REVISED

APPROVED
FEB 16 2023
BOARD OF RECREATION
AND PARK COMMISSIONERS

BOARD REPORT **NO.** 23-044

DATE February 16, 2023 C.D. 14

BOARD OF RECREATION AND PARK COMMISSIONERS

SUBJECT: SIXTH STREET VIADUCT PARK, ARTS, AND RIVER CONNECTIVITY (PARC) IMPROVEMENTS (PRJ21652) (PRJ21696) (W.O.# E700235F) PROJECT – DEVELOPMENT OF MEMORANDUM OF UNDERSTANDING WITH CITY DEPARTMENTS; APPROVAL OF FINAL PLANS AND SPECIFICATIONS – ALLOCATION OF QUIMBY FEES – COMMITMENT OF PARK FEES - CONSIDERATION OF THE ENVIRONMENTAL IMPACT REPORT FOR THE SIXTH STREET PARK, ARTS, RIVER AND CONNECTIVITY (PARC) PROJECT (SCH #2017041045) CERTIFIED ON APRIL 29, 2022 AND STATUTORY EXEMPTION FROM THE CALIFORNIA ENVIRONMENTAL QUALITY ACT PURSUANT TO ARTICLE II, SECTION 2(i) OF CITY OF LOS ANGELES CEQA GUIDELINES AND SECTION 21082 OF CALIFORNIA PUBLIC RESOURCES CODE

B. Aguirre		M. Rudnick	
H. Fujita	for	*C. Santo Domingo	DF
B. Jackson		N. Williams	

General Manager

Approved X With Corrections Disapproved Withdrawn

RECOMMENDATIONS

1. Direct staff to develop a Memorandum of Understanding with the Department of Public Works, the Department of Cultural Affairs, and other City Departments as necessary, regarding site control, operations, and maintenance of the Sixth Street Viaduct PARC site as further described in this Report;

2. Approve the final plans and specifications, substantially in the form on file in the Board of Recreation and Park Commissioners (Board) Office and as attached to this Report, for the Sixth Street Viaduct PARC Improvements (PRJ21652) (PRJ21696) (W.O. #E700235F) Project except for the plans and specifications related to the performance arts plaza component of the project (Project);

3. Authorize the Department of Recreation and Parks' (RAP) Chief Accounting Employee or designee to establish new Quimby Fees Account No. 89460K-A6 with Sixth Street Viaduct PARC as the Account Name;

4. ~~Approve the transfer of Eight Million Two Hundred Fifty Thousand Dollars ($8,250,000.00) in Quimby Fees from the 1st and Broadway Civic Center Park Account No. 89460K-RX to the Sixth Street Viaduct PARC Account No. 89460K-A6;~~

5. ~~Approve the allocation of Eight Million Two Hundred Fifty Thousand Dollars ($8,250,000.00) in Quimby Fees from the Sixth Street Viaduct PARC Account No. 89460K-A6 to the Project except for the performance arts plaza component of such Project;~~

6. Authorize RAP staff to commit from the following fund and work order numbers, a maximum of Six Million Seven Hundred Thousand Dollars ($6,700,000.00) in Park Fees for the proposed Project except for the performance arts plaza component of such Project;

FUNDING SOURCE	FUND/DEPT./ACCT. NO.	WORK ORDER NO.
Park Fees	302/89/89718H	QP001998
Park Fees	302/89/89716H	QT074197
Park Fees	302/89/89716H	QT074537
Park Fees	302/89/89718H	QP002728
Park Fees	302/89/89718H	QP002611
Park Fees	302/89/89718H	QP002602
Park Fees	302/89/89718H	QP002713
Park Fees	302/89/89716H	QT074309
Park Fees	302/89/89718H	QP002627

7. Determine under the California Public Resources Code, Section 21166 and the California Environmental Quality Act (CEQA) Guidelines Section 15162, on the basis of substantial evidence contained in the whole record, that since the City Council's prior certification of the Environmental Impact Report (EIR) and approval of the Project (Council File No. 14-1510-S12; State Clearinghouse No. 2017041045, County Clerk Filing No. 2022103172) there have been no changes to the Project; no changes with respect to the circumstances under which the Project is being undertaken; and no new information of substantial importance concerning the Project showing new significant environmental effects, substantial increases in severity of identified significant effects, or different mitigation measures or alternatives that would substantially reduce significant effects; and therefore no major revisions are needed for the EIR, and no subsequent or supplemental EIR is required, and no additional CEQA analysis is necessary for the Project;

8. Determine that the allocation of additional funding is statutorily exempt from the provisions of the California Environmental Quality Act (CEQA) pursuant to Article II, Section 2(i) [Any activity (approval of bids, execution of contracts, allocation of funds, etc.) for which the underlying project has previously been evaluated for environmental significance and processed according to the requirements of these Guidelines] of City CEQA Guidelines as well as to Section 21082 of California CEQA Guidelines and direct staff to file a Notice of Exemption (NOE) with the Los Angeles County Clerk;

9. Authorize RAP's Chief Accounting Employee to prepare a check to the Los Angeles County Clerk in the amount of $75.00 for the purpose of filing a Notice of Exemption (NOE); and,

10. Authorize RAP staff to make technical corrections as necessary to carry out the intent of this Report.

SUMMARY

The construction of the Sixth Street Viaduct Replacement Project required the acquisition of land underneath and immediately adjacent to the new viaduct in order to produce a roadway alignment that would meet modern public safety standards for vehicular travel. The land is a combination of existing right-of-way from the previously demolished viaduct, newly acquired public right-of-way, and City owned parcels. The City is proposing to transform this land into a public recreational space with the Sixth Street Viaduct PARC Improvements Project (Project) which spans the areas underneath and adjacent to the Viaduct from Mateo Street in the Arts District to the US-101 on-ramp in the Boyle Heights community, in Council District 14. The goal of the Project is to create new park space to promote recreation, community connectedness, culture, and the arts.

Due to its facilities and features, and the programs and services that this new park will provide on-site, the Sixth Street Viaduct PARC will meet the standard for a Community Park, as defined in the City's Public Recreation Plan

PROJECT SCOPE

The Project scope includes the construction of a new 12-acre park and features a performance arts plaza, two (2) soccer fields, multi-purpose fields, two (2) dog parks, a children's playground, basketball court, walking/jogging paths, adult fitness equipment, picnic areas, two (2) restroom buildings, a 870 square foot staff office area, a 577 square foot café building at the west park, general landscaping, lighting, irrigation, and fencing. In addition, the existing and partially reconstructed Sixth Street tunnel leading from the arts plaza to the Los Angeles River will receive new painting and lighting as a part of the Project.

An illustration of the proposed Project, including all of the major proposed recreational elements, is attached as Attachment No. 1

The Project is a Department of Public Works project, with the design and construction of the Project being managed by the Department of Public Works' Bureau of Engineering (BOE). Upon completion of the Project, it is proposed that the Project site, except for the performance arts plaza, will be operated and maintained by RAP through a Memorandum of Understanding (MOU) as further discussed below.

For purposes of this Report and the Board's approval of the Project and the allocation and commitment of Quimby and Park Fees in connection thereto, the Project does not include the performance arts plaza.

COMMUNITY ENGAGEMENT

Community engagement at the Project onset was critical to developing support for the Project's thematic design elements and to the understanding of the sensitivities of the community. During the Project's conceptual design phase in 2017, a total of six large community meetings were held in the Arts District and the Boyle Heights communities. Additionally, a number of smaller focus meetings were conducted with youth groups and Boyle Heights community leaders. The large meetings were designed to elicit feedback on the priorities of park features the community was interested in having at the park, while the smaller focus meetings provided insight on how the park could be developed within the purpose and the spirit of the community.

An additional six meetings were convened in January and February 2021 during the application process for the Proposition 68 grant to provide a status of the Project and to develop the scope that would use the grant funding.

The table blow summarizes all the community meetings held to date:

Date	Meeting Title / Location	Purpose
2/7/17	Community Meeting 1 (Puente Learning Ctr)	Introduce project to community; Provide surveys; Receive feedback.
2/8/17	Community Meeting 2 (Sci Arc)	Introduce project to community; Provide surveys; Receive feedback.
3/8/17	Youth Meeting (Mendez High School)	Engage community youth; listen to youth vision and priorities for the PARC.
3/28/17	Community Meeting 3 (Sci Arc)	Survey Results; Vote on three conceptual frameworks: (1) Promenade, (2) Canopies & Objects, and (3) Episodic. Community voted for Canopies & Objects.
3/30/17	Community Meeting 4 (Puente Learning Ctr)	Survey Results; Vote on three conceptual frameworks: (1) Promenade, (2) Canopies & Objects, and (3) Episodic. Community voted for Canopies & Objects.

4/27/17	Community Leaders Meeting (CD 14 Field Office)	Listen to feedback and concerns from community leaders.
5/3/17	Scoping Meeting 1 (Puente Learning Ctr)	Brief review of project; Discuss CEQA process; Discuss potential environmental issues; Inform public on how to stay informed.
5/11/17	Scoping Meeting 2 (Aliso Pico Gym)	Conducted entirely in Spanish - Brief review of project; Discuss CEQA process; Discuss potential environmental issues; Inform public on how to stay informed.
9/19/17	Community Meeting 5 (Aliso Pico Gym)	Provide three variations of Canopies & Objects: (1) Nature Focus, (2) Sports Focus, and (3) Balanced. Community votes for Balanced.
9/20/17	Community Meeting 6 (Sci Arc)	Provide three variations of Canopies & Objects: (1) Nature Focus, (2) Sports Focus, and (3) Balanced. Community votes tie for Sports and Balanced.
1/20/21	Virtual Meeting 1	Discuss grant application scope improvements at Mesquit Street (Arts District).
1/23/21	Virtual Meeting 2	Discuss grant application scope improvements at Boyle Heights – Clarence/Anderson Streets.
1/26/21	Virtual Meeting 3	Discuss grant application scope improvements at Boyle Heights – Skate Park.
1/28/21	Virtual Meeting 4	Discuss grant application scope improvements at Boyle Heights – Design Features (Splash Pad, Playground, etc.).
2/2/21	Virtual Meeting 5	Discuss grant application scope improvements at Boyle Heights – Public Art.
2/8/21	Virtual Meeting 6	General discussion of Prop 68 and PARC in partnership with the Boyle Heights Neighborhood Council.

DESIGN DEVELOPMENT, CONSTRUCTION DOCUMENTS, AND BIDDING

Through the community engagement process, the community was presented with three thematic options for the overall layout of the park. The one that was ultimately chosen was the “Canopy & Objects” balanced theme with curvilinear shapes and ovals that complement the aesthetic of the Sixth Street Viaduct arching over the park above.

BOE enlisted the services of the design consultant, Tetra Tech Inc. (TTI), to prepare the construction documents. RAP staff was consulted on the design to provide feedback for the park features and the landscape plant palette.

BOE initially presented its conceptual plan for the project to the Board's Facility Repair and Maintenance Commission Task Force on June 21, 2017 and construction plans on May 5, 2022, during which feedback was solicited.

Additionally, BOE presented the project's restroom, cafe, and staff office buildings to the Department of Cultural Affairs Commission and received its approval on April 13, 2022.

On August 18, 2022, BOE submitted an informational report to the Board setting forth the final plans and specifications for the Project which BOE planned to release for bid (Report #22-217).On August 24, 2022, the Board of Public Works released the bid package for the Project public bidding. It should be noted that the bidding of the Project was combined with two other projects that are in the same location as the Project, and which have also completed design and were ready to proceed to construction. Those two projects are the Department of Cultural Affairs – LA Hands Art Piece Foundations project and the CBD Sewer Rehabilitation Unit 11A project. The locations of these projects are shown in Attachment No. 2 and 3, respectively. To facilitate construction coordination, it was decided to package all three projects into a single bid package to be constructed by one contractor. This report, however, is only focused on the Project exclusive of the performance arts plaza component, as the other two projects and the performance arts plaza component will not be funded by any Quimby or Park Fees and would not be operated nor maintained by RAP.

The City Engineer's estimate for the Project was $35,520,524. Addenda were issued during the bid period to add the urban forest (Prop. 68 Grant scope of work) and perimeter fencing (CD 14 requested scope addition) to the Project, resulting in a revised Project estimate of $37,661,000. The perimeter fencing was added as an allowance in the bid documents as a site security measure, the feasibility of which would need to be discussed with maintenance and operations staff prior to implementation.

The following two bids for the PARC Project components were received on November 16, 2022:

COMPANY	TOTAL BID AMOUNT	PARC PROJECT BID AMOUNT
Environmental Construction, Inc. (ECI)	$54,680,360.00	$53,117,178.00
Los Angeles Engineering, Inc. (LAEI)	$67,800,000.00	$66,662,730.00

Shortly after receiving bids, ECI requested to withdraw its bid citing clerical errors on bid item nos. 16 and 22. The Board of Public Works approved the bid withdrawal on December 2, 2022 per BPW-2022-0792 (Attachment No 4).

The Bureau of Contract Administration has reviewed LAEI's bid and determined it to be responsive.

Due to a request for Quimby and Park Fee funding for this Project as described below, BOE and RAP staff is now requesting the Board formally approve the final plans and specifications for the Project but with the exception noted below. The final plans, specifications, and addenda prepared by TTI under the supervision of the Department of Public Works, Bureau of Engineering, Architectural Division which is part of the bid is attached as Attachment No. 5.

One of the Project's components is a performance arts plaza (Arts Plaza), composed of a stage, terraced seating, and landscaping, which is in portion of the Project located in the Arts District, and more specifically between Santa Fe Avenue and the Sixth Street tunnel. Once completed, it is the intent that the Arts Plaza would host regular arts programming for the enjoyment of neighboring residents and Angelenos from across the City. The Arts Plaza is the subject of certain naming and programming obligations related to a grant agreement between the Leonard Hill Foundation and the Mayor's Fund of Los Angeles. Based on previous feedback from the Board regarding the Project, staff recommends that the Board's approval of the final plans and specifications for the Project not extend to approval of the performance arts plaza component of the Project and that the allocation and commitment of Quimby and Park Fees for the Project as authorized under this Report be limited to those Project components which do not include the Arts Plaza. Further, the operation and maintenance of the Arts Plaza will not be the responsibility of RAP under the proposed MOU as described below.

PROJECT FUNDING

Upon approval of this Report, Six Million Seven Hundred Thousand Dollars ($6,700,000.00) in Park Fees can be committed to the proposed Project.

Upon approval of this Report, Eight Million Two Hundred Fifty Thousand Dollars ($8,250,000.00) in Quimby Fees can be transferred from the 1st and Broadway Civic Center Park Account No. 89460K-RX to the Sixth Street Viaduct PARC Account No. 89460K-A6 and allocated to the Project.

The total amount of funding currently available for the PARC Project construction is $58,783,436.00 as set forth in the Funding Matrix below.

The Quimby and Park Fees were collected within five (5) miles of Sixth Street Viaduct PARC, which is the standard distance for the commitment of Park Fees for community recreational facilities pursuant to Los Angeles Municipal Code Section 12.33 E.3.

FUNDING MATRIX

Upon approval of this report, funds are available for the Project from the following funds and accounts:

FUNDING SOURCE	FUND/DEPT./ACCT. NO.	FUND AMOUNT	PERCENTAGE
MICLA Fund*	298/50/50RLDS	$11,850,000	20.2%
	298/50/50MCON	$ 1,850,000	3.1%
	298/50/50RSIX	$ 342,548	0.6%
	298/50/50MCSS	$ 4,800,000	8.2%
	298/50/50RCSR	$ 7,440,000	12.7%
	298/50/50VLDS	$ 1,000,000	1.7%
Prop. K Fund	TBD	$ 2,000,000	3.4%
Leonard Hill Grant	682/50/50NVCC	$ 1,425,000	2.4%
Metropolis Grant	682/50/50LVBC	$ 1,000,000	1.7%
CRA/EBP Fund	57D/22/22L9AT	$ 3,625,888	6.2%
	57D/22/22L9AN		
Prop. 68 Grant	TBD	$ 8,500,000	14.5%
Quimby Fees	302/89/89460K-A6	$8,250,000.00	14.0%
Park Fees	302/89/89716H	$6,619,852.86	11.3%
Park Fees	302/89/89718H	$80,147.14	0.1%
TOTAL FUNDING:		$ 58,783,436.00	

*For MICLA funding, see CF 14-1510-S5, CF18-0600, CF 14-1411-S3

The overall Project budget is $82,893,704, which represents the design, environmental, permitting, and construction cost and which includes a 10% contingency. With the total funding of $58,783,436, there is presently an overall Project shortfall of $24,110,268. BOE will be requesting authority to award the bid for the Project from the Los Angeles for Kids Steering Committee (LAFKSC) with the understanding there is a construction funding shortfall that will have to be identified in future fiscal years. The Project construction contract will also include a Financial Liability Clause which states that “the City’s liability under this contract shall only be to the extent of the present City appropriation to fund the contract. However, if the City shall appropriate funds for any succeeding years, the City’s liability shall be extended to the extent of such appropriation, subject to the terms and conditions of the contract.”

To manage the construction shortfall, BOE is working with Council District 14, the Mayor’s Office, the City Administrative Office (CAO), and RAP staff to identify the additional potential funding needed to close the gap. Current potential funding sources are shown in the table below:

Potential Funding Source	Potential Fund Amount
AB 1290	$2,000,000
Arts Development Fee	$1,000,000
Funding Swap with Other Local Project	$4,900,000
Street Improvement Swap	$2,000,000
Measure A – Central City*	$950,436
Measure A – Boyle Heights*	$859,178
Sites & Facilities	TBD
Total Potential Funding:	$11,709,614

*Los Angeles County Regional Park and Open Space District (RPOSD) has not yet reviewed or determined if this project is eligible for Measure A funding under current RPOSD guidelines.

The BOE project team also performed value engineering (VE) with the bidder to identify $5.14M in cost savings for the construction project. The potential modifications and scope reductions include modification of the exterior walls of the office and public restroom building to be stucco finish and metal stud framing, removal of the roof bridging structure, replacement of the pavers with concrete, elimination of top cast finish on the concrete, replacement of the rain gardens in the section of the park between Clarence and Anderson Streets with turf, and removal of the bid allowance item for the perimeter fencing. These potential modification and scope reductions will be reviewed by RAP operations and maintenance staff and BOE to determine scope reductions which can be beneficial to the park while facilitating maintenance and operation to RAP's standards.

Accounting for both potential VE savings and the additional potential funding, the Project's shortfall could be reduced to $7,260,654. In discussions with the CAO, the funds for the remaining $7.26M may be identified during the budgetary fiscal years FY23/24 and FY24/25. Should additional funding require approval from the RAP Board, staff will provide an updated report to request authorization to increase the Project funding.

TREES AND SHADE

The Project will receive ample shade since the Sixth Street Viaduct is located directly over the Project site. Additionally, Hargreaves Jones, the sub-consultant landscape architect, performed a shade analysis to determine the optimal areas that receive sunlight during the year in order to properly locate new trees.

The Project proposes to plant approximately 302 new shade trees. The table below lists the types of trees and the quantity, which have been reviewed and approved by RAP Forestry Staff:

Botanic Name	Common Name	Approximate Quantity
Angophora costata	Rose Gum	37
Arbutus 'Marina'	Marina Strawberry Tree	5
Chilopsis linearis	Desert Willow	15
Corymbia citriodora	Lemon Scented Gum	15
Corymbia papuana	Ghost Gum	23

Eucalyptus cladocalyx	Sugar Gum	10
Eucalyptus torquate	Coral Gum	14
Parkinsonia X 'Desert Museum'	Palo Verde 'Desert Museum'	5
Ficus rubiginosa	Rusty Leaf Fig	2
Jacaranda mimosifolia	Jacaranda	34
Pinus torreyana	Torrey Pine	12
Quercus agrifolia	Coast Live Oak	4
Quercus buckleyi	Texas Red Oak	30
Laurus mobilis	Bay Laurel	12
Tipuana tipu	Tipu	84

The proposed trees are estimated to provide 210,000 square feet (4.8 acres) of canopy cover reaching full maturity on average within 20 years.

PROJECT CONSTRUCTION

As noted above, sufficient funding has not yet been identified for the Project. However, BOE intends to move forward with the award of construction of the Project with concurrence from the Proposition K Oversight Committee and the Board of Public Works. Construction of the Project is anticipated to begin in late Spring 2023.

PROPOSED MEMORANDUM OF UNDERSTANDING

In May 2019, the City Council authorized the BOE, RAP, and the Department of General Services, with assistance and cooperation of the City Attorney and City Administrative Officer to undertake the necessary actions to effectuate a non-financial transfer of jurisdiction of various properties acquired by the BOE for the Sixth Street Viaduct Replacement Project (Council File 14-1510-S11) (Attachment No. 6) to RAP in order for it to assume the operations and maintenance responsibilities for the PARC Project.

In March 2022, BOE, RAP and the Bureau of Sanitation (LASAN) submitted a joint report to the City Council with recommendations on the necessary steps to effectuate the non-financial transfer of jurisdiction as directed by the previous City Council action, and implement actions necessary to allow for operations and maintenance of the open space property beneath the Sixth Street Viaduct Replacement Project. (Attachment No. 6). The joint report outlined how the proposed transfer of jurisdiction of these properties would allow RAP to operate and maintain the Project's park improvements and the various actions that would be needed to delineate those areas where the Department of Public Works would be responsible for maintenance and operation of ramps, structures, access paths, sewers, drains, and lighting that serve the new Sixth Street Viaduct and adjacent public right of way(s).

In subsequent discussions with City departments, it was determined that an ordinance to transfer the jurisdiction of the Project site was not required so long as as an interdepartmental Memorandum of Understanding (MOU) between RAP, Department of Cultural Affairs. Public

Works and other City departments was entered into which outlines the terms and conditions of the use and operation of the Project site.

Upon approval of this report, RAP, Department of Cultural Affairs, Public Works and other City department staff would begin development of the proposed MOU. At a minimum it is anticipated the MOU would address:

(1) The completion of any and all necessary surveys, land dedications, and other actions as needed to establish the legal description of all easements, maintenance boundaries, and right of way maps;
(2) The identification of the entity(s) responsible for issuing any permits for use of the Project area;
(3) The use and disposition of any revenues generated from the operation of Project area;
(4) The designated City entity(s) responsible to inspect and maintain all structures associated with the viaduct above the Project;
(5) The designated City entity(s) responsible to maintain any tunnel and access ways, bicycle ramps, stairs, sanitary sewers, storm drains, and street lighting;
(6) The designated City entity(s) responsible to provide and coordinate access to the Los Angeles River (LA River) tunnel that is used by the US Army Corps of Engineers (USACE) and Los Angeles County Flood Control District (LACFCD) to access and maintain their flood control facilities;
(7) The designated City entity(s) responsible to maintain the recreational improvements, including the restroom, café, and office buildings;
(8) The designated City entity(s) responsible to remove graffiti and other items from the viaduct and all associated structures, including, but not limited to, the bicycle ramps, stairs, and street lighting;
(9) The designation of the Department of Cultural Affairs or other City department which is not RAP as the department responsible for the operation and maintenance of the Arts Plaza, including the development and coordination of regular arts programming pursuant to the agreement between the City and the MFLA, and in consultation with the Leonard Hill Charitable Trust;
(10) The designated City entity(s) responsible for the maintenance of the public art within the Project area.
(11) The designated City entity(s) responsible for implementing the best management practices and mitigation measures identified in the Mitigation Monitoring Plan during project operations.

RAP staff will return to the Board for review and final approval of the MOU once the agreement, and all related documents, have been negotiated and approved by the appropriate City entities.

ENVIRONMENTAL REVIEW & IMPACT

The City prepared an Environmental Impact Report (EIR) for the Project pursuant to the requirements of the California Environmental Quality Act (CEQA), Public Resources Code sections 21000 et. Seq. and the CEQA Guidelines.

Scoping
The City prepared an Initial Study (IS) and circulated a Notice of Preparation (NOP) to members of the public, local and state agencies, organizations, and interested parties to solicit comments on the Project between April 13, 2017 and May 15, 2017. Two public scoping meetings were held, on May 3, 2017, at the PUENTE Learning Center, and a bilingual meeting (conducted in both English and Spanish) on May 11, 2017, at the Aliso Pico Gymnasium.

Concerns that were expressed in responses to the NOP/IS and the public meetings included, but were not limited to: handling hazardous waste and contaminated substances; exposing sensitive receptors to pollutants, lights, noise, and vibration; taking existing and potential transportation facilities into account; considering public safety and security around the railroad tracks and the LA River; and discussing potential impacts related to traffic, population growth, displacement of existing populations, and the homeless population. These concerns were addressed in the Draft EIR.

Draft EIR
The public comment period for the Draft EIR (Attachment No. 7) was from May 27, 2021 to July 26, 2021, exceeding CEQA's 45-day comment period requirement. During the comment period, the Draft EIR was made available for review on the BOE website. Hard copies were made available at the Central Library, Robert Louis Stevenson Library, Boyle Heights Technology Center, and the East Los Angeles County Library. A virtual public meeting was held via Zoom on July 14, 2021 to receive comments for the Draft EIR.

Final EIR
The Final EIR (Attachment No. 8) was prepared following the Draft EIR comment period. In accordance with CEQA Guideline Section 15088, the Final EIR includes responses to comments on environmental issues that were received during the public comment period for the Draft EIR. It also includes revisions, clarifications, and corrections to the Draft EIR, along with a copy of the Mitigation Monitoring Program, which identifies how and when the mitigation measures shall be implemented. Of note are the appendices to the Final EIR, which include copies of all written and verbal comments received on the Draft EIR, and a technical memo updating the operational and construction air quality emissions in response to comments received from the South Coast Air Quality Management District. The changes described in the Final EIR do not result in any new or increased significant environmental impacts. All impacts remain less than significant with Best Management Practices (BMPs) or mitigation measures, and there are no significant and unavoidable environmental impacts.

On April 29, 2022, the Los Angeles City Council certified that the Final EIR was completed in compliance with the California Environmental Quality Act (CEQA) and approved the following:

- Adoption of the Project's CEQA Findings (Attachment No. 9) and found that on the basis of the whole record, including best management practices and mitigation measures, there is no substantial evidence that the Project will have a significant effect on the environment;

- Adoption of the Project's Mitigation Monitoring Program (Attachment No. 10);

- Approval of the Project as described in the Final EIR.

The Notice of Determination (NOD) was filed on May 3, 2022 with State Clearinghouse number SCH #2017041045.

Staff found that since the filing of the NOD, no changes have been made to the Project, and the plans and specifications recommended for approval are consistent with the Project as analyzed in the certified EIR. In addition, there have been no changes with respect to the circumstances under which the Project is being undertaken; and no new information of substantial importance concerning the Project showing new significant environmental effects, substantial increases in severity of identified significant effects, or different mitigation measures or alternatives that would substantially reduce significant effects have been identified. Therefore, no major revisions are needed for the EIR, no subsequent or supplemental EIR is required, and no additional CEQA analysis is necessary for the Project for this approval.

The proposed Board action also includes the allocation of additional funding to the Project. Staff recommends that the Board of Recreation and Parks Commissioners determine that this action is statutorily exempt from the provisions of CEQA pursuant to Article II, Section 2(i) of City of Los Angeles CEQA Guidelines and Section 21082 of California Public Resources Code (PRC). Staff will file a Notice of Exemption (NOE) upon Board's approval.

FISCAL IMPACT

The proposed construction is substantially funded by the Municipal Improvement Corporation of Los Angeles (MICLA) funding, Proposition 68, Proposition K, CRA/Excess Bond Proceeds, Metropolis funding, Leonard Hill Grant, Quimby, Park Fees, and other funds to be determined in FY 24-25.

The future operations and maintenance costs will be evaluated and determined once the proposed MOU is completed and any requests for additional RAP staffing would be included in future RAP annual budget requests.

STRATEGIC PLAN INITIATIVES AND GOALS

Approval of this Board Report advances RAP's Strategic Plan by supporting:

Goal No. 3: Create and Maintain World Class Parks and Facilities
Outcome No. 1: Newly developed open space park projects and the redesign of signature City parks
Key Metric: Completion of a new 12-acre park
Target: 100% completion by late 2025

This Report was prepared by Gary Lam, Project Manager, BOE Architectural Division; reviewed by Ohaji Abdallah, BOE Proposition K Interim Program Manager, Steven Fierce, BOE Architectural Division Head; Deborah Weintraub, BOE Chief Deputy City Engineer; Jan Green Rebstock, BOE Environmental Affairs Officer; Darryl Ford, Department of Recreation Parks, Planning, Construction and Maintenance Branch.

LIST OF ATTACHMENTS

Attachment No. 1 – PARC Project Renderings
Attachment No. 2 – LA Hands Art Piece Foundations
Attachment No. 3 – CBD11A – Sewer Project
Attachment No. 4 – Motion to Approve ECI Bid Withdrawal
Attachment No. 5 – PARC Plans, Specifications, and Addenda
Attachment No. 6 – Transfer of Jurisdiction CD14-1510-S11
Attachment No. 7 – Draft EIR
Attachment No. 8 – Final EIR
Attachment No. 9 – CEQA Findings
Attachment No. 10 – Mitigation Monitoring Program

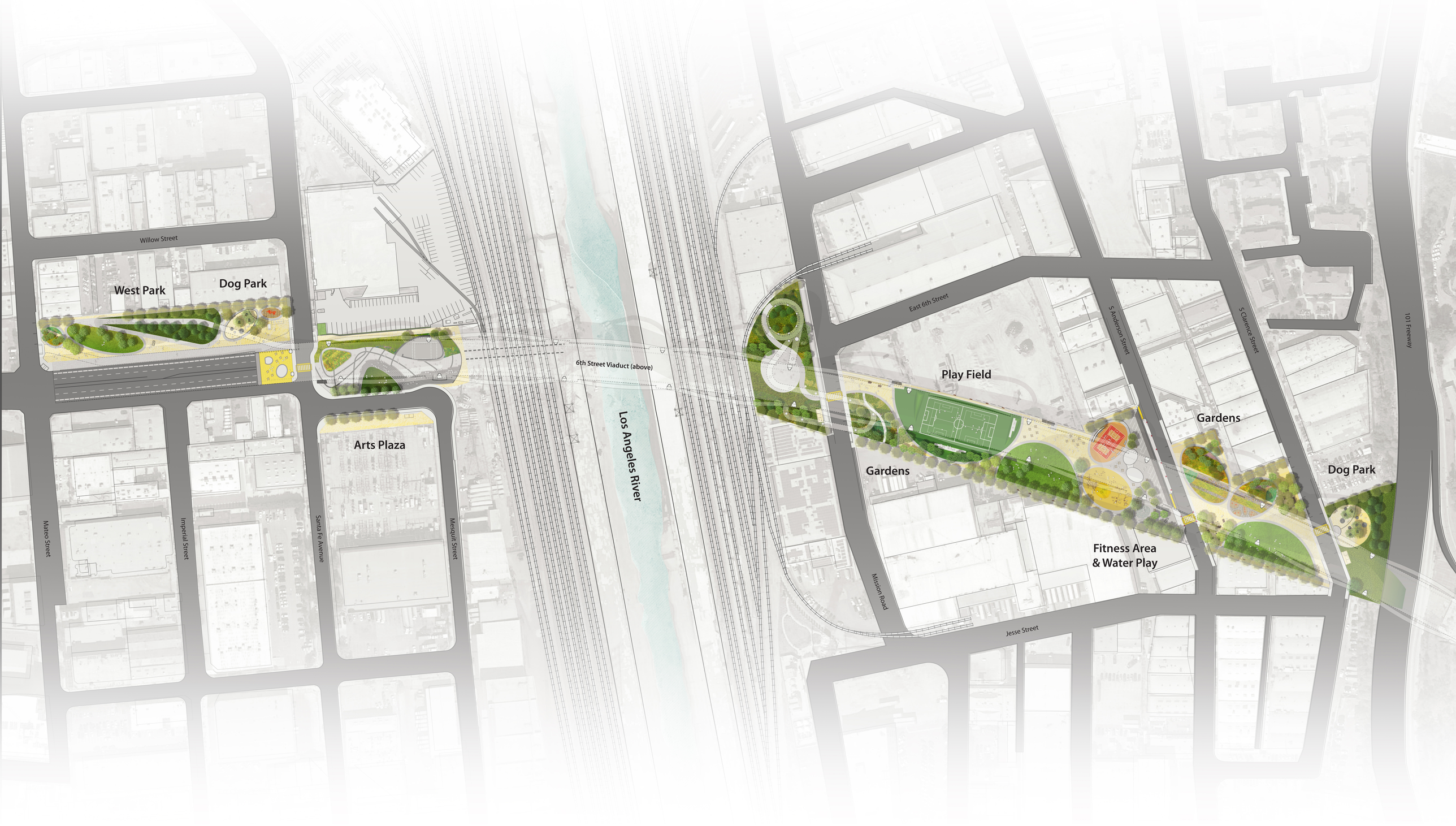

Site Plan

N

6th Street PARC

Council District 14 - Council member Kevin de Leon
Project of the Bureau of Engineering for Recreation and Parks

ENGINEERING
CITY OF LOS ANGELES

Hargreaves Jones

Fitness Area & Garden

6th Street PARC

Council District 14 - Council member Kevin de Leon
Project of the Bureau of Engineering for Recreation and Parks

ENGINEERING
CITY OF LOS ANGELES

Hargreaves Jones

Arts Plaza Stage

6th Street PARC

Council District 14 - Council member Kevin de Leon
Project of the Bureau of Engineering for Recreation and Parks

ENGINEERING
CITY OF LOS ANGELES

Hargreaves Jones

Water Play

6th Street PARC

Council District 14 - Council member Kevin de Leon
Project of the Bureau of Engineering for Recreation and Parks

ENGINEERING
CITY OF LOS ANGELES

Hargreaves Jones



West Park

6th Street PARC

Council District 14 - Council member Kevin de Leon
Project of the Bureau of Engineering for Recreation and Parks

ENGINEERING
CITY OF LOS ANGELES

Hargreaves Jones

Play Field

6th Street PARC

Council District 14 - Council member Kevin de Leon
Project of the Bureau of Engineering for Recreation and Parks

ENGINEERING
CITY OF LOS ANGELES

Hargreaves Jones

WEST PARK MAP

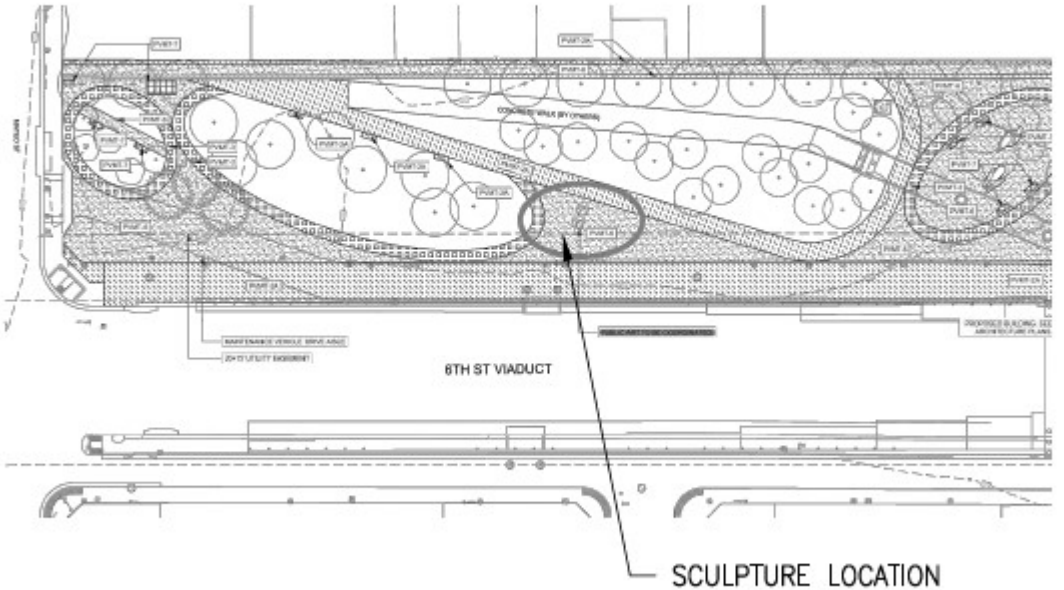

EAST PARK MAP

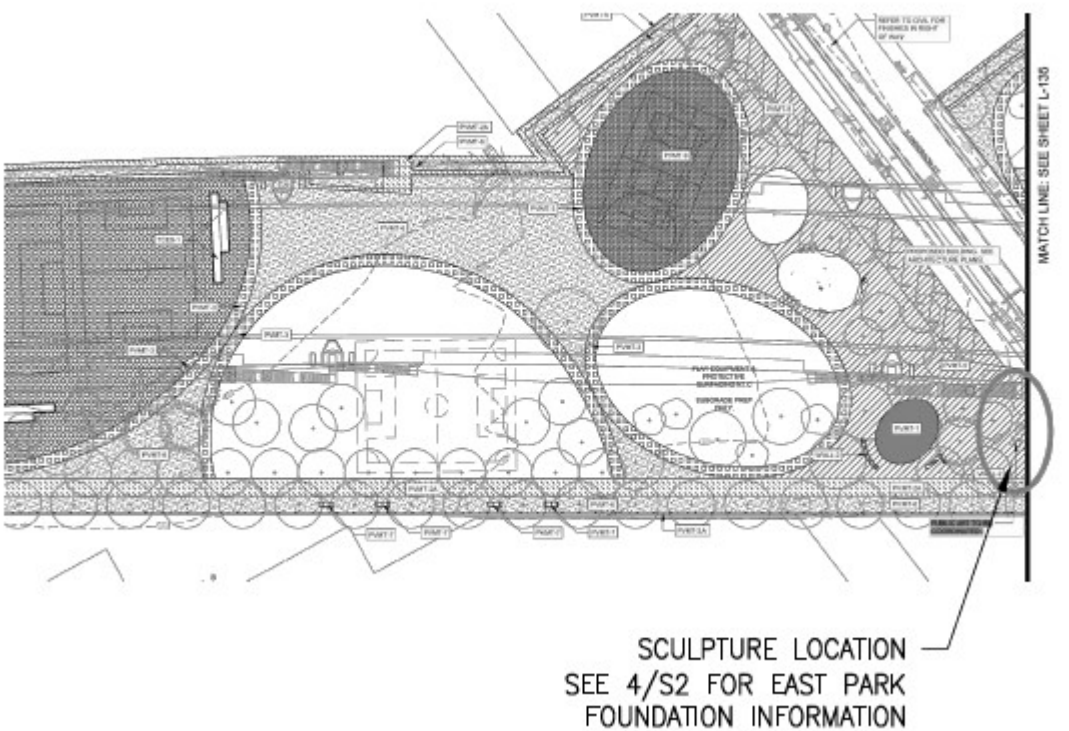

CBD11A Sewer Project

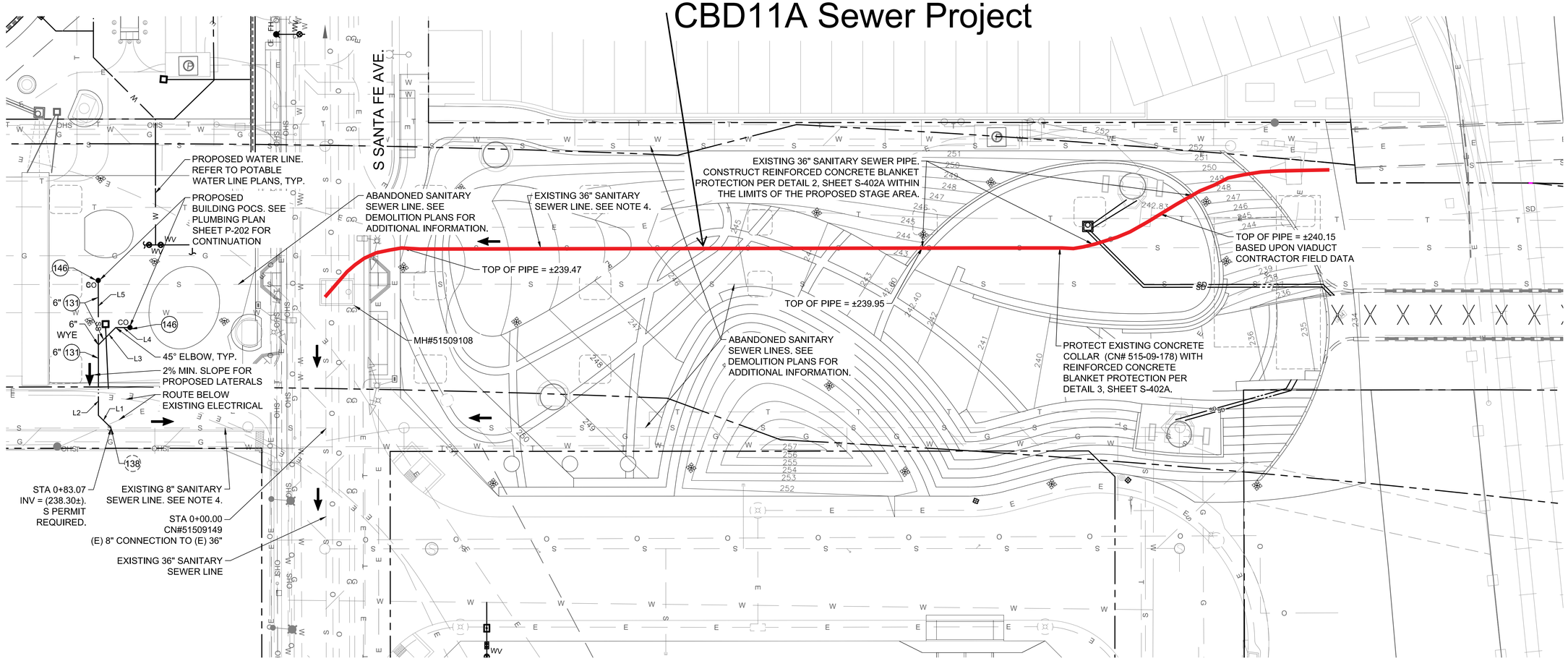

LEGEND:

- PROPERTY / BOUNDARY LINE
- EASEMENT BOUNDARY LINE
- S — EXISTING SANITARY SEWER
- W — EXISTING WATER LINE
- EXISTING STORM DRAIN
- G — EXISTING GAS LINE
- T — EXISTING UNDERGROUND/OVERHEAD TELECOMMUNICATIONS LINE
- O — EXISTING OIL LINE
- OHS — EXISTING OVERHEAD ELECTRICAL
- E — EXISTING UNDERGROUND ELECTRICAL
- W — PROPOSED WATER LINE
- SS — PROPOSED SANITARY SEWER LINE
- PROPOSED STORM DRAIN MAIN LINE (Ø ≥ 18")
- SD — PROPOSED STORM DRAIN LATERAL (Ø ≤ 18")

LEGEND OF CONSTRUCTION NOTES		
◯ CONSTRUCT ◌ WORK BY OTHERS		
NO.	CONSTRUCTION ITEM/NOTE	STANDARD PLAN
131	SDR 35 SANITARY SEWER PIPE	S-110-1, S-251-1
138	SADDLE	27983
146	TWO-WAY CLEANOUT STRUCTURE	DTL 2, SHT C-605

LINE TABLE		
LINE #	LENGTH	DIRECTION
L1	6.90'	N50° 10' 41"W
L2	27.23'	N05° 10' 41"W
L3	9.49'	N39° 49' 19"E
L4	5.51'	N84° 49' 19"E
L5	24.95'	N05° 10' 41"W

NOTES:

1. EXISTING UTILITIES ARE SHOWN FOR REFERENCE ONLY. ACTUAL LOCATIONS MAY VARY. CONTRACTOR TO VERIFY THE LOCATIONS AND ELEVATIONS OF EXISTING UTILITIES IN THE FIELD.
2. REFER TO STORM DRAINAGE SHEETS FOR PROPOSED STORM DRAINAGE SYSTEMS.
3. REFER TO POTABLE WATER SHEETS FOR PROPOSED WATER LINES.
4. CONTRACTOR SHALL PROVIDE PRE- AND POST-CONSTRUCTION CCTV INSPECTION OF EXISTING SEWER LINE.

BUREAU OF ENGINEERING OFFICIAL RECORD

SCALE: 1"=20'

PLANS PREPARED BY:
TETRA TECH, INC.
707 WILSHIRE BLVD, 23RD FLR.
LOS ANGELES, CA 90017
PHONE: (213) 239-8866

CITY OF LOS ANGELES DEPARTMENT OF PUBLIC WORKS
BUREAU OF ENGINEERING

ENGINEERING
CITY OF LOS ANGELES

NO.	REVISIONS:	DATE	BY:

BUILDING NO.

INDEX NO. MF-300501

THIS PLAN WAS ELECTRONICALLY SIGNED AND STAMPED

PROFESSIONAL ENGINEER — REGISTERED — JUSTIN T. SMITH — No. 85736 EXP: 9-30-22 — CIVIL — STATE OF CALIFORNIA

CITY ENGINEER
TED ALLEN, P.E.
DATE: 07/11/22
LIC. NO. C-85736

DESIGN GROUP
ENGINEER: JUSTIN SMITH
DESIGNED BY: JUSTIN SMITH
DRAWN BY: DAVID LOPEZ
CHECKED BY: NATE SCHREINER
APPROVED BY: JASON L. FUSSEL

SHEET TITLE: SEWER LATERAL PLAN SHEET 1
PROJECT: SIXTH STREET PARK, ARTS AND RIVER CONNECTIVITY IMPROVEMENTS (PARC)
ADDRESS: SIXTH STREET OVER THE LOS ANGELES RIVER

VERT. CONTROL: BM 12-04070, 1929 (NGVD29) - 1985 ADJUSTMENT
HORIZ. CONTROL: GPS; PID AE 1704, EPOCH 1991.35

WORK ORDER NO. E700235D
FILE NO. --
DRAWING NO. C-415
SHEET 54 OF 295 SHEETS

7/8/2022 12:07:38 AM - O:\PROJECTS\IRVINE\20043\200-20043-17001\CAD\SHEETFILES\C-415_SEWER PLAN - TT.DWG - SMITH, JUSTIN

THE CITY OF LOS ANGELES OR ITS OFFICERS OR AGENTS SHALL NOT BE RESPONSIBLE FOR THE ACCURACY OR COMPLETENESS OF ELECTRONIC COPIES OF THIS PLAN SHEET.

REVISION DATES (DESIGN STAGE ONLY)

Sheet Version 3.0

BPW-2022-0792

BID WITHDRAWAL – ENVIRONMENTAL CONSTRUCTION, INC. – SIXTH STREET VIADUCT PARK, ARTS, AND RIVER CONNECTIVITY IMPROVEMENTS – DEPARTMENT OF CULTURAL AFFAIRS LA HANDS ART PIECE FOUNDATIONS AND CBD SEWER REHAB UNIT 11A – 6TH STREET SIPHON TO SANTA FE AVENUE

Recommending the Board:

1. APPROVE the request of Environmental Construction, Inc. to withdraw their bid submitted on November 16, 2022 in connection with the Sixth Street Viaduct – Park, Arts, and River Connectivity Improvements; Department of Cultural Affairs LA Hands Art Piece Foundations; and CBD Sewer Rehab Unit 11A – 6th Street Siphon to Santa Fe Avenue, with the understanding that, in accordance with the Public Contracting Code, the Board of Public Works will not accept a Bid from Environmental Construction, Inc. in the event this project is re-advertised.

(W.O. E700235F, SZC14224)

FORM GEN. 160 (Rev. 11-02)

BPW-2022-0792

CITY OF LOS ANGELES
INTERDEPARTMENTAL CORRESPONDENCE

Date: November 23, 2022

To: Dr. Fernando Campos, Executive Officer
Board of Public Works

From: Gregg Vandergriff, Division Engineer
Project Award and Control Division
Bureau of Engineering

Jonathan Carroll for
Digitally signed by Jonathan Carroll
Date: 2022.11.23 09:29:35 -08'00'

Subject: **ENVIRONMENTAL CONSTRUCTION, INC. REQUEST TO WITHDRAW BID**

Bids were received by the Board of Public Works (Board) for the **Sixth Street Viaduct – Park, Arts, and River Connectivity (PARC) Improvements; Department of Cultural Affairs LA Hands Art Piece Foundations; and CBD Sewer Rehab Unit 11A – 6th Street Siphon to Santa Fe Avenue, (Work Order No. E700235F & SZC14224)** project on November 16, 2022. Environmental Construction, Inc. (ECI) was the apparent first low bidder on this project. Farid Soroudi, President of ECI, submitted a letter dated November 18, 2022 (Attachment 1) to Dr. Fernando Campos, Executive Officer to the Board of Public Works, requesting to withdraw their bid due to clerical errors in filling out their bid. The Project Award and Control Division (PAC) of the Bureau of Engineering (BOE) has investigated ECI's claim of clerical error in the two Bid Items (Bid Items 16 and 22). The clerical errors identified by ECI resulted in a bid that was $4,394,473.70 lower than ECI's intended bid price.

PAC staff in conjunction with the BOE's Project Manager have reviewed ECI's bid withdrawal request and believe ECI's claim of clerical errors in filling out their final bid is valid. ECI's request complies with the Public Contracting Code §5103 for granting bid withdrawals as stipulated in the General Instructions and Information for Bidders in the bid documents for the project. Therefore, PAC recommends that ECI be allowed to withdraw their bid with the understanding that, in accordance with the Public Contracting Code, the Board will not accept a bid from ECI in the event this project is re-advertised.

Attachment:
1. Letter dated November 18, 2022, from Mr. Farid Soroudi, President of Environmental Construction, Inc., requesting withdrawal of bid.

cc: Steven Fierce, Architectural Division
Gary Lam, Architectural Division

ENVIRONMENTAL CONSTRUCTION, INC.

General Engineering Contractors
21550 Oxnard Street, Suite #1060
Woodland Hills, CA 91367
818-449-8920

November 18, 2022

City of Los Angeles Department of Public Works, Bureau of Engineering
200 N. Spring Street, Room 355,
Los Angeles, California 90012
Attention: Construction Contracts Team Manager

Re: **Sixth Street Viaduct – Park, Arts, and River Connectivity (PARC) Improvements; Department of Cultural Affairs LA Hands Art Piece Foundations; and CBD Sewer Rehab Unit 11A – 6th Street Siphon to Santa Fe Avenue**

Work Order Nos. **E700235F & SZC14224**

Dear Construction Contracts Manager:

Environmental Construction, Inc. hereby requests relief from its November 16, 2022 bid for the above-noted project due to a few clerical errors. This request is in accordance with Section 5103 of the Public Contract Code.

A clerical error was made in Bid Item 16. The electrical subcontracting quantity was not properly recorded. Rather than entering a quantity factor of 1 for the lump sum unit, a factor of 0 was mistakenly applied thus the line item in Bid Item 16 totaled 0 rather than $2,778,893.70.

Additionally, another clerical error was made in applying an incorrect unit price for the Remediation Action Plan Soil Excavation (Bid Item 22). For Bid Item 22, we mistakenly entered a unit price of $20.00 rather than $120.00 as we intended.

Had the above clerical errors on line items 16 and 22 not been made, our total bid would've been $59,074,253.70.

Please review and approve our request to withdraw this bid proposal. I am available at 818-449-8920 to provide you with additional information.

Sincerely,

Farid Soroudi
President

BUREAU OF ENGINEERING
DEPARTMENT OF PUBLIC WORKS
CITY OF LOS ANGELES

SIXTH STREET PARK, ARTS AND RIVER CONNECTIVITY IMPROVEMENTS (PARC)

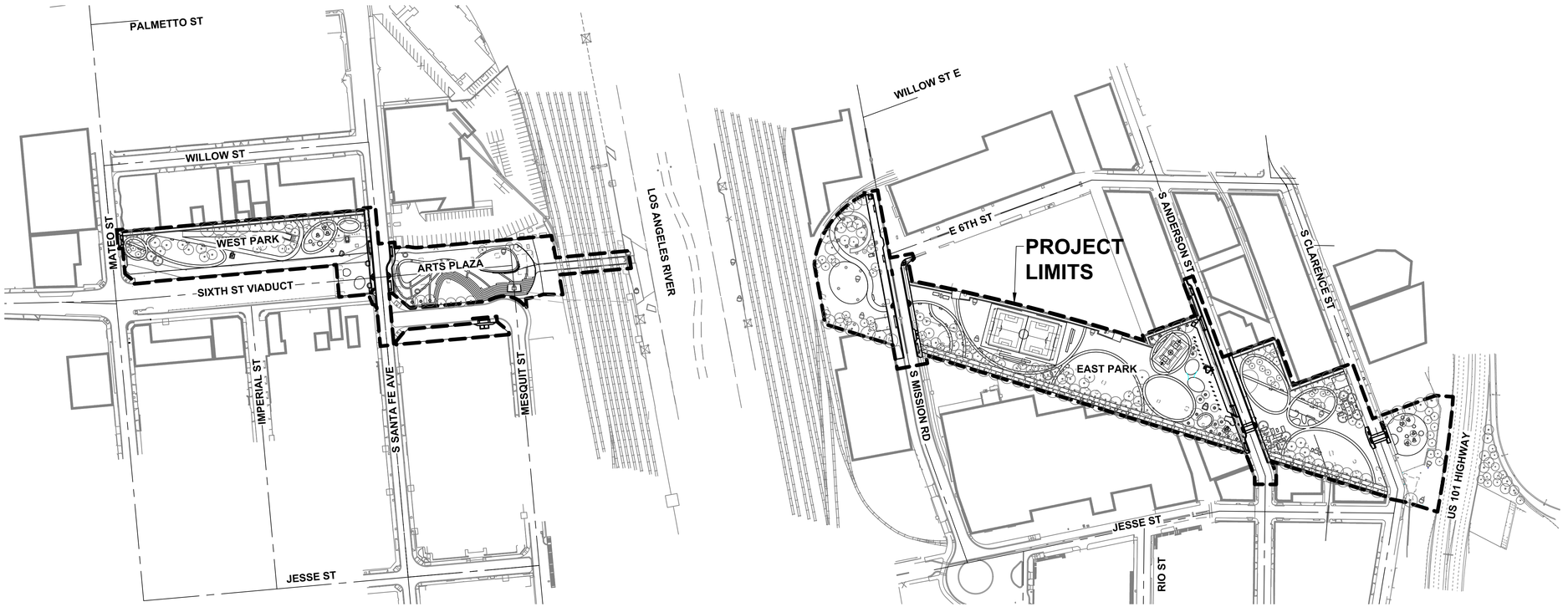

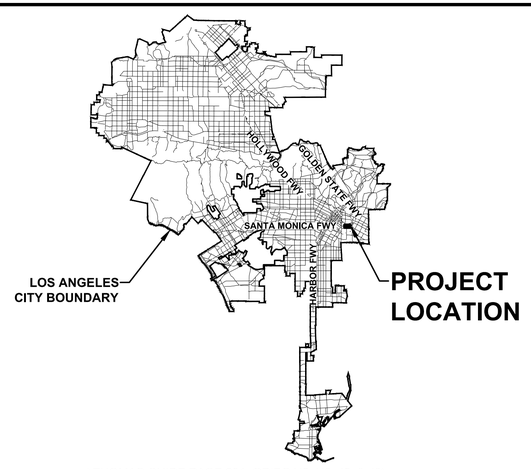

(THOMAS GUIDE PAGE 634, GRIDS H5, H6, J5, & J6)

VICINITY MAP

NOT TO SCALE

CITY OF LOS ANGELES

SIXTH STREET VIADUCT DIVISION
SHAY DOONG, P.E.
ACTING DIVISION MANAGER
GARY LAM, P.E.
PROJECT MANAGER
NATALIE MOORE
ASSISTANT PROJECT MANAGER

BID AND AWARD: **PROJECT AWARD AND CONTROL DIVISION**
GREGG VANDERGRIFF, P.E.
DIVISION MANAGER

REAL ESTATE: **REAL ESTATE DIVISION**
URIEL JIMENEZ
DIVISION MANAGER
AUGUSTO PARCERO
SENIOR REAL ESTATE OFFICER

SURVEY: **SURVEY DIVISION**
WILLIAM KNIGHT, P.L.S.
CHIEF SURVEYOR
BOBBY RIVERA, P.L.S.
SURVEY PARTY CHIEF II

GEOTECHNICAL: **GEOTECHNICAL ENGINEERING DIVISION**
PATRICK SCHMIDT, G.E.
DIVISION MANAGER
MICHAEL MULHERN, G.E.
ENGINEERING GEOLOGIST II

ENVIRONMENTAL: **ENVIRONMENTAL MANAGEMENT GROUP**
MARIA MARTIN
GROUP MANAGER
JAN GREEN REBSTOCK
ENVIRONMENTAL SUPERVISOR II

DESIGN CONSULTANTS

PRIME CONSULTANT: **TETRA TECH, INC.**

SUB CONSULTANTS:
HARGREAVESJONES
MICHAEL MALTZAN ARCHITECTURE
SUSTAINABLE LANDESIGN
GALVIN PRESERVATION ASSOCIATES, INC
HUSHMAND ASSOCIATES, INC.

REGISTERED PROFESSIONAL ENGINEER
SUSHIL T. SHAH
No. 85736
EXP: 9-30-22
CIVIL
STATE OF CALIFORNIA
07/11/22

PLANS PREPARED BY:
TETRA TECH, INC.
707 WILSHIRE BLVD, 23RD FLR.
LOS ANGELES, CA 90017
PHONE: (213) 239-8866

BUREAU OF ENGINEERING
CITY OF LOS ANGELES

NO.	REVISIONS:	DATE:	BY:

WORK ACCEPTED | SERIAL NO. | STRUCTURE NO.

INDEX NO. MF-300501

REGISTERED PROFESSIONAL ENGINEER
TED STEPHEN ALLEN
No. C-56399
CIVIL
STATE OF CALIFORNIA

TED ALLEN, P.E. CITY ENGINEER

ACCEPTED BY:
Electronically Signed by Deborah Weintraub on 08/16/2022 11:50:43 AM
DEPUTY CITY ENGINEER / PROGRAM MANAGER — DATE 08/16/2022
Electronically Signed by Ted Allen on 08/16/2022 11:50:43 AM
CITY ENGINEER — DATE 08/16/2022

CITY OF LOS ANGELES DEPARTMENT OF PUBLIC WORKS

VERTICAL CONTROL: BM 12-04070, 1929 (NGVD29) - 1985 ADJUSTMENT
HORIZONTAL CONTROL: GPS; PID AE 1704, EPOCH 1991.35

SHEET TITLE: TITLE SHEET
PROJECT: SIXTH STREET PARK, ARTS AND RIVER CONNECTIVITY IMPROVEMENTS (PARC)
ADDRESS: SIXTH STREET OVER THE LOS ANGELES RIVER

WORK ORDER NO. E700235D
DRAWING NO. G-001
SHEET 1 OF 295 SHEETS

THE CITY OF LOS ANGELES OR ITS OFFICERS OR AGENTS SHALL NOT BE RESPONSIBLE FOR THE ACCURACY OR COMPLETENESS OF ELECTRONIC COPIES OF THIS PLAN SHEET.

REVISION DATES (DESIGN STAGE ONLY)

Sheet Version 3.0

NOTICE TO CONTRACTORS

1. SPECIFICATIONS: ALL WORK SHALL CONFORM TO THE PROJECT SPECIFICATIONS. WORK NOT COVERED BY THE PROJECT SPECIFICATIONS SHALL CONFORM TO THE LATEST EDITION AND SUPPLEMENTS OF "THE STANDARD SPECIFICATIONS FOR PUBLIC WORKS CONSTRUCTION" PARTS 2 THROUGH 6 (GREEN BOOK) AND THE CORRESPONDING "ADDITIONS AND AMENDMENTS TO THE LATEST EDITION OF THE STANDARD SPECIFICATIONS FOR PUBLIC WORKS CONSTRUCTION" (BROWN BOOK). ALL SHEETS SHALL CONFORM TO THEIR RESPECTIVE PLANS AND THE PROJECT SPECIFICATION BOOK. ANY CONFLICTS SHALL BE BROUGHT TO THE CITY'S PROJECT MANAGER'S ATTENTION IMMEDIATELY.
2. NOT USED.
3. IN ADDITION TO OTHER SUBMITTALS REQUIRED BY THE OFFICE OF CONTRACT COMPLIANCE, PRIOR TO THE START OF WORK AND NO LATER THAN 10 CALENDAR DAYS AFTER ISSUANCE OF THE NOTICE TO PROCEED, THE CONTRACTOR SHALL SUBMIT TO THE ENGINEER THE LABOR COSTS BY TRADE. THESE COSTS SHALL INCLUDE ACTUAL DOCUMENTED PAYROLL COSTS INCLUDING WAGES, PAYROLL TAXES AS ESTABLISHED BY LAW (i.e. FICA, FEDERAL AND STATE UNEMPLOYMENT TAXES), FRINGE BENEFITS AS ESTABLISHED BY NEGOTIATED LABOR AGREEMENTS, AND ANY INSURANCE COSTS (SUCH AS WORKMAN'S COMPENSATION, PUBLIC LIABILITY AND PROPERTY DAMAGE INSURANCE) WHICH ARE ASSESSED AGAINST LABOR COSTS. THE CONTRACTOR SHALL ALSO SUBMIT A LIST OF ALL EQUIPMENT PLANNED FOR THIS CONTRACT AND INDICATE THE OWNERSHIP THEREOF.
4. INSPECTION: ALL WORK AND MATERIALS ARE SUBJECT TO INSPECTION PURSUANT TO SECTION 2-11 OF THE STANDARD SPECIFICATIONS. CALL (213) 485-5080 FOR INSPECTION BEFORE NOON OF THE WORKING DAY BEFORE INSPECTION IS REQUIRED.
   CONTINUOUS INSPECTIONS ARE REQUIRED FOR CONCRETE OVER 2500 PSI. CONTINUOUS INSPECTIONS BY SOILS ENGINEER ARE REQUIRED FOR EXCAVATION.
5. THE CONTRACTOR, IN CONFORMANCE WITH LOS ANGELES CITY ORDINANCE NO. 150,478 SHALL POTHOLE EXISTING SUBSURFACE INSTALLATIONS CARRYING UNSTABLE SUBSTANCES TO DETERMINE THEIR LOCATIONS AND ELEVATIONS BEFORE COMMENCING EXCAVATION.
6. UNDERGROUND SERVICE ALERT: BEFORE COMMENCING ANY EXCAVATION, THE CONTRACTOR SHALL OBTAIN AN UNDERGROUND SERVICE ALERT (USA) INQUIRY I.D. NUMBER BY CALLING (800) 227-2600. TWO WORKING DAYS SHALL BE ALLOWED AFTER THE I.D. NUMBER IS OBTAINED AND BEFORE THE CONTRACTOR STARTS THE EXCAVATION WORK SO THAT UTILITY OWNERS CAN BE NOTIFIED. IF THE UTILITY OWNER IS THE CITY OF LOS ANGELES, A CONFIRMATION NUMBER INDICATING THE CITY HAS BEEN NOTIFIED SHALL BE OBTAINED BY USA AND/OR THE CONTRACTOR FROM THE APPROPRIATE CITY DEPARTMENT. THE I.D. NUMBER TOGETHER WITH THE DATE ACQUIRED SHALL BE REPORTED TO THE BUREAU OF CONTRACT ADMINISTRATION WHEN CALLING FOR INSPECTION. I.D. NUMBERS WILL NOT BE GIVEN MORE THAN 10 DAYS BEFORE STARTING EXCAVATION WORK.
7. NOTIFICATION: AT LEAST TEN (10) DAYS BEFORE THE START OF CONSTRUCTION, THE CONTRACTOR SHALL NOTIFY, IN WRITING, ABUTTING PROPERTY OCCUPANTS OF THE PROPOSED CONSTRUCTION START DATE. A COPY OF SAID WRITTEN NOTIFICATION SHALL BE PROVIDED TO THE INSPECTOR FOR APPROVAL BEFORE THEY ARE DISTRIBUTED TO THE OCCUPANTS OF THE ABUTTING PROPERTY.
8. ADVANCE CONSTRUCTION NOTICE SIGNS: IN ADDITION TO SIGNS REQUIRED BY THE PROVISIONS OF THE WORK AREA TRAFFIC CONTROL HANDBOOK (WATCH), LATEST EDITION, AND THE CALIFORNIA MANUAL OF UNIFORM TRAFFIC CONTROL DEVICES (MUTCD), LATEST EDITION, FURNISH AND PLACE SIGNS FOR GIVING ADVANCE NOTICE TO MOTORISTS OF TRAFFIC DISRUPTION AS PART OF THIS PROJECT IN ACCORDANCE WITH STANDARD PLANS S-791-1 (EIGHT EACH). TIME AND INFORMATION TYPE CONSTRUCTION NOTICE SIGNS (EIGHT EACH) PER STANDARD PLAN S-791-1 ARE REQUIRED. THE INSPECTOR WILL DETERMINE APPROPRIATE LOCATION(S). THE TIME FOR THE TIME SIGN AND THE TELEPHONE NUMBER FOR THE INFORMATION SIGN WILL BE FURNISHED BY THE ENGINEER AT THE TIME OF CONSTRUCTION. FIVE TYPE I CREDIT SIGNS PER STANDARD PLAN S-792-0 ARE REQUIRED. THE INSPECTOR WILL DETERMINE THE APPROPRIATE LOCATION(S) FOR EACH SEQUENCE OF CONSTRUCTION AND FINAL LOCATION ONCE CONSTRUCTION IS COMPLETED.
9. THE CONTRACTOR SHALL NOT SHUT OFF WATER SERVICE AT THE CURB AT ANY TIME PER CITY OF LOS ANGELES RULES GOVERNING WATER AND ELECTRIC, RULE 16-W, SECTION A.3. SHOULD THE CONTRACTOR REQUIRE THE WATER SERVICE TO BE SHUT OFF TO THE PRIVATE PROPERTY, ARRANGEMENTS SHALL BE MADE SOLELY BY THE CONTRACTOR WITH THE PROPERTY OWNER AND THE CONTRACTOR SHALL PROVIDE THE PROPERTY OWNER WITH AT LEAST 48 HOURS PRIOR NOTICE.
10. SURVEY MONUMENT PRESERVATION IS REQUIRED AND SHALL INCLUDE SUBMITTAL OF PRE AND POST CONSTRUCTION SURVEY MONUMENT TIES TO THE ENGINEER, AS NOTED BY SECTION 2-9.3 OF THE "BROWN BOOK".
11. STRIP AND REMOVE ALL VEGETATION TO A DEPTH OF 6 INCHES AND ALL EXISTING STORMWATER MANAGEMENT RELATED ITEMS WITHIN THE PROJECT LIMITS UNLESS NOTED OTHERWISE.
12. TRAFFIC LANE REQUIREMENTS:
    THE CONTRACTOR SHALL COMPLY WITH THE LATEST VERSION OF THE WORK AREA TRAFFIC CONTROL HANDBOOK "WATCH MANUAL" ADOPTED BY THE BOARD OF PUBLIC WORKS FOR ALL TRAFFIC CONTROL AND THE CALIFORNIA MANUAL OF UNIFORM TRAFFIC CONTROL DEVICES (MUTCD), LATEST EDITION.
    AT LEAST 6 WEEKS PRIOR TO THE BEGINNING OF CONSTRUCTION WITHIN THE STREET, THE CONTRACTOR SHALL PREPARE AND SUBMIT THE TRAFFIC MITIGATION PLANS TO THE ENGINEER FOR THE LOS ANGELES DEPARTMENT OF TRANSPORTATION (LADOT) REVIEW AND APPROVAL. THE TRAFFIC MITIGATION PLANS SHALL BE PREPARED AND STAMPED BY A TRAFFIC ENGINEER LICENSED BY THE STATE OF CALIFORNIA.
13. TRAFFIC SIGNAL NOTES
    A. TRAFFIC CONTROL SHALL BE IN ACCORDANCE WITH THE LATEST EDITION OF THE *WORK AREA TRAFFIC CONTROL HANDBOOK* (WATCH) ADOPTED BY THE BOARD OF PUBLIC WORKS OF THE CITY OF LOS ANGELES AND THE CALIFORNIA MANUAL OF UNIFORM TRAFFIC CONTROL DEVICES (MUTCD), LATEST EDITION.
    B. THE CONTRACTOR SHALL MAINTAIN ALL EXISTING LADOT TRAFFIC SIGNS. CONTACT THE LADOT SIGN FOREMAN, AT TELEPHONE (323-957-6843), THREE (3) WORKING DAYS PRIOR TO CONSTRUCTION FOR REMOVAL OR REINSTALLATION OF SIGNS. ANY SIGNS LOST OR DAMAGED BY THE CONTRACTOR SHALL BE REPLACED AT CONTRACTOR'S EXPENSE.
    C. IN THE EVENT THAT CONDUIT OR TRAFFIC SIGNAL PULL BOXES INTERFERE WITH PROPOSED CONSTRUCTION, THE CONTRACTOR WILL BE AUTHORIZED BY THE PROJECT ENGINEER TO RELOCATE OR REPLACE THE CONDUIT AND/OR THE PULL BOXES AND WILL BE PAID IN ACCORDANCE WITH SECTION 01254 - CHANGE ORDERS OF THE GENERAL REQUIREMENTS. ALL WORK MUST BE PERFORMED BY A LICENSED CONTRACTOR EXPERIENCED IN TRAFFIC SIGNAL CONSTRUCTION.
    D. IN THE EVENT OF DAMAGE TO EXISTING TRAFFIC SIGNAL EQUIPMENT, CONDUIT AND DETECTOR LOOPS, THE CONTRACTOR SHALL IMMEDIATELY NOTIFY THE LADOT TRAFFIC SIGNAL SUPERINTENDENT, TELEPHONE (213) 972-4990, AND SHALL BE RESPONSIBLE FOR REPAIR OR REPLACEMENT AT NO COST TO THE CITY. REPAIRED OR REPLACED EQUIPMENT/CONDUIT SHALL BE INSPECTED BY THE TRAFFIC SIGNAL INSPECTOR BEFORE SIGNAL CIRCUITS ARE ENERGIZED.
    E. IF THE METHOD OF CONSTRUCTION INTERFERES WITH ADEQUATE VISIBILITY OF THE VEHICLE AND/OR THE PEDESTRIAN SIGNAL HEADS AT THEIR EXISTING LOCATIONS, THE CONTRACTOR SHALL PREPARE TEMPORARY AND RESTORATION SIGNAL PLANS IN SUPPORT OF THE TRAFFIC CONTROL PLAN. NECESSARY SIGNAL PLANS SHALL BE PREPARED BY A REGISTERED CIVIL/TRAFFIC ENGINEER AND SUBMITTED TO LADOT FOR APPROVAL PRIOR TO START OF CONSTRUCTION. THE CONTRACTOR SHALL BE RESPONSIBLE FOR REMOVAL AND INSTALLATION OF TEMPORARY, AS WELL AS PERMANENT TRAFFIC SIGNAL EQUIPMENT AND THE ENTIRE COST THEREOF SHALL BE BORNE BY THE CONTRACTOR.
14. TRAFFIC CONTROL NOTES
    A. TRAFFIC LANE REQUIREMENTS:
    MAINTAIN ONE LANE OF TRAFFIC IN EACH DIRECTION AT ALL TIMES; OTHERWISE, MAINTAIN ONE LANE OF TRAFFIC WITH FLAG CONTROL FROM 9AM TO 4PM WEEKDAYS. MAINTAIN LOCAL AND EMERGENCY ACCESS AT ALL TIMES. FOLLOW THE LATEST EDITION OF THE "WATCH" MANUAL AND THE CALIFORNIA MANUAL OF UNIFORM TRAFFIC CONTROL DEVICES (MUTCD), LATEST EDITION. IN THE EVENT THAT THE ROAD NEEDS TO BE CLOSED , TRAFFIC MITIGATION PLANS SHALL BE PREPARED IN ACCORDANCE WITH NOTE 12 ON THIS SHEET.
    THE CONTRACTOR SHALL NOTIFY LADOT'S SPECIAL TRAFFIC CONTROL DIVISION AT (213) 485-2298, FOUR (4) WORK DAYS PRIOR TO THE START OF CONSTRUCTION FOR THE POSTING OF TEMPORARY "TOW AWAY NO STOPPING" SIGNS AS NEEDED.
    B. TRAFFIC CONTROL DEVICE MAINTENANCE:
    THE CONTRACTOR SHALL MAKE ARRANGEMENTS FOR THE RESTORATION OF ALL OBLITERATED STRIPING AND PAVEMENT MARKINGS AND FOR THE REINSTALLATION OF ALL OTHER MISSING OR DAMAGED TRAFFIC CONTROL DEVICES (I.E., SIGNS, CURB MARKINGS, STAMPED CROSSWALKS, PARKING METERS, ETC.). WHEN NECESSARY, ADDITIONAL RELATED TRAFFIC CONTROL DEVICES, INCLUDING, BUT NOT LIMITED TO, DETOUR/CONSTRUCTION WORKSITE TRAFFIC CONTROL DEVICES SHALL BE INSTALLED IN SUPPORT OF THE PROJECT. THE CONTRACTOR WILL BE REQUIRED TO PHYSICALLY INSTALL THESE TRAFFIC CONTROL DEVICES TO THE FULL SATISFACTION OF LADOT, BUT THE CITY MAY CHOOSE TO INSTALL NONE, SOME, OR ALL OF THE SAID TRAFFIC CONTROL DEVICES. THE ENTIRE COST THEREOF SHALL BE BORNE BY THE CONTRACTOR (UNLESS PAYMENT BY THE CITY IS PRE-APPROVED BY A CITY AGENCY). ALL STRIPING AND PAVEMENT MARKINGS SHALL BE INSTALLED UTILIZING THERMOPLASTIC MATERIALS PER LADOT SPECIFICATIONS. THE CONTRACTOR SHALL CONTACT LADOT'S WESTERN DISTRICT OFFICE AT (310) 575-8138 FIVE (5) MAINTENANCE.
    FOR QUESTIONS REGARDING TRAFFIC LANE REQUIREMENTS, PLEASE CALL THE CENTRAL DISTRICT OFFICE, LADOT AT (213) 972-4990.
15. STREET IMPROVEMENTS:
    A. PAVING OF ROADWAY AREAS SHALL BE WITHHELD UNTIL THE STORM DRAIN WORK HAS BEEN APPROVED BY UNDERGROUND FINAL INSPECTION.
    B. DRIVEWAYS SHALL BE CONSTRUCTED PER STANDARD PLAN S-440-4, UNLESS OTHERWISE SHOWN ON THE PLAN.
    C. ALL DRIVEWAYS SHALL BE CONSTRUCTED ON BASE MATERIAL OF THE SAME KIND AND THICKNESS AS THAT PLACED UNDER THE CONCRETE SIDEWALK.
    D. CURB RAMPS SHALL BE CONSTRUCTED PER STANDARD PLAN S-442-6, AS SHOWN ON THE PLAN.
    E. CONSTRUCTION STAKES FOR CURB AND LONGITUDINAL GUTTER, WITH GRADE LESS THAN 0.50 %, SHALL BE SET 12.5 FEET ON THE CENTER.
16. STORM WATER POLLUTION CONTROL: THE CONTRACTOR SHALL COMPLY WITH THE PROVISIONS IN SPECIFICATIONS SECTION 01571.
17. ELEVATIONS SHOWN ON THESE PLANS ARE REFERENCED FROM THE NGVD 1929 DATUM.
18. CONTRACTORS ARE REQUIRED TO EXAMINE AND JUDGE, AS THEIR OWN RESPONSIBILITY, THE LOCATION, PHYSICAL CONDITIONS, AND SURROUNDINGS OF PROPOSED WORK.
19. THE LOCATION OF THE EXISTING UTILITIES AND SUBSTRUCTURES SHOWN HEREON HAVE BEEN TAKEN FROM RECORDS. THE ENGINEER DOES NOT WARRANT THE COMPLETENESS OR CORRECTNESS OF THE LOCATIONS. IT SHALL BE THE CONTRACTOR'S RESPONSIBILITY TO LOCATE ALL UNDERGROUND FACILITIES, BEFORE COMMENCING WORK, AND PROTECT THEM FROM DAMAGE. SHOULD UTILITIES BE ENCOUNTERED THAT ARE NOT INDICATED, NOTIFY THE ENGINEER IMMEDIATELY. MARK HIGH VOLTAGE ELECTRICAL SERVICES WITH PROPER WARNING SIGNS AND BARRICADES.
20. THE CONTRACTOR SHALL BE RESPONSIBLE FOR ALL PERMITS AND INSPECTIONS REQUIRED BY SECTION 01112 OF THE SPECIFICATIONS.
21. THE CONTRACTOR SHALL BE RESPONSIBLE FOR BARRICADING ITS WORK AREA TO PREVENT VEHICLES FROM PARKING IN THE PROPOSED LINE OF OPERATIONS. ANY DAMAGE TO PARKED VEHICLES CAUSED BY THE CONSTRUCTION OPERATIONS SHALL BE THE CONTRACTOR'S LIABILITY.
22. THE LOCATIONS OF IRRIGATION PIPING, WIRING AND EQUIPMENT ARE UNKNOWN. THE CONTRACTOR SHALL MAINTAIN A TEMPORARY SYSTEM AND REPLACE ANY IRRIGATION FACILITIES DAMAGED BY CONSTRUCTION TO PRE-CONSTRUCTION CONDITIONS.
23. ANY STREET, CURB, GUTTER, DRAIN OR PAVED AREA WHICH ARE DAMAGED OR REMOVED DURING CONSTRUCTION OF THIS PROJECT SHALL BE RETURNED TO ITS ORIGINAL CONDITION.
24. THE DRAFT GEOTECHNICAL EVALUATION FOR THE PROJECT PREPARED BY HUSHMAND ASSOCIATES, INC. (PROJECT NO. LAC-17-001; DATED JANUARY 2018) AND THE SUPPLEMENTAL UPDATE OF THE DRAFT GEOTECHNICAL REPORT PREPARED BY TETRA TECH, INC. (PROJECT NO. TET 21-203E; DATED AUGUST 2021) HAVE BEEN INCORPORATED INTO THE PROJECT PLANS & SPECIFICATIONS AS GEOTECHNICAL DATA REPORTS. THE CONTRACTOR SHALL COMPLY WITH THE RECOMMENDATIONS PRESENTED IN THE REPORTS.
25. PROVIDE FIRE DEPARTMENT ACCESS DURING CONSTRUCTION - THERE SHALL BE NO BLOCKAGE OF EXISTING HYDRANTS. IF EXISTING HYDRANTS ARE TO BE REMOVED OR ARE INACCESSIBLE CHECK WITH FIRE DEPARTMENT FOR INTERIM REQUIREMENTS.
26. CONTRACTOR SHALL PROVIDE ALL REQUIRED NOISE AND VIBRATION ABATEMENT TO MEET ALL STATE AND LOCAL ORDINANCES AND CODES.
27. ALL EXCAVATIONS SHALL BE KEPT FREE OF WATER. DEWATERING EFFLUENT SHALL BE DISCHARGED TO THE CITY SEWER SYSTEM OR THE ADJACENT STORM DRAIN. CONTRACTOR SHALL OBTAIN A PERMIT FOR THE DISCHARGE FROM THE CITY OF LOS ANGELES, BUREAU OF SANITATION (BOS) OR THE RWQCB AS NECESSARY. WATER SHALL BE TREATED PER BOS (OR RWQCB). REQUIREMENTS PRIOR TO DISCHARGING TO THE SEWER OR STORM DRAIN. DISCHARGE FLOWS TO THE SEWER SYSTEM MAY BE RESTRICTED DUE TO THE LIMITED CAPACITY.
28. SEWER CONSTRUCTION NOTES: ALL SEWER MAINTENANCE HOLES SHOWN HEREON TO BE ADJUSTED TO GRADE SHALL BE ADJUSTED TO FINISHED GRADE IN ACCORDANCE WITH STANDARD PLAN S-137-1.
29. STORM DRAIN CONSTRUCTION NOTES:
    A. ALL STORM DRAIN MAINTENANCE HOLES SHOWN HEREON TO BE ADJUSTED TO GRADE SHALL BE ADJUSTED TO FINISHED GRADE IN ACCORDANCE WITH STANDARD PLAN S-137-1.
    B. PROTECTION BARS SHALL BE INSTALLED ON ALL SIDE OPENING CATCH BASINS UNLESS INDICATED OTHERWISE ON PLAN.
    C. PER BUREAU OF ENGINEERING SPECIAL ORDER NO. 007-0701, DATED JULY 16, 2001, THE LATEST APWA STANDARD PLANS FOR PUBLIC WORKS CONSTRUCTION - SOUTHERN CALIFORNIA CHAPTER, SHALL BE UTILIZED IN LIEU OF OLDER/RETIRED BUREAU OF ENGINEERING STANDARD PLANS FOR STORM DRAIN CONSTRUCTION.
    D. TRENCH BACKFILL FOR ALL STORM DRAINS CONSTRUCTED IN DRAINAGE EASEMENTS SHALL BE MECHANICALLY COMPACTED TO A RELATIVE DENSITY OF 90%.
30. NOT USED.
31. REMOVALS:
    A. REMOVE ALL EXISTING IMPROVEMENTS THAT INTERFERE WITH THE CONSTRUCTION OF THIS PROJECT.
    B. WHERE EXISTING UTILITIES ARE TO BE REMOVED OR RELOCATED BY OTHERS, CONTRACTOR SHALL BE RESPONSIBLE FOR ALL COORDINATION WITH THE UTILITY OWNER..
32. CASE 5 BEDDING PER STANDARD PLAN S-251-1 SHALL BE PLACED IN ALL TRENCHES, EXCEPT WHERE INDICATED IN SCHEDULE OF REPAIRS.
33. SHORING SHALL COMPLY WITH THE CALIFORNIA ADMINISTRATIVE CODE, TITLE 8; CONSTRUCTION SAFETY ORDERS, "INJURY AND ILLNESS PREVENTION - SAFETY MEASURES" OF THE GENERAL CONDITIONS AND "EXCAVATION SHORING, FORMS, & FALSE WORK" OF THE GENERAL REQUIREMENTS. SHORING PLANS SHALL BE SUBMITTED TO THE PROJECT ENGINEER FOR REVIEW AND APPROVAL. SHORING PLANS SHALL BE DESIGNED IN ACCORDANCE WITH RECOMMENDATIONS OF THE PROJECT GEOTECHNICAL ENGINEERING REPORT.
34. FOR TRENCHES OR EXCAVATIONS 5 FEET OR MORE IN DEPTH INTO WHICH A PERSON IS REQUIRED TO DESCEND, THE CONTRACTOR SHALL OBTAIN NECESSARY PERMITS FROM THE STATE OF CALIFORNIA DIVISION OF INDUSTRIAL SAFETY PRIOR TO STARTING WORK.
35. THE CONTRACTOR SHALL PROTECT ALL EXISTING UTILITIES AND SUPPORT WATER CONDUITS AT TRENCH CROSSINGS IN ACCORDANCE WITH DEPARTMENT OF WATER AND POWER STANDARD DRAWINGS B1453-1A, A3615-A, A3716, AND A9219. THE CONTRACTOR SHALL SUPPORT POWER CONDUITS IN ACCORDANCE WITH DEPARTMENT OF WATER AND POWER STANDARD DRAWINGS 1-222 AND 1-224.
36. LAY DOWN AREA:
    A. ALL REPAIRS TO CONSTRUCTION LAYDOWN AREAS AND TEMPORARY IMPROVEMENTS SHALL BE INSPECTED AND APPROVED BY THE INSPECTOR AND/OR AN AUTHORIZED REPRESENTATIVE OF THE PROPERTY OWNER PER REQUEST.
    B. THE CONTRACTOR SHALL REMOVE, RE-GRADE AND, WHEN NECESSARY, BACKFILL TO RESTORE THE CONSTRUCTION LAYDOWN ACCESS AND TEMPORARY IMPROVEMENTS TO ITS ORIGINAL/FORMER CONDITION AT THE COMPLETION OF THE WORK.
    C. THE CONTRACTOR SHALL BACKFILL EXCAVATED AREAS WITH ENGINEERED FILL UP TO THE ORIGINAL GRADE, UNLESS OTHERWISE SPECIFIED OR INDICATED ON THESE PLANS. BACKFILL PIPE TRENCH ACCESSES ONLY AFTER PIPING HAS BEEN INSPECTED.
    D. THE LAYDOWN AREA MAY BE MOVED THROUGHOUT CONSTRUCTION TO FACILITATE CONSTRUCTION AT NO ADDITIONAL COST TO THE CITY.
37. GRADING NOTES
    A. ALL GRADING SLOPES SHALL BE PLANTED AND SPRINKLERED PER THE PLANS AND SPECIFICATIONS.
    B. STANDARD 12 INCH HIGH BERM IS REQUIRED AT TOP OF ALL GRADED SLOPES.
    C. NO FILL TO BE PLACED UNTIL THE INSPECTOR HAS INSPECTED AND APPROVED THE BOTTOM EXCAVATION.
    D. MAN-MADE FILL SHALL BE COMPACTED TO A MINIMUM RELATIVE COMPACTION OF 90% MAXIMUM DRY DENSITY WITHIN 40 FEET BELOW FINISH GRADE AND 93% OF MAXIMUM DRY DENSITY DEEPER THAN 40 FEET BELOW FINISH GRADE, UNLESS A LOWER RELATIVE COMPACTION (NOT LESS THAN 90% OF MAXIMUM DRY DENSITY) IS JUSTIFIED BY THE SOILS ENGINEER, UNLESS A HIGHER RELATIVE COMPACTION PERCENTAGE IS NOTED ELSEWHERE IN THE CONTRACT DOCUMENTS.
    E. TEMPORARY EROSION CONTROL TO BE INSTALLED BETWEEN OCTOBER 1 AND APRIL 15. OBTAIN INSPECTOR'S AND DEPARTMENT OF PUBLIC WORKS APPROVAL OF PROPOSED PROCEDURES.
    F. CONTRACTOR SHALL COMPLY WITH THE GRADING REQUIREMENTS IN THE PROJECT SPECIFICATIONS.
38. CONTINUOUS INSPECTION BY THE SOILS ENGINEER/GEOLOGIST IS REQUIRED FOR REMOVAL AND RECOMPACTION. IT IS ALSO REQUIRED FOR THE EXCAVATION FOR SHORING.
39. THE CONSTRUCTION SHALL NOT RESTRICT A FIVE-FOOT CLEAR AND UNOBSTRUCTED ACCESS TO ANY WATER OR POWER DISTRIBUTION FACILITIES (POWER POLES, PULL-BOXES, TRANSFORMERS, VAULTS, PUMPS, VALVES, METERS, APPURTENANCES, ETC.) OR TO THE LOCATION OF THE HOOKUP. THE CONSTRUCTION SHALL NOT BE WITHIN TEN FEET OF ANY POWER LINES-WHETHER OR NOT THEY ARE LOCATED ON THE PROPERTY. FAILURE TO COMPLY MAY CAUSE CONSTRUCTION DELAYS AND/OR ADDITIONAL EXPENSES.
40. RETAINING WALLS LOCATED CLOSER TO THE PROPERTY LINE THAN THE HEIGHT OF THE WALL SHALL BE BACKFILLED NOT LATER THAN 10 DAYS AFTER CONSTRUCTION OF THE WALL AND NECESSARY STRUCTURAL SUPPORTING MEMBERS UNLESS RECOMMENDED OTHERWISE BY RESPONSIBLE ENGINEER.
41. PROVIDE ACCESS TO ADJOINING PROPERTIES AT ALL TIMES THROUGH THE USE OF PLATES OR TEMPORARY RAMPS.
42. COMPLY WITH NOTIFICATION OF ADJOINING PROPERTY BY GIVING A 30-DAY WRITTEN NOTICE (BY CERTIFIED MAIL AND RETURN RECEIPT) PER LADBS P/BC 2014-060 TO ADJACENT PROPERTY OWNERS, OF INTENT TO EXCAVATE WHERE EXCAVATION IS DEEPER THAN THE FOUNDATION OF ADJOINING BUILDING OR LOCATION CLOSER TO PROPERTY LINE THAN THE DEPTH OF EXCAVATION.

PROJECT UTILITY AGENCIES

AT&T CALIFORNIA
AT&T DISTRIBUTION
AT&T TCA
AT&T TRANSMISSION
CHEVRON
CITY OF LOS ANGELES
CROWN CASTLE
EXXON MOBIL
KINDER MORGAN ENERGY PARTNERS
LOS ANGELES COUNTY FLOOD CONTROL DISTRICT
LOS ANGELES DEPARTMENT OF WATER AND POWER
MCI (VERIZON BUSINESS)
LOS ANGELES COUNTY METRO TRANSIT AUTHORITY
MOBIL OIL
SC GAS DISTRIBUTION
SC GAS TRANSMISSION
SHELL OIL
SPECTRUM
SUNESYS (CROWN CASTLE)
TIME WARNER CABLE
T-MOBILE
TORRANCE LOGISTICS CO/PBF ENERGY
XO COMMUNICATIONS

BUREAU OF ENGINEERING
OFFICIAL RECORD

THE CITY OF LOS ANGELES OR ITS OFFICERS OR AGENTS SHALL NOT BE RESPONSIBLE FOR THE ACCURACY OR COMPLETENESS OF ELECTRONIC COPIES OF THIS PLAN SHEET.

REVISION DATES (DESIGN STAGE ONLY)

Sheet Version 3.0

BUREAU OF ENGINEERING
ENGINEERING
CITY OF LOS ANGELES

NO.	REVISIONS:	DATE	BY:

BUILDING NO.

INDEX NO. MF-300501

THIS PLAN WAS ELECTRONICALLY SIGNED AND STAMPED

PROFESSIONAL ENGINEER — REGISTERED — JUSTIN T. SMITH — No. 85736 EXP: 9-30-22 — CIVIL — STATE OF CALIFORNIA

CITY OF LOS ANGELES
DEPARTMENT OF PUBLIC WORKS

CITY ENGINEER

GROUP		DATE:	07/11/22
ENGINEER:	JUSTIN SMITH	LIC. NO.	C-85736
DESIGNED BY:	JUSTIN SMITH		
DRAWN BY:	DAVID LOPEZ		
CHECKED BY:	NATE SCHREINER		
APPROVED BY:	JASON L. FUSSEL		

TED ALLEN, P.E.
DESIGN GROUP

VERT. CONTROL: BM 12-04070, 1929 (NGVD29) - 1985 ADJUSTMENT
HORIZ. CONTROL: GPS; PID AE 1704, EPOCH 1991.35

SHEET TITLE: NOTICE TO CONTRACTORS SHEET 1

PROJECT: SIXTH STREET PARK, ARTS AND RIVER CONNECTIVITY IMPROVEMENTS (PARC)

ADDRESS: SIXTH STREET OVER THE LOS ANGELES RIVER

PLANS PREPARED BY:
TETRA TECH, INC.
707 WILSHIRE BLVD, 23RD FLR.
LOS ANGELES, CA 90017
PHONE: (213) 239-9866

WORK ORDER NO. E700235D
FILE NO. --
DRAWING NO. G-002
SHEET 2 OF 295 SHEETS

7/8/2022 9:40:19 AM - O:\PROJECTS\IRVINE\20043200-20043-17001\CAD\SHEETFILES\G-002_NOTICE TO CONTRACTORS.DWG - SMITH, JUSTIN

NOTES FOR WORK NEAR CITY OF LOS ANGELES SEWERS

43. ALL EXISTING SEWERS, HOUSE CONNECTION SEWERS AND STORM DRAINS THAT CROSS THE PROPOSED SEWER TRENCH SHALL BE SUPPORTED IN ACCORDANCE WITH STANDARD PLAN S-253-0. THE CONTRACTOR SHALL SUBMIT CALCULATIONS AND DRAWINGS OF SUPPORT FOR LARGE UTILITIES AND STRUCTURES FOR APPROVAL BY THE ENGINEER.

44. TRENCH BACKFILL AND COMPACTION:
TRENCH BACKFILL FOR THIS PROJECT SHALL BE MECHANICALLY COMPACTED TO A MINIMUM RELATIVE COMPACTION OF 90 PERCENT. JETTING OR FLOODING IS PROHIBITED.

45. CLOSED CIRCUIT TELEVISION (CCTV) INSPECTION REQUIREMENT:
   A. THE CONTRACTOR SHALL BE RESPONSIBLE FOR WORKING WITH THE PROJECT ENGINEER TO OBTAIN NECESSARY PERMITS AND PROVIDING A CCTV INSPECTION. THE CONTRACTOR SHALL RECORD THE INSPECTION USING DIGITAL VIDEO DISC (DVD) PER BROWN BOOK SECTION 500-1.3. THE CCTV SHALL BE PERFORMED BY A BONDED SEWER CONTRACTOR, IN THE PRESENCE OF BUREAU OF CONTRACT ADMINISTRATION PERSONNEL.
   B. PRIOR TO CCTVING, THE CONTRACTOR SHALL COMPLY WITH ALL REQUIREMENTS STIPULATED IN THE PRE/POST CCTV CHECKLIST (SEWER/STORM), AND NOTIFY THE BUREAU OF SANITATION CONTACT PERSONNEL LISTED ON THE NOTIFICATION ROSTER OF THE REQUIRED SEWAGE SPILL PREVENTION AND RESPONSE REQUIREMENTS AND NOTIFY APPROPRIATE INSPECTION OFFICE BEFORE NOON ON WORKDAY BEFORE INSPECTION IS REQUIRED AT: (213) 485-5080 OR HTTPS://BCA.LACITY.ORG/DISPATCH.
   C. THE CCTV SHALL BE CONDUCTED AT TWO (2) CONSTRUCTION STAGES : PRIOR TO START OF CONSTRUCTION, AFTER THE COMPLETION OF THE PROJECT. AT EACH STAGE THE DVD AND RECORD LOG SHALL BE SUBMITTED TO THE CITY OF LOS ANGELES FOR REVIEW AND CONFIRMATION THAT NO DAMAGE HAS OCCURRED TO THE SEWERS, AND TO OBTAIN LASAN APPROVAL TO CONTINUE WITH THE NEXT CONSTRUCTION OPERATION.
   D. VIDEO INSPECTION SHALL COVER THE ENTIRE LENGTH OF THE SEWER WITHIN THE PROJECT LIMIT OR REQUIRED AND SHALL BE DONE IN ACCORDANCE WITH THE LATEST EDITION OF CITY OF LOS ANGELES BROWN BOOK, SECTION 500.
   E. THE CONTRACTOR SHALL COMPLETE AND SUBMIT THE PRE/POST CCTV CHECKLIST WITH THE CCTV PACKAGE TO THE PROJECT ENGINEER FOR LASAN APPROVAL.
   F. THE CCTV PACKAGE INCLUDES THREE (3) DVDS, THREE (3) RECORD LOGS, THE CCTV PERMIT WITH INSPECTOR'S NAME AND PHONE NUMBER, DESIGN PLANS, AND RECORD OF EASEMENT ACKNOWLEDGEMENT, IF APPLICABLE. SUBMITTED DVDS AND RECORD LOGS SHALL BECOME A PROPERTY OF THE CITY. THE PROJECT ENGINEER WILL FORWARD THE COMPLETED CCTV PACKAGE TO THE CLEAN WATER COLLECTION DIVISION AT SAN.CWREVIEW@LACITY.ORG.
   G. ANY DAMAGE REVIEWED IN THE CCTV TO THE SEWERS RESULTING FROM CONSTRUCTION ACTIVITIES SHALL BE PROMPTLY REPAIRED BY THE CONTRACTOR/DEVELOPER AT THEIR COST AND TO THE SATISFACTION OF THE CITY OF LOS ANGELES, DEPARTMENT OF PUBLIC WORK, BUREAU OF ENGINEERING, WASTEWATER CONVEYANCE ENGINEERING DIVISION AND STRUCTURAL ENGINEERING DIVISION AND THE BUREAU OF SANITATION. THE DECISION OF THE AFOREMENTIONED DEPARTMENT CONCERNING THE EXTENT OF DAMAGE, AS WELL AS THE REQUIRED REPAIR METHODOLOGY IS FINAL.
   H. CCTV FOR THIS PROJECT IS REQUIRED FOR:

U/S MH NO.	D/S MH NO.	STREET	PIPE LENGTH (FT)
515-09-139	515-09-135	EASE N/O WHITTIER BLVD	343
515-09-145	515-09-219	MISSION RD	384
515-09-134	515-09-142	MISSION RD	312
515-09-106	515-09-109	6TH ST	300
515-09-178	515-09-108	6TH ST	285
515-09-151	515-09-178	6TH ST	96.8
515-09-125	515-09-136	ANDERSON ST	362
515-09-136	515-13-013	ANDERSON ST	363
515-09-138	515-09-141	CLARENCE ST	254
515-09-141	515-13-014	CLARENCE ST	255

46. SPILL PREVENTION AND EMERGENCY RESPONSE PLAN:
   A. THE CONTRACTOR SHALL OBSERVE AND COMPLY WITH THE CITY'S POLICY OF "ZERO SEWER SPILLS" ADOPTED BY THE BOARD OF PUBLIC WORKS ON JANUARY 10, 2011, AND SHALL BE IN FULL CHARGE AND BE RESPONSIBLE FOR THE JOBSITE AND THE CONSTRUCTION WORK OF THIS CONTRACT. THE ZERO SEWER SPILLS POLICY CAN BE FOUND AT HTTPS://BOE.LACITY.ORG/DOCS/DPW/AGENDAS/2011/201101/20110110/BCA/20110110_AG_MO_BCA_BOE_BOS.PDF.
   B. THE CONTRACTOR SHALL OBSERVE AND COMPLY WITH ALL FEDERAL, STATE, AND LOCAL LAWS, ORDINANCES, CODES, AND REGULATIONS WHICH IN ANY MANNER AFFECT THE CONDUCT OF THE WORK, SPECIFICALLY AS IT RELATES TO SEWAGE SPILLS.
   C. THE CONTRACTOR SHALL BE FULLY RESPONSIBLE FOR PREVENTING SEWAGE SPILLAGE, CONTAINING ANY SEWAGE SPILLAGE, RECOVERY AND LEGAL DISPOSAL OF ANY SPILLED SEWAGE, ANY AND ALL FINES, PENALTIES, CLAIMS AND LIABILITY ARISING FROM NEGLIGENTLY CAUSING A SEWAGE SPILLAGE AND ANY VIOLATION OF ANY LAW, ORDINANCE, CODE, ORDER, OR REGULATION AS A RESULT OF THE SEWAGE SPILLAGE.
   D. PRIOR TO THE START OF CONSTRUCTION THE CONTRACTOR SHALL DEVELOP AND SUBMIT A WRITTEN SPILL RESPONSE PLAN IN ACCORDANCE WITH THE BROWN BOOK SECTION 7-8.5.3, TO THE CITY FOR REVIEW AND APPROVAL BY . NO CONSTRUCTION ACTIVITIES SHALL BE STARTED WITHOUT THE APPROVAL OF THE SUBMITTAL.
   E. THE CONTRACTOR SHALL BE RESPONSIBLE FOR RESOLVING ANY SEWAGE SPILLS CAUSED BY THE CONSTRUCTION, WHETHER THE SPILLS OCCUR ON OR OFF THE PROJECT SITE.
   F. THE CONTRACTOR SHALL SUBMIT THE SPILL RESPONSE PLAN TO THE PROJECT ENGINEER FOR LASAN APPROVAL.
   G. IN CASE OF A SEWAGE SPILL, THE CONTRACTOR SHALL, WITHOUT INSTRUCTIONS FROM THE CITY, ACT IMMEDIATELY TO CONTROL THE SPILL AND TAKE ALL APPROPRIATE STEPS TO CONTAIN IT IN ACCORDANCE WITH THE SPILL RESPONSE PLAN. THE CONTRACTOR SHALL IMMEDIATELY NOTIFY THE CITY REPRESENTATIVES OF THE SPILL AND ALL ACTIONS TAKEN. THE CONTRACTOR SHALL, WITHIN THREE WORKING DAYS FROM THE OCCURRENCE OF THE SPILL, SUBMIT TO THE ENGINEER A WRITTEN CONFIRMATION REPORT DESCRIBING THE FOLLOWING INFORMATION RELATED TO THE SPILL
      1. THE LOCATION ON A "THOMAS GUIDE MAP."
      2. THE NATURE AND VOLUME OF THE SPILL.
      3. THE DATE AND TIME OF THE SPILL.
      4. THE DURATION OF THE SPILL.
      5. THE CAUSE OF THE SPILL.
      6. THE TYPE OF REMEDIAL AND/OR CLEAN UP MEASURES TAKEN AND THE DATE AND TIME OF IMPLEMENTATION.
      7. THE CORRECTIVE AND/OR PREVENTATIVE ACTION TAKEN TO ELIMINATE THE POSSIBILITY OF A RECURRENCE.
      8. THE WATER BODY AFFECTED.
      9. THE RESULTS OF ANY NECESSARY MONITORING.

47. SEWER BYPASS AND PUMPING PLAN:
   A. THE CONTRACTOR IS ADVISED THAT ALL REPAIRS ARE TO LIVE SEWERS. THE CONTRACTOR SHALL PROVIDE TEMPORARY MEANS TO MAINTAIN THE SEWAGE FLOW IN THE EXISTING SYSTEM AS REQUIRED TO COMPLETE THE NECESSARY CONSTRUCTION. THE CONSTRUCTION SHALL PREPARE AND SUBMIT A DETAILED BYPASS PLAN TO THE CITY FOR REVIEW AND APPROVAL BY LASAN PRIOR TO THE INSTALLATION OF THE BYPASS PLAN. BYPASS PLANS ARE REQUIRED FOR ANY OPEN CUT INSTALLATION CROSSING UNDER PRIMARY (>15") SEWERS, UNDERMINING THE BEDDING OR EXPOSING THE SEWER.
   B. UNLESS OTHERWISE INDICATED IN THIS PLAN THE BYPASS PLAN SHALL BE IN ACCORDANCE WITH THE LATEST BROWN BOOK, SECTIONS 7-8.5.2, 7-8.5.3, AND 306-6.1.

48. PLACING, SPREADING AND COMPACTING FILL MATERIAL: SPECIAL PRECAUTIONS AND PROTECTION SHALL BE CONSIDERED, WHEN WORKING IN THE IMMEDIATE AREA OVER AND AROUND EXISTING NORTH OUTFALL (NOS) AND NORTHEAST INTERCEPTOR SEWERS (NEIS). NO BACKFILL AND RECOMPACTION IN THAT AREA SHALL NOT BE DONE WITHOUT THE APPROVAL OF THE CITY SOILS ENGINEER. NO HEAVY MACHINERY, SPIKE ROLLERS OR HEAVY COMPACTORS SHALL BE USED FOR BACKFILL AND COMPACTION OPERATIONS OVER THE 30 FEET MINIMUM STRIP (15 FEET EACH SIDE OF THE CENTER LINE OF NOS), AND HEAVY EQUIPMENT CAN BE PERMITTED OVER THE SEWER ONLY IF THE CONDUIT IS EXCAVATED, EXPOSED AND ENCASED IN CONCRETE.

49. FOR ANY CONSTRUCTION OVER THE NOS OR NEIS THERE SHALL BE NO LOADING, VIBRATION OR SETTLEMENT/HEAVE (GREATER THAN 0.5 INCHES) TO THE NOS OR NEIS. NO SHORING PILES SHALL BE DRIVEN OR BY VIBRATORY METHODS UNLESS APPROVED BY THE PROJECT ENGINEER. ALL DRILLED PILES SHALL BE AT LEAST 5 FEET CLEAR EDGE TO EDGE FROM THE NOS MAINLINE OR STRUCTURES.

50. SEWER WORK:
ALL SEWER WORK SHALL BE DONE BY AN APPROVED SEWER BONDED CONTRACTOR. A LIST OF APPROVED CONTRACTORS CAN BE FOUND AT HTTP://ENGPERMITS.LACITY.ORG/SPERMITS/.

51. APPROVED SEWER PRODUCTS:
ALL SEWER PRODUCTS USED WITHIN THE CITY OF LOS ANGELES, PRIMARY AND SECONDARY SEWER SYSTEMS, SHALL BE FROM THE APPROVED PRODUCTS FOUND AT HTTP://BOE.LACITY.ORG/APM/.

52. CITY OF LOS ANGELES DEPARTMENT OF PUBLIC WORKS NOTIFICATION THE CONTRACTOR SHALL NOTIFY THE DEPARTMENT OF PUBLIC WORKS CONTACTS LISTED IN THE NOTIFICATION ROSTER LISTS BY PHONE AND EMAIL TEN (10) WORKING DAYS PRIOR TO START OF ANY WORK IN THE VICINITY OF THE CENTRAL OUTFALL SEWER; INCLUDING CLEANING, CONSTRUCTION, AND CCTVING. THE CONTRACTOR SHALL IMMEDIATELY NOTIFY THE DEPARTMENT OF PUBLIC WORKS IN THE EVENT OF ANY SEWAGE SPILL OR SEWER EMERGENCY.

BOS NOTIFICATION ROSTER:

CLEAN WATER NORTH CONVEYANCE DIVISION (CWNCD)			
KWASI BERKO	ACTING DIVISION MANAGER	OFFICE: (323) 342-6004, CELL: (213) 675-0470	KWASI.BERKO@LACITY.ORG
GERALD WATSON	MANAGER II	OFFICE: (323) 342-6003, CELL: (213) 422-7780	GERALD.WATSON@LACITY.ORG
VINCENT TAN	ACT MANAGER II	OFFICE: (323) 342-6040 CELL: (213) 814-7182	VINCENT.TAN@LACITY.ORG
CLEAN WATER SOUTH CONVEYANCE DIVISION (CWSCD)			
MARK FERNANDEZ	ACTING DIVISION MANAGER	(213) 280-2018	MARK.FERNANDEZ@LACITY.ORG
VENICE PUMP PLANT	24 HOUR EMERGENCY	(310) 823-5507, (310) 822-0777	
CITY WIDE	BUREAU OF SANITATION	(213) 485-7575	

BOE NOTIFICATION ROSTER:

EDWARD ARRINGTON	DIVISION ENGINEER	(213) 485-1694	EDWARD.ARRINGTON@LACITY.ORG
HORTENSIA ALONSO	ASSISTANT DIVISION MANAGER	(213) 485-1641	HORTENSIA.ALONSO@LACITY.ORG
VIVIAN LUI	CIVIL ENGINEER	(213) 847-0310	VIVIAN.LUI@LACITY.ORG

HORIZONTAL AND VERTICAL CONTROL

HORIZONTAL CONTROL:
NAD 83 (ZONE 5) COORDINATES
PER F.B. 126-217 PAGES 123, 129, 140, 174, 175, AND 191
F.B. 123-221 PAGE 106

HELD COORD. PER NAVIGATE LA: (BASIN OF BEARINGS, S 77-38-27 E)
(HELD FOR POSITION) CP NO. 14 NORTHING 1836387.06
FD SSDM PER 126-217 P123 EASTING 6491165.61
(HELD FOR POSITION) CP NO. 712 NORTHING 1835473.68
FD SMHM PER 123-221 P106 EASTING 6495334.11

BENCHMARK:
NGVD 1929-1985 ADJUSTMENT
BM 12-04070 ELEV'N = 247.26
BM 11-02339 ELEV'N = 318.86

OFF-STREET PARKING SUMMARY

PARKING PLAZA TOTAL PARKING SPACES = 14 SPACES
- STANDARD PARKING SPACES = 2 SPACES
- STANDARD PARKING SPACES - RESERVED FOR CITY STAFF = 6 SPACES
- EV/CLEAN AIR/VANPOOL (FUTURE EV CHARGER CAPABLE) PARKING SPACES = 1 SPACE
- EV/CLEAN AIR/VANPOOL (FUTURE EV CHARGER CAPABLE) PARKING SPACES - RESERVED FOR CITY STAFF = 2 SPACES
- VAN ACCESSIBLE EV CHARGING PARKING SPACE = 1 SPACE
- EV CHARGING PARKING SPACE - RESERVED FOR CITY STAFF = 1 SPACE
- VAN ACCESSIBLE ADA PARKING SPACES = 1 SPACE

ABBREVIATIONS

AC	ASPHALT CONCRETE
ACC	ACCESSIBLE
AGG	AGGREGATE
BBALL	BASKETBALL COURT/BASEBALL FIELD
BC	BEGINNING OF CURVE
BE	BOTTOM ELEVATION
BEG	BEGIN
BG	BOTTOM GRADE
BMP	BEST MANAGEMENT PRACTICE
CA MUTCD	CALIFORNIA MANUAL ON UNIFORM TRAFFIC CONTROL DEVICES
CB	CATCH BASIN
CF	CUBIC FEET/CURB FACE
CFS	CUBIC FEET PER SECOND
CH	CHAPTER
CLF	CHAIN LINK FENCE
CO	CLEAN OUT
CONC	CONCRETE
DG	DECOMPOSED GRANITE
DHW	DESIGN HIGH WATER
DLH	DESIGN LOW WATER
DOC	DOCUMENT
DWG	DRAWING
DWP	DEPARTMENT OF WATER AND POWER
DWPWS	DEPARTMENT OF WATER AND POWER, WATER SERVICE
E	ELECTRICAL LINE
EA	EACH
EC	END OF CURVE
EL	ELEVATION
ELEV	ELEVATION
EX/EXIST	EXISTING
FG	FINISH GRADE
FL	FLOW LINE
FS	FINISH SURFACE
G	GAS LINE
GA	GAUGE
GALV	GALVINIZED
GB	GRADE BREAK
GPR	GROUND PENETRATING RADAR
GTR	GUTTER
HDPE	HIGH DENSITY POLYETHYLENE
HDS	HYDRO DYNAMIC SEPARATOR
HP	HIGH POINT ELEVATION
HR	HOUR
IN	INCHES
INV	INVERT
LABC	LOS ANGELES BUILDING CODE
LF	LINEAR FOOT
LG	LIP OF GUTTER
LP	LOW POINT ELEVATION/LIGHT POLE
MAX	MAXIMUM
MH	MAINTENANCE HOLE
MIL	MILI LITERS
MIN	MINIMUM
N.A.P.	NOT A PART
NO	NUMBER
NOS	NORTH OUTFALL SEWER
NTS	NOT TO SCALE
OC	ON CENTER
OD	OUTSIDE DIAMETER
OP	CURB OPENING
PLNT	PLANTER
POC	POINT OF CONNECTION
PVC	POLYVINYL CHLORIDE PIPE
PVMT	PAVEMENT
SPPWC	APWA STANDARD PLANS FOR SOUTHERN CALIFORNIA PUBLIC WORKS CONSTRUCTION
RAP	RECREATION AND PARKS
R & S	REMOVE AND SALVAGE
RCP	REINFORCED CONCRETE PIPE
RP	RADIAL POINT
R/W	RIGHT OF WAY
SD	STORM DRAIN
SIMMS	SEWER INVENTORY MAINTENANCE MANAGEMENT SYSTEM
SS	SANITARY SEWER/STAINLESS STEEL
STA	STATION
STD	STANDARD
SW/SWLK	SIDEWALK
TB	TOP OF BERM
TC	TOP OF CURB
TEL	TELEPHONE
TF	TOP OF FOOTING ELEVATION
TG	TOP OF GRATE
TV	TREATMENT VALVE
TW	TOP OF WALL ELEVATION
TYP	TYPICAL
VCP	VITRIFIED CLAY PIPE
W	DOMESTIC WATER
WSE	WATER SURFACE ELEVATION
WM	WATER METER
WV	WATER VALVE

EARTHWORK NOTES:

1. THE CONTRACTOR SHALL CALCULATE THEIR OWN EARTHWORK QUANTITIES NECESSARY FOR THEIR BID AND WORK. CITY IS NOT RESPONSIBLE AND LIABLE FOR THE CONTRACTOR'S EARTHWORK CALCULATION. THE EARTHWORK CALCULATIONS SHALL TAKE INTO ACCOUNT THE REMOVAL OF HAZARDOUS SOILS AS PART OF THE PROJECT'S REMEDIAL ACTION PLAN. REFER TO THE SPECIFICATIONS FOR ADDITIONAL INFORMATION.
2. EXISTING GRADES MAY HAVE CHANGED DUE TO ON-GOING VIADUCT PROJECT CONSTRUCTION ACTIVITIES THROUGHOUT THE PROJECT LIMITS. ORIGINAL DATE OF SURVEY WAS 2012 WITH SUPPLEMENTAL SURVEY IN 2017. CONTRACTOR SHALL PERFORM AN EXISTING TOPOGRAPHIC SURVEY OF THE PROJECT AREAS PRIOR TO BEGINNING WORK, AND THE TOPOGRAPHIC SURVEY SHALL BE SUBMITTED TO THE CITY FOR REVIEW.
3. EXISTING ON-SITE MATERIALS TO BE REUSED AS BACKFILL AND IMPORTED MATERIALS MUST FIRST BE APPROVED BY THE GEOTECHNICAL ENGINEER PRIOR TO INSTALLATION, REMOVAL, OR REPLACEMENT.

SOILS REPORT AND INVESTIGATION

UPDATE OF DRAFT GEOTECHNICAL REPORT FOR THE SIXTH STREET VIADUCT - PARK, ARTS AND RIVER CONNECTIVITY (PARC) IMPROVEMENTS PROJECT PREPARED BY TETRA TECH, INC. (PROJECT NO. TET21-203E), REPORT DATED AUGUST 2021 AND THE DRAFT GEOTECHNICAL EVALUATION FOR THE PROJECT PREPARED BY HUSHMAND ASSOCIATES, INC. (PROJECT NO. LAC-17-001; DATED JANUARY 2018)

BUREAU OF ENGINEERING
OFFICIAL RECORD

THE CITY OF LOS ANGELES OR ITS OFFICERS OR AGENTS SHALL NOT BE RESPONSIBLE FOR THE ACCURACY OR COMPLETENESS OF ELECTRONIC COPIES OF THIS PLAN SHEET.

REVISION DATES (DESIGN STAGE ONLY)

Sheet Version 3.0

BUREAU OF ENGINEERING
ENGINEERING
CITY OF LOS ANGELES

NO.	REVISIONS:	DATE	BY:

BUILDING NO.
INDEX NO. MF-300501

THIS PLAN WAS ELECTRONICALLY SIGNED AND STAMPED

JUSTIN T. SMITH
No. 85736
EXP: 9-30-22
REGISTERED PROFESSIONAL ENGINEER
CIVIL
STATE OF CALIFORNIA

CITY OF LOS ANGELES DEPARTMENT OF PUBLIC WORKS

CITY ENGINEER: TED ALLEN, P.E.
DESIGN GROUP
ENGINEER: JUSTIN SMITH LIC. NO. C-85736 DATE: 07/11/22
DESIGNED BY: JUSTIN SMITH
DRAWN BY: DAVID LOPEZ
CHECKED BY: NATE SCHREINER
APPROVED BY: JASON L. FUSSEL

VERT. CONTROL: BM 12-04070, 1929 (NGVD29) - 1985 ADJUSTMENT
HORIZ. CONTROL: GPS; PID AE 1704, EPOCH 1991.35

SHEET TITLE: NOTICE TO CONTRACTORS SHEET 2
PROJECT: SIXTH STREET PARK, ARTS AND RIVER CONNECTIVITY IMPROVEMENTS (PARC)
ADDRESS: SIXTH STREET OVER THE LOS ANGELES RIVER

PLANS PREPARED BY:
TETRA TECH, INC.
707 WILSHIRE BLVD, 23RD FLR.
LOS ANGELES, CA 90017
PHONE: (213) 239-3866

WORK ORDER NO. E700235D
FILE NO. --
DRAWING NO. G-003
SHEET 3 OF 295 SHEETS

7/8/2022 9:52:38 AM - O:\PROJECTS\RIVINE\20043\2000-20043-17001\CAD\SHEETFILES\G-003_NOTICE TO CONTRACTORS.DWG - SMITH, JUSTIN

SHEET LIST TABLE

SHEET #	DRAWING #	SHEET TITLE
1	G-001	TITLE SHEET
2	G-002	NOTICE TO CONTRACTORS SHEET 1
3	G-003	NOTICE TO CONTRACTORS SHEET 2
4	G-004	SHEET INDEX
5	G-005	BORING LOGS SHEET 1
6	G-006	BORING LOGS SHEET 2
7	G-007	BORING LOGS SHEET 3
8	G-008	BORING LOGS SHEET 4
9	G-009	OVERALL CONSTRUCTION SEQUENCE PLAN SHEET 1
10	G-010	OVERALL CONSTRUCTION SEQUENCE PLAN SHEET 2
11	G-011	ACCESSIBILITY PLAN SHEET 1
12	G-012	ACCESSIBILITY PLAN SHEET 2
13	G-013	OVERALL SITE PLAN SHEET 1
14	G-014	OVERALL SITE PLAN SHEET 2
15	G-015	LEGEND
16	CD-001	DEMOLITION PLAN SHEET 1
17	CD-002	DEMOLITION PLAN SHEET 2
18	CD-003	DEMOLITION PLAN SHEET 3
19	CD-004	DEMOLITION PLAN SHEET 4
20	CD-005	DEMOLITION PLAN SHEET 5
21	C-100	EROSION AND SEDIMENT CONTROL PLAN SHEET 1
22	C-101	EROSION AND SEDIMENT CONTROL PLAN SHEET 2
23	C-102	EROSION AND SEDIMENT CONTROL PLAN SHEET 3
24	C-103	EROSION AND SEDIMENT CONTROL PLAN SHEET 4
25	C-104	EROSION AND SEDIMENT CONTROL PLAN SHEET 5
26	C-105	EROSION AND SEDIMENT CONTROL DETAILS
27	C-200	HORIZONTAL CONTROL PLAN SHEET 1
28	C-201	HORIZONTAL CONTROL PLAN SHEET 2
29	C-202	HORIZONTAL CONTROL PLAN SHEET 3
30	C-203	HORIZONTAL CONTROL PLAN SHEET 4
31	C-204	HORIZONTAL CONTROL PLAN SHEET 5
32	C-205	HORIZONTAL CONTROL LINE TABLES
33	C-206	HORIZONTAL CONTROL CURVE TABLES
34	C-207	HORIZONTAL CONTROL POINT TABLES SHEET 1
35	C-208	HORIZONTAL CONTROL POINT TABLES SHEET 2
36	C-209	HORIZONTAL CONTROL POINT TABLES SHEET 3
37	C-210	HORIZONTAL CONTROL POINT TABLES SHEET 4
38	C-211	HORIZONTAL CONTROL POINT TABLES SHEET 5
39	C-212	HORIZONTAL CONTROL POINT TABLES SHEET 6
40	C-213	HORIZONTAL CONTROL POINT TABLES SHEET 7
41	C-400	DOMESTIC WATER PLAN SHEET 1
42	C-401	DOMESTIC WATER PLAN SHEET 2
43	C-402	DOMESTIC WATER PLAN SHEET 3
44	C-403	STORM DRAIN PLAN SHEET 1
45	C-403A	STORM DRAIN PLAN & PROFILE SHEET 2
46	C-404	STORM DRAIN PLAN SHEET 3
47	C-405	STORM DRAIN PLAN & PROFILE SHEET 4
48	C-406	STORM DRAIN PLAN & PROFILE SHEET 5
49	C-407	STORM DRAIN PLAN & PROFILE SHEET 6
50	C-408	STORM DRAIN PLAN & PROFILE SHEET 7
51	C-409	STORM DRAIN PLAN & PROFILE SHEET 8
52	C-410	STORM DRAIN PLAN & PROFILE SHEET 9
53	C-411	STORM DRAIN PLAN SHEET 10
54	C-415	SEWER PLAN SHEET 1
55	C-416	SEWER PLAN SHEET 2
56	C-500	STREET IMPROVEMENTS SANTA FE AVENUE
57	C-501	STREET IMPROVEMENTS MISSION ROAD
58	C-502	STREET IMPROVEMENTS ANDERSON STREET
59	C-503	STREET IMPROVEMENTS CLARENCE STREET
60	C-504	SIGNING AND STRIPING NOTES
61	C-505	SIGNING AND STRIPING SANTA FE AVENUE
62	C-506	SIGNING AND STRIPING MISSION ROAD
63	C-507	SIGNING AND STRIPING ANDERSON STREET
64	C-508	SIGNING AND STRIPING CLARENCE STREET
65	C-600	CIVIL DETAILS SHEET 1
66	C-601	CIVIL DETAILS SHEET 2
67	C-602	CIVIL DETAILS SHEET 3
68	C-603	CIVIL DETAILS SHEET 4
69	C-604	CIVIL DETAILS SHEET 5
70	C-605	CIVIL DETAILS SHEET 6
71	C-606	CIVIL DETAILS SHEET 7
72	C-607	CIVIL DETAILS SHEET 8
73	C-608	CIVIL DETAILS SHEET 9
74	C-609	CIVIL DETAILS SHEET 10
75	C-610	CIVIL DETAILS SHEET 11
76	C-611	CIVIL DETAILS SHEET 12
77	C-612	CIVIL DETAILS SHEET 13
78	C-613	CIVIL DETAILS SHEET 14
79	C-614	CIVIL DETAILS SHEET 15
80	L-001	LANDSCAPE NOTES & ABBREVIATIONS
81	L-016	SITE GRADING PLAN
82	L-017	SITE HARDSCAPE PLAN
83	L-019	SITE TREE AND UNDERSTORY PLAN
84	L-030	MATERIALS LEGEND AND SCHEDULE
85	L-040	FURNISHING LEGEND AND SCHEDULE
86	L-041	FURNISHING AND LIGHTING LEGEND AND SCHEDULE SHEET 1
87	L-042	FURNISHING AND LIGHTING LEGEND AND SCHEDULE SHEET 2
88	L-050	SOILS LEGEND AND SCHEDULE
89	L-060	UNDERSTORY LEGEND AND SCHEDULE
90	L-065	TREE AND UNDERSTORY SPECIES LEGEND AND SCHEDULE
91	L-066	UNDERSTORY SPECIES LEGEND AND SCHEDULE
92	L-121	GRADING PLAN SHEET 1
93	L-122	GRADING PLAN SHEET 2
94	L-123	GRADING PLAN SHEET 3
95	L-124	GRADING PLAN SHEET 4
96	L-125	GRADING PLAN SHEET 5
97	L-131	HARDSCAPE PLAN SHEET 1
98	L-132	HARDSCAPE PLAN SHEET 2
99	L-133	HARDSCAPE PLAN SHEET 3
100	L-134	HARDSCAPE PLAN SHEET 4
101	L-135	HARDSCAPE PLAN SHEET 5
102	L-141	FURNITURE & SIGNAGE PLAN SHEET 1
103	L-142	FURNITURE & SIGNAGE PLAN SHEET 2
104	L-143	FURNITURE & SIGNAGE PLAN SHEET 3
105	L-144	FURNITURE & SIGNAGE PLAN SHEET 4
106	L-145	FURNITURE & SIGNAGE PLAN SHEET 5
107	L-151	SOILS PLAN SHEET 1
108	L-152	SOILS PLAN SHEET 2
109	L-153	SOILS PLAN SHEET 3
110	L-154	SOILS PLAN SHEET 4
111	L-155	SOILS PLAN SHEET 5
112	L-161	TREE PLANTING PLAN SHEET 1
113	L-162	TREE PLANTING PLAN SHEET 2
114	L-163	TREE PLANTING PLAN SHEET 3
115	L-164	TREE PLANTING PLAN SHEET 4
116	L-165	TREE PLANTING PLAN SHEET 5
117	L-166	TREE PLANTING PLAN SHEET 6
118	L-171	UNDERSTORY PLANTING PLAN SHEET 1
119	L-172	UNDERSTORY PLANTING PLAN SHEET 2
120	L-173	UNDERSTORY PLANTING PLAN SHEET 3
121	L-174	UNDERSTORY PLANTING PLAN SHEET 4
122	L-175	UNDERSTORY PLANTING PLAN SHEET 5
123	L-301	SITE SECTIONS SHEET 1
124	L-302	SITE SECTIONS SHEET 2
125	L-303	SITE SECTIONS SHEET 3
126	L-400	ENLARGEMENTS KEY PLAN
127	L-401	ENLARGEMENT: WEST PARK - DOG PARK & FITNESS LAYOUT
128	L-402	ENLARGEMENT: ARTS PLAZA - PLANTING AREA FENCE LAYOUT
129	L-403	ENLARGEMENT: ARTS PLAZA - GUARDRAIL & FENCE LAYOUT
130	L-404	ENLARGEMENT: EAST PARK - NORTHERN EDGE FENCE LAYOUT
131	L-405	ENLARGEMENT: EAST PARK - SOCCER FIELD LAYOUT
132	L-406	ENLARGEMENT: EAST PARK - BASKETBALL COURT LAYOUT
133	L-407	ENLARGEMENT: EAST PARK - MISTING PAD LAOUT
134	L-408	ENLARGEMENT: EAST PARK - PLANTING AREA FENCE LAYOUT
135	L-409	ENLARGEMENT: EAST PARK - PLANTING AREA FENCE & FITNESS LAYOUT
136	L-410	ENLARGEMENT: EAST PARK - DOG PARK LAYOUT
137	L-505	DETAILS - GRADING
138	L-530	DETAILS - PAVING & CURBS
139	L-535	DETAILS - GUARDRAILS
140	L-536	DETAILS - FENCE SHEET 1
141	L-537	DETAILS - FENCE SHEET 2
142	L-538	DETAILS - FENCE SHEET 3
143	L-539	DETAILS - SPORTS
144	L-540	DETAILS - FURNITURE SHEET 1
145	L-541	DETAILS - FURNITURE SHEET 2
146	L-542	DETAILS - FURNITURE SHEET 3
147	L-543	DETAILS - FURNITURE SHEET 4
148	L-544	DETAILS - FURNITURE SHEET 5
149	L-545	DETAILS - FURNITURE SHEET 6
150	L-550	PLANTING - TREES SHEET 1
151	L-551	PLANTING - TREES SHEET 2
152	L-552	PLANTING - TREES SHEET 3
153	L-555	PLANTING - UNDERSTORY
154	I-001	IRRIGATION PLAN SHEET 1
155	I-002	IRRIGATION PLAN SHEET 2
156	I-003	IRRIGATION PLAN SHEET 3
157	I-004	IRRIGATION PLAN SHEET 4
158	I-005	IRRIGATION PLAN SHEET 5
159	I-006	IRRIGATION PLAN SHEET 6
160	I-007	IRRIGATION NOTES
161	I-008	IRRIGATION WATER ALLOWANCE
162	I-009	IRRIGATION DETAILS SHEET 1
163	I-010	IRRIGATION DETAILS SHEET 2
164	I-011	IRRIGATION DETAILS SHEET 3
165	E-001	ELECTRICAL LEGENDS, SYMBOLS & ABBREVIATIONS
166	E-101	WEST PARK ELECTRICAL OVERALL SITE PLAN
167	E-102	ELECTRICAL SITE PLAN I
168	E-103	ELECTRICAL SITE PLAN II
169	E-104	EAST PARK ELECTRICAL OVERALL SITE PLAN
170	E-105	ELECTRICAL SITE PLAN III
171	E-106	ELECTRICAL SITE PLAN IV
172	E-107	ELECTRICAL SITE PLAN V
173	E-108	WEST PARK BUILDING ELECTRICAL PLAN
174	E-109	EAST PARK BUILDING ELECTRICAL PLAN
175	E-401	WEST PARK SINGLE LINE DIAGRAM
176	E-402	EAST PARK SINGLE LINE DIAGRAM
177	E-403	WEST PARK PANEL SCHEDULES
178	E-404	EAST PARK PANEL SCHEDULES
179	E-405	WEST PARK CONDUIT SCHEDULE
180	E-406	EAST PARK CONDUIT SCHEDULE
181	E-407	LIGHTING SCHEDULE
182	E-501	ELECTRICAL DETAILS SHEET 1
183	E-502	ELECTRICAL DETAILS SHEET 2
184	E-503	ELECTRICAL DETAILS SHEET 3
185	E-504	ELECTRICAL DETAILS SHEET 4
186	E-601	ARTS PLAZA LIGHTING CONTROL DIAGRAM
187	E-701	TITLE 24 WEST PARK RESTROOMS - INDOOR SHEET 1
188	E-702	TITLE 24 WEST PARK RESTROOMS - INDOOR SHEET 2
189	E-703	TITLE 24 WEST PARK CAFE - INDOOR SHEET 1
190	E-704	TITLE 24 WEST PARK CAFE - INDOOR SHEET 2
191	E-705	TITLE 24 WEST PARK BUILDINGS - INDOOR SHEET 1
192	E-706	TITLE 24 WEST PARK BUILDINGS - INDOOR SHEET 2
193	E-707	TITLE 24 OVERALL SITE - OUTDOOR SHEET 1
194	E-708	TITLE 24 OVERALL SITE - OUTDOOR SHEET 2
195	A0-01	SHEET INDEX & NOTES
196	A0-02	ACCESSIBILITY NOTES & DIAGRAMS SHEET 1
197	A0-03	ACCESSIBILITY NOTES & DIAGRAMS SHEET 2
198	A0-04	GENERAL NOTES
199	A0-05	GREEN FORMS SHEET 1
200	A0-06	GREEN FORMS SHEET 2
201	A0-07	MATERIAL PRODUCT DATA
202	A0-11	PROJECT VIEWS
203	A1-01	SITE PLAN
204	A1-02	EAST BUILDING GEOMETRY PLAN
205	A1-03	WEST BUILDINGS GEOMETRY PLAN
206	A1-04	ARTS PLAZA RETAINING WALL & SIGNAGE
207	A1-05	ARTS PLAZA RETAINING WALL
208	A1-06	ARTS PLAZA SIGNAGE
209	A1-07	VIADUCT BENT 10S STAIR LANDING
210	AE2-00	EAST BUILDING GEOMETRY PLAN
211	AE2-01	EAST BUILDING PLAN
212	AE2-02	EAST BUILDING ROOF PLAN SHEET 1
213	AE2-03	EAST BUILDING ROOF PLAN SHEET 2
214	AE3-01	EAST BUILDING ELEVATIONS
215	AE4-01	EAST BUILDING SECTIONS
216	AE4-02	EAST BUILDING WALL SECTIONS
217	AE5-01	EAST BUILDING ENLARGEMENTS SHEET 1
218	AE5-02	EAST BUILDING ENLARGEMENTS SHEET 2
219	AE5-03	EAST BUILDING DETAILS
220	AE5-04	EAST BUILDING SCHEDULES
221	AE6-01	EAST BUILDING DETAILS SHEET 1
222	AE6-02	EAST BUILDING DETAILS SHEET 2
223	AE6-03	STAFF & RESTROOM BUILDING DETAILS
224	AW2-01	WEST BUILDING PLAN
225	AW3-01	WEST BUILDING ELEVATIONS
226	AW4-01	WEST BUILDING SECTIONS
227	AC2-01	CAFE AND RESTROOM PLAN
228	AC3-01	CAFE & RESTROOM BUILDING ELEVATIONS
229	AC4-01	CAFE & RESTROOM BUILDING SECTIONS
230	S-001	STRUCTURAL GENERAL NOTES SHEET 1
231	S-002	STRUCTURAL GENERAL NOTES 2
232	S-003	STRUCTURAL GENERAL NOTES 3
233	S-004	STRUCTURAL GENERAL NOTES 4
234	S-101	EAST BUILDING FOUNDATION PLAN
235	S-102	EAST BUILDING ROOF FRAMING PLAN
236	S-102A	EAST BUILDING BRIDGE FRAMING PLAN
237	S-103	WEST RESTROOM BUILDING FOUNDATION & ROOF PLAN
238	S-104	WEST CAFE BUILDING FOUNDATION & ROOF PLAN
239	S-301	EAST BUILDING SECTION SHEET 1
240	S-302	EAST BUILDING SECTION SHEET 2
241	S-303	EAST BUILDING SECTION SHEET 3
242	S-304	EAST BUILDING SECTION SHEET 4
243	S-304A	EAST BUILDING SECTION SHEET 5
244	S-305	WEST RESTROOM BUILDING SECTION
245	S-306	WEST CAFE BUILDING SECTION
246	S-306A	WEST CAFE BUILDING BRACE FRAME ELEVATIONS
247	S-401	RETAINING WALL FOUNDATION PLAN
248	S-402	"U" RETAINING WALL FOUNDATION PLAN
249	S-402A	"U" RETAINING WALL SECTIONS
250	S-403	TUNNEL DETAILS
251	S-501	TYPICAL DETAILS SHEET 1
252	S-501A	TYPICAL DETAILS SHEET 2
253	S-502	FOUNDATION WALL DETAILS
254	S-503	EAST BUILDINGS ROOF FRAMING DETAILS SHEET 1
255	S-504	EAST BUILDINGS ROOF FRAMING DETAILS SHEET 2
256	S-505	WEST RESTROOM BUILDING DETAILS 1
257	S-506	WEST CAFE BUILDING DETAILS
258	S-507	EAST BUILDINGS ROOF FRAMING DETAILS SHEET 3
259	S-508	FOUNDATION WALL DETAILS
260	S-509	SUBGRADE PREP DETAILS
261	S-510	EAST BUILDING DETAILS
262	M-001	MECHANICAL ABBREVIATIONS, SYMBOLS, AND NOTES
263	M-100	MECHANICAL SITE PLAN STAFF AND SHOP BUILDINGS
264	M-101	MECHANICAL SITE PLAN RESTROOM AND CAFE
265	M-201	MECHANICAL FLOOR PLAN SHOP AND STAFF
266	M-202	MECHANICAL FLOOR PLAN RESTROOM AND CAFE
267	M-501	MECHANICAL DETAILS
268	M-601	MECHANICAL SCHEDULES
269	M-800	TITLE 24 FORMS - STAFF BLDG SHEET 1
270	M-801	TITLE 24 FORMS - STAFF BLDG SHEET 2
271	M-802	TITLE 24 FORMS - STAFF BLDG MM
272	M-803	TITLE 24 FORMS - STAFF BLDG SHEET 3
273	M-804	TITLE 24 FORMS - STAFF BLDG SHEET 4
274	M-805	TITLE 24 FORMS - STAFF BLDG SHEET 5
275	M-806	TITLE 24 FORMS - STAFF BLDG SHEET 6
276	M-807	TITLE 24 FORMS - CAFE SHEET 1
277	M-808	TITLE 24 FORMS - CAFE SHEET 2
278	M-809	TITLE 24 FORMS - CAFE SHEET 3
279	M-810	TITLE 24 FORMS - CAFE SHEET 4
280	M-811	TITLE 24 FORMS - CAFE SHEET 5
281	M-812	TITLE 24 FORMS - RESTROOM BLDG SHEET 1
282	M-813	TITLE 24 FORMS - RESTROOM BLDG SHEET 2
283	P-001	PLUMBING ABBREVIATIONS, SYMBOLS, AND NOTES
284	P-100	PLUMBING SITE PLAN STAFF & SHOP BUILDINGS
285	P-101	PLUMBING SITE PLAN CAFE AND RESTROOM BUILDINGS
286	P-201	STAFF AND SHOP BUILDINGS WASTE & VENT FLOOR PLANS
287	P-202	CAFE & RESTROOM BUILDING WASTE & VENT FLOOR PLANS
288	P-301	STAFF & SHOP BUILDINGS DOMESTIC HOT & COLD WATER FLOOR PLANS
289	P-302	CAFE & RESTROOM BUILDINGS DOMESTIC HOT & COLD WATER FLOOR PLANS
290	P-501	PLUMBING DETAILS
291	P-601	PLUMBING SCHEDULES
292	P-901	WASTE & VENT ISOMETRIC - STAFF
293	P-902	WASTE & VENT ISOMETRIC - CAFE/RR
294	P-903	WATER ISOMETRIC - STAFF
295	P-904	WATER ISOMETRIC - RR/CAFE

THE CITY OF LOS ANGELES OR ITS OFFICERS OR AGENTS SHALL NOT BE RESPONSIBLE FOR THE ACCURACY OR COMPLETENESS OF ELECTRONIC COPIES OF THIS PLAN SHEET.

REVISION DATES (DESIGN STAGE ONLY)

Sheet Version 3.0

BUREAU OF ENGINEERING

ENGINEERING
CITY OF LOS ANGELES

NO.	REVISIONS:	DATE	BY:

BUILDING NO.

INDEX NO. MF-300501

THIS PLAN WAS ELECTRONICALLY SIGNED AND STAMPED

PROFESSIONAL ENGINEER JUSTIN T. SMITH No. 85736 EXP: 9-30-22 CIVIL STATE OF CALIFORNIA

CITY OF LOS ANGELES DEPARTMENT OF PUBLIC WORKS

CITY ENGINEER: TED ALLEN, P.E.
DATE: 07/11/22
LIC. NO. C-85736

DESIGN GROUP
ENGINEER: JUSTIN SMITH
DESIGNED BY: JUSTIN SMITH
DRAWN BY: DAVID LOPEZ
CHECKED BY: NATE SCHREINER
APPROVED BY: JASON L. FUSSEL

BUREAU OF ENGINEERING
OFFICIAL RECORD

PLANS PREPARED BY:
TETRA TECH, INC.
707 WILSHIRE BLVD. 23RD FLR.
LOS ANGELES, CA 90017
PHONE: (213) 239-8866

VERT. CONTROL: BM 12-04070, 1929 (NGVD29) - 1985 ADJUSTMENT
HORIZ. CONTROL: GPS; PID AE 1704, EPOCH 1991.35

SHEET TITLE: SHEET INDEX

PROJECT: SIXTH STREET PARK, ARTS AND RIVER CONNECTIVITY IMPROVEMENTS (PARC)

ADDRESS: SIXTH STREET OVER THE LOS ANGELES RIVER

WORK ORDER NO. E700235D
FILE NO. --
DRAWING NO. G-004
SHEET 4 OF 295 SHEETS

7/10/2022 9:14:41 PM - C:\PROJECTS\IRVINE\20043\200-20043-170011\CAD\SHEETFILES\G-004_SHEET INDEX_LEGEND_ABBREVIATIONS- TT.DWG - SMITH, JUSTIN

SOIL BORING INFORMATION
GB-1 TO GB-3

NOTES:
1. THE BORING LOGS SHOWN ON THIS SHEET ARE FROM THE DRAFT GEOTECHNICAL SITE INVESTIGATION FOR THE PROJECT PREPARED BY HUSHMAND ASSOCIATES, INC. (PROJECT NO. LAC-17-001; DATED JANUARY 2018) . THE DRAFT GEOTECHNICAL SITE INVESTIGATION WAS UPDATED AND FINALIZED BY REFERENCE IN THE UPDATE OF THE DRAFT GEOTECHNICAL REPORT PREPARED BY TETRA TECH, INC. (PROJECT NO. TET 21-203E; DATED AUGUST 2021). REFER TO NOTE 24, SHEET G-002 FOR ADDITIONAL INFORMATION.

DRAFT

HAI Hushmand Associates, Inc.

BORING NUMBER GB-1
PAGE 1 OF 1

CLIENT Tetra Tech/City of Los Angeles
PROJECT NAME Sixth Street Viaduct PARC
PROJECT NUMBER LAC-17-001
PROJECT LOCATION 6th Street, Los Angeles, CA
DATE STARTED 11/7/17 **COMPLETED** 11/7/17
GROUND ELEVATION **HOLE SIZE** 10"
DRILLING CONTRACTOR CAL PAC Drilling
GROUND WATER LEVELS:
DRILLING METHOD Hand Auger/Hollow Stem Auger
AT TIME OF DRILLING Not Encountered
LOGGED BY RN **CHECKED BY** NM
AT END OF DRILLING Not Encountered
NOTES Borehole was backfilled with GRAVEL after completion of percolation test **AFTER DRILLING** Not Encountered

DEPTH (ft)	GRAPHIC LOG	MATERIAL DESCRIPTION	CORE SAMPLE	BULK SAMPLE	SAMPLE NUMBER	BLOW COUNTS (N VALUE)	DRY UNIT WT. (pcf)	MOISTURE CONTENT (%)	OTHER LABORATORY TESTS
		SILT with SAND (ML): Brown, moist, fine grained SAND							
		SILTY SAND (SM): Brown, moist, fine grained SAND.							
		SILTY SAND (SM): Brown, moist, fine grained SAND, sub-angular to sub-rounded GRAVEL up to 2" dia. encountered. More sub-angular to sub-rounded GRAVEL up to 3" dia. encountered.			AU 1A				SA
5		SILTY SAND (SM): Brown, moist, fine to medium grained SAND, GRAVEL up to 3" dia.			AU 1B				
		Poorly graded SAND (SP): Brown, moist, fine to coarse grained SAND, GRAVEL up to 3" dia.							
		Borehole terminated at 6 feet.							

HAI-AMIR LAC-17-001 SIXTH STREET VIADUCT PARC.GPJ GINT US.GDT 1/12/18

DRAFT

HAI Hushmand Associates, Inc.

BORING NUMBER GB-2
PAGE 1 OF 1

CLIENT Tetra Tech/City of Los Angeles
PROJECT NAME Sixth Street Viaduct PARC
PROJECT NUMBER LAC-17-001
PROJECT LOCATION 6th Street, Los Angeles, CA
DATE STARTED 11/3/17 **COMPLETED** 11/3/17
GROUND ELEVATION **HOLE SIZE** 6"
DRILLING CONTRACTOR CAL PAC Drilling
GROUND WATER LEVELS:
DRILLING METHOD Hand Auger/Hollow Stem Auger
AT TIME OF DRILLING Not Encountered
LOGGED BY RN **CHECKED BY** NM
AT END OF DRILLING Not Encountered
NOTES Backfilled with cement grout **AFTER DRILLING** Not Encountered

DEPTH (ft)	GRAPHIC LOG	MATERIAL DESCRIPTION	CORE SAMPLE	BULK SAMPLE	SAMPLE NUMBER	BLOW COUNTS (N VALUE)	DRY UNIT WT. (pcf)	MOISTURE CONTENT (%)	OTHER LABORATORY TESTS
		SILTY SAND (SM): Brown, dry to moist, fine to medium grained SAND.			AU 1				RV CORR SW
5		@ 4': 6" COBBLE encountered.							
		Well-graded SAND with SILT and GRAVEL (SW-SM): Brown, moist, loose, fine to medium grained SAND.			MC 2	6-5-4 (9)	107	2	DS
		Well-graded SAND with SILT and GRAVEL (SW-SM): Brown, moist, medium dense, fine to medium grained SAND. @7.5': 2" dia. sub-angular to sub-rounded GRAVEL encountered.			SPT 3	2-5-8 (13)			SA
10		Poorly graded SAND (SP): Brown, moist, medium dense, fine to medium grained SAND.			MC 4	5-9-19 (28)	105	3	
		Poorly graded SAND with GRAVEL (SP): Brown, moist, very dense, fine to medium grained SAND, scattered sub-angular to sub-rounded fine GRAVEL up to 5 mm.			SPT 5	20-27-21 (48)			
15		Poorly graded SAND with GRAVEL (SP): Pale gray to brown, moist, very dense, fine to medium grained SAND, sub-angular to sub-rounded fine to coarse GRAVEL up to 3" dia. Few sub-angular COBBLES up to 4" dia. encountered.			MC 6	20-21-21 (42)	104	2	SA
		Poorly graded SAND with GRAVEL (SP): Pale gray to brown, moist, dense, fine to coarse grained SAND with fine to coarse grained GRAVEL up to 2" dia. No Sample Recovery			SPT 7	13-16-22 (38)			
20		SILTY SAND (SM): Gray, very moist, very dense, fine grained SAND.			MC 8	13-50	115	4	
		Poorly graded SAND (SP): Gray, very moist, very dense, medium grained SAND.							
		Borehole terminated at 21 feet.							

HAI-AMIR LAC-17-001 SIXTH STREET VIADUCT PARC.GPJ GINT US.GDT 1/12/18

DRAFT

HAI Hushmand Associates, Inc.

BORING NUMBER GB-3
PAGE 1 OF 1

CLIENT Tetra Tech/City of Los Angeles
PROJECT NAME Sixth Street Viaduct PARC
PROJECT NUMBER LAC-17-001
PROJECT LOCATION 6th Street, Los Angeles, CA
DATE STARTED 11/8/17 **COMPLETED** 11/8/17
GROUND ELEVATION **HOLE SIZE** 8"
DRILLING CONTRACTOR CAL PAC Drilling
GROUND WATER LEVELS:
DRILLING METHOD Hand Auger/Hollow Stem Auger
AT TIME OF DRILLING Not Encountered
LOGGED BY RN **CHECKED BY** NM
AT END OF DRILLING Not Encountered
NOTES Borehole was backfilled with GRAVEL after completion of percolation test **AFTER DRILLING** Not Encountered

DEPTH (ft)	GRAPHIC LOG	MATERIAL DESCRIPTION	CORE SAMPLE	BULK SAMPLE	SAMPLE NUMBER	BLOW COUNTS (N VALUE)	DRY UNIT WT. (pcf)	MOISTURE CONTENT (%)	OTHER LABORATORY TESTS
		CONCRETE ~ 3 inches							
		SILTY SAND (SM): Brown, moist, fine grained SAND.			AU 1				
5		Borehole terminated at 6 feet.							

HAI-AMIR LAC-17-001 SIXTH STREET VIADUCT PARC.GPJ GINT US.GDT 1/12/18

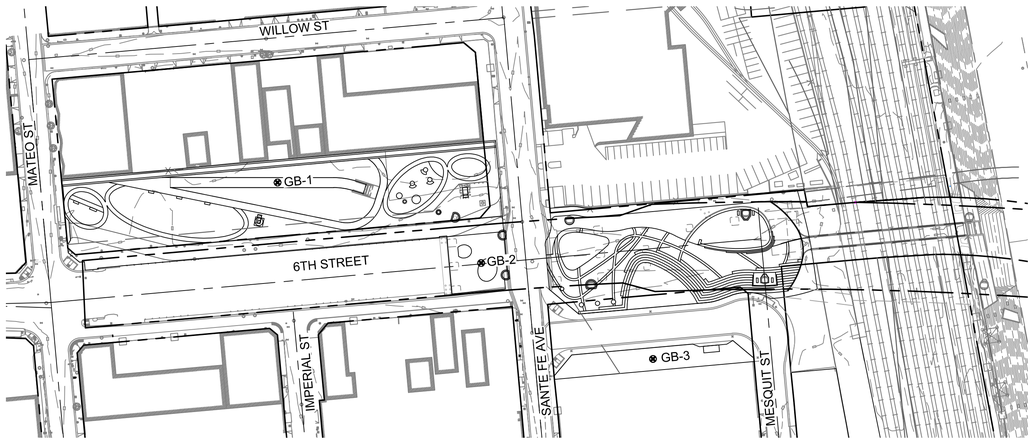

KEY MAP

BUREAU OF ENGINEERING
OFFICIAL RECORD

PLANS PREPARED BY:
TETRA TECH, INC.
707 WILSHIRE BLVD. 23RD FLR.
LOS ANGELES, CA 90017
PHONE: (213) 239-8866

CITY OF LOS ANGELES DEPARTMENT OF PUBLIC WORKS BUREAU OF ENGINEERING

VERT. CONTROL: BM 12-04070, 1929 (NGVD29) - 1985 ADJUSTMENT
HORIZ. CONTROL: GPS; PID AE 1704; EPOCH 1991.35

SHEET TITLE: BORING LOGS SHEET 1

PROJECT: SIXTH STREET PARK, ARTS AND RIVER CONNECTIVITY IMPROVEMENTS (PARC)

ADDRESS: SIXTH STREET OVER THE LOS ANGELES RIVER

WORK ORDER NO. E700235D
FILE NO. --
DRAWING NO. G-005
SHEET 5 OF 295 SHEETS

CITY ENGINEER
TED ALLEN, P.E.
DESIGN GROUP
ENGINEER: JUSTIN SMITH
DESIGNED BY: JUSTIN SMITH
DRAWN BY: DAVID LOPEZ
CHECKED BY: NATE SCHREINER
APPROVED BY: JASON L. FUSSEL
LIC. NO. C-85736 DATE: 07/11/22

DATE BY:
NO. REVISIONS:

BUILDING NO.
INDEX NO. MF-300501

ENGINEERING
CITY OF LOS ANGELES

THIS PLAN WAS ELECTRONICALLY SIGNED AND STAMPED
JUSTIN T. SMITH
No. 85736 EXP: 9-30-22
REGISTERED PROFESSIONAL ENGINEER
CIVIL
STATE OF CALIFORNIA

7/8/2022 2:10:55 AM - O:\PROJECTS\IRVINE2\DK3\200-20043-17001\CAD\SHEETFILES\G-005_BORING LOGS - TT.DWG - SMITH, JUSTIN

THE CITY OF LOS ANGELES OR ITS OFFICERS OR AGENTS SHALL NOT BE RESPONSIBLE FOR THE ACCURACY OR COMPLETENESS OF ELECTRONIC COPIES OF THIS PLAN SHEET.

REVISION DATES (DESIGN STAGE ONLY)

Sheet Version 3.0

SOIL BORING INFORMATION (CONT.)

GB-4

NOTES:

1. THE BORING LOGS SHOWN ON THIS SHEET ARE FROM THE DRAFT GEOTECHNICAL SITE INVESTIGATION FOR THE PROJECT PREPARED BY HUSHMAND ASSOCIATES, INC. (PROJECT NO. LAC-17-001; DATED JANUARY 2018) . THE DRAFT GEOTECHNICAL SITE INVESTIGATION WAS UPDATED AND FINALIZED BY REFERENCE IN THE UPDATE OF THE DRAFT GEOTECHNICAL REPORT PREPARED BY TETRA TECH, INC. (PROJECT NO. TET 21-203E; DATED AUGUST 2021). REFER TO NOTE 24, SHEET G-002 FOR ADDITIONAL INFORMATION.

DRAFT

HAI Hushmand Associates, Inc.

BORING NUMBER GB-4
PAGE 1 OF 2

CLIENT Tetra Tech/City of Los Angeles
PROJECT NAME Sixth Street Viaduct PARC
PROJECT NUMBER LAC-17-001
PROJECT LOCATION 6th Street, Los Angeles, CA
DATE STARTED 11/6/17 **COMPLETED** 11/6/17
GROUND ELEVATION **HOLE SIZE** 6"
DRILLING CONTRACTOR CAL PAC Drilling
GROUND WATER LEVELS:
DRILLING METHOD Hand Auger/Hollow Stem Auger
AT TIME OF DRILLING Not Encountered
LOGGED BY RN **CHECKED BY** NM
AT END OF DRILLING Not Encountered
NOTES Backfilled with cement grout
AFTER DRILLING Not Encountered

DEPTH (ft)	GRAPHIC LOG	MATERIAL DESCRIPTION	CORE SAMPLE	BULK SAMPLE	SAMPLE NUMBER	BLOW COUNTS (N VALUE)	DRY* UNIT WT. (pcf)	MOISTURE CONTENT (%)	OTHER LABORATORY TESTS
		SILTY SAND (SM): Dark grayish brown, moist, fine grained SAND with sub-rounded to sub-angular GRAVEL up to 2" encountered.			AU 1				
5		SILTY SAND (SM): Dark grayish brown, moist, loose, fine grained SAND.			SPT 2	5-3-3 (6)			
		Poorly graded SAND (SP): Gray, moist, loose, fine to coarse grained SAND.							
		SILTY SAND (SM): Brown, moist, loose, fine grained SAND.			MC 3	4-5-7 (12)			SW
10		Same as above.			SPT 4	2-2-2 (4)			SA
		Poorly graded SAND (SP): Grayish brown, moist, loose, fine to medium grained SAND, fine GRAVEL up to 5 mm. dia.			MC 5	5-4-4 (8)	107	9	DS
15		Poorly graded SAND (SP): Grayish brown, moist, medium dense, fine to medium grained SAND, fine GRAVEL up to 5 mm. dia.			SPT 6	4-5-9 (14)			
		Well-graded SAND (SW): Yellowish brown, moist, medium dense, fine to medium grained SAND, fine GRAVEL up to 5 mm. dia.							
		Poorly graded SAND (SP): Mixture of pale yellow to pale brown, moist, dense, medium to coarse grained SAND, occasional fine GRAVEL.			MC 7	10-18-24 (42)	103	2	SA
20		Poorly graded SAND with GRAVEL (SP): Mixture of pale yellow to pale brown, moist, dense, medium to coarse grained SAND, fine GRAVEL.							
		Poorly graded SAND (SP): Mixture of pale yellow to pale brown, moist, very dense, medium to coarse grained SAND, fine to coarse GRAVEL up to 1.5" dia.			SPT 8	10-21-26 (47)			CORR
25									

(Continued Next Page)

HAI-AMR LAC-17-001 SIXTH STREET VIADUCT PARC.GPJ GINT US.GDT 11/3/18

DRAFT

HAI Hushmand Associates, Inc.

BORING NUMBER GB-4
PAGE 2 OF 2

CLIENT Tetra Tech/City of Los Angeles
PROJECT NAME Sixth Street Viaduct PARC
PROJECT NUMBER LAC-17-001
PROJECT LOCATION 6th Street, Los Angeles, CA

DEPTH (ft)	GRAPHIC LOG	MATERIAL DESCRIPTION	CORE SAMPLE	BULK SAMPLE	SAMPLE NUMBER	BLOW COUNTS (N VALUE)	DRY* UNIT WT. (pcf)	MOISTURE CONTENT (%)	OTHER LABORATORY TESTS
		SILTY SAND with GRAVEL (SM): Grayish brown, moist, dense, fine to medium grained SAND.			MC 9	12-16-22 (38)	109	4	DS
30		SILTY SAND with GRAVEL (SM): Gray, moist, very dense, fine SAND with fine GRAVEL, with GRAVEL up to 2" dia. @ 30.5' to 31': Color change to dark gray SILTY SAND with GRAVEL (SM): Gray, moist, very dense, fine to medium grained SAND with fine sub-angluar to sub-rounded fine GRAVEL. GRAVEL up to 2" dia. encountered occasionally.			SPT 10	21-50/2"			
35		Poorly graded SAND with SILT (SP-SM): Gray, moist, very dense, fine to medium grained SAND. 3" dia. sub-rounded GRAVEL encountered at the bottom of sampler.			MC 11	50	102	10	DS
		Same as above.			SPT 12	50/1"			
		Borehole terminated at 39.08 feet.							

HAI-AMR LAC-17-001 SIXTH STREET VIADUCT PARC.GPJ GINT US.GDT 11/3/18

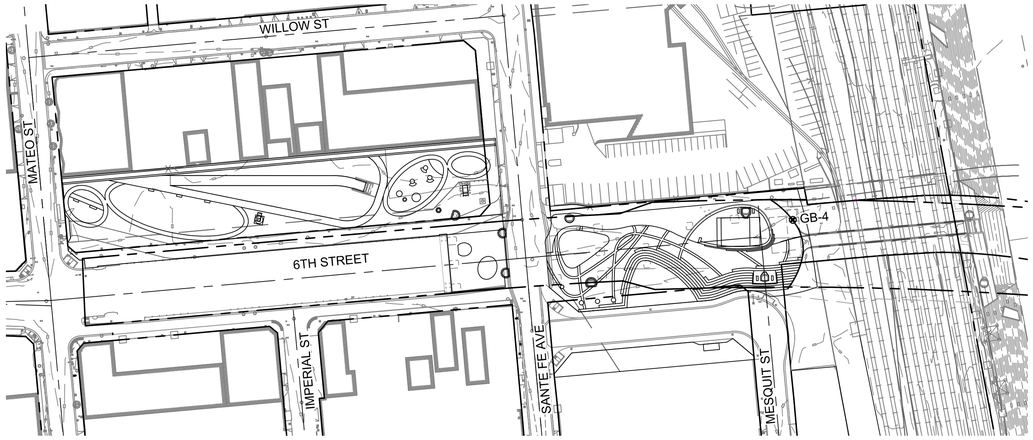

KEY MAP

BUREAU OF ENGINEERING
OFFICIAL RECORD

PLANS PREPARED BY:
TETRA TECH, INC.
707 WILSHIRE BLVD. 23RD FLR.
LOS ANGELES, CA 90017
PHONE: (213) 239-9866

CITY OF LOS ANGELES DEPARTMENT OF PUBLIC WORKS
BUREAU OF ENGINEERING

ENGINEERING
CITY OF LOS ANGELES

NO.	REVISIONS:	DATE	BY:

BUILDING NO.
INDEX NO. MF-300501

THIS PLAN WAS ELECTRONICALLY SIGNED AND STAMPED
JUSTIN T. SMITH
No. 85736
EXP: 9-30-22
REGISTERED PROFESSIONAL ENGINEER
CIVIL
STATE OF CALIFORNIA

CITY ENGINEER
TED ALLEN, P.E.
DESIGN GROUP
ENGINEER: JUSTIN SMITH LIC. NO. C-85736 DATE: 07/11/22
DESIGNED BY: JUSTIN SMITH
DRAWN BY: DAVID LOPEZ
CHECKED BY: NATE SCHREINER
APPROVED BY: JASON L. FUSSEL

VERT. CONTROL: BM 12-04070, 1929 (NGVD29) - 1985 ADJUSTMENT
HORIZ. CONTROL: GPS; PID AE 1704, EPOCH 1991.35

SHEET TITLE: BORING LOGS SHEET 2
PROJECT: SIXTH STREET PARK, ARTS AND RIVER CONNECTIVITY IMPROVEMENTS (PARC)
ADDRESS: SIXTH STREET OVER THE LOS ANGELES RIVER

WORK ORDER NO. E700235D
FILE NO. --
DRAWING NO. G-006
SHEET 6 OF 295 SHEETS

7/8/2022 2:11:04 AM - O:\PROJECTS\RIVINE\20043\200-20043-17001\CAD\SHEETFILES\G-006_BORING LOGS - TT.DWG - SMITH, JUSTIN

THE CITY OF LOS ANGELES OR ITS OFFICERS OR AGENTS SHALL NOT BE RESPONSIBLE FOR THE ACCURACY OR COMPLETENESS OF ELECTRONIC COPIES OF THIS PLAN SHEET.

REVISION DATES (DESIGN STAGE ONLY)

Sheet Version 3.0

SOIL BORING INFORMATION (CONT.)

GB-6 TO GB-8

NOTES:

1. THE BORING LOGS SHOWN ON THIS SHEET ARE FROM THE DRAFT GEOTECHNICAL SITE INVESTIGATION FOR THE PROJECT PREPARED BY HUSHMAND ASSOCIATES, INC. (PROJECT NO. LAC-17-001; DATED JANUARY 2018) . THE DRAFT GEOTECHNICAL SITE INVESTIGATION WAS UPDATED AND FINALIZED BY REFERENCE IN THE UPDATE OF THE DRAFT GEOTECHNICAL REPORT PREPARED BY TETRA TECH, INC. (PROJECT NO. TET 21-203E; DATED AUGUST 2021). REFER TO NOTE 24, SHEET G-002 FOR ADDITIONAL INFORMATION.

DRAFT

HAI Hushmand Associates, Inc.

BORING NUMBER GB-6

PAGE 1 OF 1

CLIENT Tetra Tech/City of Los Angeles — **PROJECT NAME** Sixth Street Viaduct PARC
PROJECT NUMBER LAC-17-001 — **PROJECT LOCATION** 6th Street, Los Angeles, CA
DATE STARTED 11/7/17 — **COMPLETED** 11/7/17 — **GROUND ELEVATION** — **HOLE SIZE** 9"
DRILLING CONTRACTOR CAL PAC Drilling — **GROUND WATER LEVELS:**
DRILLING METHOD Hand Auger/Hollow Stem Auger — **AT TIME OF DRILLING** Not Encountered
LOGGED BY RN — **CHECKED BY** NM — **AT END OF DRILLING** Not Encountered
NOTES Borehole was backfilled with GRAVEL after completion of percolation tests — **AFTER DRILLING** Not Encountered

DEPTH (ft)	GRAPHIC LOG	MATERIAL DESCRIPTION	CORE SAMPLE	BULK SAMPLE	SAMPLE NUMBER	BLOW COUNTS (N VALUE)	DRY UNIT WT. (pcf)	MOISTURE CONTENT (%)	OTHER LABORATORY TESTS
		SILTY SAND with GRAVEL (SM): Brown, moist, fine grained SAND, sub-angular to sub-rounded fine to coarse GRAVEL up to 3" dia.			AU 1A				SA
		@ 1': 4" dia. COBBLE encountered.							
		More GRAVEL and COBBLES encountered. Very difficult conditions to perform hand augering.							
		Poorly graded SAND with SILT and GRAVEL (SP-SM): Brown, moist, fine to medium grained SAND, fine GRAVEL.							
5		@ 4.75': more GRAVEL and COBBLES encountered. Very difficult conditions to perform hand augering.			AU 1B				
		Poorly graded SAND (SP): Brown, moist, medium grained SAND.							
		Borehole terminated at 6.08 feet.							

HAI-AMR LAC-17-001- SIXTH STREET VIADUCT PARC.GPJ GINT US.GDT 1/12/18

DRAFT

HAI Hushmand Associates, Inc.

BORING NUMBER GB-7

PAGE 1 OF 1

CLIENT Tetra Tech/City of Los Angeles — **PROJECT NAME** Sixth Street Viaduct PARC
PROJECT NUMBER LAC-17-001 — **PROJECT LOCATION** 6th Street, Los Angeles, CA
DATE STARTED 11/8/17 — **COMPLETED** 11/8/17 — **GROUND ELEVATION** — **HOLE SIZE** 8"
DRILLING CONTRACTOR CAL PAC Drilling — **GROUND WATER LEVELS:**
DRILLING METHOD Hand Auger/Hollow Stem Auger — **AT TIME OF DRILLING** Not Encountered
LOGGED BY RN — **CHECKED BY** NM — **AT END OF DRILLING** Not Encountered
NOTES Borehole was backfilled with GRAVEL after completion of percolation tests — **AFTER DRILLING** Not Encountered

DEPTH (ft)	GRAPHIC LOG	MATERIAL DESCRIPTION	CORE SAMPLE	BULK SAMPLE	SAMPLE NUMBER	BLOW COUNTS (N VALUE)	DRY UNIT WT. (pcf)	MOISTURE CONTENT (%)	OTHER LABORATORY TESTS
		ASPHALT ~ 3 inches							
		SILT with SAND (ML): Brown, fine SILT with fine grained SAND, sub-rounded GRAVEL up to 1.5" dia.			AU 1A				
		SILTY SAND (SM): Brown, moist, fine grained SAND, sub-rounded GRAVEL up to 1.5" dia.							
5		Poorly graded SAND (SP): Brown, moist, fine grained SAND.			AU 1B				
		Borehole terminated at 6.04 feet.							

HAI-AMR LAC-17-001- SIXTH STREET VIADUCT PARC.GPJ GINT US.GDT 1/12/18

DRAFT

HAI Hushmand Associates, Inc.

BORING NUMBER GB-8

PAGE 1 OF 1

CLIENT Tetra Tech/City of Los Angeles — **PROJECT NAME** Sixth Street Viaduct PARC
PROJECT NUMBER LAC-17-001 — **PROJECT LOCATION** 6th Street, Los Angeles, CA
DATE STARTED 11/6/17 — **COMPLETED** 11/6/17 — **GROUND ELEVATION** — **HOLE SIZE** 10"
DRILLING CONTRACTOR CAL PAC Drilling — **GROUND WATER LEVELS:**
DRILLING METHOD Hand Auger/Hollow Stem Auger — **AT TIME OF DRILLING** Not Encountered
LOGGED BY RN — **CHECKED BY** NM — **AT END OF DRILLING** Not Encountered
NOTES Borehole was backfilled with GRAVEL after completion of percolation tests — **AFTER DRILLING** Not Encountered

DEPTH (ft)	GRAPHIC LOG	MATERIAL DESCRIPTION	CORE SAMPLE	BULK SAMPLE	SAMPLE NUMBER	BLOW COUNTS (N VALUE)	DRY UNIT WT. (pcf)	MOISTURE CONTENT (%)	OTHER LABORATORY TESTS
		ASPHALT ~ 3 inches							
		SILTY SAND (SM): Brown, moist, fine grained SAND.			AU 1				
5		Borehole terminated at 5.67 feet.							

HAI-AMR LAC-17-001- SIXTH STREET VIADUCT PARC.GPJ GINT US.GDT 1/12/18

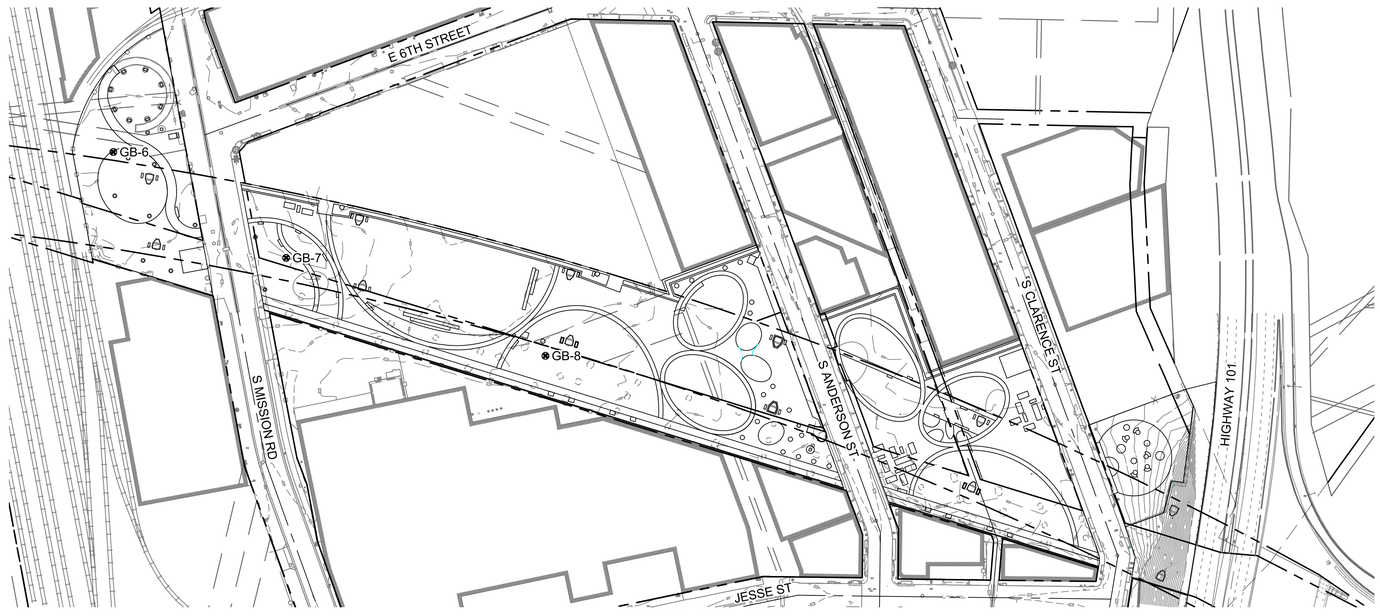

KEY MAP

BUREAU OF ENGINEERING — OFFICIAL RECORD

PLANS PREPARED BY:
TETRA TECH, INC.
707 WILSHIRE BLVD, 23RD FLR.
LOS ANGELES, CA 90017
PHONE: (213) 239-8866

CITY OF LOS ANGELES — DEPARTMENT OF PUBLIC WORKS — BUREAU OF ENGINEERING

VERT. CONTROL: BM 12-04070, 1929 (NGVD29) - 1985 ADJUSTMENT
HORIZ. CONTROL: GPS, PID AE 1704, EPOCH 1991.35

SHEET TITLE: BORING LOGS SHEET 3
PROJECT: SIXTH STREET PARK, ARTS AND RIVER CONNECTIVITY IMPROVEMENTS (PARC) SIXTH STREET OVER THE LOS ANGELES RIVER
ADDRESS:

WORK ORDER NO. E700235D
FILE NO. --
DRAWING NO. G-007
SHEET 7 OF 295 SHEETS

CITY ENGINEER — DESIGN GROUP
ENGINEER: JUSTIN SMITH
DESIGNED BY: JUSTIN SMITH
DRAWN BY: DAVID LOPEZ
CHECKED BY: NATE SCHREINER
APPROVED BY: JASON L. FUSSEL
TED ALLEN, P.E. — LIC. NO. C-85736 — DATE: 07/11/22

ENGINEERING — CITY OF LOS ANGELES

BUREAU OF ENGINEERING

DATE | BY:
NO. | REVISIONS:

BUILDING NO.
INDEX NO. MF-300501

THIS PLAN WAS ELECTRONICALLY SIGNED AND STAMPED

REGISTERED PROFESSIONAL ENGINEER — JUSTIN L. SMITH — No. 85736 EXP: 9-30-22 — CIVIL — STATE OF CALIFORNIA

THE CITY OF LOS ANGELES OR ITS OFFICERS OR AGENTS SHALL NOT BE RESPONSIBLE FOR THE ACCURACY OR COMPLETENESS OF ELECTRONIC COPIES OF THIS PLAN SHEET.

REVISION DATES (DESIGN STAGE ONLY)

Sheet Version 3.0

7/8/2022 2:32:47 AM - O:\PROJECTS\RIVINE\20043\200-20043-17001\CAD\SHEETFILES\G-007_BORING LOGS - TT.DWG - SMITH, JUSTIN

SOIL BORING INFORMATION (CONT.)

GB-9 TO GB-10

NOTES:

1. THE BORING LOGS SHOWN ON THIS SHEET ARE FROM THE DRAFT GEOTECHNICAL SITE INVESTIGATION FOR THE PROJECT PREPARED BY HUSHMAND ASSOCIATES, INC. (PROJECT NO. LAC-17-001; DATED JANUARY 2018) , THE DRAFT GEOTECHNICAL SITE INVESTIGATION WAS UPDATED AND FINALIZED BY REFERENCE IN THE UPDATE OF THE DRAFT GEOTECHNICAL REPORT PREPARED BY TETRA TECH, INC. (PROJECT NO. TET 21-203E; DATED AUGUST 2021). REFER TO NOTE 24, SHEET G-002 FOR ADDITIONAL INFORMATION.

DRAFT

HAI Hushmand Associates, Inc.

BORING NUMBER GB-9

PAGE 1 OF 1

CLIENT Tetra Tech/City of Los Angeles
PROJECT NAME Sixth Street Viaduct PARC
PROJECT NUMBER LAC-17-001
PROJECT LOCATION 6th Street, Los Angeles, CA
DATE STARTED 11/3/17 **COMPLETED** 11/3/17
GROUND ELEVATION _____ **HOLE SIZE** 8"
DRILLING CONTRACTOR CAL PAC Drilling
GROUND WATER LEVELS:
DRILLING METHOD Hand Auger/Hollow Stem Auger
AT TIME OF DRILLING Not Encountered
LOGGED BY RN **CHECKED BY** NM
AT END OF DRILLING Not Encountered
NOTES Backfilled with cement grout
AFTER DRILLING Not Encountered

DEPTH (ft)	GRAPHIC LOG	MATERIAL DESCRIPTION	CORE SAMPLE	BULK SAMPLE	SAMPLE NUMBER	BLOW COUNTS (N VALUE)	DRY UNIT WT. (pcf)	MOISTURE CONTENT (%)	OTHER LABORATORY TESTS
		Poorly graded SAND (SP): Gray, moist, fine to medium grained, with angular gravel up to 1" dia.							
		@ 2': 2" dia. GRAVEL encountered.			AU 1				RV CORR
5		Poorly graded SAND (SP): Light gray, moist, medium dense, fine to medium grained.			MC 2	5-5-9 (14)	101	3	DS
		Poorly graded SAND with SILT and GRAVEL(SP): Brown, moist, medium dense, fine to medium grained. @ 8.25': sub-angular GRAVEL up to 1.5" dia. encountered.			SPT 3	5-15-11 (26)			SA
10		Poorly graded SAND (SP): Light gray, moist, dense fine to medium grained. 3" dia. sub-angular GRAVEL found at the bottom of sampler.			MC 4	15-24-28 (52)	118	3	
		Poorly graded SAND (SP): Gray to light brown, moist, dense, medium to coarse grained, fine sub-angular gravel up to 1" dia.			SPT 5	7-10-10 (20)			
15		Poorly graded SAND (SP): Gray, moist, medium dense, fine to coarse grained SAND.			MC 6	10-13-15 (28)	106	3	
		Well-graded SAND with GRAVEL (SW): Light brown, moist, dense, fine to coarse grained SAND.			SPT 7	6-10-14 (24)			SA
		SILTY SAND (SM): Light brown, moist dense, fine grained SAND.							
20		Poorly graded SAND (SP): Light brown, medium dense, fine to coarse grained SAND, fine to coarse GRAVEL up to 1.5" dia. 3" dia. GRAVEL encountered at the bottom of sampler. Borehole terminated at 21.5 feet.			MC 8	13-16-10 (26)	118	3	

H:\AA\MR_LAC-17-001_SIXTH STREET_VIADUCT_PARC.GPJ_GINT US.GDT 11/3/18

DRAFT

HAI Hushmand Associates, Inc.

BORING NUMBER GB-10

PAGE 1 OF 1

CLIENT Tetra Tech/City of Los Angeles
PROJECT NAME Sixth Street Viaduct PARC
PROJECT NUMBER LAC-17-001
PROJECT LOCATION 6th Street, Los Angeles, CA
DATE STARTED 11/7/17 **COMPLETED** 11/7/17
GROUND ELEVATION _____ **HOLE SIZE** 8"
DRILLING CONTRACTOR CAL PAC Drilling
GROUND WATER LEVELS:
DRILLING METHOD Hand Auger/Hollow Stem Auger
AT TIME OF DRILLING Not Encountered
LOGGED BY RN **CHECKED BY** NM
AT END OF DRILLING Not Encountered
NOTES Borehole was backfilled with GRAVEL after completion of percolation testing
AFTER DRILLING Not Encountered

DEPTH (ft)	GRAPHIC LOG	MATERIAL DESCRIPTION	CORE SAMPLE	BULK SAMPLE	SAMPLE NUMBER	BLOW COUNTS (N VALUE)	DRY UNIT WT. (pcf)	MOISTURE CONTENT (%)	OTHER LABORATORY TESTS
		Poorly graded SAND with SILT (SP-SM): Light brown, moist, fine grained SAND with SILT.							
		SILTY SAND (SM): Brown, moist, fine grained, sub-angular to sub-rounded GRAVEL and COBBLES up to 4" dia. encountered.			AU 1A				SA
		SILTY SAND (SM): Brown, moist, fine grained SAND.							
5		Poorly graded SAND (SP): Brown, moist, fine to coarse grained SAND, very little GRAVEL up to 1.5" dia. Borehole terminated at 6 feet.			AU 1B				

H:\AA\MR_LAC-17-001_SIXTH STREET_VIADUCT_PARC.GPJ_GINT US.GDT 11/3/18

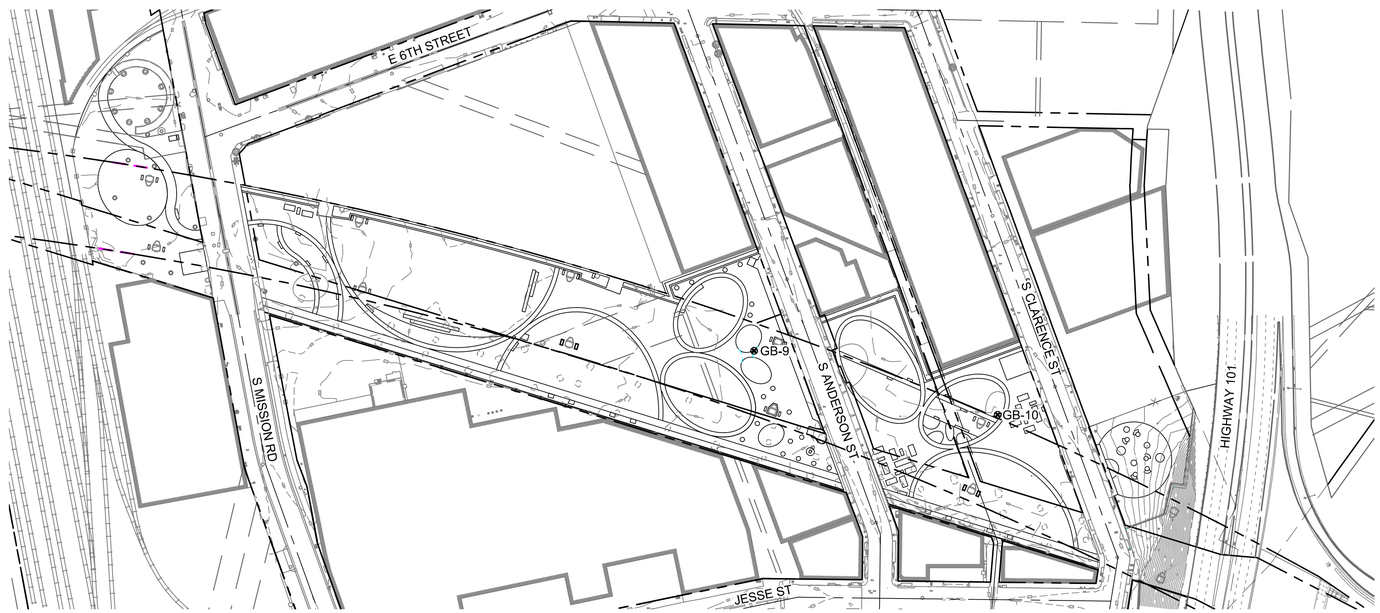

KEY MAP

BUREAU OF ENGINEERING
OFFICIAL RECORD

PLANS PREPARED BY:
TETRA TECH, INC.
707 WILSHIRE BLVD, 23RD FLR.
LOS ANGELES, CA 90017
PHONE: (213) 239-9866

CITY OF LOS ANGELES DEPARTMENT OF PUBLIC WORKS
BUREAU OF ENGINEERING
ENGINEERING
CITY OF LOS ANGELES

TED ALLEN, P.E.
CITY ENGINEER

DESIGN GROUP
ENGINEER: JUSTIN SMITH
DESIGNED BY: JUSTIN SMITH
DRAWN BY: DAVID LOPEZ
CHECKED BY: NATE SCHREINER
APPROVED BY: JASON L. FUSSEL
LIC. NO. C-85736 DATE: 07/11/22

VERT. CONTROL: BM 12-04070, 1929 (NGVD29) - 1985 ADJUSTMENT
HORIZ. CONTROL: GPS; PID AE 1704, EPOCH 1991.35

SHEET TITLE: BORING LOGS SHEET 4
PROJECT: SIXTH STREET PARK, ARTS AND RIVER CONNECTIVITY IMPROVEMENTS (PARC)
ADDRESS: SIXTH STREET OVER THE LOS ANGELES RIVER

WORK ORDER NO. E700235D
FILE NO. --
DRAWING NO. G-008
SHEET 8 OF 295 SHEETS

REVISIONS: NO. | DATE | BY:

BUILDING NO.
INDEX NO. MF-300501

THIS PLAN WAS ELECTRONICALLY SIGNED AND STAMPED

JUSTIN T. SMITH No. 85736 EXP: 9-30-22 REGISTERED PROFESSIONAL ENGINEER CIVIL STATE OF CALIFORNIA

7/8/2022 2:35:35 AM - O:\PROJECTS\RIVINE\20043\200\20043-17001\CAD\SHEETFILES\G-008_BORING LOGS - TT.DWG - SMITH, JUSTIN

REVISION DATES (DESIGN STAGE ONLY)

THE CITY OF LOS ANGELES OR ITS OFFICERS OR AGENTS SHALL NOT BE RESPONSIBLE FOR THE ACCURACY OR COMPLETENESS OF ELECTRONIC COPIES OF THIS PLAN SHEET.

Sheet Version 3.0

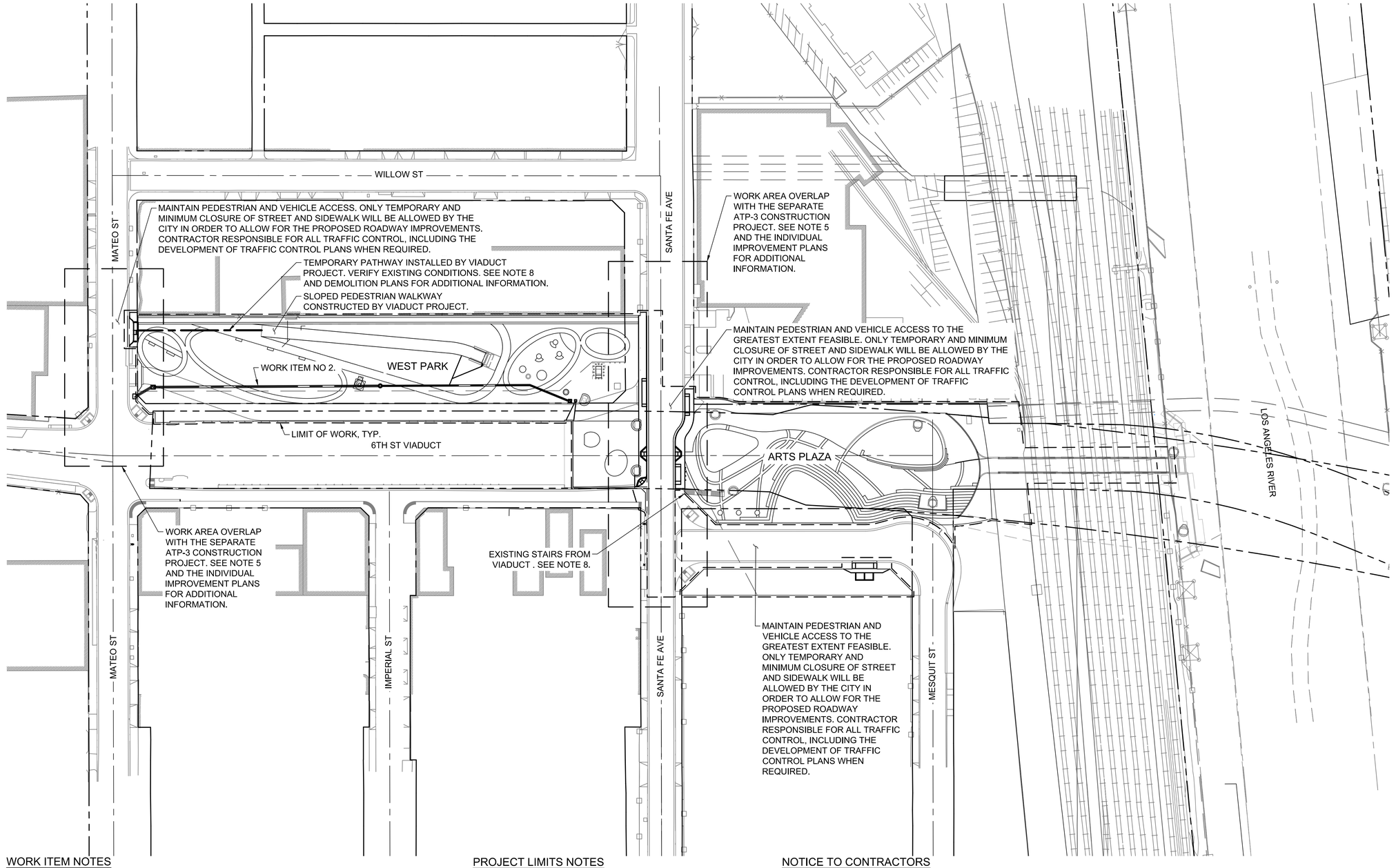

WORK ITEM NOTES

WORK ITEM 1:

WORK ITEM 1 SHALL INCLUDE IMPLEMENTATION OF THE PROJECT REMEDIAL ACTION PLAN WITHIN THE PROJECT AREAS. SEE SPECIFICATIONS FOR ADDITIONAL INFORMATION.

WORK ITEM 2:

WORK ITEM 2 SHALL INCLUDE THE CONSTRUCTION OF ALL MAINLINE STORM DRAIN SYSTEMS CONNECTING TO THE SIXTH STREET VIADUCT DRAINAGE OUTLETS. SEE PLANS FOR ADDITIONAL INFORMATION.

WORK ITEM 3:

WORK ITEM 3 SHALL INCLUDE THE CONSTRUCTION OF ALL REMAINING PARC IMPROVEMENTS, EXCEPT FOR THE STREET IMPROVEMENT AREAS.

WORK ITEM 4:

WORK ITEM 4 SHALL INCLUDE THE CONSTRUCTION OF ALL PARC STREET IMPROVEMENTS ALONG MATEO STREET, SANTA FE AVENUE, MISSION ROAD, ANDERSON STREET, AND CLARENCE STREET. THIS WORK SHALL BE PERFORMED AFTER COMPLETION OF THE ADJACENT INTERIOR PARK IMPROVEMENTS. WORK SHALL ALSO FALL OUTSIDE OF ANY APPLICABLE ONE-YEAR STREET WORK MORATORIUMS FOR THE WORK AREAS.

PROJECT LIMITS NOTES

PROJECT LIMIT LINE IS AN OFFSET FOR CLARITY PURPOSES. CURBS AND GUTTERS ALONG THE PROJECT LIMITS SHALL BE PROTECTED IN PLACE UNLESS NOTED OTHERWISE ON DEMOLITION PLANS.

NOTICE TO CONTRACTORS

1. CONTRACTOR SHALL USE EXISTING DRIVEWAY CUTS ALONG MATEO ST, SANTA FE AVE, MISSION RD, ANDERSON ST, AND CLARENCE ST FOR ACCESS AND/OR AS APPROVED BY THE CITY.
2. CONTRACTOR IS RESTRICTED FROM ALL AREAS OUTSIDE OF THE PROJECT LIMITS EXCEPT AS SHOWN ON THE CONTRACT DRAWINGS.
3. CONTRACTOR SHALL PREPARE AN ACCESS PLAN PRIOR TO THE PLACEMENT OF ANY CONSTRUCTION FENCE, FOR REVIEW AND APPROVAL BY THE CITY. IF DURING CONSTRUCTION THE CONSTRUCTION FENCE IS REQUIRED TO BE MOVED, A REVISED PLAN SHALL BE SUBMITTED TO THE CITY FOR REVIEW AND APPROVAL.
4. CONTRACTOR SHALL MAINTAIN ACCESS TO THE EXISTING BUSINESSES. THE STREET MAY ONLY BE CLOSED FOR THE SHORT PERIOD REQUIRED TO CONSTRUCT THE STREET IMPROVEMENTS OR AS APPROVED BY THE CITY.
5. THE SEPARATE ATP-2 AND ATP-3 CONSTRUCTION PROJECTS WILL BE ACTIVE DURING THE TIME OF PARC CONSTRUCTION. THE PARC CONTRACTOR SHALL COORDINATE CONSTRUCTION ACTIVITIES UNDER THE CONTRACT WITH EACH PROJECT'S GENERAL CONTRACTOR TO ENSURE NO INTERRUPTION OF WORK AND SO AS NOT TO CREATE CONFLICT AND/OR ADDITIONAL WORK TO EITHER OR BOTH PARTIES. SUBMITTAL FOR REVIEW AND APPROVAL OF THE CITY REQUIRED. REFER TO PLANS FOR OVERLAPPING WORK AREAS.
6. CONTRACTOR SHALL LIMIT PARKING RESTRICTIONS ALONG THE STREETS TO THE GREATEST EXTENT FEASIBLE.
7. WORK ADJACENT TO AND PARALLEL TO THE RAILROAD TRACKS WILL REQUIRE COORDINATION WITH METRO OR APPROPRIATE AGENCY. FLAG MEN MAY BE REQUIRED DURING GRADING OPERATIONS AND OTHER WORK DEEMED BY METRO OF HAVING A POSSIBILITY TO FOUL THE TRACKS. REFER TO PROJECT SPECIFICATIONS FOR ADDITIONAL INFORMATION.
8. CONTRACTOR SHALL MAINTAIN ACCESS TO THE VIADUCT RAMP AND STAIRS WEST OF THE LOS ANGELES RIVER AT ALL TIMES. CONTRACTOR TO MAINTAIN AND RELOCATE AS NECESSARY A 5' MINIMUM WIDE TEMPORARY AC PATHWAY BETWEEN THE RAMP/STAIRS AND THE NEAREST ROADWAY SIDEWALK. THE CROSS-SLOPE OF THE TEMPORARY PATHWAY SHALL NOT EXCEED 2% AND THE LONGITUDINAL SLOPE SHALL NOT EXCEED 5%.

N

0 30 60 120
SCALE: 1"=60'

BUREAU OF ENGINEERING
OFFICIAL RECORD

PLANS PREPARED BY:
TETRA TECH, INC.
707 WILSHIRE BLVD, 23RD FLR.
LOS ANGELES, CA 90017
PHONE: (213) 239-8866

BUREAU OF ENGINEERING
ENGINEERING
CITY OF LOS ANGELES

NO. | REVISIONS: | DATE | BY:

BUILDING NO.

INDEX NO. MF-300501

THIS PLAN WAS ELECTRONICALLY SIGNED AND STAMPED

PROFESSIONAL ENGINEER
JUSTIN T. SMITH
No. 85736
EXP: 9-30-22
REGISTERED
CIVIL
STATE OF CALIFORNIA

BUREAU OF PUBLIC WORKS
DEPARTMENT OF
CITY OF LOS ANGELES

CITY ENGINEER
LIC NO. C-85736 DATE: 07/11/22

TED ALLEN, P.E.

DESIGN GROUP

ENGINEER:	JUSTIN SMITH
DESIGNED BY:	JUSTIN SMITH
DRAWN BY:	DAVID LOPEZ
CHECKED BY:	NATE SCHREINER
APPROVED BY:	JASON L. FUSSEL

VERT. CONTROL: BM 12-04070, 1929 (NGVD29) - 1985 ADJUSTMENT
HORIZ. CONTROL: GPS, PID AE 1704, EPOCH 1991.35

SHEET TITLE: OVERALL CONSTRUCTION SEQUENCE PLAN SHEET 1

PROJECT: SIXTH STREET PARK, ARTS AND RIVER CONNECTIVITY IMPROVEMENTS (PARC)

ADDRESS: SIXTH STREET OVER THE LOS ANGELES RIVER

WORK ORDER NO. E700235D

FILE NO. --

DRAWING NO. G-009

SHEET 9 OF 295 SHEETS

7/8/2022 12:12:02 AM - O:\PROJECTS\RVINE\20043\200\20043-17001\CAD\SHEETFILES\G-009_CONSTRUCTION SEQUENCE PLAN - TT.DWG - SMITH, JUSTIN

REVISION DATES (DESIGN STAGE ONLY)

THE CITY OF LOS ANGELES OR ITS OFFICERS OR AGENTS SHALL NOT BE RESPONSIBLE FOR THE ACCURACY OR COMPLETENESS OF ELECTRONIC COPIES OF THIS PLAN SHEET.

Sheet Version 3.0

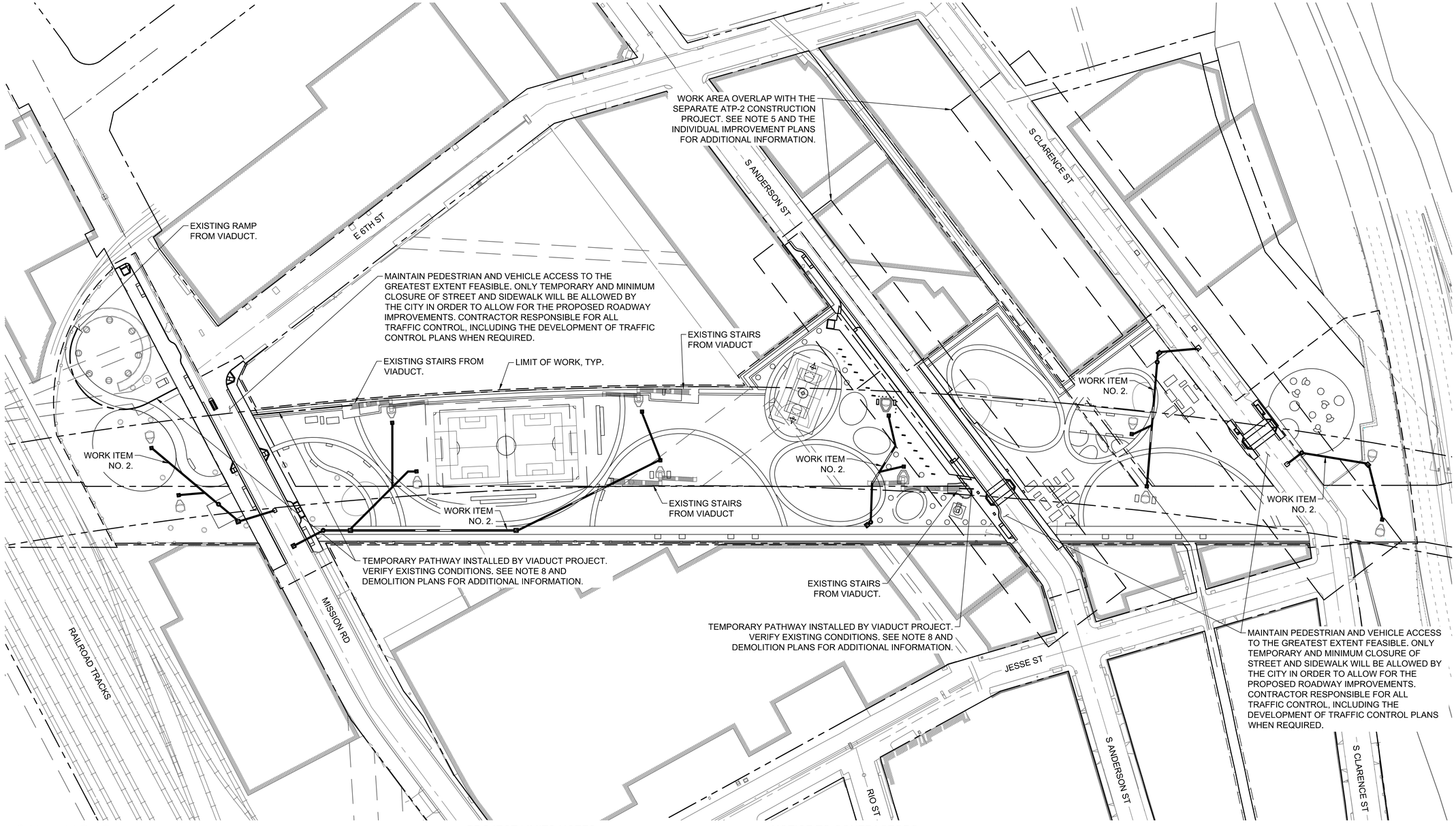

WORK ITEM NOTES

WORK ITEM 1:

WORK ITEM 1 SHALL INCLUDE IMPLEMENTATION OF THE PROJECT REMEDIAL ACTION PLAN WITHIN THE PROJECT AREAS. SEE SPECIFICATIONS FOR ADDITIONAL INFORMATION.

WORK ITEM 2:

WORK ITEM 2 SHALL INCLUDE THE CONSTRUCTION OF ALL MAINLINE STORM DRAIN SYSTEMS CONNECTING TO THE SIXTH STREET VIADUCT DRAINAGE OUTLETS. SEE PLANS FOR ADDITIONAL INFORMATION.

WORK ITEM 3:

WORK ITEM 3 SHALL INCLUDE THE CONSTRUCTION OF ALL REMAINING PARC IMPROVEMENTS, EXCEPT FOR THE STREET IMPROVEMENT AREAS.

WORK ITEM 4:

WORK ITEM 4 SHALL INCLUDE THE CONSTRUCTION OF ALL PARC STREET IMPROVEMENTS ALONG MATEO STREET, SANTA FE AVENUE, MISSION ROAD, ANDERSON STREET, AND CLARENCE STREET. THIS WORK SHALL BE PERFORMED AFTER COMPLETION OF THE ADJACENT INTERIOR PARK IMPROVEMENTS. WORK SHALL ALSO FALL OUTSIDE OF ANY APPLICABLE ONE-YEAR STREET WORK MORATORIUMS FOR THE WORK AREAS.

PROJECT LIMITS NOTES

PROJECT LIMIT LINE IS AN OFFSET FOR CLARITY PURPOSES. CURBS AND GUTTERS ALONG THE PROJECT LIMITS SHALL BE PROTECTED IN PLACE UNLESS NOTED OTHERWISE ON DEMOLITION PLANS.

NOTICE TO CONTRACTORS

1. CONTRACTOR SHALL USE EXISTING DRIVEWAY CUTS ALONG MATEO ST, SANTA FE AVE, MISSION RD, ANDERSON ST, AND CLARENCE ST FOR ACCESS AND/OR AS APPROVED BY THE CITY.
2. CONTRACTOR IS RESTRICTED FROM ALL AREAS OUTSIDE OF THE PROJECT LIMITS EXCEPT AS SHOWN ON THE CONTRACT DRAWINGS.
3. CONTRACTOR SHALL PREPARE AN ACCESS PLAN PRIOR TO THE PLACEMENT OF ANY CONSTRUCTION FENCE, FOR REVIEW AND APPROVAL BY THE CITY. IF DURING CONSTRUCTION THE CONSTRUCTION FENCE IS REQUIRED TO BE MOVED, A REVISED PLAN SHALL BE SUBMITTED TO THE CITY FOR REVIEW AND APPROVAL.
4. CONTRACTOR SHALL MAINTAIN ACCESS TO THE EXISTING BUSINESSES. THE STREET MAY ONLY BE CLOSED FOR THE SHORT PERIOD REQUIRED TO CONSTRUCT THE STREET IMPROVEMENTS OR AS APPROVED BY THE CITY.
5. THE SEPARATE ATP-2 AND ATP-3 CONSTRUCTION PROJECTS WILL BE ACTIVE DURING THE TIME OF PARC CONSTRUCTION. THE PARC CONTRACTOR SHALL COORDINATE CONSTRUCTION ACTIVITIES UNDER THE CONTRACT WITH EACH PROJECT'S GENERAL CONTRACTOR TO ENSURE NO INTERRUPTION OF WORK AND SO AS NOT TO CREATE CONFLICT AND/OR ADDITIONAL WORK TO EITHER OR BOTH PARTIES. SUBMITTAL FOR REVIEW AND APPROVAL OF THE CITY REQUIRED. REFER TO PLANS FOR OVERLAPPING WORK AREAS.
6. CONTRACTOR SHALL LIMIT PARKING RESTRICTIONS ALONG THE STREETS TO THE GREATEST EXTENT FEASIBLE.
7. WORK ADJACENT TO AND PARALLEL TO THE RAILROAD TRACKS WILL REQUIRE COORDINATION WITH METRO OR APPROPRIATE AGENCY. FLAG MEN MAY BE REQUIRED DURING GRADING OPERATIONS AND OTHER WORK DEEMED BY METRO OF HAVING A POSSIBILITY TO FOUL THE TRACKS. REFER TO PROJECT SPECIFICATIONS FOR ADDITIONAL INFORMATION.
8. CONTRACTOR SHALL MAINTAIN ACCESS TO THE VIADUCT RAMP AND STAIRS INDICATED ABOVE EAST OF THE LOS ANGELES RIVER AT ALL TIMES. CONTRACTOR TO MAINTAIN AND RELOCATE AS NECESSARY A 5' MINIMUM WIDE TEMPORARY AC PATHWAY BETWEEN THE RAMP/STAIRS AND THE NEAREST ROADWAY SIDEWALK. THE CROSS-SLOPE OF THE TEMPORARY PATHWAY SHALL NOT EXCEED 2% AND THE LONGITUDINAL SLOPE SHALL NOT EXCEED 5%.

THE CITY OF LOS ANGELES OR ITS OFFICERS OR AGENTS SHALL NOT BE RESPONSIBLE FOR THE ACCURACY OR COMPLETENESS OF ELECTRONIC COPIES OF THIS PLAN SHEET.

REVISION DATES (DESIGN STAGE ONLY)

Sheet Version 3.0

BUREAU OF ENGINEERING
OFFICIAL RECORD

PLANS PREPARED BY:
TETRA TECH, INC.
707 WILSHIRE BLVD, 23RD FLR.
LOS ANGELES, CA 90017
PHONE: (213) 239-8866

CITY OF LOS ANGELES
DEPARTMENT OF PUBLIC WORKS
BUREAU OF ENGINEERING

ENGINEERING
CITY OF LOS ANGELES

NO.	REVISIONS:	DATE	BY:

BUILDING NO.

INDEX NO. MF-300501

THIS PLAN WAS ELECTRONICALLY SIGNED AND STAMPED

JUSTIN T. SMITH
No. 85736
EXP: 9-30-22
REGISTERED PROFESSIONAL ENGINEER
CIVIL
STATE OF CALIFORNIA

CITY ENGINEER

TED ALLEN, P.E.	DESIGN GROUP	DATE:	07/11/22
ENGINEER:	JUSTIN SMITH	LIC NO.	C-85736
DESIGNED BY:	JUSTIN SMITH		
DRAWN BY:	DAVID LOPEZ		
CHECKED BY:	NATE SCHREINER		
APPROVED BY:	JASON L. FUSSEL		

VERT. CONTROL: BM 12-04070, 1929 (NGVD29) - 1985 ADJUSTMENT
HORIZ. CONTROL: GPS, PID AE 1704, EPOCH 1991.35

SHEET TITLE: OVERALL CONSTRUCTION SEQUENCE PLAN SHEET 2

PROJECT: SIXTH STREET PARK, ARTS AND RIVER CONNECTIVITY IMPROVEMENTS (PARC)

ADDRESS: SIXTH STREET OVER THE LOS ANGELES RIVER

WORK ORDER NO. E700235D

FILE NO. --

DRAWING NO. G-010

SHEET 10 OF 295 SHEETS

7/8/2022 12:48:10 AM - O:\PROJECTS\IRVINE\20043\2000-20043-17001\CAD\SHEETFILES\G-010_CONSTRUCTION SEQUENCE PLAN - TT.DWG - SMITH, JUSTIN

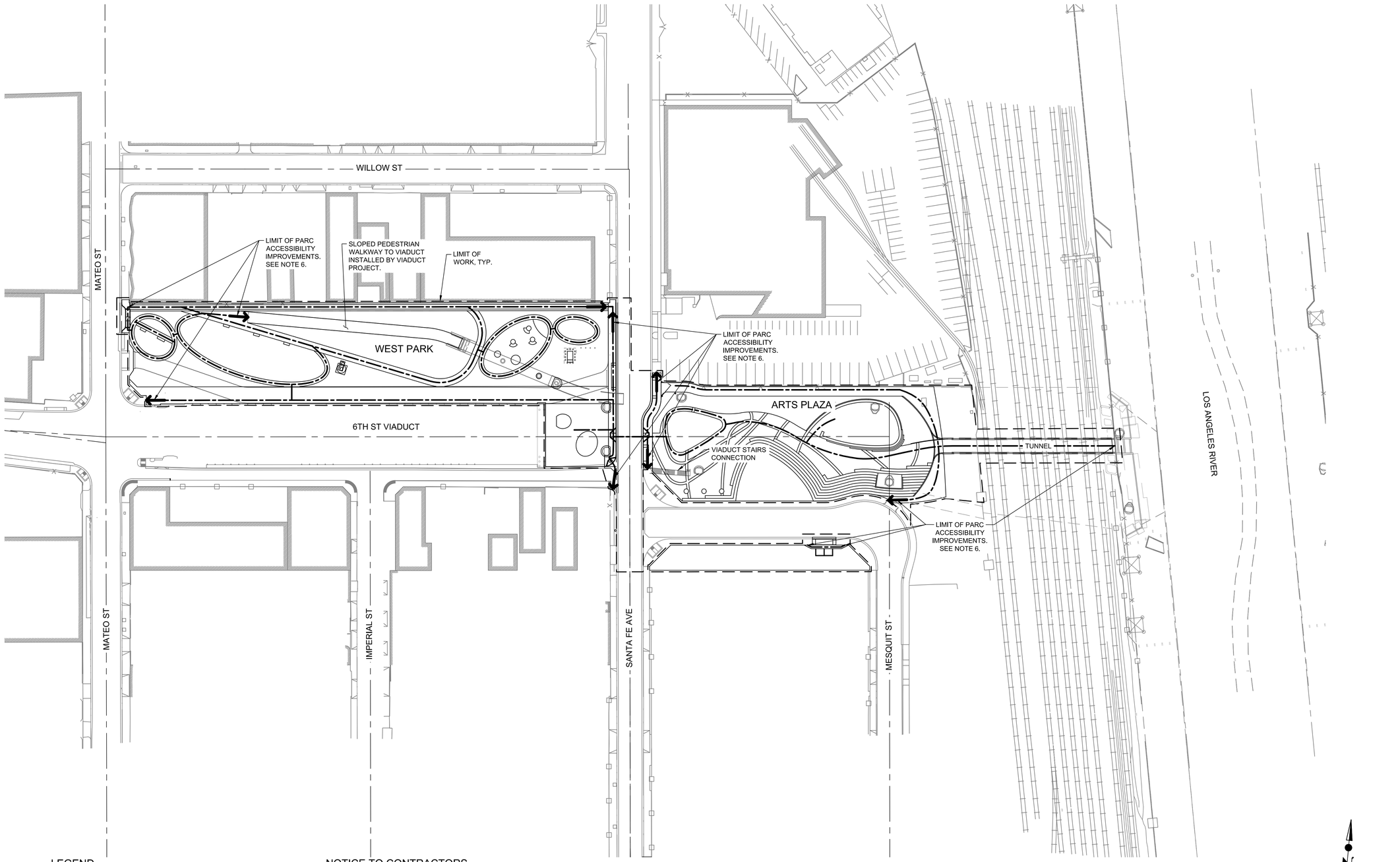

LEGEND

PRIMARY ADA ACCESSIBLE ROUTE

NOTICE TO CONTRACTORS

1. CONTRACTOR SHALL PREPARE AN ACCESS PLAN PRIOR TO THE PLACEMENT OF ANY CONSTRUCTION FENCE, FOR REVIEW AND APPROVAL BY THE CITY. IF DURING CONSTRUCTION THE CONSTRUCTION FENCE IS REQUIRED TO BE MOVED, A REVISED PLAN SHALL BE SUBMITTED TO THE CITY FOR REVIEW AND APPROVAL.
2. CONTRACTOR SHALL MAINTAIN ACCESS TO THE EXISTING BUSINESSES. THE STREET MAY ONLY BE CLOSED FOR THE SHORT PERIOD REQUIRED TO CONSTRUCT THE STREET IMPROVEMENTS OR AS APPROVED BY THE CITY.
3. CONTRACTOR SHALL LIMIT PARKING RESTRICTIONS ALONG THE STREETS TO THE GREATEST EXTENT FEASIBLE.
4. CONTRACTOR SHALL MAINTAIN THE EXISTING PEDESTRIAN ACCESS ALONG THE STREET SIDEWALKS TO THE GREATEST EXTENT FEASIBLE. ONLY TEMPORARY AND MINIMUM CLOSURE OF SIDEWALK WILL BE ALLOWED BY THE CITY. IF EXTENDED CLOSURE IS REQUIRED, THE CONTRACTOR SHALL PROVIDE A TEMPORARY PEDESTRIAN WALKWAY AROUND THE WORK AREA USING TEMPORARY AC PAVEMENT.
5. SEE SHEET G-009 AND G-010 REGARDING MAINTAINING ACCESS TO THE VIADUCT RAMPS AND STAIRS.
6. EXISTING IMPROVEMENTS OUTSIDE OF THE PROJECT LIMITS MAY NOT BE ADA ACCESSIBLE. WHERE PROPOSED IMPROVEMENTS ARE TO CONNECT TO EXISTING IMPROVEMENTS THAT ARE NOT ADA COMPLIANT, A SIDEWALK PANEL, 4' MIN. IN LENGTH, SHALL BE RECONSTRUCTED TO TRANSITION FROM THE PROPOSED ADA COMPLIANT SLOPES TO THE EXISTING NON-COMPLIANT SLOPES.

BUREAU OF ENGINEERING
APPROVED
OFFICIAL RECORD

N

0 30 60 120
SCALE: 1"=60'

THE CITY OF LOS ANGELES OR ITS OFFICERS OR AGENTS SHALL NOT BE RESPONSIBLE FOR THE ACCURACY OR COMPLETENESS OF ELECTRONIC COPIES OF THIS PLAN SHEET.

REVISION DATES (DESIGN STAGE ONLY)

Sheet Version 3.0

PLANS PREPARED BY:
TETRA TECH, INC.
707 WILSHIRE BLVD, 23RD FLR.
LOS ANGELES, CA 90017
PHONE: (213) 239-8866

CITY OF LOS ANGELES DEPARTMENT OF PUBLIC WORKS
BUREAU OF ENGINEERING

ENGINEERING
CITY OF LOS ANGELES

NO.	REVISIONS:	DATE	BY:

BUILDING NO.

INDEX NO. MF-300501

REGISTERED PROFESSIONAL ENGINEER
JUSTIN T. SMITH
No. 85736
EXP: 9-30-22
CIVIL
STATE OF CALIFORNIA

THIS PLAN WAS ELECTRONICALLY SIGNED AND STAMPED

CITY ENGINEER
DATE: 07/11/22
LIC NO. C-85736

TED ALLEN, P.E.

DESIGN GROUP

ENGINEER: JUSTIN SMITH
DESIGNED BY: JUSTIN SMITH
DRAWN BY: DAVID LOPEZ
CHECKED BY: NATE SCHREINER
APPROVED BY: JASON L. FUSSEL

VERT. CONTROL: BM 12-04070, 1929 (NGVD29) - 1985 ADJUSTMENT
HORIZ. CONTROL: GPS; PID AE 1704, EPOCH 1991.35

SHEET TITLE: ACCESSIBILITY PLAN SHEET 1

PROJECT: SIXTH STREET PARK, ARTS AND RIVER CONNECTIVITY IMPROVEMENTS (PARC)

ADDRESS: SIXTH STREET OVER THE LOS ANGELES RIVER

WORK ORDER NO. E700235D
FILE NO. --
DRAWING NO. G-011
SHEET 11 OF 295 SHEETS

7/8/2022 1:00:16 AM - O:\PROJECT\SIRVINE\20043200-20043-17001\CAD\SHEETFILES\G-011_ACCESSIBILITY PLAN - TT.DWG - SMITH, JUSTIN

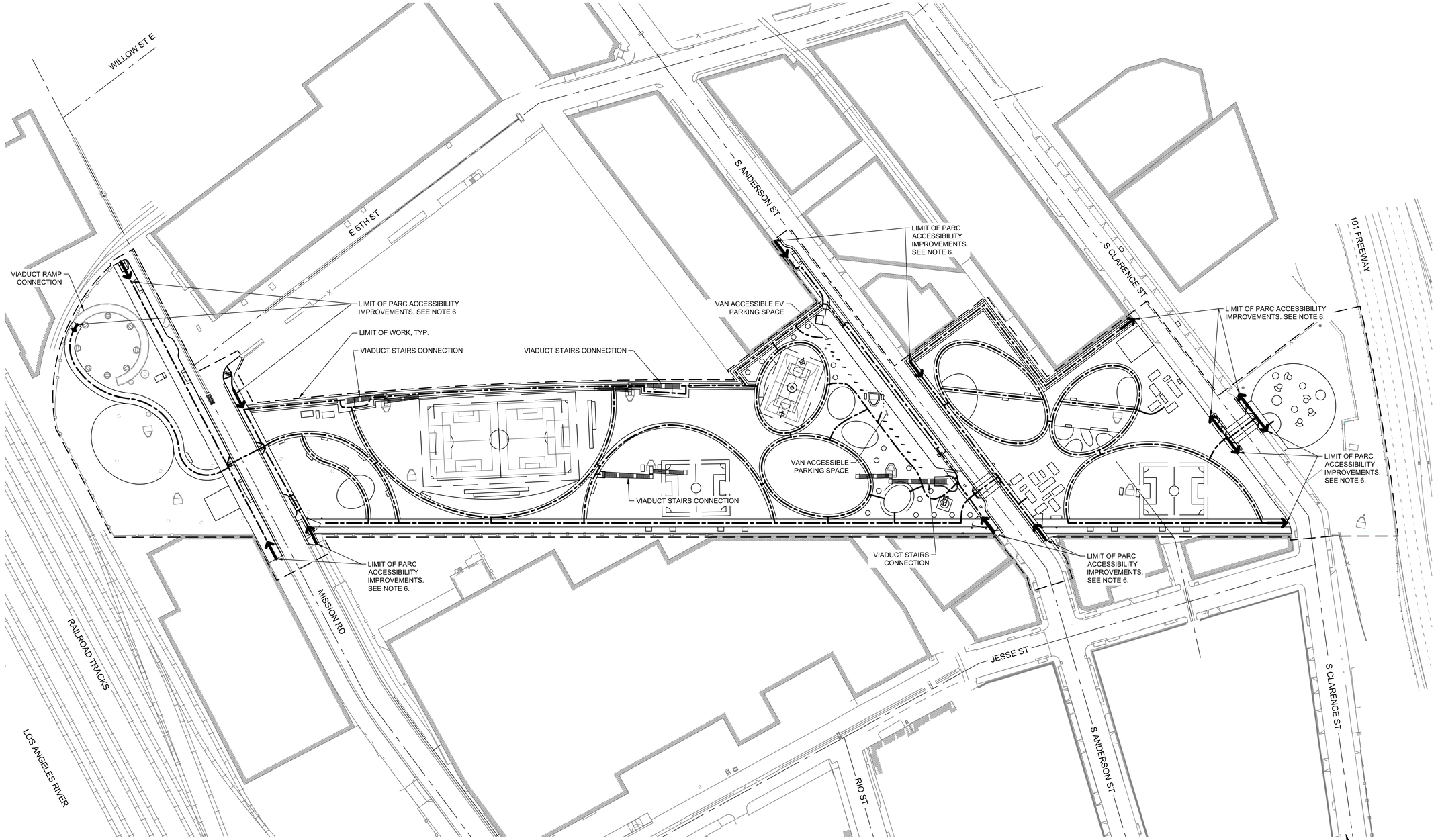

LEGEND

PRIMARY ADA ACCESSIBLE ROUTE

NOTICE TO CONTRACTORS

1. CONTRACTOR SHALL PREPARE AN ACCESS PLAN PRIOR TO THE PLACEMENT OF ANY CONSTRUCTION FENCE, FOR REVIEW AND APPROVAL BY THE CITY. IF DURING CONSTRUCTION THE CONSTRUCTION FENCE IS REQUIRED TO BE MOVED, A REVISED PLAN SHALL BE SUBMITTED TO THE CITY FOR REVIEW AND APPROVAL.
2. CONTRACTOR SHALL MAINTAIN ACCESS TO THE EXISTING BUSINESSES. THE STREET MAY ONLY BE CLOSED FOR THE SHORT PERIOD REQUIRED TO CONSTRUCT THE STREET IMPROVEMENTS OR AS APPROVED BY THE CITY.
3. CONTRACTOR SHALL LIMIT PARKING RESTRICTIONS ALONG THE STREETS TO THE GREATEST EXTENT FEASIBLE.
4. CONTRACTOR SHALL MAINTAIN THE EXISTING PEDESTRIAN ACCESS ALONG THE STREET SIDEWALKS TO THE GREATEST EXTENT FEASIBLE. ONLY TEMPORARY AND MINIMUM CLOSURE OF SIDEWALK WILL BE ALLOWED BY THE CITY. IF EXTENDED CLOSURE IS REQUIRED, THE CONTRACTOR SHALL PROVIDE A TEMPORARY PEDESTRIAN WALKWAY AROUND THE WORK AREA USING TEMPORARY AC PAVEMENT.
5. SEE SHEET G-009 AND G-010 REGARDING MAINTAINING ACCESS TO THE VIADUCT RAMPS AND STAIRS.
6. EXISTING IMPROVEMENTS OUTSIDE OF THE PROJECT LIMITS MAY NOT BE ADA ACCESSIBLE. WHERE PROPOSED IMPROVEMENTS ARE TO CONNECT TO EXISTING IMPROVEMENTS THAT ARE NOT ADA COMPLIANT, A SIDEWALK PANEL, 4' MIN. IN LENGTH, SHALL BE RECONSTRUCTED TO TRANSITION FROM THE PROPOSED ADA COMPLIANT SLOPES TO THE EXISTING NON-COMPLIANT SLOPES.

BUREAU OF ENGINEERING
OFFICIAL RECORD

0 30 60 120
SCALE: 1"=60'

THE CITY OF LOS ANGELES OR ITS OFFICERS OR AGENTS SHALL NOT BE RESPONSIBLE FOR THE ACCURACY OR COMPLETENESS OF ELECTRONIC COPIES OF THIS PLAN SHEET.

REVISION DATES: (DESIGN STAGE ONLY)

Sheet Version 3.0

PLANS PREPARED BY:
TETRA TECH, INC.
707 WILSHIRE BLVD, 23RD FLR.
LOS ANGELES, CA 90017
PHONE: (213) 239-8866

CITY OF LOS ANGELES DEPARTMENT OF PUBLIC WORKS
BUREAU OF ENGINEERING

ENGINEERING
CITY OF LOS ANGELES

NO.	REVISIONS:	DATE	BY:

BUILDING NO.

INDEX NO. MF-300501

THIS PLAN WAS ELECTRONICALLY SIGNED AND STAMPED

PROFESSIONAL ENGINEER
REGISTERED
JUSTIN L. SMITH
No. 85736
EXP: 9-30-22
CIVIL
STATE OF CALIFORNIA

CITY ENGINEER

TED ALLEN, P.E.		DATE:	07/11/22
DESIGN GROUP		LIC NO.	C-85736
ENGINEER:	JUSTIN SMITH		
DESIGNED BY:	JUSTIN SMITH		
DRAWN BY:	DAVID LOPEZ		
CHECKED BY:	NATE SCHREINER		
APPROVED BY:	JASON L. FUSSEL		

SHEET TITLE: ACCESSIBILITY PLAN SHEET 2

PROJECT: SIXTH STREET PARK, ARTS AND RIVER CONNECTIVITY IMPROVEMENTS (PARC)

ADDRESS: SIXTH STREET OVER THE LOS ANGELES RIVER

WORK ORDER NO. E700235D

FILE NO. --

DRAWING NO. G-012

SHEET 12 OF 295 SHEETS

VERT. CONTROL: BM 12-04070, 1929 (NGVD29) - 1985 ADJUSTMENT
HORIZ. CONTROL: GPS; PID AE 1704, EPOCH 1991.35

7/8/2022 1:13:32 AM - O:\PROJECTS\IRVINE\20043\200\20043-17001\CAD\SHEETFILES\G-012_ACCESSIBILITY PLAN - TT.DWG - SMITH, JUSTIN

REVISION DATES (DESIGN STAGE ONLY)

THE CITY OF LOS ANGELES OR ITS OFFICERS OR AGENTS SHALL NOT BE RESPONSIBLE FOR THE ACCURACY OR COMPLETENESS OF ELECTRONIC COPIES OF THIS PLAN SHEET.

Sheet Version 3.0

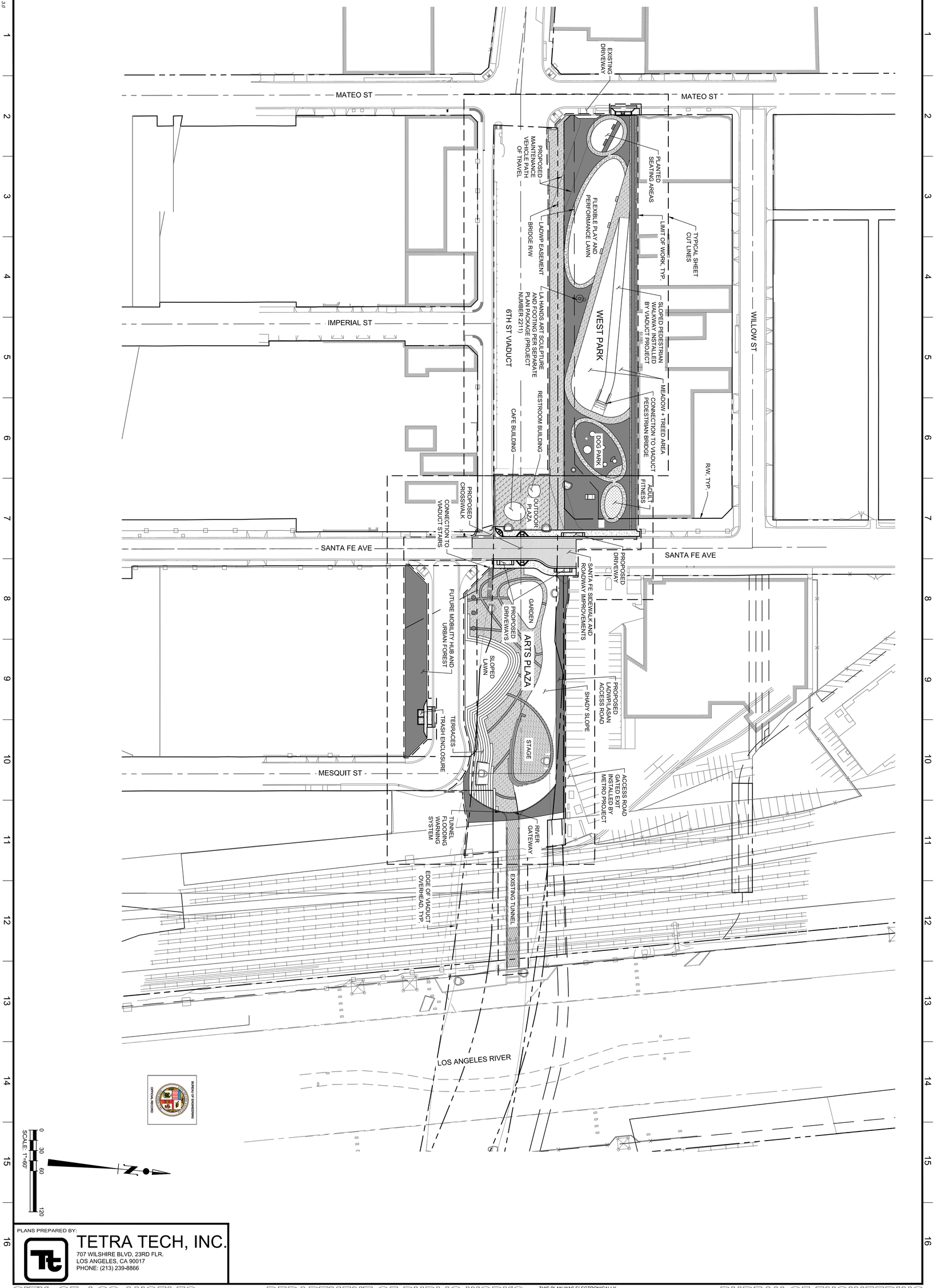

PLANS PREPARED BY:

TETRA TECH, INC.
707 WILSHIRE BLVD, 23RD FLR.
LOS ANGELES, CA 90017
PHONE: (213) 239-8866

CITY OF LOS ANGELES — DEPARTMENT OF PUBLIC WORKS — BUREAU OF ENGINEERING

THIS PLAN WAS ELECTRONICALLY SIGNED AND STAMPED.

SHEET 13 OF 295 SHEETS

DRAWING NO. G-013

FILE NO. --

WORK ORDER NO. E70023SD

VERT. CONTROL: BM 12-04070, 1929 (NGVD29) - 1985 ADJUSTMENT
HORIZ. CONTROL: GPS; PID AE 1704, EPOCH 1991.35

SHEET TITLE: OVERALL SITE PLAN SHEET 1

PROJECT: SIXTH STREET PARK, ARTS AND RIVER CONNECTIVITY IMPROVEMENTS (PARC)

ADDRESS: SIXTH STREET OVER THE LOS ANGELES RIVER

TED ALLEN, P.E. — CITY ENGINEER

DESIGN GROUP		DATE:
ENGINEER:	JUSTIN SMITH — LIC. NO. C-85736	07/11/22
DESIGNED BY:	JUSTIN SMITH	
DRAWN BY:	DAVID LOPEZ	
CHECKED BY:	NATE SCHREINER	
APPROVED BY:	JASON L. FUSSEL	

REGISTERED PROFESSIONAL ENGINEER — JUSTIN T. SMITH — No. 85736 — EXP: 9-30-22 — CIVIL — STATE OF CALIFORNIA

NO.	REVISIONS:	DATE:	BY:

INDEX NO. MF-300501

BUILDING NO.

ENGINEERING — CITY OF LOS ANGELES

7/8/2022 1:28:47 AM - O:\PROJECTS\IRVINE\20043\200-20043-17001\CAD\SHEETFILES\G-013_OVERALL SITE PLAN - TT.DWG - SMITH, JUSTIN

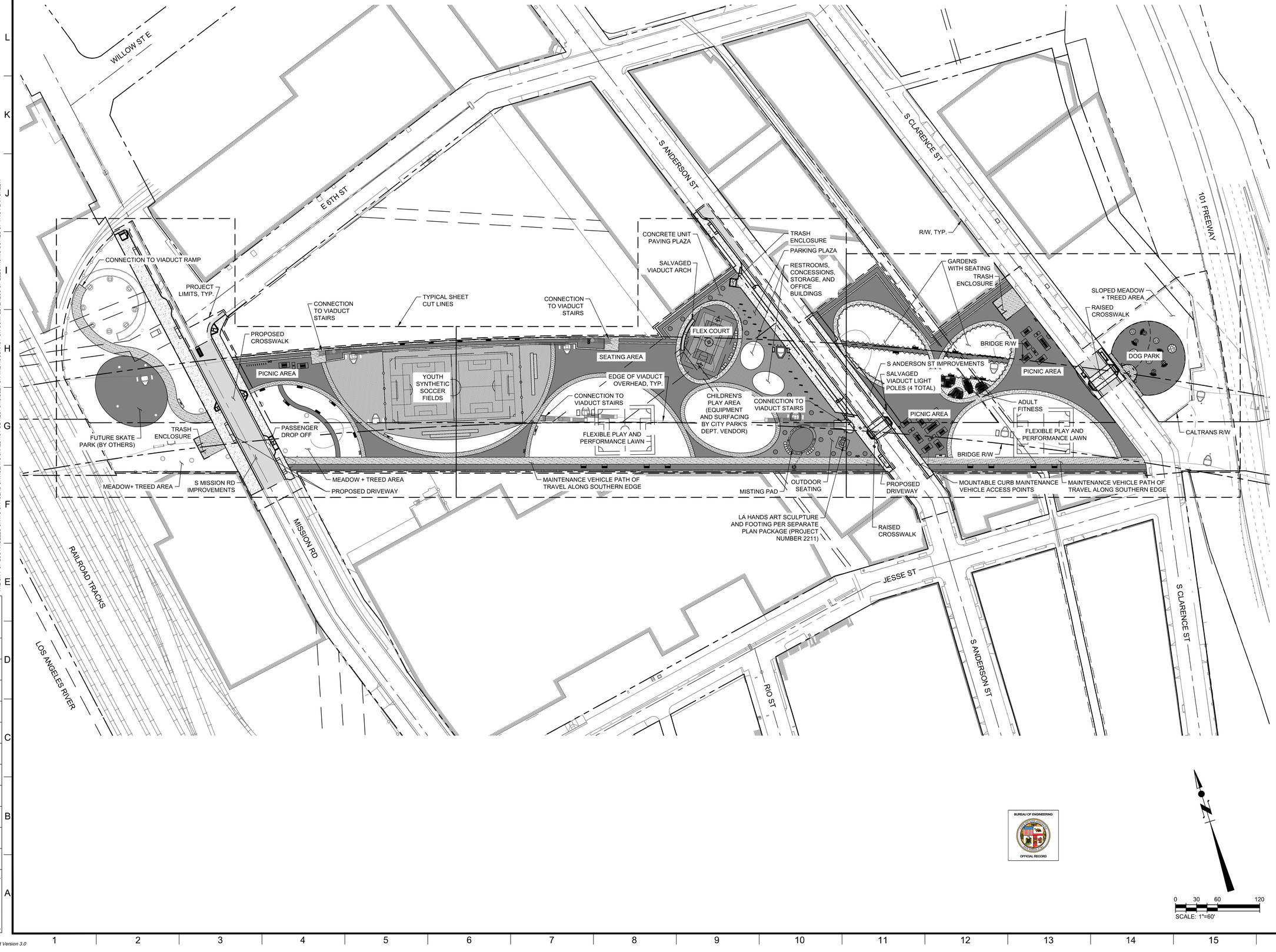

THE CITY OF LOS ANGELES OR ITS OFFICERS OR AGENTS SHALL NOT BE RESPONSIBLE FOR THE ACCURACY OR COMPLETENESS OF ELECTRONIC COPIES OF THIS PLAN SHEET.

REVISION DATES (DESIGN STAGE ONLY)

Sheet Version 3.0

BUREAU OF ENGINEERING

OFFICIAL RECORD

PLANS PREPARED BY:
TETRA TECH, INC.
707 WILSHIRE BLVD. 23RD FLR.
LOS ANGELES, CA 90017
PHONE: (213) 239-8866

CITY OF LOS ANGELES DEPARTMENT OF PUBLIC WORKS
BUREAU OF ENGINEERING

ENGINEERING
CITY OF LOS ANGELES

NO.	REVISIONS:	DATE	BY:

BUILDING NO.

INDEX NO. MF-300501

THIS PLAN WAS ELECTRONICALLY SIGNED AND STAMPED

JUSTIN T. SMITH
No. 85736
EXP: 9-30-22
REGISTERED PROFESSIONAL ENGINEER
CIVIL
STATE OF CALIFORNIA

CITY ENGINEER

		DATE:	07/11/22
		LIC NO.	C-85736

TED ALLEN, P.E.

DESIGN GROUP

ENGINEER:	JUSTIN SMITH
DESIGNED BY:	JUSTIN SMITH
DRAWN BY:	DAVID LOPEZ
CHECKED BY:	NATE SCHREINER
APPROVED BY:	JASON L. FUSSEL

VERT. CONTROL: BM 12-04070, 1929 (NGVD29) - 1985 ADJUSTMENT
HORIZ. CONTROL: GPS; PID AE 1704; EPOCH 1991.35

SHEET TITLE: OVERALL SITE PLAN SHEET 2

PROJECT: SIXTH STREET PARK, ARTS AND RIVER CONNECTIVITY IMPROVEMENTS (PARC)

ADDRESS: SIXTH STREET OVER THE LOS ANGELES RIVER

WORK ORDER NO. E700235D

FILE NO. --

DRAWING NO. G-014

SHEET 14 OF 295 SHEETS

7/8/2022 1:40:04 AM - O:\PROJECTS\IRVINE2\0043\20-20043-17001\CAD\SHEETFILES\G-014_OVERALL SITE PLAN - TT.DWG - SMITH, JUSTIN

LEGEND

- SAWCUT
- FENCE
- LIMIT OF WORK
- PROPERTY / BOUNDARY LINE
- EASEMENT BOUNDARY LINE
- 300 — PROPOSED MAJOR CONTOUR LINE
- 301 — PROPOSED MINOR CONTOUR LINE
- (300) — EXISTING MAJOR CONTOUR LINE
- (301) — EXISTING MINOR CONTOUR LINE
- X — EXISTING FENCE
- S — EXISTING SANITARY SEWER
- W — EXISTING WATER LINE
- EXISTING STORM DRAIN
- G — EXISTING GAS LINE
- T — EXISTING UNDERGROUND/OVERHEAD TELECOMMUNICATIONS LINE
- O — EXISTING OIL LINE
- OHS — EXISTING OVERHEAD ELECTRICAL
- E — EXISTING UNDERGROUND ELECTRICAL
- W — PROPOSED WATER LINE
- SS — PROPOSED SANITARY SEWER LINE
- PROPOSED STORM DRAIN MAIN LINE (Ø ≥ 18")
- SD — PROPOSED STORM DRAIN LATERAL (Ø ≤ 18")

- EXISTING - PROTECT IN PLACE
- REMOVE
- CONSTRUCT
- REMOVE & CONSTRUCT
- WORK BY OTHERS

- (E) MAINTENANCE HOLE
- (E) SEWER MAINTENANCE HOLE
- (E) STORM DRAIN MAINTENANCE HOLE
- (E) POWER MAINTENANCE HOLE
- (E) TELEPHONE MAINTENANCE HOLE
- (E) SEWER LAMP HOLE
- (E) MAINTENANCE HOLE LARGE
- (E) TRAFFIC SIGNAL PULLBOX
- (E) ELECTRIC PULLBOX
- (E) PULLBOX
- (E) WATER METER
- (E) GAS VALVE
- (E) WATER VALVE
- (E) TELEVISION PULLBOX
- (E) IRRIGATION CTRL BOX
- (E) LIGHT STANDARD
- (E) TRAFFIC STANDARD
- (E) LIGHT & TRAFFIC STANDARD
- (E) PARKING METER
- (E) VENT
- (E) SIGN
- (E) FIRE HYDRANT
- (E) GUARD POST
- (E) POWER POLE
- (E) GUY WIRE
- (E) CLEAN OUT
- FF (E) FINISH FLOOR
- (E) MONITORING POINT
- (E) MONITORING STATION
- (E) MONITORING WELL
- (E) SHRUB
- (E) SPRINKLER
- (E) GAS METER
- (E) STAND PIPE
- (E) BOREHOLE
- (E) NEWS STAND
- (E) MAIL BOX
- (E) DRINKING FOUNTAIN
- (E) PHONE
- (E) TREE
- (E) PALM TREE

STREET IMPROVEMENT AC PAVEMENT. DETAIL REFERENCE PER PLAN.

STREET IMPROVEMENT PORTLAND CEMENT CONCRETE PAVEMENT/SIDEWALK. DETAIL REFERENCE PER PLAN.

- PVMT 1 - STONE UNIT PAVERS - DTL 1, SHT C-609
- PVMT 2 A/B - CIP CONCRETE - DTL 2, SHT C-609
- PVMT 3 - CIP CONCRETE - DTL 3, SHT C-609
- PVMT 4 - COATED CONCRETE - DTL 3, SHT C-609
- PVMT 5 - CONCRETE UNIT PAVERS - DTL 4, SHT C-609
- PVMT 6 A/B - CRUSHED STONE - DTL 5, SHT C-609
- PVMT 7 - CRUSHED STONE ADMIXTURE - DTL 5, SHT C-609
- PVMT 8 - TUNNEL RESURFACING - DTL 9, SHT C-601
- PVMT 9 A/B - COATED ASPHALT - DTL 6, SHT C-609
- PVMT 10 A/B - SAFETY SURFACING - DTL 7, SHT C-609
- PVMT 11 - SYNTHETIC GRASS - DTL 1, SHT C-601

STANDARD PLANS FOR THIS PROJECT

WITH EXCEPTION TO THE APWA PWC STANDARD PLANS, A COPY OF THE LISTED STANDARD PLANS HAVE BEEN INCLUDED AS AN ATTACHMENT IN THE SPECIFICATIONS.

APWA STANDARD PLANS FOR PUBLIC WORKS CONSTRUCTION (PWC) - SOUTHERN CALIFORNIA CHAPTER

NUMBER	ITEM
112-2	CURB AND SIDEWALK JOINTS
300-4	CURB OPENING CATCH BASIN
303-4	CURBSIDE GRATING CATCH BASIN
304-4	GRATING CATCH BASIN - ALLEY (LONGITUDINAL)
308-3	MONOLITHIC CATCH BASIN CONNECTION
309-3	CATCH BASIN REINFORCEMENT
310-4	CATCH BASIN FACE PLATE ASSEMBLY AND PROTECTION BAR
311-4	FRAME AND GRATING FOR CATCH BASINS
312-5	CATCH BASIN MANHOLE FRAME AND COVER
313-4	LOCAL DEPRESSIONS AT CATCH BASINS
314-3	MODIFICATIONS FOR SIDE OPENING CATCH-BASIN
324-2	MANHOLE SHAFT - WITH ECCENTRIC REDUCER
331-3	JUNCTION STRUCTURE - PIPE TO PIPE
332-2	JUNCTION STRUCTURE - PIPE TO PIPE
335-2	PIPE CONNECTIONS TO EXISTING STORM DRAINS
615-4	REINFORCED CONCRETE RETAINING WALL TYPE 6
617-3	REINFORCED CONCRETE RETAINING WALL DETAILS
635-3	STEEL STEP

CITY OF LOS ANGELES - BUREAU OF ENGINEERING STANDARD PLAN

NUMBER	ITEM
S-110-1	HOUSE CONNECTION SEWERS
S-137-1	ADJUSTING SEWER MAINTENANCE HOLES TO GRADE
S-164-0	TERMINAL CLEANOUT STRUCTURE "Y"
S-241-0	REINFORCED CONCRETE PIPE
S-251-1	PIPE LAYING IN TRENCHES
S-253-0	SUPPORTS FOR STORM DRAIN AND SEWER PIPE ACROSS TENCHES
S-255-1	BLANKET PROTECTION FOR PIPES
S-281-3	MAINTENANCE HOLE FRAME AND COVER 24-INCH
S-300-1	JUNCTION STRUCTURE "A"
S-322-2	SIDEWALK CULVERT WITH STEEL PLATE TOP
S-355-0	ALLEY GRATING CATCH BASIN
S-361-0	CATCH BASIN NO.61-PRECAST
S-381-0	MANHOLE "EZ"
S-410-2	TYPES OF CURB AND GUTTER
S-432-1	STANDARD STREET CROWN SECTIONS
S-440-4	DRIVEWAYS
S-442-6	CURB RAMPS
S-444-0	SIDEWALKS
S-463-3	PEDESTRIAN PIPE GUARDRAILS & HANDRAILS
S-477-2	T-TRENCH AND PAVEMENT RESTORATION - ASPHALT CONCRETE STREETS
S-601-3	HANDHOLES, MAINTENANCE HOLE COVERS AND FRAMES, DETECTABLE WARNING SURFACE, TREE WELL COVERS, PAVERS AND SIMILAR INSTALLATIONS
S-627-0	SYMBOLS FOR CONSTRUCTION NOTES
S-791-1	ADVANCE CONSTRUCTION NOTICE SIGNS
S-792-0	BUILDING CREDIT SIGNS
27983	STANDARD SADDLE CONNECTION
DETAIL 600	RAISED CROSSINGS (SUPPLEMENTAL DESIGN GUIDE)

CALTRANS STANDARD PLANS

NUMBER	ITEM
RSP B11-47	CABLE RAILING
RSP ES-5C	ELECTRICAL SYSTEMS - (ACCESSIBLE PEDESTRIAN SIGNAL AND PUSH BUTTON ASSEMBLIES)
RSP ES-6A	ELECTRICAL SYSTEMS (LIGHTING STANDARD, TYPES 15 & 21)
RSP ES-7B	ELECTRICAL SYSTEMS (SIGNAL AND LIGHTING STANDARD, TYPE 1 AND EQUIPMENT IDENTIFICATION CHARACTERS)
RSP ES-7M	ELECTRICAL SYSTEMS (SIGNAL AND LIGHTING STANDARD, DETAIL NO. 1)
RSP ES-7N	ELECTRICAL SYSTEMS (SIGNAL AND LIGHTING STANDARD, DETAIL NO. 2)

BUREAU OF ENGINEERING — OFFICIAL RECORD

PLANS PREPARED BY:
TETRA TECH, INC.
707 WILSHIRE BLVD. 23RD FLR.
LOS ANGELES, CA 90017
PHONE: (213) 239-8866

THE CITY OF LOS ANGELES OR ITS OFFICERS OR AGENTS SHALL NOT BE RESPONSIBLE FOR THE ACCURACY OR COMPLETENESS OF ELECTRONIC COPIES OF THIS PLAN SHEET.

REVISION DATES (DESIGN STAGE ONLY)

Sheet Version 3.0

CITY OF LOS ANGELES DEPARTMENT OF PUBLIC WORKS
BUREAU OF ENGINEERING

ENGINEERING — CITY OF LOS ANGELES

NO. | REVISIONS: | DATE | BY:

BUILDING NO.

INDEX NO. MF-300501

THIS PLAN WAS ELECTRONICALLY SIGNED AND STAMPED

PROFESSIONAL ENGINEER — JUSTIN T. SMITH — No. 85736 EXP: 9-30-22 — REGISTERED — CIVIL — STATE OF CALIFORNIA

CITY ENGINEER
TED ALLEN, P.E.
DATE: 07/11/22
LIC NO. C-85736

DESIGN GROUP
ENGINEER: JUSTIN SMITH
DESIGNED BY: JUSTIN SMITH
DRAWN BY: DAVID LOPEZ
CHECKED BY: NATE SCHREINER
APPROVED BY: JASON L. FUSSEL

VERT. CONTROL: BM 12-04070, 1929 (NGVD29) - 1985 ADJUSTMENT
HORIZ. CONTROL: GPS; PID AE 1704; EPOCH 1991.35

SHEET TITLE: LEGEND

PROJECT: SIXTH STREET PARK, ARTS AND RIVER CONNECTIVITY IMPROVEMENTS (PARC)

ADDRESS: SIXTH STREET OVER THE LOS ANGELES RIVER

WORK ORDER NO. E700235D
FILE NO. --
DRAWING NO. G-015
SHEET 15 OF 295 SHEETS

7/8/2022 6:20:54 PM - O:\PROJECTS\IRVINE\20043\20-20043-17001\CAD\SHEETFILES\G-015_LEGEND - TT.DWG - SMITH, JUSTIN

CONTRACTOR SHALL VERIFY THE LOCATION OF THE EXISTING TEMPORARY AC PATHWAY BETWEEN THE VIADUCT PATHWAY AND MATEO STREET. CONTRACTOR SHALL MAINTAIN AND RELOCATE THIS AC PATHWAY AS NEEDED THROUGHOUT CONSTRUCTION. TEMPORARY PATHWAY TO BE REMOVED AT THE END OF CONSTRUCTION. SEE SHEET G-009 FOR ADDITIONAL INFORMATION.

EXISTING BUILDINGS TO REMAIN, TYP.

LIMIT OF WORK, TYP.

TEMPORARY CONSTRUCTION/SECURITY FENCE (SEE NOTE 7), TYP.

VIADUCT PATHWAY AND BERM CONSTRUCTED BY VIADUCT PROJECT. PROTECT IN PLACE. VERIFY EXISTING CONDITIONS.

BEGIN

END

DIRT

LADWP EASEMENT

ACTIVE 8"

RW

BRIDGE RW

MATEO ST

6TH ST. VIADUCT

C/L

IMPERIAL STREET

MATCH LINE: SEE SHEET CD-002

LEGEND:

- REMOVE EXISTING AC PAVEMENT AND BASE MATERIAL
- REMOVE EXISTING CONCRETE
- SAWCUT
- LIMITS OF WORK (2' OFFSET FOR CLARITY)
- PROPERTY LINE
- EASEMENT BOUNDARY LINE
- TEMPORARY CONSTRUCTION/ SECURITY FENCE

LEGEND OF CONSTRUCTION NOTES

CONSTRUCT | REMOVE | REMODEL & ADJUST TO GRADE | WORK BY OTHERS | EXISTING-PROTECT IN PLACE | REMOVE & RECONSTRUCT

NO.	CONSTRUCTION ITEM/NOTE	NO.	CONSTRUCTION ITEM/NOTE
2	TYPE C INTEGRAL CURB & GUTTER	56	VIADUCT BENT / COLUMN
8	CONCRETE PAVEMENT	57	VIADUCT ABUTMENT
12	CONCRETE WALK	58	MONITORING WELL
14	ASPHALT CONCRETE PAVEMENT	71	SWING GATE
16	UNTREATED BASE MATERIAL	77	ELECTRIC PULL BOX
17	ADJUST MAINTENANCE HOLE TO GRADE	85	STORM DRAIN MAINTENANCE HOLE
37	POLE ANCHOR	99	SIDE OPENING CATCH BASIN
41	FIRE HYDRANT	136	SEWER MAINTENANCE HOLE
44	DWPPS MAINTENANCE HOLE	180	EXISTING WATER LINE
46	WATER METER	181	EXISTING GAS LINE
48	POWER POLE	182	EXISTING SANITARY SEWER LINE
49	GAS VALVE	183	EXISTING STORM DRAIN LINE
50	WATER VALVE	184	EXISTING OVERHEAD POWER
53	FENCE	185	EXISTING UNDERGROUND POWER
54	RETAINING WALL	186	EXISTING OVERHEAD TELECOM
55	TELECOM MAINTENANCE HOLE	187	EXISTING UNDERGROUND TELECOM

DEMOLITION NOTES:

1. LOCATION OF EXISTING UTILITIES IS APPROXIMATE AND BASED ON RECORD DRAWINGS. ACTUAL CONDITIONS MAY VARY. CONTRACTOR TO VERIFY IN FIELD AND REPORT ANY DISCREPANCIES.
2. EXISTING UNDERGROUND UTILITIES MUST BE PROTECTED IN PLACE UNLESS NOTED OTHERWISE.
3. REFER TO PROJECT SPECIFICATIONS SECTIONS 01571, 01572, 02110, AND 02220 FOR DEMOLITION REQUIREMENTS.
4. CONTRACTOR TO REMOVE ANOMALY FOUND ONSITE AS NECESSARY.
5. CONTRACTOR SHOULD BE PREPARED TO HANDLE OVERSIZED CONCRETE MATERIAL AND BE ABLE TO BREAK SAID MATERIAL INTO SMALLER PIECES AS MAY BE NECESSARY TO REMOVE AND PROPERLY DISPOSE OF OFFSITE AT NO ADDITIONAL COST TO THE CITY.
6. FOR RELOCATIONS/ADJUSTMENTS TO GRADE, COORDINATE WITH APPLICABLE IMPROVEMENT PLANS.
7. SECURITY FENCING LAYOUT SHOWN IS THE ASSUMED LAYOUT OF FENCING LEFT IN PLACE AT THE SITE BY THE VIADUCT CONTRACTOR. THE PARC CONTRACTOR SHALL BE RESPONSIBLE FOR VERIFYING THE EXISTING CONDITIONS INCLUDING THE LOCATIONS OF ANY OPENINGS OR GATES. PARC CONTRACTOR SHALL BE RESPONSIBLE FOR MAINTAINING, SUPPLEMENTING, RELOCATING AS NEEDED FOR CONSTRUCTION ACTIVITIES, AND ULTIMATELY REMOVING THE FENCING AND ANY GATES AT THE COMPLETION OF THE PROJECT.
8. CONTRACTOR SHALL BE RESPONSIBLE FOR COORDINATING ALL UTILITY ADJUSTMENTS AND RELOCATIONS WITH THE RESPECTIVE UTILITY OWNER. CONTRACTOR SHALL BE RESPONSIBLE FOR PAYING ALL FEES.

0 10 20 40
SCALE: 1"=20'

THE CITY OF LOS ANGELES OR ITS OFFICERS OR AGENTS SHALL NOT BE RESPONSIBLE FOR THE ACCURACY OR COMPLETENESS OF ELECTRONIC COPIES OF THIS PLAN SHEET.

REVISION DATES (DESIGN STAGE ONLY)

Sheet Version 3.0

BUREAU OF ENGINEERING OFFICIAL RECORD

PLANS PREPARED BY:
TETRA TECH, INC.
707 WILSHIRE BLVD, 23RD FLR.
LOS ANGELES, CA 90017
PHONE: (213) 239-8866

BUREAU OF ENGINEERING
ENGINEERING
CITY OF LOS ANGELES

NO.	REVISIONS:	DATE	BY:

BUILDING NO.

INDEX NO. MF-300501

THIS PLAN WAS ELECTRONICALLY SIGNED AND STAMPED

TED ALLEN, P.E.
DESIGN GROUP
ENGINEER: JUSTIN SMITH
DESIGNED BY: JUSTIN SMITH
DRAWN BY: DAVID LOPEZ
CHECKED BY: NATE SCHREINER
APPROVED BY: JASON L. FUSSEL
CITY ENGINEER
DATE: 07/11/22
LIC NO. C-85736

CITY OF LOS ANGELES DEPARTMENT OF PUBLIC WORKS

VERT. CONTROL: BM 12-04070, 1929 (NGVD29) - 1985 ADJUSTMENT
HORIZ. CONTROL: GPS, PID AE 1704, EPOCH 1991.35

SHEET TITLE: DEMOLITION PLAN SHEET 1

PROJECT: SIXTH STREET PARK, ARTS AND RIVER CONNECTIVITY IMPROVEMENTS (PARC)
SIXTH STREET OVER THE LOS ANGELES RIVER

ADDRESS:

WORK ORDER NO. E700235D
FILE NO. --
DRAWING NO. CD-001
SHEET 16 OF 295 SHEETS

7/8/2022 8:40:39 AM - C:\PROJECTS\RVINE\20043\200-20043-17001\CAD\SHEETFILES\IC-001_DEMOLITION PLAN - TT.DWG - SMITH, JUSTIN

LEGEND:

- REMOVE EXISTING AC PAVEMENT AND BASE MATERIAL
- REMOVE EXISTING CONCRETE
- SAWCUT
- LIMITS OF WORK (2' OFFSET FOR CLARITY)
- PROPERTY LINE
- EASEMENT BOUNDARY LINE
- TEMPORARY CONSTRUCTION/ SECURITY FENCE

DEMOLITION NOTES:

1. LOCATION OF EXISTING UTILITIES IS APPROXIMATE AND BASED ON RECORD DRAWINGS. ACTUAL CONDITIONS MAY VARY. CONTRACTOR TO VERIFY IN FIELD AND REPORT ANY DISCREPANCIES.
2. EXISTING UNDERGROUND UTILITIES MUST BE PROTECTED IN PLACE UNLESS NOTED OTHERWISE.
3. REFER TO PROJECT SPECIFICATIONS SECTIONS 01571, 01572, 02110, AND 02220 FOR DEMOLITION REQUIREMENTS.
4. CONTRACTOR TO REMOVE ANOMALY FOUND ONSITE AS NECESSARY.
5. CONTRACTOR SHOULD BE PREPARED TO HANDLE OVERSIZED CONCRETE MATERIAL AND BE ABLE TO BREAK SAID MATERIAL INTO SMALLER PIECES AS MAY BE NECESSARY TO REMOVE AND PROPERLY DISPOSE OF OFFSITE AT NO ADDITIONAL COST TO THE CITY.
6. FOR RELOCATIONS/ADJUSTMENTS TO GRADE, COORDINATE WITH APPLICABLE IMPROVEMENT PLANS.
7. UTILITIES NOTED AS ABANDONED SHALL BE REMOVED TO THE EXTENTS NECESSARY TO ALLOW FOR THE CONSTRUCTION OF THE PROPOSED IMPROVEMENTS. PORTIONS NOT IN CONFLICT WITH THE PROPOSED IMPROVEMENTS MAY BE LEFT IN PLACE. CONTRACTOR TO COORDINATE REMOVALS WITH UTILITY OWNERS.
8. SECURITY FENCING LAYOUT SHOWN IS THE ASSUMED LAYOUT OF FENCING LEFT IN PLACE AT THE SITE BY THE VIADUCT CONTRACTOR. THE PARC CONTRACTOR SHALL BE RESPONSIBLE FOR VERIFYING THE EXISTING CONDITIONS INCLUDING THE LOCATIONS OF ANY OPENINGS OR GATES. PARC CONTRACTOR SHALL BE RESPONSIBLE FOR MAINTAINING, SUPPLEMENTING, RELOCATING AS NEEDED FOR CONSTRUCTION ACTIVITIES, AND ULTIMATELY REMOVING THE FENCING AND ANY GATES AT THE COMPLETION OF THE PROJECT.

LEGEND OF CONSTRUCTION NOTES

○ CONSTRUCT □ REMOVE ⊡○ REMODEL & ADJUST TO GRADE ◌ WORK BY OTHERS ⊡ EXISTING-PROTECT IN PLACE □○ REMOVE & RECONSTRUCT

NO.	CONSTRUCTION ITEM/NOTE	NO.	CONSTRUCTION ITEM/NOTE	NO.	CONSTRUCTION ITEM/NOTE
2	TYPE C INTEGRAL CURB & GUTTER	48	POWER POLE	72	SAWCUT LINE; JOIN EXISTING
5	CONCRETE LONGITUDINAL GUTTER	49	GAS VALVE	76	TUNNEL AC WEARING SURFACE
8	CONCRETE PAVEMENT	50	WATER VALVE	77	ELECTRIC PULL BOX
10	CONCRETE DRIVEWAY	51	LIGHT POLE	78	ALLEY GRATING BASIN (AGB)
12	CONCRETE WALK	53	FENCE INCLUDING PILASTERS	136	SEWER MAINTENANCE HOLE
13	CURB RAMP	54	RETAINING WALL	180	EXISTING WATER LINE
14	ASPHALT CONCRETE PAVEMENT	56	VIADUCT BENT / COLUMN	181	EXISTING GAS LINE
16	UNTREATED BASE MATERIAL	59	VIADUCT ARCH LIGHTING	182	EXISTING SANITARY SEWER LINE
17	ADJUST MAINTENANCE HOLE TO GRADE	61	POWER SERVICE EQUIPMENT / PANEL	183	EXISTING STORM DRAIN LINE
37	POLE ANCHOR	62	PAD-MOUNTED SWITCH GEAR	184	EXISTING OVERHEAD POWER
41	FIRE HYDRANT	64	STAIRS	185	EXISTING UNDERGROUND POWER
43	DWPPS VENT	65	TUNNEL	186	EXISTING OVERHEAD TELECOM
44	DWPPS MAINTENANCE HOLE	67	SEWER SIPHON STRUCTURE	187	EXISTING UNDERGROUND TELECOM
46	WATER METER	69	FIXED BOLLARD	188	EXISTING OIL LINE

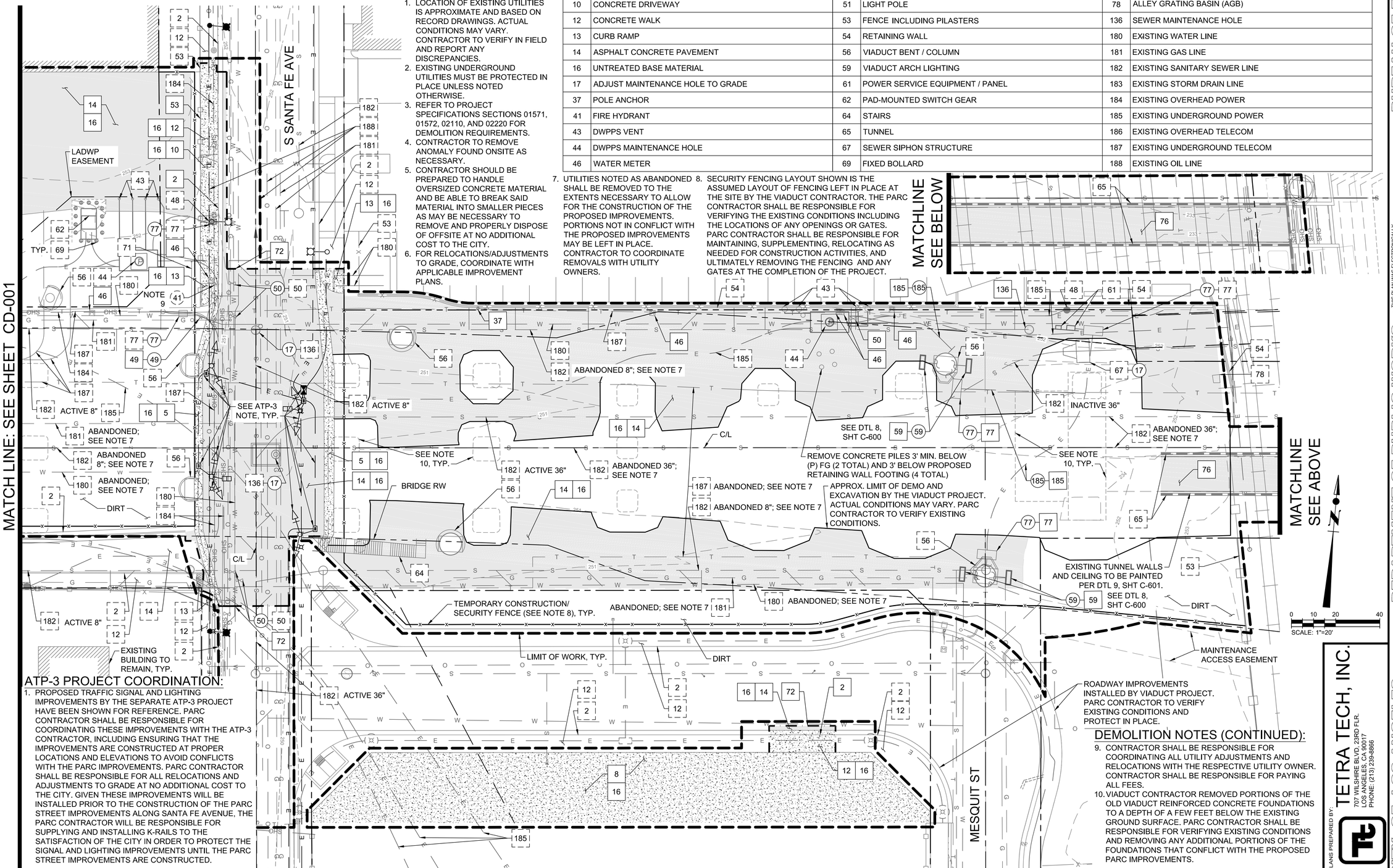

ATP-3 PROJECT COORDINATION:

1. PROPOSED TRAFFIC SIGNAL AND LIGHTING IMPROVEMENTS BY THE SEPARATE ATP-3 PROJECT HAVE BEEN SHOWN FOR REFERENCE. PARC CONTRACTOR SHALL BE RESPONSIBLE FOR COORDINATING THESE IMPROVEMENTS WITH THE ATP-3 CONTRACTOR, INCLUDING ENSURING THAT THE IMPROVEMENTS ARE CONSTRUCTED AT PROPER LOCATIONS AND ELEVATIONS TO AVOID CONFLICTS WITH THE PARC IMPROVEMENTS. PARC CONTRACTOR SHALL BE RESPONSIBLE FOR ALL RELOCATIONS AND ADJUSTMENTS TO GRADE AT NO ADDITIONAL COST TO THE CITY. GIVEN THESE IMPROVEMENTS WILL BE INSTALLED PRIOR TO THE CONSTRUCTION OF THE PARC STREET IMPROVEMENTS ALONG SANTA FE AVENUE, THE PARC CONTRACTOR WILL BE RESPONSIBLE FOR SUPPLYING AND INSTALLING K-RAILS TO THE SATISFACTION OF THE CITY IN ORDER TO PROTECT THE SIGNAL AND LIGHTING IMPROVEMENTS UNTIL THE PARC STREET IMPROVEMENTS ARE CONSTRUCTED.

DEMOLITION NOTES (CONTINUED):

9. CONTRACTOR SHALL BE RESPONSIBLE FOR COORDINATING ALL UTILITY ADJUSTMENTS AND RELOCATIONS WITH THE RESPECTIVE UTILITY OWNER. CONTRACTOR SHALL BE RESPONSIBLE FOR PAYING ALL FEES.
10. VIADUCT CONTRACTOR REMOVED PORTIONS OF THE OLD VIADUCT REINFORCED CONCRETE FOUNDATIONS TO A DEPTH OF A FEW FEET BELOW THE EXISTING GROUND SURFACE. PARC CONTRACTOR SHALL BE RESPONSIBLE FOR VERIFYING EXISTING CONDITIONS AND REMOVING ANY ADDITIONAL PORTIONS OF THE FOUNDATIONS THAT CONFLICT WITH THE PROPOSED PARC IMPROVEMENTS.

THE CITY OF LOS ANGELES OR ITS OFFICERS OR AGENTS SHALL NOT BE RESPONSIBLE FOR THE ACCURACY OR COMPLETENESS OF ELECTRONIC COPIES OF THIS PLAN SHEET.

REVISION DATES (DESIGN STAGE ONLY)

Sheet Version 3.0

BUREAU OF ENGINEERING
ENGINEERING
CITY OF LOS ANGELES

NO.	REVISIONS:	DATE	BY:

BUILDING NO.
INDEX NO. MF-300501

THIS PLAN WAS ELECTRONICALLY SIGNED AND STAMPED

PROFESSIONAL ENGINEER ★ REGISTERED ★ CIVIL ★ STATE OF CALIFORNIA
TED T. SMITH
No. 85736
EXP: 9-30-22
JUSTIN L. FUSSEL

CITY OF LOS ANGELES DEPARTMENT OF PUBLIC WORKS

CITY ENGINEER
DESIGN GROUP
ENGINEER: JUSTIN SMITH
DESIGNED BY: JUSTIN SMITH
DRAWN BY: DAVID LOPEZ
CHECKED BY: NATE SCHREINER
APPROVED BY: JASON L. FUSSEL
TED ALLEN, P.E.
LIC. NO. C-85736
DATE: 07/11/22

VERT. CONTROL: BM 12-04070, 1929 (NGVD29) - 1985 ADJUSTMENT
HORIZ. CONTROL: GPS; PID AE 1704; EPOCH 1991.35

SHEET TITLE: DEMOLITION PLAN SHEET 2
PROJECT: SIXTH STREET PARK, ARTS AND RIVER CONNECTIVITY IMPROVEMENTS (PARC)
ADDRESS: SIXTH STREET OVER THE LOS ANGELES RIVER

PLANS PREPARED BY:
TETRA TECH, INC.
707 WILSHIRE BLVD, 23RD FLR.
LOS ANGELES, CA 90017
PHONE: (213) 239-8866

WORK ORDER NO. E700235D
FILE NO. --
DRAWING NO. CD-002
SHEET 17 OF 295 SHEETS

7/8/2022 8:48:36 AM - O:\PROJECTS\IRVINE\20043\200-20043-17001\CAD\SHEETFILES\C-002_DEMOLITION PLAN - TT.DWG - SMITH, JUSTIN

LEGEND:

- REMOVE EXISTING AC PAVEMENT AND BASE MATERIAL
- REMOVE EXISTING CONCRETE
- REMOVE EXISTING DG PATH
- SAWCUT
- LIMITS OF WORK (2' OFFSET FOR CLARITY)
- PROPERTY LINE
- EASEMENT BOUNDARY LINE
- TEMPORARY CONSTRUCTION/ SECURITY FENCE

DEMOLITION NOTES:

1. LOCATION OF EXISTING UTILITIES IS APPROXIMATE AND BASED ON RECORD DRAWINGS. ACTUAL CONDITIONS MAY VARY. CONTRACTOR TO VERIFY IN FIELD AND REPORT ANY DISCREPANCIES.
2. EXISTING UNDERGROUND UTILITIES MUST BE PROTECTED IN PLACE UNLESS NOTED OTHERWISE.
3. REFER TO PROJECT SPECIFICATIONS SECTIONS 01571, 01572, 02110, AND 02220 FOR DEMOLITION REQUIREMENTS.
4. CONTRACTOR TO REMOVE ANOMALY FOUND ONSITE AS NECESSARY.
5. CONTRACTOR SHOULD BE PREPARED TO HANDLE OVERSIZED CONCRETE MATERIAL AND BE ABLE TO BREAK SAID MATERIAL INTO SMALLER PIECES AS MAY BE NECESSARY TO REMOVE AND PROPERLY DISPOSE OF OFFSITE AT NO ADDITIONAL COST TO THE CITY.
6. FOR RELOCATIONS/ADJUSTMENTS TO GRADE, COORDINATE WITH APPLICABLE IMPROVEMENT PLANS.
7. CONTRACTOR SHALL VERIFY THE LOCATION OF THE TEMPORARY AC PATHWAY BETWEEN THE VIADUCT HELICAL RAMP AND MISSION ROAD. CONTRACTOR SHALL MAINTAIN AND RELOCATE THIS AC PATHWAY AS NEEDED THROUGHOUT CONSTRUCTION. TEMPORARY PATHWAY TO BE REMOVED AT THE END OF CONSTRUCTION. SEE SHEET G-010 FOR ADDITIONAL INFORMATION.
8. CONTRACTOR SHALL VERIFY THE LOCATION OF THE TEMPORARY AC PATHWAY BETWEEN THE VIADUCT STAIRS AND MISSION ROAD. CONTRACTOR SHALL MAINTAIN AND RELOCATE THIS AC PATHWAY AS NEEDED THROUGHOUT CONSTRUCTION. TEMPORARY PATHWAY TO BE REMOVED AT THE END OF CONSTRUCTION. SEE SHEET G-010 FOR ADDITIONAL INFORMATION.
9. SECURITY FENCING LAYOUT SHOWN IS THE ASSUMED LAYOUT OF FENCING LEFT IN PLACE AT THE SITE BY THE VIADUCT CONTRACTOR. THE PARC CONTRACTOR SHALL BE RESPONSIBLE FOR VERIFYING THE EXISTING CONDITIONS INCLUDING THE LOCATIONS OF ANY OPENINGS OR GATES. PARC CONTRACTOR SHALL BE RESPONSIBLE FOR MAINTAINING, SUPPLEMENTING, RELOCATING AS NEEDED FOR CONSTRUCTION ACTIVITIES, AND ULTIMATELY REMOVING THE FENCING AND ANY GATES AT THE COMPLETION OF THE PROJECT.
10. CONTRACTOR SHALL BE RESPONSIBLE FOR COORDINATING ALL UTILITY ADJUSTMENTS AND RELOCATIONS WITH THE RESPECTIVE UTILITY OWNER. CONTRACTOR SHALL BE RESPONSIBLE FOR PAYING ALL FEES.
11. VIADUCT CONTRACTOR REMOVED PORTIONS OF THE OLD VIADUCT REINFORCED CONCRETE FOUNDATIONS TO A DEPTH OF A FEW FEET BELOW THE EXISTING GROUND SURFACE. PARC CONTRACTOR SHALL BE RESPONSIBLE FOR VERIFYING EXISTING CONDITIONS AND REMOVING ANY ADDITIONAL PORTIONS OF THE FOUNDATIONS THAT CONFLICT WITH THE PROPOSED PARC IMPROVEMENTS.
12. CONTRACTOR SHALL COORDINATE FIRE HYDRANT RELOCATION WITH LADWP.

LEGEND OF CONSTRUCTION NOTES

◯ CONSTRUCT ☐ REMOVE ⬚◯ REMODEL & ADJUST TO GRADE ◯ WORK BY OTHERS ⬚ EXISTING-PROTECT IN PLACE ☐◯ REMOVE & RECONSTRUCT

NO.	CONSTRUCTION ITEM/NOTE	NO.	CONSTRUCTION ITEM/NOTE
1	TYPE A CONCRETE CURB	56	VIADUCT BENT / COLUMN
2	TYPE C INTEGRAL CURB & GUTTER	59	VIADUCT ARCH LIGHTING
5	CONCRETE LONGITUDINAL GUTTER	60	PAD MOUNTED TRANSFORMER
8	CONCRETE PAVEMENT	61	POWER SERVICE EQUIPMENT / PANEL
12	CONCRETE WALK	62	PAD-MOUNTED SWITCH GEAR
14	ASPHALT CONCRETE PAVEMENT	64	STAIRS
16	UNTREATED BASE MATERIAL	66	DECOMPOSED GRANITE PAVEMENT
17	ADJUST MAINTENANCE HOLE TO GRADE	69	FIXED BOLLARD
20	TREE	72	SAWCUT LINE; JOIN EXISTING
37	POLE ANCHOR	77	ELECTRIC PULL BOX
38	STREET LIGHTING PULL BOX	78	ALLEY GRATING BASIN (AGB)
41	FIRE HYDRANT	85	STORM DRAIN MAINTENANCE HOLE
43	DWPPS VENT	136	SEWER MAINTENANCE HOLE
44	DWPPS MAINTENANCE HOLE	180	EXISTING WATER LINE
45	DWPWS MAINTENANCE HOLE	181	EXISTING GAS LINE
46	WATER METER	182	EXISTING SANITARY SEWER LINE
50	WATER VALVE	183	EXISTING STORM DRAIN LINE
51	LIGHT POLE	185	EXISTING UNDERGROUND POWER
53	FENCE	187	EXISTING UNDERGROUND TELECOM
54	RETAINING WALL	188	EXISTING OIL LINE

TEMPORARY CONSTRUCTION/SECURITY FENCE (SEE NOTE 9), TYP.
EXISTING BUILDING TO REMAIN, TYP.
S MISSION RD
E 6TH ST.
C/L
SEE NOTE 7
INACTIVE 33"
SEWER EASEMENT
LADWP EASEMENT
NOTE 12
TYP.
DTL 8, SHT C-600
DIRT
SEE NOTE 11, TYP.
BRIDGE RW
EXISTING BUILDING TO REMAIN, TYP.
ACTIVE 10"
ACTIVE 96" NEIS
ACTIVE 63" NOS
SEE NOTE 8
LIMIT OF WORK, TYP.
SEE NOTE 11, TYP.

MATCH LINE: SEE SHEET CD-004

SCALE: 1"=20'

BUREAU OF ENGINEERING OFFICIAL RECORD

PLANS PREPARED BY:
TETRA TECH, INC.
707 WILSHIRE BLVD, 23RD FLR.
LOS ANGELES, CA 90017
PHONE: (213) 239-8866

THIS PLAN WAS ELECTRONICALLY SIGNED AND STAMPED

PROFESSIONAL ENGINEER ★ REGISTERED ★ JUSTIN T. SMITH No. 85736 EXP: 9-30-22 CIVIL STATE OF CALIFORNIA

BUREAU OF ENGINEERING
ENGINEERING
CITY OF LOS ANGELES

NO.	REVISIONS:	DATE	BY:

BUILDING NO.
INDEX NO. MF-300501

CITY ENGINEER
TED ALLEN, P.E.
DATE:

DESIGN GROUP
ENGINEER: JUSTIN SMITH LIC NO. C-85736 07/11/22
DESIGNED BY: JUSTIN SMITH
DRAWN BY: DAVID LOPEZ
CHECKED BY: NATE SCHREINER
APPROVED BY: JASON L. FUSSEL

CITY OF LOS ANGELES DEPARTMENT OF PUBLIC WORKS

VERT. CONTROL: BM 12-04070, 1929 (NGVD29) - 1985 ADJUSTMENT
HORIZ. CONTROL: GPS, PID AE 1704, EPOCH 1991.35

SHEET TITLE: DEMOLITION PLAN SHEET 3

PROJECT: SIXTH STREET PARK, ARTS AND RIVER CONNECTIVITY IMPROVEMENTS (PARC)

ADDRESS: SIXTH STREET OVER THE LOS ANGELES RIVER

WORK ORDER NO. E700235D
FILE NO. --
DRAWING NO. CD-003
SHEET 18 OF 295 SHEETS

7/8/2022 8:59:04 AM - C:\PROJECTSIRVINE\20043\200-20043-17001\CAD\SHEETFILES\C-003_DEMOLITION PLAN - TT.DWG - SMITH, JUSTIN

REVISION DATES (DESIGN STAGE ONLY)

THE CITY OF LOS ANGELES OR ITS OFFICERS OR AGENTS SHALL NOT BE RESPONSIBLE FOR THE ACCURACY OR COMPLETENESS OF ELECTRONIC COPIES OF THIS PLAN SHEET.

Sheet Version 3.0

LEGEND OF CONSTRUCTION NOTES

CONSTRUCT | REMOVE | REMODEL & ADJUST TO GRADE | WORK BY OTHERS | EXISTING-PROTECT IN PLACE | REMOVE & RECONSTRUCT

NO.	CONSTRUCTION ITEM/NOTE	NO.	CONSTRUCTION ITEM/NOTE
1	TYPE A CONCRETE CURB	63	TELECOM PULL BOX
8	CONCRETE PAVEMENT	64	STAIRS
10	CONCRETE DRIVEWAY	69	FIXED BOLLARD
12	CONCRETE WALK	72	SAWCUT LINE; JOIN EXISTING
16	UNTREATED BASE MATERIAL	77	ELECTRIC PULL BOX
17	ADJUST MAINTENANCE HOLE TO GRADE	78	ALLEY GRATING BASIN (AGB)
31	PIPE HANDRAIL	85	STORM DRAIN MAINTENANCE HOLE
37	POLE ANCHOR	136	SEWER MAINTENANCE HOLE
38	STREET LIGHTING PULL BOX	180	EXISTING WATER LINE
41	FIRE HYDRANT	181	EXISTING GAS LINE
46	WATER METER	182	EXISTING SANITARY SEWER LINE
48	POWER POLE	183	EXISTING STORM DRAIN LINE
50	WATER VALVE	184	EXISTING OVERHEAD POWER
51	LIGHT POLE	185	EXISTING UNDERGROUND POWER
52	ELEVATED LANDING	186	EXISTING OVERHEAD TELECOM
53	FENCE	187	EXISTING UNDERGROUND TELECOM
56	VIADUCT BENT / COLUMN	188	EXISTING OIL LINE
59	VIADUCT ARCH LIGHTING		

DEMOLITION NOTES:

1. LOCATION OF EXISTING UTILITIES IS APPROXIMATE AND BASED ON RECORD DRAWINGS. ACTUAL CONDITIONS MAY VARY. CONTRACTOR TO VERIFY IN FIELD AND REPORT ANY DISCREPANCIES.
2. EXISTING UNDERGROUND UTILITIES MUST BE PROTECTED IN PLACE UNLESS NOTED OTHERWISE.
3. REFER TO PROJECT SPECIFICATIONS SECTIONS 01571, 01572, 02110, AND 02220 FOR DEMOLITION REQUIREMENTS.
4. CONTRACTOR TO REMOVE ANOMALY FOUND ONSITE AS NECESSARY.
5. CONTRACTOR SHOULD BE PREPARED TO HANDLE OVERSIZED CONCRETE MATERIAL AND BE ABLE TO BREAK SAID MATERIAL INTO SMALLER PIECES AS MAY BE NECESSARY TO REMOVE AND PROPERLY DISPOSE OF OFFSITE AT NO ADDITIONAL COST TO THE CITY.
6. FOR RELOCATIONS/ADJUSTMENTS TO GRADE, COORDINATE WITH APPLICABLE IMPROVEMENT PLANS.
7. CONTRACTOR SHALL VERIFY THE LOCATION OF THE TEMPORARY AC PATHWAY BETWEEN THE VIADUCTS STAIRS AND ANDERSON STREET. CONTRACTOR SHALL MAINTAIN AND RELOCATE THE AC PATHWAY AS NEEDED THROUGHOUT CONSTRUCTION. TEMPORARY PATHWAYS TO BE REMOVED AT THE END OF CONSTRUCTION. SEE SHEET G-010 FOR ADDITIONAL INFORMATION.
8. SECURITY FENCING LAYOUT SHOWN IS THE ASSUMED LAYOUT OF FENCING LEFT IN PLACE AT THE SITE BY THE VIADUCT CONTRACTOR. THE PARC CONTRACTOR SHALL BE RESPONSIBLE FOR VERIFYING THE EXISTING CONDITIONS INCLUDING THE LOCATIONS OF ANY OPENINGS OR GATES. PARC CONTRACTOR SHALL BE RESPONSIBLE FOR MAINTAINING, SUPPLEMENTING, RELOCATING AS NEEDED FOR CONSTRUCTION ACTIVITIES, AND ULTIMATELY REMOVING THE FENCING AND ANY GATES AT THE COMPLETION OF THE PROJECT.
9. CONTRACTOR SHALL BE RESPONSIBLE FOR COORDINATING ALL UTILITY ADJUSTMENTS AND RELOCATIONS WITH THE RESPECTIVE UTILITY OWNER. CONTRACTOR SHALL BE RESPONSIBLE FOR PAYING ALL FEES.
10. VIADUCT CONTRACTOR REMOVED PORTIONS OF THE OLD VIADUCT REINFORCED CONCRETE FOUNDATIONS TO A DEPTH OF A FEW FEET BELOW THE EXISTING GROUND SURFACE. PARC CONTRACTOR SHALL BE RESPONSIBLE FOR VERIFYING EXISTING CONDITIONS AND REMOVING ANY ADDITIONAL PORTIONS OF THE FOUNDATIONS THAT CONFLICT WITH THE PROPOSED PARC IMPROVEMENTS.
11. CONTRACTOR SHALL COORDINATE FIRE HYDRANT RELOCATION WITH LADWP.

LEGEND:

REMOVE EXISTING AC PAVEMENT AND BASE MATERIAL

REMOVE EXISTING CONCRETE

SAWCUT

LIMITS OF WORK (2' OFFSET FOR CLARITY)

PROPERTY LINE

EASEMENT BOUNDARY LINE

TEMPORARY CONSTRUCTION/SECURITY FENCE

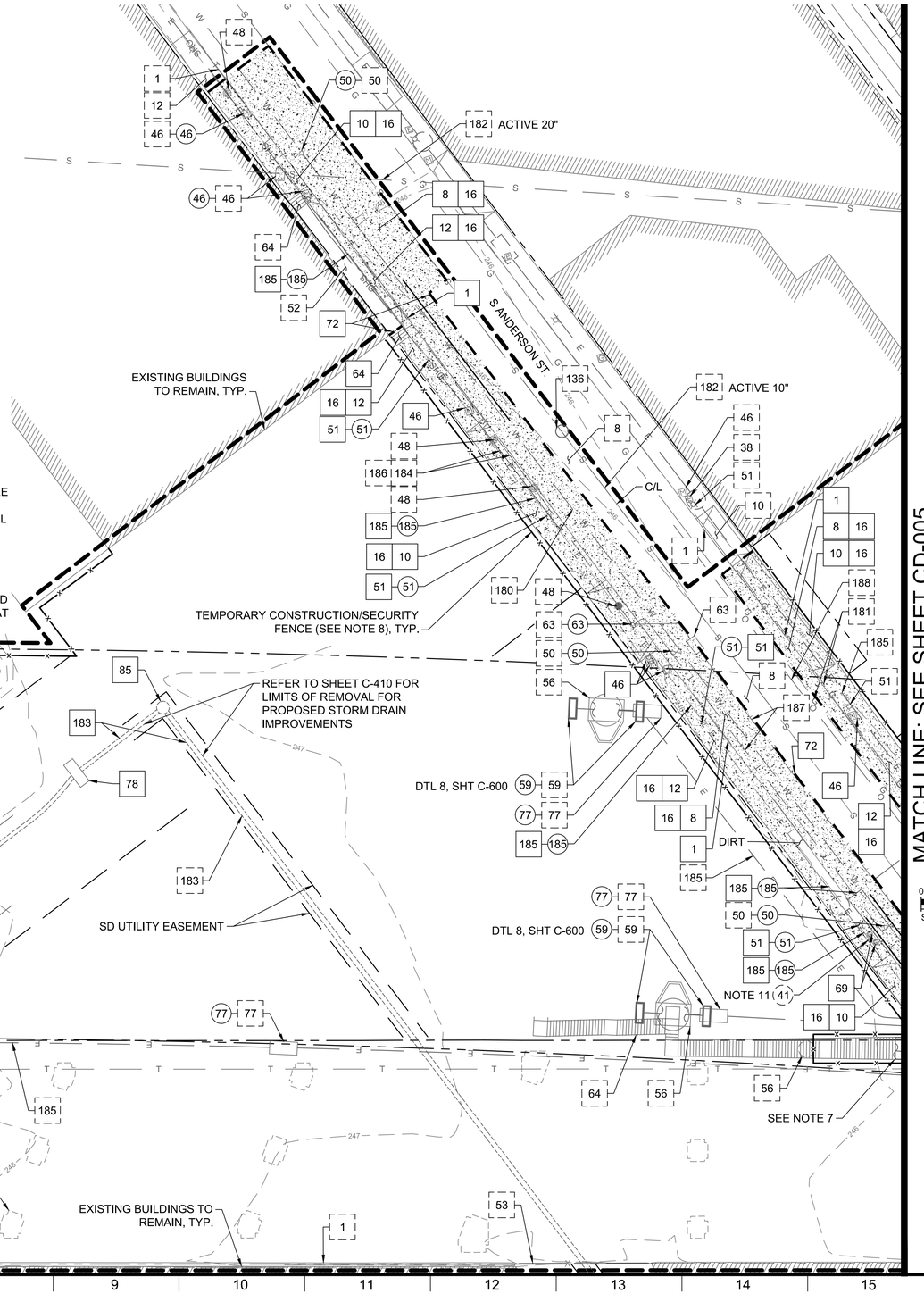

BUREAU OF ENGINEERING
OFFICIAL RECORD

THIS PLAN WAS ELECTRONICALLY SIGNED AND STAMPED

PROFESSIONAL ENGINEER * JUSTIN T. SMITH * No. 85736 EXP: 9-30-22 * REGISTERED * CIVIL * STATE OF CALIFORNIA

BUREAU OF ENGINEERING • CITY OF LOS ANGELES • ENGINEERING

NO.	REVISIONS:	DATE	BY:

BUILDING NO.

INDEX NO. MF-300501

CITY ENGINEER

TED ALLEN, P.E.

DESIGN GROUP

ENGINEER: JUSTIN SMITH

DESIGNED BY: JUSTIN SMITH

DRAWN BY: DAVID LOPEZ

CHECKED BY: NATE SCHREINER

APPROVED BY: JASON L. FUSSEL

LIC. NO. C-85736 DATE: 07/11/22

SHEET TITLE: DEMOLITION PLAN SHEET 4

PROJECT: SIXTH STREET PARK, ARTS AND RIVER CONNECTIVITY IMPROVEMENTS (PARC)

ADDRESS: SIXTH STREET OVER THE LOS ANGELES RIVER

CITY OF LOS ANGELES DEPARTMENT OF PUBLIC WORKS

VERT. CONTROL: BM 12-04070, 1929 (NGVD29) - 1985 ADJUSTMENT
HORIZ. CONTROL: GPS; PID AE 1704; EPOCH 1991.35

PLANS PREPARED BY:
TETRA TECH, INC.
707 WILSHIRE BLVD. 23RD FLR.
LOS ANGELES, CA 90017
PHONE: (213) 239-8866

WORK ORDER NO. E700235D

FILE NO. --

DRAWING NO. CD-004

SHEET 19 OF 295 SHEETS

REVISION DATES (DESIGN STAGE ONLY)

THE CITY OF LOS ANGELES OR ITS OFFICERS OR AGENTS SHALL NOT BE RESPONSIBLE FOR THE ACCURACY OR COMPLETENESS OF ELECTRONIC COPIES OF THIS PLAN SHEET.

Sheet Version 3.0

7/8/2022 9:08:21 AM - O:\PROJECTS\IRVINE\20043200-20043-17001\CAD\SHEETFILES\C-004_DEMOLITION PLAN - TT.DWG - SMITH, JUSTIN

THE CITY OF LOS ANGELES OR ITS OFFICERS OR AGENTS SHALL NOT BE RESPONSIBLE FOR THE ACCURACY OR COMPLETENESS OF ELECTRONIC COPIES OF THIS PLAN SHEET.

MATCH LINE: SEE SHEET CD-004

EXISTING BUILDINGS TO REMAIN, TYP.

TEMPORARY CONSTRUCTION/ SECURITY FENCE (SEE NOTE 8), TYP.

S CLARENCE ST.

ACTIVE 12"

DTL 8, SHT C-600

BEGIN

END

CALTRANS ROW

EXISTING RETAINING WALL BURIED BELOW SLOPE

REMOVE AND RECONSTRUCT CALTRANS CHAIN LINK FENCE AS NEEDED FOR PARC CONSTRUCTION.

DIRT

SEE NOTE 7

ACTIVE 10"

TEMPORARY CONSTRUCTION/ SECURITY FENCE (SEE NOTE 8), TYP.

SEE NOTE 10, TYP.

S ANDERSON ST.

LIMIT OF WORK

EXISTING BUILDINGS TO REMAIN, TYP.

DEMOLITION NOTES:

1. LOCATION OF EXISTING UTILITIES IS APPROXIMATE AND BASED ON RECORD DRAWINGS. ACTUAL CONDITIONS MAY VARY. CONTRACTOR TO VERIFY IN FIELD AND REPORT ANY DISCREPANCIES.
2. EXISTING UNDERGROUND UTILITIES MUST BE PROTECTED IN PLACE UNLESS NOTED OTHERWISE.
3. REFER TO PROJECT SPECIFICATIONS SECTIONS 01571, 01572, 02110, AND 02220 FOR DEMOLITION REQUIREMENTS.
4. CONTRACTOR TO REMOVE ANOMALY FOUND ONSITE AS NECESSARY.
5. CONTRACTOR SHOULD BE PREPARED TO HANDLE OVERSIZED CONCRETE MATERIAL AND BE ABLE TO BREAK SAID MATERIAL INTO SMALLER PIECES AS MAY BE NECESSARY TO REMOVE AND PROPERLY DISPOSE OF OFFSITE AT NO ADDITIONAL COST TO THE CITY.
6. FOR RELOCATIONS/ADJUSTMENTS TO GRADE, COORDINATE WITH APPLICABLE IMPROVEMENT PLANS.
7. CONTRACTOR SHALL VERIFY THE LOCATION OF THE TEMPORARY AC PATHWAY BETWEEN THE VIADUCTS STAIRS AND ANDERSON STREET. CONTRACTOR SHALL MAINTAIN AND RELOCATE THE AC PATHWAY AS NEEDED THROUGHOUT CONSTRUCTION. TEMPORARY PATHWAYS TO BE REMOVED AT THE END OF CONSTRUCTION. SEE SHEET G-010 FOR ADDITIONAL INFORMATION.
8. SECURITY FENCING LAYOUT SHOWN IS THE ASSUMED LAYOUT OF FENCING LEFT IN PLACE AT THE SITE BY THE VIADUCT CONTRACTOR. THE PARC CONTRACTOR SHALL BE RESPONSIBLE FOR VERIFYING THE EXISTING CONDITIONS INCLUDING THE LOCATIONS OF ANY OPENINGS OR GATES. PARC CONTRACTOR SHALL BE RESPONSIBLE FOR MAINTAINING, SUPPLEMENTING, RELOCATING AS NEEDED FOR CONSTRUCTION ACTIVITIES, AND ULTIMATELY REMOVING THE FENCING AND ANY GATES AT THE COMPLETION OF THE PROJECT.
9. CONTRACTOR SHALL BE RESPONSIBLE FOR COORDINATING ALL UTILITY ADJUSTMENTS AND RELOCATIONS WITH THE RESPECTIVE UTILITY OWNER. CONTRACTOR SHALL BE RESPONSIBLE FOR PAYING ALL FEES.
10. VIADUCT CONTRACTOR REMOVED PORTIONS OF THE OLD VIADUCT REINFORCED CONCRETE FOUNDATIONS TO A DEPTH OF A FEW FEET BELOW THE EXISTING GROUND SURFACE. PARC CONTRACTOR SHALL BE RESPONSIBLE FOR VERIFYING EXISTING CONDITIONS AND REMOVING ANY ADDITIONAL PORTIONS OF THE FOUNDATIONS THAT CONFLICT WITH THE PROPOSED PARC IMPROVEMENTS.

LEGEND:

- REMOVE EXISTING AC PAVEMENT AND BASE MATERIAL
- REMOVE EXISTING CONCRETE
- SAWCUT
- LIMITS OF WORK (2' OFFSET FOR CLARITY)
- PROPERTY LINE
- EASEMENT BOUNDARY LINE
- TEMPORARY CONSTRUCTION/ SECURITY FENCE

LEGEND OF CONSTRUCTION NOTES

CONSTRUCT | REMOVE | REMODEL & ADJUST TO GRADE | WORK BY OTHERS | EXISTING-PROTECT IN PLACE | REMOVE & RECONSTRUCT

NO.	CONSTRUCTION ITEM/NOTE	NO.	CONSTRUCTION ITEM/NOTE	NO.	CONSTRUCTION ITEM/NOTE	NO.	CONSTRUCTION ITEM/NOTE
1	TYPE A CONCRETE CURB	50	WATER VALVE	99	SIDE OPENING CATCH BASIN	188	EXISTING OIL LINE
8	CONCRETE PAVEMENT	51	LIGHT POLE	100	SIDE OPENING CATCH BASIN WITH GRATINGS		
10	CONCRETE DRIVEWAY	53	FENCE	136	SEWER MAINTENANCE HOLE		
12	CONCRETE WALK	54	RETAINING WALL	180	EXISTING WATER LINE		
16	UNTREATED BASE MATERIAL	56	VIADUCT BENT / COLUMN	181	EXISTING GAS LINE		
17	ADJUST MAINTENANCE HOLE TO GRADE	59	VIADUCT ARCH LIGHTING	182	EXISTING SANITARY SEWER LINE		
37	POLE ANCHOR	61	POWER SERVICE EQUIPMENT / PANEL	183	EXISTING STORM DRAIN LINE		
38	STREET LIGHTING PULL BOX	64	STAIRS	184	EXISTING OVERHEAD POWER		
46	WATER METER	72	SAWCUT LINE; JOIN EXISTING	185	EXISTING UNDERGROUND POWER		
48	POWER POLE	77	ELECTRIC PULL BOX	186	EXISTING OVERHEAD TELECOM		
49	GAS VALVE	85	STORM DRAIN MAINTENANCE HOLE	187	EXISTING UNDERGROUND TELECOM		

0 10 20 40
SCALE: 1"=20'

BUREAU OF ENGINEERING — OFFICIAL RECORD

PLANS PREPARED BY:
TETRA TECH, INC.
707 WILSHIRE BLVD, 23RD FLR.
LOS ANGELES, CA 90017
PHONE: (213) 239-9866

REVISION DATES (DESIGN STAGE ONLY)

Sheet Version 3.0

CITY OF LOS ANGELES DEPARTMENT OF PUBLIC WORKS BUREAU OF ENGINEERING

VERT. CONTROL: BM 12-04070, 1929 (NGVD29) - 1985 ADJUSTMENT
HORIZ. CONTROL: GPS; PID AE 1704, EPOCH 1991.35

SHEET TITLE: DEMOLITION PLAN SHEET 5

PROJECT: SIXTH STREET PARK, ARTS AND RIVER CONNECTIVITY IMPROVEMENTS (PARC)

ADDRESS: SIXTH STREET OVER THE LOS ANGELES RIVER

WORK ORDER NO. E700235D
FILE NO. --
DRAWING NO. CD-005
SHEET 20 OF 295 SHEETS

ENGINEERING — CITY OF LOS ANGELES

NO.	REVISIONS:	DATE:	BY:

BUILDING NO.
INDEX NO. MF-300501

PROFESSIONAL ENGINEER — REGISTERED — JUSTIN T. SMITH — No. 85736 EXP: 9-30-22 — CIVIL — STATE OF CALIFORNIA

THIS PLAN WAS ELECTRONICALLY SIGNED AND STAMPED

CITY ENGINEER
TED ALLEN, P.E.

DESIGN GROUP		DATE:	07/11/22
ENGINEER:	JUSTIN SMITH	LIC. NO.	C-85736
DESIGNED BY:	JUSTIN SMITH		
DRAWN BY:	DAVID LOPEZ		
CHECKED BY:	NATE SCHREINER		
APPROVED BY:	JASON L. FUSSEL		

7/8/2022 9:15:35 AM - O:\PROJECTS\IRVINE\20043\20-20043-17001\CAD\SHEETFILES\C-005_DEMOLITION PLAN - TT.DWG - SMITH, JUSTIN

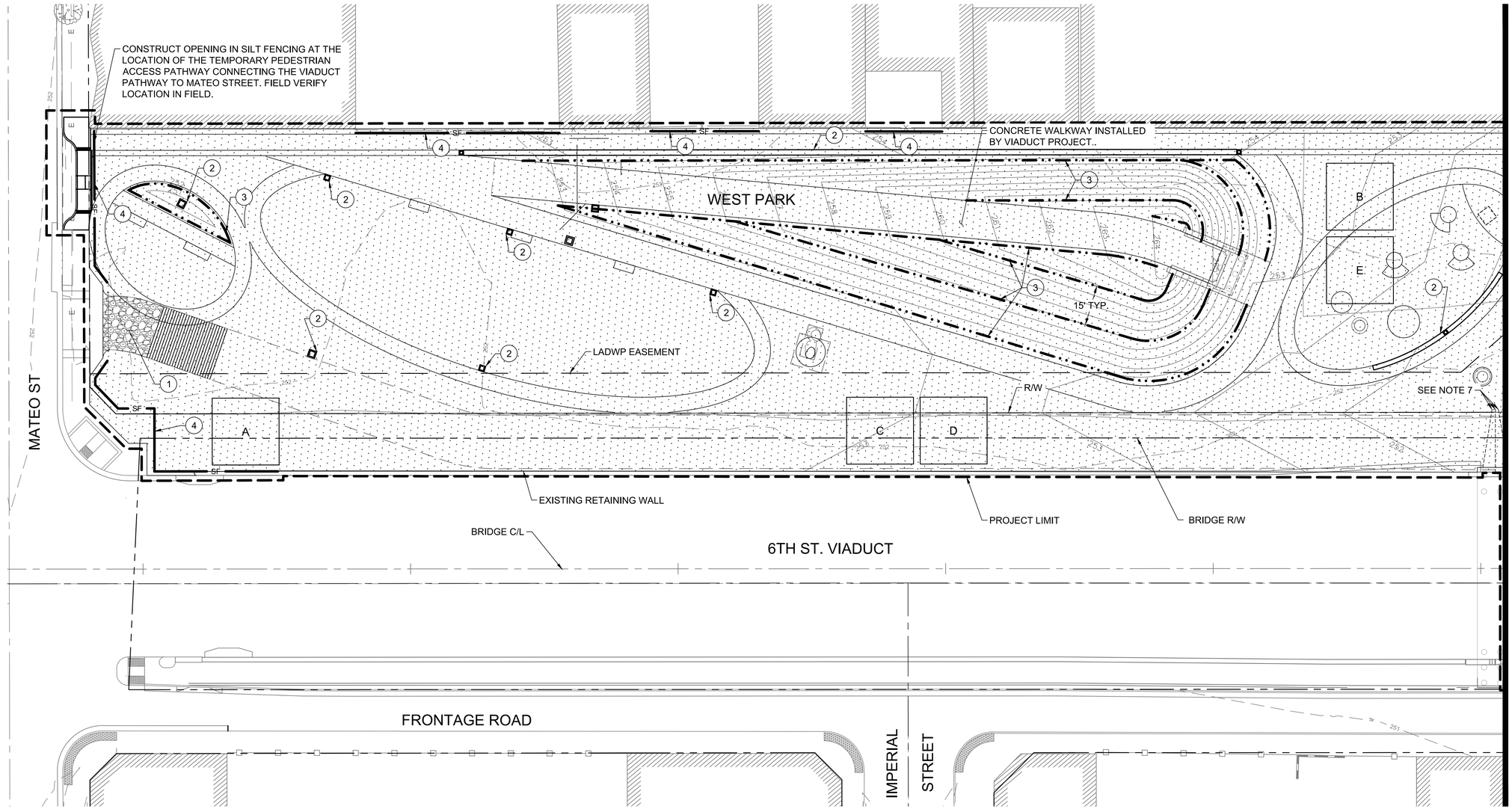

LEGEND:

- TC-1 STABILIZED CONSTRUCTION ENTRANCE
- TEMPORARY SOIL STABILIZATION, SEE NOTE 4.
- 1245 — EXISTING CONTOUR
- 1245 — PROPOSED CONTOUR
- GRAVEL BAG
- SF — SILT FENCE
- FIBER ROLL
- A — PROPOSED LOCATION FOR TEMPORARY TRASH ENCLOSURE PER CASQA WM-5
- B — PROPOSED LOCATION FOR MATERIAL DELIVERY & STORAGE AREA PER CASQA WM-1
- C — PROPOSED LOCATION FOR VEHICLE AND EQUIPMENT FUELING AREA PER CASQA NS-9
- D — PROPOSED AREA FOR VEHICLE CLEANING AND MAINTENANCE PER CASQA NS-8 & NS-10
- E — PROPOSED LOCATION FOR CONCRETE WASHOUT AREA PER CASQA WM-8

EROSION CONTROL NOTES:

1. STABILIZED CONSTRUCTION ENTRANCE PER CASQA TC-1 AND DETAIL 1, SHEET C-105. PROVIDE TIRE WASH PER CASQA TC-3.
2. STORM DRAIN INLET PROTECTION PER CASQA SE-10 AND DETAIL 2, SHEET C-105.
3. FIBER ROLLS PER CASQA SE-5 AND DETAIL 4, SHEET C-105.
4. SILT FENCE PER CASQA SE-1 AND DETAIL 3, SHEET C-105. LOCATE INSIDE CONSTRUCTION FENCE

NOTE:

1. THESE PLANS ARE FOR REFERENCE ONLY. CONTRACTOR TO PREPARE PROJECT STORM WATER POLLUTION PREVENTION PLAN (SWPPP) PER SPECIFICATION SECTION 01571. REFER TO SPECIFICATIONS AND THE BEST MANAGEMENT PRACTICES FOR ADDITIONAL INFORMATION.
2. TEMPORARY TRASH ENCLOSURE, MATERIAL DELIVERY AND STORAGE, VEHICLE/EQUIPMENT CLEANING, MAINTENANCE, AND FUELING, AND CONCRETE WASHOUT AREAS ARE FOR REFERENCE ONLY. FINAL LOCATIONS AND SIZES TO BE APPROVED AND ADJUSTED AS NECESSARY THROUGHOUT CONSTRUCTION AS PART OF CONTRACTOR'S SWPPP.
3. EMPLOYEE AND NON-WORK VEHICLES TO PARK OFF SITE UNLESS OTHERWISE APPROVED BY CITY.
4. ALL DISTURBED SOILS TO BE TEMPORARILY STABILIZED UPON COMPLETION OF CLEARING, GRUBBING, AND GRADING ACTIVITIES. TEMPORARY STABILIZATION SHALL CONSIST OF WATERING AT A MINIMUM. IF DISTURBED SOILS ARE TO REMAIN BARE FOR A SIGNIFICANT PERIOD OF TIME PRIOR TO PAVING OR FINAL STABILIZATION (SEEDING AND PLANTING ACTIVITIES), SUPPLEMENTAL STABILIZATION SHALL BE IMPLEMENTED. SUPPLEMENTAL STABILIZATION METHOD TO BE APPROVED BY THE ENGINEER.
5. STORM DRAIN INLET BMPS SHALL NOT BE INSTALLED ON INLETS WITHIN THE PUBLIC ROADWAYS PER CITY STANDARDS. ADEQUATE EROSION AND SEDIMENT CONTROL BMPS SHALL BE INSTALLED ON-SITE.
6. THE PROJECT AREAS WERE PREVIOUSLY A CONSTRUCTION SITE FOR THE SIXTH STREET VIADUCT PROJECT. THE PARC CONTRACTOR SHALL BE RESPONSIBLE FOR MANAGING AND ULTIMATELY REMOVING ALL EROSION AND SEDIMENT CONTROL BMPS THAT WERE INSTALLED BY THE VIADUCT PROJECT WITHIN THE PROJECT AREAS, INCLUDING BUT NOT LIMITED TO NON-VEGETATIVE STABILIZATION MEASURES, COMPOST SOCKS, FIBER ROLLS, ETC. CONTRACTOR IS RESPONSIBLE FOR VERIFYING EXISTING SITE CONDITIONS PRIOR TO SUBMITTING THEIR BID.
7. VIADUCT ABUTMENT DRAINS DO NOT HAVE AN OUTLET STRUCTURE. UNTIL THE MAINLINE PARC STORM DRAINS ARE CONSTRUCTED, RUNOFF FROM THE VIADUCT WILL DISCHARGE UNCONTROLLED ONTO THE SITE. PARC CONTRACTOR IS RESPONSIBLE FOR MANAGING THIS RUNOFF, INCLUDING ALL NECESSARY EROSION AND SEDIMENT CONTROLS, UNTIL THE ABUTMENT DRAINS ARE ABLE TO BE CONNECTED TO THE PARC STORM DRAIN SYSTEMS.

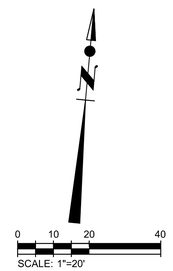

THE CITY OF LOS ANGELES OR ITS OFFICERS OR AGENTS SHALL NOT BE RESPONSIBLE FOR THE ACCURACY OR COMPLETENESS OF ELECTRONIC COPIES OF THIS PLAN SHEET.

REVISION DATES (DESIGN STAGE ONLY)

Sheet Version 3.0

PLANS PREPARED BY:
TETRA TECH, INC.
707 WILSHIRE BLVD. 23RD FLR.
LOS ANGELES, CA 90017
PHONE: (213) 239-8866

CITY OF LOS ANGELES DEPARTMENT OF PUBLIC WORKS
BUREAU OF ENGINEERING

VERT. CONTROL: BM 12-04070, 1929 (NGVD29) - 1985 ADJUSTMENT
HORIZ. CONTROL: GPS; PID AE 1704, EPOCH 1991.35

SHEET TITLE: EROSION AND SEDIMENT CONTROL PLAN SHEET 1
PROJECT: SIXTH STREET PARK, ARTS AND RIVER CONNECTIVITY IMPROVEMENTS (PARC)
ADDRESS: SIXTH STREET OVER THE LOS ANGELES RIVER

WORK ORDER NO. E700235D
FILE NO. --
DRAWING NO. C-100
SHEET 21 OF 295 SHEETS

CITY ENGINEER
TED ALLEN, P.E.
DESIGN GROUP
ENGINEER: JUSTIN SMITH LIC. NO. C-85736 DATE: 07/11/22
DESIGNED BY: JUSTIN SMITH
DRAWN BY: DAVID LOPEZ
CHECKED BY: NATE SCHREINER
APPROVED BY: JASON L. FUSSEL

ENGINEERING
CITY OF LOS ANGELES

BUILDING NO.
INDEX NO. MF-300501

NO.	REVISIONS:	DATE	BY:

THIS PLAN WAS ELECTRONICALLY SIGNED AND STAMPED
PROFESSIONAL ENGINEER JUSTIN T. SMITH No. 85736 EXP: 9-30-22 REGISTERED CIVIL STATE OF CALIFORNIA

BUREAU OF ENGINEERING OFFICIAL RECORD

7/7/2022 5:44:19 PM - O:\PROJECTS\IRVINE\20043\200-20043-17001\CAD\SHEETFILES\C-100_EROSION AND SEDIMENT CONTROL PLAN - TT.DWG - SMITH, JUSTIN

LEGEND:

- TC-1 STABILIZED CONSTRUCTION ENTRANCE
- TEMPORARY SOIL STABILIZATION, SEE NOTE 4.
- –(1245)– EXISTING CONTOUR
- 1245 PROPOSED CONTOUR
- GRAVEL BAG
- SF SILT FENCE
- FIBER ROLL
- A PROPOSED LOCATION FOR TEMPORARY TRASH ENCLOSURE PER CASQA WM-5
- B PROPOSED LOCATION FOR MATERIAL DELIVERY & STORAGE AREA PER CASQA WM-1
- C PROPOSED LOCATION FOR VEHICLE AND EQUIPMENT FUELING AREA PER CASQA NS-9
- D PROPOSED AREA FOR VEHICLE CLEANING AND MAINTENANCE PER CASQA NS-8 & NS-10
- E PROPOSED LOCATION FOR CONCRETE WASHOUT AREA PER CASQA WM-8

EROSION CONTROL NOTES:

① STABILIZED CONSTRUCTION ENTRANCE PER CASQA TC-1 AND DETAIL 1, SHEET C-105. PROVIDE TIRE WASH PER CASQA TC-3.
② STORM DRAIN INLET PROTECTION PER CASQA SE-10 AND DETAIL 2, SHEET C-105.
③ FIBER ROLLS PER CASQA SE-5 AND DETAIL 4, SHEET C-105
④ SILT FENCE PER CASQA SE-1 AND DETAIL 3, SHEET C-105. LOCATE INSIDE CONSTRUCTION FENCE
⑤ GRAVEL BAG BERM PER CASQA SE-6.

NOTE:

1. THESE PLANS ARE FOR REFERENCE ONLY. CONTRACTOR TO PREPARE PROJECT STORM WATER POLLUTION PREVENTION PLAN (SWPPP) PER SPECIFICATION SECTION 01571. REFER TO SPECIFICATIONS AND THE BEST MANAGEMENT PRACTICES FOR ADDITIONAL INFORMATION.
2. TEMPORARY TRASH ENCLOSURE, MATERIAL DELIVERY AND STORAGE, VEHICLE/EQUIPMENT CLEANING, MAINTENANCE, AND FUELING, AND CONCRETE WASHOUT AREAS ARE FOR REFERENCE ONLY. FINAL LOCATIONS AND SIZES TO BE APPROVED AND ADJUSTED AS NECESSARY THROUGHOUT CONSTRUCTION AS PART OF CONTRACTOR'S SWPPP.
3. EMPLOYEE AND NON-WORK VEHICLES TO PARK OFF SITE UNLESS OTHERWISE APPROVED BY CITY.
4. ALL DISTURBED SOILS TO BE TEMPORARILY STABILIZED UPON COMPLETION OF CLEARING, GRUBBING, AND GRADING ACTIVITIES. TEMPORARY STABILIZATION SHALL CONSIST OF WATERING AT A MINIMUM. IF DISTURBED SOILS ARE TO REMAIN BARE FOR A SIGNIFICANT PERIOD OF TIME PRIOR TO PAVING OR FINAL STABILIZATION (SEEDING AND PLANTING ACTIVITIES), SUPPLEMENTAL STABILIZATION SHALL BE IMPLEMENTED. SUPPLEMENTAL STABILIZATION METHOD TO BE APPROVED BY THE ENGINEER.
5. STORM DRAIN INLET BMPS SHALL NOT BE INSTALLED ON INLETS WITHIN THE PUBLIC ROADWAYS PER CITY STANDARDS. ADEQUATE EROSION AND SEDIMENT CONTROL BMPS SHALL BE INSTALLED ON-SITE.
6. THE PROJECT AREAS WERE PREVIOUSLY A CONSTRUCTION SITE FOR THE SIXTH STREET VIADUCT PROJECT. THE PARC CONTRACTOR SHALL BE RESPONSIBLE FOR MANAGING AND ULTIMATELY REMOVING ALL EROSION AND SEDIMENT CONTROL BMPS THAT WERE INSTALLED BY THE VIADUCT PROJECT WITHIN THE PROJECT AREAS, INCLUDING BUT NOT LIMITED TO NON-VEGETATIVE STABILIZATION MEASURES, COMPOST SOCKS, FIBER ROLLS, ETC. CONTRACTOR IS RESPONSIBLE FOR VERIFYING EXISTING SITE CONDITIONS PRIOR TO SUBMITTING THEIR BID.
7. VIADUCT BENT DRAINS HAVE BEEN TEMPORARILY PLUGGED AT THE LOWER COLUMN. DURING A RAIN EVENT, RUNOFF FROM THE VIADUCT OVERHEAD WILL DISCHARGE ONTO THE SITE THROUGH THE TRANSITION OF THE UPPER COLUMN TO LOWER COLUMN. PARC CONTRACTOR IS RESPONSIBLE FOR MANAGING THIS RUNOFF, INCLUDING ALL NECESSARY EROSION AND SEDIMENT CONTROLS, UNTIL THE MAINLINE PARC STORM DRAINS ARE CONSTRUCTED SO THAT THE PLUGS AT THE LOWER COLUMNS CAN BE REMOVED.

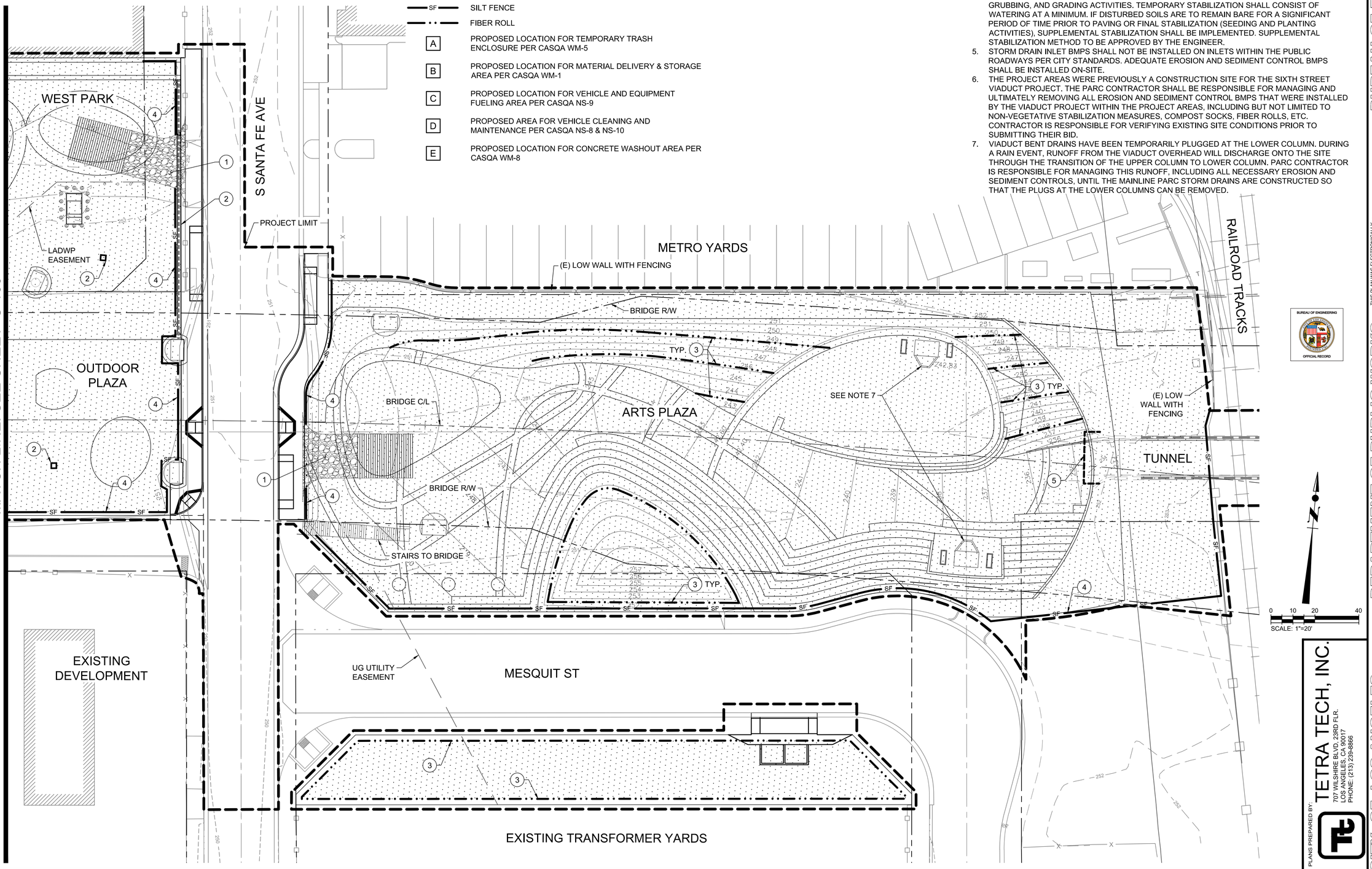

PLANS PREPARED BY:
TETRA TECH, INC.
707 WILSHIRE BLVD, 23RD FLR.
LOS ANGELES, CA 90017
PHONE: (213) 239-8866

BUREAU OF ENGINEERING
OFFICIAL RECORD

ENGINEERING
CITY OF LOS ANGELES

BUREAU OF ENGINEERING

NO.	REVISIONS:	DATE	BY:

BUILDING NO.

INDEX NO. MF-300501

PROFESSIONAL ENGINEER
JUSTIN T. SMITH
No. 85736
EXP: 9-30-22
CIVIL
STATE OF CALIFORNIA

THIS PLAN WAS ELECTRONICALLY SIGNED AND STAMPED

CITY OF LOS ANGELES DEPARTMENT OF PUBLIC WORKS

CITY ENGINEER: TED ALLEN, P.E.
DESIGN GROUP
ENGINEER: JUSTIN SMITH LIC. NO. C-85736 DATE: 07/11/22
DESIGNED BY: JUSTIN SMITH
DRAWN BY: DAVID LOPEZ
CHECKED BY: NATE SCHREINER
APPROVED BY: JASON L. FUSSEL

VERT. CONTROL: BM 12-04070, 1929 (NGVD29) - 1985 ADJUSTMENT
HORIZ. CONTROL: GPS; PID AE 1704, EPOCH 1991.35

SHEET TITLE: EROSION AND SEDIMENT CONTROL PLAN SHEET 2
PROJECT: SIXTH STREET PARK, ARTS AND RIVER CONNECTIVITY IMPROVEMENTS (PARC)
ADDRESS: SIXTH STREET OVER THE LOS ANGELES RIVER

WORK ORDER NO. E700235D
FILE NO. --
DRAWING NO. C-101
SHEET 22 OF 295 SHEETS

7/7/2022 11:15:42 PM - O:\PROJECTS\IRVINE\20043\200-20043-17001\CAD\SHEETFILES\C-101_EROSION AND SEDIMENT CONTROL PLAN - TT.DWG - SMITH, JUSTIN

REVISION DATES (DESIGN STAGE ONLY)

THE CITY OF LOS ANGELES OR ITS OFFICERS OR AGENTS SHALL NOT BE RESPONSIBLE FOR THE ACCURACY OR COMPLETENESS OF ELECTRONIC COPIES OF THIS PLAN SHEET.

Sheet Version 3.0

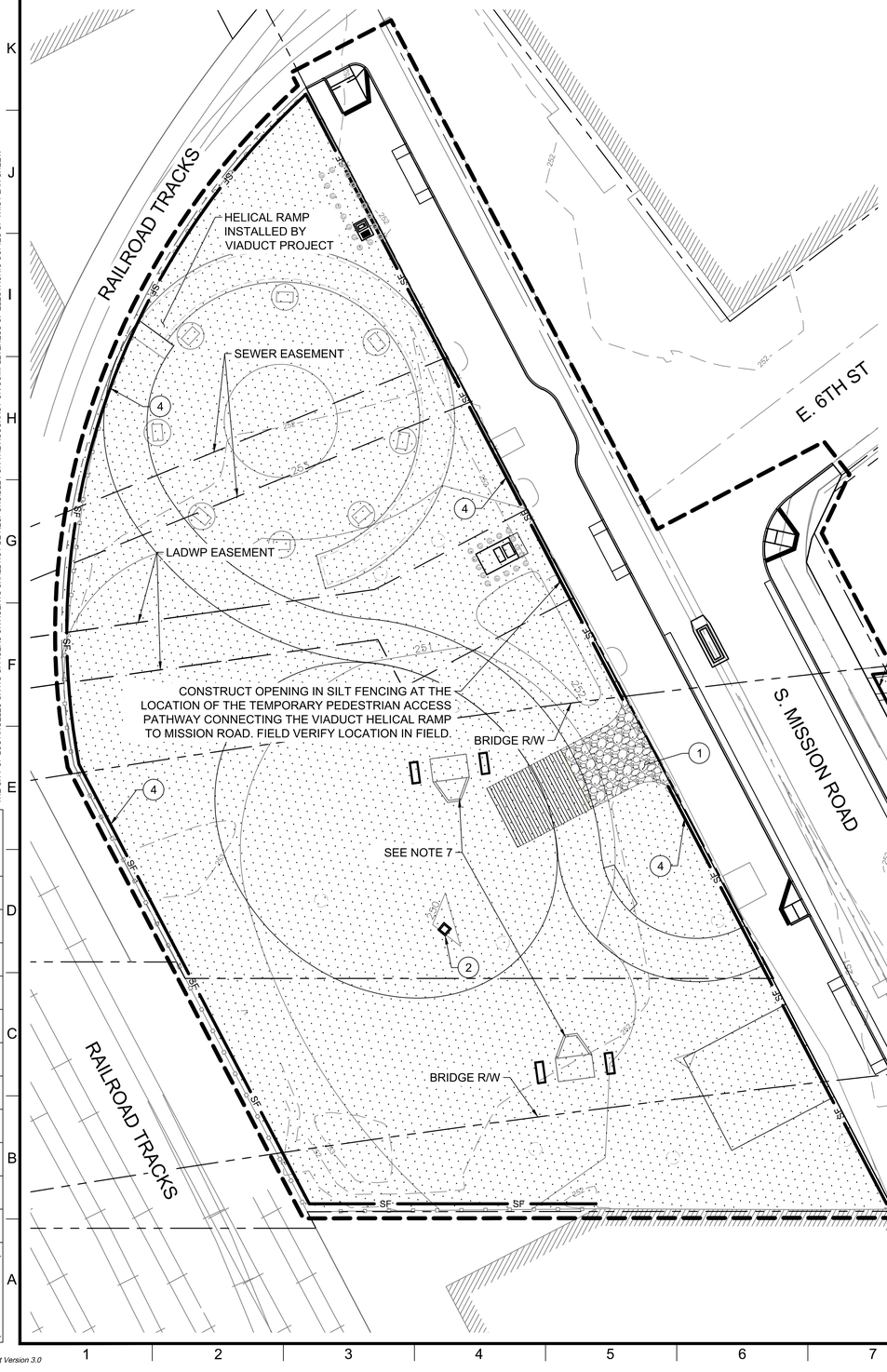

LEGEND:

- TC-1 STABILIZED CONSTRUCTION ENTRANCE
- TEMPORARY SOIL STABILIZATION, SEE NOTE 4.
- (1245) EXISTING CONTOUR
- 1245 PROPOSED CONTOUR
- GRAVEL BAG
- SF SILT FENCE
- FIBER ROLL
- A PROPOSED LOCATION FOR TEMPORARY TRASH ENCLOSURE PER CASQA WM-5
- B PROPOSED LOCATION FOR MATERIAL DELIVERY & STORAGE AREA PER CASQA WM-1
- C PROPOSED LOCATION FOR VEHICLE AND EQUIPMENT FUELING AREA PER CASQA NS-9
- D PROPOSED AREA FOR VEHICLE CLEANING AND MAINTENANCE PER CASQA NS-8 & NS-10
- E PROPOSED LOCATION FOR CONCRETE WASHOUT AREA PER CASQA WM-8

EROSION CONTROL NOTES:

1. STABILIZED CONSTRUCTION ENTRANCE PER CASQA TC-1 AND DETAIL 1, SHEET C-105. PROVIDE TIRE WASH PER CASQA TC-3.
2. STORM DRAIN INLET PROTECTION PER CASQA SE-10 AND DETAIL 2, SHEET C-105.
3. FIBER ROLLS PER CASQA SE-5 AND DETAIL 4, SHEET C-105.
4. SILT FENCE PER CASQA SE-1 AND DETAIL 3, SHEET C-105. LOCATE INSIDE CONSTRUCTION FENCE

NOTE:

1. THESE PLANS ARE FOR REFERENCE ONLY. CONTRACTOR TO PREPARE PROJECT STORM WATER POLLUTION PREVENTION PLAN (SWPPP) PER SPECIFICATION SECTION 01571. REFER TO SPECIFICATIONS AND THE BEST MANAGEMENT PRACTICES FOR ADDITIONAL INFORMATION.
2. TEMPORARY TRASH ENCLOSURE, MATERIAL DELIVERY AND STORAGE, VEHICLE/EQUIPMENT CLEANING, MAINTENANCE, AND FUELING, AND CONCRETE WASHOUT AREAS ARE FOR REFERENCE ONLY. FINAL LOCATIONS AND SIZES TO BE APPROVED AND ADJUSTED AS NECESSARY THROUGHOUT CONSTRUCTION AS PART OF CONTRACTOR'S SWPPP.
3. EMPLOYEE AND NON-WORK VEHICLES TO PARK OFF SITE UNLESS OTHERWISE APPROVED BY CITY.
4. ALL DISTURBED SOILS TO BE TEMPORARILY STABILIZED UPON COMPLETION OF CLEARING, GRUBBING, AND GRADING ACTIVITIES. TEMPORARY STABILIZATION SHALL CONSIST OF WATERING AT A MINIMUM. IF DISTURBED SOILS ARE TO REMAIN BARE FOR A SIGNIFICANT PERIOD OF TIME PRIOR TO PAVING OR FINAL STABILIZATION (SEEDING AND PLANTING ACTIVITIES), SUPPLEMENTAL STABILIZATION SHALL BE IMPLEMENTED. SUPPLEMENTAL STABILIZATION METHOD TO BE APPROVED BY THE ENGINEER.
5. STORM DRAIN INLET BMPS SHALL NOT BE INSTALLED ON INLETS WITHIN THE PUBLIC ROADWAYS PER CITY STANDARDS. ADEQUATE EROSION AND SEDIMENT CONTROL BMPS SHALL BE INSTALLED ON-SITE.
6. THE PROJECT AREAS WERE PREVIOUSLY A CONSTRUCTION SITE FOR THE SIXTH STREET VIADUCT PROJECT. THE PARC CONTRACTOR SHALL BE RESPONSIBLE FOR MANAGING AND ULTIMATELY REMOVING ALL EROSION AND SEDIMENT CONTROL BMPS THAT WERE INSTALLED BY THE VIADUCT PROJECT WITHIN THE PROJECT AREAS, INCLUDING BUT NOT LIMITED TO NON-VEGETATIVE STABILIZATION MEASURES, COMPOST SOCKS, FIBER ROLLS, ETC. CONTRACTOR IS RESPONSIBLE FOR VERIFYING EXISTING SITE CONDITIONS PRIOR TO SUBMITTING THEIR BID.
7. VIADUCT BENT DRAINS HAVE BEEN TEMPORARILY PLUGGED AT THE LOWER COLUMN. DURING A RAIN EVENT, RUNOFF FROM THE VIADUCT OVERHEAD WILL DISCHARGE ONTO THE SITE THROUGH THE TRANSITION OF THE UPPER COLUMN TO LOWER COLUMN. PARC CONTRACTOR IS RESPONSIBLE FOR MANAGING THIS RUNOFF, INCLUDING ALL NECESSARY EROSION AND SEDIMENT CONTROLS, UNTIL THE MAINLINE PARC STORM DRAINS ARE CONSTRUCTED SO THAT THE PLUGS AT THE LOWER COLUMNS CAN BE REMOVED.

BUREAU OF ENGINEERING
OFFICIAL RECORD

BUREAU OF ENGINEERING
ENGINEERING
CITY OF LOS ANGELES

NO.	REVISIONS:	DATE	BY:

BUILDING NO.

INDEX NO. MF-300501

THIS PLAN WAS ELECTRONICALLY SIGNED AND STAMPED

PROFESSIONAL ENGINEER
JUSTIN L. SMITH
No. 85736
EXP: 9-30-22
CIVIL
STATE OF CALIFORNIA
REGISTERED

CITY OF LOS ANGELES DEPARTMENT OF PUBLIC WORKS

TED ALLEN, P.E.
CITY ENGINEER

ENGINEER:	JUSTIN SMITH	LIC. NO. C-85736	DATE: 07/11/22
DESIGNED BY:	JUSTIN SMITH		
DRAWN BY:	DAVID LOPEZ		
CHECKED BY:	NATE SCHREINER		
APPROVED BY:	JASON L. FUSSEL		

DESIGN GROUP

SHEET TITLE: EROSION AND SEDIMENT CONTROL PLAN SHEET 3

PROJECT: SIXTH STREET PARK, ARTS AND RIVER CONNECTIVITY IMPROVEMENTS (PARC)

ADDRESS: SIXTH STREET OVER THE LOS ANGELES RIVER

VERT. CONTROL: BM 12-04070, 1929 (NGVD29) - 1985 ADJUSTMENT
HORIZ. CONTROL: GPS; PID AE 1704, EPOCH 1991.35

PLANS PREPARED BY:
TETRA TECH, INC.
707 WILSHIRE BLVD. 23RD FLR.
LOS ANGELES, CA 90017
PHONE: (213) 239-8866

WORK ORDER NO. E700235D
FILE NO. --
DRAWING NO. C-102
SHEET 23 OF 295 SHEETS

7/7/2022 11:20:49 PM - O:\PROJECTS\RIVINE\20043\200-20043-17001\CAD\SHEETFILES\C-102_EROSION AND SEDIMENT CONTROL PLAN - TT.DWG - SMITH, JUSTIN

THE CITY OF LOS ANGELES OR ITS OFFICERS OR AGENTS SHALL NOT BE RESPONSIBLE FOR THE ACCURACY OR COMPLETENESS OF ELECTRONIC COPIES OF THIS PLAN SHEET.

REVISION DATES (DESIGN STAGE ONLY)

Sheet Version 3.0

LEGEND:

- TC-1 STABILIZED CONSTRUCTION ENTRANCE
- TEMPORARY SOIL STABILIZATION, SEE NOTE 4.
- 1245 EXISTING CONTOUR
- 1245 PROPOSED CONTOUR
- GRAVEL BAG
- SF SILT FENCE
- FIBER ROLL
- A PROPOSED LOCATION FOR TEMPORARY TRASH ENCLOSURE PER CASQA WM-5
- B PROPOSED LOCATION FOR MATERIAL DELIVERY & STORAGE AREA PER CASQA WM-1
- C PROPOSED LOCATION FOR VEHICLE AND EQUIPMENT FUELING AREA PER CASQA NS-9
- D PROPOSED AREA FOR VEHICLE CLEANING AND MAINTENANCE PER CASQA NS-8 & NS-10
- E PROPOSED LOCATION FOR CONCRETE WASHOUT AREA PER CASQA WM-8

EROSION CONTROL NOTES:

① STABILIZED CONSTRUCTION ENTRANCE PER CASQA TC-1 AND DETAIL 1, SHEET C-105. PROVIDE TIRE WASH PER CASQA TC-3.
② STORM DRAIN INLET PROTECTION PER CASQA SE-10 AND DETAIL 2, SHEET C-105.
③ FIBER ROLLS PER CASQA SE-5 AND DETAIL 4, SHEET C-105.
④ SILT FENCE PER CASQA SE-1 AND DETAIL 3, SHEET C-105. LOCATE INSIDE CONSTRUCTION FENCE

NOTE:

1. THESE PLANS ARE FOR REFERENCE ONLY. CONTRACTOR TO PREPARE PROJECT STORM WATER POLLUTION PREVENTION PLAN (SWPPP) PER SPECIFICATION SECTION 01571. REFER TO SPECIFICATIONS AND THE BEST MANAGEMENT PRACTICES FOR ADDITIONAL INFORMATION.
2. TEMPORARY TRASH ENCLOSURE, MATERIAL DELIVERY AND STORAGE, VEHICLE/EQUIPMENT CLEANING, MAINTENANCE, AND FUELING, AND CONCRETE WASHOUT AREAS ARE FOR REFERENCE ONLY. FINAL LOCATIONS AND SIZES TO BE APPROVED AND ADJUSTED AS NECESSARY THROUGHOUT CONSTRUCTION AS PART OF CONTRACTOR'S SWPPP.
3. EMPLOYEE AND NON-WORK VEHICLES TO PARK OFF SITE UNLESS OTHERWISE APPROVED BY CITY.
4. ALL DISTURBED SOILS TO BE TEMPORARILY STABILIZED UPON COMPLETION OF CLEARING, GRUBBING, AND GRADING ACTIVITIES. TEMPORARY STABILIZATION SHALL CONSIST OF WATERING AT A MINIMUM. IF DISTURBED SOILS ARE TO REMAIN BARE FOR A SIGNIFICANT PERIOD OF TIME PRIOR TO PAVING OR FINAL STABILIZATION (SEEDING AND PLANTING ACTIVITIES), SUPPLEMENTAL STABILIZATION SHALL BE IMPLEMENTED. SUPPLEMENTAL STABILIZATION METHOD TO BE APPROVED BY THE ENGINEER.
5. STORM DRAIN INLET BMPS SHALL NOT BE INSTALLED ON INLETS WITHIN THE PUBLIC ROADWAYS PER CITY STANDARDS. ADEQUATE EROSION AND SEDIMENT CONTROL BMPS SHALL BE INSTALLED ON-SITE.
6. THE PROJECT AREAS WERE PREVIOUSLY A CONSTRUCTION SITE FOR THE SIXTH STREET VIADUCT PROJECT. THE PARC CONTRACTOR SHALL BE RESPONSIBLE FOR MANAGING AND ULTIMATELY REMOVING ALL EROSION AND SEDIMENT CONTROL BMPS THAT WERE INSTALLED BY THE VIADUCT PROJECT WITHIN THE PROJECT AREAS, INCLUDING BUT NOT LIMITED TO NON-VEGETATIVE STABILIZATION MEASURES, COMPOST SOCKS, FIBER ROLLS, ETC. CONTRACTOR IS RESPONSIBLE FOR VERIFYING EXISTING SITE CONDITIONS PRIOR TO SUBMITTING THEIR BID.
7. VIADUCT BENT DRAINS HAVE BEEN TEMPORARILY PLUGGED AT THE LOWER COLUMN. DURING A RAIN EVENT, RUNOFF FROM THE VIADUCT OVERHEAD WILL DISCHARGE ONTO THE SITE THROUGH THE TRANSITION OF THE UPPER COLUMN TO LOWER COLUMN. PARC CONTRACTOR IS RESPONSIBLE FOR MANAGING THIS RUNOFF, INCLUDING ALL NECESSARY EROSION AND SEDIMENT CONTROLS, UNTIL THE MAINLINE PARC STORM DRAINS ARE CONSTRUCTED SO THAT THE PLUGS AT THE LOWER COLUMNS CAN BE REMOVED.

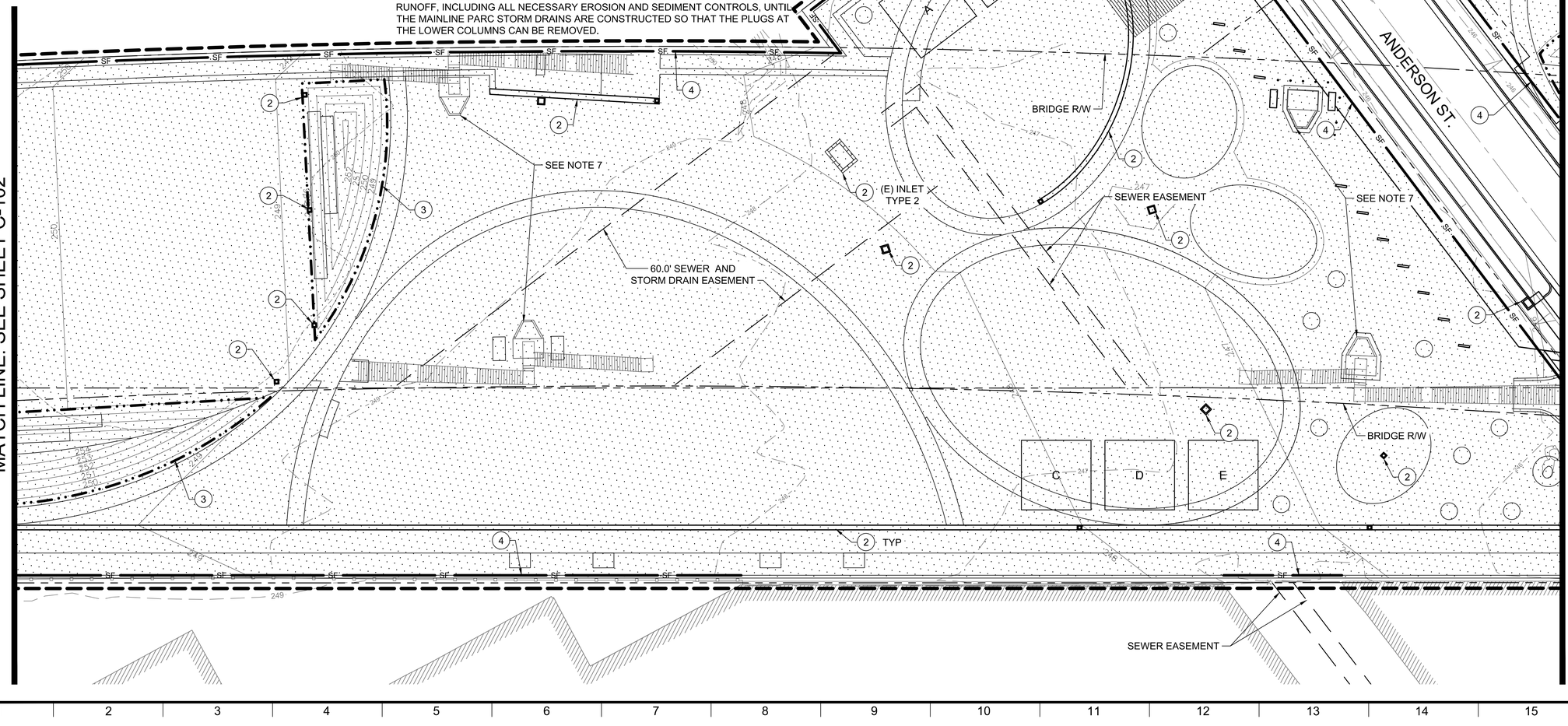

BUREAU OF ENGINEERING
OFFICIAL RECORD

PLANS PREPARED BY:
TETRA TECH, INC.
707 WILSHIRE BLVD, 23RD FLR.
LOS ANGELES, CA 90017
PHONE: (213) 239-8866

CITY OF LOS ANGELES DEPARTMENT OF PUBLIC WORKS
BUREAU OF ENGINEERING
ENGINEERING
CITY OF LOS ANGELES

NO.	REVISIONS:	DATE	BY:

BUILDING NO.
INDEX NO. MF-300501

THIS PLAN WAS ELECTRONICALLY SIGNED AND STAMPED
PROFESSIONAL ENGINEER ★ REGISTERED ★ JUSTIN T. SMITH No. 85736 EXP: 9-30-22 CIVIL STATE OF CALIFORNIA

CITY ENGINEER
TED ALLEN, P.E.
DATE:

DESIGN GROUP		LIC. NO.	C-85736
ENGINEER:	JUSTIN SMITH	DATE	07/11/22
DESIGNED BY:	JUSTIN SMITH		
DRAWN BY:	DAVID LOPEZ		
CHECKED BY:	NATE SCHREINER		
APPROVED BY:	JASON L. FUSSEL		

CITY OF LOS ANGELES DEPARTMENT OF PUBLIC WORKS

VERT. CONTROL: BM 12-04070, 1929 (NGVD29) - 1985 ADJUSTMENT
HORIZ. CONTROL: GPS, PID AE 1704, EPOCH 1991.35

SHEET TITLE: EROSION AND SEDIMENT CONTROL PLAN SHEET 4
PROJECT: SIXTH STREET PARK, ARTS AND RIVER CONNECTIVITY IMPROVEMENTS (PARC)
ADDRESS: SIXTH STREET OVER THE LOS ANGELES RIVER

WORK ORDER NO. E700235D
FILE NO. --
DRAWING NO. C-103
SHEET 24 OF 295 SHEETS

REVISION DATES (DESIGN STAGE ONLY)

THE CITY OF LOS ANGELES OR ITS OFFICERS OR AGENTS SHALL NOT BE RESPONSIBLE FOR THE ACCURACY OR COMPLETENESS OF ELECTRONIC COPIES OF THIS PLAN SHEET.

THE CITY OF LOS ANGELES OR ITS OFFICERS OR AGENTS SHALL NOT BE RESPONSIBLE FOR THE ACCURACY OR COMPLETENESS OF ELECTRONIC COPIES OF THIS PLAN SHEET.

MATCH LINE: SEE SHEET C-103

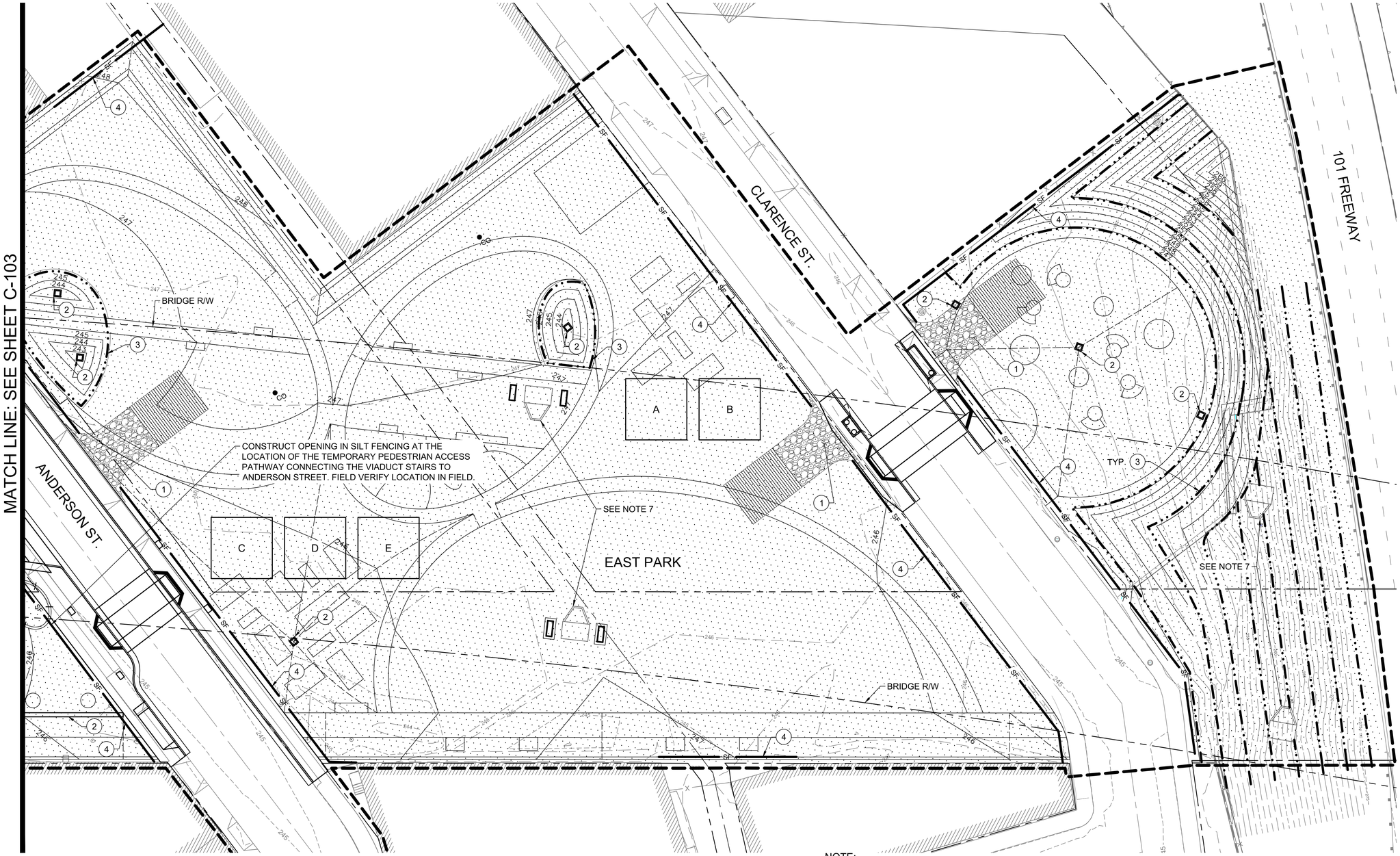

LEGEND:

- TC-1 STABILIZED CONSTRUCTION ENTRANCE
- TEMPORARY SOIL STABILIZATION, SEE NOTE 4.
- (1245) EXISTING CONTOUR
- 1245 PROPOSED CONTOUR
- GRAVEL BAG
- SF SILT FENCE
- FIBER ROLL
- A PROPOSED LOCATION FOR TEMPORARY TRASH ENCLOSURE PER CASQA WM-5
- B PROPOSED LOCATION FOR MATERIAL DELIVERY & STORAGE AREA PER CASQA WM-1
- C PROPOSED LOCATION FOR VEHICLE AND EQUIPMENT FUELING AREA PER CASQA NS-9
- D PROPOSED AREA FOR VEHICLE CLEANING AND MAINTENANCE PER CASQA NS-8 & NS-10
- E PROPOSED LOCATION FOR CONCRETE WASHOUT AREA PER CASQA WM-8

EROSION CONTROL NOTES:

1. STABILIZED CONSTRUCTION ENTRANCE PER CASQA TC-1 AND DETAIL 1, SHEET C-105. PROVIDE TIRE WASH PER CASQA TC-3.
2. STORM DRAIN INLET PROTECTION PER CASQA SE-10 AND DETAIL 2, SHEET C-105.
3. FIBER ROLLS PER CASQA SE-5 AND DETAIL 4, SHEET C-105.
4. SILT FENCE PER CASQA SE-1 AND DETAIL 3, SHEET C-105. LOCATE INSIDE CONSTRUCTION FENCE
5. GRAVEL BAG BERM PER CASQA SE-6.

NOTE:

1. THESE PLANS ARE FOR REFERENCE ONLY. CONTRACTOR TO PREPARE PROJECT STORM WATER POLLUTION PREVENTION PLAN (SWPPP) PER SPECIFICATION SECTION 01571. REFER TO SPECIFICATIONS AND THE BEST MANAGEMENT PRACTICES FOR ADDITIONAL INFORMATION.
2. TEMPORARY TRASH ENCLOSURE, MATERIAL DELIVERY AND STORAGE, VEHICLE/EQUIPMENT CLEANING, MAINTENANCE, AND FUELING, AND CONCRETE WASHOUT AREAS ARE FOR REFERENCE ONLY. FINAL LOCATIONS AND SIZES TO BE APPROVED AND ADJUSTED AS NECESSARY THROUGHOUT CONSTRUCTION AS PART OF CONTRACTOR'S SWPPP.
3. EMPLOYEE AND NON-WORK VEHICLES TO PARK OFF SITE UNLESS OTHERWISE APPROVED BY CITY.
4. ALL DISTURBED SOILS TO BE TEMPORARILY STABILIZED UPON COMPLETION OF CLEARING, GRUBBING, AND GRADING ACTIVITIES. TEMPORARY STABILIZATION SHALL CONSIST OF WATERING AT A MINIMUM. IF DISTURBED SOILS ARE TO REMAIN BARE FOR A SIGNIFICANT PERIOD OF TIME PRIOR TO PAVING OR FINAL STABILIZATION (SEEDING AND PLANTING ACTIVITIES), SUPPLEMENTAL STABILIZATION SHALL BE IMPLEMENTED. SUPPLEMENTAL STABILIZATION METHOD TO BE APPROVED BY THE ENGINEER.
5. STORM DRAIN INLET BMPS SHALL NOT BE INSTALLED ON INLETS WITHIN THE PUBLIC ROADWAYS PER CITY STANDARDS. ADEQUATE EROSION AND SEDIMENT CONTROL BMPS SHALL BE INSTALLED ON-SITE.
6. THE PROJECT AREAS WERE PREVIOUSLY A CONSTRUCTION SITE FOR THE SIXTH STREET VIADUCT PROJECT. THE PARC CONTRACTOR SHALL BE RESPONSIBLE FOR MANAGING AND ULTIMATELY REMOVING ALL EROSION AND SEDIMENT CONTROL BMPS THAT WERE INSTALLED BY THE VIADUCT PROJECT WITHIN THE PROJECT AREAS, INCLUDING BUT NOT LIMITED TO NON-VEGETATIVE STABILIZATION MEASURES, COMPOST SOCKS, FIBER ROLLS, ETC. CONTRACTOR IS RESPONSIBLE FOR VERIFYING EXISTING SITE CONDITIONS PRIOR TO SUBMITTING THEIR BID.
7. VIADUCT BENT DRAINS HAVE BEEN TEMPORARILY PLUGGED AT THE LOWER COLUMN. DURING A RAIN EVENT, RUNOFF FROM THE VIADUCT OVERHEAD WILL DISCHARGE ONTO THE SITE THROUGH THE TRANSITION OF THE UPPER COLUMN TO LOWER COLUMN. PARC CONTRACTOR IS RESPONSIBLE FOR MANAGING THIS RUNOFF, INCLUDING ALL NECESSARY EROSION AND SEDIMENT CONTROLS, UNTIL THE MAINLINE PARC STORM DRAINS ARE CONSTRUCTED SO THAT THE PLUGS AT THE LOWER COLUMNS CAN BE REMOVED.

REVISION DATES (DESIGN STAGE ONLY)

BUREAU OF ENGINEERING
OFFICIAL RECORD

PLANS PREPARED BY:
TETRA TECH, INC.
707 WILSHIRE BLVD, 23RD FLR.
LOS ANGELES, CA 90017
PHONE: (213) 239-8866

CITY OF LOS ANGELES DEPARTMENT OF PUBLIC WORKS
BUREAU OF ENGINEERING

ENGINEERING
CITY OF LOS ANGELES

NO.	REVISIONS:	DATE	BY:

BUILDING NO.

INDEX NO. MF-300501

THIS PLAN WAS ELECTRONICALLY SIGNED AND STAMPED

PROFESSIONAL ENGINEER JUSTIN T. SMITH No. 85736 EXP: 9-30-22 CIVIL STATE OF CALIFORNIA

TED ALLEN, P.E.
CITY ENGINEER

		LIC. NO.	DATE
DESIGN GROUP:			
ENGINEER:	JUSTIN SMITH	C-85736	07/11/22
DESIGNED BY:	JUSTIN SMITH		
DRAWN BY:	DAVID LOPEZ		
CHECKED BY:	NATE SCHREINER		
APPROVED BY:	JASON L. FUSSEL		

VERT. CONTROL: BM 12-04070, 1929 (NGVD29) - 1985 ADJUSTMENT
HORIZ. CONTROL: GPS; PID AE 1704, EPOCH 1991.35

SHEET TITLE: EROSION AND SEDIMENT CONTROL PLAN SHEET 5

PROJECT: SIXTH STREET PARK, ARTS AND RIVER CONNECTIVITY IMPROVEMENTS (PARC)

ADDRESS: SIXTH STREET OVER THE LOS ANGELES RIVER

WORK ORDER NO. E700235D

FILE NO. --

DRAWING NO. C-104

SHEET 25 OF 295 SHEETS

7/7/2022 11:38:46 PM - O:\PROJECTS\RIVINE\20043\200\20043-17001\CAD\SHEETFILES\C-104_EROSION AND SEDIMENT CONTROL PLAN - TT.DWG - SMITH, JUSTIN

Sheet Version 3.0

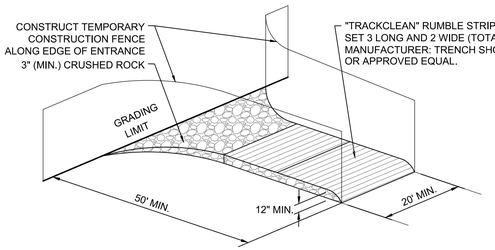

1 CASQA TC-1 STABILIZATION ENTRANCE

NTS REFERENCE SHEET C-100 THRU C-104

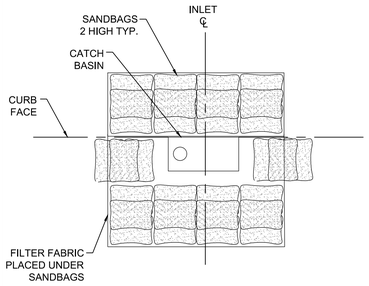

TYPE 1

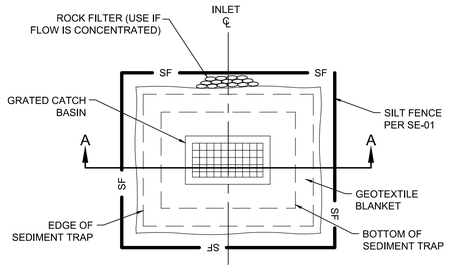

TYPE 2

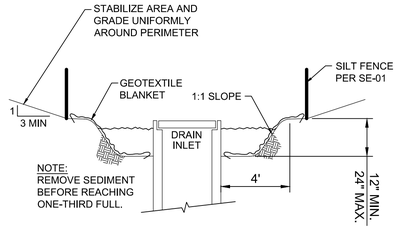

NOTE:
REMOVE SEDIMENT BEFORE REACHING ONE-THIRD FULL.

SECTION A-A

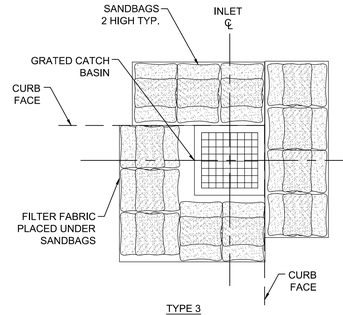

TYPE 3

NOTE:
SAND AND GRAVEL BAGS TO BE CONSTRUCTED OF BURLAP.

2 CASQA SE-10 INLET PROTECTION

NTS REFERENCE SHEET C-100 THRU C-104

STORMWATER POLLUTION PREVENTION PLAN NOTES

ALL ACTIVITIES SHALL BE IN COMPLIANCE WITH ALL APPLICABLE REGULATIONS INCLUDING:

THE CALIFORNIA CONSTRUCTION GENERAL PERMIT FOR DISCHARGES OF STORM WATER ASSOCIATED WITH CONSTRUCTION AND LAND DISTURBANCE ACTIVITIES, ORDER NO. 2009-0009-DWQ, NPDES NO. CAS000002 (AS AMENDED BY 2010-0014-DWQ AND 2012-006-DWQ)

STATE OF CALIFORNIA, CALIFORNIA REGIONAL WATER QUALITY CONTROL BOARD, LOS ANGELES REGION, ORDER NO. R4-2021-0105, NPDES PERMIT NO. CAS004004, WASTE DISCHARGE REQUIREMENTS AND NATIONAL POLLUTANT DISCHARGE ELIMINATION SYSTEM (NPDES) PERMIT FOR MUNICIPAL SEPARATE STORM SEWER SYSTEM (MS4) DISCHARGES WITHIN THE COASTAL WATERSHEDS OF LOS ANGELES AND VENTURA COUNTIES.

1. AS PER STATE REGULATIONS ONLY A QUALIFIED SWPPP DEVELOPER (QSD) SHALL PREPARE, REVISE, AMEND AND MAINTAIN THE PROJECT'S SWPPP WHERE MORE THAN ONE ACRE IS DISTURBED.
2. AS PER STATE REGULATIONS ONLY A QUALIFIED SWPPP PRACTITIONER (QSP) SHALL IMPLEMENT, MONITOR AND MAINTAIN THE BMPS IDENTIFIED IN THE PROJECT SWPPP. INCLUDED IN THESE ACTIVITIES IS COMPLETION OF THE REQUIRED DOCUMENTATION MAINTAINED ON SITE.
3. ALL BMP CORRECTIONS SHALL BE COMPLETED WITHIN 72 HOURS (OR SOONER IF THERE'S A PREDICTED STORM*) OF INSPECTOR'S NOTIFICATION TO CONTRACTOR. NOTE: NOTIFICATION IS BY ANY METHOD INCLUDING VERBAL, WRITTEN, EMAIL, ETCETERA.
   * BMP CORRECTIONS SHALL BE COMPLETED BEFORE THE PREDICTED STORM.
4. SOIL DISTURBANCE SHALL BE MINIMIZED AS MUCH AND/OR AS LONG AS POSSIBLE.
5. SOIL AND/OR SEDIMENT EROSION SHALL BE MINIMIZED THROUGH THE IMPLEMENTATION OF BEST MANAGEMENT PRACTICES (BMPS). EROSION CONTROLS ARE THE HIGHEST BMP PRIORITY AND SHALL NOT BE REDUCED BECAUSE OF ENHANCED SEDIMENT CONTROLS.
6. SOIL AND ALL OTHER MATERIALS SHALL NOT LEAVE THE SITE EITHER THROUGH STORM WATER RUNOFF, NON-STORM WATER RUNOFF, EQUIPMENT TRACKING OR TRANSPORT OR BY WIND.
7. SITE EXIT(S) FROM UNSTABILIZED AREAS SHALL BE STABILIZED WITH A GRAVEL PAD OF AT LEAST 3" ROCK, AT LEAST 12' DEEP, WITH ADEQUATE LENGTH (GENERALLY 50FT) AND WIDTH TO ACCOMMODATE ALL CONSTRUCTION TRAFFIC EXITING THE SITE. THE STABILIZED EXIT SHALL BE CONSTRUCTED SUCH THAT IT CAN NOT BE CIRCUMVENTED BY EXITING VEHICLES. THE STABILIZED EXIT SHALL BE DEEMED INADEQUATE AND IN NEED OF IMPROVEMENT WHEN TRACKING IS PRESENT. REGULAR MAINTENANCE SHALL BE COMPLETED TO KEEP GRAVEL VOIDS OPEN AND SHAKER-PLATES CLEAN.
8. NON-STORM WATER DISCHARGES ARE NOT PERMITTED.
9. ALL SPILLS SHALL BE CLEANED IMMEDIATELY. A SPILL RESPONSE KIT WITH ABSORBENT MATERIALS (INCLUDING BOOMS, PILLOWS AND GRANULES), A SCOOP OR SHOVEL AND A COVERED CONTAINER WITH SECURABLE COVER SHALL BE KEPT ON-SITE DURING THE ENTIRE PROJECT. WORKERS SHALL BE TRAINED IN ITS LOCATION AND CORRECT CLEAN-UP PROCEDURES. ALL POWERED EQUIPMENT SHALL BE KEPT OVER IMPERVIOUS CONTAINMENT DURING NON-WORK HOURS.
10. BULK STORAGE, GREATER-THAN-OR-EQUAL-TO 50 GALLONS, OF ANY LIQUID, OTHER THAN CLEAN WATER, SHALL NOT BE ALLOWED ON THE PROJECT SITE. EQUIPMENT FUELING SHALL OCCUR THROUGH A WET-HOSE OPERATION FROM PERIODIC SERVICE TRUCK VISITS.
11. WET OR UNCURED PORTLAND CEMENT CONCRETE (PCC) SHALL ONLY BE PLACED IN A DESIGNATED PCC WASHOUT CONTAINER. THE PCC WASHOUT CONTAINER SHALL BE ABOVE-GROUND AND LIQUID-TIGHT. PCC WASHOUT WASTEWATER SHALL BE REMOVED AND PROPERLY DISPOSED OF PRIOR TO MOVING THE PCC WASHOUT CONTAINER. ALL PCC DELIVERY TRUCKS, FINISHING TOOLS, BOOTS, ON-SITE MIXERS, GROUTS, MORTAR AND OTHER CEMENTITIOUS-BASED MATERIALS SHALL ONLY CLEANED OVER THE PCC WASHOUT. THE PCC WASHOUT SHALL HAVE A 6" DEEP GRAVEL BED PLACED WHERE TRUCK TRAFFIC WILL DRIVE ADJACENT TO IT WHEN THE QUANTITY OF WASHOUT CREATES MUD. ADDITIONAL PCC WASHOUT SHALL BE ADDED WHEN THERE WILL BE MORE THAN TWO PCC DELIVERY TRUCKS WASHING OUT AT ANY ONE TIME. PLASTIC SHALL BE PLACED UNDER ANY MIXING OR PUMPING OPERATIONS WHERE MATERIAL MAY SPILL.
12. STOCKPILES OF SOIL; SAND; BEDDING; WOOD CHIPS; MULCH; SOIL AMENDMENTS; FERTILIZERS; DEMOLITION WASTES INCLUDING AC, PCC, MASONRY, LUMBER, STEEL, GLASS, PLASTICS, VEGETATION, ETCETERA SHALL BE PLACED UPON A BARRIER SUCH AS PLASTIC SHEETING OR AN IMPERVIOUS SURFACE AND COMPLETELY COVERED WITH PLASTIC SHEETING. THE PLASTIC SHEETING SHALL BE SECURELY ANCHORED AND WILL RESIST WIND OR OTHER NATURAL FORCES WHICH MAY TRY TO REMOVE IT. ALL STOCKPILES SHALL BE INSPECTED EACH WORKING DAY AND AS-NEEDED DURING NON-WORK HOURS.
13. CONSTRUCTION WASTE, SHIPPING AND/OR PACKAGING MATERIALS, SURPLUS SUPPLIES, LITTER AND CONSTRUCTION DEBRIS SHALL BE PLACED IN DESIGNATED WASTE OR RECYCLING CONTAINERS AT THE END OF THE DAY IT'S GENERATED. WASTE CONTAINERS SHALL BE COVERED DURING NON-WORK HOURS OR WHEN THERE'S A PREDICTION OF RAIN OR WIND.
14. HAZARDOUS MATERIALS SHALL BE KEPT IN THEIR ORIGINAL CONTAINERS, CLOSED AND CAPPED. ALL CONTAINERS SHALL BE KEPT IN SECONDARY CONTAINMENT, UNDER-COVER IN A SECURED FACILITY.
15. TEMPORARY TOILETS SHALL BE PLACED UPON A LEVEL SURFACE, NO CLOSER THAN 75 FEET UPSTREAM OF A STORM DRAIN INLET OR DRAINAGE CHANNEL AND UTILIZE SECONDARY CONTAINMENT. TEMPORARY TOILETS SHALL BE REGULARLY SERVICED.
16. ALL DISTURBED AREAS NOT STABILIZED BY PROJECT IMPROVEMENTS SHALL BE STABILIZED BY THE CONTRACTOR AT THE END PROJECT. STABILIZATION SHALL USE MATERIALS DESCRIBED IN CASQA'S BMP FACT SHEET EC-5, "SOIL BINDERS" WITH A LONG-LIVED APPLICATION. THE MATERIAL SELECTED SHALL BE APPROPRIATE FOR THE SOIL TYPE AND CONDITIONS OF THE SITE.
17. THE FOLLOWING CALIFORNIA STORMWATER QUALITY ASSOCIATION (CASQA) CONSTRUCTION BMP FACT SHEETS FOR CONTROLLING: EROSION, SEDIMENT, TRACKING, WIND EROSION, NON-STORMWATER MANAGEMENT AND WASTE MANAGEMENT & MATERIALS POLLUTION WHEN APPLICABLE SHALL BE IMPLEMENTED ON THE THIS PROJECT:

EROSION CONTROL

EC1 - SCHEDULING
EC2 - PRESERVATION OF EXISTING VEGETATION
EC3 - HYDRAULIC MULCH
EC4 - HYDROSEEDING
EC5 - SOIL BINDERS
EC6 - STRAW MULCH
EC7 - GEOTEXTILES AND MATS
EC8 - WOOD MULCHING
EC9 - EARTH DIKES AND DRAINAGE SWALES
EC10 - VELOCITY DISSIPATION DEVICES
EC11 - SLOPE DRAINS
EC12 - STREAMBANK
EC13 - RESERVED (FORMERLY PAM)
EC14 - COMPOST BLANKET
EC15 - SOIL PREPARATION/ROUGHENING
EC16 - NON-VEGETATIVE STABILIZATION

THE CONTRACTOR SHALL MONITOR AND DOCUMENT THE WEATHER DAILY THROUGH THE NATIONAL OCEANIC AND ATMOSPHERIC ADMINISTRATION (NOAA) WEBSITE AT:
HTTP://FORECAST.WEATHER.GOV

EROSION CONTROL BMPS ARE THE PRIMARY MEANS TO PREVENT CONTAMINATION. INADEQUATE EROSION CONTROL BMPS SHALL NOT BE JUSTIFIED BY ADDITIONAL SEDIMENT CONTROL BMPS.

EVERY EFFORT SHALL BE MADE TO AVOID THE EXPOSURE OF CONSTRUCTION MATERIALS TO RAINFALL AND RUNOFF.

INADEQUATE POLLUTION PREVENTION BMPS SHALL NOT BE JUSTIFIED BY INCREASED TREATMENT BMPS.

NON-STORMWATER MANAGEMENT

NS1 - WATER CONSERVATION PRACTICES
NS2 - DEWATERING OPERATIONS
NS3 - PAVING AND GRINDING OPERATIONS
NS4 - TEMPORARY STREAM CROSSING
NS5 - CLEAR WATER DIVERSION
NS6 - ILLICIT CONNECTION / DISCHARGE
NS7 - POTABLE WATER / IRRIGATION
NS8 - VEHICLE AND EQUIPMENT CLEANING
NS9 - VEHICLE AND EQUIPMENT FUELING
NS10 - VEHICLE AND EQUIPMENT MAINTENANCE
NS11 - PILE DRIVING OPERATIONS
NS12 - CONCRETE CURING
NS13 - CONCRETE FINISHING
NS14 - MATERIAL AND EQUIPMENT USE
NS15 - DEMOLITION ADJACENT TO WATER
NS16 - TEMPORARY BATCH PLANTS

TEMPORARY SEDIMENT CONTROL

SE1 - SILT FENCE
SE2 - SEDIMENT BASIN
SE3 - SEDIMENT TRAP
SE4 - CHECK DAMS
SE5 - FIBER ROLLS
SE6 - GRAVEL BAG BERM
SE7 - STREET SWEEPING AND VACUUMING
SE8 - SANDBAG BARRIER
SE9 - STRAW BALE BARRIER
SE10 - STORM DRAIN INLET PROTECTION
SE11 - ACTIVE TREATMENT SYSTEMS
SE12 - TEMPORARY SILT DIKE
SE13 - COMPOST SOCKS AND BERMS
SE14 - BIOFILTER BAGS

WIND EROSION CONTROL

WE1 - WIND EROSION CONTROL

WASTE MANAGEMENT & MATERIAL POLLUTION CONTROL

WM1 - MATERIAL DELIVERY AND STORAGE
WM2 - MATERIAL USE
WM3 - STOCKPILE MANAGEMENT
WM4 - SPILL PREVENTION AND CONTROL
WM5 - SOLID WASTE MANAGEMENT
WM6 - HAZARDOUS WASTE MANAGEMENT
WM7 - CONTAMINATION SOIL MANAGEMENT
WM8 - CONCRETE WASTE MANAGEMENT
WM9 - SANITARY / SEPTIC WASTE MANAGEMENT
WM10 - LIQUID WASTE MANAGEMENT

EQUIPMENT TRACKING CONTROL

TC1 - STABILIZED CONSTRUCTION ENTRANCE/EXIT
TC2 - STABILIZED CONSTRUCTION ROADWAY
TC3 - ENTRANCE / OUTLET TIRE WASH

1. SET 2"x2" POSTS AND SPACE AT 6' - 8' ON CENTER. EXCAVATE A 6"x6" TRENCH UPSLOPE FROM AND ALONG THE LINE OF POSTS.

2. ATTACH THE FILTER FABRIC AND EXTEND IT INTO THE TRENCH.

3. BACKFILL AND COMPACT THE NATIVE SOIL.

NOTE:
1. HEIGHT OF FABRIC SHALL BE 36" MIN.
2. MINIMUM TENSILE STRENGTH OF FABRIC: 100 LBS
   ASTM D4632
   ASTM D4491

3 CASQA SE-1 SILT FENCE DETAIL

NTS REFERENCE SHEET C-100 THRU C-104

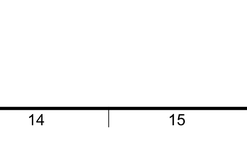

4 CASQA SE-5 FIBER ROLLS

NTS REFERENCE SHEET C-100 THRU C-104

BUREAU OF ENGINEERING
OFFICIAL RECORD

PLANS PREPARED BY:
TETRA TECH, INC.
707 WILSHIRE BLVD. 23RD FLR.
LOS ANGELES, CA 90017
PHONE: (213) 239-8866

BUREAU OF ENGINEERING
ENGINEERING
CITY OF LOS ANGELES

NO.	REVISIONS:	DATE	BY:

BUILDING NO.
INDEX NO. MF-300501

THIS PLAN WAS ELECTRONICALLY SIGNED AND STAMPED
PROFESSIONAL ENGINEER * REGISTERED * JUSTIN T. SMITH * No. 85736 EXP: 9-30-22 * CIVIL * STATE OF CALIFORNIA

CITY OF LOS ANGELES DEPARTMENT OF PUBLIC WORKS

CITY ENGINEER
DATE: 07/11/22
LIC NO. C-85736

DESIGN GROUP	
ENGINEER:	JUSTIN SMITH
DESIGNED BY:	JUSTIN SMITH
DRAWN BY:	DAVID LOPEZ
CHECKED BY:	NATE SCHREINER
APPROVED BY:	JASON L. FUSSEL

TED ALLEN, P.E.

SHEET TITLE: EROSION AND SEDIMENT CONTROL DETAILS
PROJECT: SIXTH STREET PARK, ARTS AND RIVER CONNECTIVITY IMPROVEMENTS (PARC)
ADDRESS: SIXTH STREET OVER THE LOS ANGELES RIVER

VERT. CONTROL: BM 12-04070, 1929 (NGVD29) - 1985 ADJUSTMENT
HORIZ. CONTROL: GPS, PID AE 1704, EPOCH 1991.35

WORK ORDER NO. E700235D
FILE NO. --
DRAWING NO. C-105
SHEET 26 OF 295 SHEETS

7/7/2022 5:49:31 PM - O:\PROJECTS\IRVINE\20043\20-20043-17001\CAD\SHEETFILES\C-105_EROSION AND SEDIMENT CONTROL DETAILS – TT.DWG - SMITH, JUSTIN

THE CITY OF LOS ANGELES OR ITS OFFICERS OR AGENTS SHALL NOT BE RESPONSIBLE FOR THE ACCURACY OR COMPLETENESS OF ELECTRONIC COPIES OF THIS PLAN SHEET.

REVISION DATES (DESIGN STAGE ONLY)

Sheet Version 3.0

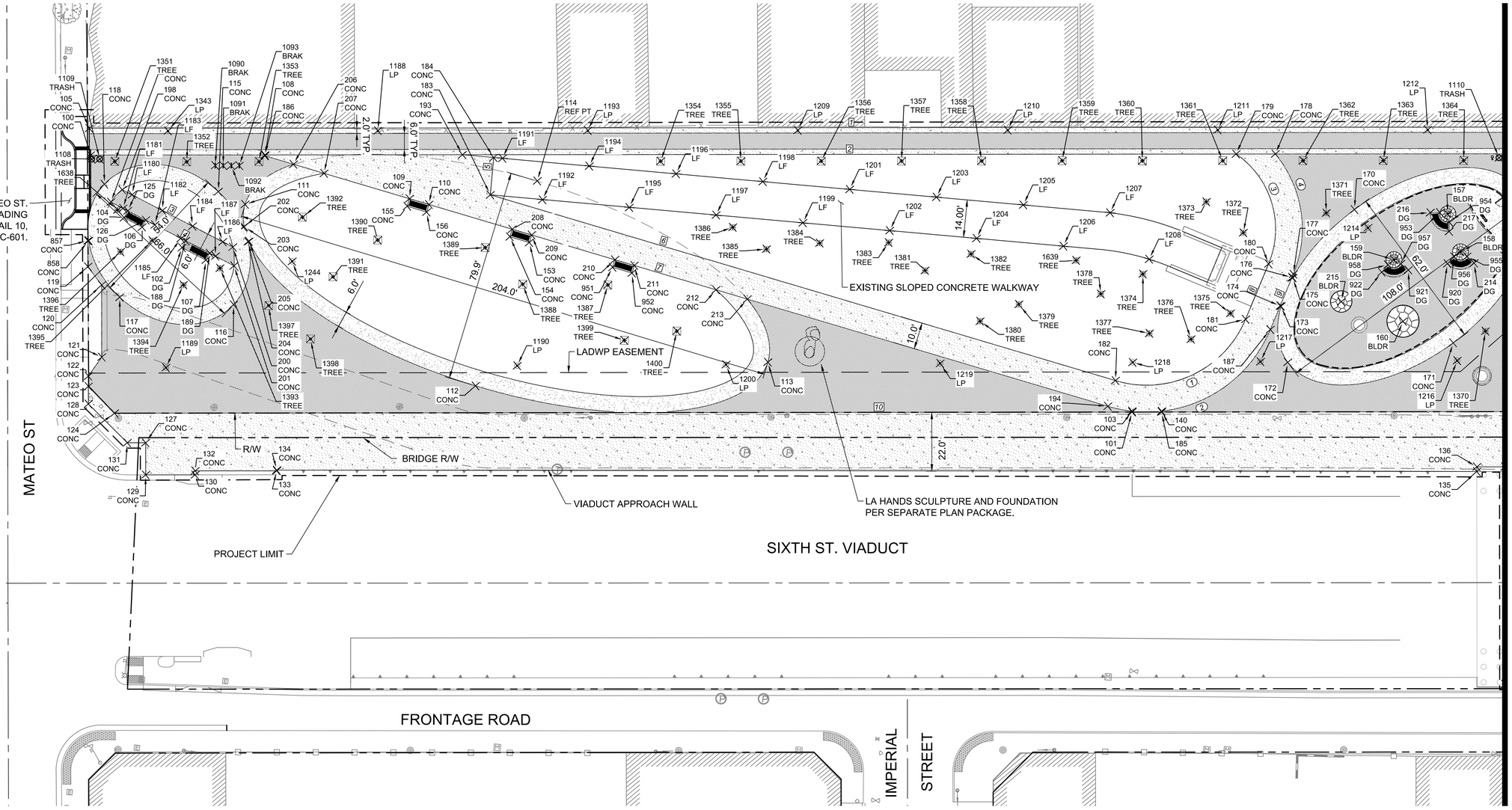

LEGEND:

▬ ▬ ▬	LIMITS OF WORK (2' OFFSET SHOWN FOR CLARITY)
— — —	PROPERTY LINE
— — — —	EASEMENT BOUNDARY LINE
BLDR	LANDSCAPE BOULDER
CONC	CONCRETE PAVEMENT
DG	DECOMPOSED GRANITE PAVEMENT
REF PT	REFERENCE POINT
LF	LIGHT FIXTURE
LP	LIGHT POLE
BRAK	BIKE RACK
TRASH	TRASH BIN
TREE	TREE MISCELLANEOUS

NOTES:

1. DIMENSIONS ARE FROM FACE OF CURB
2. XXX-FOR LINE DATA TABLE, SEE SHEET C-205
3. XXX-FOR CURVE DATA TABLE, SEE SHEET C-206
4. FOR POINT TABLE, SEE SHEETS C-207 THRU C-213
5. DESIGN OF THE PARKING STALLS AND ACCESSIBLE PARKING ARE PER STREET PLANS.
6. HORIZONTAL CONTROL FOR STORM DRAIN, SEWER, AND POTABLE WATER IMPROVEMENTS PER RESPECTIVE UTILITY SHEETS.
7. HORIZONTAL CONTROL FOR STREET IMPROVEMENTS PER STREET PLANS.
8. REFER TO LANDSCAPE PLANS FOR ADDITIONAL INFORMATION ON SITE FURNISHINGS AND LANDSCAPING.
9. REFER TO LANDSCAPE HARDSCAPE PLANS AND SCHEDULES FOR PAVEMENT JOINT LOCATIONS, FINISHES, ADMIXTURES, COLORS, ETC.

MATERIALS LEGEND:

- PVMT 1 - STONE UNIT PAVERS - DTL 1, SHT C-609
- PVMT 2 A/B - CIP CONCRETE - DTL 2, SHT C-609
- PVMT 3 - CIP CONCRETE - DTL 3, SHT C-609
- PVMT 4 - COATED CONCRETE - DTL 3, SHT C-609
- PVMT 5 - CONCRETE UNIT PAVERS - DTL 4, SHT C-609
- PVMT 6 A/B - CRUSHED STONE - DTL 5, SHT C-609
- PVMT 7 - CRUSHED STONE ADMIXTURE - DTL 5, SHT C-609
- PVMT 8 - TUNNEL RESURFACING - DTL 9, SHT C-601
- PVMT 9 A/B - COATED ASPHALT - DTL 6, SHT C-609
- PVMT 10 A/B - SAFETY SURFACING - DTL 7, SHT C-609
- PVMT 11 - SYNTHETIC GRASS - DTL 1, SHT C-601

BUREAU OF ENGINEERING OFFICIAL RECORD

0 10 20 40
SCALE: 1"=20'

PLANS PREPARED BY:
TETRA TECH, INC.
707 WILSHIRE BLVD. 23RD FLR.
LOS ANGELES, CA 90017
PHONE: (213) 239-8866

CITY OF LOS ANGELES DEPARTMENT OF PUBLIC WORKS BUREAU OF ENGINEERING

VERT. CONTROL: BM 12-04070, 1929 (NGVD29) - 1985 ADJUSTMENT
HORIZ. CONTROL: GPS; PID AE 1704, EPOCH 1991.35

SHEET TITLE: HORIZONTAL CONTROL PLAN SHEET 1
PROJECT: SIXTH STREET PARK, ARTS AND RIVER CONNECTIVITY IMPROVEMENTS (PARC)
ADDRESS: SIXTH STREET OVER THE LOS ANGELES RIVER

CITY ENGINEER: TED ALLEN, P.E.
DESIGN GROUP
ENGINEER: JUSTIN SMITH
DESIGNED BY: JUSTIN SMITH
DRAWN BY: MARK CARLOS
CHECKED BY: NATE SCHREINER
APPROVED BY: JASON L. FUSSEL
LIC. NO. C-85736
DATE: 07/11/22

WORK ORDER NO. E700235D
FILE NO. --
DRAWING NO. C-200
SHEET 27 OF 295 SHEETS

7/11/2022 8:50:00 AM - O:\PROJECTS\IRVINE\20043\200-20043-17001\CAD\SHEETFILES\C-200_HORIZONTAL CONTROL PLAN - TT.DWG - SMITH, JUSTIN

ENGINEERING CITY OF LOS ANGELES

BUREAU OF ENGINEERING DEPARTMENT OF PUBLIC WORKS

BUILDING NO.

INDEX NO. MF-300501

NO. | REVISIONS: | DATE | BY:

THIS PLAN WAS ELECTRONICALLY SIGNED AND STAMPED

REGISTERED PROFESSIONAL ENGINEER JUSTIN T. SMITH No. 85736 EXP: 9-30-22 CIVIL STATE OF CALIFORNIA

REVISION DATES (DESIGN STAGE ONLY)

THE CITY OF LOS ANGELES OR ITS OFFICERS OR AGENTS SHALL NOT BE RESPONSIBLE FOR THE ACCURACY OR COMPLETENESS OF ELECTRONIC COPIES OF THIS PLAN SHEET.

Sheet Version 3.0

LEGEND:

▬ ▬ ▬	LIMITS OF WORK (2' OFFSET SHOWN FOR CLARITY)
– – – –	PROPERTY LINE
– – – –	EASEMENT BOUNDARY LINE
BLDG	BUILDING
C&G	CURB AND GUTTER
CONC	CONCRETE PAVEMENT
DG	DECOMPOSED GRANITE PAVEMENT
WALL	RETAINING WALL
LF	LIGHT FIXTURE
LP	LIGHT POLE
BRAK	BIKE RACK
TRASH	TRASH BIN
TREE	TREE MISCELLANEOUS
EQPT	EXERCISE EQUIPMENT

NOTES:

1. DIMENSIONS ARE FROM FACE OF CURB
2. XXX-FOR LINE DATA TABLE, SEE SHEET C-205
3. XXX-FOR CURVE DATA TABLE, SEE SHEET C-206
4. FOR POINT TABLE, SEE SHEETS C-207 THRU C-213
5. DESIGN OF THE PARKING STALLS AND ACCESSIBLE PARKING ARE PER STREET PLANS.
6. HORIZONTAL CONTROL FOR STORM DRAIN, SEWER, AND POTABLE WATER IMPROVEMENTS PER RESPECTIVE UTILITY SHEETS.
7. HORIZONTAL CONTROL FOR STREET IMPROVEMENTS PER STREET PLANS.
8. REFER TO LANDSCAPE PLANS FOR ADDITIONAL INFORMATION ON SITE FURNISHINGS AND LANDSCAPING.
9. REFER TO LANDSCAPE HARDSCAPE PLANS AND SCHEDULES FOR PAVEMENT JOINT LOCATIONS, FINISHES, ADMIXTURES, COLORS, ETC.

MATERIALS LEGEND:

- PVMT 1 - STONE UNIT PAVERS - DTL 1, SHT C-609
- PVMT 2 A/B - CIP CONCRETE - DTL 2, SHT C-609
- PVMT 3 - CIP CONCRETE - DTL 3, SHT C-609
- PVMT 4 - COATED CONCRETE - DTL 3, SHT C-609
- PVMT 5 - CONCRETE UNIT PAVERS - DTL 4, SHT C-609
- PVMT 6 A/B - CRUSHED STONE - DTL 5, SHT C-609
- PVMT 7 - CRUSHED STONE ADMIXTURE - DTL 5, SHT C-609
- PVMT 8 - TUNNEL RESURFACING - DTL 9, SHT C-601
- PVMT 9 A/B - COATED ASPHALT - DTL 6, SHT C-609
- PVMT 10 A/B - SAFETY SURFACING - DTL 7, SHT C-609
- PVMT 11 - SYNTHETIC GRASS - DTL 1, SHT C-601

MATCH LINE: SEE BELOW

MATCH LINE: SEE SHEET C-200

MATCH LINE: SEE ABOVE

WEST PARK

OUTDOOR PLAZA

S SANTA FE AVE

LADWP EASEMENT

PROPOSED PAD-MOUNTED TRANSFORMER

METRO YARDS

BRIDGE R/W

ARTS PLAZA

RAILWAY TRACKS

TUNNEL

MESQUIT ST

STAIRS TO BRIDGE

EXISTING DEVELOPMENT

UG UTILITY EASEMENT

EXISTING TRANSFORMER YARDS

3.5' TYP

SCALE: 1"=20'

THE CITY OF LOS ANGELES OR ITS OFFICERS OR AGENTS SHALL NOT BE RESPONSIBLE FOR THE ACCURACY OR COMPLETENESS OF ELECTRONIC COPIES OF THIS PLAN SHEET.

REVISION DATES (DESIGN STAGE ONLY)

Sheet Version 3.0

THIS PLAN WAS ELECTRONICALLY SIGNED AND STAMPED

PROFESSIONAL ENGINEER - JUSTIN T. SMITH - No. 85736 - EXP: 9-30-22 - CIVIL - STATE OF CALIFORNIA

BUREAU OF ENGINEERING OFFICIAL RECORD

BUREAU OF ENGINEERING

ENGINEERING

CITY OF LOS ANGELES

NO.	REVISIONS:	DATE	BY:

BUILDING NO.

INDEX NO. MF-300501

CITY OF LOS ANGELES DEPARTMENT OF PUBLIC WORKS

CITY ENGINEER: LIC NO. C-85736 DATE: 07/11/22

TED ALLEN, P.E.

DESIGN GROUP

ENGINEER: JUSTIN SMITH

DESIGNED BY: JUSTIN SMITH

DRAWN BY: MARK CARLOS

CHECKED BY: NATE SCHREINER

APPROVED BY: JASON L. FUSSEL

VERT. CONTROL: BM 12-04070, 1929 (NGVD29) - 1985 ADJUSTMENT

HORIZ. CONTROL: GPS; PID AE 1704, EPOCH 1991.35

SHEET TITLE: HORIZONTAL CONTROL PLAN SHEET 2

PROJECT: SIXTH STREET PARK, ARTS AND RIVER CONNECTIVITY IMPROVEMENTS (PARC)

ADDRESS: SIXTH STREET OVER THE LOS ANGELES RIVER

PLANS PREPARED BY:

TETRA TECH, INC.
707 WILSHIRE BLVD, 23RD FLR.
LOS ANGELES, CA 90017
PHONE: (213) 239-9866

WORK ORDER NO. E700235D

FILE NO. --

DRAWING NO. C-201

SHEET 28 OF 295 SHEETS

7/11/2022 2:27:19 AM - O:\PROJECTS\RIVINE\20043\200-20043-17001\CAD\SHEETFILES\C-201_HORIZONTAL CONTROL PLAN - TT.DWG - SMITH, JUSTIN

LEGEND:

— — —	LIMITS OF WORK (2' OFFSET SHOWN FOR CLARITY)
— — — —	PROPERTY LINE
– – – –	EASEMENT BOUNDARY LINE
CONC	CONCRETE PAVEMENT
DG	DECOMPOSED GRANITE PAVEMENT
LF	LIGHT FIXTURE
LP	LIGHT POLE
BRAK	BIKE RACK
TRASH	TRASH BIN
TREE	TREE MISCELLANEOUS
FENC	FENCE
BNCH	BENCH

NOTES:

1. DIMENSIONS ARE FROM FACE OF CURB
2. XXX-FOR LINE DATA TABLE, SEE SHEET C-205
3. (XXX)-FOR CURVE DATA TABLE, SEE SHEET C-206
4. FOR POINT TABLE, SEE SHEETS C-207 THRU C-213
5. DESIGN OF THE PARKING STALLS AND ACCESSIBLE PARKING ARE PER STREET PLANS.
6. HORIZONTAL CONTROL FOR STORM DRAIN, SEWER, AND POTABLE WATER IMPROVEMENTS PER RESPECTIVE UTILITY SHEETS.
7. HORIZONTAL CONTROL FOR STREET IMPROVEMENTS PER STREET PLANS.
8. REFER TO LANDSCAPE PLANS FOR ADDITIONAL INFORMATION ON SITE FURNISHINGS AND LANDSCAPING.
9. REFER TO LANDSCAPE HARDSCAPE PLANS AND SCHEDULES FOR PAVEMENT JOINT LOCATIONS, FINISHES, ADMIXTURES, COLORS, ETC.

MATERIALS LEGEND:

- PVMT 1 - STONE UNIT PAVERS - DTL 1, SHT C-609
- PVMT 2 A/B - CIP CONCRETE - DTL 2, SHT C-609
- PVMT 3 - CIP CONCRETE - DTL 3, SHT C-609
- PVMT 4 - COATED CONCRETE - DTL 3, SHT C-609
- PVMT 5 - CONCRETE UNIT PAVERS - DTL 4, SHT C-609
- PVMT 6 A/B - CRUSHED STONE - DTL 5, SHT C-609
- PVMT 7 - CRUSHED STONE ADMIXTURE - DTL 5, SHT C-609
- PVMT 8 - TUNNEL RESURFACING - DTL 9, SHT C-601
- PVMT 9 A/B - COATED ASPHALT - DTL 6, SHT C-609
- PVMT 10 A/B - SAFETY SURFACING - DTL 7, SHT C-609
- PVMT 11 - SYNTHETIC GRASS - DTL 1, SHT C-601

RAILROAD TRACKS
LADWP EASEMENT
SEWER EASEMENT
EXISTING LADWP PAD MOUNTED SWITCH GEAR WITH BOLLARDS
E. 6TH ST
S. MISSION ROAD
BRIDGE R/W
RAILROAD TRACKS
BRIDGE R/W
92.0'
110.8'
13.0' TYP
34.7'
6.0' TYP
8.0' TYP
4.5' TYP
MATCH LINE: SEE SHEET C-203

SCALE: 1"=20'

THE CITY OF LOS ANGELES OR ITS OFFICERS OR AGENTS SHALL NOT BE RESPONSIBLE FOR THE ACCURACY OR COMPLETENESS OF ELECTRONIC COPIES OF THIS PLAN SHEET.

REVISION DATES (DESIGN STAGE ONLY)

Sheet Version 3.0

BUREAU OF ENGINEERING
OFFICIAL RECORD

PLANS PREPARED BY:
TETRA TECH, INC.
707 WILSHIRE BLVD, 23RD FLR.
LOS ANGELES, CA 90017
PHONE: (213) 239-8866

CITY OF LOS ANGELES DEPARTMENT OF PUBLIC WORKS
BUREAU OF ENGINEERING

VERT. CONTROL: BM 12-04070, 1929 (NGVD29) - 1985 ADJUSTMENT
HORIZ. CONTROL: GPS, PID AE 1704, EPOCH 1991.35

SHEET TITLE: HORIZONTAL CONTROL PLAN SHEET 3

PROJECT: SIXTH STREET PARK, ARTS AND RIVER CONNECTIVITY IMPROVEMENTS (PARC)

ADDRESS: SIXTH STREET OVER THE LOS ANGELES RIVER

WORK ORDER NO. E700235D
FILE NO. --
DRAWING NO. C-202
SHEET 29 OF 295 SHEETS

CITY ENGINEER
TED ALLEN, P.E.

DESIGN GROUP		DATE:	07/11/22
ENGINEER:	JUSTIN SMITH	LIC. NO.	C-85736
DESIGNED BY:	JUSTIN SMITH		
DRAWN BY:	MARK CARLOS		
CHECKED BY:	NATE SCHREINER		
APPROVED BY:	JASON L. FUSSEL		

BUILDING NO.

INDEX NO. mf-300501

NO.	REVISIONS:	DATE:	BY:

THIS PLAN WAS ELECTRONICALLY SIGNED AND STAMPED

PROFESSIONAL ENGINEER - REGISTERED - JUSTIN T. SMITH - No. 85736 EXP: 9-30-22 - CIVIL - STATE OF CALIFORNIA

7/11/2022 2:30:55 AM - O:\PROJECTS\IRVINE\2004\200\20043-17001\CAD\SHEETFILES\C-202_HORIZONTAL CONTROL PLAN - TT.DWG - SMITH, JUSTIN

LEGEND:

	LIMITS OF WORK (2' OFFSET SHOWN FOR CLARITY)
	PROPERTY LINE
	EASEMENT BOUNDARY LINE
BLDR	LANDSCAPE BOULDER
CONC	CONCRETE PAVEMENT
DG	DECOMPOSED GRANITE PAVEMENT
REF PT	REFERENCE POINT
LF	LIGHT FIXTURE
LP	LIGHT POLE
BNCH	BENCH
TRASH	TRASH BIN
TREE	TREE MISCELLANEOUS
HOOP	BASKETBALL HOOP
FENC	FENCE

MATERIALS LEGEND:

- PVMT 1 - STONE UNIT PAVERS - DTL 1, SHT C-609
- PVMT 2 A/B - CIP CONCRETE - DTL 2, SHT C-609
- PVMT 3 - CIP CONCRETE - DTL 3, SHT C-609
- PVMT 4 - COATED CONCRETE - DTL 3, SHT C-609
- PVMT 5 - CONCRETE UNIT PAVERS - DTL 4, SHT C-609
- PVMT 6 A/B - CRUSHED STONE - DTL 5, SHT C-609
- PVMT 7 - CRUSHED STONE ADMIXTURE - DTL 5, SHT C-609
- PVMT 8 - TUNNEL RESURFACING - DTL 9, SHT C-601
- PVMT 9 A/B - COATED ASPHALT - DTL 6, SHT C-609
- PVMT 10 A/B - SAFETY SURFACING - DTL 7, SHT C-609
- PVMT 11 - SYNTHETIC GRASS - DTL 1, SHT C-601

NOTES:

1. DIMENSIONS ARE FROM FACE OF CURB
2. XXX-FOR LINE DATA TABLE, SEE SHEET C-205
3. (XXX)-FOR CURVE DATA TABLE, SEE SHEET C-206
4. FOR POINT TABLE, SEE SHEETS C-207 THRU C-213
5. DESIGN OF THE PARKING STALLS AND ACCESSIBLE PARKING ARE PER STREET PLANS.
6. HORIZONTAL CONTROL FOR STORM DRAIN, SEWER, AND POTABLE WATER IMPROVEMENTS PER RESPECTIVE UTILITY SHEETS.
7. HORIZONTAL CONTROL FOR STREET IMPROVEMENTS PER STREET PLANS.
8. REFER TO LANDSCAPE PLANS FOR ADDITIONAL INFORMATION ON SITE FURNISHINGS AND LANDSCAPING.
9. REFER TO LANDSCAPE HARDSCAPE PLANS AND SCHEDULES FOR PAVEMENT JOINT LOCATIONS, FINISHES, ADMIXTURES, COLORS, ETC.

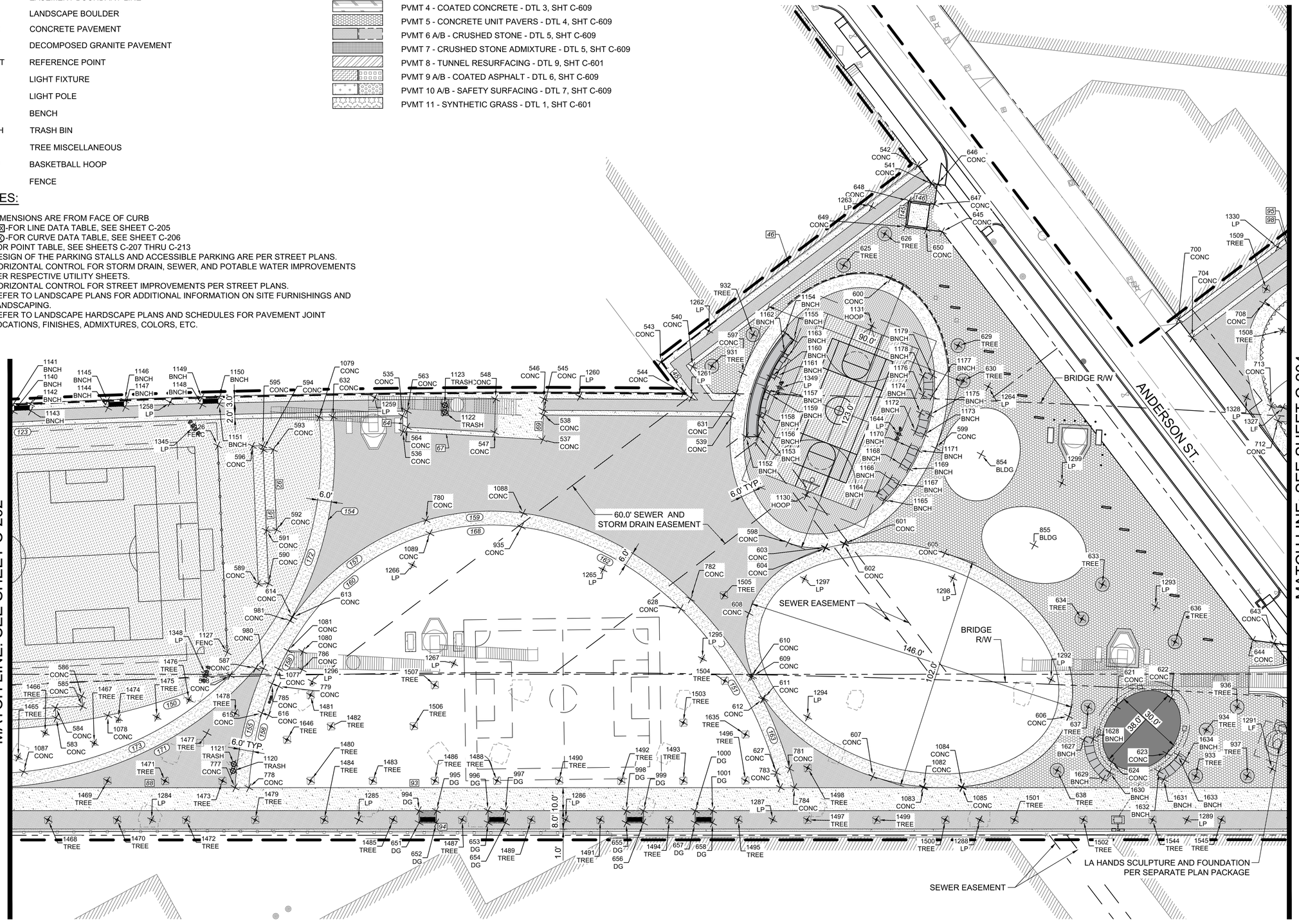

THE CITY OF LOS ANGELES OR ITS OFFICERS OR AGENTS SHALL NOT BE RESPONSIBLE FOR THE ACCURACY OR COMPLETENESS OF ELECTRONIC COPIES OF THIS PLAN SHEET.

REVISION DATES (DESIGN STAGE ONLY)

Sheet Version 3.0

BUREAU OF ENGINEERING

OFFICIAL RECORD

THIS PLAN WAS ELECTRONICALLY SIGNED AND STAMPED

PROFESSIONAL ENGINEER ★ REGISTERED ★ JUSTIN T. SMITH No. 85736 EXP: 9-30-22 CIVIL STATE OF CALIFORNIA

BUREAU OF ENGINEERING

ENGINEERING

CITY OF LOS ANGELES

NO.	REVISIONS:	DATE	BY:

BUILDING NO.

INDEX NO. MF-300501

CITY OF LOS ANGELES DEPARTMENT OF PUBLIC WORKS

CITY ENGINEER: TED ALLEN, P.E.

DESIGN GROUP

ENGINEER:	JUSTIN SMITH	LIC. NO. C-85736
DESIGNED BY:	JUSTIN SMITH	DATE: 07/11/22
DRAWN BY:	MARK CARLOS	
CHECKED BY:	NATE SCHREINER	
APPROVED BY:	JASON L. FUSSEL	

PLANS PREPARED BY:

TETRA TECH, INC.
707 WILSHIRE BLVD, 23RD FLR.
LOS ANGELES, CA 90017
PHONE: (213) 239-8866

VERT. CONTROL: BM 12-04070, 1929 (NGVD29) - 1985 ADJUSTMENT
HORIZ. CONTROL: GPS, PID AE 1704, EPOCH 1991.35

SHEET TITLE: HORIZONTAL CONTROL PLAN SHEET 4

PROJECT: SIXTH STREET PARK, ARTS AND RIVER CONNECTIVITY IMPROVEMENTS (PARC)

ADDRESS: SIXTH STREET OVER THE LOS ANGELES RIVER

WORK ORDER NO. E700235D

FILE NO. --

DRAWING NO. C-203

SHEET 30 OF 295 SHEETS

7/11/2022 2:35:31 AM - O:\PROJECTS\RVINE\20043\200\20043-17001\CAD\SHEETFILES\C-203_HORIZONTAL CONTROL PLAN - TT.DWG - SMITH, JUSTIN

MATCH LINE: SEE SHEET C-004

ANDERSON ST.

CLARENCE ST.

101 FREEWAY

BRIDGE R/W

CALTRANS R/W

635 STAIRS

168.0'

102.0'

136.0'

95.0'

8.0' TYP.

10.0' TYP.

1.0' TYP.

SCALE: 1"=20'

LEGEND:

- LIMITS OF WORK
- PROPERTY LINE
- EASEMENT BOUNDARY LINE

BLDR	LANDSCAPE BOULDER
CONC	CONCRETE PAVEMENT
DG	DECOMPOSED GRANITE PAVEMENT
REF PT	REFERENCE POINT
LF	LIGHT FIXTURE
LP	LIGHT POLE
TRASH	TRASH BIN
EQPT	EXERCISE EQUIPMENT
TREE	TREE MISCELLANEOUS

NOTES:

1. DIMENSIONS ARE FROM FACE OF CURB
2. XXX-FOR LINE DATA TABLE, SEE SHEET C-205
3. XXX-FOR CURVE DATA TABLE, SEE SHEET C-206
4. FOR POINT TABLE, SEE SHEETS C-207 THRU C-213
5. DESIGN OF THE PARKING STALLS AND ACCESSIBLE PARKING ARE PER STREET PLANS.
6. HORIZONTAL CONTROL FOR STORM DRAIN, SEWER, AND POTABLE WATER IMPROVEMENTS PER RESPECTIVE UTILITY SHEETS.
7. HORIZONTAL CONTROL FOR STREET IMPROVEMENTS PER STREET PLANS.
8. REFER TO LANDSCAPE PLANS FOR ADDITIONAL INFORMATION ON SITE FURNISHINGS AND LANDSCAPING.
9. REFER TO LANDSCAPE HARDSCAPE PLANS AND SCHEDULES FOR PAVEMENT JOINT LOCATIONS, FINISHES, ADMIXTURES, COLORS, ETC.

MATERIALS LEGEND:

- PVMT 1 - STONE UNIT PAVERS - DTL 1, SHT C-609
- PVMT 2 A/B - CIP CONCRETE - DTL 2, SHT C-609
- PVMT 3 - CIP CONCRETE - DTL 3, SHT C-609
- PVMT 4 - COATED CONCRETE - DTL 3, SHT C-609
- PVMT 5 - CONCRETE UNIT PAVERS - DTL 4, SHT C-609
- PVMT 6 A/B - CRUSHED STONE - DTL 5, SHT C-609
- PVMT 7 - CRUSHED STONE ADMIXTURE - DTL 5, SHT C-609
- PVMT 8 - TUNNEL RESURFACING - DTL 9, SHT C-601
- PVMT 9 A/B - COATED ASPHALT - DTL 6, SHT C-609
- PVMT 10 A/B - SAFETY SURFACING - DTL 7, SHT C-609
- PVMT 11 - SYNTHETIC GRASS - DTL 1, SHT C-601

THE CITY OF LOS ANGELES OR ITS OFFICERS OR AGENTS SHALL NOT BE RESPONSIBLE FOR THE ACCURACY OR COMPLETENESS OF ELECTRONIC COPIES OF THIS PLAN SHEET.

REVISION DATES (DESIGN STAGE ONLY)

Sheet Version 3.0

BUREAU OF ENGINEERING
OFFICIAL RECORD

PLANS PREPARED BY:
TETRA TECH, INC.
707 WILSHIRE BLVD, 23RD FLR.
LOS ANGELES, CA 90017
PHONE: (213) 239-8866

CITY OF LOS ANGELES
DEPARTMENT OF PUBLIC WORKS
BUREAU OF ENGINEERING

ENGINEERING
CITY OF LOS ANGELES

NO.	REVISIONS:	DATE	BY:

BUILDING NO.

INDEX NO. MF-300501

THIS PLAN WAS ELECTRONICALLY SIGNED AND STAMPED.

REGISTERED PROFESSIONAL ENGINEER JUSTIN T. SMITH No. 85736 EXP: 9-30-22 CIVIL STATE OF CALIFORNIA

CITY ENGINEER
TED ALLEN, P.E.
DATE: 07/11/22
LIC. NO. C-85736

DESIGN GROUP
ENGINEER: JUSTIN SMITH
DESIGNED BY: JUSTIN SMITH
DRAWN BY: MARK CARLOS
CHECKED BY: NATE SCHREINER
APPROVED BY: JASON L. FUSSEL

VERT. CONTROL: BM 12-04070, 1929 (NGVD29) - 1985 ADJUSTMENT
HORIZ. CONTROL: GPS; PID AE 1704; EPOCH 1991.35

SHEET TITLE: HORIZONTAL CONTROL PLAN SHEET 5

PROJECT: SIXTH STREET PARK, ARTS AND RIVER CONNECTIVITY IMPROVEMENTS (PARC)

ADDRESS: SIXTH STREET OVER THE LOS ANGELES RIVER

WORK ORDER NO. E700235D
FILE NO. --
DRAWING NO. C-204
SHEET 31 OF 295 SHEETS

7/11/2022 2:39:39 AM - O:\PROJECTS\IRVINE\20043\200\20043-17001\CAD\SHEETFILES\C-204_HORIZONTAL CONTROL PLAN - TT.DWG - SMITH, JUSTIN

LINE TABLE		
LINE #	LENGTH	DIRECTION
1	608.43	N84° 50' 58.42"E
2	607.92	N84° 50' 58.42"E
3	46.55	S67° 42' 42.78"E
4	51.76	S67° 42' 42.78"E
5	14.00	N00° 01' 10.27"E
6	243.66	S78° 32' 45.20"E
7	328.48	S78° 32' 45.20"E
8	22.40	N17° 28' 11.44"E
9	22.40	N17° 28' 11.44"E
10	599.15	N84° 50' 12.10"E
11	27.38	N85° 23' 22.43"E
12	19.30	N85° 23' 22.43"E
13	288.56	N84° 52' 58.77"E
14	247.75	N84° 53' 30.31"E
15	9.60	N84° 49' 19.47"E
16	28.93	S84° 52' 28.04"W
17	32.64	S84° 52' 29.83"W
18	67.77	S84° 52' 28.03"W
19	5.16	N12° 40' 51.97"E
20	10.14	N20° 01' 32.24"E
21	2.22	N76° 40' 25.92"E
22	2.22	N72° 07' 44.63"E
23	7.09	S82° 07' 33.10"W
24	6.04	S85° 36' 29.26"W
25	14.85	S84° 52' 28.03"W
26	1.68	S58° 22' 30.84"W
27	36.43	N15° 10' 32.67"W
28	42.80	N08° 01' 31.82"W
29	4.83	N05° 45' 19.43"W
30	38.20	N39° 51' 09.30"E
31	169.56	N84° 52' 28.07"E
32	10.50	N84° 52' 28.03"E
33	30.00	N84° 52' 28.03"E
34	16.00	N84° 52' 28.03"E
35	10.06	S68° 33' 37.78"E
36	38.50	N84° 52' 28.03"E
37	10.06	N58° 18' 33.85"E
38	38.17	S50° 08' 53.15"E
39	4.88	S05° 10' 14.34"E
40	280.02	S84° 52' 39.31"W
41	3.07	S36° 14' 57.95"E
42	13.01	S36° 33' 05.37"E
43	31.33	S10° 31' 39.08"E
44	10.80	S10° 50' 14.73"W
45	16.81	S19° 46' 42.69"E
46	140.61	S69° 40' 37.11"W
47	7.35	N12° 50' 39.18"E
49	47.09	S81° 46' 54.48"E
50	7.99	S17° 43' 01.03"W
64	6.91	S16° 18' 29.65"W

LINE TABLE		
LINE #	LENGTH	DIRECTION
67	60.94	S69° 37' 25.36"E
69	10.73	N18° 18' 29.64"E
88	98.58	S72° 54' 23.49"E
89	57.11	S75° 32' 35.28"E
90	80.00	S75° 32' 35.28"E
91	60.01	S14° 45' 21.51"W
92	35.00	S14° 43' 36.10"W
93	842.75	S72° 54' 21.74"E
94	847.25	S72° 54' 21.74"E
95	117.01	N69° 52' 02.96"E
96	127.11	S20° 08' 46.01"E
97	133.08	N69° 52' 49.60"E
98	115.01	N69° 52' 02.53"E
99	127.11	S20° 08' 50.77"E
100	135.09	N69° 52' 49.60"E
101	109.00	N69° 52' 02.96"E
102	127.11	S20° 08' 50.77"E
103	141.15	N69° 52' 49.60"E
104	106.81	S69° 52' 02.96"W
105	127.11	N20° 08' 50.77"W
106	143.17	S69° 52' 49.60"W
107	123.13	S66° 45' 56.37"E
108	122.73	S66° 45' 56.37"E
109	89.93	S66° 45' 56.37"E
110	91.05	S66° 45' 56.37"E
111	81.65	S66° 45' 56.37"E
112	314.84	S72° 53' 35.74"E
113	306.68	N72° 53' 35.74"W
135	31.33	S20° 07' 15.79"E
140	75.19	S20° 09' 45.36"E
145	11.33	N24° 53' 33.38"E
146	9.16	S65° 09' 48.75"E

THE CITY OF LOS ANGELES OR ITS OFFICERS OR AGENTS SHALL NOT BE RESPONSIBLE FOR THE ACCURACY OR COMPLETENESS OF ELECTRONIC COPIES OF THIS PLAN SHEET.

REVISION DATES (DESIGN STAGE ONLY)

Sheet Version 3.0

BUREAU OF ENGINEERING

ENGINEERING
CITY OF LOS ANGELES

NO.	REVISIONS:	DATE	BY:

BUILDING NO.

INDEX NO. **MF-300501**

THIS PLAN WAS ELECTRONICALLY SIGNED AND STAMPED

REGISTERED PROFESSIONAL ENGINEER
JUSTIN T. SMITH
No. 85736
EXP: 9-30-22
CIVIL
STATE OF CALIFORNIA

BUREAU OF ENGINEERING
OFFICIAL RECORD

PLANS PREPARED BY:
TETRA TECH, INC.
707 WILSHIRE BLVD. 23RD FLR.
LOS ANGELES, CA 90017
PHONE: (213) 239-8866

CITY OF LOS ANGELES
DEPARTMENT OF PUBLIC WORKS
BUREAU OF ENGINEERING

VERT. CONTROL: BM 12-04070, 1929 (NGVD29) - 1985 ADJUSTMENT
HORIZ. CONTROL: GPS; PID AE 1704; EPOCH 1991.35

CITY ENGINEER
TED ALLEN, P.E.
DATE: 07/11/22
LIC NO. C-85736

DESIGN GROUP
ENGINEER: JUSTIN SMITH
DESIGNED BY: JUSTIN SMITH
DRAWN BY: MARK CARLOS
CHECKED BY: NATE SCHREINER
APPROVED BY: JASON L. FUSSEL

SHEET TITLE: HORIZONTAL CONTROL LINE TABLES

PROJECT: SIXTH STREET PARK, ARTS AND RIVER CONNECTIVITY IMPROVEMENTS (PARC)

ADDRESS: SIXTH STREET OVER THE LOS ANGELES RIVER

WORK ORDER NO. E700235D
FILE NO. --
DRAWING NO. C-205
SHEET 32 OF 295 SHEETS

7/11/2022 1:25:48 AM - O:\PROJECTS\RIVINE\20043\200-20043-17001\CAD\SHEETFILES\C-205_HORIZONTAL CONTROL LINE TABLES - TT.DWG - SMITH, JUSTIN

CURVE TABLE			
CURVE #	LENGTH	RADIUS	DELTA
1	58.91	40.00	84.38
2	73.60	50.00	84.34
3	46.34	34.00	78.09
4	47.73	44.00	62.16
5	12.39	7.89	89.98
6	17.78	57.10	17.84
7	14.04	45.10	17.84
8	13.52	43.14	17.96
9	17.33	55.14	18.00
10	58.45	117.29	28.55
11	37.67	63.57	33.95
12	52.99	105.07	28.90
13	25.20	40.50	35.66
14	18.21	23.00	45.36
15	18.25	50.47	20.71
16	20.82	257.50	4.63
17	42.57	98.00	24.89
18	55.10	96.00	32.89
19	17.62	122.46	8.24
20	16.34	194.50	4.81
21	14.84	194.50	4.37
23	23.48	16.00	84.05
25	28.46	178.51	9.14
26	23.40	199.00	6.74
27	22.83	20.50	63.80
28	22.83	20.50	63.80
29	12.66	154.91	4.68
30	17.08	158.59	6.17
31	14.73	122.09	6.91
32	14.49	26.32	31.53
33	18.60	29.83	35.74
34	5.23	50.11	5.98
36	21.25	145.07	8.39
37	18.04	149.65	6.91
38	6.49	152.50	2.44
39	19.31	154106.72	0.01
40	12.17	93.93	7.42
41	26.81	97.47	15.76
42	6.65	362.23	1.05
43	32.70	182.79	10.25
44	19.55	403.98	2.77
45	34.09	147.88	13.21
46	27.87	108.10	14.77
47	14.47	12.33	67.27
48	8.20	32.71	14.37
49	71.59	124.15	33.04
50	15.10	63.51	13.63
51	14.68	56.03	15.01
52	19.30	31071.57	0.04
53	26.34	66.08	22.84

CURVE TABLE			
CURVE #	LENGTH	RADIUS	DELTA
54	52.56	222.32	13.55
55	28.73	70.00	23.52
56	23.87	17.00	80.44
57	17.03	44.72	21.82
58	36.04	251.50	8.21
59	15.00	7.00	122.77
60	52.19	271.50	11.01
61	19.44	12.00	92.82
62	16.30	61.41	15.21
63	25.83	33.00	44.85
64	20.89	53.50	22.37
65	30.33	72.25	24.05
66	66.84	225.81	16.96
67	62.15	500.88	7.11
68	41.10	220.00	10.70
69	40.82	216.67	10.79
70	28.79	21.00	78.54
71	25.47	18.00	81.09
72	49.84	84.00	34.00
73	55.20	81.00	39.05
74	25.62	18.00	81.55
75	22.21	15.00	84.85
76	13.18	272.00	2.78
77	13.36	359.56	2.13
78	22.48	272.00	4.74
79	22.10	269.00	4.71
80	18.62	265.16	4.02
81	19.94	269.00	4.25
82	58.04	729.00	4.56
83	56.51	732.00	4.42
84	15.26	408.00	2.14
85	21.00	367.30	3.28
86	32.64	408.00	4.58
87	32.18	411.00	4.49
88	48.33	313.00	8.85
89	51.28	310.00	9.48
90	17.25	313.00	3.16
91	16.46	310.00	3.04
92	40.07	30.00	76.53
93	31.63	27.00	67.13
94	24.37	729.00	1.92
95	8.63	15.00	32.97
96	52.70	408.00	7.40
97	58.16	411.00	8.11
98	10.02	12.00	47.84
99	10.13	15.00	38.69
100	4.69	30.00	8.95
101	4.81	27.00	10.21
102	13.25	408.00	1.86
103	13.60	411.00	1.90

CURVE TABLE			
CURVE #	LENGTH	RADIUS	DELTA
104	32.85	218.00	8.63
105	33.52	215.00	8.93
106	11.53	91.00	7.26
107	11.57	94.50	7.01
108	13.93	91.00	8.77
109	13.77	87.89	8.98
110	90.56	218.00	23.80
111	88.15	215.00	23.49
112	37.92	497.00	4.37
113	37.26	500.00	4.27
114	30.96	44.50	39.86
115	31.11	47.50	37.52
116	2.47	218.00	0.65
117	62.80	52.00	69.20
118	47.28	38.98	69.49
119	86.38	94.00	52.65
120	74.43	81.00	52.65
121	88.26	63.50	79.64
122	106.33	76.50	79.64
123	330.70	5050.61	3.75
124	82.51	42.00	112.56
125	56.93	29.00	112.48
126	46.30	89.44	29.66
127	613.98	5060.61	6.95
128	45.31	102.93	25.22
129	19.72	50.50	22.37
130	108.79	5049.19	1.23
133	46.90	350.88	7.66
134	98.37	300.88	18.73
135	44.74	86.44	29.65
136	43.47	99.93	24.92
137	61.05	115.08	30.39
138	84.56	108.43	44.68
139	58.33	109.20	30.61
140	90.40	102.85	50.36
141	67.59	129.82	29.83
142	15.52	58.50	15.20
143	17.79	30.00	33.97
144	147.77	191.99	44.10
145	51.30	47.00	62.54
146	44.07	41.00	61.59
147	89.80	68.00	75.67
148	97.61	74.00	75.57
149	67.64	174.75	22.18
150	56.00	284.19	11.29
151	83.31	164.44	29.03
152	136.46	178.05	43.91
153	13.78	187.97	4.20
154	90.28	145.17	35.63
155	53.54	151.73	20.22

CURVE TABLE			
CURVE #	LENGTH	RADIUS	DELTA
156	53.52	144.91	21.16
157	73.08	106.79	39.21
158	8.96	126.87	4.05
159	42.66	103.47	23.62
160	82.08	104.12	45.17
161	42.95	174.73	14.08
162	79.24	122.48	37.07
163	32.49	177.41	10.49
164	95.20	75.00	72.73
165	241.28	152.00	90.95
166	93.00	69.00	77.23
167	235.95	146.00	92.59
168	40.18	97.54	23.60
169	44.41	13.82	184.15
170	249.42	53.00	269.63
171	120.08	154.62	44.49
172	122.96	136.81	51.50
173	101.00	148.60	38.94
174	100.37	179.42	32.05

THE CITY OF LOS ANGELES OR ITS OFFICERS OR AGENTS SHALL NOT BE RESPONSIBLE FOR THE ACCURACY OR COMPLETENESS OF ELECTRONIC COPIES OF THIS PLAN SHEET.

REVISION DATES (DESIGN STAGE ONLY)

BUREAU OF ENGINEERING

OFFICIAL RECORD

PLANS PREPARED BY:
TETRA TECH, INC.
707 WILSHIRE BLVD, 23RD FLR.
LOS ANGELES, CA 90017
PHONE: (213) 239-8866

CITY OF LOS ANGELES DEPARTMENT OF PUBLIC WORKS

VERT. CONTROL: BM 12-04070, 1929 (NGVD29) - 1985 ADJUSTMENT
HORIZ. CONTROL: GPS, PID AE 1704, EPOCH 1991.35

SHEET TITLE: HORIZONTAL CONTROL CURVE TABLES

PROJECT: SIXTH STREET PARK, ARTS AND RIVER CONNECTIVITY IMPROVEMENTS (PARC)

ADDRESS: SIXTH STREET OVER THE LOS ANGELES RIVER

CITY ENGINEER
TED ALLEN, P.E.
DATE: 07/11/22
LIC NO. C-85736

DESIGN GROUP
ENGINEER: JUSTIN SMITH
DESIGNED BY: JUSTIN SMITH
DRAWN BY: MARK CARLOS
CHECKED BY: NATE SCHREINER
APPROVED BY: JASON L. FUSSEL

WORK ORDER NO. E700235D
FILE NO. --
DRAWING NO. C-206
SHEET 33 OF 295 SHEETS

BUREAU OF ENGINEERING

ENGINEERING
CITY OF LOS ANGELES

NO. | REVISIONS: | DATE | BY:

BUILDING NO.

INDEX NO. MF-300501

THIS PLAN WAS ELECTRONICALLY SIGNED AND STAMPED

PROFESSIONAL ENGINEER
JUSTIN L. SMITH
No. 85736
EXP: 9-30-22
CIVIL
STATE OF CALIFORNIA
REGISTERED

7/11/2022 2:05:02 AM - O:\PROJECTS\IRVINE\20043\200\20043-17001\CAD\SHEETFILES\C-206_HORIZONTAL CONTROL CURVE TABLES - TT.DWG - SMITH, JUSTIN

Sheet Version 3.0

POINT TABLE			
POINT #	DESCRIPTION	NORTHING	EASTING
100	CONC	1836549.21	6491182.15
101	CONC	1836488.11	6491578.19
102	DG	1836517.75	6491219.24
103	CONC	1836488.44	6491578.16
104	DG	1836526.99	6491196.70
105	CONC	1836559.12	6491180.74
106	DG	1836524.12	6491203.69
107	DG	1836513.94	6491228.55
108	CONC	1836554.72	6491247.03
109	CONC	1836543.53	6491302.23
110	CONC	1836542.03	6491309.65
111	CONC	1836536.01	6491241.25
112	CONC	1836476.07	6491333.01
113	CONC	1836494.60	6491441.00
114	REF PT	1836554.42	6491349.21
115	CONC	1836539.84	6491230.87
116	CONC	1836498.26	6491240.31
117	CONC	1836497.24	6491197.69
118	CONC	1836538.82	6491188.25
119	CONC	1836507.55	6491184.82
120	CONC	1836501.19	6491190.57
121	CONC	1836474.35	6491192.98
122	CONC	1836466.83	6491188.64
123	CONC	1836463.01	6491188.99
124	CONC	1836453.90	6491199.60
125	DG	1836529.71	6491197.81
126	DG	1836526.84	6491204.81
127	CONC	1836443.95	6491212.19
128	CONC	1836456.48	6491189.57
129	CONC	1836432.00	6491213.26
130	CONC	1836433.65	6491231.65
131	CONC	1836443.33	6491205.34
132	CONC	1836435.12	6491231.50
133	CONC	1836437.84	6491261.87
134	CONC	1836438.11	6491261.84
135	CONC	1836477.42	6491708.45
136	CONC	1836479.16	6491708.29
137	CONC	1836480.10	6491718.77
138	CONC	1836399.14	6491726.01
139	CONC	1836405.83	6491800.52
140	CONC	1836489.43	6491589.14
141	CONC	1836420.19	6491799.23
142	CONC	1836420.83	6491804.88
143	CONC	1836430.30	6491804.12
144	CONC	1836430.24	6491803.34
145	CONC	1836476.55	6491799.15
146	CONC	1836476.65	6491800.38
147	CONC	1836486.12	6491799.62
148	CONC	1836486.01	6491798.29
149	BLDG	1836451.55	6491735.14

POINT TABLE			
POINT #	DESCRIPTION	NORTHING	EASTING
150	CONC	1836507.82	6491796.31
151	CONC	1836603.78	6491787.61
152	CONC	1836613.74	6491786.71
153	CONC	1836531.21	6491348.28
154	CONC	1836532.71	6491340.87
155	CONC	1836540.66	6491301.65
156	CONC	1836539.15	6491309.06
157	BLDR	1836572.35	6491689.09
158	BLDR	1836558.61	6491695.07
159	BLDR	1836553.53	6491670.59
160	BLDR	1836530.91	6491675.99
161	CONC	1836594.96	6491750.12
162	CONC	1836574.80	6491779.36
163	CONC	1836556.99	6491748.63
164	CONC	1836577.15	6491719.40
165	CONC	1836576.56	6491719.39
166	CONC	1836576.50	6491719.08
167	CONC	1836572.00	6491720.31
168	CONC	1836571.94	6491719.98
169	CONC	1836583.59	6491715.16
170	CONC	1836570.87	6491654.21
171	CONC	1836524.54	6491695.41
172	CONC	1836511.81	6491634.46
173	CONC	1836532.45	6491630.09
174	CONC	1836532.55	6491629.77
175	CONC	1836543.42	6491633.54
176	CONC	1836543.52	6491633.22
177	CONC	1836544.78	6491633.62
178	CONC	1836588.94	6491622.93
179	CONC	1836587.62	6491608.33
180	CONC	1836547.79	6491624.08
181	CONC	1836526.42	6491617.36
182	CONC	1836499.28	6491570.99
183	CONC	1836547.67	6491332.19
184	CONC	1836561.67	6491332.19
185	CONC	1836489.10	6491589.17
186	CONC	1836555.05	6491247.00
187	CONC	1836523.42	6491626.90
188	DG	1836520.47	6491220.35
189	DG	1836516.65	6491229.66
193	CONC	1836561.68	6491320.49
194	CONC	1836489.49	6491568.97
195	CONC	1836170.79	6493991.50
198	CONC	1836537.33	6491195.04
199	CONC	1836532.40	6491191.26
200	CONC	1836519.68	6491238.11
201	CONC	1836512.77	6491239.15
202	CONC	1836527.48	6491241.34
203	CONC	1836527.65	6491241.67
204	CONC	1836522.21	6491243.60

POINT TABLE			
POINT #	DESCRIPTION	NORTHING	EASTING
205	CONC	1836522.31	6491243.93
206	CONC	1836552.52	6491257.91
207	CONC	1836550.14	6491269.62
208	CONC	1836535.59	6491341.46
209	CONC	1836534.09	6491348.87
210	CONC	1836527.64	6491380.67
211	CONC	1836526.14	6491388.08
212	CONC	1836519.81	6491419.32
213	CONC	1836517.38	6491431.30
214	DG	1836554.93	6491700.50
215	BLDR	1836536.18	6491652.39
216	DG	1836572.24	6491682.54
217	DG	1836565.88	6491690.20
218	BLDG	1836432.69	6491775.47
300	CONC	1836447.39	6492215.23
301	CONC	1836446.92	6492209.21
302	CONC	1836443.44	6492209.50
303	CONC	1836440.36	6492183.04
304	CONC	1836436.89	6492183.51
305	CONC	1836435.43	6492150.88
306	CONC	1836431.93	6492150.73
307	CONC	1836430.08	6492117.45
308	CONC	1836426.67	6492118.22
309	CONC	1836415.38	6492084.16
310	CONC	1836447.61	6492045.53
311	CONC	1836443.92	6492044.71
312	CONC	1836420.51	6492080.18
313	CONC	1836418.30	6492077.46
314	CONC	1836460.72	6492012.46
315	CONC	1836457.44	6492011.24
316	CONC	1836456.55	6491980.93
317	CONC	1836453.51	6491982.67
318	CONC	1836429.97	6491966.40
319	CONC	1836428.67	6491969.65
320	CONC	1836396.42	6491961.50
321	CONC	1836395.95	6491964.96
322	CONC	1836383.35	6491963.79
323	CONC	1836380.44	6491931.28
324	CONC	1836376.95	6491931.59
325	CONC	1836374.37	6491902.77
326	CONC	1836370.88	6491903.09
327	CONC	1836405.29	6491861.85
328	CONC	1836392.57	6492171.15
329	CONC	1836400.90	6492142.06
330	CONC	1836453.59	6491857.47
331	CONC	1836466.72	6491856.28
332	CONC	1836474.85	6491858.04
333	CONC	1836498.88	6491864.42
334	DG	1836507.37	6491871.65
335	DG	1836508.93	6491890.88

POINT TABLE			
POINT #	DESCRIPTION	NORTHING	EASTING
336	DG	1836507.87	6491904.83
337	DG	1836506.60	6491922.04
338	CONC	1836518.69	6491862.62
339	DG	1836520.89	6491889.92
340	DG	1836519.56	6491907.58
341	DG	1836518.56	6491921.01
342	CONC	1836467.63	6492069.50
343	CONC	1836519.08	6492143.41
344	WALL	1836528.66	6492168.81
345	WALL	1836403.08	6492194.45
346	CONC	1836440.60	6492184.77
347	CONC	1836432.34	6492144.09
348	CONC	1836423.23	6492106.56
349	CONC	1836416.58	6492088.43
350	CONC	1836491.90	6491997.91
351	CONC	1836491.63	6491980.86
352	CONC	1836443.29	6491972.66
353	CONC	1836413.19	6491964.69
354	CONC	1836385.11	6491963.89
355	CONC	1836465.71	6491875.23
356	CONC	1836438.45	6491883.51
357	CONC	1836434.85	6491901.73
358	CONC	1836466.43	6491943.18
359	CONC	1836478.34	6491940.17
360	CONC	1836484.79	6491904.74
361	CONC	1836483.68	6491887.85
362	CONC	1836454.46	6491867.03
363	CONC	1836478.71	6491872.23
364	CONC	1836489.48	6491886.32
365	CONC	1836490.72	6491905.71
366	CONC	1836487.83	6491925.15
367	CONC	1836489.20	6491967.23
368	CONC	1836491.21	6491977.45
369	CONC	1836480.33	6492037.77
370	CONC	1836458.54	6492109.18
371	CONC	1836462.41	6492160.00
372	CONC	1836479.34	6492173.13
373	CONC	1836479.56	6492176.12
374	CONC	1836474.28	6492175.78
375	CONC	1836473.97	6492177.24
376	CONC	1836466.66	6492174.15
377	CONC	1836457.98	6492160.80
378	CONC	1836455.21	6492137.57
379	CONC	1836456.70	6492137.48
381	CONC	1836457.05	6492109.05
382	CONC	1836468.47	6492184.53
383	CONC	1836478.35	6492225.30
393	CONC	1836505.04	6492164.30
394	DG	1836544.29	6492208.42
395	DG	1836509.14	6492217.95

LEGEND:

BLDG	BUILDING
BLDR	BOULDERS
CONC	CONCRETE PAVEMENT
DG	DECOMPOSED GRANITE PAVEMENT
REF PT	REFERENCE POINT
WALL	RETAINING WALL

THE CITY OF LOS ANGELES OR ITS OFFICERS OR AGENTS SHALL NOT BE RESPONSIBLE FOR THE ACCURACY OR COMPLETENESS OF ELECTRONIC COPIES OF THIS PLAN SHEET.

REVISION DATES (DESIGN STAGE ONLY)

Sheet Version 3.0

BUREAU OF ENGINEERING

ENGINEERING
CITY OF LOS ANGELES

NO.	REVISIONS:	DATE:	BY:

BUILDING NO.

INDEX NO. MF-300501

THIS PLAN WAS ELECTRONICALLY SIGNED AND STAMPED

PROFESSIONAL ENGINEER
JUSTIN L. SMITH
No. 85736
EXP: 9-30-22
CIVIL
STATE OF CALIFORNIA
REGISTERED

BUREAU OF ENGINEERING
OFFICIAL RECORD

CITY OF LOS ANGELES DEPARTMENT OF PUBLIC WORKS

PLANS PREPARED BY:
TETRA TECH, INC.
707 WILSHIRE BLVD. 23RD FLR.
LOS ANGELES, CA 90017
PHONE: (213) 239-8866

CITY ENGINEER
TED ALLEN, P.E.
DATE: 07/11/22
LIC. NO. C-85736

DESIGN GROUP

ENGINEER: JUSTIN SMITH
DESIGNED BY: JUSTIN SMITH
DRAWN BY: MARK CARLOS
CHECKED BY: NATE SCHREINER
APPROVED BY: JASON L. FUSSEL

VERT. CONTROL: BM 12-04070, 1929 (NGVD29) - 1985 ADJUSTMENT
HORIZ. CONTROL: GPS; PID AE 1704, EPOCH 1991.35

SHEET TITLE: HORIZONTAL CONTROL POINT TABLES SHEET 1

PROJECT: SIXTH STREET PARK, ARTS AND RIVER CONNECTIVITY IMPROVEMENTS (PARC)

ADDRESS: SIXTH STREET OVER THE LOS ANGELES RIVER

WORK ORDER NO. E700235D
FILE NO. --
DRAWING NO. C-207
SHEET 34 OF 295 SHEETS

7/11/2022 1:30:56 AM - O:\PROJECTS\IRVINE\20043\200-20043-17001\CAD\SHEETFILES\C-207_HORIZONTAL CONTROL POINT TABLES - TT.DWG - SMITH, JUSTIN

POINT TABLE			
POINT #	DESCRIPTION	NORTHING	EASTING
396	DG	1836448.30	6492230.42
397	DG	1836407.18	6492236.22
398	DG	1836405.92	6492236.40
399	CONC	1836313.78	6491893.27
400	CONC	1836284.45	6491868.80
401	CONC	1836279.65	6491869.28
402	CONC	1836304.65	6492148.18
403	CONC	1836309.51	6492147.74
404	CONC	1836333.97	6492118.43
405	CONC	1836328.92	6492062.16
406	CONC	1836325.25	6492071.53
407	CONC	1836328.69	6492109.87
408	CONC	1836316.60	6492077.82
409	CONC	1836318.57	6492099.74
410	C&G	1836337.83	6492071.90
411	C&G	1836340.51	6492101.78
500	DG	1836480.27	6492972.54
501	DG	1836409.10	6492961.50
502	DG	1836385.15	6493029.43
503	DG	1836456.32	6493040.46
504	CONC	1836600.86	6492975.06
505	CONC	1836545.24	6492955.22
506	CONC	1836482.59	6493010.23
507	CONC	1836410.65	6493048.15
508	CONC	1836360.61	6493096.91
509	CONC	1836360.80	6493097.88
510	CONC	1836373.58	6493095.50
511	CONC	1836373.38	6493094.49
514	CONC	1836407.94	6493060.87
515	CONC	1836494.61	6493015.18
516	CONC	1836548.60	6492967.78
517	CONC	1836590.41	6492982.81
518	CONC	1836341.05	6493066.20
519	CONC	1836310.24	6493071.93
520	CONC	1836437.01	6493151.86
521	CONC	1836433.84	6493152.45
522	CONC	1836411.56	6493261.73
523	CONC	1836406.65	6493260.79
524	CONC	1836428.56	6493153.44
525	CONC	1836185.69	6494099.58
526	CONC	1836426.44	6493153.83
527	CONC	1836391.28	6493277.74
528	CONC	1836392.15	6493271.75
529	CONC	1836170.68	6493991.19
530	CONC	1836185.58	6494099.27
531	CONC	1836404.69	6493260.42
532	CONC	1836394.08	6493258.39
533	CONC	1836387.35	6493304.99
534	CONC	1836394.51	6493306.62
535	CONC	1836311.35	6493626.64

POINT TABLE			
POINT #	DESCRIPTION	NORTHING	EASTING
536	CONC	1836304.73	6493624.70
537	CONC	1836283.51	6493681.82
538	CONC	1836293.69	6493685.19
539	CONC	1836268.98	6493763.12
540	CONC	1836294.80	6493753.40
541	CONC	1836340.18	6493875.92
542	CONC	1836349.57	6493872.49
543	CONC	1836300.73	6493740.64
544	CONC	1836284.92	6493746.32
545	CONC	1836295.59	6493685.82
546	CONC	1836300.34	6493687.39
547	CONC	1836292.72	6493662.75
548	CONC	1836306.48	6493667.30
549	CONC	1836207.19	6493415.23
550	CONC	1836171.79	6494104.33
551	CONC	1836171.90	6494104.64
552	CONC	1836207.51	6493415.33
553	CONC	1836213.93	6493393.32
554	CONC	1836214.24	6493393.42
559	CONC	1836407.10	6493282.26
560	CONC	1836392.97	6493279.55
561	CONC	1836389.59	6493303.45
562	CONC	1836396.90	6493305.12
563	CONC	1836312.71	6493629.12
564	CONC	1836305.95	6493627.14
565	CONC	1836378.65	6493176.39
566	CONC	1836378.87	6493183.95
567	CONC	1836368.67	6493228.30
568	CONC	1836365.09	6493234.97
569	DG	1836353.56	6493205.18
570	DG	1836347.01	6493208.96
571	DG	1836330.60	6493245.00
572	DG	1836324.73	6493249.76
573	CONC	1836333.65	6493267.82
574	CONC	1836327.18	6493271.73
575	CONC	1836283.52	6493285.45
576	CONC	1836275.98	6493286.06
577	CONC	1836269.21	6493328.15
578	CONC	1836259.59	6493337.70
579	CONC	1836255.81	6493380.12
580	CONC	1836251.46	6493379.00
581	CONC	1836248.65	6493389.90
582	CONC	1836244.29	6493388.77
583	CONC	1836230.03	6493444.08
584	CONC	1836234.39	6493445.20
585	CONC	1836231.48	6493456.46
586	CONC	1836235.84	6493457.59
587	CONC	1836225.17	6493533.27
588	CONC	1836225.44	6493521.75
589	CONC	1836259.87	6493545.10

POINT TABLE			
POINT #	DESCRIPTION	NORTHING	EASTING
590	CONC	1836258.73	6493549.45
591	CONC	1836281.12	6493555.35
592	CONC	1836280.00	6493559.70
593	CONC	1836313.85	6493568.60
594	CONC	1836314.97	6493564.26
595	CONC	1836316.76	6493564.74
596	CONC	1836317.91	6493560.36
597	CONC	1836285.52	6493773.29
598	CONC	1836209.37	6493770.49
599	CONC	1836229.74	6493843.92
600	CONC	1836305.89	6493846.72
601	CONC	1836201.89	6493793.81
602	CONC	1836201.56	6493793.76
603	CONC	1836202.63	6493785.40
604	CONC	1836202.29	6493785.39
605	CONC	1836184.97	6493834.29
606	CONC	1836101.33	6493864.87
607	CONC	1836101.40	6493775.82
608	CONC	1836185.03	6493745.24
609	CONC	1836158.35	6493738.65
610	CONC	1836158.28	6493737.77
611	CONC	1836147.77	6493740.61
612	CONC	1836147.57	6493739.90
613	CONC	1836241.70	6493555.22
614	CONC	1836241.92	6493554.99
615	CONC	1836205.78	6493530.19
616	CONC	1836204.00	6493532.61
617	CONC	1836325.86	6493282.87
618	CONC	1836325.74	6493282.56
619	CONC	1836312.86	6493288.28
620	CONC	1836312.72	6493287.97
621	CONC	1836099.27	6493885.90
622	CONC	1836095.82	6493909.86
623	CONC	1836073.31	6493900.95
624	CONC	1836076.76	6493876.99
625	TREE	1836317.48	6493829.04
626	TREE	1836325.29	6493850.14
627	CONC	1836115.32	6493736.27
628	CONC	1836195.57	6493717.49
629	TREE	1836269.50	6493866.32
630	TREE	1836254.23	6493863.97
631	CONC	1836277.96	6493767.97
632	CONC	1836319.85	6493597.54
633	TREE	1836151.85	6493895.83
634	TREE	1836140.16	6493882.82
635	STAIRS	1836084.96	6493962.80
636	TREE	1836118.69	6493918.59
637	TREE	1836102.67	6493874.18
638	TREE	1836080.35	6493853.19
639	CONC	1836279.15	6493181.22

POINT TABLE			
POINT #	DESCRIPTION	NORTHING	EASTING
640	CONC	1836258.07	6493185.14
641	CONC	1836009.03	6493994.96
642	CONC	1836031.44	6493986.73
643	CONC	1836105.53	6493959.53
644	CONC	1836109.36	6493951.24
645	CONC	1836318.88	6493874.31
646	CONC	1836339.16	6493878.28
647	CONC	1836331.22	6493874.60
648	CONC	1836335.92	6493864.46
649	CONC	1836325.64	6493859.69
650	CONC	1836321.80	6493867.99
651	DG	1836140.07	6493581.40
652	DG	1836137.84	6493588.63
653	DG	1836131.25	6493610.08
654	DG	1836129.03	6493617.30
655	DG	1836113.61	6493667.43
656	DG	1836111.39	6493674.65
657	DG	1836104.79	6493696.10
658	DG	1836102.57	6493703.33
700	CONC	1836252.22	6493961.19
701	CONC	1836292.49	6494071.05
702	CONC	1836173.16	6494114.83
703	CONC	1836218.93	6494239.78
704	CONC	1836242.83	6493964.64
705	CONC	1836279.66	6494065.10
706	CONC	1836160.33	6494108.88
707	CONC	1836209.58	6494243.32
708	CONC	1836248.08	6493998.71
709	CONC	1836149.90	6494002.96
710	CONC	1836206.55	6494087.78
711	CONC	1836108.38	6494092.02
712	CONC	1836197.31	6493989.56
713	CONC	1836204.25	6493988.61
714	DG	1836155.68	6494101.76
715	DG	1836148.90	6494102.34
716	CONC	1836160.08	6494140.25
717	CONC	1836152.62	6494222.29
718	CONC	1836078.87	6494185.59
719	CONC	1836086.33	6494103.54
720	DG	1836103.97	6494207.00
721	DG	1836108.87	6494210.77
722	DG	1836144.35	6494128.13
723	DG	1836139.89	6494123.33
724	DG	1836143.69	6494137.11
725	DG	1836140.71	6494144.06
726	DG	1836122.05	6494157.43
727	DG	1836118.08	6494166.68
728	DG	1836113.37	6494121.59
729	DG	1836110.39	6494128.54
730	DG	1836100.88	6494150.67

LEGEND:

C&G	CURB AND GUTTER
CONC	CONCRETE PAVEMENT
DG	DECOMPOSED GRANITE PAVEMENT

BUREAU OF ENGINEERING
OFFICIAL RECORD

THE CITY OF LOS ANGELES OR ITS OFFICERS OR AGENTS SHALL NOT BE RESPONSIBLE FOR THE ACCURACY OR COMPLETENESS OF ELECTRONIC COPIES OF THIS PLAN SHEET.

REVISION DATES
(DESIGN STAGE ONLY)

Sheet Version 3.0

PLANS PREPARED BY:
TETRA TECH, INC.
707 WILSHIRE BLVD, 23RD FLR.
LOS ANGELES, CA 90017
PHONE: (213) 239-8866

CITY OF LOS ANGELES DEPARTMENT OF PUBLIC WORKS
BUREAU OF ENGINEERING

VERT. CONTROL: BM 12-04070, 1929 (NGVD29) - 1985 ADJUSTMENT
HORIZ. CONTROL: GPS; PID AE 1704, EPOCH 1991.35

SHEET TITLE: HORIZONTAL CONTROL POINT TABLES SHEET 2
PROJECT: SIXTH STREET PARK, ARTS AND RIVER CONNECTIVITY IMPROVEMENTS (PARC)
ADDRESS: SIXTH STREET OVER THE LOS ANGELES RIVER

WORK ORDER NO. E700235D
FILE NO. --
DRAWING NO. C-208
SHEET 35 OF 295 SHEETS

BUREAU OF ENGINEERING
ENGINEERING
CITY OF LOS ANGELES

NO.	REVISIONS:	DATE:	BY:

BUILDING NO.
INDEX NO. MF-300501

THIS PLAN WAS ELECTRONICALLY SIGNED AND STAMPED

REGISTERED PROFESSIONAL ENGINEER
JUSTIN L. SMITH
No. 85736
EXP: 9-30-22
CIVIL
STATE OF CALIFORNIA

CITY ENGINEER
DESIGN GROUP
TED ALLEN, P.E.

ENGINEER:	JUSTIN SMITH	LIC. NO.	C-85736
DESIGNED BY:	JUSTIN SMITH	DATE:	07/11/22
DRAWN BY:	MARK CARLOS		
CHECKED BY:	NATE SCHREINER		
APPROVED BY:	JASON L. FUSSEL		

7/11/2022 1:34:39 AM - O:\PROJECTS\IRVINE\20043\200-20043-17001\CAD\SHEETFILES\C-208_HORIZONTAL CONTROL POINT TABLES - TT.DWG - SMITH, JUSTIN

POINT TABLE			
POINT #	DESCRIPTION	NORTHING	EASTING
731	DG	1836092.58	6494170.03
732	DG	1836166.33	6494084.38
733	DG	1836163.35	6494091.32
734	DG	1836166.03	6494054.98
735	DG	1836163.05	6494061.93
736	CONC	1836067.20	6494147.31
737	CONC	1836066.87	6494147.34
738	CONC	1836068.47	6494157.21
739	CONC	1836068.13	6494157.24
742	CONC	1835919.48	6494350.45
743	CONC	1835899.46	6494350.91
744	CONC	1835989.67	6494057.80
745	CONC	1836012.09	6494049.55
748	CONC	1836009.79	6494070.61
749	CONC	1836005.82	6494083.52
750	DG	1835978.00	6494108.28
751	DG	1835975.77	6494115.50
752	DG	1835969.18	6494136.95
753	DG	1835966.96	6494144.18
754	DG	1835951.54	6494194.30
755	DG	1835949.32	6494201.53
756	DG	1835942.72	6494222.98
757	DG	1835940.50	6494230.20
758	DG	1836379.98	6493203.24
759	DG	1836378.70	6493209.16
760	DG	1836336.12	6493224.73
761	DG	1836341.17	6493227.97
762	DG	1836257.35	6493252.17
763	DG	1836255.57	6493257.91
764	CONC	1836385.81	6493161.38
765	CONC	1836379.91	6493162.48
766	CONC	1836381.16	6493221.54
767	CONC	1836375.37	6493219.94
768	CONC	1836313.12	6493281.45
769	CONC	1836246.54	6493287.27
770	CONC	1836244.76	6493293.05
771	DG	1836409.73	6493213.74
772	DG	1836406.63	6493228.64
773	DG	1836401.03	6493238.70
774	DG	1836397.94	6493253.60
775	DG	1836394.96	6493233.86
776	DG	1836404.10	6493235.78
777	CONC	1836178.21	6493509.45
778	CONC	1836176.45	6493515.20
779	CONC	1836214.78	6493540.50
780	CONC	1836264.93	6493623.01
781	CONC	1836115.21	6493742.27
782	CONC	1836198.41	6493722.77
783	CONC	1836108.54	6493736.01
784	CONC	1836106.73	6493741.91

POINT TABLE			
POINT #	DESCRIPTION	NORTHING	EASTING
785	CONC	1836216.67	6493538.18
786	CONC	1836218.71	6493552.47
787	DG	1836066.53	6494034.64
788	DG	1836071.78	6494048.92
789	DG	1836053.35	6494042.49
790	DG	1836049.59	6494043.87
791	DG	1836065.48	6494058.02
792	DG	1836051.20	6494063.26
793	DG	1836066.48	6494072.39
794	DG	1836067.86	6494076.15
795	DG	1836071.08	6494084.38
796	DG	1836056.80	6494089.63
797	DG	1836045.69	6494047.31
798	DG	1836031.40	6494052.56
799	DG	1836048.47	6494065.31
800	DG	1836056.21	6494086.37
801	DG	1836034.08	6494066.28
802	DG	1836038.09	6494077.21
803	DG	1836022.90	6494053.10
804	DG	1836028.14	6494067.38
805	DG	1836038.81	6494079.91
806	DG	1836044.06	6494094.19
807	DG	1836027.43	6494072.31
808	DG	1836013.15	6494077.56
809	CONC	1836116.11	6494107.75
810	CONC	1836083.91	6494182.77
811	CONC	1836000.86	6494086.02
812	CONC	1835999.06	6494091.88
813	CONC	1836061.41	6494151.28
814	CONC	1835929.95	6494316.44
815	CONC	1835928.04	6494322.61
816	DG	1836140.12	6494237.11
817	DG	1836145.37	6494251.39
818	DG	1836131.61	6494254.06
819	DG	1836134.82	6494262.82
820	DG	1836127.57	6494234.38
821	DG	1836113.29	6494239.63
822	DG	1836125.33	6494257.27
823	DG	1836104.27	6494265.00
824	DG	1836104.06	6494226.22
825	DG	1836109.31	6494240.50
826	DG	1836112.95	6494244.49
827	DG	1836114.33	6494248.25
828	DG	1836095.71	6494245.92
829	DG	1836100.96	6494260.20
830	DG	1836125.22	6494270.88
831	DG	1836119.59	6494272.95
834	CONC	1836026.03	6494369.76
836	CONC	1836051.96	6494360.24
837	BLDR	1836094.34	6494390.18

POINT TABLE			
POINT #	DESCRIPTION	NORTHING	EASTING
838	BLDR	1836087.51	6494405.92
839	BLDR	1836080.18	6494390.95
840	BLDR	1836072.35	6494418.54
841	BLDR	1836064.73	6494382.51
842	BLDR	1836053.88	6494417.25
843	BLDR	1836054.90	6494436.73
844	BLDR	1836047.70	6494400.34
845	BLDR	1836039.75	6494419.02
846	BLDR	1836031.50	6494402.31
847	DG	1836087.01	6494399.38
848	DG	1836094.05	6494406.42
849	DG	1836082.24	6494384.72
850	CONC	1836126.49	6494105.44
851	CONC	1836126.35	6494105.74
852	CONC	1836119.42	6494102.22
853	CONC	1836119.28	6494102.52
854	BLDG	1836221.34	6493862.02
855	BLDG	1836176.97	6493872.36
857	CONC	1836517.23	6491183.94
858	CONC	1836517.26	6491184.27
859	WALL	1836425.09	6492147.39
860	WALL	1836411.11	6492146.62
861	WALL	1836411.78	6492179.74
862	WALL	1836425.71	6492178.34
863	WALL	1836487.49	6492209.43
864	WALL	1836450.93	6492215.89
865	WALL	1836478.75	6492225.24
866	CONC/WALL	1836461.48	6492226.78
867	CONC	1836192.80	6494212.03
868	CONC	1836163.38	6494222.81
869	CONC	1836204.92	6494245.13
870	CONC	1836175.51	6494255.93
871	DG	1836443.62	6491858.38
872	DG	1836434.74	6491859.18
873	CONC	1836408.02	6491878.23
874	CONC	1836403.94	6491881.10
875	CONC	1836399.67	6491880.51
876	CONC	1836396.28	6491905.73
877	CONC	1836393.21	6491906.29
878	CONC	1836474.53	6491870.14
879	CONC	1836481.37	6491874.02
880	CONC	1836426.55	6491880.64
881	CONC	1836428.02	6491883.25
882	CONC	1836418.56	6491902.75
883	CONC	1836421.69	6491902.47
884	CONC	1836436.67	6491904.64
885	CONC	1836423.34	6491905.36
886	CONC	1836419.96	6491905.63
887	CONC	1836398.05	6491908.47
888	CONC	1836394.77	6491909.05

POINT TABLE			
POINT #	DESCRIPTION	NORTHING	EASTING
889	CONC	1836456.38	6491953.05
890	CONC	1836452.20	6491952.48
891	CONC	1836435.04	6491950.75
892	CONC	1836430.51	6491950.45
893	CONC	1836407.51	6491920.45
894	CONC	1836412.86	6491926.83
895	CONC	1836407.81	6491925.51
896	CONC	1836408.81	6491926.70
897	CONC	1836433.72	6491953.67
898	CONC	1836438.37	6491954.02
899	CONC	1836454.73	6491955.85
900	CONC	1836459.14	6491956.70
901	CONC	1836474.25	6491975.82
902	CONC	1836471.93	6491977.72
903	CONC	1836478.74	6491979.22
904	CONC	1836478.96	6491982.51
905	CONC	1836481.85	6491980.11
906	CONC	1836481.96	6491983.14
907	CONC	1836481.10	6491990.23
908	CONC	1836478.41	6491988.24
909	CONC	1836480.47	6491993.50
910	CONC	1836477.80	6491991.53
911	CONC	1836473.81	6492018.88
912	CONC	1836471.15	6492017.36
913	CONC	1836472.83	6492021.79
914	CONC	1836470.18	6492020.25
915	CONC	1836422.17	6492103.69
916	CONC	1836421.03	6492100.57
917	CONC	1836401.47	6491882.91
918	CONC	1836481.53	6491987.80
919	CONC	1836478.57	6491987.30
920	DG	1836553.81	6491690.61
921	DG	1836550.19	6491676.24
922	DG	1836548.46	6491666.43
923	TREE	1836383.78	6491906.95
924	TREE	1836385.79	6491929.36
925	TREE	1836387.80	6491951.76
926	CONC	1836402.58	6493063.38
927	CONC	1836389.45	6493066.54
928	CONC	1836267.18	6493325.94
929	CONC	1836270.32	6493329.35
931	TREE	1836292.45	6493761.46
932	TREE	1836300.27	6493782.56
933	TREE	1836060.27	6493909.99
934	TREE	1836078.02	6493920.32
935	CONC	1836249.97	6493661.77
936	TREE	1836083.64	6493936.09
937	TREE	1836053.66	6493931.50
938	TREE	1836047.05	6493953.01
939	TREE	1836040.43	6493974.51

LEGEND:

BLDG	BUILDING
BLDR	BOULDERS
CONC	CONCRETE PAVEMENT
DG	DECOMPOSED GRANITE PAVEMENT
WALL	RETAINING WALL

BUREAU OF ENGINEERING
OFFICIAL RECORD

THE CITY OF LOS ANGELES OR ITS OFFICERS OR AGENTS SHALL NOT BE RESPONSIBLE FOR THE ACCURACY OR COMPLETENESS OF ELECTRONIC COPIES OF THIS PLAN SHEET.

REVISION DATES (DESIGN STAGE ONLY)

PLANS PREPARED BY:
TETRA TECH, INC.
707 WILSHIRE BLVD, 23RD FLR.
LOS ANGELES, CA 90017
PHONE: (213) 239-8866

CITY OF LOS ANGELES DEPARTMENT OF PUBLIC WORKS
BUREAU OF ENGINEERING

VERT. CONTROL: BM 12-04070, 1929 (NGVD29) - 1985 ADJUSTMENT
HORIZ. CONTROL: GPS, PID AE 1704, EPOCH 1991.35

SHEET TITLE: HORIZONTAL CONTROL POINT TABLES SHEET 3

PROJECT: SIXTH STREET PARK, ARTS AND RIVER CONNECTIVITY IMPROVEMENTS (PARC)

ADDRESS: SIXTH STREET OVER THE LOS ANGELES RIVER

CITY ENGINEER
TED ALLEN, P.E.
DATE: 07/11/22
LIC NO. C-85736

DESIGN GROUP
ENGINEER: JUSTIN SMITH
DESIGNED BY: JUSTIN SMITH
DRAWN BY: MARK CARLOS
CHECKED BY: NATE SCHREINER
APPROVED BY: JASON L. FUSSEL

THIS PLAN WAS ELECTRONICALLY SIGNED AND STAMPED

PROFESSIONAL ENGINEER
JUSTIN T. SMITH
No. 85736
EXP: 9-30-22
CIVIL
STATE OF CALIFORNIA

BUILDING NO.

INDEX NO. MF-300501

NO. REVISIONS: DATE: BY:

WORK ORDER NO. E700235D
FILE NO. --
DRAWING NO. C-209
SHEET 36 OF 295 SHEETS

7/11/2022 1:38:36 AM - O:\PROJECTS\RIVNE\20043\200\20043-17001\CAD\SHEETFILES\C-209_HORIZONTAL CONTROL POINT TABLES - TT.DWG - SMITH, JUSTIN

Sheet Version 3.0

POINT TABLE			
POINT #	DESCRIPTION	NORTHING	EASTING
940	DG	1836073.71	6494389.87
941	DG	1836060.29	6494415.87
942	DG	1836054.27	6494423.79
943	DG	1836035.95	6494424.37
944	DG	1836035.04	6494414.45
945	DG	1836025.33	6494404.54
946	DG	1836030.23	6494395.87
947	CONC	1836074.29	6494352.04
948	CONC	1836072.39	6494346.86
949	CONC	1836001.44	6494371.78
950	CONC	1836003.71	6494377.97
951	CONC	1836524.76	6491380.09
952	CONC	1836523.26	6491387.50
953	DG	1836572.57	6491686.10
954	DG	1836569.45	6491689.87
955	DG	1836557.16	6491697.70
956	DG	1836556.61	6491692.84
957	DG	1836552.24	6491673.30
958	DG	1836551.39	6491668.49
959	CONC	1836402.66	6493060.24
960	CONC	1836387.95	6493063.81
961	DG	1836402.31	6493212.20
962	DG	1836399.22	6493227.10
963	DG	1836404.92	6493231.87
964	DG	1836395.79	6493229.94
965	DG	1836393.61	6493237.16
966	DG	1836390.52	6493252.06
967	CONC	1836381.59	6493176.31
968	CONC	1836381.80	6493183.87
969	DG	1836355.09	6493207.82
970	DG	1836348.58	6493211.68
971	DG	1836328.68	6493242.64
972	DG	1836322.82	6493247.41
973	CONC	1836371.25	6493229.69
974	CONC	1836367.68	6493236.35
975	CONC	1836335.17	6493270.33
976	CONC	1836328.70	6493274.25
977	CONC	1836283.76	6493288.38
978	CONC	1836276.22	6493288.99
979	CONC	1836257.40	6493335.65
980	CONC	1836224.07	6493536.56
981	CONC	1836240.56	6493553.52
982	DG	1836168.73	6494056.14
983	DG	1836165.75	6494063.09
984	DG	1836163.64	6494083.21
985	DG	1836160.66	6494090.15
986	DG	1836140.99	6494135.95
987	DG	1836138.01	6494142.90
988	DG	1836124.75	6494158.59
989	DG	1836120.78	6494167.84

POINT TABLE			
POINT #	DESCRIPTION	NORTHING	EASTING
990	DG	1836110.67	6494120.43
991	DG	1836107.69	6494127.38
992	DG	1836098.18	6494149.51
993	DG	1836089.88	6494168.87
994	DG	1836145.14	6493582.96
995	DG	1836142.92	6493590.19
996	DG	1836136.33	6493611.64
997	DG	1836134.10	6493618.87
998	DG	1836118.69	6493668.99
999	DG	1836116.47	6493676.22
1000	DG	1836109.87	6493697.66
1001	DG	1836107.65	6493704.89
1002	DG	1836059.42	6494037.25
1003	DG	1836064.67	6494051.53
1004	DG	1836056.57	6494051.25
1005	DG	1836052.81	6494052.63
1006	DG	1836068.09	6494065.13
1007	DG	1836053.81	6494070.38
1008	DG	1836057.72	6494075.61
1009	DG	1836059.09	6494079.37
1010	DG	1836073.69	6494091.50
1011	DG	1836059.41	6494096.74
1012	DG	1836048.30	6494054.42
1013	DG	1836034.01	6494059.67
1014	DG	1836041.36	6494067.93
1015	DG	1836049.10	6494088.98
1016	DG	1836015.78	6494055.71
1017	DG	1836021.03	6494069.99
1018	DG	1836030.04	6494079.42
1019	DG	1836015.76	6494084.67
1020	DG	1836030.33	6494067.66
1021	DG	1836034.35	6494078.61
1022	DG	1836031.70	6494082.52
1023	DG	1836036.94	6494096.81
1024	CONC	1836005.96	6494069.44
1025	CONC	1836001.99	6494082.34
1026	DG	1836133.01	6494239.72
1027	DG	1836138.26	6494254.00
1028	DG	1836130.19	6494241.49
1029	DG	1836115.90	6494246.74
1030	DG	1836127.85	6494255.43
1031	DG	1836131.07	6494264.20
1032	DG	1836096.95	6494228.83
1033	DG	1836102.20	6494243.12
1034	DG	1836102.00	6494248.51
1035	DG	1836103.38	6494252.27
1036	DG	1836127.94	6494264.38
1037	DG	1836106.88	6494272.12
1038	DG	1836088.60	6494248.53
1039	DG	1836093.85	6494262.81

POINT TABLE			
POINT #	DESCRIPTION	NORTHING	EASTING
1040	DG	1836126.26	6494273.69
1041	DG	1836120.62	6494275.76
1042	DG	1835983.07	6494109.84
1043	DG	1835980.84	6494117.06
1044	DG	1835974.24	6494138.51
1045	DG	1835972.02	6494145.74
1046	DG	1835956.59	6494195.86
1047	DG	1835954.37	6494203.08
1048	DG	1835947.77	6494224.53
1049	DG	1835945.55	6494231.76
1050	DG	1836090.47	6494406.42
1051	DG	1836087.02	6494402.96
1052	DG	1836081.38	6494388.20
1053	DG	1836077.19	6494390.73
1054	DG	1836056.75	6494416.35
1055	DG	1836053.79	6494420.24
1056	DG	1836037.79	6494416.74
1057	DG	1836038.24	6494421.61
1058	DG	1836031.19	6494399.32
1059	DG	1836028.78	6494403.58
1060	CONC	1836456.36	6492123.66
1061	CONC	1836456.83	6492127.63
1062	CONC	1836435.29	6492155.18
1063	CONC	1836435.25	6492160.30
1064	CONC	1836471.05	6492193.06
1065	CONC	1836471.86	6492195.96
1066	CONC	1836441.09	6492188.24
1067	CONC	1836441.57	6492191.88
1068	CONC	1836462.28	6492047.14
1069	CONC	1836460.94	6492049.83
1070	CONC	1836459.48	6492046.04
1071	CONC	1836458.13	6492048.74
1072	CONC	1836491.59	6492001.33
1073	CONC	1836485.19	6492026.89
1074	CONC	1836484.01	6492029.81
1075	CONC	1836473.57	6492052.65
1076	CONC	1836472.45	6492055.47
1077	CONC	1836221.98	6493542.73
1078	CONC	1836224.42	6493465.85
1079	CONC	1836321.51	6493591.75
1080	CONC	1836226.18	6493554.96
1081	CONC	1836228.42	6493548.97
1082	CONC	1836090.57	6493795.59
1083	CONC	1836090.26	6493795.46
1084	CONC	1836085.64	6493811.62
1085	CONC	1836085.31	6493811.55
1086	CONC	1836248.87	6493371.02
1087	CONC	1836211.86	6493423.62
1088	CONC	1836255.41	6493664.29
1089	CONC	1836258.93	6493622.90

POINT TABLE			
POINT #	DESCRIPTION	NORTHING	EASTING
1090	BRAK	1836549.43	6491228.86
1091	BRAK	1836549.67	6491231.85
1092	BRAK	1836549.94	6491234.84
1093	BRAK	1836550.24	6491237.82
1094	BRAK	1836598.95	6491778.61
1095	BRAK	1836598.68	6491775.62
1096	BRAK	1836598.41	6491772.63
1097	BRAK	1836598.14	6491769.65
1098	BRAK	1836419.34	6493169.32
1099	BRAK	1836418.76	6493172.27
1100	BRAK	1836418.17	6493175.21
1101	BRAK	1836417.59	6493178.15
1102	BRAK	1836417.00	6493181.09
1103	BRAK	1836416.41	6493184.04
1104	BRAK	1836415.83	6493186.98
1105	BRAK	1836415.24	6493189.92
1106	BRAK	1836414.66	6493192.86
1107	BRAK	1836414.07	6493195.80
1108	TRASH	1836547.75	6491182.68
1109	TRASH	1836548.02	6491185.66
1110	TRASH	1836594.94	6491706.31
1111	TRASH	1836595.22	6491709.30
1112	TRASH	1836435.51	6491801.36
1113	TRASH	1836432.52	6491801.63
1114	TRASH	1836407.60	6491883.82
1115	TRASH	1836404.60	6491883.83
1116	TRASH	1836312.44	6491895.18
1117	TRASH	1836312.71	6491898.17
1118	TRASH	1836415.64	6493200.70
1119	TRASH	1836415.04	6493203.64
1120	TRASH	1836185.43	6493510.76
1121	TRASH	1836188.18	6493511.95
1122	TRASH	1836307.46	6493644.57
1123	TRASH	1836310.31	6493645.51
1124	TRASH	1836254.89	6493286.87
1125	TRASH	1836251.91	6493286.52
1126	FENC	1836322.52	6493545.97
1127	FENC	1836235.37	6493523.49
1128	FENC	1836371.20	6493357.14
1129	FENC	1836284.05	6493334.68
1130	HOOP	1836226.63	6493784.12
1131	HOOP	1836288.63	6493833.08
1132	BNCH	1836382.66	6493385.94
1133	BNCH	1836385.51	6493386.63
1134	BNCH	1836383.74	6493393.98
1135	BNCH	1836380.89	6493393.30
1136	BNCH	1836372.87	6493425.73
1137	BNCH	1836375.72	6493426.45
1138	BNCH	1836373.87	6493433.78
1139	BNCH	1836371.02	6493433.07

LEGEND:

CONC	CONCRETE PAVEMENT
DG	DECOMPOSED GRANITE PAVEMENT
BRAK	BIKE RACK
TRASH	TRASH BIN
FENC	FENCE
BNCH	BENCH
HOOP	BASKETBALL HOOP

THE CITY OF LOS ANGELES OR ITS OFFICERS OR AGENTS SHALL NOT BE RESPONSIBLE FOR THE ACCURACY OR COMPLETENESS OF ELECTRONIC COPIES OF THIS PLAN SHEET.

REVISION DATES (DESIGN STAGE ONLY)

Sheet Version 3.0

BUREAU OF ENGINEERING

ENGINEERING
CITY OF LOS ANGELES

BUILDING NO.

INDEX NO. MF-300501

NO.	REVISIONS:	DATE	BY:

THIS PLAN WAS ELECTRONICALLY SIGNED AND STAMPED

PROFESSIONAL ENGINEER
JUSTIN T. SMITH
No. 85736
EXP: 9-30-22
CIVIL
STATE OF CALIFORNIA
REGISTERED

BUREAU OF ENGINEERING
OFFICIAL RECORD

CITY OF LOS ANGELES DEPARTMENT OF PUBLIC WORKS

VERT. CONTROL: BM 12-04070, 1929 (NGVD29) - 1985 ADJUSTMENT
HORIZ. CONTROL: GPS, PID AE 1704, EPOCH 1991.35

SHEET TITLE: HORIZONTAL CONTROL POINT TABLES SHEET 4

PROJECT: SIXTH STREET PARK, ARTS AND RIVER CONNECTIVITY IMPROVEMENTS (PARC)

ADDRESS: SIXTH STREET OVER THE LOS ANGELES RIVER

CITY ENGINEER
DATE: 07/11/22
LIC. NO. C-85736

TED ALLEN, P.E.

DESIGN GROUP

ENGINEER:	JUSTIN SMITH
DESIGNED BY:	JUSTIN SMITH
DRAWN BY:	MARK CARLOS
CHECKED BY:	NATE SCHREINER
APPROVED BY:	JASON L. FUSSEL

PLANS PREPARED BY:
TETRA TECH, INC.
707 WILSHIRE BLVD, 23RD FLR.
LOS ANGELES, CA 90017
PHONE: (213) 239-8866

WORK ORDER NO. E700235D
FILE NO. --
DRAWING NO. C-210
SHEET 37 OF 295 SHEETS

7/11/2022 1:47:53 AM - O:\PROJECTS\IRVINE\2004\200+2\2043-17001\CAD\SHEETFILES\C-210_HORIZONTAL CONTROL POINT TABLES - TT.DWG - SMITH, JUSTIN

POINT TABLE			
POINT #	DESCRIPTION	NORTHING	EASTING
1140	BNCH	1836362.76	6493465.43
1141	BNCH	1836365.60	6493466.17
1142	BNCH	1836363.69	6493473.49
1143	BNCH	1836360.85	6493472.75
1144	BNCH	1836352.32	6493505.07
1145	BNCH	1836355.16	6493505.83
1146	BNCH	1836353.18	6493513.14
1147	BNCH	1836350.35	6493512.37
1148	BNCH	1836341.55	6493544.64
1149	BNCH	1836344.38	6493545.38
1150	BNCH	1836342.38	6493552.68
1151	BNCH	1836339.55	6493551.90
1152	BNCH	1836258.75	6493766.69
1153	BNCH	1836257.33	6493771.53
1154	BNCH	1836297.04	6493796.09
1155	BNCH	1836292.80	6493798.72
1156	BNCH	1836265.34	6493774.97
1157	BNCH	1836275.71	6493780.92
1158	BNCH	1836265.69	6493777.31
1159	BNCH	1836273.51	6493781.79
1160	BNCH	1836280.37	6493784.60
1161	BNCH	1836280.03	6493786.95
1162	BNCH	1836288.56	6493793.31
1163	BNCH	1836286.20	6493793.51
1164	BNCH	1836218.48	6493814.25
1165	BNCH	1836214.92	6493816.06
1166	BNCH	1836222.84	6493821.23
1167	BNCH	1836219.64	6493823.64
1168	BNCH	1836227.70	6493827.45
1169	BNCH	1836224.67	6493830.07
1170	BNCH	1836233.60	6493833.18
1171	BNCH	1836231.07	6493836.28
1172	BNCH	1836239.29	6493837.68
1173	BNCH	1836236.86	6493840.86
1174	BNCH	1836246.23	6493842.09
1175	BNCH	1836244.39	6493845.63
1176	BNCH	1836253.41	6493845.38
1177	BNCH	1836251.81	6493849.05
1178	BNCH	1836261.21	6493848.00
1179	BNCH	1836260.27	6493851.88
1180	LF	1836535.84	6491198.89
1181	LF	1836530.45	6491195.99
1182	LF	1836530.93	6491210.65
1183	LF	1836525.38	6491208.39
1184	LF	1836526.10	6491222.43
1185	LF	1836521.15	6491218.47
1186	LF	1836521.27	6491234.22
1187	LF	1836515.73	6491231.94
1188	LP	1836567.80	6491288.22
1189	LP	1836472.58	6491217.22

POINT TABLE			
POINT #	DESCRIPTION	NORTHING	EASTING
1190	LP	1836484.94	6491347.88
1191	LF	1836561.67	6491335.49
1192	LF	1836547.58	6491351.77
1193	LP	1836574.84	6491366.34
1194	LF	1836561.66	6491368.05
1195	LF	1836547.57	6491384.33
1196	LF	1836561.65	6491400.61
1197	LF	1836547.64	6491416.89
1198	LF	1836561.64	6491433.18
1199	LF	1836547.63	6491449.45
1200	LP	1836492.29	6491425.53
1201	LF	1836561.63	6491465.74
1202	LF	1836547.62	6491482.01
1203	LF	1836561.62	6491498.30
1204	LF	1836547.61	6491514.57
1205	LF	1836561.60	6491530.86
1206	LF	1836547.60	6491547.13
1207	LF	1836561.57	6491563.40
1208	LF	1836545.57	6491579.49
1209	LP	1836581.89	6491444.46
1210	LP	1836588.93	6491522.57
1211	LP	1836595.97	6491600.69
1212	LP	1836603.01	6491678.81
1213	LP	1836610.01	6491756.91
1214	LP	1836564.53	6491659.85
1215	LP	1836554.14	6491744.78
1216	LP	1836518.04	6491697.48
1217	LP	1836511.11	6491624.29
1218	LP	1836506.63	6491576.76
1219	LP	1836499.83	6491505.17
1220	LP	1836479.66	6491738.83
1221	LP	1836483.24	6491778.46
1222	LP	1836449.63	6491762.44
1223	LP	1836424.40	6491739.60
1224	LP	1836429.08	6491791.40
1225	LP	1836487.87	6491878.05
1226	LP	1836455.70	6491858.54
1227	LP	1836375.68	6491900.45
1228	LP	1836438.59	6491903.93
1229	LP	1836463.29	6491936.86
1230	LP	1836489.30	6491945.43
1231	LP	1836490.99	6492015.79
1232	LP	1836486.12	6492057.65
1233	LP	1836508.57	6492081.85
1234	LP	1836508.64	6492165.38
1235	LP	1836486.44	6492175.18
1236	LP	1836401.10	6492194.72
1237	LP	1836398.70	6492144.87
1238	LP	1836394.60	6492115.62
1239	LP	1836385.45	6492086.98

POINT TABLE			
POINT #	DESCRIPTION	NORTHING	EASTING
1240	LP	1836394.32	6492058.66
1241	LP	1836424.81	6492026.52
1242	LP	1836429.09	6491986.74
1243	LP	1836388.45	6491976.19
1244	LP	1836516.34	6491260.67
1245	LP	1836616.14	6493019.93
1246	LP	1836559.96	6493008.37
1247	LP	1836568.66	6492951.38
1248	LP	1836531.11	6492956.73
1249	LP	1836474.83	6492969.98
1250	LP	1836471.93	6493022.78
1251	LP	1836419.78	6492959.57
1252	LP	1836357.23	6493094.68
1253	LP	1836254.85	6493212.62
1254	LP	1836428.39	6493185.48
1255	LP	1836410.24	6493272.58
1256	LP	1836390.56	6493359.35
1257	LP	1836369.35	6493445.77
1258	LP	1836346.62	6493531.80
1259	LP	1836322.40	6493617.42
1260	LP	1836296.67	6493702.60
1261	LP	1836281.99	6493748.83
1262	LP	1836307.51	6493764.68
1263	LP	1836338.42	6493848.12
1264	LP	1836248.60	6493873.64
1265	LP	1836221.87	6493690.16
1266	LP	1836248.03	6493611.62
1267	LP	1836201.88	6493616.15
1268	LP	1836376.40	6493194.35
1269	LF	1836372.26	6493209.42
1270	LF	1836359.76	6493205.78
1271	LF	1836351.36	6493217.50
1272	LF	1836338.18	6493222.19
1273	LF	1836334.25	6493237.17
1274	LF	1836317.64	6493243.41
1275	LF	1836310.64	6493254.76
1276	LF	1836296.03	6493253.70
1277	LF	1836284.90	6493261.61
1278	LF	1836271.56	6493255.16
1279	LF	1836258.34	6493258.96
1280	LF	1836297.14	6493283.10
1281	LP	1836353.44	6493253.97
1282	LP	1836228.39	6493298.65
1283	LP	1836201.92	6493384.67
1284	LP	1836175.46	6493470.69
1285	LP	1836149.00	6493556.72
1286	LP	1836122.57	6493642.75
1287	LP	1836096.12	6493728.77
1288	LP	1836069.61	6493814.78
1289	LP	1836043.21	6493900.82

POINT TABLE			
POINT #	DESCRIPTION	NORTHING	EASTING
1290	LP	1836016.75	6493986.84
1291	LF	1836053.42	6493942.60
1292	LP	1836118.81	6493862.26
1293	LP	1836135.83	6493915.06
1294	LP	1836134.41	6493756.37
1295	LP	1836172.01	6493720.08
1296	LP	1836212.44	6493555.07
1297	LP	1836192.23	6493772.66
1298	LP	1836173.62	6493834.42
1299	LP	1836199.11	6493891.82
1300	LP	1836100.59	6494051.91
1301	LP	1836071.27	6494036.62
1302	LP	1836042.63	6494079.41
1303	LF	1836052.89	6494137.92
1304	LP	1836021.02	6494186.71
1305	LP	1836024.82	6494261.60
1306	LP	1835972.61	6494300.50
1307	LP	1836052.87	6494400.06
1308	LP	1836063.20	6494281.02
1309	LP	1836114.31	6494245.30
1310	LF	1836104.89	6494204.86
1311	LF	1836115.21	6494196.02
1312	LF	1836114.50	6494182.45
1313	LF	1836124.43	6494174.73
1314	LF	1836124.73	6494158.62
1315	LF	1836134.92	6494150.11
1316	LF	1836133.99	6494137.07
1317	LF	1836143.35	6494130.46
1318	LF	1836153.69	6494091.17
1319	LF	1836164.61	6494080.94
1320	LF	1836163.31	6494068.76
1321	LF	1836173.82	6494059.47
1322	LF	1836172.74	6494046.69
1323	LF	1836183.30	6494037.42
1324	LF	1836182.28	6494024.58
1325	LF	1836192.80	6494015.38
1326	LF	1836192.12	6494001.67
1327	LF	1836202.23	6493993.31
1328	LP	1836211.10	6493979.46
1329	LP	1836250.13	6494085.53
1330	LP	1836269.67	6494011.71
1331	LP	1836177.91	6494130.69
1332	LP	1836208.88	6494215.20
1333	LP	1836163.58	6494232.11
1334	LP	1835907.37	6494342.39
1335	LP	1835933.78	6494256.35
1336	LP	1835960.28	6494170.34
1337	LP	1835986.74	6494084.32
1338	LP	1836054.06	6494203.10
1339	LP	1836083.79	6494175.45

LEGEND:

BNCH	BENCH
LF	LIGHT FIXTURE
LP	LIGHT POLE

BUREAU OF ENGINEERING
OFFICIAL RECORD

PLANS PREPARED BY:
TETRA TECH, INC.
707 WILSHIRE BLVD. 23RD FLR.
LOS ANGELES, CA 90017
PHONE: (213) 239-8866

CITY OF LOS ANGELES
DEPARTMENT OF PUBLIC WORKS
BUREAU OF ENGINEERING

VERT. CONTROL: BM 12-04070, 1929 (NGVD29) - 1985 ADJUSTMENT
HORIZ. CONTROL: GPS, PID AE 1704, EPOCH 1991.35

SHEET TITLE: HORIZONTAL CONTROL POINT TABLES SHEET 5
PROJECT: SIXTH STREET PARK, ARTS AND RIVER CONNECTIVITY IMPROVEMENTS (PARC)
ADDRESS: SIXTH STREET OVER THE LOS ANGELES RIVER

WORK ORDER NO. E700235D
FILE NO. --
DRAWING NO. C-211
SHEET 38 OF 295 SHEETS

CITY ENGINEER
TED ALLEN, P.E.
DESIGN GROUP
ENGINEER: JUSTIN SMITH
DESIGNED BY: JUSTIN SMITH
DRAWN BY: MARK CARLOS
CHECKED BY: NATE SCHREINER
APPROVED BY: JASON L. FUSSEL
LIC. NO. C-85736
DATE: 07/11/22

BUREAU OF ENGINEERING
ENGINEERING
CITY OF LOS ANGELES

NO. | REVISIONS: | DATE | BY:

BUILDING NO.
INDEX NO. MF-300501

THIS PLAN WAS ELECTRONICALLY SIGNED AND STAMPED

PROFESSIONAL ENGINEER
JUSTIN T. SMITH
No. 85736
EXP: 9-30-22
CIVIL
STATE OF CALIFORNIA
REGISTERED

7/11/2022 1:51:25 AM - O:\PROJECTS\IRVINE\2004\200+\2043+17001\CAD\SHEETFILES\C-211_HORIZONTAL CONTROL POINT TABLES - TT.DWG - SMITH, JUSTIN

THE CITY OF LOS ANGELES OR ITS OFFICERS OR AGENTS SHALL NOT BE RESPONSIBLE FOR THE ACCURACY OR COMPLETENESS OF ELECTRONIC COPIES OF THIS PLAN SHEET.

REVISION DATES (DESIGN STAGE ONLY)

Sheet Version 3.0

POINT TABLE			
POINT #	DESCRIPTION	NORTHING	EASTING
1340	LP	1836105.35	6494107.46
1341	LP	1836142.25	6494004.85
1342	LP	1836396.09	6493037.48
1343	LP	1836560.76	6491210.10
1344	LP	1836377.18	6493369.01
1345	LP	1836333.49	6493538.47
1348	LP	1836229.40	6493511.63
1349	LP	1836274.67	6493787.02
1350	LP	1836273.08	6493342.17
1351	TREE	1836547.64	6491191.36
1352	TREE	1836549.91	6491218.12
1353	TREE	1836552.35	6491245.01
1354	TREE	1836565.83	6491394.44
1355	TREE	1836568.52	6491424.31
1356	TREE	1836571.22	6491454.19
1357	TREE	1836573.91	6491484.07
1358	TREE	1836576.59	6491513.87
1359	TREE	1836579.37	6491543.83
1360	TREE	1836581.99	6491573.71
1361	TREE	1836584.68	6491603.59
1362	TREE	1836587.38	6491633.47
1363	TREE	1836590.07	6491663.35
1364	TREE	1836592.76	6491693.22
1365	TREE	1836595.46	6491723.10
1366	TREE	1836598.15	6491752.98
1367	TREE	1836600.84	6491782.86
1368	TREE	1836574.51	6491787.07
1369	TREE	1836550.95	6491723.15
1370	TREE	1836529.97	6491706.98
1371	TREE	1836568.67	6491643.84
1372	TREE	1836558.57	6491613.64
1373	TREE	1836568.84	6491598.82
1374	TREE	1836539.86	6491577.63
1375	TREE	1836528.13	6491611.54
1376	TREE	1836517.19	6491597.71
1377	TREE	1836517.98	6491582.03
1378	TREE	1836531.05	6491562.65
1379	TREE	1836524.46	6491532.47
1380	TREE	1836516.88	6491518.61
1381	TREE	1836533.95	6491496.45
1382	TREE	1836541.60	6491513.03
1383	TREE	1836543.13	6491481.99
1384	TREE	1836540.63	6491456.33
1385	TREE	1836536.63	6491436.74
1386	TREE	1836543.64	6491423.47
1387	TREE	1836518.02	6491378.89
1388	TREE	1836515.48	6491347.18
1389	TREE	1836527.85	6491332.03
1390	TREE	1836527.10	6491291.78
1391	TREE	1836511.94	6491276.40

POINT TABLE			
POINT #	DESCRIPTION	NORTHING	EASTING
1392	TREE	1836533.13	6491263.03
1393	TREE	1836511.39	6491234.03
1394	TREE	1836503.97	6491220.99
1395	TREE	1836519.43	6491207.95
1396	TREE	1836514.19	6491196.47
1397	TREE	1836499.08	6491253.39
1398	TREE	1836488.04	6491270.06
1399	TREE	1836497.95	6491386.89
1400	TREE	1836503.12	6491406.09
1401	TREE	1836380.26	6491979.69
1402	TREE	1836382.51	6492004.59
1403	TREE	1836384.76	6492029.49
1404	TREE	1836386.92	6492054.39
1405	TREE	1836515.46	6492083.36
1406	TREE	1836522.91	6492151.63
1407	TREE	1836522.23	6492172.46
1408	TREE	1836645.21	6493038.81
1409	TREE	1836632.80	6493017.12
1410	TREE	1836617.95	6492997.03
1411	TREE	1836548.89	6492949.33
1412	TREE	1836570.27	6492982.91
1413	TREE	1836583.58	6492998.21
1414	TREE	1836573.74	6493009.39
1415	TREE	1836579.46	6493024.33
1416	TREE	1836558.39	6493033.41
1417	TREE	1836535.03	6493013.95
1418	TREE	1836538.72	6492991.98
1419	TREE	1836530.51	6493060.44
1420	TREE	1836517.20	6493057.75
1421	TREE	1836520.74	6492959.86
1422	TREE	1836479.80	6492922.10
1423	TREE	1836490.26	6492935.12
1424	TREE	1836491.87	6492958.70
1425	TREE	1836482.78	6492968.83
1426	TREE	1836473.62	6492943.61
1427	TREE	1836471.59	6493068.37
1428	TREE	1836457.14	6493062.66
1429	TREE	1836354.55	6492945.54
1430	TREE	1836334.93	6492951.81
1431	TREE	1836344.23	6492979.07
1432	TREE	1836326.12	6492980.89
1433	TREE	1836350.87	6492994.99
1434	TREE	1836336.13	6492999.01
1435	TREE	1836317.31	6493009.57
1436	TREE	1836331.58	6493041.07
1437	TREE	1836337.07	6493056.72
1438	TREE	1836304.81	6493050.24
1439	TREE	1836322.80	6493063.11
1440	TREE	1836296.00	6493078.91
1441	TREE	1836287.18	6493107.58

POINT TABLE			
POINT #	DESCRIPTION	NORTHING	EASTING
1442	TREE	1836347.01	6493180.39
1443	TREE	1836335.46	6493196.82
1444	TREE	1836300.93	6493186.23
1445	TREE	1836306.25	6493203.00
1446	TREE	1836279.81	6493198.98
1447	TREE	1836282.12	6493219.99
1448	TREE	1836270.22	6493232.05
1449	TREE	1836259.26	6493198.29
1450	TREE	1836250.44	6493226.97
1451	TREE	1836261.49	6493248.78
1452	TREE	1836241.62	6493255.64
1453	TREE	1836254.83	6493278.10
1454	TREE	1836248.41	6493299.01
1455	TREE	1836232.80	6493284.32
1456	TREE	1836223.98	6493312.99
1457	TREE	1836248.29	6493325.42
1458	TREE	1836236.52	6493343.66
1459	TREE	1836215.16	6493341.66
1460	TREE	1836206.35	6493370.34
1461	TREE	1836197.53	6493399.01
1462	TREE	1836246.51	6493354.64
1463	TREE	1836245.82	6493371.60
1464	TREE	1836228.84	6493384.58
1465	TREE	1836218.63	6493423.29
1466	TREE	1836225.23	6493437.55
1467	TREE	1836214.69	6493456.66
1468	TREE	1836188.71	6493427.69
1469	TREE	1836197.37	6493457.33
1470	TREE	1836179.89	6493456.36
1471	TREE	1836189.98	6493481.23
1472	TREE	1836171.07	6493485.04
1473	TREE	1836182.64	6493505.12
1474	TREE	1836221.88	6493469.83
1475	TREE	1836217.52	6493486.05
1476	TREE	1836220.70	6493501.59
1477	TREE	1836204.48	6493504.84
1478	TREE	1836209.04	6493519.04
1479	TREE	1836162.26	6493513.71
1480	TREE	1836171.45	6493541.74
1481	TREE	1836207.02	6493552.65
1482	TREE	1836191.43	6493557.17
1483	TREE	1836163.49	6493567.54
1484	TREE	1836153.44	6493542.39
1485	TREE	1836144.62	6493571.06
1486	TREE	1836155.55	6493593.35
1487	TREE	1836135.80	6493599.74
1488	TREE	1836147.65	6493619.17
1489	TREE	1836126.98	6493628.41
1490	TREE	1836139.74	6493644.98
1491	TREE	1836118.16	6493657.09

POINT TABLE			
POINT #	DESCRIPTION	NORTHING	EASTING
1492	TREE	1836131.74	6493670.77
1493	TREE	1836123.81	6493696.58
1494	TREE	1836109.35	6493685.76
1495	TREE	1836100.53	6493714.44
1496	TREE	1836115.99	6493722.43
1497	TREE	1836091.71	6493743.11
1498	TREE	1836113.21	6493749.87
1499	TREE	1836082.89	6493771.79
1500	TREE	1836074.07	6493800.46
1501	TREE	1836065.26	6493829.14
1502	TREE	1836056.44	6493857.81
1503	TREE	1836147.95	6493704.00
1504	TREE	1836160.05	6493726.56
1505	TREE	1836195.71	6493737.16
1506	TREE	1836180.95	6493591.60
1507	TREE	1836195.32	6493605.51
1508	TREE	1836234.35	6494002.95
1509	TREE	1836253.72	6494001.58
1510	TREE	1836264.05	6494029.75
1511	TREE	1836274.39	6494057.91
1512	TREE	1836255.84	6494068.12
1513	TREE	1836243.98	6494057.13
1514	TREE	1836233.59	6494031.71
1515	TREE	1836223.91	6494012.71
1516	TREE	1836217.03	6494038.62
1517	TREE	1836207.63	6494052.56
1518	TREE	1836235.27	6494074.24
1519	TREE	1836193.98	6494081.15
1520	TREE	1836186.94	6494059.90
1521	TREE	1836174.63	6494070.52
1522	TREE	1836161.95	6494120.56
1523	TREE	1836172.28	6494148.73
1524	TREE	1836182.61	6494176.89
1525	TREE	1836192.95	6494205.06
1526	TREE	1836203.28	6494233.22
1527	TREE	1836171.85	6494210.19
1528	TREE	1836161.92	6494171.16
1529	TREE	1836153.27	6494162.92
1530	TREE	1836154.01	6494190.98
1531	TREE	1836157.57	6494202.15
1532	TREE	1836155.65	6494225.31
1533	TREE	1836164.49	6494253.22
1534	TREE	1836149.39	6494242.38
1535	TREE	1836135.63	6494233.58
1536	TREE	1836128.89	6494248.66
1537	TREE	1836142.79	6494262.18
1538	TREE	1836118.40	6494231.08
1539	TREE	1836111.55	6494255.66
1540	TREE	1836102.08	6494276.93
1541	TREE	1836094.51	6494240.37

LEGEND:

CONC	CONCRETE PAVEMENT
DG	DECOMPOSED GRANITE PAVEMENT
LP	LIGHT POLE
TREE	TREE MISCELLANEOUS

THE CITY OF LOS ANGELES OR ITS OFFICERS OR AGENTS SHALL NOT BE RESPONSIBLE FOR THE ACCURACY OR COMPLETENESS OF ELECTRONIC COPIES OF THIS PLAN SHEET.

REVISION DATES (DESIGN STAGE ONLY)

BUREAU OF ENGINEERING
OFFICIAL RECORD

BUREAU OF ENGINEERING
ENGINEERING
CITY OF LOS ANGELES

NO.	REVISIONS:	DATE	BY:

BUILDING NO.

INDEX NO. MF-300501

THIS PLAN WAS ELECTRONICALLY SIGNED AND STAMPED

PROFESSIONAL ENGINEER
JUSTIN T. SMITH
No. 85736
EXP: 9-30-22
CIVIL
STATE OF CALIFORNIA

CITY OF LOS ANGELES
DEPARTMENT OF PUBLIC WORKS

CITY ENGINEER
TED ALLEN, P.E.
DATE: 07/11/22
LIC. NO. C-85736

DESIGN GROUP	
ENGINEER:	JUSTIN SMITH
DESIGNED BY:	JUSTIN SMITH
DRAWN BY:	MARK CARLOS
CHECKED BY:	NATE SCHREINER
APPROVED BY:	JASON L. FUSSEL

VERT. CONTROL: BM 12-04070, 1929 (NGVD29) - 1985 ADJUSTMENT
HORIZ. CONTROL: GPS, PID AE 1704, EPOCH 1991.35

SHEET TITLE: HORIZONTAL CONTROL POINT TABLES SHEET 6

PROJECT: SIXTH STREET PARK, ARTS AND RIVER CONNECTIVITY IMPROVEMENTS (PARC)

ADDRESS: SIXTH STREET OVER THE LOS ANGELES RIVER

PLANS PREPARED BY:
TETRA TECH, INC.
707 WILSHIRE BLVD, 23RD FLR.
LOS ANGELES, CA 90017
PHONE: (213) 239-8866

WORK ORDER NO. E700235D
FILE NO. --
DRAWING NO. C-212
SHEET 39 OF 295 SHEETS

7/11/2022 1:55:05 AM - O:\PROJECTS\RIVINE\20043\200-2\20043-17001\CAD\SHEETFILES\C-212_HORIZONTAL CONTROL POINT TABLES - TT.DWG - SMITH, JUSTIN

Sheet Version 3.0

POINT TABLE			
POINT #	DESCRIPTION	NORTHING	EASTING
1542	TREE	1836085.58	6494264.92
1543	TREE	1836078.22	6494281.64
1544	TREE	1836047.62	6493886.48
1545	TREE	1836038.80	6493915.16
1546	TREE	1836029.98	6493943.83
1547	TREE	1836021.16	6493972.51
1548	TREE	1836073.56	6494040.67
1549	TREE	1836057.86	6494053.97
1550	TREE	1836046.35	6494040.47
1551	TREE	1836040.23	6494065.03
1552	TREE	1836025.97	6494048.35
1553	TREE	1836026.79	6494087.52
1554	TREE	1836013.75	6494069.13
1555	TREE	1835991.15	6494069.98
1556	TREE	1835982.32	6494098.65
1557	TREE	1835997.56	6494106.92
1558	TREE	1836007.10	6494145.20
1559	TREE	1836031.21	6494134.96
1560	TREE	1836022.11	6494111.68
1561	TREE	1835990.22	6494130.83
1562	TREE	1835973.50	6494127.33
1563	TREE	1835964.68	6494156.00
1564	TREE	1835975.54	6494178.62
1565	TREE	1835955.85	6494184.67
1566	TREE	1835968.20	6494202.51
1567	TREE	1835947.03	6494213.34
1568	TREE	1835960.86	6494226.42
1569	TREE	1835938.20	6494242.02
1570	TREE	1835953.52	6494250.29
1571	TREE	1835946.17	6494274.21
1572	TREE	1835929.38	6494270.69
1573	TREE	1835938.83	6494298.10
1574	TREE	1835920.55	6494299.36
1575	TREE	1835911.73	6494328.04
1576	TREE	1836133.18	6494162.45
1577	TREE	1836132.11	6494175.94
1578	TREE	1836123.02	6494186.00
1579	TREE	1836095.52	6494350.60
1580	TREE	1836105.87	6494378.76
1581	TREE	1836116.23	6494406.91
1582	TREE	1836126.58	6494435.07
1583	TREE	1836136.94	6494463.23
1584	TREE	1836109.89	6494456.52
1585	TREE	1836097.41	6494469.70
1586	TREE	1836088.86	6494453.29
1587	TREE	1836070.93	6494470.04
1588	TREE	1836050.36	6494459.07
1589	TREE	1836031.20	6494463.70
1590	TREE	1836002.59	6494460.80
1591	TREE	1836004.11	6494478.16

POINT TABLE			
POINT #	DESCRIPTION	NORTHING	EASTING
1592	TREE	1835984.26	6494482.75
1593	TREE	1835887.68	6494409.61
1594	TREE	1836064.11	6494605.38
1595	TREE	1836042.58	6494603.01
1596	TREE	1836016.51	6494615.39
1597	TREE	1835998.83	6494595.47
1598	TREE	1836000.55	6494620.49
1599	TREE	1835981.39	6494606.46
1600	TREE	1835971.17	6494622.35
1601	TREE	1835969.08	6494594.00
1602	TREE	1835939.41	6494586.49
1603	TREE	1835945.92	6494601.33
1604	TREE	1835948.53	6494628.46
1605	TREE	1835951.09	6494641.66
1606	TREE	1835934.60	6494651.94
1607	TREE	1835932.28	6494627.17
1608	TREE	1835930.13	6494603.41
1609	TREE	1835916.30	6494647.63
1610	TREE	1835911.78	6494669.17
1611	TREE	1835886.87	6494685.11
1612	TRASH	1836047.63	6494107.08
1613	TRASH	1836045.49	6494104.98
1614	TRASH	1836150.26	6494263.30
1615	TRASH	1836153.08	6494262.27
1616	EQPT	1836089.35	6494143.15
1617	EQPT	1836082.69	6494128.66
1618	EQPT	1836085.95	6494122.44
1619	EQPT	1836101.87	6494116.35
1620	EQPT	1836103.05	6494123.81
1621	EQPT	1836110.05	6494111.96
1622	EQPT	1836079.97	6494161.89
1623	EQPT	1836085.73	6494160.42
1624	EQPT	1836575.97	6491749.58
1625	TRASH	1836040.76	6493961.77
1626	TRASH	1836039.83	6493964.63
1627	BNCH	1836089.42	6493868.20
1628	BNCH	1836088.67	6493872.13
1629	BNCH	1836070.83	6493871.23
1630	BNCH	1836072.78	6493874.72
1631	BNCH	1836062.97	6493896.37
1632	BNCH	1836066.85	6493895.38
1633	BNCH	1836071.35	6493905.35
1634	BNCH	1836068.04	6493907.60
1635	TREE	1836135.11	6493728.31
1636	TREE	1836265.59	6493312.16
1637	TREE	1836265.68	6493296.94
1638	TREE	1836529.68	6491193.96
1639	TREE	1836542.73	6491552.34
1640	TREE	1835982.88	6494154.72
1641	TREE	1836319.36	6493264.79

POINT TABLE			
POINT #	DESCRIPTION	NORTHING	EASTING
1642	TREE	1836302.38	6493281.21
1643	TREE	1836274.89	6493265.65
1644	LP	1836240.57	6493830.20
1645	TREE	1836046.39	6494097.49
1646	TREE	1836191.51	6493537.21

LEGEND:

TREE	TREE MISCELLANEOUS
BNCH	BENCH
TRASH	TRASH BIN
EQPT	EXERCISE EQUIPMENT
LP	LIGHT POLE

BUREAU OF ENGINEERING
OFFICIAL RECORD

THE CITY OF LOS ANGELES OR ITS OFFICERS OR AGENTS SHALL NOT BE RESPONSIBLE FOR THE ACCURACY OR COMPLETENESS OF ELECTRONIC COPIES OF THIS PLAN SHEET.

REVISION DATES (DESIGN STAGE ONLY)

Sheet Version 3.0

PLANS PREPARED BY:
TETRA TECH, INC.
707 WILSHIRE BLVD. 23RD FLR.
LOS ANGELES, CA 90017
PHONE: (213) 239-8866

CITY OF LOS ANGELES DEPARTMENT OF PUBLIC WORKS
BUREAU OF ENGINEERING

VERT. CONTROL: BM 12-04070, 1929 (NGVD29) - 1985 ADJUSTMENT
HORIZ. CONTROL: GPS; PID AE 1704; EPOCH 1991.35

SHEET TITLE: HORIZONTAL CONTROL POINT TABLES SHEET 7
PROJECT: SIXTH STREET PARK, ARTS AND RIVER CONNECTIVITY IMPROVEMENTS (PARC)
ADDRESS: SIXTH STREET OVER THE LOS ANGELES RIVER

WORK ORDER NO. E700235D
FILE NO. --
DRAWING NO. C-213
SHEET 40 OF 295 SHEETS

CITY ENGINEER
TED ALLEN, P.E.
DESIGN GROUP
ENGINEER: JUSTIN SMITH
DESIGNED BY: JUSTIN SMITH
DRAWN BY: MARK CARLOS
CHECKED BY: NATE SCHREINER
APPROVED BY: JASON L. FUSSEL
DATE: 07/11/22
LIC. NO. C-85736

ENGINEERING
CITY OF LOS ANGELES

BUREAU OF ENGINEERING

NO. | REVISIONS: | DATE | BY:

BUILDING NO.

INDEX NO. MF-300501

THIS PLAN WAS ELECTRONICALLY SIGNED AND STAMPED

PROFESSIONAL ENGINEER
JUSTIN T. SMITH
No. 85736
EXP: 9-30-22
CIVIL
REGISTERED
STATE OF CALIFORNIA

7/11/2022 1:58:08 AM - O:\PROJECTS\IRVINE\20043\200-20043-17001\CAD\SHEETFILES\C-213_HORIZONTAL CONTROL POINT TABLES - TT.DWG - SMITH, JUSTIN

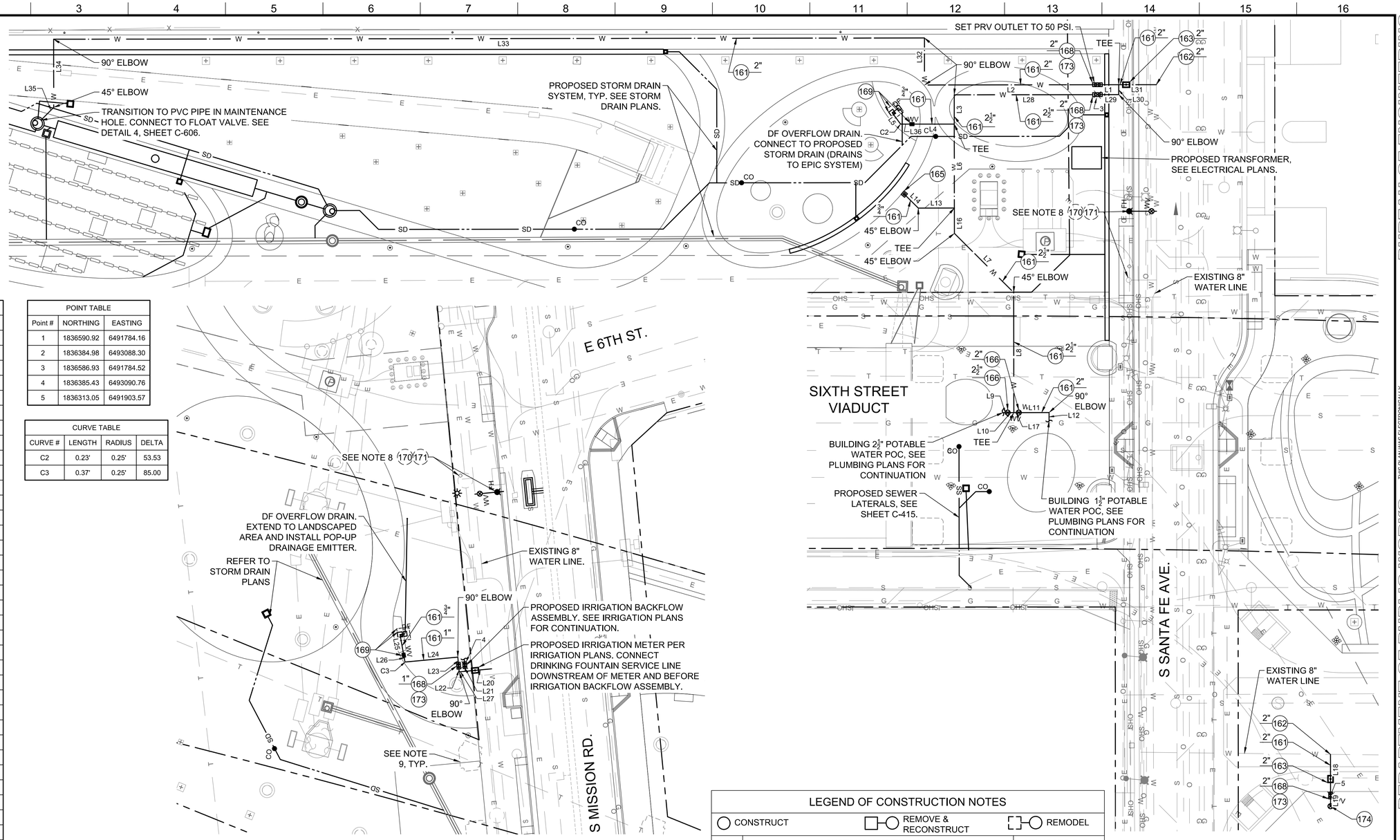

LINE TABLE		
LINE #	LENGTH	BEARING
L1	8.60'	S84° 49' 19"W
L2	69.90'	S84° 49' 19"W
L3	11.81'	S05° 10' 41"E
L4	17.11'	S84° 49' 19"W
L5	5.60'	N41° 39' 04"W
L6	33.96'	S05° 10' 41"E
L7	33.83'	S50° 10' 41"E
L8	48.56'	S05° 10' 41"E
L9	1.90'	N84° 49' 19"E
L10	2.50'	N84° 49' 19"E
L11	12.23'	N84° 49' 19"E
L12	3.42'	S05° 10' 41"E
L13	14.57'	S84° 49' 19"W
L14	8.00'	N50° 10' 41"W
L16	10.25'	S05° 10' 41"E
L17	2.00'	N84° 49' 19"E
L18	16.65'	S05° 10' 41"E
L19	4.31'	S05° 10' 41"E
L20	10.66'	S79° 33' 47"W
L21	2.50'	S10° 26' 13"E
L22	2.50'	N10° 26' 13"W
L23	3.50'	N10° 26' 13"W
L24	21.22'	S79° 33' 47"W
L25	8.48'	N15° 26' 13"W
L26	2.58'	S15° 26' 12"E
L27	2.50'	N79° 33' 47"E
L28	57.90'	S84° 49' 19"W
L29	8.60'	S84° 49' 19"W
L30	4.00'	N05° 10' 41"W
L31	15.20'	S84° 49' 19"W
L32	19.00'	N05° 10' 41"W
L33	352.05'	S84° 49' 19"W
L34	27.57'	S05° 10' 41"E
L35	7.26'	S39° 49' 19"W
L36	4.46'	N84° 49' 19"E

POINT TABLE		
Point #	NORTHING	EASTING
1	1836590.92	6491784.16
2	1836384.98	6493088.30
3	1836586.93	6491784.52
4	1836385.43	6493090.76
5	1836313.05	6491903.57

CURVE TABLE			
CURVE #	LENGTH	RADIUS	DELTA
C2	0.23'	0.25'	53.53
C3	0.37'	0.25'	85.00

LEGEND:

- PROPERTY / BOUNDARY LINE
- EASEMENT BOUNDARY LINE
- EXISTING SANITARY SEWER
- EXISTING WATER LINE
- EXISTING STORM DRAIN
- EXISTING GAS LINE
- EXISTING UNDERGROUND/OVERHEAD TELECOMMUNICATIONS LINE
- EXISTING OIL LINE
- EXISTING OVERHEAD ELECTRICAL
- EXISTING UNDERGROUND ELECTRICAL
- PROPOSED WATER LINE
- PROPOSED SANITARY SEWER LINE
- PROPOSED STORM DRAIN MAIN LINE (Ø ≥ 18")
- PROPOSED STORM DRAIN LATERAL (Ø ≤ 18")

NOTES:

1. EXISTING UTILITIES ARE SHOWN FOR REFERENCE ONLY. ACTUAL LOCATIONS MAY VARY. CONTRACTOR TO VERIFY THE LOCATIONS AND ELEVATIONS OF EXISTING UTILITIES IN THE FIELD.
2. CONTRACTOR SHALL COORDINATE THE INSTALLATION OF ALL SERVICE TAPS AND WATER METERS WITH LADWP. CONTRACTOR SHALL BE RESPONSIBLE FOR THE PAYMENT OF ALL FEES.
3. THRUST BLOCKS SHALL BE CONSTRUCTED AT ALL VERTICAL AND HORIZONTAL FITTINGS AND ANGLES FOR PIPES WITHOUT RESTRAINED JOINTS PER DETAIL 5, SHEET C-604.
4. POTABLE WATER LINES SHALL BE LOCATED 1' MINIMUM (OD TO OD) ABOVE ALL CROSSING SANITARY SEWER AND STORM DRAIN LINES. 10' MINIMUM (OD TO OD) HORIZONTAL CLEARANCE SHALL BE MAINTAINED BETWEEN PARALLEL SANITARY SEWER AND POTABLE WATER LINES. 4' MINIMUM (OD TO OD) HORIZONTAL CLEARANCE SHALL BE MAINTAINED BETWEEN PARALLEL STORM DRAIN AND POTABLE WATER LINES.
5. REFER TO STORM DRAINAGE SHEETS FOR PROPOSED STORM DRAINAGE SYSTEMS.
6. REFER TO SANITARY SEWER SHEETS FOR PROPOSED SEWER LATERALS.
7. PROPOSED ELECTRICAL CONDUIT NOT SHOWN FOR CLARITY. REFER TO ELECTRICAL PLANS. CONTRACTOR RESPONSIBLE FOR ALL COORDINATION TO AVOID CONFLICTS WITH THE PROPOSED POTABLE WATER SYSTEMS.
8. EXISTING FIRE HYDRANTS TO BE RELOCATED BY LADWP. CONTRACTOR RESPONSIBLE FOR ALL COORDINATION AND PAYMENT OF ANY REQUIRED FEES.
9. VIADUCT CONTRACTOR REMOVED PORTIONS OF THE OLD VIADUCT REINFORCED CONCRETE FOUNDATIONS TO A DEPTH OF A FEW FEET BELOW THE EXISTING GROUND SURFACE. PARC CONTRACTOR SHALL BE RESPONSIBLE FOR VERIFYING EXISTING CONDITIONS AND REMOVING ANY ADDITIONAL PORTIONS OF THE FOUNDATIONS THAT CONFLICT WITH THE PROPOSED PARC IMPROVEMENTS.

LEGEND OF CONSTRUCTION NOTES

○ CONSTRUCT ▭—○ REMOVE & RECONSTRUCT ┆▭┆—○ REMODEL

NO.	CONSTRUCTION ITEM/NOTE	STANDARD PLAN
161	TYPE K HARD COPPER WATER LINE	DTL 1, SHT C-604
162	SERVICE TAP WITH CORP STOP AND SERVICE SADDLE	LADWP STD
163	DOMESTIC WATER METER AND BOX	LADWP STD
164	HOT TAP EXISTING WATER LINE	LADWP STD
165	IN-GROUND HOSE BOX	DTL 3, SHT C-604
166	WATER SHUT-OFF VALVE	DTL 4, SHT C-604
168	DOMESTIC REDUCED PRESSURE BACKFLOW ASSEMBLY (≤2"Ø)	DTL 7, SHT C-604
169	DRINKING FOUNTAIN, VALVE, DRAINAGE SUMP & OVERFLOW	DTL 3, SHT C-605
170	GATE VALVE	LADWP STD
171	FIRE HYDRANT	LADWP STD
173	BACKFLOW ENCLOSURE	DTL 8, SHT C-604
174	POTABLE QUICK COUPLER VALVE	DTL 4, SHT C-611

BUREAU OF ENGINEERING — OFFICIAL RECORD

N

0 10 20 40
SCALE: 1"=20'

PLANS PREPARED BY:
TETRA TECH, INC.
707 WILSHIRE BLVD. 23RD FLR.
LOS ANGELES, CA 90017
PHONE: (213) 239-8866

CITY OF LOS ANGELES DEPARTMENT OF PUBLIC WORKS
BUREAU OF ENGINEERING
ENGINEERING — CITY OF LOS ANGELES

VERT. CONTROL: BM 12-04070, 1929 (NGVD29) - 1985 ADJUSTMENT
HORIZ. CONTROL: GPS; PID AE 1704, EPOCH 1991.35

SHEET TITLE: DOMESTIC WATER PLAN SHEET 1
PROJECT: SIXTH STREET PARK, ARTS AND RIVER CONNECTIVITY IMPROVEMENTS (PARC)
ADDRESS: SIXTH STREET OVER THE LOS ANGELES RIVER

CITY ENGINEER: TED ALLEN, P.E.
DESIGN GROUP
ENGINEER: JUSTIN SMITH
DESIGNED BY: JUSTIN SMITH
DRAWN BY: MARK CARLOS
CHECKED BY: NATE SCHREINER
APPROVED BY: JASON L. FUSSEL
LIC NO. C-85736 07/11/22

DATE | BY:
NO. | REVISIONS:

BUILDING NO.
INDEX NO. MF-300501

THIS PLAN WAS ELECTRONICALLY SIGNED AND STAMPED
REGISTERED PROFESSIONAL ENGINEER JUSTIN T. SMITH No. 85736 EXP: 9-30-22 CIVIL STATE OF CALIFORNIA

WORK ORDER NO. E700235D
FILE NO. --
DRAWING NO. C-400
SHEET 41 OF 295 SHEETS

7/8/2022 9:42:26 PM - O:\PROJECTS\IRVINE\20043\200-20043-17001\CAD\SHEETFILES\C-400_DOMESTIC WATER PLAN - TT_DWG - SMITH, JUSTIN

REVISION DATES (DESIGN STAGE ONLY)

THE CITY OF LOS ANGELES OR ITS OFFICERS OR AGENTS SHALL NOT BE RESPONSIBLE FOR THE ACCURACY OR COMPLETENESS OF ELECTRONIC COPIES OF THIS PLAN SHEET.

Sheet Version 3.0

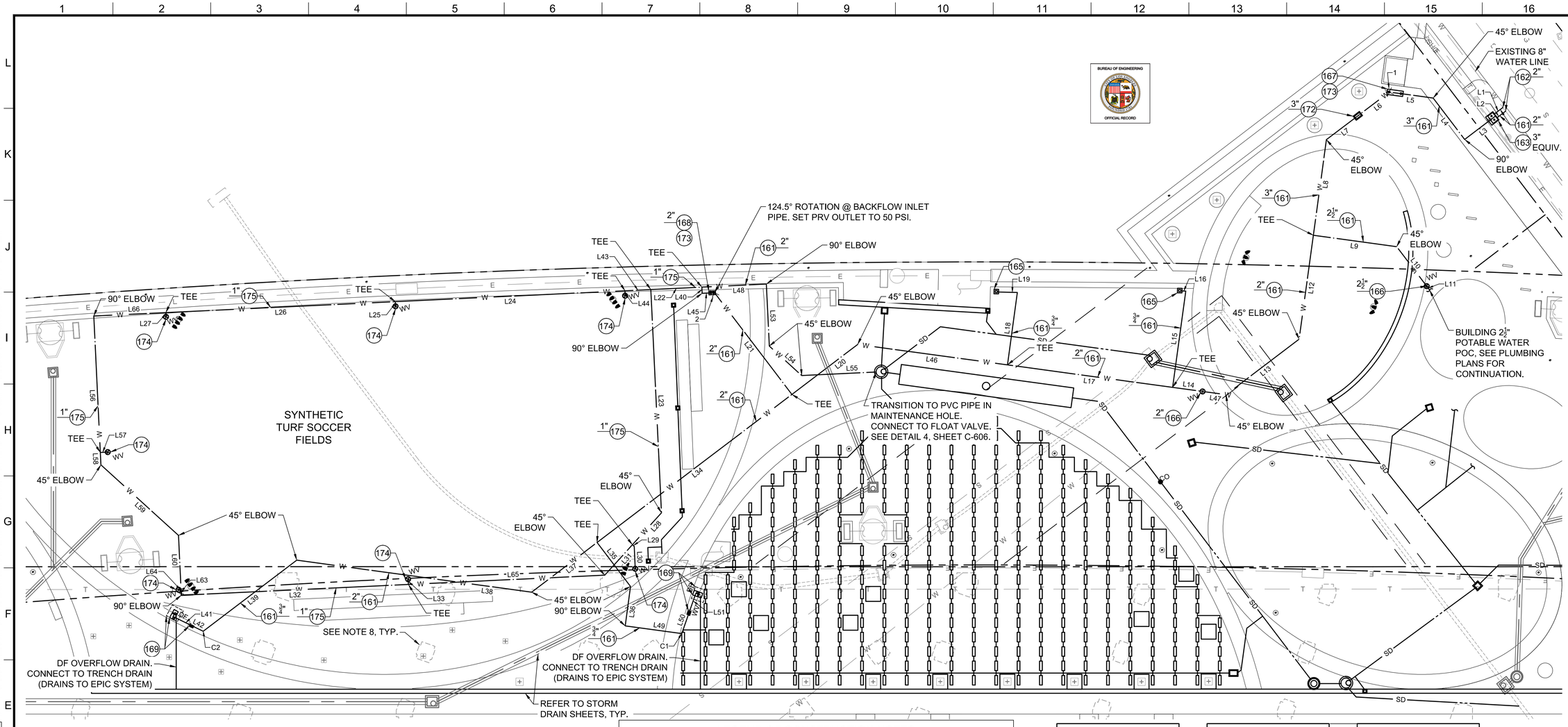

LEGEND:

- PROPERTY / BOUNDARY LINE
- EASEMENT BOUNDARY LINE
- S — EXISTING SANITARY SEWER
- W — EXISTING WATER LINE
- EXISTING STORM DRAIN
- G — EXISTING GAS LINE
- T — EXISTING UNDERGROUND/OVERHEAD TELECOMMUNICATIONS LINE
- O — EXISTING OIL LINE
- OHS — EXISTING OVERHEAD ELECTRICAL
- E — EXISTING UNDERGROUND ELECTRICAL
- W — PROPOSED WATER LINE
- SS — PROPOSED SANITARY SEWER LINE
- PROPOSED STORM DRAIN MAIN LINE (Ø ≥ 18")
- SD — PROPOSED STORM DRAIN LATERAL (Ø ≤ 18")

0 10 20 40
SCALE: 1"=20'

LEGEND OF CONSTRUCTION NOTES

◯ CONSTRUCT

NO.	CONSTRUCTION ITEM/NOTE	STANDARD PLAN
161	TYPE K HARD COPPER WATER LINE	DTL 1, SHT C-604
162	SERVICE TAP WITH CORP STOP AND SERVICE SADDLE	LADWP STD
163	DOMESTIC WATER METER AND BOX	LADWP STD
165	IN-GROUND HOSE BOX	DTL 3, SHT C-604
166	WATER SHUT-OFF VALVE	DTL 4, SHT C-604
167	DOMESTIC REDUCED PRESSURE BACKFLOW ASSEMBLY (3"Ø)	DTL 6, SHT C-604
168	DOMESTIC REDUCED PRESSURE BACKFLOW ASSEMBLY (≤2"Ø)	DTL 7, SHT C-604
169	DRINKING FOUNTAIN, VALVE, DRAINAGE SUMP & OVERFLOW	DTL 3, SHT C-605
172	PRESSURE REDUCING VALVE	DTL 2, SHT C-604
173	BACKFLOW ENCLOSURE	DTL 8, SHT C-604
174	POTABLE QUICK COUPLER VALVE	DTL 4, SHT C-611
175	SCH 40 PVC WATER LINE	DTL 1, SHT C-604

NOTES:

1. EXISTING UTILITIES ARE SHOWN FOR REFERENCE ONLY. ACTUAL LOCATIONS MAY VARY. CONTRACTOR TO VERIFY THE LOCATIONS AND ELEVATIONS OF EXISTING UTILITIES IN THE FIELD.
2. CONTRACTOR SHALL COORDINATE THE INSTALLATION OF ALL SERVICE TAPS AND WATER METERS WITH LADWP. CONTRACTOR SHALL BE RESPONSIBLE FOR THE PAYMENT OF ALL FEES.
3. THRUST BLOCKS SHALL BE CONSTRUCTED AT ALL VERTICAL AND HORIZONTAL FITTINGS AND ANGLES FOR PIPES WITHOUT RESTRAINED JOINTS PER DETAIL 5, SHEET C-604.
4. POTABLE WATER LINES SHALL BE LOCATED 1' MINIMUM (OD TO OD) ABOVE ALL CROSSING SANITARY SEWER AND STORM DRAIN LINES. 10' MINIMUM (OD TO OD) HORIZONTAL CLEARANCE SHALL BE MAINTAINED BETWEEN PARALLEL SANITARY SEWER AND POTABLE WATER LINES. 4' MINIMUM (OD TO OD) HORIZONTAL CLEARANCE SHALL BE MAINTAINED BETWEEN PARALLEL STORM DRAIN AND POTABLE WATER LINES.
5. REFER TO STORM DRAINAGE SHEETS FOR PROPOSED STORM DRAINAGE SYSTEMS.
6. REFER TO SANITARY SEWER SHEETS FOR PROPOSED SEWER LATERALS.
7. PROPOSED ELECTRICAL CONDUIT NOT SHOWN FOR CLARITY. REFER TO ELECTRICAL PLANS. CONTRACTOR RESPONSIBLE FOR ALL COORDINATION TO AVOID CONFLICTS WITH THE PROPOSED POTABLE WATER SYSTEMS.
8. VIADUCT CONTRACTOR REMOVED PORTIONS OF THE OLD VIADUCT REINFORCED CONCRETE FOUNDATIONS TO A DEPTH OF A FEW FEET BELOW THE EXISTING GROUND SURFACE. PARC CONTRACTOR SHALL BE RESPONSIBLE FOR VERIFYING EXISTING CONDITIONS AND REMOVING ANY ADDITIONAL PORTIONS OF THE FOUNDATIONS THAT CONFLICT WITH THE PROPOSED PARC IMPROVEMENTS.

LINE TABLE		
LINE #	LENGTH	BEARING
L1	4.23'	S69° 51' 27"W
L2	4.23'	S69° 51' 27"W
L3	15.77'	S69° 51' 27"W
L4	20.93'	N20° 08' 33"W
L5	17.87'	N65° 06' 27"W
L6	15.86'	S69° 53' 33"W
L7	15.86'	S69° 53' 33"W
L8	38.85'	S24° 53' 33"W
L9	33.87'	S65° 06' 27"E
L10	19.96'	S20° 06' 27"E
L11	2.00'	S20° 06' 27"E
L12	42.24'	S24° 53' 33"W
L13	36.90'	S69° 51' 27"W
L14	12.17'	N65° 08' 33"W
L15	39.12'	N24° 51' 27"E
L16	2.00'	N72° 00' 46"W
L17	67.08'	N65° 08' 33"W
L18	29.43'	N24° 51' 27"E
L19	8.04'	N71° 41' 30"W
L20	33.25'	S69° 51' 27"W
L21	51.44'	N20° 08' 33"W
L22	20.55'	N75° 37' 39"W
L23	90.00'	S14° 22' 21"W
L24	92.51'	N75° 37' 39"W

LINE TABLE		
LINE #	LENGTH	BEARING
L25	1.86'	S14° 27' 25"W
L26	92.49'	N75° 37' 39"W
L27	1.71'	S14° 22' 21"W
L28	17.39'	N59° 22' 21"E
L29	0.99'	S30° 37' 39"E
L30	9.00'	S14° 22' 21"W
L31	16.52'	S59° 22' 21"W
L32	91.48'	N75° 37' 39"W
L33	2.12'	S14° 22' 21"W
L34	98.49'	S69° 51' 27"W
L35	22.26'	S20° 08' 33"E
L36	16.00'	N24° 51' 27"E
L37	33.07'	S69° 51' 27"W
L38	95.41'	N65° 08' 33"W
L39	47.15'	S69° 51' 27"W
L40	2.50'	S14° 22' 21"W
L41	8.36'	S46° 52' 41"E
L42	5.01'	S46° 52' 40"E
L43	10.44'	N75° 37' 39"W
L44	2.00'	S14° 22' 21"W
L45	5.00'	S75° 37' 39"E
L46	60.86'	N65° 08' 33"W
L47	9.56'	N65° 08' 33"W
L48	26.00'	N75° 37' 39"W

LINE TABLE		
LINE #	LENGTH	BEARING
L49	22.80'	S65° 08' 33"E
L50	8.58'	N36° 13' 15"E
L51	8.33'	N36° 13' 15"E
L53	25.00'	S14° 22' 21"W
L54	17.65'	S30° 37' 39"E
L55	30.00'	S75° 37' 39"E
L56	55.00'	N14° 22' 21"E
L57	3.00'	S75° 37' 39"E
L58	5.00'	N14° 22' 21"E
L59	42.21'	N30° 37' 39"W
L60	21.87'	N14° 22' 21"E
L63	2.26'	S14° 22' 21"W
L64	1.00'	N75° 37' 39"W
L65	79.14'	S75° 37' 39"E
L66	29.01'	S75° 37' 39"E

POINT TABLE		
POINT #	NORTHING	EASTING
1	1836321.42	6493861.65
2	1836324.03	6493578.36

CURVE TABLE			
CURVE #	LENGTH	RADIUS	DELTA
C1	0.34'	0.25'	78.64
C2	0.28'	0.25'	63.26

THE CITY OF LOS ANGELES OR ITS OFFICERS OR AGENTS SHALL NOT BE RESPONSIBLE FOR THE ACCURACY OR COMPLETENESS OF ELECTRONIC COPIES OF THIS PLAN SHEET.

REVISION DATES (DESIGN STAGE ONLY)

Sheet Version 3.0

BUREAU OF ENGINEERING
OFFICIAL RECORD

BUREAU OF ENGINEERING
ENGINEERING
CITY OF LOS ANGELES

NO.	REVISIONS:	DATE:	BY:

BUILDING NO.

INDEX NO. MF-300501

THIS PLAN WAS ELECTRONICALLY SIGNED AND STAMPED

PROFESSIONAL ENGINEER
JUSTIN L. SMITH
No. 85736
EXP: 9-30-22
CIVIL
STATE OF CALIFORNIA

CITY OF LOS ANGELES DEPARTMENT OF PUBLIC WORKS

VERT. CONTROL: BM 12-04070, 1929 (NGVD29) - 1985 ADJUSTMENT
HORIZ. CONTROL: GPS; PID AE 1704, EPOCH 1991.35

SHEET TITLE: DOMESTIC WATER PLAN SHEET 2

PROJECT: SIXTH STREET PARK, ARTS AND RIVER CONNECTIVITY IMPROVEMENTS (PARC)

ADDRESS: SIXTH STREET OVER THE LOS ANGELES RIVER

CITY ENGINEER: TED ALLEN, P.E.
LIC. NO. C-85736
DATE: 07/11/22

ENGINEER:	DESIGN GROUP	JUSTIN SMITH
DESIGNED BY:	JUSTIN SMITH	
DRAWN BY:	MARK CARLOS	
CHECKED BY:	NATE SCHREINER	
APPROVED BY:	JASON L. FUSSEL	

PLANS PREPARED BY:
TETRA TECH, INC.
707 WILSHIRE BLVD. 23RD FLR.
LOS ANGELES, CA 90017
PHONE: (213) 239-8866

WORK ORDER NO. E700235D
FILE NO. --
DRAWING NO. C-401
SHEET 42 OF 295 SHEETS

7/8/2022 11:11:52 PM - O:\PROJECTS\IRVINE\20043\200\20043-17001\CAD\SHEETFILES\C-401_DOMESTIC WATER PLAN - TT.DWG - SMITH, JUSTIN

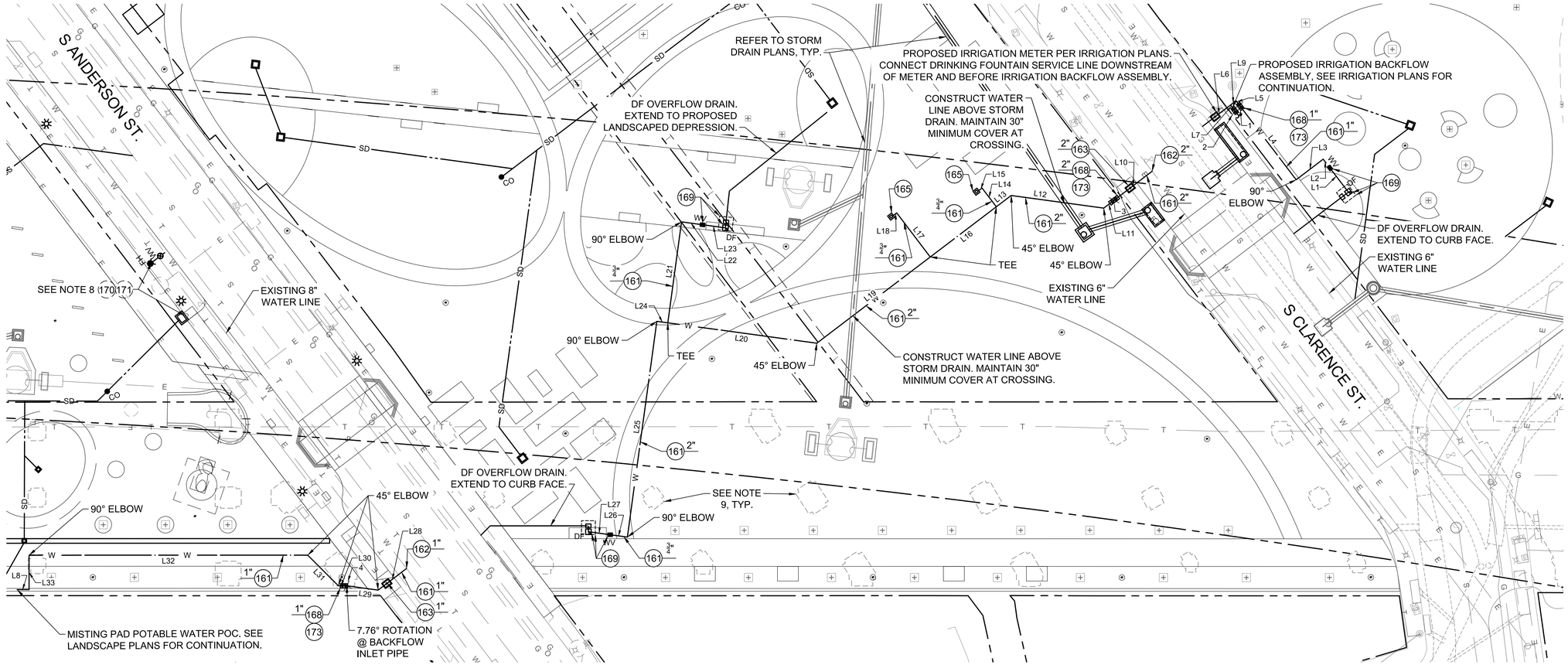

LEGEND:

- PROPERTY / BOUNDARY LINE
- EASEMENT BOUNDARY LINE
- S — EXISTING SANITARY SEWER
- W — EXISTING WATER LINE
- EXISTING STORM DRAIN
- G — EXISTING GAS LINE
- T — EXISTING UNDERGROUND/OVERHEAD TELECOMMUNICATIONS LINE
- O — EXISTING OIL LINE
- OHS — EXISTING OVERHEAD ELECTRICAL
- E — EXISTING UNDERGROUND ELECTRICAL
- W — PROPOSED WATER LINE
- SS — PROPOSED SANITARY SEWER LINE
- PROPOSED STORM DRAIN MAIN LINE (Ø ≥ 18")
- SD — PROPOSED STORM DRAIN LATERAL (Ø ≤ 18")

NOTES:

1. EXISTING UTILITIES ARE SHOWN FOR REFERENCE ONLY. ACTUAL LOCATIONS MAY VARY. CONTRACTOR TO VERIFY THE LOCATIONS AND ELEVATIONS OF EXISTING UTILITIES IN THE FIELD.
2. CONTRACTOR SHALL COORDINATE THE INSTALLATION OF ALL SERVICE TAPS AND WATER METERS WITH LADWP. CONTRACTOR SHALL BE RESPONSIBLE FOR THE PAYMENT OF ALL FEES.
3. THRUST BLOCKS SHALL BE CONSTRUCTED AT ALL VERTICAL AND HORIZONTAL FITTINGS AND ANGLES FOR PIPES WITHOUT RESTRAINED JOINTS PER DETAIL 5, SHEET C-604.
4. POTABLE WATER LINES SHALL BE LOCATED 1' MINIMUM (OD TO OD) ABOVE ALL CROSSING SANITARY SEWER AND STORM DRAIN LINES. 10' MINIMUM (OD TO OD) HORIZONTAL CLEARANCE SHALL BE MAINTAINED BETWEEN PARALLEL SANITARY SEWER AND POTABLE WATER LINES. 4' MINIMUM (OD TO OD) HORIZONTAL CLEARANCE SHALL BE MAINTAINED BETWEEN PARALLEL STORM DRAIN AND POTABLE WATER LINES.
5. REFER TO STORM DRAINAGE SHEETS FOR PROPOSED STORM DRAINAGE SYSTEMS.
6. REFER TO SANITARY SEWER SHEETS FOR PROPOSED SEWER LATERALS.
7. PROPOSED ELECTRICAL CONDUIT NOT SHOWN FOR CLARITY. REFER TO ELECTRICAL PLANS. CONTRACTOR RESPONSIBLE FOR ALL COORDINATION TO AVOID CONFLICTS WITH THE PROPOSED POTABLE WATER SYSTEMS.
8. EXISTING FIRE HYDRANTS TO BE RELOCATED BY LADWP. CONTRACTOR RESPONSIBLE FOR ALL COORDINATION AND PAYMENT OF ANY REQUIRED FEES.
9. VIADUCT CONTRACTOR REMOVED PORTIONS OF THE OLD VIADUCT REINFORCED CONCRETE FOUNDATIONS TO A DEPTH OF A FEW FEET BELOW THE EXISTING GROUND SURFACE. PARC CONTRACTOR SHALL BE RESPONSIBLE FOR VERIFYING EXISTING CONDITIONS AND REMOVING ANY ADDITIONAL PORTIONS OF THE FOUNDATIONS THAT CONFLICT WITH THE PROPOSED PARC IMPROVEMENTS.

LEGEND OF CONSTRUCTION NOTES

○ CONSTRUCT ⊡ REMOVE & RECONSTRUCT ◌ WORK BY OTHERS

NO.	CONSTRUCTION ITEM/NOTE	STANDARD PLAN
161	TYPE K HARD COPPER WATER LINE	DTL 1, SHT C-604
162	SERVICE TAP WITH CORP STOP AND SERVICE SADDLE	LADWP STD
163	DOMESTIC WATER METER AND BOX	LADWP STD
164	HOT TAP EXISTING WATER LINE	LADWP STD
165	IN-GROUND HOSE BOX	DTL 3, SHT C-604
166	WATER SHUT-OFF VALVE	DTL 4, SHT C-604
168	DOMESTIC REDUCED PRESSURE BACKFLOW ASSEMBLY (≤2"Ø)	DTL 7, SHT C-604
169	DRINKING FOUNTAIN, VALVE, DRAINAGE SUMP & OVERFLOW	DTL 3, SHT C-605
170	GATE VALVE	LADWP STD
171	FIRE HYDRANT	LADWP STD
173	BACKFLOW ENCLOSURE	DTL 8, SHT C-604

LINE TABLE		
LINE #	LENGTH	BEARING
L1	10.98'	S20° 11' 40"E
L2	4.03'	S20° 11' 40"E
L3	12.28'	N69° 48' 20"E
L4	33.37'	S20° 11' 40"E
L5	2.50'	S20° 11' 40"E
L6	12.80'	N69° 48' 20"E
L7	2.50'	S20° 11' 40"E
L8	4.30'	S72° 54' 22"E
L9	2.50'	S69° 48' 20"W
L10	17.28'	S69° 51' 56"W
L11	4.72'	S69° 51' 56"W
L12	33.78'	N65° 08' 04"W
L13	6.74'	S69° 51' 56"W
L14	8.50'	N20° 08' 04"W
L15	2.00'	S69° 51' 56"W
L16	30.00'	S69° 51' 56"W
L17	20.00'	N20° 08' 04"W
L18	2.00'	S69° 51' 56"W
L19	51.50'	S69° 51' 56"W
L20	54.38'	N65° 08' 04"W

LINE TABLE		
LINE #	LENGTH	BEARING
L21	36.84'	N24° 51' 56"E
L22	7.68'	S65° 08' 04"E
L23	8.34'	S65° 08' 04"E
L24	3.98'	N65° 08' 04"W
L25	78.71'	S24° 51' 56"W
L26	6.32'	N65° 08' 04"W
L27	7.91'	N65° 08' 04"W
L28	12.87'	S69° 51' 27"W
L29	11.51'	N65° 08' 33"W
L30	2.07'	N72° 54' 22"W
L31	15.63'	N27° 54' 22"W
L32	100.74'	N72° 54' 22"W
L33	12.46'	S17° 05' 38"W

POINT TABLE		
POINT #	NORTHING	EASTING
1	1836084.02	6494347.31
2	1836083.16	6494344.96
3	1836064.99	6494293.75
4	1836013.33	6493987.59

BUREAU OF ENGINEERING
OFFICIAL RECORD

0 10 20 40
SCALE: 1"=20'

PLANS PREPARED BY:
TETRA TECH, INC.
707 WILSHIRE BLVD, 23RD FLR.
LOS ANGELES, CA 90017
PHONE: (213) 239-8866

BUREAU OF ENGINEERING
ENGINEERING
CITY OF LOS ANGELES

NO.	REVISIONS:	DATE	BY:

BUILDING NO.
INDEX NO. MF-300501

THIS PLAN WAS ELECTRONICALLY SIGNED AND STAMPED

PROFESSIONAL ENGINEER
REGISTERED
JUSTIN T. SMITH
No. 85736
EXP: 9-30-22
CIVIL
STATE OF CALIFORNIA

CITY ENGINEER
TED ALLEN, P.E.
LIC. NO. C-85736
DATE: 07/11/22

DESIGN GROUP
ENGINEER: JUSTIN SMITH
DESIGNED BY: JUSTIN SMITH
DRAWN BY: MARK CARLOS
CHECKED BY: NATE SCHREINER
APPROVED BY: JASON L. FUSSEL

SHEET TITLE: DOMESTIC WATER PLAN SHEET 3
PROJECT: SIXTH STREET PARK, ARTS AND RIVER CONNECTIVITY IMPROVEMENTS (PARC)
ADDRESS: SIXTH STREET OVER THE LOS ANGELES RIVER

VERT. CONTROL: BM 12-04070, 1929 (NGVD29) - 1985 ADJUSTMENT
HORIZ. CONTROL: GPS; PID AE 1704, EPOCH 1991.35

WORK ORDER NO. E700235D
FILE NO. --
DRAWING NO. C-402
SHEET 43 OF 295 SHEETS

7/7/2022 11:44:07 AM - C:\PROJECTS\IRVINE\20043\200\20043-17001\CAD\SHEETFILES\C-402_DOMESTIC WATER PLAN - TT.DWG - SMITH, JUSTIN

CITY OF LOS ANGELES DEPARTMENT OF PUBLIC WORKS

THE CITY OF LOS ANGELES OR ITS OFFICERS OR AGENTS SHALL NOT BE RESPONSIBLE FOR THE ACCURACY OR COMPLETENESS OF ELECTRONIC COPIES OF THIS PLAN SHEET.

REVISION DATES (DESIGN STAGE ONLY)

Sheet Version 3.0

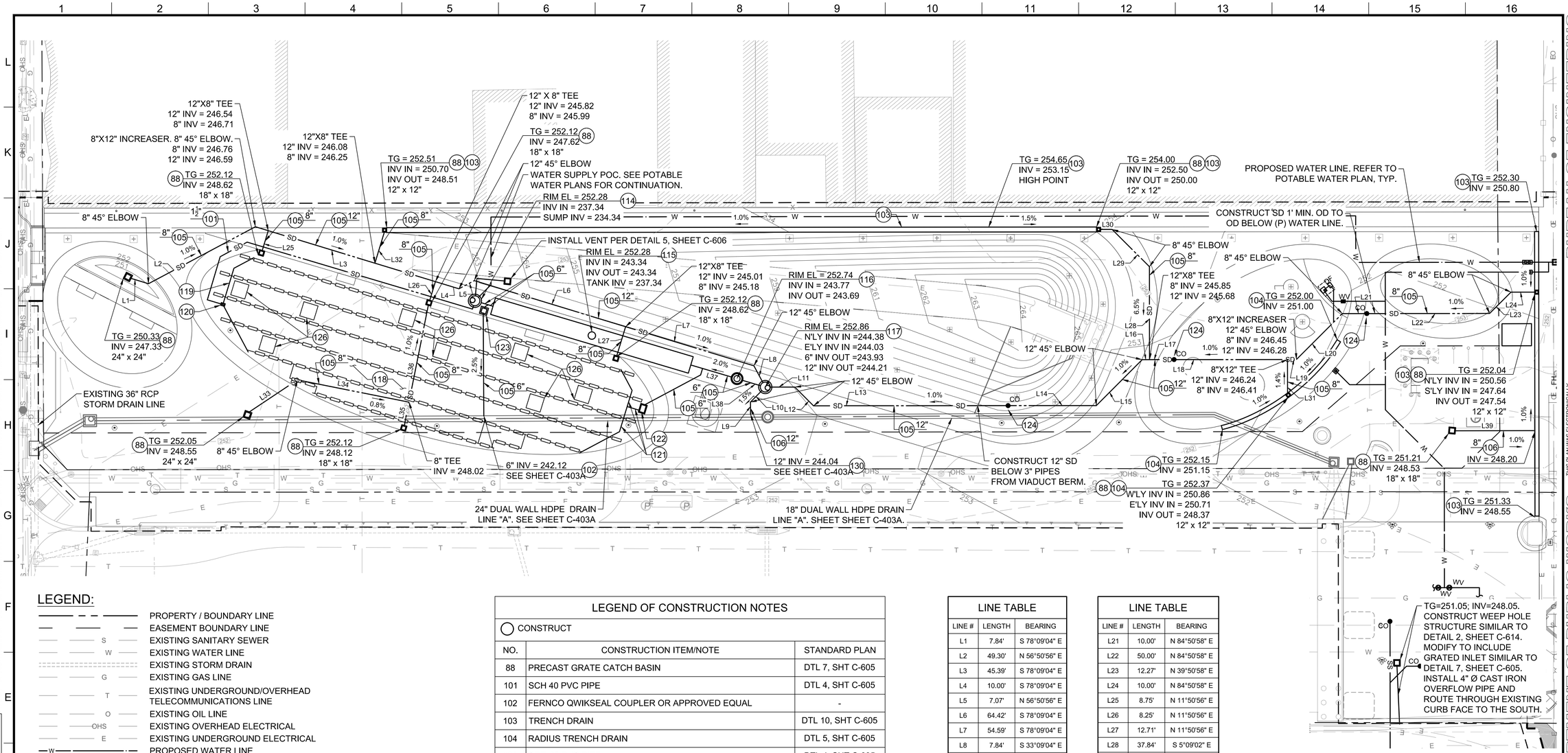

LEGEND:

- PROPERTY / BOUNDARY LINE
- EASEMENT BOUNDARY LINE
- EXISTING SANITARY SEWER
- EXISTING WATER LINE
- EXISTING STORM DRAIN
- EXISTING GAS LINE
- EXISTING UNDERGROUND/OVERHEAD TELECOMMUNICATIONS LINE
- EXISTING OIL LINE
- EXISTING OVERHEAD ELECTRICAL
- EXISTING UNDERGROUND ELECTRICAL
- PROPOSED WATER LINE
- PROPOSED SANITARY SEWER LINE
- PROPOSED STORM DRAIN MAIN LINE (Ø ≥ 18")
- PROPOSED STORM DRAIN LATERAL (Ø ≤ 18")

NOTE:

1. NO DUMPING STENCIL SHALL BE PLACED ON TOP OF INLET OR TOP OF CURB AT ALL INLETS PER DETAIL 9, SHEET C-605.
2. CONTRACTOR TO FIELD VERIFY LOCATIONS AND INVERTS OF ALL EXISTING UTILITIES AND PROPOSED CONNECTIONS TO EXISTING STORM DRAIN FACILITIES BEFORE STARTING STORM DRAIN CONSTRUCTION. CONTRACTOR TO NOTIFY THE CITY OF ANY DISCREPANCIES.
3. PROPOSED ELECTRICAL CONDUIT NOT SHOWN FOR CLARITY. REFER TO ELECTRICAL PLANS. CONTRACTOR RESPONSIBLE FOR ALL COORDINATION TO AVOID CONFLICTS WITH PROPOSED STORM DRAIN SYSTEM..

LEGEND OF CONSTRUCTION NOTES

◯ CONSTRUCT

NO.	CONSTRUCTION ITEM/NOTE	STANDARD PLAN
88	PRECAST GRATE CATCH BASIN	DTL 7, SHT C-605
101	SCH 40 PVC PIPE	DTL 4, SHT C-605
102	FERNCO QWIKSEAL COUPLER OR APPROVED EQUAL	-
103	TRENCH DRAIN	DTL 10, SHT C-605
104	RADIUS TRENCH DRAIN	DTL 5, SHT C-605
105	SDR-35 PVC PIPE	DTL 4, SHT C-605
106	DUAL WALL HDPE PIPE	DTL 4, SHT C-605
114	WET WELL AND PUMP	DTL 4, SHT C-606
115	STORMWATER STORAGE TANK	DTL 4, SHT C-606
116	HYDRODYNAMIC SEPARATOR, TYPE 1	DTL 1, SHT C-606
117	DIVERSION MAINTENANCE HOLE	DTL 3, SHT C-606
118	EPIC SYSTEM	DTL 1, 2, 7, & 9, SHT C-607
119	EPIC SYSTEM INLET HEADER PIPE	DTL 3, SHT C-607
120	EPIC SYSTEM INLET STRUCTURE	DTL 4, SHT C-607
121	EPIC SYSTEM OUTLET HEADER PIPE	DTL 5, SHT C-607
122	EPIC SYSTEM OUTLET STRUCTURE	DTL 6, SHT C-607
123	PRECAST CONCRETE JUNCTION STRUCTURE W/ COVER	DTL 8, SHT C-605
124	STORM DRAIN CLEANOUT	DTL 6, SHT C-605
126	EPIC SYSTEM AT TREE LOCATIONS	DTL 8, SHT C-607
130	FABRICATED 24"X12" DUAL WALL HDPE SADDLE TEE	DTL 5, SHT C-606

LINE TABLE

LINE #	LENGTH	BEARING
L1	7.84'	S 78°09'04" E
L2	49.30'	N 56°50'56" E
L3	45.39'	S 78°09'04" E
L4	10.00'	S 78°09'04" E
L5	7.07'	N 56°50'56" E
L6	64.42'	S 78°09'04" E
L7	54.59'	S 78°09'04" E
L8	7.84'	S 33°09'04" E
L9	5.00'	N 5°24'27" W
L10	6.54'	N 39°35'33" E
L11	10.00'	N 84°50'58" E
L12	10.79'	S 50°09'02" E
L13	77.80'	N 84°50'58" E
L14	37.32'	N 84°50'58" E
L15	26.42'	N 39°50'58" E
L16	13.00'	N 84°50'58" E
L17	13.00'	N 84°50'58" E
L18	46.18'	N 84°50'58" E
L19	3.64'	N 84°50'58" E
L20	26.41'	N 39°50'58" E

LINE TABLE

LINE #	LENGTH	BEARING
L21	10.00'	N 84°50'58" E
L22	50.00'	N 84°50'58" E
L23	12.27'	N 39°50'58" E
L24	10.00'	N 84°50'58" E
L25	8.75'	N 11°50'56" E
L26	8.25'	N 11°50'56" E
L27	12.71'	N 11°50'56" E
L28	37.84'	S 5°09'02" E
L29	21.47'	S 50°09'02" E
L30	5.00'	N 84°50'58" E
L31	14.07'	S 5°09'02" E
L32	13.55'	N 11°50'56" E
L33	24.00'	N 51°11'32" E
L34	46.35'	S 83°48'28" E
L35	10.00'	N 6°11'32" E
L36	40.55'	N 6°11'32" E
L37	17.64'	N 78°32'45" W
L38	8.00'	N 78°32'45" W
L39	32.71'	N 84°49'19" E

BUREAU OF ENGINEERING
OFFICIAL RECORD

0 10 20 40
SCALE: 1"=20'

PLANS PREPARED BY:
TETRA TECH, INC.
707 WILSHIRE BLVD, 23RD FLR.
LOS ANGELES, CA 90017
PHONE: (213) 239-8866

CITY OF LOS ANGELES DEPARTMENT OF PUBLIC WORKS
BUREAU OF ENGINEERING
ENGINEERING
CITY OF LOS ANGELES

NO.	REVISIONS:	DATE	BY:

BUILDING NO.
INDEX NO. MF-300501

THIS PLAN WAS ELECTRONICALLY SIGNED AND STAMPED
JUSTIN T. SMITH
No. 85736
EXP: 9-30-22
CIVIL
STATE OF CALIFORNIA

CITY ENGINEER
DATE: 07/11/22
LIC NO. C-85736
TED ALLEN, P.E.
DESIGN GROUP
ENGINEER: JUSTIN SMITH
DESIGNED BY: JUSTIN SMITH
DRAWN BY: TYLER PARRA
CHECKED BY: NATE SCHREINER
APPROVED BY: JASON L. FUSSEL

VERT. CONTROL: BM 12-04070, 1929 (NGVD29) - 1985 ADJUSTMENT
HORIZ. CONTROL: GPS; PID AE 1704, EPOCH 1991.35

SHEET TITLE: STORM DRAIN PLAN SHEET 1
PROJECT: SIXTH STREET PARK, ARTS AND RIVER CONNECTIVITY IMPROVEMENTS (PARC)
ADDRESS: SIXTH STREET OVER THE LOS ANGELES RIVER

WORK ORDER NO. E700235D
FILE NO. --
DRAWING NO. C-403
SHEET 44 OF 295 SHEETS

7/11/2022 10:44:14 PM - O:\PROJECTS\IRVINE\20043\200-20043-17001\CAD\SHEETFILES\C-403_STORM DRAIN PLAN - TT.DWG - SMITH, JUSTIN

THE CITY OF LOS ANGELES OR ITS OFFICERS OR AGENTS SHALL NOT BE RESPONSIBLE FOR THE ACCURACY OR COMPLETENESS OF ELECTRONIC COPIES OF THIS PLAN SHEET.

REVISION DATES (DESIGN STAGE ONLY)

Sheet Version 3.0

THE CITY OF LOS ANGELES OR ITS OFFICERS OR AGENTS SHALL NOT BE RESPONSIBLE FOR THE ACCURACY OR COMPLETENESS OF ELECTRONIC COPIES OF THIS PLAN SHEET.

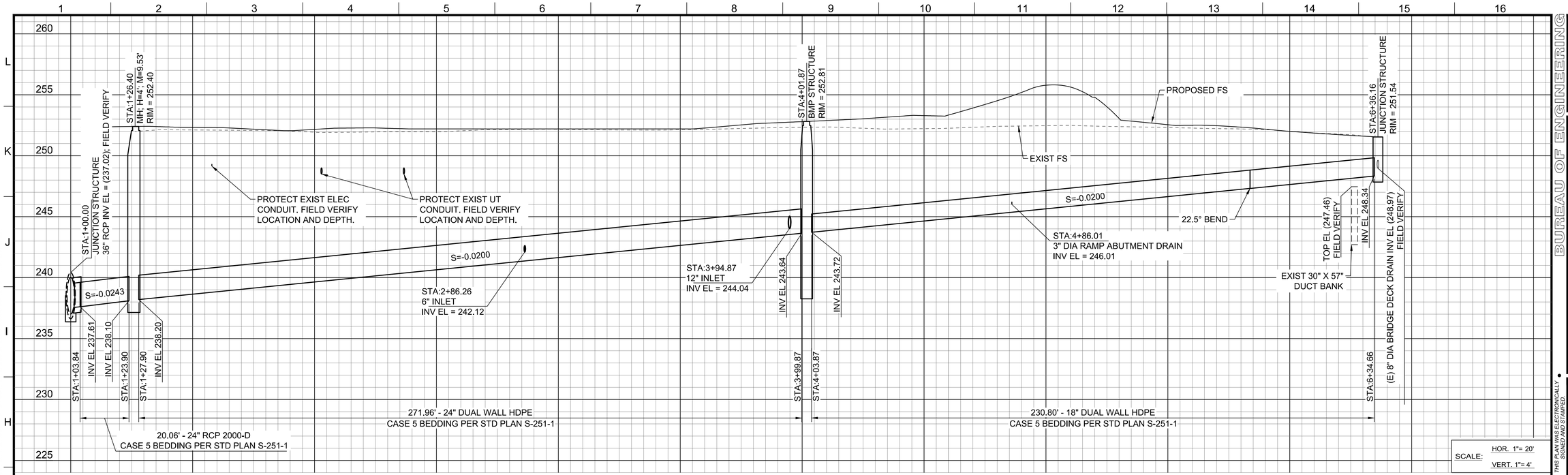

PROFILE LINE "A"

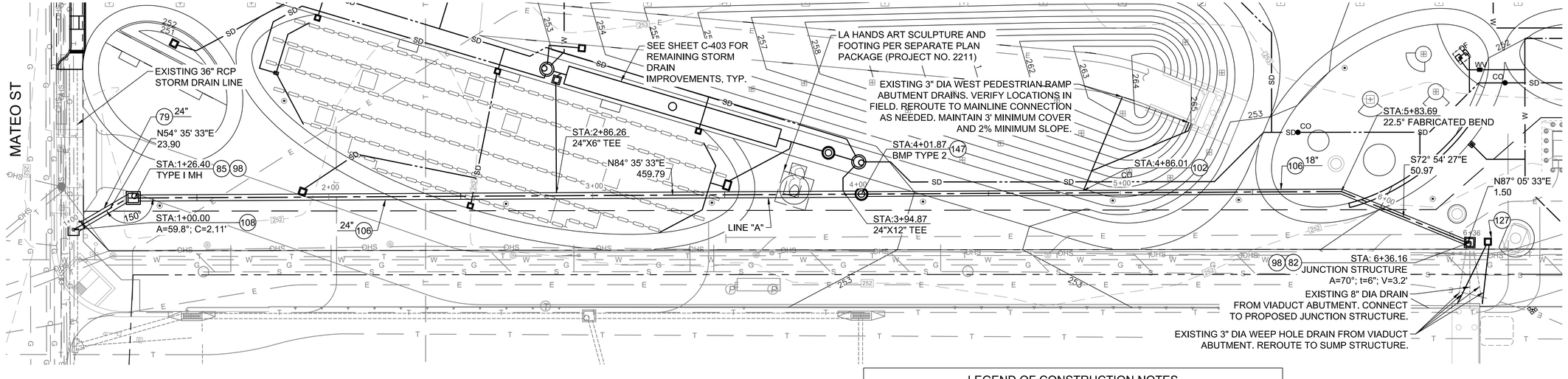

LEGEND:

- PROPERTY / BOUNDARY LINE
- EASEMENT BOUNDARY LINE
- EXISTING SANITARY SEWER
- EXISTING WATER LINE
- EXISTING STORM DRAIN
- EXISTING GAS LINE
- EXISTING UNDERGROUND/OVERHEAD TELECOMMUNICATIONS LINE
- EXISTING OIL LINE
- EXISTING OVERHEAD ELECTRICAL
- EXISTING UNDERGROUND ELECTRICAL
- PROPOSED WATER LINE
- PROPOSED SANITARY SEWER LINE
- PROPOSED STORM DRAIN MAIN LINE

NOTE:

1. NO DUMPING STENCIL SHALL BE PLACED ON TOP OF INLET OR TOP OF CURB AT ALL INLETS PER DETAIL 9, SHEET C-605.
2. CONTRACTOR TO FIELD VERIFY LOCATIONS AND INVERTS OF ALL EXISTING UTILITIES AND PROPOSED CONNECTIONS TO EXISTING STORM DRAIN FACILITIES BEFORE STARTING STORM DRAIN CONSTRUCTION. CONTRACTOR TO NOTIFY THE CITY OF ANY DISCREPANCIES.
3. PROPOSED ELECTRICAL CONDUIT NOT SHOWN FOR CLARITY. REFER TO ELECTRICAL PLANS. CONTRACTOR RESPONSIBLE FOR ALL COORDINATION TO AVOID CONFLICTS WITH PROPOSED STORM DRAIN SYSTEM.
4. LENGTHS SHOWN IN THE BEARING AND DISTANCE PLAN VIEW LABELS REPRESENT ALIGNMENT SEGMENT LENGTHS. REFER TO PROFILES FOR HORIZONTAL PIPE SEGMENT LENGTHS BETWEEN STRUCTURES.

LEGEND OF CONSTRUCTION NOTES

◯ CONSTRUCT

NO.	CONSTRUCTION ITEM/NOTE	STANDARD PLAN
79	REINFORCED CONCRETE PIPE (RCP)	S-241-0, S-251-1
82	JUNCTION STRUCTURE (J.S.)	S-300-1
85	STORM DRAIN MAINTENANCE HOLE	S-381-0
98	MONOLITHIC CONNECTION	SPPWC 308-3
102	FERNCO QWIKSEAL COUPLER OR APPROVED EQUAL	-
106	DUAL WALL HDPE PIPE	S-251-1
108	JUNCTION STRUCTURE	SPPWC 331-3
127	WEEP DRAIN DRAINAGE SUMP STRUCTURE	DTL 2, SHT C-614
147	HYDRODYNAMIC SEPARATOR, TYPE 2	DTL 1, SHT C-14

BUREAU OF ENGINEERING
OFFICIAL RECORD

N

0 10 20 40
SCALE: 1"=20'

SCALE: HOR. 1"= 20'
VERT. 1"= 4'

THIS PLAN WAS ELECTRONICALLY SIGNED AND STAMPED

PROFESSIONAL ENGINEER * REGISTERED * JUSTIN T. SMITH * No. 85736 EXP: 9-30-22 * CIVIL * STATE OF CALIFORNIA

BUREAU OF ENGINEERING
ENGINEERING
CITY OF LOS ANGELES

NO.	REVISIONS:	DATE	BY:

BUILDING NO.

INDEX NO. MF-300501

CITY OF LOS ANGELES DEPARTMENT OF PUBLIC WORKS

CITY ENGINEER: TED ALLEN, P.E.

DESIGN GROUP	LIC. NO.	C-85736	DATE: 07/11/22
ENGINEER: JUSTIN SMITH			
DESIGNED BY: JUSTIN SMITH			
DRAWN BY: JUSTIN SMITH			
CHECKED BY: AARON YONKER			
APPROVED BY: JASON L. FUSSEL			

VERT. CONTROL: BM 12-04070, 1929 (NGVD29) - 1985 ADJUSTMENT
HORIZ. CONTROL: GPS, PID AE 1704, EPOCH 1991.35

SHEET TITLE: STORM DRAIN PLAN & PROFILE SHEET 2

PROJECT: SIXTH STREET PARK, ARTS AND RIVER CONNECTIVITY IMPROVEMENTS (PARC)
SIXTH STREET OVER THE LOS ANGELES RIVER

ADDRESS:

PLANS PREPARED BY:
TETRA TECH, INC.
707 WILSHIRE BLVD, 23RD FLR.
LOS ANGELES, CA 90017
PHONE: (213) 239-8866

WORK ORDER NO. E700235D
FILE NO. --
DRAWING NO. C-403A
SHEET 45 OF 295 SHEETS

7/10/2022 2:07:49 AM - O:\PROJECTS\IRVINE\20043\2000-20043-17001\CAD\SHEETFILES\C-403A_STORM DRAIN PLAN AND PROFILE - TT.DWG - SMITH, JUSTIN

REVISION DATES (DESIGN STAGE ONLY)

Sheet Version 3.0

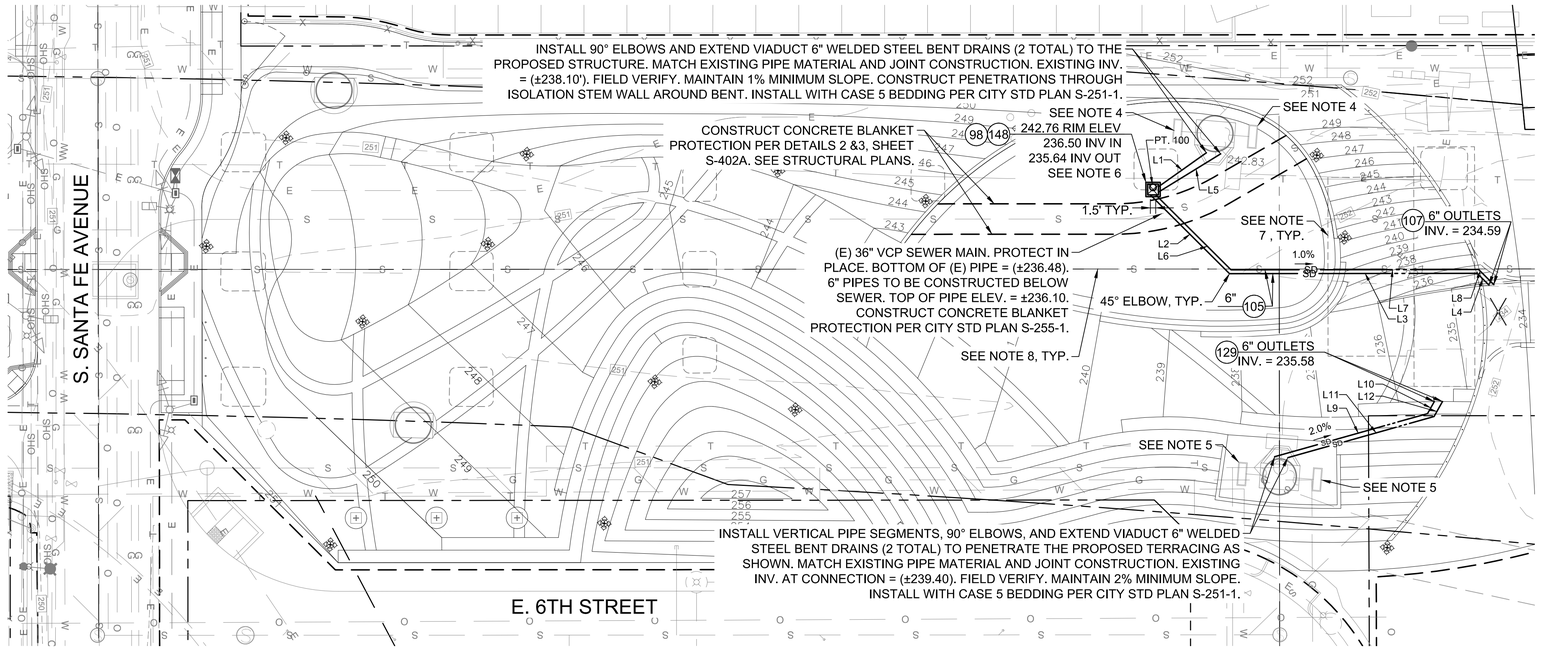

LEGEND:

- PROPERTY / BOUNDARY LINE
- EASEMENT BOUNDARY LINE
- S — EXISTING SANITARY SEWER
- W — EXISTING WATER LINE
- EXISTING STORM DRAIN
- G — EXISTING GAS LINE
- T — EXISTING UNDERGROUND/OVERHEAD TELECOMMUNICATIONS LINE
- O — EXISTING OIL LINE
- OHS — EXISTING OVERHEAD ELECTRICAL
- E — EXISTING UNDERGROUND ELECTRICAL
- W — PROPOSED WATER LINE
- SS — PROPOSED SANITARY SEWER LINE
- PROPOSED STORM DRAIN MAIN LINE (Ø ≥ 18")
- SD — PROPOSED STORM DRAIN LATERAL (Ø ≤ 18")

LEGEND OF CONSTRUCTION NOTES

◯ CONSTRUCT

NO.	CONSTRUCTION ITEM/NOTE	STANDARD PLAN
98	MONOLITHIC CONNECTION	SPPWC 308-3
105	SDR-35 PVC PIPE	DTL 4, SHT C-605
107	PIPE PENETRATION @ SLOUGH WALL	DTL 8, SHT C-612
129	PIPE PENETRATION @ TERRACE	DTL 1, SHT C-605
148	MODIFIED PRECAST CONCRETE CATCH BASIN (NO INLET)	S-361-0

NOTE:

1. NO DUMPING STENCIL SHALL BE PLACED ON TOP OF INLET OR TOP OF CURB AT ALL INLETS PER DETAIL 9, SHEET C-605.
2. CONTRACTOR TO FIELD VERIFY LOCATIONS AND INVERTS OF ALL EXISTING UTILITIES AND PROPOSED CONNECTIONS TO EXISTING STORM DRAIN FACILITIES BEFORE STARTING STORM DRAIN CONSTRUCTION. CONTRACTOR TO NOTIFY THE CITY OF ANY DISCREPANCIES.
3. PROPOSED ELECTRICAL CONDUIT NOT SHOWN FOR CLARITY. REFER TO ELECTRICAL PLANS. CONTRACTOR RESPONSIBLE FOR ALL COORDINATION TO AVOID CONFLICTS WITH PROPOSED STORM DRAIN SYSTEM.
4. INSTALL 4" SDR-35 PIPE TO DRAIN EXISTING VIADUCT ARCH LIGHT. ARCH LIGHT TO BE ADJUSTED TO IN-GRADE BY PARC CONTRACTOR PER DETAIL 8, SHEET C-600. PIPING TO BE FIELD ROUTED AND CONNECTED TO THE PROPOSED BENT DRAINAGE SYSTEM. CONTRACTOR SHALL SUBMIT LAYOUTS FOR APPROVAL.
5. INSTALL 4" SDR-35 PIPE TO DRAIN EXISTING VIADUCT ARCH LIGHT. ARCH LIGHT TO BE ADJUSTED TO IN-GRADE BY PARC CONTRACTOR PER DETAIL 8, SHEET C-600. PIPING TO BE FIELD ROUTED THROUGH TERRACING SIMILAR TO DETAIL 1, SHEET C-605. CONTRACTOR SHALL SUBMIT LAYOUTS FOR APPROVAL.
6. TOP OF CATCH BASIN SHALL BE POURED INTEGRAL WITH THE SURROUNDING PAVEMENT.
7. VIADUCT CONTRACTOR REMOVED PORTIONS OF THE OLD VIADUCT REINFORCED CONCRETE FOUNDATIONS TO A DEPTH OF A FEW FEET BELOW THE EXISTING GROUND SURFACE. PARC CONTRACTOR SHALL BE RESPONSIBLE FOR VERIFYING EXISTING CONDITIONS AND REMOVING ANY ADDITIONAL PORTIONS OF THE FOUNDATIONS THAT CONFLICT WITH THE PROPOSED PARC IMPROVEMENTS.
8. UTILITIES NOTED AS ABANDONED ON THE DEMOLITION PLANS SHALL BE REMOVED TO THE EXTENTS NECESSARY TO ALLOW FOR THE CONSTRUCTION OF THE PROPOSED IMPROVEMENTS. PORTIONS NOT IN CONFLICT WITH THE PROPOSED IMPROVEMENTS MAY BE LEFT IN PLACE. CONTRACTOR TO COORDINATE REMOVALS WITH UTILITY OWNERS.

LINE TABLE		
LINE #	LENGTH	BEARING
L1	16.44'	N49° 34' 58"E
L2	31.24'	S50° 11' 52"E
L3	69.18'	N84° 48' 08"E
L4	4.70'	S50° 11' 52"E
L5	20.42'	N53° 20' 41"E
L6	29.74'	S50° 11' 52"E
L7	69.18'	N84° 48' 08"E
L8	6.00'	S50° 11' 52"E
L9	44.42'	N69° 09' 45"E
L10	3.85'	N24° 09' 45"E
L11	42.45'	N69° 09' 45"E
L12	4.79'	N24° 09' 45"E

POINT TABLE		
POINT #	NORTHING	EASTING
100	1836495.03	6492120.63





PLANS PREPARED BY:
TETRA TECH, INC.
707 WILSHIRE BLVD. 23RD FLR.
LOS ANGELES, CA 90017
PHONE: (213) 239-8866

BUREAU OF ENGINEERING
CITY OF LOS ANGELES
DEPARTMENT OF PUBLIC WORKS

VERT. CONTROL: BM 12-04070, 1929 (NGVD29) - 1985 ADJUSTMENT
HORIZ. CONTROL: GPS; PID AE 1704, EPOCH 1991.35

SHEET TITLE: STORM DRAIN PLAN SHEET 3

PROJECT: SIXTH STREET PARK, ARTS AND RIVER CONNECTIVITY IMPROVEMENTS (PARC)

ADDRESS: SIXTH STREET OVER THE LOS ANGELES RIVER

WORK ORDER NO. E700235D
FILE NO. --
DRAWING NO. C-404
SHEET 46 OF 295 SHEETS

CITY ENGINEER: TED ALLEN, P.E.
DESIGN GROUP
ENGINEER: JUSTIN SMITH
DESIGNED BY: JUSTIN SMITH
DRAWN BY: DAVID LOPEZ
CHECKED BY: NATE SCHREINER
APPROVED BY: JASON L. FUSSEL
LIC. NO. C-85736
DATE: 07/11/22

THIS PLAN WAS ELECTRONICALLY SIGNED AND STAMPED

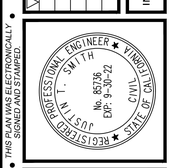

DATE: BY:
NO. REVISIONS:

BUILDING NO.
INDEX NO. MF-300501

ENGINEERING
CITY OF LOS ANGELES
BUREAU OF ENGINEERING

THE CITY OF LOS ANGELES OR ITS OFFICERS OR AGENTS SHALL NOT BE RESPONSIBLE FOR THE ACCURACY OR COMPLETENESS OF ELECTRONIC COPIES OF THIS PLAN SHEET.

REVISION DATES (DESIGN STAGE ONLY)

Sheet Version 3.0

7/6/2022 11:10:32 PM • O:\PROJECTS\IRVINE\20043\200-20043-17001\CAD\SHEETFILES\C-404_STORM DRAIN PLAN AND PROFILE - TT.DWG • SMITH, JUSTIN

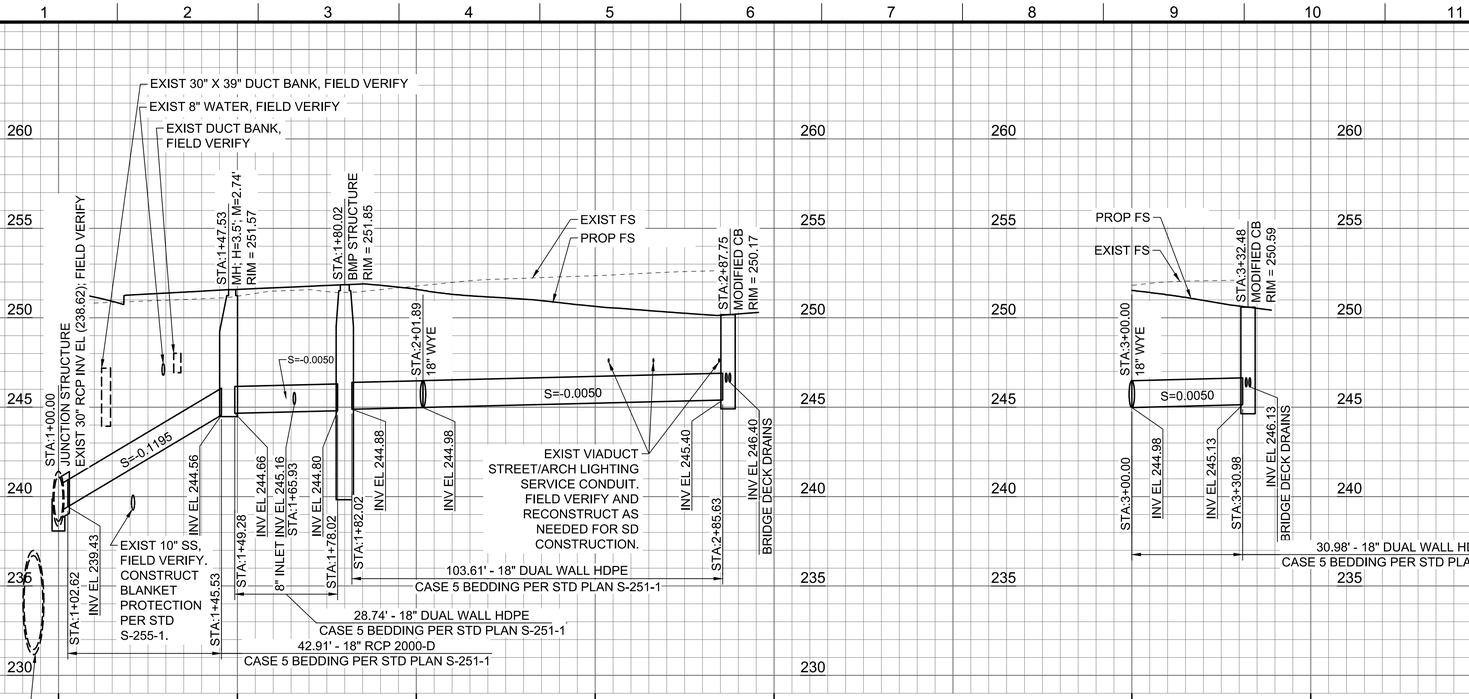

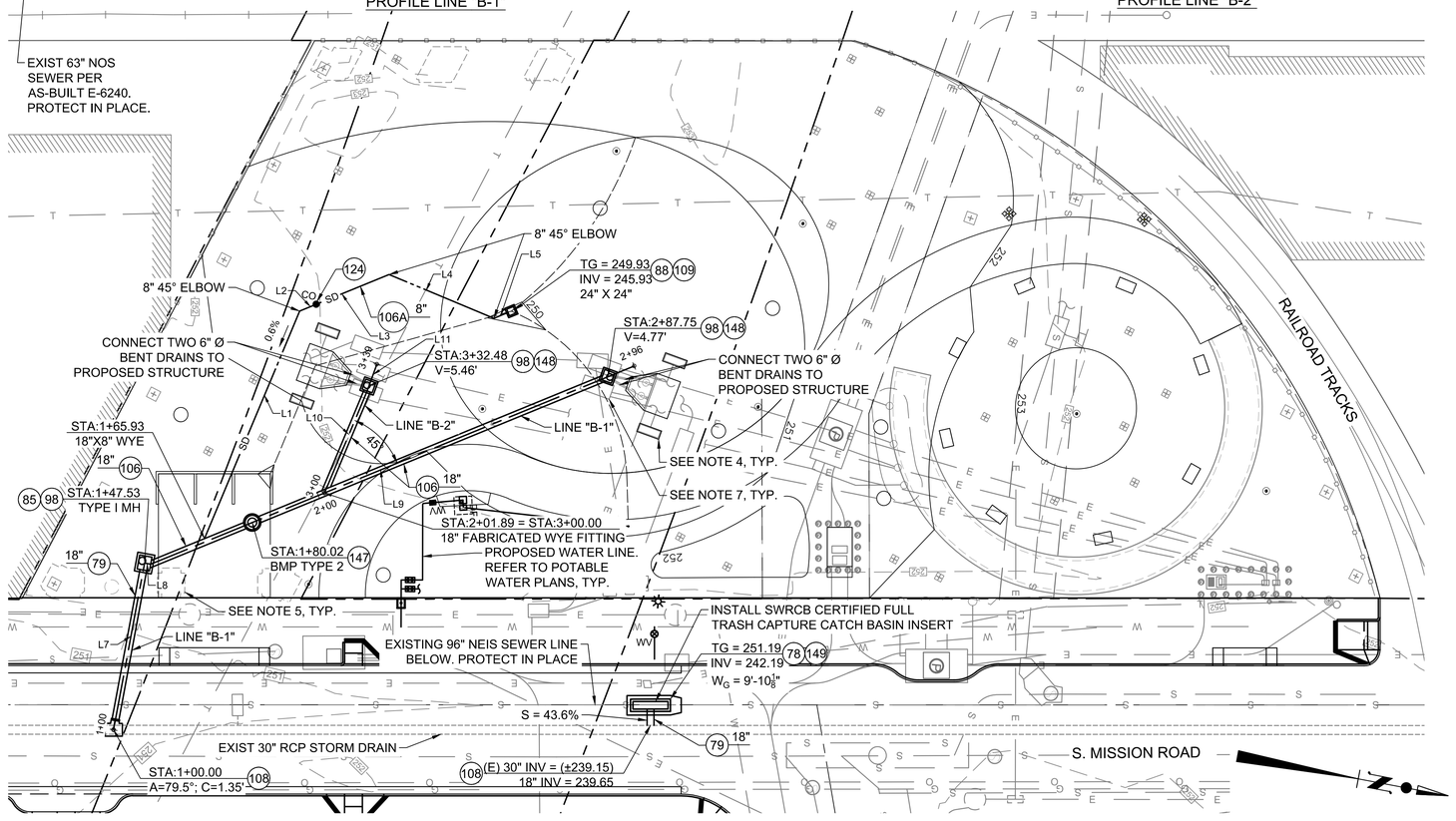

NOTE:

1. NO DUMPING STENCIL SHALL BE PLACED ON TOP OF INLET OR TOP OF CURB AT ALL INLETS PER DETAIL 9, SHEET C-605.
2. CONTRACTOR TO FIELD VERIFY LOCATIONS AND INVERTS OF ALL EXISTING UTILITIES AND PROPOSED CONNECTIONS TO EXISTING STORM DRAIN FACILITIES BEFORE STARTING STORM DRAIN CONSTRUCTION. CONTRACTOR TO NOTIFY THE CITY OF ANY DISCREPANCIES.
3. PROPOSED ELECTRICAL CONDUIT NOT SHOWN FOR CLARITY. REFER TO ELECTRICAL PLANS. CONTRACTOR RESPONSIBLE FOR ALL COORDINATION TO AVOID CONFLICTS WITH PROPOSED STORM DRAIN SYSTEM.
4. INSTALL 4" SDR-35 PIPE TO DRAIN EXISTING VIADUCT ARCH LIGHT. ARCH LIGHT TO BE ADJUSTED TO IN-GRADE BY PARC CONTRACTOR PER DETAIL 8, SHEET C-600. PIPING TO BE FIELD ROUTED AND CONNECTED TO THE PROPOSED BENT DRAINAGE SYSTEM. CONTRACTOR SHALL SUBMIT LAYOUTS FOR APPROVAL.
5. VIADUCT CONTRACTOR REMOVED PORTIONS OF THE OLD VIADUCT REINFORCED CONCRETE FOUNDATIONS TO A DEPTH OF A FEW FEET BELOW THE EXISTING GROUND SURFACE. PARC CONTRACTOR SHALL BE RESPONSIBLE FOR VERIFYING EXISTING CONDITIONS AND REMOVING ANY ADDITIONAL PORTIONS OF THE FOUNDATIONS THAT CONFLICT WITH THE PROPOSED PARC IMPROVEMENTS.
6. LENGTHS SHOWN IN THE BEARING AND DISTANCE PLAN VIEW LABELS REPRESENT ALIGNMENT SEGMENT LENGTHS. REFER TO PROFILES FOR HORIZONTAL PIPE SEGMENT LENGTHS BETWEEN STRUCTURES.
7. VERIFY EXISTING ELECTRICAL FIELD CONDITIONS. REROUTE/RELOCATE EXISTING CONDUIT AND PULL BOXES AS NEEDED TO ALLOW FOR STORM DRAIN CONSTRUCTION.

SCALE: HOR. 1"= 20'
VERT. 1"= 4'

LEGEND:

- PROPERTY / BOUNDARY LINE
- EASEMENT BOUNDARY LINE
- S — EXISTING SANITARY SEWER
- W — EXISTING WATER LINE
- EXISTING STORM DRAIN
- G — EXISTING GAS LINE
- T — EXISTING UNDERGROUND/OVERHEAD TELECOMMUNICATIONS LINE
- O — EXISTING OIL LINE
- OHS — EXISTING OVERHEAD ELECTRICAL
- E — EXISTING UNDERGROUND ELECTRICAL
- W — PROPOSED WATER LINE
- SS — PROPOSED SANITARY SEWER LINE
- SD — PROPOSED STORM DRAIN MAIN LINE (Ø ≥ 18")
- PROPOSED STORM DRAIN LATERAL (Ø ≤ 18")
- PROPOSED TREE. SEE LANDSCAPE PLANS.

LINE TABLE

LINE #	LENGTH	BEARING
L1	69.12'	N 77°50'42" W
L2	5.00'	N 32°50'42" W
L3	22.03'	N 32°50'42" W
L4	31.83'	N 12°09'18" E
L5	4.30'	N 32°50'42" W
L7	47.53'	S 89°59'17" W
L8	1.75'	N 0°00'00" W
L9	146.35'	N 32°50'42" W
L10	30.98'	N 77°50'42" W
L11	8.00'	N 80°30'11" W

LEGEND OF CONSTRUCTION NOTES

◯ CONSTRUCT

NO.	CONSTRUCTION ITEM/NOTE	STANDARD PLAN
78	ALLEY GRATING BASIN (AGB)	SPPWC 304-4
79	REINFORCED CONCRETE PIPE (RCP)	S-241-0, S-251-1
85	STORM DRAIN MAINTENANCE HOLE	S-381-0
88	PRECAST GRATE CATCH BASIN	DTL 7, SHT C-605
98	MONOLITHIC CONNECTION	SPPWC 308-3
105	SDR-35 PVC PIPE	DTL 4, SHT C-605
106	DUAL WALL HDPE PIPE	S-251-1
106A	DUAL WALL HDPE PIPE	DTL 4, SHT C-605
108	JUNCTION STRUCTURE	SPPWC 331-3
109	CATCH BASIN FILTRATION INSERT	DTL 7, SHT C-605
124	STORM DRAIN CLEANOUT	DTL 6, SHT C-605
147	HYDRODYNAMIC SEPARATOR, TYPE 2	DTL 1, SHT C-14
148	MODIFIED PRECAST CONCRETE CATCH BASIN (NO INLET)	S-361-0
149	ALLEY GRATING BASIN GUTTER TRANSITION	S-355-0

BUREAU OF ENGINEERING
OFFICIAL RECORD

PLANS PREPARED BY:
TETRA TECH, INC.
707 WILSHIRE BLVD, 23RD FLR.
LOS ANGELES, CA 90017
PHONE: (213) 239-8866

REVISION DATES (DESIGN STAGE ONLY)

THE CITY OF LOS ANGELES OR ITS OFFICERS OR AGENTS SHALL NOT BE RESPONSIBLE FOR THE ACCURACY OR COMPLETENESS OF ELECTRONIC COPIES OF THIS PLAN SHEET.

Sheet Version 3.0

CITY OF LOS ANGELES DEPARTMENT OF PUBLIC WORKS
BUREAU OF ENGINEERING
ENGINEERING
CITY OF LOS ANGELES

NO.	REVISIONS:	DATE	BY:

BUILDING NO.
INDEX NO. MF-300501

THIS PLAN WAS ELECTRONICALLY SIGNED AND STAMPED
PROFESSIONAL ENGINEER ★ REGISTERED ★ CIVIL ★ STATE OF CALIFORNIA
JUSTIN T. SMITH
No. 85736
EXP: 9-30-22

CITY ENGINEER
TED ALLEN, P.E.
DATE: 07/11/22
LIC. NO. C-85736

DESIGN GROUP
ENGINEER: JUSTIN SMITH
DESIGNED BY: JUSTIN SMITH
DRAWN BY: TYLER PARRA
CHECKED BY: NATE SCHREINER
APPROVED BY: JASON L. FUSSEL

SHEET TITLE: STORM DRAIN PLAN & PROFILE SHEET 4
PROJECT: SIXTH STREET PARK, ARTS AND RIVER CONNECTIVITY IMPROVEMENTS (PARC)
ADDRESS: SIXTH STREET OVER THE LOS ANGELES RIVER

VERT. CONTROL: BM 12-04070, 1929 (NGVD29) - 1985 ADJUSTMENT
HORIZ. CONTROL: GPS; PID AE 1704; EPOCH 1991.35

WORK ORDER NO. E700235D
FILE NO. --
DRAWING NO. C-405
SHEET 47 OF 295 SHEETS

7/10/2022 12:48:02 PM - O:\PROJECTS\IRVINE\20043\200-20043-17001\CAD\SHEETFILES\C-405_STORM DRAIN PLAN AND PROFILE - TT.DWG - SMITH, JUSTIN

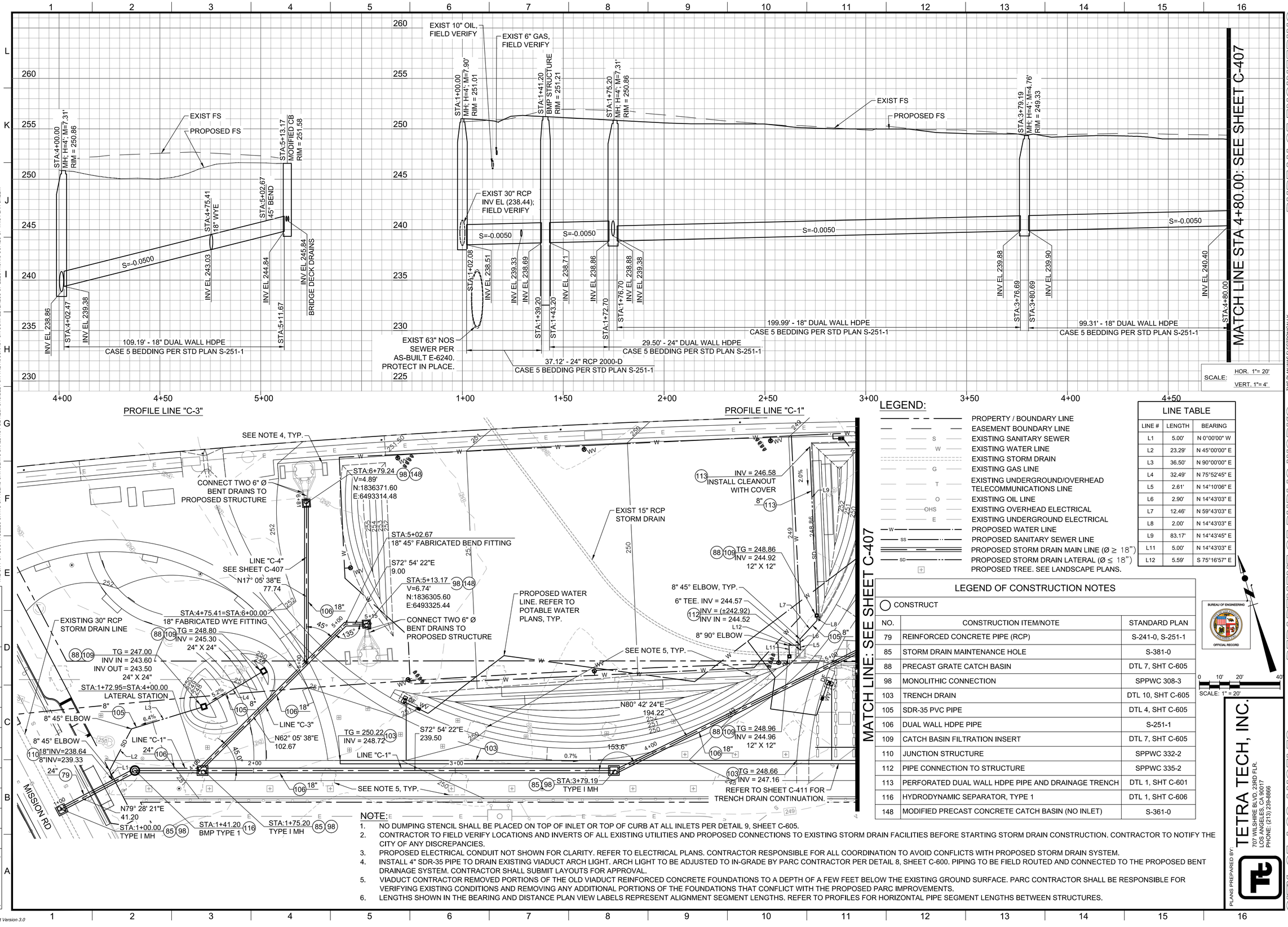

LEGEND:

- PROPERTY / BOUNDARY LINE
- EASEMENT BOUNDARY LINE
- S — EXISTING SANITARY SEWER
- W — EXISTING WATER LINE
- EXISTING STORM DRAIN
- G — EXISTING GAS LINE
- T — EXISTING UNDERGROUND/OVERHEAD TELECOMMUNICATIONS LINE
- O — EXISTING OIL LINE
- OHS — EXISTING OVERHEAD ELECTRICAL
- E — EXISTING UNDERGROUND ELECTRICAL
- W — PROPOSED WATER LINE
- SS — PROPOSED SANITARY SEWER LINE
- SD — PROPOSED STORM DRAIN MAIN LINE (Ø ≥ 18")
- SD — PROPOSED STORM DRAIN LATERAL (Ø ≤ 18")
- PROPOSED TREE. SEE LANDSCAPE PLANS.

LINE TABLE

LINE #	LENGTH	BEARING
L1	5.00'	N 0°00'00" W
L2	23.29'	N 45°00'00" E
L3	36.50'	N 90°00'00" E
L4	32.49'	N 75°52'45" E
L5	2.61'	N 14°10'06" E
L6	2.90'	N 14°43'03" E
L7	12.46'	N 59°43'03" E
L8	2.00'	N 14°43'03" E
L9	83.17'	N 14°43'45" E
L11	5.00'	N 14°43'03" E
L12	5.59'	S 75°16'57" E

LEGEND OF CONSTRUCTION NOTES

CONSTRUCT

NO.	CONSTRUCTION ITEM/NOTE	STANDARD PLAN
79	REINFORCED CONCRETE PIPE (RCP)	S-241-0, S-251-1
85	STORM DRAIN MAINTENANCE HOLE	S-381-0
88	PRECAST GRATE CATCH BASIN	DTL 7, SHT C-605
98	MONOLITHIC CONNECTION	SPPWC 308-3
103	TRENCH DRAIN	DTL 10, SHT C-605
105	SDR-35 PVC PIPE	DTL 4, SHT C-605
106	DUAL WALL HDPE PIPE	S-251-1
109	CATCH BASIN FILTRATION INSERT	DTL 7, SHT C-605
110	JUNCTION STRUCTURE	SPPWC 332-2
112	PIPE CONNECTION TO STRUCTURE	SPPWC 335-2
113	PERFORATED DUAL WALL HDPE PIPE AND DRAINAGE TRENCH	DTL 1, SHT C-601
116	HYDRODYNAMIC SEPARATOR, TYPE 1	DTL 1, SHT C-606
148	MODIFIED PRECAST CONCRETE CATCH BASIN (NO INLET)	S-361-0

BUREAU OF ENGINEERING OFFICIAL RECORD

SCALE: 1" = 20'

NOTE:

1. NO DUMPING STENCIL SHALL BE PLACED ON TOP OF INLET OR TOP OF CURB AT ALL INLETS PER DETAIL 9, SHEET C-605.
2. CONTRACTOR TO FIELD VERIFY LOCATIONS AND INVERTS OF ALL EXISTING UTILITIES AND PROPOSED CONNECTIONS TO EXISTING STORM DRAIN FACILITIES BEFORE STARTING STORM DRAIN CONSTRUCTION. CONTRACTOR TO NOTIFY THE CITY OF ANY DISCREPANCIES.
3. PROPOSED ELECTRICAL CONDUIT NOT SHOWN FOR CLARITY. REFER TO ELECTRICAL PLANS. CONTRACTOR RESPONSIBLE FOR ALL COORDINATION TO AVOID CONFLICTS WITH PROPOSED STORM DRAIN SYSTEM.
4. INSTALL 4" SDR-35 PIPE TO DRAIN EXISTING VIADUCT ARCH LIGHT. ARCH LIGHT TO BE ADJUSTED TO IN-GRADE BY PARC CONTRACTOR PER DETAIL 8, SHEET C-600. PIPING TO BE FIELD ROUTED AND CONNECTED TO THE PROPOSED BENT DRAINAGE SYSTEM. CONTRACTOR SHALL SUBMIT LAYOUTS FOR APPROVAL.
5. VIADUCT CONTRACTOR REMOVED PORTIONS OF THE OLD VIADUCT REINFORCED CONCRETE FOUNDATIONS TO A DEPTH OF A FEW FEET BELOW THE EXISTING GROUND SURFACE. PARC CONTRACTOR SHALL BE RESPONSIBLE FOR VERIFYING EXISTING CONDITIONS AND REMOVING ANY ADDITIONAL PORTIONS OF THE FOUNDATIONS THAT CONFLICT WITH THE PROPOSED PARC IMPROVEMENTS.
6. LENGTHS SHOWN IN THE BEARING AND DISTANCE PLAN VIEW LABELS REPRESENT ALIGNMENT SEGMENT LENGTHS. REFER TO PROFILES FOR HORIZONTAL PIPE SEGMENT LENGTHS BETWEEN STRUCTURES.

PLANS PREPARED BY:
TETRA TECH, INC.
707 WILSHIRE BLVD, 23RD FLR.
LOS ANGELES, CA 90017
PHONE: (213) 239-9866

THE CITY OF LOS ANGELES OR ITS OFFICERS OR AGENTS SHALL NOT BE RESPONSIBLE FOR THE ACCURACY OR COMPLETENESS OF ELECTRONIC COPIES OF THIS PLAN SHEET.

REVISION DATES (DESIGN STAGE ONLY)

Sheet Version 3.0

ENGINEERING
CITY OF LOS ANGELES

BUREAU OF ENGINEERING

NO.	REVISIONS:	DATE	BY:

BUILDING NO.

INDEX NO. MF-300501

THIS PLAN WAS ELECTRONICALLY SIGNED AND STAMPED

PROFESSIONAL ENGINEER ★ REGISTERED ★ CIVIL ★ STATE OF CALIFORNIA
JUSTIN T. SMITH
No. 85736
EXP: 9-30-22

CITY OF LOS ANGELES DEPARTMENT OF PUBLIC WORKS

CITY ENGINEER
LIC NO. C-85736 DATE: 07/11/22

DESIGN GROUP	
ENGINEER:	JUSTIN SMITH
DESIGNED BY:	JUSTIN SMITH
DRAWN BY:	TYLER PARRA
CHECKED BY:	NATE SCHREINER
APPROVED BY:	JASON L. FUSSEL

TED ALLEN, P.E.

SHEET TITLE: STORM DRAIN PLAN & PROFILE SHEET 5

PROJECT: SIXTH STREET PARK, ARTS AND RIVER CONNECTIVITY IMPROVEMENTS (PARC)

ADDRESS: SIXTH STREET OVER THE LOS ANGELES RIVER

VERT. CONTROL: BM 12-04070, 1929 (NGVD29) - 1985 ADJUSTMENT
HORIZ. CONTROL: GPS; PID AE 1704, EPOCH 1991.35

WORK ORDER NO. E700235D
FILE NO. --
DRAWING NO. C-406
SHEET 48 OF 295 SHEETS

7/10/2022 10:12:34 PM - O:\PROJECTS\RIVINE\20043\200\20043-17001\CAD\SHEETFILES\C-406_STORM DRAIN PLAN AND PROFILE - TT.DWG - SMITH, JUSTIN

THE CITY OF LOS ANGELES OR ITS OFFICERS OR AGENTS SHALL NOT BE RESPONSIBLE FOR THE ACCURACY OR COMPLETENESS OF ELECTRONIC COPIES OF THIS PLAN SHEET.

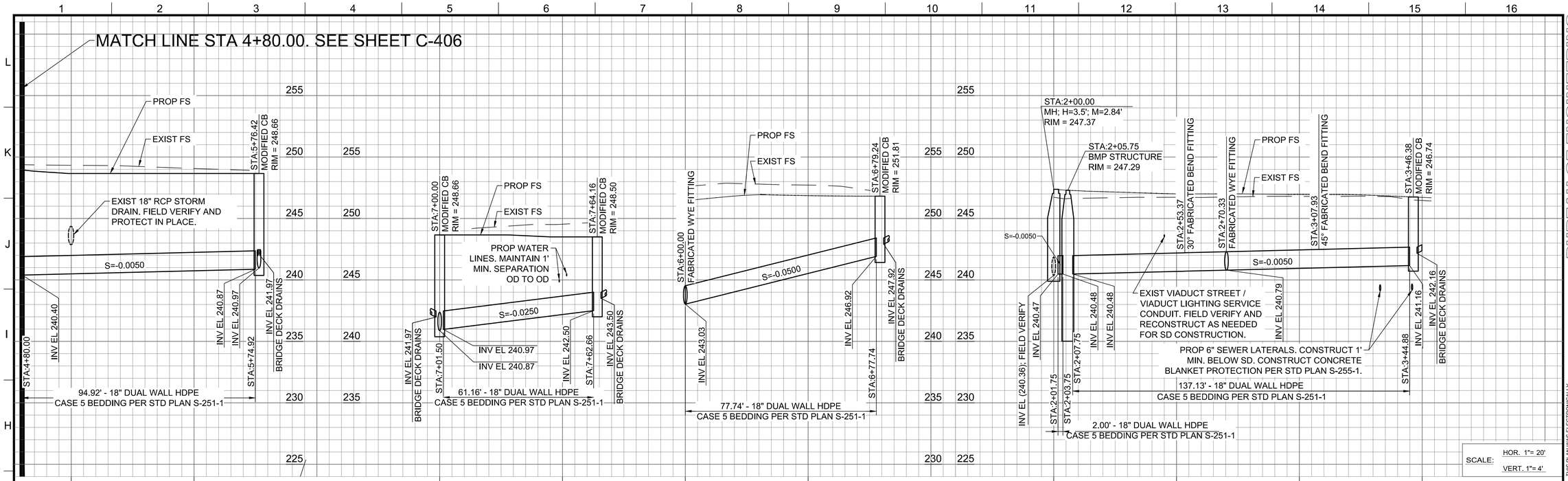

NOTES:

1. NO DUMPING STENCIL SHALL BE PLACED ON TOP OF INLET OR TOP OF CURB AT ALL INLETS PER DETAIL 9, SHEET C-605.
2. CONTRACTOR TO FIELD VERIFY LOCATIONS AND INVERTS OF ALL EXISTING UTILITIES AND PROPOSED CONNECTIONS TO EXISTING STORM DRAIN FACILITIES BEFORE STARTING STORM DRAIN CONSTRUCTION. CONTRACTOR TO NOTIFY THE CITY OF ANY DISCREPANCIES.
3. PROPOSED ELECTRICAL CONDUIT NOT SHOWN FOR CLARITY. REFER TO ELECTRICAL PLANS. CONTRACTOR RESPONSIBLE FOR ALL COORDINATION TO AVOID CONFLICTS WITH PROPOSED STORM DRAIN SYSTEM.

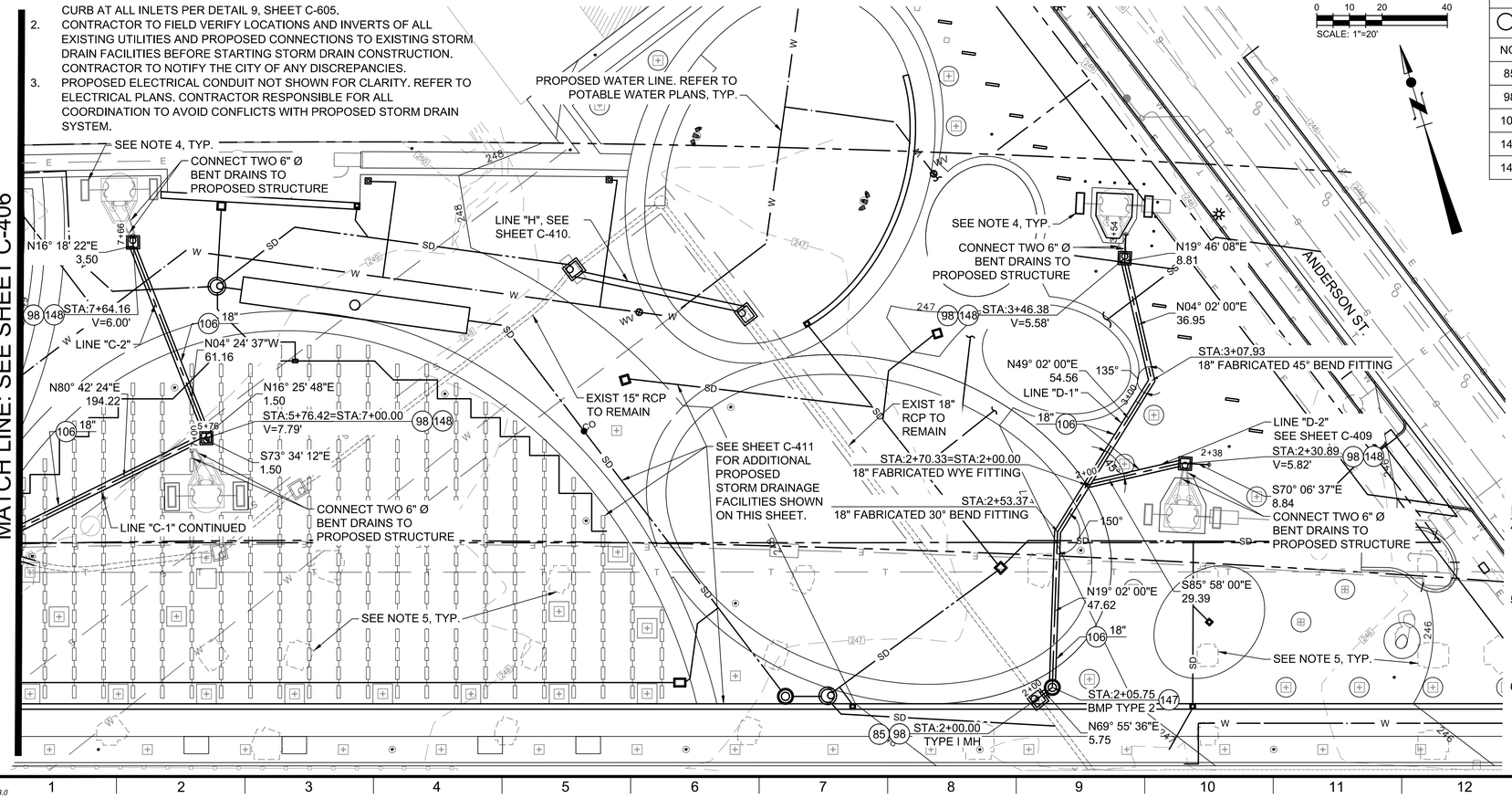

LEGEND OF CONSTRUCTION NOTES

◯ CONSTRUCT

NO.	CONSTRUCTION ITEM/NOTE	STANDARD PLAN
85	STORM DRAIN MAINTENANCE HOLE	S-381-0
98	MONOLITHIC CONNECTION	SPPWC 308-3
106	DUAL WALL HDPE PIPE	S-251-1
147	HYDRODYNAMIC SEPARATOR, TYPE 2	DTL 1, SHT C-14
148	MODIFIED PRECAST CONCRETE CATCH BASIN (NO INLET)	S-361-0

LEGEND:

- PROPERTY / BOUNDARY LINE
- EASEMENT BOUNDARY LINE
- S — EXISTING SANITARY SEWER
- W — EXISTING WATER LINE
- EXISTING STORM DRAIN
- G — EXISTING GAS LINE
- T — EXISTING UNDERGROUND/OVERHEAD TELECOMMUNICATIONS LINE
- O — EXISTING OIL LINE
- OHS — EXISTING OVERHEAD ELECTRICAL
- E — EXISTING UNDERGROUND ELECTRICAL
- W — PROPOSED WATER LINE
- SS — PROPOSED SANITARY SEWER LINE
- PROPOSED STORM DRAIN MAIN LINE (Ø ≥ 18")
- SD — PROPOSED STORM DRAIN LATERAL (Ø ≤ 18")
- PROPOSED TREE. SEE LANDSCAPE PLANS.

BUREAU OF ENGINEERING OFFICIAL RECORD

NOTES (CONTINUED):

4. INSTALL 4" SDR-35 PIPE TO DRAIN EXISTING VIADUCT ARCH LIGHT. ARCH LIGHT TO BE ADJUSTED TO IN-GRADE BY PARC CONTRACTOR PER DETAIL 8, SHEET C-600. PIPING TO BE FIELD ROUTED AND CONNECTED TO THE PROPOSED BENT DRAINAGE SYSTEM. CONTRACTOR SHALL SUBMIT LAYOUTS FOR APPROVAL.
5. VIADUCT CONTRACTOR REMOVED PORTIONS OF THE OLD VIADUCT REINFORCED CONCRETE FOUNDATIONS TO A DEPTH OF A FEW FEET BELOW THE EXISTING GROUND SURFACE. PARC CONTRACTOR SHALL BE RESPONSIBLE FOR VERIFYING EXISTING CONDITIONS AND REMOVING ANY ADDITIONAL PORTIONS OF THE FOUNDATIONS THAT CONFLICT WITH THE PROPOSED PARC IMPROVEMENTS.
6. LENGTHS SHOWN IN THE BEARING AND DISTANCE PLAN VIEW LABELS REPRESENT ALIGNMENT SEGMENT LENGTHS. REFER TO PROFILES FOR HORIZONTAL PIPE SEGMENT LENGTHS BETWEEN STRUCTURES.

PLANS PREPARED BY:
TETRA TECH, INC.
707 WILSHIRE BLVD. 23RD FLR.
LOS ANGELES, CA 90017
PHONE: (213) 239-8866

REVISION DATES (DESIGN STAGE ONLY)

Sheet Version 3.0

CITY OF LOS ANGELES DEPARTMENT OF PUBLIC WORKS
BUREAU OF ENGINEERING

ENGINEERING
CITY OF LOS ANGELES

NO.	REVISIONS:	DATE	BY:

BUILDING NO.

INDEX NO. MF-300501

THIS PLAN WAS ELECTRONICALLY SIGNED AND STAMPED

PROFESSIONAL ENGINEER * REGISTERED * JUSTIN T. SMITH * No. 85736 EXP: 9-30-22 * CIVIL * STATE OF CALIFORNIA

CITY ENGINEER: TED ALLEN, P.E.
DESIGN GROUP: STORM DRAIN
LIC. NO. C-85736 DATE: 07/11/22

ENGINEER:	JUSTIN SMITH	
DESIGNED BY:	JUSTIN SMITH	
DRAWN BY:	TYLER PARRA	
CHECKED BY:	NATE SCHREINER	
APPROVED BY:	JASON L. FUSSEL	

SHEET TITLE: STORM DRAIN PLAN & PROFILE SHEET 6

PROJECT: SIXTH STREET PARK, ARTS AND RIVER CONNECTIVITY IMPROVEMENTS (PARC)

ADDRESS: SIXTH STREET OVER THE LOS ANGELES RIVER

VERT. CONTROL: BM 12-04070, 1929 (NGVD29) - 1985 ADJUSTMENT
HORIZ. CONTROL: GPS; PID AE 1704, EPOCH 1991.35

WORK ORDER NO. E700235D
FILE NO. --
DRAWING NO. C-407
SHEET 49 OF 295 SHEETS

7/11/2022 1:13:03 AM - O:\PROJECTS\RIVINE\20043\200-20043-17001\CAD\SHEETFILES\C-407_STORM DRAIN PLAN AND PROFILE - TT.DWG - SMITH, JUSTIN

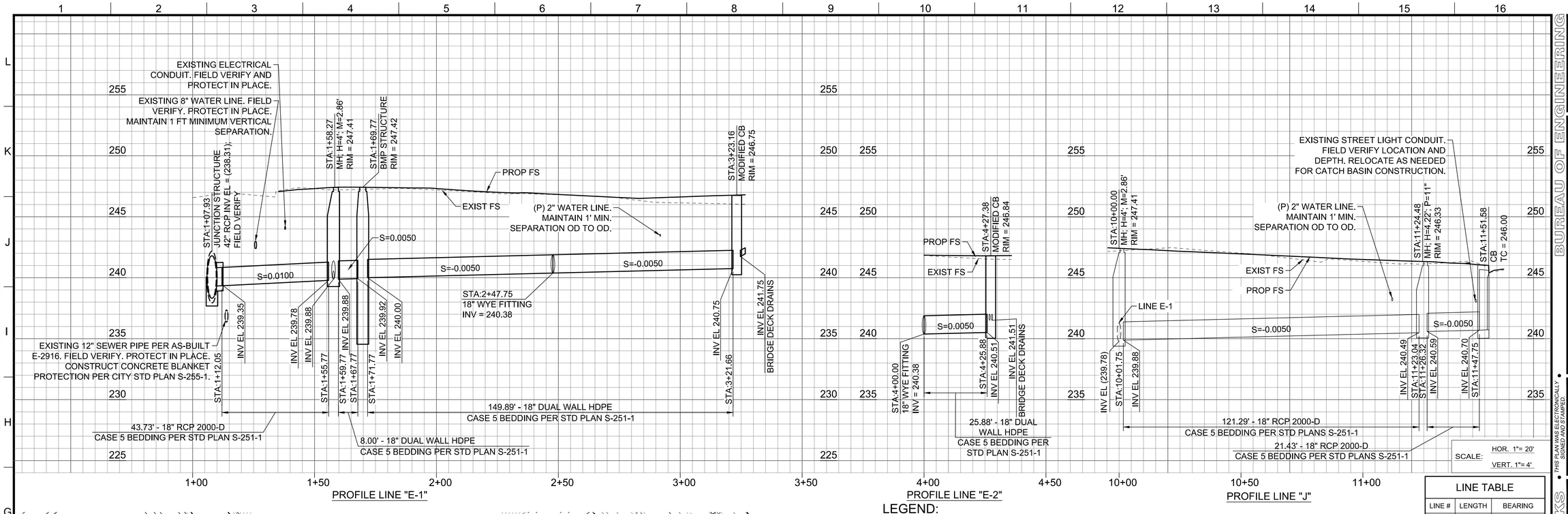

LEGEND:

- PROPERTY / BOUNDARY LINE
- EASEMENT BOUNDARY LINE
- EXISTING SANITARY SEWER
- EXISTING WATER LINE
- EXISTING STORM DRAIN
- EXISTING GAS LINE
- EXISTING UNDERGROUND/OVERHEAD TELECOMMUNICATIONS LINE
- EXISTING OIL LINE
- EXISTING OVERHEAD ELECTRICAL
- EXISTING UNDERGROUND ELECTRICAL
- PROPOSED WATER LINE
- PROPOSED SANITARY SEWER LINE
- PROPOSED STORM DRAIN MAIN LINE (Ø ≥ 18")
- PROPOSED STORM DRAIN LATERAL (Ø ≤ 18")
- PROPOSED TREE. SEE LANDSCAPE PLANS.

LINE TABLE

LINE #	LENGTH	BEARING
L1	26.01'	S 3°55'55" E
L2	83.52'	S 65°07'10" E
L3	5.00'	S 69°52'50" W
L4	11.06'	S 69°52'50" W
L5	88.94'	S 69°47'46" W
L6	6.44'	S 71°02'40" W
L7	32.85'	S 69°52'50" W
L8	23.74'	N 65°07'10" W
L9	13.15'	N 20°07'10" W
L10	101.01'	N 24°52'50" E
L11	50.04'	N 20°07'10" W

LEGEND OF CONSTRUCTION NOTES

○ CONSTRUCT

NO.	CONSTRUCTION ITEM/NOTE	STANDARD PLAN
79	REINFORCED CONCRETE PIPE (RCP)	S-241-0, S-251-1
85	STORM DRAIN MAINTENANCE HOLE	S-381-0
88	PRECAST GRATE CATCH BASIN	DTL 7, SHT C-605
98	MONOLITHIC CONNECTION	SPPWC 308-3
99	SIDE OPENING CATCH BASIN	SPPWC 300-4
105	SDR-35 PVC PIPE	DTL 4, SHT C-605
106	DUAL WALL HDPE PIPE	S-251-1
108	JUNCTION STRUCTURE	SPPWC 331-3
109	CATCH BASIN FILTRATION INSERT	DTL 7, SHT C-605
124	STORM DRAIN CLEANOUT	DTL 6, SHT C-605
147	HYDRODYNAMIC SEPARATOR, TYPE 2	DTL 1, SHT C-14
148	MODIFIED PRECAST CONCRETE CATCH BASIN (NO INLET)	S-361-0

NOTE:

1. NO DUMPING STENCIL SHALL BE PLACED ON TOP OF INLET OR TOP OF CURB AT ALL INLETS PER DETAIL 9, SHEET C-605.
2. CONTRACTOR TO FIELD VERIFY LOCATIONS AND INVERTS OF ALL EXISTING UTILITIES AND PROPOSED CONNECTIONS TO EXISTING STORM DRAIN FACILITIES BEFORE STARTING STORM DRAIN CONSTRUCTION. CONTRACTOR TO NOTIFY THE CITY OF ANY DISCREPANCIES.
3. PROPOSED ELECTRICAL CONDUIT NOT SHOWN FOR CLARITY. REFER TO ELECTRICAL PLANS. CONTRACTOR RESPONSIBLE FOR ALL COORDINATION TO AVOID CONFLICTS WITH PROPOSED STORM DRAIN SYSTEM.
4. INSTALL 4" SDR-35 PIPE TO DRAIN EXISTING VIADUCT ARCH LIGHT. ARCH LIGHT TO BE ADJUSTED TO IN-GRADE BY PARC CONTRACTOR PER DETAIL 8, SHEET C-600. PIPING TO BE FIELD ROUTED AND CONNECTED TO THE PROPOSED BENT DRAINAGE SYSTEM. CONTRACTOR SHALL SUBMIT LAYOUTS FOR APPROVAL.
5. VIADUCT CONTRACTOR REMOVED PORTIONS OF THE OLD VIADUCT REINFORCED CONCRETE FOUNDATIONS TO A DEPTH OF A FEW FEET BELOW THE EXISTING GROUND SURFACE. PARC CONTRACTOR SHALL BE RESPONSIBLE FOR VERIFYING EXISTING CONDITIONS AND REMOVING ANY ADDITIONAL PORTIONS OF THE FOUNDATIONS THAT CONFLICT WITH THE PROPOSED PARC IMPROVEMENTS.
6. LENGTHS SHOWN IN THE BEARING AND DISTANCE PLAN VIEW LABELS REPRESENT ALIGNMENT SEGMENT LENGTHS. REFER TO PROFILES FOR HORIZONTAL PIPE SEGMENT LENGTHS BETWEEN STRUCTURES.

BUREAU OF ENGINEERING OFFICIAL RECORD

PLANS PREPARED BY:
TETRA TECH, INC.
707 WILSHIRE BLVD, 23RD FLR.
LOS ANGELES, CA 90017
PHONE: (213) 239-8866

CITY OF LOS ANGELES DEPARTMENT OF PUBLIC WORKS
BUREAU OF ENGINEERING
ENGINEERING
CITY OF LOS ANGELES

TED ALLEN, P.E.
CITY ENGINEER

DESIGN GROUP
ENGINEER: JUSTIN SMITH LIC. NO. C-85736
DESIGNED BY: JUSTIN SMITH
DRAWN BY: TYLER PARRA
CHECKED BY: NATE SCHREINER
APPROVED BY: JASON L. FUSSEL

DATE: 07/11/22

BUILDING NO.
INDEX NO. MF-300501

NO. REVISIONS: DATE: BY:

THIS PLAN WAS ELECTRONICALLY SIGNED AND STAMPED
PROFESSIONAL ENGINEER JUSTIN T. SMITH No. 85736 EXP: 9-30-22 CIVIL STATE OF CALIFORNIA

VERT. CONTROL: BM 12-04070, 1929 (NGVD29) - 1985 ADJUSTMENT
HORIZ. CONTROL: GPS; PID AE 1704, EPOCH 1991.35

SHEET TITLE: STORM DRAIN PLAN & PROFILE SHEET 7

PROJECT: SIXTH STREET PARK, ARTS AND RIVER CONNECTIVITY IMPROVEMENTS (PARC)

ADDRESS: SIXTH STREET OVER THE LOS ANGELES RIVER

WORK ORDER NO. E700235D
FILE NO. --
DRAWING NO. C-408
SHEET 50 OF 295 SHEETS

7/10/2022 4:12:05 PM - O:\PROJECTS\IRVINE2\0043\200-20043-17001\CAD\SHEETFILES\C-408_STORM DRAIN PLAN AND PROFILE - TT.DWG - SMITH, JUSTIN

REVISION DATES (DESIGN STAGE ONLY)

THE CITY OF LOS ANGELES OR ITS OFFICERS OR AGENTS SHALL NOT BE RESPONSIBLE FOR THE ACCURACY OR COMPLETENESS OF ELECTRONIC COPIES OF THIS PLAN SHEET.

Sheet Version 3.0

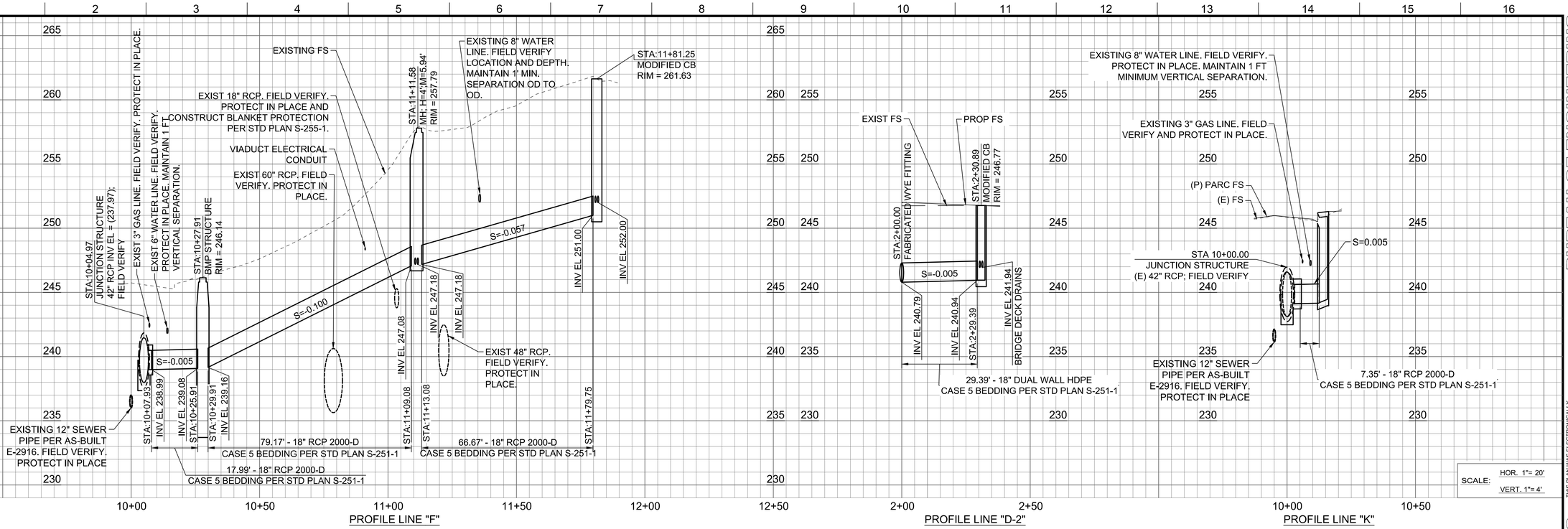

SCALE: HOR. 1"= 20'
VERT. 1"= 4'

NOTES:

1. NO DUMPING STENCIL SHALL BE PLACED ON TOP OF INLET OR TOP OF CURB AT ALL INLETS PER DETAIL 9, SHEET C-605.
2. CONTRACTOR TO FIELD VERIFY LOCATIONS AND INVERTS OF ALL EXISTING UTILITIES AND PROPOSED CONNECTIONS TO EXISTING STORM DRAIN FACILITIES BEFORE STARTING STORM DRAIN CONSTRUCTION. CONTRACTOR TO NOTIFY THE CITY OF ANY DISCREPANCIES.
3. PROPOSED ELECTRICAL CONDUIT NOT SHOWN FOR CLARITY. REFER TO ELECTRICAL PLANS. CONTRACTOR RESPONSIBLE FOR ALL COORDINATION TO AVOID CONFLICTS WITH PROPOSED STORM DRAIN SYSTEM.
4. VIADUCT CONTRACTOR REMOVED PORTIONS OF THE OLD VIADUCT REINFORCED CONCRETE FOUNDATIONS TO A DEPTH OF A FEW FEET BELOW THE EXISTING GROUND SURFACE. PARC CONTRACTOR SHALL BE RESPONSIBLE FOR VERIFYING EXISTING CONDITIONS AND REMOVING ANY ADDITIONAL PORTIONS OF THE FOUNDATIONS THAT CONFLICT WITH THE PROPOSED PARC IMPROVEMENTS.
5. LENGTHS SHOWN IN THE BEARING AND DISTANCE PLAN VIEW LABELS REPRESENT ALIGNMENT SEGMENT LENGTHS. REFER TO PROFILES FOR HORIZONTAL PIPE SEGMENT LENGTHS BETWEEN STRUCTURES.

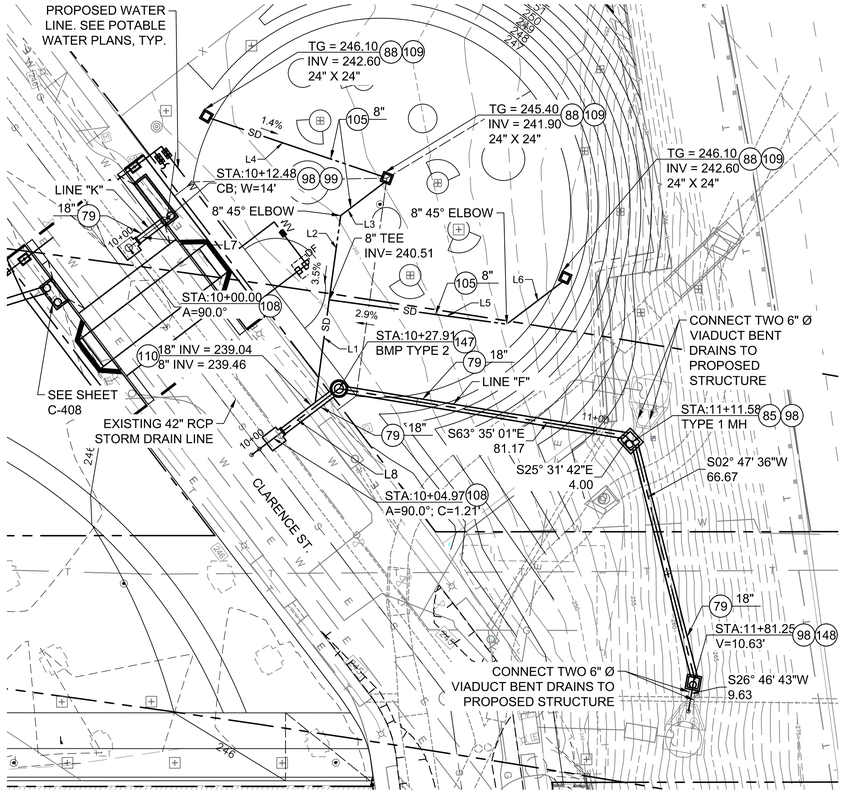

LEGEND:

- PROPERTY / BOUNDARY LINE
- EASEMENT BOUNDARY LINE
- S — EXISTING SANITARY SEWER
- W — EXISTING WATER LINE
- EXISTING STORM DRAIN
- G — EXISTING GAS LINE
- T — EXISTING UNDERGROUND/OVERHEAD TELECOMMUNICATIONS LINE
- O — EXISTING OIL LINE
- OHS — EXISTING OVERHEAD ELECTRICAL
- E — EXISTING UNDERGROUND ELECTRICAL
- W — PROPOSED WATER LINE
- SS — PROPOSED SANITARY SEWER LINE
- SD — PROPOSED STORM DRAIN MAIN LINE (Ø ≥ 18")
- SD — PROPOSED STORM DRAIN LATERAL (Ø ≤ 18")
- PROPOSED TREE. SEE LANDSCAPE PLANS.

LINE TABLE		
LINE #	LENGTH	BEARING
L1	28.93'	N 24°51'56" E
L2	23.79'	N 24°51'56" E
L3	15.76'	N 69°51'56" E
L4	51.34'	S 54°14'01" E
L5	50.08'	S 65°08'04" E
L6	20.00'	N 69°51'56" E
L7	12.48'	S 69°48'20" W
L8	27.91'	N 69°51'56" E

LEGEND OF CONSTRUCTION NOTES

◯ CONSTRUCT

NO.	CONSTRUCTION ITEM/NOTE	STANDARD PLAN
79	REINFORCED CONCRETE PIPE (RCP)	S-241-0, S-251-1
85	STORM DRAIN MAINTENANCE HOLE	S-381-0
88	PRECAST GRATE CATCH BASIN	DTL 7, SHT C-605
98	MONOLITHIC CONNECTION	SPPWC 308-3
99	SIDE OPENING CATCH BASIN	SPPWC 300-4
105	SDR-35 PVC PIPE	DTL 4, SHT C-605
108	JUNCTION STRUCTURE	SPPWC 331-3
109	CATCH BASIN FILTRATION INSERT	DTL 7, SHT C-605
110	JUNCTION STRUCTURE	SPPWC 332-2
148	MODIFIED PRECAST CONCRETE CATCH BASIN (NO INLET)	S-361-0

BUREAU OF ENGINEERING
OFFICIAL RECORD

0 10 20 40
SCALE: 1"=20'

PLANS PREPARED BY:
TETRA TECH, INC.
707 WILSHIRE BLVD. 23RD FLR.
LOS ANGELES, CA 90017
PHONE: (213) 239-8866

CITY OF LOS ANGELES DEPARTMENT OF PUBLIC WORKS
BUREAU OF ENGINEERING

VERT. CONTROL: BM 12-04070, 1929 (NGVD29) - 1985 ADJUSTMENT
HORIZ. CONTROL: GPS, PID AE 1704, EPOCH 1991.35

SHEET TITLE: STORM DRAIN PLAN & PROFILE SHEET 8

PROJECT: SIXTH STREET PARK, ARTS AND RIVER CONNECTIVITY IMPROVEMENTS (PARC)

ADDRESS: SIXTH STREET OVER THE LOS ANGELES RIVER

CITY ENGINEER

TED ALLEN, P.E.	DESIGN GROUP	LIC. NO. C-85736	DATE: 07/11/22
ENGINEER:	JUSTIN SMITH		
DESIGNED BY:	JUSTIN SMITH		
DRAWN BY:	TYLER PARRA		
CHECKED BY:	NATE SCHREINER		
APPROVED BY:	JASON L. FUSSEL		

NO.	REVISIONS:	DATE:	BY:

BUILDING NO.

INDEX NO. MF-300501

THIS PLAN WAS ELECTRONICALLY SIGNED AND STAMPED

PROFESSIONAL ENGINEER * REGISTERED * JUSTIN T. SMITH * No. 85736 EXP: 9-30-22 * CIVIL * STATE OF CALIFORNIA

WORK ORDER NO. E700235D
FILE NO. --
DRAWING NO. C-409
SHEET 51 OF 295 SHEETS

7/12/2022 3:14:10 AM - O:\PROJECTS\RIVINE\20043\200\20043-17001\CAD\SHEETFILES\C-409_STORM DRAIN PLAN AND PROFILE - TT.DWG - SMITH, JUSTIN

REVISION DATES (DESIGN STAGE ONLY)

THE CITY OF LOS ANGELES OR ITS OFFICERS OR AGENTS SHALL NOT BE RESPONSIBLE FOR THE ACCURACY OR COMPLETENESS OF ELECTRONIC COPIES OF THIS PLAN SHEET.

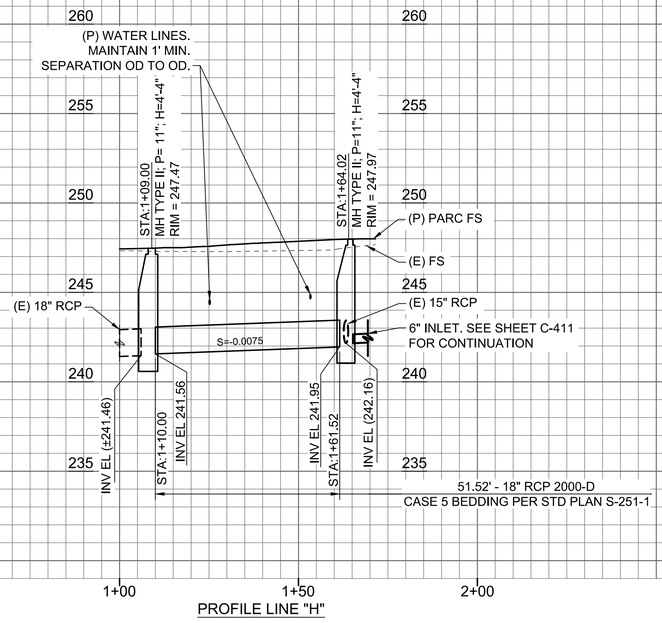

PROFILE LINE "H"

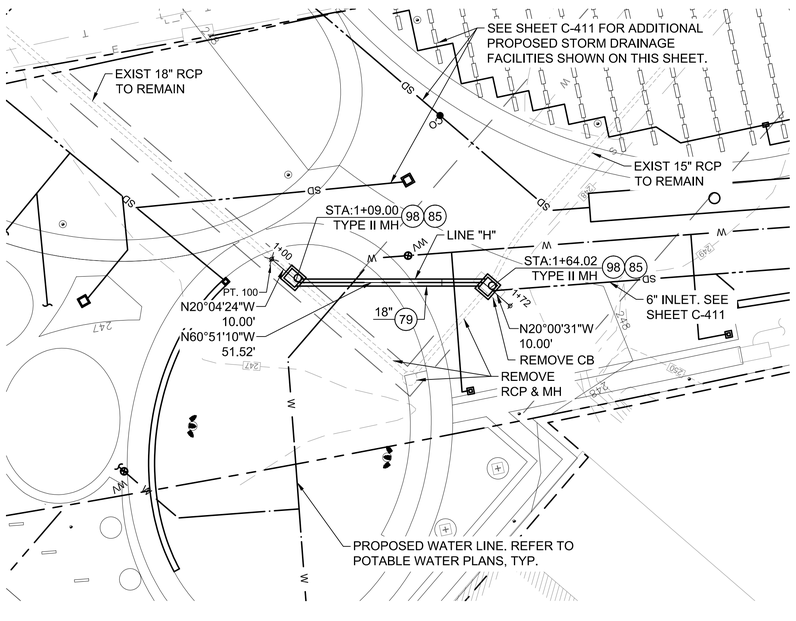

SCALE: HOR. 1"= 20'
VERT. 1"= 4'

LEGEND OF CONSTRUCTION NOTES

◯ CONSTRUCT

NO.	CONSTRUCTION ITEM/NOTE	STANDARD PLAN
79	REINFORCED CONCRETE PIPE (RCP)	S-241-0, S-251-1
85	STORM DRAIN MAINTENANCE HOLE	S-381-0
98	MONOLITHIC CONNECTION	SPPWC 308-3

POINT TABLE		
PT#	NORTHING	EASTING
100	1836210.57	6493788.22

BUREAU OF ENGINEERING OFFICIAL RECORD

LEGEND:

- PROPERTY / BOUNDARY LINE
- EASEMENT BOUNDARY LINE
- S — EXISTING SANITARY SEWER
- W — EXISTING WATER LINE
- EXISTING STORM DRAIN
- G — EXISTING GAS LINE
- T — EXISTING UNDERGROUND/OVERHEAD TELECOMMUNICATIONS LINE
- O — EXISTING OIL LINE
- OHS — EXISTING OVERHEAD ELECTRICAL
- E — EXISTING UNDERGROUND ELECTRICAL
- W — PROPOSED WATER LINE
- SS — PROPOSED SANITARY SEWER LINE
- PROPOSED STORM DRAIN MAIN LINE (Ø ≥ 18")
- SD — PROPOSED STORM DRAIN LATERAL (Ø ≤ 18")

0 10 20 40
SCALE: 1"=20'

NOTE:

1. NO DUMPING STENCIL SHALL BE PLACED ON TOP OF INLET OR TOP OF CURB AT ALL INLETS PER DETAIL 9, SHEET C-605.
2. CONTRACTOR TO FIELD VERIFY LOCATIONS AND INVERTS OF ALL EXISTING UTILITIES AND PROPOSED CONNECTIONS TO EXISTING STORM DRAIN FACILITIES BEFORE STARTING STORM DRAIN CONSTRUCTION. CONTRACTOR TO NOTIFY THE CITY OF ANY DISCREPANCIES.
3. PROPOSED ELECTRICAL CONDUIT NOT SHOWN FOR CLARITY. REFER TO ELECTRICAL PLANS. CONTRACTOR RESPONSIBLE FOR ALL COORDINATION TO AVOID CONFLICTS WITH PROPOSED STORM DRAIN SYSTEM.

PLANS PREPARED BY:
TETRA TECH, INC.
707 WILSHIRE BLVD, 23RD FLR.
LOS ANGELES, CA 90017
PHONE: (213) 239-8866

CITY OF LOS ANGELES DEPARTMENT OF PUBLIC WORKS
BUREAU OF ENGINEERING

VERT. CONTROL: BM 12-04070, 1929 (NGVD29) - 1985 ADJUSTMENT
HORIZ. CONTROL: GPS; PID AE 1704, EPOCH 1991.35

SHEET TITLE: STORM DRAIN PLAN & PROFILE SHEET 9

PROJECT: SIXTH STREET PARK, ARTS AND RIVER CONNECTIVITY IMPROVEMENTS (PARC)

ADDRESS: SIXTH STREET OVER THE LOS ANGELES RIVER

CITY ENGINEER: TED ALLEN, P.E.

DESIGN GROUP		LIC NO.	DATE
ENGINEER:	JUSTIN SMITH	C-85736	07/11/22
DESIGNED BY:	JUSTIN SMITH		
DRAWN BY:	TYLER PARRA		
CHECKED BY:	NATE SCHREINER		
APPROVED BY:	JASON L. FUSSEL		

WORK ORDER NO. E700235D
FILE NO. --
DRAWING NO. C-410
SHEET 52 OF 295 SHEETS

BUILDING NO.
INDEX NO. MF-300501

NO.	REVISIONS:	DATE	BY:

THIS PLAN WAS ELECTRONICALLY SIGNED AND STAMPED

REGISTERED PROFESSIONAL ENGINEER JUSTIN L. SMITH No. 85736 EXP: 9-30-22 CIVIL STATE OF CALIFORNIA

7/7/2022 9:10:38 AM - C:\PROJECTS\IRVINE\20043\200-20043-17001\CAD\SHEETFILES\C-410_STORM DRAIN PLAN.DWG - SMITH, JUSTIN

THE CITY OF LOS ANGELES OR ITS OFFICERS OR AGENTS SHALL NOT BE RESPONSIBLE FOR THE ACCURACY OR COMPLETENESS OF ELECTRONIC COPIES OF THIS PLAN SHEET.

REVISION DATES (DESIGN STAGE ONLY)

Sheet Version 3.0

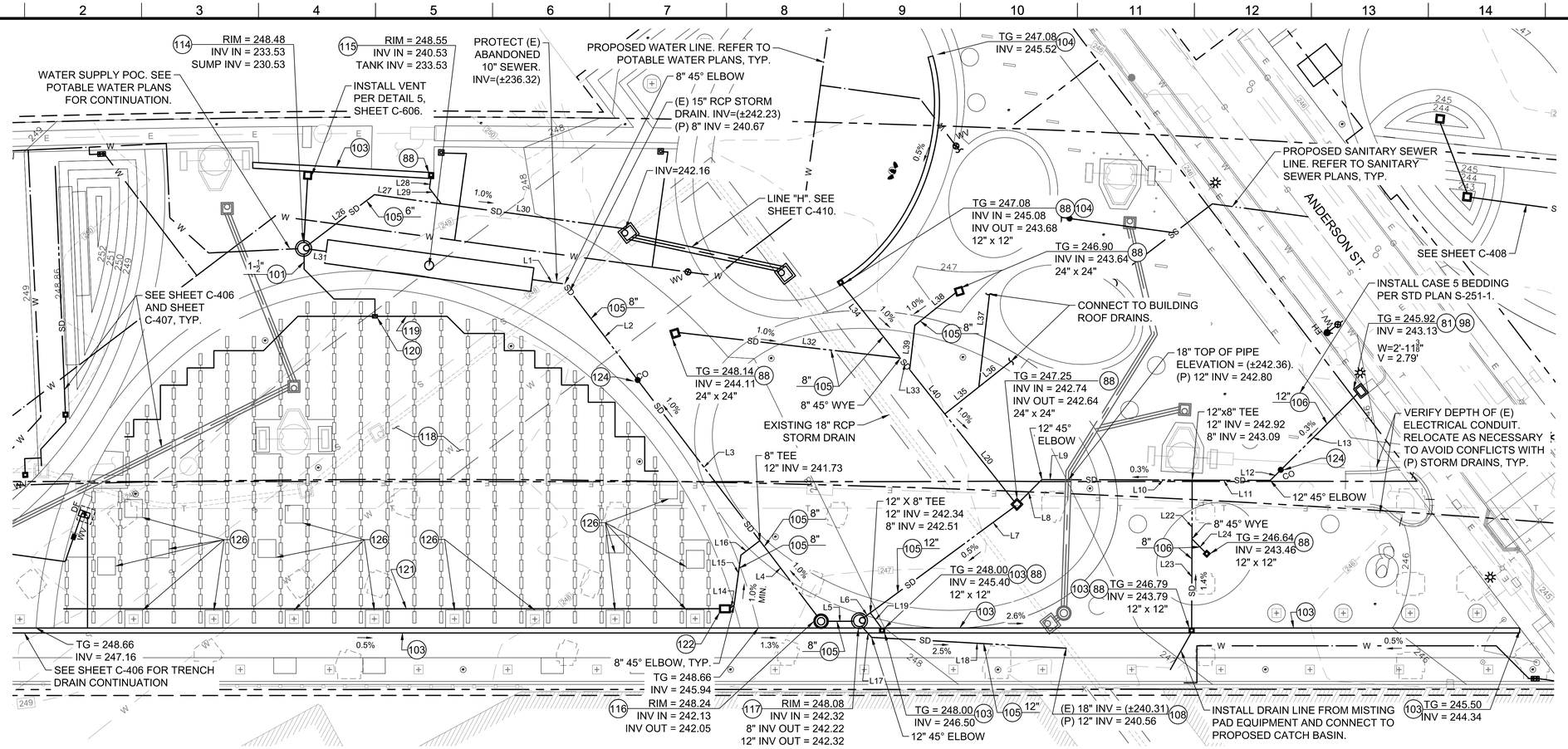

LEGEND:

- PROPERTY / BOUNDARY LINE
- EASEMENT BOUNDARY LINE
- S — EXISTING SANITARY SEWER
- W — EXISTING WATER LINE
- EXISTING STORM DRAIN
- G — EXISTING GAS LINE
- T — EXISTING UNDERGROUND/OVERHEAD TELECOMMUNICATIONS LINE
- O — EXISTING OIL LINE
- OHS — EXISTING OVERHEAD ELECTRICAL
- E — EXISTING UNDERGROUND ELECTRICAL
- W — PROPOSED WATER LINE
- SS — PROPOSED SANITARY SEWER LINE
- PROPOSED STORM DRAIN MAIN LINE (Ø ≥ 18")
- SD — PROPOSED STORM DRAIN LATERAL (Ø ≤ 18")

NOTE:

1. NO DUMPING STENCIL SHALL BE PLACED ON TOP OF INLET OR TOP OF CURB AT ALL INLETS PER DETAIL 9, SHEET C-605.
2. CONTRACTOR TO FIELD VERIFY LOCATIONS AND INVERTS OF ALL EXISTING UTILITIES AND PROPOSED CONNECTIONS TO EXISTING STORM DRAIN FACILITIES BEFORE STARTING STORM DRAIN CONSTRUCTION. CONTRACTOR TO NOTIFY THE CITY OF ANY DISCREPANCIES.
3. PROPOSED ELECTRICAL CONDUIT NOT SHOWN FOR CLARITY. REFER TO ELECTRICAL PLANS. CONTRACTOR RESPONSIBLE FOR ALL COORDINATION TO AVOID CONFLICTS WITH PROPOSED STORM DRAIN SYSTEM..

LEGEND OF CONSTRUCTION NOTES

◯ CONSTRUCT

NO.	CONSTRUCTION ITEM/NOTE	STANDARD PLAN
81	CURBSIDE GRATING BASIN (CGB)	SPPWC 303-3
88	PRECAST GRATE CATCH BASIN	DTL 7, SHT C-605
101	SCH 40 PVC PIPE	DTL 4, SHT C-605
103	TRENCH DRAIN	DTL 10, SHT C-605
104	RADIUS TRENCH DRAIN	DTL 5, SHT C-605
105	SDR-35 PVC PIPE	DTL 4, SHT C-605
106	DUAL WALL HDPE PIPE	DTL 4, SHT C-605
108	JUNCTION STRUCTURE	SPPWC 331-3
110	JUNCTION STRUCTURE	SPPWC 332-2
114	WET WELL AND PUMP	DTL 4, SHT C-606
115	STORMWATER STORAGE TANK	DTL 4, SHT C-606
116	HYDRODYNAMIC SEPARATOR, TYPE 1	DTL 1, SHT C-606
117	DIVERSION MAINTENANCE HOLE	DTL 3, SHT C-606
118	EPIC SYSTEM	DTL 1, 2, 7, & 9, SHT C-607
119	EPIC SYSTEM INLET HEADER PIPE	DTL 3, SHT C-607
120	EPIC SYSTEM INLET STRUCTURE	DTL 4, SHT C-607
121	EPIC SYSTEM OUTLET HEADER PIPE	DTL 5, SHT C-607
122	EPIC SYSTEM OUTLET STRUCTURE	DTL 6, SHT C-607
123	PRECAST CONCRETE JUNCTION STRUCTURE W/ COVER	DTL 8, SHT C-605
124	STORM DRAIN CLEANOUT	DTL 6, SHT C-605
126	EPIC SYSTEM AT TREE LOCATIONS	DTL 8, SHT C-607

LINE TABLE

LINE #	LENGTH	BEARING
L1	11.00'	S 65°08'33" E
L2	40.65'	N 20°08'33" W
L3	67.91'	N 20°08'33" W
L4	32.09'	N 20°08'33" W
L5	8.95'	N 72°54'22" W
L6	2.48'	S 70°43'40" W
L7	60.42'	S 70°43'40" W
L8	10.83'	S 62°17'24" W
L9	8.00'	N 72°42'36" W
L10	67.03'	N 72°42'36" W
L11	67.03'	N 72°42'36" W
L12	5.00'	S 62°17'24" W
L13	36.76'	S 62°17'24" W
L14	2.00'	N 69°51'27" E
L15	17.01'	N 24°51'27" E
L16	8.00'	N 69°51'27" E
L17	5.00'	N 24°42'42" W
L18	65.62'	N 69°42'42" W
L19	6.74'	N 19°16'20" W
L20	37.95'	S 21°20'07" E

LINE TABLE

LINE #	LENGTH	BEARING
L22	19.79'	S 17°17'24" W
L23	29.99'	S 17°17'24" W
L24	6.55'	S 27°42'36" E
L26	27.93'	N 69°51'27" E
L27	22.69'	S 65°08'33" E
L28	4.00'	N 24°51'27" E
L29	6.51'	N 20°08'33" W
L30	62.59'	S 65°08'33" E
L31	5.67'	N 65°08'33" W
L32	75.38'	S 66°20'07" E
L33	93.89'	S 21°20'07" E
L34	31.94'	N 21°20'07" W
L35	14.62'	N 68°39'53" E
L36	13.87'	N 68°39'53" E
L37	31.43'	N 23°39'53" E
L38	17.88'	N 68°39'53" E
L39	15.10'	N 23°39'53" E
L40	19.00'	S 21°20'07" E

BUREAU OF ENGINEERING
OFFICIAL RECORD

0 10 20 40
SCALE: 1"=20'

PLANS PREPARED BY:
TETRA TECH, INC.
707 WILSHIRE BLVD. 23RD FLR.
LOS ANGELES, CA 90017
PHONE: (213) 239-8866

CITY OF LOS ANGELES
DEPARTMENT OF PUBLIC WORKS
BUREAU OF ENGINEERING

ENGINEERING
CITY OF LOS ANGELES

NO. | REVISIONS: | DATE | BY:

BUILDING NO.

INDEX NO. MF-300501

THIS PLAN WAS ELECTRONICALLY SIGNED AND STAMPED
PROFESSIONAL ENGINEER
JUSTIN T. SMITH
No. 85736
EXP: 9-30-22
CIVIL
STATE OF CALIFORNIA

CITY ENGINEER
DATE: 07/11/22
LIC NO. C-85736

DESIGN GROUP
ENGINEER: JUSTIN SMITH
DESIGNED BY: JUSTIN SMITH
DRAWN BY: TYLER PARRA
CHECKED BY: NATE SCHREINER
APPROVED BY: JASON L. FUSSEL

TED ALLEN, P.E.

VERT. CONTROL: BM 12-04070, 1929 (NGVD29) - 1985 ADJUSTMENT
HORIZ. CONTROL: GPS; PID AE 1704, EPOCH 1991.35

SHEET TITLE: STORM DRAIN PLAN SHEET 10

PROJECT: SIXTH STREET PARK, ARTS AND RIVER CONNECTIVITY IMPROVEMENTS (PARC)

ADDRESS: SIXTH STREET OVER THE LOS ANGELES RIVER

WORK ORDER NO. E700235D
FILE NO. --
DRAWING NO. C-411
SHEET 53 OF 295 SHEETS

7/12/2022 12:11:48 AM - O:\PROJECTS\IRVINE\20043\200-20043-17001\CAD\SHEETFILES\C-411_STORM DRAIN PLAN DWG - SMITH, JUSTIN

THE CITY OF LOS ANGELES OR ITS OFFICERS OR AGENTS SHALL NOT BE RESPONSIBLE FOR THE ACCURACY OR COMPLETENESS OF ELECTRONIC COPIES OF THIS PLAN SHEET.

REVISION DATES (DESIGN STAGE ONLY)

Sheet Version 3.0

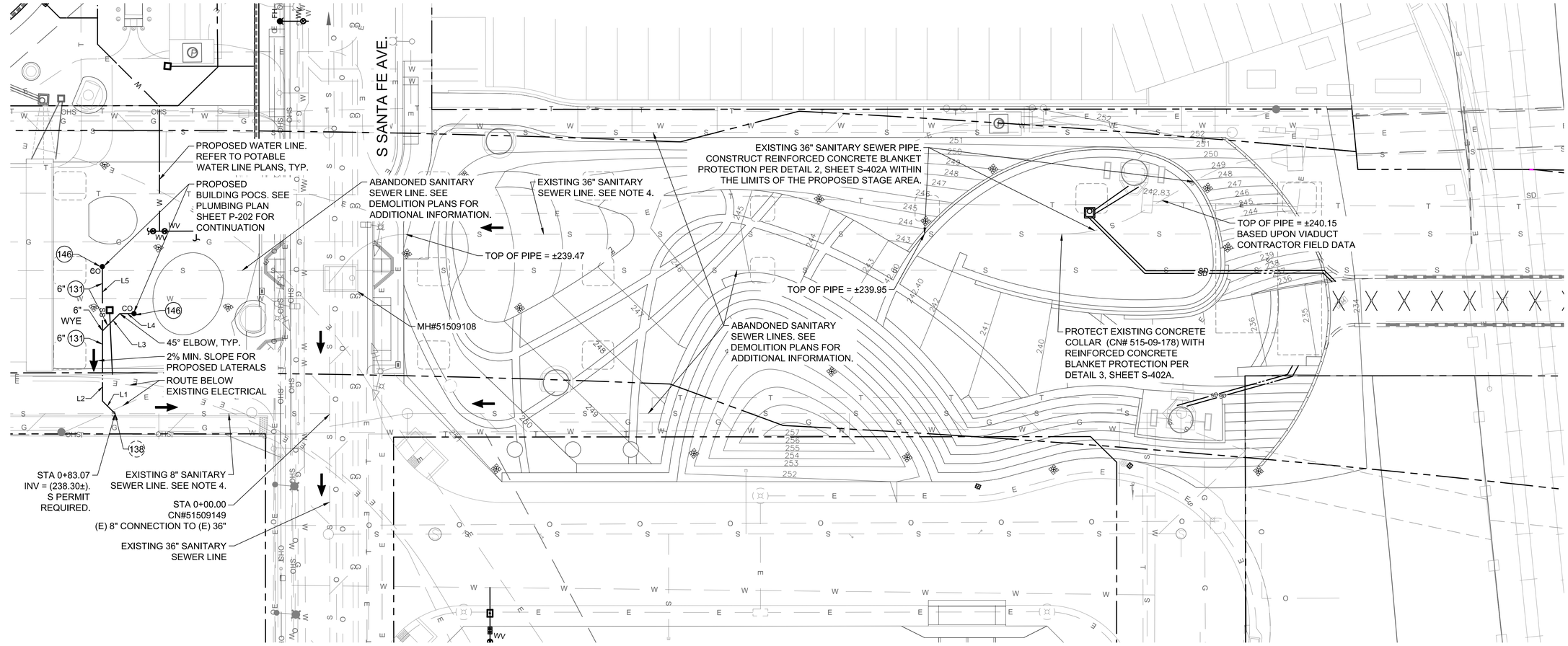

LEGEND:

- PROPERTY / BOUNDARY LINE
- EASEMENT BOUNDARY LINE
- S — EXISTING SANITARY SEWER
- W — EXISTING WATER LINE
- EXISTING STORM DRAIN
- G — EXISTING GAS LINE
- T — EXISTING UNDERGROUND/OVERHEAD TELECOMMUNICATIONS LINE
- O — EXISTING OIL LINE
- OHS — EXISTING OVERHEAD ELECTRICAL
- E — EXISTING UNDERGROUND ELECTRICAL
- W — PROPOSED WATER LINE
- SS — PROPOSED SANITARY SEWER LINE
- PROPOSED STORM DRAIN MAIN LINE (Ø ≥ 18")
- SD — PROPOSED STORM DRAIN LATERAL (Ø ≤ 18")

LEGEND OF CONSTRUCTION NOTES		
◯ CONSTRUCT	◌ WORK BY OTHERS	
NO.	CONSTRUCTION ITEM/NOTE	STANDARD PLAN
131	SDR 35 SANITARY SEWER PIPE	S-110-1, S-251-1
138	SADDLE	27983
146	TWO-WAY CLEANOUT STRUCTURE	DTL 2, SHT C-605

LINE TABLE		
LINE #	LENGTH	DIRECTION
L1	6.90'	N50° 10' 41"W
L2	27.23'	N05° 10' 41"W
L3	9.49'	N39° 49' 19"E
L4	5.51'	N84° 49' 19"E
L5	24.95'	N05° 10' 41"W

NOTES:

1. EXISTING UTILITIES ARE SHOWN FOR REFERENCE ONLY. ACTUAL LOCATIONS MAY VARY. CONTRACTOR TO VERIFY THE LOCATIONS AND ELEVATIONS OF EXISTING UTILITIES IN THE FIELD.
2. REFER TO STORM DRAINAGE SHEETS FOR PROPOSED STORM DRAINAGE SYSTEMS.
3. REFER TO POTABLE WATER SHEETS FOR PROPOSED WATER LINES.
4. CONTRACTOR SHALL PROVIDE PRE- AND POST-CONSTRUCTION CCTV INSPECTION OF EXISTING SEWER LINE.

BUREAU OF ENGINEERING
OFFICIAL RECORD

SCALE: 1"=20'

PLANS PREPARED BY:
TETRA TECH, INC.
707 WILSHIRE BLVD. 23RD FLR.
LOS ANGELES, CA 90017
PHONE: (213) 239-8866

CITY OF LOS ANGELES DEPARTMENT OF PUBLIC WORKS
BUREAU OF ENGINEERING
ENGINEERING
CITY OF LOS ANGELES

NO.	REVISIONS:	DATE	BY:

BUILDING NO.
INDEX NO. MF-300501

THIS PLAN WAS ELECTRONICALLY SIGNED AND STAMPED
TED ALLEN, P.E.
DESIGN GROUP
CITY ENGINEER
LIC. NO. C-85736
DATE: 07/11/22

ENGINEER: JUSTIN SMITH
DESIGNED BY: JUSTIN SMITH
DRAWN BY: DAVID LOPEZ
CHECKED BY: NATE SCHREINER
APPROVED BY: JASON L. FUSSEL

VERT. CONTROL: BM 12-04070, 1929 (NGVD29) - 1985 ADJUSTMENT
HORIZ. CONTROL: GPS; PID AE 1704, EPOCH 1991.35

SHEET TITLE: SEWER LATERAL PLAN SHEET 1
PROJECT: SIXTH STREET PARK, ARTS AND RIVER CONNECTIVITY IMPROVEMENTS (PARC)
ADDRESS: SIXTH STREET OVER THE LOS ANGELES RIVER

WORK ORDER NO. E700235D
FILE NO. --
DRAWING NO. C-415
SHEET 54 OF 295 SHEETS

7/8/2022 12:07:38 AM - O:\PROJECTS\RVINE\20043\200-20043-17001\CAD\SHEETFILES\C-415_SEWER PLAN - TT.DWG - SMITH, JUSTIN

REVISION DATES (DESIGN STAGE ONLY)

THE CITY OF LOS ANGELES OR ITS OFFICERS OR AGENTS SHALL NOT BE RESPONSIBLE FOR THE ACCURACY OR COMPLETENESS OF ELECTRONIC COPIES OF THIS PLAN SHEET.

Sheet Version 3.0

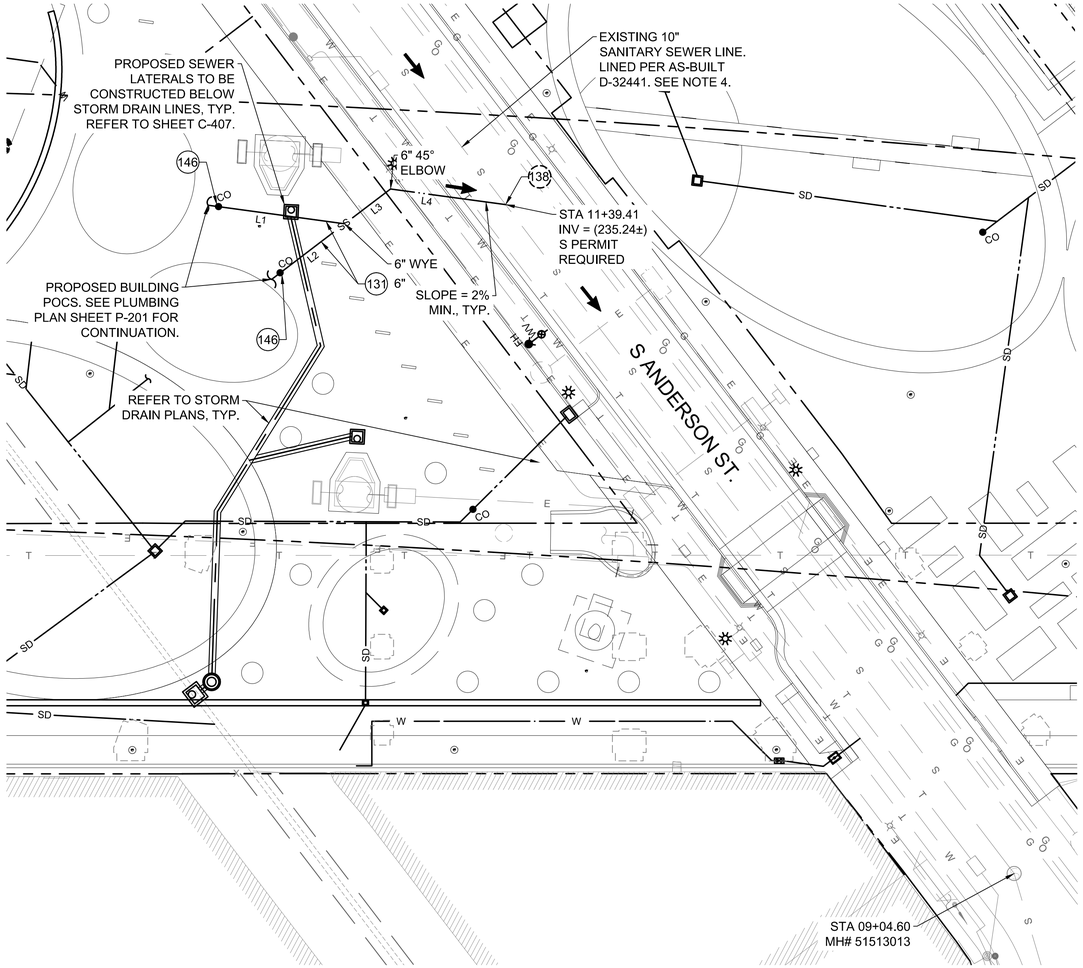

LEGEND:

- PROPERTY / BOUNDARY LINE
- EASEMENT BOUNDARY LINE
- S — EXISTING SANITARY SEWER
- W — EXISTING WATER LINE
- EXISTING STORM DRAIN
- G — EXISTING GAS LINE
- T — EXISTING UNDERGROUND/OVERHEAD TELECOMMUNICATIONS LINE
- O — EXISTING OIL LINE
- OHS — EXISTING OVERHEAD ELECTRICAL
- E — EXISTING UNDERGROUND ELECTRICAL
- W — PROPOSED WATER LINE
- SS — PROPOSED SANITARY SEWER LINE
- PROPOSED STORM DRAIN MAIN LINE (Ø ≥ 18")
- SD — PROPOSED STORM DRAIN LATERAL (Ø ≤ 18")

LEGEND OF CONSTRUCTION NOTES		
◯ CONSTRUCT	⬡ WORK BY OTHERS	
NO.	CONSTRUCTION ITEM/NOTE	STANDARD PLAN
131	SDR 35 SANITARY SEWER PIPE	S-110-1, S-251-1
138	SADDLE	27983
146	TWO-WAY CLEANOUT STRUCTURE	DTL 2, SHT C-605

LINE TABLE		
LINE #	LENGTH	BEARING
L1	38.56'	N65° 08' 33"W
L2	41.75'	S69° 51' 27"W
L3	41.75'	S69° 51' 27"W
L4	32.47'	N65° 08' 33"W

NOTES:

1. EXISTING UTILITIES ARE SHOWN FOR REFERENCE ONLY. ACTUAL LOCATIONS MAY VARY. CONTRACTOR TO VERIFY THE LOCATIONS AND ELEVATIONS OF EXISTING UTILITIES IN THE FIELD.
2. REFER TO STORM DRAINAGE SHEETS FOR PROPOSED STORM DRAINAGE SYSTEMS.
3. REFER TO POTABLE WATER SHEETS FOR PROPOSED WATER LINES.
4. CONTRACTOR SHALL PROVIDE PRE- AND POST-CONSTRUCTION CCTV INSPECTION OF EXISTING SEWER LINE.

BUREAU OF ENGINEERING
OFFICIAL RECORD

0 10 20 40
SCALE: 1"=20'

PLANS PREPARED BY:
TETRA TECH, INC.
707 WILSHIRE BLVD, 23RD FLR.
LOS ANGELES, CA 90017
PHONE: (213) 239-8866

CITY OF LOS ANGELES DEPARTMENT OF PUBLIC WORKS BUREAU OF ENGINEERING

ENGINEERING
CITY OF LOS ANGELES

BUILDING NO.

INDEX NO. MF-300501

NO.	REVISIONS:	DATE	BY:

THIS PLAN WAS ELECTRONICALLY SIGNED AND STAMPED

PROFESSIONAL ENGINEER
JUSTIN L. SMITH
No. 85736
EXP: 9-30-22
CIVIL
STATE OF CALIFORNIA

CITY ENGINEER
TED ALLEN, P.E.
DATE: 07/11/22
LIC. NO. C-85736

DESIGN GROUP	
ENGINEER:	JUSTIN SMITH
DESIGNED BY:	JUSTIN SMITH
DRAWN BY:	DAVID LOPEZ
CHECKED BY:	NATE SCHREINER
APPROVED BY:	JASON L. FUSSEL

VERT. CONTROL: BM 12-04070, 1929 (NGVD29) - 1985 ADJUSTMENT
HORIZ. CONTROL: GPS; PID AE 1704, EPOCH 1991.35

SHEET TITLE: SEWER LATERAL PLAN SHEET 2

PROJECT: SIXTH STREET PARK, ARTS AND RIVER CONNECTIVITY IMPROVEMENTS (PARC)

ADDRESS: SIXTH STREET OVER THE LOS ANGELES RIVER

WORK ORDER NO. E700235D
FILE NO. --
DRAWING NO. C-416
SHEET 55 OF 295 SHEETS

7/9/2022 12:35:09 AM - O:\PROJECTS\RIVINE\20043\200-20043-17001\CAD\SHEETFILES\C-416_SEWER PLAN - T1.DWG - SMITH, JUSTIN

REVISION DATES (DESIGN STAGE ONLY)

THE CITY OF LOS ANGELES OR ITS OFFICERS OR AGENTS SHALL NOT BE RESPONSIBLE FOR THE ACCURACY OR COMPLETENESS OF ELECTRONIC COPIES OF THIS PLAN SHEET.

Sheet Version 3.0

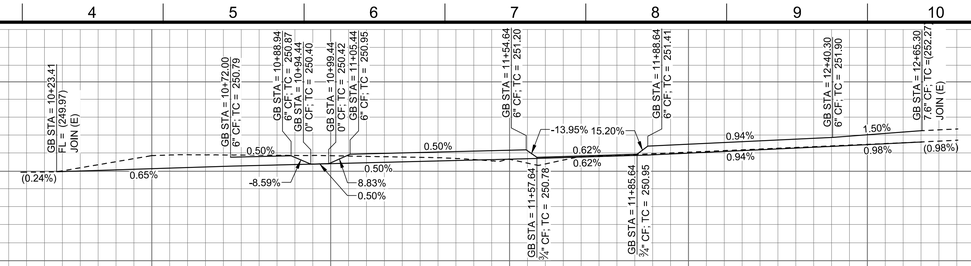

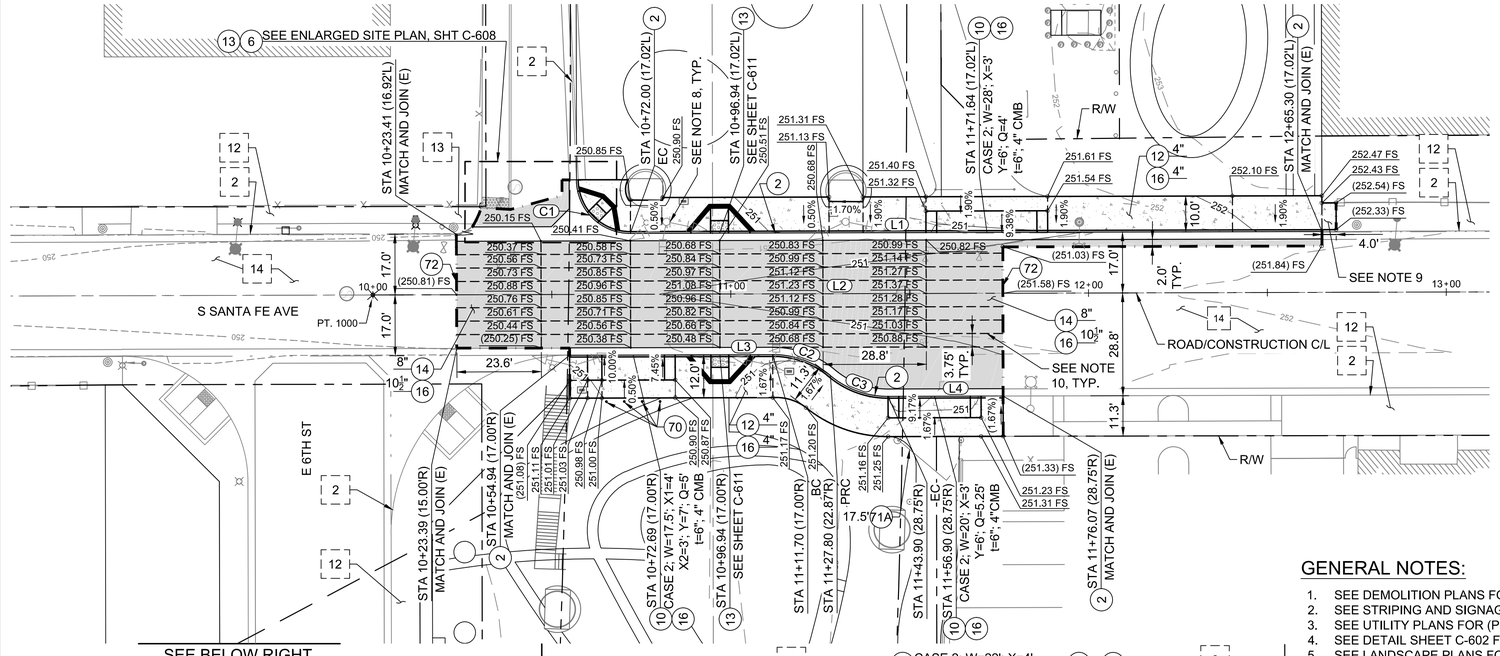

LINE TABLE		
LINE #	LENGTH	DIRECTION
L1	193.29	N05° 10' 40.54"W
L2	300.00	N05° 10' 41.93"W
L3	56.76	N05° 10' 45.49"W
L4	32.17	N05° 10' 40.59"W

CURVE TABLE			
CURVE #	LENGTH	RADIUS	DELTA
C1	23.57	15.00	90.05
C2	17.50	25.00	40.10
C3	17.50	25.00	40.10

POINT TABLE		
POINT #	NORTHING	EASTING
1000	1836351.95	6491837.57

LEGEND OF CONSTRUCTION NOTES

CONSTRUCT ◯ | REMOVE ▢ | REMODEL ▢◯ | WORK BY OTHERS ◌ | EXISTING-PROTECT IN PLACE ▢ | REMOVE & RECONSTRUCT ▢◯

NO.	CONSTRUCTION ITEM/NOTE	STANDARD PLAN
2	TYPE C INTEGRAL CURB & GUTTER	S-410-2
6	CONCRETE INTERSECTION GUTTER	S-410-2
10	CONCRETE DRIVEWAY	S-440-4
12	CONCRETE WALK	S-444-0; DTL 4, SHT C-600
13	CURB RAMP	S-442-6
14	ASPHALT CONCRETE PAVEMENT	DTL 1, SHT C-600
16	UNTREATED BASE MATERIAL	SEE PVMT DTL
28	CURB AND SIDEWALK JOINT	SPPWC 112-2
68	DETECTABLE WARNING SURFACE	DTL 8, SHT C-601
70	REMOVABLE BOLLARD	DTL 3, SHT C-601
71A	SWING GATE	DTL 1, SHT C-611
72	SAWCUT LINE; JOIN EXISTING	DTL 2, 5, 6, SHT C-600

LEGEND:

AC PAVEMENT

PORTLAND CEMENT CONC. SIDEWALK

SAWCUT

GENERAL NOTES:

1. SEE DEMOLITION PLANS FOR REMOVALS, RELOCATIONS, OR PROTECTIONS OF (E) FEATURES.
2. SEE STRIPING AND SIGNAGE PLANS FOR (P) STRIPING AND SIGNAGE IMPROVEMENTS.
3. SEE UTILITY PLANS FOR (P) UTILITY RELOCATIONS AND IMPROVEMENTS NOT SHOWN ON THIS SHEET.
4. SEE DETAIL SHEET C-602 FOR TYPICAL STREET SECTIONS.
5. SEE LANDSCAPE PLANS FOR (P) SITE GRADING.
6. SIDEWALK AT PROPOSED DRIVEWAY LOCATIONS TO BE 6" THICK.
7. CONSTRUCT JOINTS PER SPPWC 112-2 AND APPLICABLE STD PLANS.
8. PROPOSED TRAFFIC SIGNAL AND LIGHTING IMPROVEMENTS BY THE SEPARATE ATP-3 PROJECT HAVE BEEN SHOWN FOR REFERENCE. SEE DEMOLITION SHEET CD-002 FOR ADDITIONAL INFORMATION.
9. RECONSTRUCT SIDEWALK PANEL TO TRANSITION TO EXISTING SIDEWALK WITH NON-ADA COMPLIANT CROSS SLOPES.
10. CONSTRUCT T-SECTION PER CITY STD PLAN S-432-1 (T = 1½"). CROWN SECTION SLOPE SHALL NOT EXCEED 5% AT THE PROPOSED CROSSWALK LOCATION.
11. SIDEWALK CROSS SLOPES SHALL NOT EXCEED 2%.

SCALE: 1"=20'

SCALE: HOR. 1"= 20'
VERT. 1"= 4'

BUREAU OF ENGINEERING
OFFICIAL RECORD

PLANS PREPARED BY:
TETRA TECH, INC.
707 WILSHIRE BLVD, 23RD FLR.
LOS ANGELES, CA 90017
PHONE: (213) 239-8866

ENGINEERING
CITY OF LOS ANGELES

BUREAU OF ENGINEERING

NO.	REVISIONS:	DATE	BY:

BUILDING NO.

INDEX NO. MF-300501

THIS PLAN WAS ELECTRONICALLY SIGNED AND STAMPED

PROFESSIONAL ENGINEER
JUSTIN T. SMITH
No. 85736
EXP: 9-30-22
CIVIL
STATE OF CALIFORNIA
REGISTERED

CITY OF LOS ANGELES DEPARTMENT OF PUBLIC WORKS

VERT. CONTROL: BM 12-04070, 1929 (NGVD29) - 1985 ADJUSTMENT
HORIZ. CONTROL: GPS; PID AE 1704, EPOCH 1991.35

SHEET TITLE: STREET IMPROVEMENTS
SANTA FE AVENUE

PROJECT: SIXTH STREET PARK, ARTS AND RIVER CONNECTIVITY IMPROVEMENTS (PARC)

ADDRESS: SIXTH STREET OVER THE LOS ANGELES RIVER

CITY ENGINEER

DESIGN GROUP		DATE:
TED ALLEN, P.E.	LIC. NO. C-85736	07/11/22

ENGINEER: JUSTIN SMITH
DESIGNED BY: JUSTIN SMITH
DRAWN BY: DAVID LOPEZ
CHECKED BY: NATE SCHREINER
APPROVED BY: JASON L. FUSSEL

WORK ORDER NO. E700235D
FILE NO. --
DRAWING NO. C-500
SHEET 56 OF 295 SHEETS

7/8/2022 12:13:19 PM - O:\PROJECTS\RIVINE\20043\200\20043-17001\CAD\SHEETFILES\C-500_STREET IMPROVEMENTS_SANTA FE ST - TT.DWG - SMITH, JUSTIN

REVISION DATES (DESIGN STAGE ONLY)

THE CITY OF LOS ANGELES OR ITS OFFICERS OR AGENTS SHALL NOT BE RESPONSIBLE FOR THE ACCURACY OR COMPLETENESS OF ELECTRONIC COPIES OF THIS PLAN SHEET.

Sheet Version 3.0

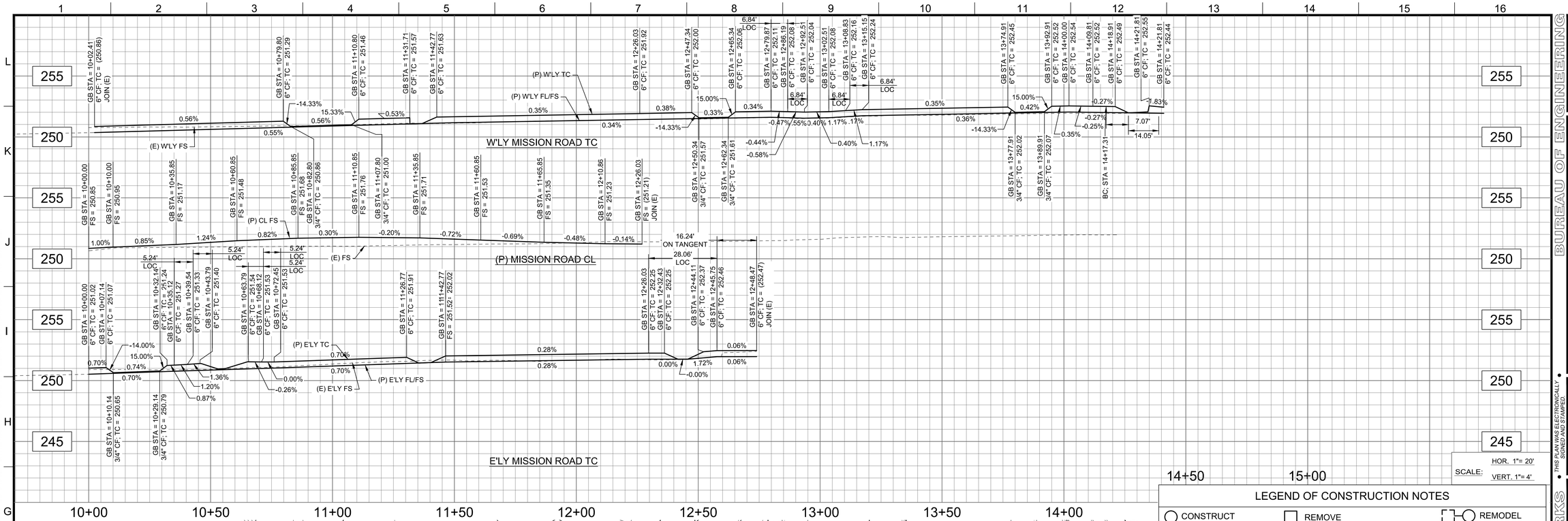

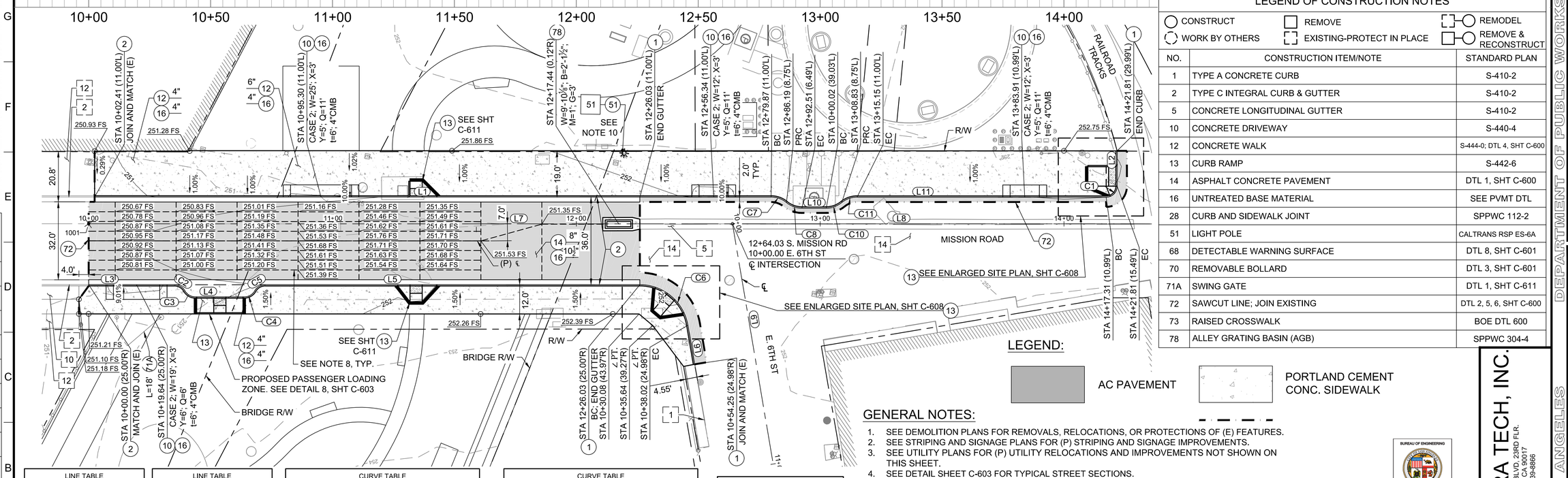

LEGEND OF CONSTRUCTION NOTES

CONSTRUCT · WORK BY OTHERS · REMOVE · EXISTING-PROTECT IN PLACE · REMODEL · REMOVE & RECONSTRUCT

NO.	CONSTRUCTION ITEM/NOTE	STANDARD PLAN
1	TYPE A CONCRETE CURB	S-410-2
2	TYPE C INTEGRAL CURB & GUTTER	S-410-2
5	CONCRETE LONGITUDINAL GUTTER	S-410-2
10	CONCRETE DRIVEWAY	S-440-4
12	CONCRETE WALK	S-444-0; DTL 4, SHT C-600
13	CURB RAMP	S-442-6
14	ASPHALT CONCRETE PAVEMENT	DTL 1, SHT C-600
16	UNTREATED BASE MATERIAL	SEE PVMT DTL
28	CURB AND SIDEWALK JOINT	SPPWC 112-2
51	LIGHT POLE	CALTRANS RSP ES-6A
68	DETECTABLE WARNING SURFACE	DTL 8, SHT C-601
70	REMOVABLE BOLLARD	DTL 3, SHT C-601
71A	SWING GATE	DTL 1, SHT C-611
72	SAWCUT LINE; JOIN EXISTING	DTL 2, 5, 6, SHT C-600
73	RAISED CROSSWALK	BOE DTL 600
78	ALLEY GRATING BASIN (AGB)	SPPWC 304-4

LEGEND:

AC PAVEMENT

PORTLAND CEMENT CONC. SIDEWALK

GENERAL NOTES:

1. SEE DEMOLITION PLANS FOR REMOVALS, RELOCATIONS, OR PROTECTIONS OF (E) FEATURES.
2. SEE STRIPING AND SIGNAGE PLANS FOR (P) STRIPING AND SIGNAGE IMPROVEMENTS.
3. SEE UTILITY PLANS FOR (P) UTILITY RELOCATIONS AND IMPROVEMENTS NOT SHOWN ON THIS SHEET.
4. SEE DETAIL SHEET C-603 FOR TYPICAL STREET SECTIONS.
5. SEE LANDSCAPE PLANS FOR (P) SITE GRADING.
6. SIDEWALK AT PROPOSED DRIVEWAY AND MOUNTABLE CURB LOCATIONS TO BE 6" THICK.
7. CONSTRUCT JOINTS PER SPPWC 112-2 AND APPLICABLE STD PLANS.
8. CONSTRUCT T-SECTION PER CITY STD PLAN S-432-1 (T = 1½"). CROWN SECTION SLOPE SHALL NOT EXCEED 5% AT THE PROPOSED CROSSWALK LOCATION.
9. SIDEWALK CROSS SLOPES SHALL NOT EXCEED 2%.
10. REMOVE AND RECONSTUCT EXISTING LIGHT POLES AT THE NEW LOCATIONS SHOWN, INCLUDING THE RECONSTRUCTION OF THE EXISTING CONDUIT AND WIRING AS NEEDED. CONTRACTOR SHALL COORDINATE WITH THE CITY'S BUREAU OF STREET LIGHTING (BSL) PRIOR TO PERFORMING THE WORK. CONTRACTOR SHALL VERIFY THE EXISTING POLE DIMENSIONS AND MATERIALS ARE CONSISTENT WITH THE DETAILS.

SCALE: 1"=20'

LINE TABLE		
LINE #	LENGTH	DIRECTION
L1	276.28'	N10° 31' 29"W
L2	14.50'	S79° 28' 21"W
L3	35.12'	N10° 31' 32"W
L4	20.00'	N10° 31' 40"W
L5	153.59'	N10° 31' 40"W
L6	16.23'	N69° 51' 12"E
L7	264.03'	N10° 31' 39"W

LINE TABLE		
LINE #	LENGTH	DIRECTION
L8	235.97'	N10° 31' 57"W
L9	200.00'	N69° 51' 12"E
L10	10.00'	N10° 31' 39"W
L11	102.15'	N10° 31' 39"W

CURVE TABLE				
CURVE #	RADIUS	DELTA	LENGTH	TANGENT
C1	4.50'	090°00'00"	7.07'	4.50'
C2	5.00'	059°59'34"	5.24'	2.89'
C3	5.00'	059°59'34"	5.24'	2.89'
C4	5.00'	059°59'50"	5.24'	2.89'
C5	5.00'	059°59'50"	5.24'	2.89'
C6	20.00'	080°22'52"	28.06'	16.90'
C7	10.33'	037°52'47"	6.83'	3.55'

CURVE TABLE				
CURVE #	RADIUS	DELTA	LENGTH	TANGENT
C8	10.33'	037°52'47"	6.83'	3.55'
C10	10.00'	039°11'42"	6.84'	3.56'
C11	10.00'	039°11'42"	6.84'	3.56'

POINT TABLE		
POINT #	NORTHING	EASTING
1001	1836243.78	6493150.14

BUREAU OF ENGINEERING — OFFICIAL RECORD

0 10' 20' 40'

PLANS PREPARED BY:
TETRA TECH, INC.
707 WILSHIRE BLVD, 23RD FLR.
LOS ANGELES, CA 90017
PHONE: (213) 239-3866

CITY OF LOS ANGELES — DEPARTMENT OF PUBLIC WORKS

VERT. CONTROL: BM 12-04070, 1929 (NGVD29) - 1985 ADJUSTMENT
HORIZ. CONTROL: GPS; PID AE 1704, EPOCH 1991.35

SHEET TITLE: STREET IMPROVEMENTS MISSION ROAD
PROJECT: SIXTH STREET PARK, ARTS AND RIVER CONNECTIVITY IMPROVEMENTS (PARC)
ADDRESS: SIXTH STREET OVER THE LOS ANGELES RIVER

CITY ENGINEER: DATE: 07/11/22 LIC. NO. C-85736
ENGINEER: JUSTIN SMITH
DESIGNED BY: JUSTIN SMITH
DRAWN BY: TYLER PARRA
CHECKED BY: NATE SCHREINER
APPROVED BY: JASON L. FUSSEL
DESIGN GROUP

WORK ORDER NO. E700235D
FILE NO. --
DRAWING NO. C-501
SHEET 57 OF 295 SHEETS

BUREAU OF ENGINEERING — CITY OF LOS ANGELES — ENGINEERING

TED ALLEN, P.E.

NO. | REVISIONS: | DATE | BY:

BUILDING NO.

INDEX NO. MF-300501

THIS PLAN WAS ELECTRONICALLY SIGNED AND STAMPED

PROFESSIONAL ENGINEER — REGISTERED — JUSTIN T. SMITH — No. 85736 EXP: 9-30-22 — CIVIL — STATE OF CALIFORNIA

THE CITY OF LOS ANGELES OR ITS OFFICERS OR AGENTS SHALL NOT BE RESPONSIBLE FOR THE ACCURACY OR COMPLETENESS OF ELECTRONIC COPIES OF THIS PLAN SHEET.

REVISION DATES (DESIGN STAGE ONLY)

Sheet Version 3.0

7/12/2022 1:39:36 AM - O:\PROJECTS\IRVINE2\0043\20-20043-17001\CAD\SHEETFILES\C-501_STREET IMPROVEMENTS_MISSION RD - TT.DWG - SMITH, JUSTIN

THE CITY OF LOS ANGELES OR ITS OFFICERS OR AGENTS SHALL NOT BE RESPONSIBLE FOR THE ACCURACY OR COMPLETENESS OF ELECTRONIC COPIES OF THIS PLAN SHEET.

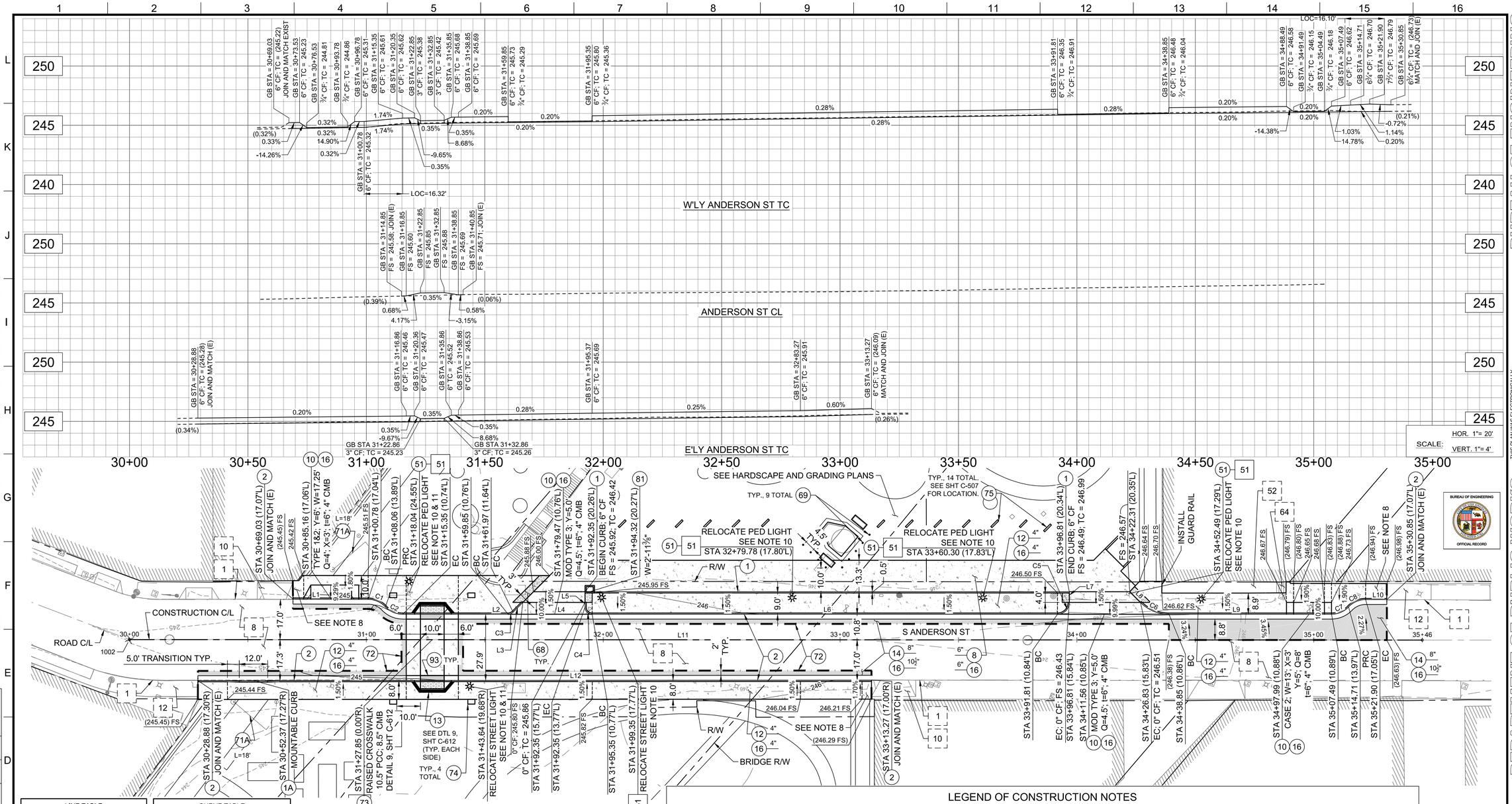

LINE TABLE		
LINE #	LENGTH	DIRECTION
L1	31.75	N20° 05' 05.96"W
L2	44.50	N20° 09' 48.75"W
L3	5.83	N65° 09' 48.60"W
L4	35.50	N20° 09' 48.75"W
L5	2.00	N69° 50' 11.25"E
L6	196.46	N20° 09' 48.75"W
L7	4.50	S69° 50' 11.25"W
L8	6.39	N24° 50' 11.25"E
L9	68.64	N20° 09' 48.75"W
L10	8.95	N20° 18' 07.11"W
L11	545.85	N20° 08' 32.64"W
L12	284.39	N20° 12' 05.72"W

CURVE TABLE			
CURVE #	LENGTH	RADIUS	DELTA
C1	8.15	10.00	46.70
C2	8.16	10.00	46.78
C3	2.36	3.00	45.00
C4	4.71	3.00	90.00
C5	7.85	5.00	90.00
C6	13.35	17.00	45.00
C7	8.06	10.00	46.19
C8	8.04	10.00	46.05

POINT TABLE		
PT#	NORTHING	EASTING
1002	1835948.31	6494046.03

GENERAL NOTES:

1. SEE DEMOLITION PLANS FOR REMOVALS, RELOCATIONS, OR PROTECTIONS OF (E) FEATURES.
2. SEE STRIPING AND SIGNAGE PLANS FOR (P) STRIPING AND SIGNAGE IMPROVEMENTS.
3. SEE UTILITY PLANS FOR (P) UTILITY RELOCATIONS NOT SHOWN ON THIS SHEET.
4. SEE DETAIL SHEET C-603 FOR TYPICAL STREET SECTIONS.
5. SEE LANDSCAPE PLANS FOR (P) SITE GRADING.
6. SIDEWALK AT PROPOSED DRIVEWAY AND MOUNTABLE CURB LOCATIONS TO BE 6" THICK.
7. CONSTRUCT JOINTS PER SPPWC 112-2 AND APPLICABLE STD PLANS.
8. RECONSTRUCT SIDEWALK PANEL TO TRANSITION TO EXISTING SIDEWALK WITH NON-ADA COMPLIANT CROSS SLOPES.
9. SIDEWALK CROSS SLOPES SHALL NOT EXCEED 2%.
10. REMOVE AND RECONSTUCT EXISTING LIGHT POLES AT THE NEW LOCATIONS SHOWN, INCLUDING THE RECONSTRUCTION OF THE EXISTING CONDUIT AND WIRING AS NEEDED. CONTRACTOR SHALL COORDINATE WITH THE CITY'S BUREAU OF STREET LIGHTING (BSL) PRIOR TO PERFORMING THE WORK. PEDESTRIAN LIGHT FOOTINGS SHALL BE RECONSTRUCTED PER DTL 4, SHT C-608, WHILE STREET LIGHT FOOTINGS SHALL BE RECONSTRUCTED PER CALTRANS RSP ES-6A. CONTRACTOR SHALL VERIFY THE EXISTING POLE DIMENSIONS AND MATERIALS ARE CONSISTENT WITH THE DETAILS.
11. CONTRACTOR SHALL UPGRADE THE LIGHT POLE FIXTURE HEAD. NEW FIXTURE HEAD REQUIREMENTS TO BE PROVIDED BY BSL.

LEGEND OF CONSTRUCTION NOTES

CONSTRUCT | REMOVE | REMODEL | WORK BY OTHERS | EXISTING-PROTECT IN PLACE | REMOVE & RECONSTRUCT

NO.	CONSTRUCTION ITEM/NOTE	STANDARD PLAN	NO.	CONSTRUCTION ITEM/NOTE	STANDARD PLAN
1	TYPE A CONCRETE CURB	S-410-2	68	DETECTABLE WARNING SURFACE	DTL 8, SHT C-601
1A	TYPE D CONCRETE CURB	S-410-2	69	FIXED BOLLARD	DTL 2, SHT C-601
2	TYPE C INTEGRAL CURB & GUTTER	S-410-2	71A	SWING GATE	DTL 1, SHT C-611
8	CONCRETE PAVEMENT	DTL 3 & 7, SHT C-600	72	SAWCUT LINE; JOIN EXISTING	DTL 2, 5, 6, SHT C-600
10	CONCRETE DRIVEWAY	S-440-4	73	RAISED CROSSWALK	BOE DTL 600
12	CONCRETE WALK	S-444-0; DTL 4, SHT C-600	74	HISTORIC LIGHT POLE	DTL 7, SHT C-601
14	ASPHALT CONCRETE PAVEMENT	DTL 1, SHT C-600	75	WHEEL STOP	DTL 4, SHT C-601
16	UNTREATED BASE MATERIAL	SEE PVMT DTL	81	CURBSIDE GRATING BASIN (CGB)	SPPWC 303-3
28	CURB AND SIDEWALK JOINT	SPPWC 112-2	93	RAISED CROSSWALK CULVERT WITH STEEL PLATE COVER	DTL 3, SHT C-614
31	PIPE HANDRAIL	S-463-3			
51	LIGHT POLE	DTL 4, SHT C-608 / CALTRANS RSP ES-6A			
52	ELEVATED LANDING	-			
64	STAIRS	-			

LEGEND:

PORTLAND CEMENT CONC. SIDEWALK/PVMT | AC PAVEMENT | SAWCUT

REVISION DATES (DESIGN STAGE ONLY)

PLANS PREPARED BY:
TETRA TECH, INC.
707 WILSHIRE BLVD, 23RD FLR.
LOS ANGELES, CA 90017
PHONE: (213) 239-8866

BUREAU OF ENGINEERING
OFFICIAL RECORD

ENGINEERING
CITY OF LOS ANGELES

BUREAU OF ENGINEERING

NO.	REVISIONS:	DATE	BY:

BUILDING NO.

INDEX NO. MF-300501

PROFESSIONAL ENGINEER * JUSTIN T. SMITH * No. 85736 EXP: 9-30-22 * CIVIL * STATE OF CALIFORNIA

THIS PLAN WAS ELECTRONICALLY SIGNED AND STAMPED

CITY OF LOS ANGELES DEPARTMENT OF PUBLIC WORKS

CITY ENGINEER: TED ALLEN, P.E. DATE: 07/11/22 LIC. NO. C-85736

DESIGN GROUP

ENGINEER:	JUSTIN SMITH	
DESIGNED BY:	JUSTIN SMITH	
DRAWN BY:	DAVID LOPEZ	
CHECKED BY:	NATE SCHREINER	
APPROVED BY:	JASON L. FUSSEL	

VERT. CONTROL: BM 12-04070, 1929 (NGVD29) - 1985 ADJUSTMENT
HORIZ. CONTROL: GPS; PID AE 1704, EPOCH 1991.35

SHEET TITLE: STREET IMPROVEMENTS ANDERSON STREET

PROJECT: SIXTH STREET PARK, ARTS AND RIVER CONNECTIVITY IMPROVEMENTS (PARC)

ADDRESS: SIXTH STREET OVER THE LOS ANGELES RIVER

WORK ORDER NO. E700235D

FILE NO. --

DRAWING NO. C-502

SHEET 58 OF 295 SHEETS

7/11/2022 9:31:24 PM - O:\PROJECTS\IRVINE\2004\3\200-20043-17001\CAD\SHEETFILES\C-502_STREET IMPROVEMENTS_ANDERSON ST - TT.DWG - SMITH, JUSTIN

Sheet Version 3.0

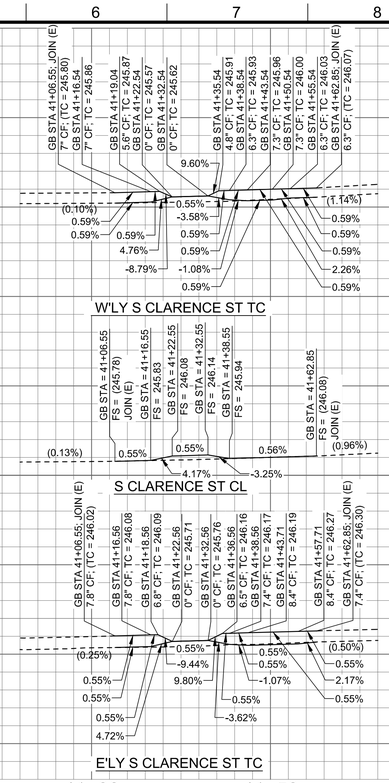

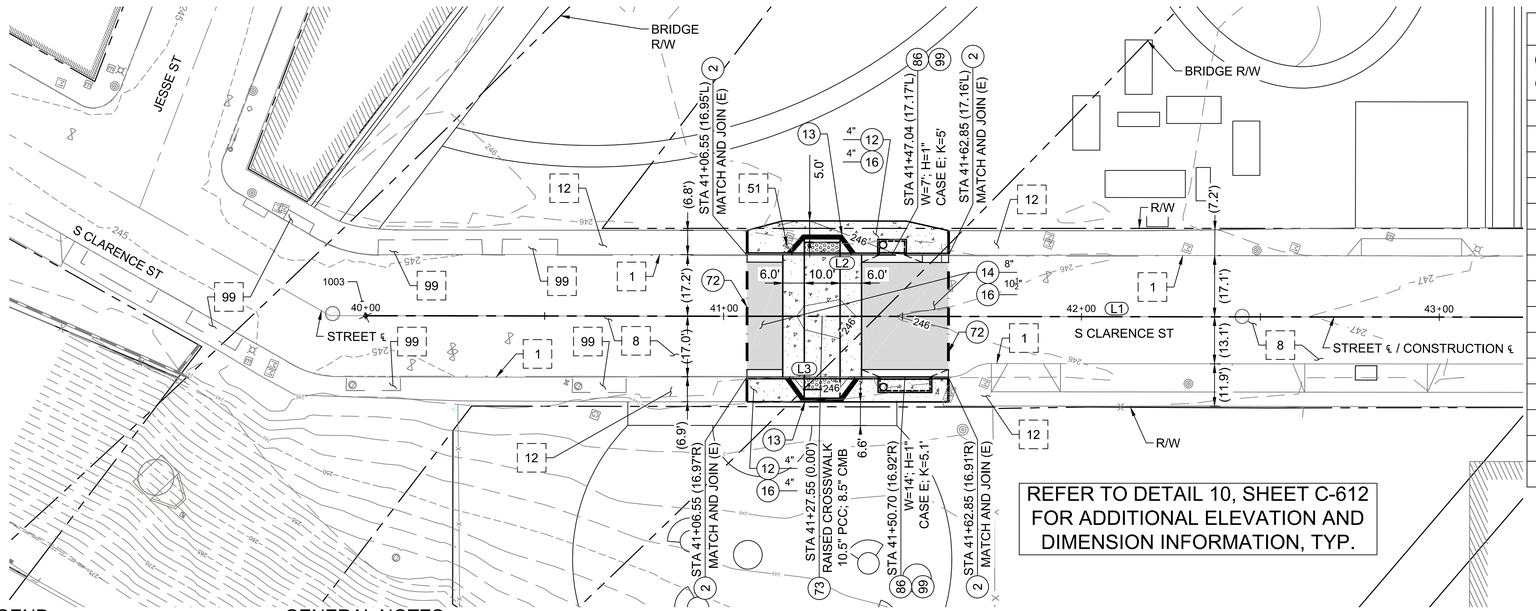

REFER TO DETAIL 10, SHEET C-612 FOR ADDITIONAL ELEVATION AND DIMENSION INFORMATION, TYP.

LEGEND OF CONSTRUCTION NOTES

CONSTRUCT | REMOVE | REMODEL
WORK BY OTHERS | EXISTING-PROTECT IN PLACE | REMOVE & RECONSTRUCT

NO.	CONSTRUCTION ITEM/NOTE	STANDARD PLAN
1	TYPE A CONCRETE CURB	S-410-2
2	TYPE C INTEGRAL CURB & GUTTER	S-410-2
8	CONCRETE PAVEMENT	DTL 3 & 7, SHT C-600
10	CONCRETE DRIVEWAY	S-440-4
12	CONCRETE WALK	S-444-0; DTL 4, SHT C-600
13	CURB RAMP	S-442-6
14	ASPHALT CONCRETE PAVEMENT	DTL 1, SHT C-600
16	UNTREATED BASE MATERIAL	SEE PVMT DTL
28	CURB AND SIDEWALK JOINT	SPPWC 112-2
51	LIGHT POLE	-
72	SAWCUT LINE; JOIN EXISTING	DTL 2, 5, 6, SHT C-600
73	RAISED CROSSWALK	BOE DTL 600
86	WARPED GUTTER AT CATCH BASIN	SPPWC 313-4
99	SIDE OPENING CATCH BASIN	SPPWC 300-4

LEGEND:

PORTLAND CEMENT CONC.

ASPHALT CONC. PAVEMENT

SAWCUT

GENERAL NOTES:

1. SEE DEMOLITION PLANS FOR REMOVALS, RELOCATIONS, OR PROTECTIONS OF (E) FEATURES.
2. SEE STRIPING AND SIGNAGE PLANS FOR (P) STRIPING AND SIGNAGE IMPROVEMENTS.
3. SEE UTILITY PLANS FOR (P) UTILITY RELOCATIONS AND IMPROVEMENTS NOT SHOWN ON THIS SHEET.
4. SEE DETAIL SHEET C-603 FOR TYPICAL STREET SECTIONS.
5. SEE LANDSCAPE PLANS FOR (P) SITE GRADING.
6. SIDEWALK AT PROPOSED DRIVEWAY LOCATIONS TO BE 6" THICK.
7. PROPOSED WORK AREA OVERLAPS WITH THE SEPARATE VIADUCT AND ATP-2 IMPROVEMENTS. PARC CONTRACTOR SHALL VERIFY EXISTING FIELD CONDITIONS AND NOTIFY THE ENGINEER OF DISCREPANCIES.
8. CONSTRUCT JOINTS PER SPPWC 112-2 AND APPLICABLE STD PLANS.

POINT TABLE		
PT#	NORTHING	EASTING
1003	1835924.42	6494374.50

LINE TABLE		
LINE #	LENGTH	DIRECTION
L1	300.00'	N20° 08' 03.75"W
L2	56.30'	N20° 06' 41.76"W
L3	56.30'	N20° 11' 40.27"W

HOR. 1"= 20'
SCALE:
VERT. 1"= 4'

0 10' 20' 40'
SCALE: 1"=20'

PLANS PREPARED BY:
TETRA TECH, INC.
707 WILSHIRE BLVD, 23RD FLR.
LOS ANGELES, CA 90017
PHONE: (213) 239-9866

BUREAU OF ENGINEERING
OFFICIAL RECORD

ENGINEERING
CITY OF LOS ANGELES

BUREAU OF ENGINEERING
NO. | REVISIONS: | DATE | BY:

BUILDING NO.

INDEX NO. MF-300501

THIS PLAN WAS ELECTRONICALLY SIGNED AND STAMPED.

PROFESSIONAL ENGINEER
REGISTERED
JUSTIN T. SMITH
No. 85736
EXP: 9-30-22
CIVIL
STATE OF CALIFORNIA

CITY OF LOS ANGELES DEPARTMENT OF PUBLIC WORKS

CITY ENGINEER: TED ALLEN, P.E.
DATE:
DESIGN GROUP
ENGINEER: JUSTIN SMITH
LIC. NO. C-85736 07/11/22
DESIGNED BY: JUSTIN SMITH
DRAWN BY: DAVID LOPEZ
CHECKED BY: NATE SCHREINER
APPROVED BY: JASON L. FUSSEL

VERT. CONTROL: BM 12-04070, 1929 (NGVD29) - 1985 ADJUSTMENT
HORIZ. CONTROL: GPS; PID AE 1704, EPOCH 1991.35

SHEET TITLE: STREET IMPROVEMENTS S CLARENCE STREET
PROJECT: SIXTH STREET PARK, ARTS AND RIVER CONNECTIVITY IMPROVEMENTS (PARC)
ADDRESS: SIXTH STREET OVER THE LOS ANGELES RIVER

WORK ORDER NO. E700235D
FILE NO. --
DRAWING NO. C-503
SHEET 59 OF 295 SHEETS

7/8/2022 11:20:22 AM - O:\PROJECTS\IRVINE\20043\20-20043-17001\CAD\SHEETFILES\C-503_STREET IMPROVEMENTS_S CLARENCE ST - TT.DWG - SMITH, JUSTIN

REVISION DATES (DESIGN STAGE ONLY)

THE CITY OF LOS ANGELES OR ITS OFFICERS OR AGENTS SHALL NOT BE RESPONSIBLE FOR THE ACCURACY OR COMPLETENESS OF ELECTRONIC COPIES OF THIS PLAN SHEET.

Sheet Version 3.0

WORKSITE TRAFFIC CONTROL PLAN NOTES

1. THE CONTRACTOR SHALL BE RESPONSIBLE FOR LABOR AND MATERIAL INVOLVED IN THE REMOVAL, INSTALLATION, AND MAINTENANCE OF ALL STRIPING, PAVEMENT MARKINGS, SIGNS, BARRICADES, DELINEATORS, ETC., SHOWN ON THESE PLANS AND AS CONSTRUCTION STAGING NECESSITATES. STRIPING AND PAVEMENT MARKINGS SHALL BE REMOVED BY WET SANDBLASTING/GRINDING IN ACCORDANCE WITH THE CITY OF LOS ANGELES DEPARTMENT OF TRANSPORTATION (LADOT) SPECIFICATION NO. 79-016-10. PAINTING THE EXISTING STRIPING OVER WITH BLACK PAINT IS NOT PERMITTED. TEMPORARY REFLECTIVE PAVEMENT MARKERS (SEE LADOT STANDARD PLAN S-453.0) SHALL BE MAINTAINED BY THE CONTRACTOR ADJACENT TO THE SCAR OF THE SANDBLASTED CENTERLINE OR TAPED-OVER CENTERLINE. THERMOPLASTIC SHALL BE USED FOR ALL ROUGH AND UNEVEN SURFACES AND AS REQUIRED BY LADOT ENGINEER. PAINT MAY BE USED ON SMOOTH SURFACES. DETOUR TAPE IS NOT PERMITTED.
2. CONTRACTOR SHALL CONTACT THE LADOT TEMPORARY TRAFFIC MANAGMENT SECTION'S JON.PALOS@LACITY.ORG AT LEAST 15 WORKING DAYS (TO INSPECT MARK OUT) PRIOR TO THE INSTALLATION OF ANY TEMPORARY STRIPING FOR ALL CONSTRUCTION STAGES. DEPARTMENT OF TRANSPORTATION RESERVES THE RIGHT TO OBSERVE THE TRAFFIC CONTROL PLANS IN USE AND TO MAKE NECESSARY CHANGES AS FIELD CONDITIONS WARRANT. ANY CHANGES SHALL SUPERSEDE THESE PLANS. THE CONTRACTOR SHALL BE RESPONSIBLE FOR THE PLACEMENT OF ANY ADDITIONAL TRAFFIC CONTROL DEVICES NECESSARY TO ENSURE PUBLIC SAFETY AT ALL TIMES DURING CONSTRUCTION.
3. ALL CONSTRUCTION RELATED WARNING SIGNS SHALL BE IN BLACK LEGEND WITH ORANGE BACKGROUND AND IN CONFORMANCE WITH THE CALIFORNIA MANUAL ON UNIFORM TRAFFIC CONTROL DEVICES (CA M.U.T.C.D.) LATEST EDITION.
4. THE STRIPING AND SIGNING SHOWN FOR REMOVAL ON THESE PLANS MAY BE DIFFERENT THAN WHAT EXISTS AT TIME OF INSTALLATION OF A CONSTRUCTION STAGE. THE CONTRACTOR SHALL REMOVE ALL CONFLICTING SIGNING AND STRIPING, WHETHER OR NOT IT IS DEPICTED ACCURATELY ON THESE PLANS.
5. CONTRACTOR SHALL NOTIFY THE METROPOLITAN TRANSPORTATION AUTHORITY (METRO) AT (213) 922-4632 OR ANY OTHER AFFECTED TRANSIT SERVICES AT LEAST FIVE WORKING DAYS PRIOR TO CONSTRUCTION.
6. ALL TRAFFIC CONTROL DEVICES SHALL BE KEPT IN THEIR PROPER POSITION AT ALL TIMES, AND SHALL BE REPAIRED, REPLACED OR CLEANED AS NECESSARY TO PRESERVE THEIR APPEARANCE AND CONTINUITY.
7. CONTRACTORS SHALL PROVIDE FLAGGERS AS DEEMED NECESSARY BY CITY. A FLAGGER SHALL USE ONLY THE APPROVED OCTAGONAL STOP/ SLOW PADDLE, SHALL WEAR AN ORANGE SAFETY VEST (PADDLE AND VEST MUST BE RETLECTORIZED FOR NIGHT WORK) AND HARD HAT, AS REQUIRED BY THE WATCH MANUAL, AND MUST BE PROPERLY TRAINED BY THE CONTRACTOR IN PERFORMING THE WORK SAFELY. APPROPRIATE ADVANCE SIGNS MUST ALSO BE INSTALLED, PER THE WATCH MANUAL.
8. ALL TEMPORARY TRAFFIC CONTROL DEVICES SHALL BE REMOVED FOLLOWING COMPLETION OF EACH CONSTRUCTION STAGE AND THE PERMANENT TRAFFIC CONTROL DEVICES SHALL BE RESTORED BY THE CONTRACTOR UPON REMOVAL OF DETOUR STRIPING.
9. ALL SIGNS, DELINEATORS, BARRICADES, ETC., SHALL CONFORM TO THE CALIFORNIA MUTCD (LATEST EDITION), AND THE BROWN BOOK.
10. CONTRACTOR SHALL NOTIFY LADOT'S SIGNAL MAINTENANCE SUPERVISOR AT (213) 485-7721 FIVE (5) WORKING DAYS PRIOR TO ANY EXCAVATION OR CONSTRUCTION WITHIN 10-FEET OF EXISTING TRAFFIC SIGNAL DETECTOR LOOPS, CONDUIT, INTERCONNECTS, OR ATSAC FIBER OPTIC CABLE.
11. ANY DAMAGE TO TRAFFIC SIGNAL DETECTOR LOOPS, CONDUITS, INTERCONNECTS, OR FIBER OPTIC CABLE SHALL BE REPAIRED IMMEDIATELY BY THE CONTRACTOR AT THEIR OWN EXPENSE. DELAYS IN REPAIR OF INTERCONNECT OR ATSAC FIBER OPTIC CABLE WILL REQUIRE THE PAYMENT OF LIQUIDATION DAMAGES TO THE CITY OF LOS ANGELES DEPARTMENT OF TRANSPORTATION. IMMEDIATELY NOTIFY LADOT SIGNAL REPAIR PERSONNEL AT (213) 485-7721 OF ANY DAMAGES.
12. THERE SHALL BE NO STORAGE OF CONSTRUCTION MATERIALS OR EQUIPMENT OUTSIDE THE DESIGNATED WORK AREA AS INDICATED IN THE WTCP. STORAGE OF CONSTRUCTION MATERIALS OR EQUIPMENT WITHIN THE DESIGNATED AREA SHALL BE DONE IN A MANNER NOT TO CREATE VISIBILITY OBSTRUCTIONS TO THE MOTORING PUBLIC.
13. CONTRACTOR SHALL MAINTAIN ACCESS TO ALL FUNCTIONAL DRIVEWAYS AT ALL TIMES AND SHALL COORDINATE ANY CLOSURE OR ACCESS RESTRICTION TO DRIVEWAYS WITH RESIDENTS, BUSINESSES, AND ALL OTHER STAKEHOLDERS. IF CONSTRUCTION NECESSITATES ANY CLOSURE OR ACCESS RESTRICTION, CONTRACTOR SHALL NOTIFY THE CITY AND SHALL REVISE WORKSITE TRAFFIC CONTROL PLANS TO CHANGE SET UP AND ALLOW ACCESS TO A DRIVEWAY THAT IS SHOWN BLOCKED. REVISED TRAFFIC CONTROL PLANS SHALL BE PREPARED PER LADOT STANDARDS, SIGNED AND SEALED BY REGISTERED TRAFFIC AND CIVIL ENGINEERS AND SUBMITTED TO LADOT FOR APPROVAL.
14. CONTRACTOR SHALL PERFORM WORK IN ONLY ONE STAGE AT A TIME. THE CONTRACTOR SHALL ONLY UTILIZE THAT PORTION OF THE DESIGNATED "WORK AREA" WHICH IS NEEDED FOR CONSTRUCTION AT ANY GIVEN TIME.
15. THE CROSSWALKS ACROSS THREE LEGS OF ANY SIGNALIZED INTERSECTION SHALL BE MAINTAINED AT ALL TIMES. "NO PED CROSSING" (R9-3) SIGNS SHALL BE INSTALLED WHEN A PAINTED CROSSWALK IS UNAVAILABLE FOR USE DUE TO CONSTRUCTION AND ALL AFFECTED PEDESTRIAN SIGNAL HEADS SHALL BE COVERED/REMOVED PER CALIFORNIA MUTCD.
16. CONTRACTOR SHALL INSTALL R3-18 (NO LEFT AND NO U-TURN) SIGNS AT INTERSECTIONS WHERE THE LEFT TURN LANE HAS BEEN CLOSED FOR CONSTRUCTION. SIGNS SHOULD BE INSTALLED ON MASTARMS AND FAR LEFT OF THE INTERSECTION OR AT LOCATIONS WHERE THEY WILL BE CLEARLY VISIBLE BY THE THRU TRAFFIC.
17. FOR OTHER REQUIREMENTS RELATED TO TRAFFIC CONTROL PLANS AND WORK AREA MAINTENANCE, THE CONTRACTOR SHALL FOLLOW THE CALIFORNIA MUTCD (LATEST EDITION) AND WATCH MANUAL (LATEST EDITION) ADOPTED BY THE CITY, AND ALL RELATED SECTIONS OF THE STANDARD SPECIFICATIONS FOR PUBLIC WORKS CONSTRUCTION, INCLUDING SECTION 7-10 "PUBLIC CONVENIENCE AND SAFETY," AND 302-4.4 "PUBLIC CONVENIENCE AND TRAFFIC CONTROL."
18. WHEN DESIGNATED ON THESE PLANS, THE CONTRACTOR SHALL FURNISH AND INSTALL METAL AND RETLECTORIZED "TOW AWAY NO STOPPING ANY TIME" "T.A.N.S.A.T." SIGNS PER DEPARTMENT SPECIFICATIONS. IN ADDITION, THE CONTRACTOR SHALL NOTIFY LADOT'S SPECIAL TRAFFIC CONTROLS OFFICE AT (213) 485-2298 AT LEAST 7 WORKING DAYS IN ADVANCE, OF THE INSTALLATION OF T.A.N.S.A.T. SIGNS. THE INSTALLATION OF T.A.N.S.A.T. SIGNS AT PARKING METER ZONES SHALL ALSO INCLUDE REMOVING METER HEADS AND THE ASSOCIATED PARKING RESTRICTION.
19. PRIOR TO THE REMOVAL OF AN EXISTING CURB/SIDEWALK IN A PARKING METER ZONE CONTRACTOR SHALL CONTACT LADOT PARKING METER SUPERVISOR AT (213) 485-4230 FOR METER HEAD REMOVAL.
20. CONTRACTOR SHALL BE RESPONSIBLE FOR THE RESTORATION OF THE STRIPING AND PAVEMENT MARKINGS TO THE ORIGINAL CONDITION USING THERMOPLASTIC MATERIALS, UNLESS OTHERWISE INSTRUCTED BY LADOT. LADOT WILL INSPECT AND APPROVE ANY CONTRACTOR MARKOUT BEFORE THE FINAL INSTALLATION OF STRIPING BY THE CONTRACTOR. NOTIFY JON PALOS FROM THE LADOT TEMPORARY TRAFFIC MANAGMENT SECTION FIFTEEN (15) WORKING DAYS PRIOR TO PROJECT COMPLETION DATE AT JON.PALOS@LACITY.ORG.
21. LOCATION AND SPACING OF TEMPORARY SIGNS AND DELINEATORS SHALL CONFORM TO THE CALIFORNIA MUTCD (LATEST EDITION) AND AS DIRECTED BY THE LADOT ENGINEER.
22. CONTRACTOR SHALL PROVIDE CHANGEABLE MESSAGE SIGNS/FLASHING ARROW BOARDS AND CONES/BARRICADES AS FIELD CONDITIONS/DETOURS WARRANT AND AS DEEMED NECESSARY BY LADOT, EVEN IF THEY ARE NOT SHOWN ON THESE PLANS.
23. UNLESS K-RAILS AND CRASH CUSHIONS ARE INSTALLED, CONTRACTOR SHALL PROVIDE MIN. 5' SHOULDER FROM ANY OPEN EXCAVATION PER CALIFORNIA MUTCD.
24. ALL K-RAIL ENDS, PLATFORMS AND FIXED OBJECTS SHALL BE PROTECTED BY CRASH CUSHIONS OR BY A QUADGUARD SYSTEM, UNLESS THEY ARE PLACED 15' AWAY FROM EDGE OF TRAVEL WAY. FOR A 20' K-RAIL MAX. HORIZONTAL DISTANCE DISPLACED CAN NOT EXCEED 5'/K-RAIL, OR A TAPER RATE SHALL NOT EXCEED 1/4.
25. NOTIFY FILM LA (JOSH MINGO) AT (213)977-8600 AT LEAST (5) WORKING DAYS PRIOR TO CONSTRUCTION TO COORDINATE WITH FILMING ACTIVITIES.
26. ALL TEMPORARY SIGNAGE INSTALLED ADJACENT TO PEDESTRIAN TRAVEL WAY MUST ALLOW FOR ADA-COMPLIANT PASSAGEWAYS.
27. CONCRETE K-RAIL SECTIONS SHALL BE CONTINUOUSLY CONNECTED. IN AREAS WITH LESS THAN 2-FEET OF EXCAVATION, SECURE K-RAIL TO PAVEMENT PER CALTRANS SPECIFICATIONS.
28. ANY CHANGES TO WORK AREAS, WORK HOURS, AND/OR APPROVED PLANS SHALL BE SUBMITTED TO LADOT FOR REVIEW AND APPROVAL.
29. THE CONTRACTOR SHALL BE RESPONSIBLE FOR STRIPING (PROPOSED AND EXISTING) SHOWN ON THESE PLANS TO BE IN GOOD CONDITION AND VISIBLE. THE CONTRACTOR SHALL REPAINT ANY FADED EXISTING STRIPING AS DIRECTED BY THE LADOT ENGINEER.
30. THE CONTRACTOR SHALL BE RESPONSIBLE FOR REPLACING ANY MISSING OR DAMAGED SIGNS (DUE TO CONSTRUCTION) ACCORDING TO THE LATEST LADOT SPECIFICATIONS.
31. LADOT HAS JURISDICTION FOR STRIPING/TRAFFIC CONTROL DEVICES WITHIN CITY RIGHT OF WAY. CONTRACTOR SHALL OBTAIN APPROVAL FROM CALTRANS FOR STRIPING/TRAFFIC CONTROL DEVICES WITHIN OTHER CITIES, COUNTY, AND/OR STATE RIGHT OF WAY, AND FROM PROPERTY OWNERS FOR STRIPING/TRAFFIC CONTROL DEVICES WITHIN ANY PRIVATE PROPERTY.
32. IMPLEMENTATION OF THESE PLANS SHALL BE PERFORMED WITHIN ONE WORK PERIOD ON SATURDAY (8AM-6PM), OR FRIDAY 9PM THRU MONDAY 6AM (55 HOUR-SHIFT), UNLESS OTHERWISE APPROVED BY THE CITY OF LOS ANGELES DEPARTMENT OF PUBLIC WORKS.
33. ALL STREET CLOSURES MUST BE APPROVED BY THE BOARD OF PUBLIC WORKS (OR THEIR DESIGNEE). AN EXEMPTION OF THE MAYOR'S DIRECTIVE #2 (RUSH HOUR CONSTRUCTION ON ANY CITY STREETS) MUST BE APPROVED BY THE BUREAU OF ENGINEERING FOR ALL PEAK HOUR LANE CLOSURES ON ARTERIAL STREETS.

RESTORATION STRIPING NOTES

1. THE CONTRACTOR SHALL BE RESPONSIBLE FOR LABOR AND MATERIAL INVOLVED IN THE MARKOUT, AND INSTALLATION OF ALL RESTORATION STRIPING/PAVEMENT MARKINGS. THE CONTRACTOR SHALL ALSO BE RESPONSIBLE FOR REMOVAL OF ALL CONFLICTING DETOUR STRIPING, SIGNING, AND OTHER DETOUR-RELATED TRAFFIC CONTROL DEVICES PRIOR TO THE INSTALLATION OF THE FINAL STRIPING. IF THERE IS NO RESTORATION PLAN IN THIS PACKAGE, CONTRACTOR SHALL CONTACT LADOT GEOMETRIC DESIGN FOR THE LATEST STRIPING PLANS.
2. THE CONTRACTOR SHALL BE RESPONSIBLE FOR THE REPAINTING OF ALL EXISTING STRIPING THAT HAS BEEN DAMAGED DURING THE CONSTRUCTION PROCESS.
3. MARKOUT SHALL BE BY HEAVY PAINT BRUSH MARKINGS OVER A PULLED ROPE IN THE RESPECTIVE WHITE AND YELLOW COLORS OF THE PROPOSED STRIPING. STRIPING AND PAVEMENT MARKINGS SHALL BE IN HOT APPLIED ALKYD THERMOPLASTIC IN ACCORDANCE WITH LADOT SPECIFICATION NOS. 51-005-10 AND 76-012-15. PRIMER AND SEALERS ARE REQUIRED AND SHALL CONFORM TO LADOT SPECIFICATION NO. 76-012-15.
4. THE CONTRACTOR SHALL CONTACT JON PALOS FROM THE LADOT MAJOR CONSTRUCTION TEMPORARY TRAFFIC MANAGEMENT SECTION AT JON.PALOS@LACITY.ORG AT LEAST 15 WORKING DAYS BEFORE BEGINNING MARKOUT. THE CONTRACTOR SHALL CORRECT ALL ERRORS IN MARKOUT REQUESTED BY LADOT. THE INSTALLATION OF THERMOPLASTIC STRIPING MAY PROCEED ONLY AFTER APPROVAL OF MARKOUT BY THE LADOT TEMPORARY TRAFFIC MANAGEMENT SECTION THAT CAN BE CONTACTED AT JON.PALOS@LACITY.ORG.
5. TEMPORARY RETLECTIVE RAISED PAVEMENT MARKERS SHALL BE MAINTAINED ADJACENT TO ANY TEMPORARY CENTERLINE, MARKOUT CENTERLINE OR SCAR OF A SANDBLASTED CENTERLINE, AS APPLICABLE, AS PER LADOT STANDARD PLAN NO. S-453.0.

TEMPORARY STRIPING NOTES

1. REMOVE ALL CONFLICTING STRIPING PRIOR TO INSTALLATION OF WTCP.
2. WHEN REMOVAL IS REQUIRED BY CONSTRUCTION, CROSSWALK MARKINGS AND PEDESTRIAN SIGNAL HEADS SHALL BE COVERED SIMULTANEOUSLY.
3. WHEN REQUIRED BY CONSTRUCTION, THE CONTRACTOR SHALL MAKE ARRANGEMENTS WITH LACMTA, OR THE APPROPRIATE TRANSIT OPERATION, FOR THE TEMPORARY RELOCATION OF BUS STOPS/ZONE.
4. CONTRACTOR SHALL PROVIDE RETLECTORIZED CONES AT TYPE III BARRICADE SUPPORTS TO ALERT PEDESTRIANS OF THE BARRICADE SUPPORT.
5. FIELD CONDITIONS MAY VARY FROM THOSE SHOWN ON THE WTCP. IN THE EVENT FIELD CONDITIONS ARE DIFFERENT, THE CONTRACTOR SHALL COORDINATE WITH LADOT AND L.A.B.O.E. BEFORE IMPLEMENTING THE WTCP. THE CONTRACTOR MAY BE REQUIRED TO SUBMIT A REVISED WTCP TO LADOT AND THE AUTHORITY FOR APPROVAL PRIOR TO IMPLEMENTATION.

PROPOSED STRIPING NOTES

1. THE CONTRACTOR SHALL BE RESPONSIBLE FOR LABOR AND MATERIAL INVOLVED IN THE REMOVAL, MARKOUT, AND INSTALLATION OF ALL STRIPING, PAVEMENT MARKINGS, AND SIGNS SHOWN HEREON. REMOVAL OF MARKINGS SHALL BE PERFORMED BEFORE MARKOUT AND INSTALLATION OF NEW STRIPING, AND SHALL BE BY WET SANDBLASTING/GRINDING IN ACCORDANCE WITH LADOT SPECIFICATION NO. 76-016-10. MARKOUT SHALL BE BY HEAVY PAINT BRUSH OR SPRAY PAINT OVER A PULLED ROPE IN THE RESPECTIVE WHITE OR YELLOW COLORS OF THE PROPOSED STRIPING. FINAL STRIPING AND PAVEMENT MARKINGS SHALL BE IN HOT APPLIED ALKYD THERMOPLASTIC IN ACCORDANCE WITH LADOT SPECIFICATIONS NOS. 51-005-10 AND 76-012-15.
2. THE INSTALLATION OF THERMOPLASTIC STRIPING MAY PROCEED ONLY AFTER INSPECTION AND APPROVAL OF MARKOUT BY THE LADOT CITYWIDE INVESTIGATIONS UNIT. THE CONTRACTOR SHALL CORRECT ALL ERRORS IN MARKOUT REQUESTED BY LADOT. UPON APPROVAL OF MARKOUT THE CONTRACTOR SHALL FULLY INSTALL THE THERMOPLASTIC STRIPING, PAVEMENT MARKINGS, (CURB MARKINGS, AND SIGNS-AS APPLICABLE) WITHIN THE FOLLOWING THREE (3) WORKING DAYS. THE CONTRACTOR SHALL CONTACT THE LADOT CITYWIDE INVESTIGATIONS UNIT AT (213) 928-9625 AT THE FOLLOWING POINTS IN TIME, AND FOR THE FOLLOWING PURPOSES:
   A. TEN (10) WORKING DAYS IN ADVANCE OF MARKOUT.
   B. UPON COMPLETION OF MARKOUT (INCLUDING ANY MARKOUT CORRECTIONS) FOR INSPECTION AND APPROVAL. UPON APPROVAL OF MARKOUT, THE CONTRACTOR SHALL INSTALL THE THERMOPLASTIC STRIPING WITHIN FIVE (5) WORKING DAYS.
   C. UPON COMPLETION OF THERMOPLASTIC STRIPING (INCLUDING ANY THERMOPLASTIC STRIPING CORRECTIONS) FOR INSPECTION AND FINAL STRIPING APPROVAL
3. DURING ALL PHASES OF CONSTRUCTION, TEMPORARY RAISED OVERLAY PAVEMENT MARKERS SHALL BE MAINTAINED ADJACENT TO THE TEMPORARY CENTERLINE, MARKOUT CENTERLINE, OR SCAR OF A SANDBLASTED CENTERLINE, AS APPLICABLE, AS PER LADOT STANDARD PLAN NO. S-453.0.
4. THE FIELD CONDITIONS SHOWN AS EXISTING ON THIS PLAN MAY CHANGE BETWEEN THE PLAN APPROVAL DATE AND THE IMPLEMENTATION DATE. THE CONTRACTOR MAY BE REQUIRED TO INSTALL OR REMOVE STRIPING, PAVEMENT MARKINGS, SIGNS OR OTHER TRAFFIC CONTROL DEVICES BEYOND THOSE INDICATED ON THIS PLAN, IN ORDER TO FACILITATE THESE CHANGES IN FIELD CONDITIONS AND/OR TO BE IN COMPLIANCE WITH LADOT STANDARDS AND SPECIFICATIONS. IF THIS PLAN HAS NOT BEEN INSTALLED WITHIN TWO (2) YEARS OF THE ACCEPTED DATE, IT SHALL BE RESUBMITTED TO LADOT FOR REAPPROVAL PRIOR TO PROCEEDING TO CONSTRUCTION.
5. REMOVAL AND REINSTALLATION OF PARKING METERS THE CONTRACTOR SHALL CONTACT THE LADOT PARKING METER ADMINISTRATOR AT (213) 473-8270 FIVE (5) WORKING DAYS IN ADVANCE OF CONSTRUCTION AFFECTING PARKING METERS. LADOT WILL COORDINATE THE REMOVAL OF PARKING METERS AND SIGNS AS NEEDED AND, UPON COMPLETION OF THE PROJECT, THE REINSTALLATION OF METERS, SIGNS, AND/OR PAINT AS NEEDED. REMOVE AND REINSTALLATION COSTS WILL BE DEDUCTED FROM THE CONTRACTORS DEPOSIT. FAILURE TO NOTIFY LADOT WILL MAKE THE CONTRACTOR LIABLE FOR THE COST OF ANY MISSING OR DAMAGED METERS, SIGNS, ETC., THAT THE DEPARTMENT RECORDS INDICATE WERE PRESENT.
6. REMOVE CONFLICTING STRIPING. INSTALL CONTINENTAL CROSSWALKS PER LADOT STD. DWG. NO. S-481.1.
7. CONTRACTOR SHALL INSPECT AND ENSURE THAT THE FINAL ROADWAY SURFACE IS IN GOOD CONDITION PRIOR TO BIKE LANE INSTALLATION.

LEGEND:

1. – EXISTING STRIPING & MARKINGS TO REMAIN
   – EXISTING STRIPING & MARKINGS TO BE REMOVED
   – PROPOSED STRIPING & MARKINGS
2. R/C – EXISTING RED CURB MARKINGS TO REMAIN
   R/C – EXISTING RED CURB MARKINGS TO BE REMOVED
   R/C – PROPOSED RED CURB MARKINGS
3. – EXISTING SIGN AND POST
   – EXISTING SIGN AND POST TO BE REMOVED/RELOCATED
   – PROPOSED SIGN AND POST
4. (S) – SIGNALIZED INTERSECTION
5. – DRIVEWAY

R5-1 DO NOT ENTER | R1-5(L) HERE TO | R1-5(R) HERE TO
R5-1A WRONG WAY | R9-7 KEEP LEFT | RIGHT | R9-7(MOD) KEEP LEFT | RIGHT
R6-1L ONE WAY | R9-6 YIELD TO PEDS | R10-25(CA) PUSH BUTTON TO TURN ON WARNING LIGHTS
R6-1R ONE WAY | R10-15(MOD "A") TURNING VEHICLES TO | R10-15(MOD "B") TURNING VEHICLES TO
R3-1 | R81A(CA) BEGIN | R81B(CA) END
R3-2 | R81(CA)(MOD) BIKE LANE | W11-2
R10-6 STOP HERE ON RED | W13-1(20) 20 MPH | W8-6(MOD) VEHICLE CROSSING
R2-1(30) SPEED LIMIT 30 | W13-1(15) 15 MPH | W16-9P AHEAD
R26L(CA) NO STOPPING ANY TIME | W16-7P(L) | W16-7P(R)
R10-23 CROSSWALK STOP ON RED | W17-1 SPEED HUMP | SIGN "A" AUTHORIZED VEHICLES ONLY
SIGN "B"(LT) NO STOPPING ANY TIME | SIGN "B"(RT) NO STOPPING ANY TIME
R1-1 STOP | W3-1 STOP AHEAD
R1-3P ALL WAY | R5-2
W2-6 | R25C(CA) PASSENGER LOADING ONLY

BUREAU OF ENGINEERING – OFFICIAL RECORD

SIXTH STREET PARC – RESTORATION PLAN S-504

REVIEWED _____ 20 ___ Transportation Engineer

ACCEPTED _____ 20 ___ Senior Transportation Engineer

INSTALLATION DATES
MARKOUT BEGAN:
MARKOUT COMPLETED:
STRIPING COMPLETED:
References:

Thomas Guide 634-H5,6 J5,6 | District

CITY OF LOS ANGELES
DEPARTMENT OF TRANSPORTATION
SELETA REYNOLDS, GENERAL MANAGER

SIGNING AND STRIPING NOTES

PROJECT NO. | DRAWING NO.

TETRA TECH
www.tetratech.com
707 WILSHIRE BLVD, 23RD FLR.
LOS ANGELES, CA 90017
PHONE: (213) 239-8866

PLAN RECOMMENDED BY :
REGISTERED TRAFFIC ENGINEER
DATE :

PLAN RECOMMENDED BY :
REGISTERED CIVIL ENGINEER
DATE : 07/11/22

REGISTERED PROFESSIONAL ENGINEER – JUSTIN T. SMITH – No. 85736 EXP: 9-30-22 – CIVIL – STATE OF CALIFORNIA

SCALE: 1"=40'

1"=20' ORIGINAL MAP SCALE 1"=40' — 20 10 0 20 40 60 80 100 FEET / 40 20 0 40 80 120 160 200 FEET

SCALES HORIZ. 1"= VERT. 1"=

SHEET 60 OF 295

INDEX NUMBER MF-300501

NO.	REVISION DESCRIPTION	BY	DATE
	PRINCIPAL T.E.		
	T.E./SR. T.E.		
	SIGNALS		
	DISTRICT		
	SUPERVISOR		
	DESIGN		
	CHECK		
	BASE		

CADD PROJECT FILE NAME: D:\Projects\Irvine\20043\200-20043-17001\CAD\SheetFiles\C-504_Signing and Striping Plan_Cover Sheet Notes - TT.dwg Jul 08, 2022 10:50am Justin.T.Smith

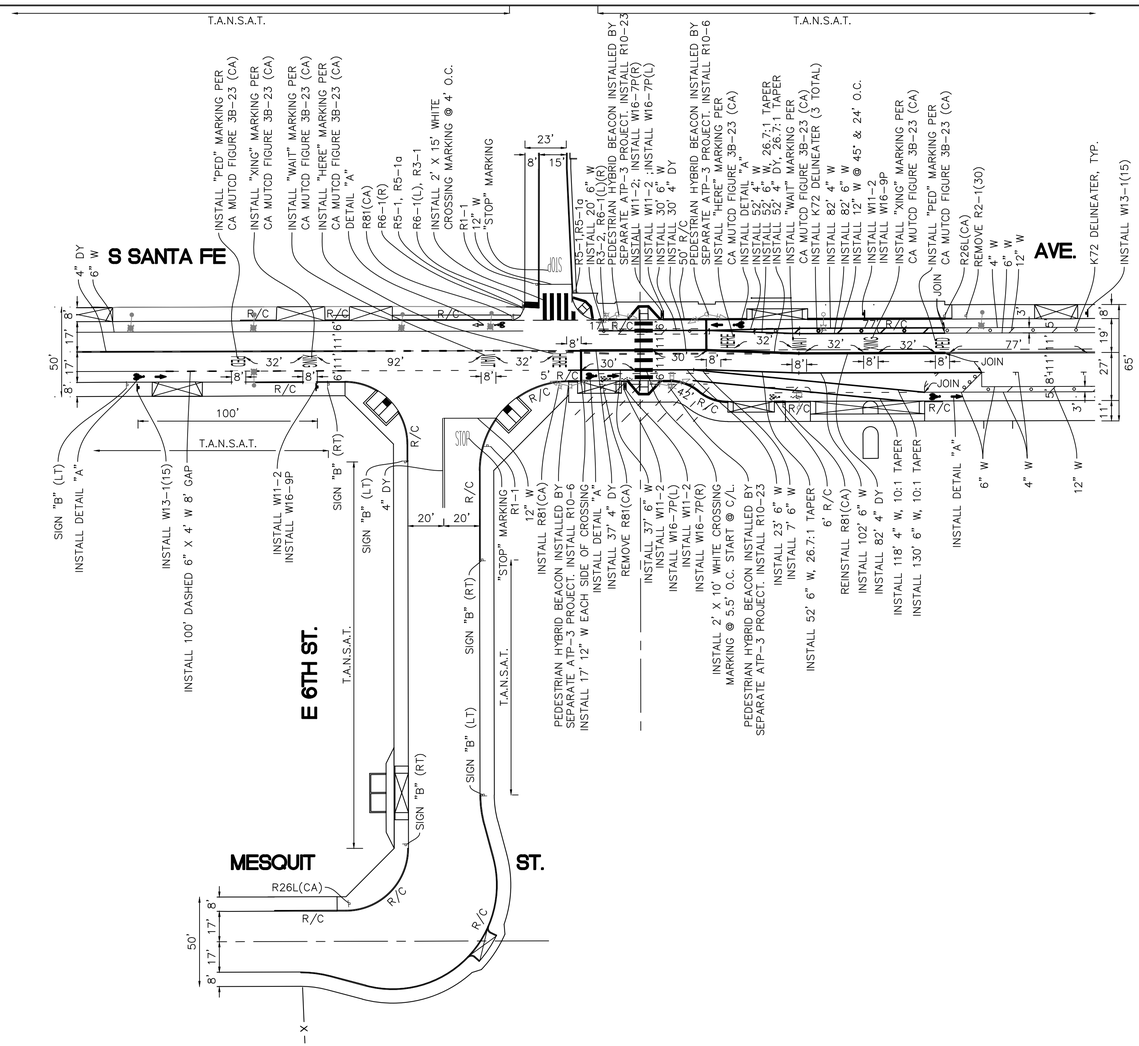

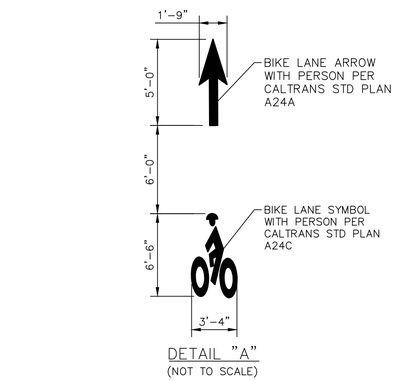

DETAIL "A"
(NOT TO SCALE)

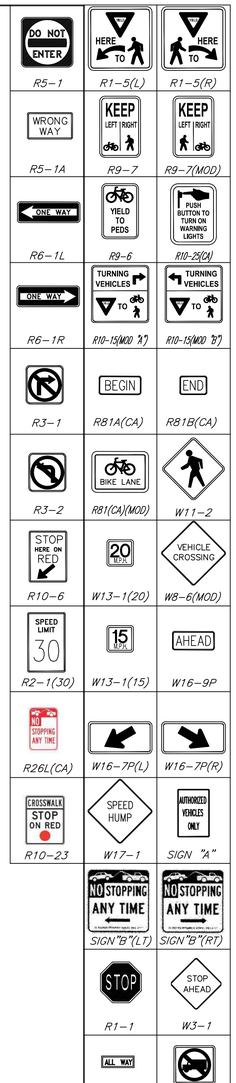

BUREAU OF ENGINEERING
OFFICIAL RECORD

NOTES

1. LENGTH OF DESIGN : 550'±
2. INSTALL PVMT. MARKINGS AS SHOWN.
3. PAINT REMOVAL REQUIRED.
4. CONTINENTAL CROSSWALK PER LADOT STD. DWG. NO. S-481.0.
5. PROPOSED WORK AREA OVERLAPS WITH THE SEPARATE VIADUCT AND ATP-3 SIGNING AND STRIPING IMPROVEMENTS. PARC CONTRACTOR SHALL VERIFY EXISTING FIELD CONDITIONS AND NOTIFY ENGINEER OF DISCREPANCIES.

SIXTH STREET PARC – RESTORATION PLAN C-505

REVIEWED _____ 20 ___
Transportation Engineer

ACCEPTED _____ 20 ___
Senior Transportation Engineer

INSTALLATION DATES
MARKOUT BEGAN: _____
MARKOUT COMPLETED: _____
STRIPING COMPLETED: _____
References:

Thomas Guide	District
634–H5,6 J5,6	

CITY OF LOS ANGELES
DEPARTMENT OF TRANSPORTATION
SELETA REYNOLDS, GENERAL MANAGER

S SANTA FE AVE.
175' S/O E 6TH ST. TO 375' N/O E 6TH ST.

PROJECT NO. | DRAWING NO.

TETRA TECH
www.tetratech.com
707 WILSHIRE BLVD, 23RD FLR.
LOS ANGELES, CA 90017
PHONE: (213) 239-8866

PLAN RECOMMENDED BY :
REGISTERED TRAFFIC ENGINEER
DATE : _____

PLAN RECOMMENDED BY :
REGISTERED CIVIL ENGINEER
DATE : 07/11/22

REGISTERED PROFESSIONAL ENGINEER JUSTIN T. SMITH No. 85736 EXP: 9-30-22 CIVIL STATE OF CALIFORNIA

SCALE: 1"=40'

1"=20' ORIGINAL MAP SCALE 1"=40'
20 10 0 20 40 60 80 100 FEET
40 20 0 40 80 120 160 200 FEET

SCALES | HORIZ. 1"= | VERT. 1"=

SHEET 61 OF 295

INDEX NUMBER MF-300501

NO.	REVISION DESCRIPTION	BY	DATE
	BASE / CHECK / DESIGN	SUPERVISOR / DISTRICT / SIGNALS	PRINCIPAL T.E. / T.E./SR. T.E.

CADD PROJECT FILE NAME: D:\Projects\Irvine\20043\200-20043-17001\CAD\SheetFiles\C-505_Signing and Striping Plan_Santa Fe St - TT.dwg Jul 08, 2022 10:54am_Justin.T.Smith

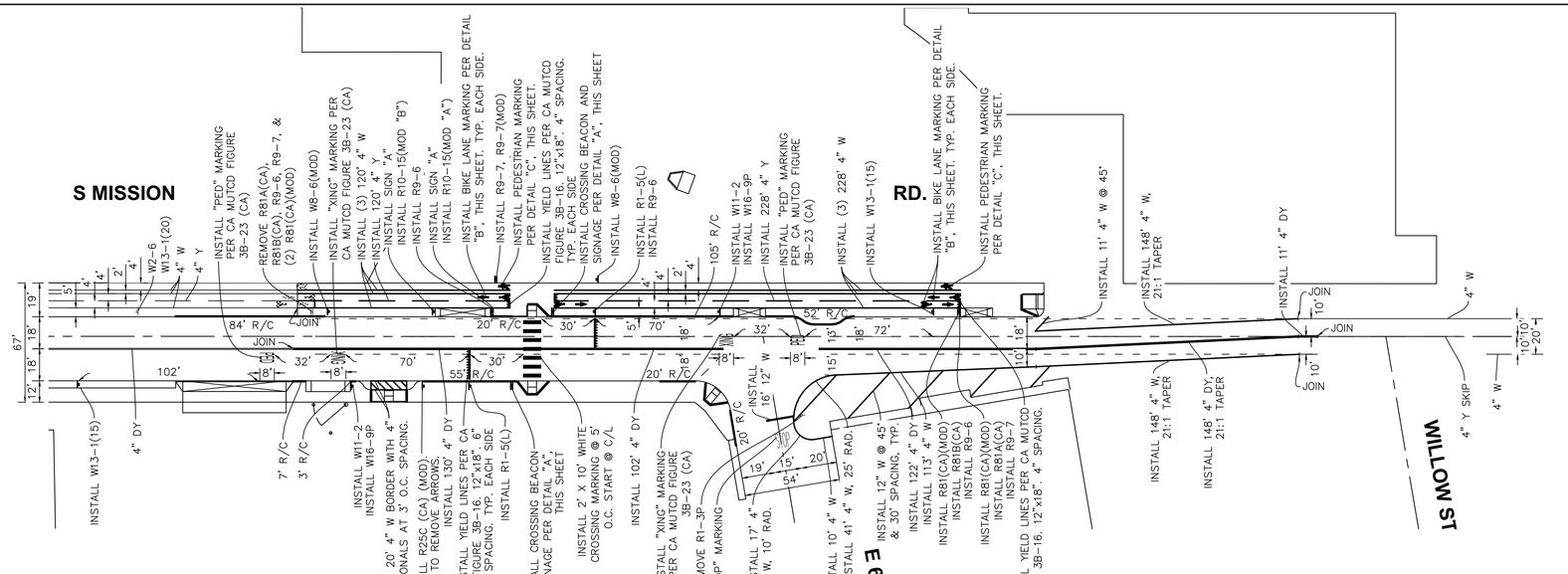

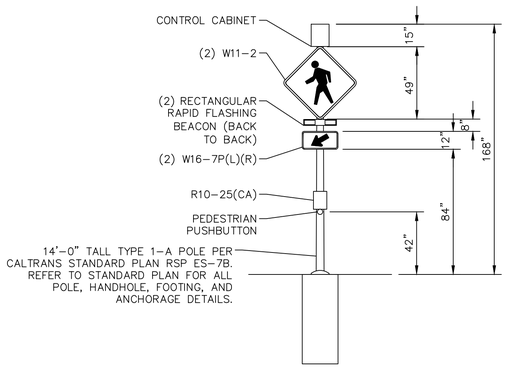

DETAIL "A"
(NOT TO SCALE)

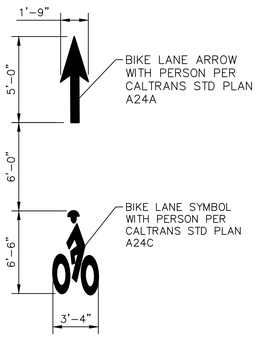

DETAIL "B"
(NOT TO SCALE)

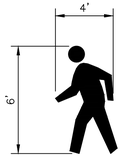

DETAIL "C"
(NOT TO SCALE)



NOTES

1. LENGTH OF DESIGN : 750'±
2. INSTALL PVMT. MARKINGS AS SHOWN.
3. PAINT REMOVAL REQUIRED.
4. CONTINENTAL CROSSWALK PER LADOT STD. DWG. NO. S-481.0.

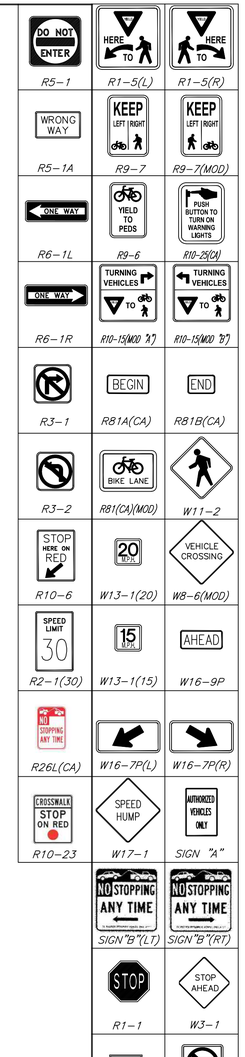

BUREAU OF ENGINEERING
OFFICIAL RECORD

SIXTH STREET PARC – RESTORATION PLAN C-506

REVIEWED _____ 20 ___
Transportation Engineer

ACCEPTED _____ 20 ___
Senior Transportation Engineer

INSTALLATION DATES
MARKOUT BEGAN: _____
MARKOUT COMPLETED: _____
STRIPING COMPLETED: _____
References:

CITY OF LOS ANGELES
DEPARTMENT OF TRANSPORTATION
SELETA REYNOLDS, GENERAL MANAGER

S MISSION RD.
400' S/O E 6TH ST TO WILLOW ST. E

Thomas Guide	District	PROJECT NO.	DRAWING NO.
634-H5,6 J5,6			

TETRA TECH
www.tetratech.com
707 WILSHIRE BLVD, 23RD FLR.
LOS ANGELES, CA 90017
PHONE: (213) 239-8866

PLAN RECOMMENDED BY :
REGISTERED TRAFFIC ENGINEER
DATE : _____

PLAN RECOMMENDED BY :
REGISTERED CIVIL ENGINEER
DATE : 07/11/22

REGISTERED PROFESSIONAL ENGINEER JUSTIN T. SMITH No. 85736 EXP. 9-30-22 CIVIL STATE OF CALIFORNIA

SCALE: 1"=40'

1"=20' ORIGINAL MAP SCALE 1"=40'
20 10 0 20 40 60 80 100 FEET
40 20 0 40 80 120 160 200 FEET

SCALES HORIZ. 1"= VERT. 1"=

SHEET 62 OF 295

INDEX NUMBER MF-300501

NO.	REVISION DESCRIPTION	BY	DATE

PRINCIPAL T.E. / T.E./SR. T.E. / SUPERVISOR DISTRICT SIGNALS / BASE CHECK DESIGN

CADD PROJECT FILE NAME: D:\Projects\Irvine\20043\200-20043-17001\CAD\Sheet Files\C-506_Signing and Striping Plan_Mission Rd - TT.dwg Jul 08, 2022 11:00am_Justin.T.Smith

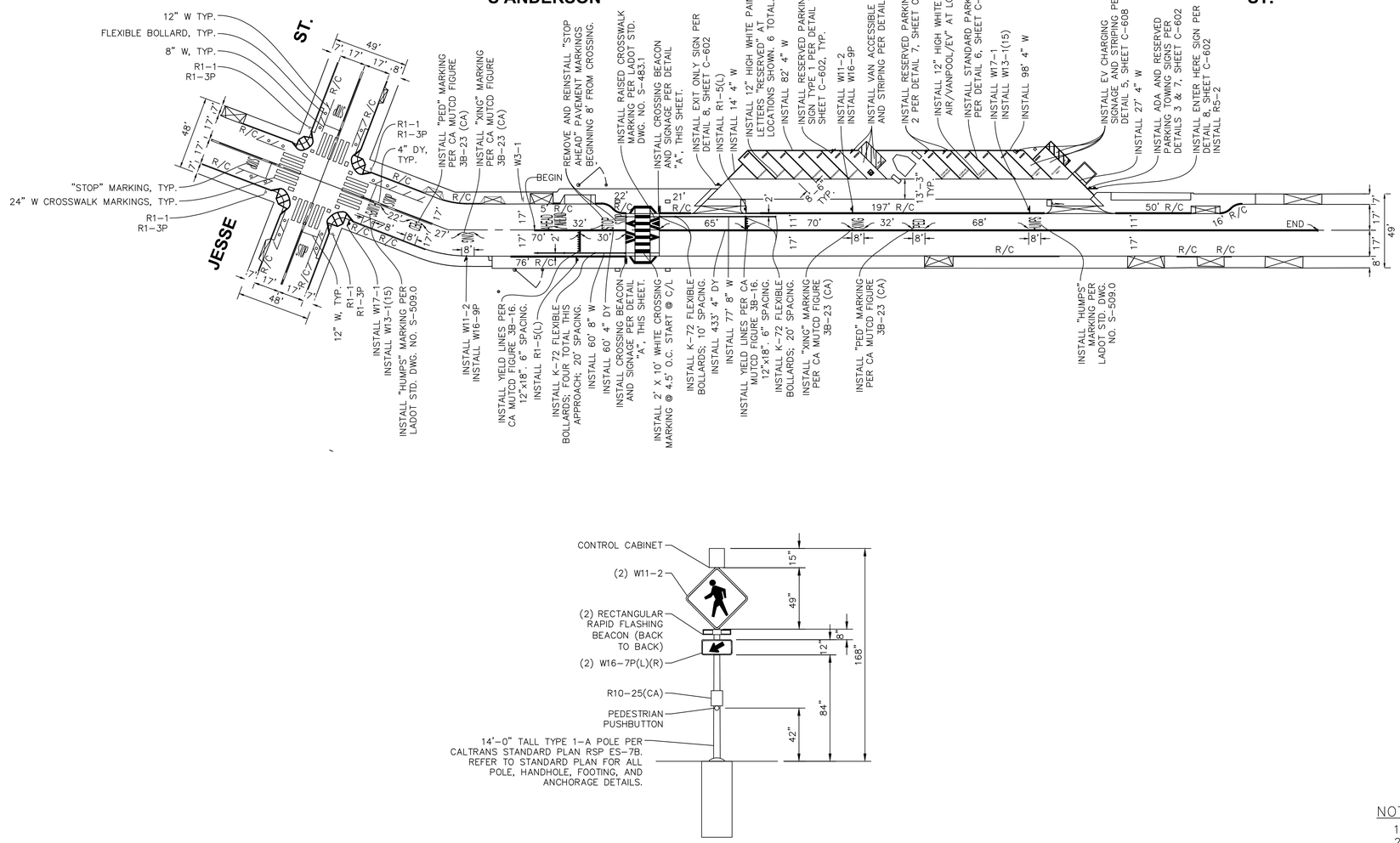

DETAIL "A"

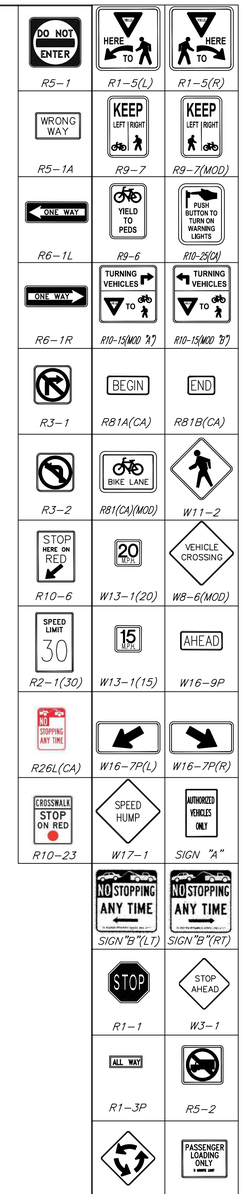

NOTES

1. LENGTH OF DESIGN : 670'±
2. INSTALL PVMT. MARKINGS AS SHOWN.
3. PAINT REMOVAL REQUIRED.
4. CONTINENTAL CROSSWALK PER LADOT STD. DWG. NO. S-481.0.

BUREAU OF ENGINEERING
OFFICIAL RECORD

SIXTH STREET PARC – RESTORATION PLAN C-507

REVIEWED _____ 20 ___
Transportation Engineer

ACCEPTED _____ 20 ___
Senior Transportation Engineer

INSTALLATION DATES
MARKOUT BEGAN: _____
MARKOUT COMPLETED: _____
STRIPING COMPLETED: _____
References:

Thomas Guide	District
634–H5,6 J5,6	

CITY OF LOS ANGELES
DEPARTMENT OF TRANSPORTATION
SELETA REYNOLDS, GENERAL MANAGER

S ANDERSON ST.
JESSE ST. TO 670' N/O JESSE ST.

PROJECT NO.
DRAWING NO. MF-300501

TETRA TECH
www.tetratech.com
707 WILSHIRE BLVD, 23RD FLR.
LOS ANGELES, CA 90017
PHONE: (213) 239-8866

PLAN RECOMMENDED BY :
REGISTERED TRAFFIC ENGINEER
DATE : _____

PLAN RECOMMENDED BY :
REGISTERED CIVIL ENGINEER
DATE : 07/11/22

REGISTERED PROFESSIONAL ENGINEER
JUSTIN T. SMITH
No. 85736
EXP: 9-30-22
CIVIL
STATE OF CALIFORNIA

SCALE: 1"=40'

1"=20' ORIGINAL MAP SCALE 1"=40'
20 10 0 20 40 60 80 100 FEET
40 20 0 40 80 120 160 200 FEET

SCALES HORIZ. 1"= VERT. 1"=

SHEET 63 OF 295

INDEX NUMBER

NO.	REVISION DESCRIPTION	BY	DATE

BASE CHECK DESIGN
SUPERVISOR DISTRICT SIGNALS
T.E./SR. T.E. PRINCIPAL T.E.

CADD PROJECT FILE NAME: D:\Projects\Irvine\20043\200-20043-17001\CAD\SheetFiles\C-507_Signing and Striping Plan_Anderson St - TT.dwg Jul 08, 2022 11:04am_Justin.T.Smith

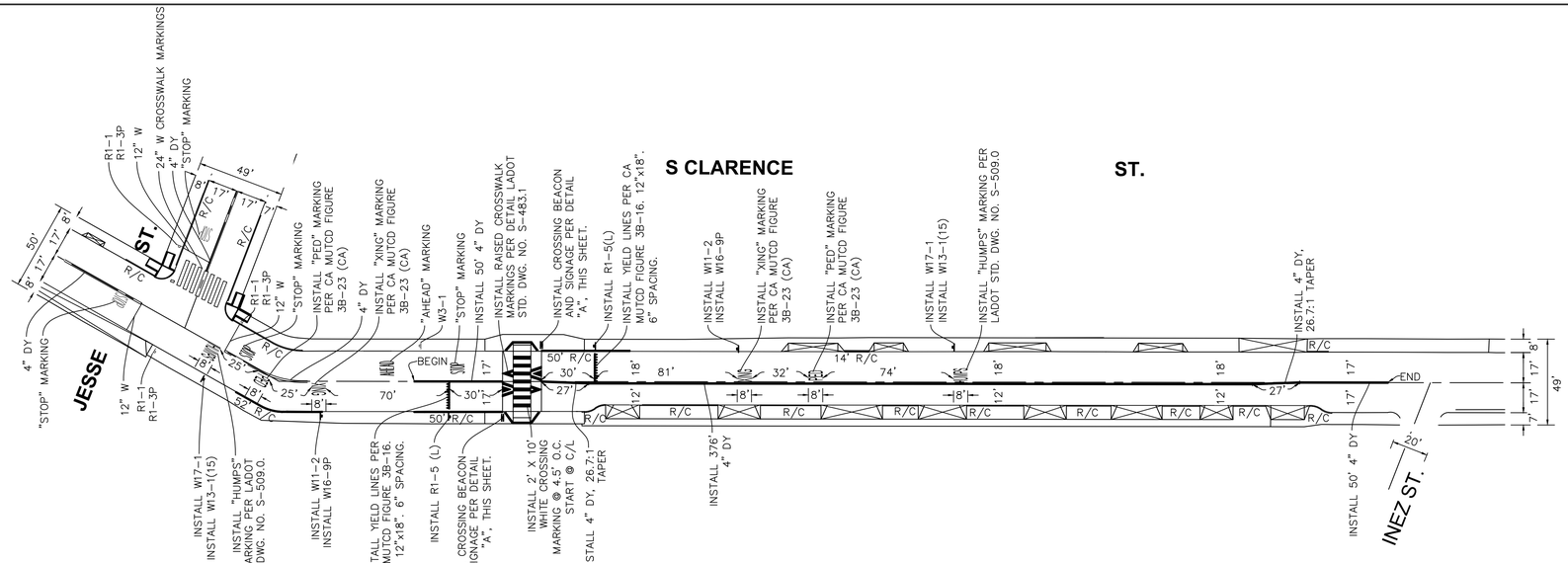

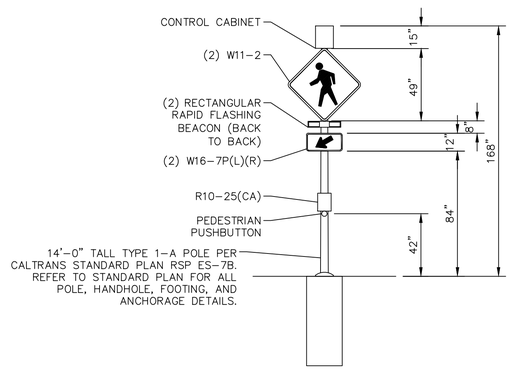

DETAIL "A"

NOTES

1. LENGTH OF DESIGN : 715'±
2. INSTALL PVMT. MARKINGS AS SHOWN.
3. PAINT REMOVAL REQUIRED.
4. CONTINENTAL CROSSWALK PER LADOT STD. DWG. NO. S-481.0.

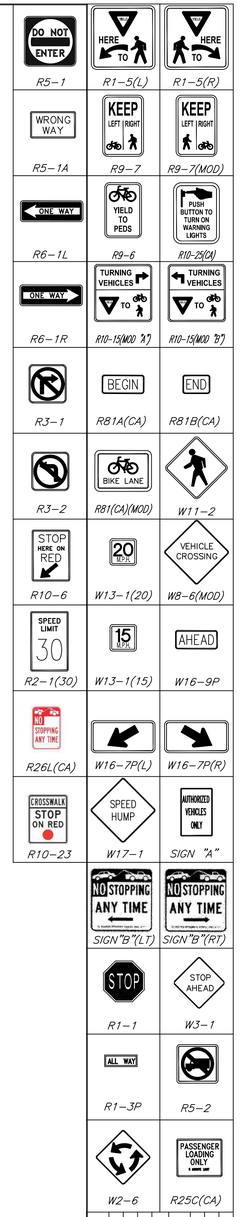

BUREAU OF ENGINEERING
OFFICIAL RECORD

SIXTH STREET PARC – RESTORATION PLAN C-508

REVIEWED _____ 20 ___
Transportation Engineer

ACCEPTED _____ 20 ___
Senior Transportation Engineer

INSTALLATION DATES
MARKOUT BEGAN: _____
MARKOUT COMPLETED: _____
STRIPING COMPLETED: _____
References:

CITY OF LOS ANGELES
DEPARTMENT OF TRANSPORTATION
SELETA REYNOLDS, GENERAL MANAGER

S CLARENCE ST.
JESSE ST. TO INEZ ST.

Thomas Guide	District	PROJECT NO.	DRAWING NO.
634-H5,6 J5,6			

SCALE: 1"=40'

TETRA TECH
www.tetratech.com
707 WILSHIRE BLVD, 23RD FLR.
LOS ANGELES, CA 90017
PHONE: (213) 239-8866

PLAN RECOMMENDED BY :
REGISTERED TRAFFIC ENGINEER
DATE : _____

PLAN RECOMMENDED BY :
REGISTERED CIVIL ENGINEER
DATE : 07/11/22

REGISTERED PROFESSIONAL ENGINEER JUSTIN T. SMITH No. 85736 EXP: 9-30-22 CIVIL STATE OF CALIFORNIA

1"=20' ORIGINAL MAP SCALE 1"=40'
20 10 0 20 40 60 80 100 FEET
40 20 0 40 80 120 160 200 FEET

SCALES HORIZ. 1"= VERT. 1"=

SHEET 64 OF 295

INDEX NUMBER MF-300501

NO.	REVISION DESCRIPTION	T.E./SR. T.E.	PRINCIPAL T.E.	DATE

BY	DATE	SUPERVISOR	DISTRICT	SIGNALS

BASE	CHECK	DESIGN

CADD PROJECT FILE NAME: D:\Projects\Irvine\20043\200-20043-17001\CAD\SheetFiles\C-508_Signing and Striping Plan_S Clarence St - TT.dwg Jul 08, 2022 11:10am__Justin.T.Smith

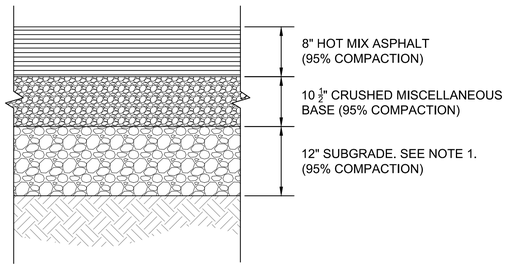

(R-VALUE=50, TI=13)

NOTE:
1. SUBGRADE SHALL BE SCARIFIED AND MOISTURE CONDITIONED TO AT LEAST 2 PERCENT OVER OPTIMUM MOISTURE CONTENT.
2. ASPHALT SHALL BE PLACED AND COMPACTED IN LIFTS NOT EXCEEDING 3". TACK COAT TO BE APPLIED BETWEEN LAYERS. APPLY SEAL COAT PER SPECIFICATIONS.
3. BASE SHALL BE PLACED AND COMPACTED IN LIFTS NOT EXCEEDING 6".

1 ASPHALT CONCRETE PVMT.

NTS REFERENCE SHEET C-500 THRU C-503

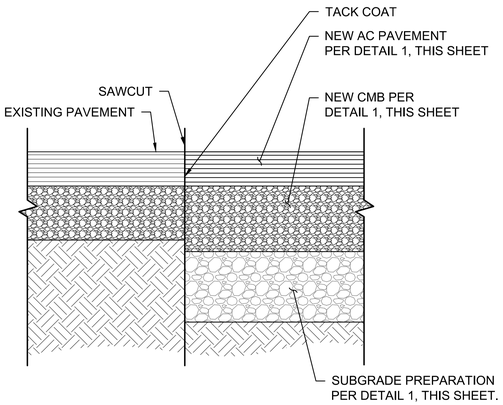

2 JUNCTURE NEW PVMT. AND (E) PVMT.

NTS REFERENCE SHEET C-500 THRU C-503

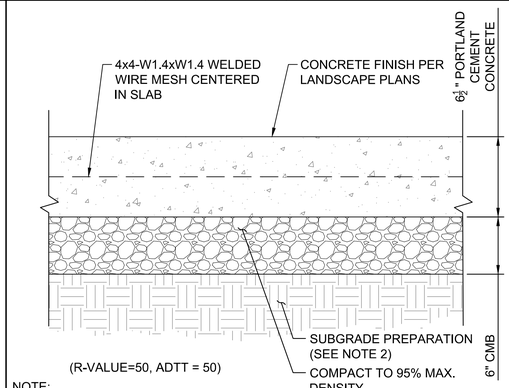

(R-VALUE=50, ADTT = 50)

NOTE:
1. PCC PAVEMENT SHALL CONFORM TO TABLE 622.1 OF THE CALTRANS HDM.
2. 12" SUBGRADE SHALL BE SCARIFIED, MOISTURE-CONDITIONED TO AT LEAST 2% OVER OPTIMUM MOISTURE CONTENT, AND RECOMPACTED TO AT LEAST 95% MAX DRY DENSITY.
3. BASE SHALL BE PLACED AND COMPACTED IN LIFTS NOT EXCEEDING 6".

3 CONCRETE PVMT. - VEHICULAR

NTS REFERENCE SHEET C-502

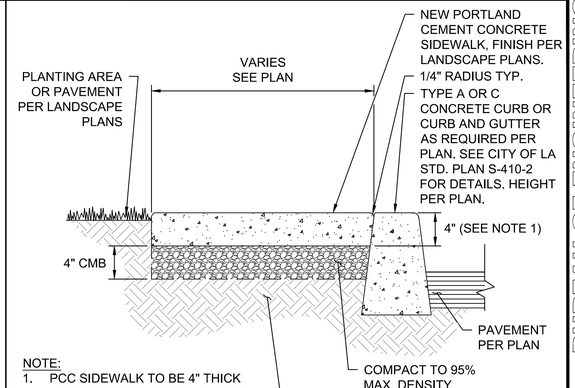

NOTE:
1. PCC SIDEWALK TO BE 4" THICK UNLESS OTHERWISE SPECIFIED ON PLAN. PCC TO BE 6" THICK AT DRIVEWAY LOCATIONS.
2. INSTALL JOINTS PER CIVIL ROADWAY PLANS.

4 PEDESTRIAN CONCRETE WALKWAY

NTS REFERENCE SHEET C-500 THRU C-503

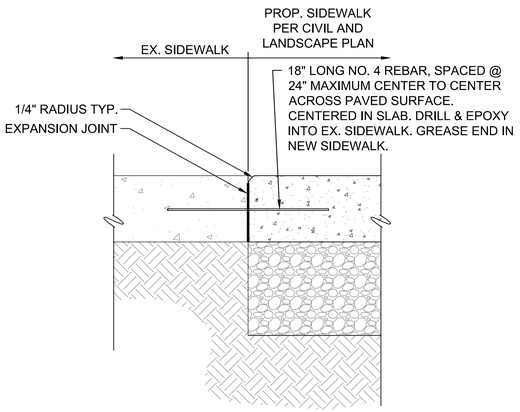

5 JUNCTURE NEW WALK AND (E) WALK

NTS REFERENCE SHEET L-131 THRU L-135, C-500 THRU C-503

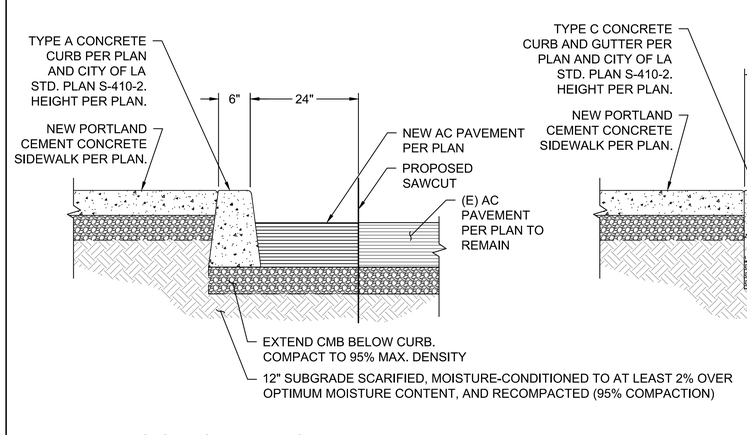

CASE 1: CURB AND AC PAVEMENT

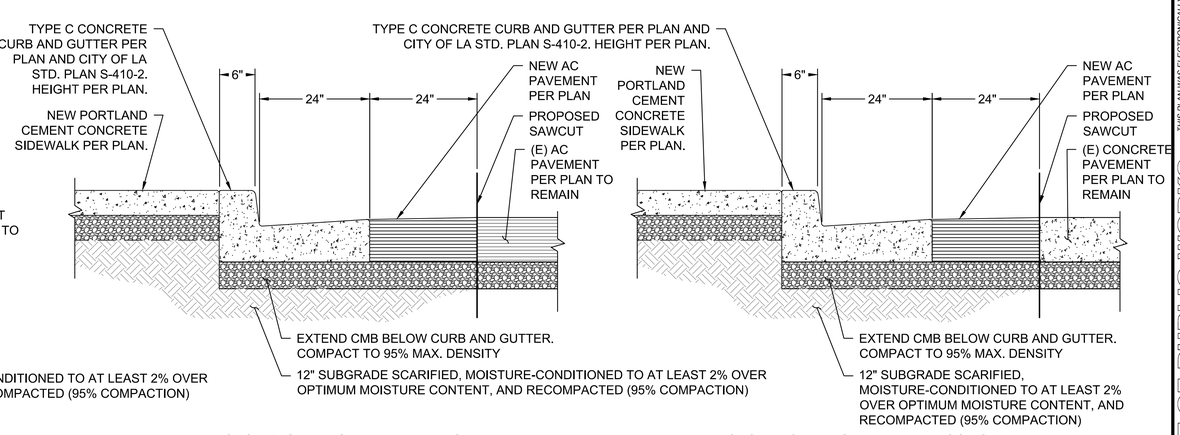

CASE 2: CURB, GUTTER, AND AC PAVEMENT

CASE 3: CURB, GUTTER, AND CONCRETE PAVEMENT

6 CURB RECONSTRUCTION ADJACENT TO EXISTING PAVEMENT TO REMAIN

NTS REFERENCE SHEET C-500 THRU C-502

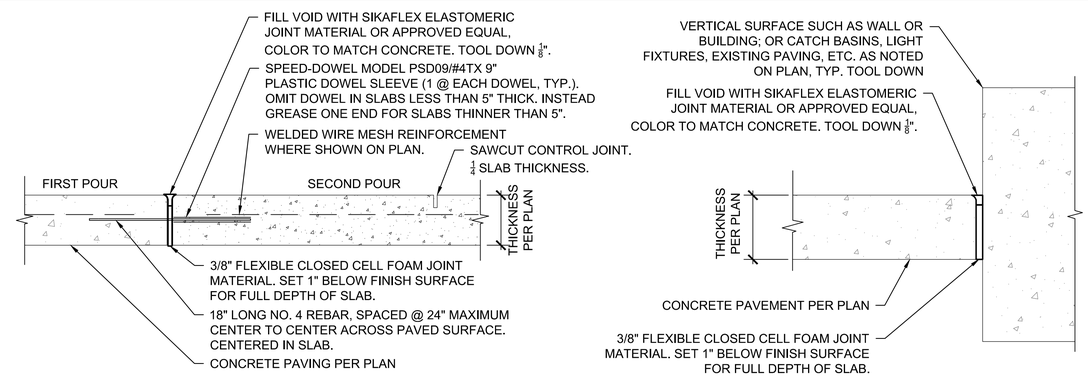

NOTE:
1. MAINTAIN LINE AND GRADE AT EXPANSION JOINTS.
2. SEE PLAN FOR JOINT LOCATIONS.

7 CONCRETE PVMT. JOINTS

NTS REFERENCE SHEET L-131 THRU L-135, C-500 THRU C-503

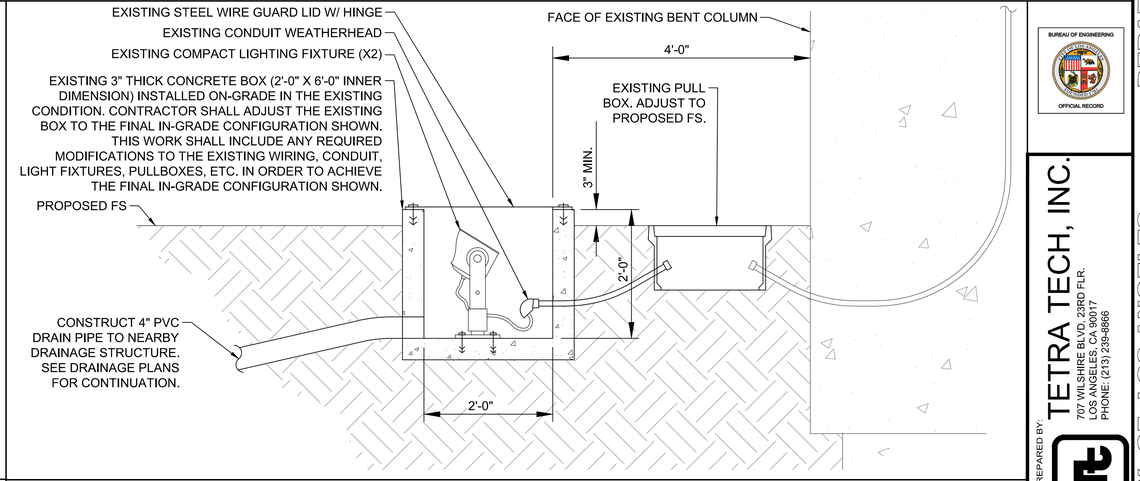

8 VIADUCT ARCH LIGHT ADJUSTMENT TO IN-GRADE

NTS REFERENCE SHEET CD-002 THRU CD-005

BUREAU OF ENGINEERING
OFFICIAL RECORD

PLANS PREPARED BY:
TETRA TECH, INC.
707 WILSHIRE BLVD, 23RD FLR.
LOS ANGELES, CA 90017
PHONE: (213) 239-8866

ENGINEERING
CITY OF LOS ANGELES

BUREAU OF ENGINEERING

NO.	REVISIONS:	DATE	BY:

BUILDING NO.

INDEX NO. MF-300501

THIS PLAN WAS ELECTRONICALLY SIGNED AND STAMPED

JUSTIN T. SMITH
No. 85736
EXP: 9-30-22
CIVIL
STATE OF CALIFORNIA
PROFESSIONAL ENGINEER
REGISTERED

CITY OF LOS ANGELES DEPARTMENT OF PUBLIC WORKS

CITY ENGINEER: TED ALLEN, P.E.
DESIGN GROUP
ENGINEER: JUSTIN SMITH
LIC NO. C-85736
DATE: 07/11/22
DESIGNED BY: JUSTIN SMITH
DRAWN BY: DAVID LOPEZ
CHECKED BY: NATE SCHREINER
APPROVED BY: JASON L. FUSSEL

SHEET TITLE: CIVIL DETAILS SHEET 1

PROJECT: SIXTH STREET PARK, ARTS AND RIVER CONNECTIVITY IMPROVEMENTS (PARC)

ADDRESS: SIXTH STREET OVER THE LOS ANGELES RIVER

VERT. CONTROL: BM 12-04070, 1929 (NGVD29) - 1985 ADJUSTMENT
HORIZ. CONTROL: GPS; PID AE 1704, EPOCH 1991.35

WORK ORDER NO. E700235D
FILE NO. --
DRAWING NO. C-600
SHEET 65 OF 295 SHEETS

7/9/2022 10:10:50 AM - O:\PROJECTS\RIVINE\20043\200-20043-17001\CAD\SHEETFILES\C-600_DETAILS - TT.DWG - SMITH, JUSTIN

THE CITY OF LOS ANGELES OR ITS OFFICERS OR AGENTS SHALL NOT BE RESPONSIBLE FOR THE ACCURACY OR COMPLETENESS OF ELECTRONIC COPIES OF THIS PLAN SHEET.

REVISION DATES (DESIGN STAGE ONLY)

Sheet Version 3.0

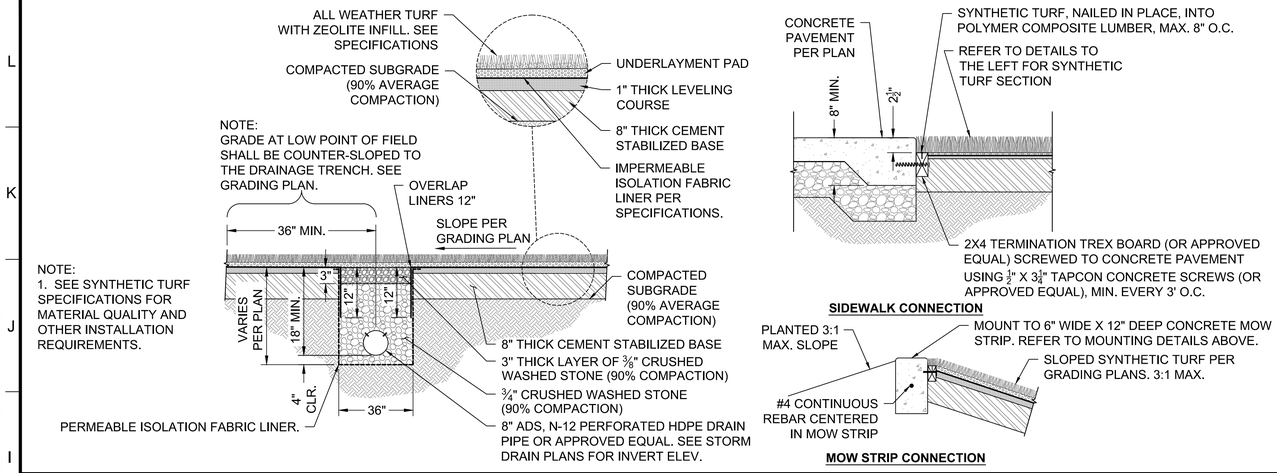

1 SYNTHETIC TURF

NTS REFERENCE SHEET L-133 THRU L-134

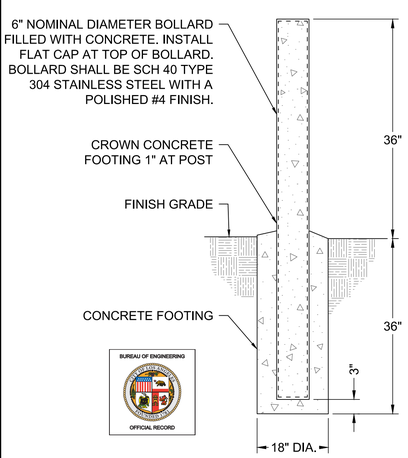

2 FIXED BOLLARD

NTS REFERENCE SHEET C-502

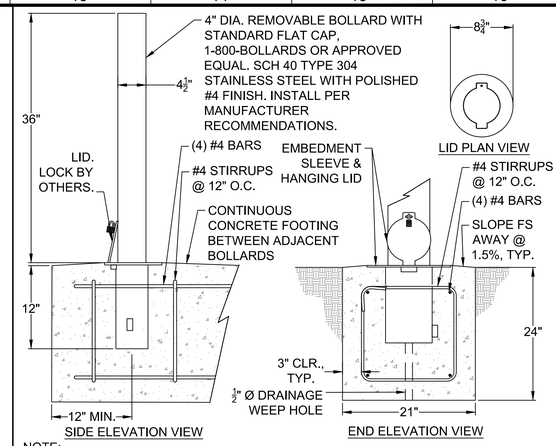

NOTE:
1. CONTRACTOR SHALL COORDINATE WITH BOLLARD MANUFACTURER TO VERIFY FOUNDATION DESIGN.

3 REMOVABLE BOLLARD

NTS REFERENCE SHEET C-500

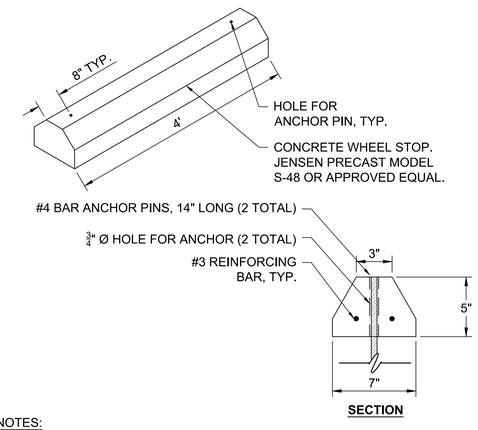

NOTES:
1. WHEEL STOP SHALL BE PREFABRICATED P.C. CONCRETE - 3500 PSI MIN.
2. REINFORCEMENT SHALL BE ASTM A-615 GRADE 60.

4 WHEEL STOP

NTS REFERENCE SHEET C-502

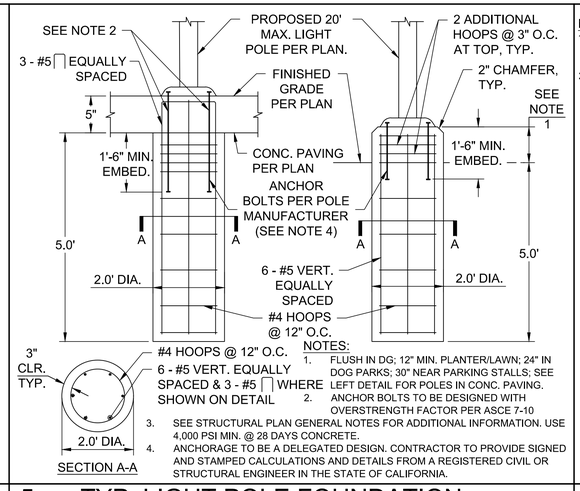

NOTES:
1. FLUSH IN DG; 12" MIN. PLANTER/LAWN; 24" IN DOG PARKS; 30" NEAR PARKING STALLS; SEE LEFT DETAIL FOR POLES IN CONC. PAVING.
2. ANCHOR BOLTS TO BE DESIGNED WITH OVERSTRENGTH FACTOR PER ASCE 7-10
3. SEE STRUCTURAL PLAN GENERAL NOTES FOR ADDITIONAL INFORMATION. USE 4,000 PSI MIN. @ 28 DAYS CONCRETE.
4. ANCHORAGE TO BE A DELEGATED DESIGN. CONTRACTOR TO PROVIDE SIGNED AND STAMPED CALCULATIONS AND DETAILS FROM A REGISTERED CIVIL OR STRUCTURAL ENGINEER IN THE STATE OF CALIFORNIA.

5 TYP. LIGHT POLE FOUNDATION

NTS REFERENCE SHEET E-101 THRU E-107

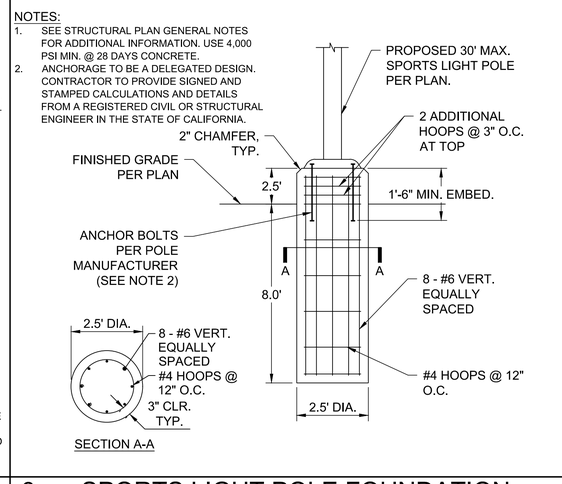

6 SPORTS LIGHT POLE FOUNDATION

NTS REFERENCE SHEET E-105 THRU E-106

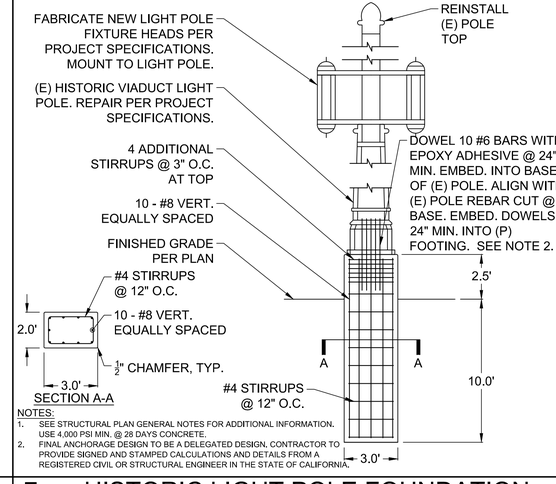

NOTES:
1. SEE STRUCTURAL PLAN GENERAL NOTES FOR ADDITIONAL INFORMATION. USE 4,000 PSI MIN. @ 28 DAYS CONCRETE.
2. FINAL ANCHORAGE DESIGN TO BE A DELEGATED DESIGN. CONTRACTOR TO PROVIDE SIGNED AND STAMPED CALCULATIONS AND DETAILS FROM A REGISTERED CIVIL OR STRUCTURAL ENGINEER IN THE STATE OF CALIFORNIA.

7 HISTORIC LIGHT POLE FOUNDATION

NTS REFERENCE SHEET C-502 & E-106

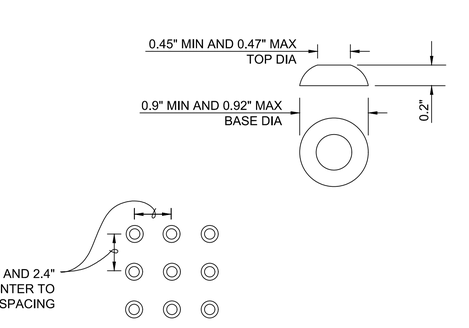

NOTE:
1. DETECTABLE WARNING SURFACE COLOR PER SPECIFICATIONS.
2. DETECTABLE WARNING SURFACE SHALL BE CAST INTO PROPOSED CONCRETE.

8 DETECTABLE WARNING SURFACE

NTS REFERENCE SHEET C-500 THRU C-503

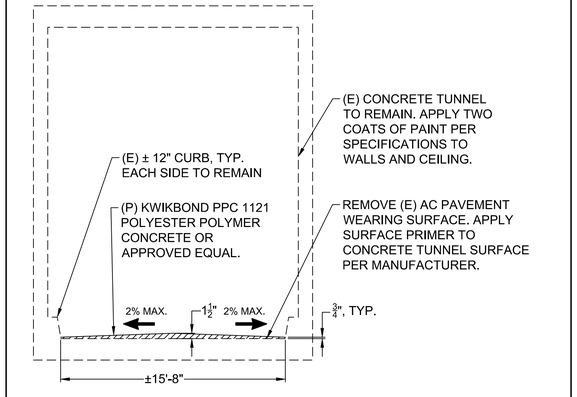

9 TUNNEL RESURFACING (PVMT 8)

NTS REFERENCE SHEET CD-002 & L-132

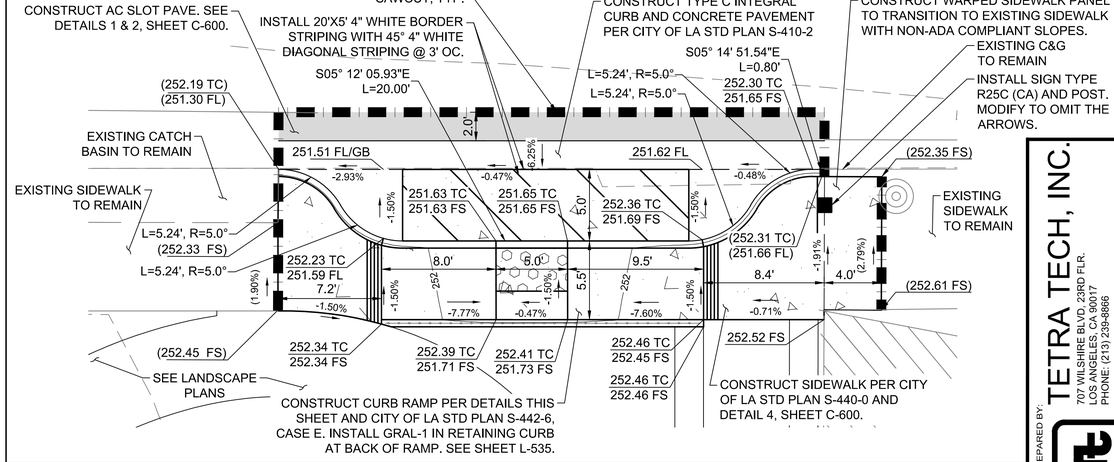

10 MATEO STREET PASSENGER LOADING ZONE

NTS REFERENCE SHEET C-200

PLANS PREPARED BY:
TETRA TECH, INC.
707 WILSHIRE BLVD, 23RD FLR.
LOS ANGELES, CA 90017
PHONE: (213) 239-8866

THIS PLAN WAS ELECTRONICALLY SIGNED AND STAMPED

PROFESSIONAL ENGINEER — JUSTIN T. SMITH — No. 85736 EXP: 9-30-22 — CIVIL — STATE OF CALIFORNIA

CITY OF LOS ANGELES DEPARTMENT OF PUBLIC WORKS
BUREAU OF ENGINEERING
ENGINEERING
CITY OF LOS ANGELES

NO.	REVISIONS:	DATE	BY:

BUILDING NO.
INDEX NO. MF-300501

CITY ENGINEER
DESIGN GROUP
ENGINEER: JUSTIN SMITH
DESIGNED BY: JUSTIN SMITH
DRAWN BY: DAVID LOPEZ
CHECKED BY: NATE SCHREINER
APPROVED BY: JASON L. FUSSEL
DATE: 07/11/22
LIC NO. C-85736

VERT. CONTROL: BM 12-04070, 1929 (NGVD29) - 1985 ADJUSTMENT
HORIZ. CONTROL: GPS, PID AE 1704, EPOCH 1991.35

SHEET TITLE: CIVIL DETAILS SHEET 2
PROJECT: SIXTH STREET PARK, ARTS AND RIVER CONNECTIVITY IMPROVEMENTS (PARC)
ADDRESS: SIXTH STREET OVER THE LOS ANGELES RIVER

WORK ORDER NO. E700235D
FILE NO. --
DRAWING NO. C-601
SHEET 66 OF 295 SHEETS

7/8/2022 2:08:12 PM - C:\PROJECTS\IRVINE\20043\200-20043-17001\CAD\SHEETFILES\C-601_DETAILS - TT.DWG - SMITH, JUSTIN

THE CITY OF LOS ANGELES OR ITS OFFICERS OR AGENTS SHALL NOT BE RESPONSIBLE FOR THE ACCURACY OR COMPLETENESS OF ELECTRONIC COPIES OF THIS PLAN SHEET.

REVISION DATES (DESIGN STAGE ONLY)

Sheet Version 3.0

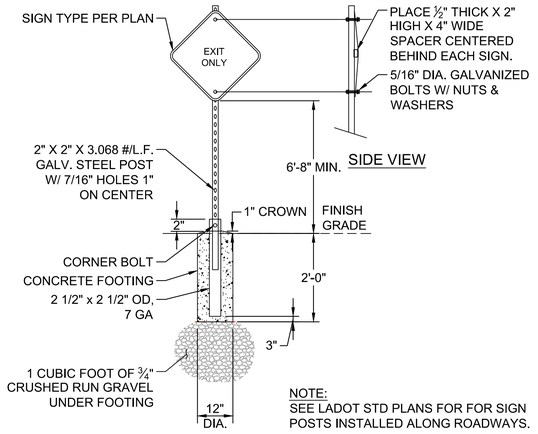

NOTE:
SEE LADOT STD PLANS FOR FOR SIGN POSTS INSTALLED ALONG ROADWAYS.

1 PARKING PLAZA SIGN POSTS

NTS REFERENCE SHEET C-507

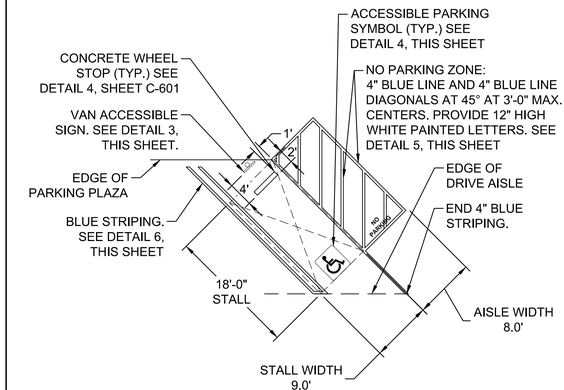

NOTES:
1. PER LABC CH 11B AND FIGURE 11B-18A.

2 ACCESSIBLE PARKING SPACE

NTS REFERENCE SHEET C-507

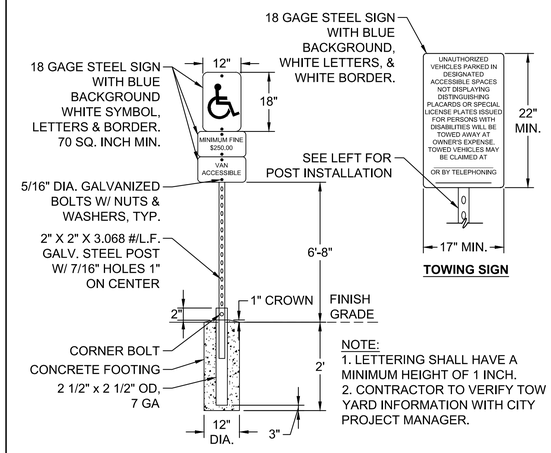

NOTE:
1. LETTERING SHALL HAVE A MINIMUM HEIGHT OF 1 INCH.
2. CONTRACTOR TO VERIFY TOW YARD INFORMATION WITH CITY PROJECT MANAGER.

3 ACCESSIBLE PARKING SIGNS

NTS REFERENCE SHEET C-507

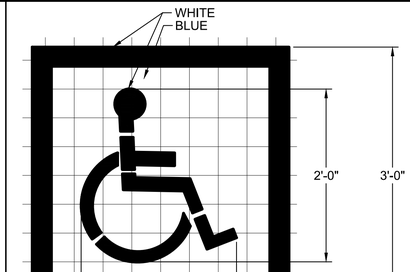

NOTES:
1. ALL STRIPES TO BE 3" WIDE. ROYAL BLUE BACKGROUND.
2. PROVIDE 2 COATS OF PAINT. DRY BETWEEN COATS.
3. LOCATE SYMBOL AT CENTER OF STALL WHERE SHOWN ON DETAIL.
4. ACCESSIBLE SYMBOL TO COMPLY WITH CURRENT REQUIREMENTS OF TITLE 24, STATE CODE.

4 ACCESSIBLE PARKING SYMBOL

NTS REFERENCE SHEET C-507

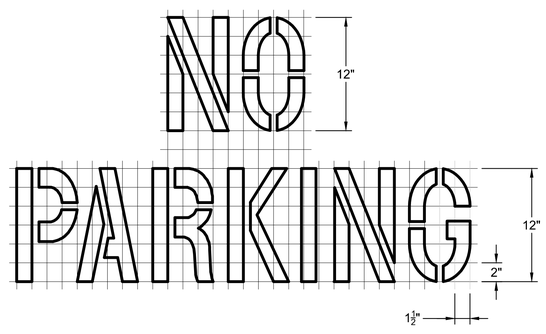

NOTE:
THE WORDS, "NO PARKING", SHALL BE PAINTED IN WHITE LETTERS NO LESS THAN 1'-0" HIGH ON A CONTRASTING BACKGROUND AND LOCATED SO THAT IT IS VISIBLE TO TRAFFIC ENFORCEMENT OFFICIALS.

5 NO PARKING DETAIL

NTS REFERENCE SHEET C-507

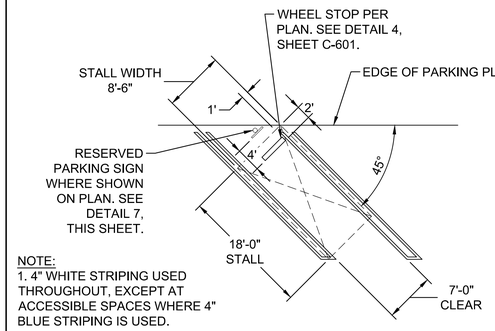

NOTE:
1. 4" WHITE STRIPING USED THROUGHOUT, EXCEPT AT ACCESSIBLE SPACES WHERE 4" BLUE STRIPING IS USED.

2. STRIPING PER LOS ANGELES DEPARTMENT OF BUILDING AND SAFETY DOC. NO. P/ZC 2002-001

6 STANDARD PARKING STALLS

NTS REFERENCE SHEET C-507

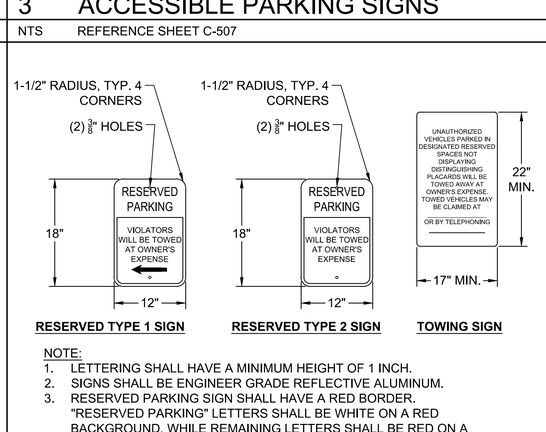

NOTE:
1. LETTERING SHALL HAVE A MINIMUM HEIGHT OF 1 INCH.
2. SIGNS SHALL BE ENGINEER GRADE REFLECTIVE ALUMINUM.
3. RESERVED PARKING SIGN SHALL HAVE A RED BORDER. "RESERVED PARKING" LETTERS SHALL BE WHITE ON A RED BACKGROUND, WHILE REMAINING LETTERS SHALL BE RED ON A WHITE BACKGROUND.
4. TOWING SIGN SHALL HAVE A RED BORDER AND LETTERING ON A WHITE BACKGROUND.
5. MOUNT PER DETAIL 3, THIS SHEET.

7 RESERVED PARKING SIGN

NTS REFERENCE SHEETC-507

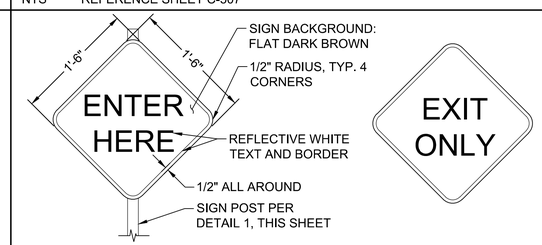

DETAIL 373 A
NOT TO SCALE

DETAIL 373 B
NOT TO SCALE

NOTES:
1. TWO (2) SIGNS REQUIRED PER POST
2. SIGNS SHALL BE CUSTOM MANUFACTURED BY ZUMAR INDUSTRIES, INC. 213-724-8450, (OR APPROVED EQUAL) AND FABRICATED TO THE FOLLOWING SPECIFICATIONS:
   - FOR 373A: QUANTITY = 2 - SPECIAL - 18" x18" - DIAMOND - ENTER HERE -.080" - 1/2" RADIUS - STANDARD HOLES - ENGINEER GRADE - WHITE ON DARK BROWN;
   - FOR 373B: QUANTITY = 2 - SPECIAL - 18" x18" - DIAMOND - EXIT ONLY - .080" - 1/2" RADIUS - STANDARD HOLES - ENGINEER GRADE - WHITE ON DARK BROWN
3. 313A AND 373B ARE IDENTICAL EXCEPT FOR TEXT.
4. INSTALL SIGN PER DETAIL 1, THIS SHEET

8 ENTRANCE/EXIT SIGN

NTS REFERENCE SHEET C-507

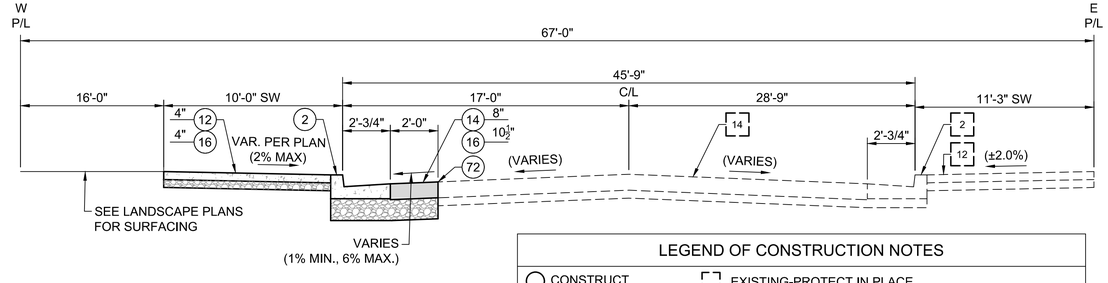

GENERAL NOTES:
1. SEE DETAIL 6, CASE 2 ON SHEET C-600 FOR CURB AND GUTTER CONSTRUCTION.
2. SEE SHEET C-500 FOR PROPOSED DRIVEWAY OPENINGS AND PEDESTRIAN CURB RAMPS.
3. SIDEWALK CONCRETE THICKNESS AT PROPOSED DRIVEWAYS SHALL BE 6" THICK MINIMUM.

LEGEND OF CONSTRUCTION NOTES

○ CONSTRUCT ⬚ EXISTING-PROTECT IN PLACE

NO.	CONSTRUCTION ITEM/NOTE	STANDARD PLAN
2	TYPE C INTEGRAL CURB & GUTTER	S-410-2
12	CONCRETE WALK	S-444-0; DTL 4, SHT C-600
14	ASPHALT CONCRETE PAVEMENT	DTL 1, SHT C-600
16	UNTREATED BASE MATERIAL	SEE PVMT DTL
72	SAWCUT LINE; JOIN EXISTING	DTL 2, 5, 6, SHT C-600

9 TYP. ROADWAY SECTION - SANTA FE AVE. STA. 11+76.07 TO STA. 12+65.30

NTS REFERENCE SHEET C-500

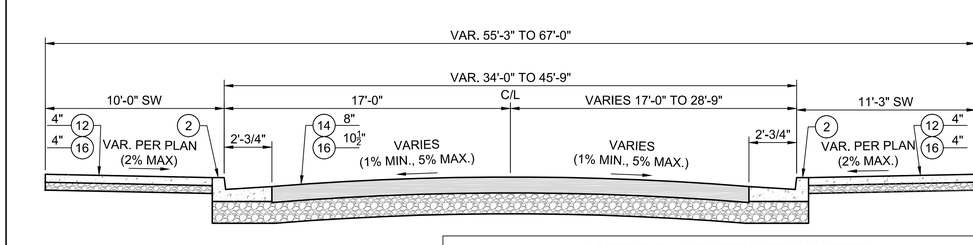

GENERAL NOTES:
1. SEE DETAIL 6, CASE 2 ON SHEET C-600 FOR CURB AND GUTTER CONSTRUCTION.
2. SEE SHEET C-500 FOR PROPOSED DRIVEWAY OPENINGS AND PEDESTRIAN CURB RAMPS.
3. SIDEWALK CONCRETE THICKNESS AT PROPOSED DRIVEWAYS SHALL BE 6" THICK MINIMUM.
4. CONSTRUCT T SECTION PER CITY STD PLAN S-432-1. SEE SHEET C-500.

LEGEND OF CONSTRUCTION NOTES

○ CONSTRUCT ⬚ EXISTING-PROTECT IN PLACE

NO.	CONSTRUCTION ITEM/NOTE	STANDARD PLAN
2	TYPE C INTEGRAL CURB & GUTTER	S-410-2
12	CONCRETE WALK	S-444-0; DTL 4, SHT C-600
14	ASPHALT CONCRETE PAVEMENT	DTL 1, SHT C-600
16	UNTREATED BASE MATERIAL	SEE PVMT DTL
72	SAWCUT LINE; JOIN EXISTING	DTL 2, 5, 6, SHT C-600

10 TYP. ROADWAY SECTION - SANTA FE AVE. STA. 10+54.94 TO STA. 11+76.07

NTS REFERENCE SHEET C-500

BUREAU OF ENGINEERING
OFFICIAL RECORD

PLANS PREPARED BY:
TETRA TECH, INC.
707 WILSHIRE BLVD, 23RD FLR.
LOS ANGELES, CA 90017
PHONE: (213) 239-8866

THE CITY OF LOS ANGELES OR ITS OFFICERS OR AGENTS SHALL NOT BE RESPONSIBLE FOR THE ACCURACY OR COMPLETENESS OF ELECTRONIC COPIES OF THIS PLAN SHEET.

REVISION DATES (DESIGN STAGE ONLY)

Sheet Version 3.0

CITY OF LOS ANGELES DEPARTMENT OF PUBLIC WORKS
BUREAU OF ENGINEERING
ENGINEERING
CITY OF LOS ANGELES

NO.	REVISIONS:	DATE	BY:

BUILDING NO.
INDEX NO. MF-300501

THIS PLAN WAS ELECTRONICALLY SIGNED AND STAMPED

JUSTIN T. SMITH
No. 85736
EXP: 9-30-22
REGISTERED PROFESSIONAL ENGINEER
CIVIL
STATE OF CALIFORNIA

CITY ENGINEER
DATE: 07/11/22
LIC. NO. C-85736
DESIGN GROUP
ENGINEER: JUSTIN SMITH
DESIGNED BY: JUSTIN SMITH
DRAWN BY: DAVID LOPEZ
CHECKED BY: NATE SCHREINER
APPROVED BY: JASON L. FUSSEL
TED ALLEN, P.E.

VERT. CONTROL: BM 12-04070, 1929 (NGVD29) - 1985 ADJUSTMENT
HORIZ. CONTROL: GPS; PID AE 1704, EPOCH 1991.35

SHEET TITLE: CIVIL DETAILS SHEET 3

PROJECT: SIXTH STREET PARK, ARTS AND RIVER CONNECTIVITY IMPROVEMENTS (PARC)

ADDRESS: SIXTH STREET OVER THE LOS ANGELES RIVER

WORK ORDER NO. E700235D
FILE NO. --
DRAWING NO. C-602
SHEET 67 OF 295 SHEETS

7/8/2022 1:19:24 AM - O:\PROJECTS\IRVINE\20043\200-20043-17001\CAD\SHEETFILES\C-602_DETAILS - TIT.DWG - SMITH, JUSTIN

1 TYP. ROADWAY SECTION - MISSION RD. STA. 12+26.03 TO STA. 14+21.81

NTS REFERENCE SHEET C-501

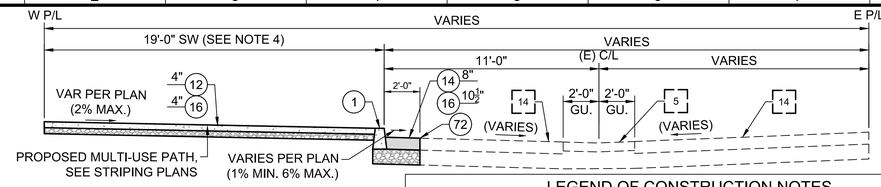

GENERAL NOTES:

1. SEE DETAIL 6, CASE 1 ON SHEET C-600 FOR CURB CONSTRUCTION.
2. SEE SHEET C-501 FOR PROPOSED DRIVEWAY OPENINGS, CURB RETURNS, AND PEDESTRIAN CURB RAMPS.
3. SIDEWALK CONCRETE THICKNESS AT PROPOSED DRIVEWAYS SHALL BE 6" THICK MINIMUM.
4. BETWEEN STATIONS 12+79.87 AND 13+15.15, WIDTH TO VARY BETWEEN 19'-0" AND 23'-6". SEE SHEET C-501 FOR ADDITIONAL INFORMATION ON THE CURB EXTENSION.

LEGEND OF CONSTRUCTION NOTES

◯ CONSTRUCT ⬚ EXISTING-PROTECT IN PLACE

NO.	CONSTRUCTION ITEM/NOTE	STANDARD PLAN
1	TYPE A CONCRETE CURB	S-410-2
5	CONCRETE LONGITUDINAL GUTTER	S-410-2
12	CONCRETE WALK	S-444-0; DTL 4, SHT C-600
14	ASPHALT CONCRETE PAVEMENT	DTL 1, SHT C-600
16	UNTREATED BASE MATERIAL	SEE PVMT DTL
72	SAWCUT LINE; JOIN EXISTING	DTL 2, 5, 6, SHT C-600

2 TYP. ROADWAY SECTION - MISSION RD. STA. 11+35.85 TO STA. 12+26.03

NTS REFERENCE SHEET C-501

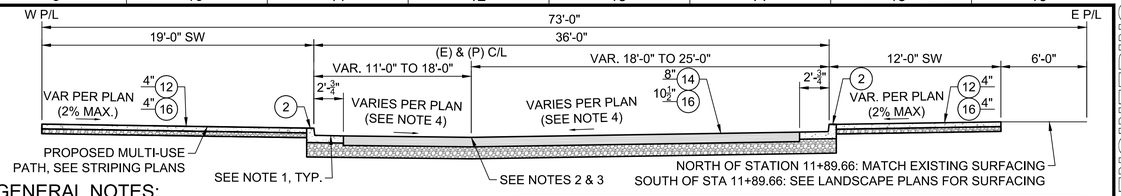

GENERAL NOTES:

1. CURB AND GUTTER SHALL TRANSITION FROM A SHED GUTTER TO THE STANDARD CITY GUTTER SECTION BETWEEN STATION 12+26.03 AND STATION 11+85.85. SEE SHEET C-501 FOR ADDITIONAL INFORMATION.
2. SEE SHEET C-501 FOR PROPOSED CATCH BASIN LOCATION AT C/L.
3. CENTERLINE LOCATION TRANSITION OCCURS BETWEEN STATION 11+60.85 AND STATION 11+85.85. SEE SHEET C-501 FOR ADDITIONAL INFORMATION.
4. STREET SECTION TRANSITIONS FROM A REVERSE CROWN CONDITION AT STATION 12+26.03 TO A STANDARD CROWN CONDITION AT STATION 11+35.85. SEE SHEET C-501 FOR ADDITIONAL INFORMATION.

LEGEND OF CONSTRUCTION NOTES

◯ CONSTRUCT ⬚ EXISTING-PROTECT IN PLACE

NO.	CONSTRUCTION ITEM/NOTE	STANDARD PLAN
2	TYPE C INTEGRAL CURB & GUTTER	S-410-2
12	CONCRETE WALK	S-444-0; DTL 4, SHT C-600
14	ASPHALT CONCRETE PAVEMENT	DTL 1, SHT C-600
16	UNTREATED BASE MATERIAL	SEE PVMT DTL

3 TYP. ROADWAY SECTION - MISSION RD. STA. 10+00.00 TO STA. 11+35.85

NTS REFERENCE SHEET C-501

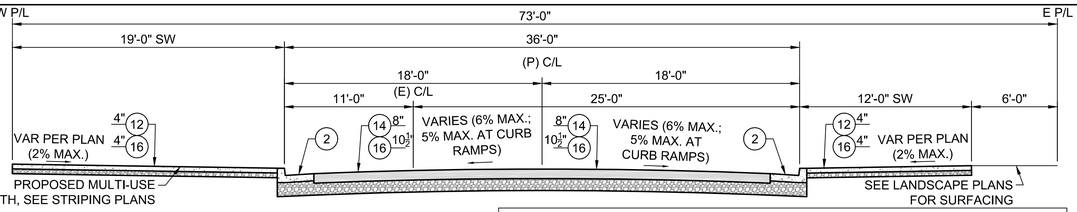

GENERAL NOTES:

1. SEE SHEET C-501 FOR PROPOSED DRIVEWAY OPENINGS AND PEDESTRIAN CURB RAMPS.
2. SIDEWALK CONCRETE THICKNESS AT PROPOSED DRIVEWAYS SHALL BE 6" THICK MINIMUM.
3. CONSTRUCT T SECTION PER CITY STD PLAN S-432-1. SEE SHEET C-501.

LEGEND OF CONSTRUCTION NOTES

◯ CONSTRUCT ⬚ EXISTING-PROTECT IN PLACE

NO.	CONSTRUCTION ITEM/NOTE	STANDARD PLAN
2	TYPE C INTEGRAL CURB & GUTTER	S-410-2
12	CONCRETE WALK	S-444-0; DTL 4, SHT C-600
14	ASPHALT CONCRETE PAVEMENT	DTL 1, SHT C-600
16	UNTREATED BASE MATERIAL	SEE PVMT DTL

4 TYP. ROADWAY SECTION - ANDERSON ST. STA. 30+28.88 TO STA. 31+77.39

NTS REFERENCE SHEET C-502

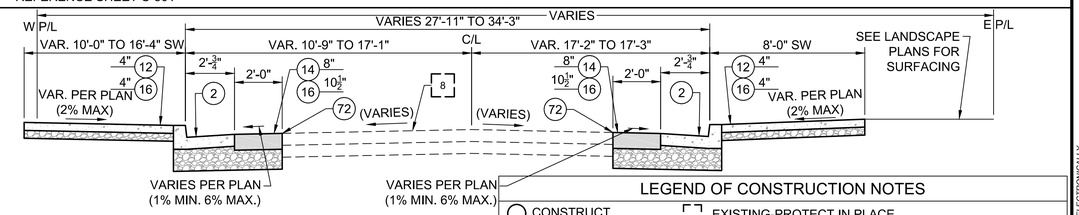

GENERAL NOTES:

1. SEE DETAIL 6, CASE 3 ON SHEET C-600 FOR CURB AND GUTTER CONSTRUCTION.
2. SEE SHEET C-502 FOR PROPOSED DRIVEWAY OPENINGS, MOUNTABLE CURB SECTIONS, RAISED CROSSINGS, AND PEDESTRIAN CURB RAMPS.
3. WESTERN SIDEWALK AND CURB RECONSTRUCTION TO BEGIN AT STA 30+69.03.
4. SIDEWALK CONCRETE THICKNESS AT PROPOSED DRIVEWAYS AND MOUNTABLE CURBS SHALL BE 6" THICK MINIMUM.

LEGEND OF CONSTRUCTION NOTES

◯ CONSTRUCT ⬚ EXISTING-PROTECT IN PLACE

NO.	CONSTRUCTION ITEM/NOTE	STANDARD PLAN
2	TYPE C INTEGRAL CURB & GUTTER	S-410-2
8	CONCRETE PAVEMENT	DTL 3 & 7, SHT C-600
12	CONCRETE WALK	S-444-0; DTL 4, SHT C-600
14	ASPHALT CONCRETE PAVEMENT	DTL 1, SHT C-600
16	UNTREATED BASE MATERIAL	SEE PVMT DTL
72	SAWCUT LINE; JOIN EXISTING	DTL 2, 5, 6, SHT C-600

5 TYP. ROADWAY SECTION - ANDERSON ST. STA. 31+77.39 TO STA. 34+38.85

NTS REFERENCE SHEET C-502

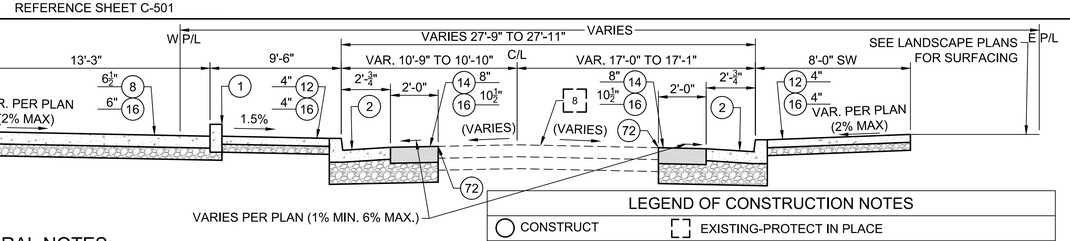

GENERAL NOTES:

1. TYP. SECTION VARIES AT RAISED CROSSWALK LOCATION. SEE SHEET C-503 FOR ADDITIONAL INFORMATION.
2. SEE SHEET C-503 FOR CATCH BASIN LOCATIONS, INCLUDING ASSOCIATED LOCAL DEPRESSIONS.

LEGEND OF CONSTRUCTION NOTES

◯ CONSTRUCT ⬚ EXISTING-PROTECT IN PLACE

NO.	CONSTRUCTION ITEM/NOTE	STANDARD PLAN
2	TYPE C INTEGRAL CURB & GUTTER	S-410-2
12	CONCRETE WALK	S-444-0; DTL 4, SHT C-600
14	ASPHALT CONCRETE PAVEMENT	DTL 1, SHT C-600
16	UNTREATED BASE MATERIAL	SEE PVMT DTL

6 TYP. ROADWAY SECTION - ANDERSON ST. STA. 34+38.85 TO STA. 35+30.85

NTS REFERENCE SHEET C-502

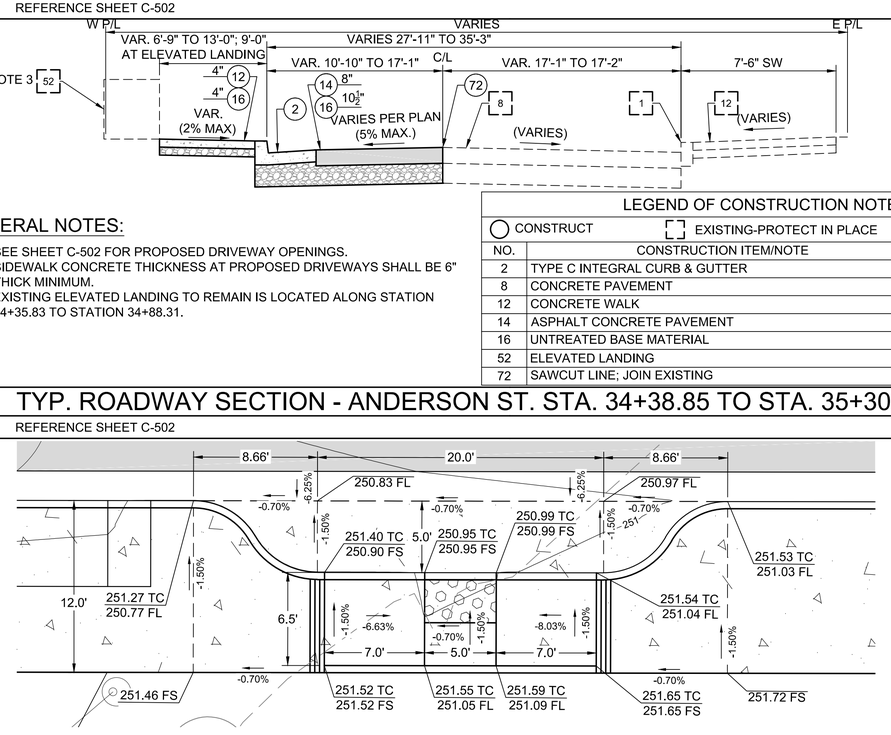

7 TYP. ROADWAY SECTION - CLARENCE ST. STA. 41+77.30 TO STA. 42+33.59

NTS REFERENCE SHEET C-503

GENERAL NOTES:

1. SEE DETAIL 6, CASE 3 ON SHEET C-600 FOR CURB AND GUTTER CONSTRUCTION.
2. SEE SHEET C-502 FOR PROPOSED DRIVEWAY OPENINGS.
3. EASTERN SIDEWALK AND CURB RECONSTRUCTION TO END AT STA 33+13.27.
4. SIDEWALK CONCRETE THICKNESS AT PROPOSED DRIVEWAYS SHALL BE 6" THICK MINIMUM.
5. TYPE A CONCRETE CURB TO BE CONSTRUCTED WITH VERTICAL FACES. TYPE A CONCRETE CURB TO BE CONSTRUCTED BETWEEN STATION 31+92.34 AND STATION 33+96.81.

LEGEND OF CONSTRUCTION NOTES

◯ CONSTRUCT ⬚ EXISTING-PROTECT IN PLACE

NO.	CONSTRUCTION ITEM/NOTE	STANDARD PLAN
1	TYPE A CONCRETE CURB	S-410-2
2	TYPE C INTEGRAL CURB & GUTTER	S-410-2
8	CONCRETE PAVEMENT	DTL 3 & 7, SHT C-600
12	CONCRETE WALK	S-444-0; DTL 4, SHT C-600
14	ASPHALT CONCRETE PAVEMENT	DTL 1, SHT C-600
16	UNTREATED BASE MATERIAL	SEE PVMT DTL
72	SAWCUT LINE; JOIN EXISTING	DTL 2, 5, 6, SHT C-600

8 MISSION ROAD PASSENGER LOADING ZONE

NTS REFERENCE SHEET C-501

GENERAL NOTES:

1. SEE SHEET C-502 FOR PROPOSED DRIVEWAY OPENINGS.
2. SIDEWALK CONCRETE THICKNESS AT PROPOSED DRIVEWAYS SHALL BE 6" THICK MINIMUM.
3. EXISTING ELEVATED LANDING TO REMAIN IS LOCATED ALONG STATION 34+35.83 TO STATION 34+88.31.

LEGEND OF CONSTRUCTION NOTES

◯ CONSTRUCT ⬚ EXISTING-PROTECT IN PLACE

NO.	CONSTRUCTION ITEM/NOTE	STANDARD PLAN
2	TYPE C INTEGRAL CURB & GUTTER	S-410-2
8	CONCRETE PAVEMENT	DTL 3 & 7, SHT C-600
12	CONCRETE WALK	S-444-0; DTL 4, SHT C-600
14	ASPHALT CONCRETE PAVEMENT	DTL 1, SHT C-600
16	UNTREATED BASE MATERIAL	SEE PVMT DTL
52	ELEVATED LANDING	-
72	SAWCUT LINE; JOIN EXISTING	DTL 2, 5, 6, SHT C-600

THE CITY OF LOS ANGELES OR ITS OFFICERS OR AGENTS SHALL NOT BE RESPONSIBLE FOR THE ACCURACY OR COMPLETENESS OF ELECTRONIC COPIES OF THIS PLAN SHEET.

REVISION DATES (DESIGN STAGE ONLY)

Sheet Version 3.0

BUREAU OF ENGINEERING • CITY OF LOS ANGELES • ENGINEERING

BUILDING NO.

INDEX NO. MF-300501

NO.	REVISIONS:	DATE	BY:

THIS PLAN WAS ELECTRONICALLY SIGNED AND STAMPED

PROFESSIONAL ENGINEER ★ JUSTIN T. SMITH ★ No. 85736 EXP: 9-30-22 ★ REGISTERED ★ CIVIL ★ STATE OF CALIFORNIA

CITY OF LOS ANGELES • DEPARTMENT OF PUBLIC WORKS • BUREAU OF ENGINEERING

TED ALLEN, P.E. CITY ENGINEER

DESIGN GROUP

ENGINEER: JUSTIN SMITH
DESIGNED BY: JUSTIN SMITH
DRAWN BY: DAVID LOPEZ
CHECKED BY: NATE SCHREINER
APPROVED BY: JASON L. FUSSEL

LIC. NO. C-85736 DATE: 07/11/22

OFFICIAL RECORD

VERT. CONTROL: BM 12-04070, 1929 (NGVD29) - 1985 ADJUSTMENT
HORIZ. CONTROL: GPS, PID AE 1704; EPOCH 1991.35

SHEET TITLE: CIVIL DETAILS SHEET 4

PROJECT: SIXTH STREET PARK, ARTS AND RIVER CONNECTIVITY IMPROVEMENTS (PARC)

ADDRESS: SIXTH STREET OVER THE LOS ANGELES RIVER

PLANS PREPARED BY:
TETRA TECH, INC.
707 WILSHIRE BLVD. 23RD FLR.
LOS ANGELES, CA 90017
PHONE: (213) 239-8866

WORK ORDER NO. E700235D
FILE NO. --
DRAWING NO. C-603
SHEET 68 OF 295 SHEETS

7/8/2022 2:28:24 AM - O:\PROJECTS\IRVINE\20043\20-20043-17001\CAD\SHEETFILES\C-603_DETAILS - TT.DWG - SMITH, JUSTIN

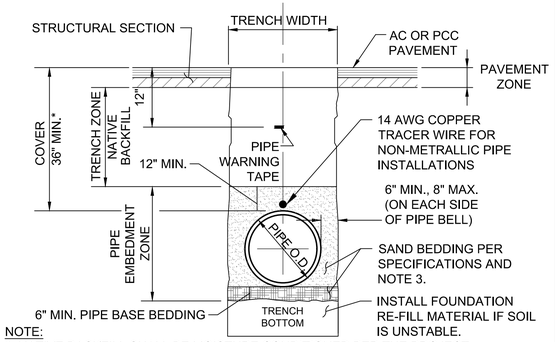

NOTE:
1. NATIVE BACKFILL SHALL BE MOISTURE CONDITIONED PER THE PROJECT GEOTECHNICAL REPORT.
2. BACKFILL AND BEDDING SHALL BE COMPACTED PER THE PROJECT GEOTECHNICAL REPORT (90% RELATIVE COMPACTION). UPPER 12" TO BE COMPACTED TO 95% RELATIVE COMPACTION.
3. MIN. S.E. SHALL BE 30 FOR NATURAL IMPORTED MATERIALS AND 40 FOR SCREENED RECYCLED MATERIALS PER ASTM D 2419
4. WHERE PIPE MUST BE CONSTRUCTED AT DEPTHS SHALLOWER THAN 3' OF COVER, PIPE SHALL BE ENCASED IN CONCRETE PER PLAN.

1 WATER LINE TRENCH DETAIL

NTS REFERENCE SHEET C-400 THRU C-402

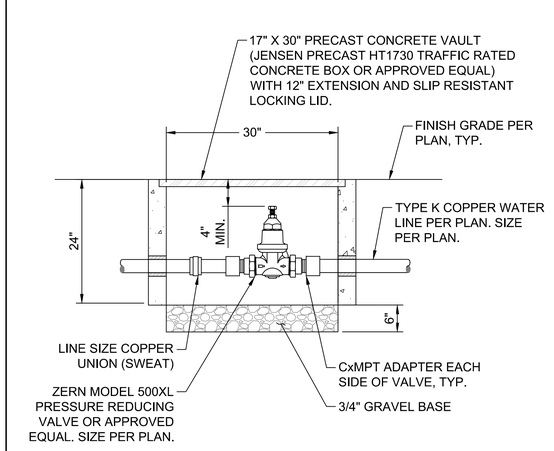

2 PRESSURE REDUCING VALVE & VAULT

NTS REFERENCE SHEET C-401

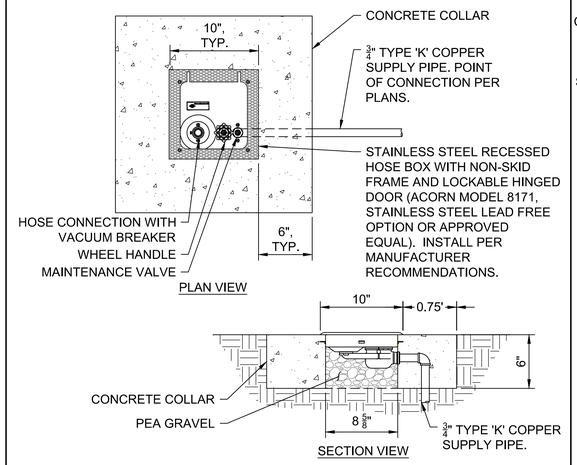

3 IN-GROUND HOSE BOX

NTS REFERENCE SHEET C-400 THRU C-402

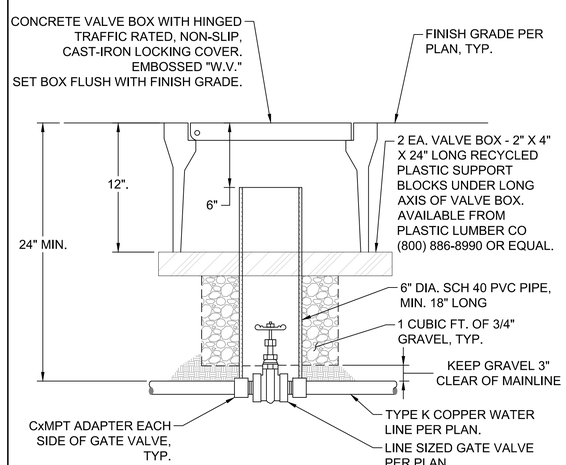

4 GATE VALVE BOX

NTS REFERENCE SHEET C-400 THRU C-402

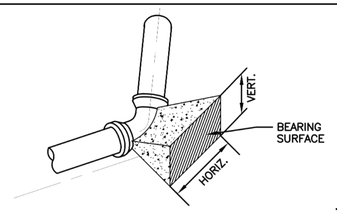

TYPICAL BEARING SURFACE

PIPE SIZE	11 1/4° BEND		22 1/2° BEND		45° BEND		90° BEND		TEE		END CAP	
	HORIZ.	VERT.	HORIZ.	VERT.	HORIZ.	VERT.	HORIZ.	VERT.	HORIZ.	VERT.	HORIZ.	VERT.
4"	1'-6"	0'-9"	1'-8"	0'-9"	2'-4"	1'-0"	3'-3"	1'-4"	2'-8"	1'-3"	2'-8"	1'-3"
6"	1'-9"	1'-0"	2'-6"	1'-3"	3'-6"	1'-6"	4'-8"	2'-3"	4'-0"	2'-0"	4'-0"	2'-0"
8"	2'-4"	1'-0"	3'-4"	1'-6"	4'-8"	2'-0"	6'-4"	3'-0"	5'-4"	2'-4"	5'-4"	2'-4"
10"	3'-0"	1'-4"	4'-3"	1'-9"	5'-9"	2'-6"	7'-10"	3'-6"	6'-8"	3'-0"	6'-8"	3'-0"
12"	3'-6"	2'-0"	5'-0"	2'-3"	6'-10"	3'-0"	9'-6"	4'-3"	7'-10"	3'-6"	7'-10"	3'-6"

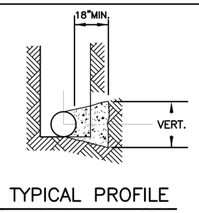

TYPICAL PROFILE

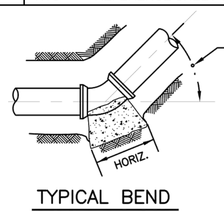

TYPICAL BEND

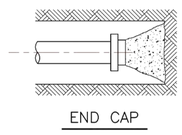

END CAP

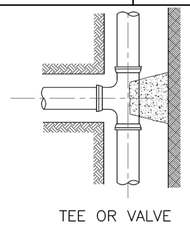

TEE OR VALVE

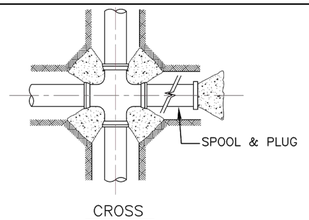

CROSS
SEE NOTE 3

NOTES:
1. THRUST BLOCK BEARING AREA BASED ON ALLOWABLE SOIL BEARING VALUE OF 1500 PSF PRESSURE AND 225 PSI LINE PRESSURE WITH 3'-0" COVER MINIMUM.
   FOR BEARING = 1000 PSF, (SAND) 1.5 X AREA/VOLUME SHOWN
   FOR BEARING = 500 PSF, (SOFT CLAY) 3.0 X AREA/VOLUME SHOWN
2. THRUST BLOCKS SHALL BE CLASS 560-C-3250 CONCRETE (CONTAINING NOT LESS THAN FIVE SACKS PER CUBIC YARD) AND PLACED AGAINST UNDISTURBED SOIL.
3. THRUST BLOCKS ON CROSSES SHALL BE USED ONLY WHEN PIPE SIZES DIFFER OR WHEN ONE OR MORE BRANCHES ARE CAPPED/STUBBED OUT. SIZE SHALL BE BASED ON THE LARGEST PIPE SIZE.
4. REINFORCING STEEL SHALL CONFORM TO ASTM A15 AND A305 INTERMEDIATE GRADE. REBAR AT VALVES AND VERTICAL BENDS SHALL BE EPOXY COATED.
5. CONCRETE SHALL NOT EXTEND ONTO FLANGE OR ADJOINING PIPE. PIPE AND FITTING JOINTS SHALL BE ACCESSIBLE FOR REPAIR.
6. THRUST BLOCK WIDTH SHALL BE BETWEEN ONE AND TWO TIMES ITS HEIGHT. THRUST BLOCK HEIGHT SHALL NOT EXCEED TRENCH HEIGHT.
7. CONTRACTOR SHALL BE RESPONSIBLE FOR DETERMINING THE SAFE SOIL BEARING VALUES AND THE POSITION AND SIZE OF BEARING AREAS.

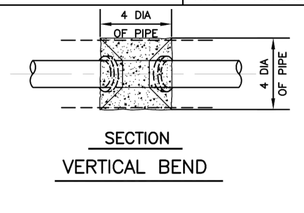

SECTION
VERTICAL BEND

VERTICAL DEAD LOAD (MIN. CUBIC YARDS)

PIPE SIZE	11 1/4° BEND	22 1/2° BEND	45° BEND
4"	0.3	0.5	0.9
6"	0.5	1.0	2.0
8"	0.9	1.8	3.5
10"	1.4	2.8	5.5
12"	2.0	4.0	7.8

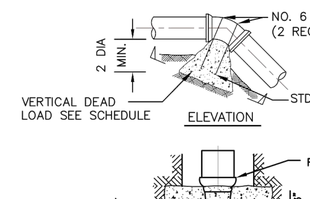

ELEVATION

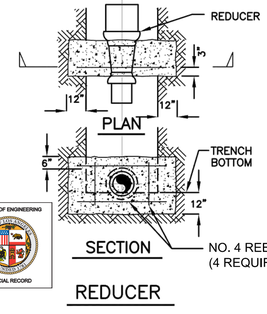

REDUCER

BUREAU OF ENGINEERING OFFICIAL RECORD

5 THRUST BLOCKS

NTS REFERENCE SHEET C-400 THRU C-402

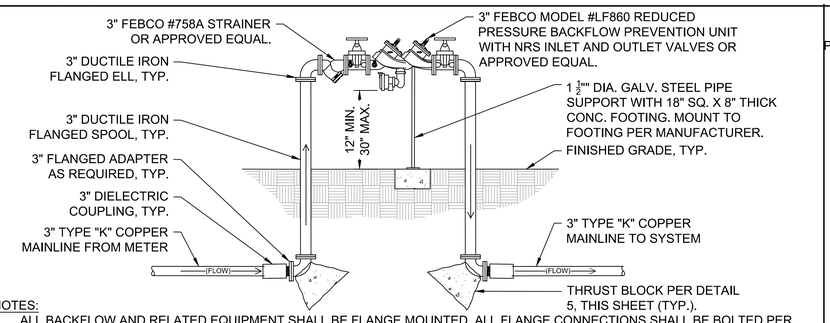

NOTES:
1. ALL BACKFLOW AND RELATED EQUIPMENT SHALL BE FLANGE MOUNTED. ALL FLANGE CONNECTIONS SHALL BE BOLTED PER MANUFACTURERS SPECIFICATIONS USING A FULL-FACE GASKET.
2. PAINT BACKFLOW DEVICE, RELATED EQUIPMENT, AND EXPOSED PIPING WITH TWO COATS OF FOREST GREEN ENAMEL PAINT - MASK ALL IDENTIFICATION TAGS.
3. THE CONTRACTOR SHALL HAVE THE BACKFLOW PREVENTER TESTED BY A CERTIFIED TESTER. A "BACKFLOW PREVENTION DEVICE TESTING REPORT" SHALL BE SUBMITTED TO THE LOS ANGELES COUNTY HEALTH DEPT AND A DUPLICATE COPY PROVIDED TO THE POLLUTION CONTROL SECTION OF THE DEPARTMENT OF WATER AND POWER; A COPY OF THE REPORT SHALL BE GIVEN TO THE PROJECT MANAGER AT THE OPERATIONAL FINAL.
4. THE PORTLAND CEMENT CONCRETE USED FOR THRUST BLOCKS SHALL BE MINIMUM 3250 PSI CONCRETE.
5. SEE BACKFLOW ENCLOSURE DETAIL.
6. THIS BACKFLOW DETAIL IS FOR THE POTABLE WATER SYSTEM. SEE IRRIGATION PLANS FOR IRRIGATION BACKFLOW DETAILS.

6 RP BACKFLOW PREVENTER ASSEMBLY (3" Ø)

NTS REFERENCE SHEET C-400 THRU C-402

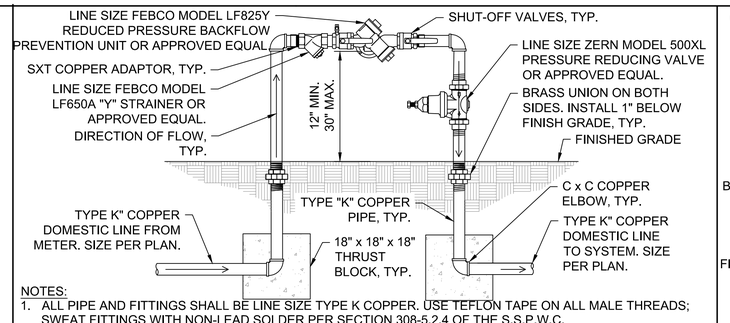

NOTES:
1. ALL PIPE AND FITTINGS SHALL BE LINE SIZE TYPE K COPPER. USE TEFLON TAPE ON ALL MALE THREADS; SWEAT FITTINGS WITH NON-LEAD SOLDER PER SECTION 308-5.2.4 OF THE S.S.P.W.C.
2. THE CONTRACTOR SHALL HAVE THE BACKFLOW PREVENTER TESTED BY A CERTIFIED TESTER. A "BACKFLOW PREVENTION DEVICE TESTING REPORT" SHALL BE SUBMITTED TO THE LOS ANGELES COUNTY HEALTH DEPT AND A DUPLICATE COPY PROVIDED TO THE POLLUTION CONTROL SECTION OF THE DEPARTMENT OF WATER AND POWER; A COPY OF THE REPORT SHALL BE GIVEN TO THE PROJECT MANAGER AT THE OPERATIONAL FINAL.
3. SEE BACKFLOW ENCLOSURE DETAIL.
4. PAINT BACKFLOW DEVICE, PRESSURE REGULATOR AN EXPOSED PIPING WITH TWO COATS OF FOREST GREEN ENAMEL PAINT. MASK ALL IDENTIFICATION TAGS AND VALVE OPERATING HANDLES.
5. THE PORTLAND CEMENT CONCRETE USED FOR THRUST BLOCKS SHALL BE MINIMUM 3250 PSI CONCRETE.
6. THIS BACKFLOW DETAIL IS FOR THE POTABLE WATER SYSTEM. SEE IRRIGATION PLANS FOR IRRIGATION BACKFLOW DETAILS.

7 RP BACKFLOW PREVENTER ASSEMBLY (<= 2" Ø)

NTS REFERENCE SHEET C-400 THRU C-402

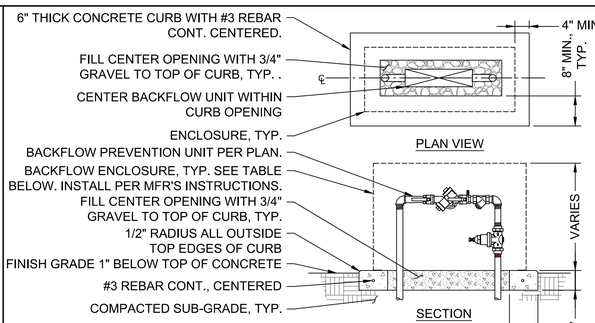

BACKFLOW SIZE AND ENCLOSURE MODEL & CURB SIZE TABLE
ALL ENCLOSURES SHALL BE POWDER COATED DARK GREEN

DEVICE SIZE:	STRONG BOX INC. (800) 729-1314	ENCLOSURE DIMEMSIONS (width x length)	LENGTH "L"
3/4" to 1"	SBBC-30CR	18" x 31.5"	40 INCHES
1-1/2" to 2"	SBBC-45CR	18" x 46.5"	55 INCHES
2-1/2" to 3"	SBBC-75CR	25.5" x 76.5"	85 INCHES

ENCLOSURE MOUNTING HARDWARE: REFER TO MANUFACTURER'S INSTALLATION INSTRUCTIONS BEFORE POURING CONC. CURB.

8 BACKFLOW PREVENTER ENCLOSURE

NTS REFERENCE SHEET C-400 THRU C-402

PLANS PREPARED BY:
TETRA TECH, INC.
707 WILSHIRE BLVD. 23RD FLR.
LOS ANGELES, CA 90017
PHONE: (213) 239-8866

BUREAU OF ENGINEERING
ENGINEERING
CITY OF LOS ANGELES

NO.	REVISIONS:	DATE	BY:

BUILDING NO.
INDEX NO. MF-300501

THIS PLAN WAS ELECTRONICALLY SIGNED AND STAMPED

PROFESSIONAL ENGINEER * JUSTIN T. SMITH * No. 85736 EXP: 9-30-22 * CIVIL * STATE OF CALIFORNIA

CITY ENGINEER
DATE: 07/11/22
LIC. NO. C-85736
DESIGN GROUP
ENGINEER: JUSTIN SMITH
DESIGNED BY: JUSTIN SMITH
DRAWN BY: DAVID LOPEZ
CHECKED BY: NATE SCHREINER
APPROVED BY: JASON L. FUSSEL
TED ALLEN, P.E.

SHEET TITLE: CIVIL DETAILS SHEET 5
PROJECT: SIXTH STREET PARK, ARTS AND RIVER CONNECTIVITY IMPROVEMENTS (PARC)
ADDRESS: SIXTH STREET OVER THE LOS ANGELES RIVER

CITY OF LOS ANGELES DEPARTMENT OF PUBLIC WORKS
VERT. CONTROL: BM 12-04070, 1929 (NGVD29) - 1985 ADJUSTMENT
HORIZ. CONTROL: GPS, PID AE 1704, EPOCH 1991.35

WORK ORDER NO. E700235D
FILE NO. --
DRAWING NO. C-604
SHEET 69 OF 295 SHEETS

7/8/2022 1:26:51 AM - O:\PROJECTS\IRVINE\20043\20-20043-17001\CAD\SHEETFILES\C-604_DETAILS - TT.DWG - SMITH, JUSTIN

REVISION DATES (DESIGN STAGE ONLY)

THE CITY OF LOS ANGELES OR ITS OFFICERS OR AGENTS SHALL NOT BE RESPONSIBLE FOR THE ACCURACY OR COMPLETENESS OF ELECTRONIC COPIES OF THIS PLAN SHEET.

Sheet Version 3.0

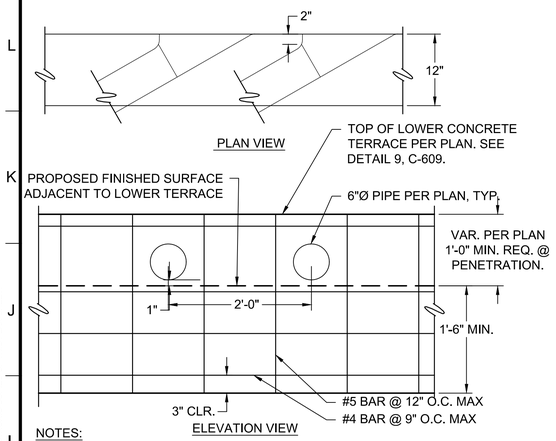

NOTES:
ADJUST REINFORCEMENT AT PENETRATION LOCATIONS.

1 PIPE PENETRATION @ TERRACE

NTS REFERENCE SHEET C-404

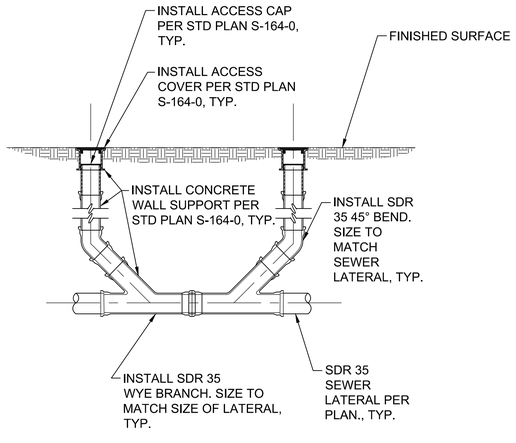

2 TWO-WAY SEWER CLEANOUT

NTS REFERENCE SHEET C-415 THRU C-416

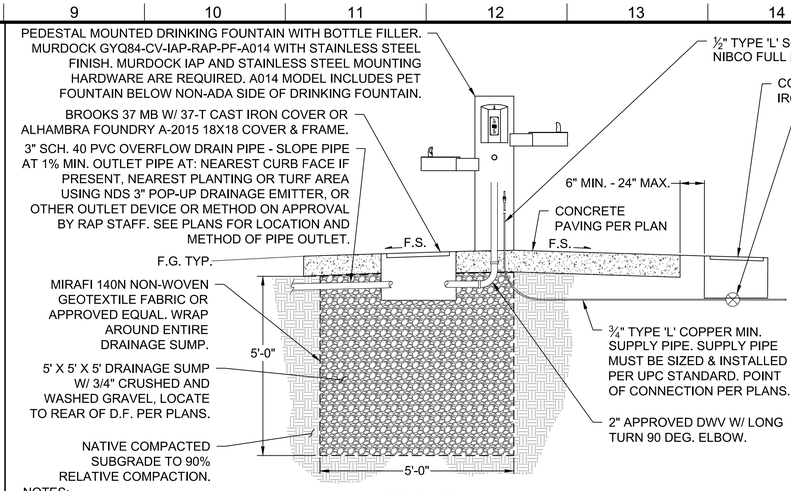

NOTES:
1. INSTALL PER DETAIL. REFER TO MANUFACTURER'S INSTRUCTION FOR PLUMBING AND MOUNTING DRINKING FOUNTAIN UNIT.
2. CONTRACTOR SHALL SUBMIT LOCATION FOR SUMP AND OVERFLOW DRAINAGE LAYOUT FOR APPROVAL BY PROJECT MANAGER PRIOR TO BEGINNING EXCAVATION.
3. CONTRACTOR TO SUBMIT SHOP DRAWINGS TO THE CITY'S PROJECT MANAGER FOR APPROVAL PRIOR TO FABRICATION AND INSTALLATION.
4. REFER TO SHEET L-543 FOR ADDITIONAL DRINKING FOUNTAIN LAYOUT INFORMATION.

3 DRINKING FOUNTAIN AND SUMP

NTS REFERENCE SHEET C-400 THRU C-402

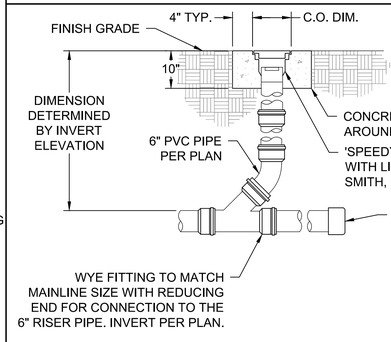

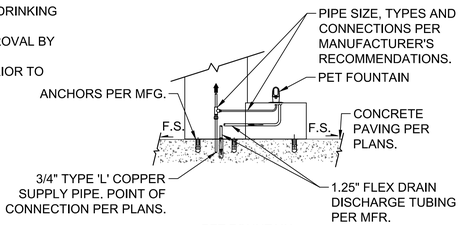

PET FOUNTAIN

DOMESTIC LINE STERILIZATION PROCEDURE:
1. FLUSH DOMESTIC WATER LINES COMPLETELY.
2. USING A PROPORTIONING PUMP, INJECT SODIUM HYPOCHLORITE LIQUID DISINFECTANT INTO THE DOMESTIC LINE THROUGH A ¾" SERVICE COCK AT A POINT AS CLOSE TO THE WATER METER AS POSSIBLE.
3. OPEN BUBBLERS ON ALL D.F. UNITS INSTALLED TO DISTRIBUTE DISINFECTANT THROUGHOUT THE DOMESTIC LINE SYSTEM.
4. VERIFY BY TESTING THAT A MINIMUM CONCENTRATION OF 50 PPM OF DISINFECTANT IS ACHIEVED AT EACH D.F. UNIT.
5. DISINFECTANT SHALL REMAIN IN THE SYSTEM FOR 24 HOURS MINIMUM.
6. AT THE END OF THE 24 HOUR PERIOD, THE RESIDUAL LEVEL OF DISINFECTANT SHALL NOT BE LESS THAN 10 PPM.
7. ALL LINES SHALL BE FLUSHED THOROUGHLY AFTER DISINFECTION IS COMPLETED.
8. A WATER SAMPLE AT EACH D.F. UNIT SHALL BE TESTED BY AN APPROVED TESTING LABORATORY. REQUIRED RESULTS ARE:
   - COLIFORM-AEROGENES ORGANISMS: NEGATIVE
   - TOTAL BACTERIA PLATE COUNT: LESS THAN 100 PER CUBIC CENTIMETER
   - WATER POTABILITY: SAFE TO USE
9. IF THE REQUIRED RESULTS ARE NOT MET, STERILIZATION PROCESS LISTED ABOVE SHALL BE REPEATED UNTIL THE REQUIRED TEST RESULTS ARE MET.

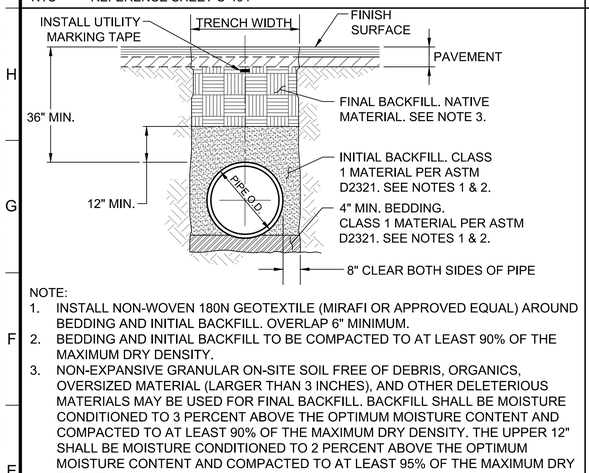

NOTE:
1. INSTALL NON-WOVEN 180N GEOTEXTILE (MIRAFI OR APPROVED EQUAL) AROUND BEDDING AND INITIAL BACKFILL. OVERLAP 6" MINIMUM.
2. BEDDING AND INITIAL BACKFILL TO BE COMPACTED TO AT LEAST 90% OF THE MAXIMUM DRY DENSITY.
3. NON-EXPANSIVE GRANULAR ON-SITE SOIL FREE OF DEBRIS, ORGANICS, OVERSIZED MATERIAL (LARGER THAN 3 INCHES), AND OTHER DELETERIOUS MATERIALS MAY BE USED FOR FINAL BACKFILL. BACKFILL SHALL BE MOISTURE CONDITIONED TO 3 PERCENT ABOVE THE OPTIMUM MOISTURE CONTENT AND COMPACTED TO AT LEAST 90% OF THE MAXIMUM DRY DENSITY. THE UPPER 12" SHALL BE MOISTURE CONDITIONED TO 2 PERCENT ABOVE THE OPTIMUM MOISTURE CONTENT AND COMPACTED TO AT LEAST 95% OF THE MAXIMUM DRY DENSITY.

4 STORM DRAIN TRENCH

NTS REFERENCE SHEET C-403 THRU C-411

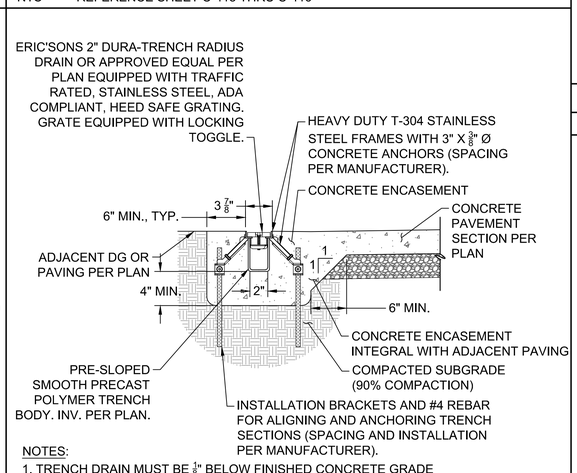

NOTES:
1. TRENCH DRAIN MUST BE ⅜" BELOW FINISHED CONCRETE GRADE

5 RADIUS TRENCH DRAIN

NTS REFERENCE SHEET C-403 & C-411

NOTE:
STENCIL OR PLACARD SHALL BE PLACED ON TOP OF CURB AT ALL INLETS.

6 STORM DRAIN CLEANOUT

NTS REFERENCE SHEET C-403 THRU C-411

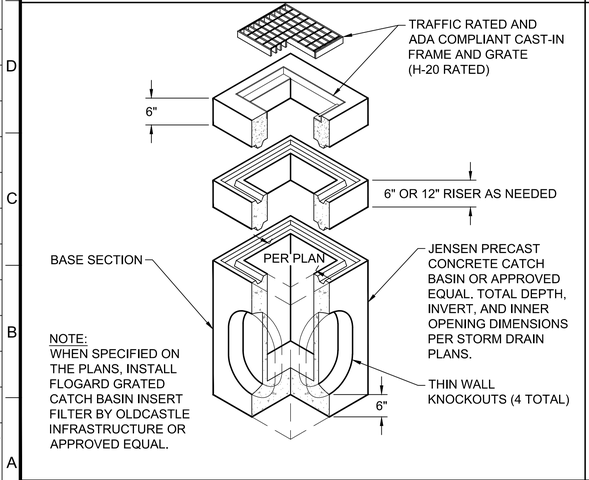

NOTE:
WHEN SPECIFIED ON THE PLANS, INSTALL FLOGARD GRATED CATCH BASIN INSERT FILTER BY OLDCASTLE INFRASTRUCTURE OR APPROVED EQUAL.

7 PRECAST GRATED CATCH BASIN

NTS REFERENCE SHEET C-403 THRU C-411

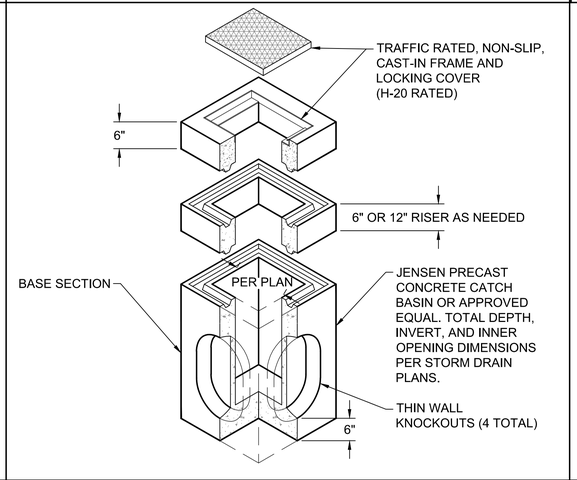

8 CONCRETE JUNCTION STRUCTURE

NTS REFERENCE SHEET C-403 THRU C-411

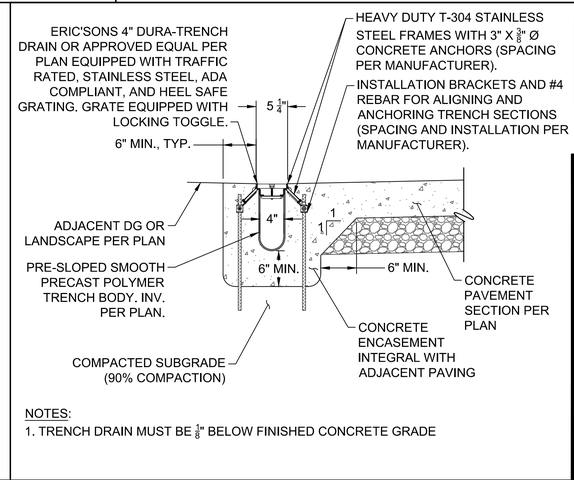

NOTES:
1. TRENCH DRAIN MUST BE ⅜" BELOW FINISHED CONCRETE GRADE

10 STANDARD TRENCH DRAIN

NTS REFERENCE SHEET C-403 THRU C-411

BUREAU OF ENGINEERING OFFICIAL RECORD

PLANS PREPARED BY:
TETRA TECH, INC.
707 WILSHIRE BLVD. 23RD FLR.
LOS ANGELES, CA 90017
PHONE: (213) 239-8866

ENGINEERING
CITY OF LOS ANGELES

BUREAU OF ENGINEERING
DEPARTMENT OF PUBLIC WORKS
CITY OF LOS ANGELES

NO.	REVISIONS:	DATE	BY:

BUILDING NO.

INDEX NO. MF-300501

THIS PLAN WAS ELECTRONICALLY SIGNED AND STAMPED

JUSTIN L. SMITH
No. 85736
EXP: 9-30-22
REGISTERED PROFESSIONAL ENGINEER
CIVIL
STATE OF CALIFORNIA

CITY ENGINEER
TED ALLEN, P.E.
DATE: 07/11/22
LIC NO. C-85736

DESIGN GROUP

ENGINEER:	JUSTIN SMITH
DESIGNED BY:	JUSTIN SMITH
DRAWN BY:	DAVID LOPEZ
CHECKED BY:	NATE SCHREINER
APPROVED BY:	JASON L. FUSSEL

VERT. CONTROL: BM 12-04070, 1929 (NGVD29) - 1985 ADJUSTMENT
HORIZ. CONTROL: GPS; PID AE 1704, EPOCH 1991.35

SHEET TITLE: CIVIL DETAILS SHEET 6

PROJECT: SIXTH STREET PARK, ARTS AND RIVER CONNECTIVITY IMPROVEMENTS (PARC)

ADDRESS: SIXTH STREET OVER THE LOS ANGELES RIVER

WORK ORDER NO. E700235D
FILE NO. --
DRAWING NO. C-605
SHEET 70 OF 295 SHEETS

7/9/2022 3:59:55 PM - O:\PROJECTS\RIVINE\20043\200-20043-17001\CAD\SHEETFILES\C-605_DETAILS - TT.DWG - SMITH, JUSTIN

THE CITY OF LOS ANGELES OR ITS OFFICERS OR AGENTS SHALL NOT BE RESPONSIBLE FOR THE ACCURACY OR COMPLETENESS OF ELECTRONIC COPIES OF THIS PLAN SHEET.

REVISION DATES (DESIGN STAGE ONLY)

Sheet Version 3.0

JENSEN DEFLECTIVE SEPARATOR, MODEL JDS48-2424

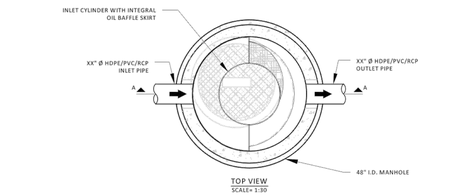

TOP VIEW
SCALE= 1:10

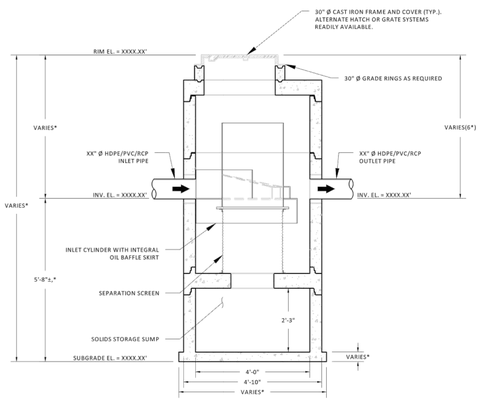

SECTION A-A
SCALE= 1:10

HYDRAULICS AND TREATMENT :

STORMWATER QUALITY DESIGN FLOW (SQDF)	≤ 1.1 - CFS
STORM DRAIN DESIGN CONVEYANCE FLOW	XX.XX - CFS
RETURN FREQUENCY/PERIOD OF PEAK DESIGN CONVEYANCE FLOW	XXXX - YRS
SUGGEST MAXIMUM INTERNAL BYPASS FLOW	≤ 7.0 - CFS

STORMWATER TREATMENT UNIT EMPLOYING THE CONTINUOUS DEFLECTIVE SEPARATION TREATMENT PROCESS TO PRODUCE A NON-BLOCKING SCREENING SYSTEM WITH SWIRL CONCENTRATION. THIS HYDRODYNAMIC SEPARATION TREATMENT IS EQUIPPED WITH AN INTERNAL BYPASS THAT PROVIDES COMPLETE BYPASS OF STORM DRAIN PIPELINE CONVEYANCE FLOW WITHOUT SCOUR OF CAPTURED GROSS SOLIDS.

TREATMENT :

1. CERTIFIED FOR 100% CAPTURE FOR TRASH & DEBRIS BY CALIFORNIA STATE WATER RESOURCES CONTROL BOARD.
2. CERTIFIED FOR 50% TOTAL SUSPENDED SOLIDS (TSS) REMOVAL BY NEW JERSEY DEPARTMENT OF ENVIRONMENTAL PROTECTION.
3. JENSEN DEFLECTIVE SEPARATOR IS A NON-BLOCKING SCREENING UNIT.
4. JENSEN DEFLECTIVE SEPARATOR DESIGNED TO PROCESS ENTIRE SQDF.
5. CAPTURE OF OTHER WATER QUALITY CONSTITUENTS INCLUDE:
   - TOTAL SUSPENDED SOLIDS (TSS)
   - HEAVY METALS
   - OIL & GREASE
   - NUTRIENTS
   - FECAL COLIFORM

GENERAL NOTES :

1. STANDARD CONFIGURATION IS SHOWN. ALTERNATE CONFIGURATIONS ARE READILY AVAILABLE. CONTACT JENSEN STORMWATER SYSTEMS FOR CUSTOM DESIGNS, www.jensenengineeredsystems.com.
2. FOR COMPLETE DESIGN AND PRODUCT INFORMATION, CONTACT JENSEN STORMWATER SYSTEMS.
3. FOUNDATION, SUBGRADE, AND BACKFILL TO BE DESIGNED BY OTHERS.
4. GROUNDWATER ELEVATION IS ASSUMED TO BE BELOW THE BOTTOM OF PRECAST STRUCTURE. CONTACT JENSEN STORMWATER SYSTEMS FOR HIGH GROUNDWATER CONDITIONS.
5. JENSEN STORMWATER SYSTEMS TO PROVIDE ALL MATERIALS AS SHOWN, UNLESS OTHERWISE NOTED.
6. OUTLET INVERT ELEVATION TYPICALLY SET EQUAL TO INLET ELEVATION OR SET 1" LOWER THAN INLET.

INSTALLATION NOTES :

1. CONTRACTOR TO VERIFY ALL DIMENSIONS AND ELEVATIONS IN FIELD PRIOR TO INSTALLATION.
2. PRECAST CONCRETE JOINTS TO BE SEALED USING BUTYL RUBBER COMPOUND SUPPLIED BY JENSEN PRECAST.
3. CONTRACTOR TO GROUT ALL PIPE PENETRATIONS IN PRECAST CONCRETE OPENINGS IN FIELD AS NECESSARY.
4. CONTRACTOR TO ADJUST ELEVATION OF FRAME AND COVER IN FIELD AS NECESSARY.

MATERIALS :

1. ALL DIMENSIONS ARE IN FOOT-INCH.
2. PRECAST MATERIALS AND MANUFACTURING METHODS SHALL CONFORM TO ASTM C-478, C-857 AND LACSD S-A-206, WHEN IN LA COUNTY.
3. CONCRETE SHALL HAVE A MINIMUM COMPRESSIVE STRENGTH F'c = 5,000-psi AT 28-DAYS.
4. THE PORTLAND CEMENT USED IN THE PRECAST SECTION SHALL MEET THE REQUIREMENTS OF TYPE II/V HIGH SULFATE RESISTANT CEMENT IN ACCORDANCE WITH ASTM CLASS M C-150.
5. MANHOLE COMPONENTS CONFORM TO CURRENT SPECIFICATIONS, ASTM, C-478 AND AASHTO M199.
6. FLAT TOPS AND BASE SLABS ARE DESIGNED FOR ASSHTO HS-20 WHEEL LOADING.
7. ALL PRECAST CONCRETE COMPONENTS TO BE MANUFACTURED IN AN NPCA CERTIFIED PLANT.

QTY.	COMPONENT DESCRIPTION	RESPONSIBLE PROVIDER	RESPONSIBLE INSTALLER
1	SEPARATION SCREEN AND INLET CYLINDER	JENSEN	CONTRACTOR
1	XX" Ø HDPE/PVC/RCP INLET PIPE	CONTRACTOR	JENSEN
1	XX" Ø HDPE/PVC/RCP OUTLET PIPE	CONTRACTOR	JENSEN
1	30" Ø CAST IRON FRAME AND COVER, H20 RATED	JENSEN	CONTRACTOR
X	3" TALL 36" Ø GRADE RINGS	JENSEN	CONTRACTOR
X	6" TALL 36" Ø GRADE RING	JENSEN	CONTRACTOR

(*) REGIONAL MANUFACTURING DIFFERENCE :

THESE ARE TEMPLATE SITE DESIGN DRAWINGS. JOINTS ORIENTATIONS, AND FINAL SEPARATION AND BASE SLAB THICKNESS VARY ACROSS JENSEN'S REGIONAL MANUFACTURING FACILITIES. CONFIRM FINAL JOINT ORIENTATION AND THICKNESS PER CONSTRUCTION SUBMITTAL DRAWINGS. ADJUST FINAL DIMENSIONS TO EXTERIOR INVERT AND SUBGRADE ELEVATION PER REGION DIFFERENCES.

MODEL:	PROJECT:	
JDS48-2424 *JENSEN DEFLECTIVE SEPARATOR*	PROJECT NAME PROJECT LOCATION	JENSEN WATER RESOURCES 521 DUNN CIRCLE, SPARKS, NV 89431-6312 (877) 449-0095 FAX (775) 440-2013 www.jensenengineeredsystems.com

HYDRODYNAMIC SEPARATOR (HDS), SWIRL CONCENTRATING, FULL CAPTURE, NON-BLOCKING SCREENING UNIT	ENG. CHK'G. DATE	MFG. CHK'G. DATE	SCALE:	SHEET SIZE:	DRAWING NO:	SHEET NUMBER
	XX/XX/XXXX	XX/XX/XXXX	AS SHOWN	11" X 17"	X.XXXX	JDS48-2424

Copyright Information © 2016 Jensen Precast All Rights Reserved. All materials appearing as Jensen Precast documents and the like are proprietary work product and are protected under U.S. copyright and other laws. Unless in conjunction with business conducted with Jensen Precast, any use of Jensen Precast work product without express, written consent is prohibited and recipient is prohibited from distributing any and all work product to non-approved third parties under penalty of civil action.

NOTE:

1. HYDRODYNAMIC SEPARATOR SHALL BE JENSEN PRECAST MODEL JDS48-2424 OR APPROVED EQUAL.
2. REFER TO THE PLANS FOR PIPE SIZES, PIPE TYPES, INVERT ELEVATIONS, RIM ELEVATIONS, ETC. FINAL PRECAST SECTION DIMENSIONS PER MANUFACTURER. RIM ELEVATION TO SUMP ELEVATION SHALL NOT EXCEED 25 FEET.
3. SUMP OPENING SHALL BE 18" IN DIAMETER MINIMUM.
4. STANDARD DETAIL SHALL BE MODIFIED SO THAT THE 30" Ø FRAME AND COVER IS CENTERED IN THE TOP SLAB.
5. REFER TO DETAIL 2, THIS SHEET FOR OVEREXCAVATION AND SUBGRADE PREPARATION REQUIREMENTS.
6. PRIOR TO INSTALLING THE SEPARATION SLAB OVER THE SOLID STORAGE SUMP, THE CONTRACTOR SHALL APPLY CEMENT MORTAR (¼" MINIMUM THICKNESS) TO THE BASE OF THE SUMP STORAGE TO SLOPE THE SURFACE 2% MINIMUM TO THE CENTER OF THE STRUCTURE.
7. CONTRACTOR SHALL APPLY CEMENT MORTAR (¾" MINIMUM THICKNESS) TO THE TOP OF THE SEPARATION SLAB OVER THE SOLID STORAGE SUMP TO SLOPE THE SURFACE 2% MINIMUM TO OUTLET SIDE OF THE STRUCTURE.

1 HYDRODYNAMIC SEPARATOR TYPE 1

NTS REFERENCE SHEET C-403 THRU C-411

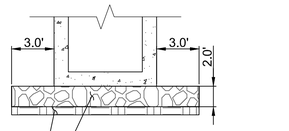

8" SUBGRADE SCARIFIED, MOISTURE CONDITIONED TO 3% ABOVE OPTIMUM MOISTURE CONTENT, AND COMPACTED TO AT LEAST 90% MAX. DRY DENSITY

24" OVEREXCAVATION AND REMOVAL. INSTALL 24" CRUSHED MISCELLANEOUS BASE COMPACTED TO AT LEAST 95% MAX. DRY DENSITY.

2 SUBGRADE PREPARATION

NTS REFERENCE SHEET C-403 THRU C-411, C-606

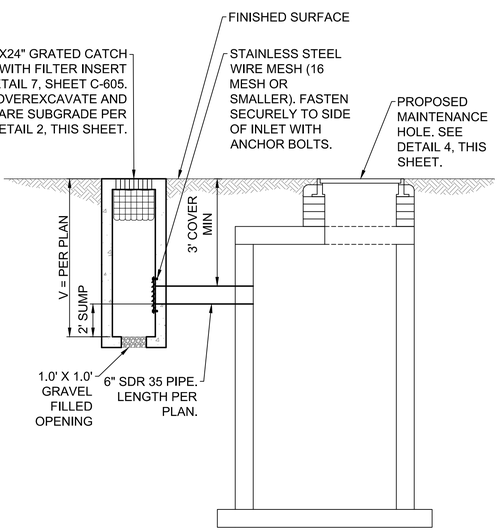

5 AIR VENTING THROUGH CATCH BASIN

NTS REFERENCE SHEET C-403 & C-411

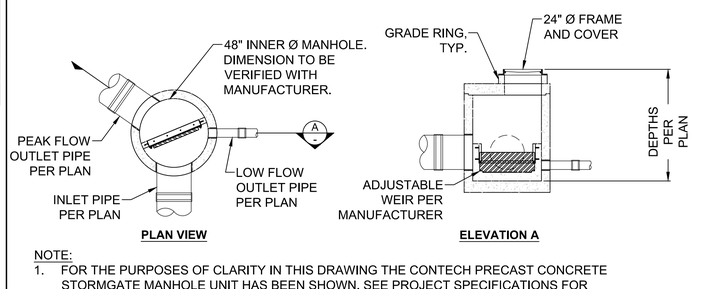

NOTE:

1. FOR THE PURPOSES OF CLARITY IN THIS DRAWING THE CONTECH PRECAST CONCRETE STORMGATE MANHOLE UNIT HAS BEEN SHOWN. SEE PROJECT SPECIFICATIONS FOR ALTERNATIVE APPROVED PRODUCTS AND PRODUCT REQUIREMENTS.
2. OVEREXCAVATE AND PREPARE SUBGRADE PER DETAIL 2, THIS SHEET.
3. REFER TO SPECIFICATIONS FOR ADDITIONAL PERFORMANCE REQUIREMENTS.

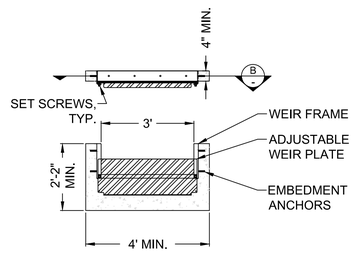

WEIR DETAILS

3 DIVERSION MANHOLE

NTS REFERENCE SHEET C-403 & C-411

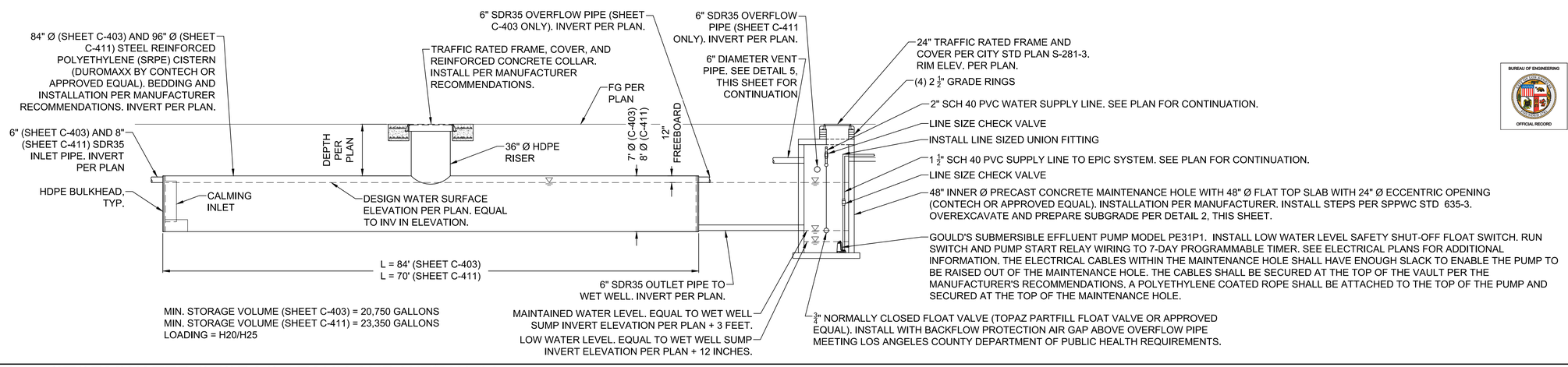

BUREAU OF ENGINEERING
OFFICIAL RECORD

4 STORMWATER STORAGE TANK AND WET WELL

NTS REFERENCE SHEET C-403 & C-411

PLANS PREPARED BY:
TETRA TECH, INC.
707 WILSHIRE BLVD. 23RD FLR.
LOS ANGELES, CA 90017
PHONE: (213) 239-9866

CITY OF LOS ANGELES DEPARTMENT OF PUBLIC WORKS BUREAU OF ENGINEERING

ENGINEERING
CITY OF LOS ANGELES

NO.	REVISIONS:	DATE	BY:

BUILDING NO.

INDEX NO. MF-300501

THIS PLAN WAS ELECTRONICALLY SIGNED AND STAMPED

PROFESSIONAL ENGINEER ★ REGISTERED ★ JUSTIN T. SMITH No. 85736 EXP: 9-30-22 CIVIL STATE OF CALIFORNIA

CITY ENGINEER
TED ALLEN, P.E.
LIC NO. C-85736
DATE: 07/11/22

DESIGN GROUP
ENGINEER: JUSTIN SMITH
DESIGNED BY: JUSTIN SMITH
DRAWN BY: DAVID LOPEZ
CHECKED BY: NATE SCHREINER
APPROVED BY: JASON L. FUSSEL

VERT. CONTROL: BM 12-04070, 1929 (NGVD29) - 1985 ADJUSTMENT
HORIZ. CONTROL: GPS; PID AE 1704, EPOCH 1991.35

SHEET TITLE: CIVIL DETAILS SHEET 7

PROJECT: SIXTH STREET PARK, ARTS AND RIVER CONNECTIVITY IMPROVEMENTS (PARC)

ADDRESS: SIXTH STREET OVER THE LOS ANGELES RIVER

WORK ORDER NO. E700235D
FILE NO. --
DRAWING NO. C-606
SHEET 71 OF 295 SHEETS

7/8/2022 3:14:09 PM - O:\PROJECTS\IRVINE\20043\200-20043-17001\CAD\SHEETFILES\C-606_DETAILS - TT.DWG - SMITH, JUSTIN

THE CITY OF LOS ANGELES OR ITS OFFICERS OR AGENTS SHALL NOT BE RESPONSIBLE FOR THE ACCURACY OR COMPLETENESS OF ELECTRONIC COPIES OF THIS PLAN SHEET.

REVISION DATES (DESIGN STAGE ONLY)

Sheet Version 3.0

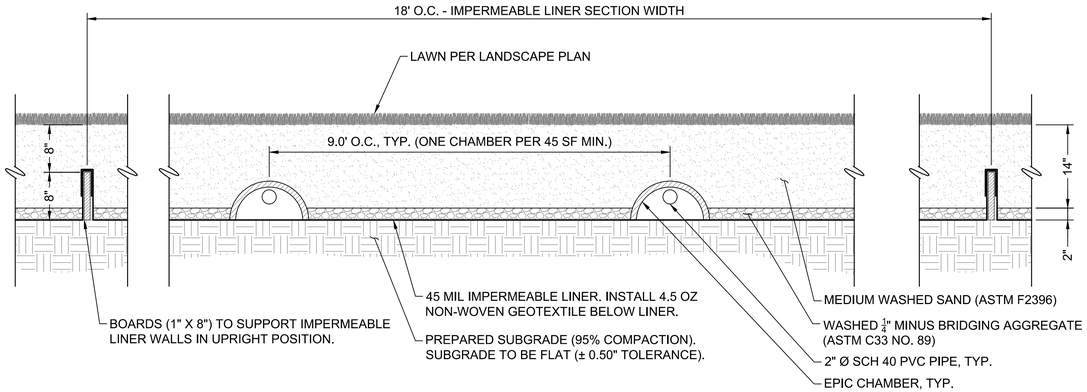

1 EPIC SYSTEM - TYPICAL SECTION VIEW

NTS REFERENCE SHEET C-403 & C-411

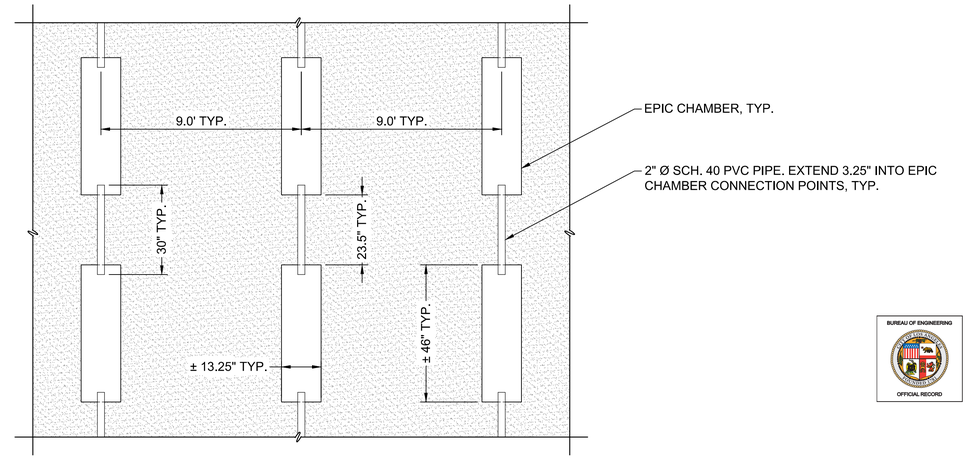

2 EPIC SYSTEM - TYPICAL PLAN VIEW

NTS REFERENCE SHEET C-403 & C-411

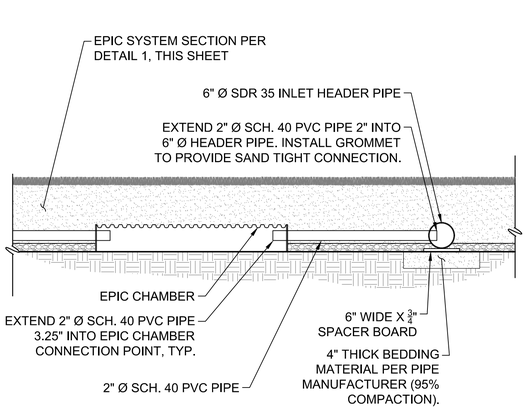

3 EPIC SYSTEM - INLET HEADER PIPE

NTS REFERENCE SHEET C-403 & C-411

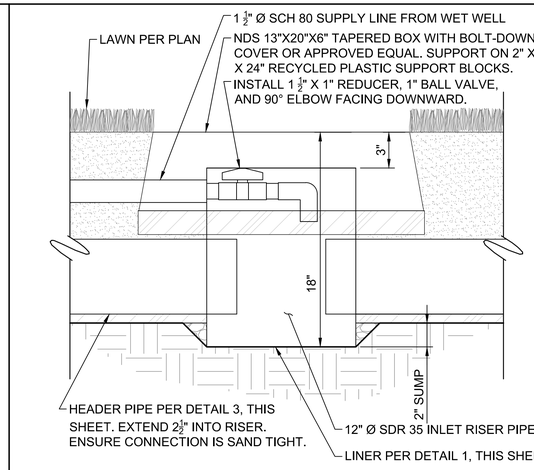

4 EPIC SYSTEM - INLET STRUCTURE

NTS REFERENCE SHEET C-403 & C-411

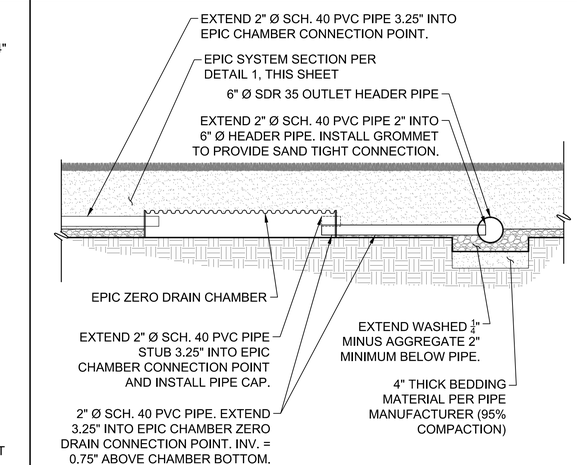

5 EPIC SYSTEM - OUTLET HEADER PIPE

NTS REFERENCE SHEET C-403 & C-411

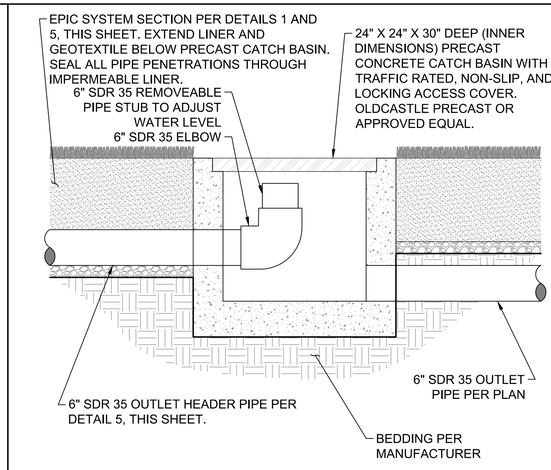

6 EPIC SYSTEM - OUTLET STRUCTURE

NTS REFERENCE SHEET C-403 & C-411

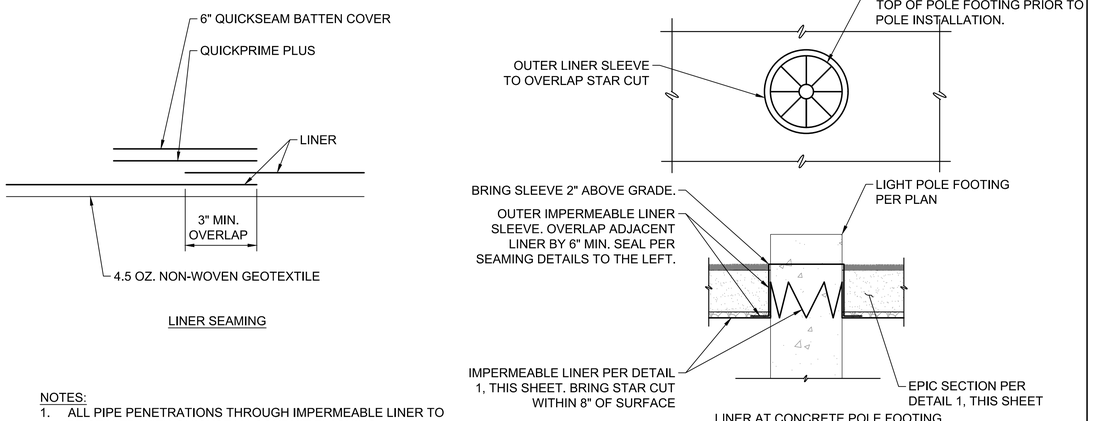

7 EPIC SYSTEM - LINER PENETRATION AND SEAMING DETAILS

NTS REFERENCE SHEET C-403 & C-411

8 EPIC SYSTEM - TREE LOCATIONS

NTS REFERENCE SHEET C-403 & C-411

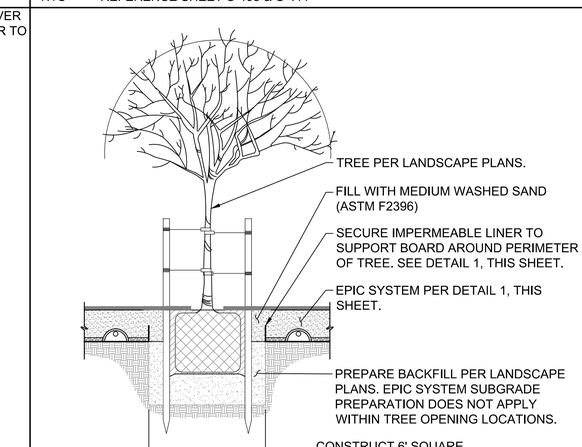

9 EPIC SYSTEM - PERIMETER

NTS REFERENCE SHEET C-403 & C-411

THE CITY OF LOS ANGELES OR ITS OFFICERS OR AGENTS SHALL NOT BE RESPONSIBLE FOR THE ACCURACY OR COMPLETENESS OF ELECTRONIC COPIES OF THIS PLAN SHEET.

REVISION DATES: (DESIGN STAGE ONLY)

Sheet Version 3.0

BUREAU OF ENGINEERING

ENGINEERING
CITY OF LOS ANGELES

NO.	REVISIONS:	DATE	BY:

BUILDING NO.

INDEX NO. MF-300501

THIS PLAN WAS ELECTRONICALLY SIGNED AND STAMPED

PROFESSIONAL ENGINEER ★ REGISTERED ★ JUSTIN T. SMITH ★ No. 85736 EXP: 9-30-22 ★ CIVIL ★ STATE OF CALIFORNIA

CITY OF LOS ANGELES DEPARTMENT OF PUBLIC WORKS

CITY ENGINEER: TED ALLEN, P.E.
DESIGN GROUP
ENGINEER: JUSTIN SMITH
DESIGNED BY: JUSTIN SMITH
DRAWN BY: DAVID LOPEZ
CHECKED BY: NATE SCHREINER
APPROVED BY: JASON L. FUSSEL
DATE: 07/11/22
LIC NO. C-85736

SHEET TITLE: CIVIL DETAILS SHEET 8
PROJECT: SIXTH STREET PARK, ARTS AND RIVER CONNECTIVITY IMPROVEMENTS (PARC)
ADDRESS: SIXTH STREET OVER THE LOS ANGELES RIVER

VERT. CONTROL: BM 12-04070, 1929 (NGVD29) - 1985 ADJUSTMENT
HORIZ. CONTROL: GPS; PID AE 1704, EPOCH 1991.35

PLANS PREPARED BY:
TETRA TECH, INC.
707 WILSHIRE BLVD. 23RD FLR.
LOS ANGELES, CA 90017
PHONE: (213) 239-8866

WORK ORDER NO. E700235D
FILE NO. --
DRAWING NO. C-607
SHEET 72 OF 295 SHEETS

7/9/2022 2:10:13 AM - O:\PROJECTS\RVINE\20043\200\20043-17001\CAD\SHEETFILES\C-607_DETAILS - TT.DWG - SMITH, JUSTIN

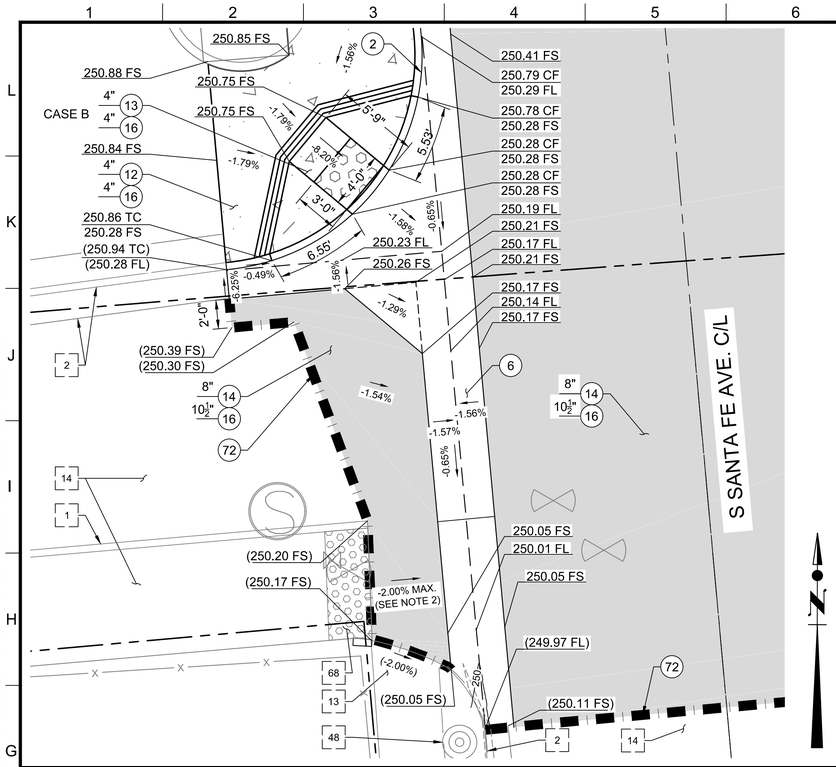

1 SANTA FE AVE. - WESTERN ADA RAMP

1"=5' REFERENCE SHEET C-500

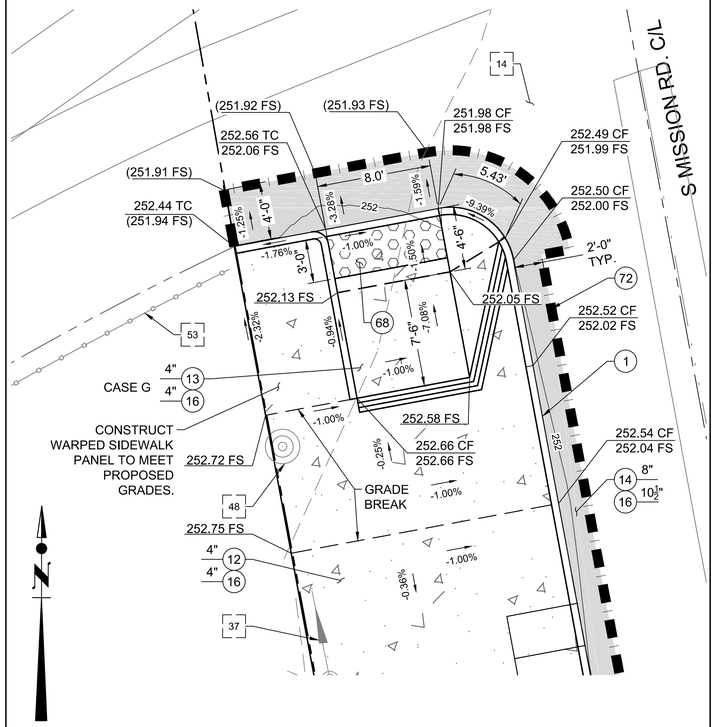

2 MISSION RD. - WESTERN ADA RAMP

1"=5' REFERENCE SHEET C-501

LEGEND OF CONSTRUCTION NOTES		
○ CONSTRUCT	□ REMOVE	⊡○ REMODEL
◌ WORK BY OTHERS	⊡ EXISTING-PROTECT IN PLACE	⊡○ REMOVE & RECONSTRUCT

NO.	CONSTRUCTION ITEM/NOTE	STANDARD PLAN
1	TYPE A CONCRETE CURB	S-410-2
2	TYPE C INTEGRAL CURB & GUTTER	S-410-2
6	CONCRETE INTERSECTION GUTTER	S-410-2
12	CONCRETE WALK	S-444-0; DTL 4, SHT C-600
13	CURB RAMP	S-442-6
14	ASPHALT CONCRETE PAVEMENT	DTL 1, SHT C-600
16	UNTREATED BASE MATERIAL	SEE PVMT DTL
28	CURB AND SIDEWALK JOINT	SPPWC 112-2
37	POLE ANCHOR	-
46	WATER METER	-
48	POWER POLE	-
51	LIGHT POLE	-
53	FENCE	-
68	DETECTABLE WARNING SURFACE	DTL 8, SHT C-601
72	SAWCUT LINE; JOIN EXISTING	DTL 2, 5, 6, SHT C-600

GENERAL NOTES:

1. SEE SHEETS C-500 THROUGH C-503 FOR FULL STREET IMPROVEMENTS.
2. PROVIDE 4 FT. MIN. WIDE PATHWAY WITH 2.00% MAX. CROSS SLOPE.
3. THESE GENERAL NOTES AND THE CONSTRUCTION NOTES ABOVE APPLY TO DETAILS 1 THROUGH 3 ON THIS SHEEET.

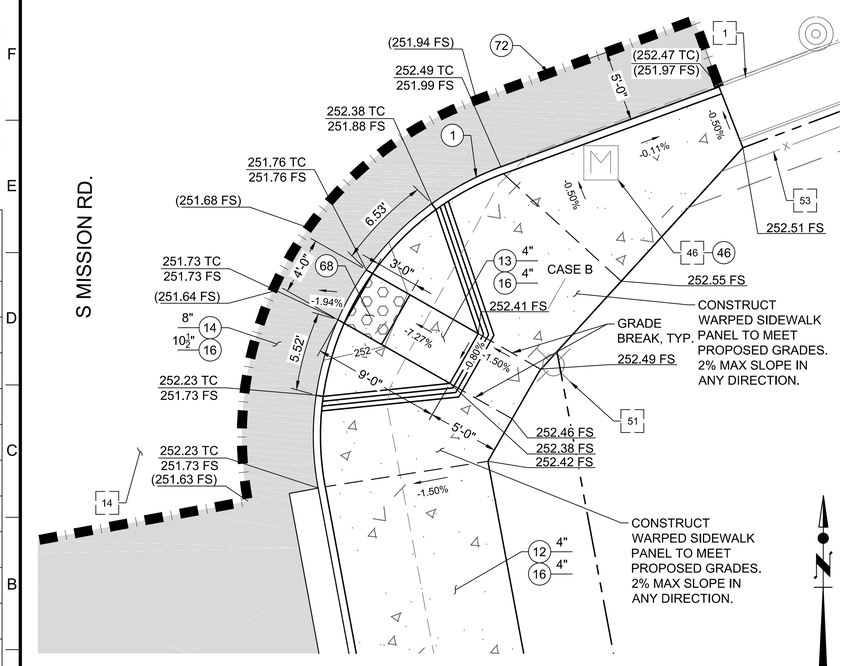

3 MISSION RD. - EASTERN ADA RAMP

1"=5' REFERENCE SHEET C-501

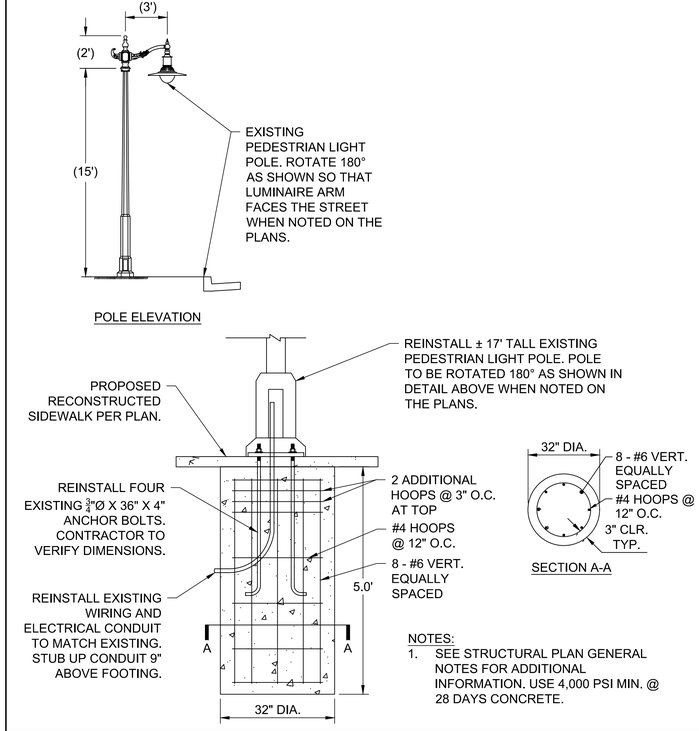

4 REINSTALL PEDESTRIAN LIGHT POLE

NTS REFERENCE SHEET C-502

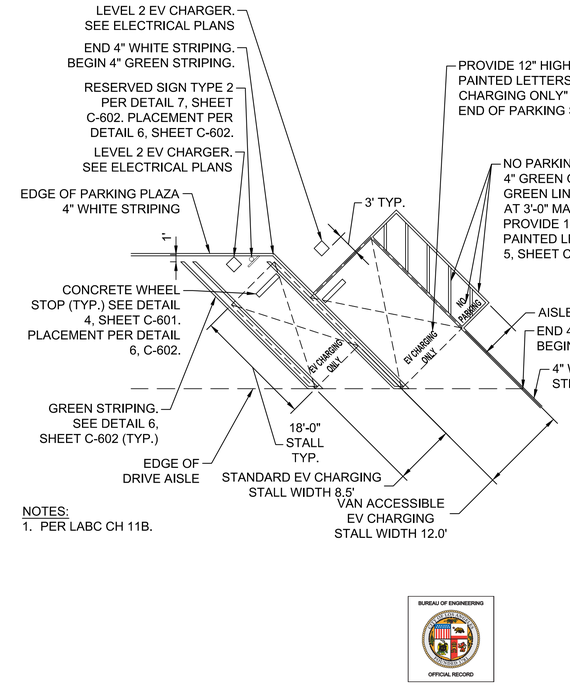

5 EV CHARGING SPACES

NTS REFERENCE SHEET C-502 & C-507

PLANS PREPARED BY:
TETRA TECH, INC.
707 WILSHIRE BLVD. 23RD FLR.
LOS ANGELES, CA 90017
PHONE: (213) 239-8866

BUREAU OF ENGINEERING
OFFICIAL RECORD

ENGINEERING
CITY OF LOS ANGELES

BUREAU OF ENGINEERING

NO.	REVISIONS:	DATE:	BY:

BUILDING NO.

INDEX NO. MF-300501

THIS PLAN WAS ELECTRONICALLY SIGNED AND STAMPED

PROFESSIONAL ENGINEER
REGISTERED
JUSTIN T. SMITH
No. 85736
EXP: 9-30-22
CIVIL
STATE OF CALIFORNIA

CITY OF LOS ANGELES DEPARTMENT OF PUBLIC WORKS

VERT. CONTROL: BM 12-04070, 1929 (NGVD29) - 1985 ADJUSTMENT
HORIZ. CONTROL: GPS, PID AE 1704, EPOCH 1991.35

SHEET TITLE: CIVIL DETAILS SHEET 9

PROJECT: SIXTH STREET PARK, ARTS AND RIVER CONNECTIVITY IMPROVEMENTS (PARC)

ADDRESS: SIXTH STREET OVER THE LOS ANGELES RIVER

CITY ENGINEER
TED ALLEN, P.E.
DESIGN GROUP
LIC. NO. C-85736 DATE: 07/11/22

ENGINEER:	JUSTIN SMITH
DESIGNED BY:	JUSTIN SMITH
DRAWN BY:	DAVID LOPEZ
CHECKED BY:	NATE SCHREINER
APPROVED BY:	JASON L. FUSSEL

WORK ORDER NO. E700235D
FILE NO. --
DRAWING NO. C-608
SHEET 73 OF 295 SHEETS

7/8/2022 2:30:06 PM - O:\PROJECTS\IRVINE\20043\20-20043-17001\CAD\SHEETFILES\C-608_CURB RAMP DETAIL - TT.DWG - SMITH, JUSTIN

REVISION DATES (DESIGN STAGE ONLY)

THE CITY OF LOS ANGELES OR ITS OFFICERS OR AGENTS SHALL NOT BE RESPONSIBLE FOR THE ACCURACY OR COMPLETENESS OF ELECTRONIC COPIES OF THIS PLAN SHEET.

Sheet Version 3.0

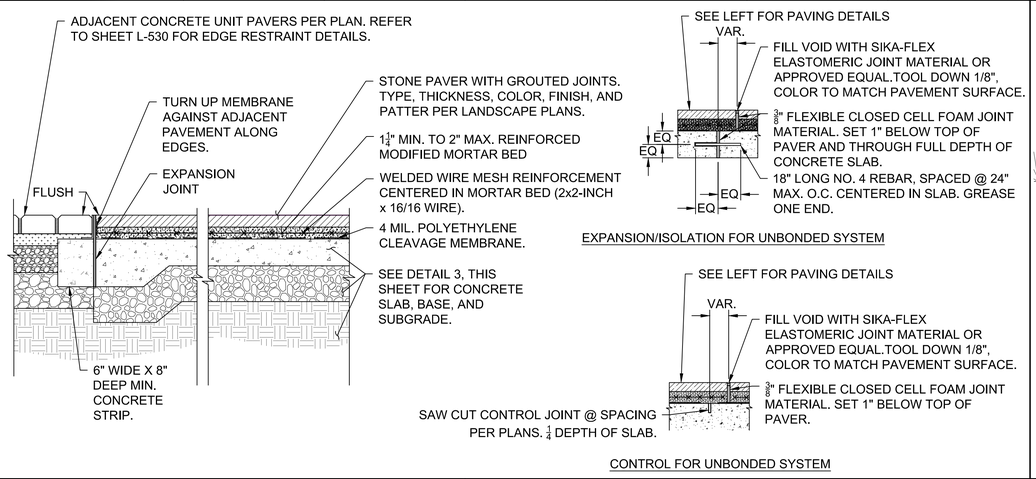

EXPANSION/ISOLATION FOR UNBONDED SYSTEM

CONTROL FOR UNBONDED SYSTEM

1 GRANITE UNIT PAVING (PVMT 1)

NTS REFERENCE SHEET L-131 THRU L-135

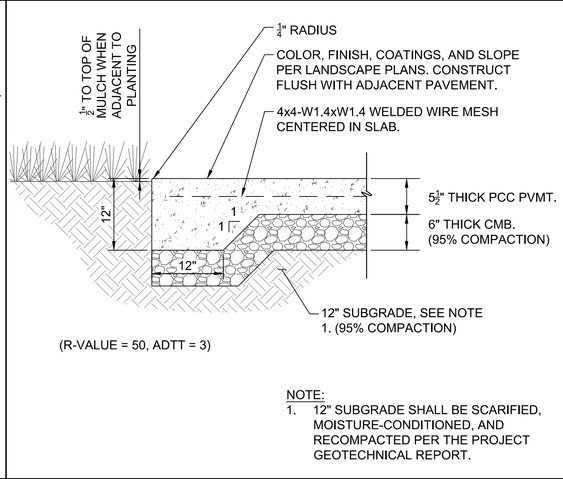

(R-VALUE = 50, ADTT = 3)

NOTE:
1. 12" SUBGRADE SHALL BE SCARIFIED, MOISTURE-CONDITIONED, AND RECOMPACTED PER THE PROJECT GEOTECHNICAL REPORT.

2 CONC PAVEMENT (PVMT 2)

NTS REFERENCE SHEET L-131 THRU L-135

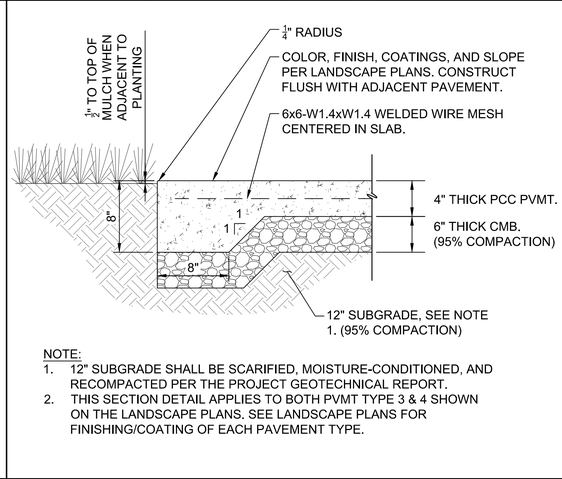

NOTE:
1. 12" SUBGRADE SHALL BE SCARIFIED, MOISTURE-CONDITIONED, AND RECOMPACTED PER THE PROJECT GEOTECHNICAL REPORT.
2. THIS SECTION DETAIL APPLIES TO BOTH PVMT TYPE 3 & 4 SHOWN ON THE LANDSCAPE PLANS. SEE LANDSCAPE PLANS FOR FINISHING/COATING OF EACH PAVEMENT TYPE.

3 CONCRETE PAVEMENT (PVMT 3 & 4)

NTS REFERENCE SHEET L-131 THRU L-135

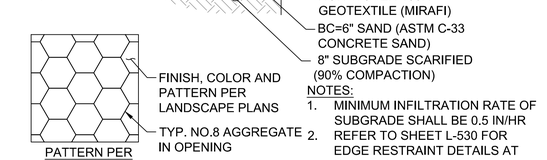

PATTERN PER LANDSCAPE PLANS

NOTES:
1. MINIMUM INFILTRATION RATE OF SUBGRADE SHALL BE 0.5 IN/HR
2. REFER TO SHEET L-530 FOR EDGE RESTRAINT DETAILS AT STONE PAVING AND TREE OPENINGS.

4 CONC UNIT PAVING (PVMT 5)

NTS REFERENCE SHEET L-131 THRU L-135

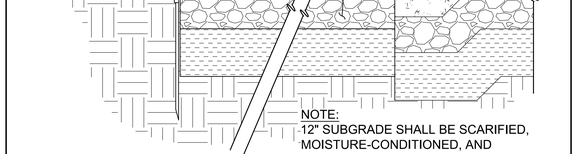

NOTE:
12" SUBGRADE SHALL BE SCARIFIED, MOISTURE-CONDITIONED, AND RECOMPACTED (95% COMPACTION) PER THE PROJECT GEOTECHNICAL REPORT.

5 DECOMPOSED GRANITE (PVMT 6 & 7)

NTS REFERENCE SHEET L-131 THRU L-135

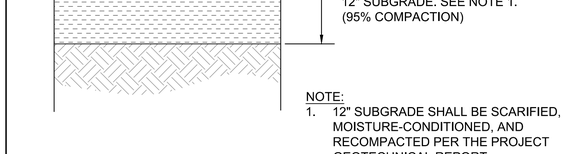

NOTE:
1. 12" SUBGRADE SHALL BE SCARIFIED, MOISTURE-CONDITIONED, AND RECOMPACTED PER THE PROJECT GEOTECHNICAL REPORT.

6 SPORTS COURT (PVMT 9)

NTS REFERENCE SHEET L-131 THRU L-135

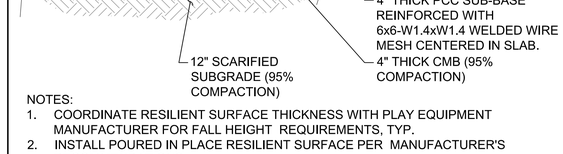

NOTES:
1. COORDINATE RESILIENT SURFACE THICKNESS WITH PLAY EQUIPMENT MANUFACTURER FOR FALL HEIGHT REQUIREMENTS, TYP.
2. INSTALL POURED IN PLACE RESILIENT SURFACE PER MANUFACTURER'S RECOMMENDATIONS.
3. SEE PLANS FOR RESILIENT SURFACING COLORS AND PATTERN LAYOUT, TYP.

7 SAFETY SURFACING (PVMT 10)

NTS REFERENCE SHEET L-131 THRU L-135

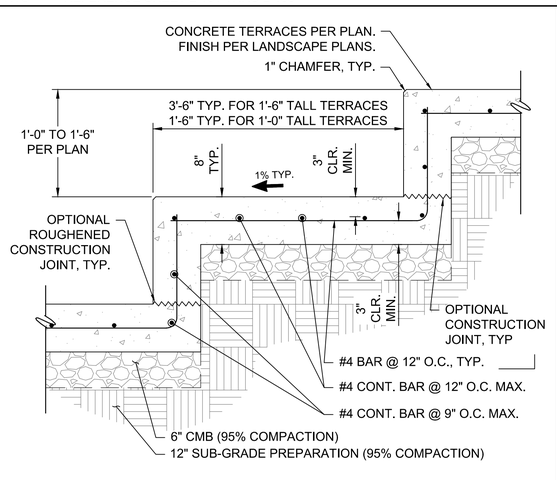

8 CONCRETE TERRACE TYP. SECTION

NTS REFERENCE SHEET L-132

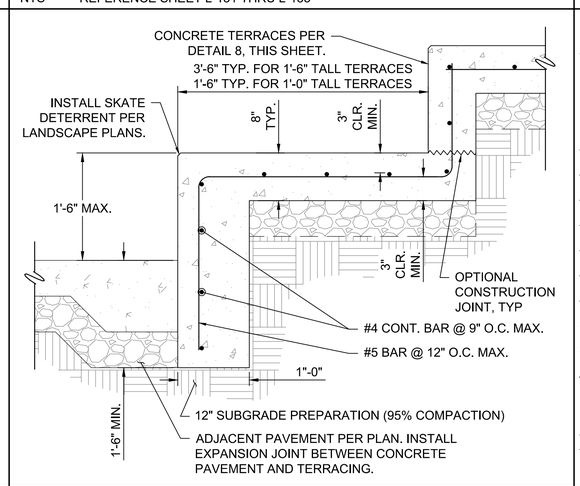

9 CONCRETE TERRACE BASE SECTION

NTS REFERENCE SHEET L-132

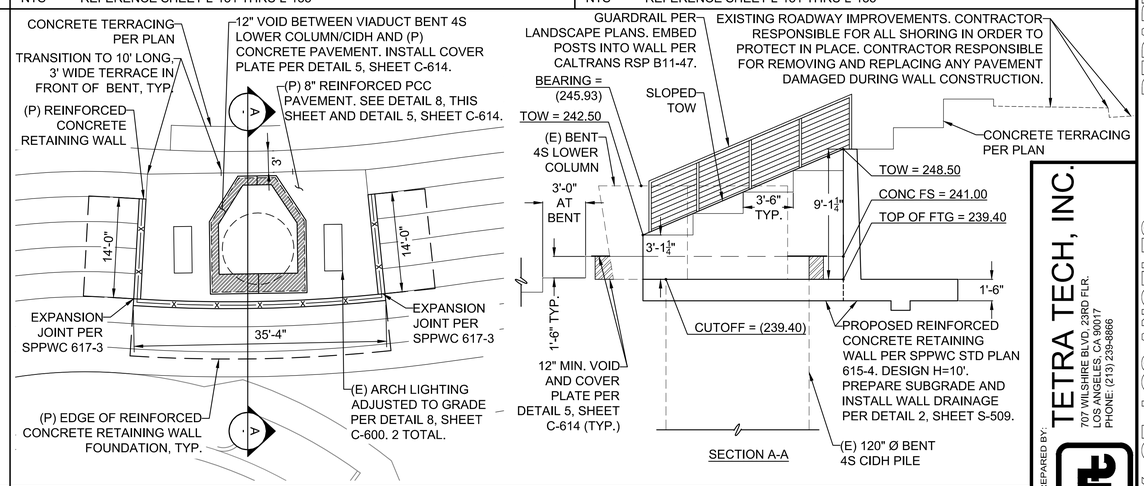

10 ARTS PLAZA TERRACE AT BENT 4S

NTS REFERENCE SHEET L-132

BUREAU OF ENGINEERING OFFICIAL RECORD

THE CITY OF LOS ANGELES OR ITS OFFICERS OR AGENTS SHALL NOT BE RESPONSIBLE FOR THE ACCURACY OR COMPLETENESS OF ELECTRONIC COPIES OF THIS PLAN SHEET.

REVISION DATES (DESIGN STAGE ONLY)

Sheet Version 3.0

CITY OF LOS ANGELES DEPARTMENT OF PUBLIC WORKS BUREAU OF ENGINEERING

ENGINEERING CITY OF LOS ANGELES

NO.	REVISIONS:	DATE	BY:

BUILDING NO.

INDEX NO. MF-300501

THIS PLAN WAS ELECTRONICALLY SIGNED AND STAMPED

PROFESSIONAL ENGINEER ★ REGISTERED ★ CIVIL ★ STATE OF CALIFORNIA ★ TED T. SMITH No. 85736 EXP: 9-30-22

CITY ENGINEER

DESIGN GROUP	DATE:	07/11/22
ENGINEER:	JUSTIN SMITH	LIC NO. C-85736
DESIGNED BY:	JUSTIN SMITH	
DRAWN BY:	DAVID LOPEZ	
CHECKED BY:	NATE SCHREINER	
APPROVED BY:	JASON L. FUSSEL	

TED ALLEN, P.E.

CIVIL DETAILS SHEET 10

PROJECT: SIXTH STREET PARK, ARTS AND RIVER CONNECTIVITY IMPROVEMENTS (PARC)

ADDRESS: SIXTH STREET OVER THE LOS ANGELES RIVER

SMITH, JUSTIN

PLANS PREPARED BY:

TETRA TECH, INC.
707 WILSHIRE BLVD, 23RD FLR.
LOS ANGELES, CA 90017
PHONE: (213) 239-9866

VERT. CONTROL: BM 12-04070, 1929 (NGVD29) - 1985 ADJUSTMENT
HORIZ. CONTROL: GPS, PID AE 1704, EPOCH 1991.35

WORK ORDER NO. E700235D

FILE NO. --

DRAWING NO. C-609

SHEET 74 OF 295 SHEETS

7/8/2022 2:50:05 PM - O:\PROJECTS\IRVINE\20043\2000-20043-17001\CAD\SHEETFILES\C-609_DETAILS - TT.DWG

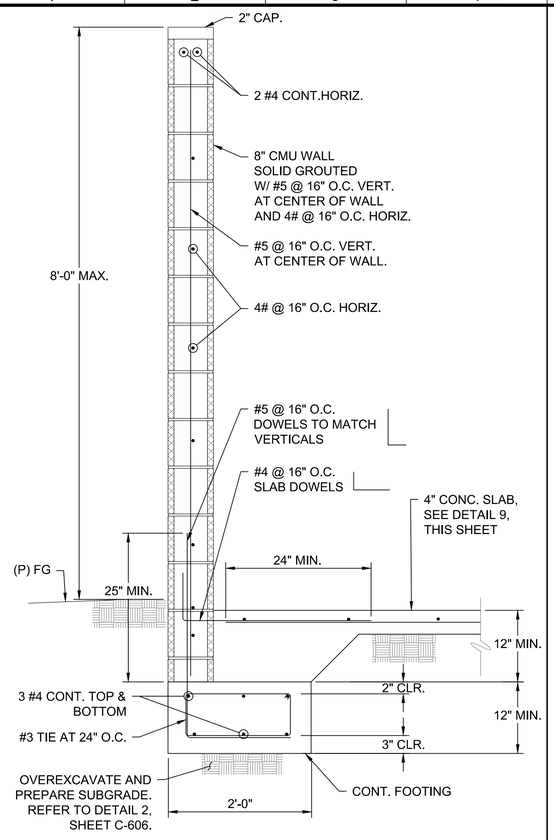

1 TYPICAL MASONRY BACKWALL

NTS REFERENCE SHEET L-142 THRU L-145

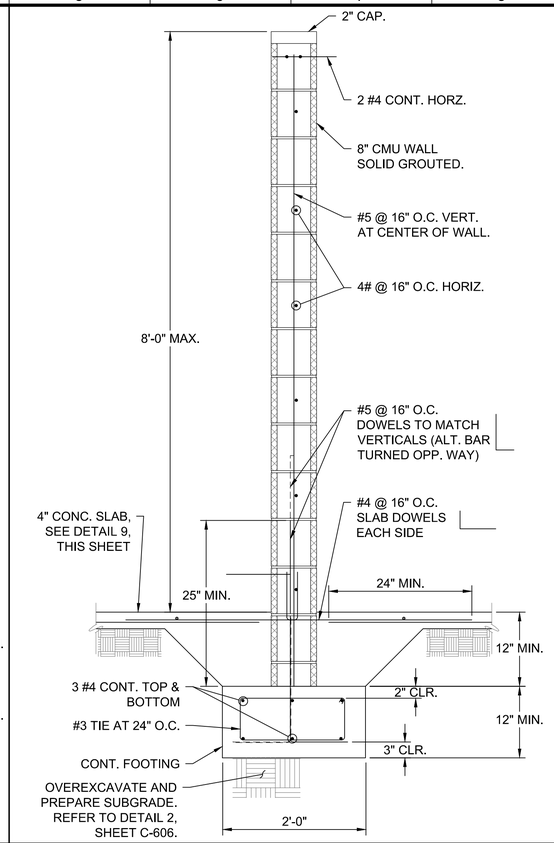

2 INTERIOR MASONRY WALL

NTS REFERENCE SHEET L-142 THRU L-145

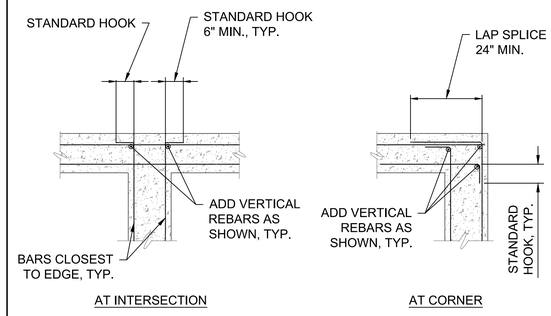

3 TYPICAL CONTINUOUS FOOTING

NTS REFERENCE SHEET L-142 THRU L-145

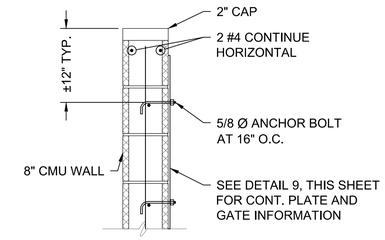

4 EXTERIOR MASONRY WALL ANCHOR

NTS REFERENCE SHEET L-142 THRU L-145

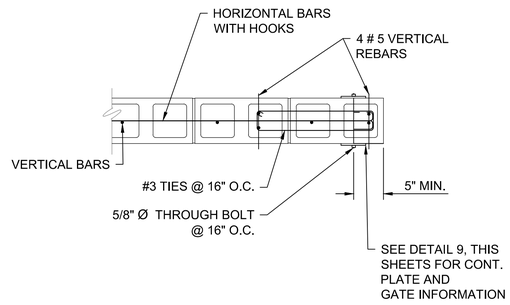

5 MIDDLE MASONRY WALL ANCHOR

NTS REFERENCE SHEET L-142 THRU L-145

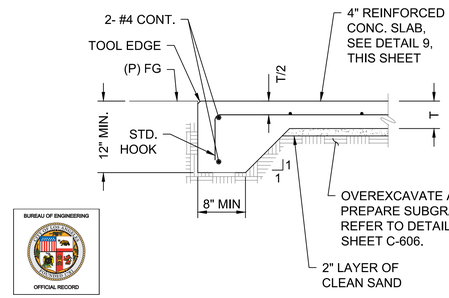

BUREAU OF ENGINEERING
OFFICIAL RECORD

6 SLAB EDGE

NTS REFERENCE SHEET L-142 THRU L-145

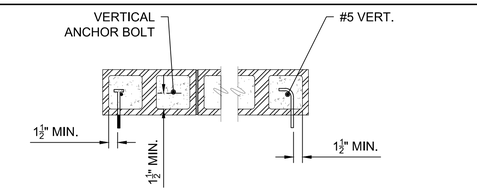

MININUM EMBEDMENT DEPTH OF HORIZONTAL ANCHOR	
DIAMETER	MIN EMBEDMENT=L_b
3/8"	4"
1/2"	4"
5/8"	4"
3/4"	5"
7/8"	6"

NOTES:
1. MIN. EMBEDMENT DEPTH L_b = 4 d_b BUT L_b MAY NOT BE LESS THAN 4".
2. MIN. BOLT SPACING SHALL BE 12 BOLT DIAMETERS WITH A MIN. EDGE DISTANCE OF 6 DIAMETER AND WITH A MINIMUM OF 6" TO END OF WALL.

7 ANCHOR IN MASONRY

NTS REFERENCE SHEET L-142 THRU L-145

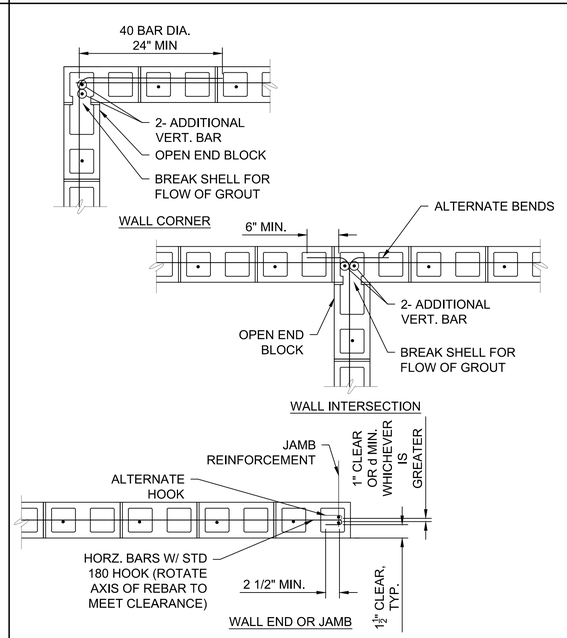

8 MASONRY WALL DETAILS

NTS REFERENCE SHEET L-142 THRU L-145

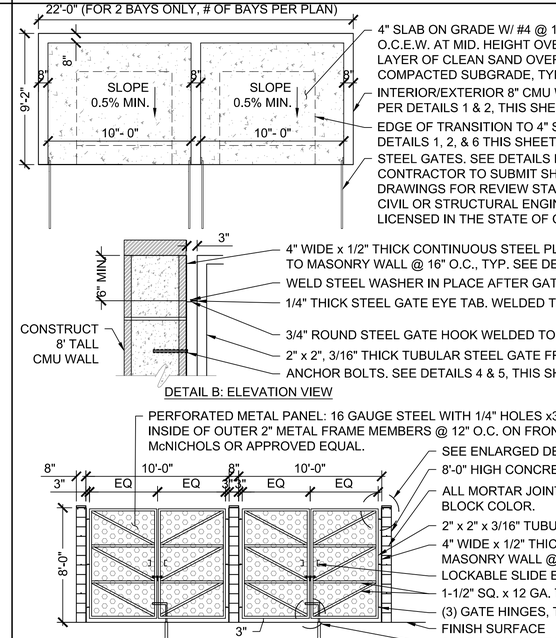

NOTES:
1. SEE STRUCTURAL GENERAL NOTE SHEETS FOR ADDITIONAL INFORMATION.
2. CONCRETE SHALL HAVE A MIN. COMPRESSIVE STRENGTH OF 4,000 PSI AT 28 DAYS.
3. OVEREXCAVATE & PREPARE SUBGRADE PER DETAIL 2, SHEET C-606.

9 TRASH ENCLOSURE

NTS REFERENCE SHEET L-142 THRU L-145

THE CITY OF LOS ANGELES OR ITS OFFICERS OR AGENTS SHALL NOT BE RESPONSIBLE FOR THE ACCURACY OR COMPLETENESS OF ELECTRONIC COPIES OF THIS PLAN SHEET.

REVISION DATES (DESIGN STAGE ONLY)

Sheet Version 3.0

BUREAU OF ENGINEERING

ENGINEERING
CITY OF LOS ANGELES

NO.	REVISIONS:	DATE	BY:

BUILDING NO.

INDEX NO. MF-300501

THIS PLAN WAS ELECTRONICALLY SIGNED AND STAMPED

PROFESSIONAL ENGINEER
REGISTERED
JUSTIN T. SMITH
No. 85736
EXP: 9-30-22
CIVIL
STATE OF CALIFORNIA

CITY OF LOS ANGELES DEPARTMENT OF PUBLIC WORKS

CITY ENGINEER
LIC NO. C-85736
DATE: 07/11/22

DESIGN GROUP	
ENGINEER:	JUSTIN SMITH
DESIGNED BY:	JUSTIN SMITH
DRAWN BY:	DAVID LOPEZ
CHECKED BY:	NATE SCHREINER
APPROVED BY:	JASON L. FUSSEL

TED ALLEN, P.E.

VERT. CONTROL: BM 12-04070, 1929 (NGVD29) - 1985 ADJUSTMENT
HORIZ. CONTROL: GPS; PID AE 1704, EPOCH 1991.35

SHEET TITLE: CIVIL DETAILS SHEET 11

PROJECT: SIXTH STREET PARK, ARTS AND RIVER CONNECTIVITY IMPROVEMENTS (PARC)

ADDRESS: SIXTH STREET OVER THE LOS ANGELES RIVER

PLANS PREPARED BY:
TETRA TECH, INC.
707 WILSHIRE BLVD. 23RD FLR.
LOS ANGELES, CA 90017
PHONE: (213) 239-8866

WORK ORDER NO. E700235D
FILE NO. --
DRAWING NO. C-610
SHEET 75 OF 295 SHEETS

7/9/2022 3:32:35 PM - O:\PROJECTS\RIVINE\20043\200-20043-17001\CAD\SHEETFILES\C-610_DETAILS - TT.DWG - SMITH, JUSTIN

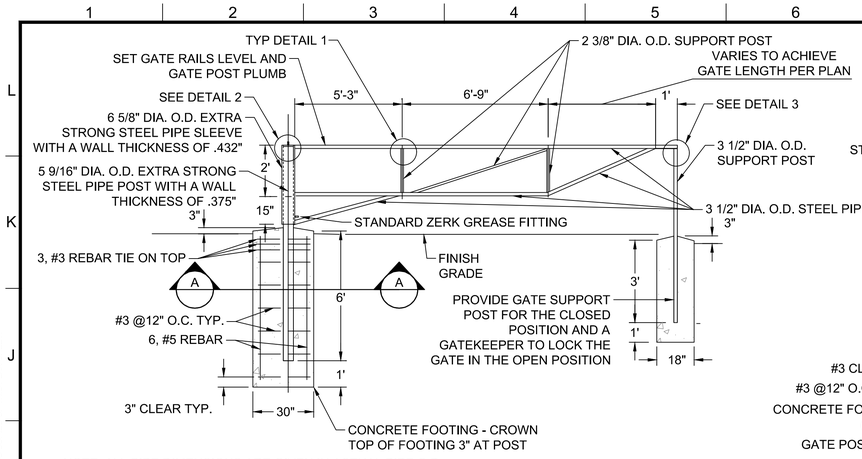

NOTE: ALL PIPE DIMENSIONS ARE GIVEN IN ACTUAL PIPE O.D.

GATE ELEVATION

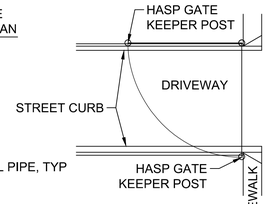

GATE PLAN

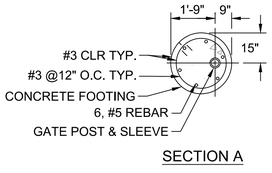

SECTION A

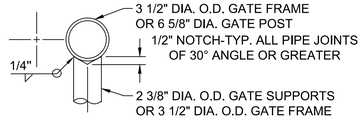

DETAIL 1

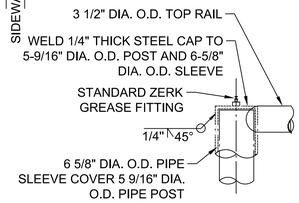

DETAIL 2

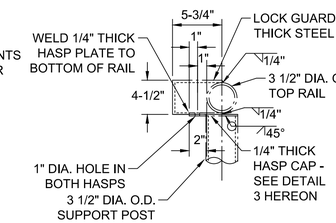

3A: LOCK GUARD-END VIEW

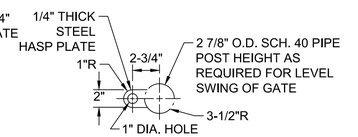

3C: SUPPORT POST HASP & GATE KEEPER PLAN

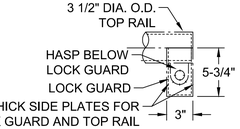

3B: LOCK GUARD TOP VIEW

GATE SPECIFICATIONS:

1. FABRICATION AND PAINTING: GATE SHALL BE SHOP-FABRICATED AND PAINTED. FABRICATION AND PAINTING SHALL BE DONE UNDER BUREAU OF CONTRACT ADMINISTRATION INSPECTION.
2. ALL PIPE FOR GATE CONSTRUCTION SHALL BE NON-GALVANIZED STEEL.
3. PIPE FOR GATE CONSTRUCTION SHALL BE AS FOLLOWS:
   A. TOP AND BOTTOM RAILS, DIAGONAL AND VERTICAL BRACING AND SUPPORT POSTS SHALL BE SCH. 40 STANDARD STEEL.
   B. 5-9/16" DIAM. O.D. PIPE POST SHALL BE HIGH STRENGTH STEEL PIPE; WALL THICKNESS SHALL BE 0.375".
   C. 6 5/8" DIA. O.D. PIPE POST SLEEVE SHALL BE HIGH STRENGTH STEEL PIPE; WALL THICKNESS SHALL BE 0.432".
4. ALL WELDS SHALL BE GROUND SMOOTH. ALL WELDS SHALL BE PER A.N.S.I./A.W.S. D1.1.81.
5. PROVIDE AND INSTALL AN ADDITIONAL SUPPORT POST TO SECURE THE GATE WHEN FULLY OPEN. THE GATE KEEPER SUPPORT POST SHALL HAVE A HASP AS INDICATED IN THE DETAIL AT LEFT.
6. ADJUST THE HEIGHT OF THE GATE AND SUPPORT POSTS TO ACCOMMODATE THE EXISTING GRADES.
7. COLOR AND FINISH:
   A. ALL EXTERIOR SURFACES SHALL BE CLEANED WITH "OAKITE" OR EQUAL PRIOR TO PRIMING
   B. ALL EXTERIOR COMPONENTS SHALL BE PRIMED WITH ONE COAT OF RUST-INHIBITING ZINC PRIMER (NO PRIMER OR PAINT ON 5-9/16" DIA. POST).
   C. ALL EXTERIOR COMPONENTS SHALL BE PAINTED WITH TWO COATS OF ACRYLIC ENAMEL; COLOR SHALL BE 'OSHA' NO. 2166 (WHITE)
8. PRIOR TO INSTALLATION OF GATE, COMPLETELY COAT THE ENTIRE ABOVE GRADE SURFACE OF THE 5-9/16" DIA. O.D. GATE POST WITH GREASE. AFTER THE GATE IS INSTALLED FILL THE SPACE BETWEEN THE POST SLEEVE AND POST WITH ADDITIONAL GREASE USING BOTH GREASE FITTINGS.

1 SINGLE LEAF RINO SWING GATE

NTS REFERENCE SHEET C-500 THRU C-503

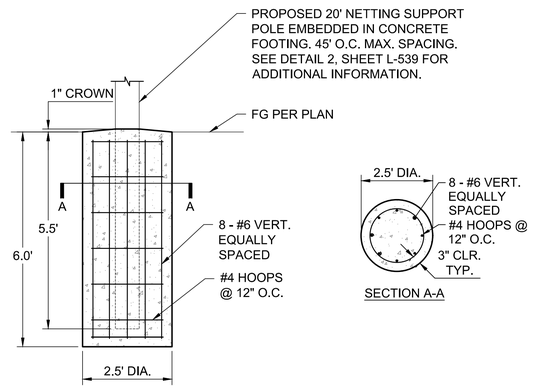

2 SOCCER NETTING POST FOOTING

NTS REFERENCE SHEET L-141 THRU L-145

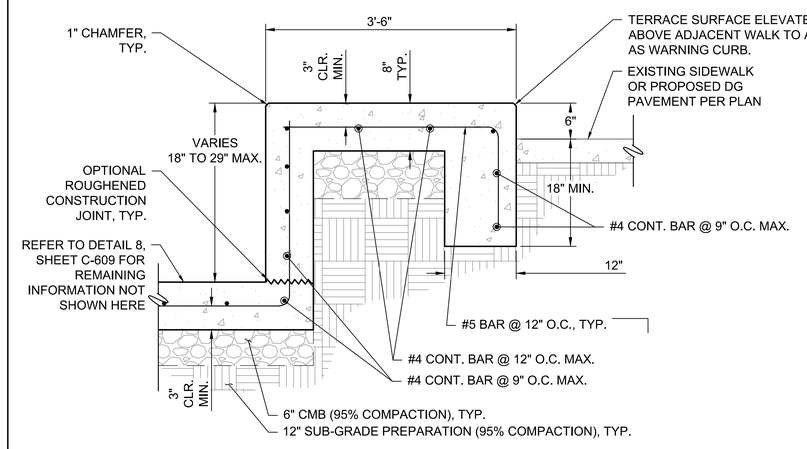

3 TOP OF CONCRETE TERRACING

NTS REFERENCE SHEET L-132

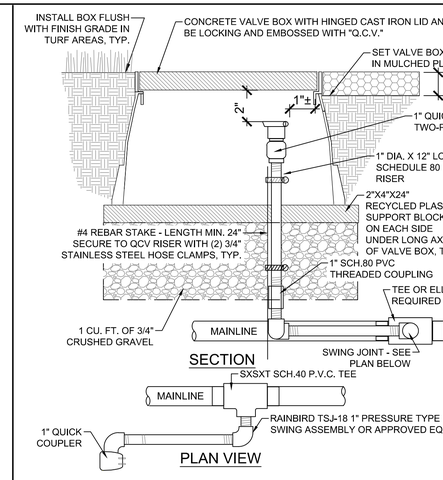

4 POTABLE QUICK COUPLER VALVE

NTS REFERENCE SHEET C-400 AND C-401

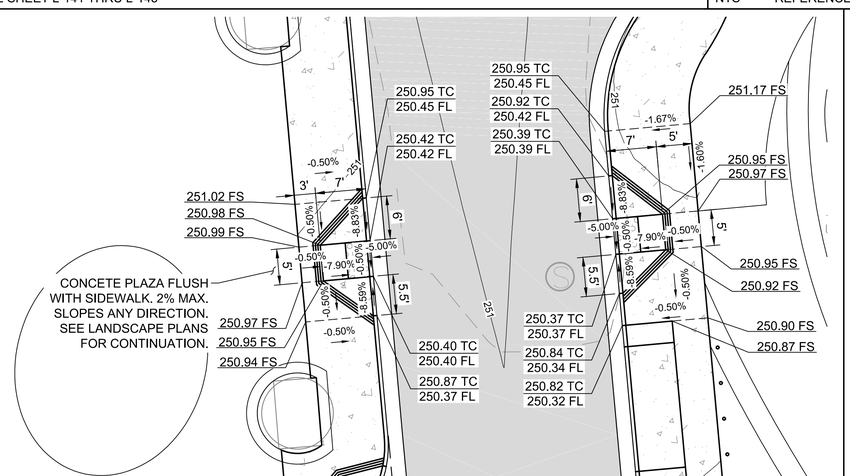

5 SANTA FE AVENUE CROSSING ENLARGED CURB RAMPS

1"=10' REFERENCE SHEET C-500

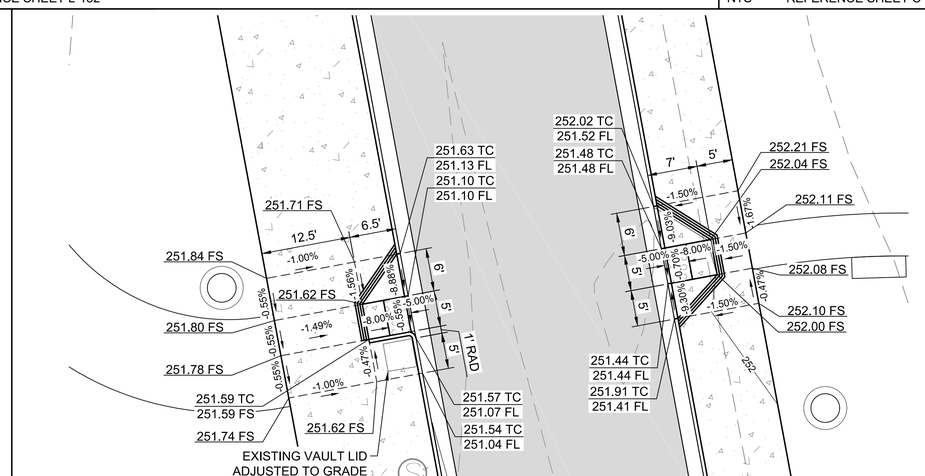

6 MISSION ROAD CROSSING ENLARGED CURB RAMPS

1"=10' REFERENCE SHEET C-501

PLANS PREPARED BY:
TETRA TECH, INC.
707 WILSHIRE BLVD, 23RD FLR.
LOS ANGELES, CA 90017
PHONE: (213) 239-9866

BUREAU OF ENGINEERING
CITY OF LOS ANGELES
DEPARTMENT OF PUBLIC WORKS
ENGINEERING
CITY OF LOS ANGELES

TED ALLEN, P.E.
CITY ENGINEER

DESIGN GROUP	DATE:
ENGINEER: JUSTIN SMITH	LIC. NO. C-85736 07/11/22
DESIGNED BY: JUSTIN SMITH	
DRAWN BY: DAVID LOPEZ	
CHECKED BY: NATE SCHREINER	
APPROVED BY: JASON L. FUSSEL	

BUILDING NO.
INDEX NO. MF-300501

NO.	REVISIONS:	DATE	BY:

THIS PLAN WAS ELECTRONICALLY SIGNED AND STAMPED

PROFESSIONAL ENGINEER
REGISTERED
JUSTIN T. SMITH
No. 85736
EXP: 9-30-22
CIVIL
STATE OF CALIFORNIA

CIVIL DETAILS
SHEET 12

PROJECT: SIXTH STREET PARK, ARTS AND RIVER CONNECTIVITY IMPROVEMENTS (PARC)

ADDRESS: SIXTH STREET OVER THE LOS ANGELES RIVER

VERT. CONTROL: BM 12-04070, 1929 (NGVD29) - 1985 ADJUSTMENT
HORIZ. CONTROL GPS; PID AE 1704, EPOCH 1991.35

OFFICIAL RECORD

WORK ORDER NO. E700235D
FILE NO. --
DRAWING NO. C-611
SHEET 76 OF 295 SHEETS

7/9/2022 3:48:46 PM - O:\PROJECTS\IRVINE\20043\2000-20043-17001\CAD\SHEETFILES\C-611_DETAILS - TT.DWG - SMITH, JUSTIN

REVISION DATES (DESIGN STAGE ONLY)

THE CITY OF LOS ANGELES OR ITS OFFICERS OR AGENTS SHALL NOT BE RESPONSIBLE FOR THE ACCURACY OR COMPLETENESS OF ELECTRONIC COPIES OF THIS PLAN SHEET.

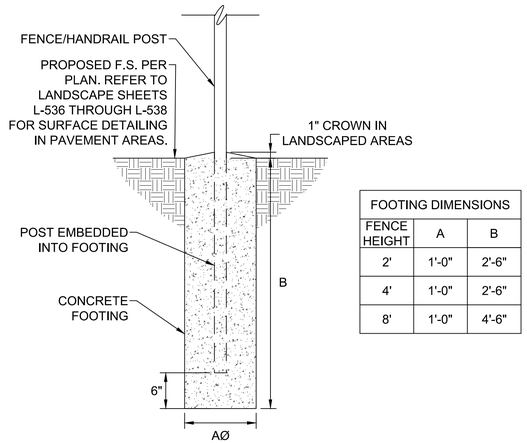

FOOTING DIMENSIONS		
FENCE HEIGHT	A	B
2'	1'-0"	2'-6"
4'	1'-0"	2'-6"
8'	1'-0"	4'-6"

1 FENCE/HANDRAIL POST EMBEDMENT

NTS REFERENCE SHEET: L-141 THRU L-145, L-536 THRU L-538, & A1-07

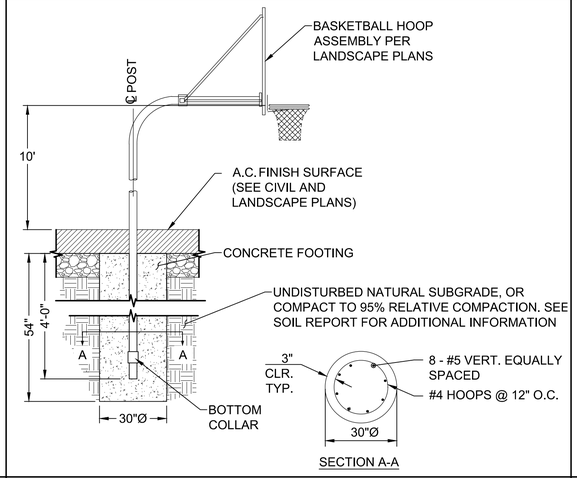

2 BASKETBALL HOOP POST FOOTING

NTS REFERENCE SHEET: L-141 THRU L-145

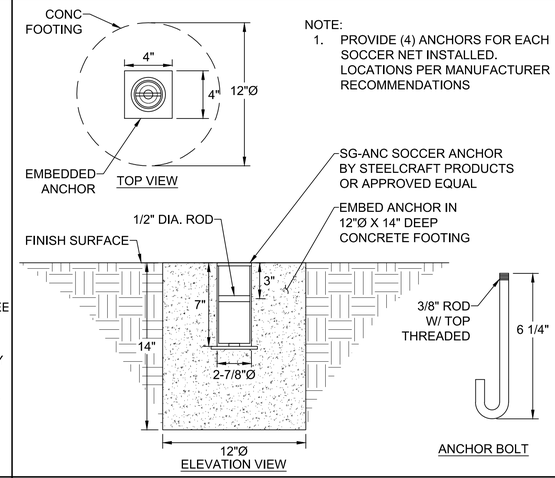

3 SOCCER NET POST FOOTING

NTS REFERENCE SHEET: L-141 THRU L-145

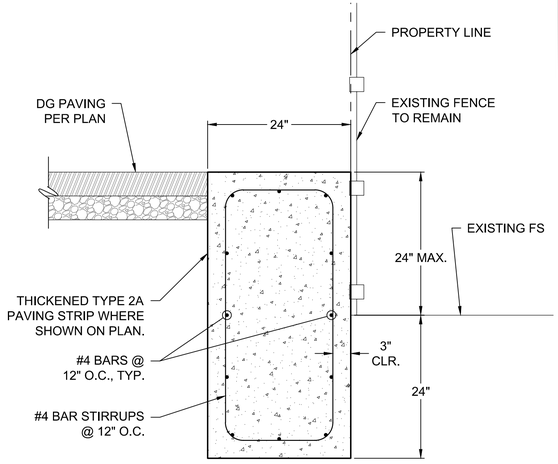

4 THICKENED PERIMETER CONC PAVING

NTS REFERENCE SHEET L-131 THRU L-135

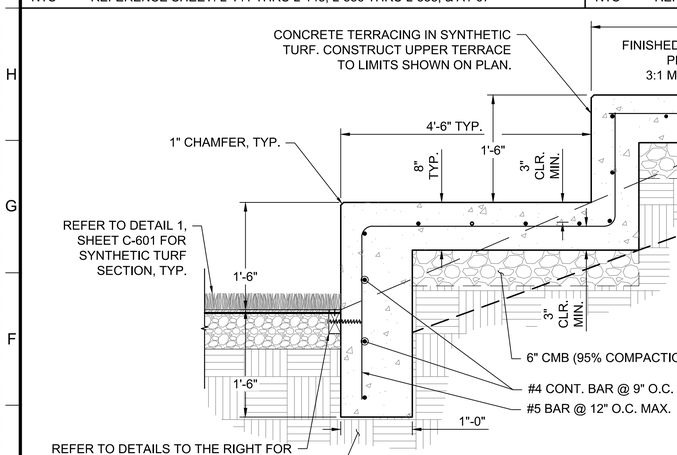

5 SOCCER FIELD CONCRETE TERRACE

NTS REFERENCE SHEET: L-141 THRU L-145

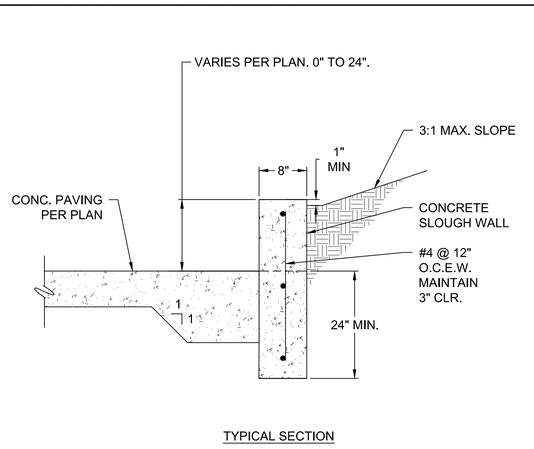

TYPICAL SECTION

7 CONCRETE SLOUGH WALL

NTS REFERENCE SHEET: L-132

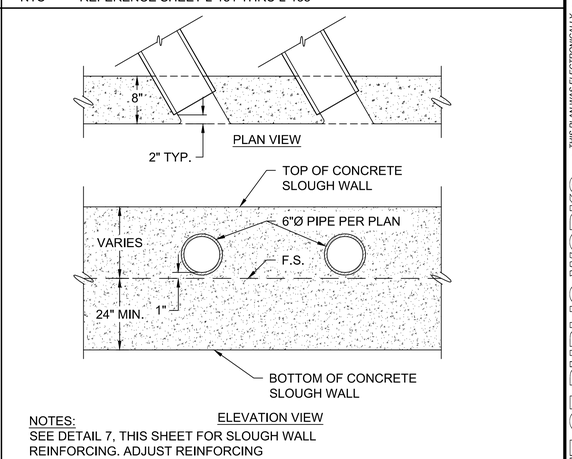

NOTES:
SEE DETAIL 7, THIS SHEET FOR SLOUGH WALL REINFORCING. ADJUST REINFORCING SPACING AT PENETRATIONS AS NEEDED.

8 CONCRETE SLOUGH WALL PENETRATION

NTS REFERENCE SHEET: L-132 & C-404

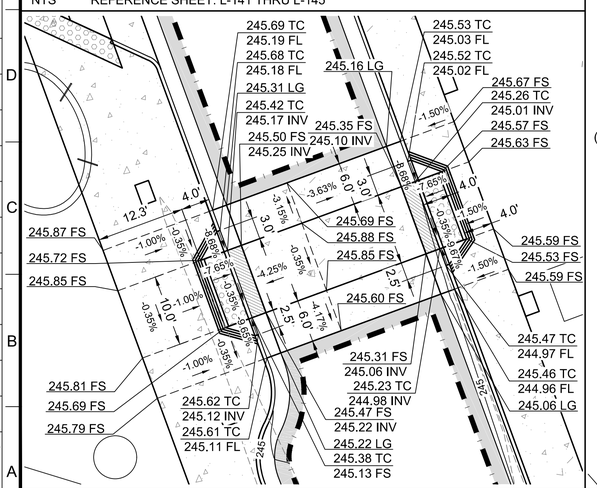

9 ANDERSON STREET CROSSING RAMPS

NTS REFERENCE SHEET: C-502

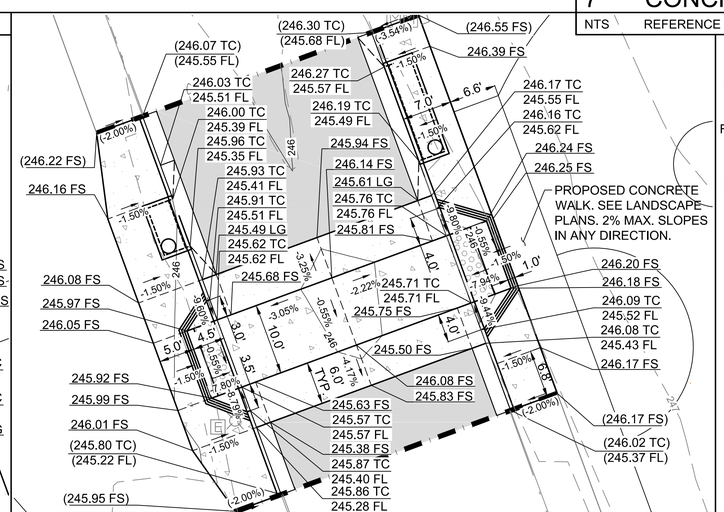

10 CLARENCE STREET CROSSING RAMPS

NTS REFERENCE SHEET: C-503

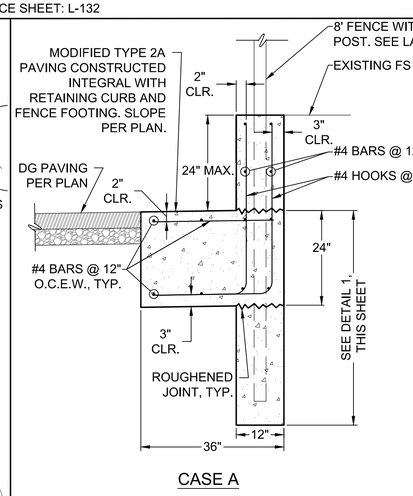

11 RETAINING CURB W/ FENCE

NTS REFERENCE SHEET: L-141 THRU L-145

BUREAU OF ENGINEERING
OFFICIAL RECORD

PLANS PREPARED BY:
TETRA TECH, INC.
707 WILSHIRE BLVD, 23RD FLR.
LOS ANGELES, CA 90017
PHONE: (213) 239-8866

THIS PLAN WAS ELECTRONICALLY SIGNED AND STAMPED

PROFESSIONAL ENGINEER — JUSTIN T. SMITH — No. 85736 EXP: 9-30-22 — CIVIL — STATE OF CALIFORNIA

ENGINEERING — CITY OF LOS ANGELES

BUREAU OF ENGINEERING

NO.	REVISIONS:	DATE	BY:

BUILDING NO.

INDEX NO. MF-300501

CITY OF LOS ANGELES DEPARTMENT OF PUBLIC WORKS

CITY ENGINEER: TED ALLEN, P.E.
DESIGN GROUP
ENGINEER: JUSTIN SMITH
DESIGNED BY: JUSTIN SMITH
DRAWN BY: DAVID LOPEZ
CHECKED BY: NATE SCHREINER
APPROVED BY: JASON L. FUSSEL
DATE:
LIC. NO. C-85736

VERT. CONTROL: BM 12-04070, 1929 (NGVD29) - 1985 ADJUSTMENT
HORIZ. CONTROL: GPS; PID AE 1704, EPOCH 1991.35

SHEET TITLE: CIVIL DETAILS SHEET 13

PROJECT: SIXTH STREET PARK, ARTS AND RIVER CONNECTIVITY IMPROVEMENTS (PARC)

ADDRESS: SIXTH STREET OVER THE LOS ANGELES RIVER

WORK ORDER NO. E700235D
FILE NO. --
DRAWING NO. C-612
SHEET 77 OF 295 SHEETS

7/8/2022 4:25:25 PM - O:\PROJECTS\IRVINE\20043\20-20043-17001\CAD\SHEETFILES\C-612_DETAILS - TT.DWG - SMITH, JUSTIN

THE CITY OF LOS ANGELES OR ITS OFFICERS OR AGENTS SHALL NOT BE RESPONSIBLE FOR THE ACCURACY OR COMPLETENESS OF ELECTRONIC COPIES OF THIS PLAN SHEET.

REVISION DATES (DESIGN STAGE ONLY)

Sheet Version 3.0

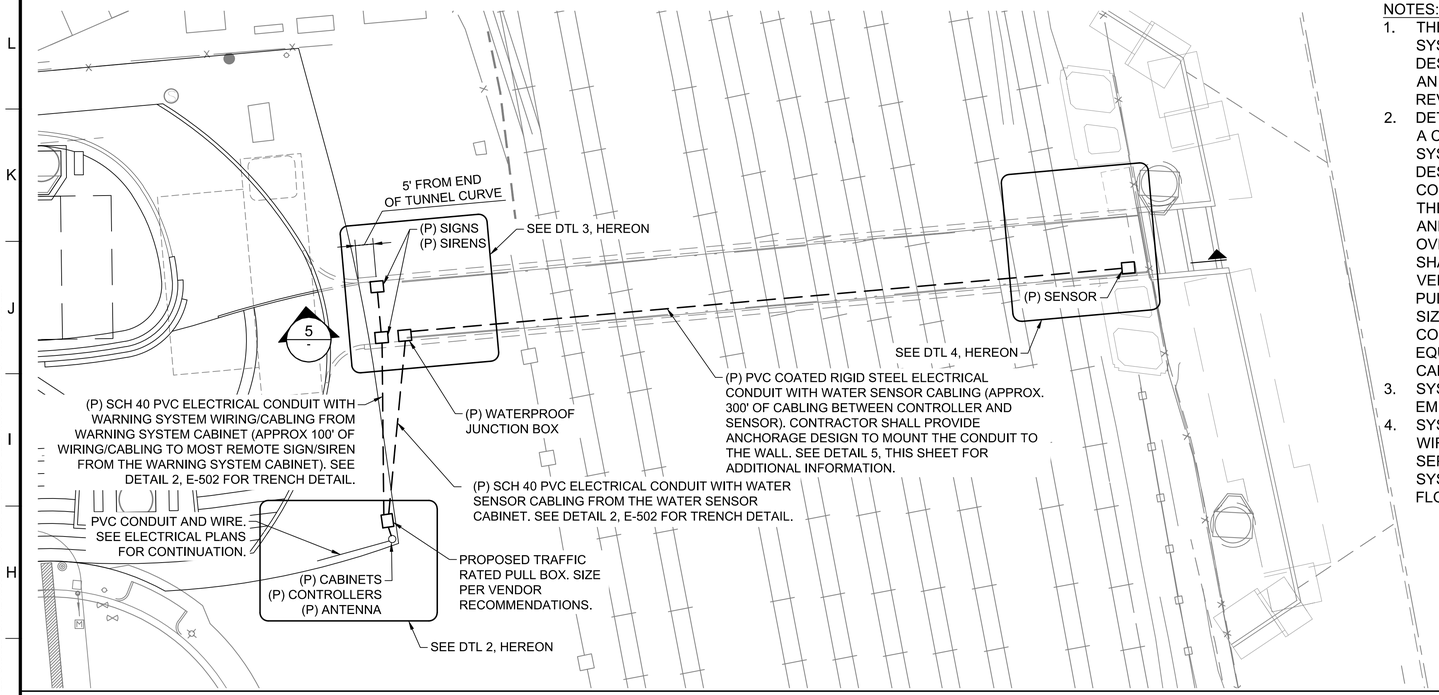

NOTES:

1. THE TAPCO HIGH WATER WARNING SYSTEM WAS USED AS THE BASIS OF DESIGN. CONTRACTOR MAY SUBMIT AN ALTERNATIVE EQUAL SYSTEM FOR REVIEW AND APPROVAL.
2. DETAILS SHOWN ON THIS SHEET ARE A CONCEPT LEVEL DESIGN. THIS SYSTEM IS TO BE A DELEGATED DESIGN BY THE CONTRACTOR. CONTRACTOR IS RESPONSIBLE FOR THE FINAL DESIGN, INSTALLATION, AND COMMISSIONING OF THE OVERALL SYSTEM. CONTRACTOR SHALL BE RESPONSIBLE FOR VERIFYING THE EQUIPMENT SIZING, PULL BOX LOCATIONS, PULLBOX SIZES, JUNCTION LOCATIONS, CONDUIT SIZING, CONDUIT COUNTS, EQUIPMENT LAYOUTS, AND CABLE/WIRING ROUTING.
3. SYSTEM MUST BE EQUIPPED WITH AN EMERGENCY BACKUP BATTERY.
4. SYSTEM MUST BE CAPABLE OF WIRELESSLY NOTIFYING UP TO FOUR SEPARATE AGENCIES WHEN THE SYSTEM HAS BEEN ACTIVATED BY A FLOOD CONDITION.

1 TUNNEL FLOOD WARNING SYSTEM SITE PLAN

NTS REFERENCE SHEET: C-613

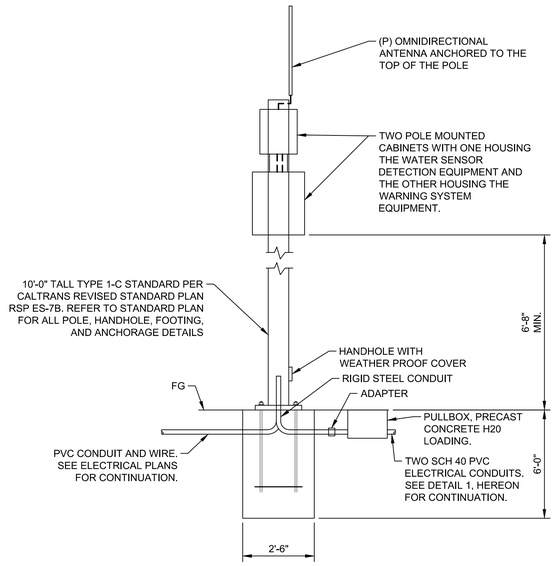

2 POLE-MOUNTED FLOOD WARNING SYSTEM CABINETS

NTS REFERENCE SHEET: C-613

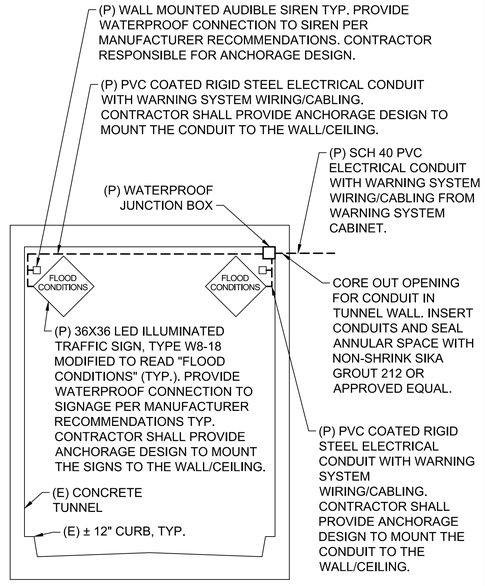

3 WALL MOUNTED SIGNAGE AND SIRENS

NTS REFERENCE SHEET: C-613

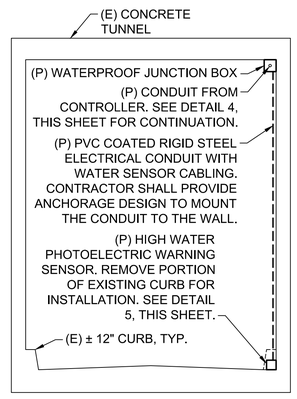

4 WALL MOUNTED WATER SENSOR

NTS REFERENCE SHEET: C-613

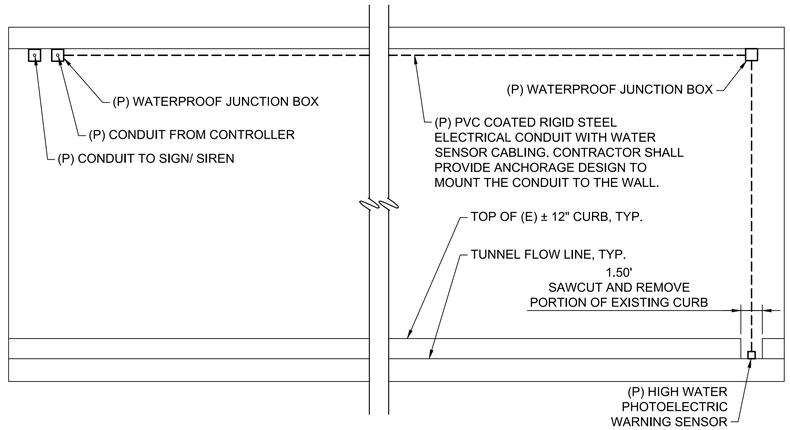

5 TUNNEL SECTION VIEW

NTS REFERENCE SHEET: C-613

BUREAU OF ENGINEERING
OFFICIAL RECORD

PLANS PREPARED BY:
TETRA TECH, INC.
707 WILSHIRE BLVD. 23RD FLR.
LOS ANGELES, CA 90017
PHONE: (213) 239-8866

ENGINEERING
CITY OF LOS ANGELES

BUREAU OF ENGINEERING
CITY OF LOS ANGELES
DEPARTMENT OF PUBLIC WORKS

NO.	REVISIONS:	DATE	BY:

BUILDING NO.

INDEX NO. MF-300501

THIS PLAN WAS ELECTRONICALLY SIGNED AND STAMPED

PROFESSIONAL ENGINEER ★ REGISTERED ★ JUSTIN T. SMITH ★ No. 85736 EXP: 9-30-22 ★ CIVIL ★ STATE OF CALIFORNIA

CITY ENGINEER
TED ALLEN, P.E.

DESIGN GROUP		DATE:
ENGINEER:	JUSTIN SMITH	07/11/22
DESIGNED BY:	JUSTIN SMITH	
DRAWN BY:	TYLER PARRA	
CHECKED BY:	NATE SCHREINER	
APPROVED BY:	JASON L. FUSSEL	

LIC. NO. C-85736

VERT. CONTROL: BM 12-04070, 1929 (NGVD29) - 1985 ADJUSTMENT
HORIZ. CONTROL: GPS, PID AE 1704, EPOCH 1991.35

SHEET TITLE: CIVIL DETAILS SHEET 14

PROJECT: SIXTH STREET PARK, ARTS AND RIVER CONNECTIVITY IMPROVEMENTS (PARC)

ADDRESS: SIXTH STREET OVER THE LOS ANGELES RIVER

WORK ORDER NO. E700235D
FILE NO. --
DRAWING NO. C-613
SHEET 78 OF 295 SHEETS

7/8/2022 4:57:50 PM - O:\PROJECTS\IRVINE\20043\20-20043-17001\CAD\SHEETFILES\C-613_DETAILS - TT.DWG - SMITH, JUSTIN

REVISION DATES (DESIGN STAGE ONLY)

THE CITY OF LOS ANGELES OR ITS OFFICERS OR AGENTS SHALL NOT BE RESPONSIBLE FOR THE ACCURACY OR COMPLETENESS OF ELECTRONIC COPIES OF THIS PLAN SHEET.

Sheet Version 3.0

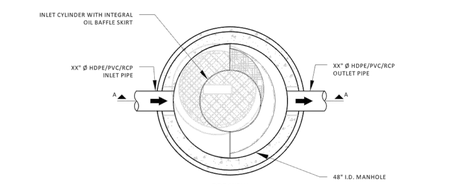

TOP VIEW
SCALE= 1:30

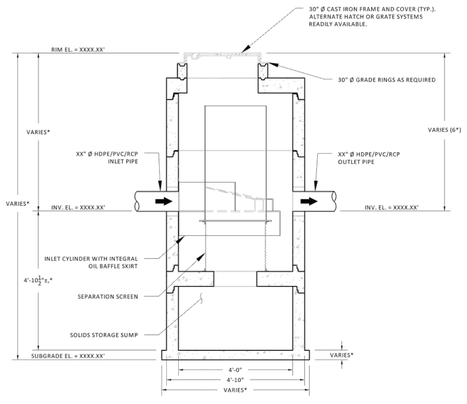

SECTION A-A
SCALE= 1:30

JENSEN DEFLECTIVE SEPARATOR, MODEL JDS48-2418

HYDRAULICS AND TREATMENT :

STORMWATER QUALITY DESIGN FLOW (SQDF)	≤ 0.7 - CFS
STORM DRAIN DESIGN CONVEYANCE FLOW	XX.XX - CFS
RETURN FREQUENCY/PERIOD OF PEAK DESIGN CONVEYANCE FLOW	XXXX - YRS
SUGGEST MAXIMUM INTERNAL BYPASS FLOW	≤ 7.0 - CFS

STORMWATER TREATMENT UNIT EMPLOYING THE CONTINUOUS DEFLECTIVE SEPARATION TREATMENT PROCESS TO PRODUCE A NON-BLOCKING SCREENING SYSTEM WITH SWIRL CONCENTRATION. THIS HYDRODYNAMIC SEPARATION TREATMENT IS EQUIPPED WITH AN INTERNAL BYPASS THAT PROVIDES COMPLETE BYPASS OF STORM DRAIN PIPELINE CONVEYANCE FLOW WITHOUT SCOUR OF CAPTURED GROSS SOLIDS .

TREATMENT :

1. CERTIFIED FOR 100% CAPTURE FOR TRASH & DEBRIS BY CALIFORNIA STATE WATER RESOURCES CONTROL BOARD.
2. CERTIFIED FOR 50% TOTAL SUSPENDED SOLIDS (TSS) REMOVAL BY NEW JERSEY DEPARTMENT OF ENVIRONMENTAL PROTECTION.
3. JENSEN DEFLECTIVE SEPARATOR IS A NON-BLOCKING SCREENING UNIT.
4. JENSEN DEFLECTIVE SEPARATOR DESIGNED TO PROCESS ENTIRE SQDF.
5. CAPTURE OF OTHER WATER QUALITY CONSTITUENTS INCLUDE:
   - TOTAL SUSPENDED SOLIDS (TSS)
   - HEAVY METALS
   - OIL & GREASE
   - NUTRIENTS
   - FECAL COLIFORM

GENERAL NOTES :

1. STANDARD CONFIGURATION IS SHOWN. ALTERNATE CONFIGURATIONS ARE READILY AVAILABLE. CONTACT JENSEN STORMWATER SYSTEMS FOR CUSTOM DESIGNS, www.jensenengineeredsystems.com.
2. FOR COMPLETE DESIGN AND PRODUCT INFORMATION, CONTACT JENSEN STORMWATER SYSTEMS.
3. FOUNDATION, SUBGRADE, AND BACKFILL TO BE DESIGNED BY OTHERS.
4. GROUNDWATER ELEVATION IS ASSUMED TO BE BELOW THE BOTTOM OF PRECAST STRUCTURE. CONTACT JENSEN STORMWATER SYSTEMS FOR HIGH GROUNDWATER CONDITIONS.
5. JENSEN STORMWATER SYSTEMS TO PROVIDE ALL MATERIALS AS SHOWN, UNLESS OTHERWISE NOTED.
6. OUTLET INVERT ELEVATION TYPICALLY SET EQUAL TO INLET ELEVATION OR SET 1" LOWER THAN INLET.

INSTALLATION NOTES :

1. CONTRACTOR TO VERIFY ALL DIMENSIONS AND ELEVATIONS IN FIELD PRIOR TO INSTALLATION.
2. PRECAST CONCRETE JOINTS TO BE SEALED USING BUTYL RUBBER COMPOUND SUPPLIED BY JENSEN PRECAST.
3. CONTRACTOR TO GROUT ALL PIPE PENETRATIONS IN PRECAST CONCRETE OPENINGS IN FIELD AS NECESSARY.
4. CONTRACTOR TO ADJUST ELEVATION OF FRAME AND COVER IN FIELD AS NECESSARY.

MATERIALS :

1. ALL DIMENSIONS ARE IN FOOT-INCH.
2. PRECAST MATERIALS AND MANUFACTURING METHODS SHALL CONFORM TO ASTM C-478, C-857 AND LACSD S-A-206, WHEN IN LA COUNTY.
3. CONCRETE SHALL HAVE A MINIMUM COMPRESSIVE STRENGTH F'c = 5,000-psi AT 28-DAYS.
4. THE PORTLAND CEMENT USED IN THE PRECAST SECTION SHALL MEET THE REQUIREMENTS OF TYPE II/V HIGH SULFATE RESISTANT CEMENT IN ACCORDANCE WITH ASTM CLASS M C-150.
5. MANHOLE COMPONENTS CONFORM TO CURRENT SPECIFICATIONS, ASTM, C-478 AND AASHTO M199.
6. FLAT TOPS AND BASE SLABS ARE DESIGNED FOR AASHTO HS-20 WHEEL LOADING.
7. ALL PRECAST CONCRETE COMPONENTS TO BE MANUFACTURED IN AN NPCA CERTIFIED PLANT.

QTY.	COMPONENT DESCRIPTION	RESPONSIBLE PROVIDER	RESPONSIBLE INSTALLER
1	SEPARATION SCREEN AND INLET CYLINDER	JENSEN	CONTRACTOR
1	XX" Ø HDPE/PVC/RCP INLET PIPE	CONTRACTOR	JENSEN
1	XX" Ø HDPE/PVC/RCP OUTLET PIPE	CONTRACTOR	JENSEN
1	30" Ø CAST IRON FRAME AND COVER, H20 RATED	JENSEN	CONTRACTOR
X	3" TALL 36" Ø GRADE RINGS	JENSEN	CONTRACTOR
X	6" TALL 36" Ø GRADE RING	JENSEN	CONTRACTOR

(*) REGIONAL MANUFACTURING DIFFERENCE :

THESE ARE TEMPLATE SITE DESIGN DRAWINGS. JOINTS ORIENTATIONS, AND FINAL SEPARATION AND BASE SLAB THICKNESS VARY ACROSS JENSEN'S REGIONAL MANUFACTURING FACILITIES. CONFIRM FINAL JOINT ORIENTATION AND THICKNESS PER CONSTRUCTION SUBMITTAL DRAWINGS. ADJUST FINAL DIMENSIONS TO EXTERIOR INVERT AND SUBGRADE ELEVATION PER REGION DIFFERENCES.

MODEL:	PROJECT:	JENSEN WATER RESOURCES
JDS48-2418 JENSEN DEFLECTIVE SEPARATOR	PROJECT NAME PROJECT LOCATION	521 DUNN CIRCLE, SPARKS, NV 89431-6312 (877) 649-0095 FAX (775) 440-2013 www.jensenengineeredsystems.com

HYDRODYNAMIC SEPARATOR (HDS), SWIRL CONCENTRATING, FULL CAPTURE, NON-BLOCKING SCREENING UNIT	ORG. DWG. DATE	REV. DWG. DATE	SCALE:	SHEET SIZE	DRAWN BY	SHEET NUMBER
	XX/XX/XXXX	XX/XX/XXXX	AS SHOWN	11" X 17"	X.XXXX	JDS48-2418

Copyright Information © 2016 Jensen Precast All Rights Reserved. All materials appearing as Jensen Precast documents and the like are proprietary work product and are protected under U.S. copyright and other laws. Unless in conjunction with business conducted with Jensen Precast, any use of Jensen Precast work product without express, written consent is prohibited and recipient is prohibited from distributing any and all work product to non-approved third parties under penalty of civil action.

1 HYDRODYNAMIC SEPARATOR TYPE 2

NTS REFERENCE SHEET C-403 THRU C-411

NOTE:

1. HYDRODYNAMIC SEPARATOR SHALL BE JENSEN PRECAST MODEL JDS48-2418 OR APPROVED EQUAL.
2. REFER TO THE PLANS FOR PIPE SIZES, PIPE TYPES, INVERT ELEVATIONS, RIM ELEVATIONS, ETC. FINAL PRECAST SECTION DIMENSIONS PER MANUFACTURER. RIM ELEVATION TO SUMP ELEVATION SHALL NOT EXCEED 25 FEET.
3. SUMP OPENING SHALL BE 18" IN DIAMETER MINIMUM.
4. STANDARD DETAIL SHALL BE MODIFIED SO THAT THE 30" Ø FRAME AND COVER IS CENTERED IN THE TOP SLAB.
5. REFER TO DETAIL 2, SHEET C-606 FOR OVEREXCAVATION AND SUBGRADE PREPARATION REQUIREMENTS.
6. PRIOR TO INSTALLING THE SEPARATION SLAB OVER THE SOLID STORAGE SUMP, THE CONTRACTOR SHALL APPLY CEMENT MORTAR ($\frac{1}{2}$" MINIMUM THICKNESS) TO THE BASE OF THE SUMP STORAGE TO SLOPE THE SURFACE 2% MINIMUM TO THE CENTER OF THE STRUCTURE.
7. CONTRACTOR SHALL APPLY CEMENT MORTAR ($\frac{1}{2}$" MINIMUM THICKNESS) TO THE TOP OF THE SEPARATION SLAB OVER THE SOLID STORAGE SUMP TO SLOPE THE SURFACE 2% MINIMUM TO OUTLET SIDE OF THE STRUCTURE.

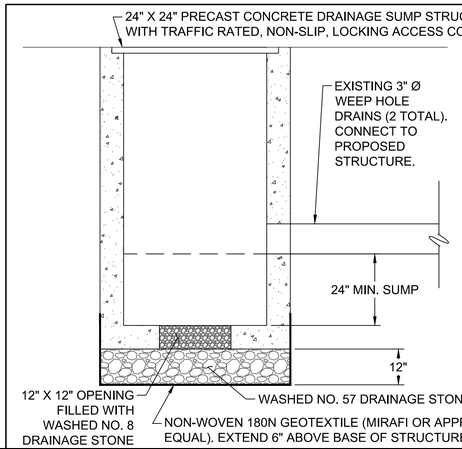

2 WEEP HOLE SUMP STRUCTURE

NTS REFERENCE SHEET C-403A

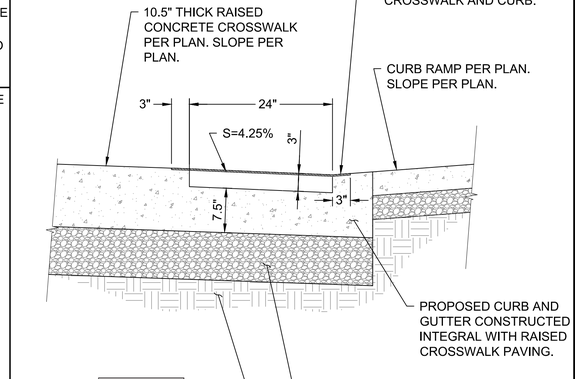

BUREAU OF ENGINEERING
OFFICIAL RECORD

3 RAISED CROSSWALK CULVERT

NTS REFERENCE SHEET C-502

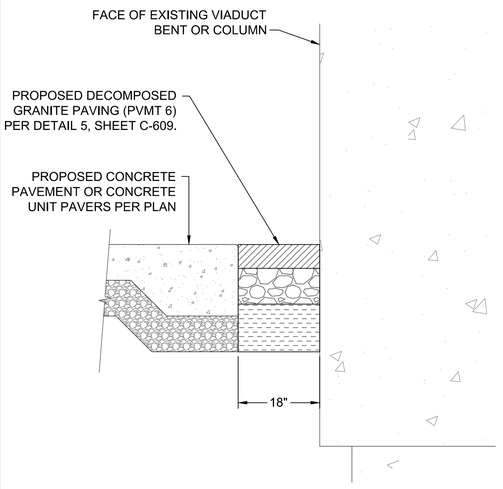

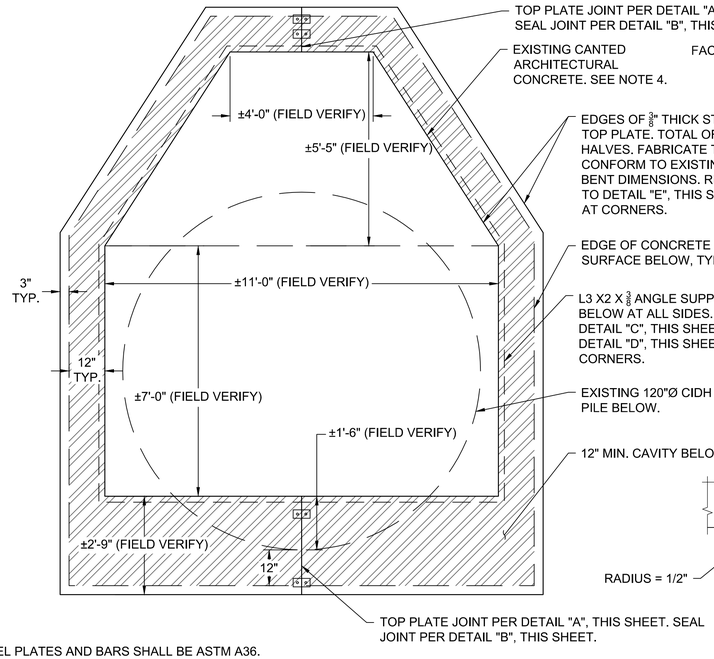

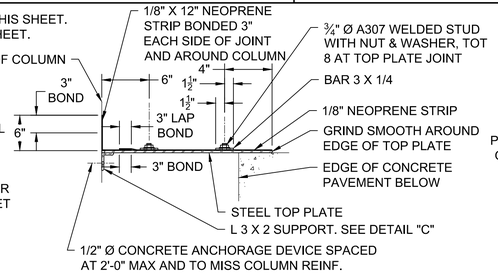

DETAIL "A"

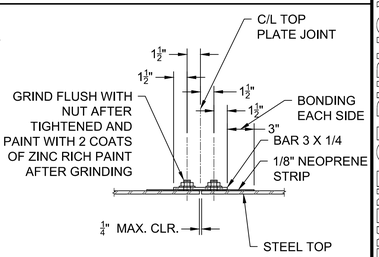

DETAIL "B"

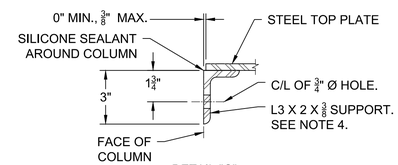

DETAIL "C"

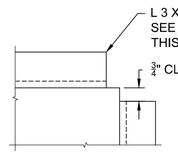

DETAIL "D"

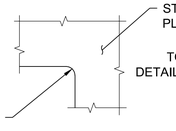

DETAIL "E"

REAR/SIDE CONCRETE TERRACE EDGE DETAIL

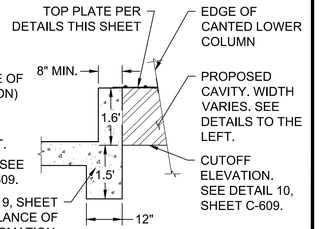

FRONT CONCRETE TERRACE EDGE DETAIL

NOTES:

1. ALL STEEL PLATES AND BARS SHALL BE ASTM A36.
2. ALL STEEL COMPONENTS SHALL BE GALVANIZED
3. BONDING OF NEOPRENE STRIP SHALL BE ACHIEVED USING A NEOPRENE ADHESIVE THAT SHALL COMPLY WITH FEDERAL SPEC MMM-A-121.
4. AT CANTED ARCHITECTURAL CONCRETE WALLS, REPLACE L 3 X 2 X 3/8 SUPPORT ANGLE WITH A FABRICATED ANGLE TO MATCH THE SLOPE OF THE ARCHITECTURAL CONCRETE WALL

4 VIADUCT BENTS/COLUMNS IN PVMT

NTS REFERENCE SHEET L-131 THRU L-135

5 VIADUCT BENTS 4S ISOLATION COVER PLATE

NTS REFERENCE SHEET L-131 THRU L-135

PLANS PREPARED BY:
TETRA TECH, INC.
707 WILSHIRE BLVD. 23RD FLR.
LOS ANGELES, CA 90017
PHONE: (213) 239-8866

BUREAU OF ENGINEERING
ENGINEERING
CITY OF LOS ANGELES

NO.	REVISIONS:	DATE:	BY:

BUILDING NO.
INDEX NO. MF-300501

THIS PLAN WAS ELECTRONICALLY SIGNED AND STAMPED

REGISTERED PROFESSIONAL ENGINEER ★ VINNIE T. SMITH ★ No. 85736 EXP: 9-30-22 CIVIL ★ STATE OF CALIFORNIA

CITY OF LOS ANGELES DEPARTMENT OF PUBLIC WORKS

CITY ENGINEER
TED ALLEN, P.E.

DESIGN GROUP		DATE:	07/11/22
ENGINEER:	JUSTIN SMITH	LIC. NO.	C-85736
DESIGNED BY:	JUSTIN SMITH		
DRAWN BY:	DAVID LOPEZ		
CHECKED BY:	NATE SCHREINER		
APPROVED BY:	JASON L. FUSSEL		

VERT. CONTROL: BM 12-04070, 1929 (NGVD29) - 1985 ADJUSTMENT
HORIZ. CONTROL: GPS, PID AE 1704, EPOCH 1991.35

SHEET TITLE: CIVIL DETAILS SHEET 15

PROJECT: SIXTH STREET PARK, ARTS AND RIVER CONNECTIVITY IMPROVEMENTS (PARC)

ADDRESS: SIXTH STREET OVER THE LOS ANGELES RIVER

WORK ORDER NO. E700235D
FILE NO. --
DRAWING NO. C-614
SHEET 79 OF 295 SHEETS

7/8/2022 5:50:35 PM - O:\PROJECTS\IRVINE\20043\20-20043-17001\CAD\SHEETFILES\C-614 DETAILS - TT.DWG - SMITH, JUSTIN

THE CITY OF LOS ANGELES OR ITS OFFICERS OR AGENTS SHALL NOT BE RESPONSIBLE FOR THE ACCURACY OR COMPLETENESS OF ELECTRONIC COPIES OF THIS PLAN SHEET.

REVISION DATES (DESIGN STAGE ONLY)

Sheet Version 3.0

CONTRACT DOCUMENTS

1. THE WORK SHALL CONFORM TO THE CONTRACT DOCUMENTS.
2. THE CONTRACT DOCUMENTS ARE COMPLIMENTARY. READ THE DRAWINGS IN CONJUNCTION WITH THE SPECIFICATIONS AND EXECUTE THE WORK AS THOUGH SHOWN ON ALL.
3. THE EXTERNAL WORKS IS DEPENDENT ON SEVERAL DISCIPLINES. READ THE DRAWINGS BY CROSS-REFERENCING BETWEEN DISCIPLINES.
4. REPORT ANY DISCREPANCIES IMMEDIATELY TO THE OWNER'S REPRESENTATIVE FOR DIRECTION BEFORE PROCEEDING WITH THE WORK.

SITE ACCESS & PROTECTION

1. STAGING AREA IS WITHIN THE CONTRACT LIMIT LINE. STAGING AREA DOES NOT INCLUDE ACCESS ROUTES TO THE SITE. THE CONSTRUCTION (AND REMOVAL) OF TEMPORARY STAGING AREAS AND/OR ACCESS ROUTES SHALL BE THE CONTRACTOR'S SOLE RESPONSIBILITY AND EXPENSE.
2. ALL CONSTRUCTION RELATED VEHICLES REQUIRED FOR THE WORK EXITING AND/OR ENTERING THE SITE SHALL NOT DEPOSIT DIRT, MUD, OR OTHER DELETERIOUS MATERIALS THAT WOULD PRESENT A NUISANCE OR HAZARD TO THE PUBLIC TRAVELING ON RIGHT OF WAYS. ALL PREVENTION AND CLEANING SHALL BE AT THE CONTRACTOR'S SOLE RESPONSIBILITY AND EXPENSE.
3. NO WORK, EQUIPMENT OR STAGING IS PERMITTED IN THE RIGHT OF WAY AT ANY TIME UNLESS THE CONTRACTOR HAS APPROVAL FROM THE GOVERNMENT AUTHORITIES HAVING JURISDICTION. ALL COORDINATION PERMITS AND TRAFFIC CONTROL REQUIRED SHALL BE AT THE CONTRACTOR'S SOLE RESPONSIBILITY AND EXPENSE.
4. THE DOCUMENTS DO NOT SPECIFY SAFETY MATERIALS, EQUIPMENT, METHODS OR SEQUENCING TO PROTECT PERSONS AND PROPERTY. IT SHALL BE THE CONTRACTOR'S SOLE RESPONSIBILITY AND EXPENSE TO DIRECT AND IMPLEMENT SAFETY OPERATIONS TO PROTECT PERSONS AND PROPERTY.

QUALITY ASSURANCE

1. EXECUTE THE WORK AND SCHEDULE INSPECTIONS IN ACCORDANCE WITH ALL APPLICABLE FEDERAL, STATE AND LOCAL STANDARDS, LAWS AND REGULATIONS.
2. ENSURE SUBCONTRACTORS, MANUFACTURERS AND SUPPLIERS HAVE THE LATEST CONTRACT DOCUMENTS PRIOR TO THE SUBMITTAL OF THEIR SHOP DRAWINGS AND/OR DELEGATED DESIGN DRAWINGS.
3. REFER TO THE SPECIFICATION FOR REQUIRED SUBMITTALS, INSPECTIONS AND NOTICE PERIODS.

EXISTING CONDITIONS SURVEY

1. THE DOCUMENTS ARE BASED ON THE FOLLOWING TOPOGRAPHIC AND UTILITY SURVEY;
   - BUREAU OF ENGINEERING SURVEY DATED 09-12-2017, UNDERTAKEN BY IN-FIELD METHODS SUBJECT TO PRECISION AND ACCURACY TOLERANCES.
2. SURVEYED UNDERGROUND UTILITIES ARE PROVIDED FOR INFORMATION ONLY AS THEY ARE INFERRED BY SURFACE MARKINGS AND FEATURES AND AS SUCH MAY NOT BE ACCURATE OR COMPLETE.

GEOTECHNICAL REPORT

1. THE DOCUMENTS ARE BASED ON THE FOLLOWING GEOTECHNICAL REPORT,
   - HUSHMAND ASSOCIATES, INC. REPORT DATED 01-2018, UNDERTAKEN BY IN-FIELD METHODS SUBJECT TO PRECISION AND ACCURACY TOLERANCES.
2. THE GEOTECHNICAL REPORT IS MADE AVAILABLE FOR INFORMATION ONLY AS SOME RECOMMENDATIONS IN THE REPORT MAY NOT BE RELEVANT OR USED IN THE DOCUMENTS.

UTILITIES

1. THE LOCATIONS AND SIZES OF EXISTING UTILITIES IF SHOWN ARE APPROXIMATE ONLY. IDENTIFY, LOCATE AND PROTECT ALL UNDERGROUND AND OVERHEAD UTILITIES TO REMAIN.
2. COORDINATE WITH THE LOCAL UTILITY COMPANIES AND/OR AGENCIES. NOTIFY THE CALL CENTER NO LESS THAN 72 HOURS PRIOR TO DIGGING TO LOCATE UNDERGROUND UTILITIES OR AS REQUIRED BY LOCAL REGULATIONS.
3. BE FULLY RESPONSIBLE FOR THE COST OF ANY AND ALL DAMAGES WHICH OCCUR AS A RESULT OF A FAILURE TO ACCURATELY LOCATE AND/OR RETAIN ANY AND/OR ALL UTILITIES TO REMAIN.

LAYOUT

1. THE HORIZONTAL CONTROL FOR THE PROJECT IS: STATE PLANE COORDINATE SYSTEM NORTH AMERICAN DATUM (NAD83) UNLESS OTHERWISE NOTED.
2. THE VERTICAL CONTROL FOR THE PROJECT IS: NORTH AMERICAN VERTICAL DATUM (NAVD88) OR NATIONAL GEODETIC DATUM (NGDV29) UNLESS OTHERWISE NOTED.
3. VERIFY THE LOCATION OF EXISTING FEATURES TO REMAIN THAT CONNECT TO NEW WORK. ALL DIMENSIONAL CLEARANCES, SETBACKS AND OFFSETS AND VERTICAL DATUM. REPORT ANY DISCREPANCIES IMMEDIATELY TO THE OWNER'S REPRESENTATIVE FOR DIRECTION BEFORE PROCEEDING WITH THAT PORTION OF THE WORK.
4. VERIFY ALL PREVIOUS UNDERLYING TRADEWORK CONFORMS TO THE DOCUMENTS PRIOR TO PROCEEDING WITH OVERLYING TRADEWORK. REPORT ANY DISCREPANCIES IMMEDIATELY TO THE OWNER'S REPRESENTATIVE FOR DIRECTION BEFORE PROCEEDING WITH THAT PORTION OF THE WORK.
5. GENERAL CONTRACTOR SHALL RETAIN SURVEY CONTROL FOR LAYOUT OF THE WORKS AND AS-BUILT SURVEYS.
6. COORDINATE AND COLLATE SUBCONTRACTOR'S SURVEYS.IT IS THE CONTRACTOR'S RESPONSIBILITY TO FIELD VERIFY EXISTING SITE CONDITIONS AND EVOLVING SITE CONDITIONS PRIOR TO THE START OF ANY SITE WORK. ANY DISCREPANCY AND/OR UNFORESEEN CONDITIONS FOUND SHALL BE BROUGHT TO THE IMMEDIATE ATTENTION OF THE OWNER'S REPRESENTATIVE PRIOR TO STARTING THE SITE WORK. DO NOT BEGIN WORK IN ANY SUCH AFFECTED AREA UNTIL THE DISCREPANCY HAS BEEN RESOLVED.
7. ERECT AND INSTALL ALL WORK LEVEL, PLUMB, SQUARE, TRUE, STRAIGHT AND IN PROPER ALIGNMENT.
8. DO NOT SCALE FROM DRAWINGS. USE DIMENSIONS SHOWN.
9. DIMENSIONS NOTED [CLR] OR CLEAR MUST BE STRICTLY MAINTAINED ALLOWING FOR THICKNESS OF ALL FINISHES. FIELD VERIFY PRIOR TO CONSTRUCTION.
10. ALL ANGLES ARE 90 DEGREES UNLESS OTHERWISE NOTED.
11. ALL CURVES FOR PAVING, BANDS, PATHS, EDGING AND HEADER BOARDS SHALL BE SMOOTH AND CONTINUOUS WITHOUT ABRUPT CHANGES, OBVIOUS TANGENTS OR BENDS.
12. PITCH EVENLY BETWEEN SPOT GRADES AND CONTOUR LINES UNLESS GRADE BREAKS, RIDGELINES, SWALES ARE INDICATED OR OTHERWISE NOTED. ALL PAVED AREAS SHALL PITCH AT A MINIMUM OF 1% UNLESS OTHERWISE NOTED ON DRAWINGS. ANY DISCREPANCIES OR CONDITIONS NOT ALLOWING THIS TO OCCUR SHALL BE REPORTED TO THE OWNER'S REPRESENTATIVE FOR RESOLUTION PRIOR TO CONTINUING WORK.
13. PEDESTRIAN SIDEWALKS AND PAVING SHALL HAVE A CROSS PITCH LESS THAN 2% TO MEET ADA, UNLESS OTHERWISE NOTED.
14. REQUEST A FIRST IN PLACE FIELD REVIEW BY THE LANDSCAPE ARCHITECT OF THE LAYOUT OF ELEMENTS AS SHOWN. STAKE ALL LOCATIONS. OBTAIN LANDSCAPE ARCHITECT'S APPROVAL OF LAYOUT BEFORE INSTALLING THE FOLLOWING;
   - ALL SITE LIGHTING FIXTURES, JUNCTION BOXES, TRANSFORMERS
   - ALL SITE UTILITY FIXTURES, INCLUDING BUT NOT LIMITED TO BOXES, VAULTS, PULL BOXES, MAN HOLES, AIR RELEASE VALVES, VENTS, BFP, AND OTHER CIVIL, MECHANICAL, ELECTRICAL, PLUMBING, TELECOM, HEATING/COOLING, AND IRRIGATION STRUCTURES
   - ALL FORMWORK OR A TYPICAL FORMWORK PORTION REPRESENTING SIMILAR WORK. OBTAIN LANDSCAPE ARCHITECTS APPROVAL OF FORMWORK FOR FLATWORK AND WALL WORK PRIOR TO CONCRETE POURING
   - ALL TREE LOCATIONS. STAKE ALL TREE LOCATIONS. OBTAIN APPROVAL OF LANDSCAPE ARCHITECT BEFORE PLANTING TREES
   - ALL CURVED EDGING AND CUTTING
   - EXPANSION JOINTS IN UNIT PAVING
15. COORDINATE PLANT LAYOUT WITH IRRIGATION EQUIPMENT LAYOUT. PLANT LAYOUT TAKES PRECEDENCE OVER IRRIGATION EQUIPMENT LAYOUT.

WATERING

1. AREAS NOT SHOWN TO BE IRRIGATED PERMANENTLY BUT ARE PLANTED SHALL BE WATERED BY TEMPORARY MEANS UNTIL PLANTS ARE ESTABLISHED.
2. TEMPORARY WATERING MEANS, METHODS AND SCHEDULING SHALL BE THE CONTRACTORS' RESPONSIBILITY. REMOVE ALL TEMPORARY WATERING EQUIPMENT UPON PLANT ESTABLISHMENT.

WORK BY OTHERS

1. COOPERATE AND COORDINATE WITH OTHER CONTRACTORS WORKING CONCURRENTLY SO AS TO NOT VIOLATE EACH OTHER'S PERMITS AND TO AVOID DAMAGE TO EACH OTHER'S WORK. OTHER CONTRACTS THAT MAY BE ACTIVE DURING THIS WORK ARE:
   - BRIDGEWORKS
   - ROADWORKS INCLUDING CURB AND GUTTERS
   - PUBLIC ART INSTALLATION
2. EACH CONTRACTOR SHALL PROTECT AND MAINTAIN THEIR OWN WORK FOR THE DURATION OF THEIR CONTRACTS.

CODE COMPLIANCE

1. ALL WORK SHALL BE IN ACCORDANCE WITH APPLICABLE LAWS, CODES AND REQUIREMENTS OF REGULATORY AGENCIES HAVING JURISDICTION.
2. NOTIFY THE OWNER'S REPRESENTATIVE OF ANY DISCREPANCY BETWEEN THE WORK AND APPLICABLE CODES. DO NOT WORK IN ANY SUCH AFFECTED AREA UNTIL THE DISCREPANCY HAS BEEN RESOLVED.
3. VERIFY ALL CODES IN EFFECT AT THE TIME OF THE NOTICE TO PROCEED AND STAY CURRENT WITH ALL CODE CHANGES WHICH AFFECT THE WORK UNTIL SUBSTANTIAL COMPLETION.
4. IT IS THE SOLE RESPONSIBILITY OF THE CONTRACTOR TO OBTAIN AND PAY FOR ALL CONSTRUCTION RELATED PERMITS.

CODES IN EFFECT

1. THE CODES INCLUDING , BUT NOT LIMITED TO THE FOLLOWING, ARE APPLICABLE AND IN EFFECT:
   - CITY OF LOS ANGELES MUNICIPAL CODE, 2017
   - CITY OF LOS ANGELES GREEN BUILDING CODE, 2017
   - CALIFORNIA ENERGY CODE, 2016
   - INTERNATIONAL BUILDING CODE (IBC), 2015
   - NATIONAL ELECTRICAL CODE (NEC), 2014
   - INTERNATIONAL PLUMBING CODE (IPC), 2015
   - INTERNATIONAL MECHANICAL CODE (IMC), 2015
   - INTERNATIONAL ENERGY CONSERVATION CODE, 2009
   - INTERNATIONAL FIRE CODE (IFC), 2015
2. ANY REVISIONS TO THE APPROVED AND PERMITTED DRAWINGS OR DOCUMENTS SHALL BE SUBMITTED TO THE CITY BUILDING DEPARTMENT FOR REVIEW. NOTIFY THE OWNER'S REPRESENTATIVE OF THE PROCESSING TIME FOR EACH REVISION SUBMITTED FOR PLAN CHECK.

COPYRIGHT AND REPRODUCTION

1. THE USE OF REPRODUCTIONS OF THE CONTRACT DOCUMENTS OR ELECTRONIC FILES AS SHOP DRAWING DOCUMENTS BY THE CONTRACTOR IS AT THEIR OWN RISK. THE DESIGN CONSULTANTS ASSUME NO LIABILITY AS A RESULT OF THE USE OF THE CONTRACT DOCUMENTS FOR SHOP DRAWINGS AND/OR DELEGATED DESIGN DRAWINGS.
2. THE ENTIRE CONTRACT DOCUMENT PACKAGE HEREIN IS THE ORIGINAL AND UNPUBLISHED PROPERTY OF THE CITY OF LOS ANGELES AND MAY NOT BE DUPLICATED, USED OR DISCLOSED WITHOUT THE PRIOR EXPLICIT WRITTEN CONSENT OF THE CITY OF LOS ANGELES.
3. THE USE OF DIGITAL DESIGN FILES SHALL REQUIRE THE CONTRACTOR TO AGREE TO LICENSE CONDITIONS BEFORE USE.

CONSTRUCTION LOADS, DAMAGES & REPAIRS

1. THE CONTRACTOR IS SOLELY RESPONSIBLE FOR SLOPE STABILITY AND DEWATERING DURING THE WORKS UNLESS UNKNOWN CONDITIONS ARE ENCOUNTERED.
2. THE CONTRACTOR IS SOLELY RESPONSIBLE FOR PROTECTING THE WORKS FROM CONSTRUCTION LOADS AND DAMAGES TO EXISTING STRUCTURES TO REMAIN, NEW STRUCTURES AND NEW PAVEMENTS DURING THE WORKS.
3. BE FULLY RESPONSIBLE FOR THE COST OF ANY AND ALL DAMAGES WHICH OCCUR AS A RESULT OF A FAILURE TO MITIGATE CONSTRUCTION LOADS AND/OR PROTECT THE WORKS FROM ANY CONSTRUCTION RELATED IMPACTS. REPAIRS SHALL BE TO A NEW OR BETTER CONDITION COMPARED TO THE EXISTING CONDITION BEFORE DAMAGE, AND AS APPROVED BY THE OWNER'S REPRESENTATIVE.
4. CONFIRM ON-STRUCTURE UNIFORM AND POINT LOAD LIMITS WITH ENGINEER PRIOR TO IMPORTING AND HANDLING LANDSCAPE MATERIALS OVER ROOFS, BASEMENTS, VAULTS, AND/OR TUNNELS.

CONSTRUCTION WASTE MANAGEMENT

1. REMOVE FROM THE SITE ANY EXCESS MATERIAL AND/OR DEBRIS. DISPOSAL OF MATERIALS IS THE RESPONSIBILITY OF THE CONTRACTOR. ALL EXCESS MATERIAL AND/OR DEBRIS NOT ABLE TO BE RECYCLED OR REUSED SHALL BE DISPOSED OF OFF THE PROJECT SITE IN A PERMITTED LANDFILL.

GREEN CODE

1. FOR PROJECTS THAT INCLUDE LANDSCAPE WORK, THE LANDSCAPE CERTIFICATION, FORM GRN 12, SHALL BE COMPLETED PRIOR TO FINAL INSPECTION APPROVAL
2. A CERTIFICATE OF COMPLETION SHALL BE FILLED OUT AND CERTIFIED BY EITHER THE SIGNER OF THE LANDSCAPE PLANS, THE SIGNER OF THE IRRIGATION PLANS, OR THE LICENSED LANDSCAPE CONTRACTOR FOR THE PROJECT.

ABBREVIATIONS

AMP	AMPERE
APPROX	APPROXIMATE
AVG	AVERAGE
BC	BOTTOM OF CURB
BFP	BACKFLOW PREVENTER
BLDG	BUILDING
BM	BENCHMARK
BOT	BOTTOM
BR	BOTTOM OF RAMP
BS	BOTTOM OF STAIR
BW	BOTTOM OF WALL
CB	CATCH BASIN
CIP	CAST-IN-PLACE
CJ	CONTROL JOINT
CL	CENTER LINE
CLR	CLEAR
CMU	CONCRETE MASONRY UNIT
CO	CLEAN OUT
CONC	CONCRETE
CTR	CENTER
DAT	DATUM
DEG	DEGREE
DIA	DIAMETER
DIM	DIMENSION
DIST	DISTANCE
DIV	DIVISION
DWG	DRAWING
E	EAST
EA	EACH
EJ	EXPANSION JOINT
EL	ELEVATION
EQ	EQUAL
EQL SP	EQUALLY SPACED
EQUIV	EQUIVALENT
EXIST	EXISTING
F	FAHRENHEIT
FC	FOOTCANDLE
FFE	FINISH FLOOR ELEVATION
FF&E	FURNITURE, FIXTURE, AND EQUIPMENT
FIN GR	FINISH GRADE
FOC	FACE OF CURB
FOW	FACE OF WALL
FV	FIELD VERIFY
GALV	GALVANIZED
GB	GRADE BREAK
GDR	GUARD RAIL
H	HIGH
HB	HOSE BIBB
HDPE	HIGH DENSITY POLYETHYLENE
HH	HAND HOLE
HNDRL	HANDRAIL
HORIZ	HORIZONTAL
HT	HEIGHT
HV	HIGH VOLTAGE
HW	HIGH WATER
ID	INSIDE DIMENSION
IE	INVERT ELEVATION
IJ	ISOLATION JOINT
JB	JUNCTION BOX
kW	KILOWATT
LDPE	LOW DENSITY POLYETHYLENE
LED	LIGHT EMITTING DIODE
LOW	LIMIT OF WORK
LPT	LOW POINT
LTD	LIMITED
LV	LOW VOLTAGE
LW	LOW WATER
MAX	MAXIMUM
ME	MITERED OUTLET
MFR REC	MANUFACTURER'S RECOMMENDATION
MH	MANHOLE
MID	MIDDLE
MIN	MINIMUM
N	NORTH
NA	NOT APPLICABLE
NIC	NOT IN CONTRACT
NO	NUMBER
NOM	NOMINAL
NP	NORMAL POOL
NTS	NOT TO SCALE
OC	ON CENTER
OD	OUTSIDE DIAMETER
OH	OVERHANG
P.A.	PLANTING AREA
PB	PULL BOX
POB	POINT OF BEGINNING
POC	POINT OF CURVE
PCC	PRECAST CONCRETE
PERF	PERFORATED
PERP	PERPENDICULAR
pH	ACID/ALKALINE SCALE
PH	PHASE
POI	POINT OF INTERSECTION
PKG	PACKAGE
PL	PROPERTY LINE
PLMB	PLUMBING
PRCST	PRECAST
PREFAB	PREFABRICATE
PROV	PROVISIONAL
PVC	POLYVINYL CHLORIDE
PWR	POWER
QTR	QUARTER
QTY	QUANTITY
R	RADIUS
RCP	REINFORCED CONCRETE PIPE
RECIRC	RECIRCULATE
RECPT	RECEPTACLE
REINF	REINFORCE
REQD	REQUIRED
REV	REVISION
RLG	RAILING
ROW	RIGHT OF WAY
S	SOUTH
SALV	SALVAGE
SEG	SEGMENT
SHT	SHEET
SIM	SIMILAR
SPEC	SPECIFICATION
SQ	SQUARE
SSD	SUBSOIL DRAIN
SS	STAINLESS STEEL
STA	STATION
STD	STANDARD
SUCT	SUCTION
TAN	TANGENT
TB-xx	TEST BORING-XX (E.G., TB-01)
TD	TRENCH DRAIN
TEMP	TEMPORARY
THK	THICKNESS
THRU	THROUGH
THRUOUT	THROUGHOUT
TC	TOP OF CURB
TR	TOP OF RAMP
TS	TOP OF STAIRS
TW	TOP OF WALL
TOL	TOLERANCE
TOW	TOP OF WALL
TR	TOP OF RIM
TYP	TYPICAL
UGND	UNDERGROUND
UNIF	UNIFORM
UNO	UNLESS NOTED OTHERWISE
UP	UTILITY POLE
UV	ULTRAVIOLET
VAR	VARIES
VERT	VERTICAL
VRFY	VERIFY
W	WEST
W/	WITH
W/O	WITHOUT
WL	WATER LINE
WLD	WELDED
WT EL	WATER ELEVATION
XFMR	TRANSFORMER
YR	YEAR
@	AT
&	AND
+ / -	DIMENSION TOLERANCE

SYMBOLS

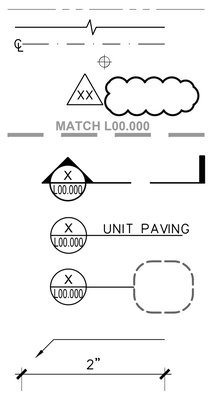

PROPERTY LINE
CUT LINE
CENTER LINE
STATION POINT
REVISION RECORD
MATCH LINE
SECTION REFERENCE
DETAIL CALLOUT
LARGE SCALE PLAN OR ENLARGED DETAIL
LEADER
DIMENSION

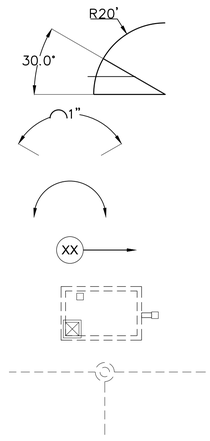

DIMENSION (RADIUS, ANGLE AND FOCI)
DIMENSION (ARC LENGTH)
ALIGN
KEY NOTE
UDERGROUND VAULT ROOM AND VENTS
UTILITY MANHOLE, SEE CIVIL

BUREAU OF ENGINEERING
OFFICIAL RECORD

THIS PLAN WAS ELECTRONICALLY SIGNED AND STAMPED

LICENSED LANDSCAPE ARCHITECT CALIFORNIA 2516 Ted Allen Date Renewal Date

PLANS PREPARED BY:
TETRA TECH, INC.
707 WILSHIRE BLVD. 23RD FLR.
LOS ANGELES, CA 90017
PHONE: (213) 239-9866

HargreavesJones
Hargreaves Jones Landscape Architecture

CITY OF LOS ANGELES DEPARTMENT OF PUBLIC WORKS
BUREAU OF ENGINEERING
ENGINEERING
CITY OF LOS ANGELES

NO.	REVISIONS:	DATE	BY:

BUILDING NO.
INDEX NO. MF-300501

CITY ENGINEER
TED ALLEN, P.E.
DESIGN GROUP
DATE: 07/11/2022
LIC. NO.
LANDSCAPE ARCHITECT: MARY MARGARET JONES
DESIGNED BY: MARY MARGARET JONES
DRAWN BY: MEGAN ESOPENKO
CHECKED BY: GAVIN MCMILLAN
APPROVED BY: MARY MARGARET JONES

VERT. CONTROL: BM 12-04070, 1929 (NGVD29) - 1985 ADJUSTMENT
HORIZ. CONTROL: GPS; PID AE 1704; EPOCH 1991.35

SHEET TITLE: LANDSCAPE NOTES & ABBREVIATIONS
PROJECT: SIXTH STREET PARK, ARTS AND RIVER CONNECTIVITY IMPROVEMENTS (PARC)
ADDRESS: SIXTH STREET OVER THE LOS ANGELES RIVER

WORK ORDER NO. E700235D
FILE NO. --
DRAWING NO. L-001
SHEET 80 OF 295 SHEETS

2022-07-05 0:55:50 PM - C:\USERS\MESOPENK\ONEDRIVE - HARGREAVESSSV 1601 - SIXTH STREET VIADUCT\300_CREATE\310_HA WORKING FILES\06_TECHNICAL\06_ TECHNICAL06_100-CD150_SHEETS_L-001 LANDSCAPE NOTES AND ABBREVIATIONS.DWG - MEGAN ESOPENKO

THE CITY OF LOS ANGELES OR ITS OFFICERS OR AGENTS SHALL NOT BE RESPONSIBLE FOR THE ACCURACY OR COMPLETENESS OF ELECTRONIC COPIES OF THIS PLAN SHEET.

REVISION DATES (DESIGN STAGE ONLY)

Sheet Version 3.0

BUREAU OF ENGINEERING

OFFICIAL RECORD

0 60' 120' 240'

SCALE 1" = 120'

PLANS PREPARED BY:

TETRA TECH, INC.
707 WILSHIRE BLVD. 23RD FLR.
LOS ANGELES, CA 90017
PHONE: (213) 239-8866

HargreavesJones
Hargreaves Jones Landscape Architecture

CITY OF LOS ANGELES DEPARTMENT OF PUBLIC WORKS

VERT. CONTROL: BM 12-04070, 1929 (NGVD29) - 1985 ADJUSTMENT
HORIZ. CONTROL: GPS; PID AE 1704, EPOCH 1991.35

SHEET TITLE: SITE GRADING PLAN

PROJECT: SIXTH STREET PARK, ARTS AND RIVER CONNECTIVITY IMPROVEMENTS (PARC)

ADDRESS: SIXTH STREET OVER THE LOS ANGELES RIVER

CITY ENGINEER
TED ALLEN, P.E.
DATE:

DESIGN GROUP
LANDSCAPE ARCHITECT: MARY MARGARET JONES LIC. NO.
DESIGNED BY: MARY MARGARET JONES
DRAWN BY: MEGAN ESOPENKO
CHECKED BY: GAVIN MCMILLAN
APPROVED BY: MARY MARGARET JONES

WORK ORDER NO. E700235D
FILE NO. --
DRAWING NO. L-016
SHEET 81 OF 295 SHEETS

BUREAU OF ENGINEERING

ENGINEERING
CITY OF LOS ANGELES

NO.	REVISIONS:	DATE	BY:

BUILDING NO.

INDEX NO. MF-300501

LICENSED LANDSCAPE ARCHITECT MARY MARGARET JONES #2516 STATE OF CALIFORNIA
Mary Margaret Jones Date Relinquish Date

THIS PLAN WAS ELECTRONICALLY SIGNED AND STAMPED

2022-07-05 8:56:07 PM - C:\USERS\MESOPENKO\ONEDRIVE - HARGREAVESSSV 1601 - SIXTH STREET VIADUCT\300_CREATE\310_HA WORKING FILES\06_TECHNICAL\06_100-CD150_SHEETS_L-016 SITE GRADING PLAN.DWG - MEGAN ESOPENKO

REVISION DATES (DESIGN STAGE ONLY)

THE CITY OF LOS ANGELES OR ITS OFFICERS OR AGENTS SHALL NOT BE RESPONSIBLE FOR THE ACCURACY OR COMPLETENESS OF ELECTRONIC COPIES OF THIS PLAN SHEET.

Sheet Version 3.0

0 60' 120' 240'

SCALE 1" = 120'

BUREAU OF ENGINEERING
OFFICIAL RECORD

PLANS PREPARED BY:
TETRA TECH, INC.
707 WILSHIRE BLVD. 23RD FLR.
LOS ANGELES, CA 90017
PHONE: (213) 239-8866

HargreavesJones
Hargreaves Jones Landscape Architecture

CITY OF LOS ANGELES DEPARTMENT OF PUBLIC WORKS
BUREAU OF ENGINEERING

CITY ENGINEER
TED ALLEN, P.E.
DATE:

DESIGN GROUP
LANDSCAPE ARCHITECT: MARY MARGARET JONES LIC. NO.
DESIGNED BY: MARY MARGARET JONES
DRAWN BY: MEGAN ESOPENKO
CHECKED BY: GAVIN MCMILLAN
APPROVED BY: MARY MARGARET JONES

VERT. CONTROL: BM 12-04070, 1929 (NGVD29) - 1985 ADJUSTMENT
HORIZ. CONTROL: GPS; PID AE 1704, EPOCH 1991.35

SHEET TITLE: SITE HARDSCAPE PLAN

PROJECT: SIXTH STREET PARK, ARTS AND RIVER CONNECTIVITY IMPROVEMENTS (PARC)

ADDRESS: SIXTH STREET OVER THE LOS ANGELES RIVER

WORK ORDER NO. E700235D
FILE NO. --
DRAWING NO. L-017
SHEET 82 OF 295 SHEETS

2022-07-05 8:56:29 PM - C:\USERS\MESOPENKO\ONEDRIVE - HARGREAVESJSSY 1601 - SIXTH STREET VIADUCT\300_CREATE\310_HA WORKING FILES\06_TECHNICAL\06_100-CD150_SHEETS_L-017_SITE HARDSCAPE PLAN.DWG - MEGAN ESOPENKO

BUILDING NO.

INDEX NO. MF-300501

NO. REVISIONS: DATE: BY:

THIS PLAN WAS ELECTRONICALLY SIGNED AND STAMPED

LICENSED LANDSCAPE ARCHITECT MARY MARGARET JONES #2516 STATE OF CALIFORNIA

REVISION DATES (DESIGN STAGE ONLY)

THE CITY OF LOS ANGELES OR ITS OFFICERS OR AGENTS SHALL NOT BE RESPONSIBLE FOR THE ACCURACY OR COMPLETENESS OF ELECTRONIC COPIES OF THIS PLAN SHEET.

Sheet Version 3.0



BUREAU OF ENGINEERING
OFFICIAL RECORD

0 60' 120' 240'
SCALE 1" = 120'

PLANS PREPARED BY:
TETRA TECH, INC.
707 WILSHIRE BLVD, 23RD FLR.
LOS ANGELES, CA 90017
PHONE: (213) 239-8866

HargreavesJones
Hargreaves Jones Landscape Architecture

CITY OF LOS ANGELES DEPARTMENT OF PUBLIC WORKS BUREAU OF ENGINEERING

ENGINEERING
CITY OF LOS ANGELES

NO.	REVISIONS:	DATE:	BY:

BUILDING NO.

INDEX NO. MF-300501

THIS PLAN WAS ELECTRONICALLY SIGNED AND STAMPED.

LICENSED LANDSCAPE ARCHITECT
Mary Margaret Jones #2615
Renewal Date
Date
STATE OF CALIFORNIA

TED ALLEN, P.E.
CITY ENGINEER

DESIGN GROUP
LANDSCAPE ARCHITECT: MARY MARGARET JONES LIC. NO. 07/11/2022
DESIGNED BY: MARY MARGARET JONES
DRAWN BY: MEGAN ESOPENKO
CHECKED BY: GAVIN MCMILLAN
APPROVED BY: MARY MARGARET JONES

VERT. CONTROL: BM 12-04070, 1929 (NGVD29) - 1985 ADJUSTMENT
HORIZ. CONTROL: GPS; PID AE 1704, EPOCH 1991.35

SHEET TITLE: SITE TREE AND UNDERSTORY PLAN

PROJECT: SIXTH STREET PARK, ARTS AND RIVER CONNECTIVITY IMPROVEMENTS (PARC)

ADDRESS: SIXTH STREET OVER THE LOS ANGELES RIVER

WORK ORDER NO. E700235D
FILE NO. --
DRAWING NO. L-019
SHEET 83 OF 295 SHEETS

2022-07-05 8:56:44 PM - C:\USERS\MESOPENKO\ONEDRIVE - HARGREAVES\SSV 1601 - SIXTH STREET VIADUCT\300_CREATE\310_HA WORKING FILES\06_TECHNICAL\06_100-CD\50_SHEETS\L-019 SITE TREE AND UNDERSTORY PLAN.DWG - MEGAN ESOPENKO

THE CITY OF LOS ANGELES OR ITS OFFICERS OR AGENTS SHALL NOT BE RESPONSIBLE FOR THE ACCURACY OR COMPLETENESS OF ELECTRONIC COPIES OF THIS PLAN SHEET.

REVISION DATES (DESIGN STAGE ONLY)

Sheet Version 3.0

PAVEMENT

SYMBOL	ABBREV.	ELEMENT	MATERIAL ASSEMBLY SUMMARY - REFER DRAWINGS & SPECIFICATION FOR COMPLETE DESCRIPTION	DETAIL REFERENCE	NOTES	PRODUCTS & MANUFACTURERS #1	PRODUCTS & MANUFACTURERS #2	PRODUCTS & MANUFACTURERS #3
	PVMT - 1	**PED. SPACE**	**GRANITE UNIT PAVING ON SLAB**	**1/C-609**				
		PRIMARY, RIGID	24" X 1.5" THK. NOM. HEXAGONAL CUT GRANITE UNIT PAVER		H10 LOADING, SHOP DRAWINGS, EJ <16' O.C, WATER JET CURVES, THERMAL FINISH	GOLDEN BRASIL GRANITE BY COLD SPRINGS GRANITE	KASHMIR GOLD GRANITE BY SOUTHLAND STONE	NEW VENETIAN GOLD GRANITE BY STONE AND TILE
					GROUT JOINTS	COLOR TO MATCH PAVER, APPROVAL PER LANDSCAPE ARCHITECT	COLOR TO MATCH PAVER, APPROVAL PER LANDSCAPE ARCHITECT	COLOR TO MATCH PAVER, APPROVAL PER LANDSCAPE ARCHITECT
					2" REINFORCED LATEX MORTAR BED	PLANICRETE AC & KERABOND/KERALASTIC SYSTEM BY MAPEI	209 FLOOR MUD & 254 PLATINUM BOND COAT BY LATICRETE	DECK MUD & ACRYLIC FORTIFIER & VENEER STONE MORTAR
					REFER TO CIVIL DRAWINGS FOR PAVEMENT SECTION.			
	PVMT - 2 A/B	**PED. PATH**	**CAST IN PLACE CONCRETE SLAB**	**2/C-609**				
		PRIMARY, RIGID	CONCRETE SLAB		FINISH 2A: LIGHT EXPOSED AGGREGATE;	TOPCAST BY RESOURCE BUILDING MATERIAL, #5 FINISH	SCOFIELD LITHOCAST BY SIKA CORP, # 3 FINISH	APPROVED EQUAL
					FINISH 2B: HEAVY SANDBLAST ON TOP OF FINISH 2A			
					REFER TO CIVIL DRAWINGS FOR PAVEMENT SECTION.			
	PVMT - 3	**PED. PATH**	**CAST IN PLACE CONCRETE SLAB**	**3/C-609**				
		SECONDARY, RIGID	CONCRETE SLAB		EXPOSED AGGREGATE FINISH	TOPCAST BY RESOURCE BUILDING MATERIAL, #25 FINISH	SCOFIELD LITHOCAST BY SIKA CORP, # 15 FINISH	APPROVED EQUAL
					REFER TO CIVIL DRAWINGS FOR PAVEMENT SECTION.			
	PVMT - 4	**PED. SPACE**	**COATED CONCRETE SLAB**	**3/C-609**				
		PRIMARY, RIGID	EXTERIOR PAINT		2 COATS, COLOR: YELLOW-RANGE, AS PER ARCHITECTS APPROVAL	MARQUEE BY BEHR, FINISH: SEMI-GLOSS	APPROVED EQUAL	APPROVED EQUAL
	PVMT - 5	**PED. SPACE**	**CONCRETE UNIT PAVING**	**4/C-609**				
		PRIMARY, FLEXIBLE	8"X 3" NOM. HEXAGONAL CONCRETE UNIT PAVER		EXPOSED AGGREGATE FINSIH	HEXAGON PAVERS BY ACKERSTONE WITH PLASTIC SPACERS	HEXAGONAL PAVERS BY WASAU TILE WITH PLASTIC SPACERS	APPROVED EQUAL
					3 COLOR BLEND	60% STANFORD SAND, 20% CHARCOAL, 20% MOCHA BROWN	60% HRL-20, 20% HRL-40, 20% HRL-37	
					FINISH	GRIND AND SHOTBAST	RIDGELINE	
			BASE COURSING		REFER TO CIVIL DRAWINGS FOR PAVEMENT SECTION.			
	PVMT - 6A	**PED. SPACE**	**CRUSHED STONE**	**5/C-609**				
		SECONDARY, FLEXIBLE	4" CRUSHED STONE		1/4" MINUS AGGREGATE	CALIFORNIA GOLD DG BY GAIL MATERIALS	CALIFORNIA GOLD DG BY EARTH STONE ROCK	DESERT GOLD BY TRI-STATE MATERIALS
			ORGANIC BINDER		PVMT TYPE 6A ONLY	ORGANIC LOCK STABILIZER BY GAIL MATERIALS	ORGANIC-LOCK BY ENVIROBOND	STABILIZER BY STABILIZER SOLUTIONS
			BASE COURSE		REFER TO CIVIL DRAWINGS FOR PAVEMENT SECTION.			
	PVMT - 6B	**PED. SPACE**	**CRUSHED STONE**	**5/C-609**				
		SECONDARY, FLEXIBLE	4" CRUSHED STONE		1/4" MINUS AGGREGATE	CALIFORNIA GOLD DG BY GAIL MATERIALS	CALIFORNIA GOLD DG BY EARTH STONE ROCK	DESERT GOLD BY TRI-STATE MATERIALS
			BASE COURSE		REFER TO CIVIL DRAWINGS FOR PAVEMENT SECTION.			
	PVMT - 7	**PED. SPACE**	**CRUSHED STONE ADMIXTURE BOUND**	**5/C-609**				
		SECONDARY, FLEXIBLE	4" CRUSHED STONE		1/4" MINUS AGGREGATE	CALIFORNIA GOLD DG BY GAIL MATERIALS	CALIFORNIA GOLD DG BY EARTH STONE ROCK	DESERT GOLD BY TRI-STATE MATERIALS
			ADMIXTURE BINDER			GRANITECRETE BY GRANITECRETE	STALOK BY STABILIZER SOLUTIONS	TERRA PAVE BY WZ SUPPLY
			BASE COURSE		REFER TO CIVIL DRAWINGS FOR PAVEMENT SECTION.			
	PVMT - 8	**PED. SPACE**	**TUNNEL RESURFACING**	**9/C-601**		KWIKBOND PPC 1121 POLYESTER POLYMER CONCRETE	APPROVED EQUAL	APPROVED EQUAL
		RIGID	POLYMER OVERLAY		REFER TO CIVIL DRAWINGS FOR PAVEMENT SECTION.			
	PVMT - 9 A/B	**SPORTS COURTS**	**COATED ASPHALT**	**6/C-609**				
		RIGID	ACRYLIC STRIPING		1 COAT PRIMER, 1 COAT WHITE STRIPING	SEAL-A-LINE AND NOVATEX BY NOVAL SPORTS USA	STRIPE-RITE AND LINE PAINT BY SPORT MASTER	LINE PAINT BY CALIFONRIA SPORTS SURFACES
			ACRYLIC SURFACE		2 COATS EACH COLOR; SAND ADDITIVE FOR SLIP RESISTANCE	NOVAPLAY BY NOVA SPORTS USA	COLOR PLUS NEUTRAL CONCENTRATE AND PIGMENT BY SPORT MASTER	PLEXIPAVE BY CALIFORNIA SPORTS SURFACES
					COLORS 9A, 9B	9A: TERRA COTTA, 9B: SAND DUNE	9A: BRIGHT RED, 9B: SANDSTONE	9A: CALIFORNIA RED, 9B: SAHARA SAND
			ACRYLIC RESURFACER		1 COAT	NOVASURFACE BY NOVA SPORTS USA	FLEXIBLE ACRYLIC RESURFACER BY SPORT MASTER	ACRYLIC RESURFACER BY CALIFORNIA SPORTS SURFACES
			ASPHALT PAVEMENT		REFER TO CIVIL DRAWINGS FOR PAVEMENT SECTION.			
	PVMT - 10 A/B	**PROTECTIVE**	**SAFETY SURFACING**	**7/C-609**				
		SURFACING	SEAMLESS POURED SURFACING		EPD RUBBER SURFACING	EVERTOP SAFETY SURFACE BY SURFACE AMERICA	SAFETY SURFACE BY DURAPLAY	POUR IN PLACE RUBBER BY CREATIVE RECREATIONAL SYSTEM
					COLOR 10A: 3 COLOR BLEND	33% PEARL, 33% DARK GREY, 33% YELLOW	33% CREAM, 33% CHARCOAL, 33% YELLOW	33% PEARL, 33% DARK GREY, 33% YELLOW
					COLOR 10B: 2 COLOR BLEND	50% PEARL, 50% DARK GREY	50% CREAM, 50% CHARCOAL	50% PEARL, 50% DARK GREY
			CONCRETE SLAB		REFER TO CIVIL DRAWINGS FOR PAVEMENT SECTION.			
	PVMT - 11	**SURFACING**	**SYNTHETIC TURF**	**1/C-601**				
		FIELDS	SYNTHETIC ALL WEATHER GRASS SYSTEM		WITH NYLON MONOFILAMENT THATCH LAYER, COLOR: GRASS GREEN	CHALLENGER INDUSTRIES, INC.	ASTROTURF	HELLAS CONSTRUCTION
			ATHLETIC FIELD MARKINGS		INLAID, WHITE			
			DRAINAGE AND CUSHION MAT		PERFORATED FOR DRAINAGE, MIN 1/4" DIA AT 4" O.C.ACROSS MIN 95% OF TURF ROLL			
			INFILL		MESH SIZE 12-20	SEE SPECIFICATIONS	SEE SPECIFICAITONS	SEE SPECIFICATIONS
			LINER, LEVELING COURSE, AND SUBDRAINAGE		REFER TO CIVIL DRAWINGS FOR PAVEMENT SECTION.			

THE CITY OF LOS ANGELES OR ITS OFFICERS OR AGENTS SHALL NOT BE RESPONSIBLE FOR THE ACCURACY OR COMPLETENESS OF ELECTRONIC COPIES OF THIS PLAN SHEET.

REVISION DATES (DESIGN STAGE ONLY)

BUREAU OF ENGINEERING OFFICIAL RECORD

BUREAU OF ENGINEERING

ENGINEERING
CITY OF LOS ANGELES

NO.	REVISIONS:	DATE	BY:

BUILDING NO.

INDEX NO. **MF-300501**

LICENSED LANDSCAPE ARCHITECT JAMES #2516 STATE OF CALIFORNIA
Date 07/11/2022

THIS PLAN WAS ELECTRONICALLY SIGNED AND STAMPED

CITY OF LOS ANGELES DEPARTMENT OF PUBLIC WORKS BUREAU OF ENGINEERING

CITY ENGINEER
TED ALLEN, P.E.
DATE: 07/11/2022

DESIGN GROUP

LANDSCAPE ARCHITECT: MARY MARGARET JONES	LIC. NO. 2516
DESIGNED BY: MARY MARGARET JONES	
DRAWN BY: MEGAN ESOPENKO	
CHECKED BY: GAVIN MCMILLAN	
APPROVED BY: MARY MARGARET JONES	

HargreavesJones
Hargreaves Jones Landscape Architecture

PLANS PREPARED BY:
TETRA TECH, INC.
707 WILSHIRE BLVD, 23RD FLR.
LOS ANGELES, CA 90017
PHONE: (213) 239-8866

VERT. CONTROL: BM 12-04070, 1929 (NGVD29) - 1985 ADJUSTMENT
HORIZ. CONTROL: GPS; PID AE 1704, EPOCH 1991.35

SHEET TITLE: MATERIALS LEGEND AND SCHEDULE

PROJECT: SIXTH STREET PARK, ARTS AND RIVER CONNECTIVITY IMPROVEMENTS (PARC)

ADDRESS: SIXTH STREET OVER THE LOS ANGELES RIVER

WORK ORDER NO. E700235D
FILE NO. --
DRAWING NO. L-030
SHEET 84 OF 295 SHEETS

2022-07-05 8:57:02 PM - C:\USERS\MESOPENKO\ONEDRIVE - HARGREAVESJSV 1601 - SIXTH STREET VIADUCT\300_CREATE\310_HA WORKING FILES\06_TECHNICAL\06_CHNICAL06_100-CD150_SHEETS_L-030 MATERIALS LEGEND AND SCHEDULE.DWG - MEGAN ESOPENKO

Sheet Version 3.0

SITE FURNISHING SYMBOL	ABBREV.	ELEMENT	MATERIAL ASSEMBLY SUMMARY - REFER DRAWINGS & SPECIFICATION FOR COMPLETE DESCRIPTION	DETAIL REFERENCE	NOTES	PRODUCTS & MANUFACTURERS #1	PRODUCTS & MANUFACTURERS #2
	FURN-1A	BENCH	POWDER COATED STEEL	1/L-540			
		MEDIUM - STRAIGHT	8' x 5/8" DIA. POWER COATED STEEL WIRE ROD SEAT		POWDER COATED STEEL, SILVER	LIBRE BENCHES COLLECTION BY ID CREATED INC, SILVER SABLE #MW 3021	APPROVED EQUAL
			2" x 6" X 12" POWDER COATED STEEL LEGS			DIMENSION: 23"W X 18"H X 78"L	
			WITH BACKS AND ARMRESTS, MODULAR			PHONE: 760.690.8557 EMAIL: INFO@IDCREATED.COM	
			EMBEDDED MOUNT TO CONCRETE FOOTING			ADDRESS: 1782 LA COSTA MEADOWS DRIVE, SUITE 104, SAN MARCOS, CA 92078	
						WEBSITE: WWW.IDCREATED.COM	
	FURN-1B	BENCH	POWDER COATED STEEL	2/L-540			
		MEDIUM - CURVED	8' x 5/8" DIA. POWER COATED STEEL WIRE ROD SEAT		POWDER COATED STEEL, SILVER	LIBRE BENCHES COLLECTION BY ID CREATED INC, SILVER SABLE #MW 3021	APPROVED EQUAL
			2" x 6" X 12" POWDER COATED STEEL LEGS			DIMENSION: 23"W X 18"H X 67"L (43.7" DIA RADIUS)	
			WITH BACKS, MODULAR			PHONE: 760.690.8557 EMAIL: INFO@IDCREATED.COM	
			EMBEDDED MOUNT TO CONCRETE FOOTING			ADDRESS: 1782 LA COSTA MEADOWS DRIVE, SUITE 104, SAN MARCOS, CA 92078	
						WEBSITE: WWW.IDCREATED.COM	
	FURN-2	WASTE	POWDER COATED STEEL	1/L-541			
		RECEPTACLES	TWIN SET, 55 GAL., LINER PROVIDED BY OWNER		CITY STANDARD, LANDFILL & RECYCLE GRAPHICS, COLOR:SILVER	READING RED3-55 BY KEYSTONE RIDGE DESIGNS, SPARKLE SILVER #49/90450	APPROVED EQUAL
			SIDE DOOR ACCESS, LOCKING TAB, FLAT LID			DIMENSION: 28"DIA X 42"H	
			SURFACE MOUNT			PHONE: 724.284.1213 EMAIL: SALES@KRDUSA.COM	
						ADDRESS: 670 MERCER ROAD BUTLER, PA 16001	
						WEBSITE: WWW.KEYSTONERIDGEDESIGNS.COM	
	FURN-3	DOG WASTE UNIT	POWDER COATED STEEL	2/L-541			
			DISPENSER BIN AND RECEPTACLE CAGE		PROPRIETARY, POWDER COATED STEEL, SILVER	TRASH RECEPTACLE DOG PARK BY LANDSCAPE FORMS, SILVER	APPROVED EQUAL
						DIMENSION: 27" X 11" DIA RECEPTACLE CAGE X 6" DIA BAG DISPENSER	
			EMBEDDED MOUNT TO CONCRETE FOOTING			PHONE:800.430.6209 EMAIL: COMMENTS@LANDSCAPEFORMS.COM	
						ADDRESS: 7800E. MICHIGAN AVE. KALAMAZOO, MI 49048	
						WEBSITE:WWW.LANDSCAPEFORMS.COM	
	FURN-4	PICNIC UNIT	POWDER COATED STEEL	1/L-542			
			8' x 1/2" DIA. STEEL ROD SEAT & TABLE		PROPRIETARY, POWDER COATED STEEL, SILVER	AIR-A COLLECTION BENCH-TABLE BY ID CREATED INC, SILVER SABLE #MW 3021	STEELSITES COLLECTION FBF-56 MODEL BY VICTORSTANLEY, RAL-SILVER
			TRIANGULAR STEEL SUPPORTS		MODIFIED FOR WHEELCHAIR ACCESSIBILITY	DIMENSION 66.9"X86.6"X30"	DIMENSION: 36"X96" MODEL WITH 72" MODEL BENCH
			EMBEDDED MOUNT TO CONCRETE FOOTING			PHONE: 760.690.8557 EMAIL: INFO@IDCREATED.COM	PHONE: 301.855.8300 EMAIL: SALES@VICTORSTANLEY.COM
						ADDRESS: 1782 LA COSTA MEADOWS DRIVE, SUITE 104, SAN MARCOS, CA 92078	ADDRESS: P.O. DRAWER 330 DUNKIRK, MD 20754 USA
						WEBSITE: WWW.IDCREATED.COM	WEBSITE: WWW.VICTORSTANLEY.COM
	FURN-5	PICNIC GRILL	POWDER COATED STEEL	2/L-542			
			FIRE BOX MADE OF 3/16" STEEL		PROPRIETARY, HEAT RESISTENT BLACK ENAMEL PAINT	CBP-247 SERIES CHARCOAL GRILL BY PILOT ROCK	H-16 SERIES CHARCOAL GRILL BY PILOT ROCK
			300 SQ. IN. COOKING SURFACE WITH 1/2"W STEEL BARS			DIMENSION: 24"X16"	DIMENSION: 16"X16
			EMBEDDED MOUNT TO CONCRETE FOOTING			PHONE: 800.762.5002	PHONE: 800.762.5002
						ADDRESS: R.J. THOMAS MFG. CO. INC PO BOX 946 CHEROKEE, IA 51012-0946	ADDRESS: R.J. THOMAS MFG. CO. INC PO BOX 946 CHEROKEE, IA 51012-0946
						WEBSITE: WWW.PILOTROCK.COM	WEBSITE: WWW.PILOTROCK.COM
	FURN-6	PRECAST BENCH 24"	PRECAST CONCRETE	1/L-544		URBANSTYLE BY WAUSAU TILE	APPROVED EQUAL
			PREFABRICATED CONCRETE ASSEMBLY		FINISH: ACID WASH, COLOR A30	PRODUCT ASSEMBLY: ZB.CE.02, ZB.CE.03, ZB.CB.04	
			HIDDEN ANCHORING			PHONE: 800.388.8728	
						ADDRESS: PO BOX 1520, WAUSAU, WI 54402-1520	
						WEBSITE: WWW.WAUSAUTILE.COM	
	FURN-7	PRECAST BENCH 48"	PRECAST CONCRETE	2/L-544		URBANSTYLE BY WAUSAU TILE	APPROVED EQUAL
			PREFABRICATED CONCRETE ASSMEBLY		FINISH: ACID WASH, COLOR A30	PRODUCT ASSEMBLY: ZB.CE.13, ZB.CE.16	
			HIDDEN ANCHORING			PHONE: 800.388.8728	
						ADDRESS: PO BOX 1520, WAUSAU, WI 54402-1520	
						WEBSITE: WWW.WAUSAUTILE.COM	
	BRAK-1	BIKE RACK	POWDER COATED STEEL	1/L-543			
		SHORT TERM	34" HEIGHT		PROPRIETARY, POWDER COATED STEEL, SILVER	U' BIKE RACK U190-P BY MADRAX, PLATINUM	BRWS-101 BY VICTOR STANLEY, RAL-SILVER
			EMBEDDED MOUNT TO CONCRETE FOOTING			DIMENSION: 20"W X 34"H WITH 1 7/8" DIA STEEL TUBING	DIMENSION 36"X22"X2-3/8" DIA STEEL TUBING
						PHONE: 608.849.1080 EMAIL:SALES@MADRAX.COM	PHONE: 951.299.9394 EMAIL: DAVIDS@AVALONAMENITIES.COM
						ADDRESS: 1080 UNIEK DRIVE WAUNAKEE, WI 53597	WEBSITE: WWW.VICTORSTANLEY.COM
						WEBSITE: WWW.MADRAX.COM	
	WATR-1	WATER STATIONS	STAINLESS STEEL PEDESTAL	2/L-543			
			18 GAGE, 304 STAINLESS STEEL BOWLS & BOTTLE FILLER		PROPRIETARY, PUSH BOTTON, ACCESS PANEL, 100% LEAD-FREE, SILVER	MODEL GYQ84-PF OPTION BY MURDOCK, STAINLESS STEEL	GT1100-GTPET WITH PET BOWL FOUNTAIN BY GLOBAL TAP STATION
			WITH PET OPTION			DIMENSION: 30"X52"	DIMENSION 43"X11"
			DRAIN OUTLET		REFER TO CIVIL DRAWINGS 3/C-605	PHONE: 800.453.7495	PHONE: 312.850.1110 EMAIL: INFO@GLOBALTAP.ORG
			EMBEDDED MOUNT TO CONCRETE FOOTING		REFER TO CIVIL DRAWINGS 3/C-605	ADDRESS: 15125 PROCTOR AVENUE CITY OF INDUSTRY, CA 91746	WEBSITE: WWW.GLOBALTAP.ORG
						WEBSITE: WWW.MURDOCKMFG.COM	
	BLDR-1	SMALL BOULDERS	SMALL BOULDERS AT DOG PARK TREES	3/L-541			
			12-INCH MIN DIA. X 18" MIN DEPTH, MATCHED		ANGULAR TOP, FLAT SIDES	CALIFORNIA GOLD ANGULAR STONE BOULDERS BY EARTH STONE ROCK	MEXICAN ONYX ANGULAR BOULDERS BY SOUTH COAST SUPPLY
	BLDR-2	LARGE BOULDERS	LARGE BOULDERS AT DOG PARK	4/L-541			
			30-INCH MIN ANGULAR STONE BOULDERS		ALL BOULDERS TO HAVE FLAT TOPS	CALIFORNIA GOLD ANGULAR STONE BOULDERS BY EARTH STONE ROCK	MEXICAN ONYX ANGULAR BOULDERS BY
			FILLED JOINTS		1/4" MINUS DECOMPOSED GRANITE	CALIFORNIA GOLD BY BY EARTH STONE ROCK	CALIFORNIA GOLD BY SOUTH COAST SUPPLY
	SKAT-1	SKATE DETERRENTS	SKATE DETERRENTS AT ARTS PLAZA	4/L-544			
			1" DIA. STAINLESS STEEL HEMI-SHAPED DETERRENT		STANDARD BRUSH FINISH	HEMI GRINDER MINDER BY PARK WAREHOUSE	

THE CITY OF LOS ANGELES OR ITS OFFICERS OR AGENTS SHALL NOT BE RESPONSIBLE FOR THE ACCURACY OR COMPLETENESS OF ELECTRONIC COPIES OF THIS PLAN SHEET.

REVISION DATES (DESIGN STAGE ONLY)

Sheet Version 3.0

BUREAU OF ENGINEERING
OFFICIAL RECORD

BUREAU OF ENGINEERING
ENGINEERING
CITY OF LOS ANGELES

BUILDING NO.

INDEX NO. MF-300501

NO. REVISIONS: DATE: BY:

LICENSED LANDSCAPE ARCHITECT No. 2516 STATE OF CALIFORNIA Mary Margaret Jones Date Rebecca Dale Date

"THIS PLAN WAS ELECTRONICALLY SIGNED AND STAMPED"

CITY ENGINEER
TED ALLEN, P.E.
DATE: 07/11/2022
LIC. NO.

DESIGN GROUP
LANDSCAPE ARCHITECT: MARY MARGARET JONES
DESIGNED BY: MARY MARGARET JONES
DRAWN BY: MEGAN ESOPENKO
CHECKED BY: GAVIN MCMILLAN
APPROVED BY: MARY MARGARET JONES

HargreavesJones
Hargreaves Jones Landscape Architecture

PLANS PREPARED BY:
TETRA TECH, INC.
707 WILSHIRE BLVD, 23RD FLR.
LOS ANGELES, CA 90017
PHONE: (213) 239-8866

CITY OF LOS ANGELES DEPARTMENT OF PUBLIC WORKS BUREAU OF ENGINEERING

VERT. CONTROL: BM 12-04070, 1929 (NGVD29) - 1985 ADJUSTMENT
HORIZ. CONTROL: GPS, PID AE 1704, EPOCH 1991.35

SHEET TITLE: FURNISHINGS LEGEND AND SCHEDULE

PROJECT: SIXTH STREET PARK, ARTS AND RIVER CONNECTIVITY IMPROVEMENTS (PARC)

ADDRESS: SIXTH STREET OVER THE LOS ANGELES RIVER

WORK ORDER NO. E700235D
FILE NO. --
DRAWING NO. L-040
SHEET 85 OF 295 SHEETS

2022-07-05 8:57:15 PM - C:\USERS\MESOPENKO\ONEDRIVE - HARGREAVESJSV 1601 - SIXTH STREET VIADUCT\300_CREATE\310_HA WORKING FILES\06_TECHNICAL\06_...

RAILS, FENCES & BARRIERS							
SYMBOL	**ABBREV.**	**ELEMENT**	**MATERIAL ASSEMBLY SUMMARY - REFER DRAWINGS & SPECIFICATION FOR COMPLETE DESCRIPTION**	**DETAIL REFERENCE**	**NOTES**	**PRODUCTS & MANUFACTURERS #1**	**PRODUCTS & MANUFACTURERS #2**
	GRAL-1	**GUARDRAIL**	**STAINLESS STEEL FRAME WITH STAINLESS STEEL CABLE**	**1&2&4/L-535**			
			42" HIGH, 2" DIA. X 1/4" STAINLESS STEEL TUBE TOP RAIL		CUSTOM; #6 SATIN FINISH, TOP RAIL RADIUS TO MATCH CURVED WALLS	CABLE RAILING BY VIVA RAILINGS MODULAR RAIL SYSTEMS	CABLE RAILING BY JAKOB ROPE SYSTEM
			2" DIA. X 1/4" STAINLESS STEEL TUBE END POSTS		PROPRIETARY, #6 SATIN FINISH	ADDRESS: 151 W. VISTA RIDGE MALL DR. LEWISVILLE, TX 75067	ADDRESS: 2665 NW 1ST AVE, BOCA RATON, FL 33431
			3/16" DIA. 316 SST HORIZONTAL WIRE CABLE INFILL		PROPRIETARY, ADJUSTABLE STUD TURNBUCKLE ASSEMBLY	WEBSITE: WWW.VIVARAILINGS.COM	WEBSITE: WWW.JAKOB-USA.COM
			CORED MOUNT TO CONCRETE FOOTING		REFER TO STRUCTURAL DRAWINGS 2/S-402		
	GRAL-2	**GUARDRAIL WITH HANDRAIL**	**STAINLESS STEEL FRAME WITH STAINLESS STEEL CABLE**	**3/L-535**			
			42" HIGH, 2" DIA. X 1/4" STAINLESS STEEL TUBE TOP RAIL		CUSTOM; #6 SATIN FINISH, TOP RAIL RADIUS TO MATCH CURVED WALLS	CABLE RAILING BY VIVA RAILINGS MODULAR RAIL SYSTEMS	CABLE RAILING BY JAKOB ROPE SYSTEM
			2" DIA. X 1/4" STAINLESS STEEL TUBE HAND RAIL		CUSTOM; #6 SATIN FINISH, TOP RAIL RADIUS TO MATCH CURVED WALLS	PHONE: 972.353.8482	PHONE: 561.330.6502
			2" DIA. X 1/4" STAINLESS STEEL TUBE END POSTS		PROPRIETARY, #6 SATIN FINISH	ADDRESS: 151 W. VISTA RIDGE MALL DR. LEWISVILLE, TX 75067	ADDRESS: 2665 NW 1ST AVE, BOCA RATON, FL 33431
			3/16" DIA. 316 SST HORIZONTAL WIRE CABLE INFILL		PROPRIETARY, ADJUSTABLE STUD TURNBUCKLE ASSEMBLY	WEBSITE: WWW.VIVARAILINGS.COM	WEBSITE: WWW.JAKOB-USA.COM
			CORED MOUNT TO CONCRETE FOOTING		REFER TO STRUCTURAL DRAWINGS 2/S-401		
	FENC-1	**2' FENCE**	**GALVANIZED STEEL WIRE**	**1/L-536**			
			2' HIGH HOT DIPPED GALVANIZED POSTS		PROPRIETARY, SILVER POWDER-COAT	CLEARVU-2' BY COCHRANE	OMEGA ELITE-2' BY OMEGA
			DOUBLE WIRE INFILL, POWDERCOAT		PROPRIETARY, SILVER POWDER-COAT	PHONE: 202.853.3227	DIMENSION: 96"H X 99" STANDARD LENGTH
			EMBEDDED MOUNT TO CONCRETE FOOTING		REFER TO CIVIL DRAWINGS 1/C-612	WEBSITE: WWW.CLEARVU.COM	PHONE: 800.836.6342
							WEBSITE: WWW.METALTECH-OMEGA.COM
	FENC-2	**4' FENCE**	**GALVANIZED STEEL WIRE**	**1/L-537**			
			4' HIGH HOT DIPPED GALVANIZED POSTS		PROPRIETARY, SILVER POWDER-COAT	CLEARVU-4' BY COCHRANE	OMEGA ELITE-4' BY OMEGA
			DOUBLE WIRE INFILL, POWDERCOAT		PROPRIETARY, SILVER POWDER-COAT	PHONE: 202.853.3227	DIMENSION: 48"H X 99" STANDARD LENGTH
			EMBEDDED MOUNT TO CONCRETE FOOTING		REFER TO CIVIL DRAWINGS 1/C-612	WEBSITE: WWW.CLEARVU.COM	PHONE: 800.836.6342
							WEBSITE: WWW.METALTECH-OMEGA.COM
	FENC-3	**8' FENCE**	**GALVANIZED STEEL WIRE**	**1/L-538**			
			8' HIGH HOT DIPPED GALVANIZED POSTS		PROPRIETARY, SILVER POWDER-COAT	CLEARVU-8' BY COCHRANE	OMEGA ELITE-8' BY OMEGA
			DOUBLE WIRE INFILL, POWDERCOAT		PROPRIETARY, SILVER POWDER-COAT	PHONE: 202.853.3227	DIMENSION: 96"H X 99" STANDARD LENGTH
			EMBEDDED MOUNT TO CONCRETE FOOTING		REFER TO CIVIL DRAWINGS 1/C-612	WEBSITE: WWW.CLEARVU.COM	PHONE: 800.836.6342
							WEBSITE: WWW.METALTECH-OMEGA.COM
	FENC-4	**20' FENCE**	**ALUMINUM POST MESH**	**2/L-539**			
			20' HIGH ALUMINIUM POSTS WTH COATED CABLE CONNECTORS			SPORTS NETTING BY JUDGE NETTING	OFFSET BALL STOPPER 20' SPORT NETTING BY AAE
			1-3/4" SQ. NETTING KNOTTED NYLON		PROPRIETARY	DIMENSION: CUSTOMIZED	DIMENSION: 20' H
			EMBEDDED MOUNT TO CONCRETE FOOTING		REFER TO CIVIL DRAWINGS 2/C-611	PHONE: 800.955.6788	PHONE: 800.523.5471 EMAIL: INFO@AAESPORTS.COM
						ADDRESS: 427 E.17TH STREET #489, COSTA MESA, CA 92627	ADDRESS: 1000 ENTERPRISE DRIVE ROYERSFORD, PA 19468-1298
						WEBSITE: WWW.JUDGENETTING.COM	

THE CITY OF LOS ANGELES OR ITS OFFICERS OR AGENTS SHALL NOT BE RESPONSIBLE FOR THE ACCURACY OR COMPLETENESS OF ELECTRONIC COPIES OF THIS PLAN SHEET.

REVISION DATES (DESIGN STAGE ONLY)

Sheet Version 3.0

BUREAU OF ENGINEERING
OFFICIAL RECORD

THIS PLAN WAS ELECTRONICALLY SIGNED AND STAMPED

LICENSED LANDSCAPE ARCHITECT MARY MARGARET JONES #2516 STATE OF CALIFORNIA
Mary Margaret Jones
Date
Rebecca Dale
Date

BUREAU OF ENGINEERING

NO.	REVISIONS:	DATE:	BY:
01	35% SCHEMATIC DESIGN	12/13/17	

BUILDING NO.

INDEX NO. **MF-300501**

ENGINEERING
CITY OF LOS ANGELES

CITY OF LOS ANGELES DEPARTMENT OF PUBLIC WORKS

PLANS PREPARED BY:
TETRA TECH, INC.
707 WILSHIRE BLVD, 23RD FLR.
LOS ANGELES, CA 90017
PHONE: (213) 239-8866

HargreavesJones
Hargreaves Jones Landscape Architecture

CITY ENGINEER
DATE:

VERT. CONTROL: BM 12-04070, 1929 (NGVD29) - 1985 ADJUSTMENT
HORIZ. CONTROL: GPS, PID AE 1704, EPOCH 1991.35

SHEET TITLE: FURNISHING AND LIGHTING LEGEND AND SCHEDULE

PROJECT: SIXTH STREET PARK, ARTS AND RIVER CONNECTIVITY IMPROVEMENTS (PARC)

ADDRESS: SIXTH STREET OVER THE LOS ANGELES RIVER

DESIGN GROUP	
LANDSCAPE ARCHITECT: MARY MARGARET JONES	LIC. NO. 07/11/2022
DESIGNED BY: MARY MARGARET JONES	
DRAWN BY: MEGAN ESOPENKO	
CHECKED BY: GAVIN MCMILLAN	
APPROVED BY: MARY MARGARET JONES	

TED ALLEN, P.E.

WORK ORDER NO. E700235D
FILE NO. --
DRAWING NO. L-041
SHEET 86 OF 295 SHEETS

2022-07-05 8:57:18 PM - C:\USERS\MESOPENKO\ONEDRIVE - HARGREAVESJONES\V 1601 - SIXTH STREET VIADUCT\300_CREATE\310_HA WORKING FILES\06_TECHNICAL\06_100-CD\50_SHEETS\L-040 FURNISHINGS LEGEND AND SCHEDULE.DWG - MEGAN ESOPENKO

SITE FURNISHING SYMBOL	EQUIPMENT NAME	EQUIPMENT TYPE	QUANTITY	NOTES & FINISHES	PRODUCTS & MANUFACTURERS #1	PRODUCTS & MANUFACTURERS #2
WEST PARK						
TRAINING STATION ZONE						
	TRAINING STATION	**EXERCISE**	1		**THRIVE 450 MODEL BY GAMETIME**	APPROVED EQUAL
				MULTI-PURPOSE FITNESS STATION	DIMENSION: 30'-4"X17'-9" USE ZONE 19'X32', 10' FALL HEIGHT	
				UPRIGHTS YELLOW	PHONE: 435.245.5055	
				ACCENTS METALIC	ADDRESS: 150 PLAYCORE DRIVE SE FORT PAYNE, ALABAMA 35967	
					WEBSITE: WWW.GAMETIME.COM	
EAST PARK						
AEROBIC ZONE						
	STEP UP	**EXERCISE**	**1**		**STEP UP FITNESS STATION 13569 MODEL BY GAMETIME**	APPROVED EQUAL
				STEP AEROBIC STATION	DIMENSION: USE ZONE 8'-6"X10'-6", 4' FALL HEIGHT	
				UPRIGHTS YELLOW	PHONE: 435.245.5055	
				ACCENTS METALIC	ADDRESS: 150 PLAYCORE DRIVE SE FORT PAYNE, ALABAMA 35967	
					WEBSITE: WWW.GAMETIME.COM	
	RECUMBENT CYCLE	**EXERCISE**	**1**	CYCLE AEROBIC STATION	**RECUMBENT CYCLE 14922 I MODEL BY GAMETIME**	APPROVED EQUAL
				UPRIGHTS YELLOW	DIMENSION: USE ZONE 7'-9"X8'-2", 2'-6" FALL HEIGHT	
				ACCENTS METALIC	PHONE: 435.245.5055	
					ADDRESS: 150 PLAYCORE DRIVE SE FORT PAYNE, ALABAMA 35967	
					WEBSITE: WWW.GAMETIME.COM	
	CARDIO WALKER	**EXERCISE**	**1**		**CARDIO WALKER 13562I I MODEL BY GAMETIME**	APPROVED EQUAL
				ELIPTICAL AEROBIC STATON	DIMENSION: USE ZONE 11'-3" x 10'-9", 4' FALL HEIGHT	
				UPRIGHTS YELLOW	PHONE: 435.245.5055	
				ACCENTS METALIC	ADDRESS: 150 PLAYCORE DRIVE SE FORT PAYNE, ALABAMA 35967	
					WEBSITE: WWW.GAMETIME.COM	
CORE ZONE						
	CAPTAIN'S CHAIR FOOTING MOUNT	**EXERCISE**	**1**		**CAPTAINS CHAIR FOOTING MOUNT BOX 13560I MODEL BY GAMETIME**	APPROVED EQUAL
				MULTIPURPOSE CORE STATON	DIMENSION: USE ZONE 8'-6"X10'-6", 4' FALL HEIGHT	
				UPRIGHTS YELLOW	PHONE: 435.245.5055	
				ACCENTS METALIC	ADDRESS: 150 PLAYCORE DRIVE SE FORT PAYNE, ALABAMA 35967	
					WEBSITE: WWW.GAMETIME.COM	
	BODY CURL STATION	**EXERCISE**	**1**		**BODY CURL STATION 13579 MODEL BY GAMETIME**	APPROVED EQUAL
				SIT UP / LEG LIFT CORE STATON	DIMENSION: USE ZONE 13'-10"X7'-4", 3' FALL HEIGHT	
				UPRIGHTS YELLOW	PHONE: 435.245.5055	
				ACCENTS METALIC	ADDRESS: 150 PLAYCORE DRIVE SE FORT PAYNE, ALABAMA 35967	
					WEBSITE: WWW.GAMETIME.COM	
BALANCE AND FLEXIBILITY ZONE						
	BALANCE PLANK STATION	**EXERCISE**	**1**		**BALANCE PLANK STATION 13279 MODEL BY GAMETIME**	APPROVED EQUAL
				PLANK STATION	DIMENSION: USE ZONE 10'-5"X7'-0", 2' FALL HEIGHT	
				UPRIGHTS YELLOW	PHONE: 435.245.5055	
				ACCENTS METALIC	ADDRESS: 150 PLAYCORE DRIVE SE FORT PAYNE, ALABAMA 35967	
					WEBSITE: WWW.GAMETIME.COM	
	KNEE LIFT STATION	**EXERCISE**	**1**		**KNEE LIFT 13574 MODEL BY GAMETIME**	APPROVED EQUAL
				MULTIPURPOSE BALANCE STATION	DIMENSION: USE ZONE 7'-8"X14'-7", 6'-6" FALL HEIGHT	
				UPRIGHTS YELLOW	PHONE: 435.245.5055	
				ACCENTS METALIC	ADDRESS: 150 PLAYCORE DRIVE SE FORT PAYNE, ALABAMA 35967	
					WEBSITE: WWW.GAMETIME.COM	
COMBINATION FITNESS ZONE						
	COMBINATION FITNESS HUB	**EXERCISE**	**1**		**COMBINATION FITNESS HUB 13590I MODEL BY GAMETIME**	APPROVED EQUAL
				MULTI-PURPOSE FITNESS STATION	DIMENSION: USE ZONE 5'-3"X9'-7", 2' FALL HEIGHT	
				UPRIGHTS YELLOW	PHONE: 435.245.5055	
				ACCENTS METALIC	ADDRESS: 150 PLAYCORE DRIVE SE FORT PAYNE, ALABAMA 35967	
					WEBSITE: WWW.GAMETIME.COM	

THE CITY OF LOS ANGELES OR ITS OFFICERS OR AGENTS SHALL NOT BE RESPONSIBLE FOR THE ACCURACY OR COMPLETENESS OF ELECTRONIC COPIES OF THIS PLAN SHEET.

REVISION DATES (DESIGN STAGE ONLY)

Sheet Version 3.0

BUREAU OF ENGINEERING OFFICIAL RECORD

BUREAU OF ENGINEERING

ENGINEERING
CITY OF LOS ANGELES

NO.	REVISIONS:	DATE	BY:

BUILDING NO.

INDEX NO. **MF-300501**

LICENSED LANDSCAPE ARCHITECT * STATE OF CALIFORNIA * MARY MARGARET JONES 2826 Date Renewal Date

THIS PLAN WAS ELECTRONICALLY SIGNED AND STAMPED

CITY OF LOS ANGELES DEPARTMENT OF PUBLIC WORKS

CITY ENGINEER
TED ALLEN, P.E.
DATE: 07/11/2022

DESIGN GROUP
LANDSCAPE ARCHITECT: MARY MARGARET JONES LIC. NO. 2826
DESIGNED BY: MARY MARGARET JONES
DRAWN BY: MEGAN ESOPENKO
CHECKED BY: GAVIN MCMILLAN
APPROVED BY: MARY MARGARET JONES

VERT. CONTROL: BM 12-04070, 1929 (NGVD29) - 1985 ADJUSTMENT
HORIZ. CONTROL: GPS, PID AE 1704, EPOCH 1991.35

SHEET TITLE: FURNISHING AND LIGHTING LEGEND AND SCHEDULE

PROJECT: SIXTH STREET PARK, ARTS AND RIVER CONNECTIVITY IMPROVEMENTS (PARC)

ADDRESS: SIXTH STREET OVER THE LOS ANGELES RIVER

HargreavesJones
Hargreaves Jones Landscape Architecture

PLANS PREPARED BY:
TETRA TECH, INC.
707 WILSHIRE BLVD, 23RD FLR.
LOS ANGELES, CA 90017
PHONE: (213) 239-8866

WORK ORDER NO. E700235D
FILE NO. --
DRAWING NO. L-042
SHEET 87 OF 295 SHEETS

2022-07-05 8:57:22 PM - C:\USERS\MESOPENKO\ONEDRIVE - HARGREAVESJSV 1601 - SIXTH STREET VIADUCT\300_CREATE\310_HA WORKING FILES\06_TECHNICAL\06_100-CD\50_SHEETS\L-040 FURNISHINGS LEGEND AND SCHEDULE.DWG - MEGAN ESOPENKO

LANDSCAPE SOILS SYMBOL	ABBREVIATION	ELEMENT	MATERIAL ASSEMBLY PROFILE SUMMARY - REFER DRAWINGS & SPECIFICATIONS FOR COMPLETE DESCRIPTION	NOTES	PRODUCTS & MANUFACTURERS #1
	SOIL-1A	**HIGHER-USE LAWN**	**COARSE SAND MIX**		
			6" TOPSOIL WITH GREATER ORGANIC MATTER	TILL INTERFACE WITH SUBSOIL	REFER SPECIFICATION
			6" MIN. SUBSOIL WITH LESSER ORGANIC MATTER, 8" WITHIN EPIC SYSTEM	SCARIFY INTERFACE WITH SUBGRADE	REFER SPECIFICATION
			6" MIN. AMENDED & DECOMPACTED SUBGRADE OUTSIDE OF PEDESTAL	RIP, AMEND PH AND/OR SALINITY AS REQUIRED BY TESTS	REFER SPECIFICATION
	SOIL-1B	**HIGHER-USE LAWN W/ TREES**	**COARSE SAND MIX**		
			6" TOPSOIL WITH GREATER ORGANIC MATTER	TILL INTERFACE WITH SUBSOIL	REFER SPECIFICATION
			36" MIN. SUBSOIL WITH LESSER ORGANIC MATTER	SCARIFY INTERFACE WITH SUBGRADE	REFER SPECIFICATION
			6" NOM. #57 COMPACTED DRAINAGE COURSE PEDESTAL		REFER SPECIFICATION
			6" MIN. AMENDED & DECOMPACTED SUBGRADE	RIP, AMEND PH AND/OR SALINITY AS REQUIRED BY TESTS	REFER SPECIFICATION
	SOIL-2A	**PLANTING**	**LOAMY SAND**		
			6" TOPSOIL WITH GREATER ORGANIC MATTER	TILL INTERFACE WITH SUBSOIL	REFER SPECIFICATION
			18" MIN. SUBSOIL WITH LESSER ORGANIC MATTER	SCARIFY INTERFACE WITH SUBGRADE	REFER SPECIFICATION
			6" MIN. AMENDED & DECOMPACTED SUBGRADE	RIP, AMEND PH AND/OR SALINITY AS REQUIRED BY TESTS	REFER SPECIFICATION
	SOIL-2B	**PLANTING W/ TREES**	**LOAMY SAND**		
			6" TOPSOIL WITH GREATER ORGANIC MATTER	TILL INTERFACE WITH SUBSOIL	REFER SPECIFICATION
			36" MIN. SUBSOIL WITH LESSER ORGANIC MATTER	SCARIFY INTERFACE WITH SUBGRADE	REFER SPECIFICATION
			6" NOM. #57 COMPACTED DRAINAGE COURSE PEDESTAL		REFER SPECIFICATION
			6" MIN. AMENDED & DECOMPACTED SUBGRADE OUTSIDE OF PEDESTAL	RIP, AMEND PH AND/OR SALINITY AS REQUIRED BY TESTS	REFER SPECIFICATION
	LBM-1	**LOAD BEARING MODULES**	**PLASTIC**		
			31" MIN. MODULAR PLASTIC CELLS & ACCESSORIES (AASHTO H-20 RATED)	ANCHOR WITH STAKES INTO SUBGRADE, ZIP-TIE MODULES TOGETHER	SILVACELLS BY DEEPROOT
			NON-WOVEN POLYESTER GEOTEXTILE, >50% RECYCLED CONTENT		GN 100 NEW GREEN GEOTEXTILES BY BTL
			PP/PVA/PET BIAXIAL GEOGRID, 1" NOM. APERTURE, PVC COATED	ZIP-TIE TO MODULES	STRATAGRID SG 150 BY GEOCHEM INC
			4" NOM. #57 COMPACTED DRAINAGE COURSE PAD		REFER SPECIFICATION
	TRF-1	**TURF REINFORCING FIBERS**	**PLASTIC**		
			PP FIBERS OR MESH	TILL INTO TOPSOIL EVENLY	ATS400/B NETLON MESH BY GEOSOLUTIONS
	SSD-1	**FRENCH DRAIN W/O PIPE**	**CRUSHED AGGREGATE**		
			2" INORGANIC MULCH	1/2" TO 1" DIA ROUNDED BLACK PEBBLES	LA PAZ BLACK PEBBLES BY BOURGET BROTHERS
			4" MIN. #8 BRIDGING COURSE	WASHED	
			24" MIN. #57 COMPACTED DRAINAGE COURSE	WASHED	
			GEOTEXTILE, NON-WOVEN POLYESTER, >50% RECYCLED CONTENT	FOLD OVER TO PROTECT DRAINAGE COURSE UNTIL PLANTING SOIL WORKS	GN 100 NEW GREEN GEOTEXTILES BY BTL
	IR	**ROOT ZONE INSPECTION RISER**	**RISER & GRATE**		
			4" DIA. ROUND GRATE, DUCTILE IRON, ABS BODY	BLACK FINISH	EA
			6" DIA. DUAL WALL HDPE PIPE,>50% RECYCLED CONTENT, 4" REDUCER AT TOP	PERF., CORRUGATED EXTERIOR, SMOOTH INTERIOR, SOIL-TIGHT FITTINGS	FD-2220 MEDIUM DUTY FLOOR DRAIN BY ZURN
			METAL T-BAR POST WITH ZIP-TIES 6" O.C	BLACK FINISH	MEGA GREEN BY ADVANCED DRAINAGE SYSTEMS
	EROS-1	**EROSION CONTROL MAT**	**BIODEGRADABLE FIBER**		
			COIR FIBER WITH GALV. STAKES		GEOCOIR DEKOWE 700 BY BELTON INDUSTRIES

THE CITY OF LOS ANGELES OR ITS OFFICERS OR AGENTS SHALL NOT BE RESPONSIBLE FOR THE ACCURACY OR COMPLETENESS OF ELECTRONIC COPIES OF THIS PLAN SHEET.

REVISION DATES (DESIGN STAGE ONLY)

Sheet Version 3.0

BUREAU OF ENGINEERING OFFICIAL RECORD

BUREAU OF ENGINEERING

ENGINEERING CITY OF LOS ANGELES

NO.	REVISIONS:	DATE	BY:

BUILDING NO.

INDEX NO. **MF-300501**

LICENSED LANDSCAPE ARCHITECT MARY MARGARET JONES #2516 Date Relicensure Date STATE OF CALIFORNIA

THIS PLAN WAS ELECTRONICALLY SIGNED AND STAMPED

CITY OF LOS ANGELES DEPARTMENT OF PUBLIC WORKS

CITY ENGINEER

TED ALLEN, P.E. DATE: 07/11/2022

DESIGN GROUP

LANDSCAPE ARCHITECT: MARY MARGARET JONES LIC. NO.

DESIGNED BY: MARY MARGARET JONES

DRAWN BY: MEGAN ESOPENKO

CHECKED BY: GAVIN MCMILLAN

APPROVED BY: MARY MARGARET JONES

HargreavesJones

Hargreaves Jones Landscape Architecture

PLANS PREPARED BY:

TETRA TECH, INC.
707 WILSHIRE BLVD. 23RD FLR.
LOS ANGELES, CA 90017
PHONE: (213) 239-8866

VERT. CONTROL: BM 12-04070, 1929 (NGVD29) - 1985 ADJUSTMENT
HORIZ. CONTROL: GPS; PID AE 1704, EPOCH 1991.35

SHEET TITLE: SOILS LEGEND AND SCHEDULE

PROJECT: SIXTH STREET PARK, ARTS AND RIVER CONNECTIVITY IMPROVEMENTS (PARC)

ADDRESS: SIXTH STREET OVER THE LOS ANGELES RIVER

WORK ORDER NO. E700235D

FILE NO. --

DRAWING NO. L-050

SHEET 88 OF 295 SHEETS

2022-07-05 8:57:32 PM - C:\USERS\MESOPENKO\ONEDRIVE - HARGREAVESSSV 1601 - SIXTH STREET VIADUCT\300_CREATE\310_HA WORKING FILES\06_TECHNICAL\06_100-CD150_SHEETS\L-050 SOILS LEGEND AND SCHEDULE.DWG - MEGAN ESOPENKO

VEGETATION					
SYMBOL	*ABBREVIATION*	*ELEMENT*	*MATERIAL ASSEMBLY SUMMARY - REFER DRAWINGS & SPECIFICATION FOR COMPLETE DESCRIPTION*	*NOTES*	*PRODUCTS & MANUFACTURERS #1*
SEE SOFTSCAPE SPECIES SCHEDULE (L-065-066)	**PLNT-1**	**HERBACEOUS - LAWN REINFORCED**	**FINE TEXTURE GRASS**		
			SODDED	AMENITY LAWN SPECIES: REFER PLANT SCHEDULE	TIFWAY' BERMUDA OR EQUAL
			12" MIN. TOPSOIL	FREE DRAINING, COARSE SAND, LIMIT PHOSPHORUS	
			FIBER REINFORCING	MIXED INTO TOP 4" OF SOIL	STALOK FIBER BY STABILIZER SOLUTION
			6" MIN. AMENDED SUBGRADE	DECOMPACT, AMEND PH AND/OR SALINITY AS REQUIRED BY TESTS	
			PERMANENT IRRIGATION	REFER TO IRRIGATION DRAWINGS	
SEE SOFTSCAPE SPECIES SCHEDULE (L-065-066)	**US -**	**UPLAND SLOPES**	**PERENNIAL SHRUBS,GRASSES & GROUNDCOVERS**		
			POTTED PLANTS	DENSE, EMERGENT, FLOWERING, FOLIAGE SPECIES: REFER PLANT SCHEDULE	
			4" MIN. MULCH		
			BIODEGRADABLE EROSION CONTROL MAT	APPLY ON SIDE SLOPES	GEOCOIR DEKOWE 400 BY BELTON INDUSTRIES
			24" MIN. DEPTH, SOIL PROFILE TYPE 2 (48" MIN. WITHIN 10' OF TREES)	NEUTRAL PH, MODIFIED WITH ORGANIC MATTER & NUTRIENTS TO SUIT SPECIES	
			6" MIN. AMENDED SUBGRADE	DECOMPACT, AMEND PH AND/OR SALINITY AS REQUIRED BY TESTS	
			PERMANENT IRRIGATION	REFER TO IRRIGATION DRAWINGS	
SEE SOFTSCAPE SPECIES SCHEDULE (L-065-066)	**LL -**	**LOWLANDS**	**PERENNIAL GRASSES**		
			POTTED PLANTS	DENSE, EMERGENT, FLOWERING, FOLIAGE SPECIES: REFER PLANT SCHEDULE	
			4" MIN. MULCH		
			12" MIN. DEPTH, SOIL PROFILE TYPE 1 (48" MIN. WITHIN 10' OF TREES)	NEUTRAL PH, MODIFIED WITH ORGANIC MATTER & NUTRIENTS TO SUIT SPECIES	
			6" MIN. AMENDED SUBGRADE	DECOMPACT, AMEND PH AND/OR SALINITY AS REQUIRED BY TESTS	
			PERMANENT IRRIGATION	REFER TO IRRIGATION DRAWINGS	
SEE SOFTSCAPE SPECIES SCHEDULE (L-065-066)	**SS -**	**SHADY SLOPES**	**PERENNIAL SHRUBS & GROUNDCOVERS**		
			POTTED PLANTS	DENSE, EMERGENT, FLOWERING, FOLIAGE SPECIES: REFER PLANT SCHEDULE	
			4" MIN. MULCH		
			24" MIN. DEPTH, SOIL PROFILE TYPE 1 (48" MIN. WITHIN 10' OF TREES)	NEUTRAL PH, MODIFIED WITH ORGANIC MATTER & NUTRIENTS TO SUIT SPECIES	
			6" MIN. AMENDED SUBGRADE	DECOMPACT, AMEND PH AND/OR SALINITY AS REQUIRED BY TESTS	
			PERMANENT IRRIGATION	REFER TO IRRIGATION DRAWINGS	
SEE SOFTSCAPE SPECIES SCHEDULE (L-065-066)	**RG -**	**RAIN GARDENS**	**PERENNIAL SHRUBS, GRASSES & GROUNDCOVERS**		
			POTTED PLANTS	MOIST SOIL MARGINAL SPECIES: REFER PLANT SCHEDULE	
			2" MIN. GRAVEL MULCH	SPREAD AT BOTTOM, INLETS & OUTLETS	
			BIODEGRADABLE EROSION CONTROL MAT	APPLY ON SIDE SLOPES	GEOCOIR DEKOWE 400 BY BELTON INDUSTRIES
			24" MIN. DEPTH, SOIL PROFILE TYPE 3	NEUTRAL PH, BIO-INFILTRATION MIX, 5 TO 10"/HR	
			2" MIN. PEA GRAVEL BRIDGING LAYER		
			12" MIN. AGGREGATE DRAINAGE LAYER		
			PERMANENT IRRIGATION	REFER TO IRRIGATION DRAWINGS	
SEE SOFTSCAPE SPECIES SCHEDULE (L-065-066)	**FG -**	**FEATURE GARDENS**	**PERENNIALS, SHRUBS, GRASSES & GROUNDCOVERS**		
			POTTED PLANTS	DENSE, EMERGENT, FLOWERING, FOLIAGE SPECIES: REFER PLANT SCHEDULE	
			4" MIN. MULCH		
			24" MIN. DEPTH, SOIL PROFILE TYPE 1 (48" MIN. WITHIN 10' OF TREES)	NEUTRAL PH, MODIFIED WITH ORGANIC MATTER & NUTRIENTS TO SUIT SPECIES	
			6" MIN. AMENDED SUBGRADE	DECOMPACT, AMEND PH AND/OR SALINITY AS REQUIRED BY TESTS	
			PERMANENT IRRIGATION	REFER TO IRRIGATION DRAWINGS	

BUREAU OF ENGINEERING
OFFICIAL RECORD

THIS PLAN WAS ELECTRONICALLY SIGNED AND STAMPED

LICENSED LANDSCAPE ARCHITECT Mary Margaret Jones #2654 STATE OF CALIFORNIA Date 07/11/2022

BUREAU OF ENGINEERING

ENGINEERING
CITY OF LOS ANGELES

NO.	REVISIONS:	DATE	BY:

BUILDING NO.

INDEX NO. **MF-300501**

CITY OF LOS ANGELES DEPARTMENT OF PUBLIC WORKS

PLANS PREPARED BY:
TETRA TECH, INC.
707 WILSHIRE BLVD, 23RD FLR.
LOS ANGELES, CA 90017
PHONE: (213) 239-8866

HargreavesJones
Hargreaves Jones Landscape Architecture

CITY ENGINEER
TED ALLEN, P.E.
DATE: 07/11/2022
LIC. NO.

DESIGN GROUP
LANDSCAPE ARCHITECT: MARY MARGARET JONES
DESIGNED BY: MARY MARGARET JONES
DRAWN BY: MEGAN ESOPENKO
CHECKED BY: GAVIN MCMILLAN
APPROVED BY: MARY MARGARET JONES

VERT. CONTROL: BM 12-04070, 1929 (NGVD29) - 1985 ADJUSTMENT
HORIZ. CONTROL: GPS; PID AE 1704, EPOCH 1991.35

SHEET TITLE: UNDERSTORY LEGEND AND SCHEDULE

PROJECT: SIXTH STREET PARK, ARTS AND RIVER CONNECTIVITY IMPROVEMENTS (PARC)

ADDRESS: SIXTH STREET OVER THE LOS ANGELES RIVER

WORK ORDER NO. E700235D
FILE NO. --
DRAWING NO. L-060
SHEET 89 OF 295 SHEETS

2022-07-05 8:57:39 PM - C:\USERS\MESOPENKO\ONEDRIVE - HARGREAVES\SSV 1901 - SIXTH STREET VIADUCT\300_CREATE\310_HA WORKING FILES\06_TECHNICAL\06_100-CD150_SHEETS\L-060 TREES AND UNDERSTORY LEGEND AND SCHEDULE.DWG - MEGAN ESOPENKO

THE CITY OF LOS ANGELES OR ITS OFFICERS OR AGENTS SHALL NOT BE RESPONSIBLE FOR THE ACCURACY OR COMPLETENESS OF ELECTRONIC COPIES OF THIS PLAN SHEET.

REVISION DATES (DESIGN STAGE ONLY)

Sheet Version 3.0

TREE SPECIES											
SYMBOL &/OR ABBREVIATION	***BOTANIC NAME***	***COMMON NAME***	***WATER USE***	***ANSI Z60.1 GROUP***	***PRIMARY MIN. PLANT SIZE @ PLANTING****	***UNIT***	***ACCEPTABLE METHOD* & MIN. SIZE @ PLANTING****	***UNIT***	***NOTES***	***APPROX. SPACING***	***APPROX. QUANTITY***
AnC	*Angophora costata*	ROSE GUM	L	SHADE & FLOWERING TREE	2	CAL"	24	BOX"	SINGLE STEM CLEAR TO 6'	SEE PLAN	37
ArM	*Arbutus 'Marina'*	MARINA STRAWBERRY TREE	L	SHADE & FLOWERING TREE	2	CAL"	24	BOX"	MULTI STEM	SEE PLAN	5
ChL	*Chilopsis linearis*	DESERT WILLOW	VL	SHADE & FLOWERING TREE	2	CAL"	24	BOX"	MULTI STEM	SEE PLAN	15
CoC	*Corymbia citriodora*	LEMON SCENTED GUM	L	SHADE & FLOWERING TREE	2	CAL"	24	BOX"	SINGLE STEM CLEAR TO 6'	SEE PLAN	15
CoP	*Corymbia papuana*	GHOST GUM	L	SHADE & FLOWERING TREE	2	CAL"	24	BOX"	SINGLE STEM CLEAR TO 6'	SEE PLAN	23
EuC	*Eucalyptus cladocalyx*	SUGAR GUM	L	SHADE & FLOWERING TREE	2	CAL"	24	BOX"	SINGLE STEM CLEAR TO 6'	SEE PLAN	10
EuT	*Eucalyptus torquata*	CORAL GUM	L	SHADE & FLOWERING TREE	2	CAL"	24	BOX"	NATURAL FORM	SEE PLAN	14
PaX	Parkinsonia X 'Desert Museum'	PALO VERDE 'DESERT MUSEUM'	VL	SHADE & FLOWERING TREE	2	CAL"	24	BOX"	NATURAL FORM	SEE PLAN	5
FiR	*Ficus rubiginosa*	RUSTY LEAF FIG	M	SHADE & FLOWERING TREE	3	CAL"	36	BOX"	SINGLE STEM CLEAR TO 6'	SEE PLAN	2
JaM	*Jacaranda mimosifolia*	JACARANDA	M	SHADE & FLOWERING TREE	3	CAL"	36	BOX"	SINGLE STEM CLEAR TO 6'	SEE PLAN	34
PiT	*Pinus torreyana*	TORREY PINE	L	CONIFEROUS EVERGREEN	3	CAL"	36	BOX"	LOW-BRANCHING	SEE PLAN	12
QuA	*Quercus agrifolia*	COAST LIVE OAK	VL	SHADE & FLOWERING TREE	3	CAL"	36	BOX"	NATURAL FORM	SEE PLAN	4
QuB	*Quercus buckleyi*	TEXAS RED OAK	VL	SHADE & FLOWERING TREE	3	CAL"	36	BOX"	LOW-BRANCHING	SEE PLAN	30
LaN	*Laurus nobilis*	BAY LAUREL	L	SHADE & FLOWERING TREE	3	CAL"	36	BOX"	SINGLE STEM CLEAR TO 6'	SEE PLAN	12
TiT	*Tipuana tipu*	TIPU	L	SHADE & FLOWERING TREE	3	CAL"	36	BOX"	SINGLE STEM CLEAR TO 6'	SEE PLAN	84

SOFTSCAPE SPECIES										
SYMBOL	***ABBREVIATION***	***BOTANIC NAME***	***COMMON NAME***	***WATER USE***	***SIZE***	***UNIT***	***APPROX. SPACING " OC.***	***SPACING***	***SF AREA***	***APPROX. QUANTITY***
	FG 1	**FEATURE GARDEN 1**								
	AgVR	*Agave victoriae-reginae*	QUEEN VICTORIA AGAVE	L	5	CTNS#	24	as shown		56
	AgB	*Agave bracteosa*	SPIDER AGAVE	L	5	CTNS#	36	as shown		18
	AgA	*Agave attenuata*	FOXTAIL AGAVE	L	5	CTNS#	60	as shown		13
	AgBF	*Agave 'Blue Flame'*	BLUE FLAME AGAVE	L	5	CTNS#	60	as shown		9
	AgV	*Agave desmettiana 'Variegata'*	VARIEGATA	L	5	CTNS#	48	as shown		8
	YuF	*Yucca filamentosa*	ADAMS NEEDLE	VL	15	CTNS#	48	as shown		21
	FG 2	**FEATURE GARDEN 2**								
	RuA	*Rumohra adiantiformis*	LEATHER FERN	M	5	CTNS#	36	as shown		72
	PoM	*Polystichum munitum*	WESTERN SWORD FERN	M	5	CTNS#	36	as shown		65
	WoF	*Woodwardia fimbriata*	GIANT CHAIN FERN	M	5	CTNS#	60	as shown		20
	MiS	*Microlepia strigosa*	LACE FERN	M	5	CTNS#	18	as shown		92
	DiCC	*Dianella caerulea 'Cassa Blue'*	FLAX LILY	M	1	CTNS#	18	TRI. SPACING	535.05	268
	FG 3	**FEATURE GARDEN 3**								
	AcMM	*Achillea millefolium 'Moonshine'*	MOONSHINE YARROW	L	1	CTNS#	18	as shown		83
	MuR	*Muhlenbergia rigens*	DEER GRASS	L	1	CTNS#	36	as shown		111
	ScM	*Senecio mandraliscae*	BLUE CHALK	L	1	CTNS#	18	TRI. SPACING	1850.10	925
	HeP	*Hesperaloe parviflora*	RED YUCCA	VL	1	CTNS#	48	as shown	.	134
	SaL	*Salvia leucantha 'Santa Barbara'*	SANTA BARBARA SAGE	L	1	CTNS#	36	as shown		138
	GaF	*Galvezia 'Firecracker'*	FIRECRACKER SNAPDRAGON	VL	1	CTNS#	36	as shown		189
	LiG	*Liriope gigantea*	GIANT LILY TURF	M	1	CTNS#	24	as shown		722
	BeR	*Berberis repens*	CREEPING BARBERRY	L	1	CTNS#	24	as shown		814
	RG 1	**RAIN GARDEN 1**								
	JuPE	*Juncus patens 'Elk Blue'*	ELK BLUE	L	1	CTNS#	18	as shown		61
	LoLB	*Lomandra longifolia 'Breeze'*	DWARF MAT RUSH	L	1	CTNS#	36	as shown		30
	RG 2	**RAIN GARDEN 2**								
	AcM	*Achillea millefolium*	YARROW	L	1	CTNS#	18	as shown		378
	JuPE	*Juncus patens 'Elk Blue'*	ELK BLUE	L	1	CTNS#	18	as shown		185

THE CITY OF LOS ANGELES OR ITS OFFICERS OR AGENTS SHALL NOT BE RESPONSIBLE FOR THE ACCURACY OR COMPLETENESS OF ELECTRONIC COPIES OF THIS PLAN SHEET.

REVISION DATES (DESIGN STAGE ONLY)

Sheet Version 3.0

BUREAU OF ENGINEERING

OFFICIAL RECORD

BUREAU OF ENGINEERING

ENGINEERING
CITY OF LOS ANGELES

NO.	REVISIONS:	DATE	BY:

BUILDING NO.

INDEX NO. **MF-300501**

LICENSED LANDSCAPE ARCHITECT Margaret Jones #2515 STATE OF CALIFORNIA Date 07/11/2022

*THIS PLAN WAS ELECTRONICALLY SIGNED AND STAMPED

CITY OF LOS ANGELES DEPARTMENT OF PUBLIC WORKS

CITY ENGINEER
TED ALLEN, P.E.
DESIGN GROUP

LANDSCAPE ARCHITECT: MARY MARGARET JONES	LIC. NO.	DATE:	07/11/2022
DESIGNED BY: MARY MARGARET JONES			
DRAWN BY: MEGAN ESOPENKO			
CHECKED BY: GAVIN MCMILLAN			
APPROVED BY: MARY MARGARET JONES			

HargreavesJones
Hargreaves Jones Landscape Architecture

TETRA TECH, INC.
707 WILSHIRE BLVD, 23RD FLR.
LOS ANGELES, CA 90017
PHONE: (213) 239-3866

PLANS PREPARED BY:

VERT. CONTROL: BM 12-04070, 1929 (NGVD29) - 1985 ADJUSTMENT
HORIZ. CONTROL: GPS; PID AE 1704, EPOCH 1991.35

SHEET TITLE: TREE AND UNDERSTORY SPECIES LEGEND AND SCHEDULE

PROJECT: SIXTH STREET PARK, ARTS AND RIVER CONNECTIVITY IMPROVEMENTS (PARC)

ADDRESS: SIXTH STREET OVER THE LOS ANGELES RIVER

WORK ORDER NO. E700235D

FILE NO. --

DRAWING NO. L-065

SHEET 90 OF 295 SHEETS

2022-07-05 8:57:42 PM - C:\USERS\MESOPENKO\ONEDRIVE - HARGREAVESJSV 1901 - SIXTH STREET VIADUCT\000_CREATE\310_HA WORKING FILES\06_TECHNICAL\06_100-CD150_SHEETS_L-060 TREES AND UNDERSTORY LEGEND AND SCHEDULE.DWG - MEGAN ESOPENKO

SOFTSCAPE SPECIES										
SYMBOL	*ABBREVIATION*	*BOTANIC NAME*	*COMMON NAME*	*WATER USE*	*SIZE*	*UNIT*	*APPROX. SPACING " OC.*	*SPACING*	*SF AREA*	*APPROX. QUANTITY*
	RG 3	**RAIN GARDEN 3**								
	AcMP	*Achillea millefolium 'Paprika'*	PAPRIKA YARROW	M	1	CTNS#	18	as shown		74
	CaD	*Carex divulsa*	EUROPEAN GREY SEDGE	L	1	CTNS#	24	TRI. SPACING	1920.45	549
	JuPE	*Juncus patens 'Elk Blue'*	ELK BLUE	L	1	CTNS#	18	as shown		127
	US 1	**UPLAND SLOPE 1**								
	LoHT	*Lomandra hystrix 'Tropicbelle'*	TROPIC BELLE MAT RUSH	M	1	CTNS#	36	TRI. SPACING	10902.09	1454
	AgBF	*Agave 'Blue Flame'*	BLUE FLAME AGAVE	L	1	CTNS#	36	as shown		48
	US 2	**UPLAND SLOPE 1**								
	LoHT	*Lomandra hystrix 'Tropicbelle'*	TROPIC BELLE MAT RUSH	M	1	CTNS#	36	TRI. SPACING	2752.85	367
	US 3	**UPLAND SLOPE 2**								
	BaPP	*Baccharis pilularis 'Pigeon Point'*	DWARF COYOTE BRUSH	L	1	CTNS#	60	TRI. SPACING	10965.48	487
	HeP	*Hesperaloe parviflora*	RED YUCCA	VL	1	CTNS#	36	TRI. SPACING	1080.40	144
	BeR	*Berberis repens*	CREEPING BARBERRY	L	1	CTNS#	24	TRI. SPACING	5207.99	1488
	CaG	*Carissa macrocarpa 'Green Carpet'*	GREEN CARPET	L	1	CTNS#	48	TRI. SPACING	4675.28	334
	TaL	*Tagetes lemmonii*	MEXICAN MARIGOLD	L	1	CTNS#	48	TRI. SPACING	1578.78	113
	SS 1	**SHADY SLOPE 1**								
	DiCC	*Dianella caerulea 'Cassa Blue'*	FLAX LILY	M	1	CTNS#	18	TRI. SPACING	763.05	382
	CoB	*Cordyline banksii 'Sprilecpink'*	ELECTRIC PINK CORDYLINE	M	1	CTNS#	36	TRI. SPACING	865.31	115
	LiG	*Liriope gigantea*	GIANT LILY TURF	M	1	CTNS#	24	TRI. SPACING	3213.59	918
	CaD	*Carex divulsa*	EUROPEAN GREY SEDGE	L	1	CTNS#	24	TRI. SPACING	3010.55	860
	LL1	**LOW LAND 1**								
	AgDV	*Agave desmettiana 'Variegata'*	VARIEGATA	L	5	CTNS#	48	TRI. SPACING	3865.21	276
	MaR	*Mahonia repens*	CREEPING BARBERRY	VL	1	CTNS#	36	TRI. SPACING	5842.47	779
	CaD	*Carex divulsa*	EUROPEAN GREY SEDGE	L	1	CTNS#	24	TRI. SPACING	7683.25	2195
	FuFM	*Furcrea foetida 'Mediopicta'*	MAURITIUS HEMP	L	5	CTNS#	48	TRI. SPACING	3213.76	230
	LoHT	*Lomandra hystrix 'Tropicbelle'*	TROPIC BELLE MAT RUSH	M	1	CTNS#	36	TRI. SPACING	11669.88	1556
	AgA	*Agave attenuata*	FOXTAIL AGAVE	L	5	CTNS#	60	TRI. SPACING	5517.73	245

BUREAU OF ENGINEERING
OFFICIAL RECORD

THE CITY OF LOS ANGELES OR ITS OFFICERS OR AGENTS SHALL NOT BE RESPONSIBLE FOR THE ACCURACY OR COMPLETENESS OF ELECTRONIC COPIES OF THIS PLAN SHEET.

REVISION DATES
(DESIGN STAGE ONLY)

Sheet Version 3.0

CITY OF LOS ANGELES DEPARTMENT OF PUBLIC WORKS
BUREAU OF ENGINEERING

ENGINEERING
CITY OF LOS ANGELES

NO.	REVISIONS:	DATE	BY:

BUILDING NO.

INDEX NO. **MF-300501**

THIS PLAN WAS ELECTRONICALLY SIGNED AND STAMPED

LICENSED LANDSCAPE ARCHITECT
MARY MARGARET JONES #2576
Date
Rahmona Dilaa
STATE OF CALIFORNIA

CITY ENGINEER
DATE: 07/11/2022
LIC. NO.
MARY MARGARET JONES

DESIGN GROUP
LANDSCAPE ARCHITECT: MARY MARGARET JONES
DESIGNED BY: MARY MARGARET JONES
DRAWN BY: MEGAN ESOPENKO
CHECKED BY: GAVIN MCMILLAN
APPROVED BY: MARY MARGARET JONES

SHEET TITLE: UNDERSTORY SPECIES LEGEND AND SCHEDULE
PROJECT: SIXTH STREET PARK, ARTS AND RIVER CONNECTIVITY IMPROVEMENTS (PARC)
ADDRESS: SIXTH STREET OVER THE LOS ANGELES RIVER

VERT. CONTROL: BM 12-04070, 1929 (NGVD29) - 1985 ADJUSTMENT
HORIZ. CONTROL: GPS; PID AE 1704, EPOCH 1991.35

WORK ORDER NO. E700235D
FILE NO. --
DRAWING NO. L-066
SHEET 91 OF 295 SHEETS

PLANS PREPARED BY:
TETRA TECH, INC.
707 WILSHIRE BLVD. 23RD FLR.
LOS ANGELES, CA 90017
PHONE: (213) 239-8866

HargreavesJones
Hargreaves Jones Landscape Architecture

TED ALLEN, P.E.

2022-07-05 8:57:47 PM - C:\USERS\MESOPENKO\ONEDRIVE - HARGREAVES\SSV 1601 - SIXTH STREET VIADUCT\300_CREATE\310_HA WORKING FILES\06_ TECHNICAL\06_100-CD\50_SHEETS\L-060 TREES AND UNDERSTORY LEGEND AND SCHEDULE.DWG - MEGAN ESOPENKO

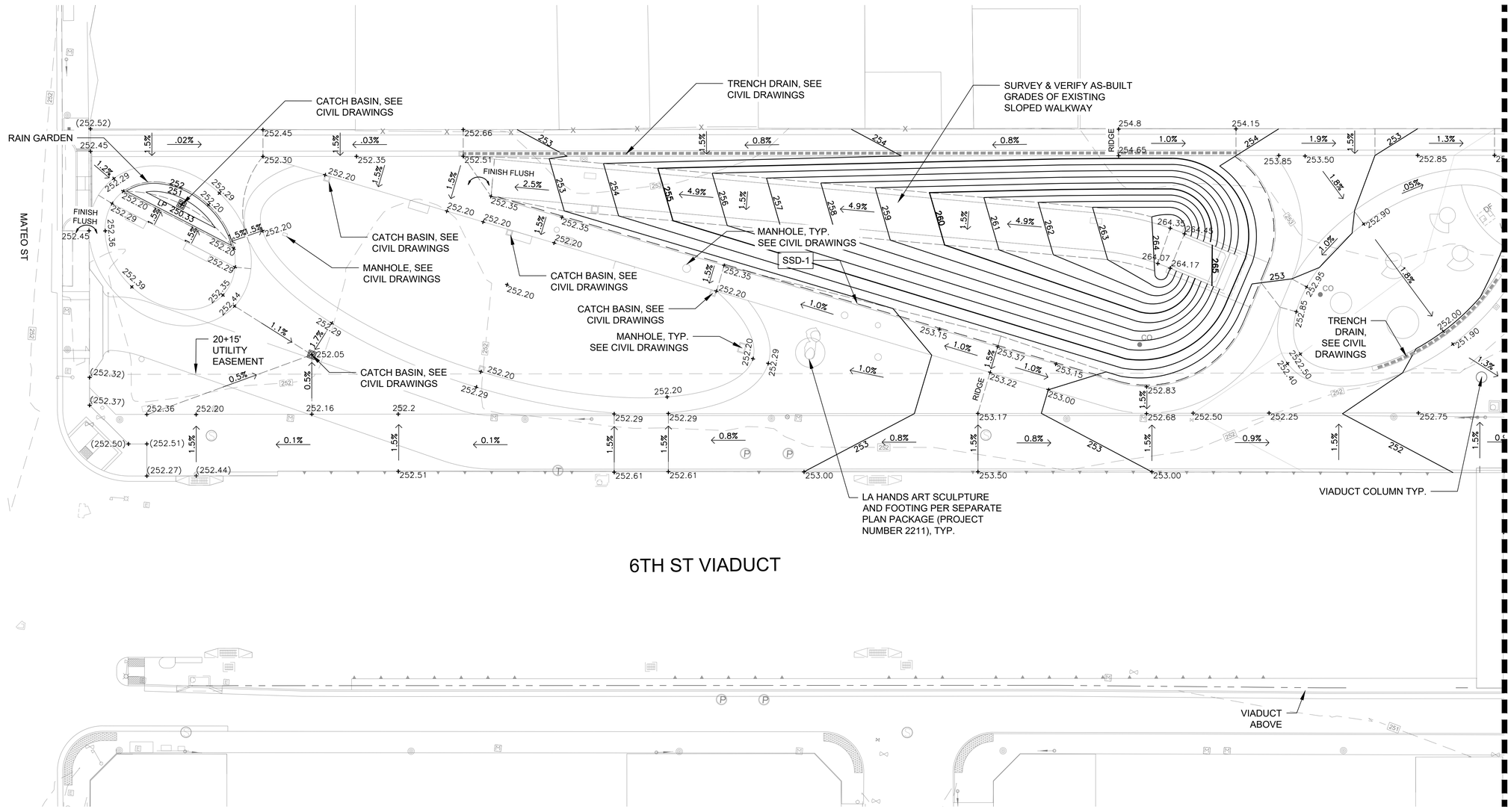

GRADING PLAN LEGEND

— — —	5' OFFSET OF LIMIT OF WORK
100	EXISTING CONTOUR LINE
100	PROPOSED CONTOUR LINE
(XXXX.XX) +	EXISTING SPOT ELEVATION
HP XXXX.XX +	HIGH POINT - SPOT ELEVATION
LP XXXX.XX +	LOW POINT - SPOT ELEVATION
XXXX.XX +	SPOT ELEVATION
2.0%	SLOPE
IE	INVERT ELEVATION
- - - - -	GRADE BREAK (GB)

SHEET NOTES

1. SEE SHEET L-001 FOR GENERAL LANDSCAPE NOTES, ABBREVIATIONS & SYMBOLS.
2. SEE DRAWINGS FOR THE CROSSPITCH. ALL PAVED PATHWAYS TO HAVE A CROSS SLOPE OF AT LEAST 1:100 (1%). CROSS SLOPES SHALL NOT EXCEED 1:50 (2%).
3. VERIFY EXISTING CURB ELEVATIONS AND ADJUST SIDEWALK CROSS SLOPES ACCORDINGLY
4. SEE CIVIL DRAWINGS C-403 - C-411 FOR STORM DRAIN PLANS.
5. FIELD VERIFY EXISTING ELEVATIONS ALONG ABUTTING PROPERTY BOUNDARIES

0 10' 20' 40'
SCALE 1" = 20'

THE CITY OF LOS ANGELES OR ITS OFFICERS OR AGENTS SHALL NOT BE RESPONSIBLE FOR THE ACCURACY OR COMPLETENESS OF ELECTRONIC COPIES OF THIS PLAN SHEET.

REVISION DATES (DESIGN STAGE ONLY)

Sheet Version 3.0

PLANS PREPARED BY:
TETRA TECH, INC.
707 WILSHIRE BLVD, 23RD FLR.
LOS ANGELES, CA 90017
PHONE: (213) 239-8866

HargreavesJones
Hargreaves Jones Landscape Architecture

CITY OF LOS ANGELES DEPARTMENT OF PUBLIC WORKS

BUREAU OF ENGINEERING

ENGINEERING
CITY OF LOS ANGELES

NO.	REVISIONS:	DATE:	BY:

BUILDING NO.

INDEX NO. MF-300501

THIS PLAN WAS ELECTRONICALLY SIGNED AND STAMPED.

LICENSED LANDSCAPE ARCHITECT
Mary Margaret Jones #2615
Rainwater Dike
Date
STATE OF CALIFORNIA

BUREAU OF ENGINEERING
OFFICIAL RECORD

TED ALLEN, P.E.
CITY ENGINEER

DESIGN GROUP
DATE:
LANDSCAPE ARCHITECT: MARY MARGARET JONES LIC. NO. 07/11/2022
DESIGNED BY: MARY MARGARET JONES
DRAWN BY: MEGAN ESOPENKO
CHECKED BY: GAVIN MCMILLAN
APPROVED BY: MARY MARGARET JONES

VERT. CONTROL: BM 12-04070, 1929 (NGVD29) - 1985 ADJUSTMENT
HORIZ. CONTROL: GPS; PID AE 1704, EPOCH 1991.35

SHEET TITLE: GRADING PLAN SHEET 1
PROJECT: SIXTH STREET PARK, ARTS AND RIVER CONNECTIVITY IMPROVEMENTS (PARC)
ADDRESS: SIXTH STREET OVER THE LOS ANGELES RIVER

WORK ORDER NO. E700235D
FILE NO. --
DRAWING NO. L-121
SHEET 92 OF 295 SHEETS

2022-07-05 8:58:03 PM - C:\USERS\MESOPENKO\ONEDRIVE - HARGREAVES\SSV 1601 - SIXTH STREET VIADUCT\300_CREATE\310_HA WORKING FILES\06_TECHNICAL\06_100-CD\50_SHEETS\L-120-125 GRADING PLAN.DWG - MEGAN ESOPENKO

GRADING PLAN LEGEND

— — —	5' OFFSET OF LIMIT OF WORK
100	EXISTING CONTOUR LINE
100	PROPOSED CONTOUR LINE
(XXXX.XX)	EXISTING SPOT ELEVATION
HP XXXX.XX	HIGH POINT - SPOT ELEVATION
LP XXXX.XX	LOW POINT - SPOT ELEVATION
XXXX.XX	SPOT ELEVATION
2.0%	SLOPE
IE	INVERT ELEVATION
- - - - -	GRADE BREAK (GB)

SHEET NOTES

1. SEE SHEET L-001 FOR GENERAL LANDSCAPE NOTES, ABBREVIATIONS & SYMBOLS.
2. SEE DRAWINGS FOR THE CROSSPITCH. ALL PAVED PATHWAYS TO HAVE A CROSS SLOPE OF AT LEAST 1:100 (1%). CROSS SLOPES SHALL NOT EXCEED 1:50 (2%).
3. VERIFY EXISTING CURB ELEVATIONS AND ADJUST SIDEWALK CROSS SLOPES ACCORDINGLY
4. SEE CIVIL DRAWINGS C-403 - C-411 FOR STORM DRAIN PLANS.
5. FIELD VERIFY EXISTING ELEVATIONS ALONG ABUTTING PROPERTY BOUNDARIES

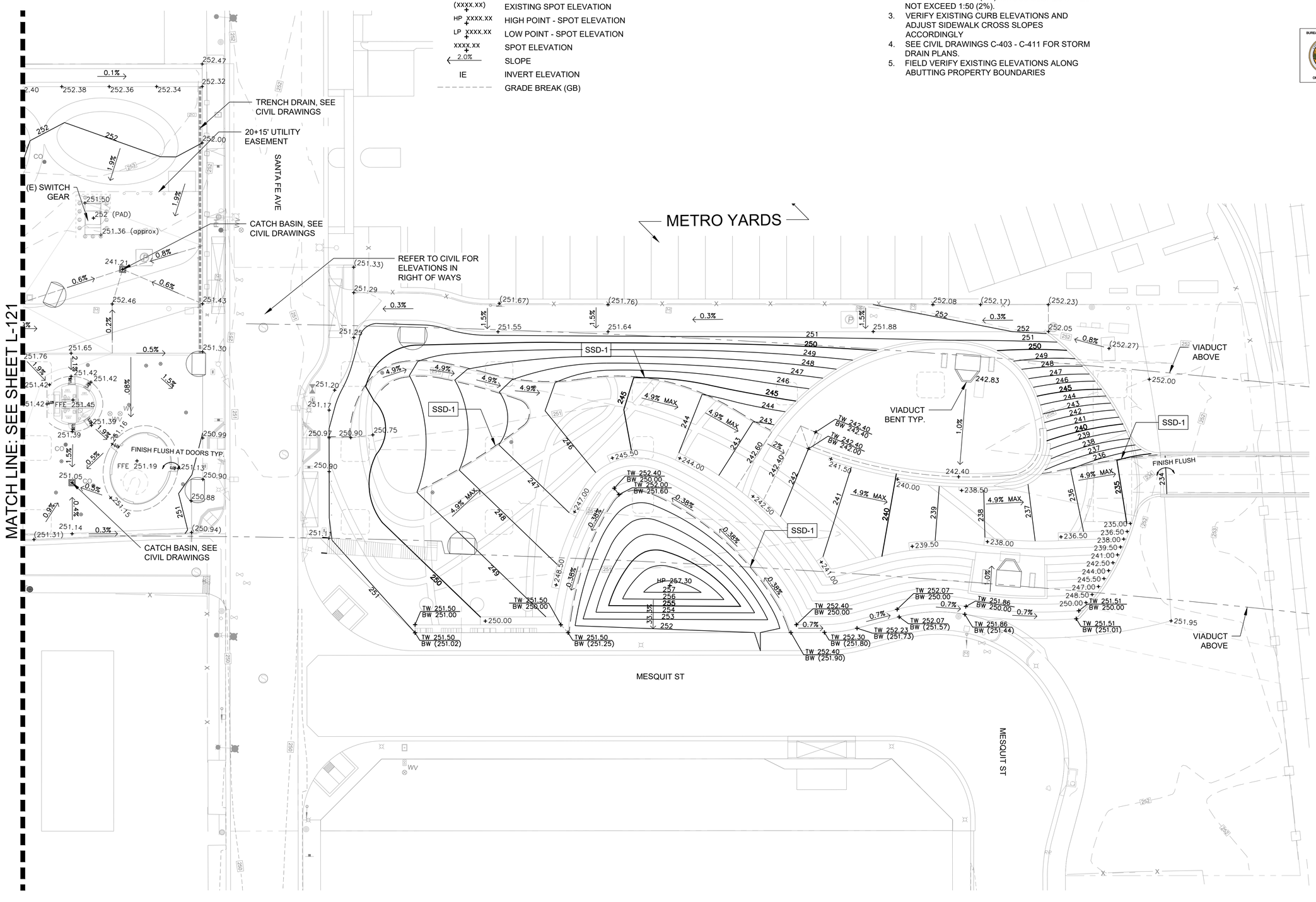

THE CITY OF LOS ANGELES OR ITS OFFICERS OR AGENTS SHALL NOT BE RESPONSIBLE FOR THE ACCURACY OR COMPLETENESS OF ELECTRONIC COPIES OF THIS PLAN SHEET.

REVISION DATES (DESIGN STAGE ONLY)

Sheet Version 3.0

BUREAU OF ENGINEERING OFFICIAL RECORD

BUREAU OF ENGINEERING

ENGINEERING CITY OF LOS ANGELES

NO.	REVISIONS:	DATE:	BY:

BUILDING NO.

INDEX NO. MF-300501

THIS PLAN WAS ELECTRONICALLY SIGNED AND STAMPED.

LICENSED LANDSCAPE ARCHITECT Mary Margaret Jones #2615 Reviewed Date Date STATE OF CALIFORNIA

CITY OF LOS ANGELES DEPARTMENT OF PUBLIC WORKS

TED ALLEN, P.E. CITY ENGINEER

DESIGN GROUP

LANDSCAPE ARCHITECT: MARY MARGARET JONES LIC. NO. 07/11/2022

DESIGNED BY: MARY MARGARET JONES

DRAWN BY: MEGAN ESOPENKO

CHECKED BY: GAVIN MCMILLAN

APPROVED BY: MARY MARGARET JONES

Hargreaves Jones

Hargreaves Jones Landscape Architecture

PLANS PREPARED BY:

TETRA TECH, INC.

707 WILSHIRE BLVD, 23RD FLR.
LOS ANGELES, CA 90017
PHONE: (213) 239-8866

VERT. CONTROL: BM 12-04070, 1929 (NGVD29) - 1985 ADJUSTMENT
HORIZ. CONTROL: GPS; PID AE 1704, EPOCH 1991.35

SHEET TITLE: GRADING PLAN SHEET 2

PROJECT: SIXTH STREET PARK, ARTS AND RIVER CONNECTIVITY IMPROVEMENTS (PARC)

ADDRESS: SIXTH STREET OVER THE LOS ANGELES RIVER

WORK ORDER NO. E700235D

FILE NO. --

DRAWING NO. L-122

SHEET 93 OF 295SHEETS

2022-07-05 8:58:09 PM - C:\USERS\MESOPENKO\ONEDRIVE - HARGREAVES\SSV 1601 - SIXTH STREET VIADUCT\300_CREATE\310_HA WORKING FILES\06_TECHNICAL\06_100-CD\50_SHEETS\L-120-125 GRADING PLAN.DWG - MEGAN ESOPENKO

GRADING PLAN LEGEND

— — —	5' OFFSET OF LIMIT OF WORK
100	EXISTING CONTOUR LINE
100	PROPOSED CONTOUR LINE
(XXXX.XX) +	EXISTING SPOT ELEVATION
HP XXXX.XX +	HIGH POINT - SPOT ELEVATION
LP XXXX.XX +	LOW POINT - SPOT ELEVATION
XXXX.XX +	SPOT ELEVATION
2.0%	SLOPE
IE	INVERT ELEVATION
- - - - - -	GRADE BREAK (GB)

SHEET NOTES

1. SEE SHEET L-001 FOR GENERAL LANDSCAPE NOTES, ABBREVIATIONS & SYMBOLS.
2. SEE DRAWINGS FOR THE CROSSPITCH. ALL PAVED PATHWAYS TO HAVE A CROSS SLOPE OF AT LEAST 1:100 (1%). CROSS SLOPES SHALL NOT EXCEED 1:50 (2%).
3. VERIFY EXISTING CURB ELEVATIONS AND ADJUST SIDEWALK CROSS SLOPES ACCORDINGLY
4. SEE CIVIL DRAWINGS C-403 - C-411 FOR STORM DRAIN PLANS.
5. FIELD VERIFY EXISTING ELEVATIONS ALONG ABUTTING PROPERTY BOUNDARIES

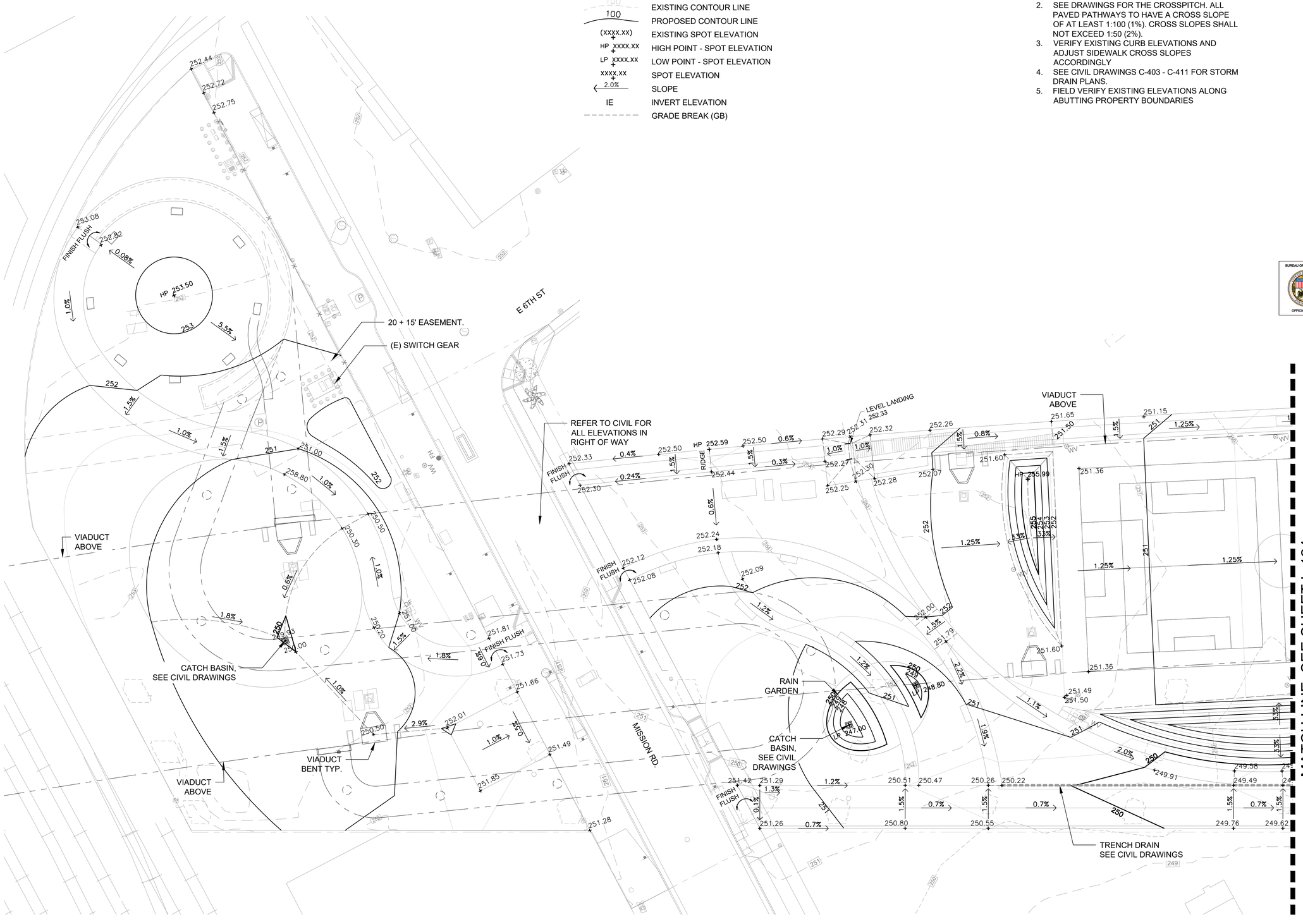

THE CITY OF LOS ANGELES OR ITS OFFICERS OR AGENTS SHALL NOT BE RESPONSIBLE FOR THE ACCURACY OR COMPLETENESS OF ELECTRONIC COPIES OF THIS PLAN SHEET.

REVISION DATES (DESIGN STAGE ONLY)

Sheet Version 3.0

BUREAU OF ENGINEERING
OFFICIAL RECORD

BUREAU OF ENGINEERING
CITY OF LOS ANGELES

NO.	REVISIONS:	DATE:	BY:

BUILDING NO.

INDEX NO. MF-300501

THIS PLAN WAS ELECTRONICALLY SIGNED AND STAMPED.

LICENSED LANDSCAPE ARCHITECT
Mary Margaret Jones #2615
Renewal Date
Date
STATE OF CALIFORNIA

CITY ENGINEER

TED ALLEN, P.E.

DESIGN GROUP

		DATE:
LANDSCAPE ARCHITECT: MARY MARGARET JONES	LIC. NO.	07/11/2022
DESIGNED BY: MARY MARGARET JONES		
DRAWN BY: MEGAN ESOPENKO		
CHECKED BY: GAVIN MCMILLAN		
APPROVED BY: MARY MARGARET JONES		

HargreavesJones
Hargreaves Jones Landscape Architecture

PLANS PREPARED BY:
TETRA TECH, INC.
707 WILSHIRE BLVD, 23RD FLR.
LOS ANGELES, CA 90017
PHONE: (213) 239-8866

VERT. CONTROL: BM 12-04070, 1929 (NGVD29) - 1985 ADJUSTMENT
HORIZ. CONTROL: GPS; PID AE 1704, EPOCH 1991.35

SHEET TITLE: GRADING PLAN SHEET 3

PROJECT: SIXTH STREET PARK, ARTS AND RIVER CONNECTIVITY IMPROVEMENTS (PARC)

ADDRESS: SIXTH STREET OVER THE LOS ANGELES RIVER

WORK ORDER NO. E700235D

FILE NO. --

DRAWING NO. L-123

SHEET 94 OF 295SHEETS

CITY OF LOS ANGELES DEPARTMENT OF PUBLIC WORKS

2022-07-05 8:58:14 PM - C:\USERS\MESOPENKO\ONEDRIVE - HARGREAVES\SSV 1601 - SIXTH STREET VIADUCT\300_CREATE\310_HA WORKING FILES\06_TECHNICAL\06_100-CD\50_SHEETS\L-120-125 GRADING PLAN.DWG - MEGAN ESOPENKO

GRADING PLAN LEGEND

- 5' OFFSET OF LIMIT OF WORK
- 100 — EXISTING CONTOUR LINE
- 100 — PROPOSED CONTOUR LINE
- (xxxx.xx) — EXISTING SPOT ELEVATION
- HP xxxx.xx — HIGH POINT - SPOT ELEVATION
- LP xxxx.xx — LOW POINT - SPOT ELEVATION
- xxxx.xx — SPOT ELEVATION
- 2.0% — SLOPE
- IE — INVERT ELEVATION
- GRADE BREAK (GB)

SHEET NOTES

1. SEE SHEET L-001 FOR GENERAL LANDSCAPE NOTES, ABBREVIATIONS & SYMBOLS.
2. SEE DRAWINGS FOR THE CROSSPITCH. ALL PAVED PATHWAYS TO HAVE A CROSS SLOPE OF AT LEAST 1:100 (1%). CROSS SLOPES SHALL NOT EXCEED 1:50 (2%).
3. VERIFY EXISTING CURB ELEVATIONS AND ADJUST SIDEWALK CROSS SLOPES ACCORDINGLY
4. SEE CIVIL DRAWINGS C-403 - C-411 FOR STORM DRAIN PLANS.
5. FIELD VERIFY EXISTING ELEVATIONS ALONG ABUTTING PROPERTY BOUNDARIES

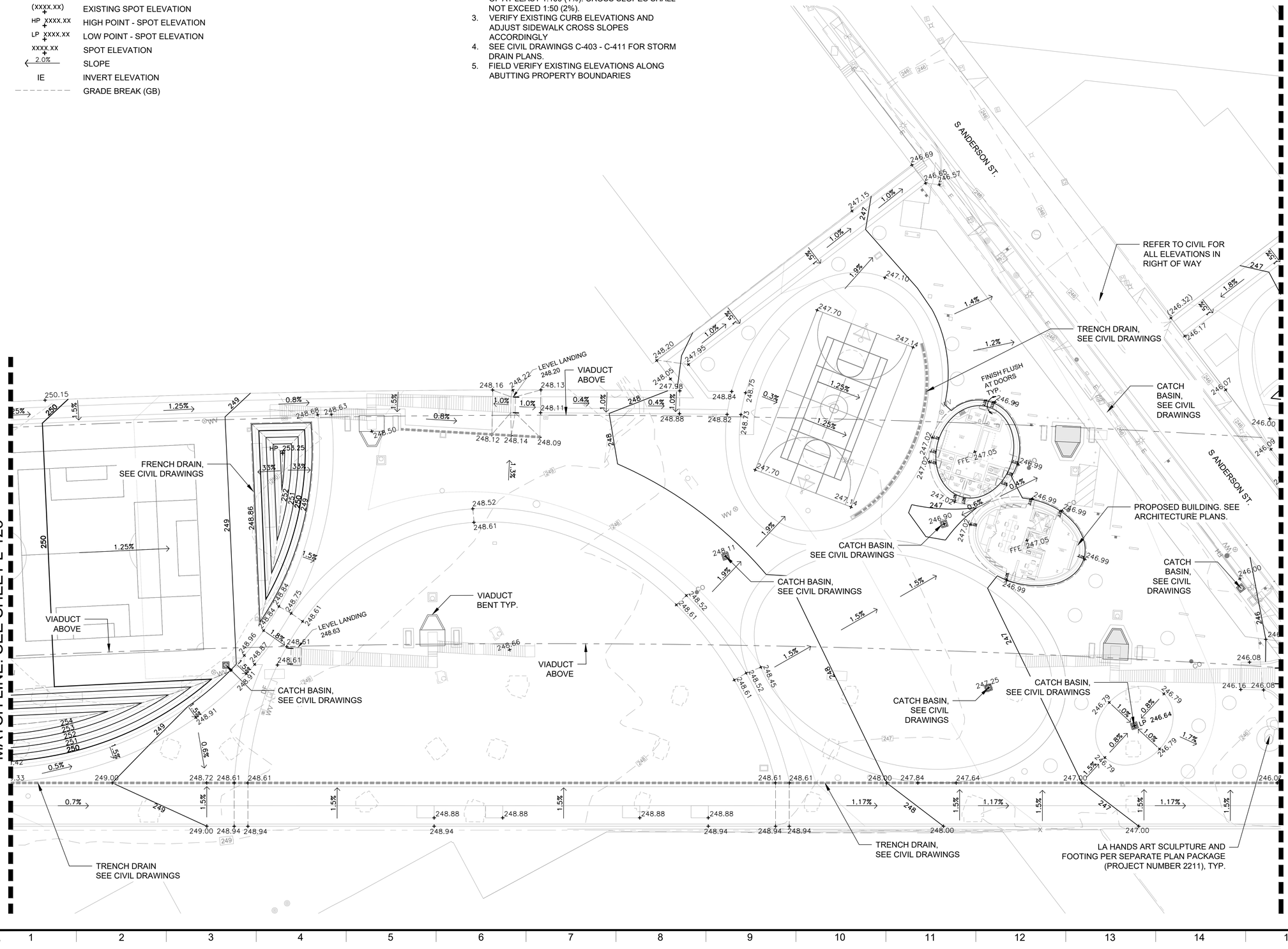

THE CITY OF LOS ANGELES OR ITS OFFICERS OR AGENTS SHALL NOT BE RESPONSIBLE FOR THE ACCURACY OR COMPLETENESS OF ELECTRONIC COPIES OF THIS PLAN SHEET.

REVISION DATES (DESIGN STAGE ONLY)

Sheet Version 3.0

BUREAU OF ENGINEERING OFFICIAL RECORD

PLANS PREPARED BY:
TETRA TECH, INC.
707 WILSHIRE BLVD. 23RD FLR.
LOS ANGELES, CA 90017
PHONE: (213) 239-8866

HargreavesJones
Hargreaves Jones Landscape Architecture

CITY OF LOS ANGELES DEPARTMENT OF PUBLIC WORKS BUREAU OF ENGINEERING

ENGINEERING CITY OF LOS ANGELES

NO.	REVISIONS:	DATE:	BY:

BUILDING NO.

INDEX NO. MF-300501

LICENSED LANDSCAPE ARCHITECT MARY MARGARET JONES #2516 STATE OF CALIFORNIA Date Relicensed Date

THIS PLAN WAS ELECTRONICALLY SIGNED AND STAMPED

CITY ENGINEER

VERT. CONTROL: BM 12-04070, 1929 (NGVD29) - 1985 ADJUSTMENT
HORIZ. CONTROL: GPS; PID AE 1704, EPOCH 1991.35

SHEET TITLE: GRADING PLAN SHEET 4

PROJECT: SIXTH STREET PARK, ARTS AND RIVER CONNECTIVITY IMPROVEMENTS (PARC)

ADDRESS: SIXTH STREET OVER THE LOS ANGELES RIVER

DESIGN GROUP	NAME	LIC. NO.	DATE
LANDSCAPE ARCHITECT:	MARY MARGARET JONES		07/11/2022
DESIGNED BY:	MARY MARGARET JONES		
DRAWN BY:	MEGAN ESOPENKO		
CHECKED BY:	GAVIN MCMILLAN		
APPROVED BY:	MARY MARGARET JONES		

TED ALLEN, P.E.

WORK ORDER NO. E700235D

FILE NO. --

DRAWING NO. L-124

SHEET 95 OF 295 SHEETS

2022-07-05 8:58:19 PM - C:\USERS\MESOPENKO\ONEDRIVE - HARGREAVESJSV 1601 - SIXTH STREET VIADUCT\300_CREATE\310_HA WORKING FILES\306_TECHNICAL\06_100-CD\50_SHEETS\L-123\125 GRADING PLAN.DWG - MEGAN ESOPENKO

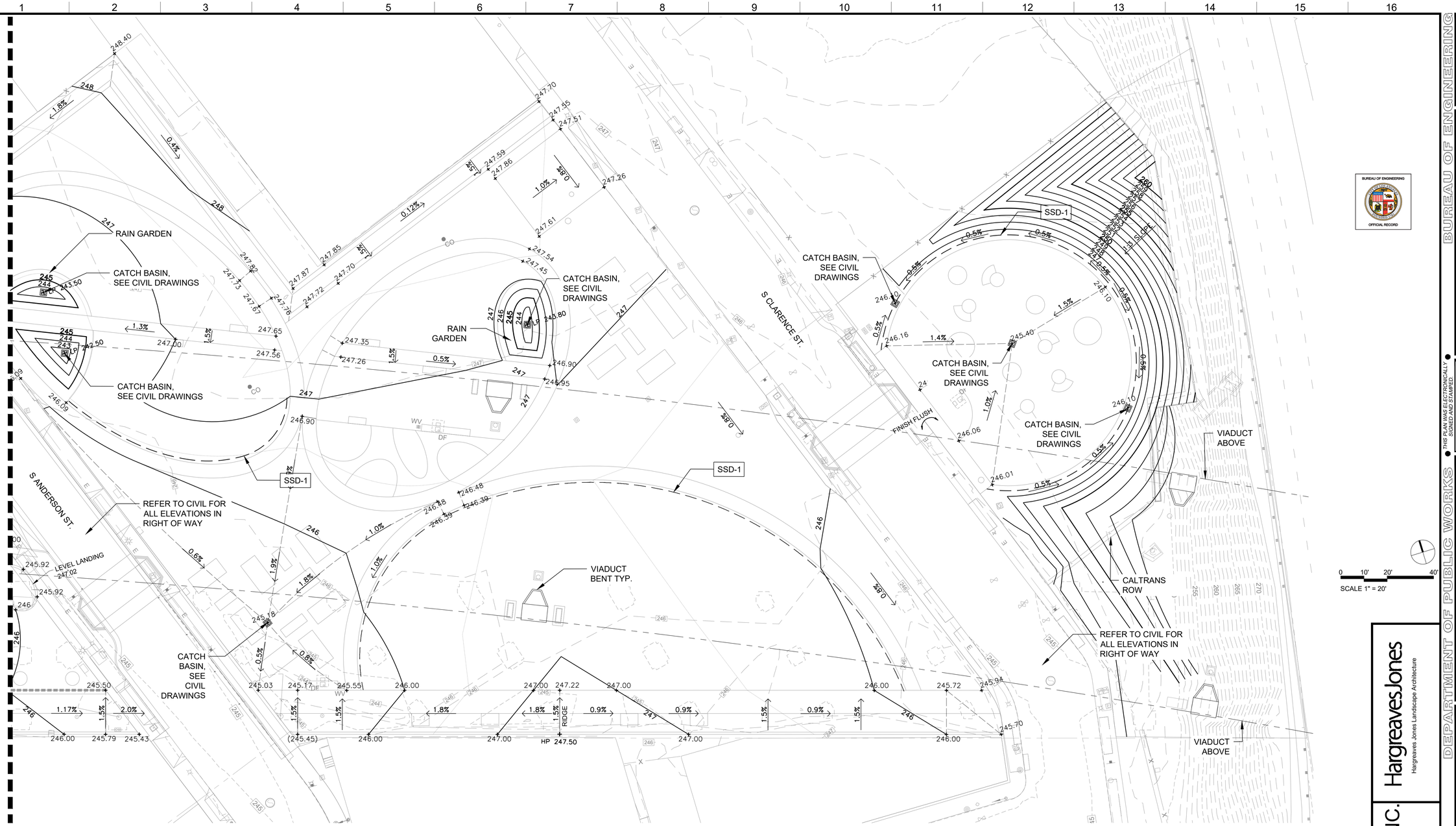

GRADING PLAN LEGEND

— — —	5' OFFSET OF LIMIT OF WORK
100	EXISTING CONTOUR LINE
100	PROPOSED CONTOUR LINE
(XXXX.XX)	EXISTING SPOT ELEVATION
HP XXXX.XX	HIGH POINT - SPOT ELEVATION
LP XXXX.XX	LOW POINT - SPOT ELEVATION
XXXX.XX	SPOT ELEVATION
2.0%	SLOPE
IE	INVERT ELEVATION
- - - - -	GRADE BREAK (GB)

SHEET NOTES

1. SEE SHEET L-001 FOR GENERAL LANDSCAPE NOTES, ABBREVIATIONS & SYMBOLS.
2. SEE DRAWINGS FOR THE CROSSPITCH. ALL PAVED PATHWAYS TO HAVE A CROSS SLOPE OF AT LEAST 1:100 (1%). CROSS SLOPES SHALL NOT EXCEED 1:50 (2%).
3. VERIFY EXISTING CURB ELEVATIONS AND ADJUST SIDEWALK CROSS SLOPES ACCORDINGLY
4. SEE CIVIL DRAWINGS C-403 - C-411 FOR STORM DRAIN PLANS.
5. FIELD VERIFY EXISTING ELEVATIONS ALONG ABUTTING PROPERTY BOUNDARIES

THE CITY OF LOS ANGELES OR ITS OFFICERS OR AGENTS SHALL NOT BE RESPONSIBLE FOR THE ACCURACY OR COMPLETENESS OF ELECTRONIC COPIES OF THIS PLAN SHEET.

REVISION DATES (DESIGN STAGE ONLY)

Sheet Version 3.0

BUREAU OF ENGINEERING

OFFICIAL RECORD

BUREAU OF ENGINEERING

CITY OF LOS ANGELES DEPARTMENT OF PUBLIC WORKS

ENGINEERING CITY OF LOS ANGELES

NO.	REVISIONS:	DATE:	BY:

BUILDING NO.

INDEX NO. MF-300501

THIS PLAN WAS ELECTRONICALLY SIGNED AND STAMPED.

LICENSED LANDSCAPE ARCHITECT Mary Margaret Jones #2616 Renewal Date Date STATE OF CALIFORNIA

CITY ENGINEER

TED ALLEN, P.E.

DESIGN GROUP

LANDSCAPE ARCHITECT: MARY MARGARET JONES LIC. NO. 07/11/2022

DESIGNED BY: MARY MARGARET JONES

DRAWN BY: MEGAN ESOPENKO

CHECKED BY: GAVIN MCMILLAN

APPROVED BY: MARY MARGARET JONES

VERT. CONTROL: BM 12-04070, 1929 (NGVD29) - 1985 ADJUSTMENT

HORIZ. CONTROL: GPS; PID AE 1704, EPOCH 1991.35

SHEET TITLE: GRADING PLAN SHEET 5

PROJECT: SIXTH STREET PARK, ARTS AND RIVER CONNECTIVITY IMPROVEMENTS (PARC)

ADDRESS: SIXTH STREET OVER THE LOS ANGELES RIVER

PLANS PREPARED BY:

TETRA TECH, INC.

707 WILSHIRE BLVD, 23RD FLR.
LOS ANGELES, CA 90017
PHONE: (213) 239-8866

HargreavesJones

Hargreaves Jones Landscape Architecture

WORK ORDER NO. E700235D

FILE NO. --

DRAWING NO. L-125

SHEET 96 OF 295 SHEETS

2022-07-05 8:58:24 PM - C:\USERS\MESOPENKO\ONEDRIVE - HARGREAVES\SSV 1601 - SIXTH STREET VIADUCT\300_CREATE\310_HA WORKING FILES\06_TECHNICAL\06_100-CD\50_SHEETS\L-120-125 GRADING PLAN.DWG - MEGAN ESOPENKO

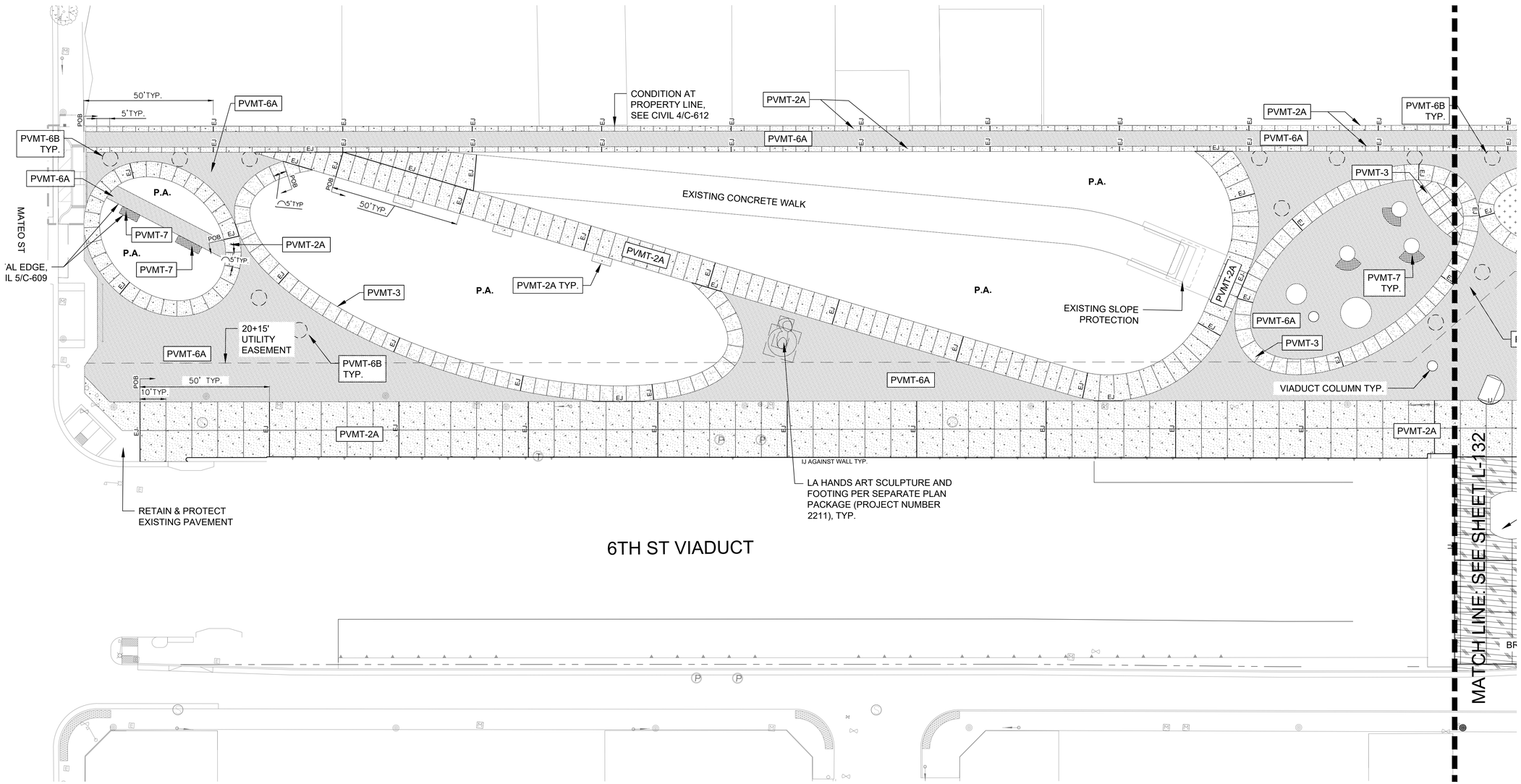

6TH ST VIADUCT

MATERIALS PLAN LEGEND

- PVMT 1 - STONE UNIT PAVERS
- PVMT 2 A/B - CIP CONCRETE
- PVMT 3 - CIP CONCRETE
- PVMT 4 - COATED CONCRETE
- PVMT 5 - CONCRETE UNIT PAVERS
- PVMT 6 A/B - CRUSHED STONE
- PVMT 7 - CRUSHED STONE ADMIXTURE
- PVMT 8 - TUNNEL RESURFACING
- PVMT 9 A/B - COATED ASPHALT
- PVMT 10 A/B - SAFETY SURFACING
- PVMT 11 - SYNTHETIC GRASS

- CONTROL JOINT
- EJ — EXPANSION JOINT
- IJ — ISOLATION JOINT

SHEET NOTES

1. SEE SHEET L-001 FOR GENERAL LANDSCAPE NOTES, ABBREVIATIONS & SYMBOLS.
2. SEE SHEET L-030 FOR MATERIALS LEGEND AND SCHEDULES.
3. SEE STRUCTURAL DRAWINGS FOR WALLS AND FOOTING.
4. SEE ENLARGEMENT L-401 FOR WEST PARK - DOG PARK & FITNESS LAYOUT
5. SEE CIVIL DRAWINGS 7/C-600 FOR ALL JOINT DETAILS
6. SEE CIVIL DRAWINGS C-609 FOR ALL PAVEMENT DETAILS
7. SEE CIVIL DRAWINGS C-200 - C-204 FOR SITE HORIZONTAL CONTROL PLANS AND PAVEMENT DETAILS.

BUREAU OF ENGINEERING
OFFICIAL RECORD

0 10' 20' 40'
SCALE 1" = 20'

THE CITY OF LOS ANGELES OR ITS OFFICERS OR AGENTS SHALL NOT BE RESPONSIBLE FOR THE ACCURACY OR COMPLETENESS OF ELECTRONIC COPIES OF THIS PLAN SHEET.

REVISION DATES (DESIGN STAGE ONLY)

Sheet Version 3.0

BUREAU OF ENGINEERING
ENGINEERING
CITY OF LOS ANGELES

NO. REVISIONS: DATE: BY:

BUILDING NO.

INDEX NO. MF-300501

LICENSED LANDSCAPE ARCHITECT MARY MARGARET JONES No. 2516 STATE OF CALIFORNIA
THIS PLAN WAS ELECTRONICALLY SIGNED AND STAMPED
Date
Authorized Date

CITY OF LOS ANGELES DEPARTMENT OF PUBLIC WORKS

CITY ENGINEER
TED ALLEN, P.E.
DATE:

DESIGN GROUP
LANDSCAPE ARCHITECT: MARY MARGARET JONES LIC. NO. 2516
DESIGNED BY: MARY MARGARET JONES
DRAWN BY: MEGAN ESOPENKO
CHECKED BY: GAVIN MCMILLAN
APPROVED BY: MARY MARGARET JONES

VERT. CONTROL: BM 12-04070, 1929 (NGVD29) - 1985 ADJUSTMENT
HORIZ. CONTROL GPS; PID AE 1704, EPOCH 1991.35

SHEET TITLE: HARDSCAPE PLAN SHEET 1

PROJECT: SIXTH STREET PARK, ARTS AND RIVER CONNECTIVITY IMPROVEMENTS (PARC)

ADDRESS: SIXTH STREET OVER THE LOS ANGELES RIVER

HargreavesJones
Hargreaves Jones Landscape Architecture

PLANS PREPARED BY:
TETRA TECH, INC.
707 WILSHIRE BLVD, 23RD FLR.
LOS ANGELES, CA 90017
PHONE: (213) 239-8866

WORK ORDER NO. E700235D
FILE NO. --
DRAWING NO. L-131
SHEET 97 OF 295 SHEETS

2022-07-05 6:58:39 PM - C:\USERS\MESOPENKO\ONEDRIVE - HARGREAVESJSSV 1901 - SIXTH STREET VIADUCT\300_CREATE\310_HA WORKING FILES\06_TECHNICAL\06_100-CD\50_SHEETS\L-130-135 HARDSCAPE PLAN.DWG - MEGAN ESOPENKO

MATERIALS PLAN LEGEND

- PVMT 1 - STONE UNIT PAVERS
- PVMT 2 A/B - CIP CONCRETE
- PVMT 3 - CIP CONCRETE
- PVMT 4 - COATED CONCRETE
- PVMT 5 - CONCRETE UNIT PAVERS
- PVMT 6 A/B - CRUSHED STONE
- PVMT 7 - CRUSHED STONE ADMIXTURE
- PVMT 8 - TUNNEL RESURFACING
- PVMT 9 A/B - COATED ASPHALT
- PVMT 10 A/B - SAFETY SURFACING
- PVMT 11 - SYNTHETIC GRASS

- CONTROL JOINT
- EJ EXPANSION JOINT
- IJ ISOLATION JOINT

SHEET NOTES

1. SEE SHEET L-001 FOR GENERAL LANDSCAPE NOTES, ABBREVIATIONS & SYMBOLS.
2. SEE SHEETS L-030 FOR MATERIALS LEGEND AND SCHEDULES.
3. SEE STRUCTURAL DRAWINGS FOR WALLS AND FOOTING.
4. SEE ENLARGEMENT L-402 FOR ARTS PLAZA - PLANTING AREA FENCE LAYOUT & ENLARGEMENT L-403 FOR ARTS PLAZA - GUARDRAIL & FENCE LAYOUT
5. SEE CIVIL DRAWINGS 7/C-600 FOR ALL JOINT DETAILS
6. SEE CIVIL DRAWINGS C-609 FOR ALL PAVEMENT DETAILS
7. SEE CIVIL DRAWINGS C-200 - C-204 FOR SITE HORIZONTAL CONTROL PLANS AND PAVEMENT DETAILS.

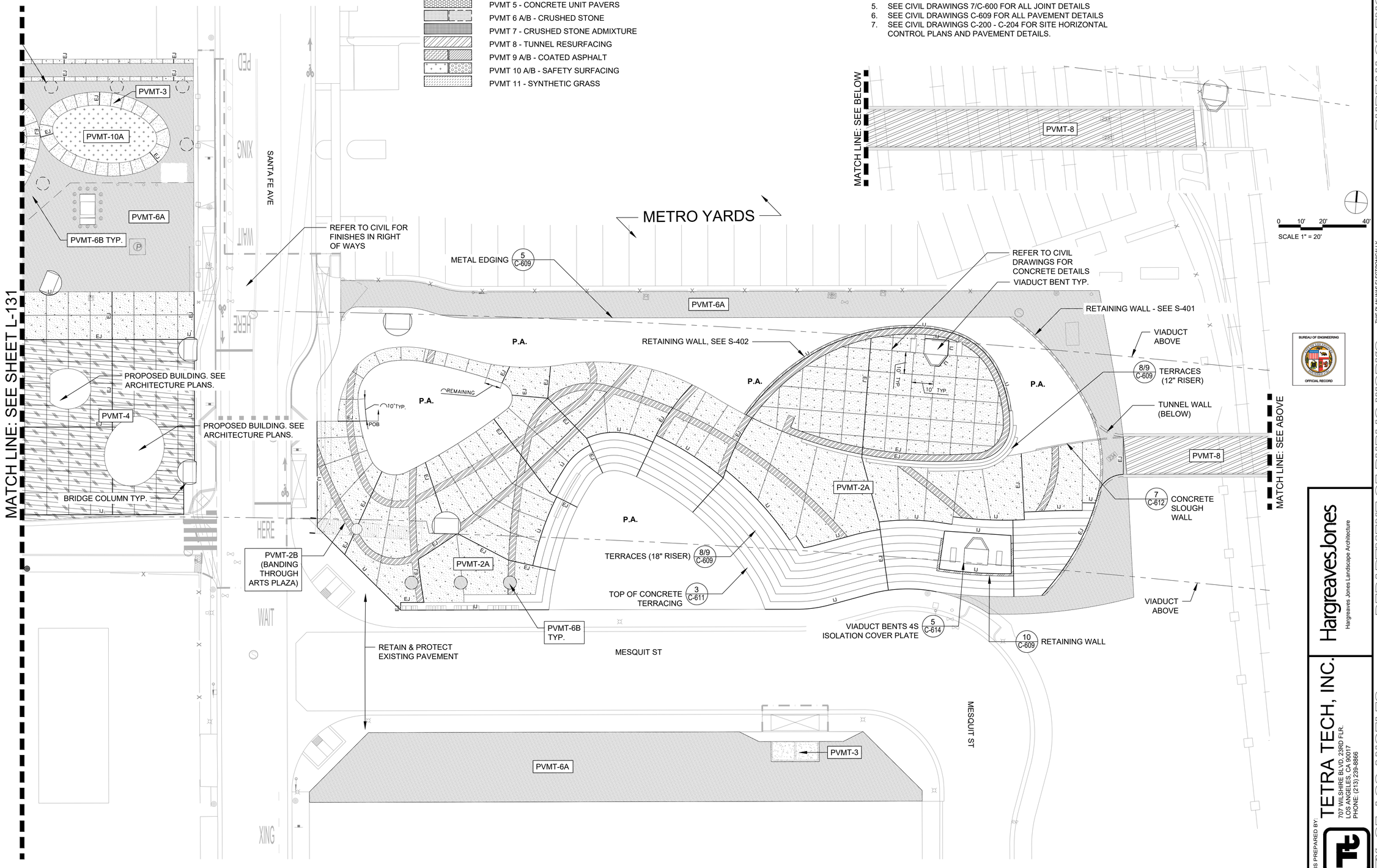

THE CITY OF LOS ANGELES OR ITS OFFICERS OR AGENTS SHALL NOT BE RESPONSIBLE FOR THE ACCURACY OR COMPLETENESS OF ELECTRONIC COPIES OF THIS PLAN SHEET.

REVISION DATES (DESIGN STAGE ONLY)

Sheet Version 3.0

BUREAU OF ENGINEERING

ENGINEERING
CITY OF LOS ANGELES

NO.	REVISIONS:	DATE:	BY:

BUILDING NO.

INDEX NO. MF-300501

THIS PLAN WAS ELECTRONICALLY SIGNED AND STAMPED.

LICENSED LANDSCAPE ARCHITECT • Mary Margaret Jones #2615 • Retained Date • Date • STATE OF CALIFORNIA

BUREAU OF ENGINEERING OFFICIAL RECORD

CITY OF LOS ANGELES DEPARTMENT OF PUBLIC WORKS

TED ALLEN, P.E. CITY ENGINEER

DESIGN GROUP

LANDSCAPE ARCHITECT: MARY MARGARET JONES LIC. NO. DATE: 07/11/2022

DESIGNED BY: MARY MARGARET JONES

DRAWN BY: MEGAN ESOPENKO

CHECKED BY: GAVIN MCMILLAN

APPROVED BY: MARY MARGARET JONES

Hargreaves Jones
Hargreaves Jones Landscape Architecture

PLANS PREPARED BY:
TETRA TECH, INC.
707 WILSHIRE BLVD, 23RD FLR.
LOS ANGELES, CA 90017
PHONE: (213) 239-8866

VERT. CONTROL: BM 12-04070, 1929 (NGVD29) - 1985 ADJUSTMENT
HORIZ. CONTROL: GPS; PID AE 1704, EPOCH 1991.35

SHEET TITLE: HARDSCAPE PLAN SHEET 2

PROJECT: SIXTH STREET PARK, ARTS AND RIVER CONNECTIVITY IMPROVEMENTS (PARC)

ADDRESS: SIXTH STREET OVER THE LOS ANGELES RIVER

WORK ORDER NO. E700235D

FILE NO. --

DRAWING NO. L-132

SHEET 98 OF 295 SHEETS

2022-07-05 8:58:48 PM - C:\USERS\MESOPENKO\ONEDRIVE - HARGREAVES\SSV 1601 - SIXTH STREET VIADUCT\300_CREATE\310_HA WORKING FILES\06_TECHNICAL\06_100-CD\50_SHEETS\L-130-135 HARDSCAPE PLAN.DWG - MEGAN ESOPENKO

MATERIALS PLAN LEGEND

- PVMT 1 - STONE UNIT PAVERS
- PVMT 2 A/B - CIP CONCRETE
- PVMT 3 - CIP CONCRETE
- PVMT 4 - COATED CONCRETE
- PVMT 5 - CONCRETE UNIT PAVERS
- PVMT 6 A/B - CRUSHED STONE
- PVMT 7 - CRUSHED STONE ADMIXTURE
- PVMT 8 - TUNNEL RESURFACING
- PVMT 9 A/B - COATED ASPHALT
- PVMT 10 A/B - SAFETY SURFACING
- PVMT 11 - SYNTHETIC GRASS

- CONTROL JOINT
- EJ — EXPANSION JOINT
- IJ — ISOLATION JOINT

SHEET NOTES

1. SEE SHEET L-001 FOR GENERAL LANDSCAPE NOTES, ABBREVIATIONS & SYMBOLS.
2. SEE SHEETS L-030 FOR MATERIALS LEGEND
3. SEE STRUCTURAL DRAWINGS FOR WALLS AND FOOTING.
4. SEE ENLARGEMENT L-404 FOR EAST PARK - NORTHERN EDGE FENCE LAYOUT & ENLARGEMENT L-405 FOR EAST PARK SOCCER FIELD LAYOUT
5. SEE CIVIL DRAWINGS 7/C-600 FOR ALL JOINT DETAILS
6. SEE CIVIL DRAWINGS C-609 FOR ALL PAVEMENT DETAILS
7. SEE CIVIL DRAWINGS C-200 - C-204 FOR SITE HORIZONTAL CONTROL PLANS AND PAVEMENT DETAILS.

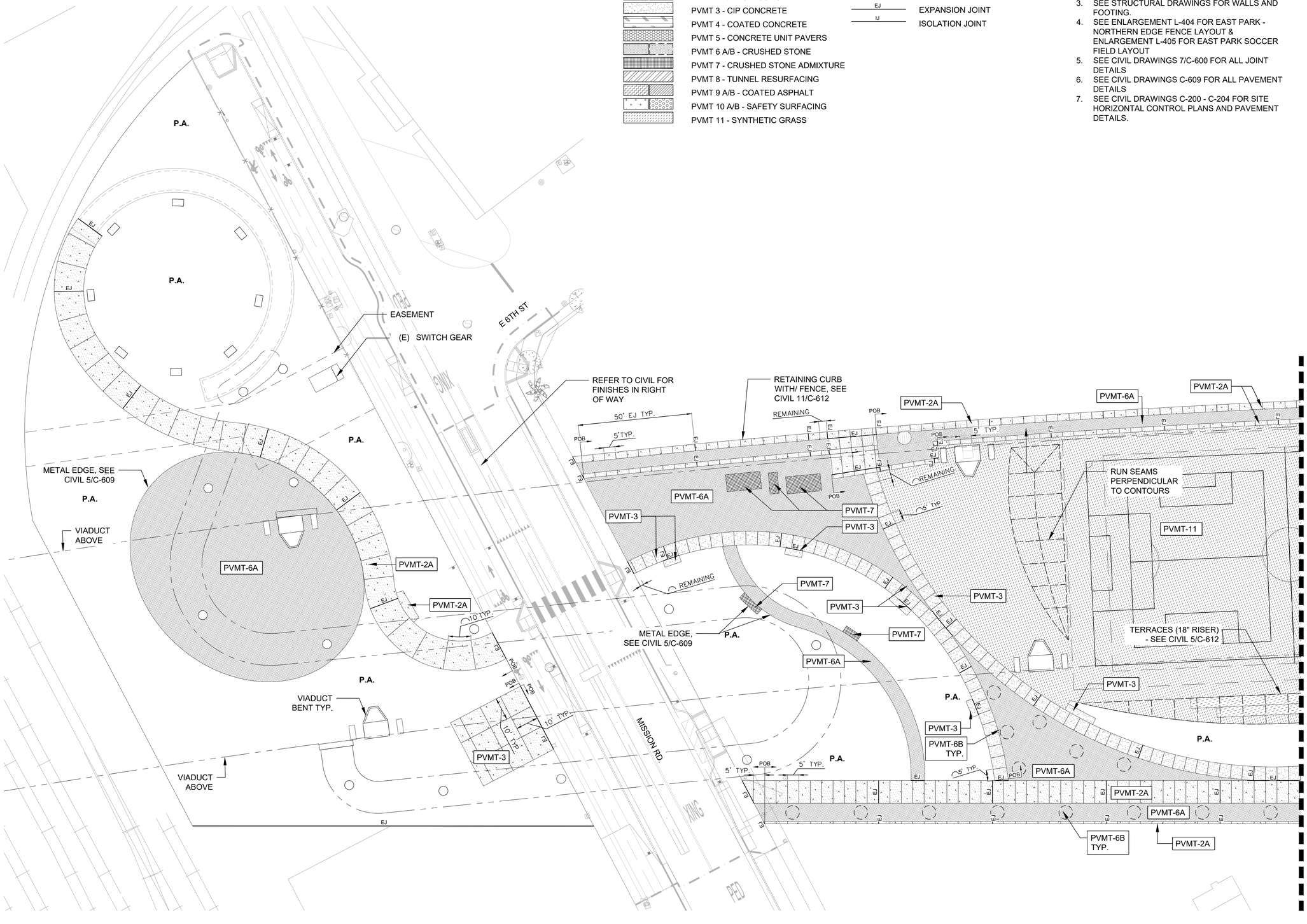

THE CITY OF LOS ANGELES OR ITS OFFICERS OR AGENTS SHALL NOT BE RESPONSIBLE FOR THE ACCURACY OR COMPLETENESS OF ELECTRONIC COPIES OF THIS PLAN SHEET.

REVISION DATES (DESIGN STAGE ONLY)

Sheet Version 3.0

BUREAU OF ENGINEERING
OFFICIAL RECORD

ENGINEERING
CITY OF LOS ANGELES

BUREAU OF ENGINEERING

NO.	REVISIONS:	DATE	BY:

BUILDING NO.

INDEX NO. MF-300501

LICENSED LANDSCAPE ARCHITECT TED ALLEN LANDSCAPE ARCHITECT License Number 6576 STATE OF CALIFORNIA Date 07/11/2022 Reference Date

THIS PLAN WAS ELECTRONICALLY SIGNED AND STAMPED

CITY OF LOS ANGELES DEPARTMENT OF PUBLIC WORKS

CITY ENGINEER
TED ALLEN, P.E.
DATE: 07/11/2022
LIC. NO.

DESIGN GROUP	
LANDSCAPE ARCHITECT: MARY MARGARET JONES	
DESIGNED BY: MARY MARGARET JONES	
DRAWN BY: MEGAN ESOPENKO	
CHECKED BY: GAVIN MCMILLAN	
APPROVED BY: MARY MARGARET JONES	

VERT. CONTROL: BM 12-04070, 1929 (NGVD29) - 1985 ADJUSTMENT
HORIZ. CONTROL: GPS; PID AE 1704, EPOCH 1991.35

SHEET TITLE: HARDSCAPE PLAN SHEET 3

PROJECT: SIXTH STREET PARK, ARTS AND RIVER CONNECTIVITY IMPROVEMENTS (PARC)

ADDRESS: SIXTH STREET OVER THE LOS ANGELES RIVER

HargreavesJones
Hargreaves Jones Landscape Architecture

PLANS PREPARED BY:
TETRA TECH, INC.
707 WILSHIRE BLVD. 23RD FLR.
LOS ANGELES, CA 90017
PHONE: (213) 239-8866

WORK ORDER NO. E700235D
FILE NO. --
DRAWING NO. L-133
SHEET 99 OF 295 SHEETS

2022-07-05 8:58:56 PM - C:\USERS\MESOPENKO\ONEDRIVE - HARGREAVESJSV 1601 - SIXTH STREET VIADUCT\300_CREATE\310_HA WORKING FILES\M6_TECHNICAL\06_100-CD\50_SHEETS\L-133_HARDSCAPE PLAN.DWG - MEGAN ESOPENKO

MATERIALS PLAN LEGEND

- PVMT 1 - STONE UNIT PAVERS
- PVMT 2 A/B - CIP CONCRETE
- PVMT 3 - CIP CONCRETE
- PVMT 4 - COATED CONCRETE
- PVMT 5 - CONCRETE UNIT PAVERS
- PVMT 6 A/B - CRUSHED STONE
- PVMT 7 - CRUSHED STONE ADMIXTURE
- PVMT 8 - TUNNEL RESURFACING
- PVMT 9 A/B - COATED ASPHALT
- PVMT 10 A/B - SAFETY SURFACING
- PVMT 11 - SYNTHETIC GRASS

- CONTROL JOINT
- EJ — EXPANSION JOINT
- IJ — ISOLATION JOINT

SHEET NOTES

1. SEE SHEET L-001 FOR GENERAL LANDSCAPE NOTES, ABBREVIATIONS & SYMBOLS.
2. SEE SHEETS L-030 FOR MATERIALS LEGEND AND SCHEDULES.
3. SEE STRUCTURAL DRAWINGS FOR WALLS AND FOOTING.
4. SEE ENLARGEMENT L-404 FOR EAST PARK: NORTHERN EDGE FENCE LAYOUT, ENLARGEMENT L-405 FOR EAST PARK: SOCCER FIELD LAYOUT, ENLARGEMENT L-406 FOR EAST PARK: BASKETBALL COURT LAYOUT & ENLARGEMENT L-407 FOR EAST PARK: MISTING PAD LAYOUT
5. SEE CIVIL DRAWINGS 7/C-600 FOR ALL JOINT DETAILS
6. SEE CIVIL DRAWINGS C-609 FOR ALL PAVEMENT DETAILS
7. SEE CIVIL DRAWINGS C-200 - C-204 FOR SITE HORIZONTAL CONTROL PLANS AND PAVEMENT DETAILS.

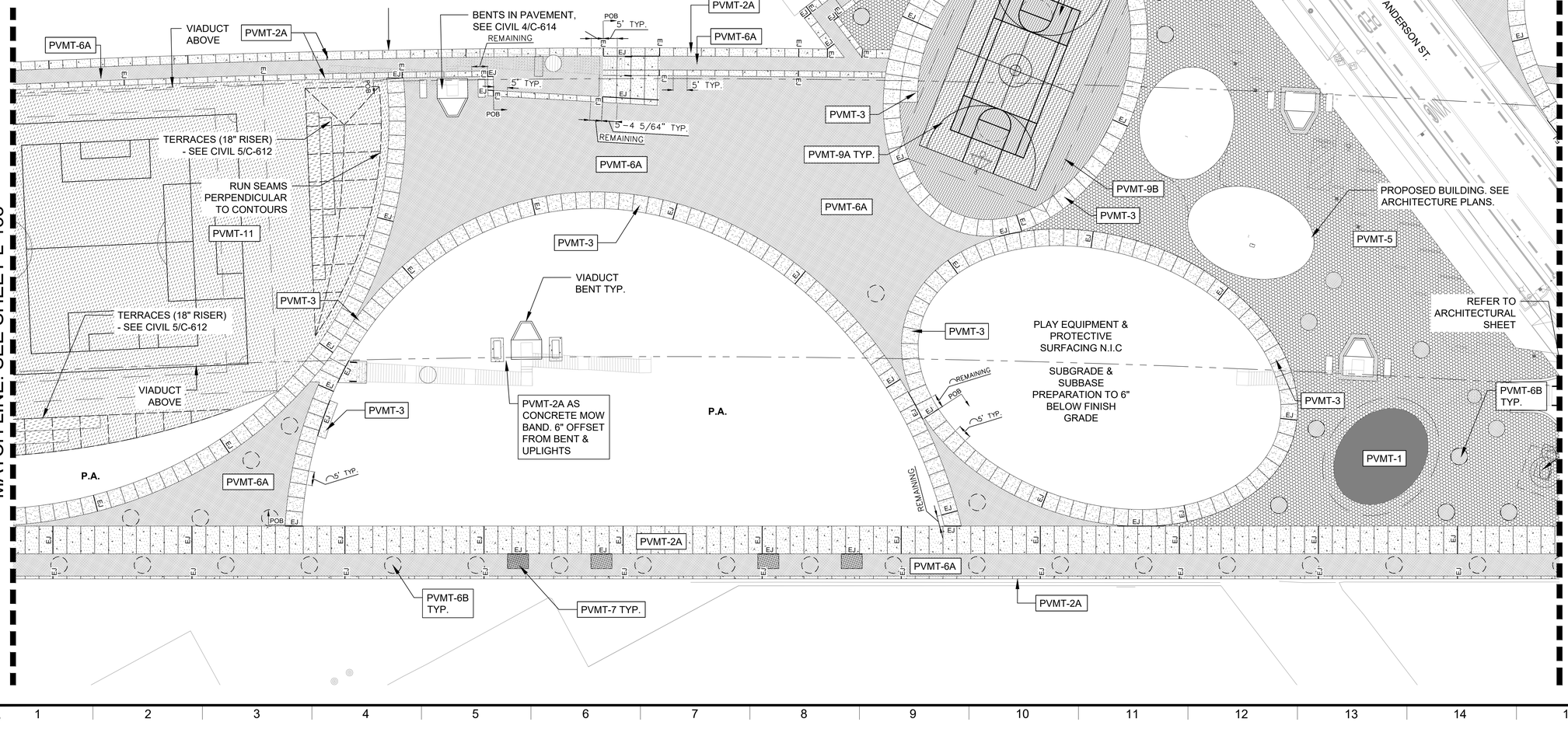

BUREAU OF ENGINEERING
OFFICIAL RECORD

THE CITY OF LOS ANGELES OR ITS OFFICERS OR AGENTS SHALL NOT BE RESPONSIBLE FOR THE ACCURACY OR COMPLETENESS OF ELECTRONIC COPIES OF THIS PLAN SHEET.

REVISION DATES (DESIGN STAGE ONLY)

Sheet Version 3.0

BUREAU OF ENGINEERING

NO.	REVISIONS:	DATE	BY:

BUILDING NO.

INDEX NO. MF-300501

ENGINEERING
CITY OF LOS ANGELES

LICENSED LANDSCAPE ARCHITECT, LICENSE #2516 • STATE OF CALIFORNIA
Richmond Dale
Date

THIS PLAN WAS ELECTRONICALLY SIGNED AND STAMPED

CITY OF LOS ANGELES DEPARTMENT OF PUBLIC WORKS

CITY ENGINEER
TED ALLEN, P.E.
DESIGN GROUP
DATE: 07/11/2022
LIC. NO.

LANDSCAPE ARCHITECT: MARY MARGARET JONES
DESIGNED BY: MARY MARGARET JONES
DRAWN BY: MEGAN ESOPENKO
CHECKED BY: GAVIN MCMILLAN
APPROVED BY: MARY MARGARET JONES

SHEET TITLE: HARDSCAPE PLAN SHEET 4

PROJECT: SIXTH STREET PARK, ARTS AND RIVER CONNECTIVITY IMPROVEMENTS (PARC)

ADDRESS: SIXTH STREET OVER THE LOS ANGELES RIVER

HargreavesJones
Hargreaves Jones Landscape Architecture

PLANS PREPARED BY:
TETRA TECH, INC.
707 WILSHIRE BLVD. 23RD FLR.
LOS ANGELES, CA 90017
PHONE: (213) 239-8866

VERT. CONTROL: BM 12-04070, 1929 (NGVD29) - 1985 ADJUSTMENT
HORIZ. CONTROL: GPS; PID AE 1704, EPOCH 1991.35

WORK ORDER NO. E700235D
FILE NO. --
DRAWING NO. L-134
SHEET 100 OF 295 SHEETS

2022-07-05 8:59:07 PM - C:\USERS\MESOPENKO\ONEDRIVE - HARGREAVESSSV 1601 - SIXTH STREET VIADUCT\300_CREATE\310_HA WORKING FILES\06_TECHNICAL\06_100-CD\50_SHEETS\L-130-135 HARDSCAPE PLAN.DWG - MEGAN ESOPENKO

THE CITY OF LOS ANGELES OR ITS OFFICERS OR AGENTS SHALL NOT BE RESPONSIBLE FOR THE ACCURACY OR COMPLETENESS OF ELECTRONIC COPIES OF THIS PLAN SHEET.

MATCH LINE: SEE SHEET L-134

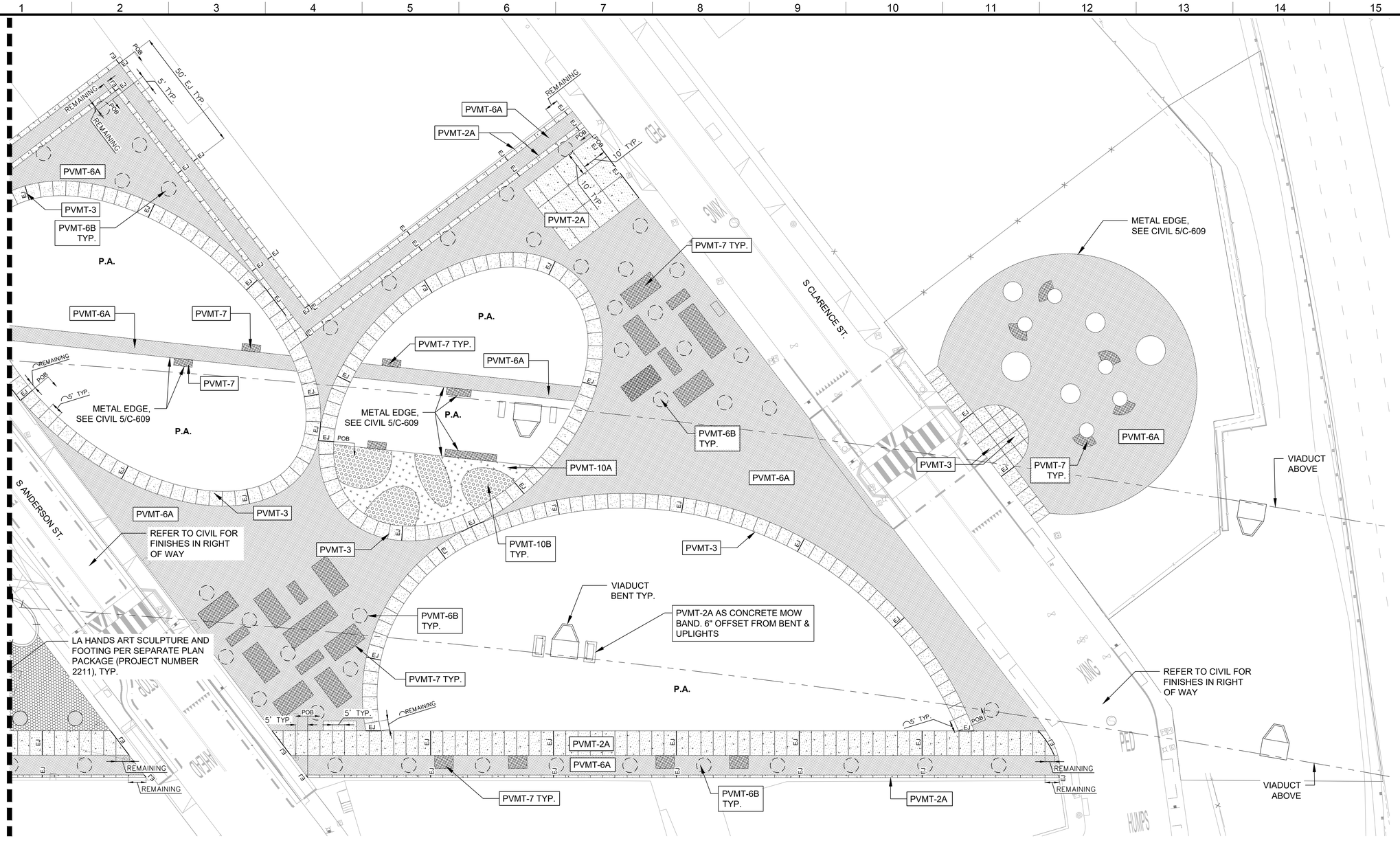

MATERIALS PLAN LEGEND

- PVMT 1 - STONE UNIT PAVERS
- PVMT 2 A/B - CIP CONCRETE
- PVMT 3 - CIP CONCRETE
- PVMT 4 - COATED CONCRETE
- PVMT 5 - CONCRETE UNIT PAVERS
- PVMT 6 A/B - CRUSHED STONE
- PVMT 7 - CRUSHED STONE ADMIXTURE
- PVMT 8 - TUNNEL RESURFACING
- PVMT 9 A/B - COATED ASPHALT
- PVMT 10 A/B - SAFETY SURFACING
- PVMT 11 - SYNTHETIC GRASS

- CONTROL JOINT
- EJ — EXPANSION JOINT
- IJ — ISOLATION JOINT

SHEET NOTES

1. SEE SHEET L-001 FOR GENERAL LANDSCAPE NOTES, ABBREVIATIONS & SYMBOLS.
2. SEE SHEETS L-030 FOR MATERIALS LEGEND AND SCHEDULES.
3. SEE STRUCTURAL DRAWINGS FOR WALLS AND FOOTING.
4. SEE ENLARGEMENT L-408 FOR EAST PARK: PLANTING FENCE LAYOUT, ENLARGEMENT L-409 FOR EAST PARK: PLANTING FENCE & FITNESS LAYOUT & ENLARGEMENT L-410 FOR EAST PARK: DOG PARK LAYOUT.
5. SEE CIVIL DRAWINGS 7/C-600 FOR ALL JOINT DETAILS
6. SEE CIVIL DRAWINGS C-609 FOR ALL PAVEMENT DETAILS
7. SEE CIVIL DRAWINGS C-200 - C-204 FOR SITE HORIZONTAL CONTROL PLANS AND PAVEMENT DETAILS.

REVISION DATES (DESIGN STAGE ONLY)

Sheet Version 3.0

BUREAU OF ENGINEERING
OFFICIAL RECORD

ENGINEERING
CITY OF LOS ANGELES

BUREAU OF ENGINEERING

NO. | REVISIONS: | DATE | BY:

BUILDING NO.

INDEX NO. MF-300501

LOCKESHA MARIE LANGSTON LANDSCAPE ARCHITECT #2516 STATE OF CALIFORNIA
THIS PLAN WAS ELECTRONICALLY SIGNED AND STAMPED
Date
Renewal Date

CITY ENGINEER
TED ALLEN, P.E.
DATE: 07/11/2022
DESIGN GROUP
LANDSCAPE ARCHITECT: MARY MARGARET JONES LIC. NO.
DESIGNED BY: MARY MARGARET JONES
DRAWN BY: MEGAN ESOPENKO
CHECKED BY: GAVIN MCMILLAN
APPROVED BY: MARY MARGARET JONES

CITY OF LOS ANGELES DEPARTMENT OF PUBLIC WORKS

VERT. CONTROL: BM 12-04070, 1929 (NGVD29) - 1985 ADJUSTMENT
HORIZ. CONTROL: GPS; PID AE 1704, EPOCH 1991.35

SHEET TITLE: HARDSCAPE PLAN SHEET 5

PROJECT: SIXTH STREET PARK, ARTS AND RIVER CONNECTIVITY IMPROVEMENTS (PARC)

ADDRESS: SIXTH STREET OVER THE LOS ANGELES RIVER

HargreavesJones
Hargreaves Jones Landscape Architecture

PLANS PREPARED BY:
TETRA TECH, INC.
707 WILSHIRE BLVD, 23RD FLR.
LOS ANGELES, CA 90017
PHONE: (213) 239-8866

WORK ORDER NO. E700235D
FILE NO. --
DRAWING NO. L-135
SHEET 101 OF 295 SHEETS

2022-07-05 8:59:17 PM - C:\USERS\MESOPENKO\ONEDRIVE - HARGREAVESJSV 1601 - SIXTH STREET VIADUCT\300_CREATE\310_HA WORKING FILES\06_TECHNICAL\06_100-CD\50_SHEETS\L-130-135 HARDSCAPE PLAN.DWG - MEGAN ESOPENKO

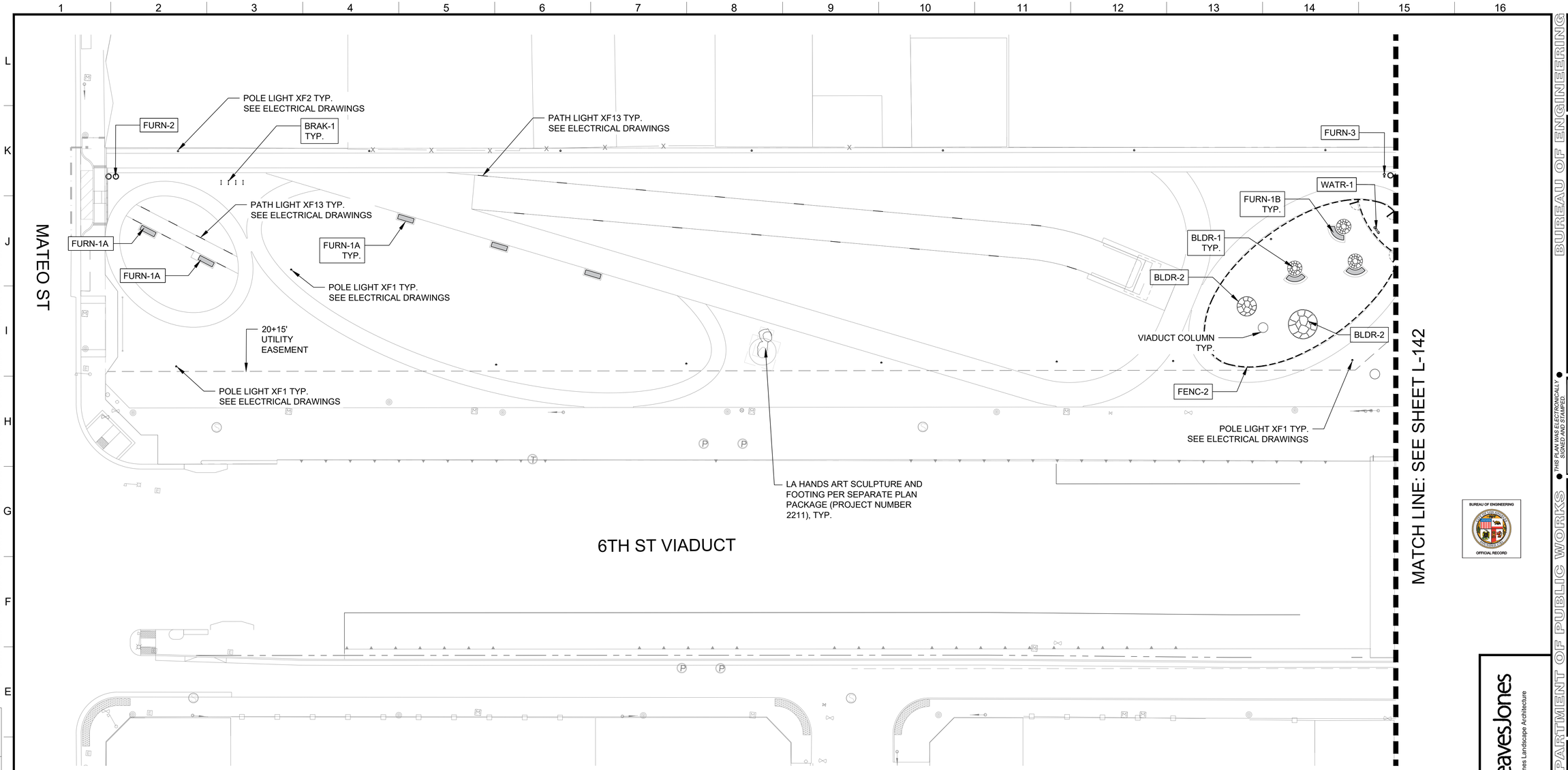

SITE FURNISHING PLAN LEGEND

- FURN 1A - STRAIGHT BENCH
- FURN 1B - CURVED BENCH
- FURN 2 - WASTE RECEPTACLES
- FURN 3 - DOG WASTE UNIT
- FURN 4 - PICNIC UNIT
- FURN 5 - PICNIC GRILL
- FURN 6 - PRECAST BENCH 24"
- FURN 7 - PRECAST BENCH 48"
- BRAK 1 - BIKE RACK
- WATR 1 - WATER STATION
- BLDR 1 - SMALL BOULDERS
- BLDR 2 - LARGE BOULDERS
- SKAT 1 - SKATE DETERRENTS
- GRAL 1 - GUARDRAIL
- GRAL 2 - GUARDRAIL-WITH HANDRAIL
- FENC 1 - 2' FENCE
- FENC 2 - 4' FENCE
- FENC 3 - 8' FENCE
- FENC 4 - 20' FENCE

SHEET NOTES

1. SEE SHEET L-001 FOR GENERAL LANDSCAPE NOTES, ABBREVIATIONS & SYMBOLS.
2. SEE SHEETS L-040 TO L-042 FOR FURNISHINGS
3. SEE L-401 FOR DOG PARK & FITNESS LAYOUT ENLARGEMENT
4. SEE ELECTRICAL SHEETS E-407 - E-501 FOR LIGHTING SCHEDULE & DETAILS.
5. SEE ENLARGEMENT L-401 FOR WEST PARK - DOG PARK & FITNESS LAYOUT

0 10' 20' 40'
SCALE 1" = 20'

THE CITY OF LOS ANGELES OR ITS OFFICERS OR AGENTS SHALL NOT BE RESPONSIBLE FOR THE ACCURACY OR COMPLETENESS OF ELECTRONIC COPIES OF THIS PLAN SHEET.

REVISION DATES (DESIGN STAGE ONLY)

Sheet Version 3.0

BUREAU OF ENGINEERING

ENGINEERING
CITY OF LOS ANGELES

NO.	REVISIONS:	DATE:	BY:

BUILDING NO.

INDEX NO. MF-300501

THIS PLAN WAS ELECTRONICALLY SIGNED AND STAMPED.

LICENSED LANDSCAPE ARCHITECT
Mary Margaret Jones #2515
Registered Date
STATE OF CALIFORNIA

CITY OF LOS ANGELES DEPARTMENT OF PUBLIC WORKS

TED ALLEN, P.E.
DESIGN GROUP
CITY ENGINEER
DATE: 07/11/2022
LANDSCAPE ARCHITECT: MARY MARGARET JONES LIC. NO.
DESIGNED BY: MARY MARGARET JONES
DRAWN BY: MEGAN ESOPENKO
CHECKED BY: GAVIN MCMILLAN
APPROVED BY: MARY MARGARET JONES

VERT. CONTROL: BM 12-04070, 1929 (NGVD29) - 1985 ADJUSTMENT
HORIZ. CONTROL: GPS; PID AE 1704, EPOCH 1991.35

SHEET TITLE: FURNITURE & SIGNAGE PLAN SHEET 1

PROJECT: SIXTH STREET PARK, ARTS AND RIVER CONNECTIVITY IMPROVEMENTS (PARC)

ADDRESS: SIXTH STREET OVER THE LOS ANGELES RIVER

PLANS PREPARED BY:
TETRA TECH, INC.
707 WILSHIRE BLVD, 23RD FLR.
LOS ANGELES, CA 90017
PHONE: (213) 239-8866

HargreavesJones
Hargreaves Jones Landscape Architecture

WORK ORDER NO. E700235D
FILE NO. --
DRAWING NO. L-141
SHEET 102 OF 295 SHEETS

2022-07-05 8:59:35 PM - C:\USERS\MESOPENKO\ONEDRIVE - HARGREAVES\SSV 1601 - SIXTH STREET VIADUCT\300_CREATE\310_HA WORKING FILES\06_TECHNICAL\06_100-CD\50_SHEETS\L-140-145 LIGHTING-SIGNAGE AND FURNITURE.DWG - MEGAN ESOPENKO

SITE FURNISHING PLAN LEGEND

- FURN 1A - STRAIGHT BENCH
- FURN 1B - CURVED BENCH
- FURN 2 - WASTE RECEPTACLES
- FURN 3 - DOG WASTE UNIT
- FURN 4 - PICNIC UNIT
- FURN 5 - PICNIC GRILL
- FURN 6 - PRECAST BENCH 24"
- FURN 7 - PRECAST BENCH 48"
- BRAK 1 - BIKE RACK
- WATR 1 - WATER STATION
- BLDR 1 - SMALL BOULDERS
- BLDR 2 - LARGE BOULDERS
- SKAT 1 - SKATE DETERRENTS
- GRAL 1 - GUARDRAIL
- GRAL 2 - GUARDRAIL-WITH HANDRAIL
- FENC 1 - 2' FENCE
- FENC 2 - 4' FENCE
- FENC 3 - 8' FENCE
- FENC 4 - 20' FENCE

SHEET NOTES

1. SEE SHEET L-001 FOR GENERAL LANDSCAPE NOTES, ABBREVIATIONS & SYMBOLS.
2. SEE SHEETS L-040 TO L-042 FOR FURNISHINGS
3. SEE L-401 FOR DOG PARK & FITNESS LAYOUT ENLARGEMENT
4. SEE ELECTRICAL SHEETS E-407 - E-501 FOR LIGHTING SCHEDULE & DETAILS.
5. SEE ENLARGEMENT L-402 FOR ARTS PLAZA - PLANTING AREA FENCE LAYOUT & ENLARGEMENT L-403 FOR ARTS PLAZA - GUARDRAIL & FENCE LAYOUT

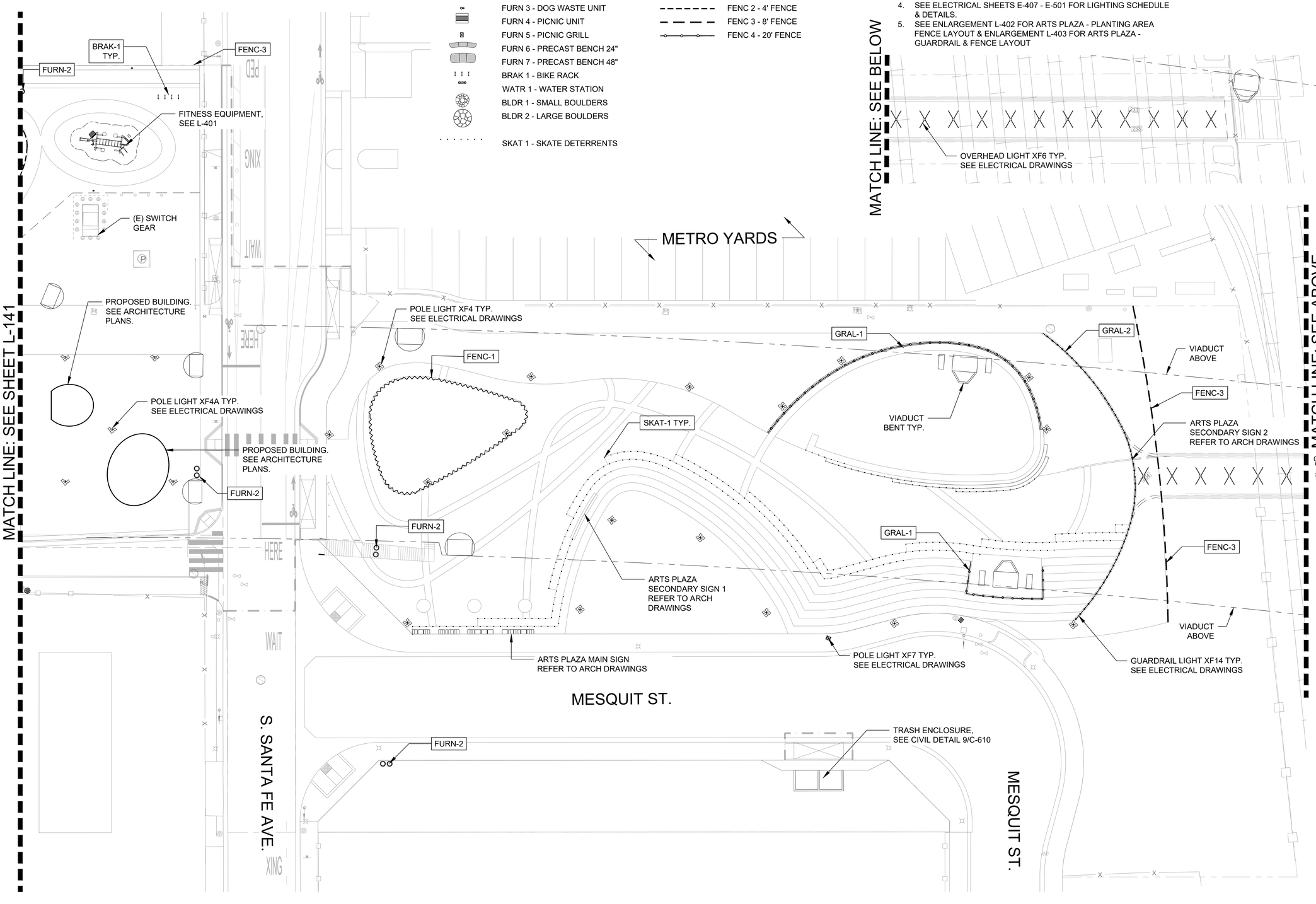

THE CITY OF LOS ANGELES OR ITS OFFICERS OR AGENTS SHALL NOT BE RESPONSIBLE FOR THE ACCURACY OR COMPLETENESS OF ELECTRONIC COPIES OF THIS PLAN SHEET.

REVISION DATES (DESIGN STAGE ONLY)

Sheet Version 3.0

PLANS PREPARED BY:
TETRA TECH, INC.
707 WILSHIRE BLVD, 23RD FLR.
LOS ANGELES, CA 90017
PHONE: (213) 239-8866

Hargreaves Jones
Hargreaves Jones Landscape Architecture

CITY OF LOS ANGELES DEPARTMENT OF PUBLIC WORKS

BUREAU OF ENGINEERING

ENGINEERING
CITY OF LOS ANGELES

NO.	REVISIONS:	DATE:	BY:

BUILDING NO.

INDEX NO. MF-30050

THIS PLAN WAS ELECTRONICALLY SIGNED AND STAMPED.

LICENSED LANDSCAPE ARCHITECT
Mary Margaret Jones #2615
Renewal Date
Date
STATE OF CALIFORNIA

BUREAU OF ENGINEERING
OFFICIAL RECORD

TED ALLEN, P.E.
CITY ENGINEER
DATE: 07/11/2022
DESIGN GROUP
LANDSCAPE ARCHITECT: MARY MARGARET JONES
LIC. NO.
DESIGNED BY: MARY MARGARET JONES
DRAWN BY: MEGAN ESOPENKO
CHECKED BY: GAVIN MCMILLAN
APPROVED BY: MARY MARGARET JONES

VERT. CONTROL: BM 12-04070, 1929 (NGVD29) - 1985 ADJUSTMENT
HORIZ. CONTROL: GPS; PID AE 1704, EPOCH 1991.35

SHEET TITLE: FURNITURE & SIGNAGE PLAN SHEET 2

PROJECT: SIXTH STREET PARK, ARTS AND RIVER CONNECTIVITY IMPROVEMENTS (PARC)

ADDRESS: SIXTH STREET OVER THE LOS ANGELES RIVER

WORK ORDER NO. E700235D
FILE NO. --
DRAWING NO. L-142
SHEET 103 OF 295 SHEETS

2022-07-05 8:59:41 PM - C:\USERS\MESOPENKO\ONEDRIVE - HARGREAVES\SSV 1601 - SIXTH STREET VIADUCT\300_CREATE\310_HA WORKING FILES\06_TECHNICAL\06_100-CD\50_SHEETS\L-140-145 LIGHTING-SIGNAGE AND FURNITURE.DWG - MEGAN ESOPENKO

SITE FURNISHING PLAN LEGEND

- FURN 1A - STRAIGHT BENCH
- FURN 1B - CURVED BENCH
- FURN 2 - WASTE RECEPTACLES
- FURN 3 - DOG WASTE UNIT
- FURN 4 - PICNIC UNIT
- FURN 5 - PICNIC GRILL
- FURN 6 - PRECAST BENCH 24"
- FURN 7 - PRECAST BENCH 48"
- BRAK 1 - BIKE RACK
- WATR 1 - WATER STATION
- BLDR 1 - SMALL BOULDERS
- BLDR 2 - LARGE BOULDERS
- SKAT 1 - SKATE DETERRENTS
- GRAL 1 - GUARDRAIL
- GRAL 2 - GUARDRAIL-WITH HANDRAIL
- FENC 1 - 2' FENCE
- FENC 2 - 4' FENCE
- FENC 3 - 8' FENCE
- FENC 4 - 20' FENCE

SHEET NOTES

1. SEE SHEET L-001 FOR GENERAL LANDSCAPE NOTES, ABBREVIATIONS & SYMBOLS.
2. SEE SHEETS L-040 TO L-042 FOR FURNISHINGS
3. SEE L-401 FOR DOG PARK & FITNESS LAYOUT ENLARGEMENT
4. SEE ELECTRICAL SHEETS E-407 - E-501 FOR LIGHTING SCHEDULE & DETAILS.
5. SEE ENLARGEMENT L-404 FOR EAST PARK - NORTHERN EDGE FENCE LAYOUT & ENLARGEMENT L-405 FOR EAST PARK SOCCER FIELD LAYOUT

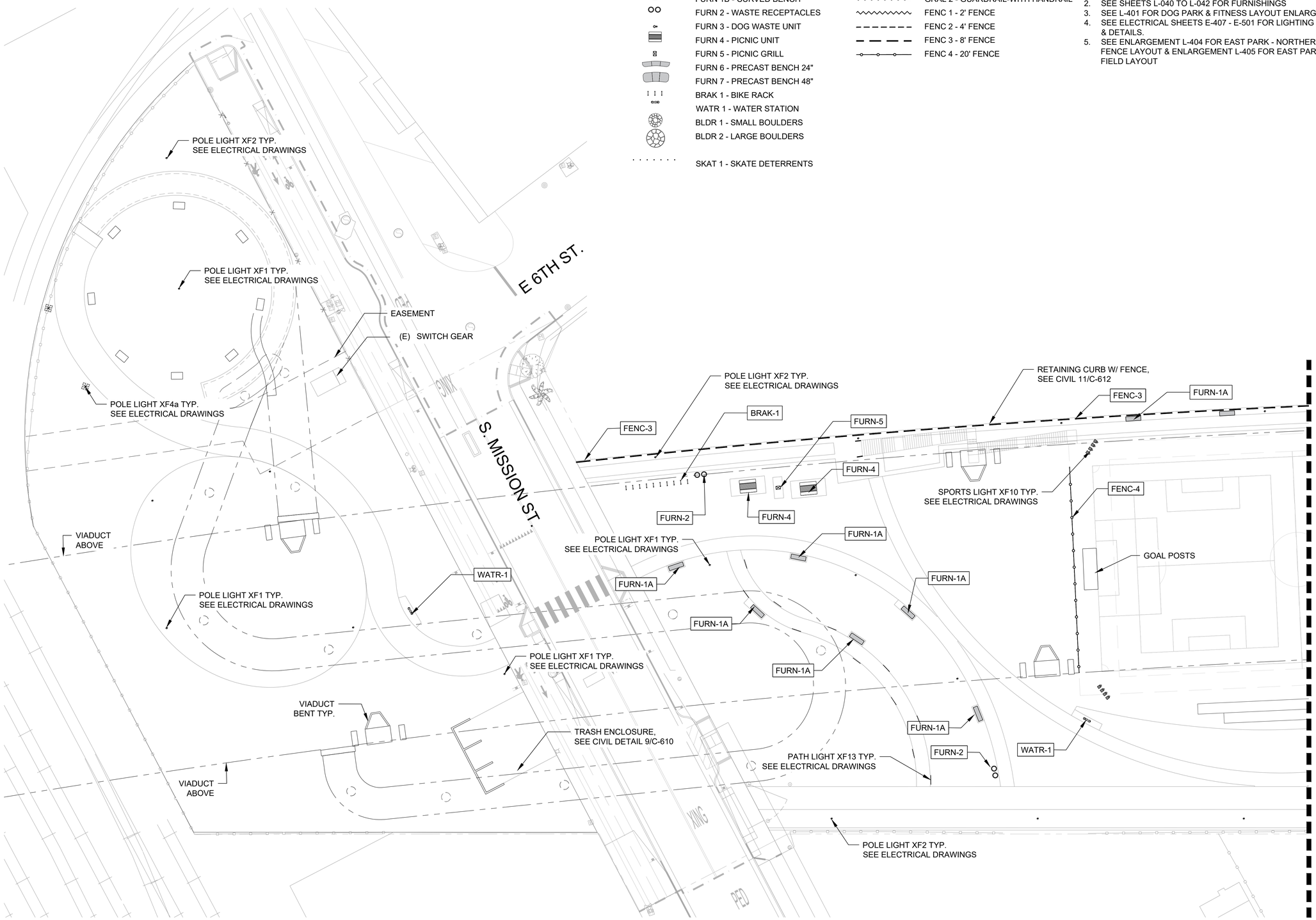

THE CITY OF LOS ANGELES OR ITS OFFICERS OR AGENTS SHALL NOT BE RESPONSIBLE FOR THE ACCURACY OR COMPLETENESS OF ELECTRONIC COPIES OF THIS PLAN SHEET.

REVISION DATES (DESIGN STAGE ONLY)

Sheet Version 3.0

BUREAU OF ENGINEERING
OFFICIAL RECORD

BUREAU OF ENGINEERING
CITY OF LOS ANGELES

NO.	REVISIONS:	DATE:	BY:

BUILDING NO.

INDEX NO. MF-300501

THIS PLAN WAS ELECTRONICALLY SIGNED AND STAMPED.

LICENSED LANDSCAPE ARCHITECT
Mary Margaret Jones #2616
Renewal Date
Date
STATE OF CALIFORNIA

CITY OF LOS ANGELES DEPARTMENT OF PUBLIC WORKS

TED ALLEN, P.E.
CITY ENGINEER

DESIGN GROUP
LANDSCAPE ARCHITECT: MARY MARGARET JONES LIC. NO. 07/11/2022
DESIGNED BY: MARY MARGARET JONES
DRAWN BY: MEGAN ESOPENKO
CHECKED BY: GAVIN MCMILLAN
APPROVED BY: MARY MARGARET JONES

VERT. CONTROL: BM 12-04070, 1929 (NGVD29) - 1985 ADJUSTMENT
HORIZ. CONTROL: GPS; PID AE 1704, EPOCH 1991.35

SHEET TITLE: FURNITURE & SIGNAGE PLAN SHEET 3

PROJECT: SIXTH STREET PARK, ARTS AND RIVER CONNECTIVITY IMPROVEMENTS (PARC)

ADDRESS: SIXTH STREET OVER THE LOS ANGELES RIVER

PLANS PREPARED BY:
TETRA TECH, INC.
707 WILSHIRE BLVD, 23RD FLR.
LOS ANGELES, CA 90017
PHONE: (213) 239-8866

HargreavesJones
Hargreaves Jones Landscape Architecture

WORK ORDER NO. E700235D
FILE NO. --
DRAWING NO. L-143
SHEET 104 OF 295 SHEETS

2022-07-05 8:59:45 PM - C:\USERS\MESOPENKO\ONEDRIVE - HARGREAVES\SSV 1601 - SIXTH STREET VIADUCT\300_CREATE\310_HA WORKING FILES\06_TECHNICAL\06_100-CD\50_SHEETS\L-140-145 LIGHTING-SIGNAGE AND FURNITURE.DWG - MEGAN ESOPENKO

SITE FURNISHING PLAN LEGEND

- FURN 1A - STRAIGHT BENCH
- FURN 1B - CURVED BENCH
- FURN 2 - WASTE RECEPTACLES
- FURN 3 - DOG WASTE UNIT
- FURN 4 - PICNIC UNIT
- FURN 5 - PICNIC GRILL
- FURN 6 - PRECAST BENCH 24"
- FURN 7 - PRECAST BENCH 48"
- BRAK 1 - BIKE RACK
- WATR 1 - WATER STATION
- BLDR 1 - SMALL BOULDERS
- BLDR 2 - LARGE BOULDERS
- SKAT 1 - SKATE DETERRENTS
- GRAL 1 - GUARDRAIL
- GRAL 2 - GUARDRAIL-WITH HANDRAIL
- FENC 1 - 2' FENCE
- FENC 2 - 4' FENCE
- FENC 3 - 8' FENCE
- FENC 4 - 20' FENCE

SHEET NOTES

1. SEE SHEET L-001 FOR GENERAL LANDSCAPE NOTES, ABBREVIATIONS & SYMBOLS.
2. SEE SHEETS L-040 TO L-042 FOR FURNISHINGS
3. SEE L-401 FOR DOG PARK & FITNESS LAYOUT ENLARGEMENT
4. SEE ELECTRICAL SHEETS E-407 - E-501 FOR LIGHTING SCHEDULE & DETAILS.
5. SEE ENLARGEMENT L-404 FOR EAST PARK: NORTHERN EDGE FENCE LAYOUT, ENLARGEMENT L-405 FOR EAST PARK: SOCCER FIELD LAYOUT, ENGLARGEMENT L-406 FOR EAST PARK: BASKETBALL COURT LAYOUT & ENLARGEMENT L-407 FOR EAST PARK: MISTING PAD LAYOUT

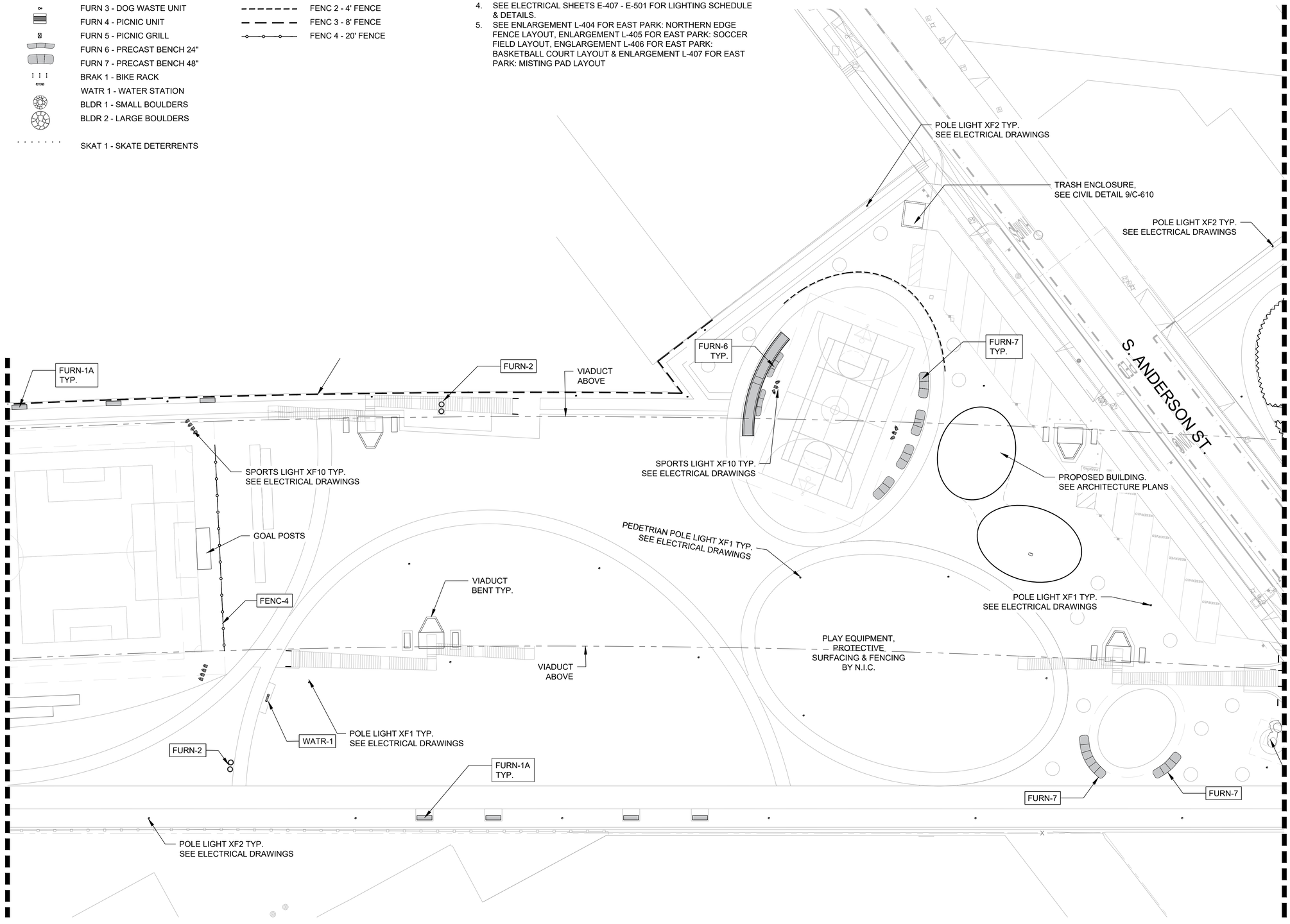

SCALE 1" = 20'

THIS PLAN WAS ELECTRONICALLY SIGNED AND STAMPED

LICENSED LANDSCAPE ARCHITECT MARY MARGARET JONES #2516 STATE OF CALIFORNIA

BUREAU OF ENGINEERING OFFICIAL RECORD

PLANS PREPARED BY:
TETRA TECH, INC.
707 WILSHIRE BLVD. 23RD FLR.
LOS ANGELES, CA 90017
PHONE: (213) 239-8866

HargreavesJones
Hargreaves Jones Landscape Architecture

CITY OF LOS ANGELES DEPARTMENT OF PUBLIC WORKS BUREAU OF ENGINEERING

ENGINEERING CITY OF LOS ANGELES

NO.	REVISIONS:	DATE:	BY:

BUILDING NO.

INDEX NO. MF-300501

CITY ENGINEER
TED ALLEN, P.E.
DESIGN GROUP
LANDSCAPE ARCHITECT: MARY MARGARET JONES LIC. NO. DATE: 07/11/2022
DESIGNED BY: MARY MARGARET JONES
DRAWN BY: MEGAN ESOPENKO
CHECKED BY: GAVIN MCMILLAN
APPROVED BY: MARY MARGARET JONES

VERT. CONTROL: BM 12-04070, 1929 (NGVD29) - 1985 ADJUSTMENT
HORIZ. CONTROL: GPS; PID AE 1704; EPOCH 1991.35

SHEET TITLE: FURNITURE & SIGNAGE PLAN SHEET 4

PROJECT: SIXTH STREET PARK, ARTS AND RIVER CONNECTIVITY IMPROVEMENTS (PARC)

ADDRESS: SIXTH STREET OVER THE LOS ANGELES RIVER

WORK ORDER NO. E700235D
FILE NO. --
DRAWING NO. L-144
SHEET 105 OF 295 SHEETS

REVISION DATES (DESIGN STAGE ONLY)

THE CITY OF LOS ANGELES OR ITS OFFICERS OR AGENTS SHALL NOT BE RESPONSIBLE FOR THE ACCURACY OR COMPLETENESS OF ELECTRONIC COPIES OF THIS PLAN SHEET.

2022-07-05 8:59:49 PM - C:\USERS\MESOPENKO\ONEDRIVE - HARGREAVESJONES\V 1601 - SIXTH STREET VIADUCT\000_CREATE\310_HA WORKING FILES\06_TECHNICAL\06_100-CD\50_SHEETS\L-140-145 LIGHTING-SIGNAGE AND FURNITURE.DWG - MEGAN ESOPENKO

Sheet Version 3.0

MATCH LINE: SEE SHEET L-144

FENC-1
PATH LIGHT XF13 TYP.
SEE ELECTRICAL DRAWINGS
FURN-1A
FENC-1
FURN-1A
FENC-1
FURN-1A
FURN-1A
WATR-1
FENC-1
TRASH ENCLOSURE,
SEE CIVIL DETAIL 9/C-610
FURN-2
FURN-5
TYP.
FURN-4
TYP.
FENC-2
FURN-1B
TPY.
BLDR-2
TYP.
WATR-1
BLDR-2
TYP.
BLDR-1
TYP.
FURN-3
101 FREEWAY
VIADUCT
ABOVE
CALTRANS ROW
FITNESS EQUIPMENT,
SEE L-408
RE-USE 4 HISTORIC
LIGHT POLES AS
ENTRANCE MARKERS
ALONG ANDERSON ST.
SEE CIVIL C-502.
FURN-5
TYP.
FURN-2
FURN-4
TYP.
WATR-1
VIADUCT
BENT TYP.
POLE LIGHT XF1 TYP.
SEE ELECTRICAL DRAWINGS
FURN-1A
S. ANDERSON ST.
S. CLARENCE ST.
LA HANDS ART SCULPTURE AND
FOOTING PER SEPARATE PLAN
PACKAGE (PROJECT NUMBER
2211), TYP.
POLE LIGHT XF2 TYP.
SEE ELECTRICAL DRAWINGS
VIADUCT
ABOVE

0 10' 20' 40'
SCALE 1" = 20'

SITE FURNISHING PLAN LEGEND

- FURN 1A - STRAIGHT BENCH
- FURN 1B - CURVED BENCH
- FURN 2 - WASTE RECEPTACLES
- FURN 3 - DOG WASTE UNIT
- FURN 4 - PICNIC UNIT
- FURN 5 - PICNIC GRILL
- FURN 6 - PRECAST BENCH 24"
- FURN 7 - PRECAST BENCH 48"
- BRAK 1 - BIKE RACK
- WATR 1 - WATER STATION
- BLDR 1 - SMALL BOULDERS
- BLDR 2 - LARGE BOULDERS
- SKAT 1 - SKATE DETERRENTS
- GRAL 1 - GUARDRAIL
- GRAL 2 - GUARDRAIL-WITH HANDRAIL
- FENC 1 - 2' FENCE
- FENC 2 - 4' FENCE
- FENC 3 - 8' FENCE
- FENC 4 - 20' FENCE

SHEET NOTES

1. SEE SHEET L-001 FOR GENERAL LANDSCAPE NOTES, ABBREVIATIONS & SYMBOLS.
2. SEE SHEETS L-040 TO L-042 FOR FURNISHINGS
3. SEE L-401 FOR DOG PARK & FITNESS LAYOUT ENLARGEMENT
4. SEE ELECTRICAL SHEETS E-407 - E-501 FOR LIGHTING SCHEDULE & DETAILS.
5. SEE ENLARGEMENT L-408 FOR EAST PARK: PLANTING FENCE LAYOUT, ENLARGEMENT L-409 FOR EAST PARK: PLANTING FENCE & FITNESS LAYOUT & ENLARGEMENT L-410 FOR EAST PARK: DOG PARK LAYOUT.

BUREAU OF ENGINEERING
OFFICIAL RECORD

THE CITY OF LOS ANGELES OR ITS OFFICERS OR AGENTS SHALL NOT BE RESPONSIBLE FOR THE ACCURACY OR COMPLETENESS OF ELECTRONIC COPIES OF THIS PLAN SHEET.

REVISION DATES
(DESIGN STAGE ONLY)

Sheet Version 3.0

ENGINEERING
CITY OF LOS ANGELES

BUREAU OF ENGINEERING

NO.	REVISIONS:	DATE	BY:

BUILDING NO.

INDEX NO. MF-300501

LICENSED LANDSCAPE ARCHITECT
MARY MARGARET JONES
No. 2516
Date
Renewal Date
STATE OF CALIFORNIA

THIS PLAN WAS ELECTRONICALLY SIGNED AND STAMPED

CITY OF LOS ANGELES DEPARTMENT OF PUBLIC WORKS

CITY ENGINEER
TED ALLEN, P.E.
DATE: 07/11/2022

DESIGN GROUP
LANDSCAPE ARCHITECT: MARY MARGARET JONES LIC. NO.
DESIGNED BY: MARY MARGARET JONES
DRAWN BY: MEGAN ESOPENKO
CHECKED BY: GAVIN MCMILLAN
APPROVED BY: MARY MARGARET JONES

VERT. CONTROL: BM 12-04070, 1929 (NGVD29) - 1985 ADJUSTMENT
HORIZ. CONTROL: GPS; PID AE 1704, EPOCH 1991.35

SHEET TITLE: FURNITURE & SIGNAGE PLAN SHEET 5

PROJECT: SIXTH STREET PARK, ARTS AND RIVER CONNECTIVITY IMPROVEMENTS (PARC)

ADDRESS: SIXTH STREET OVER THE LOS ANGELES RIVER

PLANS PREPARED BY:
TETRA TECH, INC.
707 WILSHIRE BLVD. 23RD FLR.
LOS ANGELES, CA 90017
PHONE: (213) 239-8866

HargreavesJones
Hargreaves Jones Landscape Architecture

WORK ORDER NO. E700235D
FILE NO. --
DRAWING NO. L-145
SHEET 106 OF 295 SHEETS

2022-07-05 5:59:54 PM - C:\USERS\MESOPENKO\ONEDRIVE - HARGREAVESJSSY 1601 - SIXTH STREET VIADUCT\000_CREATE\310_HA WORKING FILES\06_TECHNICAL\06_100-CD\50_SHEETS\L-140-145 LIGHTING-SIGNAGE AND FURNITURE.DWG - MEGAN ESOPENKO

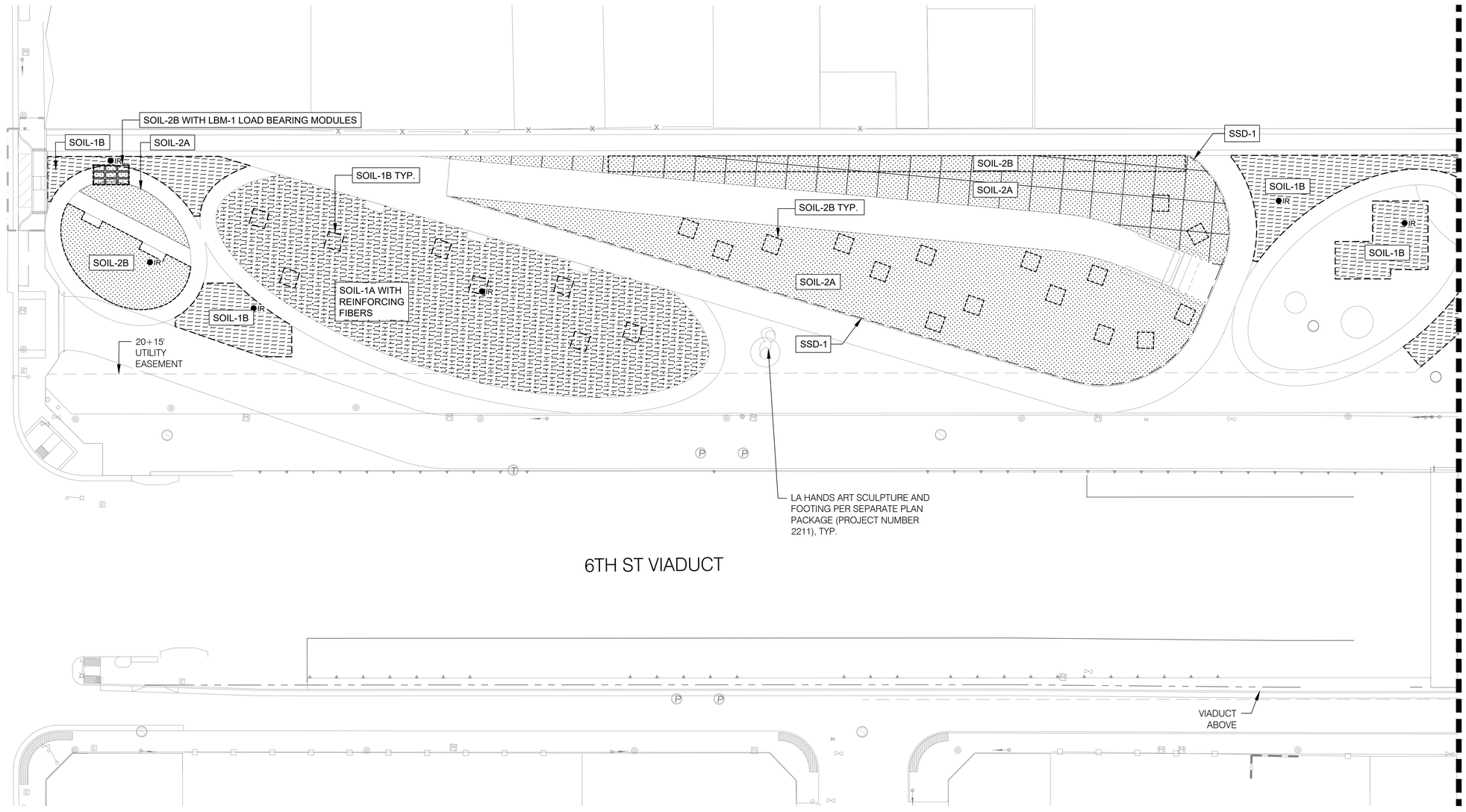

SOILS PLAN LEGEND

- SOIL 1A - LAWN
- SOIL 1B - LAWN & DG WITH TREES
- SOIL 2A - PLANTING
- SOIL 2B - PLANTING WITH TREES
- REINFORCING FIBERS
- LBM 1 - LOAD BEARING MODULES
- SSD 1 - FRENCH DRAIN
- EROS 1 - EROSION CONTROL MAT
- IR - ROOT ZONE INSPECTION RISER

SHEET NOTES

1. SEE SHEET L-001 FOR GENERAL LANDSCAPE NOTES, ABBREVIATIONS & SYMBOLS.
2. SEE SHEETS L-050 FOR SOILS LEGEND AND SCHEDULES.

BUREAU OF ENGINEERING OFFICIAL RECORD

0 10' 20' 40'
SCALE 1" = 20'

THE CITY OF LOS ANGELES OR ITS OFFICERS OR AGENTS SHALL NOT BE RESPONSIBLE FOR THE ACCURACY OR COMPLETENESS OF ELECTRONIC COPIES OF THIS PLAN SHEET.

REVISION DATES (DESIGN STAGE ONLY)

Sheet Version 3.0

PLANS PREPARED BY:
TETRA TECH, INC.
707 WILSHIRE BLVD, 23RD FLR.
LOS ANGELES, CA 90017
PHONE: (213) 239-8866

HargreavesJones
Hargreaves Jones Landscape Architecture

CITY OF LOS ANGELES DEPARTMENT OF PUBLIC WORKS BUREAU OF ENGINEERING

VERT. CONTROL: BM 12-04070, 1929 (NGVD29) - 1985 ADJUSTMENT
HORIZ. CONTROL: GPS; PID AE 1704, EPOCH 1991.35

SHEET TITLE: SOILS PLAN SHEET 1
PROJECT: SIXTH STREET PARK, ARTS AND RIVER CONNECTIVITY IMPROVEMENTS (PARC)
ADDRESS: SIXTH STREET OVER THE LOS ANGELES RIVER

WORK ORDER NO. E700235D
FILE NO. --
DRAWING NO. L-151
SHEET 107 OF 295 SHEETS

TED ALLEN, P.E.
CITY ENGINEER
DESIGN GROUP
LANDSCAPE ARCHITECT: MARY MARGARET JONES LIC. NO. 07/11/2022
DESIGNED BY: MARY MARGARET JONES
DRAWN BY: MEGAN ESOPENKO
CHECKED BY: GAVIN MCMILLAN
APPROVED BY: MARY MARGARET JONES

THIS PLAN WAS ELECTRONICALLY SIGNED AND STAMPED.

LICENSED LANDSCAPE ARCHITECT Mary Margaret Jones #2515 STATE OF CALIFORNIA Date

NO. REVISIONS: DATE: BY:

BUILDING NO.

INDEX NO. MF-300501

ENGINEERING CITY OF LOS ANGELES

2022-07-05 9:00:07 PM - C:\USERS\MESOPENKO\ONEDRIVE - HARGREAVES\SSV 1601 - SIXTH STREET VIADUCT\300_CREATE\310_HA WORKING FILES\06_TECHNICAL\06_100-CD\50_SHEETS\L-150-155 SOILS PLAN.DWG - MEGAN ESOPENKO

SOILS PLAN LEGEND

- SOIL 1A - LAWN
- SOIL 1B - LAWN & DG WITH TREES
- SOIL 2A - PLANTING
- SOIL 2B - PLANTING WITH TREES
- REINFORCING FIBERS
- LBM 1 - LOAD BEARING MODULES
- SSD 1 - FRENCH DRAIN
- EROS 1 - EROSION CONTROL MAT
- IR - ROOT ZONE INSPECTION RISER

SHEET NOTES

1. SEE SHEET L-001 FOR GENERAL LANDSCAPE NOTES, ABBREVIATIONS & SYMBOLS.
2. SEE SHEETS L-050 FOR SOILS LEGEND AND SCHEDULES.

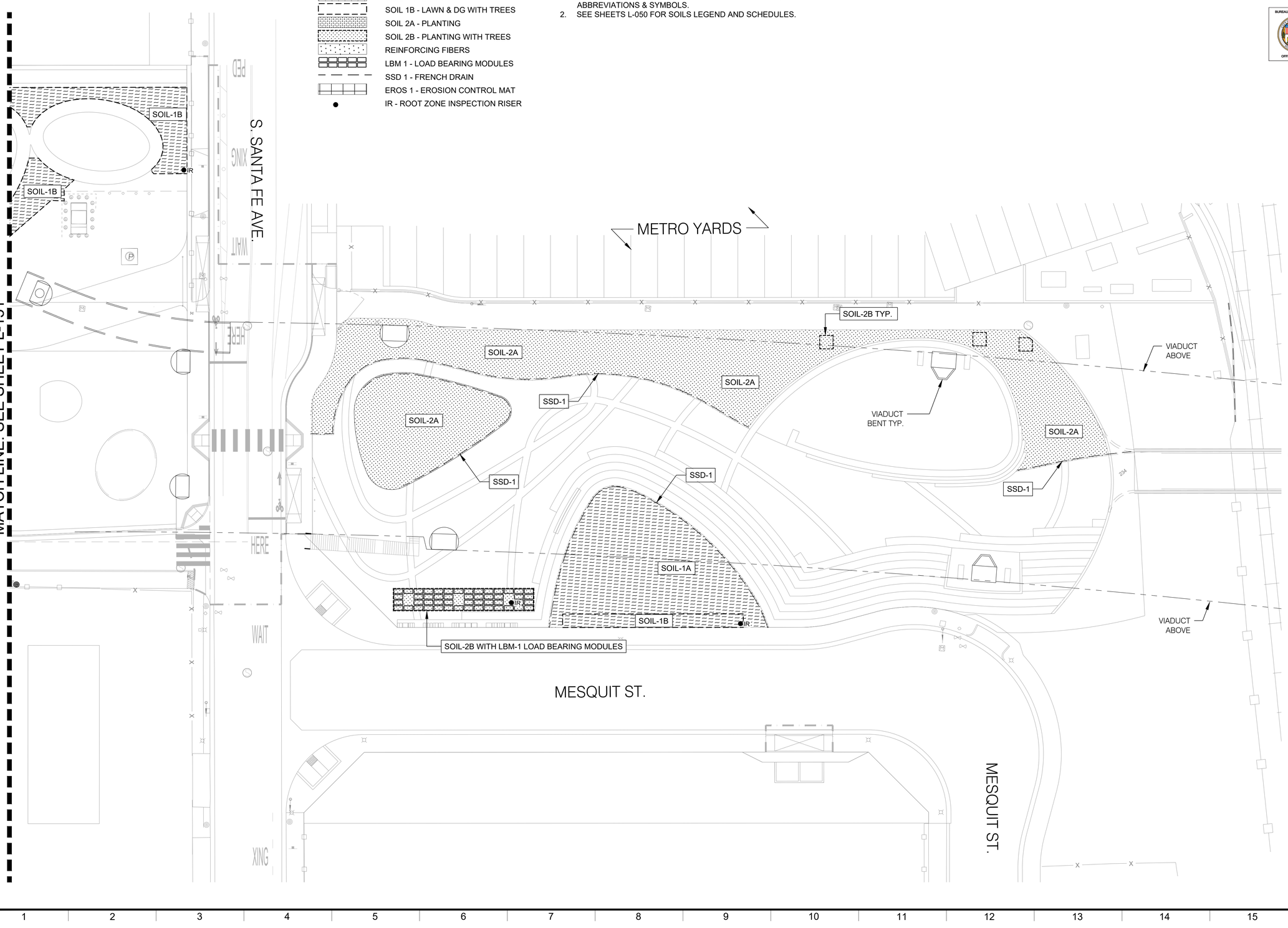

BUREAU OF ENGINEERING
OFFICIAL RECORD

ENGINEERING
CITY OF LOS ANGELES

BUREAU OF ENGINEERING

NO.	REVISIONS:	DATE:	BY:

BUILDING NO.

INDEX NO. MF-300501

LICENSED LANDSCAPE ARCHITECT MARY MARGARET JONES LICENSE #2516 STATE OF CALIFORNIA
THIS PLAN WAS ELECTRONICALLY SIGNED AND STAMPED
Date
Authorized Date

CITY OF LOS ANGELES DEPARTMENT OF PUBLIC WORKS

CITY ENGINEER
TED ALLEN, P.E.
DATE: 07/11/2022

DESIGN GROUP
LANDSCAPE ARCHITECT: MARY MARGARET JONES LIC. NO. 2516
DESIGNED BY: MARY MARGARET JONES
DRAWN BY: MEGAN ESOPENKO
CHECKED BY: GAVIN MCMILLAN
APPROVED BY: MARY MARGARET JONES

HargreavesJones
Hargreaves Jones Landscape Architecture

PLANS PREPARED BY:
TETRA TECH, INC.
707 WILSHIRE BLVD, 23RD FLR.
LOS ANGELES, CA 90017
PHONE: (213) 239-8866

VERT. CONTROL: BM 12-04070, 1929 (NGVD29) - 1985 ADJUSTMENT
HORIZ. CONTROL: GPS; PID AE 1704, EPOCH 1991.35

SHEET TITLE: SOILS PLAN SHEET 2

PROJECT: SIXTH STREET PARK, ARTS AND RIVER CONNECTIVITY IMPROVEMENTS (PARC)

ADDRESS: SIXTH STREET OVER THE LOS ANGELES RIVER

WORK ORDER NO. E700235D
FILE NO. -
DRAWING NO. L-152
SHEET 108 OF 295 SHEETS

REVISION DATES (DESIGN STAGE ONLY)

THE CITY OF LOS ANGELES OR ITS OFFICERS OR AGENTS SHALL NOT BE RESPONSIBLE FOR THE ACCURACY OR COMPLETENESS OF ELECTRONIC COPIES OF THIS PLAN SHEET.

2022-07-05 9:00:13 PM - C:\USERS\MESOPENKO\ONEDRIVE - HARGREAVESJONES\ 1601 - SIXTH STREET VIADUCT\300_CREATE\310_HA WORKING FILES\06_TECHNICAL\06_100-CD150_SHEETS\L-150-155 SOILS PLAN.DWG - MEGAN ESOPENKO

Sheet Version 3.0

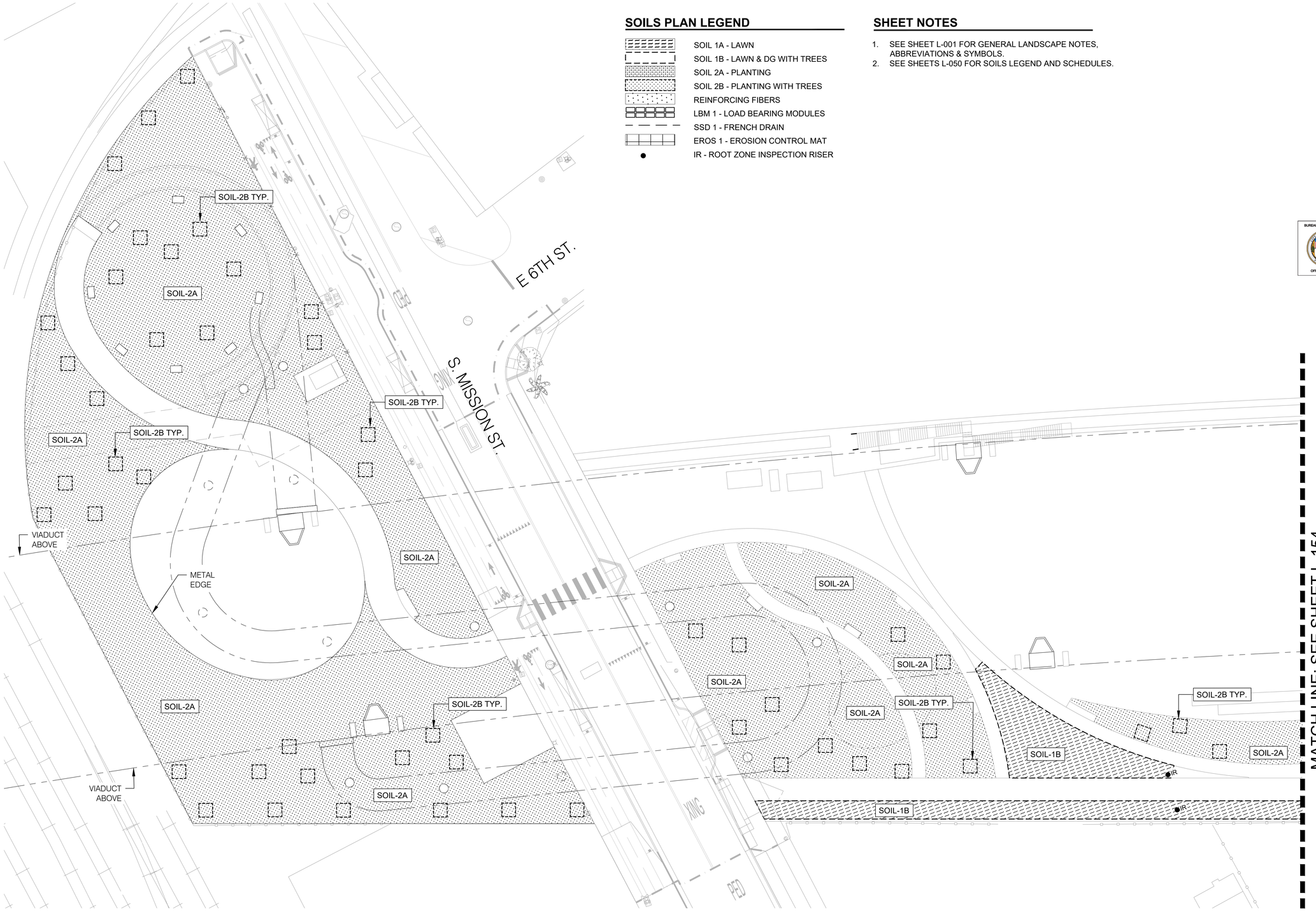

SOILS PLAN LEGEND

- SOIL 1A - LAWN
- SOIL 1B - LAWN & DG WITH TREES
- SOIL 2A - PLANTING
- SOIL 2B - PLANTING WITH TREES
- REINFORCING FIBERS
- LBM 1 - LOAD BEARING MODULES
- SSD 1 - FRENCH DRAIN
- EROS 1 - EROSION CONTROL MAT
- IR - ROOT ZONE INSPECTION RISER

SHEET NOTES

1. SEE SHEET L-001 FOR GENERAL LANDSCAPE NOTES, ABBREVIATIONS & SYMBOLS.
2. SEE SHEETS L-050 FOR SOILS LEGEND AND SCHEDULES.

BUREAU OF ENGINEERING
OFFICIAL RECORD

THIS PLAN WAS ELECTRONICALLY SIGNED AND STAMPED.

LICENSED LANDSCAPE ARCHITECT
Mary Margaret Jones #2615
Renewal Date
Date
STATE OF CALIFORNIA

BUREAU OF ENGINEERING

ENGINEERING
CITY OF LOS ANGELES

NO.	REVISIONS:	DATE:	BY:

BUILDING NO.

INDEX NO. MF-300501

CITY OF LOS ANGELES DEPARTMENT OF PUBLIC WORKS

TED ALLEN, P.E.
CITY ENGINEER
DATE: 07/11/2022

DESIGN GROUP
LANDSCAPE ARCHITECT: MARY MARGARET JONES LIC. NO.
DESIGNED BY: MARY MARGARET JONES
DRAWN BY: MEGAN ESOPENKO
CHECKED BY: GAVIN MCMILLAN
APPROVED BY: MARY MARGARET JONES

HargreavesJones
Hargreaves Jones Landscape Architecture

PLANS PREPARED BY:
TETRA TECH, INC.
707 WILSHIRE BLVD, 23RD FLR.
LOS ANGELES, CA 90017
PHONE: (213) 239-8866

VERT. CONTROL: BM 12-04070, 1929 (NGVD29) - 1985 ADJUSTMENT
HORIZ. CONTROL: GPS; PID AE 1704, EPOCH 1991.35

SHEET TITLE: SOILS PLAN SHEET 3
PROJECT: SIXTH STREET PARK, ARTS AND RIVER CONNECTIVITY IMPROVEMENTS (PARC)
ADDRESS: SIXTH STREET OVER THE LOS ANGELES RIVER

WORK ORDER NO. E700235D
FILE NO. --
DRAWING NO. L-153
SHEET 109 OF 295 SHEETS

2022-07-05 9:00:18 PM - C:\USERS\MESOPENKO\ONEDRIVE - HARGREAVES\SSV 1601 - SIXTH STREET VIADUCT\300_CREATE\310_HA WORKING FILES\06_TECHNICAL\06_100-CD\50_SHEETS\L-150-155 SOILS PLAN.DWG - MEGAN ESOPENKO

THE CITY OF LOS ANGELES OR ITS OFFICERS OR AGENTS SHALL NOT BE RESPONSIBLE FOR THE ACCURACY OR COMPLETENESS OF ELECTRONIC COPIES OF THIS PLAN SHEET.

REVISION DATES (DESIGN STAGE ONLY)

Sheet Version 3.0

SOILS PLAN LEGEND

- SOIL 1A - LAWN
- SOIL 1B - LAWN & DG WITH TREES
- SOIL 2A - PLANTING
- SOIL 2B - PLANTING WITH TREES
- REINFORCING FIBERS
- LBM 1 - LOAD BEARING MODULES
- SSD 1 - FRENCH DRAIN
- EROS 1 - EROSION CONTROL MAT
- IR - ROOT ZONE INSPECTION RISER

SHEET NOTES

1. SEE SHEET L-001 FOR GENERAL LANDSCAPE NOTES, ABBREVIATIONS & SYMBOLS.
2. SEE SHEETS L-050 FOR SOILS LEGEND AND SCHEDULES.

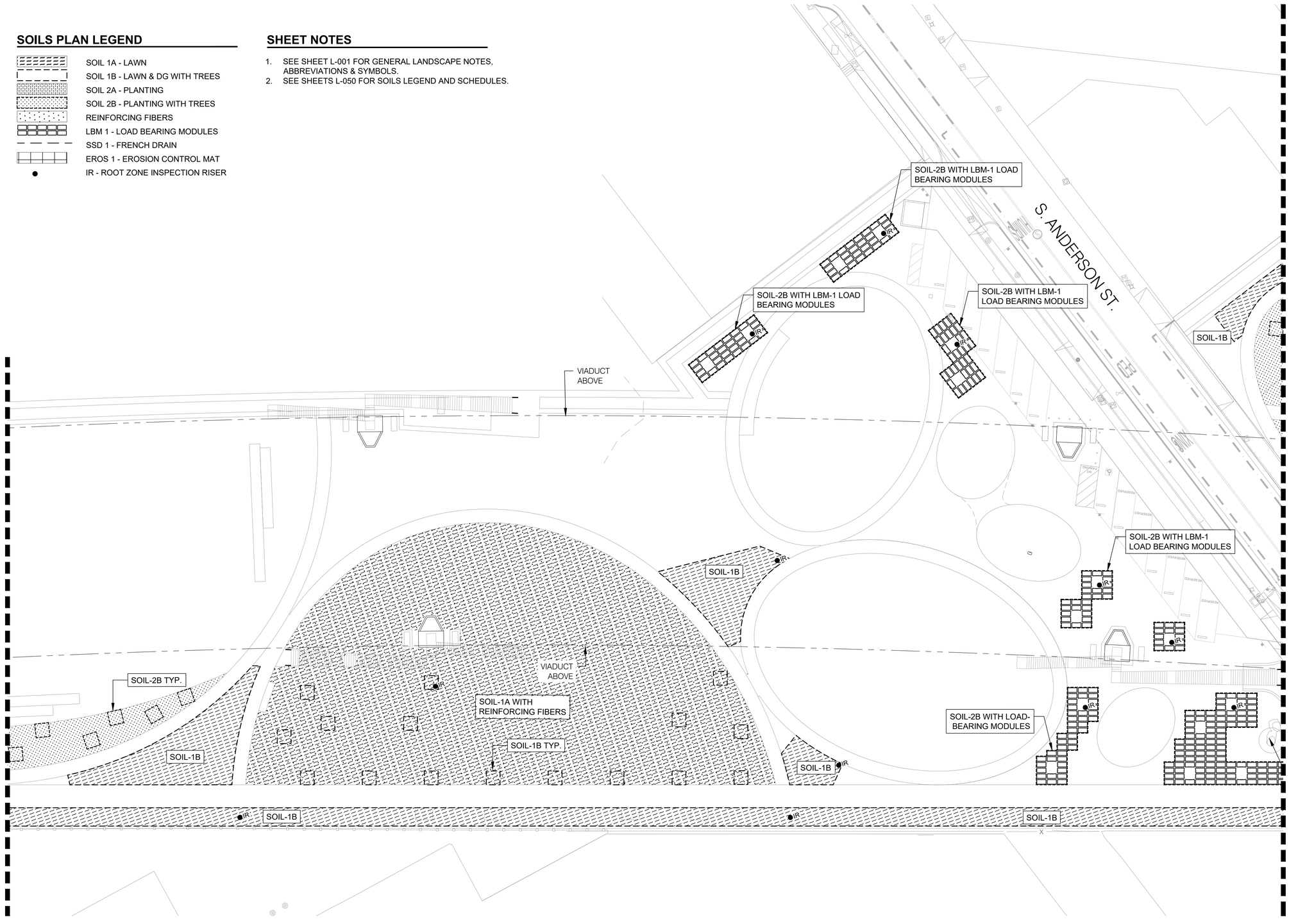

BUREAU OF ENGINEERING
OFFICIAL RECORD

CITY OF LOS ANGELES DEPARTMENT OF PUBLIC WORKS
BUREAU OF ENGINEERING

ENGINEERING
CITY OF LOS ANGELES

NO.	REVISIONS:	DATE	BY:

BUILDING NO.

INDEX NO. MF-300501

LICENSED LANDSCAPE ARCHITECT MARY MARGARET JONES #2516 STATE OF CALIFORNIA
Date
Relicensure Date

THIS PLAN WAS ELECTRONICALLY SIGNED AND STAMPED

CITY ENGINEER
DATE: 07/11/2022
TED ALLEN, P.E.
DESIGN GROUP

LANDSCAPE ARCHITECT: MARY MARGARET JONES LIC. NO.
DESIGNED BY: MARY MARGARET JONES
DRAWN BY: MEGAN ESOPENKO
CHECKED BY: GAVIN MCMILLAN
APPROVED BY: MARY MARGARET JONES

PLANS PREPARED BY:
TETRA TECH, INC.
707 WILSHIRE BLVD, 23RD FLR.
LOS ANGELES, CA 90017
PHONE: (213) 239-8866

HargreavesJones
Hargreaves Jones Landscape Architecture

CITY OF LOS ANGELES DEPARTMENT OF PUBLIC WORKS

VERT. CONTROL: BM 12-04070, 1929 (NGVD29) - 1985 ADJUSTMENT
HORIZ. CONTROL: GPS, PID AE 1704, EPOCH 1991.35

SHEET TITLE: SOILS PLAN SHEET 4

PROJECT: SIXTH STREET PARK, ARTS AND RIVER CONNECTIVITY IMPROVEMENTS (PARC)

ADDRESS: SIXTH STREET OVER THE LOS ANGELES RIVER

WORK ORDER NO. E700235D
FILE NO. --
DRAWING NO. L-154
SHEET 110 OF 295 SHEETS

REVISION DATES (DESIGN STAGE ONLY)

THE CITY OF LOS ANGELES OR ITS OFFICERS OR AGENTS SHALL NOT BE RESPONSIBLE FOR THE ACCURACY OR COMPLETENESS OF ELECTRONIC COPIES OF THIS PLAN SHEET.

2022-07-05 9:00:23 PM - C:\USERS\MESOPENKO\ONEDRIVE - HARGREAVESJONES\V 1601 - SIXTH STREET VIADUCT\000_CREATE\310_HA WORKING FILES\06_TECHNICAL\06_100-CD\50_SHEETS\L-150-155 SOILS PLAN.DWG - MEGAN ESOPENKO

Sheet Version 3.0

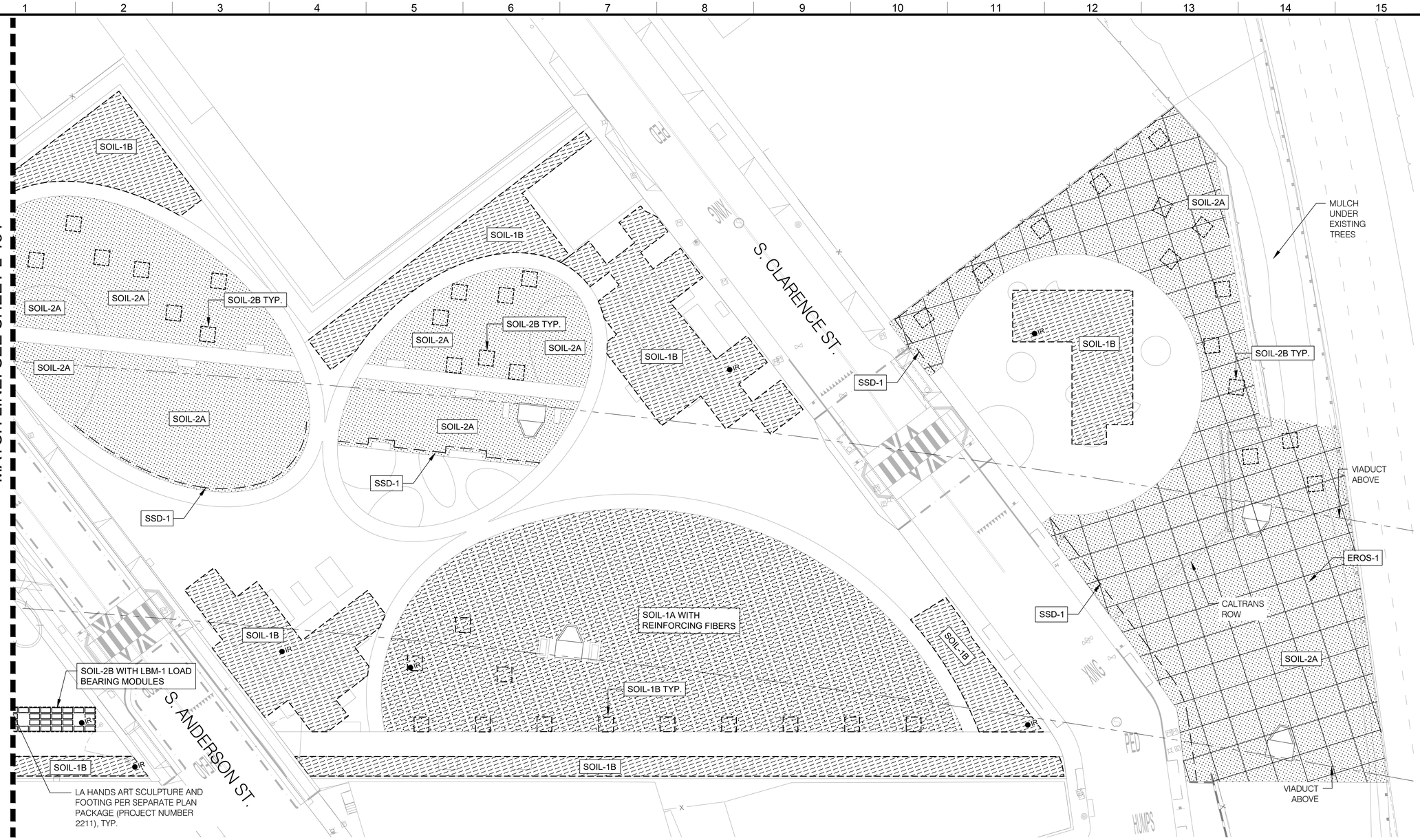

SOILS PLAN LEGEND

- SOIL 1A - LAWN
- SOIL 1B - LAWN & DG WITH TREES
- SOIL 2A - PLANTING
- SOIL 2B - PLANTING WITH TREES
- REINFORCING FIBERS
- LBM 1 - LOAD BEARING MODULES
- SSD 1 - FRENCH DRAIN
- EROS 1 - EROSION CONTROL MAT
- IR - ROOT ZONE INSPECTION RISER

SHEET NOTES

1. SEE SHEET L-001 FOR GENERAL LANDSCAPE NOTES, ABBREVIATIONS & SYMBOLS.
2. SEE SHEETS L-050 FOR SOILS LEGEND AND SCHEDULES.

BUREAU OF ENGINEERING OFFICIAL RECORD

THE CITY OF LOS ANGELES OR ITS OFFICERS OR AGENTS SHALL NOT BE RESPONSIBLE FOR THE ACCURACY OR COMPLETENESS OF ELECTRONIC COPIES OF THIS PLAN SHEET.

REVISION DATES (DESIGN STAGE ONLY)

Sheet Version 3.0

CITY OF LOS ANGELES DEPARTMENT OF PUBLIC WORKS BUREAU OF ENGINEERING

ENGINEERING CITY OF LOS ANGELES

NO.	REVISIONS:	DATE:	BY:

BUILDING NO.

INDEX NO. MF-300501

THIS PLAN WAS ELECTRONICALLY SIGNED AND STAMPED.

LICENSED LANDSCAPE ARCHITECT Mary Margaret Jones #2615 STATE OF CALIFORNIA Date

CITY ENGINEER

TED ALLEN, P.E.

DESIGN GROUP

LANDSCAPE ARCHITECT: MARY MARGARET JONES LIC. NO. 07/11/2022

DESIGNED BY: MARY MARGARET JONES

DRAWN BY: MEGAN ESOPENKO

CHECKED BY: GAVIN MCMILLAN

APPROVED BY: MARY MARGARET JONES

HargreavesJones
Hargreaves Jones Landscape Architecture

PLANS PREPARED BY:
TETRA TECH, INC.
707 WILSHIRE BLVD, 23RD FLR.
LOS ANGELES, CA 90017
PHONE: (213) 239-8866

VERT. CONTROL: BM 12-04070, 1929 (NGVD29) - 1985 ADJUSTMENT
HORIZ. CONTROL: GPS; PID AE 1704, EPOCH 1991.35

SHEET TITLE: SOILS PLAN SHEET 5

PROJECT: SIXTH STREET PARK, ARTS AND RIVER CONNECTIVITY IMPROVEMENTS (PARC)

ADDRESS: SIXTH STREET OVER THE LOS ANGELES RIVER

WORK ORDER NO. E700235D

FILE NO. --

DRAWING NO. L-155

SHEET 111 OF 295 SHEETS

2022-07-05 9:00:29 PM - C:\USERS\MESOPENKO\ONEDRIVE - HARGREAVES\SSV 1601 - SIXTH STREET VIADUCT\300_CREATE\310_HA WORKING FILES\06_TECHNICAL\06_100-CD\50_SHEETS\L-150-155 SOILS PLAN.DWG - MEGAN ESOPENKO

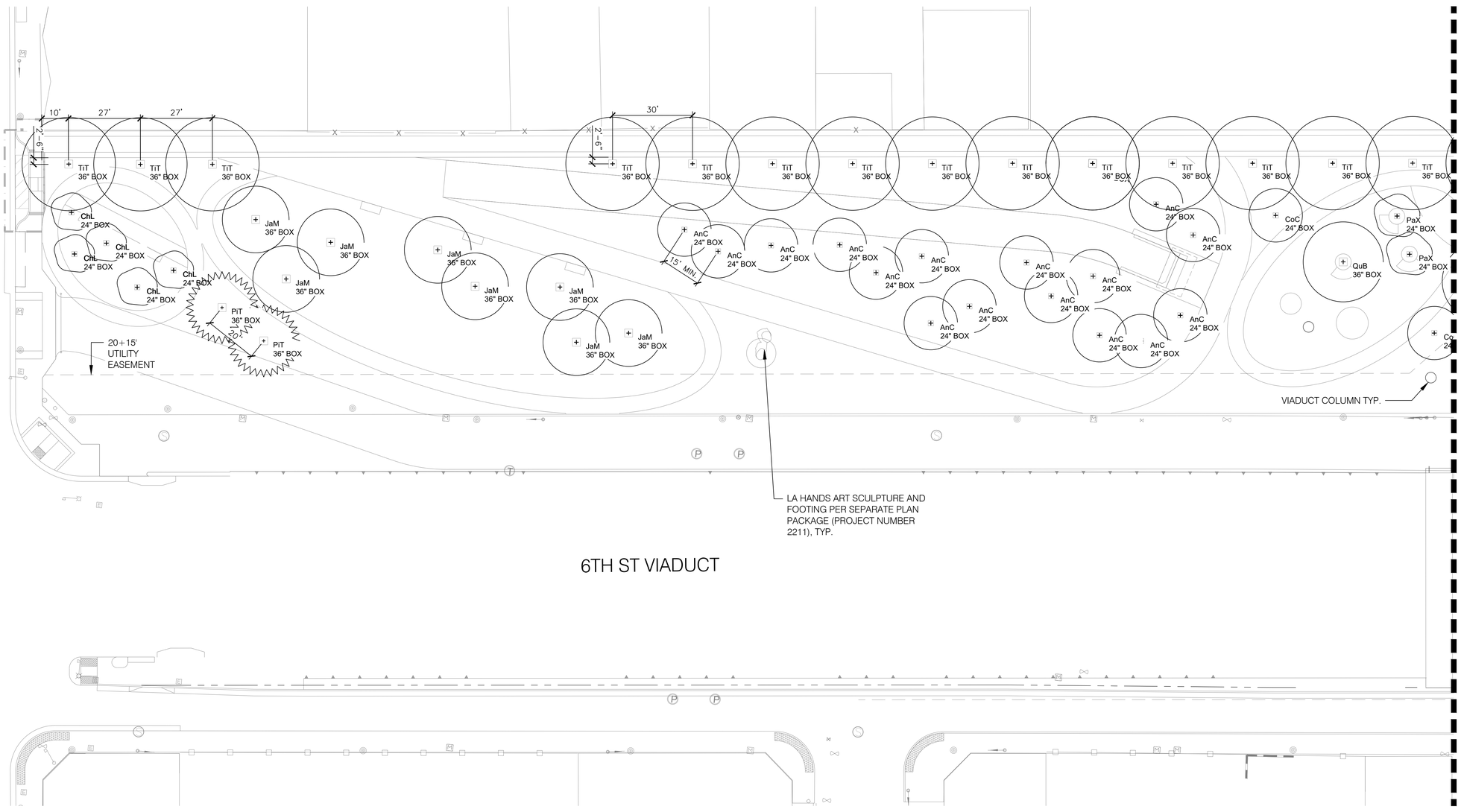

PLANTING PLAN - TREES LEGEND

LABEL	BOTANICAL NAME	COMMON NAME
AnC	*Angophora costata*	ROSE GUM
ArM	*Arbutus 'Marina'*	MARINA STRAWBERRY TREE
ChL	*Chilopsis linearis*	DESERT WILLOW
CoC	*Corymbia citriodora*	LEMON SCENTED GUM
CoP	*Corymbia papuana*	GHOST GUM
EuC	*Eucalyptus cladocalyx*	SUGAR GUM
EuT	*Eucalyptus torquata*	CORAL GUM
PaX	Parkinsonia X 'Desert Museum'	PALO VERDE 'DESERT MUSEUM'

LABEL	BOTANICAL NAME	COMMON NAME
FiR	*Ficus rubiginosa*	RUSTY LEAF FIG
JaM	*Jacaranda mimosifolia*	JACARANDA
PiT	*Pinus torreyana*	TORREY PINE
QuA	*Quercus agrifolia*	COAST LIVE OAK
QuB	*Quercus buckleyi*	TEXAS RED OAK
LaN	*Laurus nobilis*	BAY LAUREL
TiT	*Tipuana tipu*	TIPU

SHEET NOTES

1. SEE SHEET L-001 FOR GENERAL LANDSCAPE NOTES, ABBREVIATIONS AND SYMBOLS.
2. SEE SHEET L-065 FOR TREE SPECIES SCHEDULE

SCALE 1" = 20'

BUREAU OF ENGINEERING OFFICIAL RECORD

PLANS PREPARED BY:
TETRA TECH, INC.
707 WILSHIRE BLVD. 23RD FLR.
LOS ANGELES, CA 90017
PHONE (213) 239-8866

HargreavesJones
Hargreaves Jones Landscape Architecture

CITY OF LOS ANGELES DEPARTMENT OF PUBLIC WORKS
BUREAU OF ENGINEERING

ENGINEERING
CITY OF LOS ANGELES

NO.	REVISIONS:	DATE	BY:

BUILDING NO.

INDEX NO. **MF-300501**

LICENSED LANDSCAPE ARCHITECT MARY MARGARET JONES No. 2516 STATE OF CALIFORNIA
THIS PLAN WAS ELECTRONICALLY SIGNED AND STAMPED.
Date
Reference Date

CITY ENGINEER
TED ALLEN, P.E.
DATE:

DESIGN GROUP
LANDSCAPE ARCHITECT: MARY MARGARET JONES LIC. NO. 07/11/2022
DESIGNED BY: MARY MARGARET JONES
DRAWN BY: MEGAN ESOPENKO
CHECKED BY: GAVIN MCMILLAN
APPROVED BY: MARY MARGARET JONES

VERT. CONTROL: BM 12-04070, 1929 (NGVD29) - 1985 ADJUSTMENT
HORIZ. CONTROL: GPS; PID AE 1704, EPOCH 1991.35

SHEET TITLE: TREE PLANTING PLAN SHEET 1
PROJECT: SIXTH STREET PARK, ARTS AND RIVER CONNECTIVITY IMPROVEMENTS (PARC)
ADDRESS: SIXTH STREET OVER THE LOS ANGELES RIVER

WORK ORDER NO. E700235D
FILE NO. --
DRAWING NO. L-161
SHEET 112 OF 295 SHEETS

2022-07-05 9:00:42 PM - C:\USERS\MESOPENKO\ONEDRIVE - HARGREAVES\SSV Y601 - SIXTH STREET VIADUCT\000_CREATE\310_HA WORKING FILES\06_TECHNICAL\06_100-CD\60_SHEETS\L-160-165 TREE PLANTING PLAN.DWG - MEGAN ESOPENKO

REVISION DATES (DESIGN STAGE ONLY)

THE CITY OF LOS ANGELES OR ITS OFFICERS OR AGENTS SHALL NOT BE RESPONSIBLE FOR THE ACCURACY OR COMPLETENESS OF ELECTRONIC COPIES OF THIS PLAN SHEET.

Sheet Version 3.0

PLANTING PLAN - TREES LEGEND

LABEL	BOTANICAL NAME	COMMON NAME
AnC	*Angophora costata*	ROSE GUM
ArM	*Arbutus 'Marina'*	MARINA STRAWBERRY TREE
ChL	*Chilopsis linearis*	DESERT WILLOW
CoC	*Corymbia citriodora*	LEMON SCENTED GUM
CoP	*Corymbia papuana*	GHOST GUM
EuC	*Eucalyptus cladocalyx*	SUGAR GUM
EuT	*Eucalyptus torquata*	CORAL GUM
PaX	Parkinsonia X 'Desert Museum'	PALO VERDE 'DESERT MUSEUM'

LABEL	BOTANICAL NAME	COMMON NAME
FiR	*Ficus rubiginosa*	RUSTY LEAF FIG
JaM	*Jacaranda mimosifolia*	JACARANDA
PiT	*Pinus torreyana*	TORREY PINE
QuA	*Quercus agrifolia*	COAST LIVE OAK
QuB	*Quercus buckleyi*	TEXAS RED OAK
LaN	*Laurus nobilis*	BAY LAUREL
TiT	*Tipuana tipu*	TIPU

SHEET NOTES

1. SEE SHEET L-001 FOR GENERAL LANDSCAPE NOTES, ABBREVIATIONS AND SYMBOLS.
2. SEE SHEET L-065 FOR TREE SPECIES SCHEDULE

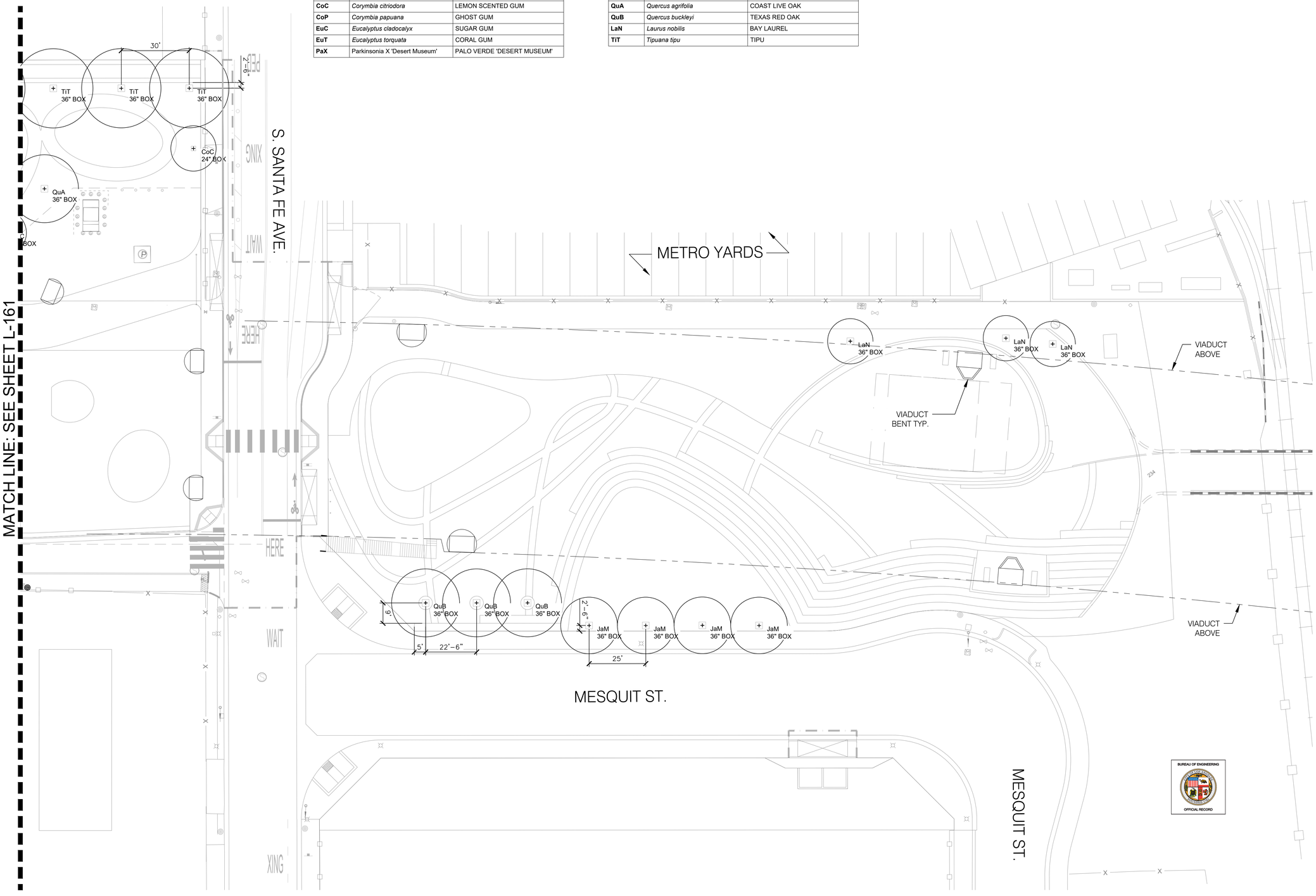

THE CITY OF LOS ANGELES OR ITS OFFICERS OR AGENTS SHALL NOT BE RESPONSIBLE FOR THE ACCURACY OR COMPLETENESS OF ELECTRONIC COPIES OF THIS PLAN SHEET.

REVISION DATES (DESIGN STAGE ONLY)

Sheet Version 3.0

PLANS PREPARED BY:
TETRA TECH, INC.
707 WILSHIRE BLVD, 23RD FLR.
LOS ANGELES, CA 90017
PHONE: (213) 239-8866

HargreavesJones
Hargreaves Jones Landscape Architecture

CITY OF LOS ANGELES DEPARTMENT OF PUBLIC WORKS

VERT. CONTROL: BM 12-04070, 1929 (NGVD29) - 1985 ADJUSTMENT
HORIZ. CONTROL: GPS; PID AE 1704, EPOCH 1991.35

SHEET TITLE: TREE PLANTING PLAN SHEET 2
PROJECT: SIXTH STREET PARK, ARTS AND RIVER CONNECTIVITY IMPROVEMENTS (PARC)
ADDRESS: SIXTH STREET OVER THE LOS ANGELES RIVER

WORK ORDER NO. E700235D
FILE NO. --
DRAWING NO. L-162
SHEET 113 OF 295 SHEETS

CITY ENGINEER
TED ALLEN, P.E.
DESIGN GROUP
LANDSCAPE ARCHITECT: MARY MARGARET JONES LIC. NO.
DESIGNED BY: MARY MARGARET JONES
DRAWN BY: MEGAN ESOPENKO
CHECKED BY: GAVIN MCMILLAN
APPROVED BY: MARY MARGARET JONES
DATE: 07/11/2022

THIS PLAN WAS ELECTRONICALLY SIGNED AND STAMPED.

LICENSED LANDSCAPE ARCHITECT Mary Margaret Jones #2615 STATE OF CALIFORNIA

BUREAU OF ENGINEERING
ENGINEERING
CITY OF LOS ANGELES

NO. | REVISIONS: | DATE: | BY:

BUILDING NO.

INDEX NO. MF-300501

2022-07-05 9:00:44 PM - C:\USERS\MESOPENKO\ONEDRIVE - HARGREAVES\SSV 1601 - SIXTH STREET VIADUCT\300_CREATE\310_HA WORKING FILES\06_TECHNICAL\06_100-CD\50_SHEETS\L-160-165 TREE PLANTING PLAN.DWG - MEGAN ESOPENKO

PLANTING PLAN - TREES LEGEND

LABEL	BOTANICAL NAME	COMMON NAME
AnC	*Angophora costata*	ROSE GUM
ArM	*Arbutus 'Marina'*	MARINA STRAWBERRY TREE
ChL	*Chilopsis linearis*	DESERT WILLOW
CoC	*Corymbia citriodora*	LEMON SCENTED GUM
CoP	*Corymbia papuana*	GHOST GUM
EuC	*Eucalyptus cladocalyx*	SUGAR GUM
EuT	*Eucalyptus torquata*	CORAL GUM
PaX	Parkinsonia X 'Desert Museum'	PALO VERDE 'DESERT MUSEUM'

LABEL	BOTANICAL NAME	COMMON NAME
FiR	*Ficus rubiginosa*	RUSTY LEAF FIG
JaM	*Jacaranda mimosifolia*	JACARANDA
PiT	*Pinus torreyana*	TORREY PINE
QuA	*Quercus agrifolia*	COAST LIVE OAK
QuB	*Quercus buckleyi*	TEXAS RED OAK
LaN	*Laurus nobilis*	BAY LAUREL
TiT	*Tipuana tipu*	TIPU

SHEET NOTES

1. SEE SHEET L-001 FOR GENERAL LANDSCAPE NOTES, ABBREVIATIONS AND SYMBOLS.
2. SEE SHEET L-065 FOR TREE SPECIES SCHEDULE

E 6TH ST.

S. MISSION ST.

VIADUCT ABOVE

VIADUCT BENT TYP.

MATCH LINE: SEE SHEET L-164

SCALE 1" = 20'

BUREAU OF ENGINEERING
OFFICIAL RECORD

THE CITY OF LOS ANGELES OR ITS OFFICERS OR AGENTS SHALL NOT BE RESPONSIBLE FOR THE ACCURACY OR COMPLETENESS OF ELECTRONIC COPIES OF THIS PLAN SHEET.

REVISION DATES (DESIGN STAGE ONLY)

PLANS PREPARED BY:
TETRA TECH, INC.
707 WILSHIRE BLVD, 23RD FLR.
LOS ANGELES, CA 90017
PHONE: (213) 239-8866

Hargreaves Jones
Hargreaves Jones Landscape Architecture

CITY OF LOS ANGELES DEPARTMENT OF PUBLIC WORKS
BUREAU OF ENGINEERING
ENGINEERING
CITY OF LOS ANGELES

NO.	REVISIONS:	DATE	BY:

BUILDING NO.

INDEX NO. MF-300501

THIS PLAN WAS ELECTRONICALLY SIGNED AND STAMPED.
LICENSED LANDSCAPE ARCHITECT
MARY MARGARET JONES
No. 2516
Date
Reviewed Date
STATE OF CALIFORNIA

CITY ENGINEER
TED ALLEN, P.E.
DESIGN GROUP
DATE: 07/11/2022
LANDSCAPE ARCHITECT: MARY MARGARET JONES LIC. NO.
DESIGNED BY: MARY MARGARET JONES
DRAWN BY: MEGAN ESOPENKO
CHECKED BY: GAVIN MCMILLAN
APPROVED BY: MARY MARGARET JONES

VERT. CONTROL: BM 12-04070, 1929 (NGVD29) - 1985 ADJUSTMENT
HORIZ. CONTROL: GPS, PID AE 1704, EPOCH 1991.35

SHEET TITLE: TREE PLANTING PLAN SHEET 3

PROJECT: SIXTH STREET PARK, ARTS AND RIVER CONNECTIVITY IMPROVEMENTS (PARC)

ADDRESS: SIXTH STREET OVER THE LOS ANGELES RIVER

WORK ORDER NO. E700235D
FILE NO. --
DRAWING NO. L-163
SHEET 114 OF 295 SHEETS

2022-07-05 9:00:49 PM - C:\USERS\MESOPENKO\ONEDRIVE - HARGREAVESJSV 1601 - SIXTH STREET VIADUCT\000_CREATE\310_HA WORKING FILES\06_TECHNICAL\06_100-CD\50_SHEETS\L-163-165 TREE PLANTING PLAN.DWG - MEGAN ESOPENKO

Sheet Version 3.0

PLANTING PLAN - TREES LEGEND

LABEL	BOTANICAL NAME	COMMON NAME
AnC	*Angophora costata*	ROSE GUM
ArM	*Arbutus 'Marina'*	MARINA STRAWBERRY TREE
ChL	*Chilopsis linearis*	DESERT WILLOW
CoC	*Corymbia citriodora*	LEMON SCENTED GUM
CoP	*Corymbia papuana*	GHOST GUM
EuC	*Eucalyptus cladocalyx*	SUGAR GUM
EuT	*Eucalyptus torquata*	CORAL GUM
PaX	Parkinsonia X 'Desert Museum'	PALO VERDE 'DESERT MUSEUM'

LABEL	BOTANICAL NAME	COMMON NAME
FiR	*Ficus rubiginosa*	RUSTY LEAF FIG
JaM	*Jacaranda mimosifolia*	JACARANDA
PiT	*Pinus torreyana*	TORREY PINE
QuA	*Quercus agrifolia*	COAST LIVE OAK
QuB	*Quercus buckleyi*	TEXAS RED OAK
LaN	*Laurus nobilis*	BAY LAUREL
TiT	*Tipuana tipu*	TIPU

SHEET NOTES

1. SEE SHEET L-001 FOR GENERAL LANDSCAPE NOTES, ABBREVIATIONS AND SYMBOLS.
2. SEE SHEET L-065 FOR TREE SPECIES SCHEDULE

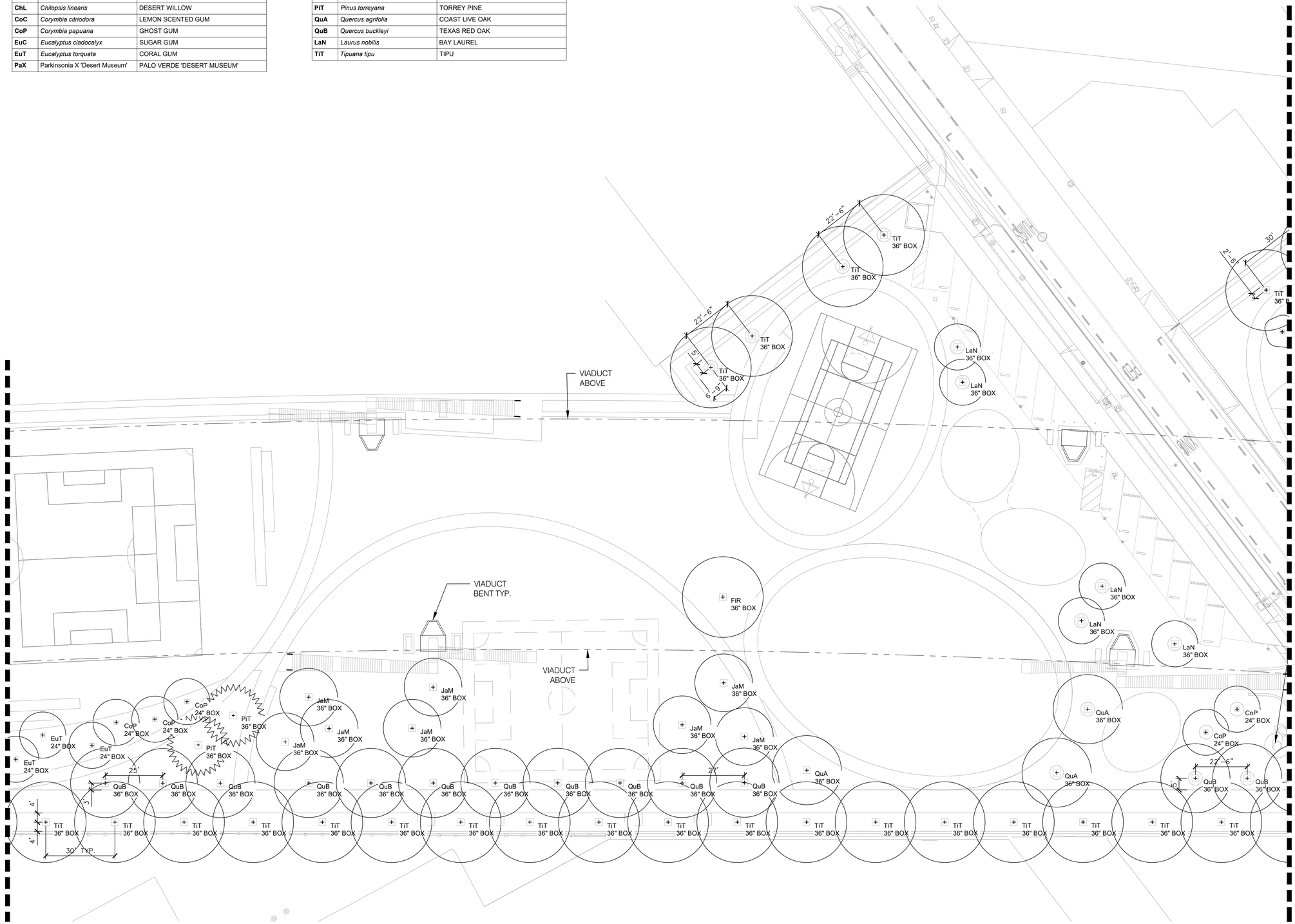

0 10' 20' 40'
SCALE 1" = 20'

BUREAU OF ENGINEERING
OFFICIAL RECORD

THIS PLAN WAS ELECTRONICALLY SIGNED AND STAMPED.

LICENSED LANDSCAPE ARCHITECT
Mary Margaret Jones #2616
Renewal Date
Date
STATE OF CALIFORNIA

ENGINEERING
CITY OF LOS ANGELES

BUREAU OF ENGINEERING

NO.	REVISIONS:	DATE:	BY:

BUILDING NO.

INDEX NO. MF-300501

CITY OF LOS ANGELES DEPARTMENT OF PUBLIC WORKS

TED ALLEN, P.E.
DESIGN GROUP
LANDSCAPE ARCHITECT: MARY MARGARET JONES
DESIGNED BY: MARY MARGARET JONES
DRAWN BY: MEGAN ESOPENKO
CHECKED BY: GAVIN MCMILLAN
APPROVED BY: MARY MARGARET JONES
LIC. NO. 07/11/2022
DATE:

CITY ENGINEER

VERT. CONTROL: BM 12-04070, 1929 (NGVD29) - 1985 ADJUSTMENT
HORIZ. CONTROL: GPS; PID AE 1704, EPOCH 1991.35

SHEET TITLE: TREE PLANTING PLAN SHEET 4
PROJECT: SIXTH STREET PARK, ARTS AND RIVER CONNECTIVITY IMPROVEMENTS (PARC)
ADDRESS: SIXTH STREET OVER THE LOS ANGELES RIVER

WORK ORDER NO. E700235D
FILE NO. --
DRAWING NO. L-164
SHEET 115 OF 295 SHEETS

PLANS PREPARED BY:
TETRA TECH, INC.
707 WILSHIRE BLVD, 23RD FLR.
LOS ANGELES, CA 90017
PHONE: (213) 239-8866

Hargreaves Jones
Hargreaves Jones Landscape Architecture

THE CITY OF LOS ANGELES OR ITS OFFICERS OR AGENTS SHALL NOT BE RESPONSIBLE FOR THE ACCURACY OR COMPLETENESS OF ELECTRONIC COPIES OF THIS PLAN SHEET.

REVISION DATES (DESIGN STAGE ONLY)

2022-07-05 9:00:54 PM - C:\USERS\MESOPENKO\ONEDRIVE - HARGREAVES\SSV 1601 - SIXTH STREET VIADUCT\300_CREATE\310_HA WORKING FILES\06_TECHNICAL\06_100-CD\50_SHEETS\L-160-165 TREE PLANTING PLAN.DWG - MEGAN ESOPENKO

Sheet Version 3.0



PLANTING PLAN - TREES LEGEND

LABEL	BOTANICAL NAME	COMMON NAME
AnC	*Angophora costata*	ROSE GUM
ArM	*Arbutus 'Marina'*	MARINA STRAWBERRY TREE
ChL	*Chilopsis linearis*	DESERT WILLOW
CoC	*Corymbia citriodora*	LEMON SCENTED GUM
CoP	*Corymbia papuana*	GHOST GUM
EuC	*Eucalyptus cladocalyx*	SUGAR GUM
EuT	*Eucalyptus torquata*	CORAL GUM
PaX	Parkinsonia X 'Desert Museum'	PALO VERDE 'DESERT MUSEUM'

LABEL	BOTANICAL NAME	COMMON NAME
FiR	*Ficus rubiginosa*	RUSTY LEAF FIG
JaM	*Jacaranda mimosifolia*	JACARANDA
PiT	*Pinus torreyana*	TORREY PINE
QuA	*Quercus agrifolia*	COAST LIVE OAK
QuB	*Quercus buckleyi*	TEXAS RED OAK
LaN	*Laurus nobilis*	BAY LAUREL
TiT	*Tipuana tipu*	TIPU

SHEET NOTES

1. SEE SHEET L-001 FOR GENERAL LANDSCAPE NOTES, ABBREVIATIONS AND SYMBOLS.
2. SEE SHEET L-065 FOR TREE SPECIES SCHEDULE

THE CITY OF LOS ANGELES OR ITS OFFICERS OR AGENTS SHALL NOT BE RESPONSIBLE FOR THE ACCURACY OR COMPLETENESS OF ELECTRONIC COPIES OF THIS PLAN SHEET.

REVISION DATES (DESIGN STAGE ONLY)

Sheet Version 3.0

BUREAU OF ENGINEERING

OFFICIAL RECORD

THIS PLAN WAS ELECTRONICALLY SIGNED AND STAMPED.

LICENSED LANDSCAPE ARCHITECT Mary Margaret Jones #2615 STATE OF CALIFORNIA

NO.	REVISIONS:	DATE:	BY:

BUILDING NO.

INDEX NO. MF-300501

BUREAU OF ENGINEERING

CITY OF LOS ANGELES DEPARTMENT OF PUBLIC WORKS

TED ALLEN, P.E.
CITY ENGINEER
DATE: 07/11/2022
LIC. NO.

DESIGN GROUP
LANDSCAPE ARCHITECT: MARY MARGARET JONES
DESIGNED BY: MARY MARGARET JONES
DRAWN BY: MEGAN ESOPENKO
CHECKED BY: GAVIN MCMILLAN
APPROVED BY: MARY MARGARET JONES

VERT. CONTROL: BM 12-04070, 1929 (NGVD29) - 1985 ADJUSTMENT
HORIZ. CONTROL: GPS; PID AE 1704, EPOCH 1991.35

SHEET TITLE: TREE PLANTING PLAN SHEET 5
PROJECT: SIXTH STREET PARK, ARTS AND RIVER CONNECTIVITY IMPROVEMENTS (PARC)
ADDRESS: SIXTH STREET OVER THE LOS ANGELES RIVER

PLANS PREPARED BY:
TETRA TECH, INC.
707 WILSHIRE BLVD, 23RD FLR.
LOS ANGELES, CA 90017
PHONE: (213) 239-8866

Hargreaves Jones
Hargreaves Jones Landscape Architecture

WORK ORDER NO. E700235D
FILE NO. --
DRAWING NO. L-165
SHEET 116 OF 295 SHEETS

2022-07-05 9:00:59 PM - C:\USERS\MESOPENKO\ONEDRIVE - HARGREAVES\SSV 1601 - SIXTH STREET VIADUCT\300_CREATE\310_HA WORKING FILES\06_TECHNICAL\06_100-CD\50_SHEETS\L-160-165 TREE PLANTING PLAN.DWG - MEGAN ESOPENKO



PLANTING PLAN - TREES LEGEND

LABEL	BOTANICAL NAME	COMMON NAME
AnC	*Angophora costata*	ROSE GUM
ArM	*Arbutus 'Marina'*	MARINA STRAWBERRY TREE
ChL	*Chilopsis linearis*	DESERT WILLOW
CoC	*Corymbia citriodora*	LEMON SCENTED GUM
CoP	*Corymbia papuana*	GHOST GUM
EuC	*Eucalyptus cladocalyx*	SUGAR GUM
EuT	*Eucalyptus torquata*	CORAL GUM
PaX	Parkinsonia X 'Desert Museum'	PALO VERDE 'DESERT MUSEUM'

LABEL	BOTANICAL NAME	COMMON NAME
FiR	*Ficus rubiginosa*	RUSTY LEAF FIG
JaM	*Jacaranda mimosifolia*	JACARANDA
PiT	*Pinus torreyana*	TORREY PINE
QuA	*Quercus agrifolia*	COAST LIVE OAK
QuB	*Quercus buckleyi*	TEXAS RED OAK
LaN	*Laurus nobilis*	BAY LAUREL
TiT	*Tipuana tipu*	TIPU

SHEET NOTES

1. SEE SHEET L-001 FOR GENERAL LANDSCAPE NOTES, ABBREVIATIONS AND SYMBOLS.
2. SEE SHEET L-065 FOR TREE SPECIES SCHEDULE

BUREAU OF ENGINEERING
OFFICIAL RECORD

THE CITY OF LOS ANGELES OR ITS OFFICERS OR AGENTS SHALL NOT BE RESPONSIBLE FOR THE ACCURACY OR COMPLETENESS OF ELECTRONIC COPIES OF THIS PLAN SHEET.

REVISION DATES (DESIGN STAGE ONLY)

Sheet Version 3.0

PLANS PREPARED BY:
TETRA TECH, INC.
707 WILSHIRE BLVD, 23RD FLR.
LOS ANGELES, CA 90017
PHONE: (213) 239-8866

HargreavesJones
Hargreaves Jones Landscape Architecture

CITY OF LOS ANGELES DEPARTMENT OF PUBLIC WORKS
BUREAU OF ENGINEERING

VERT. CONTROL: BM 12-04070, 1929 (NGVD29) - 1985 ADJUSTMENT
HORIZ. CONTROL: GPS; PID AE 1704, EPOCH 1991.35

SHEET TITLE: TREE PLANTING PLAN SHEET 5
PROJECT: SIXTH STREET PARK, ARTS AND RIVER CONNECTIVITY IMPROVEMENTS (PARC)
ADDRESS: SIXTH STREET OVER THE LOS ANGELES RIVER

TED ALLEN, P.E.
CITY ENGINEER
DESIGN GROUP
LANDSCAPE ARCHITECT: MARY MARGARET JONES LIC. NO. 07/11/2022
DESIGNED BY: MARY MARGARET JONES
DRAWN BY: MEGAN ESOPENKO
CHECKED BY: GAVIN MCMILLAN
APPROVED BY: MARY MARGARET JONES

THIS PLAN WAS ELECTRONICALLY SIGNED AND STAMPED.
LICENSED LANDSCAPE ARCHITECT Mary Margaret Jones #2615 STATE OF CALIFORNIA Date

NO. REVISIONS: DATE: BY:

BUILDING NO.

INDEX NO. MF-300501

ENGINEERING
CITY OF LOS ANGELES

WORK ORDER NO. E700235D
FILE NO. --
DRAWING NO. L-166
SHEET 117 OF 295 SHEETS

2022-07-05 9:01:04 PM - C:\USERS\MESOPENKO\ONEDRIVE - HARGREAVES\SSV 1601 - SIXTH STREET VIADUCT\300_CREATE\310_HA WORKING FILES\06_TECHNICAL\06_100-CD\50_SHEETS\L-160-165 TREE PLANTING PLAN.DWG - MEGAN ESOPENKO

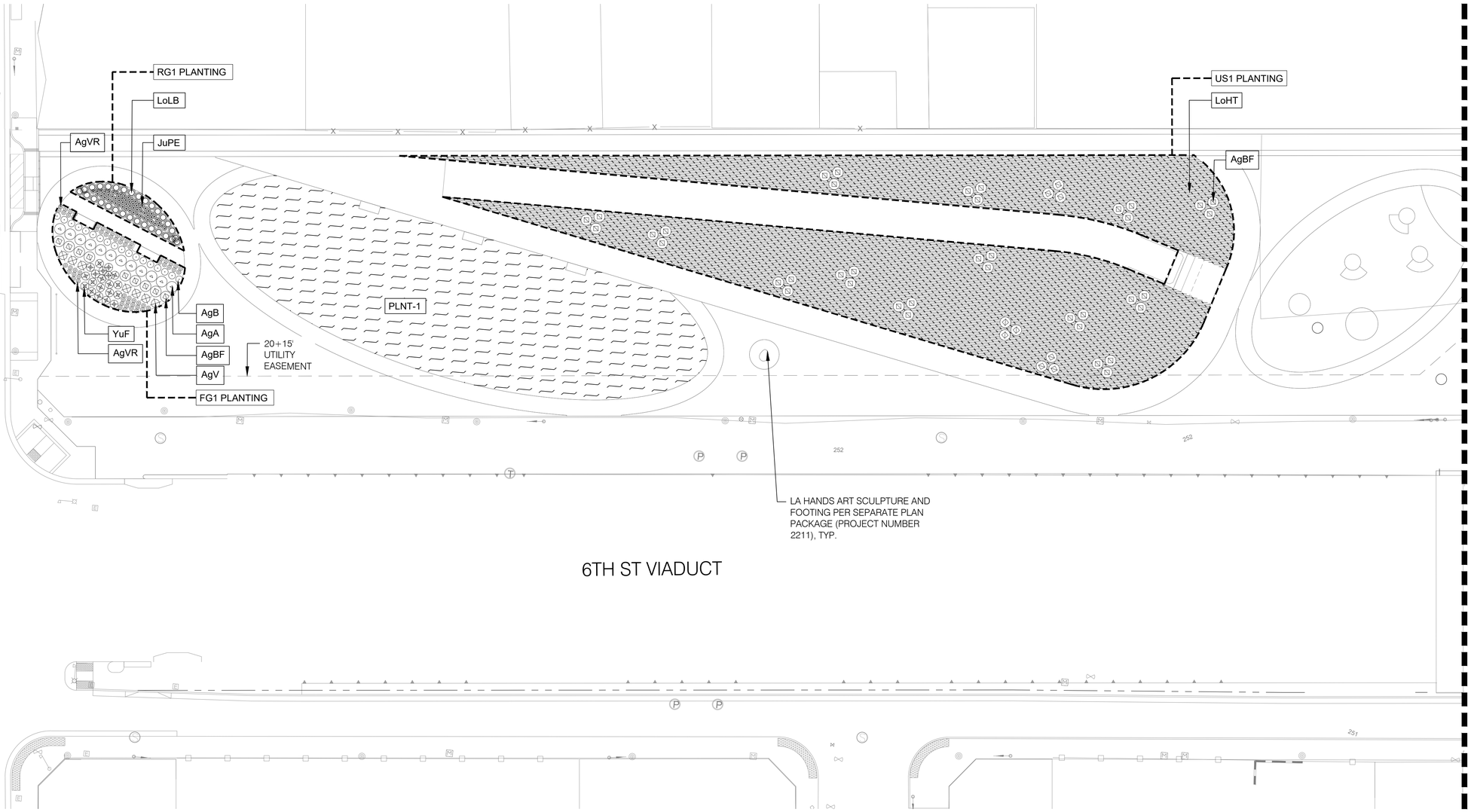

PLANTING PLAN - SOFTSCAPE LEGEND

PLNT 1 - LAWN REINFORCED

LABEL	BOTANICAL NAME	COMMON NAME
FG 1	**FEATURE GARDEN 1**	
AgVR	*Agave victoriae-reginae*	QUEEN VICTORIA AGAVE
AgB	*Agave bracteosa*	SPIDER AGAVE
AgA	*Agave attenuata*	FOXTAIL AGAVE
AgBF	*Agave 'Blue Flame'*	BLUE FLAME AGAVE
AgV	*Agave desmettiana 'Variegata'*	VARIEGATA
YuF	*Yucca filamentosa*	ADAMS NEEDLE
RG 1	**RAIN GARDEN 1**	
JuPE	*Juncus patens 'Elk Blue'*	ELK BLUE
LoLB	*Lomandra longifolia 'Breeze'*	DWARF MAT RUSH
US 1	**UPLAND SLOPE 1**	
LoHT	*Lomandra hystrix 'Tropicbelle'*	TROPIC BELLE MAT RUSH
AgBF	*Agave 'Blue Flame'*	BLUE FLAME AGAVE

SHEET NOTES

1. SEE SHEET L-001 FOR GENERAL LANDSCAPE NOTES, ABBREVIATIONS & SYMBOLS.
2. SEE SHEETS L-060, L-065, and L-066 FOR SOFTSCAPE SCHEDULE, TREE SPECIES SCHEDULE AND SOFTSCAPE SPECIES SCHEDULE.

BUREAU OF ENGINEERING
OFFICIAL RECORD

0 10' 20' 40'
SCALE 1" = 20'

THE CITY OF LOS ANGELES OR ITS OFFICERS OR AGENTS SHALL NOT BE RESPONSIBLE FOR THE ACCURACY OR COMPLETENESS OF ELECTRONIC COPIES OF THIS PLAN SHEET.

REVISION DATES (DESIGN STAGE ONLY)

Sheet Version 3.0

PLANS PREPARED BY:
TETRA TECH, INC.
707 WILSHIRE BLVD, 23RD FLR.
LOS ANGELES, CA 90017
PHONE: (213) 239-8866

HargreavesJones
Hargreaves Jones Landscape Architecture

CITY OF LOS ANGELES DEPARTMENT OF PUBLIC WORKS BUREAU OF ENGINEERING

ENGINEERING
CITY OF LOS ANGELES

THIS PLAN WAS ELECTRONICALLY SIGNED AND STAMPED.

LICENSED LANDSCAPE ARCHITECT
Mary Margaret Jones #2515
Renewal Date
Date
STATE OF CALIFORNIA

NO.	REVISIONS:	DATE:	BY:

BUILDING NO.

INDEX NO. MF-300501

TED ALLEN, P.E.
CITY ENGINEER

DESIGN GROUP
LANDSCAPE ARCHITECT: MARY MARGARET JONES LIC. NO. 07/11/2022
DESIGNED BY: MARY MARGARET JONES
DRAWN BY: MEGAN ESOPENKO
CHECKED BY: GAVIN MCMILLAN
APPROVED BY: MARY MARGARET JONES

VERT. CONTROL: BM 12-04070, 1929 (NGVD29) - 1985 ADJUSTMENT
HORIZ. CONTROL: GPS; PID AE 1704, EPOCH 1991.35

SHEET TITLE: UNDERSTORY PLANTING PLAN SHEET 1
PROJECT: SIXTH STREET PARK, ARTS AND RIVER CONNECTIVITY IMPROVEMENTS (PARC)
ADDRESS: SIXTH STREET OVER THE LOS ANGELES RIVER

WORK ORDER NO. E700235D
FILE NO. --
DRAWING NO. L-171
SHEET 118 OF 295 SHEETS

2022-07-05 9:01:19 PM - C:\USERS\MESOPENKO\ONEDRIVE - HARGREAVES\SSV 1601 - SIXTH STREET VIADUCT\300_CREATE\310_HA WORKING FILES\06_TECHNICAL\06_100-CD\50_SHEETS\L-170-175 UNDERSTORY PLANTING PLAN.DWG - MEGAN ESOPENKO

PLANTING PLAN - SOFTSCAPE LEGEND

PLNT 1 - LAWN REINFORCED

LABEL	BOTANICAL NAME	COMMON NAME
SS 1	**SHADY SLOPE 1**	
DiCC	*Dianella caerulea 'Cassa Blue'*	FLAX LILY
CoB	*Cordyline banksii 'Sprilecpink'*	ELECTRIC PINK CORDYLINE
LiG	*Liriope gigantea*	GIANT LILY TURF
CaD	*Carex divulsa*	EUROPEAN GREY SEDGE
FG 2	**FEATURE GARDEN 2**	
RuA	*Rumohra adiantiformis*	LEATHER FERN
PoM	*Polystichum munitum*	WESTERN SWORD FERN
WoF	*Woodwardia fimbriata*	GIANT CHAIN FERN
MiS	*Microlepia strigosa*	LACE FERN
DiCC	*Dianella caerulea 'Cassa Blue'*	FLAX LILY

SHEET NOTES

1. SEE SHEET L-001 FOR GENERAL LANDSCAPE NOTES, ABBREVIATIONS & SYMBOLS.
2. SEE SHEETS L-060, L-065, and L-066 FOR SOFTSCAPE SCHEDULE, TREE SPECIES SCHEDULE AND SOFTSCAPE SPECIES SCHEDULE.

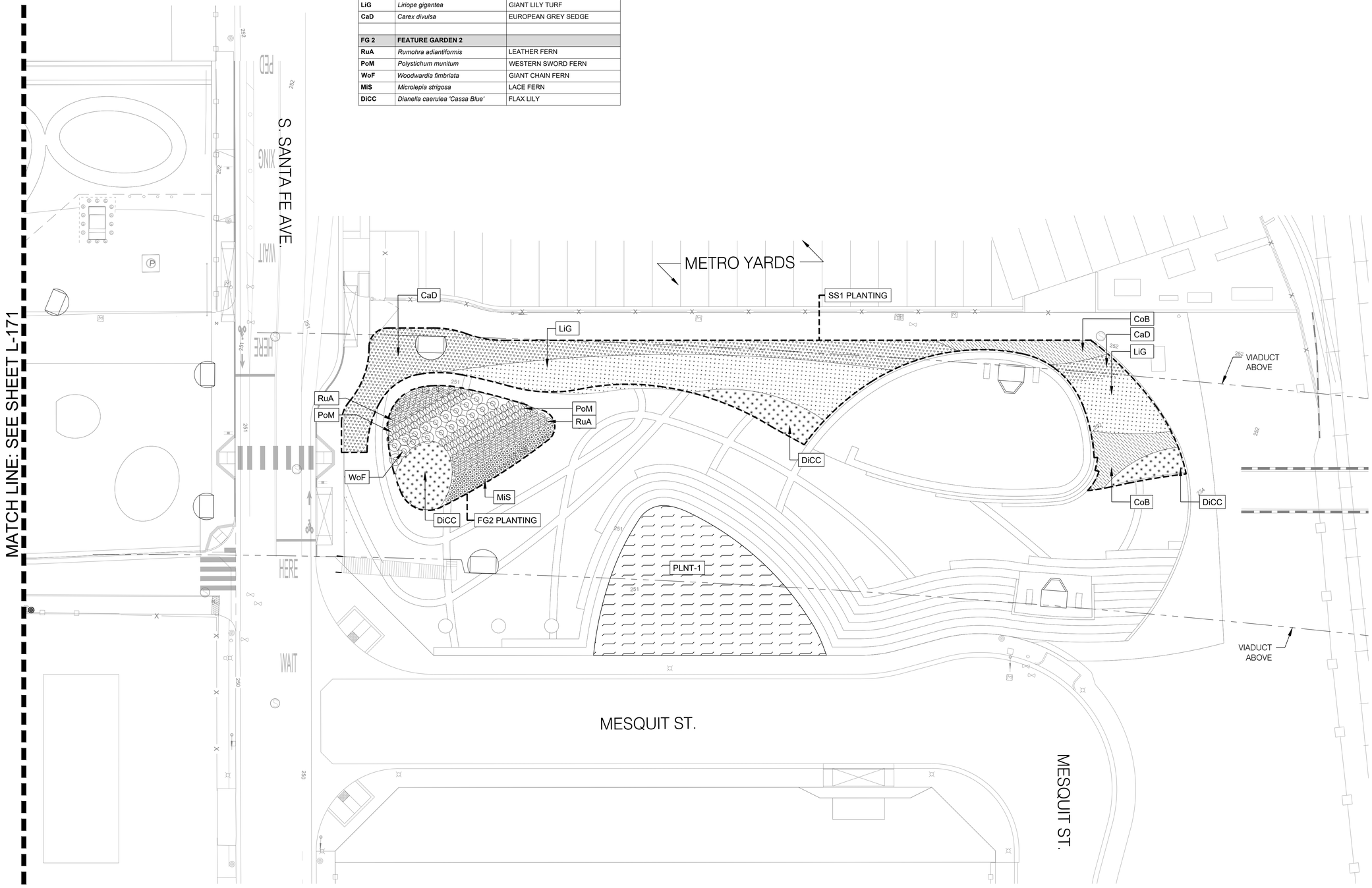

THE CITY OF LOS ANGELES OR ITS OFFICERS OR AGENTS SHALL NOT BE RESPONSIBLE FOR THE ACCURACY OR COMPLETENESS OF ELECTRONIC COPIES OF THIS PLAN SHEET.

REVISION DATES (DESIGN STAGE ONLY)

Sheet Version 3.0

BUREAU OF ENGINEERING OFFICIAL RECORD

BUREAU OF ENGINEERING

CITY OF LOS ANGELES DEPARTMENT OF PUBLIC WORKS

ENGINEERING CITY OF LOS ANGELES

NO.	REVISIONS:	DATE:	BY:

BUILDING NO.

INDEX NO. MF-300501

THIS PLAN WAS ELECTRONICALLY SIGNED AND STAMPED.

LICENSED LANDSCAPE ARCHITECT Mary Margaret Jones #2615 Renewal Date Date STATE OF CALIFORNIA

TED ALLEN, P.E. CITY ENGINEER

DESIGN GROUP

LANDSCAPE ARCHITECT: MARY MARGARET JONES LIC. NO. 07/11/2022

DESIGNED BY: MARY MARGARET JONES

DRAWN BY: MEGAN ESOPENKO

CHECKED BY: GAVIN MCMILLAN

APPROVED BY: MARY MARGARET JONES

HargreavesJones

Hargreaves Jones Landscape Architecture

PLANS PREPARED BY:

TETRA TECH, INC.

707 WILSHIRE BLVD, 23RD FLR.
LOS ANGELES, CA 90017
PHONE: (213) 239-8866

VERT. CONTROL: BM 12-04070, 1929 (NGVD29) - 1985 ADJUSTMENT
HORIZ. CONTROL: GPS; PID AE 1704, EPOCH 1991.35

SHEET TITLE: UNDERSTORY PLANTING PLAN SHEET 2

PROJECT: SIXTH STREET PARK, ARTS AND RIVER CONNECTIVITY IMPROVEMENTS (PARC)

ADDRESS: SIXTH STREET OVER THE LOS ANGELES RIVER

WORK ORDER NO. E700235D

FILE NO. --

DRAWING NO. L-172

SHEET 119 OF 295 SHEETS

2022-07-05 9:01:25 PM - C:\USERS\MESOPENKO\ONEDRIVE - HARGREAVES\SSV 1601 - SIXTH STREET VIADUCT\300_CREATE\310_HA WORKING FILES\06_TECHNICAL\06_100-CD\50_SHEETS\L-170-175 UNDERSTORY PLANTING PLAN.DWG - MEGAN ESOPENKO

PLANTING PLAN - SOFTSCAPE LEGEND

PLNT 1 - LAWN REINFORCED

LABEL	BOTANICAL NAME	COMMON NAME
LL1	**LOW LAND 1**	
AgDV	*Agave desmettiana 'Variegata'*	VARIEGATA
MaR	*Mahonia repens*	CREEPING BARBERRY
CaD	*Carex divulsa*	EUROPEAN GREY SEDGE
FuFM	*Furcrea foetida 'Mediopicta'*	MAURITIUS HEMP
LoHT	*Lomandra hystrix 'Tropicbelle'*	TROPIC BELLE MAT RUSH
AgA	*Agave attenuata*	FOXTAIL AGAVE
RG 2	**RAIN GARDEN 2**	
AcM	*Achillea millefolium*	YARROW
JuPE	*Juncus patens 'Elk Blue'*	ELK BLUE
US 2	**UPLAND SLOPE 2**	
LoHT	*Lomandra hystrix 'Tropicbelle'*	TROPIC BELLE MAT RUSH

SHEET NOTES

1. SEE SHEET L-001 FOR GENERAL LANDSCAPE NOTES, ABBREVIATIONS & SYMBOLS.
2. SEE SHEETS L-060, L-065, and L-066 FOR SOFTSCAPE SCHEDULE, TREE SPECIES SCHEDULE AND SOFTSCAPE SPECIES SCHEDULE.

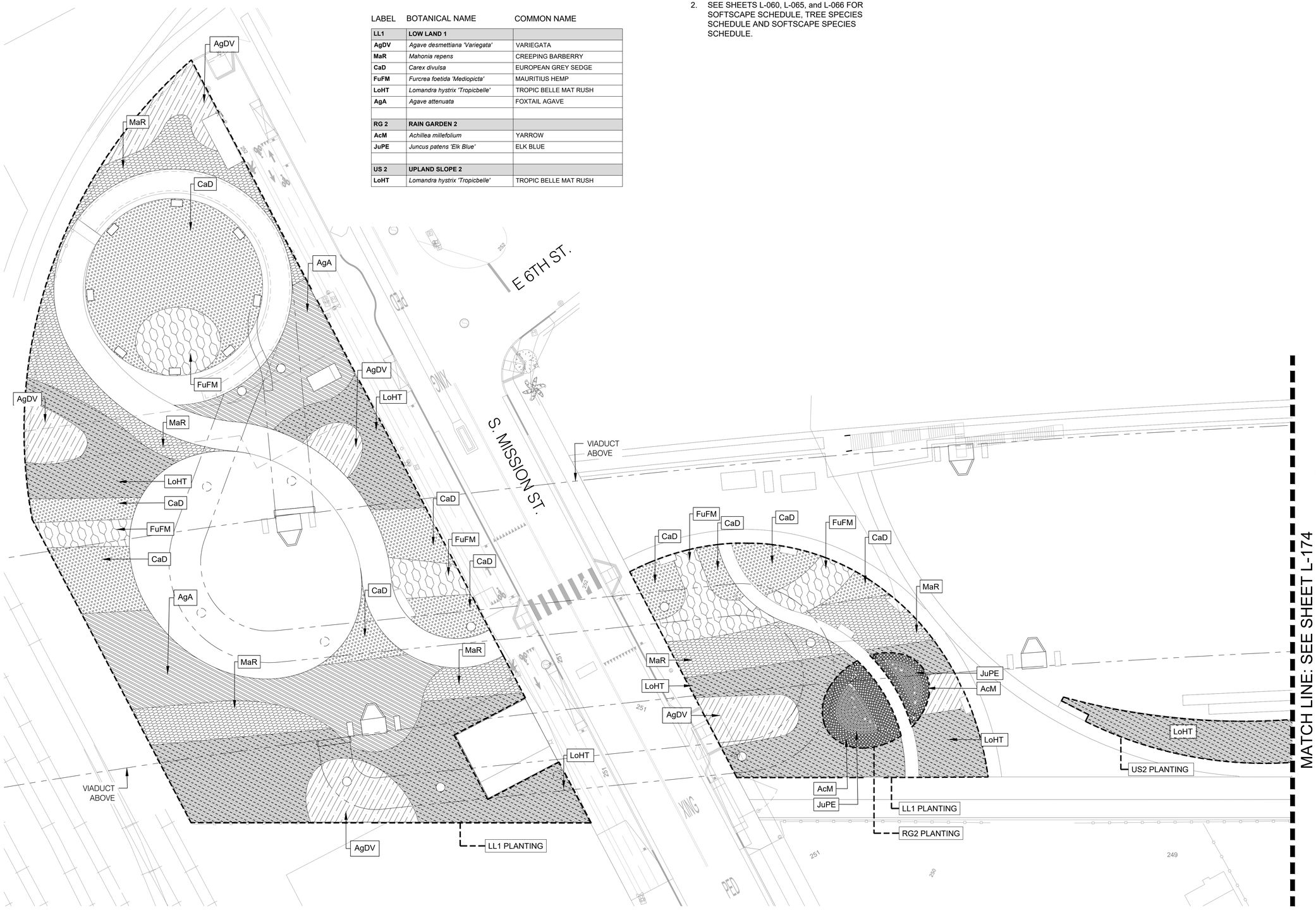

BUREAU OF ENGINEERING
OFFICIAL RECORD

PLANS PREPARED BY:
TETRA TECH, INC.
707 WILSHIRE BLVD. 23RD FLR.
LOS ANGELES, CA 90017
PHONE: (213) 239-8866

HargreavesJones
Hargreaves Jones Landscape Architecture

CITY OF LOS ANGELES DEPARTMENT OF PUBLIC WORKS
BUREAU OF ENGINEERING

ENGINEERING
CITY OF LOS ANGELES

NO.	REVISIONS:	DATE	BY:

BUILDING NO.

INDEX NO. **MF-300501**

THIS PLAN WAS ELECTRONICALLY SIGNED AND STAMPED

LICENSED LANDSCAPE ARCHITECT MARY MARGARET JONES No. 2516 STATE OF CALIFORNIA
Date 07/11/2022

CITY ENGINEER
TED ALLEN, P.E.
DATE: 07/11/2022

DESIGN GROUP	
LANDSCAPE ARCHITECT: MARY MARGARET JONES	LIC. NO.
DESIGNED BY: MARY MARGARET JONES	
DRAWN BY: MEGAN ESOPENKO	
CHECKED BY: GAVIN MCMILLAN	
APPROVED BY: MARY MARGARET JONES	

VERT. CONTROL: BM 12-04070, 1929 (NGVD29) - 1985 ADJUSTMENT
HORIZ. CONTROL: GPS; PID AE 1704, EPOCH 1991.35

SHEET TITLE: UNDERSTORY PLANTING PLAN SHEET 3

PROJECT: SIXTH STREET PARK, ARTS AND RIVER CONNECTIVITY IMPROVEMENTS (PARC)

ADDRESS: SIXTH STREET OVER THE LOS ANGELES RIVER

WORK ORDER NO. E700235D
FILE NO. --
DRAWING NO. L-173
SHEET 120 OF 295 SHEETS

REVISION DATES (DESIGN STAGE ONLY)

THE CITY OF LOS ANGELES OR ITS OFFICERS OR AGENTS SHALL NOT BE RESPONSIBLE FOR THE ACCURACY OR COMPLETENESS OF ELECTRONIC COPIES OF THIS PLAN SHEET.

2022-07-05 9:01:30 PM - C:\USERS\MESOPENKO\ONEDRIVE - HARGREAVESJSV 1601 - SIXTH STREET VIADUCT\300_CREATE\310_HA WORKING FILES\06_TECHNICAL\06_100-CD\50_SHEETS\L-170-175 UNDERSTORY PLANTING PLAN.DWG - MEGAN ESOPENKO

Sheet Version 3.0

PLANTING PLAN - SOFTSCAPE LEGEND

PLNT 1 - LAWN REINFORCED

LABEL	BOTANICAL NAME	COMMON NAME
US 2	UPLAND SLOPE 2	
LoHT	*Lomandra hystrix 'Tropicbelle'*	TROPIC BELLE MAT RUSH

SHEET NOTES

1. SEE SHEET L-001 FOR GENERAL LANDSCAPE NOTES, ABBREVIATIONS & SYMBOLS.
2. SEE SHEETS L-060, L-065, and L-066 FOR SOFTSCAPE SCHEDULE, TREE SPECIES SCHEDULE AND SOFTSCAPE SPECIES SCHEDULE.

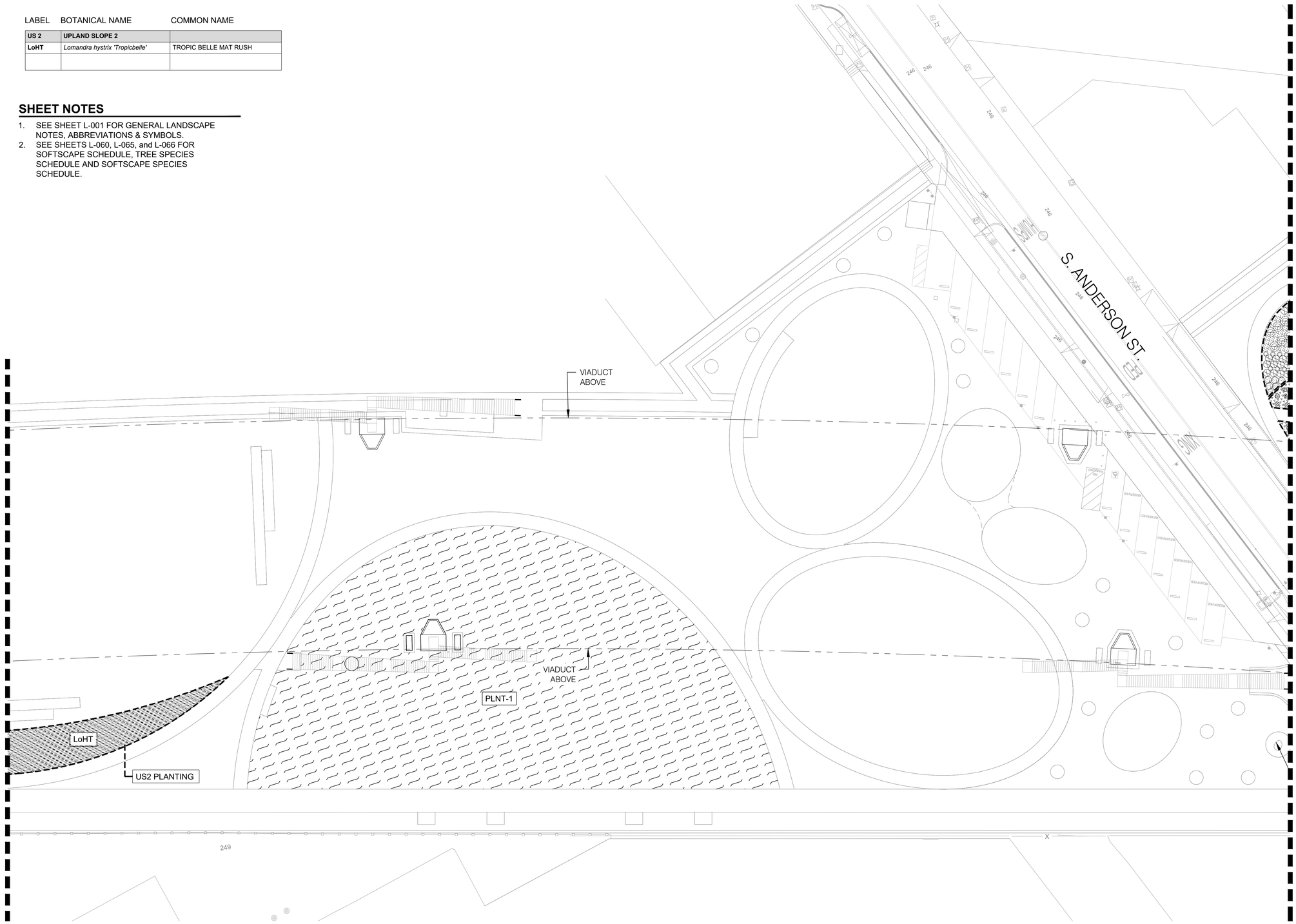

0 10' 20' 40'
SCALE 1" = 20'

BUREAU OF ENGINEERING
OFFICIAL RECORD

THIS PLAN WAS ELECTRONICALLY SIGNED AND STAMPED.

LICENSED LANDSCAPE ARCHITECT
Mary Margaret Jones #2616
Retirement Date
Date
STATE OF CALIFORNIA

BUREAU OF ENGINEERING

ENGINEERING
CITY OF LOS ANGELES

NO.	REVISIONS:	DATE:	BY:

BUILDING NO.

INDEX NO. MF-300501

CITY OF LOS ANGELES DEPARTMENT OF PUBLIC WORKS

TED ALLEN, P.E.
CITY ENGINEER

		DATE:
DESIGN GROUP		
LANDSCAPE ARCHITECT: MARY MARGARET JONES	LIC. NO.	07/11/2022
DESIGNED BY: MARY MARGARET JONES		
DRAWN BY: MEGAN ESOPENKO		
CHECKED BY: GAVIN MCMILLAN		
APPROVED BY: MARY MARGARET JONES		

HargreavesJones
Hargreaves Jones Landscape Architecture

PLANS PREPARED BY:
TETRA TECH, INC.
707 WILSHIRE BLVD, 23RD FLR.
LOS ANGELES, CA 90017
PHONE: (213) 239-8866

VERT. CONTROL: BM 12-04070, 1929 (NGVD29) - 1985 ADJUSTMENT
HORIZ. CONTROL: GPS; PID AE 1704; EPOCH 1991.35

SHEET TITLE: UNDERSTORY PLANTING PLAN SHEET 4
PROJECT: SIXTH STREET PARK, ARTS AND RIVER CONNECTIVITY IMPROVEMENTS (PARC)
ADDRESS: SIXTH STREET OVER THE LOS ANGELES RIVER

WORK ORDER NO. E700235D
FILE NO. --
DRAWING NO. L-174
SHEET 121 OF 295 SHEETS

2022-07-05 9:01:35 PM - C:\USERS\MESOPENKO\ONEDRIVE - HARGREAVES\SSV 1601 - SIXTH STREET VIADUCT\300_CREATE\310_HA WORKING FILES\06_TECHNICAL\06_100-CD\50_SHEETS\L-170-175 UNDERSTORY PLANTING PLAN.DWG - MEGAN ESOPENKO

THE CITY OF LOS ANGELES OR ITS OFFICERS OR AGENTS SHALL NOT BE RESPONSIBLE FOR THE ACCURACY OR COMPLETENESS OF ELECTRONIC COPIES OF THIS PLAN SHEET.

REVISION DATES (DESIGN STAGE ONLY)

Sheet Version 3.0

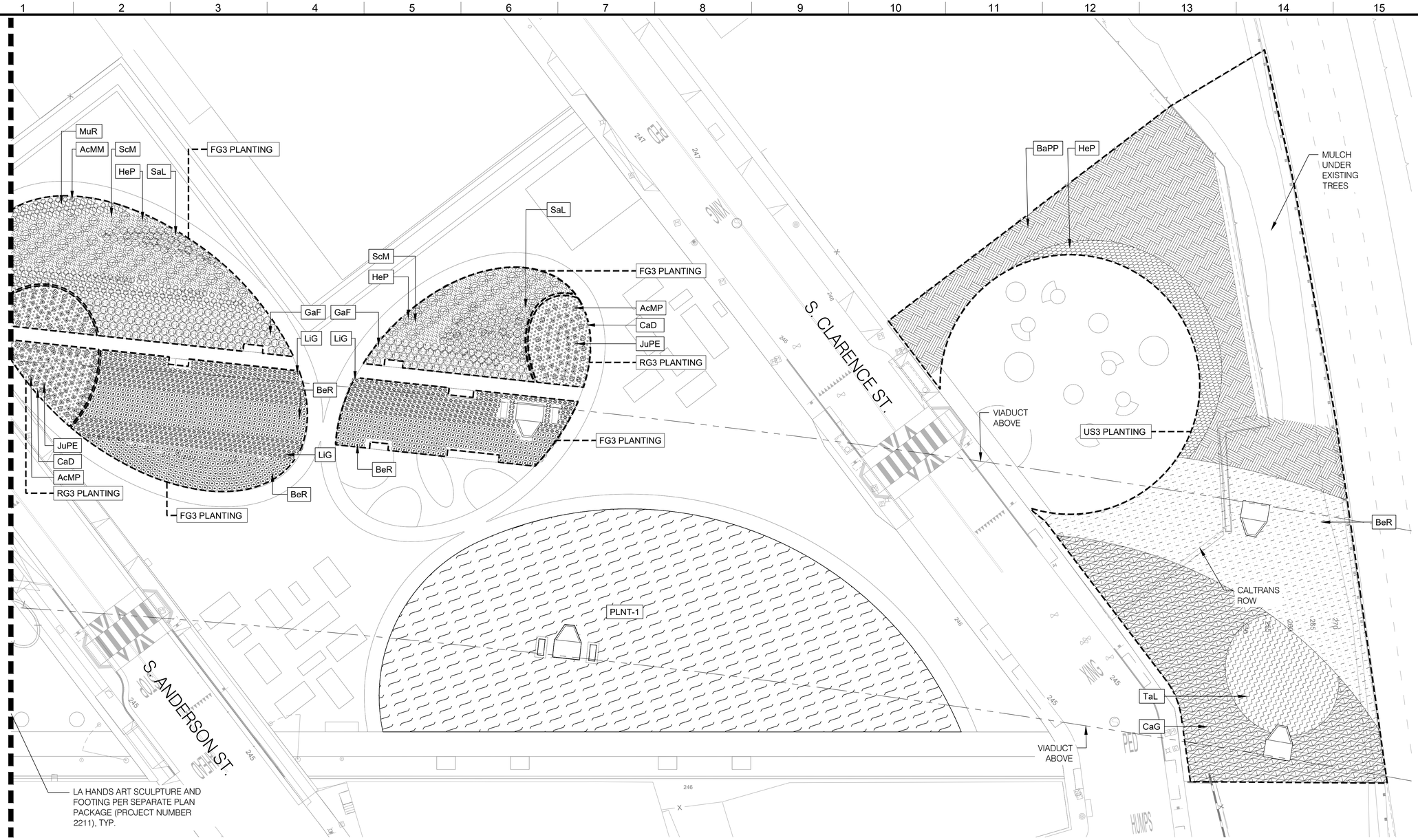

PLANTING PLAN - SOFTSCAPE LEGEND

PLNT 1 - LAWN REINFORCED

LABEL	BOTANICAL NAME	COMMON NAME
FG 3	**FEATURE GARDEN 3**	
AcMM	*Achillea millefolium 'Moonshine'*	MOONSHINE YARROW
MuR	*Muhlenbergia rigens*	DEER GRASS
ScM	*Senecio mandraliscae*	BLUE CHALK
HeP	*Hesperaloe parviflora*	RED YUCCA
SaL	*Salvia leucantha 'Santa Barbara'*	SANTA BARBARA SAGE
GaF	*Galvezia 'Firecracker'*	FIRECRACKER SNAPDRAGON
LiG	*Liriope gigantea*	GIANT LILY TURF
BeR	*Berberis repens*	CREEPING BARBERRY

LABEL	BOTANICAL NAME	COMMON NAME
RG 3	**RAIN GARDEN 3**	
AcMP	*Achillea millefolium 'Paprika'*	PAPRIKA YARROW
CaD	*Carex divulsa*	EUROPEAN GREY SEDGE
JuPE	*Juncus patens 'Elk Blue'*	ELK BLUE
US 3	**UPLAND SLOPE 3**	
BaPP	*Baccharis pilularis 'Pigeon Point'*	DWARF COYOTE BRUSH
HeP	*Hesperaloe parviflora*	RED YUCCA
BeR	*Berberis repens*	CREEPING BARBERRY
CaG	*Carissa macrocarpa 'Green Carpet'*	GREEN CARPET
TaL	*Tagetes lemmonii*	MEXICAN MARIGOLD

SHEET NOTES

1. SEE SHEET L-001 FOR GENERAL LANDSCAPE NOTES, ABBREVIATIONS & SYMBOLS.
2. SEE SHEETS L-060, L-065, and L-066 FOR SOFTSCAPE SCHEDULE, TREE SPECIES SCHEDULE AND SOFTSCAPE SPECIES SCHEDULE.

THE CITY OF LOS ANGELES OR ITS OFFICERS OR AGENTS SHALL NOT BE RESPONSIBLE FOR THE ACCURACY OR COMPLETENESS OF ELECTRONIC COPIES OF THIS PLAN SHEET.

REVISION DATES (DESIGN STAGE ONLY)

Sheet Version 3.0

PLANS PREPARED BY:
TETRA TECH, INC.
707 WILSHIRE BLVD, 23RD FLR.
LOS ANGELES, CA 90017
PHONE: (213) 239-8866

HargreavesJones
Hargreaves Jones Landscape Architecture

CITY OF LOS ANGELES DEPARTMENT OF PUBLIC WORKS BUREAU OF ENGINEERING

ENGINEERING CITY OF LOS ANGELES

BUREAU OF ENGINEERING OFFICIAL RECORD

NO.	REVISIONS:	DATE:	BY:

BUILDING NO.

INDEX NO. MF-300501

THIS PLAN WAS ELECTRONICALLY SIGNED AND STAMPED.

LICENSED LANDSCAPE ARCHITECT Mary Margaret Jones #2615 Renewal Date Date STATE OF CALIFORNIA

TED ALLEN, P.E. CITY ENGINEER

DESIGN GROUP

LANDSCAPE ARCHITECT: MARY MARGARET JONES LIC. NO. DATE: 07/11/2022

DESIGNED BY: MARY MARGARET JONES

DRAWN BY: MEGAN ESOPENKO

CHECKED BY: GAVIN MCMILLAN

APPROVED BY: MARY MARGARET JONES

VERT. CONTROL: BM 12-04070, 1929 (NGVD29) - 1985 ADJUSTMENT
HORIZ. CONTROL: GPS; PID AE 1704, EPOCH 1991.35

SHEET TITLE: UNDERSTORY PLANTING PLAN SHEET 5

PROJECT: SIXTH STREET PARK, ARTS AND RIVER CONNECTIVITY IMPROVEMENTS (PARC)

ADDRESS: SIXTH STREET OVER THE LOS ANGELES RIVER

WORK ORDER NO. E700235D

FILE NO. --

DRAWING NO. L-175

SHEET 122 OF 295 SHEETS

2022-07-05 9:01:40 PM - C:\USERS\MESOPENKO\ONEDRIVE - HARGREAVES\SSV 1601 - SIXTH STREET VIADUCT\300_CREATE\310_HA WORKING FILES\06_TECHNICAL\06_100-CD\50_SHEETS\L-170-175 UNDERSTORY PLANTING PLAN.DWG - MEGAN ESOPENKO

SHEET NOTES

1. SITE SECTIONS ARE FOR DESIGN INTENT. REFERENCE ALL DIMENSIONS MUST BE CONFIRMED PER THE HORIZONTAL CONTROL PLAN.

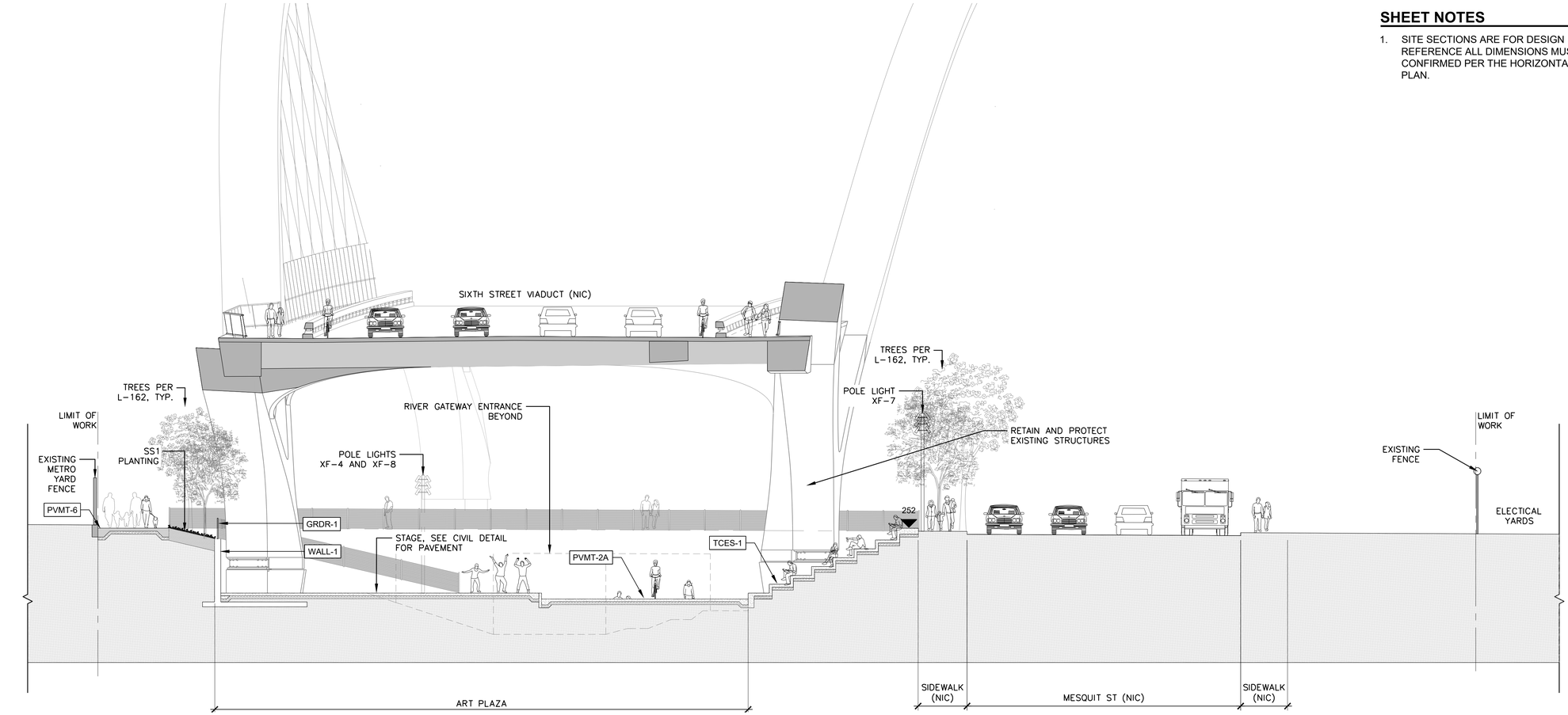

ARTS PLAZA SITE SECTION 02
SCALE: 1/8" = 1'-0"

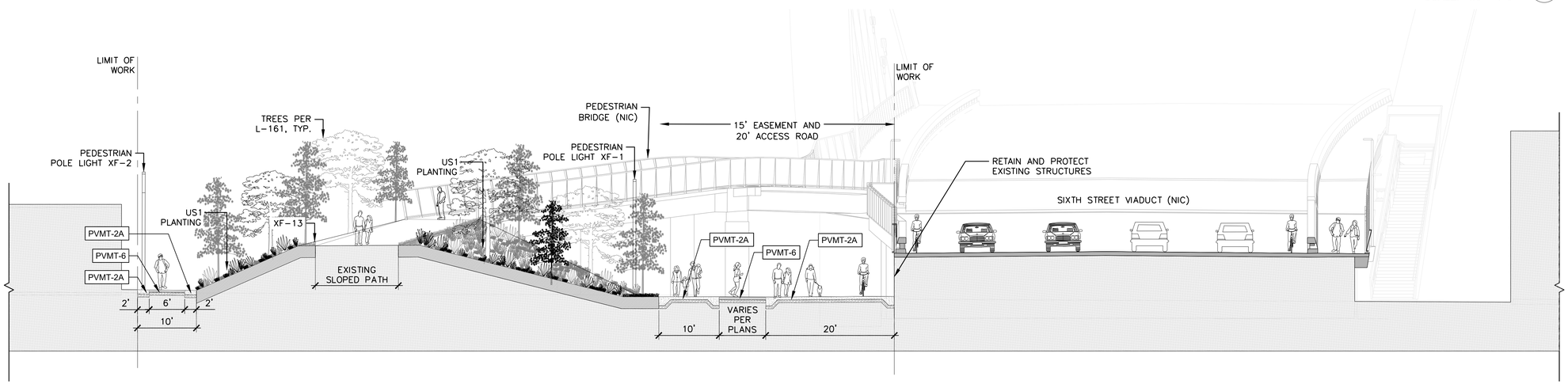

WEST PARK RAMP SITE SECTION 01
SCALE: 1/8" = 1'-0"

BUREAU OF ENGINEERING
OFFICIAL RECORD

THE CITY OF LOS ANGELES OR ITS OFFICERS OR AGENTS SHALL NOT BE RESPONSIBLE FOR THE ACCURACY OR COMPLETENESS OF ELECTRONIC COPIES OF THIS PLAN SHEET.

REVISION DATES (DESIGN STAGE ONLY)

Sheet Version 3.0

PLANS PREPARED BY:
TETRA TECH, INC.
707 WILSHIRE BLVD, 23RD FLR.
LOS ANGELES, CA 90017
PHONE: (213) 239-8866

HargreavesJones
Hargreaves Jones Landscape Architecture

CITY OF LOS ANGELES DEPARTMENT OF PUBLIC WORKS
BUREAU OF ENGINEERING

ENGINEERING
CITY OF LOS ANGELES

NO.	REVISIONS:	DATE	BY:

BUILDING NO.

INDEX NO. MF-300501

LICENSED LANDSCAPE ARCHITECT MARY MARGARET JONES #2516 STATE OF CALIFORNIA
Date 07/11/2022

THIS PLAN WAS ELECTRONICALLY SIGNED AND STAMPED

CITY ENGINEER
TED ALLEN, P.E.
DATE: 07/11/2022

DESIGN GROUP
LANDSCAPE ARCHITECT: MARY MARGARET JONES LIC. NO. 2516
DESIGNED BY: MARY MARGARET JONES
DRAWN BY: MEGAN ESOPENKO
CHECKED BY: GAVIN MCMILLAN
APPROVED BY: MARY MARGARET JONES

VERT. CONTROL: BM 12-04070, 1929 (NGVD29) - 1985 ADJUSTMENT
HORIZ. CONTROL: GPS, PID AE 1704, EPOCH 1991.35

SHEET TITLE: SITE SECTIONS SHEET 1

PROJECT: SIXTH STREET PARK, ARTS AND RIVER CONNECTIVITY IMPROVEMENTS (PARC)

ADDRESS: SIXTH STREET OVER THE LOS ANGELES RIVER

WORK ORDER NO. E700235D
FILE NO. --
DRAWING NO. L-301
SHEET 123 OF 295 SHEETS

2022-07-05 9:02:06 PM - C:\USERS\MESOPENKO\ONEDRIVE - HARGREAVESJSV 1601 - SIXTH STREET VIADUCT\300_CREATE\310_HA WORKING FILES\06_TECHNICAL\06_...

SHEET NOTES

1. SITE SECTIONS ARE FOR DESIGN INTENT. REFERENCE ALL DIMENSIONS MUST BE CONFIRMED PER THE HORIZONTAL CONTROL PLAN.

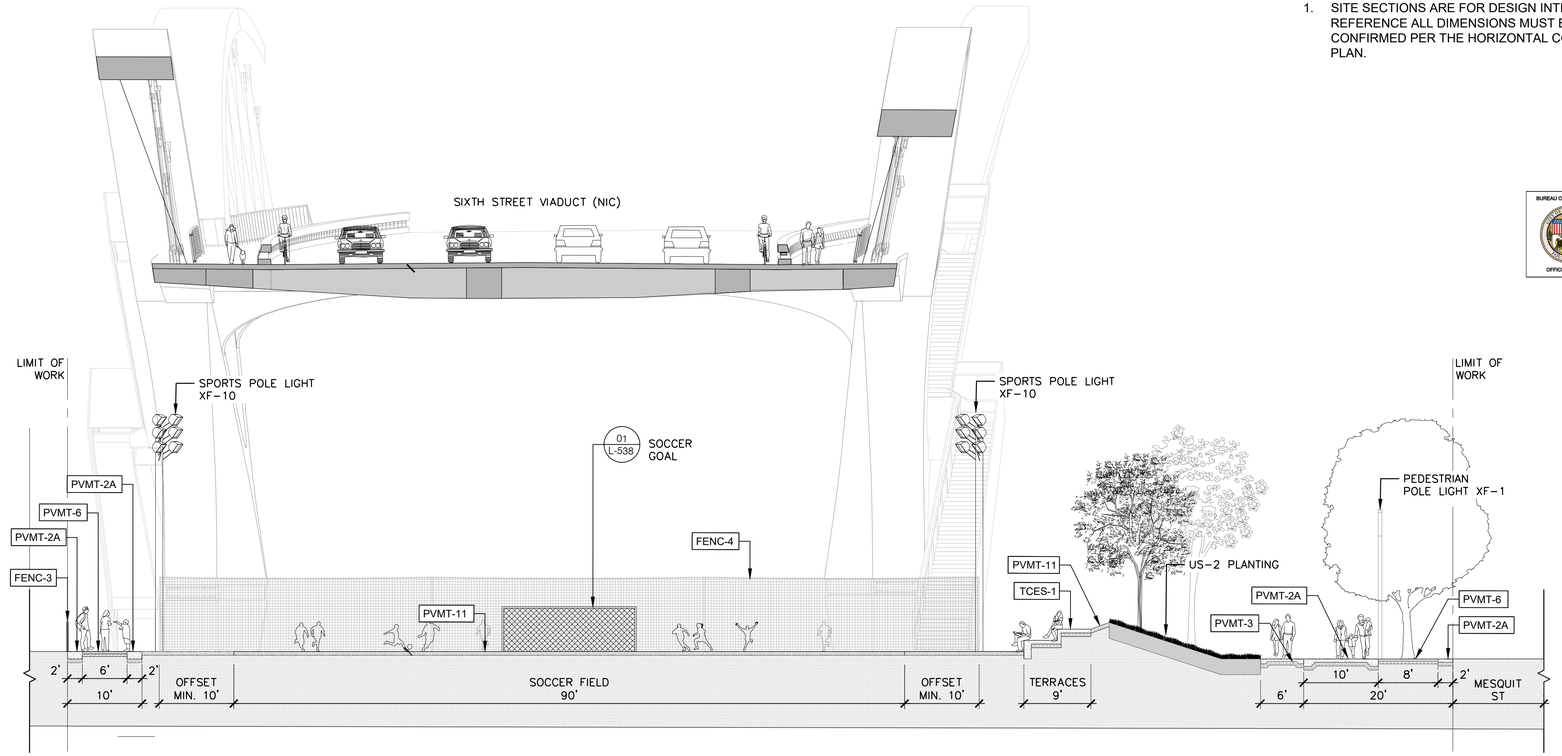

EAST PARK - SYNTHETIC SOCCER FIELD SITE SECTION 04
SCALE: 1/8" = 1'-0"

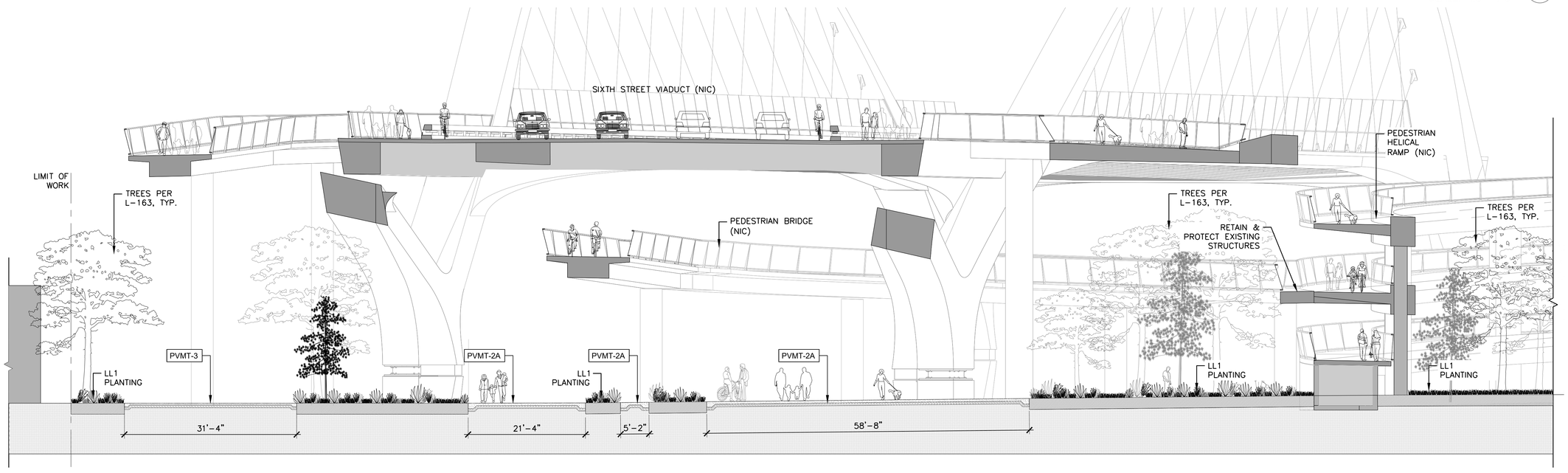

EAST PARK - NATURE WALK SITE SECTION 03
SCALE: 1/8" = 1'-0"

BUREAU OF ENGINEERING
OFFICIAL RECORD

THIS PLAN WAS ELECTRONICALLY SIGNED AND STAMPED

LICENSED LANDSCAPE ARCHITECT JAMES RICHARD DALE #2576 STATE OF CALIFORNIA

PLANS PREPARED BY:
TETRA TECH, INC.
707 WILSHIRE BLVD, 23RD FLR.
LOS ANGELES, CA 90017
PHONE: (213) 239-8866

HargreavesJones
Hargreaves Jones Landscape Architecture

CITY OF LOS ANGELES DEPARTMENT OF PUBLIC WORKS BUREAU OF ENGINEERING

ENGINEERING
CITY OF LOS ANGELES

NO.	REVISIONS:	DATE	BY:

BUILDING NO.

INDEX NO. MF-300501

CITY ENGINEER
TED ALLEN, P.E.
DESIGN GROUP
LANDSCAPE ARCHITECT: MARY MARGARET JONES LIC. NO. 2576 DATE: 07/11/2022
DESIGNED BY: MARY MARGARET JONES
DRAWN BY: MEGAN ESOPENKO
CHECKED BY: GAVIN MCMILLAN
APPROVED BY: MARY MARGARET JONES

VERT. CONTROL: BM 12-04070, 1929 (NGVD29) - 1985 ADJUSTMENT
HORIZ. CONTROL: GPS, PID AE 1704, EPOCH 1991.35

SHEET TITLE: SITE SECTIONS SHEET 2

PROJECT: SIXTH STREET PARK, ARTS AND RIVER CONNECTIVITY IMPROVEMENTS (PARC)

ADDRESS: SIXTH STREET OVER THE LOS ANGELES RIVER

WORK ORDER NO. E700235D
FILE NO. --
DRAWING NO. L-302
SHEET 124 OF 295 SHEETS

2022-07-05 9:02:21 PM - C:\USERS\MESOPENKO\ONEDRIVE - HARGREAVESJSV 1601 - SIXTH STREET VIADUCT\300_CREATE\310_HA WORKING FILES\06_TECHNICAL\06_CHNICAL06_100-CD150_SHEETS_L-301-308 SITE SECTIONS.DWG - MEGAN ESOPENKO

REVISION DATES (DESIGN STAGE ONLY)

THE CITY OF LOS ANGELES OR ITS OFFICERS OR AGENTS SHALL NOT BE RESPONSIBLE FOR THE ACCURACY OR COMPLETENESS OF ELECTRONIC COPIES OF THIS PLAN SHEET.

Sheet Version 3.0

SHEET NOTES

1. SITE SECTIONS ARE FOR DESIGN INTENT. REFERENCE ALL DIMENSIONS MUST BE CONFIRMED PER THE HORIZONTAL CONTROL PLAN.

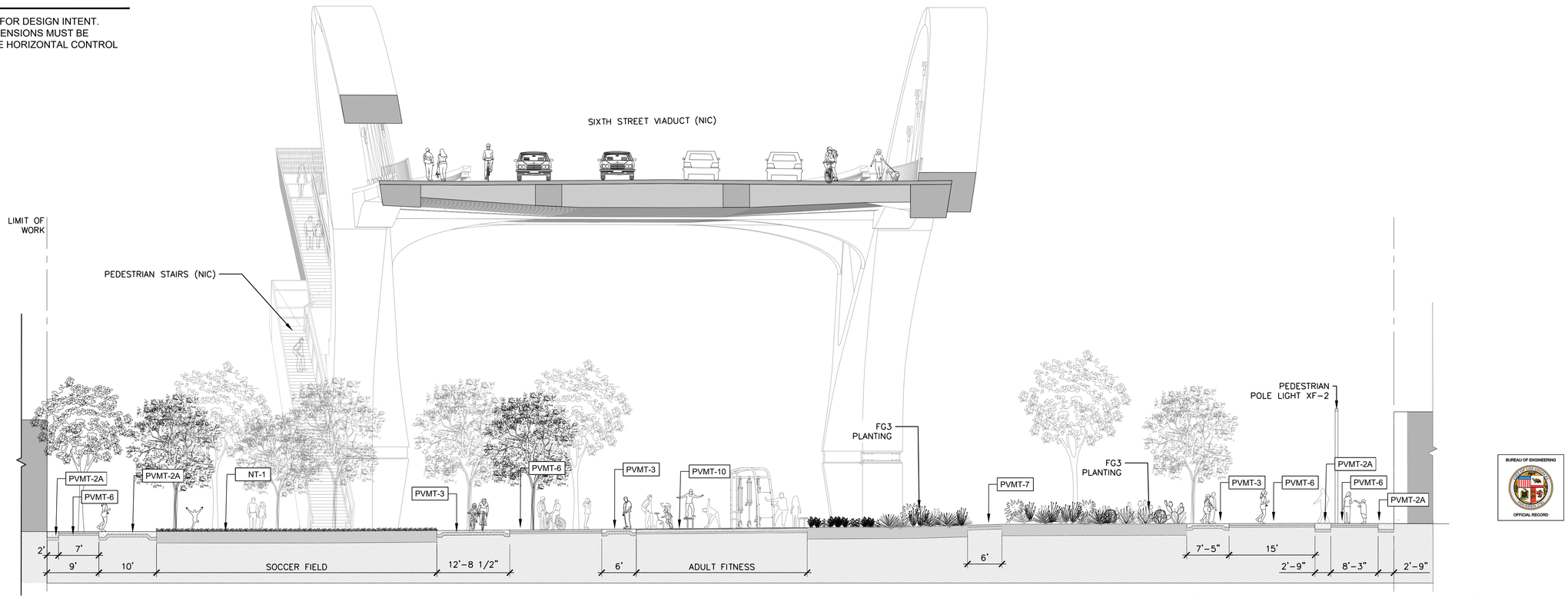

EAST PARK - GARDENS AND LAWN SITE SECTION 06
SCALE: 1/8" = 1'-0"

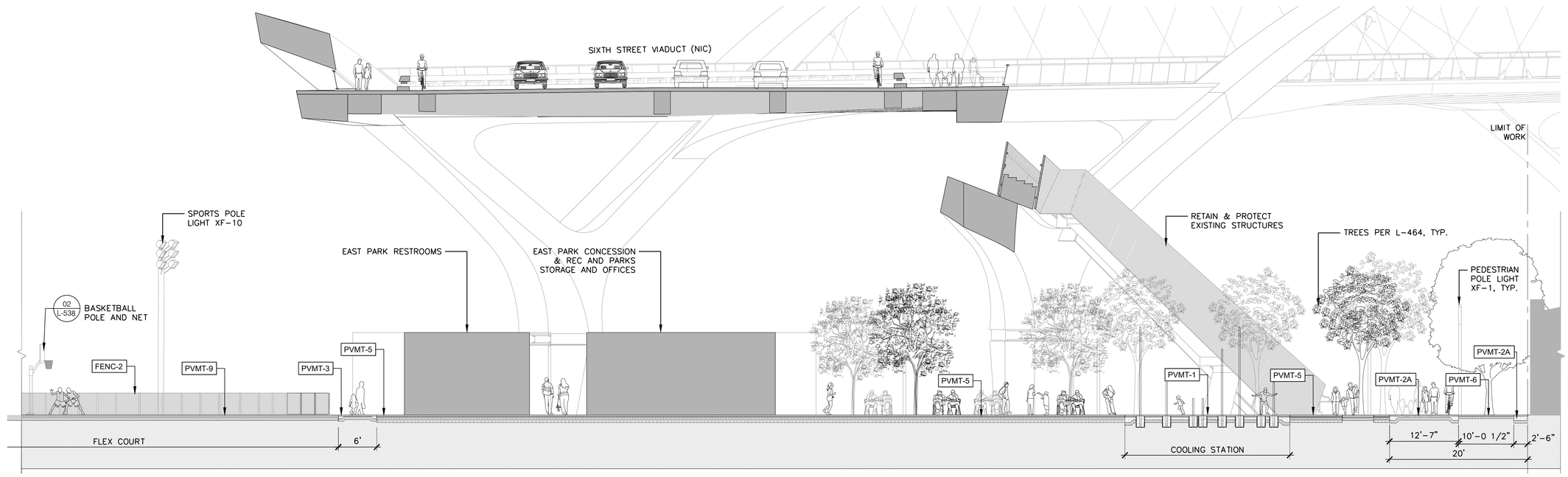

EAST PARK - PLAZA AND PLAY SITE SECTION 05
SCALE: 1/8" = 1'-0"

THE CITY OF LOS ANGELES OR ITS OFFICERS OR AGENTS SHALL NOT BE RESPONSIBLE FOR THE ACCURACY OR COMPLETENESS OF ELECTRONIC COPIES OF THIS PLAN SHEET.

REVISION DATES (DESIGN STAGE ONLY)

Sheet Version 3.0

BUREAU OF ENGINEERING
OFFICIAL RECORD

BUREAU OF ENGINEERING
CITY OF LOS ANGELES

NO. | REVISIONS: | DATE: | BY:

BUILDING NO.

INDEX NO. MF-300501

THIS PLAN WAS ELECTRONICALLY SIGNED AND STAMPED.

LICENSED LANDSCAPE ARCHITECT Mary Margaret Jones #2615 Renewal Date Date STATE OF CALIFORNIA

CITY OF LOS ANGELES DEPARTMENT OF PUBLIC WORKS

TED ALLEN, P.E. CITY ENGINEER

DESIGN GROUP
LANDSCAPE ARCHITECT: MARY MARGARET JONES LIC. NO. 07/11/2022 DATE:
DESIGNED BY: MARY MARGARET JONES
DRAWN BY: MEGAN ESOPENKO
CHECKED BY: GAVIN MCMILLAN
APPROVED BY: MARY MARGARET JONES

HargreavesJones
Hargreaves Jones Landscape Architecture

PLANS PREPARED BY:
TETRA TECH, INC.
707 WILSHIRE BLVD, 23RD FLR.
LOS ANGELES, CA 90017
PHONE: (213) 239-8866

VERT. CONTROL: BM 12-04070, 1929 (NGVD29) - 1985 ADJUSTMENT
HORIZ. CONTROL: GPS; PID AE 1704, EPOCH 1991.35

SHEET TITLE: SITE SECTIONS SHEET 3
PROJECT: SIXTH STREET PARK, ARTS AND RIVER CONNECTIVITY IMPROVEMENTS (PARC)
ADDRESS: SIXTH STREET OVER THE LOS ANGELES RIVER

WORK ORDER NO. E700235D
FILE NO. --
DRAWING NO. L-303
SHEET 125 OF 295 SHEETS

2022-07-05 9:02:36 PM - C:\USERS\MESOPENKO\ONEDRIVE - HARGREAVES\SSV 1601 - SIXTH STREET VIADUCT\300_CREATE\310_HA WORKING FILES\06_TECHNICAL\06_100-CD\50_SHEETS\L-301-303 SITE SECTIONS.DWG - MEGAN ESOPENKO

Sheet Version 3.0

REVISION DATES (DESIGN STAGE ONLY)											

THE CITY OF LOS ANGELES OR ITS OFFICERS OR AGENTS SHALL NOT BE RESPONSIBLE FOR THE ACCURACY OR COMPLETENESS OF ELECTRONIC COPIES OF THIS PLAN SHEET.

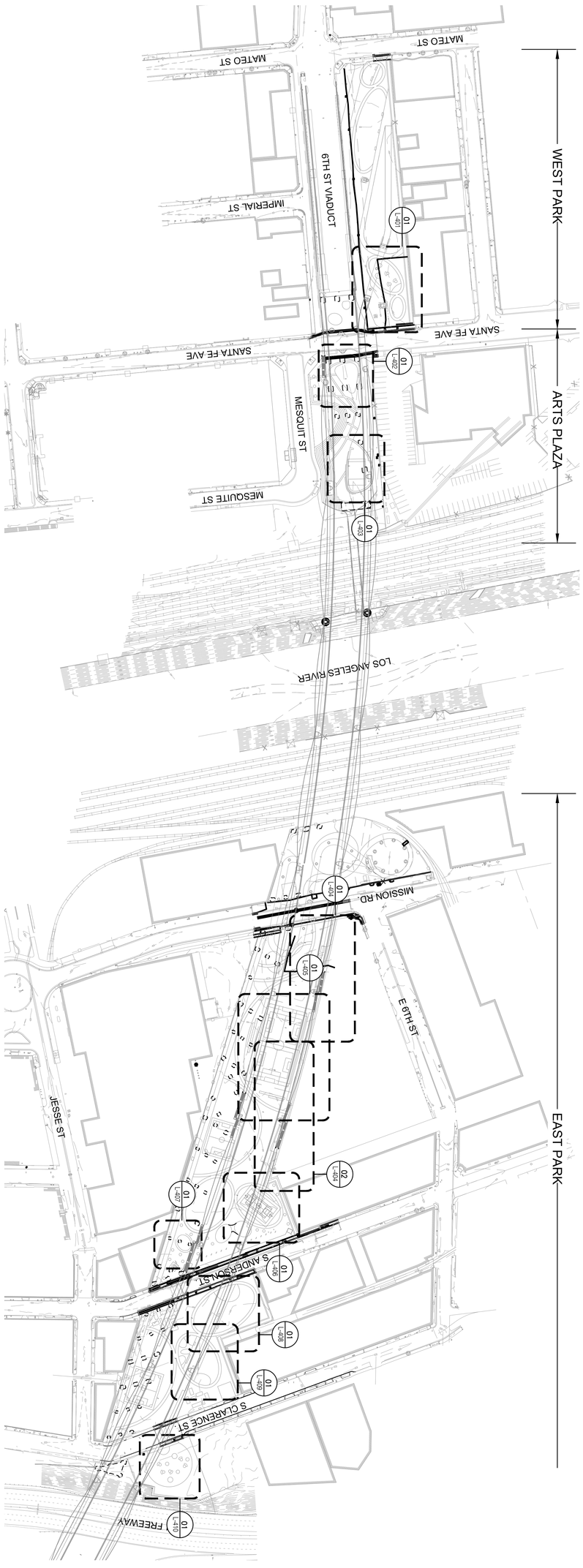

SCALE 1" = 120'
0 60' 120' 240'

PLANS PREPARED BY:

TETRA TECH, INC.
707 WILSHIRE BLVD, 23RD FLR.
LOS ANGELES, CA 90017
PHONE: (213) 239-8866

HargreavesJones
Hargreaves Jones Landscape Architecture

CITY OF LOS ANGELES DEPARTMENT OF PUBLIC WORKS

THIS PLAN WAS ELECTRONICALLY SIGNED AND STAMPED.

BUREAU OF ENGINEERING

SHEET 126 OF 295 SHEETS

DRAWING NO. L-400

FILE NO. --

WORK ORDER NO. E170235D

VERT. CONTROL: BM 12-04070, 1929 (NGVD29) - 1985 ADJUSTMENT
HORIZ. CONTROL: GPS; PID AE 1704, EPOCH 1991.35

SHEET TITLE: ENLARGEMENTS KEY PLAN

PROJECT: SIXTH STREET PARK, ARTS AND RIVER CONNECTIVITY IMPROVEMENTS (PARC)

ADDRESS: SIXTH STREET OVER THE LOS ANGELES RIVER

TED ALLEN, P.E. CITY ENGINEER

DESIGN GROUP	DATE:
LANDSCAPE ARCHITECT: MARY MARGARET JONES LIC. NO.	07/11/2022
DESIGNED BY: MARY MARGARET JONES	
DRAWN BY: MEGAN ESOPENKO	
CHECKED BY: GAVIN MCMILLAN	
APPROVED BY: MARY MARGARET JONES	

LICENSED LANDSCAPE ARCHITECT Mary Margaret Jones #2915 STATE OF CALIFORNIA

NO.	REVISIONS:	DATE:	BY:

INDEX NO. MF-300501

BUILDING NO.

ENGINEERING
CITY OF LOS ANGELES

2022-07-05 9:02:48 PM - C:\USERS\MESOPENKO\ONEDRIVE - HARGREAVES\SSV 1601 - SIXTH STREET VIADUCT\300_CREATE\310_HA WORKING FILES\06_TECHNICAL\06_100-CD\50_SHEETS\L-400 ENLARGEMENTS KEY PLAN.DWG - MEGAN ESOPENKO

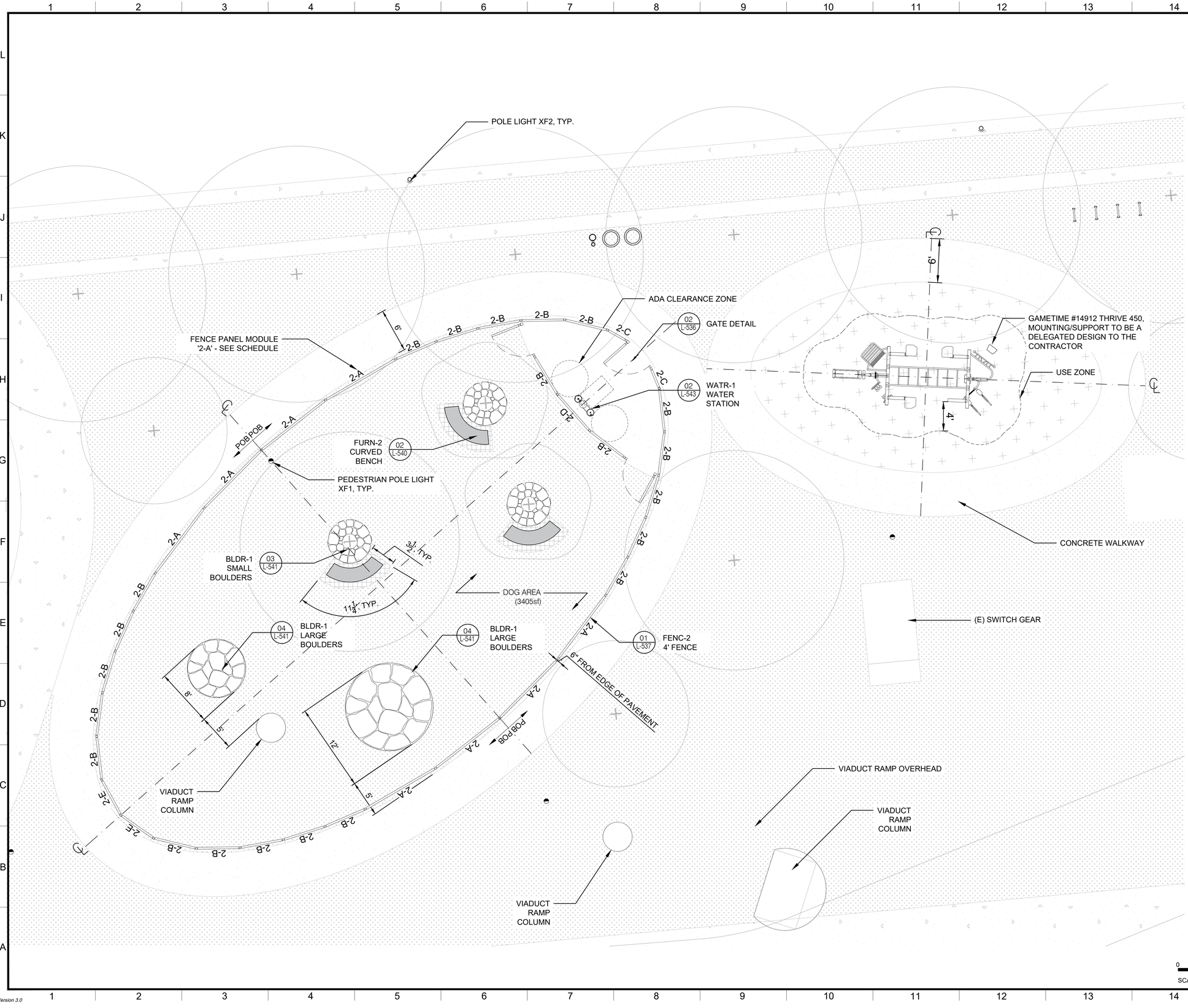

SHEET NOTES

1. SHOP DRAWINGS – SUBMIT PRIOR TO MOCKUP AND/OR FABRICATION. SEE SPECIFICATION.
2. MOCKUP – MOCKUP A PORTION AND SUBMIT PHOTOGRAPHS OF ALL JOINTS, WELDS, SEAMS AND FINISHES PRIOR TO FABRICATION. SEE SPECIFICATION.
3. FIELD VERIFY DIMENSIONS PRIOR TO FINAL FABRICATION.
4. ALL STAINLESS SHALL BE 316 GRADE WITH #4 FINISH UNLESS OTHERWISE NOTED.

FENC-2 PANEL SCHEDULE

PANEL NUMBER	PANEL LENGTH	NUMBER OF SEGMENTS
2-A	11' - 1 1/2"	8
2-B	5' - 11 7/8"	22
2-C	2' - 10 3/4"	2
2-D	6' - 7 3/8"	1
2-E	5' - 5 5/8"	2

THE CITY OF LOS ANGELES OR ITS OFFICERS OR AGENTS SHALL NOT BE RESPONSIBLE FOR THE ACCURACY OR COMPLETENESS OF ELECTRONIC COPIES OF THIS PLAN SHEET.

REVISION DATES (DESIGN STAGE ONLY)

Sheet Version 3.0

PLANS PREPARED BY:
TETRA TECH, INC.
707 WILSHIRE BLVD, 23RD FLR.
LOS ANGELES, CA 90017
PHONE: (213) 239-8866

Hargreaves Jones
Hargreaves Jones Landscape Architecture

BUREAU OF ENGINEERING
OFFICIAL RECORD

CITY OF LOS ANGELES DEPARTMENT OF PUBLIC WORKS
BUREAU OF ENGINEERING

ENGINEERING
CITY OF LOS ANGELES

NO. | REVISIONS: | DATE: | BY:

BUILDING NO.

INDEX NO. MF-300501

THIS PLAN WAS ELECTRONICALLY SIGNED AND STAMPED.

LICENSED LANDSCAPE ARCHITECT
Mary Margaret Jones #2615
Renewal Date
Date
STATE OF CALIFORNIA

TED ALLEN, P.E.
CITY ENGINEER

DESIGN GROUP
LANDSCAPE ARCHITECT: MARY MARGARET JONES LIC. NO. 07/11/2022
DESIGNED BY: MARY MARGARET JONES
DRAWN BY: MEGAN ESOPENKO
CHECKED BY: GAVIN MCMILLAN
APPROVED BY: MARY MARGARET JONES

VERT. CONTROL: BM 12-04070, 1929 (NGVD29) - 1985 ADJUSTMENT
HORIZ. CONTROL: GPS; PID AE 1704, EPOCH 1991.35

SHEET TITLE: ENLARGEMENT: WEST PARK - DOG PARK & FITNESS LAYOUT
PROJECT: SIXTH STREET PARK, ARTS AND RIVER CONNECTIVITY IMPROVEMENTS (PARC)
ADDRESS: SIXTH STREET OVER THE LOS ANGELES RIVER

WORK ORDER NO. E700235D
FILE NO. --
DRAWING NO. L-401
SHEET 127 OF 295 SHEETS

2022-07-05 9:03:27 PM - C:\USERS\MESOPENKO\ONEDRIVE - HARGREAVES\SSV 1601 - SIXTH STREET VIADUCT\300_CREATE\310_HA WORKING FILES\06_TECHNICAL\06_100-CD\50_SHEETS\L-401-403 ENLARGEMENTS.DWG - MEGAN ESOPENKO

THE CITY OF LOS ANGELES OR ITS OFFICERS OR AGENTS SHALL NOT BE RESPONSIBLE FOR THE ACCURACY OR COMPLETENESS OF ELECTRONIC COPIES OF THIS PLAN SHEET.

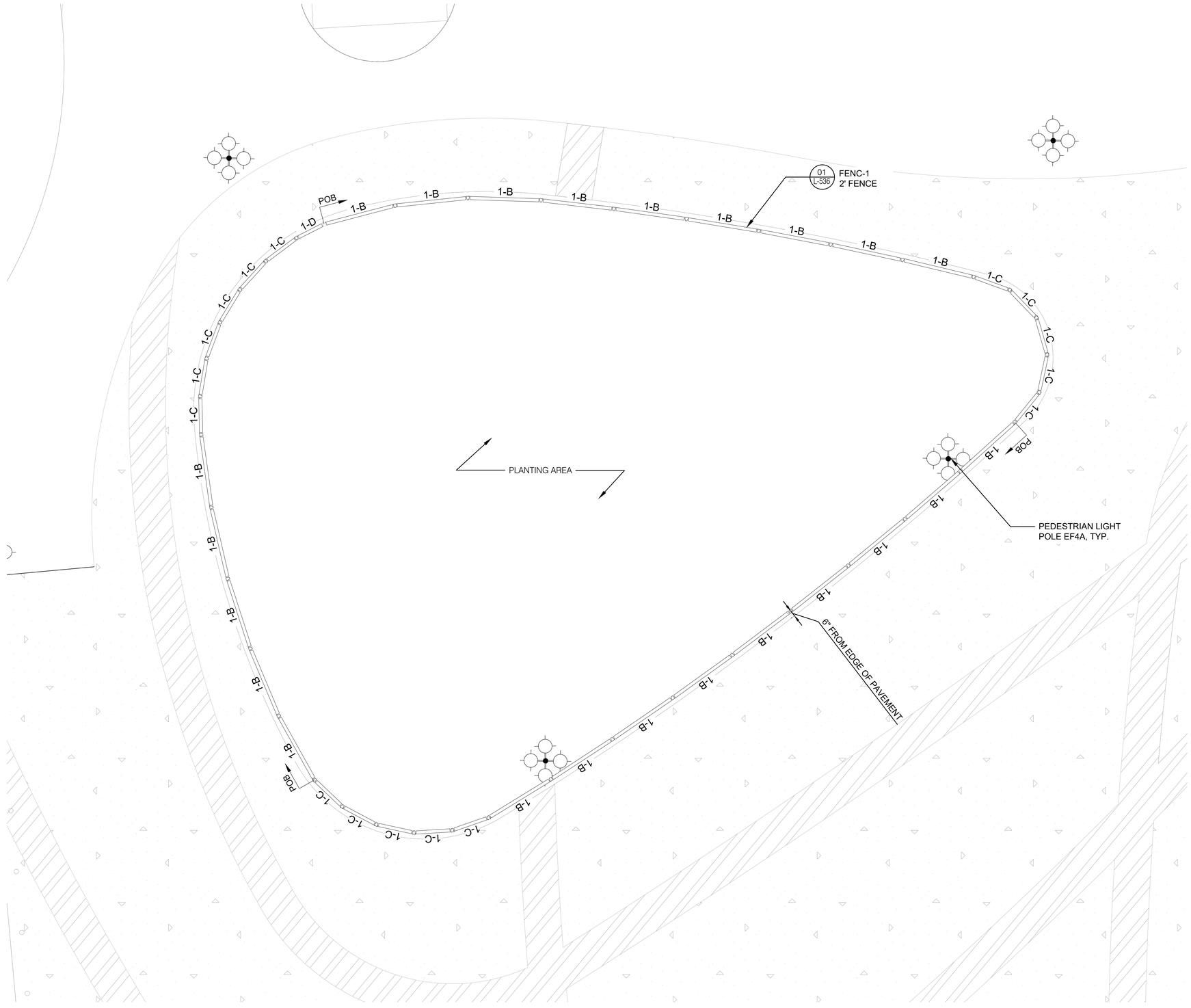

SHEET NOTES

1. SHOP DRAWINGS – SUBMIT PRIOR TO MOCKUP AND/OR FABRICATION. SEE SPECIFICATION.
2. MOCKUP – MOCKUP A PORTION AND SUBMIT PHOTOGRAPHS OF ALL JOINTS, WELDS, SEAMS AND FINISHES PRIOR TO FABRICATION. SEE SPECIFICATION.
3. FIELD VERIFY DIMENSIONS PRIOR TO FINAL FABRICATION.
4. ALL STAINLESS SHALL BE 316 GRADE WITH #4 FINISH UNLESS OTHERWISE NOTED.

FENC-1 PANEL SCHEDULE

PANEL NUMBER	PANEL LENGTH	NUMBER OF SEGMENTS
1-B	5' - 11 7/8"	23
1-C	3' - 1 5/8"	16
1-D	2' - 6 3/8"	1

SCALE 1" = 4'

BUREAU OF ENGINEERING
OFFICIAL RECORD

PLANS PREPARED BY:
TETRA TECH, INC.
707 WILSHIRE BLVD, 23RD FLR.
LOS ANGELES, CA 90017
PHONE: (213) 239-3866

HargreavesJones
Hargreaves Jones Landscape Architecture

CITY OF LOS ANGELES DEPARTMENT OF PUBLIC WORKS BUREAU OF ENGINEERING

CITY ENGINEER
TED ALLEN, P.E.
DESIGN GROUP
LANDSCAPE ARCHITECT: MARY MARGARET JONES LIC NO. 07/11/2022
DESIGNED BY: MARY MARGARET JONES
DRAWN BY: MEGAN ESOPENKO
CHECKED BY: GAVIN MCMILLAN
APPROVED BY: MARY MARGARET JONES

VERT. CONTROL: BM 12-04070, 1929 (NGVD29) - 1985 ADJUSTMENT
HORIZ. CONTROL: GPS; PID AE 1704 - EPOCH 1991.35

SHEET TITLE: ENLARGEMENT: ARTS PLAZA - PLANTING AREA FENCE LAYOUT
PROJECT: SIXTH STREET PARK, ARTS AND RIVER CONNECTIVITY IMPROVEMENTS (PARC)
ADDRESS: SIXTH STREET OVER THE LOS ANGELES RIVER

WORK ORDER NO. E700235D
FILE NO. --
DRAWING NO. L-402
SHEET 128 OF 295 SHEETS

INDEX NO. MF-300501
BUILDING NO.

NO. REVISIONS: DATE: BY:

THIS PLAN WAS ELECTRONICALLY SIGNED AND STAMPED

LICENSED LANDSCAPE ARCHITECT MARY MARGARET JONES #2516 STATE OF CALIFORNIA
Date
Retirement Date

REVISION DATES (DESIGN STAGE ONLY)

Sheet Version 3.0

2022-07-05 9:03:33 PM - C:\USERS\MESOPENKO\ONEDRIVE - HARGREAVESSSV 1901 - SIXTH STREET VIADUCT\300_CREATE\310_HA WORKING FILES\06_TECHNICAL\06_100-CD\50_SHEETS\L-401-408 ENLARGEMENTS.DWG - MEGAN ESOPENKO

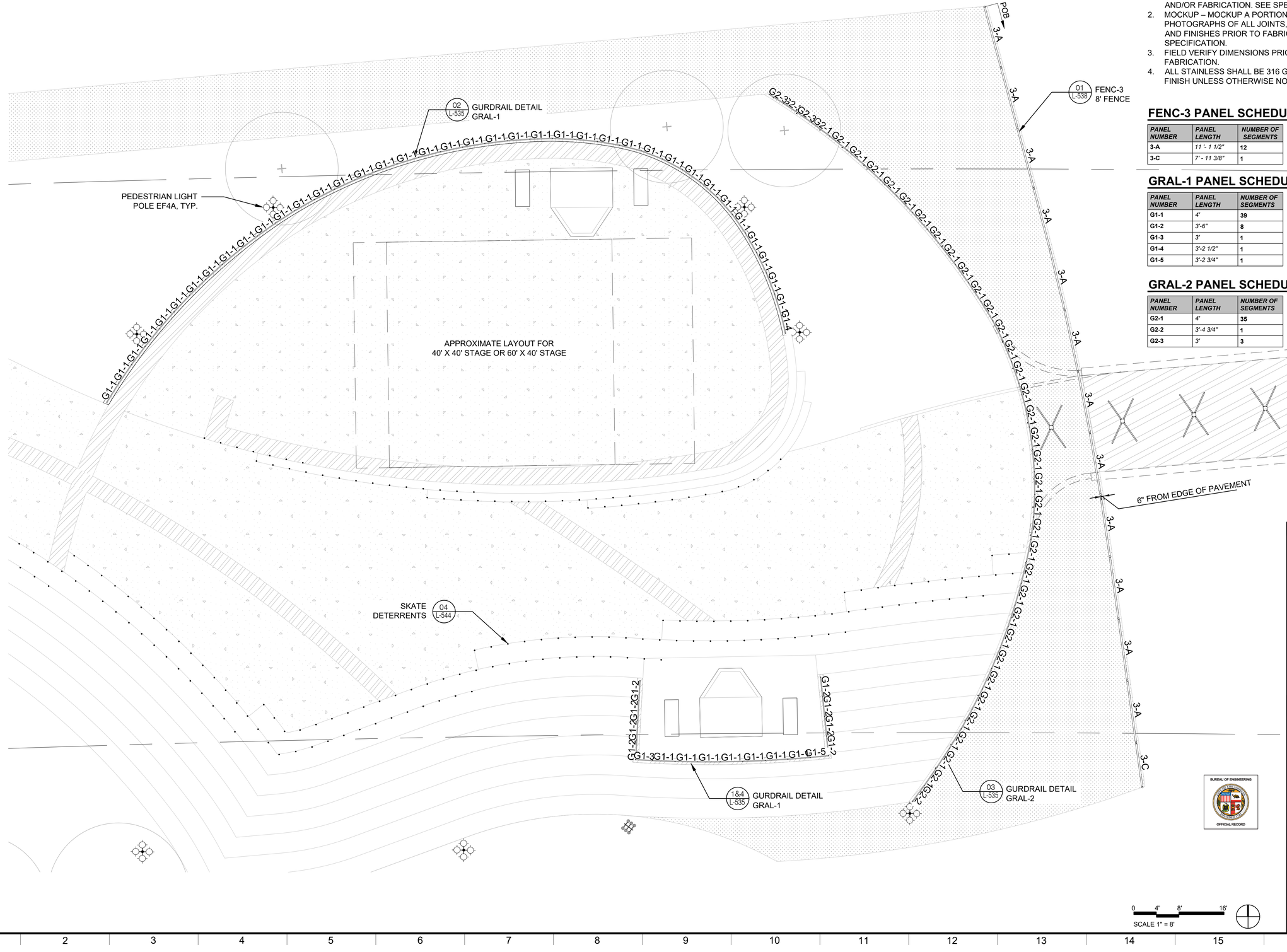
POB
3-A
01
L-538
FENC-3
8' FENCE
02
L-535
GURDRAIL DETAIL
GRAL-1
PEDESTRIAN LIGHT
POLE EF4A, TYP.
G1-1 G1-1 G1-1

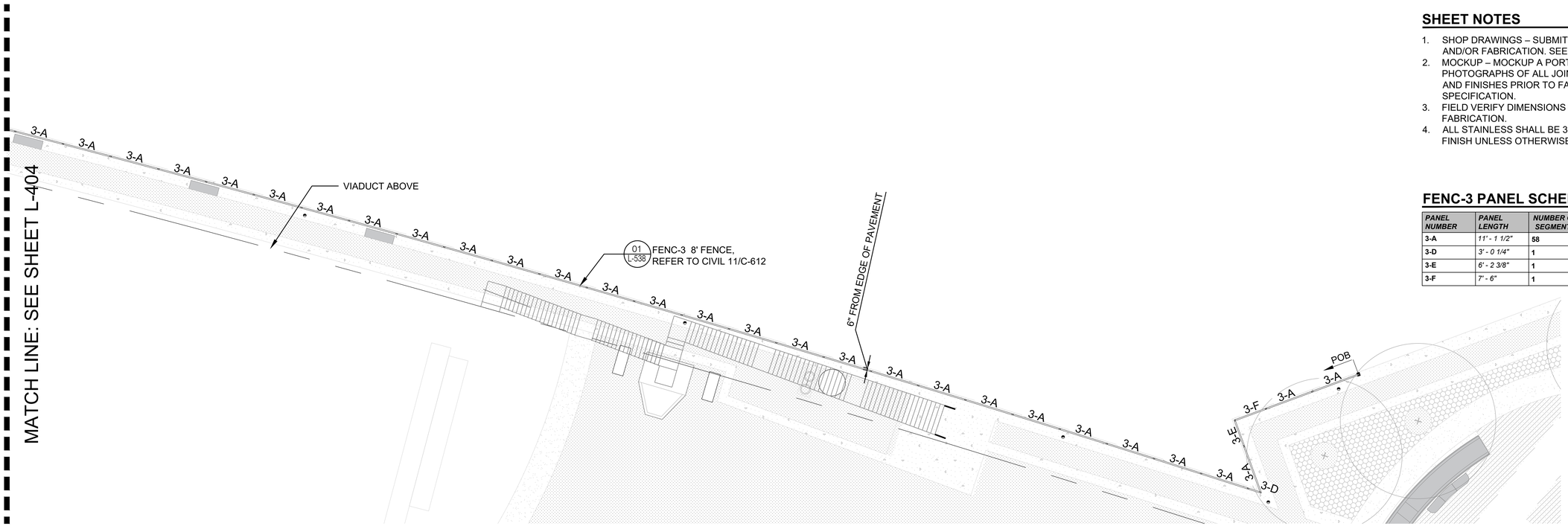

02 FENCE LAYOUT 2/2
SCALE: AS SHOWN

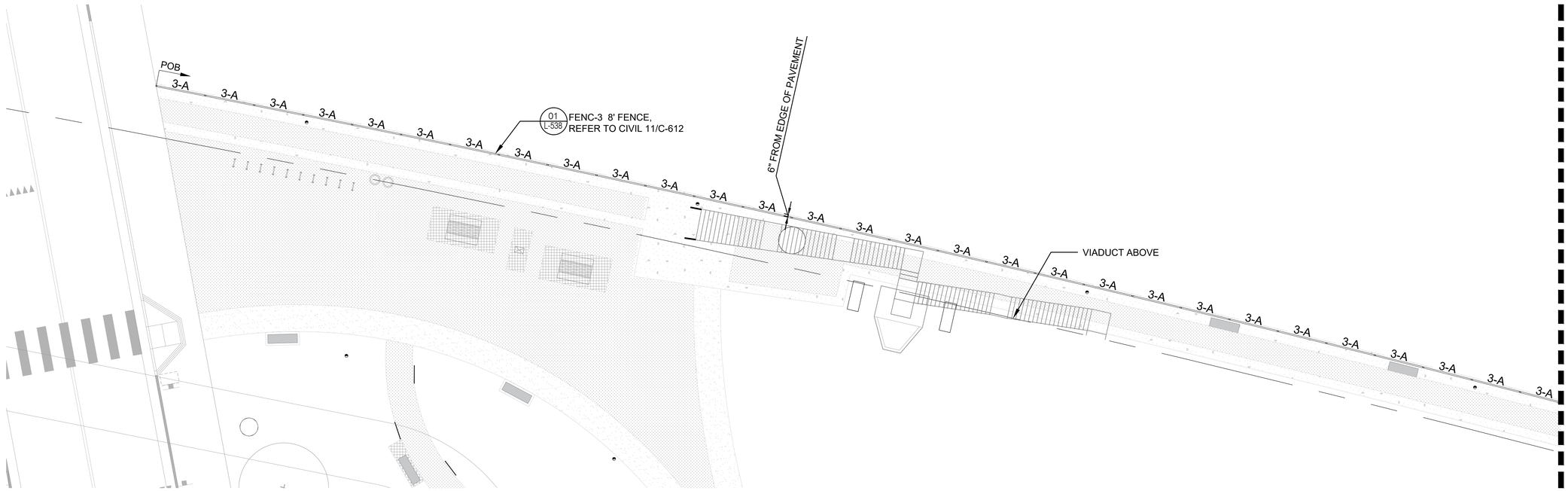

01 FENCE LAYOUT 1/2
SCALE: AS SHOWN

0 6' 12' 24'
SCALE 1" = 12'

SHEET NOTES

1. SHOP DRAWINGS – SUBMIT PRIOR TO MOCKUP AND/OR FABRICATION. SEE SPECIFICATION.
2. MOCKUP – MOCKUP A PORTION AND SUBMIT PHOTOGRAPHS OF ALL JOINTS, WELDS, SEAMS AND FINISHES PRIOR TO FABRICATION. SEE SPECIFICATION.
3. FIELD VERIFY DIMENSIONS PRIOR TO FINAL FABRICATION.
4. ALL STAINLESS SHALL BE 316 GRADE WITH #4 FINISH UNLESS OTHERWISE NOTED.

FENC-3 PANEL SCHEDULE

PANEL NUMBER	PANEL LENGTH	NUMBER OF SEGMENTS
3-A	11' - 1 1/2"	58
3-D	3' - 0 1/4"	1
3-E	6' - 2 3/8"	1
3-F	7' - 6"	1

BUREAU OF ENGINEERING
OFFICIAL RECORD

PLANS PREPARED BY:
TETRA TECH, INC.
707 WILSHIRE BLVD, 23RD FLR.
LOS ANGELES, CA 90017
PHONE: (213) 239-8866

HargreavesJones
Hargreaves Jones Landscape Architecture

CITY OF LOS ANGELES DEPARTMENT OF PUBLIC WORKS

BUREAU OF ENGINEERING
ENGINEERING
CITY OF LOS ANGELES

NO.	REVISIONS:	DATE:	BY:

BUILDING NO.

INDEX NO. MF-300501

THIS PLAN WAS ELECTRONICALLY SIGNED AND STAMPED.

LICENSED LANDSCAPE ARCHITECT
Mary Margaret Jones #2616
Renewal Date
Date
STATE OF CALIFORNIA

CITY ENGINEER
TED ALLEN, P.E.
DESIGN GROUP
LANDSCAPE ARCHITECT: MARY MARGARET JONES LIC. NO. 07/11/2022
DESIGNED BY: MARY MARGARET JONES
DRAWN BY: MEGAN ESOPENKO
CHECKED BY: GAVIN MCMILLAN
APPROVED BY: MARY MARGARET JONES

VERT. CONTROL: BM 12-04070, 1929 (NGVD29) - 1985 ADJUSTMENT
HORIZ. CONTROL: GPS; PID AE 1704, EPOCH 1991.35

SHEET TITLE: ENLARGEMENT: EAST PARK - NORTHERN EDGE FENCE LAYOUT
PROJECT: SIXTH STREET PARK, ARTS AND RIVER CONNECTIVITY IMPROVEMENTS (PARC)
ADDRESS: SIXTH STREET OVER THE LOS ANGELES RIVER

WORK ORDER NO. E700235D
FILE NO. --
DRAWING NO. L-404
SHEET 130 OF 295 SHEETS

2022-07-05 9:04:27 PM - C:\USERS\MESOPENKO\ONEDRIVE - HARGREAVES\SSV 1601 - SIXTH STREET VIADUCT\300_CREATE\310_HA WORKING FILES\06_TECHNICAL\06_100-CD\50_SHEETS\L-404 ENLARGEMENTS.DWG - MEGAN ESOPENKO

THE CITY OF LOS ANGELES OR ITS OFFICERS OR AGENTS SHALL NOT BE RESPONSIBLE FOR THE ACCURACY OR COMPLETENESS OF ELECTRONIC COPIES OF THIS PLAN SHEET.

REVISION DATES (DESIGN STAGE ONLY)

Sheet Version 3.0

SHEET NOTES

1. SHOP DRAWINGS – SUBMIT PRIOR TO MOCKUP AND/OR FABRICATION. SEE SPECIFICATION.
2. MOCKUP – MOCKUP A PORTION AND SUBMIT PHOTOGRAPHS OF ALL JOINTS, WELDS, SEAMS AND FINISHES PRIOR TO FABRICATION. SEE SPECIFICATION.
3. FIELD VERIFY DIMENSIONS PRIOR TO FINAL FABRICATION.
4. ALL STAINLESS SHALL BE 316 GRADE WITH #4 FINISH UNLESS OTHERWISE NOTED.

VIADUCT ABOVE
SPORTS POLE LIGHT XF10
FENC-4 20' FENCE (02 L-539)
SOCCER GOALS,TYP. (01 L-539)
45' O.C.
R3'
27'
18'
9'
24'
R12'
10' RUNOUT CLEAR ZONE
175'
90'
75'
60'
32'
14'
6'
18'
SOCCER FIELD CONCRETE TERRACE (05 C-612)
FENC-4 20' FENCE (01 L-539)
VIADUCT BENT LIGHTING
SPORTS POLE LIGHT XF10
10' RUNOUT CLEAR ZONE
WART-1 WATER STATION (02 L-543)
P.A.
6'
SCALE 1" = 10'

BUREAU OF ENGINEERING
OFFICIAL RECORD

PLANS PREPARED BY:
TETRA TECH, INC.
707 WILSHIRE BLVD. 23RD FLR.
LOS ANGELES, CA 90017
PHONE: (213) 239-8866

HargreavesJones
Hargreaves Jones Landscape Architecture

CITY OF LOS ANGELES DEPARTMENT OF PUBLIC WORKS
BUREAU OF ENGINEERING

ENGINEERING
CITY OF LOS ANGELES

NO. | REVISIONS: | DATE | BY:

BUILDING NO.

INDEX NO. MF-300501

LICENSED LANDSCAPE ARCHITECT, James Richmond Duke, #2516, STATE OF CALIFORNIA
Date 07/11/2022

THIS PLAN WAS ELECTRONICALLY SIGNED AND STAMPED

CITY ENGINEER
DATE: 07/11/2022
LIC. NO.
DESIGN GROUP
TED ALLEN, P.E.

LANDSCAPE ARCHITECT: MARY MARGARET JONES
DESIGNED BY: MARY MARGARET JONES
DRAWN BY: MEGAN ESOPENKO
CHECKED BY: GAVIN MCMILLAN
APPROVED BY: MARY MARGARET JONES

SHEET TITLE: ENLARGEMENT: EAST PARK - SOCCER FIELD LAYOUT
PROJECT: SIXTH STREET PARK, ARTS AND RIVER CONNECTIVITY IMPROVEMENTS (PARC)
ADDRESS: SIXTH STREET OVER THE LOS ANGELES RIVER

VERT. CONTROL: BM 12-04070, 1929 (NGVD29) - 1985 ADJUSTMENT
HORIZ. CONTROL: GPS; PID AE 1704; EPOCH 1991.35

WORK ORDER NO. E700235D
FILE NO. --
DRAWING NO. L-405
SHEET 131 OF 295 SHEETS

REVISION DATES (DESIGN STAGE ONLY)

THE CITY OF LOS ANGELES OR ITS OFFICERS OR AGENTS SHALL NOT BE RESPONSIBLE FOR THE ACCURACY OR COMPLETENESS OF ELECTRONIC COPIES OF THIS PLAN SHEET.

2022-07-05 9:05:07 PM - C:\USERS\MESOPENKO\ONEDRIVE - HARGREAVESSSV 1601 - SIXTH STREET VIADUCT\300_CREATE\310_HA WORKING FILES\06_TECHNICAL\06_100-CD\50_SHEETS\L-405-407 ENLARGEMENTS.DWG - MEGAN ESOPENKO

Sheet Version 3.0

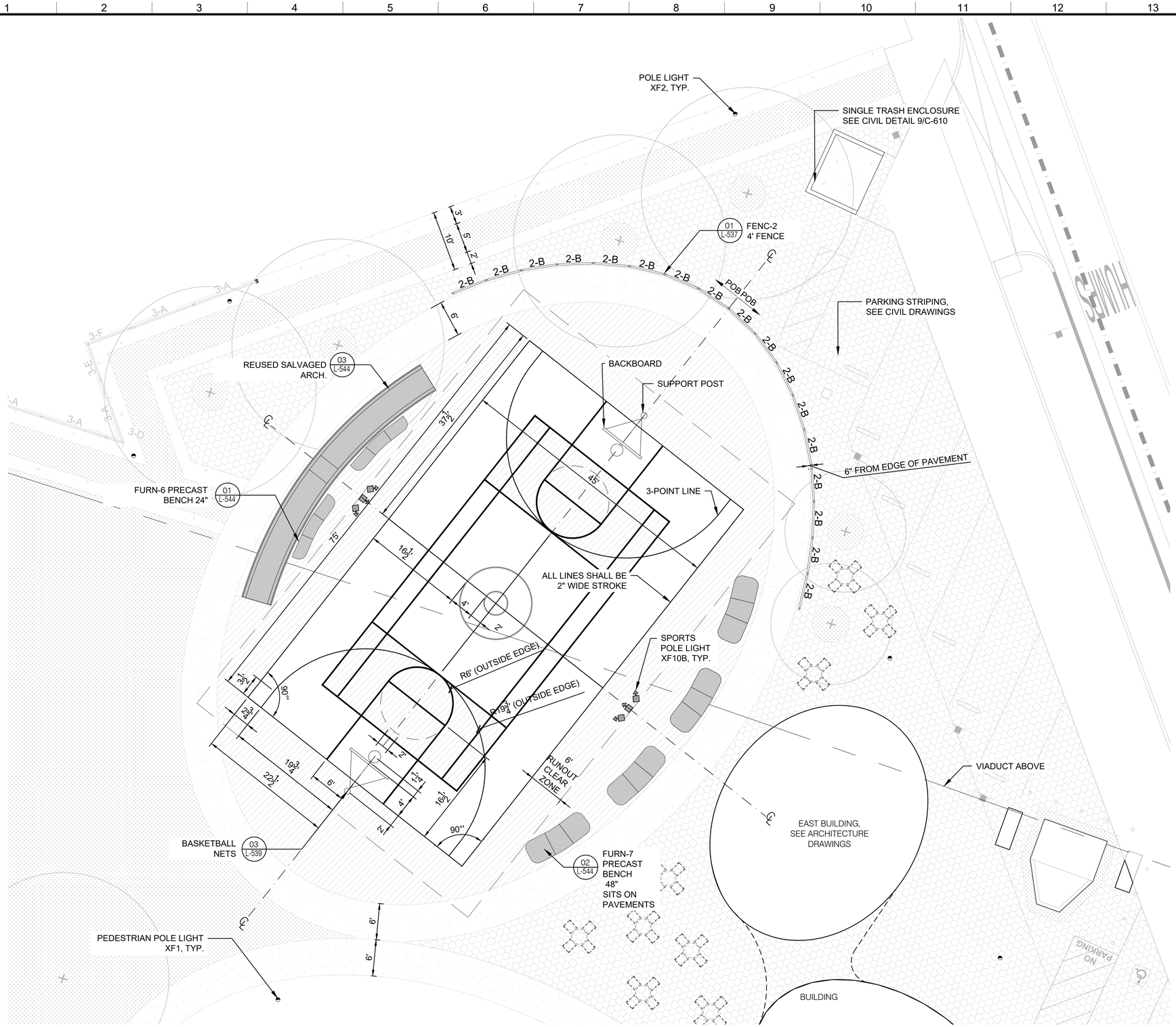

SHEET NOTES

1. SHOP DRAWINGS – SUBMIT PRIOR TO MOCKUP AND/OR FABRICATION. SEE SPECIFICATION.
2. MOCKUP – MOCKUP A PORTION AND SUBMIT PHOTOGRAPHS OF ALL JOINTS, WELDS, SEAMS AND FINISHES PRIOR TO FABRICATION. SEE SPECIFICATION.
3. FIELD VERIFY DIMENSIONS PRIOR TO FINAL FABRICATION.
4. ALL STAINLESS SHALL BE 316 GRADE WITH #4 FINISH UNLESS OTHERWISE NOTED.

FENC-3 PANEL SCHEDULE

PANEL NUMBER	PANEL LENGTH	NUMBER OF SEGMENTS
2-B	5' - 11 7/8"	17

BUREAU OF ENGINEERING OFFICIAL RECORD

0 4' 8' 16'
SCALE 1" = 8'

THE CITY OF LOS ANGELES OR ITS OFFICERS OR AGENTS SHALL NOT BE RESPONSIBLE FOR THE ACCURACY OR COMPLETENESS OF ELECTRONIC COPIES OF THIS PLAN SHEET.

REVISION DATES (DESIGN STAGE ONLY)

Sheet Version 3.0

PLANS PREPARED BY:
TETRA TECH, INC.
707 WILSHIRE BLVD, 23RD FLR.
LOS ANGELES, CA 90017
PHONE: (213) 239-8866

HargreavesJones
Hargreaves Jones Landscape Architecture

CITY OF LOS ANGELES DEPARTMENT OF PUBLIC WORKS

VERT. CONTROL: BM 12-04070, 1929 (NGVD29) - 1985 ADJUSTMENT
HORIZ. CONTROL: GPS; PID AE 1704, EPOCH 1991.35

SHEET TITLE: ENLARGEMENT: EAST PARK - BASKETBALL COURT LAYOUT
PROJECT: SIXTH STREET PARK, ARTS AND RIVER CONNECTIVITY IMPROVEMENTS (PARC)
ADDRESS: SIXTH STREET OVER THE LOS ANGELES RIVER

WORK ORDER NO. E700235D
FILE NO. --
DRAWING NO. L-406
SHEET 132 OF 295 SHEETS

CITY ENGINEER
TED ALLEN, P.E.
DESIGN GROUP
LANDSCAPE ARCHITECT: MARY MARGARET JONES
DESIGNED BY: MARY MARGARET JONES
DRAWN BY: MEGAN ESOPENKO
CHECKED BY: GAVIN MCMILLAN
APPROVED BY: MARY MARGARET JONES
LIC. NO. 07/11/2022
DATE:

THIS PLAN WAS ELECTRONICALLY SIGNED AND STAMPED.
LICENSED LANDSCAPE ARCHITECT Mary Margaret Jones #2615 Date Relevant Date
STATE OF CALIFORNIA

NO. REVISIONS: DATE: BY:

BUILDING NO.

INDEX NO. MF-300501

BUREAU OF ENGINEERING
ENGINEERING
CITY OF LOS ANGELES

2022-07-05 9:05:14 PM - C:\USERS\MESOPENKO\ONEDRIVE - HARGREAVES\SSV 1601 - SIXTH STREET VIADUCT\300_CREATE\310_HA WORKING FILES\06_TECHNICAL\06_100-CD\50_SHEETS\L-405-407 ENLARGEMENTS.DWG - MEGAN ESOPENKO

VIADUCT COLUMN

VIADUCT LIGHTING

PEDESTRIAN POLE LIGHT XF1, TYP.

VIADUCT STAIRS

6'

CATCH BASIN SEE CIVIL C-407

01 L-545 DETAIL MISTING POST

VIADUCT ABOVE

ISOLATION JOINTS

FURN-7 PRECAST BENCH 48" SITS ON PAVEMENTS

02 L-544

03 L-545 DISTRIBUTION VAULT WITH PAVED LIDS

MISTING POLES

5.00'

2.50'

4.00'

ART SCULPTURE - BY OTHERS

PUMP VAULT

4" PVC FLOOR DRAIN TO STORWATER

4" PVC VENT PAINTED BLACK

PUMP CONTROL PANEL IN NEMA SST ENCLOSURE, 208V/3P ELECTRICAL CONNECTION

02 L-545 FOG PUMP ASSEMBLY

HIGH PRESSURE MAIN DISTRIBUTION LINE INSIDE SCH 40 PVC SLEEVE

FILTERS IN NEMA SST ENCLOSURE, 3/4" CITY WATER CONNECTION

SHEET NOTES

1. FOG COOLING STATION DETAILS ARE INDICATIVE ONLY. THE CONTRACTOR SHALL BE RESPONSIBLE FOR THE MECHANICAL, ELECTRICAL AND PLUMBING DESIGN, FABRICATION, AND INSTALLATION OF THE SYSTEM.
2. DELEGATED DESIGN – DESIGN MECHANICAL, ELECTRICAL, CIVIL AND PLUMBING SYSTEM INCLUDING AN ENGINEERING ANALYSIS BY A DESIGN ENGINEER PROFESSIONAL LICENSED IN PROJECT'S STATE. SEE SPECIFICATION.
3. SHOP DRAWINGS – SUBMIT PRIOR TO MOCKUP AND/OR FABRICATION. SEE SPECIFICATION.
4. MOCKUP – MOCKUP A PORTION AND SUBMIT PHOTOGRAPHS OF ALL JOINTS, WELDS, SEAMS AND FINISHES PRIOR TO FABRICATION. SEE SPECIFICATION.
5. FIELD VERIFY DIMENSIONS PRIOR TO FINAL FABRICATION.
6. ALL STAINLESS SHALL BE 316 GRADE WITH #4 FINISH UNLESS OTHERWISE NOTED.

MISTING POST SCHEDULE

MISTING POST NUMBER	MISTING POST HEIGHT	NUMBER OF MISTING POST
A	3'	10
B	6'	11
C	12'	6
D	16'	6

BUREAU OF ENGINEERING OFFICIAL RECORD

0 2' 4' 8'

SCALE 1" = 4'

PLANS PREPARED BY:

TETRA TECH, INC.
707 WILSHIRE BLVD. 23RD FLR.
LOS ANGELES, CA 90017
PHONE: (213) 239-8866

HargreavesJones
Hargreaves Jones Landscape Architecture

CITY OF LOS ANGELES DEPARTMENT OF PUBLIC WORKS BUREAU OF ENGINEERING

ENGINEERING CITY OF LOS ANGELES

NO.	REVISIONS:	DATE	BY:

BUILDING NO.

INDEX NO. MF-300501

LICENSED LANDSCAPE ARCHITECT TED ALLEN, LANDSCAPE ARCHITECT, License #2616 Renewal Date STATE OF CALIFORNIA

THIS PLAN WAS ELECTRONICALLY SIGNED AND STAMPED

CITY ENGINEER

DATE: 07/11/2022

DESIGN GROUP

TED ALLEN, P.E. LIC. NO.

LANDSCAPE ARCHITECT: MARY MARGARET JONES

DESIGNED BY: MARY MARGARET JONES

DRAWN BY: MEGAN ESOPENKO

CHECKED BY: GAVIN MCMILLAN

APPROVED BY: MARY MARGARET JONES

SHEET TITLE: ENLARGEMENT: EAST PARK - MISTING PAD LAYOUT

PROJECT: SIXTH STREET PARK, ARTS AND RIVER CONNECTIVITY IMPROVEMENTS (PARC)

ADDRESS: SIXTH STREET OVER THE LOS ANGELES RIVER

VERT. CONTROL: BM 12-04070, 1929 (NGVD29) - 1985 ADJUSTMENT
HORIZ. CONTROL: GPS; PID AE 1704, EPOCH 1991.35

WORK ORDER NO. E700235D

FILE NO. --

DRAWING NO. L-407

SHEET 133 OF 295 SHEETS

2022-07-05 9:05:24 PM - C:\USERS\MESOPENKO\ONEDRIVE - HARGREAVESSSV 1601 - SIXTH STREET VIADUCT\000_CREATE\310_HA WORKING FILES\06_TECHNICAL\06_100-CD\50_SHEETS\L-405-407 ENLARGEMENTS.DWG - MEGAN ESOPENKO

THE CITY OF LOS ANGELES OR ITS OFFICERS OR AGENTS SHALL NOT BE RESPONSIBLE FOR THE ACCURACY OR COMPLETENESS OF ELECTRONIC COPIES OF THIS PLAN SHEET.

REVISION DATES (DESIGN STAGE ONLY)

Sheet Version 3.0

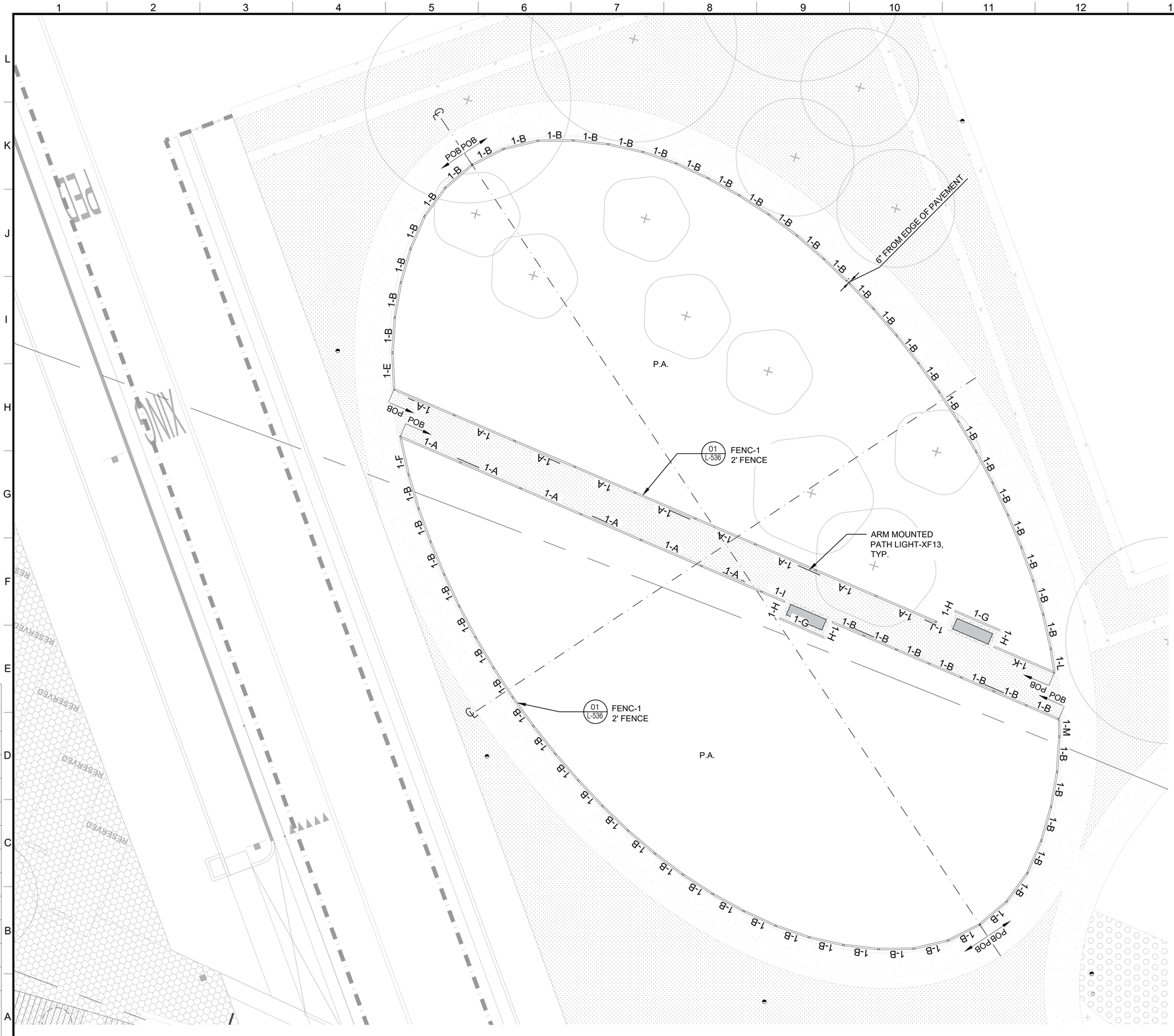

SHEET NOTES

1. SHOP DRAWINGS – SUBMIT PRIOR TO MOCKUP AND/OR FABRICATION. SEE SPECIFICATION.
2. MOCKUP – MOCKUP A PORTION AND SUBMIT PHOTOGRAPHS OF ALL JOINTS, WELDS, SEAMS AND FINISHES PRIOR TO FABRICATION. SEE SPECIFICATION.
3. FIELD VERIFY DIMENSIONS PRIOR TO FINAL FABRICATION.
4. ALL STAINLESS SHALL BE 316 GRADE WITH #4 FINISH UNLESS OTHERWISE NOTED.

FENC-1 PANEL SCHEDULE

PANEL NUMBER	PANEL LENGTH	NUMBER OF SEGMENTS
1-A	11' - 1 1/2"	15
1-B	5' - 11 7/8"	66
1-E	6' - 2 1/2"	1
1-F	6' - 7 3/8"	1
1-G	8' - 6 3/4"	2
1-H	2' - 11 1/4"	4
1-I	4' - 4 3/4"	1
1-J	2 - 0 1/2"	1
1-K	11' - 2 3/4"	1
1-L	4' - 0 3/4"	1
1-M	2' - 11 3/4"	1

BUREAU OF ENGINEERING OFFICIAL RECORD

0 4' 8' 16'
SCALE 1" = 8'

THE CITY OF LOS ANGELES OR ITS OFFICERS OR AGENTS SHALL NOT BE RESPONSIBLE FOR THE ACCURACY OR COMPLETENESS OF ELECTRONIC COPIES OF THIS PLAN SHEET.

REVISION DATES (DESIGN STAGE ONLY)

Sheet Version 3.0

PLANS PREPARED BY:
TETRA TECH, INC.
707 WILSHIRE BLVD, 23RD FLR.
LOS ANGELES, CA 90017
PHONE: (213) 239-8866

HargreavesJones
Hargreaves Jones Landscape Architecture

CITY OF LOS ANGELES DEPARTMENT OF PUBLIC WORKS

BUREAU OF ENGINEERING

ENGINEERING CITY OF LOS ANGELES

NO.	REVISIONS:	DATE:	BY:

BUILDING NO.

INDEX NO. MF-300501

THIS PLAN WAS ELECTRONICALLY SIGNED AND STAMPED.

LICENSED LANDSCAPE ARCHITECT Mary Margaret Jones #2615 Renewal Date Date STATE OF CALIFORNIA

CITY ENGINEER
TED ALLEN, P.E.
DESIGN GROUP
LANDSCAPE ARCHITECT: MARY MARGARET JONES LIC. NO. 07/11/2022
DESIGNED BY: MARY MARGARET JONES
DRAWN BY: MEGAN ESOPENKO
CHECKED BY: GAVIN MCMILLAN
APPROVED BY: MARY MARGARET JONES

VERT. CONTROL: BM 12-04070, 1929 (NGVD29) - 1985 ADJUSTMENT
HORIZ. CONTROL: GPS; PID AE 1704, EPOCH 1991.35

SHEET TITLE: ENLARGEMENT: EAST PARK - PLANTING AREA FENCE LAYOUT
PROJECT: SIXTH STREET PARK, ARTS AND RIVER CONNECTIVITY IMPROVEMENTS (PARC)
ADDRESS: SIXTH STREET OVER THE LOS ANGELES RIVER

WORK ORDER NO. E700235D
FILE NO. --
DRAWING NO. L-408
SHEET 134 OF 295 SHEETS

2022-07-05 9:06:03 PM - C:\USERS\MESOPENKO\ONEDRIVE - HARGREAVES\SSV 1601 - SIXTH STREET VIADUCT\300_CREATE\310_HA WORKING FILES\06_TECHNICAL\06_100-CD\50_SHEETS\L-408 ENLARGEMENTS.DWG - MEGAN ESOPENKO

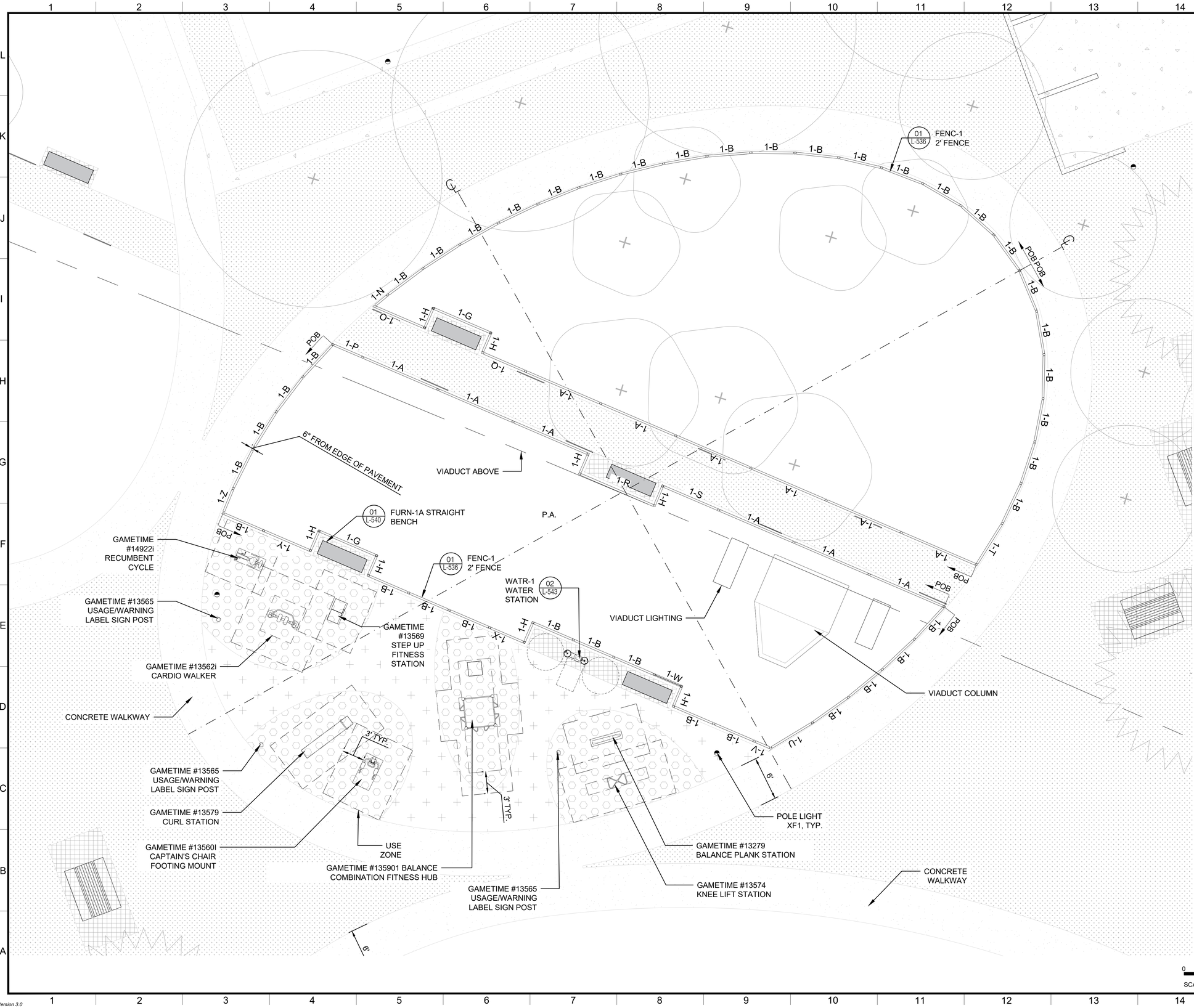

SHEET NOTES

1. SHOP DRAWINGS – SUBMIT PRIOR TO MOCKUP AND/OR FABRICATION. SEE SPECIFICATION.
2. MOCKUP – MOCKUP A PORTION AND SUBMIT PHOTOGRAPHS OF ALL JOINTS, WELDS, SEAMS AND FINISHES PRIOR TO FABRICATION. SEE SPECIFICATION.
3. FIELD VERIFY DIMENSIONS PRIOR TO FINAL FABRICATION.
4. ALL STAINLESS SHALL BE 316 GRADE WITH #4 FINISH UNLESS OTHERWISE NOTED.
5. MOUNTING/SUPPORT TO BE A DELEGATED DESIGN TO THE CONTRACT.

FENC-1 PANEL SCHEDULE

PANEL NUMBER	PANEL LENGTH	NUMBER OF SEGMENTS
1-A	11' - 1 1/2"	12
1-B	5' - 11 7/8"	39
1-G	8' - 6 3/4"	3
1-H	2' - 11 1/4"	8
1-N	2' - 4 7/8"	1
1-O	7' - 5 1/2"	1
1-P	4' - 4 7/8"	1
1-Q	6 '- 4 5/8"	1
1-R	11' - 0 7/8"	1
1-S	8' - 3 5/8"	1
1-T	6' - 7 3/8"	1
1-U	6' - 7 3/4"	1
1-V	2' - 4 7/8"	1
1-W	4' - 0 3/4"	1
1-X	5' - 1 1/2"	1
1-Y	6' - 11 1/4"	1
1-Z	3' - 7 5/8"	1

THE CITY OF LOS ANGELES OR ITS OFFICERS OR AGENTS SHALL NOT BE RESPONSIBLE FOR THE ACCURACY OR COMPLETENESS OF ELECTRONIC COPIES OF THIS PLAN SHEET.

REVISION DATES (DESIGN STAGE ONLY)

Sheet Version 3.0

BUREAU OF ENGINEERING

ENGINEERING CITY OF LOS ANGELES

NO. | REVISIONS: | DATE: | BY:

BUILDING NO.

INDEX NO. MF-300501

THIS PLAN WAS ELECTRONICALLY SIGNED AND STAMPED.

LICENSED LANDSCAPE ARCHITECT Mary Margaret Jones #2615 Signature Date Retired Date STATE OF CALIFORNIA

CITY OF LOS ANGELES DEPARTMENT OF PUBLIC WORKS

TED ALLEN, P.E. CITY ENGINEER

DESIGN GROUP

LANDSCAPE ARCHITECT: MARY MARGARET JONES LIC. NO. 07/11/2022

DESIGNED BY: MARY MARGARET JONES

DRAWN BY: MEGAN ESOPENKO

CHECKED BY: GAVIN MCMILLAN

APPROVED BY: MARY MARGARET JONES

VERT. CONTROL: BM 12-04070, 1929 (NGVD29) - 1985 ADJUSTMENT

HORIZ. CONTROL: GPS; PID AE 1704, EPOCH 1991.35

SHEET TITLE: ENLARGEMENT: ST PARK - PLANTING AREA FENCE & FITNESS LAYOUT

PROJECT: SIXTH STREET PARK, ARTS AND RIVER CONNECTIVITY IMPROVEMENTS (PARC)

ADDRESS: SIXTH STREET OVER THE LOS ANGELES RIVER

PLANS PREPARED BY: TETRA TECH, INC.
707 WILSHIRE BLVD, 23RD FLR.
LOS ANGELES, CA 90017
PHONE: (213) 239-8866

Hargreaves Jones
Hargreaves Jones Landscape Architecture

BUREAU OF ENGINEERING OFFICIAL RECORD

WORK ORDER NO. E700235D

FILE NO. --

DRAWING NO. L-409

SHEET 135 OF 295 SHEETS

2022-07-05 9:06:50 PM - C:\USERS\MESOPENKO\ONEDRIVE - HARGREAVES\SSV 1601 - SIXTH STREET VIADUCT\300_CREATE\310_HA WORKING FILES\06_TECHNICAL\06_100-CD\50_SHEETS\L-409-410 ENLARGEMENTS.DWG - MEGAN ESOPENKO

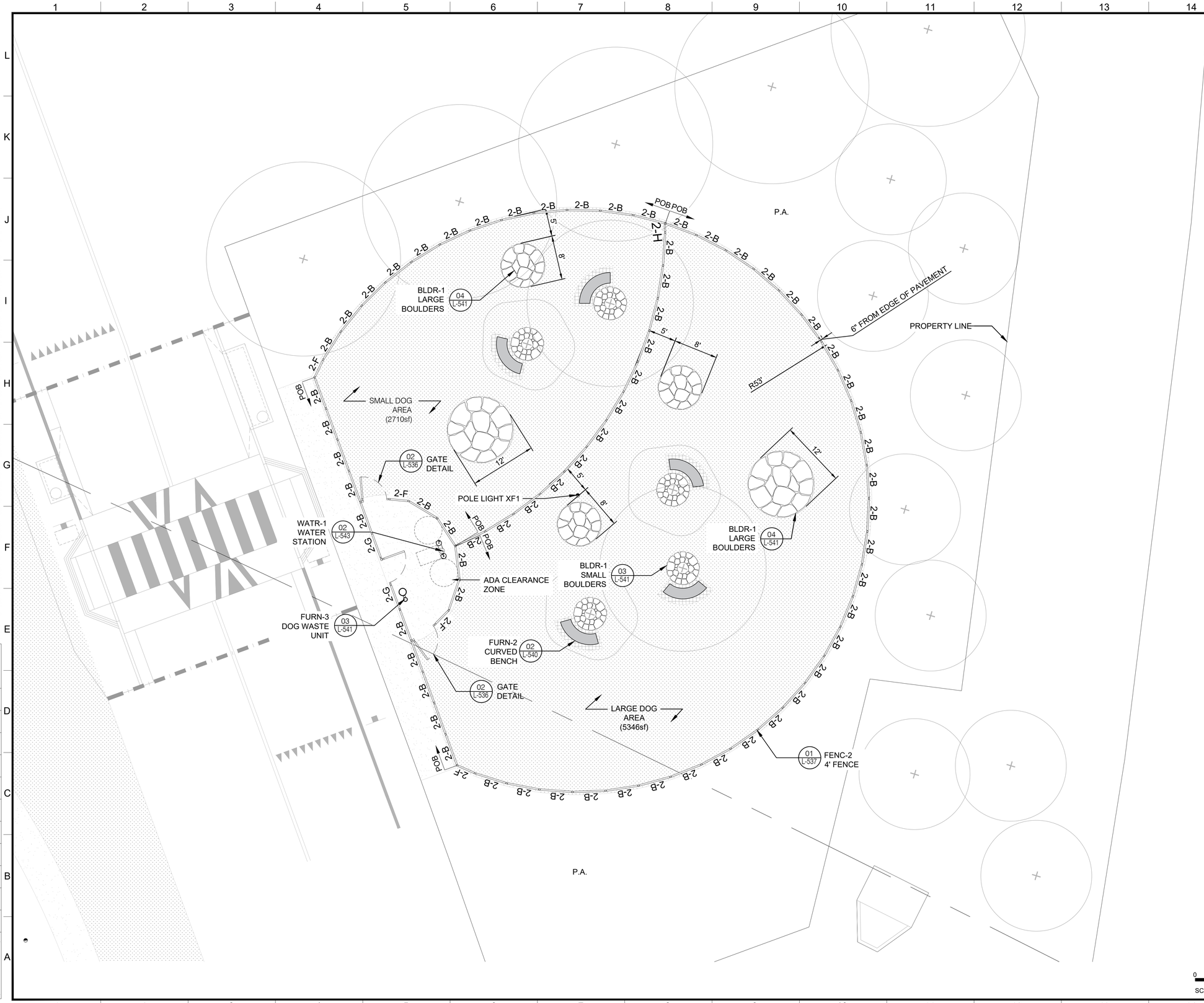

SHEET NOTES

1. SHOP DRAWINGS – SUBMIT PRIOR TO MOCKUP AND/OR FABRICATION. SEE SPECIFICATION.
2. MOCKUP – MOCKUP A PORTION AND SUBMIT PHOTOGRAPHS OF ALL JOINTS, WELDS, SEAMS AND FINISHES PRIOR TO FABRICATION. SEE SPECIFICATION.
3. FIELD VERIFY DIMENSIONS PRIOR TO FINAL FABRICATION.
4. ALL STAINLESS SHALL BE 316 GRADE WITH #4 FINISH UNLESS OTHERWISE NOTED.

FENC-2 PANEL SCHEDULE

PANEL NUMBER	PANEL LENGTH	NUMBER OF SEGMENTS
2-B	5' - 11 7/8"	62
2-F	3' - 6 1/4"	4
2-G	4' - 9 1/4"	2
2-H	1' - 7 5/8"	1

0 4' 8' 16'
SCALE 1" = 8'

BUREAU OF ENGINEERING
OFFICIAL RECORD

PLANS PREPARED BY:
TETRA TECH, INC.
707 WILSHIRE BLVD, 23RD FLR.
LOS ANGELES, CA 90017
PHONE: (213) 239-8866

HargreavesJones
Hargreaves Jones Landscape Architecture

CITY OF LOS ANGELES DEPARTMENT OF PUBLIC WORKS
BUREAU OF ENGINEERING

ENGINEERING
CITY OF LOS ANGELES

NO.	REVISIONS:	DATE:	BY:

BUILDING NO.

INDEX NO. MF-300501

THIS PLAN WAS ELECTRONICALLY SIGNED AND STAMPED.

LICENSED LANDSCAPE ARCHITECT
Mary Margaret Jones #2615
Renewal Date
Date
STATE OF CALIFORNIA

TED ALLEN, P.E.
CITY ENGINEER
DESIGN GROUP
DATE:
LANDSCAPE ARCHITECT: MARY MARGARET JONES LIC. NO. 07/11/2022
DESIGNED BY: MARY MARGARET JONES
DRAWN BY: MEGAN ESOPENKO
CHECKED BY: GAVIN MCMILLAN
APPROVED BY: MARY MARGARET JONES

VERT. CONTROL: BM 12-04070, 1929 (NGVD29) - 1985 ADJUSTMENT
HORIZ. CONTROL: GPS; PID AE 1704, EPOCH 1991.35

SHEET TITLE: ENLARGEMENT: EAST PARK - DOG PARK LAYOUT
PROJECT: SIXTH STREET PARK, ARTS AND RIVER CONNECTIVITY IMPROVEMENTS (PARC)
ADDRESS: SIXTH STREET OVER THE LOS ANGELES RIVER

WORK ORDER NO. E700235D
FILE NO. --
DRAWING NO. L-410
SHEET 136 OF 295 SHEETS

2022-07-05 9:06:59 PM - C:\USERS\MESOPENKO\ONEDRIVE - HARGREAVES\SSV 1601 - SIXTH STREET VIADUCT\300_CREATE\310_HA WORKING FILES\06_TECHNICAL\06_100-CD\50_SHEETS\L-409-410 ENLARGEMENTS.DWG - MEGAN ESOPENKO

THE CITY OF LOS ANGELES OR ITS OFFICERS OR AGENTS SHALL NOT BE RESPONSIBLE FOR THE ACCURACY OR COMPLETENESS OF ELECTRONIC COPIES OF THIS PLAN SHEET.

REVISION DATES (DESIGN STAGE ONLY)

Sheet Version 3.0

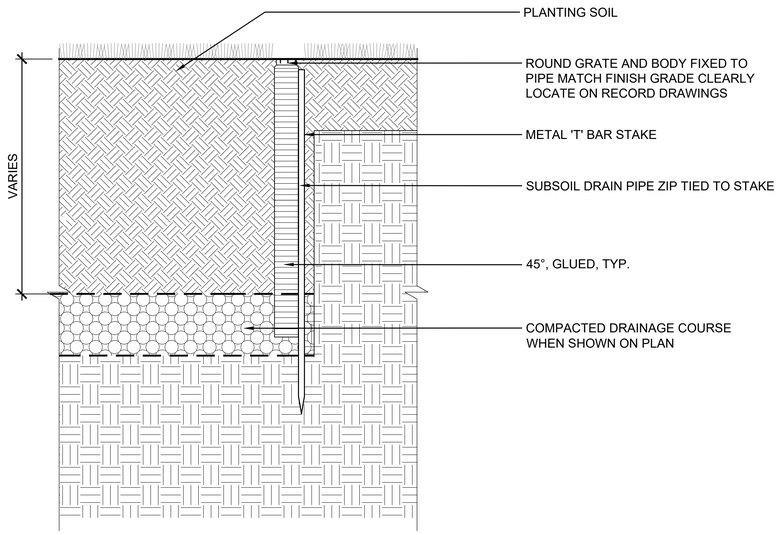

03 ROOT ZONE INSPECTION RISER
SCALE 1" = 1'

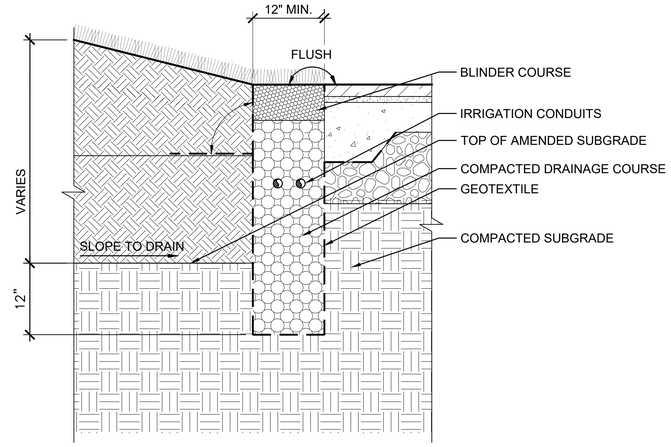

02 SUBDRAIN: FRENCH DRAIN - SSD-1
SCALE 1" = 1'

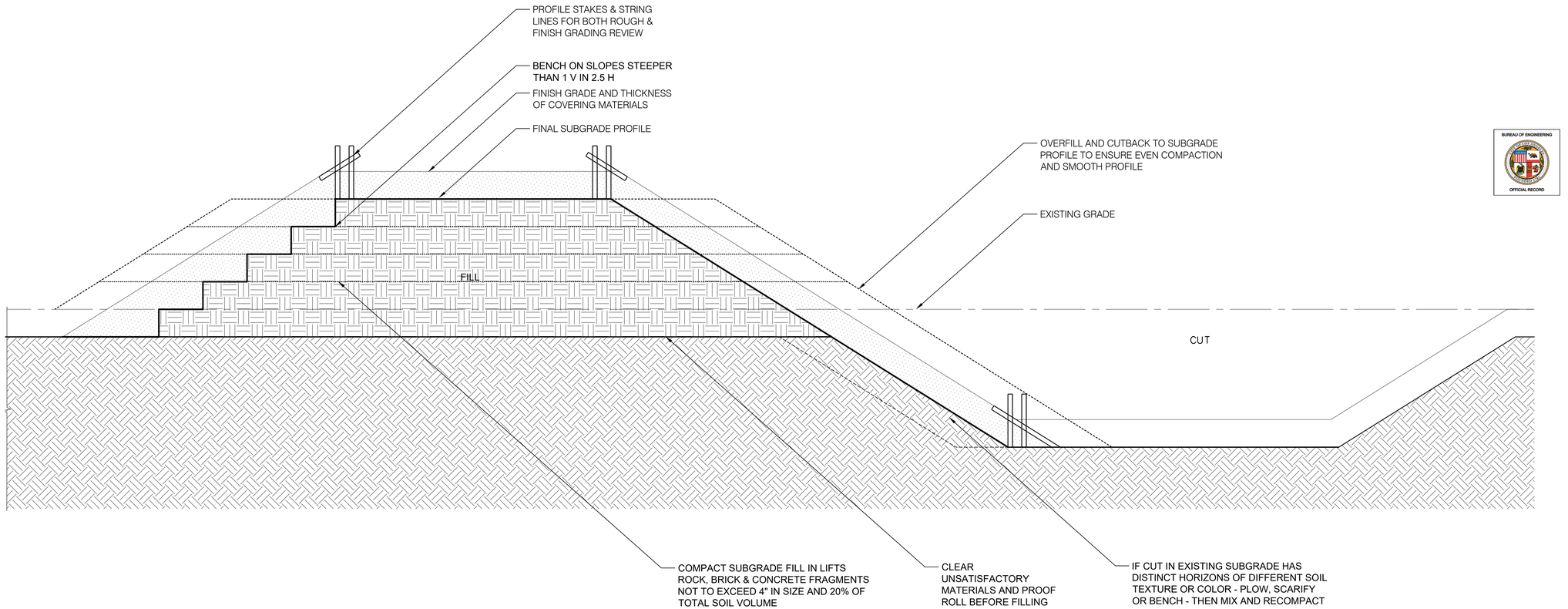

01 GRADING LANDFORMS - TYPICAL
SCALE 1" = 1'-0"

BUREAU OF ENGINEERING
OFFICIAL RECORD

THE CITY OF LOS ANGELES OR ITS OFFICERS OR AGENTS SHALL NOT BE RESPONSIBLE FOR THE ACCURACY OR COMPLETENESS OF ELECTRONIC COPIES OF THIS PLAN SHEET.

REVISION DATES (DESIGN STAGE ONLY)

Sheet Version 3.0

PLANS PREPARED BY:
TETRA TECH, INC.
707 WILSHIRE BLVD, 23RD FLR.
LOS ANGELES, CA 90017
PHONE: (213) 239-3866

HargreavesJones
Hargreaves Jones Landscape Architecture

CITY OF LOS ANGELES DEPARTMENT OF PUBLIC WORKS
VERT. CONTROL: BM 12-04070, 1929 (NGVD29) - 1985 ADJUSTMENT
HORIZ. CONTROL: GPS; PID AE 1704, EPOCH 1991.35
SHEET TITLE: DETAILS - GRADING
PROJECT: SIXTH STREET PARK, ARTS AND RIVER CONNECTIVITY IMPROVEMENTS (PARC)
ADDRESS: SIXTH STREET OVER THE LOS ANGELES RIVER

WORK ORDER NO. E700235D
FILE NO. --
DRAWING NO. L-505
SHEET 137 OF 295 SHEETS

BUREAU OF ENGINEERING
CITY ENGINEER: TED ALLEN, P.E.
DESIGN GROUP
LANDSCAPE ARCHITECT: MARY MARGARET JONES LIC. NO. 6559
DESIGNED BY: MARY MARGARET JONES
DRAWN BY: MEGAN ESOPENKO
CHECKED BY: GAVIN MCMILLAN
APPROVED BY: MARY MARGARET JONES
DATE: 07/11/2022

NO. REVISIONS: BY: DATE:

BUILDING NO.
INDEX NO. MF-300501

THIS PLAN WAS ELECTRONICALLY SIGNED AND STAMPED.
LICENSED LANDSCAPE ARCHITECT MARY MARGARET JONES #6559 STATE OF CALIFORNIA
Date 07/11/2022

ENGINEERING CITY OF LOS ANGELES

2022-07-05 9:07:10 PM - C:\USERS\MESOPENKO\ONEDRIVE - HARGREAVES\SSV 1901 - SIXTH STREET VIADUCT\900_CREATE\310_HA WORKING FILES\06_TECHNICAL\06_100-CD150_SHEETS_L-505-GRADING.DWG - MEGAN ESOPENKO

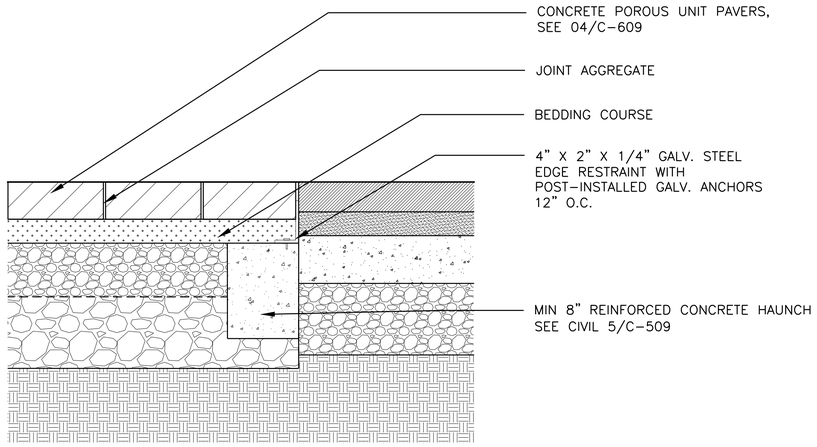

02 EDGE RESTRAINT AT STONE PAVING
SCALE 2" = 1'-0"

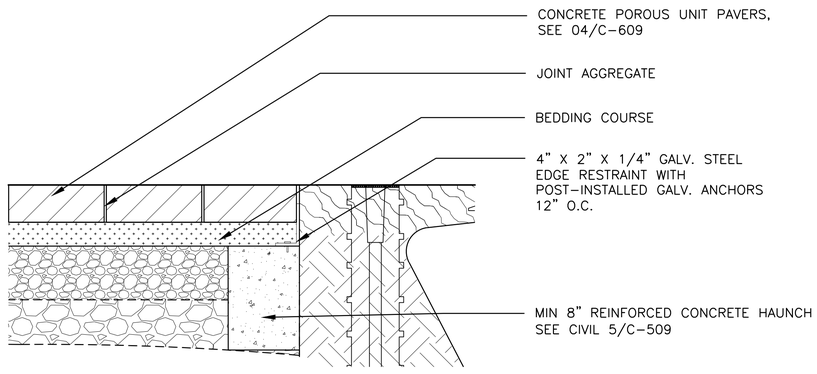

03 EDGE RESTRAINT AROUND TREE PLANTING IN PAVEMENT
SCALE 2" = 1'-0"

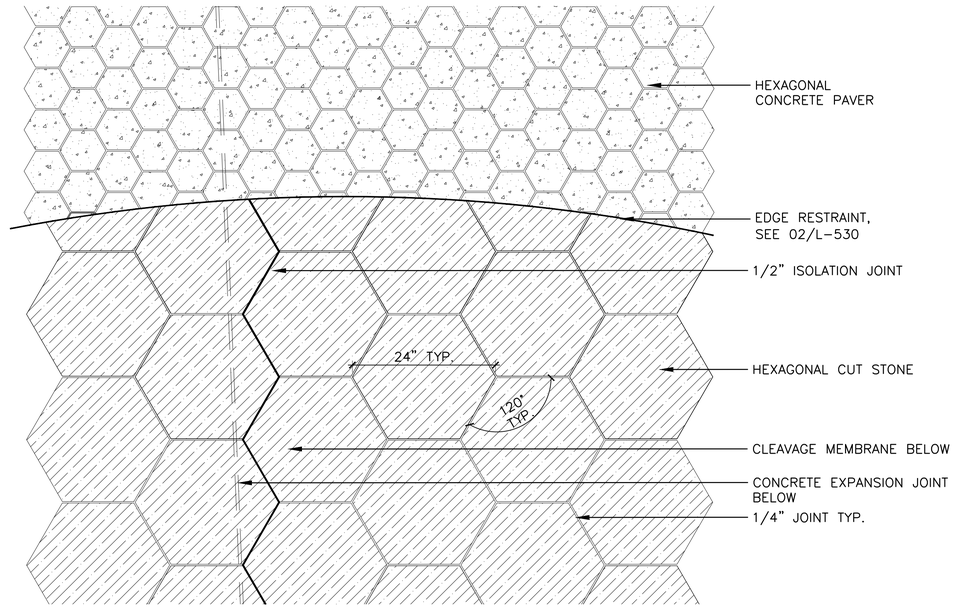

01 STONE PAVING - PVMT-1
SCALE 1" = 1'-0"

BUREAU OF ENGINEERING
OFFICIAL RECORD

THE CITY OF LOS ANGELES OR ITS OFFICERS OR AGENTS SHALL NOT BE RESPONSIBLE FOR THE ACCURACY OR COMPLETENESS OF ELECTRONIC COPIES OF THIS PLAN SHEET.

REVISION DATES (DESIGN STAGE ONLY)

Sheet Version 3.0

CITY OF LOS ANGELES DEPARTMENT OF PUBLIC WORKS BUREAU OF ENGINEERING

ENGINEERING CITY OF LOS ANGELES

BUILDING NO.

INDEX NO. MF-300501

NO. REVISIONS: DATE: BY:

THIS PLAN WAS ELECTRONICALLY SIGNED AND STAMPED.

LICENSED LANDSCAPE ARCHITECT Mary Margaret Jones #2515 STATE OF CALIFORNIA Date

TED ALLEN, P.E. CITY ENGINEER

DESIGN GROUP

LANDSCAPE ARCHITECT: MARY MARGARET JONES LIC. NO. 07/11/2022

DESIGNED BY: MARY MARGARET JONES

DRAWN BY: MEGAN ESOPENKO

CHECKED BY: GAVIN MCMILLAN

APPROVED BY: MARY MARGARET JONES

HargreavesJones
Hargreaves Jones Landscape Architecture

PLANS PREPARED BY:
TETRA TECH, INC.
707 WILSHIRE BLVD, 23RD FLR.
LOS ANGELES, CA 90017
PHONE: (213) 239-8866

VERT. CONTROL: BM 12-04070, 1929 (NGVD29) - 1985 ADJUSTMENT
HORIZ. CONTROL: GPS; PID AE 1704, EPOCH 1991.35

SHEET TITLE: DETAILS - PAVING & CURBS

PROJECT: SIXTH STREET PARK, ARTS AND RIVER CONNECTIVITY IMPROVEMENTS (PARC)

ADDRESS: SIXTH STREET OVER THE LOS ANGELES RIVER

WORK ORDER NO. E700235D

FILE NO. --

DRAWING NO. L-530

SHEET 138 OF 295 SHEETS

2022-07-05 9:07:17 PM - C:\USERS\MESOPENKO\ONEDRIVE - HARGREAVES\SSV 1601 - SIXTH STREET VIADUCT\300_CREATE\310_HA WORKING FILES\06_TECHNICAL\06_100-CD\50_SHEETS\L-530-PAVING AND CURBS.DWG - MEGAN ESOPENKO

SHEET NOTES

1. SHOP DRAWINGS – SUBMIT PRIOR TO MOCKUP AND/OR FABRICATION. SHOP DRAWINGS SHALL SHOW POST LAYOUT AND GATES. SEE SPECIFICATION.
2. MOCKUP – MOCKUP A PORTION AND SUBMIT PHOTOGRAPHS OF ALL JOINTS, WELDS, SEAMS AND FINISHES PRIOR TO FABRICATION. SEE SPECIFICATION.
3. FIELD VERIFY DIMENSIONS PRIOR TO FINAL FABRICATION.
4. PROPOSED 8' FENCE ALONG THE NORTHERN

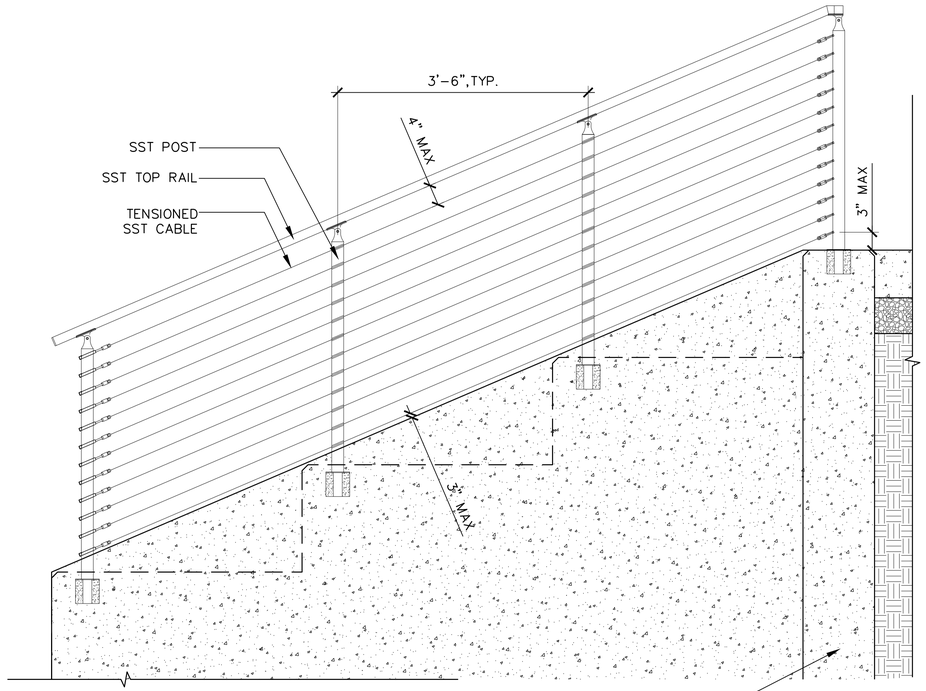

04 GRAL-1 AT TERRACE STARIS
SCALE 1" = 1'-0"

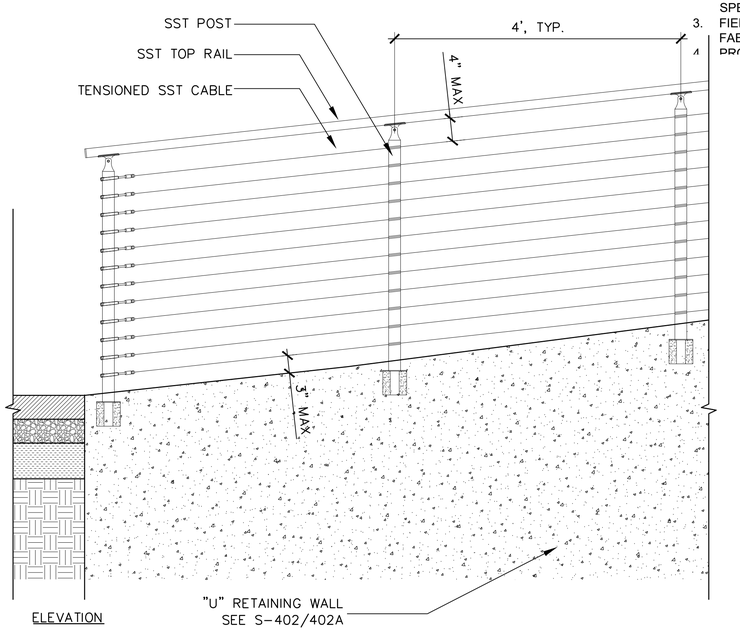

02 GRAL-1 AT STAGE RETAINING WALL
SCALE 1" = 1'-0"

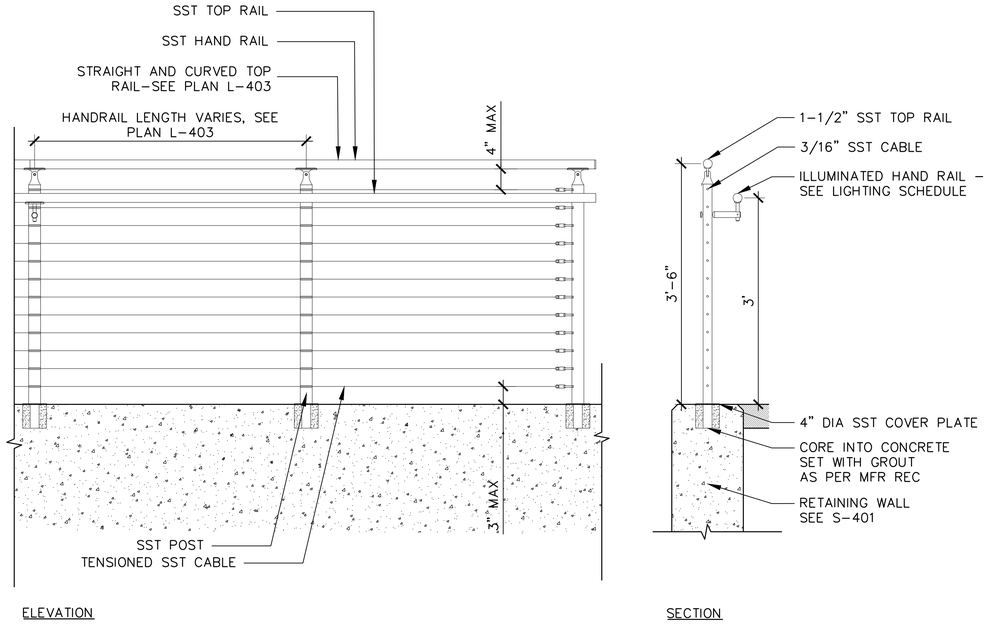

03 GRAL-2 AT TUNNEL RETAINING WALL
SCALE 1" = 1'-0"

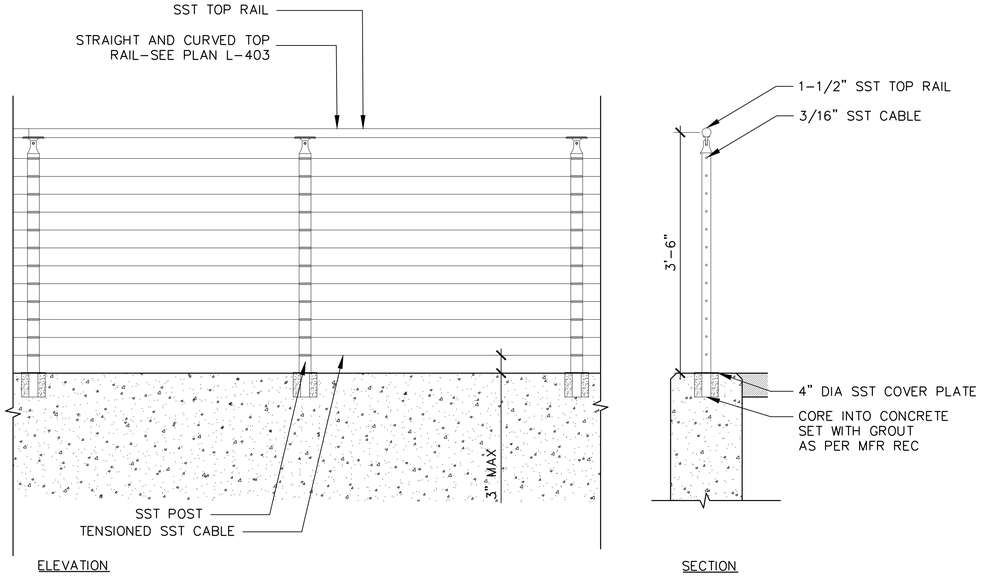

01 GRAL-1 AT BACK OF BENT RETAINING WALL
SCALE 1" = 1'-0"

BUREAU OF ENGINEERING
OFFICIAL RECORD

THIS PLAN WAS ELECTRONICALLY SIGNED AND STAMPED.

LICENSED LANDSCAPE ARCHITECT
Mary Margaret Jones #2616
Retirement Date
Date
STATE OF CALIFORNIA

NO.	REVISIONS:	DATE:	BY:

BUREAU OF ENGINEERING

INDEX NO. MF-300501

BUILDING NO.

ENGINEERING
CITY OF LOS ANGELES

CITY OF LOS ANGELES DEPARTMENT OF PUBLIC WORKS

TED ALLEN, P.E. CITY ENGINEER
DESIGN GROUP DATE:
LANDSCAPE ARCHITECT: MARY MARGARET JONES LIC. NO. 07/11/2022
DESIGNED BY: MARY MARGARET JONES
DRAWN BY: MEGAN ESOPENKO
CHECKED BY: GAVIN MCMILLAN
APPROVED BY: MARY MARGARET JONES

VERT. CONTROL: BM 12-04070, 1929 (NGVD29) - 1985 ADJUSTMENT
HORIZ. CONTROL: GPS; PID AE 1704, EPOCH 1991.35

SHEET TITLE: DETAILS - GUARDRAIL
PROJECT: SIXTH STREET PARK, ARTS AND RIVER CONNECTIVITY IMPROVEMENTS (PARC)
ADDRESS: SIXTH STREET OVER THE LOS ANGELES RIVER

WORK ORDER NO. E700235D
FILE NO. --
DRAWING NO. L-535
SHEET 139 OF 295 SHEETS

PLANS PREPARED BY:
TETRA TECH, INC.
707 WILSHIRE BLVD, 23RD FLR.
LOS ANGELES, CA 90017
PHONE: (213) 239-8866

HargreavesJones
Hargreaves Jones Landscape Architecture

THE CITY OF LOS ANGELES OR ITS OFFICERS OR AGENTS SHALL NOT BE RESPONSIBLE FOR THE ACCURACY OR COMPLETENESS OF ELECTRONIC COPIES OF THIS PLAN SHEET.

REVISION DATES (DESIGN STAGE ONLY)

Sheet Version 3.0

2022-07-05 9:25:30 PM - C:\USERS\MESOPENKO\ONEDRIVE - HARGREAVES\SSV 1601 - SIXTH STREET VIADUCT\300_CREATE\310_HA WORKING FILES\06_TECHNICAL\06_100-CD\50_SHEETS\L-535-RAILS-FENCES-SCREENS AND BARRIERS.DWG - MEGAN ESOPENKO

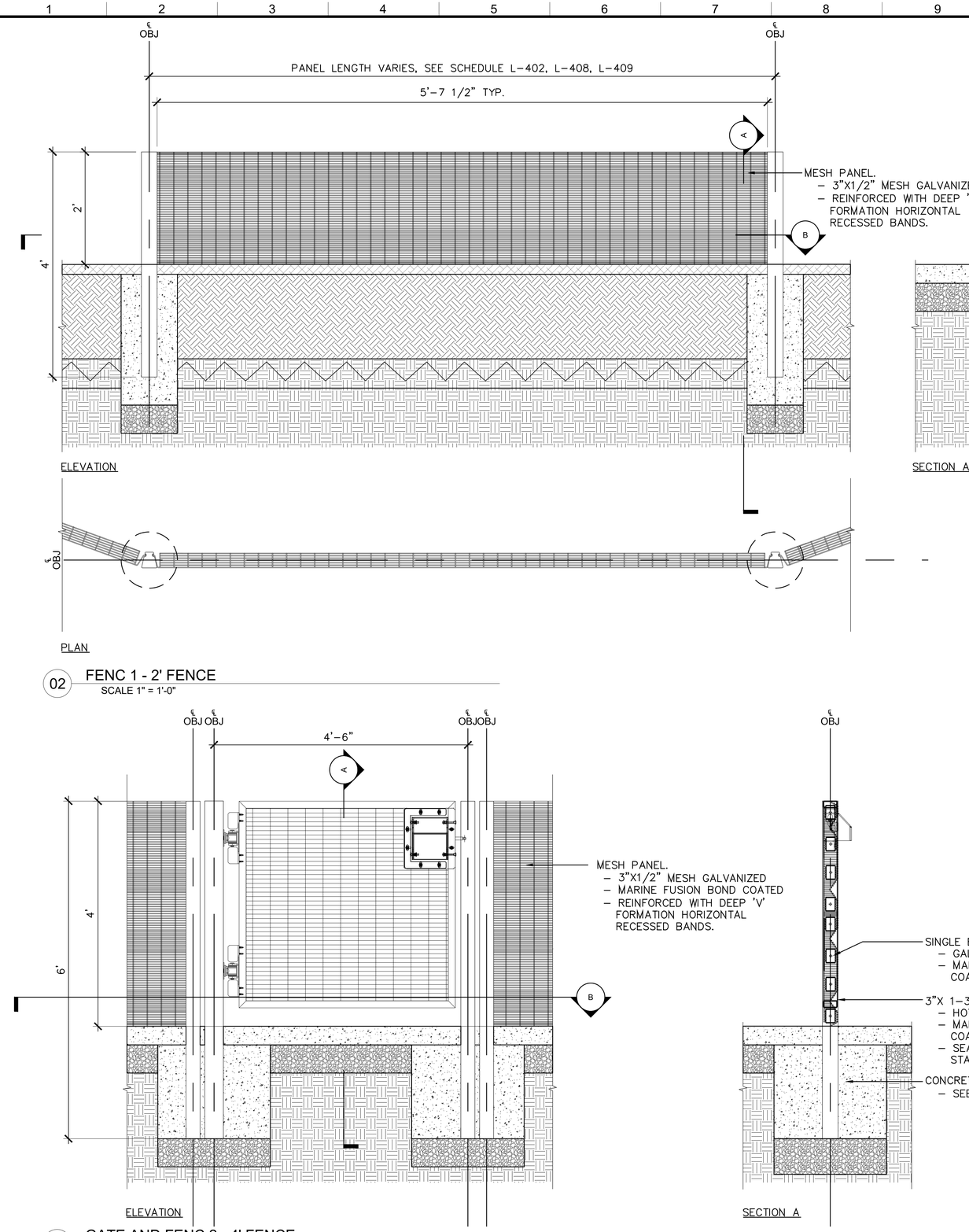

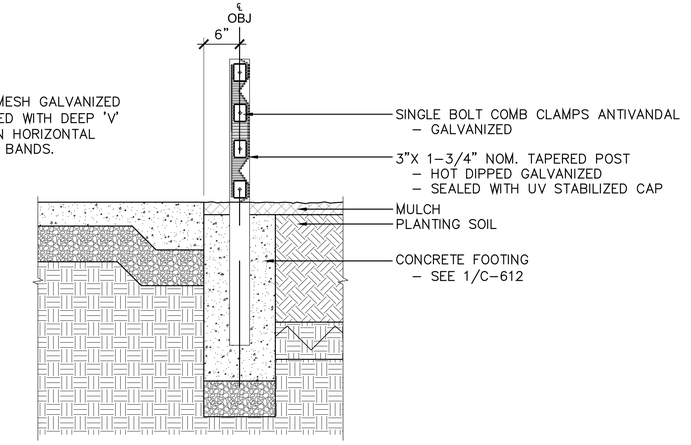

SHEET NOTES

1. SHOP DRAWINGS – SUBMIT PRIOR TO MOCKUP AND/OR FABRICATION. SHOP DRAWINGS SHALL SHOW POST LAYOUT AND GATES. SEE SPECIFICATION.
2. MOCKUP – MOCKUP A PORTION AND SUBMIT PHOTOGRAPHS OF ALL JOINTS, WELDS, SEAMS AND FINISHES PRIOR TO FABRICATION. SEE SPECIFICATION.
3. FIELD VERIFY DIMENSIONS PRIOR TO FINAL FABRICATION.
4. PROPOSED 8' FENCE ALONG THE NORTHERN

02 FENC 1 - 2' FENCE
SCALE 1" = 1'-0"

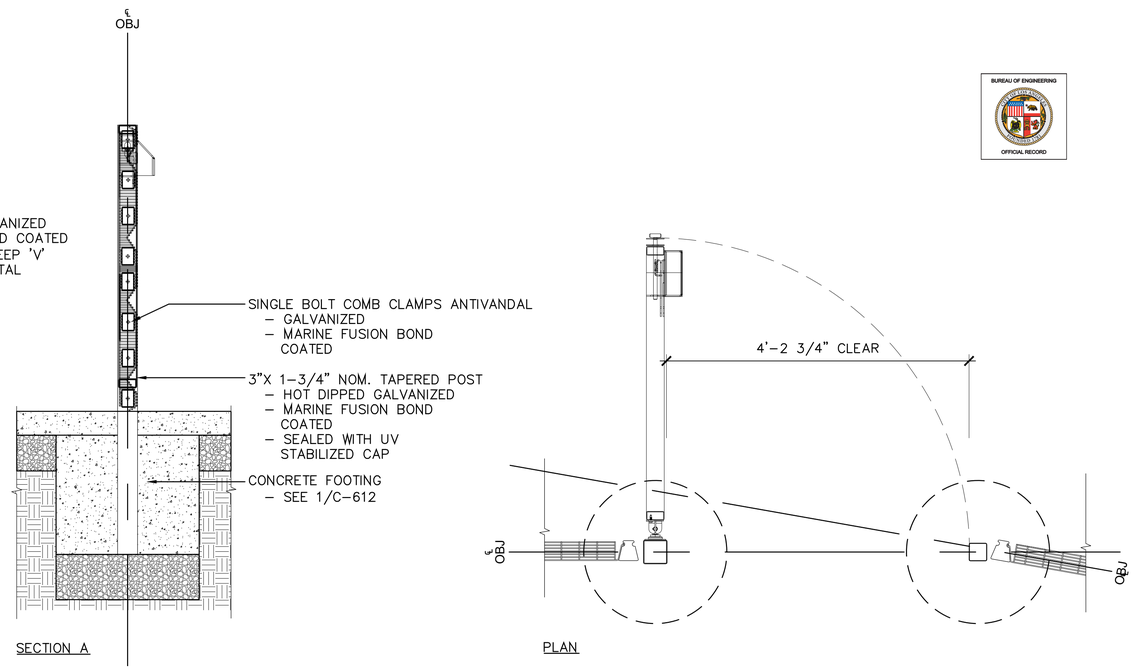

01 GATE AND FENC 2 - 4' FENCE
SCALE 1" = 1'-0"

BUREAU OF ENGINEERING
OFFICIAL RECORD

THE CITY OF LOS ANGELES OR ITS OFFICERS OR AGENTS SHALL NOT BE RESPONSIBLE FOR THE ACCURACY OR COMPLETENESS OF ELECTRONIC COPIES OF THIS PLAN SHEET.

REVISION DATES (DESIGN STAGE ONLY)

Sheet Version 3.0

BUREAU OF ENGINEERING
CITY OF LOS ANGELES
ENGINEERING

NO. REVISIONS: DATE: BY:

BUILDING NO.

INDEX NO. MF-300501

THIS PLAN WAS ELECTRONICALLY SIGNED AND STAMPED

LICENSED LANDSCAPE ARCHITECT MARY MARGARET JONES No. 2576 CALIFORNIA
Date 07/11/2022
Reference Date

CITY OF LOS ANGELES DEPARTMENT OF PUBLIC WORKS

CITY ENGINEER
TED ALLEN, P.E.
DATE:

DESIGN GROUP
LANDSCAPE ARCHITECT: MARY MARGARET JONES LIC. NO. 2576
DESIGNED BY: MARY MARGARET JONES
DRAWN BY: MEGAN ESOPENKO
CHECKED BY: GAVIN MCMILLAN
APPROVED BY: MARY MARGARET JONES

SHEET TITLE: DETAILS - FENCE

PROJECT: SIXTH STREET PARK, ARTS AND RIVER CONNECTIVITY IMPROVEMENTS (PARC)

ADDRESS: SIXTH STREET OVER THE LOS ANGELES RIVER

HargreavesJones
Hargreaves Jones Landscape Architecture

PLANS PREPARED BY:
TETRA TECH, INC.
707 WILSHIRE BLVD, 23RD FLR.
LOS ANGELES, CA 90017
PHONE: (213) 239-8866

VERT. CONTROL: BM 12-04070, 1929 (NGVD29) - 1985 ADJUSTMENT
HORIZ. CONTROL: GPS; PID AE 1704, EPOCH 1991.35

WORK ORDER NO. E700235D
FILE NO. --
DRAWING NO. L-536
SHEET 140 OF 295 SHEETS

2022-07-05 9:25:40 PM - C:\USERS\MESOPENKO\ONEDRIVE - HARGREAVESSSV 1901 - SIXTH STREET VIADUCT\000_CREATE\310_HA WORKING FILES\06_TECHNICAL\06_100-CD\50_SHEETS\L-535-RAILS-FENCES-SCREENS AND BARRIERS.DWG - MEGAN ESOPENKO

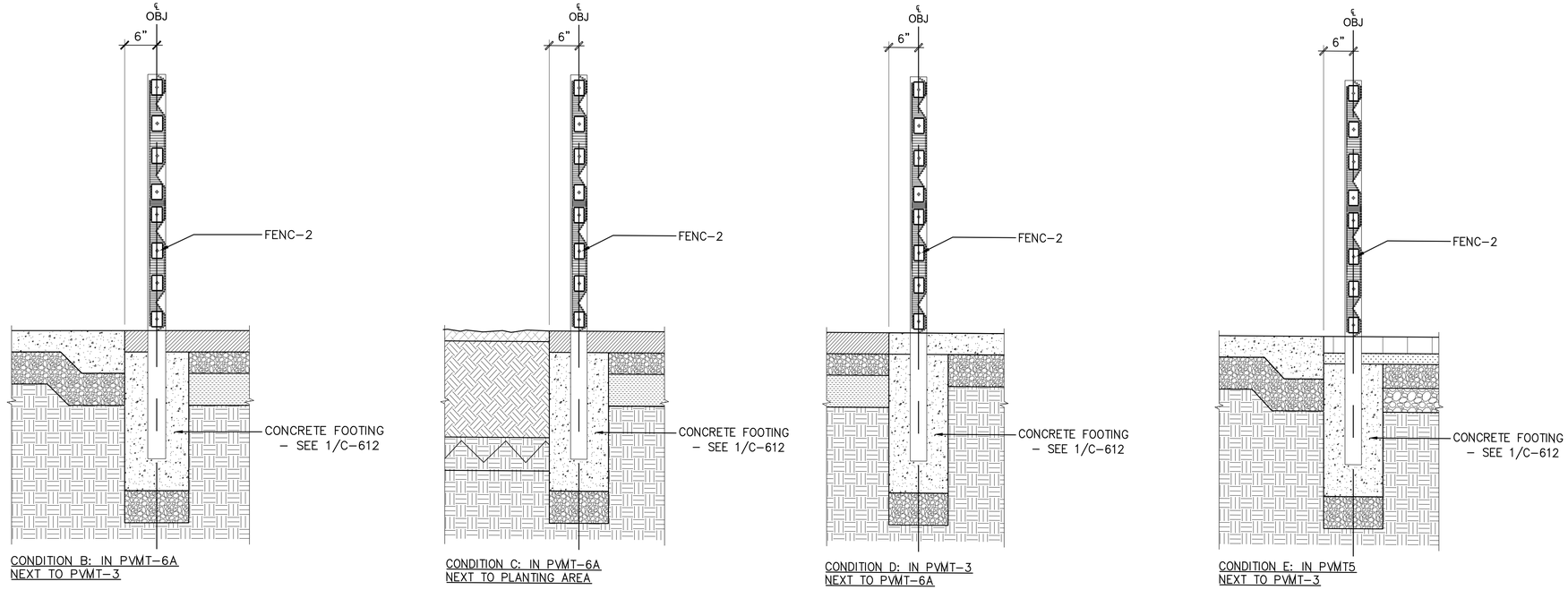

CONDITION B: IN PVMT-6A
NEXT TO PVMT-3

CONDITION C: IN PVMT-6A
NEXT TO PLANTING AREA

CONDITION D: IN PVMT-3
NEXT TO PVMT-6A

CONDITION E: IN PVMT5
NEXT TO PVMT-3

SHEET NOTES

1. SHOP DRAWINGS – SUBMIT PRIOR TO MOCKUP AND/OR FABRICATION. SHOP DRAWINGS SHALL SHOW POST LAYOUT AND GATES. SEE SPECIFICATION.
2. MOCKUP – MOCKUP A PORTION AND SUBMIT PHOTOGRAPHS OF ALL JOINTS, WELDS, SEAMS AND FINISHES PRIOR TO FABRICATION. SEE SPECIFICATION.
3. FIELD VERIFY DIMENSIONS PRIOR TO FINAL FABRICATION.
4. PROPOSED 8' FENCE ALONG THE NORTHERN

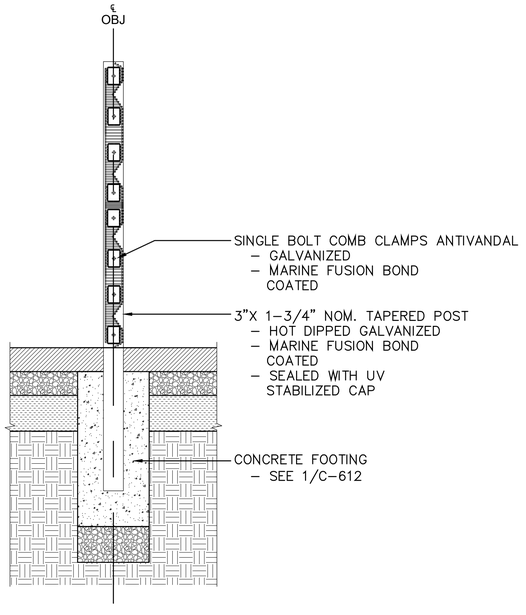

SECTION A: IN PVMT-6A

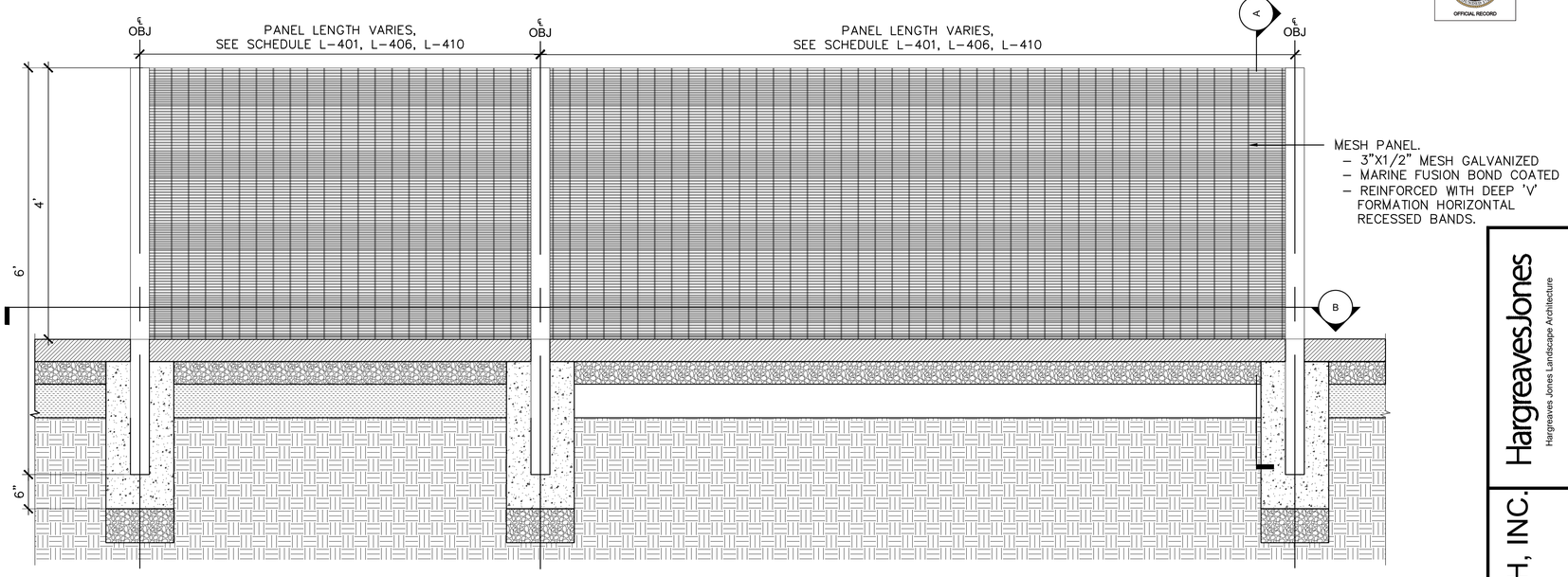

ELEVATION

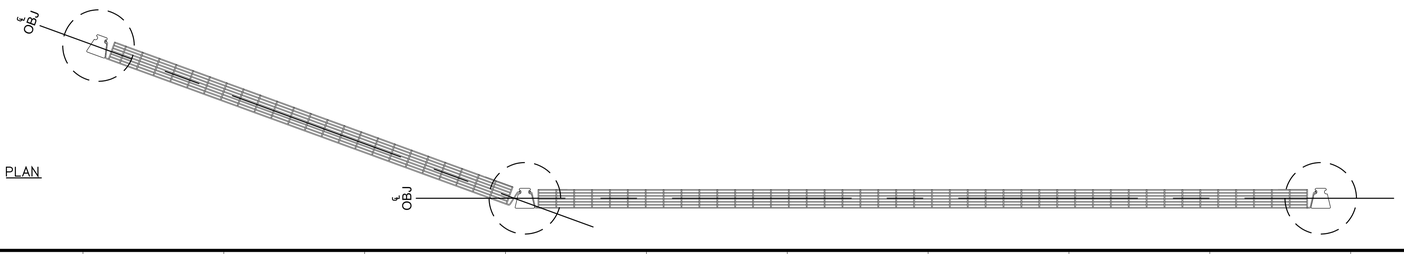

PLAN

01 FENC 2 - 4' FENCE
SCALE 1 " = 1'-0"

BUREAU OF ENGINEERING
OFFICIAL RECORD

THIS PLAN WAS ELECTRONICALLY SIGNED AND STAMPED.

LICENSED LANDSCAPE ARCHITECT
Mary Margaret Jones #2616
Renewal Date
Date
STATE OF CALIFORNIA

NO.	REVISIONS:	DATE:	BY:

BUILDING NO.

INDEX NO. MF-300501

BUREAU OF ENGINEERING

CITY OF LOS ANGELES DEPARTMENT OF PUBLIC WORKS

TED ALLEN, P.E. CITY ENGINEER

DESIGN GROUP

LANDSCAPE ARCHITECT: MARY MARGARET JONES LIC. NO. 07/11/2022

DESIGNED BY: MARY MARGARET JONES

DRAWN BY: MEGAN ESOPENKO

CHECKED BY: GAVIN MCMILLAN

APPROVED BY: MARY MARGARET JONES

VERT. CONTROL: BM 12-04070, 1929 (NGVD29) - 1985 ADJUSTMENT
HORIZ. CONTROL: GPS; PID AE 1704, EPOCH 1991.35

SHEET TITLE: DETAILS - FENCE

PROJECT: SIXTH STREET PARK, ARTS AND RIVER CONNECTIVITY IMPROVEMENTS (PARC)

ADDRESS: SIXTH STREET OVER THE LOS ANGELES RIVER

PLANS PREPARED BY:
TETRA TECH, INC.
707 WILSHIRE BLVD, 23RD FLR.
LOS ANGELES, CA 90017
PHONE: (213) 239-8866

HargreavesJones
Hargreaves Jones Landscape Architecture

WORK ORDER NO. E700235D
FILE NO. --
DRAWING NO. L-537
SHEET 141 OF 295 SHEETS

2022-07-05 9:25:52 PM - C:\USERS\MESOPENKO\ONEDRIVE - HARGREAVES\SSV 1601 - SIXTH STREET VIADUCT\300_CREATE\310_HA WORKING FILES\06_TECHNICAL\06_100-CD\50_SHEETS\L-535-RAILS-FENCES-SCREENS AND BARRIERS.DWG - MEGAN ESOPENKO

THE CITY OF LOS ANGELES OR ITS OFFICERS OR AGENTS SHALL NOT BE RESPONSIBLE FOR THE ACCURACY OR COMPLETENESS OF ELECTRONIC COPIES OF THIS PLAN SHEET.

REVISION DATES (DESIGN STAGE ONLY)

Sheet Version 3.0

SHEET NOTES

1. SHOP DRAWINGS – SUBMIT PRIOR TO MOCKUP AND/OR FABRICATION. SHOP DRAWINGS SHALL SHOW POST LAYOUT AND GATES. SEE SPECIFICATION.
2. MOCKUP – MOCKUP A PORTION AND SUBMIT PHOTOGRAPHS OF ALL JOINTS, WELDS, SEAMS AND FINISHES PRIOR TO FABRICATION. SEE SPECIFICATION.
3. FIELD VERIFY DIMENSIONS PRIOR TO FINAL FABRICATION.
4. PROPOSED 8' FENCE ALONG THE NORTHERN PROPERTY LINE BETWEEN MISSION ROAD AND ANDERSON STREET SHALL BE CONSTRUCTED WITH AN INTEGRAL RETAINING CURB AS PER 11/C-612.

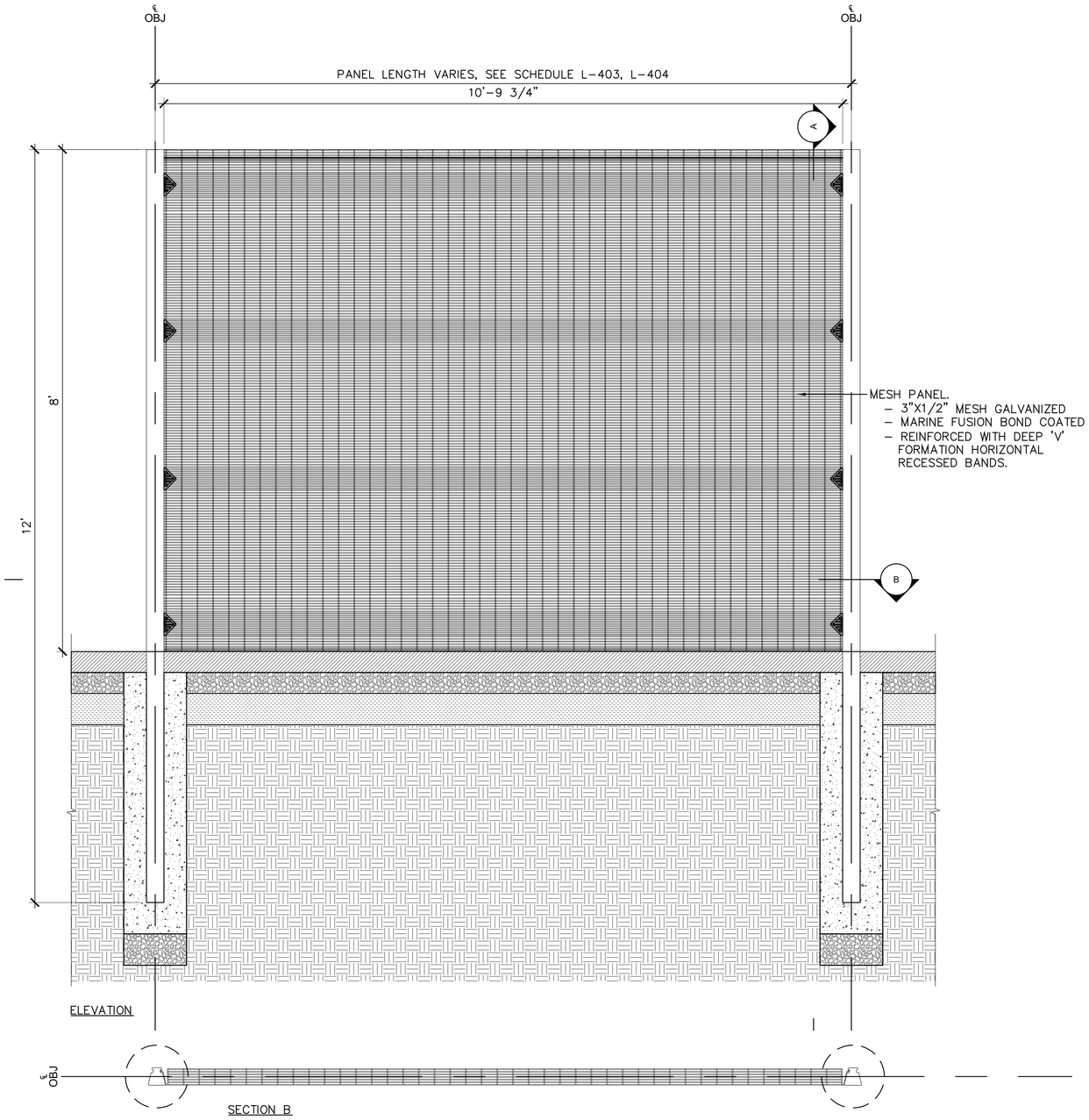

01 FENC 3 - 8' FENCE
SCALE 1" = 1'-0"

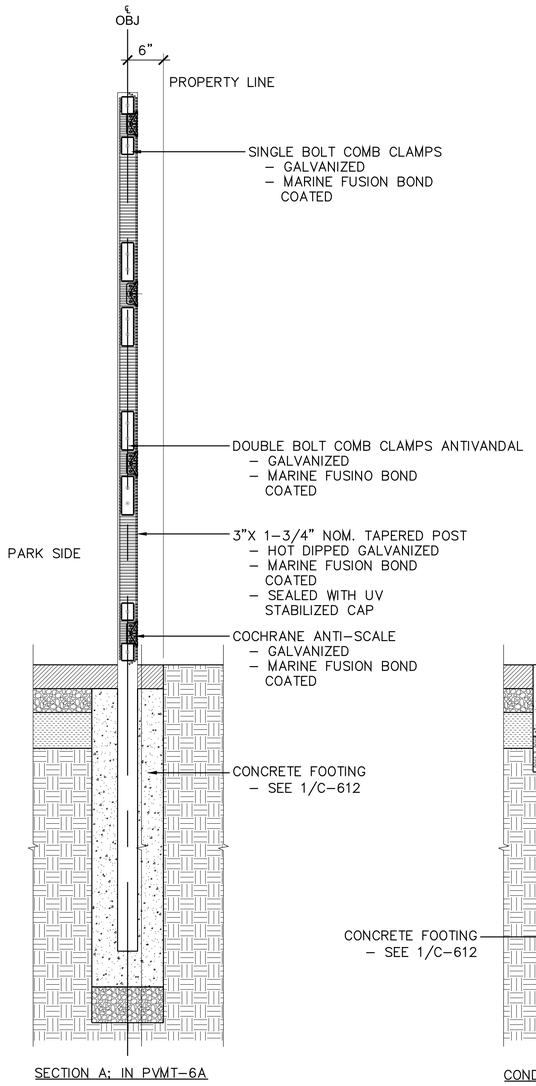

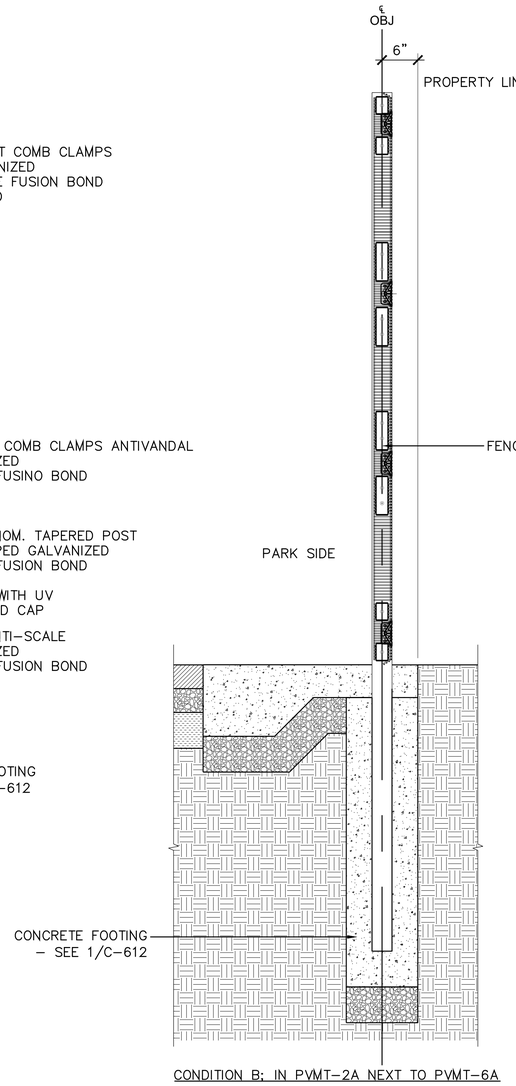

BUREAU OF ENGINEERING
OFFICIAL RECORD

THIS PLAN WAS ELECTRONICALLY SIGNED AND STAMPED.

LICENSED LANDSCAPE ARCHITECT
Mary Margaret Jones #2616
Renewal Date
Date
STATE OF CALIFORNIA

BUREAU OF ENGINEERING

ENGINEERING
CITY OF LOS ANGELES

BUILDING NO.

NO. | REVISIONS: | DATE: | BY:

INDEX NO. MF-300501

CITY OF LOS ANGELES DEPARTMENT OF PUBLIC WORKS

TED ALLEN, P.E.
DESIGN GROUP
LANDSCAPE ARCHITECT: MARY MARGARET JONES LIC. NO. 07/11/2022
DESIGNED BY: MARY MARGARET JONES
DRAWN BY: MEGAN ESOPENKO
CHECKED BY: GAVIN MCMILLAN
APPROVED BY: MARY MARGARET JONES

VERT. CONTROL: BM 12-04070, 1929 (NGVD29) - 1985 ADJUSTMENT
HORIZ. CONTROL: GPS; PID AE 1704, EPOCH 1991.35

SHEET TITLE: DETAILS - FENCE
PROJECT: SIXTH STREET PARK, ARTS AND RIVER CONNECTIVITY IMPROVEMENTS (PARC)
ADDRESS: SIXTH STREET OVER THE LOS ANGELES RIVER

WORK ORDER NO. E700235D
FILE NO. --
DRAWING NO. L-538
SHEET 142 OF 295 SHEETS

PLANS PREPARED BY:
TETRA TECH, INC.
707 WILSHIRE BLVD, 23RD FLR.
LOS ANGELES, CA 90017
PHONE: (213) 239-8866

Hargreaves Jones
Hargreaves Jones Landscape Architecture

THE CITY OF LOS ANGELES OR ITS OFFICERS OR AGENTS SHALL NOT BE RESPONSIBLE FOR THE ACCURACY OR COMPLETENESS OF ELECTRONIC COPIES OF THIS PLAN SHEET.

REVISION DATES (DESIGN STAGE ONLY)

2022-07-05 9:25:58 PM - C:\USERS\MESOPENKO\ONEDRIVE - HARGREAVES\SSV 1601 - SIXTH STREET VIADUCT\300_CREATE\310_HA WORKING FILES\06_TECHNICAL\06_100-CD\50_SHEETS\L-535-RAILS-FENCES-SCREENS AND BARRIERS.DWG - MEGAN ESOPENKO

Sheet Version 3.0

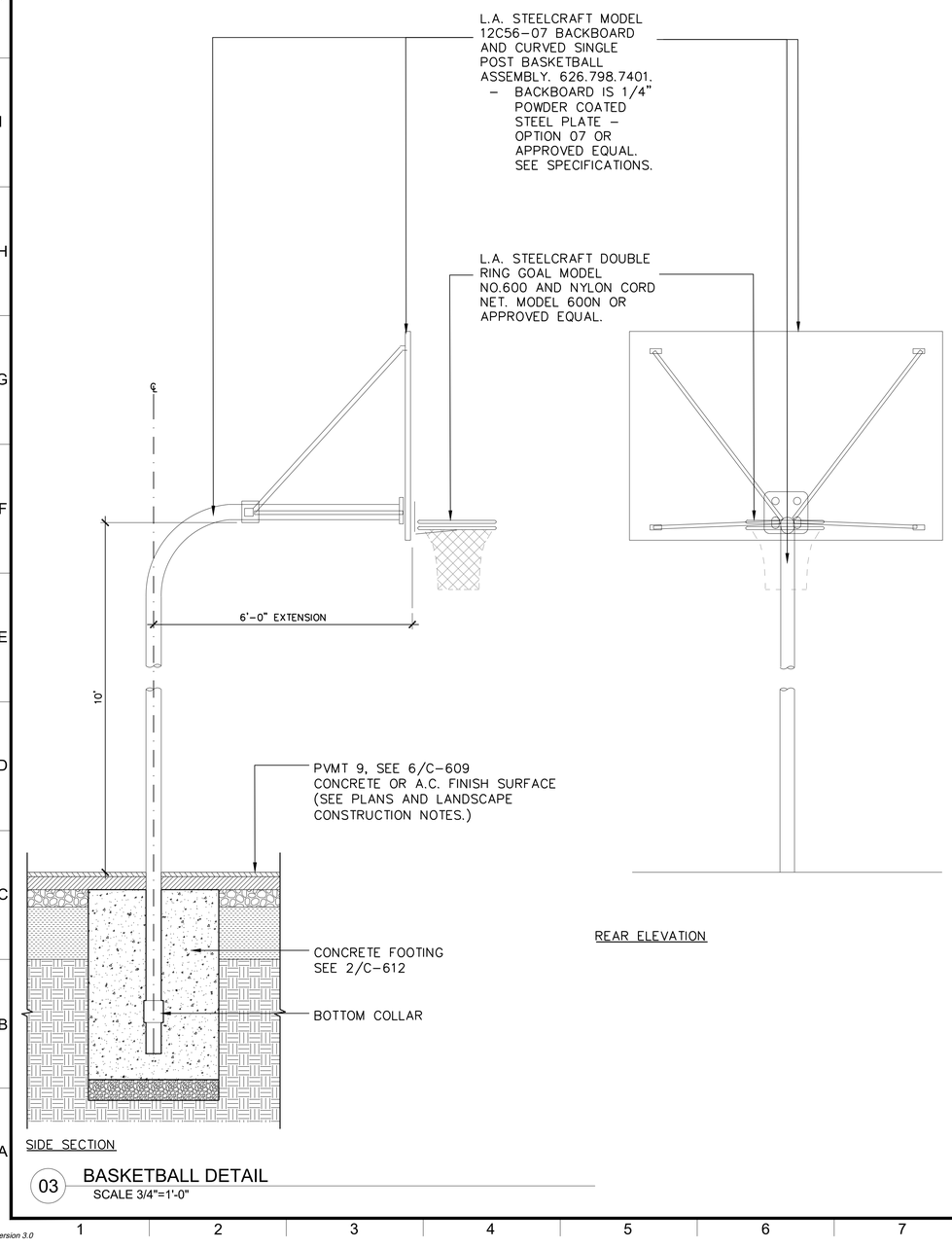

03 BASKETBALL DETAIL
SCALE 3/4"=1'-0"

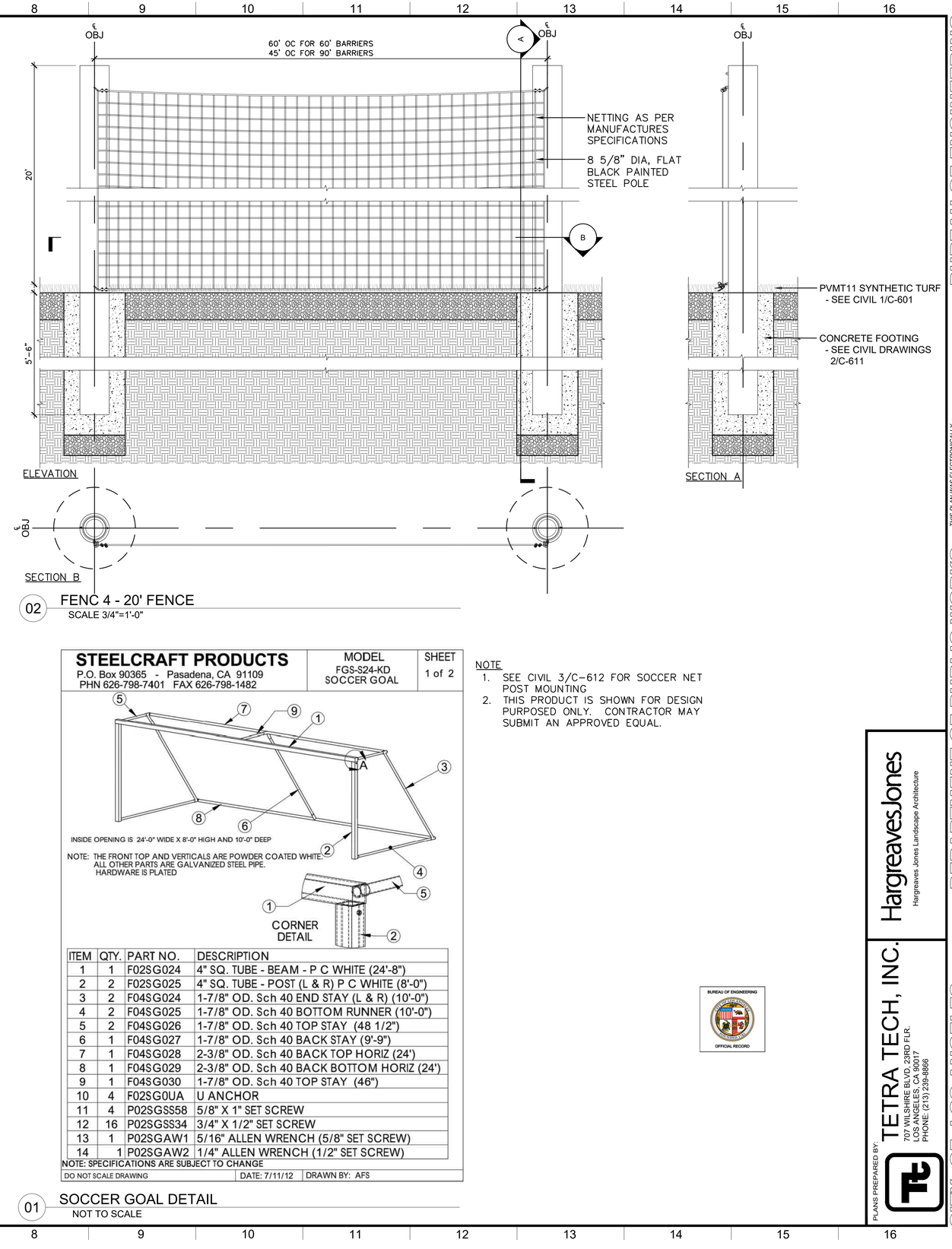

02 FENC 4 - 20' FENCE
SCALE 3/4"=1'-0"

STEELCRAFT PRODUCTS
P.O. Box 90365 - Pasadena, CA 91109
PHN 626-798-7401 FAX 626-798-1482

MODEL FGS-S24-KD SOCCER GOAL

SHEET 1 of 2

ITEM	QTY.	PART NO.	DESCRIPTION
1	1	F02SG024	4" SQ. TUBE - BEAM - P C WHITE (24'-8")
2	2	F02SG025	4" SQ. TUBE - POST (L & R) P C WHITE (8'-0")
3	2	F04SG024	1-7/8" OD. Sch 40 END STAY (L & R) (10'-0")
4	2	F04SG025	1-7/8" OD. Sch 40 BOTTOM RUNNER (10'-0")
5	2	F04SG026	1-7/8" OD. Sch 40 TOP STAY (48 1/2")
6	1	F04SG027	1-7/8" OD. Sch 40 BACK STAY (9'-9")
7	1	F04SG028	2-3/8" OD. Sch 40 BACK TOP HORIZ (24')
8	1	F04SG029	2-3/8" OD. Sch 40 BACK BOTTOM HORIZ (24')
9	1	F04SG030	1-7/8" OD. Sch 40 TOP STAY (46")
10	4	F02SG0UA	U ANCHOR
11	4	P02SGSS58	5/8" X 1" SET SCREW
12	16	P02SGSS34	3/4" X 1/2" SET SCREW
13	1	P02SGAW1	5/16" ALLEN WRENCH (5/8" SET SCREW)
14	1	P02SGAW2	1/4" ALLEN WRENCH (1/2" SET SCREW)

NOTE: SPECIFICATIONS ARE SUBJECT TO CHANGE

DO NOT SCALE DRAWING | DATE: 7/11/12 | DRAWN BY: AFS

NOTE
1. SEE CIVIL 3/C-612 FOR SOCCER NET POST MOUNTING
2. THIS PRODUCT IS SHOWN FOR DESIGN PURPOSED ONLY. CONTRACTOR MAY SUBMIT AN APPROVED EQUAL.

01 SOCCER GOAL DETAIL
NOT TO SCALE

BUREAU OF ENGINEERING
OFFICIAL RECORD

PLANS PREPARED BY:
TETRA TECH, INC.
707 WILSHIRE BLVD, 23RD FLR.
LOS ANGELES, CA 90017
PHONE: (213) 239-8866

HargreavesJones
Hargreaves Jones Landscape Architecture

CITY OF LOS ANGELES DEPARTMENT OF PUBLIC WORKS BUREAU OF ENGINEERING

VERT. CONTROL: BM 12-04070, 1929 (NGVD29) - 1985 ADJUSTMENT
HORIZ. CONTROL: GPS, PID AE 1704, EPOCH 1991.35

SHEET TITLE: DETAILS - SPORTS

PROJECT: SIXTH STREET PARK, ARTS AND RIVER CONNECTIVITY IMPROVEMENTS (PARC)

ADDRESS: SIXTH STREET OVER THE LOS ANGELES RIVER

CITY ENGINEER
TED ALLEN, P.E.
DESIGN GROUP
LANDSCAPE ARCHITECT: MARY MARGARET JONES LIC. NO. 6576 DATE: 07/11/2022
DESIGNED BY: MARY MARGARET JONES
DRAWN BY: MEGAN ESOPENKO
CHECKED BY: GAVIN MCMILLAN
APPROVED BY: MARY MARGARET JONES

LICENSED LANDSCAPE ARCHITECT MARY MARGARET JONES #6576 STATE OF CALIFORNIA
THIS PLAN WAS ELECTRONICALLY SIGNED AND STAMPED
Date: Reference Date

NO. REVISIONS: DATE: BY:

BUILDING NO.

INDEX NO. MF-300501

WORK ORDER NO. E700235D
FILE NO. --
DRAWING NO. L-539
SHEET 143 OF 295 SHEETS

2022-07-05 9:26:06 PM - C:\USERS\MESOPENKO\ONEDRIVE - HARGREAVESJSV 1601 - SIXTH STREET VIADUCT\300_CREATE\310_HA WORKING FILES\06_TECHNICAL\06_TECHNICAL06_100-CD150_SHEETS_L-535-RAILS-FENCES-SCREENS AND BARRIERS.DWG - MEGAN ESOPENKO

THE CITY OF LOS ANGELES OR ITS OFFICERS OR AGENTS SHALL NOT BE RESPONSIBLE FOR THE ACCURACY OR COMPLETENESS OF ELECTRONIC COPIES OF THIS PLAN SHEET.

REVISION DATES (DESIGN STAGE ONLY)

Sheet Version 3.0

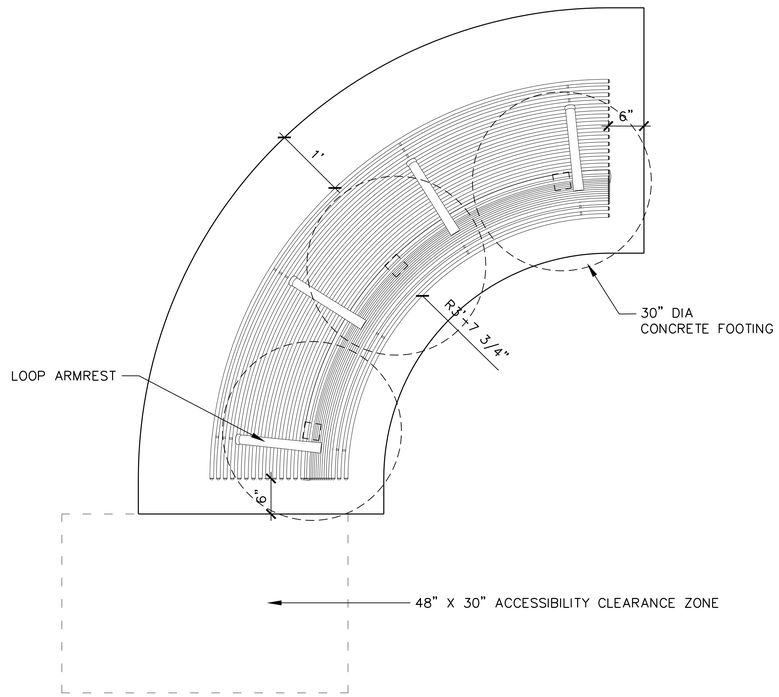

PLAN

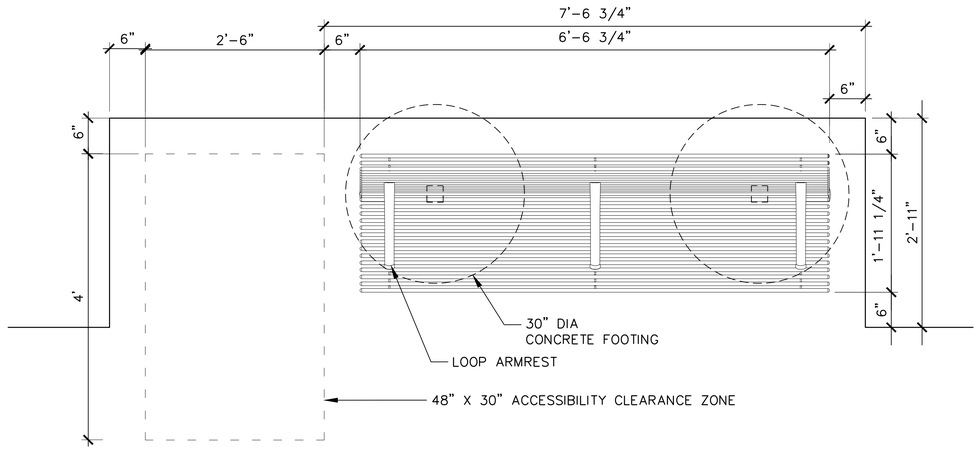

PLAN

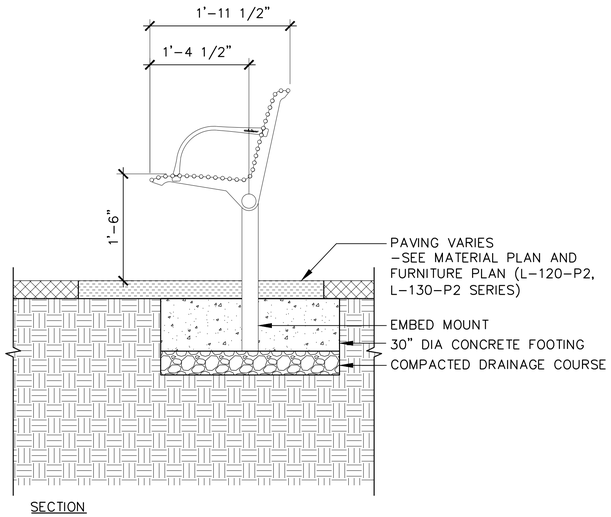

SECTION

02 FURN 1B - CURVED BENCH
SCALE 1" = 1'-0"

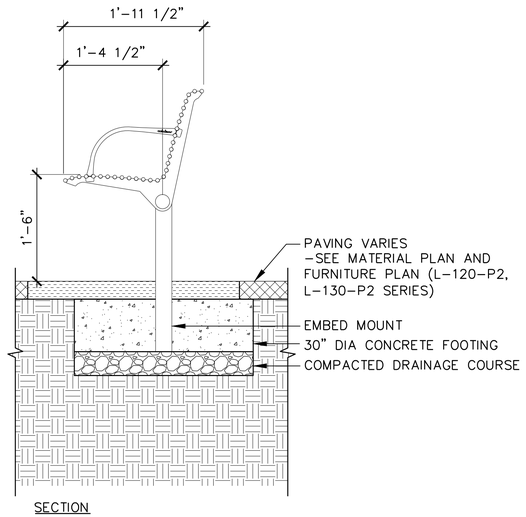

SECTION

01 FURN 1A - STRAIGHT BENCH
SCALE 1" = 1'-0"

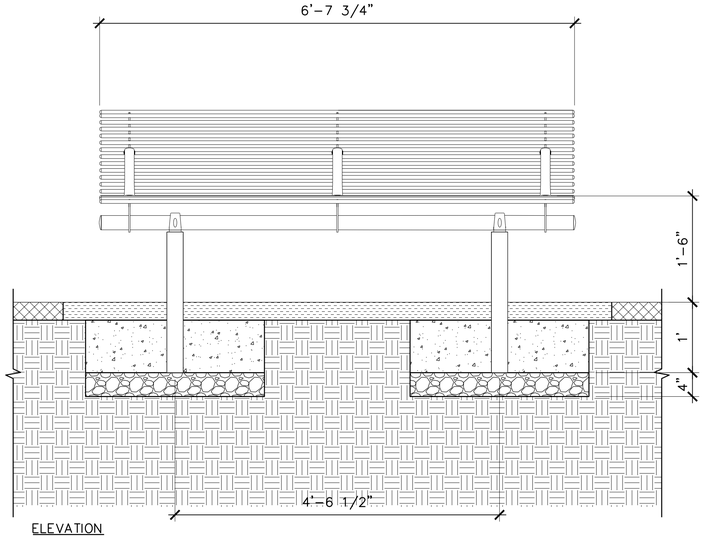

ELEVATION

BUREAU OF ENGINEERING
OFFICIAL RECORD

THIS PLAN WAS ELECTRONICALLY SIGNED AND STAMPED.

LICENSED LANDSCAPE ARCHITECT
Mary Margaret Jones #2616
Renewal Date
Date
STATE OF CALIFORNIA

BUREAU OF ENGINEERING

NO.	REVISIONS:	DATE:	BY:

INDEX NO. MF-300501

BUILDING NO.

CITY OF LOS ANGELES DEPARTMENT OF PUBLIC WORKS

TED ALLEN, P.E.
DESIGN GROUP
LANDSCAPE ARCHITECT: MARY MARGARET JONES LIC. NO. 07/11/2022
DESIGNED BY: MARY MARGARET JONES
DRAWN BY: MEGAN ESOPENKO
CHECKED BY: GAVIN MCMILLAN
APPROVED BY: MARY MARGARET JONES

VERT. CONTROL: BM 12-04070, 1929 (NGVD29) - 1985 ADJUSTMENT
HORIZ. CONTROL: GPS; PID AE 1704, EPOCH 1991.35

SHEET TITLE: DETAILS - FURNITURE

PROJECT: SIXTH STREET PARK, ARTS AND RIVER CONNECTIVITY IMPROVEMENTS (PARC)

ADDRESS: SIXTH STREET OVER THE LOS ANGELES RIVER

PLANS PREPARED BY:
TETRA TECH, INC.
707 WILSHIRE BLVD, 23RD FLR.
LOS ANGELES, CA 90017
PHONE: (213) 239-8866

HargreavesJones
Hargreaves Jones Landscape Architecture

WORK ORDER NO. E700235D
FILE NO. --
DRAWING NO. L-540
SHEET 144 OF 295 SHEETS

2022-07-05 9:26:32 PM - C:\USERS\MESOPENKO\ONEDRIVE - HARGREAVES\SSV 1601 - SIXTH STREET VIADUCT\300_CREATE\310_HA WORKING FILES\06_TECHNICAL\06_100-CD\50_SHEETS\L-540-SITE FURNISHINGS.DWG - MEGAN ESOPENKO

THE CITY OF LOS ANGELES OR ITS OFFICERS OR AGENTS SHALL NOT BE RESPONSIBLE FOR THE ACCURACY OR COMPLETENESS OF ELECTRONIC COPIES OF THIS PLAN SHEET.

REVISION DATES (DESIGN STAGE ONLY)

Sheet Version 3.0

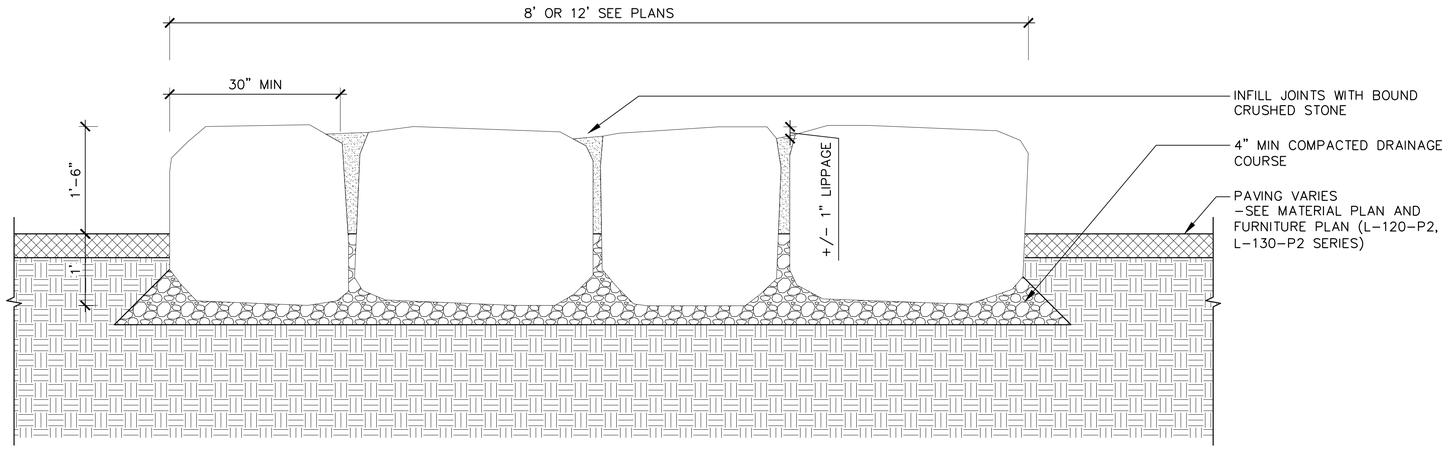

04 BLDR 2 - LARGE BOULDERS
SCALE 1" = 1'-0"

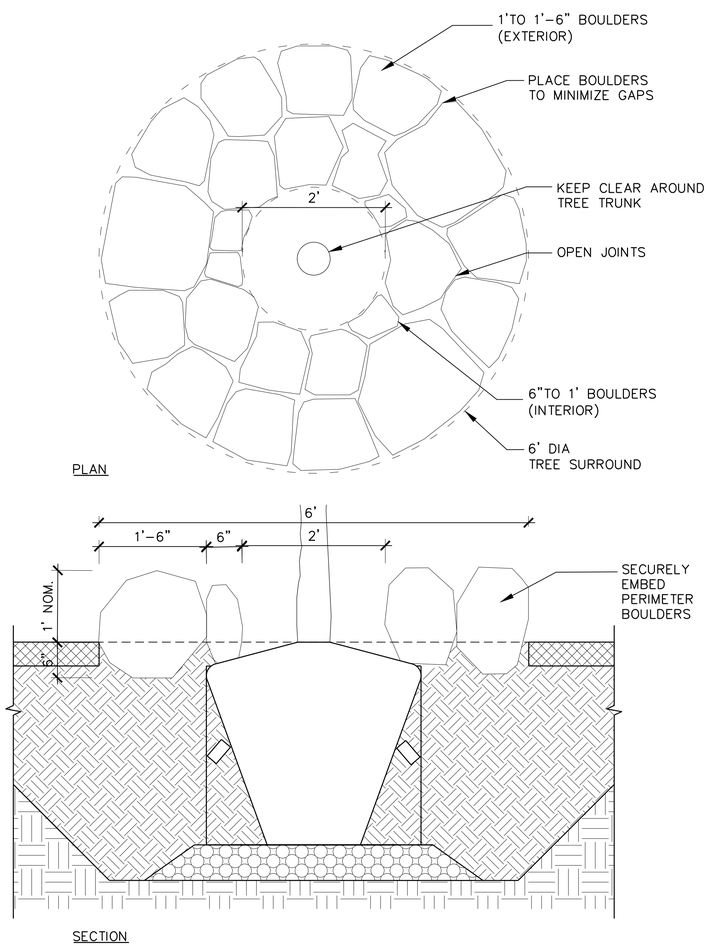

03 BLDR 1 - SMALL BOULDERS
SCALE 1" = 1'-0"

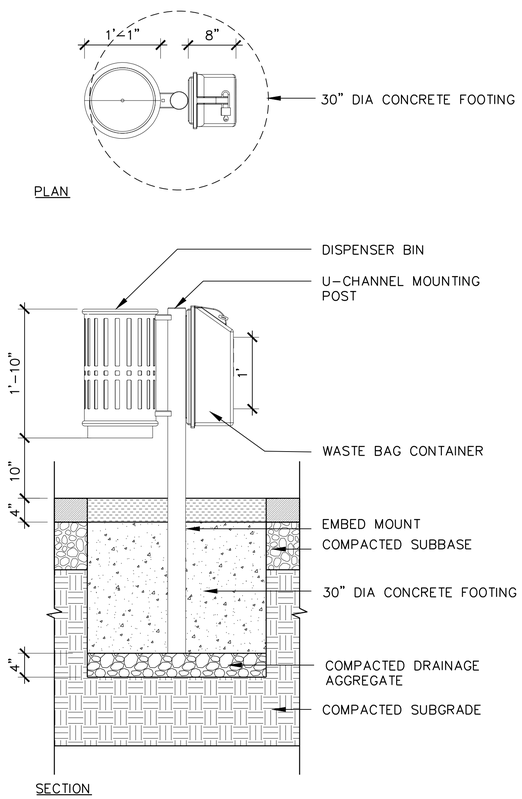

02 FURN 3 - DOG WASTE UNIT
SCALE 1" = 1'-0"

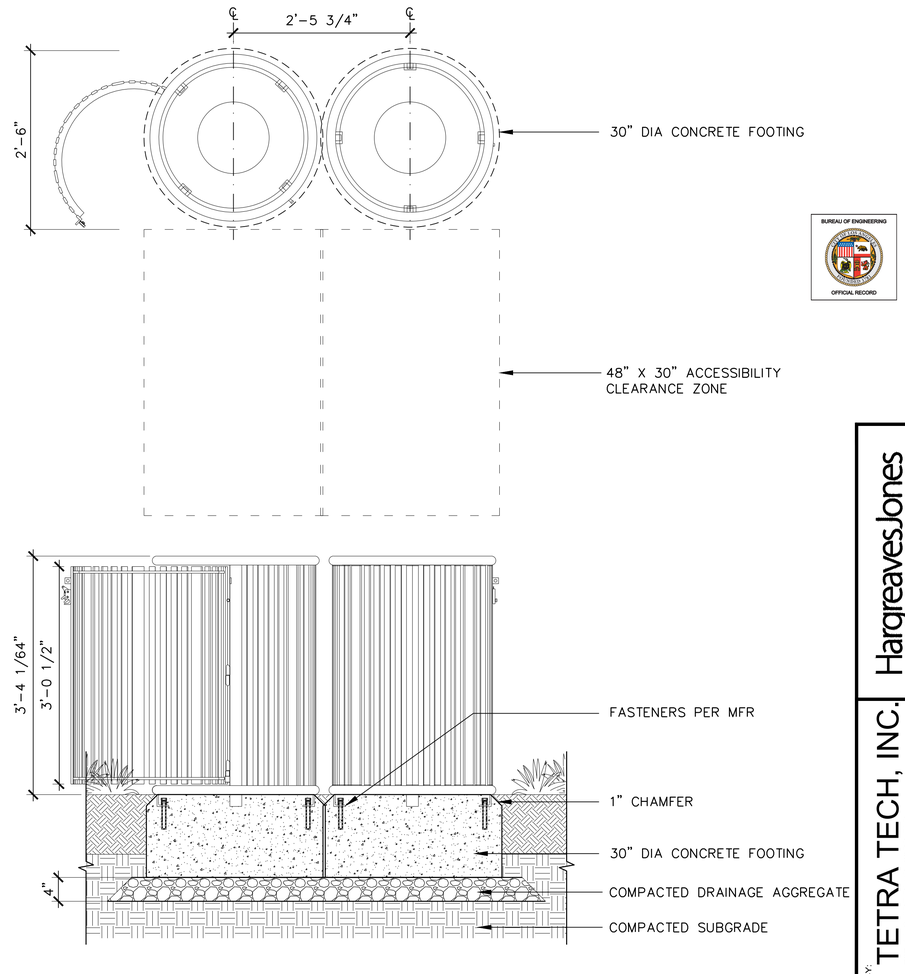

01 FURN 2 - WASTE RECEPTACLE
SCALE 1" = 1'-0"

BUREAU OF ENGINEERING
OFFICIAL RECORD

THIS PLAN WAS ELECTRONICALLY SIGNED AND STAMPED.

LICENSED LANDSCAPE ARCHITECT
Mary Margaret Jones #2616
Renewal Date
Date
STATE OF CALIFORNIA

BUREAU OF ENGINEERING

NO.	REVISIONS:	DATE:	BY:

BUILDING NO.

INDEX NO. MF-300501

DEPARTMENT OF PUBLIC WORKS

CITY OF LOS ANGELES

TED ALLEN, P.E.
CITY ENGINEER

DESIGN GROUP
LANDSCAPE ARCHITECT: MARY MARGARET JONES
LIC. NO. 07/11/2022
DESIGNED BY: MARY MARGARET JONES
DRAWN BY: MEGAN ESOPENKO
CHECKED BY: GAVIN MCMILLAN
APPROVED BY: MARY MARGARET JONES

VERT. CONTROL: BM 12-04070, 1929 (NGVD29) - 1985 ADJUSTMENT
HORIZ. CONTROL: GPS; PID AE 1704, EPOCH 1991.35

SHEET TITLE: DETAILS - FURNITURE

PROJECT: SIXTH STREET PARK, ARTS AND RIVER CONNECTIVITY IMPROVEMENTS (PARC)

ADDRESS: SIXTH STREET OVER THE LOS ANGELES RIVER

PLANS PREPARED BY:
TETRA TECH, INC.
707 WILSHIRE BLVD, 23RD FLR.
LOS ANGELES, CA 90017
PHONE: (213) 239-8866

HargreavesJones
Hargreaves Jones Landscape Architecture

WORK ORDER NO. E700235D
FILE NO. --
DRAWING NO. L-541
SHEET 145 OF 295 SHEETS

2022-07-05 9:26:46 PM - C:\USERS\MESOPENKO\ONEDRIVE - HARGREAVES\SSV 1601 - SIXTH STREET VIADUCT\300_CREATE\310_HA WORKING FILES\06_TECHNICAL\06_100-CD\50_SHEETS\L-540-SITE FURNISHINGS.DWG - MEGAN ESOPENKO

THE CITY OF LOS ANGELES OR ITS OFFICERS OR AGENTS SHALL NOT BE RESPONSIBLE FOR THE ACCURACY OR COMPLETENESS OF ELECTRONIC COPIES OF THIS PLAN SHEET.

REVISION DATES (DESIGN STAGE ONLY)

Sheet Version 3.0

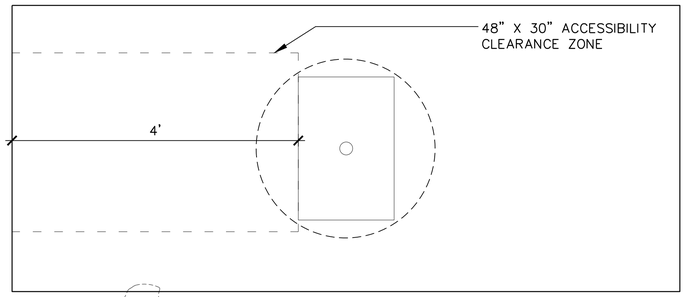

PLAN

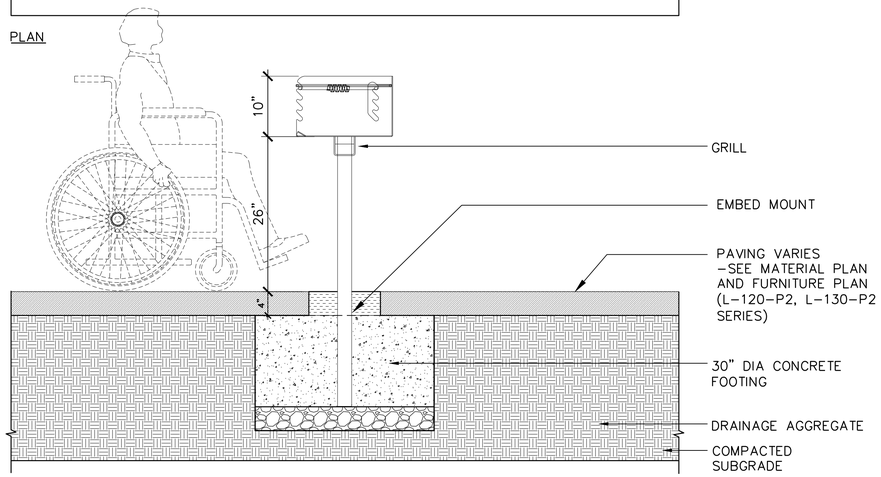

SECTION

02 FURN 5 - PICNIC GRILL
SCALE 1" = 1'-0"

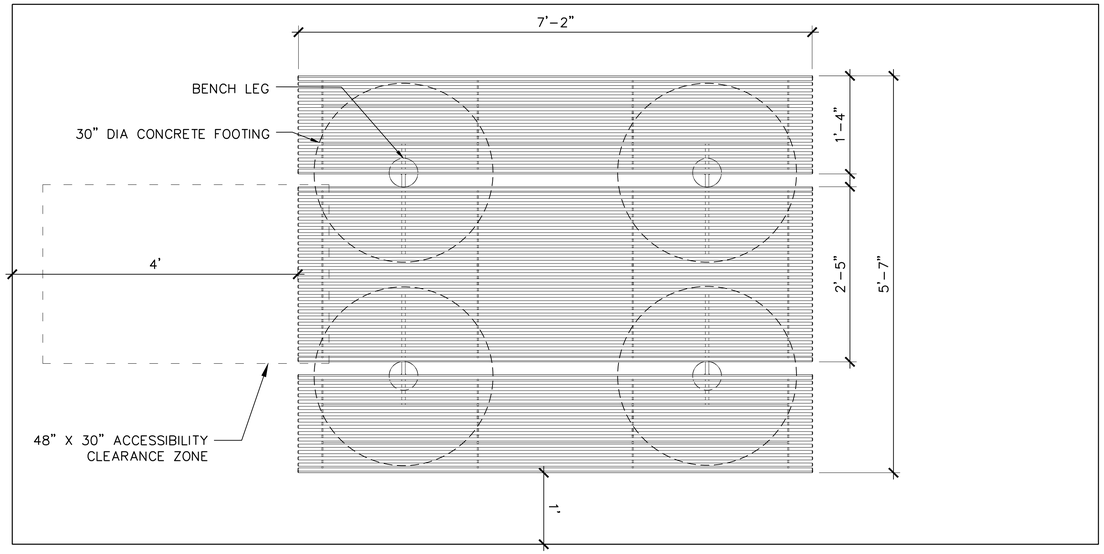

PLAN

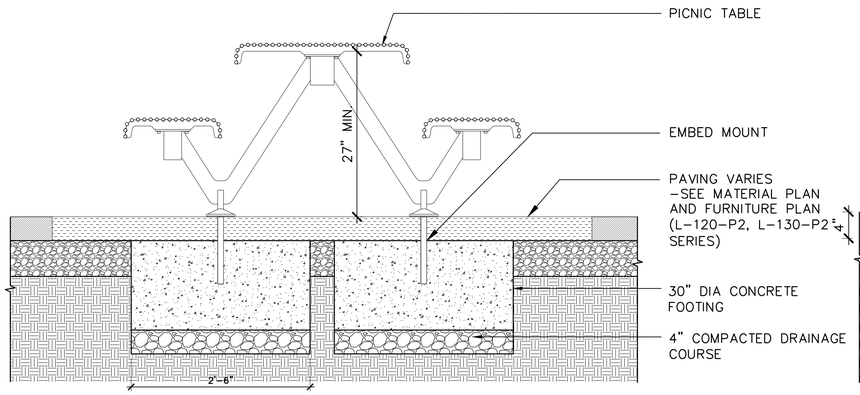

SECTION

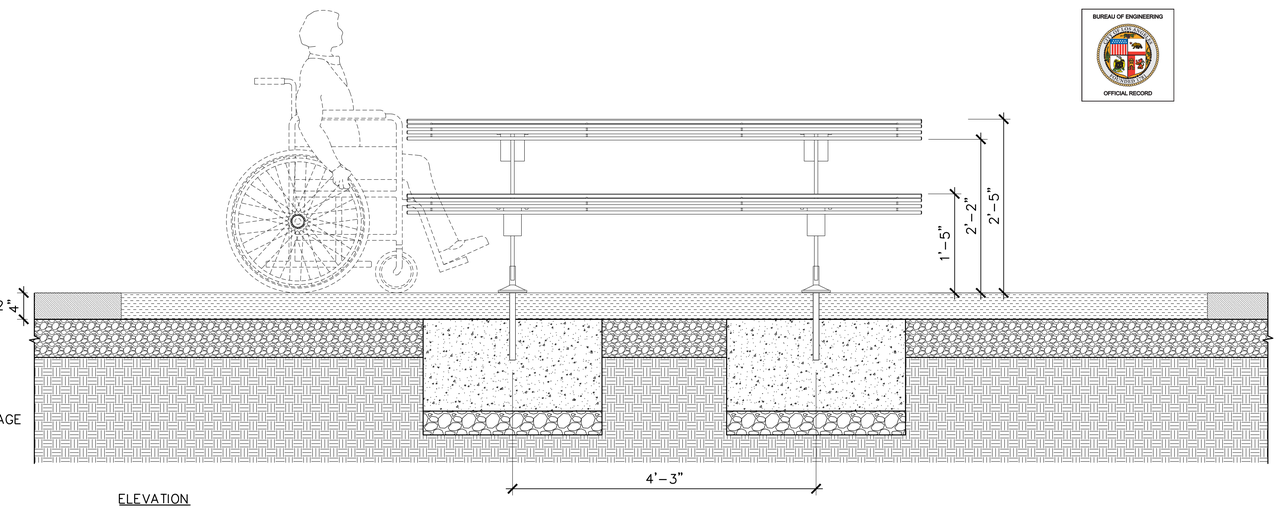

ELEVATION

01 FURN 4 - PICNIC UNIT
SCALE 1" = 1'-0"

BUREAU OF ENGINEERING
OFFICIAL RECORD

THE CITY OF LOS ANGELES OR ITS OFFICERS OR AGENTS SHALL NOT BE RESPONSIBLE FOR THE ACCURACY OR COMPLETENESS OF ELECTRONIC COPIES OF THIS PLAN SHEET.

REVISION DATES (DESIGN STAGE ONLY)

Sheet Version 3.0

PLANS PREPARED BY:
TETRA TECH, INC.
707 WILSHIRE BLVD, 23RD FLR.
LOS ANGELES, CA 90017
PHONE: (213) 239-8866

HargreavesJones
Hargreaves Jones Landscape Architecture

CITY OF LOS ANGELES DEPARTMENT OF PUBLIC WORKS

BUREAU OF ENGINEERING

ENGINEERING
CITY OF LOS ANGELES

NO.	REVISIONS:	DATE:	BY:

BUILDING NO.

INDEX NO. MF-300501

THIS PLAN WAS ELECTRONICALLY SIGNED AND STAMPED.

LICENSED LANDSCAPE ARCHITECT
Mary Margaret Jones #2615
Renewal Date
Date
STATE OF CALIFORNIA

TED ALLEN, P.E.
CITY ENGINEER
DESIGN GROUP
DATE:
LANDSCAPE ARCHITECT: MARY MARGARET JONES LIC. NO. 07/11/2022
DESIGNED BY: MARY MARGARET JONES
DRAWN BY: MEGAN ESOPENKO
CHECKED BY: GAVIN MCMILLAN
APPROVED BY: MARY MARGARET JONES

VERT. CONTROL: BM 12-04070, 1929 (NGVD29) - 1985 ADJUSTMENT
HORIZ. CONTROL: GPS; PID AE 1704, EPOCH 1991.35

SHEET TITLE: DETAILS - FURNITURE

PROJECT: SIXTH STREET PARK, ARTS AND RIVER CONNECTIVITY IMPROVEMENTS (PARC)

ADDRESS: SIXTH STREET OVER THE LOS ANGELES RIVER

WORK ORDER NO. E700235D
FILE NO. --
DRAWING NO. L-542
SHEET 146 OF 295 SHEETS

2022-07-05 9:26:54 PM - C:\USERS\MESOPENKO\ONEDRIVE - HARGREAVES\SSV 1601 - SIXTH STREET VIADUCT\300_CREATE\310_HA WORKING FILES\06_TECHNICAL\06_100-CD\50_SHEETS\L-540-SITE FURNISHINGS.DWG - MEGAN ESOPENKO

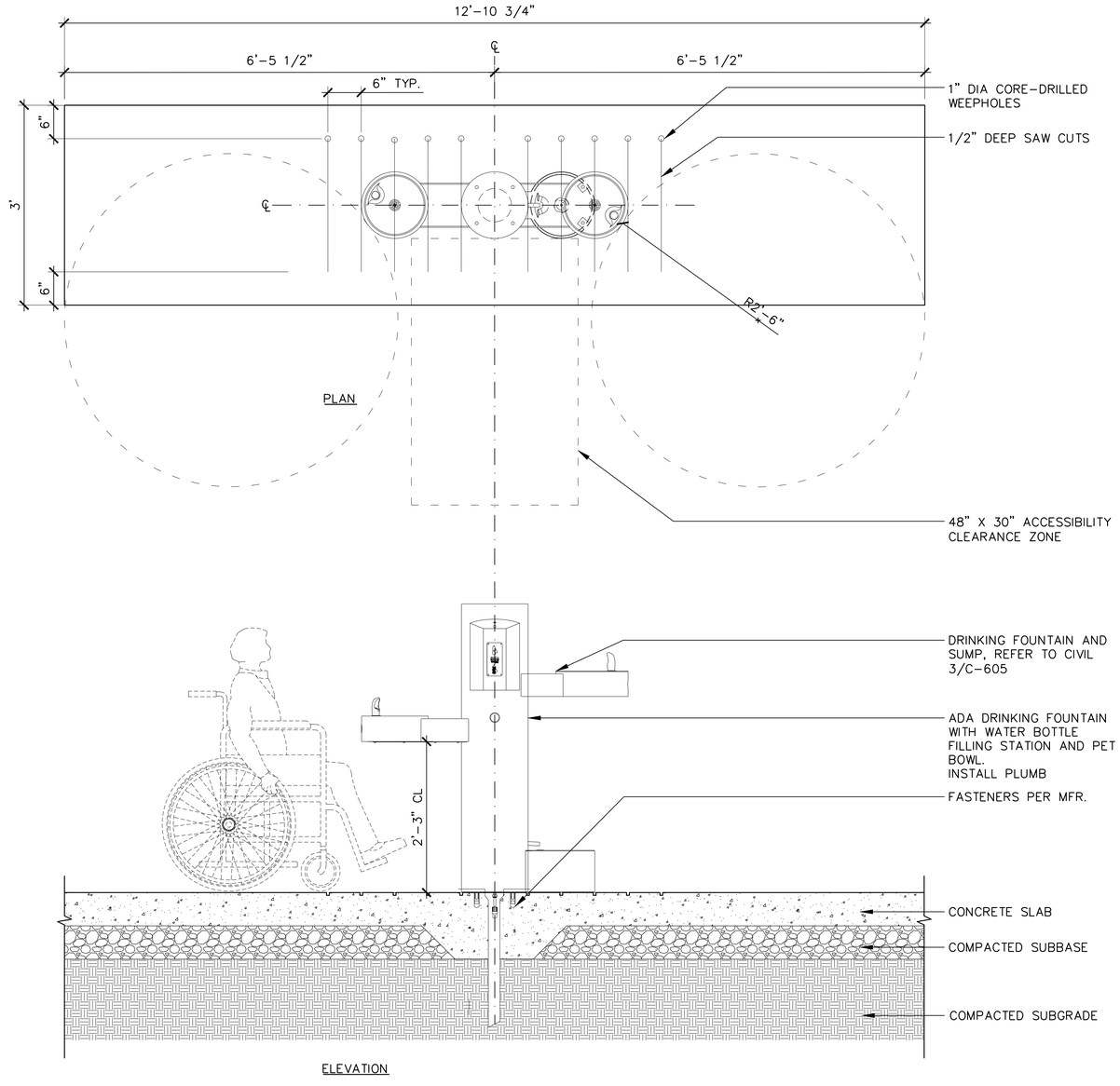

02 WATR 1 - WATER STATION AT D.G. PAVING
SCALE 1" = 1'-0"

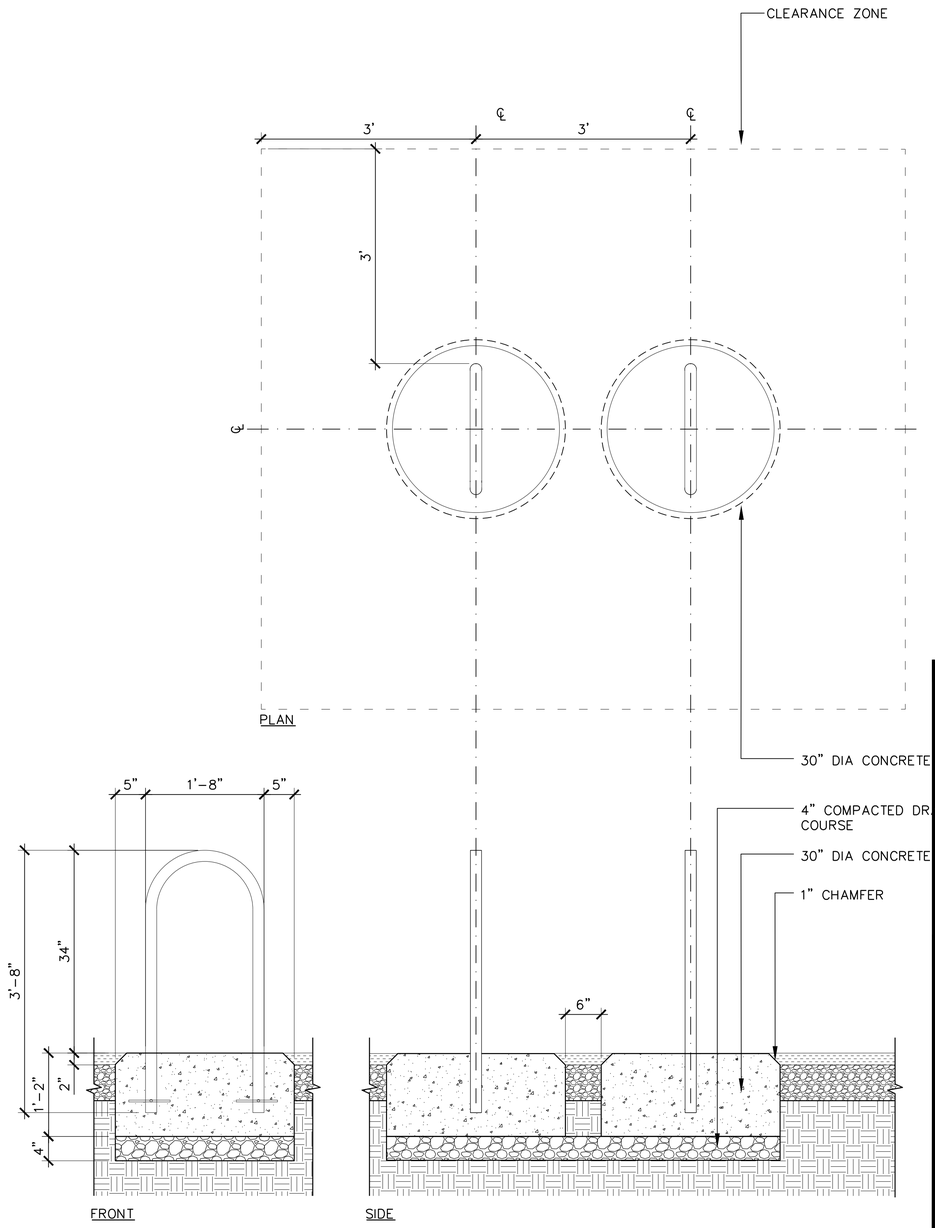

01 BRAK 1 - BIKE RACK PLAN & SECTION AT D.G. ADMIXTURE PAVING
SCALE 1" = 1'-0"

THE CITY OF LOS ANGELES OR ITS OFFICERS OR AGENTS SHALL NOT BE RESPONSIBLE FOR THE ACCURACY OR COMPLETENESS OF ELECTRONIC COPIES OF THIS PLAN SHEET.

REVISION DATES (DESIGN STAGE ONLY)

Sheet Version 3.0

BUREAU OF ENGINEERING
OFFICIAL RECORD

BUREAU OF ENGINEERING

NO.	REVISIONS:	DATE:	BY:

BUILDING NO.

INDEX NO. MF-300501

THIS PLAN WAS ELECTRONICALLY SIGNED AND STAMPED.

LICENSED LANDSCAPE ARCHITECT • STATE OF CALIFORNIA • Mary Margaret Jones #2615 • Date

CITY OF LOS ANGELES DEPARTMENT OF PUBLIC WORKS

TED ALLEN, P.E. CITY ENGINEER

DESIGN GROUP

LANDSCAPE ARCHITECT: MARY MARGARET JONES LIC. NO. 07/11/2022

DESIGNED BY: MARY MARGARET JONES

DRAWN BY: MEGAN ESOPENKO

CHECKED BY: GAVIN MCMILLAN

APPROVED BY: MARY MARGARET JONES

VERT. CONTROL: BM 12-04070, 1929 (NGVD29) - 1985 ADJUSTMENT
HORIZ. CONTROL: GPS; PID AE 1704, EPOCH 1991.35

SHEET TITLE: DETAILS - FURNITURE

PROJECT: SIXTH STREET PARK, ARTS AND RIVER CONNECTIVITY IMPROVEMENTS (PARC)

ADDRESS: SIXTH STREET OVER THE LOS ANGELES RIVER

PLANS PREPARED BY:
TETRA TECH, INC.
707 WILSHIRE BLVD, 23RD FLR.
LOS ANGELES, CA 90017
PHONE: (213) 239-8866

Hargreaves Jones
Hargreaves Jones Landscape Architecture

WORK ORDER NO. E700235D

FILE NO. --

DRAWING NO. L-543

SHEET 147 OF 295 SHEETS

2022-07-05 9:27:04 PM - C:\USERS\MESOPENKO\ONEDRIVE - HARGREAVES\SSV 1601 - SIXTH STREET VIADUCT\300_CREATE\310_HA WORKING FILES\06_TECHNICAL\06_100-CD\50_SHEETS\L-540-SITE FURNISHINGS.DWG - MEGAN ESOPENKO

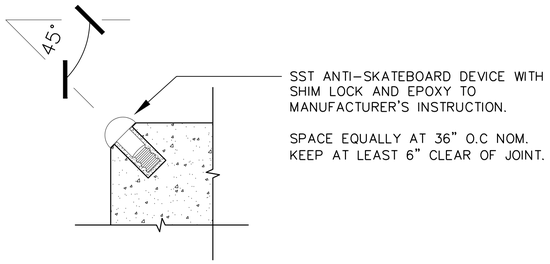

04 SKAT-1 SKATE DETERRENT
SCALE 6" = 1'-0"

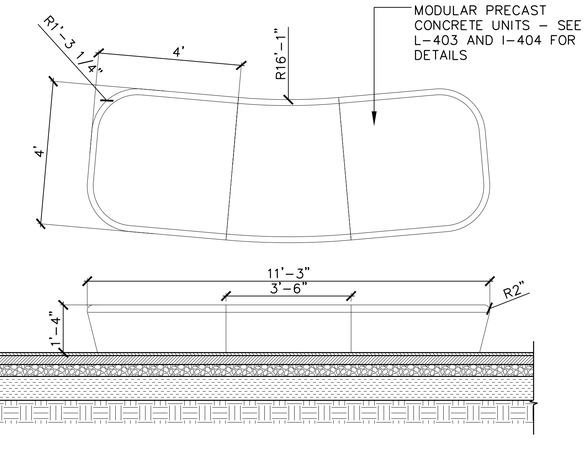

02 FURN-7 PRECAST BENCH 48"
SCALE 1/2" = 1'-0"

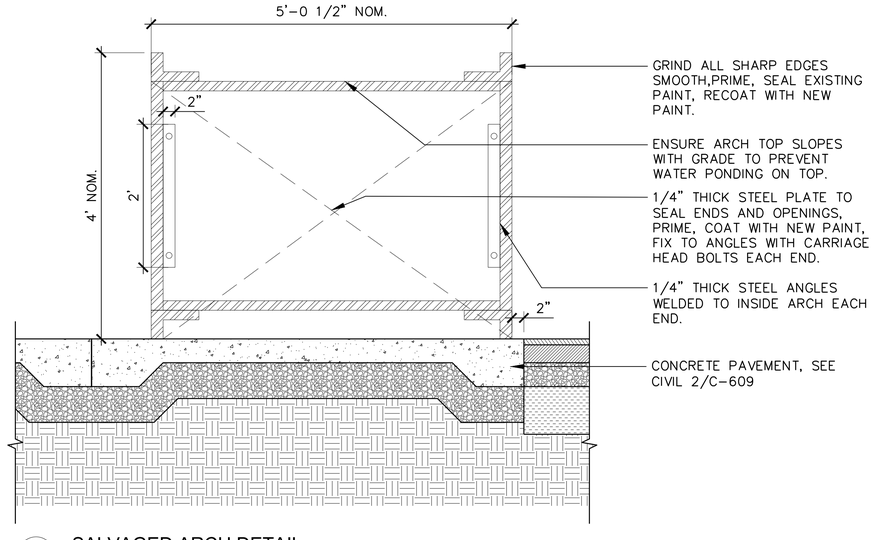

03 SALVAGED ARCH DETAIL
SCALE 1" = 1'-0"

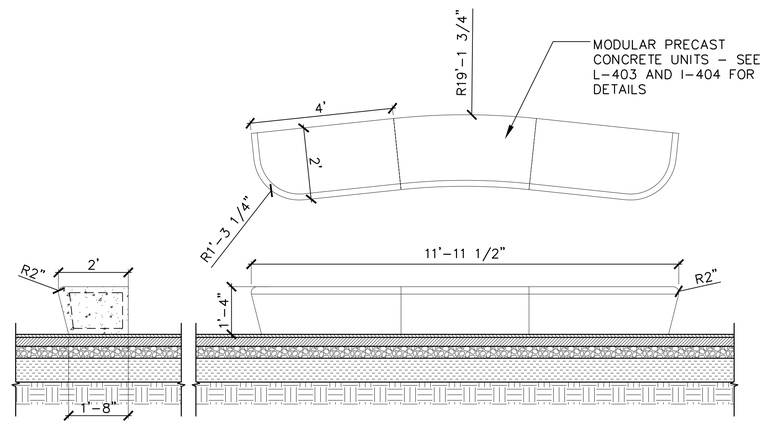

01 FURN-6 PRECAST BENCH 24"
SCALE 1/2" = 1'-0"

THE CITY OF LOS ANGELES OR ITS OFFICERS OR AGENTS SHALL NOT BE RESPONSIBLE FOR THE ACCURACY OR COMPLETENESS OF ELECTRONIC COPIES OF THIS PLAN SHEET.

REVISION DATES (DESIGN STAGE ONLY)

Sheet Version 3.0

BUREAU OF ENGINEERING
OFFICIAL RECORD

PLANS PREPARED BY:
TETRA TECH, INC.
707 WILSHIRE BLVD. 23RD FLR.
LOS ANGELES, CA 90017
PHONE: (213) 239-8866

HargreavesJones
Hargreaves Jones Landscape Architecture

CITY OF LOS ANGELES DEPARTMENT OF PUBLIC WORKS
BUREAU OF ENGINEERING

ENGINEERING
CITY OF LOS ANGELES

NO.	REVISIONS:	DATE	BY:

BUILDING NO.

INDEX NO. MF-300501

LICENSED LANDSCAPE ARCHITECT MARY MARGARET JONES No. 2516 STATE OF CALIFORNIA
THIS PLAN WAS ELECTRONICALLY SIGNED AND STAMPED
Date
Authorized Date

CITY ENGINEER
TED ALLEN, P.E.
DATE: 07/11/2022

DESIGN GROUP
LANDSCAPE ARCHITECT: MARY MARGARET JONES LIC. NO. 2516
DESIGNED BY: MARY MARGARET JONES
DRAWN BY: MEGAN ESOPENKO
CHECKED BY: GAVIN MCMILLAN
APPROVED BY: MARY MARGARET JONES

SHEET TITLE: DETAILS - FURNITURE
PROJECT: SIXTH STREET PARK, ARTS AND RIVER CONNECTIVITY IMPROVEMENTS (PARC)
ADDRESS: SIXTH STREET OVER THE LOS ANGELES RIVER

VERT. CONTROL: BM 12-04070, 1929 (NGVD29) - 1985 ADJUSTMENT
HORIZ. CONTROL: GPS; PID AE 1704, EPOCH 1991.35

WORK ORDER NO. E700235D
FILE NO. --
DRAWING NO. L-544
SHEET 148 OF 295 SHEETS

2022-07-05 9:27:20 PM - C:\USERS\MESOPENKO\ONEDRIVE - HARGREAVESSSV 1601 - SIXTH STREET VIADUCT\300_CREATE\310_HA WORKING FILES\06_TECHNICAL\06_100-CD\50_SHEETS\L-540-SITE FURNISHINGS.DWG - MEGAN ESOPENKO

THE CITY OF LOS ANGELES OR ITS OFFICERS OR AGENTS SHALL NOT BE RESPONSIBLE FOR THE ACCURACY OR COMPLETENESS OF ELECTRONIC COPIES OF THIS PLAN SHEET.

SHEET NOTES

1. FOG COOLING STATION DETAILS ARE INDICATIVE ONLY. THE CONTRACTOR SHALL BE RESPONSIBLE FOR THE MECHANICAL, ELECTRICAL AND PLUMBING DESIGN, FABRICATION, AND INSTALLATION OF THE SYSTEM.
2. DELEGATED DESIGN –DESIGN MECHANICAL, ELECTRICAL AND PLUMBING SYSTEM INCLUDING AN ENGINEERING ANALYSIS BY A DESIGN ENGINEER PROFESSIONAL LICENSED IN PROJECT'S STATE. SEE SPECIFICATION.
3. SHOP DRAWINGS –SUBMIT PRIOR TO MOCKUP AND/OR FABRICATION. SEE SPECIFICATION.
4. MOCKUP –MOCKUP A PORTION AND SUBMIT PHOTOGRAPHS OF ALL JOINTS, WELDS, SEAMS AND FINISHES PRIOR TO FABRICATION. SEE SPECIFICATION.
5. FIELD VERIFY DIMENSIONS PRIOR TO FINAL FABRICATION.
6. ALL STAINLESS SHALL BE 316 GRADE WITH #4 FINISH UNLESS OTHERWISE NOTED.

BUREAU OF ENGINEERING OFFICIAL RECORD

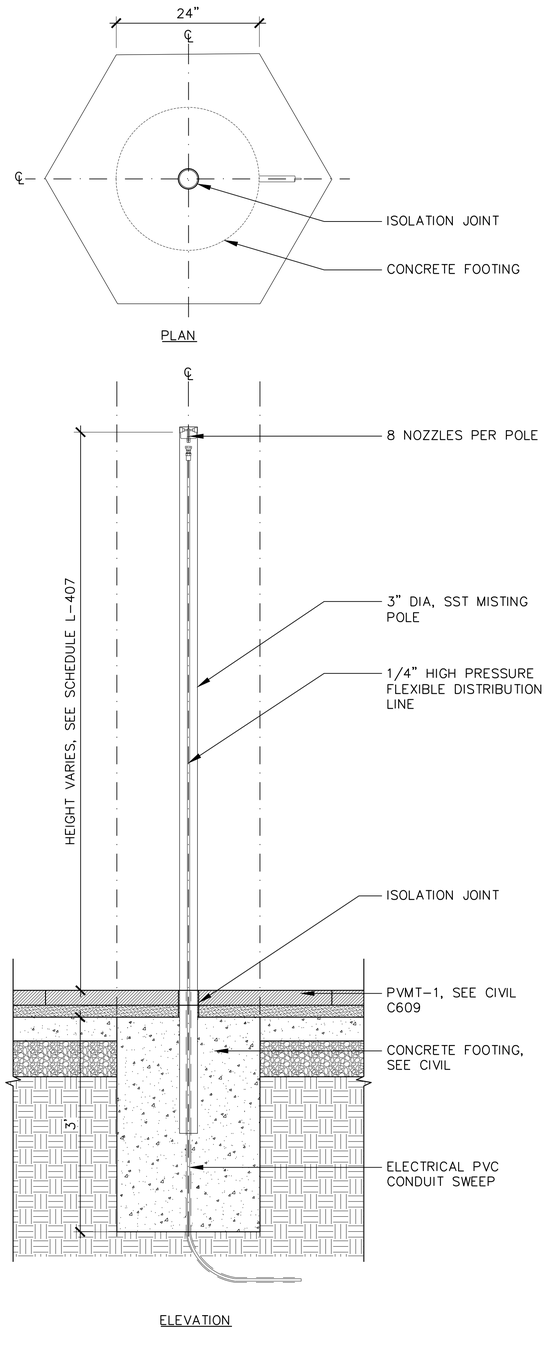

03 MISTING POST
SCALE 1" = 1'-0"

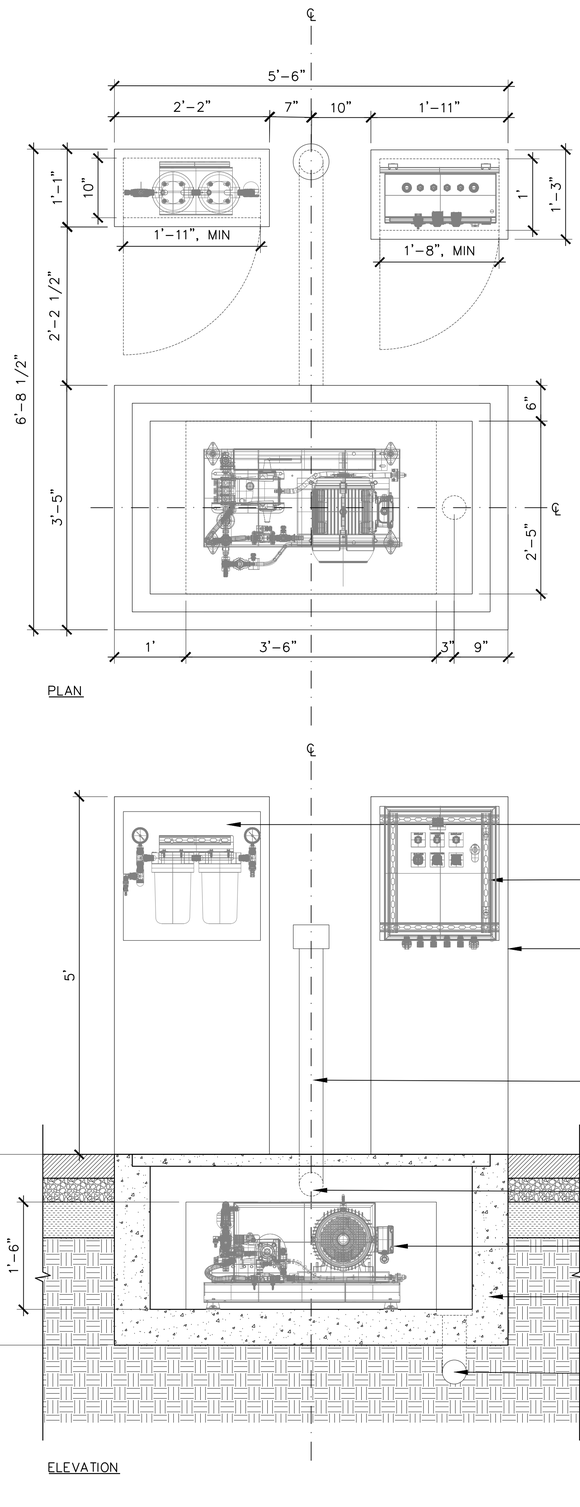

02 FOG PUMP ASSEMBLY
SCALE 1" = 1'-0"

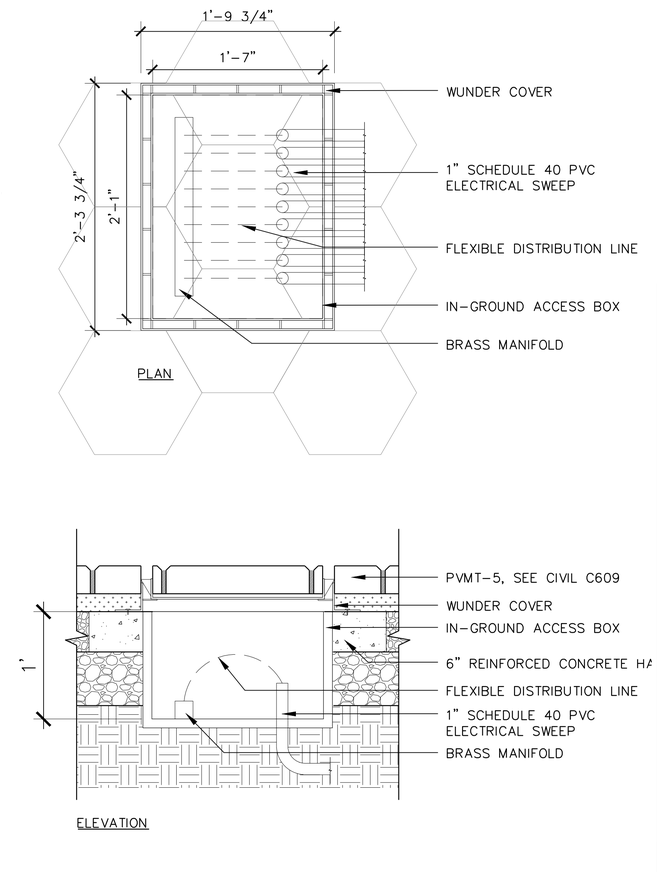

01 DISTRIBUTION BOX
SCALE 1-1/2" = 1'-0"

REVISION DATES (DESIGN STAGE ONLY)

Sheet Version 3.0

PLANS PREPARED BY:
TETRA TECH, INC.
707 WILSHIRE BLVD. 23RD FLR.
LOS ANGELES, CA 90017
PHONE: (213) 239-8866

HargreavesJones
Hargreaves Jones Landscape Architecture

CITY OF LOS ANGELES DEPARTMENT OF PUBLIC WORKS
BUREAU OF ENGINEERING
ENGINEERING
CITY OF LOS ANGELES

NO.	REVISIONS:	DATE	BY:

BUILDING NO.
INDEX NO. MF-300501

THIS PLAN WAS ELECTRONICALLY SIGNED AND STAMPED
LICENSED LANDSCAPE ARCHITECT MARY MARGARET JONES No. 2676 STATE OF CALIFORNIA Date: Renewal Date

CITY ENGINEER
TED ALLEN, P.E.
DATE: 07/11/2022

DESIGN GROUP	
LANDSCAPE ARCHITECT: MARY MARGARET JONES	LIC. NO.
DESIGNED BY: MARY MARGARET JONES	
DRAWN BY: MEGAN ESOPENKO	
CHECKED BY: GAVIN MCMILLAN	
APPROVED BY: MARY MARGARET JONES	

VERT. CONTROL: BM 12-04070, 1929 (NGVD29) - 1985 ADJUSTMENT
HORIZ. CONTROL: GPS; PID AE 1704, EPOCH 1991.35

SHEET TITLE: DETAILS - FURNITURE

PROJECT: SIXTH STREET PARK, ARTS AND RIVER CONNECTIVITY IMPROVEMENTS (PARC)

ADDRESS: SIXTH STREET OVER THE LOS ANGELES RIVER

WORK ORDER NO. E700235D
FILE NO. --
DRAWING NO. L-545
SHEET 149 OF 295 SHEETS

8/12/2022 1:26:12 PM - C:\USERS\XLIN\ONEDRIVE - HARGREAVESSSV 1601 - SIXTH STREET VIADUCT\300_CREATE\310_HA WORKING FILES\06_TECHNICAL\06_100-CD\50_SHEETS\L-545.DWG - XIAOWEI LIN

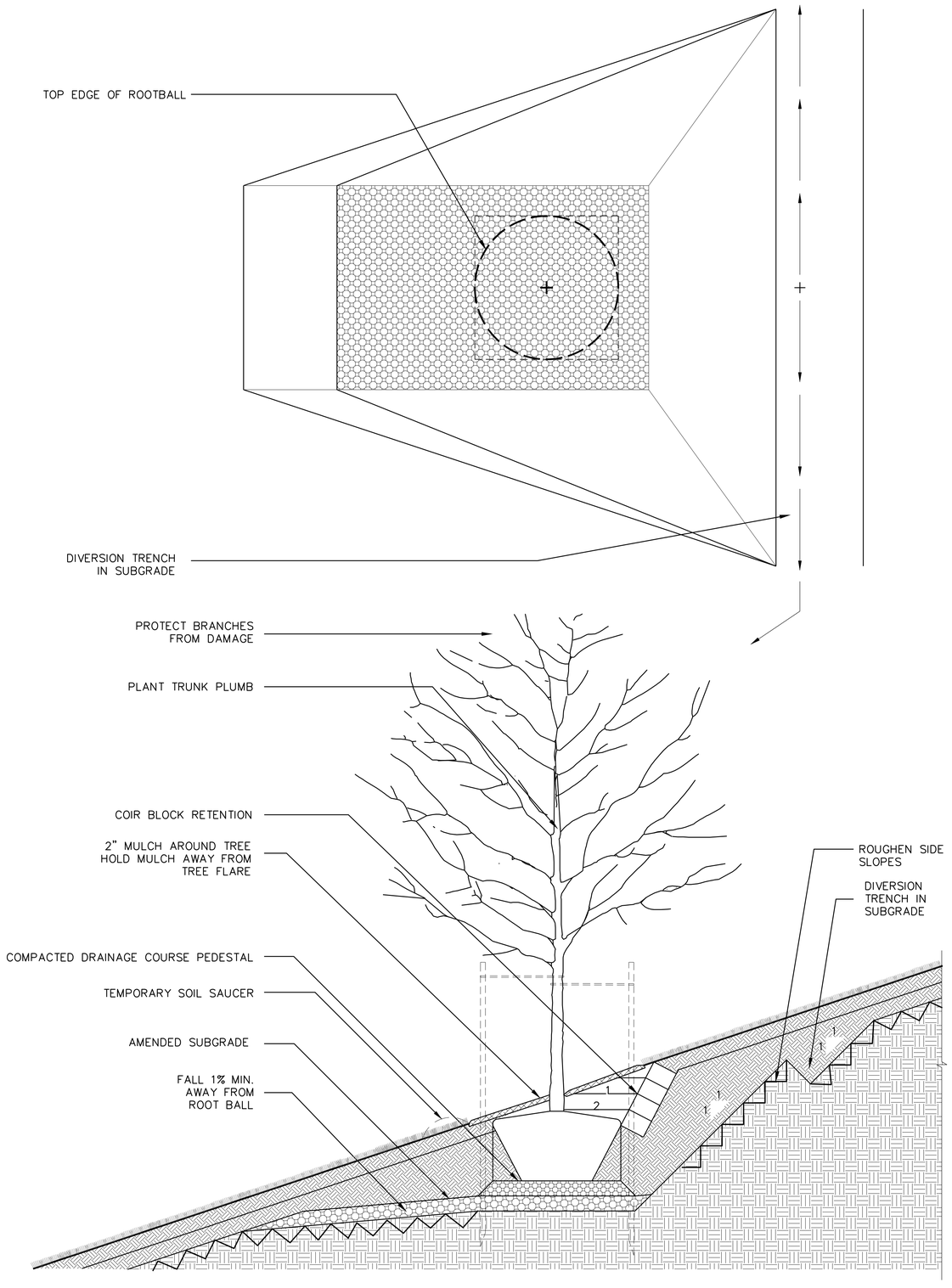

02 TYPICAL SINGLE TREE PLANTING - SLOPE
SCALE 3/8" = 1'-0"

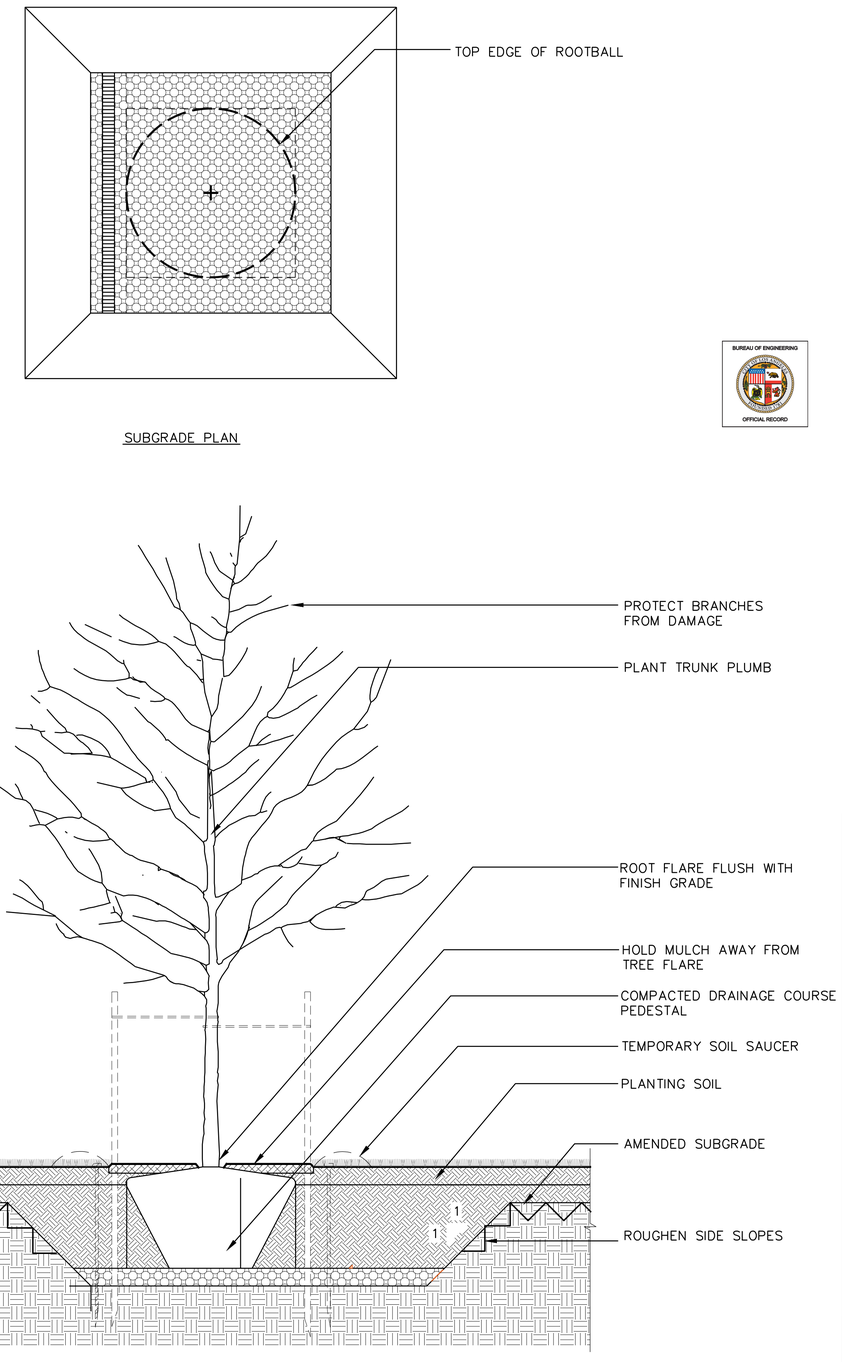

01 TYPICAL SINGLE TREE PLANTING - FLAT
SCALE 3/8" = 1'-0"

BUREAU OF ENGINEERING
OFFICIAL RECORD

THIS PLAN WAS ELECTRONICALLY SIGNED AND STAMPED.

LICENSED LANDSCAPE ARCHITECT
Mary Margaret Jones #2615
Renewal Date
Date
STATE OF CALIFORNIA

NO.	REVISIONS:	DATE:	BY:
01	35% SCHEMATIC DESIGN	12/13/17	

BUILDING NO.

INDEX NO. MF-300501

CITY OF LOS ANGELES DEPARTMENT OF PUBLIC WORKS

TED ALLEN, P.E. CITY ENGINEER

DESIGN GROUP

LANDSCAPE ARCHITECT: MARY MARGARET JONES LIC. NO. 2615
DESIGNED BY: MARY MARGARET JONES
DRAWN BY: MEGAN ESOPENKO
CHECKED BY: GAVIN MCMILLAN
APPROVED BY: MARY MARGARET JONES

VERT. CONTROL: BM 12-04070, 1929 (NGVD29) - 1985 ADJUSTMENT
HORIZ. CONTROL: GPS; PID AE 1704, EPOCH 1991.35

SHEET TITLE: PLANTING - TREES

PROJECT: SIXTH STREET PARK, ARTS AND RIVER CONNECTIVITY IMPROVEMENTS (PARC)

ADDRESS: SIXTH STREET OVER THE LOS ANGELES RIVER

WORK ORDER NO. E700235D
FILE NO. --
DRAWING NO. L-550
SHEET 150 OF 295 SHEETS

PLANS PREPARED BY:
TETRA TECH, INC.
707 WILSHIRE BLVD, 23RD FLR.
LOS ANGELES, CA 90017
PHONE: (213) 239-8866

HargreavesJones
Hargreaves Jones Landscape Architecture

THE CITY OF LOS ANGELES OR ITS OFFICERS OR AGENTS SHALL NOT BE RESPONSIBLE FOR THE ACCURACY OR COMPLETENESS OF ELECTRONIC COPIES OF THIS PLAN SHEET.

REVISION DATES (DESIGN STAGE ONLY)

Sheet Version 3.0

2022-07-05 9:27:45 PM - C:\USERS\MESOPENKO\ONEDRIVE - HARGREAVES\SSV 1601 - SIXTH STREET VIADUCT\300_CREATE\310_HA WORKING FILES\06_TECHNICAL\06_100-CD\50_SHEETS\L-550-PLANTING-TREES.DWG - MEGAN ESOPENKO

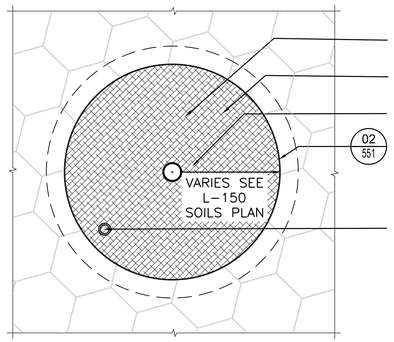

PLAN

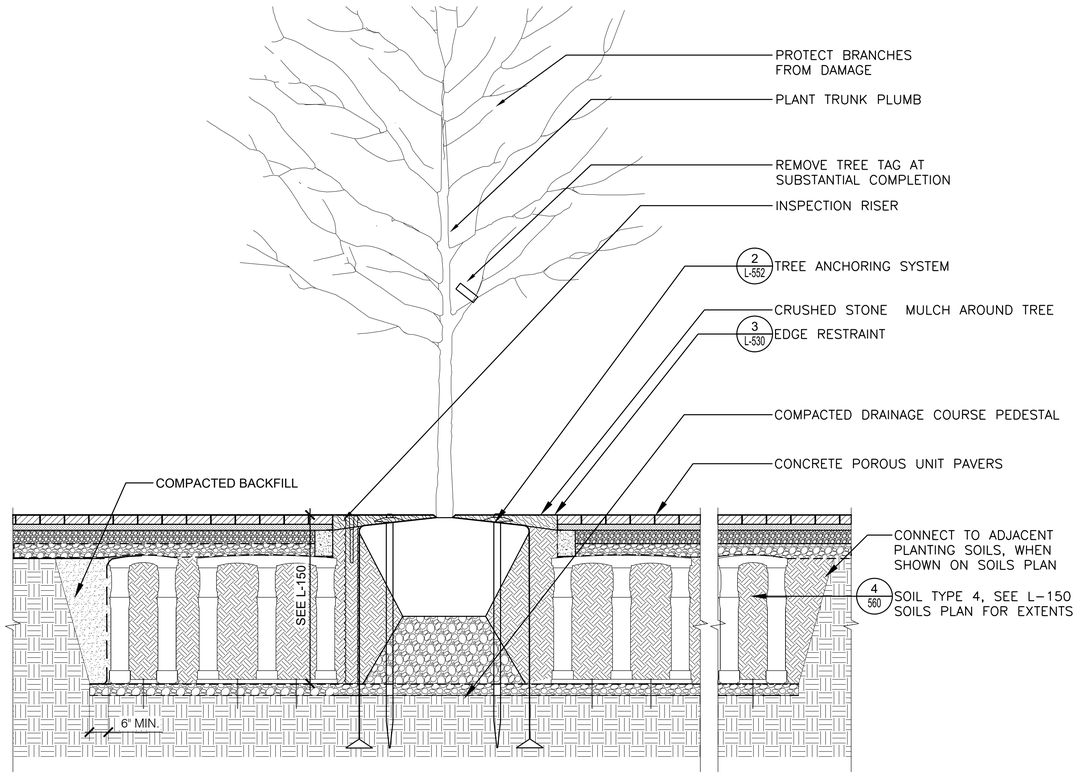

02 TREE PLANTING IN PAVEMENT
SCALE 1/2" = 1'-0"

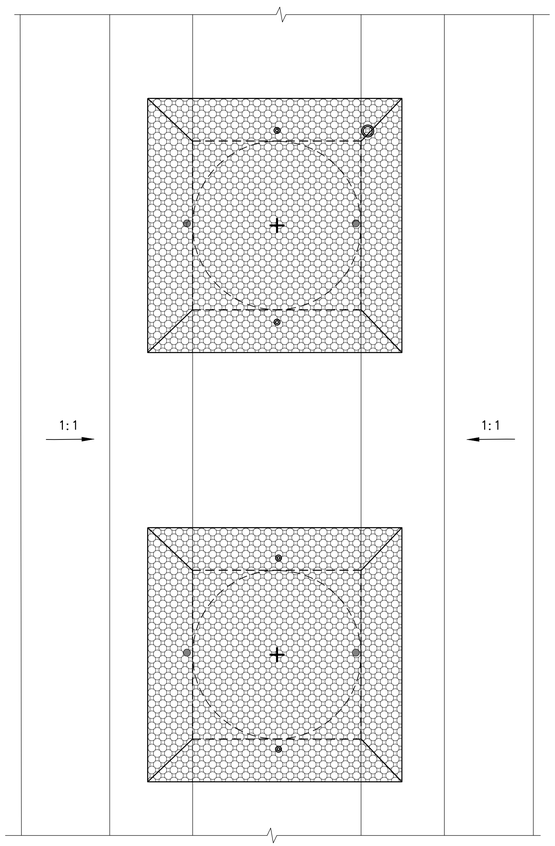

SUBGRADE PLAN

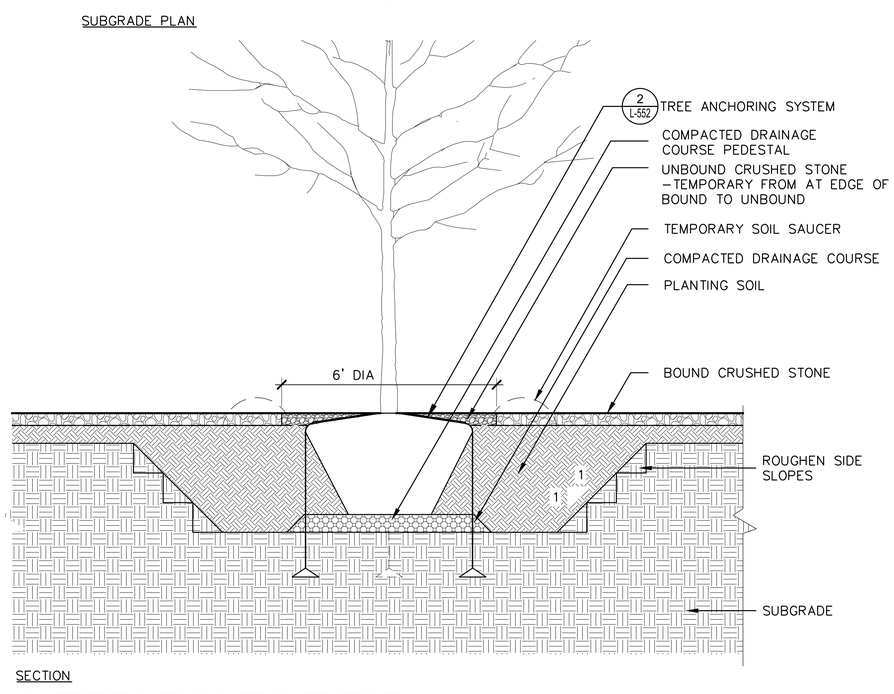

SECTION

01 TREE PLANTING IN CRUSHED STONE
SCALE 1/2" = 1'-0"

BUREAU OF ENGINEERING
OFFICIAL RECORD

THE CITY OF LOS ANGELES OR ITS OFFICERS OR AGENTS SHALL NOT BE RESPONSIBLE FOR THE ACCURACY OR COMPLETENESS OF ELECTRONIC COPIES OF THIS PLAN SHEET.

REVISION DATES (DESIGN STAGE ONLY)

Sheet Version 3.0

BUREAU OF ENGINEERING

ENGINEERING
CITY OF LOS ANGELES

NO.	REVISIONS:	DATE	BY:

BUILDING NO.

INDEX NO. MF-300501

LICENSED LANDSCAPE ARCHITECT MARY MARGARET JONES No. 2576 STATE OF CALIFORNIA

THIS PLAN WAS ELECTRONICALLY SIGNED AND STAMPED

CITY OF LOS ANGELES DEPARTMENT OF PUBLIC WORKS

CITY ENGINEER

DESIGN GROUP		DATE:
LANDSCAPE ARCHITECT: MARY MARGARET JONES	LIC. NO.	07/11/2022
DESIGNED BY: MARY MARGARET JONES		
DRAWN BY: MEGAN ESOPENKO		
CHECKED BY: GAVIN MCMILLAN		
APPROVED BY: MARY MARGARET JONES		

TED ALLEN, P.E.

HargreavesJones
Hargreaves Jones Landscape Architecture

PLANS PREPARED BY:
TETRA TECH, INC.
707 WILSHIRE BLVD. 23RD FLR.
LOS ANGELES, CA 90017
PHONE: (213) 239-8866

VERT. CONTROL: BM 12-04070, 1929 (NGVD29) - 1985 ADJUSTMENT
HORIZ. CONTROL: GPS; PID AE 1704, EPOCH 1991.35

SHEET TITLE: PLANTING - TREES

PROJECT: SIXTH STREET PARK, ARTS AND RIVER CONNECTIVITY IMPROVEMENTS (PARC)

ADDRESS: SIXTH STREET OVER THE LOS ANGELES RIVER

WORK ORDER NO. E700235D
FILE NO. --
DRAWING NO. L-551
SHEET 151 OF 295 SHEETS

2022-07-05 9:27:50 PM - C:\USERS\MESOPENKO\ONEDRIVE - HARGREAVESJSSV 1601 - SIXTH STREET VIADUCT\000_CREATE\310_HA WORKING FILES\06_TECHNICAL\06_100-CD\60_SHEETS\L-550-PLANTING-TREES.DWG - MEGAN ESOPENKO

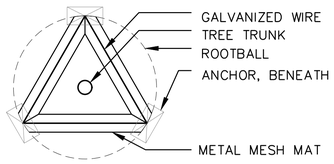

PLAN

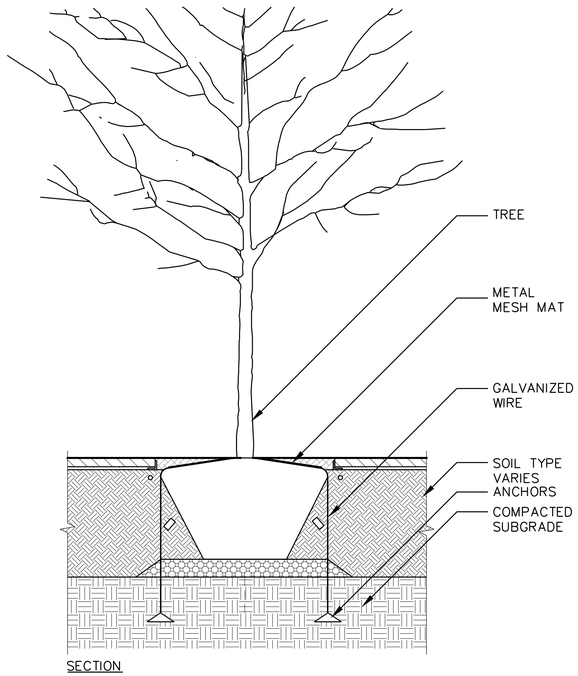

SECTION

02 ROOT BALL ANCHOR SYSTEM FOR TREES IN PAVEMENT/CRUSHED STONE/LAWN
SCALE 1/2" = 1'-0"

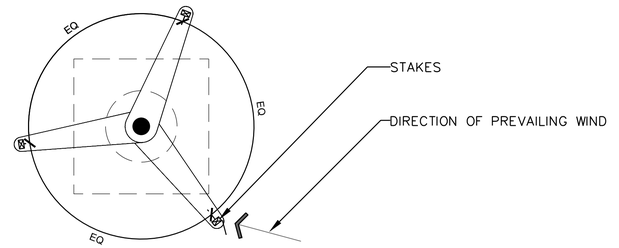

PLAN: TREE STAKING IN LAWN

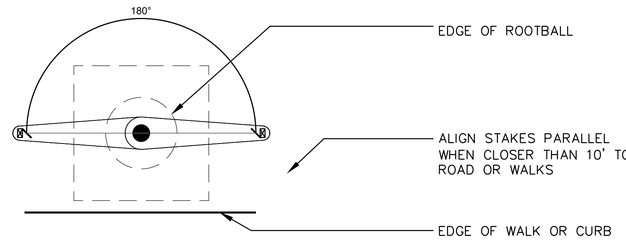

PLAN: TREE STAKING ALONG ROADS OR WALKS

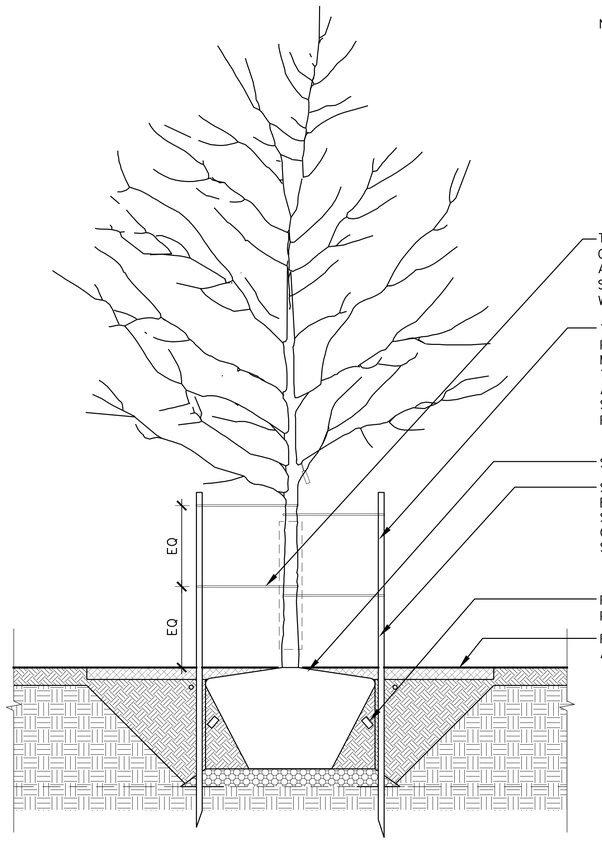

SECTION

01 TYPICAL TREE STAKING FOR TREES IN PLANTING
SCALE 1/2" = 1'-0"

NOTE:
1. ALL TREES PLANTED IN LAWN AREAS SHALL HAVE A 48" DIAMETER UNPLANTED AREA AROUND EACH TREE TRUNK. INSTALL 4" TOP-DRESS MULCH INSIDE CIRCLE.
2. WHEN PLANTING TREES IN AREAS TO RECEIVE SOD, CONTRACTOR SHALL COMPENSATE FOR THE THICKNESS OF THE SOD AND SET TOP OF TREE ROOTBALL APPROPRIATE TO AVOID A LOW AREA AND PONDING OF WATER.
3. REMOVE BOTTOM OF TREE BOXES BEFORE PLANTING.

BUREAU OF ENGINEERING
OFFICIAL RECORD

THE CITY OF LOS ANGELES OR ITS OFFICERS OR AGENTS SHALL NOT BE RESPONSIBLE FOR THE ACCURACY OR COMPLETENESS OF ELECTRONIC COPIES OF THIS PLAN SHEET.

REVISION DATES (DESIGN STAGE ONLY)

BUREAU OF ENGINEERING

ENGINEERING
CITY OF LOS ANGELES

NO.	REVISIONS:	DATE:	BY:

BUILDING NO.

INDEX NO. MF-300501

LICENSED LANDSCAPE ARCHITECT
MARY MARGARET JONES
LANDSCAPE ARCHITECT #2676
Date
Reference Date
STATE OF CALIFORNIA

THIS PLAN WAS ELECTRONICALLY SIGNED AND STAMPED

CITY OF LOS ANGELES DEPARTMENT OF PUBLIC WORKS

CITY ENGINEER
DATE: 07/11/2022
TED ALLEN, P.E.
LIC. NO.

DESIGN GROUP
LANDSCAPE ARCHITECT: MARY MARGARET JONES
DESIGNED BY: MARY MARGARET JONES
DRAWN BY: MEGAN ESOPENKO
CHECKED BY: GAVIN MCMILLAN
APPROVED BY: MARY MARGARET JONES

PLANS PREPARED BY:
TETRA TECH, INC.
707 WILSHIRE BLVD, 23RD FLR.
LOS ANGELES, CA 90017
PHONE: (213) 239-8866

HargreavesJones
Hargreaves Jones Landscape Architecture

VERT. CONTROL: BM 12-04070, 1929 (NGVD29) - 1985 ADJUSTMENT
HORIZ. CONTROL: GPS, PID AE 1704, EPOCH 1991.35

SHEET TITLE: PLANTING - TREES

PROJECT: SIXTH STREET PARK, ARTS AND RIVER CONNECTIVITY IMPROVEMENTS (PARC)

ADDRESS: SIXTH STREET OVER THE LOS ANGELES RIVER

WORK ORDER NO. E700235D
FILE NO. --
DRAWING NO. L-552
SHEET 152 OF 295 SHEETS

2022-07-05 9:27:54 PM - C:\USERS\MESOPENKO\ONEDRIVE - HARGREAVESJSV 1601 - SIXTH STREET VIADUCT\900_CREATE\310_HA WORKING FILES\06_TECHNICAL\06_100-CD\50_SHEETS\L-550-PLANTING-TREES.DWG - MEGAN ESOPENKO

Sheet Version 3.0

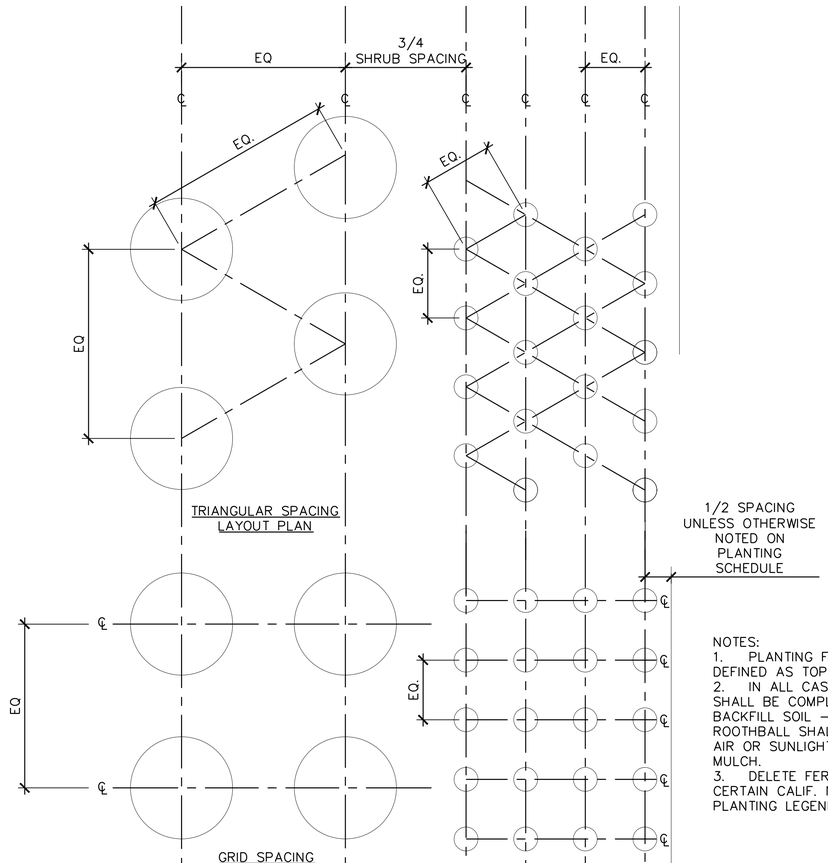

TRIANGULAR SPACING
LAYOUT PLAN

1/2 SPACING
UNLESS OTHERWISE
NOTED ON
PLANTING
SCHEDULE

NOTES:
1. PLANTING FINISH GRADE SHALL BE DEFINED AS TOP OF SOIL.
2. IN ALL CASES THE PLANT ROOTBALL SHALL BE COMPLETELY COVERED WITH BACKFILL SOIL – NO PORTION OF THE ROOTHBALL SHALL BE LEFT EXPOSED TO AIR OR SUNLIGHT BEFORE APPLICATION OF MULCH.
3. DELETE FERTILIZER TABLETS FOR CERTAIN CALIF. NATIVE PLANTS – SEE PLANTING LEGEND.

GRID SPACING
LAYOUT PLAN

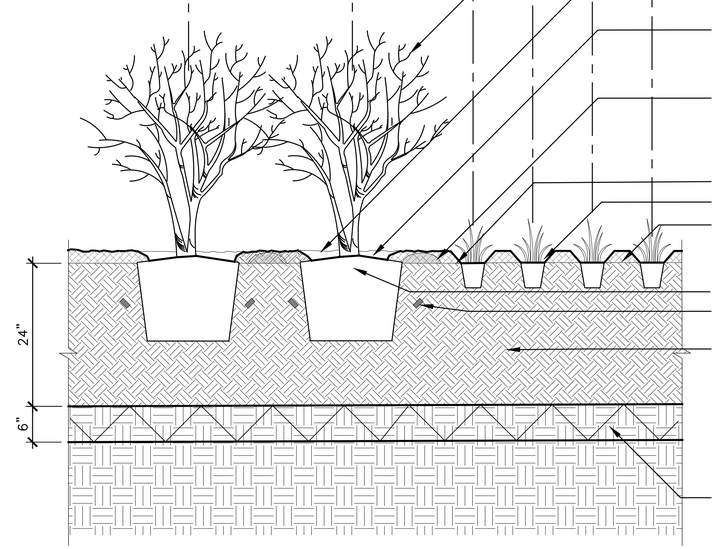

SHRUB PLANTING
LEAVE 6" CLEAR OF MULCH AROUND PLANT CROWN ALL SIDES, TYP.
SET CROWN OF PLANT ROOTBALL 1" ABOVE SOIL FINISH GRADE. ROOTBALL SHALL HAVE THIN LAYER OF BACKFILL SOIL COVERING, TYP.
FORM 2" HIGH TAMPED–SOIL TEMPORARY WATERING BASIN AROUND EDGE OF PLANT PIT AT THE TIME OF PLANTING, TYP. REMOVE DURING FINE GRADING PROCESS.
FINISH GRADE
PLANTS
4" MIN. THICK LAYER OF TOP–DRESS ORGANIC MULCH WITHIN WATERING BASIN. SEE PLANTING NOTES AND PLANTING SPECIFICATIONS.
ROOTBALL FROM CONTAINER, TYP.
TYPICAL FERTILIZER TABLET AT 6" DEPTH PER SPECIFICATION.
PLANT HOLES FOR 1,5, & 15 GALLON SHRUBS AND 15 GALLON TREES SHALL BE 2 X THE WIDTH OF ROOTBALL (OR MIN. 6" WIDER EACH SIDE – WHICHEVER IS GREATER) AND THE SAME DEPTH. SET ROOTBALL ON NATURAL UNDISTURBED SOIL AT THE BOTTOM OF THE HOLE, PLUMB TO GRADE. BACKFILL WITH SOIL.
AMENDED SUBGRADE

01 SHRUB & GROUNDCOVER PLANTING
SCALE 1" = 1'-0"

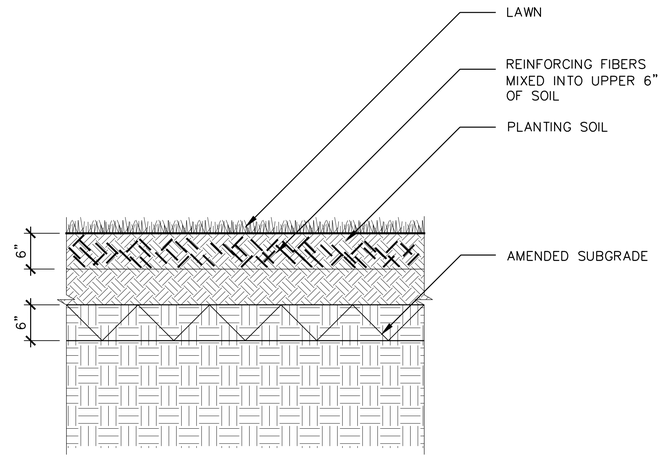

02 LAWN - FIBER REINFORCED
SCALE 1" = 1'-0"

BUREAU OF ENGINEERING
OFFICIAL RECORD

BUREAU OF ENGINEERING
CITY OF LOS ANGELES

BUILDING NO.

INDEX NO. MF-300501

NO. | REVISIONS: | DATE: | BY:

THIS PLAN WAS ELECTRONICALLY SIGNED AND STAMPED.

LICENSED LANDSCAPE ARCHITECT
Mary Margaret Jones #2616
Renewal Date
Date
STATE OF CALIFORNIA

CITY OF LOS ANGELES DEPARTMENT OF PUBLIC WORKS

TED ALLEN, P.E.
CITY ENGINEER

DESIGN GROUP
LANDSCAPE ARCHITECT: MARY MARGARET JONES LIC. NO. 07/11/2022
DESIGNED BY: MARY MARGARET JONES
DRAWN BY: MEGAN ESOPENKO
CHECKED BY: GAVIN MCMILLAN
APPROVED BY: MARY MARGARET JONES

HargreavesJones
Hargreaves Jones Landscape Architecture

PLANS PREPARED BY:
TETRA TECH, INC.
707 WILSHIRE BLVD, 23RD FLR.
LOS ANGELES, CA 90017
PHONE: (213) 239-8866

VERT. CONTROL: BM 12-04070, 1929 (NGVD29) - 1985 ADJUSTMENT
HORIZ. CONTROL: GPS; PID AE 1704, EPOCH 1991.35

SHEET TITLE: PLANTING - UNDERSTORY
PROJECT: SIXTH STREET PARK, ARTS AND RIVER CONNECTIVITY IMPROVEMENTS (PARC)
ADDRESS: SIXTH STREET OVER THE LOS ANGELES RIVER

WORK ORDER NO. E700235D
FILE NO. --
DRAWING NO. L-555
SHEET 153 OF 295 SHEETS

2022-07-05 9:28:01 PM - C:\USERS\MESOPENKO\ONEDRIVE - HARGREAVES\SSV 1601 - SIXTH STREET VIADUCT\300_CREATE\310_HA WORKING FILES\06_TECHNICAL\06_100-CD\50_SHEETS\L-555-PLANTING-UNDERSTORY.DWG - MEGAN ESOPENKO

THE CITY OF LOS ANGELES OR ITS OFFICERS OR AGENTS SHALL NOT BE RESPONSIBLE FOR THE ACCURACY OR COMPLETENESS OF ELECTRONIC COPIES OF THIS PLAN SHEET.

REVISION DATES (DESIGN STAGE ONLY)

Sheet Version 3.0

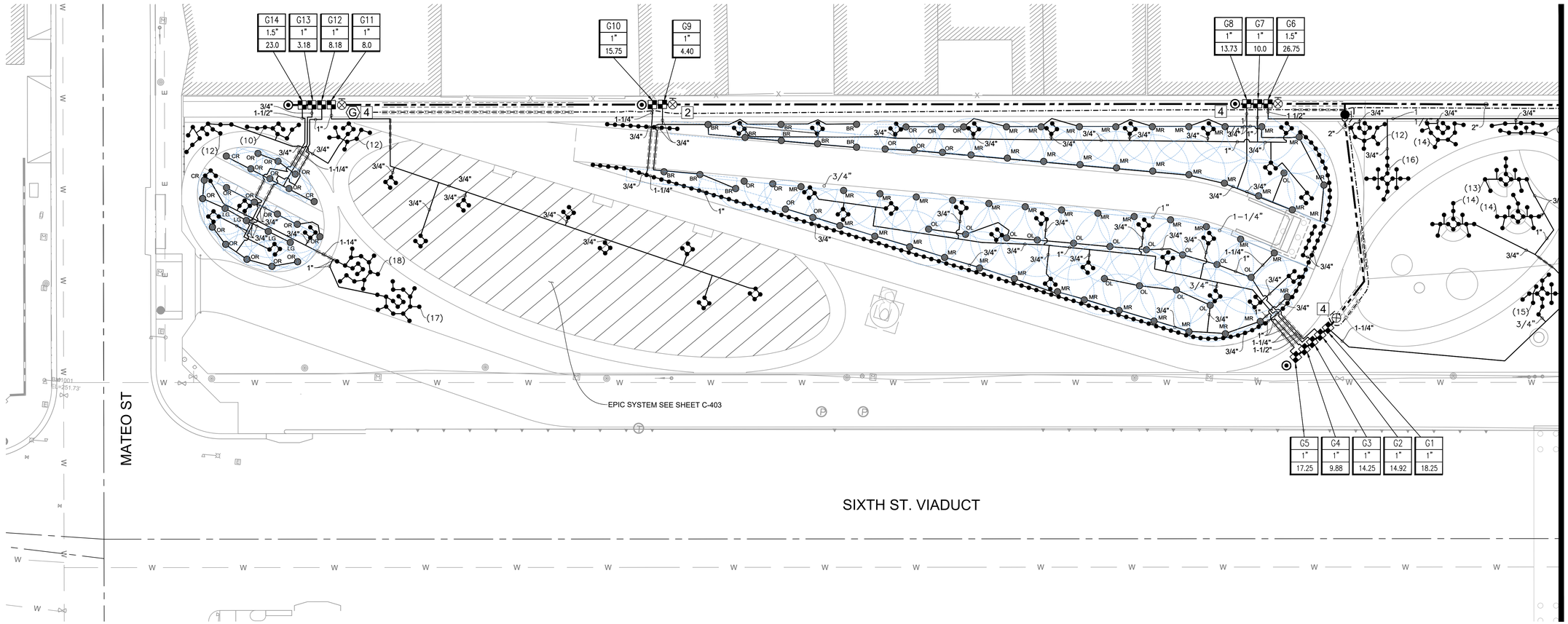

IRRIGATION EQUIPMENT LEGEND

SYMBOL	DESCRIPTION
M	CONTRACTOR SHALL ARRANGE FOR INSTALLATION OF NEW 1.5" IRRIGATION METER SERVICE WITH LADWP FOR EACH IRRIGATION P.O.C. INDICATED HEREIN. SEE IRRIGATION NOTES FOR ADDITIONAL INFORMATION.
RP	1.5" OR 2.0" FEBCO LF825Y SERIES REDUCED PRESSURE BACKFLOW DEVICE WITH ENCLOSURE PER DETAIL I4/I-011 AND I5/I-011. CONTRACTOR SHALL DETERMINE EXACT LOCATION WITH THE CITY'S AUTHORIZED REPRESENTATIVE BEFORE INSTALLATION.
A C D E F G	CONTROLLER A, C-G: RAIN BIRD ESP-LXD 50-200 STATION CAPABLE TWO-WIRE DECODER CONTROLLER. MOUNT CONTROLLER INSIDE STAINLESS STEEL PEDESTAL ENCLOSURE PER DETAIL I1/I-011. CONTROLLER GROUNDING PER DETAIL I1/2-011, I1/3-011. CONTRACTOR SHALL DETERMINE EXACT LOCATION WITH THE PROJECT MANAGER BEFORE INSTALLATION. WEATHER SENSOR FOR CONTROLLER "G" ONLY PER DETAIL I7/I-011.
EL	120 VOLT ELECTRICAL POWER, PROVIDED BY ELECTRICIAN. CONTRACTOR SHALL COORDINATE AND VERIFY CONTROLLER PEDESTAL LOCATION IN FIELD WITH ELECTRICIAN. ELECTRICIAN SHALL ROUTE AND INSTALL ALL CONDUIT AND CONDUCTORS TO WITHIN THE CONTROLLER PEDESTAL LOCATION. IRRIGATION CONTRACTOR SHALL CONNECT IRRIGATION CONTROLLER TO ELECTRICAL STUB-OUT. CONTROLLER CIRCUIT SHALL BE SUPPLIED FROM A DEDICATED BREAKER FROM THE POWER SOURCE.
MV	BUCKNER SUPERIOR MODEL: 3100200 2" OR 3100250 2-1/2" NORMALLY OPEN SOLID BRASS MASTER VALVE. PROVIDE AND INSTALL PER MANUFACTURER'S INSTRUCTIONS. MASTER VALVE CONNECTS TO CONTROLLER USING RAIN BIRD SD-210 DECODER.
F	RAIN BIRD FS150B 1.5" OR FS200B 2" BRASS TEE FLOW SENSOR WITH RAIN BIRD SD-210 SENSOR DECODER. INSTALL PER DETAIL I7/I-010.

IRRIGATION EQUIPMENT LEGEND

SYMBOL	DESCRIPTION
	REMOTE CONTROL VALVE: RAIN BIRD EFB-CP 100 OR 150 OR 200 SERIES BRASS VALVE - SEE PLAN CALLOUT FOR VALVE SIZE INSTALLER SHALL PROVIDE AND INSTALL RAIN BIRD 2-WIRE DECODERS AS INDICATED AT EACH MANIFOLD, AND PROGRAM PER MANUFACTURER'S INSTRUCTIONS. INSTALL PER DETAIL I5/I-009.
	QUICK COUPLING VALVE: 1" TWO PIECE QUICK COUPLING VALVE: RAINBIRD 44LRC, WITH 44K KEY AND SH-1 HOSE SWIVEL. PROVIDE ONE QUICK COUPLER KEY AND HOSE SWIVEL FOR EACH FIVE QUICK COUPLERS INSTALLED (MINIMUM ONE QUICK COUPLER KEY). INSTALL PER DETAIL I6/I-009.
	MAINLINE PIPING: 2-1/2" AND SMALLER SHALL BE SCH. 40 PVC; PURPLE NON-POTABLE PIPE WITH GLUED FITTINGS TYP. SEE DETAIL FOR MAINLINE SIZING IN VALVE MANIFOLDS.
	PC SCH. 40 LATERAL LINE PIPING; PURPLE NON-POTABLE PIPE, SOLVENT WELD. SIZE AS NOTED.
	PVC SLEEVE UNDER PAVING. SCHEDULE 40 PVC SLEEVE SHALL BE TWO PIPE SIZES GREATER THAN THE PIPING WHICH IS TO RUN IN THE SLEEVE, OR 4" DIA. FOR CONTROL WIRE WITHOUT MAINLINE. COVER DEPTH SHALL BE THE SAME AS THE MAINLINE OR LATER LINE. INSTALL PER DETAIL I8/I-009.
	2" TO 2-1/2" BRONZE GATE VALVE: NIBCO T-113 SOLID BRONZE, NON-RISING STEM, SOLID WEDGE TYPE OR APPROVED EQUAL. INSTALL PER DETAIL I2/I-009.
	MANIFOLD GATE VALVE. 2" TO 2-1/2" BRONZE GATE VALVE: NIBCO T-113 SOLID BRONZE, NON-RISING STEM, SOLID WEDGE TYPE OR APPROVED EQUAL. INSTALL PER DETAIL I2/I-009.

2-WIRE SYSTEM EQUIPMENT LEGEND

- 1 RAIN BIRD FD-102TURF ONE VALVE DECODER. INSTALL PER MANUFACTURER'S INSTRUCTIONS.
- 2 RAIN BIRD FD-202TURF TWO VALVE DECODER. INSTALL PER MANUFACTURER'S INSTRUCTIONS.
- 4 RAIN BIRD FD-401TURF FOUR VALVE DECODER. INSTALL PER MANUFACTURER'S INSTRUCTIONS.
- 6 RAIN BIRD FD-601TURF SIX VALVE DECODER. INSTALL PER MANUFACTURER'S INSTRUCTIONS.
- G LIGHTNING ARRESTOR AND GROUND ROD. INSTALL IN LOCATIONS SHOWN PER MANUFACTURER'S INSTRUCTIONS AND PER DETAIL I3/I-010, I4/I-010, I6/I-010.

APPROVED TWO-WIRE CABLE PER SPECIFICATIONS. ALL 2-WIRE CABLE SHALL BE INSTALLED IN 1" MIN. SCH. 80 PVC CONDUIT 24" MIN. BELOW GRADE WITH PULL BOXES @ 200' MAX.

IRRIGATION HEADS LEGEND

SYMBOL	DESCRIPTION	GPM	SPACING	NOZZLE PRESSURE	PRECIP RATE	DETAIL NUMBER
	RAINBIRD 5004 PLUS SERIES 40-360 DEG. ROTOR STAINLESS STEEL RISER WITH PRS PRESSURE REGULATION AND SAM CHECK VALVE; MPR-30 GREEN NOZZLE	1.4 2.96 5.78	29'	40 PSI	--	I9/I-009
	RAINBIRD 1812-SAM-P45 SERIES POP-UP SPRAY BODY WITH MP ROTATOR NOZZLE PER LEGEND AT RIGHT WITH RADIUS AND ARC AS REQUIRED.	0.21-3.64	11'-30'	40 PSI	--	I10/I-009
	RAIN BIRD RWS-M-B-C-1401 18" (TREES), **RWS-S-B-C-1401 10"** (SHRUBS) ROOT WATERING SYSTEM ASSEMBLY WITH PRESSURE COMPENSATING BUBBLER. (#) ON PLAN = NUMBER OF UNITS PER TREE.	.25 GPH	--	--	--	I11/I-009
5Q 5H 5F 5CST	**RAIN BIRD 5 SERIES MPR STREAM BUBBLER ON RAIN BIRD 1806 SAM-PRS POP UP BODY,** 6" POP UP HEIGHT. 5Q-B QUARTER CIRCLE, 5H-B HALF CIRCLE, 5F-B FULL CIRCLE, 5CST-B DUAL STREAM; (5' RADIUS TYP.).	0.50 1.00 1.50 0.50	7'	30 PSI	--	I10/I-009
	RAIN BIRD U- SERIES NOZZLE ON RAIN BIRD SAM-PRS 1804 BODY, 4" POP UP HEIGHT. U-15Q QUARTER CIRCLE, U-15H HALF CIRCLE, U-15F FULL CIRCLE, (15' RADIUS TYP.).	0.92 1.85 3.70	15'	30 PSI	--	I10/I-009

AREA IRRIGATED BY EPIC SYSTEM

MP ROTATOR NOZZLE LEGEND
BY HUNTER INDUSTRIES

		RADIUS
BL	MP 3000 90-210 DEG (BLUE)	22'-30'
YE	MP 3000 210-270 DEG (YELLOW)	22'-30'
GY	MP 3000 360 DEG (GRAY)	22'-30'
BK	MP 2000 90-210 DEG (BLACK)	13'-21'
GN	MP 2000 210-270 DEG (GREEN)	13'-21'
RD	MP 2000 360 DEG (RED)	13'-21'
MR	MP 1000 90-210 DEG (MAROON)	8'-15'
LB	MP 1000 210-270 DEG (LIGHT BLUE)	8'-15'
OL	MP 1000 360 DEG (OLIVE)	8'-15'
OR	MP 800 SR 90-210 DEG (ORANGE)	6'-12'
LG	MP 800 SR 360 DEG (LIME GREEN)	6'-12'
CR	MPCORNER (TURQUOISE)	8'-15'
BR	MP SIDE STRIP (BROWN)	5'X30'

IRRIGATION VALVE LEGEND



NOTES:
1. LOCATION OF BACKFLOW DEVICE AND ENCLOSURE MUST BE APPROVED BY LADWP.
2. ALL VALVES TO BE INSTALLED IN CONCRETE VALVE BOXES ("BROOKS 3-HL") WITH LOCKING STEEL COVERS.
3. ALL END RUNS OF LATERAL PIPE SHALL BE A MINIMUM OF 3/4" SIZE PIPE UNLESS NOTED OTHERWISE.
4. ALL IRRIGATION PIPING TO BE PURPLE NON-POTABLE TO ALLOW FOR FUTURE CONNECTION TO RECYCLED WATER SUPPLY.
5. LOCATE WEATHER SENSOR NEAR CONTROLLER 'G' IN A LOCATION THAT WILL BE UNOBSTRUCTED BY FUTURE TREE CANOPY GROWTH.

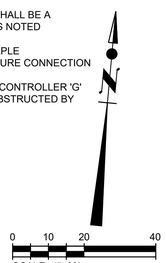

BUREAU OF ENGINEERING
OFFICIAL RECORD

PLANS PREPARED BY:
TETRA TECH, INC.
707 WILSHIRE BLVD. 23RD FLR.
LOS ANGELES, CA 90017
PHONE: (213) 239-8866

CITY OF LOS ANGELES DEPARTMENT OF PUBLIC WORKS • BUREAU OF ENGINEERING

ENGINEERING
CITY OF LOS ANGELES

NO.	REVISIONS	DATE	BY:

BUILDING NO.

INDEX NO. MF-300501

THIS PLAN WAS ELECTRONICALLY SIGNED AND STAMPED

PROFESSIONAL ENGINEER * REGISTERED * CIVIL * STATE OF CALIFORNIA * T. SMITH No. 85736 EXP: 9-30-22

CITY ENGINEER
DESIGN GROUP
ENGINEER: JUSTIN SMITH LIC. NO. C-85736 DATE: 07/11/22
DESIGNED BY: HEATH PRAY
DRAWN BY: HEATH PRAY
CHECKED BY: NATE SCHREINER
APPROVED BY: JASON L. FUSSEL

TED ALLEN, P.E.

VERT. CONTROL: BM 12-04070, 1929 (NGVD29) - 1985 ADJUSTMENT
HORIZ. CONTROL: GPS; PID AE 1704; EPOCH 1991.35

SHEET TITLE: IRRIGATION PLAN SHEET 1

PROJECT: SIXTH STREET PARK, ARTS AND RIVER CONNECTIVITY IMPROVEMENTS (PARC)

ADDRESS: SIXTH STREET OVER THE LOS ANGELES RIVER

WORK ORDER NO. E700235D
FILE NO. --
DRAWING NO. I-001
SHEET 154 OF 295 SHEETS

7/7/2022 10:21:02 AM - O:\PROJECTS\IRVINE\20043\200-20043-17001\CAD\SHEETFILES\I-001_IRRIGATION PLAN.DWG - PRAY, HEATH

REVISION DATES (DESIGN STAGE ONLY)

THE CITY OF LOS ANGELES OR ITS OFFICERS OR AGENTS SHALL NOT BE RESPONSIBLE FOR THE ACCURACY OR COMPLETENESS OF ELECTRONIC COPIES OF THIS PLAN SHEET.

Sheet Version 3.0

IRRIGATION EQUIPMENT LEGEND

SYMBOL	DESCRIPTION
(M)	CONTRACTOR SHALL ARRANGE FOR INSTALLATION OF NEW 1.5" IRRIGATION METER SERVICE WITH LADWP FOR EACH IRRIGATION P.O.C. INDICATED HEREIN. SEE IRRIGATION NOTES FOR ADDITIONAL INFORMATION.
(RP)	1.5" FEBCO LF825Y SERIES REDUCED PRESSURE BACKFLOW DEVICE WITH ENCLOSURE PER DETAIL I4/I-011 AND I5/I-011. CONTRACTOR SHALL DETERMINE EXACT LOCATION WITH THE CITY'S AUTHORIZED REPRESENTATIVE BEFORE INSTALLATION.
(A) (C) (D) (E) (F) (G)	CONTROLLER A, C-G: RAIN BIRD ESP-LXD 50-200 STATION CAPABLE TWO-WIRE DECODER CONTROLLER. MOUNT CONTROLLER INSIDE STAINLESS STEEL PEDESTAL ENCLOSURE PER DETAIL I1/I-011. CONTRACTOR SHALL DETERMINE EXACT LOCATION WITH THE PROJECT MANAGER BEFORE INSTALLATION.
[EL]	120 VOLT ELECTRICAL POWER, PROVIDED BY ELECTRICIAN. CONTRACTOR SHALL COORDINATE AND VERIFY CONTROLLER PEDESTAL LOCATION IN FIELD WITH ELECTRICIAN. ELECTRICIAN SHALL ROUTE AND INSTALL ALL CONDUIT AND CONDUCTORS TO WITHIN THE CONTROLLER PEDESTAL LOCATION. IRRIGATION CONTRACTOR SHALL CONNECT IRRIGATION CONTROLLER TO ELECTRICAL STUB-OUT. CONTROLLER CIRCUIT SHALL BE SUPPLIED FROM A DEDICATED BREAKER FROM THE POWER SOURCE.
(MV)	BUCKNER SUPERIOR MODEL: 3100200 2" OR 3100250 2-1/2" NORMALLY OPEN SOLID BRASS MASTER VALVE. PROVIDE AND INSTALL PER MANUFACTURER'S INSTRUCTIONS. MASTER VALVE CONNECTS TO CONTROLLER USING RAIN BIRD SD-210 DECODER.

IRRIGATION EQUIPMENT LEGEND

SYMBOL	DESCRIPTION
[F]	RAIN BIRD FS150B 1.5" OR FS200B 2" BRASS TEE FLOW SENSOR WITH RAIN BIRD SD-210 SENSOR DECODER. INSTALL PER DETAIL I7/I-010.
	REMOTE CONTROL VALVE: RAIN BIRD EFB-CP 100 OR 150 OR 200 SERIES BRASS VALVE - SEE PLAN CALLOUT FOR VALVE SIZE INSTALLER SHALL PROVIDE AND INSTALL RAIN BIRD 2-WIRE DECODERS AS INDICATED AT EACH MANIFOLD, AND PROGRAM PER MANUFACTURER'S INSTRUCTIONS. INSTALL PER DETAIL I5/I-009.
	QUICK COUPLING VALVE: 1" TWO PIECE QUICK COUPLING VALVE: RAINBIRD 44LRC, WITH 44K KEY AND SH-1 HOSE SWIVEL. PROVIDE ONE QUICK COUPLER KEY AND HOSE SWIVEL FOR EACH FIVE QUICK COUPLERS INSTALLED (MINIMUM ONE QUICK COUPLER KEY). INSTALL PER DETAIL I6/I-009.
	MAINLINE PIPING: 2-1/2" AND SMALLER SHALL BE SCH. 40 PVC; PURPLE NON-POTABLE PIPE WITH GLUED FITTINGS TYP. SEE DETAIL FOR MAINLINE SIZING IN VALVE MANIFOLDS.
	PC SCH. 40 LATERAL LINE PIPING; PURPLE NON-POTABLE PIPE, SOLVENT WELD. SIZE AS NOTED.
	PVC SLEEVE UNDER PAVING. SCHEDULE 40 PVC SLEEVE SHALL BE TWO PIPE SIZES GREATER THAN THE PIPING WHICH IS TO RUN IN THE SLEEVE, OR 4" DIA. FOR CONTROL WIRE WITHOUT MAINLINE. COVER DEPTH SHALL BE THE SAME AS THE MAINLINE OR LATER LINE. INSTALL PER DETAIL I8/I-009.
	2" TO 2-1/2" BRONZE GATE VALVE: NIBCO T-113 SOLID BRONZE, NON-RISING STEM, SOLID WEDGE TYPE OR APPROVED EQUAL. INSTALL PER DETAIL I2/I-009.
	MANIFOLD GATE VALVE. 2" TO 2-1/2" BRONZE GATE VALVE: NIBCO T-113 SOLID BRONZE, NON-RISING STEM, SOLID WEDGE TYPE OR APPROVED EQUAL. INSTALL PER DETAIL I2/I-009.

IRRIGATION HEADS LEGEND

SYMBOL	DESCRIPTION	GPM	SPACING	NOZZLE PRESSURE	PRECIP. RATE	DETAIL NUMBER
(XQ) (XH) (XF)	**RAINBIRD 5004 PLUS SERIES 40-360 DEG.** ROTOR STAINLESS STEEL RISER WITH PRS PRESSURE REGULATION AND SAM CHECK VALVE; MPR-30 GREEN NOZZLE	1.4 2.96 5.78	29'	40 PSI	--	I9/I-009
	RAINBIRD 1812-SAM-P45 SERIES POP-UP SPRAY BODY WITH MP ROTATOR NOZZLE PER LEGEND AT RIGHT WITH RADIUS AND ARC AS REQUIRED.	0.21-3.64	11'-30'	40 PSI	--	I10/I-009
	RAIN BIRD RWS-M-B-C-1401 18" (TREES), **RWS-S-B-C-1401 10"** (SHRUBS) ROOT WATERING SYSTEM ASSEMBLY WITH PRESSURE COMPENSATING BUBBLER. (#) ON PLAN = NUMBER OF UNITS PER TREE.	.25 GPH	--	--	--	I11/I-009
5Q 5H 5F 5CST	**RAIN BIRD 5 SERIES MPR STREAM BUBBLER ON RAIN BIRD 1806 SAM-PRS POP UP BODY,** 6" POP UP HEIGHT. 5Q-B QUARTER CIRCLE, 5H-B HALF CIRCLE, 5F-B FULL CIRCLE, 5CST-B DUAL STREAM: (5' RADIUS TYP.).	0.50 1.00 1.50 0.50	7'	30 PSI	--	I10/I-009
	RAIN BIRD U- SERIES NOZZLE ON RAIN BIRD SAM-PRS 1804 BODY, 4" POP UP HEIGHT. U-15Q QUARTER CIRCLE, U-15H HALF CIRCLE, U-15F FULL CIRCLE, (15' RADIUS TYP.).	0.92 1.85 3.70	15'	30 PSI	--	I10/I-009

2-WIRE SYSTEM EQUIPMENT LEGEND

- [1] RAIN BIRD FD-102TURF ONE VALVE DECODER. INSTALL PER MANUFACTURER'S INSTRUCTIONS.
- [2] RAIN BIRD FD-202TURF TWO VALVE DECODER. INSTALL PER MANUFACTURER'S INSTRUCTIONS.
- [4] RAIN BIRD FD-401TURF FOUR VALVE DECODER. INSTALL PER MANUFACTURER'S INSTRUCTIONS.
- [6] RAIN BIRD FD-601TURF SIX VALVE DECODER. INSTALL PER MANUFACTURER'S INSTRUCTIONS.
- (G) LIGHTNING ARRESTOR AND GROUND ROD. INSTALL IN LOCATIONS SHOWN PER MANUFACTURER'S INSTRUCTIONS AND PER DETAIL I3/I-010, I4/I-010, I6/I-010.
- APPROVED TWO-WIRE CABLE PER SPECIFICATIONS. ALL 2-WIRE CABLE SHALL BE INSTALLED IN 1" MIN. SCH. 80 PVC CONDUIT 24" MIN. BELOW GRADE WITH PULL BOXES @ 200' MAX.

MP ROTATOR NOZZLE LEGEND BY HUNTER INDUSTRIES

		RADIUS
BL	MP 3000 90-210 DEG (BLUE)	22'-30'
YE	MP 3000 210-270 DEG (YELLOW)	22'-30'
GY	MP 3000 360 DEG (GRAY)	22'-30'
BK	MP 2000 90-210 DEG (BLACK)	13'-21'
GN	MP 2000 210-270 DEG (GREEN)	13'-21'
RD	MP 2000 360 DEG (RED)	13'-21'
MR	MP 1000 90-210 DEG (MAROON)	8'-15'
LB	MP 1000 210-270 DEG (LIGHT BLUE)	8'-15'
OL	MP 1000 360 DEG (OLIVE)	8'-15'
OR	MP 800 SR 90-210 DEG (ORANGE)	6'-12'
LG	MP 800 SR 360 DEG (LIME GREEN)	6'-12'
CR	MPCORNER (TURQUOISE)	8'-15'

IRRIGATION VALVE LEGEND

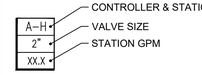

NOTES:
1. LOCATION OF BACKFLOW DEVICE AND ENCLOSURE MUST BE APPROVED BY LADWP.
2. ALL VALVES TO BE INSTALLED IN CONCRETE VALVE BOXES ("BROOKS 3-HL") WITH LOCKING STEEL COVERS.
3. ALL END RUNS OF LATERAL PIPE SHALL BE A MINIMUM OF 3/4" SIZE PIPE UNLESS NOTED OTHERWISE.
4. ALL IRRIGATION PIPING TO BE PURPLE NON-POTABLE TO ALLOW FOR FUTURE CONNECTION TO RECYCLED WATER SUPPLY.

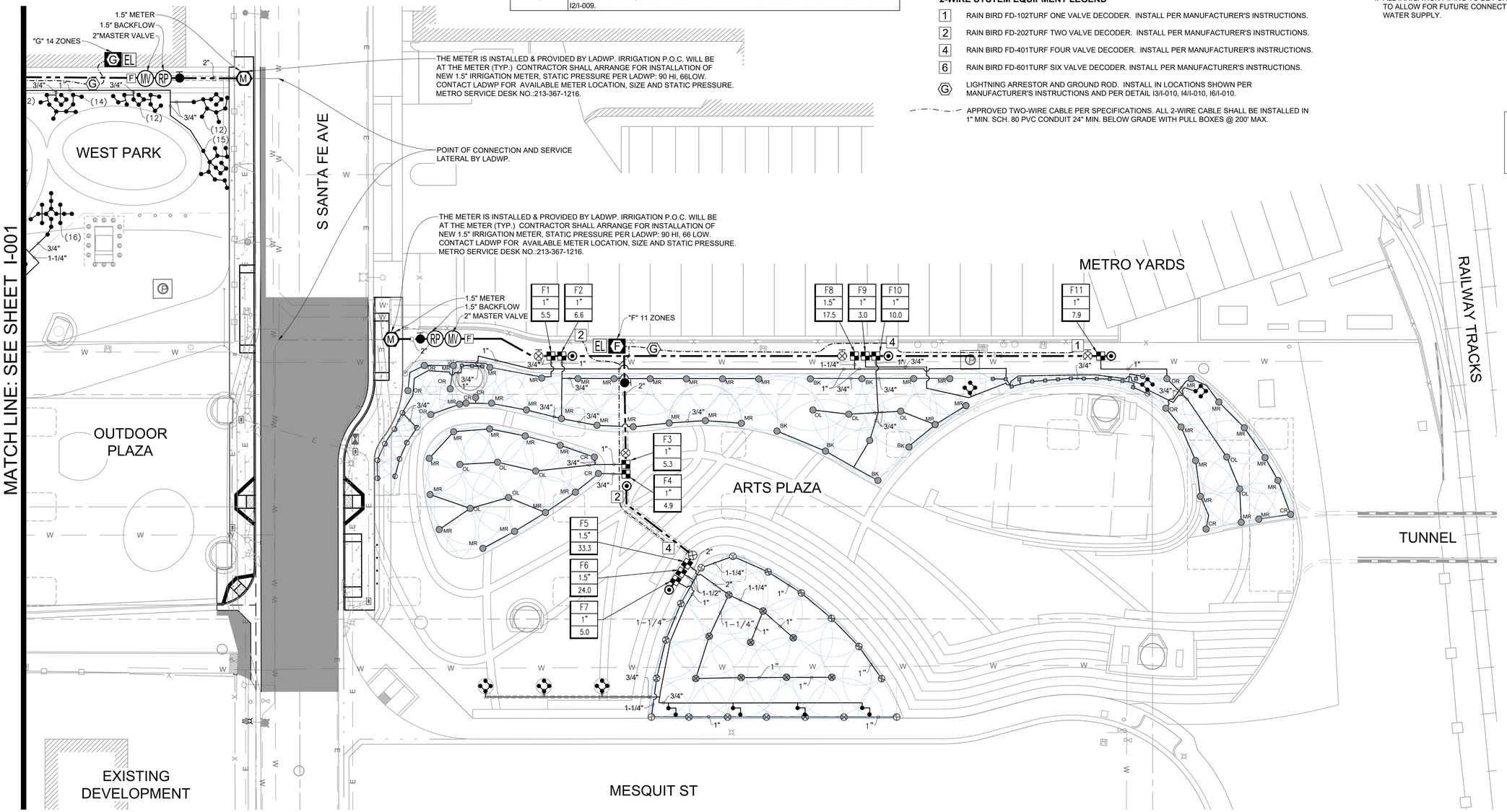

THE CITY OF LOS ANGELES OR ITS OFFICERS OR AGENTS SHALL NOT BE RESPONSIBLE FOR THE ACCURACY OR COMPLETENESS OF ELECTRONIC COPIES OF THIS PLAN SHEET.

REVISION DATES (DESIGN STAGE ONLY)

Sheet Version 3.0

BUREAU OF ENGINEERING
OFFICIAL RECORD

"THIS PLAN WAS ELECTRONICALLY SIGNED AND STAMPED"

REGISTERED PROFESSIONAL ENGINEER JUSTIN T. SMITH No. 85736 EXP: 9-30-22 CIVIL STATE OF CALIFORNIA

BUREAU OF ENGINEERING
ENGINEERING
CITY OF LOS ANGELES

NO.	REVISIONS:	DATE	BY:

BUILDING NO.

INDEX NO. MF-300501

CITY OF LOS ANGELES DEPARTMENT OF PUBLIC WORKS

TED ALLEN, P.E.
CITY ENGINEER

ENGINEER:	JUSTIN SMITH	LIC. NO. C-85736	DATE: 07/11/22
DESIGNED BY:	HEATH PRAY		
DRAWN BY:	HEATH PRAY		
CHECKED BY:	NATE SCHREINER		
APPROVED BY:	JASON L. FUSSEL		

DESIGN GROUP

VERT. CONTROL: BM 12-24#70, 1929 (NGVD29) - 1955 ADJUSTMENT
HORIZ. CONTROL: GPS; PID AE 1774, EPOCH 1991.35

SHEET TITLE: IRRIGATION PLAN SHEET 2

PROJECT: SIXTH STREET PARK, ARTS AND RIVER CONNECTIVITY IMPROVEMENTS (PARC)

ADDRESS: SIXTH STREET OVER THE LOS ANGELES RIVER

PLANS PREPARED BY:
TETRA TECH, INC.
707 WILSHIRE BLVD. 23RD FLR.
LOS ANGELES, CA 90017
PHONE: (213) 239-8866

WORK ORDER NO. E700235D
FILE NO. --
DRAWING NO. I-002
SHEET 155 OF 295 SHEETS

7/7/2022 10:28:28 AM - O:\PROJECTS\IRVINE\20043\200-20043-17001\CAD\SHEETFILES\I-002_IRRIGATION PLAN.DWG - PRAY, HEATH

IRRIGATION EQUIPMENT LEGEND

SYMBOL	DESCRIPTION
(M)	CONTRACTOR SHALL ARRANGE FOR INSTALLATION OF NEW 1.5" IRRIGATION METER SERVICE WITH LADWP FOR EACH IRRIGATION P.O.C. INDICATED HEREIN. SEE IRRIGATION NOTES FOR ADDITIONAL INFORMATION.

IRRIGATION EQUIPMENT LEGEND

SYMBOL	DESCRIPTION
(RP)	1.5" OR 2.0" FEBCO LF825Y SERIES REDUCED PRESSURE BACKFLOW DEVICE WITH ENCLOSURE PER DETAIL I4/I-011 AND I5/I-011. CONTRACTOR SHALL DETERMINE EXACT LOCATION WITH THE CITY'S AUTHORIZED REPRESENTATIVE BEFORE INSTALLATION.
(A) (C) (D) (E) (F) (G)	CONTROLLER A, C-G: RAIN BIRD ESP-LXD 50-200 STATION CAPABLE TWO-WIRE DECODER CONTROLLER. MOUNT CONTROLLER INSIDE STAINLESS STEEL PEDESTAL ENCLOSURE PER DETAIL I1/I-011. CONTROLLER GROUNDING PER DETAIL I1/2-011, I1/3-011. CONTRACTOR SHALL DETERMINE EXACT LOCATION WITH THE PROJECT MANAGER BEFORE INSTALLATION. WEATHER SENSOR FOR CONTROLLER "G" ONLY PER DETAIL I7/I-011.
(EL)	120 VOLT ELECTRICAL POWER, PROVIDED BY ELECTRICIAN. CONTRACTOR SHALL COORDINATE AND VERIFY CONTROLLER PEDESTAL LOCATION IN FIELD WITH ELECTRICIAN. ELECTRICIAN SHALL ROUTE AND INSTALL ALL CONDUIT AND CONDUCTORS TO WITHIN THE CONTROLLER PEDESTAL LOCATION. IRRIGATION CONTRACTOR SHALL CONNECT IRRIGATION CONTROLLER TO ELECTRICAL STUB-OUT. CONTROLLER CIRCUIT SHALL BE SUPPLIED FROM A DEDICATED BREAKER FROM THE POWER SOURCE.
(MV)	BUCKNER SUPERIOR MODEL: 3100200 2" OR 3100250 2-1/2" NORMALLY OPEN SOLID BRASS MASTER VALVE. PROVIDE AND INSTALL PER MANUFACTURER'S INSTRUCTIONS. MASTER VALVE CONNECTS TO CONTROLLER USING RAIN BIRD SD-210 DECODER.
(F)	RAIN BIRD FS150B 1.5" OR FS200B 2" BRASS TEE FLOW SENSOR WITH RAIN BIRD SD-210 SENSOR DECODER. INSTALL PER DETAIL I7/I-010.
	REMOTE CONTROL VALVE: RAIN BIRD EFB-CP 100 OR 150 OR 200 SERIES BRASS VALVE - SEE PLAN CALLOUT FOR VALVE SIZE INSTALLER SHALL PROVIDE AND INSTALL RAIN BIRD 2-WIRE DECODERS AS INDICATED AT EACH MANIFOLD, AND PROGRAM PER MANUFACTURER'S INSTRUCTIONS. INSTALL PER DETAIL I5/I-009.
	QUICK COUPLING VALVE: 1" TWO PIECE QUICK COUPLING VALVE: RAINBIRD 44LRC, WITH 44K KEY AND SH-1 HOSE SWIVEL. PROVIDE ONE QUICK COUPLER KEY AND HOSE SWIVEL FOR EACH FIVE QUICK COUPLERS INSTALLED (MINIMUM ONE QUICK COUPLER KEY). INSTALL PER DETAIL I6/I-009.
	MAINLINE PIPING: 2-1/2" AND SMALLER SHALL BE SCH. 40 PVC; PURPLE NON-POTABLE PIPE WITH GLUED FITTINGS TYP. SEE DETAIL FOR MAINLINE SIZING IN VALVE MANIFOLDS.
	PC SCH. 40 LATERAL LINE PIPING; PURPLE NON-POTABLE PIPE, SOLVENT WELD. SIZE AS NOTED.
	PVC SLEEVE UNDER PAVING. SCHEDULE 40 PVC SLEEVE SHALL BE TWO PIPE SIZES GREATER THAN THE PIPING WHICH IS TO RUN IN THE SLEEVE, OR 4" DIA. FOR CONTROL WIRE WITHOUT MAINLINE. COVER DEPTH SHALL BE THE SAME AS THE MAINLINE OR LATER LINE. INSTALL PER DETAIL I8/I-009.
	2" TO 2-1/2" BRONZE GATE VALVE: NIBCO T-113 SOLID BRONZE, NON-RISING STEM, SOLID WEDGE TYPE OR APPROVED EQUAL. INSTALL PER DETAIL I2/I-009.
	MANIFOLD GATE VALVE. 2" TO 2-1/2" BRONZE GATE VALVE: NIBCO T-113 SOLID BRONZE, NON-RISING STEM, SOLID WEDGE TYPE OR APPROVED EQUAL. INSTALL PER DETAIL I2/I-009.

IRRIGATION HEADS LEGEND

SYMBOL	DESCRIPTION	GPM	SPACING	NOZZLE PRESSURE	PRECIP. RATE	DETAIL NUMBER
(G) (H) (F)	**RAINBIRD 5004 PLUS SERIES 40-360 DEG.** ROTOR STAINLESS STEEL RISER WITH PRS PRESSURE REGULATION AND SAM CHECK VALVE; MPR-30 GREEN NOZZLE	1.4 2.96 5.78	29'	40 PSI	--	I9/I-009
	RAINBIRD 1812-SAM-P45 SERIES POP-UP SPRAY BODY WITH MP ROTATOR NOZZLE PER LEGEND AT RIGHT WITH RADIUS AND ARC AS REQUIRED.	0.21-3.64	11'-30'	40 PSI	--	I10/I-009
	RAIN BIRD RWS-M-B-C-1401 18" (TREES), **RWS-S-B-C-1401 10"** (SHRUBS) ROOT WATERING SYSTEM ASSEMBLY WITH PRESSURE COMPENSATING BUBBLER. (#) ON PLAN = NUMBER OF UNITS PER TREE.	.25 GPH	--	--	--	I11/I-009
5Q 5H 5F 5CST	**RAIN BIRD 5 SERIES MPR STREAM BUBBLER ON RAIN BIRD 1806 SAM-PRS POP UP BODY,** 6" POP UP HEIGHT. 5Q-B QUARTER CIRCLE, 5H-B HALF CIRCLE, 5F-B FULL CIRCLE, 5CST-B DUAL STREAM; (5' RADIUS TYP.).	0.50 1.00 1.50 0.50	7'	30 PSI	--	I10/I-009
	RAIN BIRD U- SERIES NOZZLE ON RAIN BIRD SAM-PRS 1804 BODY, 4" POP UP HEIGHT. U-15Q QUARTER CIRCLE, U-15H HALF CIRCLE, U-15F FULL CIRCLE, (15' RADIUS TYP.).	0.92 1.85 3.70	15'	30 PSI	--	I10/I-009

2-WIRE SYSTEM EQUIPMENT LEGEND

- 1 RAIN BIRD FD-102TURF ONE VALVE DECODER. INSTALL PER MANUFACTURER'S INSTRUCTIONS.
- 2 RAIN BIRD FD-202TURF TWO VALVE DECODER. INSTALL PER MANUFACTURER'S INSTRUCTIONS.
- 4 RAIN BIRD FD-401TURF FOUR VALVE DECODER. INSTALL PER MANUFACTURER'S INSTRUCTIONS.
- 6 RAIN BIRD FD-601TURF SIX VALVE DECODER. INSTALL PER MANUFACTURER'S INSTRUCTIONS.
- (G) LIGHTNING ARRESTOR AND GROUND ROD. INSTALL IN LOCATIONS SHOWN PER MANUFACTURER'S INSTRUCTIONS AND PER DETAIL I3/I-010, I4/I-010, I6/I-010.

APPROVED TWO-WIRE CABLE PER SPECIFICATIONS. ALL 2-WIRE CABLE SHALL BE INSTALLED IN 1" MIN. SCH. 80 PVC CONDUIT 24" MIN. BELOW GRADE WITH PULL BOXES @ 200' MAX.

MP ROTATOR NOZZLE LEGEND BY HUNTER INDUSTRIES

		RADIUS
BL	MP 3000 90-210 DEG (BLUE)	22'-30'
YE	MP 3000 210-270 DEG (YELLOW)	22'-30'
GY	MP 3000 360 DEG (GRAY)	22'-30'
BK	MP 2000 90-210 DEG (BLACK)	13'-21'
GN	MP 2000 210-270 DEG (GREEN)	13'-21'
RD	MP 2000 360 DEG (RED)	13'-21'
MR	MP 1000 90-210 DEG (MAROON)	8'-15'
LB	MP 1000 210-270 DEG (LIGHT BLUE)	8'-15'
OL	MP 1000 360 DEG (OLIVE)	8'-15'
OR	MP 800 SR 90-210 DEG (ORANGE)	6'-12'
LG	MP 800 SR 360 DEG (LIME GREEN)	6'-12'
CR	MPCORNER (TURQUOISE)	8'-15'

IRRIGATION VALVE LEGEND



NOTES:
1. LOCATION OF BACKFLOW DEVICE AND ENCLOSURE MUST BE APPROVED BY LADWP.
2. ALL VALVES TO BE INSTALLED IN CONCRETE VALVE BOXES ("BROOKS 3-HL") WITH LOCKING STEEL COVERS.
3. ALL END RUNS OF LATERAL PIPE SHALL BE A MINIMUM OF 3/4" SIZE PIPE UNLESS NOTED OTHERWISE.
4. ALL IRRIGATION PIPING TO BE PURPLE NON-POTABLE TO ALLOW FOR FUTURE CONNECTION TO RECYCLED WATER SUPPLY.

BUREAU OF ENGINEERING
OFFICIAL RECORD

"THIS PLAN WAS ELECTRONICALLY SIGNED AND STAMPED."

REGISTERED PROFESSIONAL ENGINEER JUSTIN T. SMITH No. 85736 EXP: 9-30-22 CIVIL STATE OF CALIFORNIA

BUREAU OF ENGINEERING
ENGINEERING
CITY OF LOS ANGELES

NO.	REVISIONS:	DATE	BY:

BUILDING NO.

INDEX NO. MF-300501

CITY OF LOS ANGELES DEPARTMENT OF PUBLIC WORKS

TED ALLEN, P.E.
CITY ENGINEER

ENGINEER:	JUSTIN SMITH	LIC. NO. C-85736	DATE: 07/11/22
DESIGNED BY:	HEATH PRAY		
DRAWN BY:	HEATH PRAY		
CHECKED BY:	NATE SCHREINER		
APPROVED BY:	JASON L. FUSSEL		

DESIGN GROUP

PROJECT: SIXTH STREET PARK, ARTS AND RIVER CONNECTIVITY IMPROVEMENTS (PARC)

ADDRESS: SIXTH STREET OVER THE LOS ANGELES RIVER

SHEET TITLE: IRRIGATION PLAN SHEET 3

VERT. CONTROL: BM # 24-0070, 1929 (NGVD29) - 1996 ADJUSTMENT
HORIZ. CONTROL: GPS, PID AE 1704, EPOCH 1991.35

PLANS PREPARED BY:
TETRA TECH, INC.
707 WILSHIRE BLVD. 23RD FLR.
LOS ANGELES, CA 90017
PHONE: (213) 239-8866

WORK ORDER NO. E7002350
FILE NO. --
DRAWING NO. I-003
SHEET 156 OF 295 SHEETS

7/7/2022 10:39:05 AM - O:\PROJECT\SRVINE\20040\200-20043-17001\CAD\SHEETFILES\I-003_IRRIGATION PLAN.DWG - PRAY, HEATH

REVISION DATES (DESIGN STAGE ONLY)

THE CITY OF LOS ANGELES OR ITS OFFICERS OR AGENTS SHALL NOT BE RESPONSIBLE FOR THE ACCURACY OR COMPLETENESS OF ELECTRONIC COPIES OF THIS PLAN SHEET.

Sheet Version 3.0

IRRIGATION EQUIPMENT LEGEND

SYMBOL	DESCRIPTION
M	CONTRACTOR SHALL ARRANGE FOR INSTALLATION OF NEW 1.5" IRRIGATION METER SERVICE WITH LADWP FOR EACH IRRIGATION P.O.C. INDICATED HEREIN. SEE IRRIGATION NOTES FOR ADDITIONAL INFORMATION.
RP	1.5" OR 2.0" FEBCO LF825Y SERIES REDUCED PRESSURE BACKFLOW DEVICE WITH ENCLOSURE PER DETAIL I4/I-011 AND I5/I-011. CONTRACTOR SHALL DETERMINE EXACT LOCATION WITH THE CITY'S AUTHORIZED REPRESENTATIVE BEFORE INSTALLATION.
A C D E F G	CONTROLLER A, C-G: RAIN BIRD ESP-LXD 50-200 STATION CAPABLE TWO-WIRE DECODER CONTROLLER. MOUNT CONTROLLER INSIDE STAINLESS STEEL PEDESTAL ENCLOSURE PER DETAIL I1/I-011. CONTROLLER GROUNDING PER DETAIL I1/2-011, I1/3-011. CONTRACTOR SHALL DETERMINE EXACT LOCATION WITH THE PROJECT MANAGER BEFORE INSTALLATION. WEATHER SENSOR FOR CONTROLLER "G" ONLY PER DETAIL I7/I-011.
EL	120 VOLT ELECTRICAL POWER, PROVIDED BY ELECTRICIAN. CONTRACTOR SHALL COORDINATE AND VERIFY CONTROLLER PEDESTAL LOCATION IN FIELD WITH ELECTRICIAN. ELECTRICIAN SHALL ROUTE AND INSTALL ALL CONDUIT AND CONDUCTORS TO WITHIN THE CONTROLLER PEDESTAL LOCATION. IRRIGATION CONTRACTOR SHALL CONNECT IRRIGATION CONTROLLER TO ELECTRICAL STUB-OUT. CONTROLLER CIRCUIT SHALL BE SUPPLIED FROM A DEDICATED BREAKER FROM THE POWER SOURCE.
MV	BUCKNER SUPERIOR MODEL: 3100200 2" OR 3100250 2-1/2" NORMALLY OPEN SOLID BRASS MASTER VALVE. PROVIDE AND INSTALL PER MANUFACTURER'S INSTRUCTIONS. MASTER VALVE CONNECTS TO CONTROLLER USING RAIN BIRD SD-210 DECODER.
F	RAIN BIRD FS150B 1.5" OR FS200B 2" BRASS TEE FLOW SENSOR WITH RAIN BIRD SD-210 SENSOR DECODER. INSTALL PER DETAIL I7/I-010.

AREA IRRIGATED BY EPIC SYSTEM

IRRIGATION EQUIPMENT LEGEND

SYMBOL	DESCRIPTION
	REMOTE CONTROL VALVE: RAIN BIRD EFB-CP 100 OR 150 OR 200 SERIES BRASS VALVE - SEE PLAN CALLOUT FOR VALVE SIZE INSTALLER SHALL PROVIDE AND INSTALL RAIN BIRD 2-WIRE DECODERS AS INDICATED AT EACH MANIFOLD, AND PROGRAM PER MANUFACTURER'S INSTRUCTIONS. INSTALL PER DETAIL I5/I-009.
	QUICK COUPLING VALVE: 1" TWO PIECE QUICK COUPLING VALVE: RAINBIRD 44LRC, WITH 44K KEY AND SH-1 HOSE SWIVEL. PROVIDE ONE QUICK COUPLER KEY AND HOSE SWIVEL FOR EACH FIVE QUICK COUPLERS INSTALLED (MINIMUM ONE QUICK COUPLER KEY). INSTALL PER DETAIL I6/I-009.
	MAINLINE PIPING: 2-1/2" AND SMALLER SHALL BE SCH. 40 PVC; PURPLE NON-POTABLE PIPE WITH GLUED FITTINGS TYP. SEE DETAIL FOR MAINLINE SIZING IN VALVE MANIFOLDS.
	PC SCH. 40 LATERAL LINE PIPING; PURPLE NON-POTABLE PIPE, SOLVENT WELD. SIZE AS NOTED.
	PVC SLEEVE UNDER PAVING. SCHEDULE 40 PVC SLEEVE SHALL BE TWO PIPE SIZES GREATER THAN THE PIPING WHICH IS TO RUN IN THE SLEEVE, OR 4" DIA. FOR CONTROL WIRE WITHOUT MAINLINE. COVER DEPTH SHALL BE THE SAME AS THE MAINLINE OR LATER LINE. INSTALL PER DETAIL I8/I-009.
	2" TO 2-1/2" BRONZE GATE VALVE: NIBCO T-113 SOLID BRONZE, NON-RISING STEM, SOLID WEDGE TYPE OR APPROVED EQUAL. INSTALL PER DETAIL I2/I-009.
	MANIFOLD GATE VALVE. 2" TO 2-1/2" BRONZE GATE VALVE: NIBCO T-113 SOLID BRONZE, NON-RISING STEM, SOLID WEDGE TYPE OR APPROVED EQUAL. INSTALL PER DETAIL I2/I-009.

IRRIGATION HEADS LEGEND

SYMBOL	DESCRIPTION	GPM	SPACING	NOZZLE PRESSURE	PRECIP. RATE	DETAIL NUMBER
4Q 5H 5F	**RAINBIRD 5004 PLUS SERIES 40-360 DEG.** ROTOR STAINLESS STEEL RISER WITH PRS PRESSURE REGULATION AND SAM CHECK VALVE; MPR-30 GREEN NOZZLE	1.4 2.96 5.78	29'	40 PSI	--	I9/I-009
	RAINBIRD 1812-SAM-P45 SERIES POP-UP SPRAY BODY WITH MP ROTATOR NOZZLE PER LEGEND AT RIGHT WITH RADIUS AND ARC AS REQUIRED.	0.21-3.64	11'-30'	40 PSI	--	I10/I-009
	RAIN BIRD RWS-M-B-C-1401 10" (TREES), **RWS-S-B-C-1401 10"** (SHRUBS) ROOT WATERING SYSTEM ASSEMBLY WITH PRESSURE COMPENSATING BUBBLER. (#) ON PLAN = NUMBER OF UNITS PER TREE.	.25 GPH	--	--	--	I11/I-009
5Q 5H 5F 5CST	**RAIN BIRD 5 SERIES MPR STREAM BUBBLER ON RAIN BIRD 1806 SAM-PRS POP UP BODY,** 6" POP UP HEIGHT. 5Q-B QUARTER CIRCLE, 5H-B HALF CIRCLE, 5F-B FULL CIRCLE, 5CST-B DUAL STREAM; (5' RADIUS TYP.).	0.50 1.00 1.50 0.50	7'	30 PSI	--	I10/I-009
	RAIN BIRD U- SERIES NOZZLE ON RAIN BIRD SAM-PRS 1804 BODY, 4" POP UP HEIGHT. U-15Q QUARTER CIRCLE, U-15H HALF CIRCLE, U-15F FULL CIRCLE, (15' RADIUS TYP.).	0.92 1.85 3.70	15'	30 PSI	--	I10/I-009

MP ROTATOR NOZZLE LEGEND
BY HUNTER INDUSTRIES

		RADIUS
BL	MP 3000 90-210 DEG (BLUE)	22'-30'
YE	MP 3000 210-270 DEG (YELLOW)	22'-30'
GY	MP 3000 360 DEG (GRAY)	22'-30'
BK	MP 2000 90-210 DEG (BLACK)	13'-21'
GN	MP 2000 210-270 DEG (GREEN)	13'-21'
RD	MP 2000 360 DEG (RED)	13'-21'
MR	MP 1000 90-210 DEG (MAROON)	8'-15'
LB	MP 1000 210-270 DEG (LIGHT BLUE)	8'-15'
OL	MP 1000 360 DEG (OLIVE)	8'-15'
OR	MP 800 SR 90-210 DEG (ORANGE)	6'-12'
LG	MP 800 SR 360 DEG (LIME GREEN)	6'-12'
CR	MPCORNER (TURQUOISE)	8'-15'

IRRIGATION VALVE LEGEND

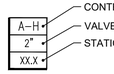

NOTES:
1. LOCATION OF BACKFLOW DEVICE AND ENCLOSURE MUST BE APPROVED BY LADWP.
2. ALL VALVES TO BE INSTALLED IN CONCRETE VALVE BOXES ("BROOKS 3-HL") WITH LOCKING STEEL COVERS.
3. ALL END RUNS OF LATERAL PIPE SHALL BE A MINIMUM OF 3/4" SIZE PIPE UNLESS NOTED OTHERWISE.
4. ALL IRRIGATION PIPING TO BE PURPLE NON-POTABLE TO ALLOW FOR FUTURE CONNECTION TO RECYCLED WATER SUPPLY.

2-WIRE SYSTEM EQUIPMENT LEGEND

1 RAIN BIRD FD-102TURF ONE VALVE DECODER. INSTALL PER MANUFACTURER'S INSTRUCTIONS.

2 RAIN BIRD FD-202TURF TWO VALVE DECODER. INSTALL PER MANUFACTURER'S INSTRUCTIONS.

4 RAIN BIRD FD-401TURF FOUR VALVE DECODER. INSTALL PER MANUFACTURER'S INSTRUCTIONS.

6 RAIN BIRD FD-601TURF SIX VALVE DECODER. INSTALL PER MANUFACTURER'S INSTRUCTIONS.

G LIGHTNING ARRESTOR AND GROUND ROD. INSTALL IN LOCATIONS SHOWN PER MANUFACTURER'S INSTRUCTIONS AND PER DETAIL I3/I-010, I4/I-010, I6/I-010.

APPROVED TWO-WIRE CABLE PER SPECIFICATIONS. ALL 2-WIRE CABLE SHALL BE INSTALLED IN 1" MIN. SCH. 80 PVC CONDUIT 24" MIN. BELOW GRADE WITH PULL BOXES @ 200' MAX.

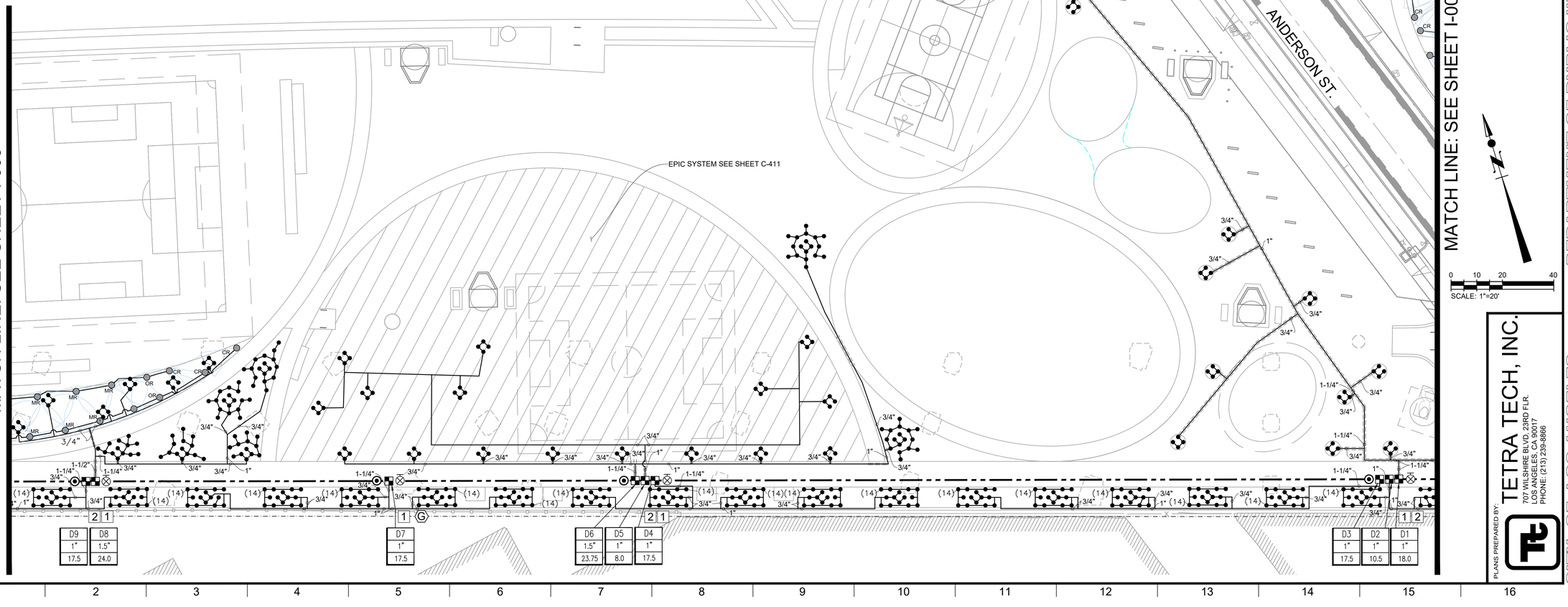

THE CITY OF LOS ANGELES OR ITS OFFICERS OR AGENTS SHALL NOT BE RESPONSIBLE FOR THE ACCURACY OR COMPLETENESS OF ELECTRONIC COPIES OF THIS PLAN SHEET.

REVISION DATES (DESIGN STAGE ONLY)

Sheet Version 3.0

BUREAU OF ENGINEERING
OFFICIAL RECORD

"THIS PLAN WAS ELECTRONICALLY SIGNED AND STAMPED"

REGISTERED PROFESSIONAL ENGINEER JUSTIN T. SMITH No. 85736 EXP: 9-30-22 CIVIL STATE OF CALIFORNIA

BUREAU OF ENGINEERING
ENGINEERING
CITY OF LOS ANGELES

NO.	REVISIONS:	DATE	BY:

BUILDING NO.

INDEX NO. MF-300501

CITY OF LOS ANGELES DEPARTMENT OF PUBLIC WORKS

CITY ENGINEER DATE: 07/11/22
TED ALLEN, P.E.
LIC. NO. C-85736

DESIGN GROUP
ENGINEER: JUSTIN SMITH
DESIGNED BY: HEATH PRAY
DRAWN BY: HEATH PRAY
CHECKED BY: NATE SCHREINER
APPROVED BY: JASON L. FUSSEL

SHEET TITLE: IRRIGATION PLAN SHEET 4
PROJECT: SIXTH STREET PARK, ARTS AND RIVER CONNECTIVITY IMPROVEMENTS (PARC)
ADDRESS: SIXTH STREET OVER THE LOS ANGELES RIVER

VERT. CONTROL: BM 12-04070, 1929 (NGVD29) - 1986 ADJUSTMENT
HORIZ. CONTROL: GPS; RID AE 1704, EPOCH 1991.35

PLANS PREPARED BY:
TETRA TECH, INC.
707 WILSHIRE BLVD, 23RD FLR.
LOS ANGELES, CA 90017
PHONE: (213) 239-8866

WORK ORDER NO. E700235D
FILE NO. --
DRAWING NO. I-004
SHEET 157 OF 295 SHEETS

7/7/2022 10:48:47 AM - O:\PROJECTS\IRVINE\20043\200-20043-17001\CAD\SHEETFILES\I-004_IRRIGATION PLAN.DWG - PRAY, HEATH

MATCH LINE: SEE SHEET I-004

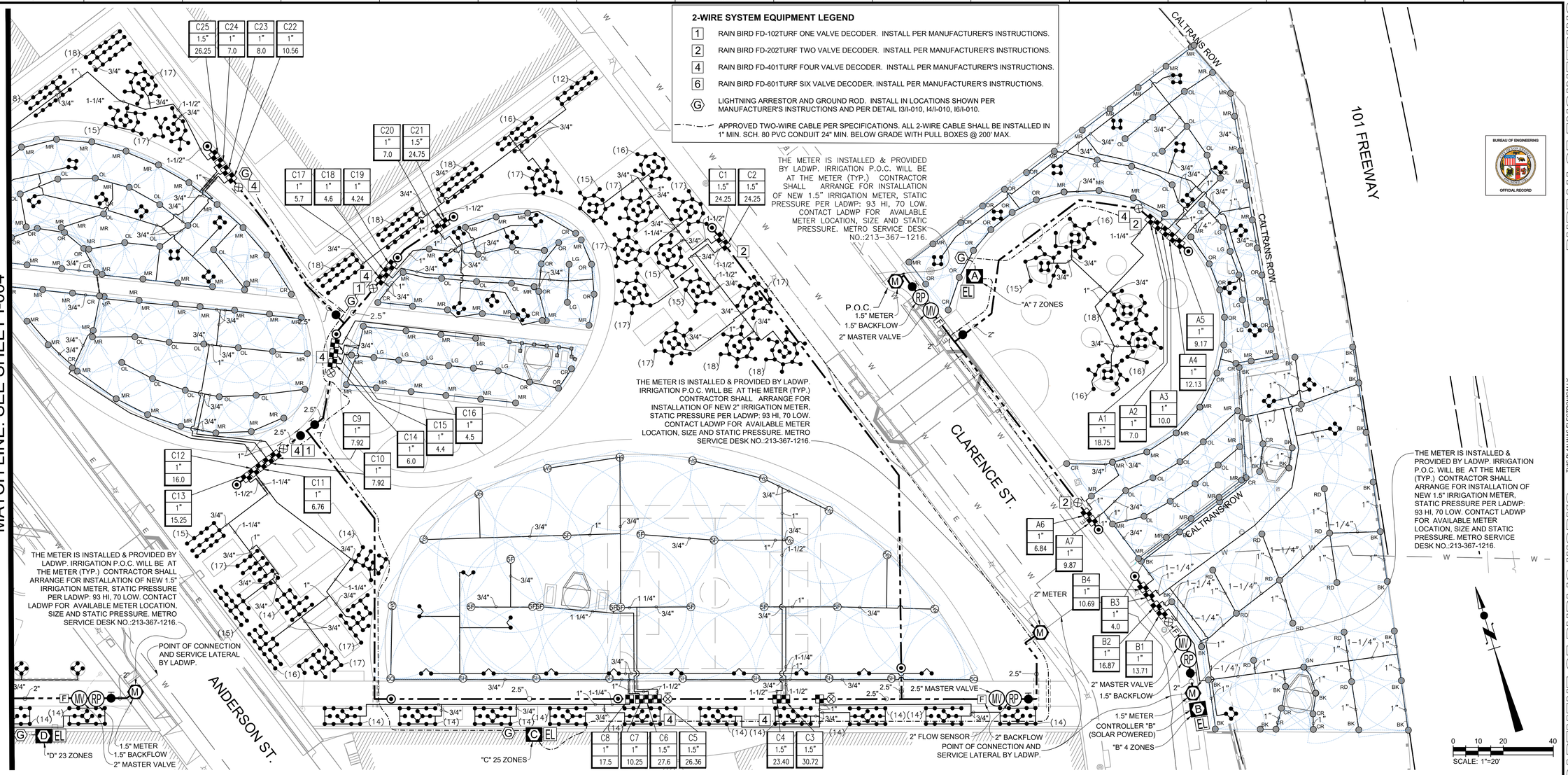

IRRIGATION EQUIPMENT LEGEND

SYMBOL	DESCRIPTION
M	CONTRACTOR SHALL ARRANGE FOR INSTALLATION OF NEW 1.5" OR 2.0" IRRIGATION METER SERVICE WITH LADWP FOR EACH IRRIGATION P.O.C. INDICATED HEREIN. SEE IRRIGATION NOTES FOR ADDITIONAL INFORMATION.
RP	1.5" OR 2.0" FEBCO LF825Y SERIES REDUCED PRESSURE BACKFLOW DEVICE WITH ENCLOSURE PER DETAIL I4/I-011 AND I5/I-011. CONTRACTOR SHALL DETERMINE EXACT LOCATION WITH THE CITY'S AUTHORIZED REPRESENTATIVE BEFORE INSTALLATION.
A C D E F G	CONTROLLER A, C-G: RAIN BIRD ESP-LXD 50-200 STATION CAPABLE TWO-WIRE DECODER CONTROLLER. MOUNT CONTROLLER INSIDE STAINLESS STEEL PEDESTAL ENCLOSURE PER DETAIL I1/I-011. CONTROLLER GROUNDING PER DETAIL I1/2-011, I1/3-011. CONTRACTOR SHALL DETERMINE EXACT LOCATION WITH THE PROJECT MANAGER BEFORE INSTALLATION. WEATHER SENSOR FOR CONTROLLER "G" ONLY PER DETAIL I7/I-011.
B	CONTROLLER H: LEIT 4004 4 STATION SOLAR POWERED CONTROLLER. POLE MOUNTED CONTROLLER WITH MANUFACTURER'S ENCLOSURE PER DETAIL I6/I-011. CONTRACTOR SHALL DETERMINE EXACT LOCATION WITH THE CITY'S AUTHORIZED REPRESENTATIVE BEFORE INSTALLATION.
EL	120 VOLT ELECTRICAL POWER, PROVIDED BY ELECTRICIAN. CONTRACTOR SHALL COORDINATE AND VERIFY CONTROLLER PEDESTAL LOCATION IN FIELD WITH ELECTRICIAN. ELECTRICIAN SHALL ROUTE AND INSTALL ALL CONDUIT AND CONDUCTORS TO WITHIN THE CONTROLLER PEDESTAL LOCATION. IRRIGATION CONTRACTOR SHALL CONNECT IRRIGATION CONTROLLER TO ELECTRICAL STUB-OUT. CONTROLLER CIRCUIT SHALL BE SUPPLIED FROM A DEDICATED BREAKER FROM THE POWER SOURCE.
MV	BUCKNER SUPERIOR MODEL: 3100200 2" OR 3100250 2-1/2" NORMALLY OPEN SOLID BRASS MASTER VALVE. PROVIDE AND INSTALL PER MANUFACTURER'S INSTRUCTIONS. MASTER VALVE CONNECTS TO CONTROLLER USING RAIN BIRD SD-210 DECODER.
F	RAIN BIRD FS150B 1.5" OR FS200B 2" BRASS TEE FLOW SENSOR WITH RAIN BIRD SD-210 SENSOR DECODER. INSTALL PER DETAIL I7/I-010.

IRRIGATION EQUIPMENT LEGEND

SYMBOL	DESCRIPTION
	REMOTE CONTROL VALVE: RAIN BIRD EFB-CP 100 OR 150 OR 200 SERIES BRASS VALVE - SEE PLAN CALLOUT FOR VALVE SIZE INSTALLER SHALL PROVIDE AND INSTALL RAIN BIRD 2-WIRE DECODERS AS INDICATED AT EACH MANIFOLD, AND PROGRAM PER MANUFACTURER'S INSTRUCTIONS. INSTALL PER DETAIL I5/I-009.
	QUICK COUPLING VALVE: 1" TWO PIECE QUICK COUPLING VALVE: RAINBIRD 44LRC, WITH 44K KEY AND SH-1 HOSE SWIVEL. PROVIDE ONE QUICK COUPLER KEY AND HOSE SWIVEL FOR EACH FIVE QUICK COUPLERS INSTALLED (MINIMUM ONE QUICK COUPLER KEY). INSTALL PER DETAIL I6/I-009.
	MAINLINE PIPING: 2-1/2" AND SMALLER SHALL BE SCH. 40 PVC; PURPLE NON-POTABLE PIPE WITH GLUED FITTINGS TYP. SEE DETAIL FOR MAINLINE SIZING IN VALVE MANIFOLDS.
	PC SCH. 40 LATERAL LINE PIPING; PURPLE NON-POTABLE PIPE, SOLVENT WELD. SIZE AS NOTED.
	PVC SLEEVE UNDER PAVING. SCHEDULE 40 PVC SLEEVE SHALL BE TWO PIPE SIZES GREATER THAN THE PIPING WHICH IS TO RUN IN THE SLEEVE, OR 4" DIA. FOR CONTROL WIRE WITHOUT MAINLINE. COVER DEPTH SHALL BE THE SAME AS THE MAINLINE OR LATER LINE. INSTALL PER DETAIL I8/I-009.
	2" TO 2-1/2" BRONZE GATE VALVE: NIBCO T-113 SOLID BRONZE, NON-RISING STEM, SOLID WEDGE TYPE OR APPROVED EQUAL. INSTALL PER DETAIL I2/I-009.
	MANIFOLD GATE VALVE. 2" TO 2-1/2" BRONZE GATE VALVE: NIBCO T-113 SOLID BRONZE, NON-RISING STEM, SOLID WEDGE TYPE OR APPROVED EQUAL. INSTALL PER DETAIL I2/I-009.

IRRIGATION HEADS LEGEND

SYMBOL	DESCRIPTION	GPM	SPACING	NOZZLE PRESSURE	PRECIP RATE	DETAIL NUMBER
6Q 5H 5F	**RAINBIRD 5004 PLUS SERIES 40-360 DEG.** ROTOR STAINLESS STEEL RISER WITH PRS PRESSURE REGULATION AND SAM CHECK VALVE; MPR-30 GREEN NOZZLE	1.4 2.96 5.78	29'	40 PSI	--	I9/I-009
	RAINBIRD 1812-SAM-P45 SERIES POP-UP SPRAY BODY WITH MP ROTATOR NOZZLE PER LEGEND AT RIGHT WITH RADIUS AND ARC AS REQUIRED.	0.21-3.64	11'-30'	40 PSI	--	I10/I-009
	RAIN BIRD RWS-M-B-C-1401 18" (TREES), **RWS-S-B-C-1401 10"** (SHRUBS) ROOT WATERING SYSTEM ASSEMBLY WITH PRESSURE COMPENSATING BUBBLER. (#) ON PLAN = NUMBER OF UNITS PER TREE.	.25 GPH	--	--	--	I11/I-009
5Q 5H 5F 5CST	**RAIN BIRD 5 SERIES MPR STREAM BUBBLER ON RAIN BIRD 1806 SAM-PRS POP UP BODY,** 6" POP UP HEIGHT. 5Q-B QUARTER CIRCLE, 5H-B HALF CIRCLE, 5F-B FULL CIRCLE, 5CST-B DUAL STREAM; (5' RADIUS TYP.).	0.50 1.00 1.50 0.50	7'	30 PSI	--	I10/I-009
	RAIN BIRD U- SERIES NOZZLE ON RAIN BIRD SAM-PRS 1804 BODY, 4" POP UP HEIGHT. U-15Q QUARTER CIRCLE, U-15H HALF CIRCLE, U-15F FULL CIRCLE, (15' RADIUS TYP.).	0.92 1.85 3.70	15'	30 PSI	--	I10/I-009

MP ROTATOR NOZZLE LEGEND BY HUNTER INDUSTRIES

		RADIUS
BL	MP 3000 90-210 DEG (BLUE)	22'-30'
YE	MP 3000 210-270 DEG (YELLOW)	22'-30'
GY	MP 3000 360 DEG (GRAY)	22'-30'
BK	MP 2000 90-210 DEG (BLACK)	13'-21'
GN	MP 2000 210-270 DEG (GREEN)	13'-21'
RD	MP 2000 360 DEG (RED)	13'-21'
MR	MP 1000 90-210 DEG (MAROON)	8'-15'
LB	MP 1000 210-270 DEG (LIGHT BLUE)	8'-15'
OL	MP 1000 360 DEG (OLIVE)	8'-15'
OR	MP 800 SR 90-210 DEG (ORANGE)	6'-12'
LG	MP 800 SR 360 DEG (LIME GREEN)	6'-12'
CR	MPCORNER (TURQUOISE)	8'-15'

IRRIGATION VALVE LEGEND

A–H • CONTROLLER & STATION NO.
2" • VALVE SIZE
XX.X • STATION GPM

NOTES:
1. LOCATION OF BACKFLOW DEVICE AND ENCLOSURE MUST BE APPROVED BY LADWP.
2. ALL VALVES TO BE INSTALLED IN CONCRETE VALVE BOXES ("BROOKS 3-HL") WITH LOCKING STEEL COVERS.
3. ALL END RUNS OF LATERAL PIPE SHALL BE A MINIMUM OF 3/4" SIZE PIPE UNLESS NOTED OTHERWISE.
4. ALL IRRIGATION PIPING TO BE PURPLE NON-POTABLE TO ALLOW FOR FUTURE CONNECTION TO RECYCLED WATER SUPPLY.

THE METER IS INSTALLED & PROVIDED BY LADWP. IRRIGATION P.O.C. WILL BE AT THE METER (TYP.) CONTRACTOR SHALL ARRANGE FOR INSTALLATION OF NEW 1.5" IRRIGATION METER, STATIC PRESSURE PER LADWP: 93 HI, 70 LOW. CONTACT LADWP FOR AVAILABLE METER LOCATION. SIZE AND STATIC PRESSURE. METRO SERVICE DESK NO.:213-367-1216.

PLANS PREPARED BY:
TETRA TECH, INC.
707 WILSHIRE BLVD. 23RD FLR.
LOS ANGELES, CA 90017
PHONE: (213) 239-8866

BUREAU OF ENGINEERING
OFFICIAL RECORD

ENGINEERING
CITY OF LOS ANGELES

BUREAU OF ENGINEERING
DEPARTMENT OF PUBLIC WORKS
CITY OF LOS ANGELES

NO.	REVISIONS:	DATE	BY:

BUILDING NO.

INDEX NO. MF-300501

"THIS PLAN WAS ELECTRONICALLY SIGNED AND SEALED"

REGISTERED PROFESSIONAL ENGINEER ★ JUSTIN T. SMITH ★ No. 85736 EXP: 9-30-22 CIVIL STATE OF CALIFORNIA

CITY ENGINEER: TED ALLEN, P.E.
DESIGN GROUP ENGINEER: JUSTIN SMITH
LIC. NO. C-85736
DATE: 07/11/22
DESIGNED BY: HEATH PRAY
DRAWN BY: HEATH PRAY
CHECKED BY: NATE SCHREINER
APPROVED BY: JASON L. FUSSEL

HORIZ. CONTROL: GPS; PRID AE 1704, EPOCH 1991.35
VERT. CONTROL: BM 12-04070, 1929 (NGVD29) - 1985 ADJUSTMENT

SHEET TITLE: IRRIGATION PLAN SHEET 5

PROJECT: SIXTH STREET PARK, ARTS AND RIVER CONNECTIVITY IMPROVEMENTS (PARC)

ADDRESS: SIXTH STREET OVER THE LOS ANGELES RIVER

WORK ORDER NO. E700235D
FILE NO. --
DRAWING NO. I-005
SHEET 158 OF 295 SHEETS

7/7/2022 1:29:49 PM - O:\PROJECTS\IRVINE\20043\200-20043-T7001\CAD\SHEETFILES\I-005_IRRIGATION PLAN.DWG - PRAY, HEATH

REVISION DATES (DESIGN STAGE ONLY)

THE CITY OF LOS ANGELES OR ITS OFFICERS OR AGENTS SHALL NOT BE RESPONSIBLE FOR THE ACCURACY OR COMPLETENESS OF ELECTRONIC COPIES OF THIS PLAN SHEET.

Sheet Version 3.0

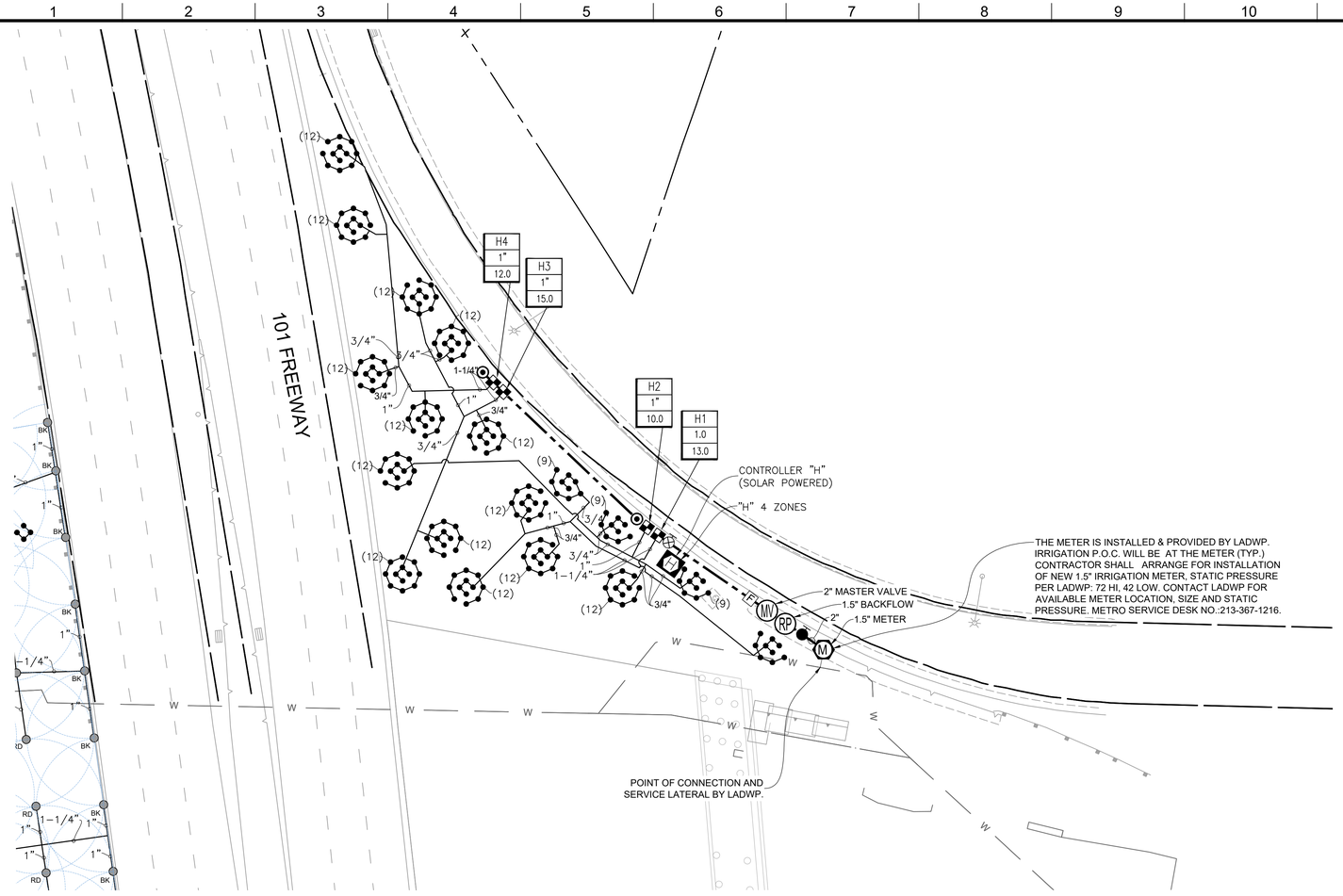

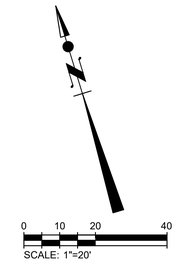

IRRIGATION EQUIPMENT LEGEND

SYMBOL	DESCRIPTION
M	CONTRACTOR SHALL ARRANGE FOR INSTALLATION OF NEW 1.5" IRRIGATION METER SERVICE WITH LADWP FOR EACH IRRIGATION P.O.C. INDICATED HEREIN. SEE IRRIGATION NOTES FOR ADDITIONAL INFORMATION.
RP	1.5" OR 2.0" FEBCO LF825Y SERIES REDUCED PRESSURE BACKFLOW DEVICE WITH ENCLOSURE PER DETAIL I4/I-011 AND I5/I-011. CONTRACTOR SHALL DETERMINE EXACT LOCATION WITH THE CITY'S AUTHORIZED REPRESENTATIVE BEFORE INSTALLATION.
H	CONTROLLER H: LEIT 4004 4 STATION SOLAR POWERED CONTROLLER. POLE MOUNTED CONTROLLER WITH MANUFACTURER'S ENCLOSURE PER DETAIL I6/I-011. INCLUDE MINI CLIK WEATHER SENSOR AND SKIT8821-4 SENSOR ADAPTOR FOR CONTROLLER "H" ONLY PER DETAIL I7/I-011. CONTRACTOR SHALL DETERMINE EXACT LOCATION WITH THE CITY'S AUTHORIZED REPRESENTATIVE BEFORE INSTALLATION.
MV	BUCKNER SUPERIOR MODEL: 3100200 2" OR 3100250 2-1/2" NORMALLY OPEN SOLID BRASS MASTER VALVE. PROVIDE AND INSTALL PER MANUFACTURER'S INSTRUCTIONS. MASTER VALVE CONNECTS TO CONTROLLER USING RAIN BIRD SD-210 DECODER.
F	RAIN BIRD FS150B 1-1/2" BRASS TEE FLOW SENSOR WITH RAIN BIRD SD-210 SENSOR DECODER. INSTALL PER DETAIL I7/I-010.

IRRIGATION EQUIPMENT LEGEND

SYMBOL	DESCRIPTION
	REMOTE CONTROL VALVE: RAIN BIRD EFB-CP 100 OR 150 OR 200 SERIES BRASS VALVE - SEE PLAN CALLOUT FOR VALVE SIZE INSTALLER SHALL PROVIDE AND INSTALL RAIN BIRD 2-WIRE DECODERS AS INDICATED AT EACH MANIFOLD, AND PROGRAM PER MANUFACTURER'S INSTRUCTIONS. INSTALL PER DETAIL I5/I-009.
	QUICK COUPLING VALVE: 1" TWO PIECE QUICK COUPLING VALVE: RAINBIRD 44LRC, WITH 44K KEY AND SH-1 HOSE SWIVEL. PROVIDE ONE QUICK COUPLER KEY AND HOSE SWIVEL FOR EACH FIVE QUICK COUPLERS INSTALLED (MINIMUM ONE QUICK COUPLER KEY). INSTALL PER DETAIL I6/I-009.
	MAINLINE PIPING: 2-1/2" AND SMALLER SHALL BE SCH. 40 PVC; PURPLE NON-POTABLE PIPE WITH GLUED FITTINGS TYP. SEE DETAIL FOR MAINLINE SIZING IN VALVE MANIFOLDS.
	PC SCH. 40 LATERAL LINE PIPING; PURPLE NON-POTABLE PIPE, SOLVENT WELD. SIZE AS NOTED.
	PVC SLEEVE UNDER PAVING. SCHEDULE 40 PVC SLEEVE SHALL BE TWO PIPE SIZES GREATER THAN THE PIPING WHICH IS TO RUN IN THE SLEEVE, OR 4" DIA. FOR CONTROL WIRE WITHOUT MAINLINE. COVER DEPTH SHALL BE THE SAME AS THE MAINLINE OR LATER LINE. INSTALL PER DETAIL I8/I-009.
	2" TO 2-1/2" BRONZE GATE VALVE: NIBCO T-113 SOLID BRONZE, NON-RISING STEM, SOLID WEDGE TYPE OR APPROVED EQUAL. INSTALL PER DETAIL I2/I-009.
	MANIFOLD GATE VALVE. 2" TO 2-1/2" BRONZE GATE VALVE: NIBCO T-113 SOLID BRONZE, NON-RISING STEM, SOLID WEDGE TYPE OR APPROVED EQUAL. INSTALL PER DETAIL I2/I-009.

IRRIGATION HEADS LEGEND

SYMBOL	DESCRIPTION	GPM	SPACING	NOZZLE PRESSURE	PRECIP. RATE	DETAIL NUMBER
4Q 3Q 2Q	**RAINBIRD 5004 PLUS SERIES 40-360 DEG.** ROTOR STAINLESS STEEL RISER WITH PRS PRESSURE REGULATION AND SAM CHECK VALVE; MPR-30 GREEN NOZZLE	1.4 2.96 5.78	29'	40 PSI	--	I9/I-009
	RAINBIRD 1812-SAM-P45 SERIES POP-UP SPRAY BODY WITH MP ROTATOR NOZZLE PER LEGEND AT RIGHT WITH RADIUS AND ARC AS REQUIRED.	0.21-3.64	11'-30'	40 PSI	--	I10/I-009
	RAIN BIRD RWS-M-B-C-1401 18" (TREES), **RWS-S-B-C-1401 10"** (SHRUBS) ROOT WATERING SYSTEM ASSEMBLY WITH PRESSURE COMPENSATING BUBBLER. (#) ON PLAN = NUMBER OF UNITS PER TREE.	.25 GPH	--	--	--	I11/I-009
5Q 5H 5F 5CST	**RAIN BIRD 5 SERIES MPR STREAM BUBBLER ON RAIN BIRD 1806 SAM-PRS POP UP BODY,** 6" POP UP HEIGHT. 5Q-B QUARTER CIRCLE, 5H-B HALF CIRCLE, 5F-B FULL CIRCLE, 5CST-B DUAL STREAM; (5' RADIUS TYP.).	0.50 1.00 1.50 0.50	7'	30 PSI	--	I10/I-009
U	**RAIN BIRD U- SERIES NOZZLE ON RAIN BIRD SAM-PRS 1804 BODY**, 4" POP UP HEIGHT. U-15Q QUARTER CIRCLE, U-15H HALF CIRCLE, U-15F FULL CIRCLE, (15' RADIUS TYP.).	0.92 1.85 3.70	15'	30 PSI	--	I10/I-009

MP ROTATOR NOZZLE LEGEND
BY HUNTER INDUSTRIES

		RADIUS
BL	MP 3000 90-210 DEG (BLUE)	22'-30'
YE	MP 3000 210-270 DEG (YELLOW)	22'-30'
GY	MP 3000 360 DEG (GRAY)	22'-30'
BK	MP 2000 90-210 DEG (BLACK)	13'-21'
GN	MP 2000 210-270 DEG (GREEN)	13'-21'
RD	MP 2000 360 DEG (RED)	13'-21'
MR	MP 1000 90-210 DEG (MAROON)	8'-15'
LB	MP 1000 210-270 DEG (LIGHT BLUE)	8'-15'
OL	MP 1000 360 DEG (OLIVE)	8'-15'
OR	MP 800 SR 90-210 DEG (ORANGE)	6'-12'
LG	MP 800 SR 360 DEG (LIME GREEN)	6'-12'
CR	MPCORNER (TURQUOISE)	8'-15'

IRRIGATION VALVE LEGEND

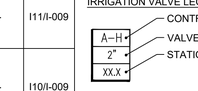

NOTES:
1. LOCATION OF BACKFLOW DEVICE AND ENCLOSURE MUST BE APPROVED BY LADWP.
2. ALL VALVES TO BE INSTALLED IN CONCRETE VALVE BOXES ("BROOKS 3-HL") WITH LOCKING STEEL COVERS.
3. ALL END RUNS OF LATERAL PIPE SHALL BE A MINIMUM OF 3/4" SIZE PIPE UNLESS NOTED OTHERWISE.
4. ALL IRRIGATION PIPING TO BE PURPLE NON-POTABLE TO ALLOW FOR FUTURE CONNECTION TO RECYCLED WATER SUPPLY.
5. LOCATE WEATHER SENSOR NEAR CONTROLLER 'H' IN A LOCATION THAT WILL BE UNOBSTRUCTED BY FUTURE TREE CANOPY GROWTH.

THE CITY OF LOS ANGELES OR ITS OFFICERS OR AGENTS SHALL NOT BE RESPONSIBLE FOR THE ACCURACY OR COMPLETENESS OF ELECTRONIC COPIES OF THIS PLAN SHEET.

DESIGN DATES
(DESIGN STAGE ONLY)

Sheet Version 3.0

PLANS PREPARED BY:
TETRA TECH, INC.
707 WILSHIRE BLVD, 23RD FLR.
LOS ANGELES, CA 90017
PHONE: (213) 239-8866

CITY OF LOS ANGELES DEPARTMENT OF PUBLIC WORKS BUREAU OF ENGINEERING

VERT. CONTROL: BM 12-04070, 1929 (NGVD29) - 1988 ADJUSTMENT
HORIZ. CONTROL: GPS, PID AE 1704, EPOCH 1991.35

SHEET TITLE: IRRIGATION PLAN SHEET 6

PROJECT: SIXTH STREET PARK, ARTS AND RIVER CONNECTIVITY IMPROVEMENTS (PARC)

ADDRESS: SIXTH STREET OVER THE LOS ANGELES RIVER

CITY ENGINEER
LIC. NO. C-85736
DATE: 07/11/22

DESIGN GROUP
ENGINEER: JUSTIN SMITH
DESIGNED BY: HEATH PRAY
DRAWN BY: HEATH PRAY
CHECKED BY: NATE SCHREINER
APPROVED BY: JASON L. FUSSELL

TED ALLEN, P.E.

NO.	REVISIONS:	DATE	BY:

BUILDING NO.

INDEX NO. MF-300501

ENGINEERING
CITY OF LOS ANGELES

REGISTERED PROFESSIONAL ENGINEER
JUSTIN T. SMITH
No. 85736
EXP: 9-30-22
CIVIL
STATE OF CALIFORNIA

"THIS PLAN WAS ELECTRONICALLY SIGNED AND SEALED"

BUREAU OF ENGINEERING
OFFICIAL RECORD

WORK ORDER NO.
E700235D

FILE NO.
--

DRAWING NO.
I-006

SHEET 159 OF 295 SHEETS

7/7/2022 1:39:21 PM - O:\PROJECTS\IRVINE\20043\200-20043-17001\CAD\SHEETFILES\I-006_IRRIGATION PLAN.DWG - PRAY, HEATH

IRRIGATION NOTES:

1. THE IRRIGATION SYSTEM DESIGN IS BASED ON A MINIMUM OPERATING PRESSURE OF 40 P.S.I. AND A MAXIMUM FLOW DEMAND OF XX G.P.M. THE CONTRACTOR SHALL VERIFY AVAILABLE WATER PRESSURE PRIOR TO CONSTRUCTION, AND REPORT ANY DIFFERENCE BETWEEN WATER PRESSURE AND AVAILABLE FLOW INDICATED ON THE DRAWINGS AND THE ACTUAL READING AT THE IRRIGATION POINT OF CONNECTION IMMEDIATELY TO THE PROJECT MANAGER.

2. BEFORE COMMENCING ANY EXCAVATION, THE CONTRACTOR SHALL OBTAIN AN UNDERGROUND SERVICE ALERT I.D. NUMBER BY CALLING 1-800-422-4133. PROVIDE TWO (2) WORKING DAYS AFTER THE NUMBER IS OBTAINED AND BEFORE THE EXCAVATION WORK IS STARTED SO THAT UTILITY OWNERS CAN BE NOTIFIED.

3. THE CONTRACTOR SHALL VERIFY THE LOCATIONS OF ALL EXISTING UTILITIES, STRUCTURES AND SERVICES BEFORE COMMENCING WORK. THE LOCATIONS OF ANY UTILITIES, STRUCTURES AND SERVICES SHOWN IN THESE PLANS ARE APPROXIMATE ONLY. ANY DISCREPANCIES BETWEEN THESE PLANS AND ACTUAL FIELD CONDITIONS SHALL BE REPORTED TO THE PROJECT MANAGER IMMEDIATELY. THE CONTRACTOR SHALL PROMPTLY REPAIR OR REPLACE ANY EXISTING OR NEWLY CONSTRUCTED UTILITIES OR SITE FEATURES DAMAGED BY HIS WORK AT HIS OWN EXPENSE.

4. THE CONTRACTOR SHALL NOT WILLFULLY INSTALL ANY EQUIPMENT AS SHOWN ON THE PLANS WHEN IT IS OBVIOUS IN THE FIELD THAT CONDITIONS OR OBSTRUCTIONS EXIST THAT WERE UNKNOWN AT THE TIME THESE PLANS WERE PREPARED. CONTRACTOR SHALL IMMEDIATELY NOTIFY THE PROJECT MANAGER OF ANY SUCH CONDITIONS PRIOR TO PERFORMING ANY AFFECTED WORK. IN THE EVENT THAT THIS NOTIFICATION IS NOT GIVEN, THE CONTRACTOR SHALL ASSUME FULL RESPONSIBILITY FOR ANY NECESSARY MODIFICATIONS TO COMPLETED WORK.

5. THIS DESIGN IS DIAGRAMMATIC. ALL PIPING, VALVES, ETC. SHOWN WITHIN PAVED AREAS ARE FOR CLARITY ONLY AND SHALL BE INSTALLED IN PLANTING AREAS. SET ALL VALVES AND QUICK COUPLERS ADJACENT TO WALKS OR PAVED SURFACES PER DETAILS. ALL IRRIGATION PRESSURE AND LATERAL LINES AND CONTROL WIRING THAT PASS UNDER PAVING SHALL BE SLEEVED PER IRRIGATION SPECIFICATIONS.

6. CONTRACTOR SHALL COORDINATE HIS WORK WITH OTHER CONTRACTORS FOR THE LOCATION AND INSTALLATION OF PIPE SLEEVES AND LATERALS UNDER PAVING IN A TIMELY MANNER. SEE TRENCHING DETAIL FOR SLEEVING REQUIREMENTS.

7. 2-WIRE CABLE CONDUIT SHALL GENERALLY FOLLOW MAINLINE WHERE POSSIBLE. CONTRACTOR SHALL SUBMIT PROPOSED LOCATION OF 2-WIRE CONDUIT RUNS AND PULL BOXES FOR APPROVAL BY PROJECT ENGINEER PRIOR TO INSTALLATION.

8. THE CONTRACTOR SHALL FLUSH AND PRESSURE TEST ALL MAINLINES PER LANDSCAPE CONSTRUCTION NOTES. CONTRACTOR SHALL FLUSH ALL LATERAL LINES AND IRRIGATION HEADS PER THE SPECIFICATIONS.

9. THE INTENT OF THESE IRRIGATION PLANS IS TO PROVIDE 100% COVERAGE TO ALL PLANTING AREAS. AS PART OF THE SCOPE OF WORK, CONTRACTOR SHALL PROVIDE ANY ADDITIONAL HEADS, SPECIAL NOZZLES, OR PATTERNS TO ACHIEVE PROPER COVERAGE WITH A MINIMUM OF OVERSPRAY AT NO ADDITIONAL COST TO THE CITY.

10. UPON COMPLETION OF INSTALLATION, CONTRACTOR SHALL CONDUCT A COVERAGE TEST PER LANDSCAPE CONSTRUCTION NOTES. CONTRACTOR SHALL NOTIFY PROJECT MANAGER TO REQUEST THE TEST, WHICH WILL BE SCHEDULED AT THE SOONEST DATE POSSIBLE PER AVAILABILITY OF RAP AND BOE STAFF.

11. CONTRACTOR SHALL ARRANGE FOR THE INSTALLATION OF WATER IRRIGATION METER. CONTRACTOR SHALL COORDINATE WITH PROJECT MANAGER TO ARRANGE FOR PAYMENT OF ALL RELATED PERMIT FEES. CITY WILL PROVIDE REIMBURSEMENT TO CONTRACTOR FOR THESE FEES.

12. REFER TO IRRIGATION SYSTEM SPECIFICATIONS FOR ADDITIONAL INFORMATION REGARDING THIS SECTION OF WORK.

13. THIS PLANNED IRRIGATION SYSTEM IS INTENDED FOR FUTURE RECLAIMED WATER USE. ENSURE IRRIGATION EQUIPMENT IS PROPERLY IDENTIFIED AS REQUIRED FOR RECLAIMED WATER USE.

14. ALL SPRAY HEADS AND ROTORS SHALL BE FITTED WITH NON-POTABLE INDICATING COVERS AT THE TIME WHEN THE IRRIGATION SYSTEM IS CONVERTED TO RECYCLED WATER. ALL VALVE BOXES SHALL SHALL BE FITTED WITH NON-POTABLE INDICATING LABELS AT THE TIME WHEN THE IRRIGATION SYSTEM IS CONVERTED TO RECYCLED WATER.

15. PLACE ALL POP-UP SPRINKLERS 2 FEET FROM ALL CURBS AND WALKS AND FLUSH WITH FINISH GRADE.

16. ADJUST NOZZLES TO MAXIMIZE COVERAGE AND MINIMIZE OVER SPRAY.

17. #12 TRACER WIRE TO BE SET OVER THE TOP OF ALL MAIN AND LATERAL LINES AND INTO VALVE BOXES PRIOR TO BACKFILLING TRENCHES.

18. PROVIDE NECESSARY SLEEVING UNDER ALL ROADS, DRIVES AND WALKWAYS WHETHER SPECIFICALLY INDICATED ON PLANS OR NOT. MARK LOCATION OF SLEEVES AND TAPE ENDS. EXTEND SLEEVE MIN. 6" BEYOND EDGE OF PAVING, COORDINATE SLEEVING WITH ALL UTILITIES ENCOUNTERED THROUGH THE SCOPE OF WORK.

19. LOCATE PIPE NEAR PERMANENT STRUCTURES WHERE POSSIBLE, I.E. ALONG EDGES OF SIDEWALKS. LEAVE PIPE SIZING FACE UP TO FACILITATE REPAIR.

20. CONTRACTOR SHALL PROVIDE AND INSTALL ELECTRICAL CONNECTION TO CONTROLLER AS REQUIRED. COMPLY WITH ALL APPLICABLE CODES.

21. PRESSURE REGULATING DEVICES ARE REQUIRED IF WATER PRESSURE IS BELOW OR EXCEEDS THE RECOMMENDED PRESSURE OF THE SPECIFIED IRRIGATION DEVICES.

22. CHECK VALVES OR ANTI-DRAIN VALVES ARE REQUIRED ON ALL SPRINKLER HEADS WHERE LOW POINT DRAINAGE COULD OCCUR.

23. OVERHEAD IRRIGATION SHALL NOT BE PERMITTED WITHIN 24-INCHES OF ANY NON-PERMEABLE SURFACE.

24. A DIAGRAM OF THE IRRIGATION PLAN SHOWING HYDROZONES SHALL BE KEPT WITH THE IRRIGATION CONTROLLER FOR SUBSEQUENT MANAGEMENT PURPOSES.

25. A CERTIFICATE OF COMPLETION SHALL BE FILLED OUT AND CERTIFIED BY EITHER THE SIGNER OF THE IRRIGATION PLANS, OR THE LICENSED LANDSCAPE CONTRACTOR FOR THE PROJECT.

26. AN IRRIGATION AUDIT REPORT SHALL BE COMPLETED AT THE TIME OF INSPECTION.

DESIGNER STATEMENT: "I HAVE COMPLIED WITH THE CRITERIA OF THE ORDINANCE AND APPLIED THEM FOR THE EFFICIENT USE OF WATER IN THE LANDSCAPE DESIGN PLANS."

CRITICAL ZONE - SYSTEM PRESSURE LOSS CALCULATION

ZONE A	
CRITICAL VALVE: A5 LONGEST DIST/ HIGHEST ELEV (9.17 GPM)	PSI
STARTING STATIC PRESSURE:	93 HI, 70 LOW
TOTAL PIPE PSI LOSS	1.53
FITTING LOSS:	0.153
MASTER VALVE LOSS 2":	0
GATE VALVE LOSS 2" (X2):	2.0
CONTROL VALVE LOSS 1":	0.7
BACKFLOW LOSS:	12.0
METER LOSS 1.5":	0
STATIC PRESSURE (LOSS DUE TO ELEV.):	6.062
TOTAL SYSTEM LOSS:	22.45
HEAD PRESSURE AVAILABLE:	67.55 HI, 43.55 LOW

ZONE B	
CRITICAL VALVE: B4 LONGEST DIST/ HIGHEST ELEV (10.69 GPM)	PSI
STARTING STATIC PRESSURE:	93 HI, 70 LOW
TOTAL PIPE PSI LOSS	1.37
FITTING LOSS:	0.137
MASTER VALVE LOSS 2":	0
GATE VALVE LOSS 2" (X2):	2.0
CONTROL VALVE LOSS 1":	0.8
BACKFLOW LOSS:	12.0
METER LOSS 1.5":	0
STATIC PRESSURE (LOSS DUE TO ELEV.):	5.196
TOTAL SYSTEM LOSS:	21.50
HEAD PRESSURE AVAILABLE:	68.50 HI, 44.50 LOW

ZONE C	
CRITICAL VALVE: C25 LONGEST DIST/ HIGHEST GPM (26.25 GPM)	PSI
STARTING STATIC PRESSURE:	93 HI, 70 LOW
TOTAL PIPE PSI LOSS	3.32
FITTING LOSS:	0.332
MASTER VALVE LOSS 2":	0
GATE VALVE LOSS 2" (X3):	3.0
CONTROL VALVE LOSS 1.5":	2.7
BACKFLOW LOSS:	12.0
METER LOSS 1.5":	0
STATIC PRESSURE (LOSS DUE TO ELEV.):	0.866
TOTAL SYSTEM LOSS:	22.21
HEAD PRESSURE AVAILABLE:	67.79 HI, 43.79 LOW

ZONE D	
CRITICAL VALVE: D23 LONGEST DIST/ HIGHEST GPM (11.69 GPM)	PSI
STARTING STATIC PRESSURE:	93 HI, 70 LOW
TOTAL PIPE PSI LOSS	3.65
FITTING LOSS:	0.365
MASTER VALVE LOSS 2":	0
GATE VALVE LOSS 2" (X3):	3.0
CONTROL VALVE LOSS 1":	0.9
BACKFLOW LOSS:	12.0
METER LOSS 1.5":	0.6
STATIC PRESSURE (LOSS DUE TO ELEV.):	3.464
TOTAL SYSTEM LOSS:	23.97
HEAD PRESSURE AVAILABLE:	66.03 HI, 42.03 LOW

ZONE E	
CRITICAL VALVE: E7 LONGEST DIST, HIGHEST GPM (17.79 GPM)	PSI
STARTING STATIC PRESSURE:	90 HI, 66 LOW
TOTAL PIPE PSI LOSS	4.03
FITTING LOSS:	0.403
MASTER VALVE LOSS 2":	0
GATE VALVE LOSS 2" (X3):	3.0
CONTROL VALVE LOSS 1":	1.7
BACKFLOW LOSS:	12.0
METER LOSS 1.5"	0.6
STATIC PRESSURE (ADD DUE TO ELEV.):	0.433
TOTAL SYSTEM LOSS:	22.16
HEAD PRESSURE AVAILABLE:	67.84 HI, 43.84 LOW

ZONE F	
CRITICAL VALVE: F5 HIGHEST GPM / HIGHEST ELEV (33.3 GPM)	PSI
STARTING STATIC PRESSURE:	90 HI, 66 LOW
TOTAL PIPE PSI LOSS	4.02
FITTING LOSS:	0.402
MASTER VALVE LOSS 2":	0
GATE VALVE LOSS 2" (X3):	3.0
CONTROL VALVE LOSS 1.5":	2.54
BACKFLOW LOSS:	12.0
METER LOSS 1.5":	1.2
STATIC PRESSURE (LOSS DUE TO ELEV.):	2.598
TOTAL SYSTEM LOSS:	25.76
HEAD PRESSURE AVAILABLE:	64.24 HI, 40.24 LOW

ZONE G	
CRITICAL VALVE: G14 LONGEST DIST/ HIGHEST GPM (23.0 GPM)	PSI
STARTING STATIC PRESSURE:	90 HI, 66 LOW
TOTAL PIPE PSI LOSS	3.625
FITTING LOSS:	0.3625
MASTER VALVE LOSS 2":	2.97
GATE VALVE LOSS 2" (X3):	3.0
CONTROL VALVE LOSS 1.5":	2.48
BACKFLOW LOSS:	12.0
METER LOSS 1.5":	1.1
STATIC PRESSURE (LOSS DUE TO ELEV.):	0
TOTAL SYSTEM LOSS:	25.53
HEAD PRESSURE AVAILABLE:	64.46 HI, 40.46 LOW

ZONE H	
CRITICAL VALVE: H2 LONGEST DIST (22.5 GPM)	PSI
STARTING STATIC PRESSURE:	72 HI, 42 LOW
TOTAL PIPE PSI LOSS	4.74
FITTING LOSS:	0.474
MASTER VALVE LOSS 2":	0
GATE VALVE LOSS 2" (X2):	2.0
CONTROL VALVE LOSS 1.5":	2.45
BACKFLOW LOSS:	12.0
METER LOSS 1.5":	1.1
STATIC PRESSURE (ADD PSI DUE TO ELEV.DIFFERENCE 18 FT):	(7.79)
TOTAL SYSTEM LOSS:	14.97
HEAD PRESSURE AVAILABLE:	57.03 HI, 29.94 LOW

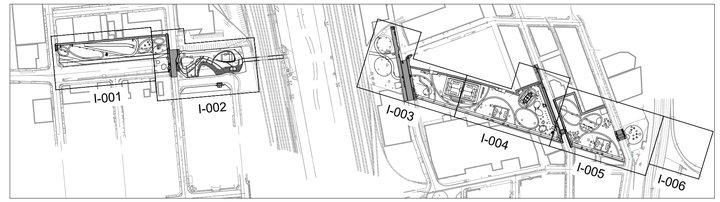

KEY MAP
SCALE: 1"=400'

BUREAU OF ENGINEERING
OFFICIAL RECORD

PLANS PREPARED BY:
TETRA TECH, INC.
707 WILSHIRE BLVD. 23RD FLR.
LOS ANGELES, CA 90017
PHONE: (213) 239-9866

CITY OF LOS ANGELES DEPARTMENT OF PUBLIC WORKS
BUREAU OF ENGINEERING

ENGINEERING
CITY OF LOS ANGELES

NO.	REVISIONS:	DATE	BY:

BUILDING NO.

INDEX NO. MF-300501

"THIS PLAN WAS ELECTRONICALLY SIGNED AND SEALED"

REGISTERED PROFESSIONAL ENGINEER
JUSTIN T. SMITH
No. 85736
EXP: 9-30-22
CIVIL
STATE OF CALIFORNIA

TED ALLEN, P.E.
CITY ENGINEER
DATE: 07/11/22

DESIGN GROUP		LIC. NO.	C-85736
ENGINEER:	JUSTIN SMITH		
DESIGNED BY:	HEATH PRAY		
DRAWN BY:	HEATH PRAY		
CHECKED BY:	NATE SCHREINER		
APPROVED BY:	JASON L. FUSSEL		

VERT. CONTROL: BM 12-04070, 1928 (NGVD29) - 1985 ADJUSTMENT
HORIZ. CONTROL: GPS; PID AE 1704, EPOCH 1991.35

SHEET TITLE: IRRIGATION NOTES

PROJECT: SIXTH STREET PARK, ARTS AND RIVER CONNECTIVITY IMPROVEMENTS (PARC)

ADDRESS: SIXTH STREET OVER THE LOS ANGELES RIVER

WORK ORDER NO. E700235D
FILE NO. --
DRAWING NO. I-007
SHEET 160 OF 295 SHEETS

7/7/2022 1:57:05 PM - O:\PROJECTS\IRVINE\20043\200-20043-17001\CAD\SHEETFILES\I-007_IRRIGATION NOTES.DWG - PRAY, HEATH

THE CITY OF LOS ANGELES OR ITS OFFICERS OR AGENTS SHALL NOT BE RESPONSIBLE FOR THE ACCURACY OR COMPLETENESS OF ELECTRONIC COPIES OF THIS PLAN SHEET.

REVISION DATES: [DESIGN STAGE ONLY]

Sheet Version 3.0

ESTIMATED TOTAL WATER USE

CITY: LOS ANGELES, 51.10 Eto (INCHES/YR)

IRRIGATION EFFICIENCY DEFAULT VALUE FOR OVERHEAD 0.75 AND DRIP 0.81

PLANT WATER USE TYPE	PLANT FACTOR
VERY LOW	0-0.1
LOW	0.2-0.3
MEDIUM	0.4-0.6
HIGH	0.7-1.0
SLA	1.0

HYDROZONE AREA - A

EQUATION: ETWU=Eto x 0.62 x [(PF x HA)/IE) + SLA]
EQUATION: MAWA=(Eto) x (0.62) x [(0.45 x LA) + (1.0-0.45) x SLA]
OVERHEAD: 8,673 SQFT
DRIP: 564 SQFT
TOTAL LANDSCAPE AREA: 9,237 SQFT

HYDROZONE	IRRIGATION METHOD	PLANT WATER USE	PLANT FACTOR (PF)	HYDROZONE AREA (HA) FT2 WITHOUT SLA	HYDROZONE EFFICIENCY (IE)	(PF x HA (FT2))/IE
ZONE 1	OVERHEAD SPRAY	LOW	0.25	8,673	0.75	2,891
ZONE 2	DRIP	LOW	0.25	199	0.81	61
ZONE 3	DRIP	LOW	0.25	365	0.81	113
						3,065

RESULTS

MAWA=	129,106 GALLONS	ETWU=	95,201 GALLONS
	17,259 CUBIC FEET		12,727 CUBIC FEET
	173 HCF		127.27 HCF
	0.39 ACRE-FEET		0.29 ACRE-FEET
	0.13 MILLIONS OF GALLONS		0.10 MILLIONS OF GALLONS

HYDROZONE AREA - B

EQUATION: ETWU=Eto x 0.62 x [(PF x HA)/IE) + SLA]
EQUATION: MAWA=(Eto) x (0.62) x [(0.45 x LA) + (1.0-0.45) x SLA]
OVERHEAD: 10,638 SQFT
DRIP: 72 SQFT
TOTAL LANDSCAPE AREA: 10,710 SQFT

HYDROZONE	IRRIGATION METHOD	PLANT WATER USE	PLANT FACTOR (PF)	HYDROZONE AREA (HA) FT2 WITHOUT SLA	HYDROZONE EFFICIENCY (IE)	(PF x HA (FT2))/IE
ZONE 1	OVERHEAD SPRAY	LOW	0.25	10,638	0.75	3,546
ZONE 2	DRIP	LOW	0.25	72	0.81	22
						3,568

RESULTS

MAWA=	149,694 GALLONS	ETWU=	110,829 GALLONS
	20,011 CUBIC FEET		14,816 CUBIC FEET
	200 HCF		148.16 HCF
	0.45 ACRE-FEET		0.34 ACRE-FEET
	0.15 MILLIONS OF GALLONS		0.11 MILLIONS OF GALLONS

HYDROZONE AREA - C

EQUATION: ETWU=Eto x 0.62 x [(PF x HA)/IE) + SLA]
EQUATION: MAWA=(Eto) x (0.62) x [(0.45 x LA) + (1.0-0.45) x SLA]
OVERHEAD: 31,922 SQFT
DRIP: 3,447 SQFT
TOTAL LANDSCAPE AREA: 35,369 SQFT

HYDROZONE	IRRIGATION METHOD	PLANT WATER USE	PLANT FACTOR (PF)	HYDROZONE AREA (HA) FT2 WITHOUT SLA	HYDROZONE EFFICIENCY (IE)	(PF x HA (FT2))/IE
ZONE 1	OVERHEAD SPRAY	LOW	0.25	5,305	0.75	1,768
ZONE 2	OVERHEAD SPRAY	LOW	0.25	4,940	0.75	1,647
ZONE 3	OVERHEAD SPRAY	LOW	0.25	2,310	0.75	770
ZONE 4	OVERHEAD SPRAY	LOW	0.25	2,312	0.75	771
ZONE 5	OVERHEAD SPRAY	LOW	0.25	793	0.75	264
ZONE 6	DRIP	LOW	0.25	525	0.81	162
ZONE 7	DRIP	LOW	0.25	144	0.81	44
ZONE 8	DRIP	LOW	0.25	126	0.81	39
ZONE 9	DRIP	LOW	0.25	1,345	0.81	415
ZONE 10	DRIP	LOW	0.25	563	0.81	174
ZONE 11	DRIP	MEDIUM	0.40	27	0.81	13
ZONE 12	DRIP	LOW	0.25	81	0.81	25
ZONE 13	DRIP	LOW	0.25	636	0.81	196
ZONE 14	OVERHEAD SPRAY	MEDIUM	0.40	16,262	0.75	8,637
						14,962

RESULTS

MAWA=	494,353 GALLONS	ETWU=	464,718 GALLONS
	66,086 CUBIC FEET		62,124 CUBIC FEET
	661 HCF		621.24 HCF
	1.51 ACRE-FEET		1.43 ACRE-FEET
	0.49 MILLIONS OF GALLONS		0.46 MILLIONS OF GALLONS

HYDROZONE AREA - D

EQUATION: ETWU=Eto x 0.62 x [(PF x HA)/IE) + SLA]
EQUATION: MAWA=(Eto) x (0.62) x [(0.45 x LA) + (1.0-0.45) x SLA]
OVERHEAD: 32,953 SQFT
DRIP: 3,678 SQFT
TOTAL LANDSCAPE AREA: 36,631 SQFT

HYDROZONE	IRRIGATION METHOD	PLANT WATER USE	PLANT FACTOR (PF)	HYDROZONE AREA (HA) FT2 WITHOUT SLA	HYDROZONE EFFICIENCY (IE)	(PF x HA (FT2))/IE
ZONE 1	OVERHEAD SPRAY	LOW	0.25	5,855	0.75	1,952
ZONE 2	OVERHEAD SPRAY	LOW	0.25	3,374	0.75	1,125
ZONE 3	OVERHEAD SPRAY	LOW	0.25	1,266	0.75	422
ZONE 4	DRIP	LOW	0.25	108	0.81	33
ZONE 5	DRIP	LOW	0.25	54	0.81	17
ZONE 6	DRIP	LOW	0.25	72	0.81	22
ZONE 7	DRIP	LOW	0.25	414	0.81	128
ZONE 8	DRIP	LOW	0.25	162	0.81	50
ZONE 9	OVERHEAD SPRAY	MEDIUM	0.40	2,738	0.75	1,460
ZONE 10	DRIP	LOW	0.25	333	0.81	103
ZONE 11	DRIP	MEDIUM	0.40	72	0.81	36
ZONE 12	DRIP	MEDIUM	0.40	136	0.81	67
ZONE 13	DRIP	LOW	0.25	221	0.81	68
ZONE 14	DRIP	LOW	0.25	108	0.81	33
ZONE 15	DRIP	LOW	0.25	217	0.81	67
ZONE 16	DRIP	LOW	0.25	1,781	0.81	550
ZONE 17	OVERHEAD SPRAY	MEDIUM	0.40	19,720	0.75	10,517
						16,650

RESULTS

MAWA=	511,991 GALLONS	ETWU=	517,138 GALLONS
	68,444 CUBIC FEET		69,132 CUBIC FEET
	684 HCF		691.32 HCF
	1.57 ACRE-FEET		1.59 ACRE-FEET
	0.51 MILLIONS OF GALLONS		0.52 MILLIONS OF GALLONS

HYDROZONE AREA - E

EQUATION: ETWU=Eto x 0.62 x [(PF x HA)/IE) + SLA]
EQUATION: MAWA=(Eto) x (0.62) x [(0.45 x LA) + (1.0-0.45) x SLA]
OVERHEAD: 29,629 SQFT
DRIP: 613 SQFT
TOTAL LANDSCAPE AREA: 30,242 SQFT

HYDROZONE	IRRIGATION METHOD	PLANT WATER USE	PLANT FACTOR (PF)	HYDROZONE AREA (HA) FT2 WITHOUT SLA	HYDROZONE EFFICIENCY (IE)	(PF x HA (FT2))/IE
ZONE 1	OVERHEAD SPRAY	LOW	0.25	4,898	0.75	1,633
ZONE 2	OVERHEAD SPRAY	LOW	0.25	5,192	0.75	1,731
ZONE 3	OVERHEAD SPRAY	LOW	0.25	19,539	0.75	6,513
ZONE 4	DRIP	LOW	0.25	54	0.81	17
ZONE 5	DRIP	LOW	0.25	126	0.81	39
ZONE 6	DRIP	LOW	0.25	126	0.81	39
ZONE 7	DRIP	LOW	0.25	72	0.81	22
ZONE 8	DRIP	LOW	0.25	235	0.81	73
						10,067

RESULTS

MAWA=	422,692 GALLONS	ETWU=	312,635 GALLONS
	56,506 CUBIC FEET		41,793 CUBIC FEET
	565 HCF		418 HCF
	1.29 ACRE-FEET		0.96 ACRE-FEET
	0.42 MILLIONS OF GALLONS		0.31 MILLIONS OF GALLONS

HYDROZONE AREA - F

EQUATION: ETWU=Eto x 0.62 x [(PF x HA)/IE) + SLA]
EQUATION: MAWA=(Eto) x (0.62) x [(0.45 x LA) + (1.0-0.45) x SLA]
OVERHEAD: 14,594 SQFT
DRIP: 144 SQFT
TOTAL LANDSCAPE AREA: 14,738 SQFT

HYDROZONE	IRRIGATION METHOD	PLANT WATER USE	PLANT FACTOR (PF)	HYDROZONE AREA (HA) FT2 WITHOUT SLA	HYDROZONE EFFICIENCY (IE)	(PF x HA (FT2))/IE
ZONE 1	OVERHEAD SPRAY	MEDIUM	0.40	7,836	0.75	4,179
ZONE 2	OVERHEAD SPRAY	MEDIUM	0.40	2,518	0.75	1,343
ZONE 3	OVERHEAD SPRAY	MEDIUM	0.40	4,240	0.75	2,261
ZONE 4	DRIP	LOW	0.25	90	0.81	28
ZONE 5	DRIP	LOW	0.25	54	0.81	17
						7,828

RESULTS

MAWA=	205,993 GALLONS	ETWU=	243,135 GALLONS
	27,537 CUBIC FEET		32,503 CUBIC FEET
	275 HCF		325 HCF
	0.63 ACRE-FEET		0.75 ACRE-FEET
	0.20 MILLIONS OF GALLONS		0.24 MILLIONS OF GALLONS

HYDROZONE AREA - G

EQUATION: ETWU=Eto x 0.62 x [(PF x HA)/IE) + SLA]
EQUATION: MAWA=(Eto) x (0.62) x [(0.45 x LA) + (1.0-0.45) x SLA]
OVERHEAD: 12,016 SQFT
DRIP: 12,048 SQFT
TOTAL LANDSCAPE AREA: 24,064 SQFT

HYDROZONE	IRRIGATION METHOD	PLANT WATER USE	PLANT FACTOR (PF)	HYDROZONE AREA (HA) FT2 WITHOUT SLA	HYDROZONE EFFICIENCY (IE)	(PF x HA (FT2))/IE
ZONE 1	OVERHEAD SPRAY	LOW	0.25	377	0.75	126
ZONE 2	OVERHEAD SPRAY	LOW	0.25	1,105	0.75	386
ZONE 3	OVERHEAD SPRAY	LOW	0.25	4,254	0.75	1,418
ZONE 4	OVERHEAD SPRAY	LOW	0.25	6,280	0.75	2,093
ZONE 5	DRIP	LOW	0.25	1,486	0.81	459
ZONE 6	DRIP	LOW	0.25	568	0.81	175
ZONE 7	DRIP	MEDIUM	0.40	144	0.81	71
ZONE 8	DRIP	LOW	0.25	180	0.81	56
ZONE 9	DRIP	LOW	0.40	253	0.81	78
ZONE 10	DRIP	LOW	0.25	789	0.81	244
ZONE 11	DRIP	MEDIUM	0.40	8,628	0.81	5,336
						10,432

RESULTS

MAWA=	336,343 GALLONS	ETWU=	323,443 GALLONS
	44,963 CUBIC FEET		43,238 CUBIC FEET
	450 HCF		432.30 HCF
	1.00 ACRE-FEET		0.99 ACRE-FEET
	0.33 MILLIONS OF GALLONS		0.32 MILLIONS OF GALLONS

HYDROZONE AREA - H

EQUATION: ETWU=Eto x 0.62 x [(PF x HA)/IE) + SLA]
EQUATION: MAWA=(Eto) x (0.62) x [(0.45 x LA) + (1.0-0.45) x SLA]
OVERHEAD: 0 SQFT
DRIP: 920 SQFT
TOTAL LANDSCAPE AREA: 920 SQFT

HYDROZONE	IRRIGATION METHOD	PLANT WATER USE	PLANT FACTOR (PF)	HYDROZONE AREA (HA) FT2 WITHOUT SLA	HYDROZONE EFFICIENCY (IE)	(PF x HA (FT2))/IE
ZONE 1	DRIP	LOW	0.25	514	0.81	159
ZONE 2	DRIP	MEDIUM	0.40	406	0.81	200
						359

RESULTS

MAWA=	12,859 GALLONS	ETWU=	11,155 GALLONS
	2 CUBIC FEET		1,491 CUBIC FEET
	17 HCF		14.91 HCF
	0.039 ACRE-FEET		0.034 ACRE-FEET
	0.01 MILLIONS OF GALLONS		0.01 MILLIONS OF GALLONS

ESTIMATED TOTAL WATER USAGE SUMMARY:

HYDROZONE	MAWA (GAL.)	ETWU (GAL.)
A	129,106	95,201
B	149,694	110,829
C	494,353	464,718
D	511,991	517,138
E	422,692	312,635
F	205,993	243,135
G	336,343	323,443
H	12,859	11,155
TOTALS:	2,263,031	2,078,254

PROJECT TOTAL ETWU COMPLIES WITH MAWA

ETWU= ESTIMATED TOTAL WATER USE
MAWA= MAXIMUM TOTAL WATER USE

BUREAU OF ENGINEERING
OFFICIAL RECORD

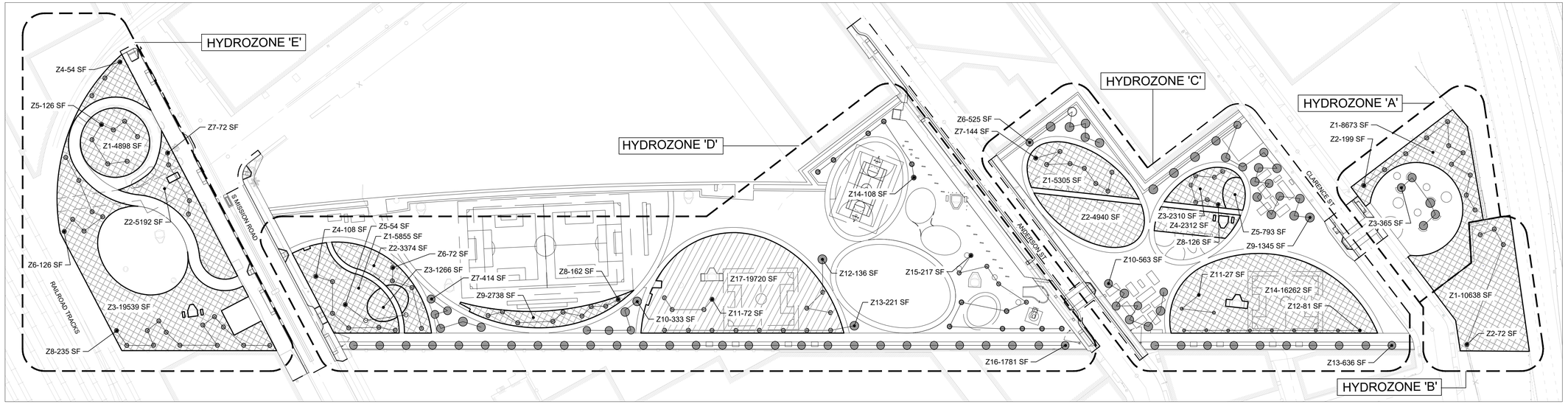

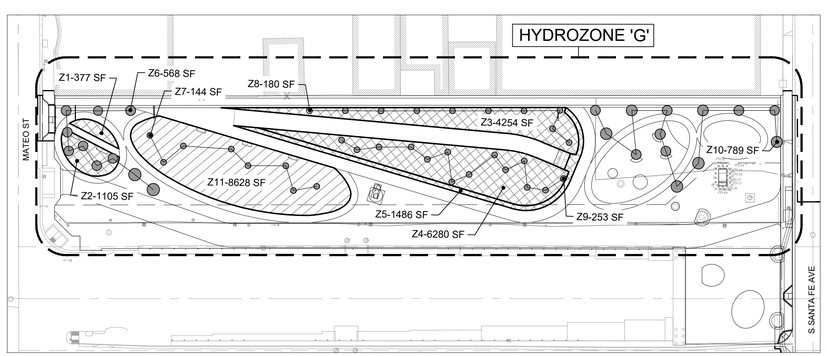

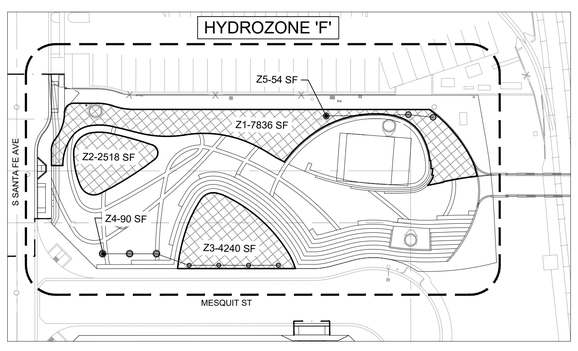

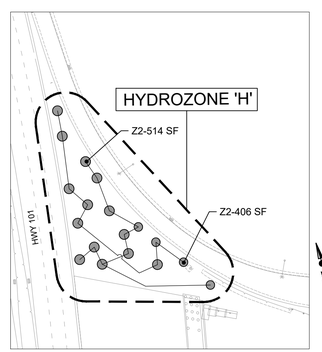

LEGEND

- EPIC IRRIGATION SYSTEM
- SPRAYHEAD IRRIGATION
- DRIP IRRIGATION

KEY MAPS
SCALE: 1"=60'

PLANS PREPARED BY:
TETRA TECH, INC.
707 WILSHIRE BLVD. 23RD FLR.
LOS ANGELES, CA 90017
PHONE: (213) 239-8866

CITY OF LOS ANGELES
DEPARTMENT OF PUBLIC WORKS
BUREAU OF ENGINEERING

TED ALLEN, P.E.
CITY ENGINEER

DESIGN GROUP		LIC. NO.	DATE:
ENGINEER:	JUSTIN SMITH	C-85736	07/11/22
DESIGNED BY:	HEATH PRAY		
DRAWN BY:	HEATH PRAY		
CHECKED BY:	NATE SCHREINER		
APPROVED BY:	JASON L. FUSSEL		

VERT. CONTROL: BM 12-04070, 1929 (NGVD29) - 1985 ADJUSTMENT
HORIZ. CONTROL: GPS; PID AE 1704; EPOCH: 1991.35

SHEET TITLE: IRRIGATION WATER ALLOWANCE

PROJECT: SIXTH STREET PARK, ARTS AND RIVER CONNECTIVITY IMPROVEMENTS (PARC)

ADDRESS: SIXTH STREET OVER THE LOS ANGELES RIVER

WORK ORDER NO. E700235D
FILE NO. --
DRAWING NO. I-008
SHEET 161 OF 295 SHEETS

NO.	REVISIONS:	DATE	BY:

BUILDING NO.
INDEX NO. MF-30501

REGISTERED PROFESSIONAL ENGINEER
JUSTIN T. SMITH
No. 85736
EXP: 9-30-22
CIVIL
STATE OF CALIFORNIA

* THIS PLAN WAS ELECTRONICALLY SIGNED AND SEALED

7/7/2022 2:13:44 PM - O:\PROJECTS\IRVINE\20043\200-20043-17001\CAD\SHEETFILES\I-008_IRRIGATION WATER ALLOWANCE.DWG - PRAY, HEATH

THE CITY OF LOS ANGELES OR ITS OFFICERS OR AGENTS SHALL NOT BE RESPONSIBLE FOR THE ACCURACY OR COMPLETENESS OF ELECTRONIC COPIES OF THIS PLAN SHEET.

REVISION DATES (DESIGN STAGE ONLY)

Sheet Version 3.0

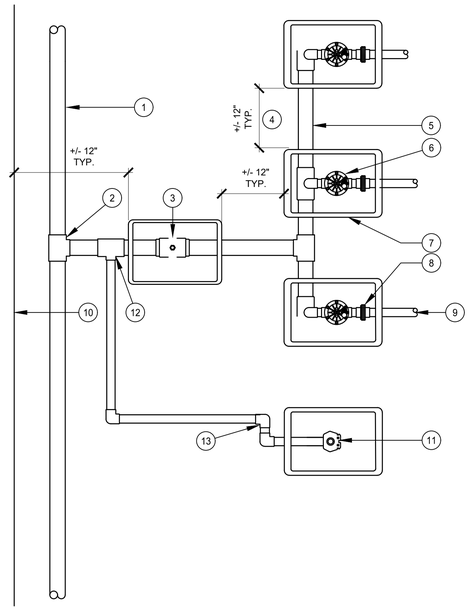

LEGEND

1. IRRIGATION MAINLINE
2. MAINLINE TEE FITTING, MAINLINE x MANIFOLD SIZE
3. LINE SIZE MANIFOLD ISOLATION VALVE. REFER TO LEGEND FOR TYPE.
4. ALL VALVE BOXES TO HAVE A MINIMUM 12" SEPARATION BETWEEN BOXES
5. IRRIGATION MANIFOLD "SUB-MAINLINE" PIPE. SIZE TO MATCH MAINLINE, TYP.
6. REMOTE CONTROL VALVE
7. RECTANGULAR SPECIFICATION GRADE CONCRETE VALVE BOX WITH CAST IRON FRAME AND HINGED DOUBLE TOGGLE LOCKING COVER. REFER TO LEGEND FOR TYPE
8. PVC SCH 80 UNION. ONE OR TWO REQUIRED. SEE RCV INSTALLATION DETAILS
9. LATERAL LINE TO SPRINKLERS
10. SIDEWALK / HARDSCAPE EDGE, INSTALL BOXES 12"-18" FROM EDGE
11. QUICK COUPLER VALVE
12. MAINLINE TEE FITTING, MAINLINE x 1" SIZE
13. QUICK COUPLER SWING JOINT

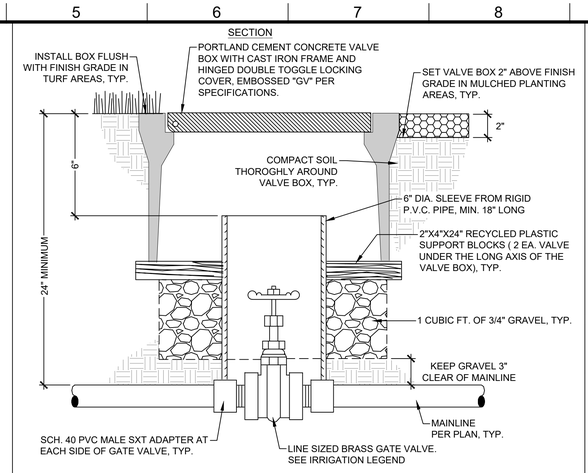

SECTION

NOTE: FOR 3" GATE VALVES AND LARGER REFER TO RP DETAIL L1101

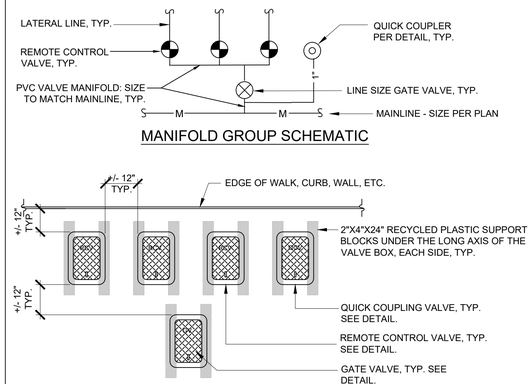

NOTES:
1. ALL VALVES SHALL BE INSTALLED IN A MANIFOLD GROUP SIMILAR TO THAT SHOWN IN ABOVE SCHEMATIC. SEE PLANS FOR NUMBER OF RCV/QCV FOR EACH MANIFOLD, TYP.
2. ALL BOXES SHALL BE SQUARE TO ONE ANOTHER AND TO THE EDGES OF ADJACENT FIXED OBJECTS WHERE PRESENT.

I2 2"-2.5" MAINLINE ISOLATION VALVE/ GATE VALVE INSTALL DETAIL

N.T.S. | BOE VERSION May/17 - RF/gm | RP DETAIL L1101

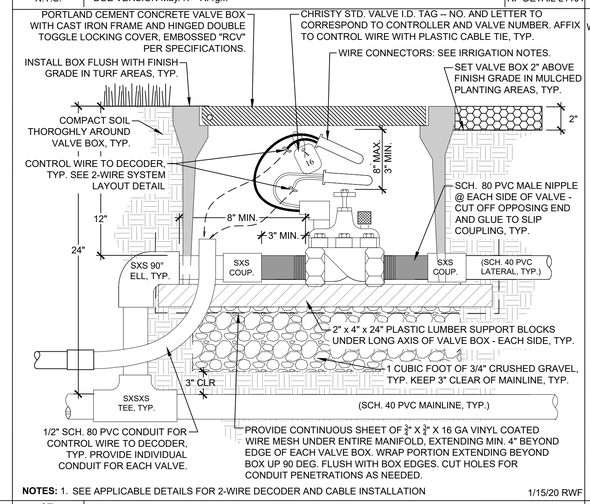

NOTES: 1. SEE APPLICABLE DETAILS FOR 2-WIRE DECODER AND CABLE INSTALLATION

1/15/20 RWF

I3 NOT USED

N.T.S.

I4 VALVE BOX PLACEMENT

N.T.S. | BOE_VERSION_FEB/18 | RP DETAIL 1410

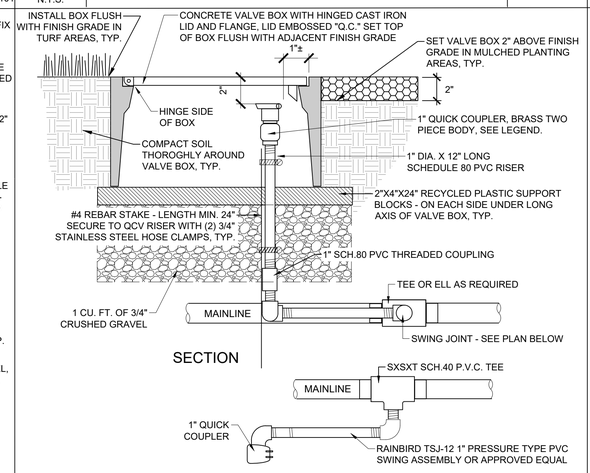

I1 VALVE MANIFOLD ASSEMBLY

N.T.S. | REFERENCE SHEET I-001 THRU I-006 | RP DETAIL 135

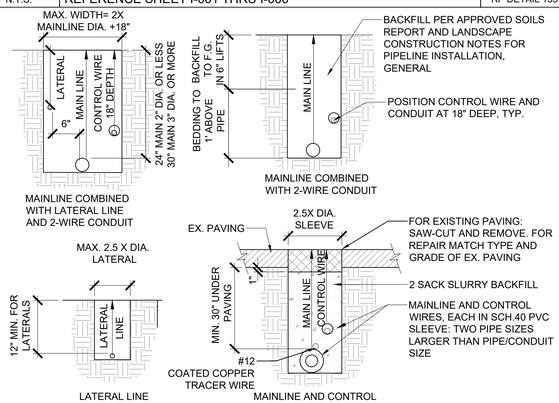

NOTE:
1. PIPE AND CONTROL WIRE CROSSING UNDER PAVING OR WALKWAY OVER 8' WIDE SHALL BE SLEEVED AS INDICATED ABOVE.
2. PIPE BEDDING AND BACKFILL SHALL BE PER APPROVED SOILS REPORT AND LANDSCAPE CONSTRUCTION NOTES, PIPELINE INSTALLATION GENERAL.
3. PROVIDE #12 COATED COPPER TRACER WIRE FOR ALL MAINLINE RUNS. PROVIDE 24" LENGTH COIL IN TERMINAL VALVE BOXES.

I5 RCV INSTALLATION DETAIL, 2-WIRE SYSTEM

N.T.S. | REFERENCE SHEET I-001 THRU I-006 | RP DETAIL 1402

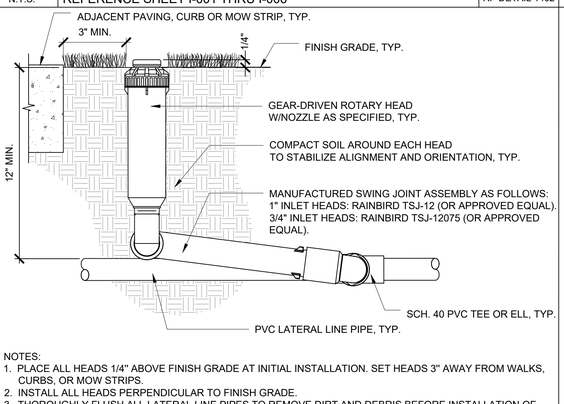

NOTES:
1. PLACE ALL HEADS 1/4" ABOVE FINISH GRADE AT INITIAL INSTALLATION. SET HEADS 3" AWAY FROM WALKS, CURBS, OR MOW STRIPS.
2. INSTALL ALL HEADS PERPENDICULAR TO FINISH GRADE.
3. THOROUGHLY FLUSH ALL LATERAL LINE PIPES TO REMOVE DIRT AND DEBRIS BEFORE INSTALLATION OF NOZZLES.
4. ADJUST ALL HEADS TO PROPER ARC AND RADIUS AS NECESSARY TO ACHIEVE PROPER COVERAGE AND UNIFORMITY. IF PROPER COVERAGE AND UNIFORMITY IS NOT ACHIEVED WITH THE SPECIFIED NOZZLE, CONTRACTOR SHALL CHANGE NOZZLE AS NEEDED IN CONSULTATION WITH LANDSCAPE ARCHITECT UNTIL DESIRED PERFORMANCE IS ACHIEVED.

REVISED: 6/14/06 RWF/SLG

I6 QUICK COUPLING VALVE INSTALLATION DETAIL

N.T.S. | REFERENCE SHEET I-002 THRU I-006 | RP DETAIL L1200

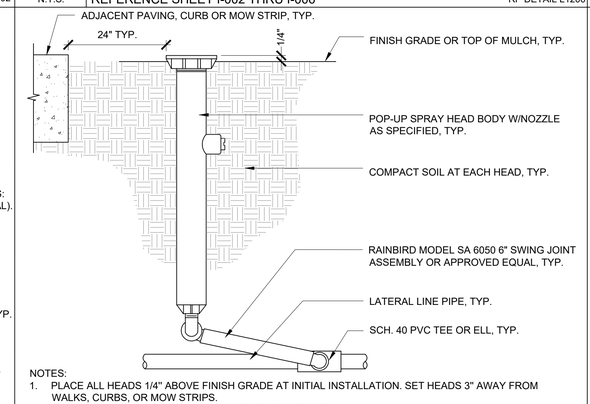

NOTES:
1. PLACE ALL HEADS 1/4" ABOVE FINISH GRADE AT INITIAL INSTALLATION. SET HEADS 3" AWAY FROM WALKS, CURBS, OR MOW STRIPS.
2. INSTALL ALL HEADS PERPENDICULAR TO FINISH GRADE.
3. THOROUGHLY FLUSH ALL LATERAL LINE PIPES TO REMOVE DIRT AND DEBRIS BEFORE INSTALLATION OF NOZZLES.
4. ADJUST ALL HEADS TO PROPER ARC AND RADIUS AS NECESSARY TO ACHIEVE PROPER COVERAGE AND UNIFORMITY. IF PROPER COVERAGE AND UNIFORMITY IS NOT ACHIEVED WITH THE SPECIFIED NOZZLE, CONTRACTOR SHALL CHANGE NOZZLE AS NEEDED UNTIL DESIRED PERFORMANCE IS ACHIEVED.

REVISED: 6/14/06 RWF/SLG

I7 NOT USED

N.T.S.

I8 IRRIGATION TRENCHING DETAIL - 2 WIRE

N.T.S. | BOE VERSION 02/08/18 | RP DETAIL 1350

I9 GEAR-DRIVEN ROTOR HEAD INSTALLATION

N.T.S. | REFERENCE SHEET I-005 | RP DETAIL 162

I10 POP-UP SPRAY HEAD INSTALLATION

N.T.S. | REFERENCE SHEET I-001 THRU I-006 | RP DETAIL 162

I11 ROOT WATERING SYSTEM BUBBLER ASSY

N.T.S. | REFERENCE SHEET I-001 THRU I-006 | RAP DETAIL L1660

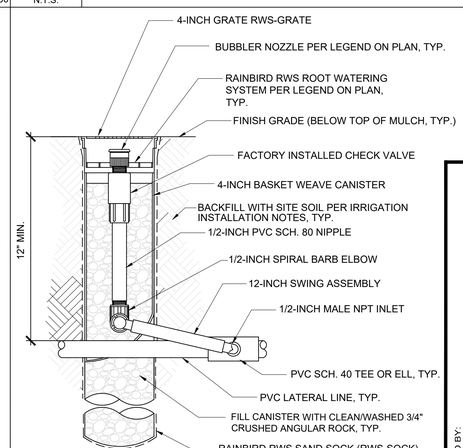

BOE VERSION Sep/07 - RF

THE CITY OF LOS ANGELES OR ITS OFFICERS OR AGENTS SHALL NOT BE RESPONSIBLE FOR THE ACCURACY OR COMPLETENESS OF ELECTRONIC COPIES OF THIS PLAN SHEET.

REVISION DATES (DESIGN STAGE ONLY)

Sheet Version 3.0

BUREAU OF ENGINEERING

ENGINEERING

CITY OF LOS ANGELES

NO.	REVISIONS:	DATE	BY:

BUILDING NO.

INDEX NO. MF-300501

"THIS PLAN WAS ELECTRONICALLY SIGNED AND SEALED"

REGISTERED PROFESSIONAL ENGINEER JUSTIN T. SMITH No. 85736 EXP: 9-30-22 CIVIL STATE OF CALIFORNIA

BUREAU OF ENGINEERING OFFICIAL RECORD

CITY OF LOS ANGELES DEPARTMENT OF PUBLIC WORKS

CITY ENGINEER: TED ALLEN, P.E. DATE: 07/11/22

DESIGN GROUP

ENGINEER: JUSTIN SMITH LIC. NO. C-85736

DESIGNED BY: HEATH PRAY

DRAWN BY: HEATH PRAY

CHECKED BY: NATE SCHREINER

APPROVED BY: JASON L. FUSSEL

VERT. CONTROL: BM 12-04070, 1929 (NGVD29) - 1988 ADJUSTMENT

HORIZ. CONTROL: GPS, PID AE 1770.4, EPOCH 1991.35

SHEET TITLE: IRRIGATION DETAILS SHEET 1

PROJECT: SIXTH STREET PARK, ARTS AND RIVER CONNECTIVITY IMPROVEMENTS (PARC)

ADDRESS: SIXTH STREET OVER THE LOS ANGELES RIVER

PLANS PREPARED BY: TETRA TECH, INC. 707 WILSHIRE BLVD. 23RD FLR. LOS ANGELES, CA 90017 PHONE: (213) 239-8866

WORK ORDER NO. E700235D

FILE NO. --

DRAWING NO. I-009

SHEET 162 OF 295 SHEETS

7/7/2022 11:23:59 AM - O:\PROJECTS\IRVINE\20043\200-20043-17001\CAD\SHEETFILES\I-009_IRRIGATION DETAILS.DWG - PRAY, HEATH

THE CITY OF LOS ANGELES OR ITS OFFICERS OR AGENTS SHALL NOT BE RESPONSIBLE FOR THE ACCURACY OR COMPLETENESS OF ELECTRONIC COPIES OF THIS PLAN SHEET.

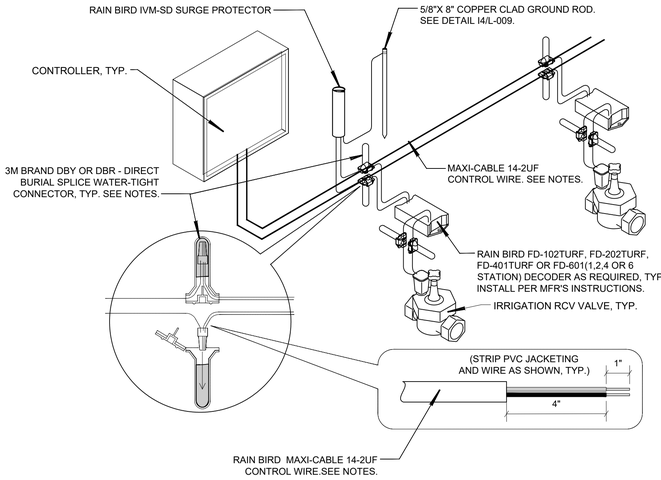

WIRING NOTES:
1.) CONTROL WIRE SHALL BE RAIN BIRD MAXI-CABLE 14-2UF OR APPROVED EQUAL: POLYETHYLENE DOUBLE-JACKETED OR UF-B UL PVC DOUBLE- JACKETED TWO-CONDUCTOR SOLID CORE DESIGNED FOR DIRECT BURIAL WITH INSULATION 3/16 INCH (.060Ø) THICK, HIGH DENSITY, SUNLIGHT RESISTANT INCASED IN AN OUTER JACKET OF POLYETHYLENE OR PVC CONFORMING TO ICEA S-GL-402 OR NEMA WC5, HAVING A MINIMUM WALL THICKNESS OF .045 INCHES. (TWO-WIRE POLYETHYLENE "TWISTED" CABLE OR SINGLE STRAND 14-GAUGE PVC IRRIGATION WIRE DOES NOT CONFORM TO THESE SPECIFICATIONS AND WILL NOT BE ACCEPTED).

2.) ALL WIRE INSULATION SHALL BE INTACT AND FREE OF NICKS AND CUTS.

3.) ALL 2-WIRE CABLE SHALL BE INSTALLED IN 1" MIN. SCH. 80 PVC CONDUIT 24" MIN. BELOW GRADE WITH PULL BOXES @ 200' MAX.

4.) ATTACHING DECODERS:

- TWIST WIRES TO PROVIDE A SOLID MECHANICAL CONNECTION BEFORE SECURING THE ATTACHMENT BY ADDING THE WIRE NUT.
- 3M BRAND DBY OR DBR DIRECT BURIAL SPLICE KIT OR APPROVED EQUAL (SURESPLICE, TRADEMARKED) GEL FILLED CONNECTORS (OR SIMILAR) SHALL BE USED ON ALL CONNECTIONS.
- GREASE FILLED WIRE NUTS WILL NOT BE ACCEPTED.
- TEST ALL CONNECTIONS BEFORE IMMERSING THE WIRE NUT IN THE GEL-FILLED CAP.
- ADHERE TO ALL LOCAL AND NATIONAL BUILDING AND ELECTRICAL CODES.
- CONTRACTOR SHALL GUARANTEE ALL WIRE CONNECTIONS TO BE ABSOLUTELY WATER TIGHT.

5.) ALL EQUIPMENT SHALL BE INSTALLED PER THE MANUFACTURER'S SPECIFICATIONS.

I1 NOT USED

I2 NOT USED

I3 2-WIRE IRRIGATION SYSTEM WIRING (RAIN BIRD OR EQUAL)
N.T.S. REFERENCE SHEET I-001 THRU I-006

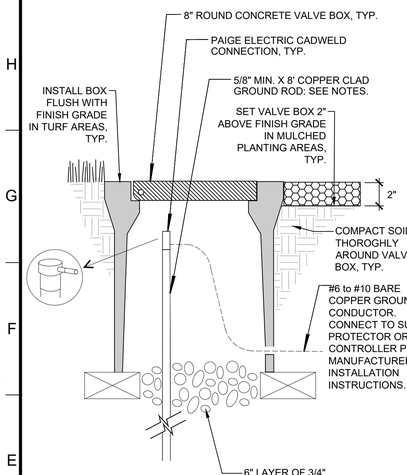

TWO-WIRE SYSTEM GROUNDING REQUIREMENTS:

SURGE PROTECTION USING PROPER GROUNDING RODS AND RAIN MASTER LIGHTNING ARRESTORS (TW-LA-1) IS REQUIRED FOR PROTECTION AGAINST SURGE DAMAGE DUE TO LIGHTNING OR OTHER ELECTRICAL SURGE EVENTS. CONFORMANCE TO THIS SURGE SUPPRESSION SPECIFICATION IS NECESSARY TO RETAIN WARRANTY PROTECTION UNDER RAIN MASTER'S WARRANTY TERMS.

THE INSTALLATION SHALL CONFORM TO MANUFACTURER'S INSTRUCTIONS, AND MUST MEET OR EXCEED THE AMERICAN SOCIETY OF IRRIGATION CONSULTANTS (ASIC) EARTH GROUNDING GUIDELINE 100-2002.

HTTP://WWW.ASIC.ORG/UPLOADS/ASSETS/011007_121320_ASIC_GROUNDING_GUIDELINES.DOC

GROUND RODS AS REFERRED TO IN THIS SPECIFICATION SHALL CONFORM TO THE FOLLOWING STANDARDS:

1.) ALL GROUNDING RODS SHALL BE BARE COPPER OF 5/8" DIAMETER OR GREATER, AND 8' LENGTH OR GREATER.

2.) A MEASURED RESISTANCE READING OF NO MORE THAN 25 OHMS IS NECESSARY AT EACH TW-LA-1 (LIGHTNING ARRESTOR). ASIC SPEC: SECTION 7.0 – MEASURING RESISTANCE, ITEM A.

GROUND RODS SHALL BE LOCATED AT A MINIMUM DISTANCE TO ASSURE THAT THE TWO-WIRE PATH IS OUTSIDE OF THE ELECTRODE SPHERE OF INFLUENCE FOR THE GROUNDING ROD: THE GROUND ROD MUST BE CONNECTED AT LEAST 8' AWAY FROM THE TWO-WIRE PATH, AT A RIGHT ANGLE TO THE TWO-WIRE PATH.

UNDER NO CIRCUMSTANCES SHOULD A GROUND ROD BE INSTALLED IN OR UNDER A VALVE BOX, METER BOX OR ELECTRICAL BOX.

CONNECTIONS TO GROUNDING RODS
ALL CONNECTIONS TO GROUND RODS SHALL CONFORM TO ASIC EARTH GROUNDING GUIDELINE 100-2002, AND SHALL CONSIST OF EITHER A CADWELD™ TYPE OR SCREW CLAMP TYPE OF CONNECTION. CADWELD OR EQUIVALENT CONNECTIONS ARE PREFERRED.

ANY WIRE EXTENSIONS REQUIRED TO CONNECT FROM A GROUND ROD TO A LIGHTNING ARRESTOR OR ENCLOSURE GROUND LUG SHALL BE BARE COPPER, AND SHALL NOT HAVE ANY SHARP BENDS OR KINKS. WIRE EXTENSIONS CONNECTED TO LIGHTNING ARRESTORS SHALL USE A CADWELD TYPE OR SCREW CLAMP TYPE CONNECTION WHERE THE BARE COPPER GROUND WIRE MEETS THE GREEN GROUNDING WIRE FROM THE LIGHTNING ARRESTOR.

I4 2-WIRE SYSTEM GROUNDING ROD
N.T.S. REFERENCE SHEET I-001 THRU I-006

PULL BOX

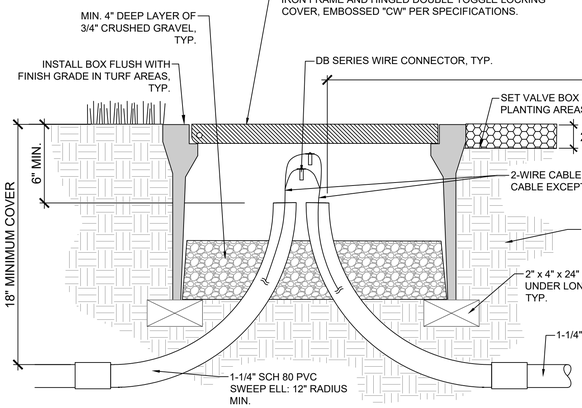

TERMINAL OR MANIFOLD BOX

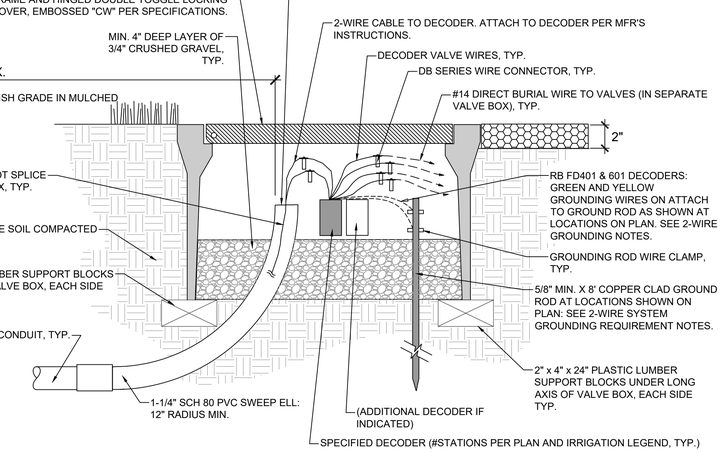

NOTES:
1. ALL CONDUIT AND FITTINGS SHALL BE SCHEDULE 80 PVC. CHANGES IN DIRECTION OF CONDUIT PATH SHALL NOT EXCEED 360 DEG. FOR EACH SECTION BETWEEN PULL BOXES.
2. MAXIMUM DISTANCE BETWEEN PULL BOXES SHALL BE 150 FEET.

I5 2-WIRE SYSTEM INSTALLATION AND GROUNDING
N.T.S. REFERENCE SHEET I-001 THRU I-006 RP DETAIL L1430

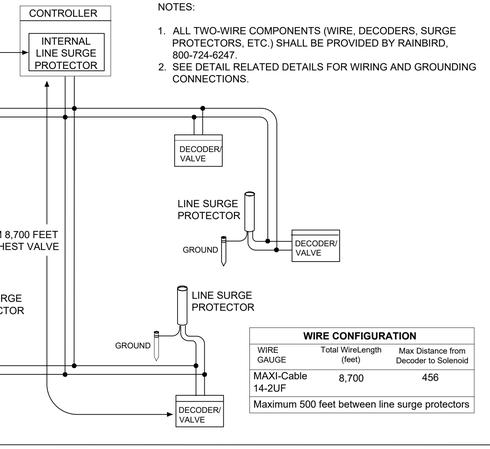

NOTES:

1. ALL TWO-WIRE COMPONENTS (WIRE, DECODERS, SURGE PROTECTORS, ETC.) SHALL BE PROVIDED BY RAINBIRD, 800-724-6247.
2. SEE DETAIL RELATED DETAILS FOR WIRING AND GROUNDING CONNECTIONS.

WIRE CONFIGURATION

WIRE GAUGE	Total WireLength (feet)	Max Distance from Decoder to Solenoid
MAXI-Cable 14-2UF	8,700	456
Maximum 500 feet between line surge protectors		

I6 2-WIRE SYSTEM LAYOUT
N.T.S. REFERENCE SHEET I-001 THRU I-006 RP DETAIL 1372

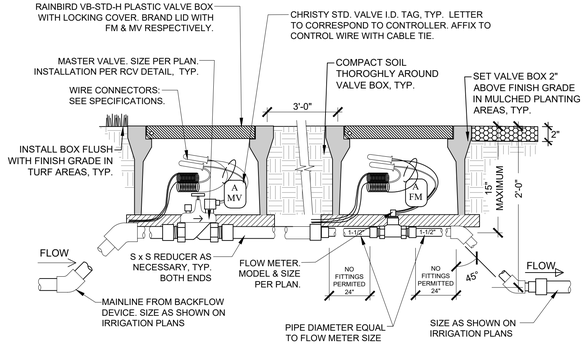

NOTES:
1. CONNECT FLOW METER LEADS TO DESIGNATED CONTROLLER WITH A BLACK AND RED #14 UF WIRE.
2. CONNECT MASTER VALVE LEADS TO 2-WIRE DECODER PER DETAILS AND SPECIFICATIONS.
3. CONNECT FLOW METER TO SENSOR DECODER PER DETAILS AND SPECIFICATIONS.
4. ALL 2-WIRE CONNECTIONS SHALL BE MADE WITH A CONNECTOR PER SPECIFICATIONS. RUN WIRE ALONG MAINLINE OR PER DETAIL L1420 WHERE MAINLINE NOT AVAILABLE.

RAP VERSION 02-07-18 / RWF

I7 FLOW METER AND MASTER VALVE
N.T.S. REFERENCE SHEET I-001 THRU I-006 RP DETAIL L1510

BUREAU OF ENGINEERING
OFFICIAL RECORD

PLANS PREPARED BY:
TETRA TECH, INC.
707 WILSHIRE BLVD. 23RD FLR.
LOS ANGELES, CA 90017
PHONE: (213) 239-8866

CITY OF LOS ANGELES DEPARTMENT OF PUBLIC WORKS
BUREAU OF ENGINEERING
ENGINEERING CITY OF LOS ANGELES

NO.	REVISIONS:	DATE	BY:

BUILDING NO.

INDEX NO. MF-300501

"THIS PLAN WAS ELECTRONICALLY SIGNED AND STAMPED"
TED ALLEN, P.E. REGISTERED PROFESSIONAL ENGINEER CIVIL No. 85736 EXP: 9-30-22 STATE OF CALIFORNIA

CITY ENGINEER
DESIGN GROUP
ENGINEER: JUSTIN SMITH LIC. NO. C-85736 DATE: 07/11/22
DESIGNED BY: HEATH PRAY
DRAWN BY: HEATH PRAY
CHECKED BY: NATE SCHREINER
APPROVED BY: JASON L. FUSSEL

VERT. CONTROL: BM 12-24070, 1929 (NGVD29) - 1985 ADJUSTMENT
HORIZ. CONTROL: GPS; PID AE 17704; EPOCH 1991.35

SHEET TITLE: IRRIGATION DETAILS SHEET 2
PROJECT: SIXTH STREET PARK, ARTS AND RIVER CONNECTIVITY IMPROVEMENTS (PARC)
ADDRESS: SIXTH STREET OVER THE LOS ANGELES RIVER

WORK ORDER NO. E700235D
FILE NO. --
DRAWING NO. I-010
SHEET 163 OF 295 SHEETS

7/7/2022 11:27:36 AM - O:\PROJECTS\IRVINE2004\3200-2004\3-17001\CAD\SHEETFILES\I-010_IRRIGATION DETAILS.DWG - PRAY, HEATH

REVISION DATES (DESIGN STAGE ONLY)

Sheet Version 3.0

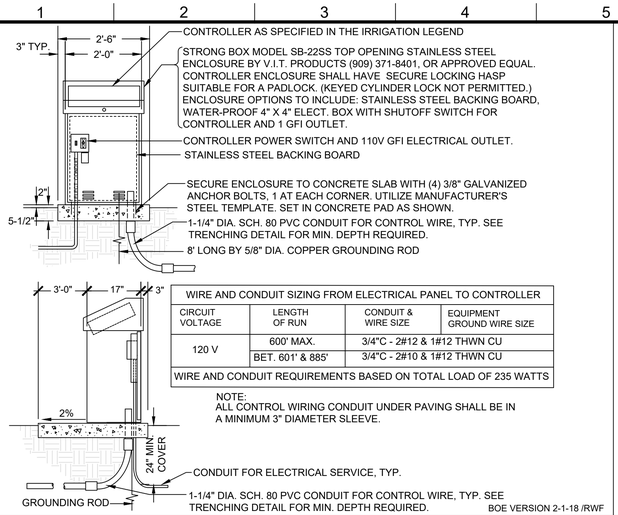

WIRE AND CONDUIT SIZING FROM ELECTRICAL PANEL TO CONTROLLER			
CIRCUIT VOLTAGE	LENGTH OF RUN	CONDUIT & WIRE SIZE	EQUIPMENT GROUND WIRE SIZE
120 V	600' MAX.	3/4"C - 2#12 & 1#12 THWN CU	
	BET. 601' & 885'	3/4"C - 2#10 & 1#12 THWN CU	
WIRE AND CONDUIT REQUIREMENTS BASED ON TOTAL LOAD OF 235 WATTS			

NOTE:
ALL CONTROL WIRING CONDUIT UNDER PAVING SHALL BE IN A MINIMUM 3" DIAMETER SLEEVE.

BOE VERSION 2-1-18 /RWF

I1 CONTROLLER AND ENCLOSURE
N.T.S. REFERENCE SHEET I-002 THRU I-006 RP DETAIL 1472

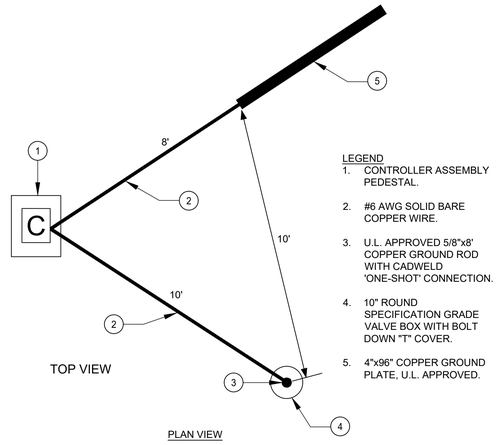

LEGEND
1. CONTROLLER ASSEMBLY PEDESTAL.
2. #6 AWG SOLID BARE COPPER WIRE.
3. U.L. APPROVED 5/8"x8' COPPER GROUND ROD WITH CADWELD 'ONE-SHOT' CONNECTION.
4. 10" ROUND SPECIFICATION GRADE VALVE BOX WITH BOLT DOWN "T" COVER.
5. 4"x96" COPPER GROUND PLATE, U.L. APPROVED.

I2 CONTROLLER GROUNDING INSTALLATION
N.T.S. REFERENCE SHEET I-001 THRU I-006

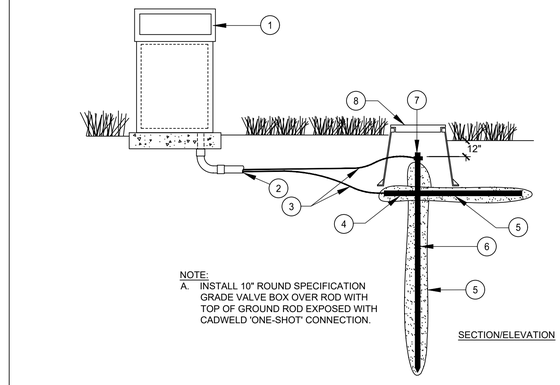

NOTE:
A. INSTALL 10" ROUND SPECIFICATION GRADE VALVE BOX OVER ROD WITH TOP OF GROUND ROD EXPOSED WITH CADWELD 'ONE-SHOT' CONNECTION.

LEGEND
1. CONTROLLER ASSEMBLY PEDESTAL. REFER TO LEGEND FOR SPECIFICATION
2. PVC ELECTRICAL SWEEP ELL (1-½" OR LARGER)
3. #6 AWG SOLID BARE COPPER WIRE
4. U.L. APPROVED 4"x96" COPPER GROUND PLATE
5. GROUNDING ENHANCEMENT EARTH CONTACT MATERIAL. SEE NATIONAL ELECTRIC CODE FOR SPECIFICATION
6. 5/8"x8' COPPER CLAD GROUND ROD, U.L. APPROVED
7. CADWELD 'ONE-SHOT' CONNECTION
8. 10" ROUND SPECIFICATION GRADE VALVE BOX WITH BOLT DOWN "T" COVER

I3 CONTROLLER GROUNDING INSTALLATION
N.T.S. REFERENCE SHEET I-001 THRU I-006

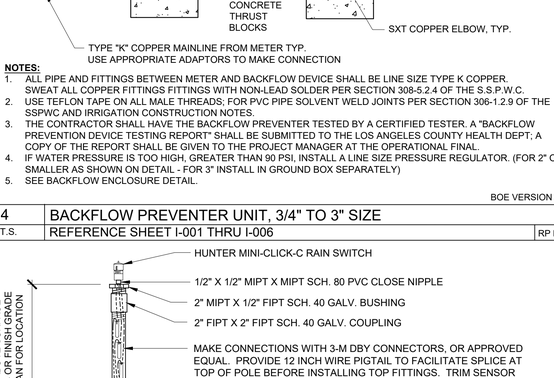

NOTES:
1. ALL PIPE AND FITTINGS BETWEEN METER AND BACKFLOW DEVICE SHALL BE LINE SIZE TYPE K COPPER. SWEAT ALL COPPER FITTINGS FITTINGS WITH NON-LEAD SOLDER PER SECTION 308-5.2.4 OF THE S.S.P.W.C.
2. USE TEFLON TAPE ON ALL MALE THREADS; FOR PVC PIPE SOLVENT WELD JOINTS PER SECTION 306-1.2.9 OF THE SSPWC AND IRRIGATION CONSTRUCTION NOTES.
3. THE CONTRACTOR SHALL HAVE THE BACKFLOW PREVENTER TESTED BY A CERTIFIED TESTER. A "BACKFLOW PREVENTION DEVICE TESTING REPORT" SHALL BE SUBMITTED TO THE LOS ANGELES COUNTY HEALTH DEPT; A COPY OF THE REPORT SHALL BE GIVEN TO THE PROJECT MANAGER AT THE OPERATIONAL FINAL.
4. IF WATER PRESSURE IS TOO HIGH, GREATER THAN 90 PSI, INSTALL A LINE SIZE PRESSURE REGULATOR. (FOR 2" OR SMALLER AS SHOWN ON DETAIL - FOR 3" INSTALL IN GROUND BOX SEPARATELY)
5. SEE BACKFLOW ENCLOSURE DETAIL.

BOE VERSION 02/08/18 RWF

I4 BACKFLOW PREVENTER UNIT, 3/4" TO 3" SIZE
N.T.S. REFERENCE SHEET I-001 THRU I-006 RP DETAIL L1002

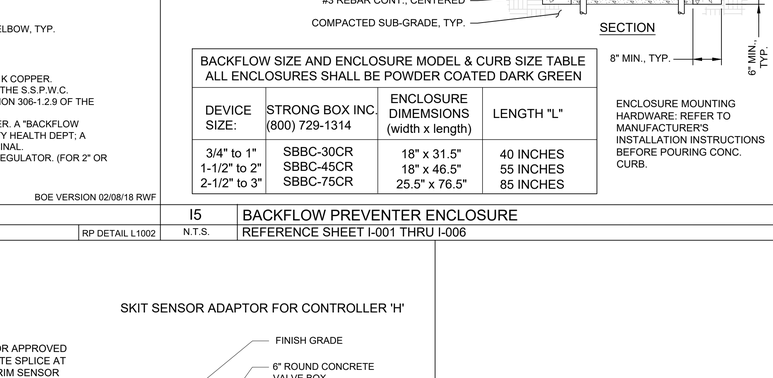

BACKFLOW SIZE AND ENCLOSURE MODEL & CURB SIZE TABLE ALL ENCLOSURES SHALL BE POWDER COATED DARK GREEN			
DEVICE SIZE:	STRONG BOX INC. (800) 729-1314	ENCLOSURE DIMEMSIONS (width x length)	LENGTH "L"
3/4" to 1"	SBBC-30CR	18" x 31.5"	40 INCHES
1-1/2" to 2"	SBBC-45CR	18" x 46.5"	55 INCHES
2-1/2" to 3"	SBBC-75CR	25.5" x 76.5"	85 INCHES

ENCLOSURE MOUNTING HARDWARE: REFER TO MANUFACTURER'S INSTALLATION INSTRUCTIONS BEFORE POURING CONC. CURB.

I5 BACKFLOW PREVENTER ENCLOSURE
N.T.S. REFERENCE SHEET I-001 THRU I-006

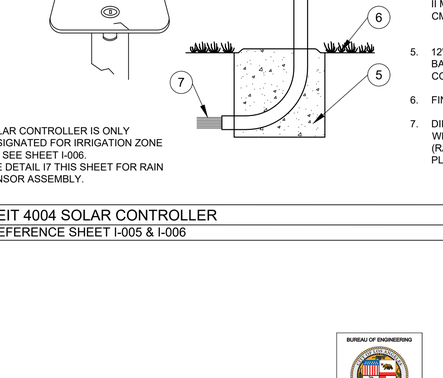

LEGEND
1. LEIT CONTROLLER MODEL LEIT 4004
2. HIGH SECURITY STAINLESS STEEL DISC-LOCK MODEL 30405
3. HEAVY -DUTY STAINLESS STEEL ENCLOSURE WITH LIGHT ACCESS THROUGH GRID ON TOP AND INTERNAL CLAMP TO SECURE COLUMN MOUNTING MODEL ENCL 4000
4. GALVANIZED STEEL MOUNTINGCOLUMN FOR LEIT 4000 AND 4000E I MODEL MCOL 4000 32" (81CM) SHORT II MODEL MCOL 4000L 48" (124 CM) LONG
5. 12"x18" (30x45CM) CONCRETE BASE USING 90LB. BAG OF CONCRETE
6. FINISH GRADE
7. DIRECT BURIAL CONTROL WIRES TO CONTROL VALVES/ (RAIN SENSOR IF NOTED ON PLANS)

I6 LEIT 4004 SOLAR CONTROLLER
N.T.S. REFERENCE SHEET I-005 & I-006

SKIT SENSOR ADAPTOR FOR CONTROLLER 'H'

NOTES:
1. USE #14 U. F. DIRECT BURIAL WIRE ONLY.
2. PROVIDE RIGID CONDUIT SLEEVE WHEREVER WIRE RUNS UNDER PAVING.
3. INSTALL MINI-CLICK RAIN SWITCH PER MANUFACTURER'S INSTRUCTIONS.
4. INSTALL SKIT SENSOR ADAPTOR WITH RAIN SENSOR FOR CONTROLLER 'H' ONLY.

RAP VERSION 5-9-97 / JPH

I7 MINI CLIK RAIN SENSOR ASSEMBLY FOR CONTROLLERS 'G' & 'H'
N.T.S. REFERENCE SHEET I-001 & I-006 RP DETAIL L1460

THE CITY OF LOS ANGELES OR ITS OFFICERS OR AGENTS SHALL NOT BE RESPONSIBLE FOR THE ACCURACY OR COMPLETENESS OF ELECTRONIC COPIES OF THIS PLAN SHEET.

REVISION DATES (DESIGN STAGE ONLY)

Sheet Version 3.0

BUREAU OF ENGINEERING
OFFICIAL RECORD

PLANS PREPARED BY:
TETRA TECH, INC.
707 WILSHIRE BLVD. 23RD FLR.
LOS ANGELES, CA 90017
PHONE: (213) 239-8866

CITY OF LOS ANGELES DEPARTMENT OF PUBLIC WORKS
BUREAU OF ENGINEERING

ENGINEERING
CITY OF LOS ANGELES

NO.	REVISIONS:	DATE	BY:

BUILDING NO.

INDEX NO. MF-300501

"THIS PLAN WAS ELECTRONICALLY SIGNED AND STAMPED"

REGISTERED PROFESSIONAL ENGINEER
JUSTIN T. SMITH
No. 85736
EXP: 9-30-22
CIVIL
STATE OF CALIFORNIA

TED ALLEN, P.E.
CITY ENGINEER
DATE: 07/11/22
DESIGN GROUP
LIC. NO. C-85736

ENGINEER:	JUSTIN SMITH
DESIGNED BY:	HEATH PRAY
DRAWN BY:	HEATH PRAY
CHECKED BY:	NATE SCHREINER
APPROVED BY:	JASON L. FUSSEL

SHEET TITLE: IRRIGATION DETAILS SHEET 3

PROJECT: SIXTH STREET PARK, ARTS AND RIVER CONNECTIVITY IMPROVEMENTS (PARC)

ADDRESS: SIXTH STREET OVER THE LOS ANGELES RIVER

VERT. CONTROL: BM 12-24070, 1929 (NGVD29) - 1985 ADJUSTMENT
HORIZ. CONTROL: GPS; PID AE 1704, EPOCH 1991.35

WORK ORDER NO. E700235D
FILE NO. --
DRAWING NO. I-011
SHEET 164 OF 295 SHEETS

7/7/2022 11:31:08 AM - O:\PROJECTS\IRVINE\20043\200-20043-17001\CAD\SHEETFILES\I-011_IRRIGATION DETAILS.DWG - PRAY, HEATH

ELECTRICAL SYMBOLS - PLANS

SYMBOL	SYMBOL DESCRIPTION
	DUPLEX RECEPTACLE (WP, GFCI AS INDICATED)
J	JUNCTION BOX
$3	SWITCH (3 = 3-WAY SWITCH, 4 = 4-WAY SWITCH, ETC.)
a	FLUORESCENT LUMINAIRE CONTROLLED BY SWITCH a
a	FLUORESCENT LUMINAIRE CONTROLLED BY SWITCH a W/ EMERGENCY BATTERY PACK
	EMERGENCY LIGHT
	WALL MOUNTED LUMINAIRE
	EXIT LIGHT
	POLE MOUNTED LUMINAIRE
A / 150	LUMINAIRE TYPE / LAMP WATTAGE — LUMINAIRE REFERENCE SEE LUMINAIRE SCHEDULE FOR DETAILS
P001	CONDUIT REFERENCE SEE CONDUIT SCHEDULE A = ANALOG SIGNAL C = CONTROL D = DATA LINK F = FIBER OPTIC P = POWER PS = PRIMARY SERVICE T = TELEPHONE SS = SECONDARY SERVICE
	UNDERGROUND DUCT BANK OR CONDUIT IN SLAB
	CONDUIT ROUTED ABOVE CEILINGS OR IN WALLS
	EXPOSED CONDUIT
G	GROUNDING CONDUCTOR MIN. 30" BELOW GRADE
A-3	HOMERUN TO PANEL "A", CIRCUIT 3
P0000	HOMERUN PER CONDUIT SCHEDULE
	CONDUIT STUBBED AND CAPPED
	CONDUIT BENDS TOWARD OBSERVER
	CONDUIT BENDS AWAY FROM OBSERVER
J	FLEXIBLE CONDUIT CONNECTION (FROM COUPLING/STUB-UP OR JBOX)
	PANELBOARD/SWITCHBOARD
	DISCONNECT SWITCH
	COMBINATION STARTER & DISCONNECT SWITCH
	HANDHOLE OR PULL BOX
DS	DUCT SMOKE DETECTOR
	SMOKE DETECTOR
F	FIRE ALARM MANUAL PULL STATION
F	FIRE ALARM STROBE
	TELEPHONE OUTLET
	DATA OUTLET
	CONDUIT SEAL
— F — F — F —	CONDUIT & WIRE FOR FIRE ALARM SYSTEM
— R — R — R —	CONDUIT & WIRE FOR ELECTRONIC KEY PAD TO PLC
KP	ELECTRONIC KEYPAD
FACP	FIRE ALARM CONTROL PANEL
	LOCAL CONTROL SWITCH
T	THERMOSTAT
	QUADPLEX
	THREE PHASE RECEPTACLE
	ISOLATED GROUND RECEPTACLE

ELECTRICAL SYMBOLS - SCHEMATIC DIAGRAMS

NORMALLY OPEN	NORMALLY CLOSED	SYMBOL DESCRIPTION
		CONTACT
		TIMED CONTACT, CONTACT ACTION REVERSES ON ENERGIZATION (ON DELAY)
		TIMED CONTACT, CONTACT ACTION REVERSES ON DE-ENERGIZATION (OFF DELAY)
		LEVEL SWITCH
		PRESSURE SWITCH
		TEMPERATURE SWITCH
		LIMIT SWITCH
		FLOW SWITCH
		PUSH BUTTON SINGLE CIRCUIT MOMENTARY CONTACT
HAND OFF AUTO / XOO / OXO / OOX		SELECTOR SWITCH HOA: HAND-OFF-AUTO (HOA SHOWN IN HAND MODE) HO: HAND-OFF RO: REMOTE-OFF SEE SYMBOL NOTE 2.
O/L		MOTOR OVERLOAD DEVICE CONTACTS
R		PILOT LIGHT A= AMBER, G= GREEN, R= RED, W= WHITE
CR1	AR1	CONTROL RELAY
TD1		TIME DELAY RELAY
M		STARTER COIL
		SOLENOID OPERATED VALVE
ETM		ELAPSED TIME METER
		FUSE
		CONTROL POWER TRANSFORMER
		GROUND
		MOTOR SPACE HEATER

SYMBOL NOTES

1. THIS DRAWING CONTAINS INDUSTRY STANDARD SYMBOLS. NOT ALL SYMBOLS SHOWN ARE USED ON THIS PROJECT.
2. FOR HOA SWITCHES, "XOO" INDICATES THAT THE TOP CONTACT IS CLOSED WHEN THE SWITCH IS SET TO HAND MODE, AND ALL OTHER SWITCH CONTACTS ARE OPEN; "OXO" INDICATES THAT THE MIDDLE CONTACT IS CLOSED WHEN THE SWITCH IS SET TO OFF MODE, AND ALL OTHER SWITCH CONTACTS ARE OPEN; "OOX" INDICATES THAT THE BOTTOM CONTACT IS CLOSED WHEN SWITCH IS IN AUTO MODE; ALL OTHER SWITCH CONTACTS ARE OPEN.

ELECTRICAL SYMBOLS - SINGLE LINE DIAGRAM

DEVICE	SYMBOL DESCRIPTION
	DRY TYPE TRANSFORMER
	IRON CORE TRANSFORMER
	POTENTIAL TRANSFORMER
	CURRENT TRANSFORMER
	FUSE
40	MOTOR, 40 HORSEPOWER
	GROUNDING ELECTRODE
600AF / 400AT	LOW VOLTAGE CIRCUIT BREAKER MCCB UON
52	MEDIUM VOLTAGE CIRCUIT BREAKER, DRAW-OUT TYPE SEE ANSI/IEEE C37.2 STANDARD DEVICE NUMBERS LIST
VFD	VARIABLE FREQUENCY DRIVE
SSS	SOLID STATE STARTER (SOFT STARTER)
SPD	SURGE PROTECTION DEVICE
PQM	POWER QUALITY MONITOR
SST	SOLID STATE TRIP
	NON-FUSED DISCONNECT SWITCH
	FUSED DISCONNECT SWITCH
	VALVE MOTOR AND ACTUATOR
	MOTOR OVERLOAD HEATER
FVNR1	MAGNETIC MOTOR STARTER FVNR1 = FULL VOLTAGE NON-REVERSING, NEMA SIZE 1 RV2S2W = REDUCED VOLTAGE 2-SPEED, 2-WINDING
47	PROTECTION RELAY SEE ANSI/IEEE C37.2 STANDARD DEVICE NUMBERS LIST
M	METER, ELECTRIC UTILITY GRADE UON
	LOCAL CONTROL SWITCH

ANSI/IEEE C37.2 STANDARD DEVICE NUMBERS

THE FOLLOWING IS A LIST OF TYPICAL DEVICE NUMBERS.
SEE ANSI/IEEE C37.2 FOR A COMPLETE LIST OF DEVICES.

11	MULTI-FUNCTION DEVICE
21	DISTANCE RELAY
23	TEMPERATURE CONTROL DEVICE
24	VOLTS PER HERTZ RELAY
25	SYNCHRONIZING OR SYNCHRONISM-CHECK DEVICE
27	UNDERVOLTAGE RELAY
32	DIRECTIONAL POWER RELAY OR REVERSE POWER RELAY
37	UNDERCURRENT OR UNDERPOWER RELAY
38	BEARING PROTECTIVE DEVICE
42	RUNNING CIRCUIT BREAKER
47	PHASE SEQUENCE OR PHASE-BALANCE VOLTAGE RELAY
50	INSTANTANEOUS OVERCURRENT RELAY
51	AC INVERSE TIME OVERCURRENT RELAY
52	AC CIRCUIT BREAKER
55	POWER FACTOR RELAY
57	SHORT-CIRCUITING OR GROUNDING DEVICE
59	OVERVOLTAGE RELAY
67	AC DIRECTIONAL OVERCURRENT RELAY
86	LOCKOUT RELAY
87	DIFFERENTIAL PROTECTIVE RELAY

ELECTRICAL ABBREVIATIONS

(D)	DEMOLISH
(E)	FUTURE
(R)	RELOCATE
%Z	PERCENT IMPEDANCE
A	AMPERES, ANALOG SIGNAL
AC	ALTERNATING CURRENT
AF	AMPERES FRAME
AFF	ABOVE FINISHED FLOOR
AFG	ABOVE FINISHED GRADE
AHJ	AUTHORITY HAVING JURISDICTION
AIC	AMPERES INTERRUPTING CAPACITY
AT	AMPERES TRIP
ATS	AUTOMATIC TRANSFER SWITCH
AWG	AMERICAN WIRE GAUGE
BC	BARE COPPER
BFG	BELOW FINISHED GRADE
C	CONDUIT
CB	CIRCUIT BREAKER
CCT	CORRELATED COLOR TEMPERATURE
CO	CONDUIT ONLY
CP	CONTROL PANEL
CPT	CONTROL POWER TRANSFORMER
CRI	COLOR RENDERING INDEX
CT	CURRENT TRANSFORMER
CU	COPPER
DC	DIRECT CURRENT
EF	EXHAUST FAN
EGC	EQUIPMENT GROUNDING CONDUCTOR
ELEV	ELEVATION
EMT	ELECTRICAL METALLIC TUBING (CONDUIT)
ETM	ELAPSED TIME METER
EXIST	EXISTING
FACP	FIRE ALARM CONTROL PANEL
FCB	FEEDER CIRCUIT BREAKER
FIT	FLOW INDICATING TRANSMITTER
FLEX	FLEXIBLE
FLUOR	FLUORESCENT
FPP	FIBER OPTIC PATCH PANEL
FVNR	FULL VOLTAGE NON-REVERSING STARTER
G, GND	GROUND
GFCI	GROUND FAULT CIRCUIT INTERRUPTER
H	HALOGEN
HH	HANDHOLE
HID	HIGH INTENSITY DISCHARGE
HMI	HUMAN MACHINE INTERFACE
HOA	HAND / OFF / AUTOMATIC
HP	HORSEPOWER
HPS	HIGH PRESSURE SODIUM
HS	HAND SWITCH
ICP	INSTRUMENTATION CONTROL PANEL
ID	INSIDE DIAMETER
INCAND	INCANDESCENT
ISP	INTERNET SERVICE PROVIDER
JB, JBOX	JUNCTION BOX
KAIC	KILOAMPERES INTERRUPTING CAPACITY
KVA	KILOVOLT-AMPERE
KW	KILOWATT
KWH	KILOWATT-HOUR
LED	LIGHT EMITTING DIODE
LCP	LOCAL CONTROL PANEL
LIT	LEVEL INDICATING TRANSMITTER
LOS	LOCKOUT STOP SWITCH
LPS	LOW PRESSURE SODIUM
LSLL	LEVEL SWITCH LOW-LOW
MCB	MAIN CIRCUIT BREAKER
MCC	MOTOR CONTROL CENTER
MCCB	MOLDED CASE CIRCUIT BREAKER
MCP	MOTOR CIRCUIT PROTECTOR
MH	METAL HALIDE, MANHOLE
MIN	MINIMUM
MLO	MAIN LUGS ONLY
MPR	MOTOR PROTECTION RELAY
MSB	MAIN SWITCHBOARD
N	NEUTRAL
NC	NORMALLY CLOSED
NIC	NOT IN CONTRACT
NO	NORMALLY OPEN
NO.	NUMBER
NTS	NOT TO SCALE
OD	OUTSIDE DIAMETER
OL'S	MOTOR OVERLOAD CONTACTS
P	POLE
PB	PUSHBUTTON, PULLBOX
PE	PHOTOELECTRIC
PFM	PHASE FAILURE MONITOR
PH	PHASE
PIT	PRESSURE INDICATING TRANSMITTER
PLC	PROGRAMMABLE LOGIC CONTROLLER
PME	POWER MONITORING EQUIPMENT
POC	POINT OF CONNECTION
PQM	POWER QUALITY MONITOR
PSHL	PRESSURE SWITCH HIGH/LOW
PSH	PRESSURE SWITCH HIGH
PSL	PRESSURE SWITCH LOW
PT	POTENTIAL TRANSFORMER
RECEPT	RECEPTACLE
RGS	RIGID GALVANIZED STEEL
RIO	REMOTE INPUT/OUTPUT DEVICE
RPM	REVERSE POWER MONITOR
RTD	RESISTANCE TEMPERATURE DETECTOR
RTU	REMOTE TERMINAL UNIT
RVSS	REDUCED VOLTAGE SOFT STARTER
SCCR	SHORT CIRCUIT CURRENT RATING
SN	SOLID NEUTRAL
SPD	SURGE PROTECTIVE DEVICE
SSS	SOLID STATE STARTER (SOFT STARTER)
SWBD	SWITCHBOARD
SYM	SYMMETRICAL
T	TELEPHONE
TEMP	TEMPERATURE
TSP	TWISTED SHIELDED PAIR
TST	TWISTED SHIELDED TRIAD
TTB	TERMINAL TELEPHONE BACKBOARD
TYP	TYPICAL
UGPS	UNDERGROUND PULL SECTION
UON	UNLESS OTHERWISE NOTED
US	UNIT SUBSTATION
V	VOLT(S)
VA	VOLT-AMPERE
VFD	VARIABLE FREQUENCY DRIVE
VIT	VIBRATION INDICATING TRANSMITTER
W	WATT, WIRE
WP	WEATHERPROOF
XFMR	TRANSFORMER
ZS	LIMIT SWITCH

GENERAL ELECTRICAL NOTES

1. REFER TO ELECTRICAL SPECIFICATIONS FOR FURTHER DETAIL AS TO SCOPE, MATERIALS, AND EXECUTION OF ELECTRICAL WORK.
2. ALL WIRING DESIGN IS BASED ON 75 DEGREE C CONDITIONS FOR COPPER CONDUCTORS OF TYPE THHN/THWN UNLESS OTHERWISE STATED.
3. ELECTRICAL CONTRACTOR TO SIZE ALL WIRING NOT EXPLICITLY SHOWN ON DRAWINGS ACCORDING TO THE REQUIREMENTS OF NATIONAL ELECTRICAL CODE (NEC) FOR THE SPECIFIC APPLICATION AND CONDITIONS.
4. ALL CONDUCTORS SHALL BE COPPER (MINIMUM SIZE #12 AWG UNLESS SPECIFICALLY NOTED OTHERWISE).
5. CONTRACTOR SHALL SUBMIT SEISMIC ANCHORAGE CALCULATIONS IN CONFORMANCE WITH CODE REQUIREMENTS AND PROVIDE SEISMIC ANCHORAGE MEANS FOR EQUIPMENT IN ACCORDANCE WITH THE CALIFORNIA BUILDING CODE.
6. THE ELECTRICAL CONTRACTOR SHALL CONFORM WITH ALL LOCAL CODES AND ORDINANCES, THE STATE OF CALIFORNIA ELECTRICAL SAFETY ORDERS, THE NATIONAL ELECTRICAL CODE AND ANY ADDITIONAL JURISDICTIONS RELATING TO THE WORK.
7. THE ELECTRICAL CONTRACTOR SHALL FURNISH AND INSTALL ALL CONDUIT, WIRE, TRANSFER SWITCHES, RECEPTACLES, SERVICES, SWITCHBOARDS, MCC, AND PANELBOARDS REQUIRED FOR A COMPLETE AND OPERATIONAL ELECTRICAL SYSTEM.
8. THE ELECTRICAL CONTRACTOR SHALL BE RESPONSIBLE TO CONFIRM THAT PROPOSED NEW EQUIPMENT ON THE CONTRACT WILL FIT DIMENSIONALLY WITH EXISTING EQUIPMENT IN LOCATION SHOWN ON DRAWINGS.
9. THE PLANS SHOW CONDUIT AND CABLE RUNS DIAGRAMMATICALLY. CONTRACTOR SHALL ROUTE CONDUIT AND CABLE TO SUIT FIELD CONDITIONS, EXCEPT IN LOCATIONS WHERE DIMENSIONED.
10. IN THE EVENT OF A CONFLICT OR INCONSISTENCY BETWEEN ITEMS INDICATED ON THE PLANS AND/OR SPECIFICATIONS, OR WITH CODE REQUIREMENTS, THE NOTE, SPECIFICATION OR CODE WHICH PRESCRIBES AND ESTABLISHES THE MORE STRINGENT JOB OR HIGHER STANDARD SHALL PREVAIL.
11. ALL ELECTRICAL EQUIPMENT EXPOSED TO THE CLIMATE SHALL BE WEATHERPROOF.
12. ALL ELECTRICAL EQUIPMENT IN THIS PROJECT SHALL BE U.L. LISTED.
13. ALL UNDERGROUND CONDUIT SHALL BE INSTALLED AT 30" BELOW FINISHED GRADE MINIMUM.
14. THE ELECTRICAL CONTRACTOR SHALL BE RESPONSIBLE FOR LOCATING EXISTING UNDERGROUND FACILITIES AND PROTECTING THESE FACILITIES FROM DAMAGE.
15. THE ELECTRICAL CONTRACTOR SHALL ROUTE CONDUITS AS REQUIRED BY FIELD CONDITIONS AND PER N.E.C.
16. THE ELECTRICAL CONTRACTOR SHALL BE RESPONSIBLE FOR REPAIRING ANY DAMAGE TO EXISTING UNDERGROUND FACILITIES.
17. FOR RECEPTACLE SYSTEMS, ONLY CONDUIT AND WIRE HOMERUNS AND CIRCUIT NUMBERS ARE SHOWN. CONTRACTOR SHALL FURNISH AND INSTALL ALL NECESSARY CONDUIT, WIRE, FITTINGS, JUNCTION BOXES, AND OTHER NECESSARY EQUIPMENT NOT SHOWN ON THE DRAWINGS THAT ARE REQUIRED FOR A COMPLETE AND OPERATIONAL SYSTEM.
18. CONTRACTOR SHALL PROVIDE ALL NEEDED CHANNELS, ANGLES, AND ANY OTHER MATERIALS REQUIRED TO SUPPORT LUMINAIRES, CONDUIT, AND ELECTRICAL EQUIPMENT IN THE LOCATIONS SHOWN ON THE DRAWINGS.
19. CONTRACTOR SHALL NOT CUT ANY STRUCTURAL MEMBERS OR USE ANY ATTACHMENTS THAT WOULD IMPAIR THEIR STRENGTH.
20. CONTRACTOR SHALL DESIGN SUPPORTS IN BETWEEN THE STRUCTURAL SUPPORT MEMBERS AND SUBMIT THE DESIGN AS A SHOP DRAWING SUBMITTAL.
21. INSTRUMENTATION IS SHOWN IN THE GENERAL VICINITY OF THE INTENDED LOCATION AND MAY NOT NECESSARILY MATCH LOCATIONS ON THE MECHANICAL PLANS. VERIFY ACTUAL LOCATIONS OF INSTRUMENTS AND RUN ASSOCIATED CONDUITS AS REQUIRED.
22. ALL EXPOSED CONDUITS TO BE GALVANIZED RIGID STEEL FOR DRY LOCATIONS AND PVC COATED GALVANIZED RIGID STEEL IN WET LOCATIONS UNLESS OTHERWISE STATED ON THE PLANS.

BUREAU OF ENGINEERING
OFFICIAL RECORD

THE CITY OF LOS ANGELES OR ITS OFFICERS OR AGENTS SHALL NOT BE RESPONSIBLE FOR THE ACCURACY OR COMPLETENESS OF ELECTRONIC COPIES OF THIS PLAN SHEET.

REVISION DATES: (DESIGN STAGE ONLY)

Sheet Version 3.0

BUREAU OF ENGINEERING
ENGINEERING
CITY OF LOS ANGELES

NO.	REVISIONS:	DATE	BY:

BUILDING NO.

INDEX NO. MF-300501

"THIS PLAN WAS ELECTRONICALLY SIGNED AND STAMPED."

REGISTERED PROFESSIONAL ENGINEER * KASSAR * Exp. 6-30-22 * REG. E-15809 * STATE OF CALIFORNIA * ELECTRICAL

CITY OF LOS ANGELES DEPARTMENT OF PUBLIC WORKS

CITY ENGINEER: TED ALLEN, P.E. LIC NO. E-15809 DATE: 07/11/22

DESIGN GROUP

DESIGNED BY: JAMES ROBERTS
DRAWN BY: JAMES ROBERTS
CHECKED BY: MAZEN KASSAR
APPROVED BY: MAZEN KASSAR

VERT. CONTROL: BM 12-04070, 1929 (NGVD29) - 1985 ADJUSTMENT
HORIZ. CONTROL: GPS; PID AE 1704, EPOCH 1991.35

SHEET TITLE: ELECTRICAL LEGEND, SYMBOLS, & ABBREVIATIONS

PROJECT: SIXTH STREET PARK, ARTS AND RIVER CONNECTIVITY IMPROVEMENTS (PARC)

ADDRESS: SIXTH STREET OVER THE LOS ANGELES RIVER

PLANS PREPARED BY:
TETRA TECH, INC.
707 WILSHIRE BLVD, 23RD FLR.
LOS ANGELES, CA 90017
PHONE: (213) 239-8866

WORK ORDER NO. E700235D
FILE NO. --
DRAWING NO. E-001
SHEET 165 OF 295 SHEETS

7/11/2022 8:10:54 PM - O:\PROJECTS\IRVINE\20043\200-20043-17001\CAD\SHEETFILES\E-001 ELECTRICAL SYMBOLS AND ABBREVIATIONS.DWG - ROBERTS, JAMES1

THE CITY OF LOS ANGELES OR ITS OFFICERS OR AGENTS SHALL NOT BE RESPONSIBLE FOR THE ACCURACY OR COMPLETENESS OF ELECTRONIC COPIES OF THIS PLAN SHEET.

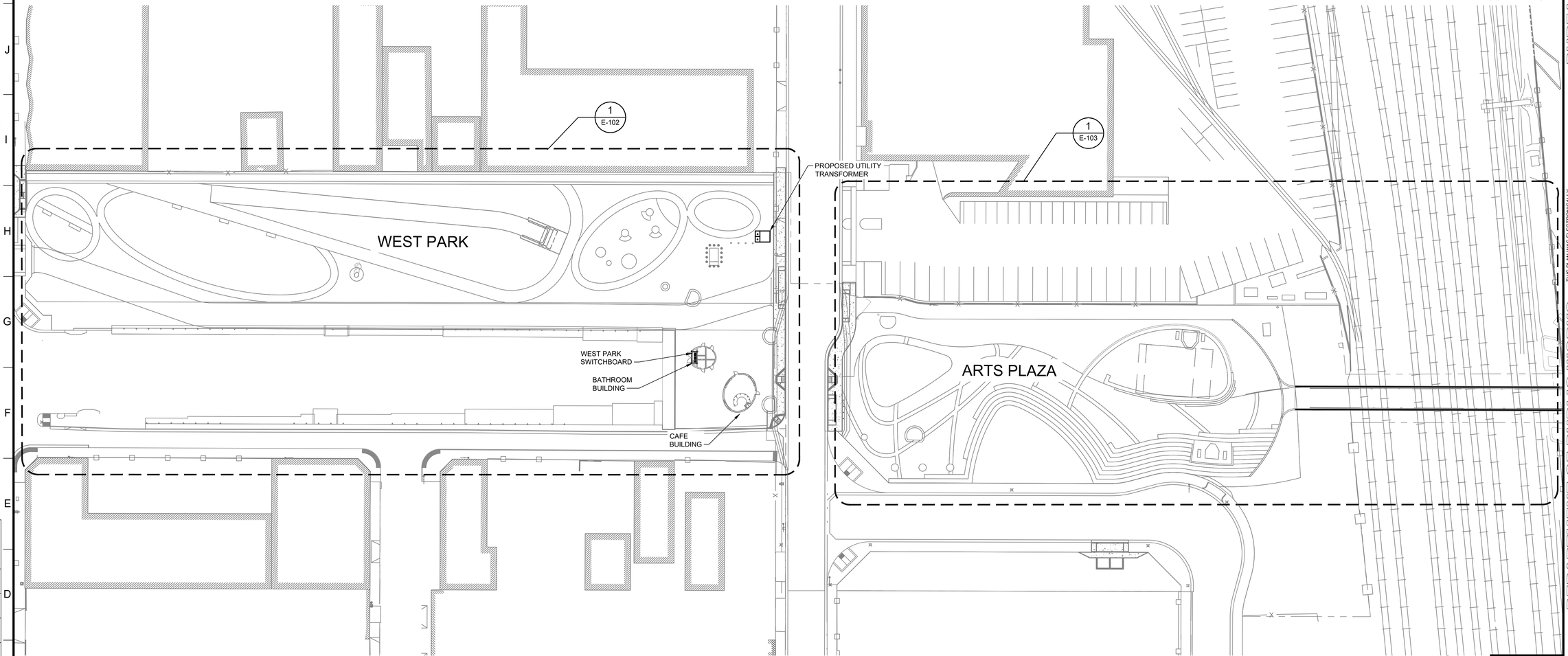

1 WEST PARK OVERALL SITE PLAN

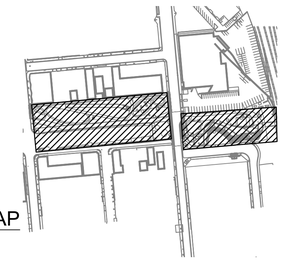

0 20' 40' 80'
SCALE: 1" = 40'

BUREAU OF ENGINEERING
OFFICIAL RECORD

PLANS PREPARED BY:
TETRA TECH, INC.
707 WILSHIRE BLVD, 23RD FLR.
LOS ANGELES, CA 90017
PHONE: (213) 239-8866

CITY OF LOS ANGELES DEPARTMENT OF PUBLIC WORKS
BUREAU OF ENGINEERING

ENGINEERING
CITY OF LOS ANGELES

NO.	REVISIONS:	DATE	BY:

BUILDING NO.

INDEX NO. MF-300501

"THIS PLAN WAS ELECTRONICALLY SIGNED AND STAMPED."

REGISTERED PROFESSIONAL ENGINEER MAZEN KASSAR No. E-15809 Exp. 6-30-22 ELECTRICAL STATE OF CALIFORNIA

CITY ENGINEER
TED ALLEN, P.E.
DATE: 07/11/22
LIC. NO. E-15809

ENGINEER:	
DESIGN GROUP:	
DESIGNED BY:	JAMES ROBERTS
DRAWN BY:	JAMES ROBERTS
CHECKED BY:	MAZEN KASSAR
APPROVED BY:	MAZEN KASSAR

VERT. CONTROL: BM 12-04070, 1929 (NGVD29) - 1985 ADJUSTMENT
HORIZ. CONTROL: GPS; PID AE 1704; EPOCH 1991.35

SHEET TITLE: WEST PARK ELECTRICAL OVERALL SITE PLAN

PROJECT: SIXTH STREET PARK, ARTS AND RIVER CONNECTIVITY IMPROVEMENTS (PARC)

ADDRESS: SIXTH STREET OVER THE LOS ANGELES RIVER

WORK ORDER NO. E700235D
FILE NO. --
DRAWING NO. E-101
SHEET 166 OF 295 SHEETS

7/11/2022 8:11:54 PM - O:\PROJECTS\IRVINE\20043\200-20043-17001\CAD\SHEETFILES\E-101 WEST PARK OVERALL PLAN.DWG - ROBERTS, JAMES1

REVISION DATES (DESIGN STAGE ONLY)

Sheet Version 3.0

THE CITY OF LOS ANGELES OR ITS OFFICERS OR AGENTS SHALL NOT BE RESPONSIBLE FOR THE ACCURACY OR COMPLETENESS OF ELECTRONIC COPIES OF THIS PLAN SHEET.

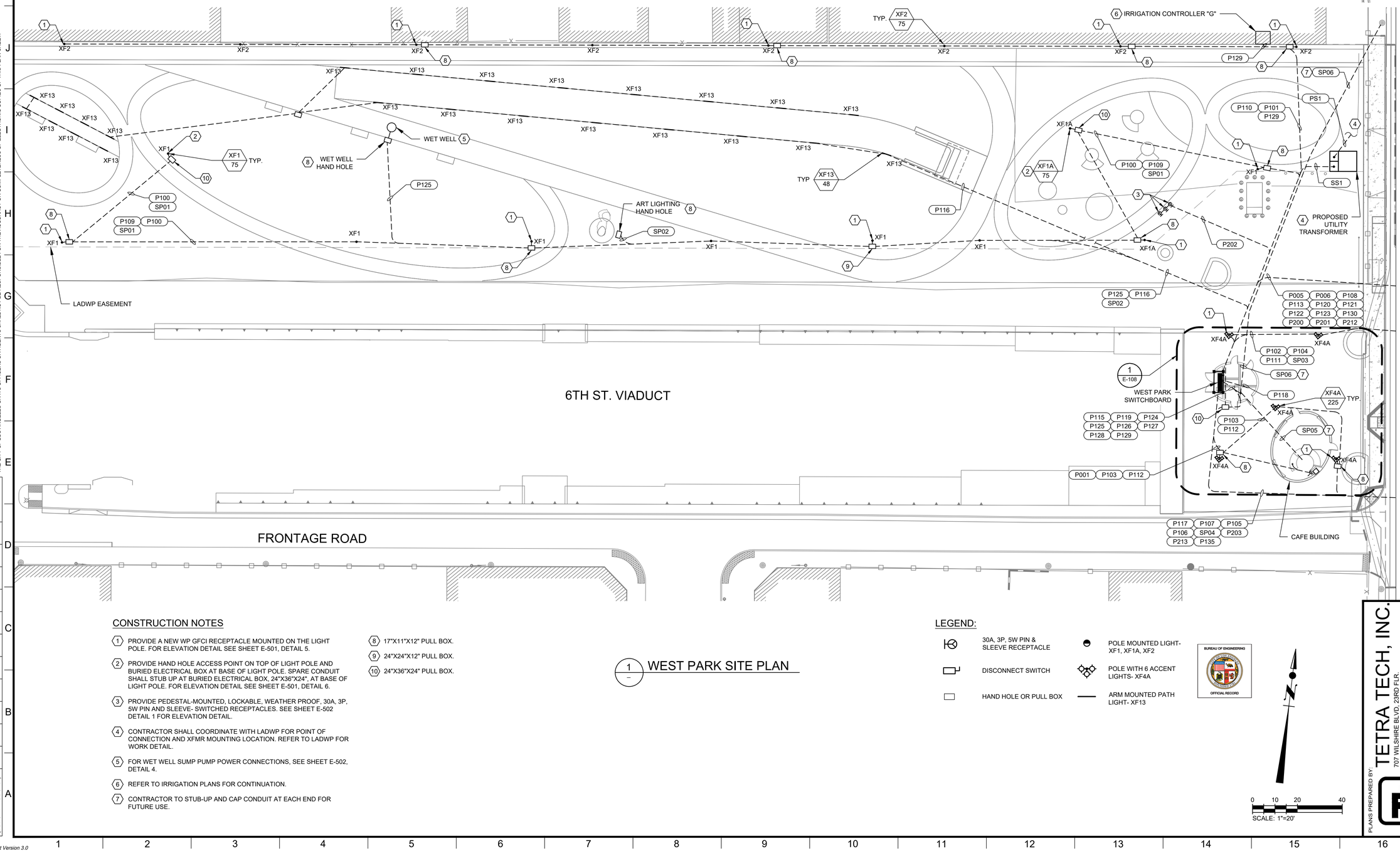

KEY MAP
NTS

CONSTRUCTION NOTES

1. PROVIDE A NEW WP GFCI RECEPTACLE MOUNTED ON THE LIGHT POLE. FOR ELEVATION DETAIL SEE SHEET E-501, DETAIL 5.
2. PROVIDE HAND HOLE ACCESS POINT ON TOP OF LIGHT POLE AND BURIED ELECTRICAL BOX AT BASE OF LIGHT POLE. SPARE CONDUIT SHALL STUB UP AT BURIED ELECTRICAL BOX, 24"X36"X24", AT BASE OF LIGHT POLE. FOR ELEVATION DETAIL SEE SHEET E-501, DETAIL 6.
3. PROVIDE PEDESTAL-MOUNTED, LOCKABLE, WEATHER PROOF, 30A, 3P, 5W PIN AND SLEEVE- SWITCHED RECEPTACLES. SEE SHEET E-502 DETAIL 1 FOR ELEVATION DETAIL.
4. CONTRACTOR SHALL COORDINATE WITH LADWP FOR POINT OF CONNECTION AND XFMR MOUNTING LOCATION. REFER TO LADWP FOR WORK DETAIL.
5. FOR WET WELL SUMP PUMP POWER CONNECTIONS, SEE SHEET E-502, DETAIL 4.
6. REFER TO IRRIGATION PLANS FOR CONTINUATION.
7. CONTRACTOR TO STUB-UP AND CAP CONDUIT AT EACH END FOR FUTURE USE.
8. 17"X11"X12" PULL BOX.
9. 24"X24"X12" PULL BOX.
10. 24"X36"X24" PULL BOX.

1 – WEST PARK SITE PLAN

LEGEND:

- 30A, 3P, 5W PIN & SLEEVE RECEPTACLE
- DISCONNECT SWITCH
- HAND HOLE OR PULL BOX
- POLE MOUNTED LIGHT- XF1, XF1A, XF2
- POLE WITH 6 ACCENT LIGHTS- XF4A
- ARM MOUNTED PATH LIGHT- XF13

BUREAU OF ENGINEERING OFFICIAL RECORD

SCALE: 1"=20'

PLANS PREPARED BY:
TETRA TECH, INC.
707 WILSHIRE BLVD. 23RD FLR.
LOS ANGELES, CA 90017
PHONE: (213) 239-8866

REVISION DATES: (DESIGN STAGE ONLY)

Sheet Version 3.0

CITY OF LOS ANGELES DEPARTMENT OF PUBLIC WORKS BUREAU OF ENGINEERING

ENGINEERING
CITY OF LOS ANGELES

NO. | REVISIONS: | DATE | BY:

BUILDING NO.

INDEX NO. MF-300501

REGISTERED PROFESSIONAL ENGINEER * JAMES KASSAR * No. E-15809 * Exp. 6-30-22 * ELECTRICAL * STATE OF CALIFORNIA

THIS PLAN WAS ELECTRONICALLY SIGNED AND STAMPED.

CITY ENGINEER
LIC NO. E-15809 DATE: 07/11/22
TED ALLEN, P.E.

DESIGN GROUP
ENGINEER:
DESIGNED BY: JAMES ROBERTS
DRAWN BY: JAMES ROBERTS
CHECKED BY: MAZEN KASSAR
APPROVED BY: MAZEN KASSAR

VERT. CONTROL: BM 12-04070, 1929 (NGVD29) - 1985 ADJUSTMENT
HORIZ. CONTROL: GPS; PID AE 1704, EPOCH 1991.35

SHEET TITLE: ELECTRICAL SITE PLAN I

PROJECT: SIXTH STREET PARK, ARTS AND RIVER CONNECTIVITY IMPROVEMENTS (PARC)

ADDRESS: SIXTH STREET OVER THE LOS ANGELES RIVER

WORK ORDER NO. E700235D
FILE NO. --
DRAWING NO. E-102
SHEET 167 OF 295 SHEETS

7/11/2022 8:13:10 PM- O:\PROJECTS\IRVINE\20043\200-20043-170011\CAD\SHEETFILES\E-102 ELECTRICAL SITE PLAN I.DWG - ROBERTS, JAMES1

THE CITY OF LOS ANGELES OR ITS OFFICERS OR AGENTS SHALL NOT BE RESPONSIBLE FOR THE ACCURACY OR COMPLETENESS OF ELECTRONIC COPIES OF THIS PLAN SHEET.

MATCH LINE: SEE SHEET E-102

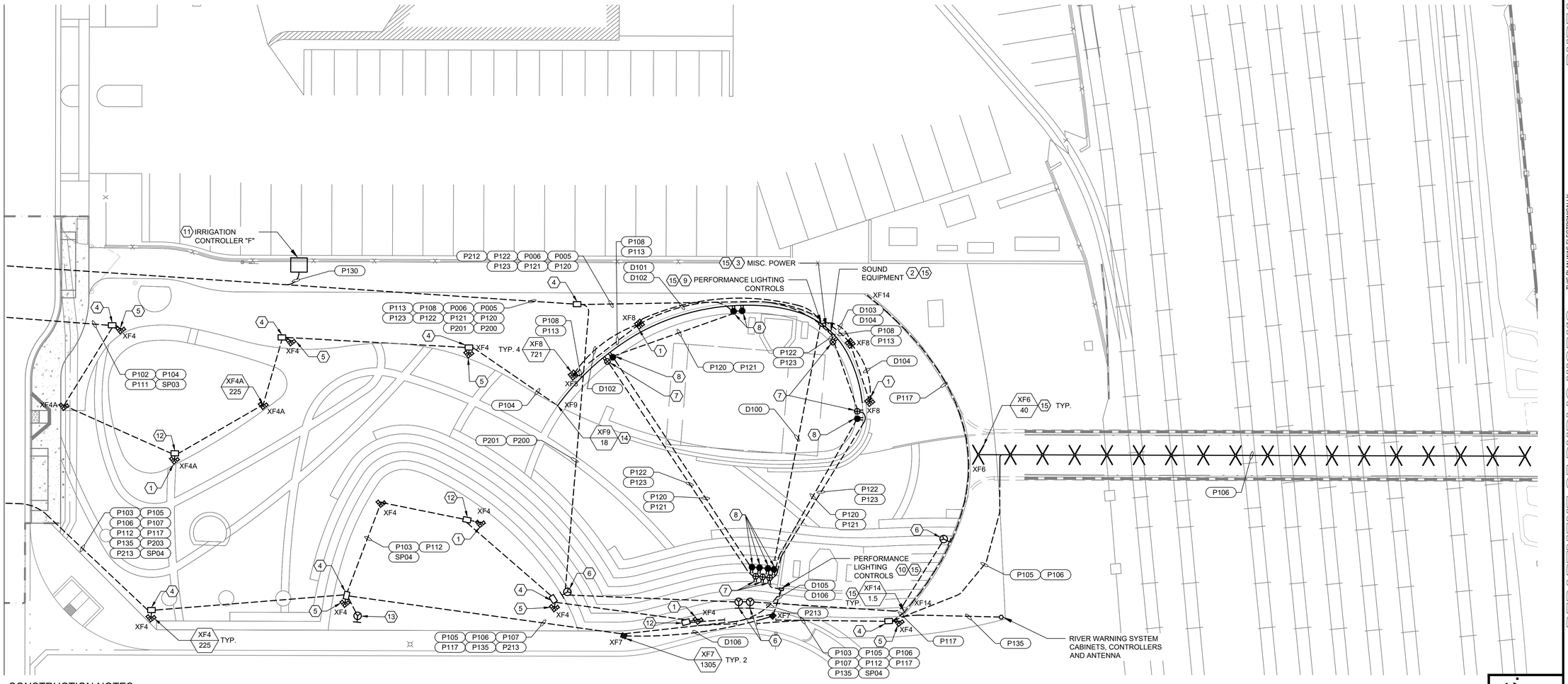

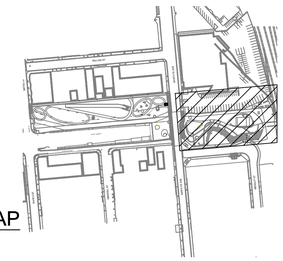

KEY MAP
NTS

CONSTRUCTION NOTES

1. PROVIDE A NEW WP GFCI RECEPTACLE MOUNTED ON THE POLE LIGHT. FOR ELEVATION DETAIL SEE SHEET E-501, DETAIL 5.
2. PROVIDE LOCKABLE 200A, 3P, 5W, NEMA 3R THEATRE POWER SWITCH. WALL-MOUNTED ON CONCRETE WALL. SEE SHEET E-503, DETAIL 4.
3. PROVIDE LOCKABLE 400A, 3P, 5W, NEMA 3R THEATRE POWER SWITCH. WALL-MOUNTED ON CONCRETE WALL. SEE SHEET E-503, DETAIL 4.
4. 24"X36"X24" PULL BOX.
5. PROVIDE HAND HOLE ACCESS POINT ON TOP OF LIGHT POLE AND BURIED ELECTRICAL BOX, 24"X36"X24", AT BASE OF LIGHT POLE. SPARE CONDUIT SHALL STUB UP AT BURIED ELECTRICAL BOX AT BASE OF LIGHT POLE. FOR ELEVATION DETAIL SEE SHEET E-501, DETAIL 6.
6. PROVIDE WALL-MOUNTED, WEATHER PROOF, 30A, 3P, 5W PIN & SLEEVE- SWITCHED RECEPTACLES. SEE SHEET E-503, DETAIL 3.14.
7. PROVIDE WALL-MOUNTED, WEATHERPROOF, 20A QUAD RECEPTACLES. SEE SHEET E-503, DETAIL 3.
8. PROVIDE WALL-MOUNTED, WEATHERPROOF, 20A QUAD RECEPTACLES WITH ISOLATED GROUND. SEE SHEET E-503, DETAIL 3.
9. NEMA 3R ENCLOSURE FOR PERFORMANCE LIGHTING CONTROLS TO BE INSTALLED BY CONTRACTOR. CONTRACTOR RESPONSIBLE FOR THE FINAL DESIGN, INSTALLATION, AND COMMISSIONING OF THE LIGHTING CONTROL SYSTEM. MUST USE A LIGHTING CONTROL SYSTEM INTEGRATOR. SEE SHEET E-601 FOR CONTROL SCHEMATIC. ENCLOSURE TO BE WALL-MOUNTED ON CONCRETE WALL.
10. NEMA 3R ENCLOSURE FOR PERFORMANCE LIGHTING CONTROLS TO BE INSTALLED BY CONTRACTOR. CONTRACTOR RESPONSIBLE FOR THE FINAL DESIGN, INSTALLATION, AND COMMISSIONING OF THE LIGHTING CONTROL SYSTEM. MUST USE A LIGHTING CONTROL SYSTEM INTEGRATOR. SEE SHEET E-601 FOR CONTROL SCHEMATIC.
11. REFER TO IRRIGATION PLANS FOR CONTINUATION.
12. 17"X11"X12" PULL BOX.
13. PROVIDE PEDESTAL, WEATHER PROOF, 30A, 3P, 5W PIN & SLEEVE-SWITCHED RECEPTACLES. SEE SHEET E-503, DETAIL 3.14.
14. XF9 LIGHTING RUNS ALONG ENTIRE WALL SURFACE.
15. EQUIPMENT MOUNTING AND ANCHORAGE SHALL BE DESIGNED AND PROVIDED BY THE CONTRACTOR AS DEFERRED SUBMITTAL. STRUCTURAL CALCULATIONS AND SHOP DRAWINGS FOR THE PAD AND/OR EQUIPMENT ANCHORAGE, STAMPED AND SIGNED BY A DULY LICENSED CIVIL OR STRUCTURAL ENGINEER IN THE STATE OF CALIFORNIA, SHALL BE PROVIDED BY THE CONTRACTOR FOR REVIEW AND APPROVAL. REFER TO THE NOTES ON SHEET S-001 AND S-002 FOR ADDITIONAL REQUIREMENTS.

1 ARTS PLAZA SITE PLAN

LEGEND:

- QUAD RECEPTACLE
- 30A, 3P, 4W PIN & SLEEVE RECEPTACLE
- QUAD RECEPTACLE WITH ISOLATED GROUND
- DISCONNECT SWITCH
- HAND HOLE OR PULL BOX
- POLE WITH 6 ACCENT LIGHTS- XF4, XF4A
- POLE WITH 6 ACCENT LIGHTS & 4 THEATRICAL LIGHTS- XF8
- POLE WITH 6 ACCENT LIGHTS AND 6 THEATRICAL LIGHTS- XF7
- LED DOWNLIGHT- XF6(4)

SCALE: 1"=20'

PLANS PREPARED BY:
TETRA TECH, INC.
707 WILSHIRE BLVD. 23RD FLR.
LOS ANGELES, CA 90017
PHONE: (213) 239-8866

CITY OF LOS ANGELES DEPARTMENT OF PUBLIC WORKS
BUREAU OF ENGINEERING

VERT. CONTROL: BM 12-04070, 1929 (NGVD29) - 1985 ADJUSTMENT
HORIZ. CONTROL: GPS; PID AE 1704, EPOCH 1991.35

SHEET TITLE: ELECTRICAL SITE PLAN II
PROJECT: SIXTH STREET PARK, ARTS AND RIVER CONNECTIVITY IMPROVEMENTS (PARC)
ADDRESS: SIXTH STREET OVER THE LOS ANGELES RIVER

CITY ENGINEER
LIC NO. E-15809 DATE: 07/11/22

ENGINEER: TED ALLEN, P.E. DESIGN GROUP
DESIGNED BY: JAMES ROBERTS DATE:
DRAWN BY: JAMES ROBERTS BY:
CHECKED BY: MAZEN KASSAR
APPROVED BY: MAZEN KASSAR

REVISIONS: NO.

BUILDING NO.

INDEX NO. MF-300501

REGISTERED PROFESSIONAL ENGINEER MAZEN KASSAR No. E-15809 Exp. 6-30-22 ELECTRICAL STATE OF CALIFORNIA

THIS PLAN WAS ELECTRONICALLY SIGNED AND STAMPED.

WORK ORDER NO. E700235D
FILE NO. --
DRAWING NO. E-103
SHEET 168 OF 295 SHEETS

REVISION DATES (DESIGN STAGE ONLY)

Sheet Version 3.0

7/11/2022 8:14:11 PM • O:\PROJECTS\IRVINE\20043\200-20043-17001\CAD\SHEETFILES\E-103 ELECTRICAL SITE PLAN II.DWG - ROBERTS, JAMES1

THE CITY OF LOS ANGELES OR ITS OFFICERS OR AGENTS SHALL NOT BE RESPONSIBLE FOR THE ACCURACY OR COMPLETENESS OF ELECTRONIC COPIES OF THIS PLAN SHEET.

KEY MAP
NTS

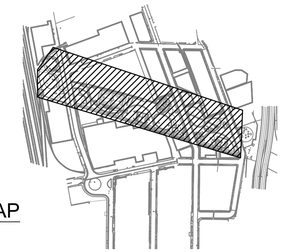

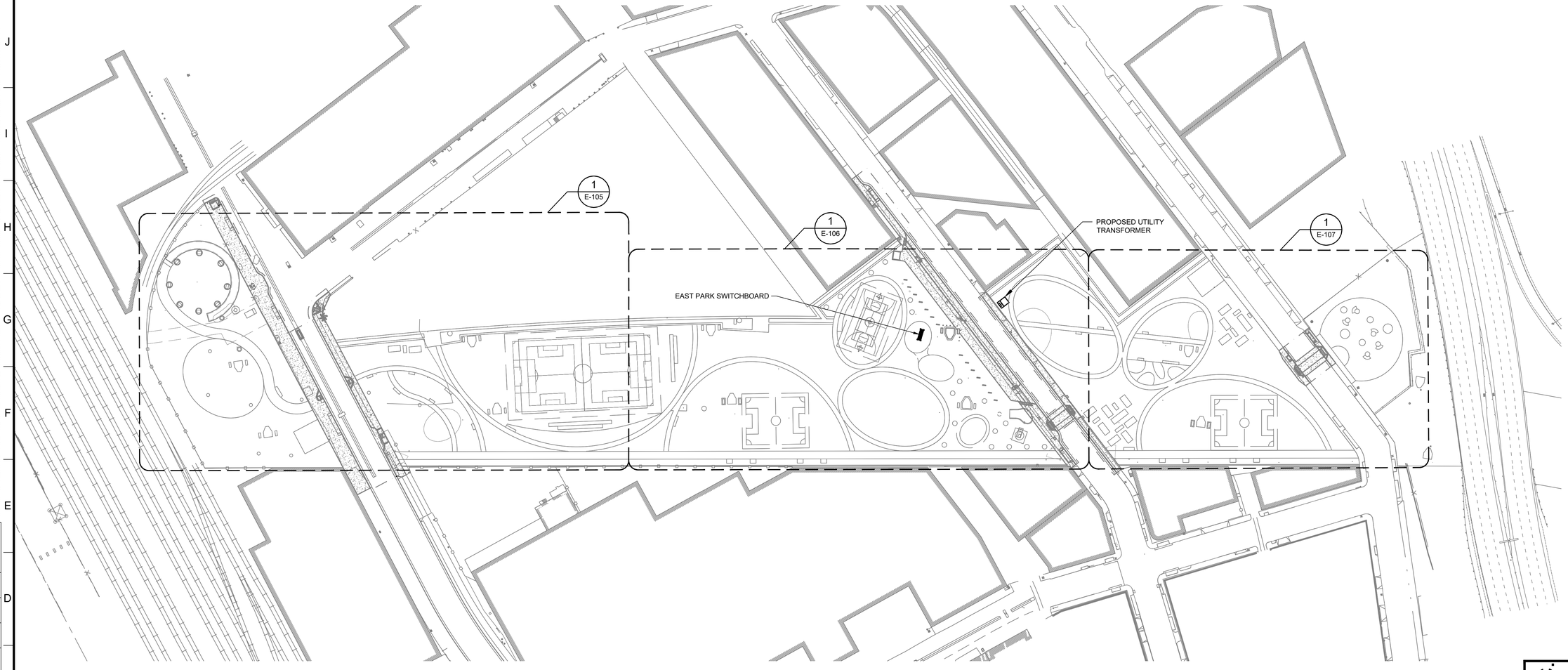

1 EAST PARK OVERALL SITE PLAN



0 30 60 120
SCALE: 1"=60'

PLANS PREPARED BY:
TETRA TECH, INC.
707 WILSHIRE BLVD. 23RD FLR.
LOS ANGELES, CA 90017
PHONE: (213) 239-8866

CITY OF LOS ANGELES DEPARTMENT OF PUBLIC WORKS
BUREAU OF ENGINEERING

ENGINEERING
CITY OF LOS ANGELES

NO.	REVISIONS:	DATE	BY:

BUILDING NO.

INDEX NO. MF-300501

REGISTERED PROFESSIONAL ENGINEER
MAZEN KASSAR
No. E-15809
Exp. 6-30-22
ELECTRICAL
STATE OF CALIFORNIA

THIS PLAN WAS ELECTRONICALLY SIGNED AND STAMPED.

CITY ENGINEER

LIC. NO.	E-15809
DATE:	07/11/22

TED ALLEN, P.E.
DESIGN GROUP

ENGINEER:	
DESIGNED BY:	JAMES ROBERTS
DRAWN BY:	JAMES ROBERTS
CHECKED BY:	MAZEN KASSAR
APPROVED BY:	MAZEN KASSAR

VERT. CONTROL: BM 12-04070, 1929 (NGVD29) - 1985 ADJUSTMENT
HORIZ. CONTROL: GPS; PID AE 1704, EPOCH 1991.35

SHEET TITLE: EAST PARK ELECTRICAL OVERALL SITE PLAN

PROJECT: SIXTH STREET PARK, ARTS AND RIVER CONNECTIVITY IMPROVEMENTS (PARC)

ADDRESS: SIXTH STREET OVER THE LOS ANGELES RIVER

WORK ORDER NO. E700235D
FILE NO. --
DRAWING NO. E-104
SHEET 169 OF 295 SHEETS

7/11/2022 8:14:57 PM - O:\PROJECTS\IRVINE\20043\200-20043-17001\CAD\SHEETFILES\E-104_EAST PARK OVERAL PLAN.DWG - ROBERTS, JAMES1

REVISION DATES
(DESIGN STAGE ONLY)

Sheet Version 3.0

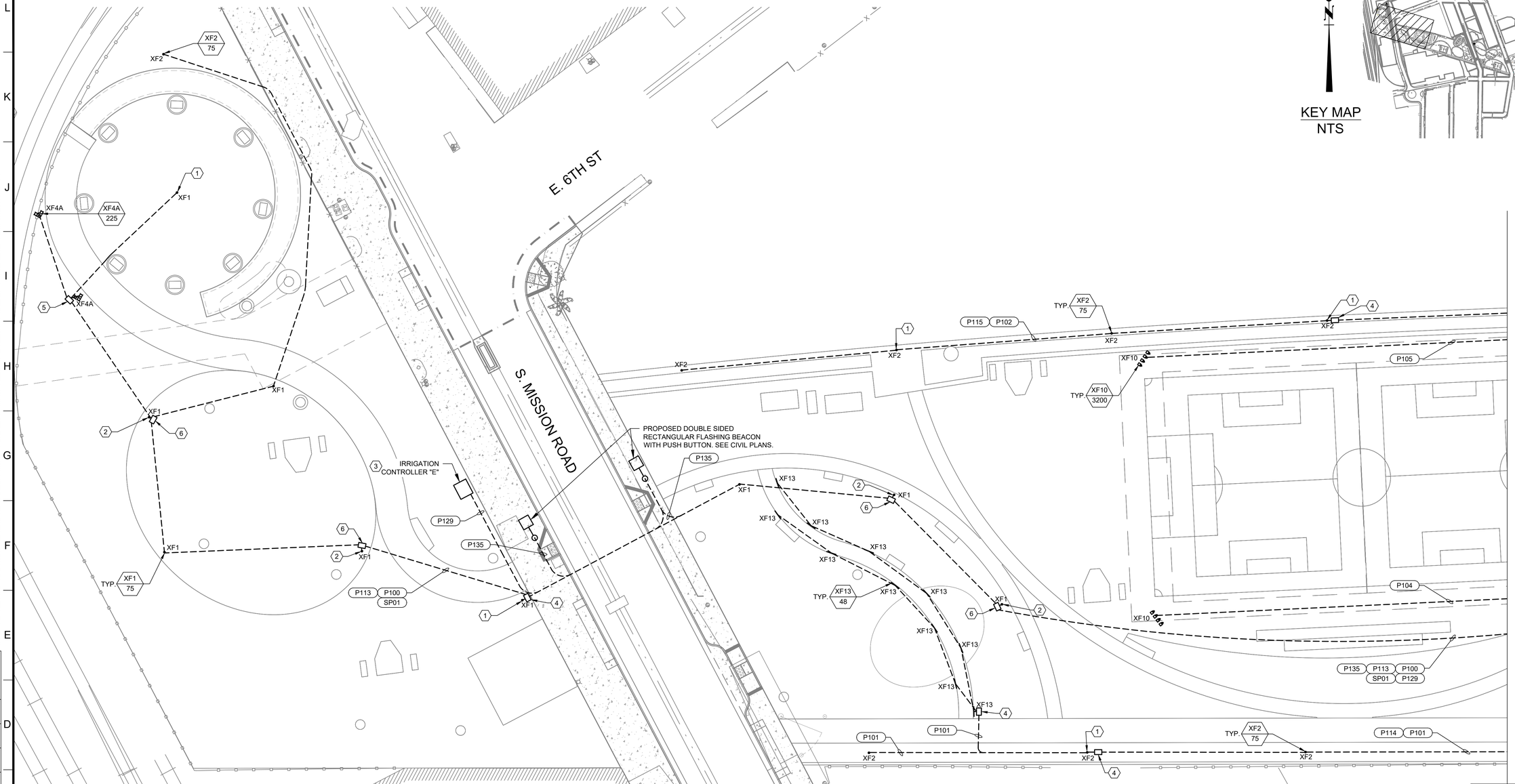

KEY MAP
NTS

1 EAST PARK SITE PLAN

CONSTRUCTION NOTES

1. PROVIDE A NEW WP GFCI RECEPTACLE MOUNTED ON THE POLE LIGHT. FOR ELEVATION DETAIL SEE SHEET E-501, DETAIL 5.
2. PROVIDE HAND HOLE ACCESS POINT ON TOP OF LIGHT POLE AND BURIED ELECTRICAL BOX AT BASE OF LIGHT POLE. SPARE CONDUIT SHALL STUB UP AT BURIED ELECTRICAL BOX, 24"X36"X24", AT BASE OF LIGHT POLE. FOR ELEVATION DETAIL SEE SHEET E-501, DETAIL 6.
3. REFER TO IRRIGATION PLANS FOR CONTINUATION.
4. 17"X11"X12" PULL BOX.
5. 24"X24"X12" PULL BOX.
6. 24"X36"X24" PULL BOX.

LEGEND:

- POLE MOUNTED LIGHT- XF1, XF2
- ARM MOUNTED PATH LIGHT- XF13
- POLE WITH 6 ACCENT LIGHTS- XF4A
- POLE WITH 4 SPORTS LIGHTS- XF10

BUREAU OF ENGINEERING OFFICIAL RECORD

SCALE: 1"=20'

PLANS PREPARED BY:
TETRA TECH, INC.
707 WILSHIRE BLVD, 23RD FLR.
LOS ANGELES, CA 90017
PHONE: (213) 239-8866

BUREAU OF ENGINEERING
CITY OF LOS ANGELES
DEPARTMENT OF PUBLIC WORKS

ENGINEERING
CITY OF LOS ANGELES

NO. | REVISIONS: | DATE | BY:

BUILDING NO.

INDEX NO. MF-300501

REGISTERED PROFESSIONAL ENGINEER MAZEN KASSAR Exp. 6-30-22 ELECTRICAL STATE OF CALIFORNIA

THIS PLAN WAS ELECTRONICALLY SIGNED AND STAMPED.

CITY ENGINEER
ENGINEER: TED ALLEN, P.E.
LIC NO. E-15809
DATE: 07/11/22

DESIGN GROUP:
DESIGNED BY: JAMES ROBERTS
DRAWN BY: JAMES ROBERTS
CHECKED BY: MAZEN KASSAR
APPROVED BY: MAZEN KASSAR

VERT. CONTROL: BM 12-04070, 1929 (NGVD29) - 1985 ADJUSTMENT
HORIZ. CONTROL: GPS - PID AE 1704, EPOCH 1991.35

SHEET TITLE: ELECTRICAL SITE PLAN III

PROJECT: SIXTH STREET PARK, ARTS AND RIVER CONNECTIVITY IMPROVEMENTS (PARC)

ADDRESS: SIXTH STREET OVER THE LOS ANGELES RIVER

WORK ORDER NO. E700235D
FILE NO. --
DRAWING NO. E-105
SHEET 170 OF 295 SHEETS

7/11/2022 8:16:06 PM - O:\PROJECTS\RIVINE\20043\200-20043-17001\CAD\SHEETFILES\E-105 ELECTRICAL SITE PLAN III.DWG - ROBERTS, JAMES1

REVISION DATES (DESIGN STAGE ONLY)

THE CITY OF LOS ANGELES OR ITS OFFICERS OR AGENTS SHALL NOT BE RESPONSIBLE FOR THE ACCURACY OR COMPLETENESS OF ELECTRONIC COPIES OF THIS PLAN SHEET.

Sheet Version 3.0

THE CITY OF LOS ANGELES OR ITS OFFICERS OR AGENTS SHALL NOT BE RESPONSIBLE FOR THE ACCURACY OR COMPLETENESS OF ELECTRONIC COPIES OF THIS PLAN SHEET.

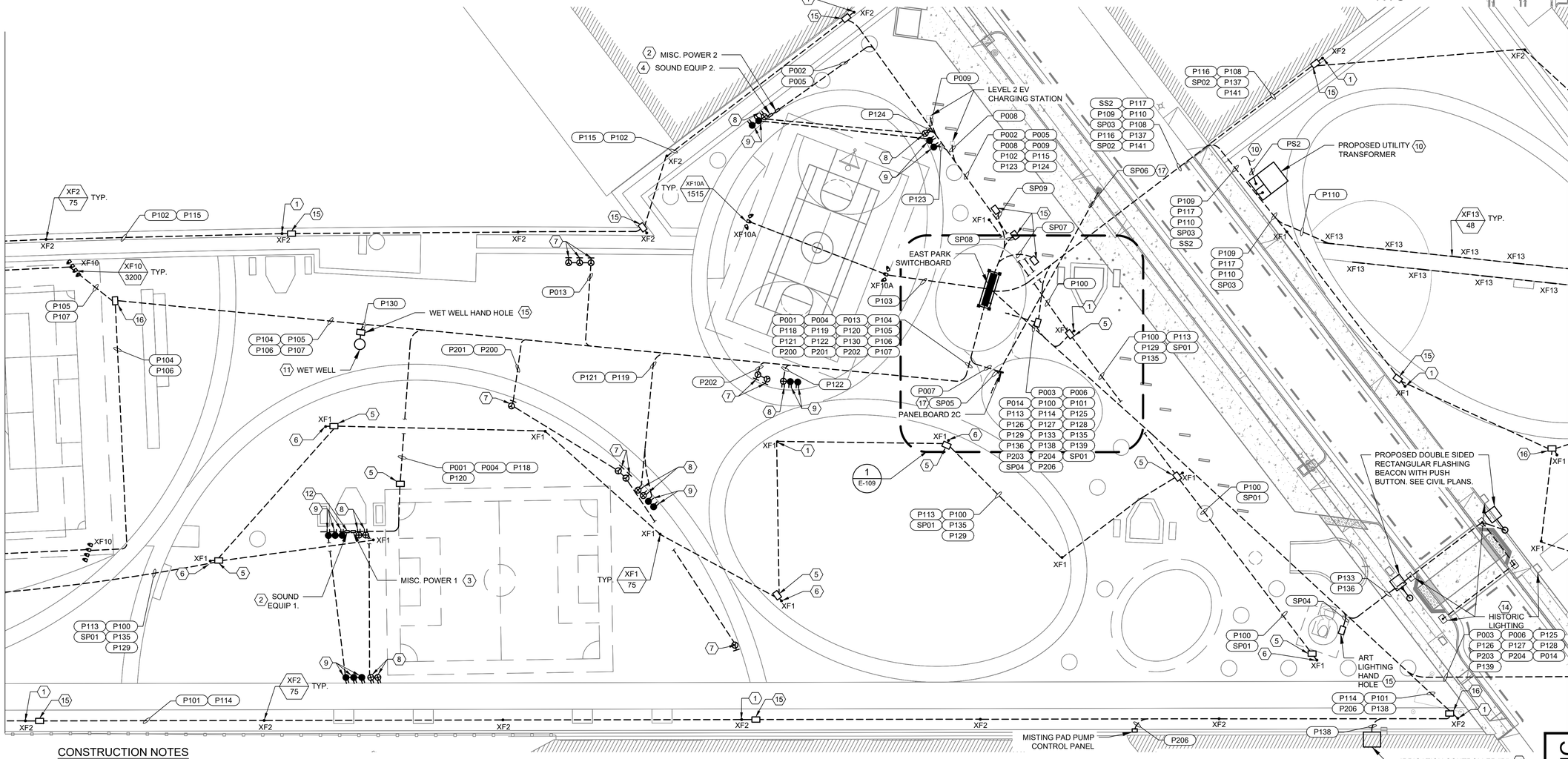

CONSTRUCTION NOTES

1. PROVIDE A NEW WP GFCI RECEPTACLE MOUNTED ON THE POLE LIGHT. FOR ELEVATION DETAIL SEE SHEET E-501, DETAIL 5.
2. PROVIDE LOCKABLE 200A, 3P, 5W, NEMA 3R THEATRE POWER SWITCH. ENCLOSURE TO BE MOUNTED ON UNISTRUT. SEE SHEET E-503, DETAIL 1.
3. PROVIDE LOCKABLE 400A, 3P, 5W, NEMA 3R THEATRE POWER SWITCH. ENCLOSURE TO BE MOUNTED ON UNISTRUT. SEE SHEET E-503, DETAIL 1.
4. PROVIDE LOCKABLE 60A, 3P, 5W, NEMA 3R THEATRE POWER SWITCH. ENCLOSURE TO BE MOUNTED ON UNISTRUT. SEE SHEET E-503, DETAIL 1.
5. 24"X36"X24" PULL BOX.
6. PROVIDE HAND HOLE ACCESS POINT ON TOP OF LIGHT POLE AND BURIED ELECTRICAL BOX AT BASE OF LIGHT POLE. SPARE CONDUIT SHALL STUB UP AT BURIED ELECTRICAL BOX. 24"X36"X24", AT BASE OF LIGHT POLE. FOR ELEVATION DETAIL SEE SHEET E-501, DETAIL 6.
7. PROVIDE LOCKABLE, PEDESTAL-MOUNTED, WEATHER PROOF, 30A, 3P, 5W PIN & SLEEVE-SWITCHED RECEPTACLES. SEE SHEET E-502, DETAIL 1.
8. PROVIDE LOCKABLE, PEDESTAL-MOUNTED, WEATHERPROOF, 20A QUAD RECEPTACLES. SEE SHEET E-502, DETAIL 1.
9. PROVIDE LOCKABLE, PEDESTAL-MOUNTED, WEATHERPROOF, 20A QUAD RECEPTACLES WITH ISOLATED GROUND. SEE SHEET E-502, DETAIL 1.
10. CONTRACTOR SHALL COORDINATE WITH LADWP FOR POINT OF CONNECTION AND XFMR MOUNTING LOCATION. REFER TO LADWP FOR WORK DETAIL.
11. FOR WET WELL SUMP PUMP POWER CONNECTIONS, SEE SHEET E-502, DETAIL 4.
12. EQUIPMENT TO MAINTAIN A MINIMUM CLEARANCE OF 30" FROM THE BENT.
13. REFER TO IRRIGATION PLANS FOR CONTINUATION.
14. REFER TO SHEET C-601, DETAIL 7 AND THE SPECIFICATIONS FOR ADDITIONAL INFORMATION.
15. 17"X11"X12" PULL BOX.
16. 24"X24"X12" PULL BOX.
17. CONTRACTOR TO STUB-UP AND CAP CONDUIT AT EACH END FOR FUTURE USE.

1 EAST PARK SITE PLAN

LEGEND:

- QUAD RECEPTACLE
- 30A, 3P, 5W PIN & SLEEVE RECEPTACLE
- QUAD RECEPTACLE WITH ISOLATED GROUND
- DISCONNECT SWITCH
- HAND HOLE OR PULL BOX
- POLE MOUNTED LIGHT- XF1, XF2
- ARM MOUNTED PATH LIGHT- XF13
- POLE WITH 3 SPORTS LIGHTS- XF10A

BUREAU OF ENGINEERING — OFFICIAL RECORD

SCALE: 1"=20'

REVISION DATES (DESIGN STAGE ONLY)

Sheet Version 3.0

BUREAU OF ENGINEERING • CITY OF LOS ANGELES • DEPARTMENT OF PUBLIC WORKS

ENGINEERING — CITY OF LOS ANGELES

NO. | REVISIONS: | DATE | BY:

BUILDING NO.

INDEX NO. MF-300501

THIS PLAN WAS ELECTRONICALLY SIGNED AND STAMPED.

REGISTERED PROFESSIONAL ENGINEER — MAZEN KASSAR — Exp. 6-30-22 — ELECTRICAL — STATE OF CALIFORNIA

CITY ENGINEER

LIC. NO. E-15809 | DATE: 07/11/22

DESIGN GROUP: TED ALLEN, P.E.

ENGINEER: TED ALLEN, P.E.

DESIGNED BY: JAMES ROBERTS

DRAWN BY: JAMES ROBERTS

CHECKED BY: MAZEN KASSAR

APPROVED BY: MAZEN KASSAR

PLANS PREPARED BY:
TETRA TECH, INC.
707 WILSHIRE BLVD. 23RD FLR.
LOS ANGELES, CA 90017
PHONE: (213) 239-8866

VERT. CONTROL: BM 12-04070, 1929 (NGVD29) - 1985 ADJUSTMENT
HORIZ. CONTROL: GPS; PID AE 1704, EPOCH 1991.35

SHEET TITLE: ELECTRICAL SITE PLAN IV

PROJECT: SIXTH STREET PARK, ARTS AND RIVER CONNECTIVITY IMPROVEMENTS (PARC)
SIXTH STREET OVER THE LOS ANGELES RIVER

ADDRESS:

WORK ORDER NO. E700235D

FILE NO. --

DRAWING NO. E-106

SHEET 171 OF 295 SHEETS

7/11/2022 6:17:16 PM - O:\PROJECTS\RVINE\20043\200\20043-17001\CAD\SHEETFILES\E-106 ELECTRICAL SITE PLAN IV.DWG - ROBERTS, JAMES1

THE CITY OF LOS ANGELES OR ITS OFFICERS OR AGENTS SHALL NOT BE RESPONSIBLE FOR THE ACCURACY OR COMPLETENESS OF ELECTRONIC COPIES OF THIS PLAN SHEET.

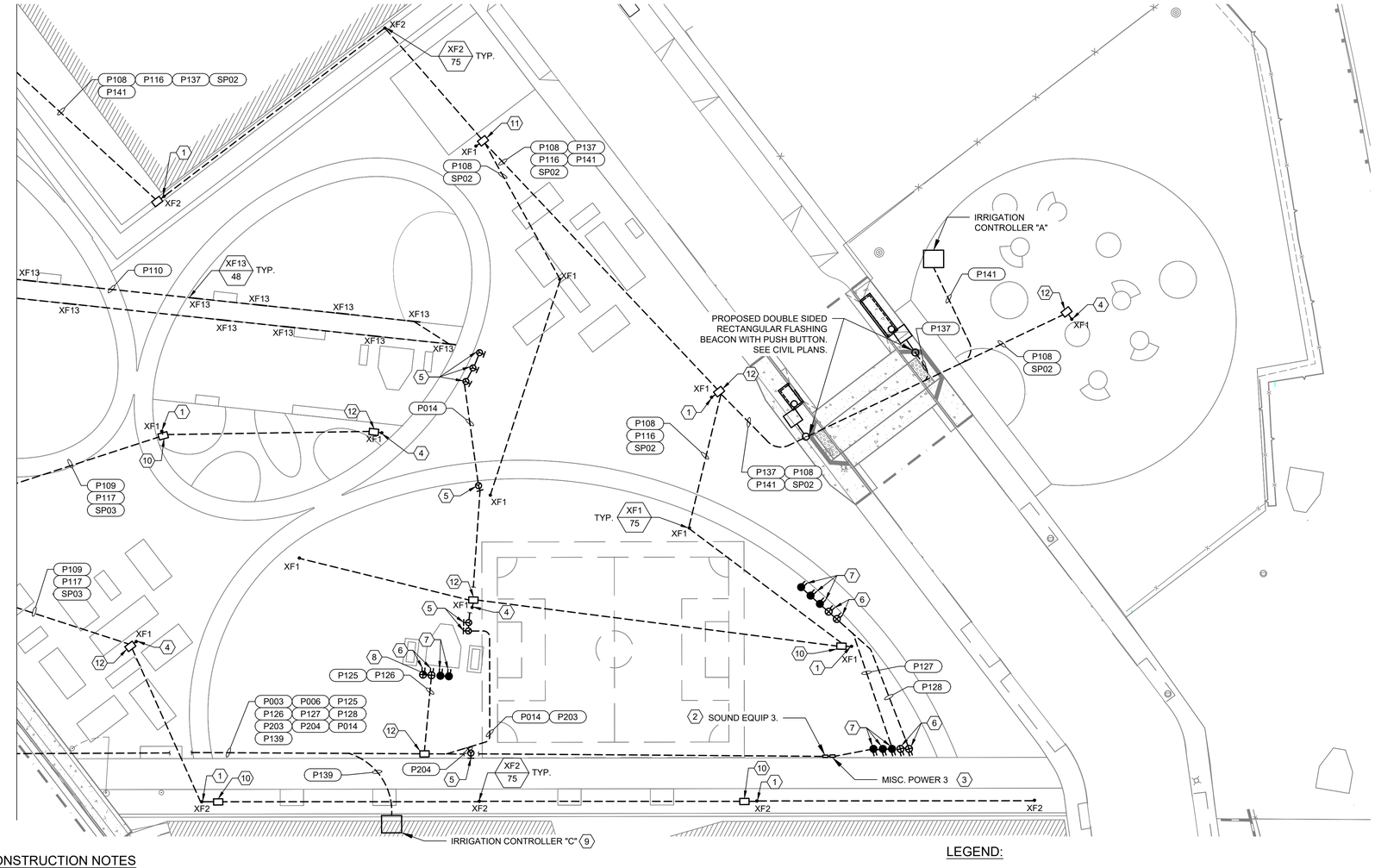

CONSTRUCTION NOTES

1. PROVIDE A NEW WP GFCI RECEPTACLE MOUNTED ON THE POLE LIGHT
2. PROVIDE LOCKABLE 200A, 3P, 5W, NEMA 3R THEATRE POWER SWITCH. ENCLOSURE TO BE MOUNTED ON UNISTRUT. SEE SHEET E-503, DETAIL 1.
3. PROVIDE LOCKABLE 400A, 3P, 5W, NEMA 3R THEATRE POWER SWITCH. ENCLOSURE TO BE MOUNTED ON UNISTRUT. SEE SHEET E-503, DETAIL 1.
4. PROVIDE HAND HOLE ACCESS POINT ON TOP OF LIGHT POLE AND BURIED ELECTRICAL BOX AT BASE OF LIGHT POLE. SPARE CONDUIT SHALL STUB UP AT BURIED ELECTRICAL BOX, 24"X36"X24" AT BASE OF LIGHT POLE. FOR ELEVATION DETAIL SEE SHEET E-501, DETAIL 6.
5. PROVIDE LOCKABLE, PEDESTAL MOUNTED, WEATHER PROOF, 30A, 3P, 5W PIN & SLEEVE-SWITCHED RECEPTACLES. SEE SHEET E-502, DETAIL 1.
6. PROVIDE LOCKABLE, PEDESTAL MOUNTED, WEATHERPROOF, 20A QUAD RECEPTACLES. SEE SHEET E-502, DETAIL 1.
7. PROVIDE LOCKABLE, PEDESTAL MOUNTED, WEATHERPROOF, 20A QUAD RECEPTACLES WITH ISOLATED GROUND. SEE SHEET E-502, DETAIL 1.
8. EQUIPMENT TO MAINTAIN A MINIMUM CLEARANCE OF 30" FROM THE BENT
9. REFER TO IRRIGATION PLANS FOR CONTINUATION.
10. 17"X11"X12" PULL BOX.
11. 24"X24"X12" PULL BOX.
12. 24"X36"X24" PULL BOX.

1 EAST PARK SITE PLAN

LEGEND:

- QUAD RECEPTACLE
- 30A, 3P, 5W PIN & SLEEVE RECEPTACLE
- QUAD RECEPTACLE WITH ISOLATED GROUND
- POLE MOUNTED LIGHT- XF1, XF2
- ARM MOUNTED PATH LIGHT- XF13

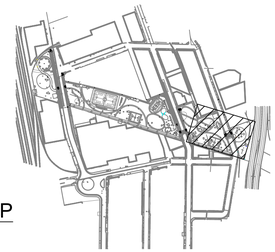

KEY MAP
NTS

SCALE: 1"=20'

BUREAU OF ENGINEERING
OFFICIAL RECORD

PLANS PREPARED BY:
TETRA TECH, INC.
707 WILSHIRE BLVD, 23RD FLR.
LOS ANGELES, CA 90017
PHONE: (213) 239-8866

CITY OF LOS ANGELES DEPARTMENT OF PUBLIC WORKS
BUREAU OF ENGINEERING

ENGINEERING
CITY OF LOS ANGELES

NO.	REVISIONS:	DATE:	BY:

BUILDING NO.

INDEX NO. MF-300501

THIS PLAN WAS ELECTRONICALLY SIGNED AND STAMPED.

REGISTERED PROFESSIONAL ENGINEER MAZEN KASSAR Exp. 6-30-22 ELECTRICAL STATE OF CALIFORNIA

CITY ENGINEER
TED ALLEN, P.E.
LIC NO. E-15809
DATE: 07/11/22

ENGINEER:	DESIGN GROUP
DESIGNED BY:	JAMES ROBERTS
DRAWN BY:	JAMES ROBERTS
CHECKED BY:	MAZEN KASSAR
APPROVED BY:	MAZEN KASSAR

VERT. CONTROL: BM 12-04070, 1929 (NGVD29) - 1985 ADJUSTMENT
HORIZ. CONTROL: GPS; PID AE 1704, EPOCH 1991.35

SHEET TITLE: ELECTRICAL SITE PLAN V

PROJECT: SIXTH STREET PARK, ARTS AND RIVER CONNECTIVITY IMPROVEMENTS (PARC)

ADDRESS: SIXTH STREET OVER THE LOS ANGELES RIVER

WORK ORDER NO. E700235D
FILE NO. --
DRAWING NO. E-107
SHEET 172 OF 295 SHEETS

7/11/2022 8:18:22 PM - O:\PROJECTS\IRVINE\20043200-20043-170011\CAD\SHEETFILES\E-107 ELECTRICAL SITE PLAN V.DWG - ROBERTS, JAMES1

REVISION DATES: (DESIGN STAGE ONLY)

Sheet Version 3.0

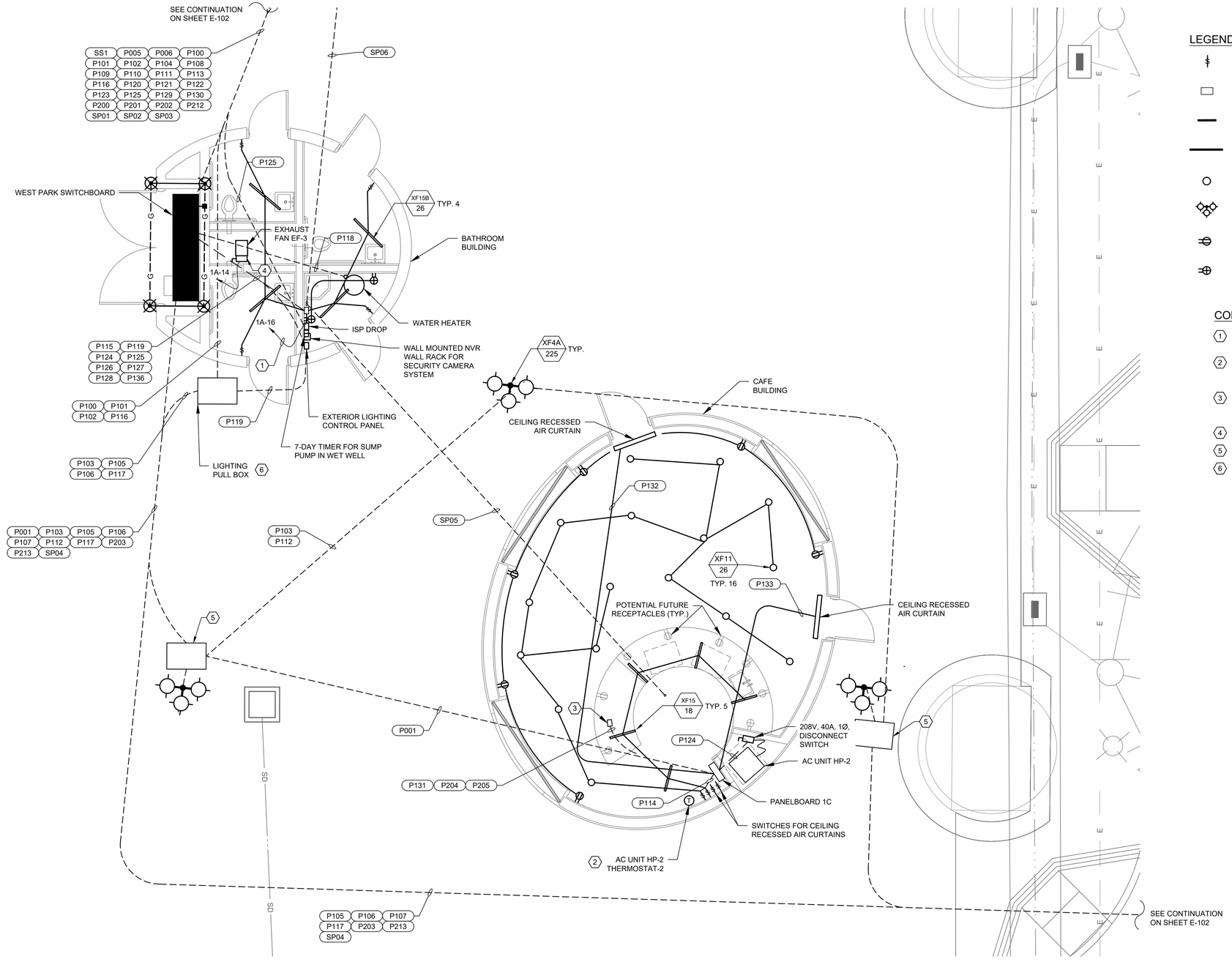

1 – WEST PARK BUILDING ELECTRICAL PLAN

SCALE: 1/4" = 1'-0"

LEGEND:

- LIGHT SWITCH
- HAND HOLE OR PULL BOX
- STRIP LIGHT- XF15
- STRIP LIGHT- XF15B
- LED DOWNLIGHT- XF11
- POLE WITH 6 ACCENT LIGHTS- XF4A
- DUPLEX RECEPTACLE
- QUAD RECEPTACLE

CONSTRUCTION NOTES

1. 3/4"C, 2#12+1#12GND.
2. CONTRACTOR TO PROVIDE AND INSTALL THERMOSTAT WITH MULTI-CONDUCTOR CABLE AND CONNECT TO AC UNIT. REFER TO SHEET E-405 CONDUIT C-100 FOR DETAIL.
3. PROVIDE CONDUIT STUB-UPS FOR POTENTIAL FUTURE RECEPTACLES AND POINT OF USE ELECTRIC WATER HEATER INTEGRATED INTO FUTURE COUNTER MILLWORK.
4. 120V, 20A, 1Ø, NEMA 3R DISCONNECT SWITCH
5. 17"X11"X12" PULL BOX.
6. 24"X36"X24" PULL BOX.

THE CITY OF LOS ANGELES OR ITS OFFICERS OR AGENTS SHALL NOT BE RESPONSIBLE FOR THE ACCURACY OR COMPLETENESS OF ELECTRONIC COPIES OF THIS PLAN SHEET.

REVISION DATES (DESIGN STAGE ONLY)

Sheet Version 3.0

BUREAU OF ENGINEERING

ENGINEERING
CITY OF LOS ANGELES

NO.	REVISIONS:	DATE:	BY:

BUILDING NO.

INDEX NO. MF-300501

THIS PLAN WAS ELECTRONICALLY SIGNED AND STAMPED.

REGISTERED PROFESSIONAL ENGINEER MAZEN KASSAR Exp. 6-30-22 ELECTRICAL STATE OF CALIFORNIA

DEPARTMENT OF PUBLIC WORKS

CITY OF LOS ANGELES

TED ALLEN, P.E.

CITY ENGINEER

DESIGN GROUP

ENGINEER:

DESIGNED BY: JAMES ROBERTS

DRAWN BY: JAMES ROBERTS

CHECKED BY: MAZEN KASSAR

APPROVED BY: MAZEN KASSAR

LIC. NO. E-15809 DATE: 07/11/22

VERT. CONTROL: BM 12-04070, 1929 (NGVD29) - 1985 ADJUSTMENT
HORIZ. CONTROL: GPS; PID AE 1704, EPOCH 1991.35

SHEET TITLE: WEST PARK BUILDING ELECTRICAL PLAN

PROJECT: SIXTH STREET PARK, ARTS AND RIVER CONNECTIVITY IMPROVEMENTS (PARC)

ADDRESS: SIXTH STREET OVER THE LOS ANGELES RIVER

BUREAU OF ENGINEERING OFFICIAL RECORD

PLANS PREPARED BY:
TETRA TECH, INC.
707 WILSHIRE BLVD, 23RD FLR.
LOS ANGELES, CA 90017
PHONE: (213) 239-3866

WORK ORDER NO. E700235D

FILE NO. --

DRAWING NO. E-108

SHEET 173 OF 295 SHEETS

7/11/2022 8:19:46 PM - O:\PROJECTS\IRVINE\200433\200-20043-170011\CAD\SHEETFILES\E-108 WEST PARK BUILDING ELECTRICAL PLAN.DWG - ROBERTS, JAMES1

THE CITY OF LOS ANGELES OR ITS OFFICERS OR AGENTS SHALL NOT BE RESPONSIBLE FOR THE ACCURACY OR COMPLETENESS OF ELECTRONIC COPIES OF THIS PLAN SHEET.

SEE CONTINUATION ON SHEET E-106

TYP. OF 3 XF15A 44

SP08

SP07

208V, 20A, 1Ø DISCONNECT SWITCH

P207

ROLL-UP DOOR MOTOR

UNIT HEATER EUH-1

UNIT HEATER EUH-2

2B-34,36

2B-30,32

208V, 20A, 1Ø DISCONNECT SWITCH

SEE CONTINUATION ON SHEET E-106

P103

2A-44

P102 P108 P109 P110

EAST PARK SWITCHBOARD

P111

P112

XF16 63 TYP. OF 5

P100

2A-26

WATER HEATER

P131 P205

P130

7-DAY TIMER FOR SUMP PUMP IN WET WELL

EXTERIOR LIGHTING CONTROL PANEL

WATER CIRC PUMP

XF15 18 TYP. OF 4

P140

LIGHTING PULL BOX 6

2A-42

EXHAUST FAN EF-2

P100 P101

SP06

TYP. OF 4 XF15B 26

XF11 26 TYP. OF 12

P100 P113 P129 P135 SP01

SECURITY SCREEN MOTORS

P301

SP05

P007 SP05

2C-12

PANELBOARD "2C"

P305

TYP. OF 12 XF12 23

SEE CONTINUATION ON SHEET E-106

P132 P134

WALL MOUNTED NVR WALL RACK FOR SECURITY CAMERA SYSTEM

P001 P004 P013 P104 P118 P119 P120 P105 P121 P122 P130 P200 P201 P202

ISP DROP

2C-14

FLOOR MOUNTED RECEPTACLES

2C-19

EXHAUST FAN EF-1

2C-20

2C-18

2C-16

AC UNIT HP-1

P303

SECURITY SCREEN MOTOR

SEE CONTINUATION ON SHEET E-106

2C-1,3

208V, 30A, 1Ø NEMA 3R DISCONNECT SWITCH, MOUNT ON ROOF

P302

2C-11

P003 P006 P014 P100 P101 P113 P114 P125 P126 P127 P128 P129 P133 P135 P136 P138 P139 P203 P204 SP01 SP04 P206

SECURITY SCREEN MOTORS

+18 AFF GFCI UNDER-COUNTER FRIDGE RECEPTACLE

P304

AC UNIT HP-1 THERMOSTAT-1

SECURITY SCREEN MOTOR

2C-15

2C-13

2C-17

SEE CONTINUATION ON SHEET E-106

XF1 75 TYP.

SEE CONTINUATION ON SHEET E-106

P113 P100 SP01 P135 P129

SEE CONTINUATION ON SHEET E-106

LEGEND:

- POLE MOUNTED LIGHT- XF1
- DUPLEX RECEPTACLE
- QUAD RECEPTACLE
- DISCONNECT SWITCH
- LIGHT SWITCH (3 = 3-WAY SWITCH)
- STRIP LIGHT- XF15
- STRIP LIGHT- XF15B
- STRIP LIGHT- XF12
- STRIP LIGHT- XF16
- EXTERIOR STRIP LIGHT- XF15A
- LED DOWNLIGHT- XF11

CONSTRUCTION NOTES

1. PROVIDE A GFCI RECEPTACLE MOUNTED AT +42" AFF.
2. 3/4"C, 2#12+1#12GND.
3. CONTRACTOR TO PROVIDE AND INSTALL THERMOSTAT WITH MULTI-CONDUCTOR CABLE AND CONNECT TO AC UNIT. REFER TO SHEET E-406 CONDUIT C-100 FOR DETAIL.
4. 3/4"C, 2#10+1#12GND.
5. 120V, 20A, 1Ø NEMA 3R DISCONNECT SWITCH, MOUNT ON ROOF
6. 24"X24"X12" PULL BOX.
7. 24"X36"X24" PULL BOX.

1 EAST PARK BUILDING ELECTRICAL PLAN

SCALE: 1/4" = 1'-0"

BUREAU OF ENGINEERING OFFICIAL RECORD

PLANS PREPARED BY:
TETRA TECH, INC.
707 WILSHIRE BLVD, 23RD FLR.
LOS ANGELES, CA 90017
PHONE: (213) 239-8866

CITY OF LOS ANGELES DEPARTMENT OF PUBLIC WORKS BUREAU OF ENGINEERING

ENGINEERING — CITY OF LOS ANGELES

DATE | BY | NO. | REVISIONS:

BUILDING NO.

INDEX NO. MF-30501

THIS PLAN WAS ELECTRONICALLY SIGNED AND STAMPED.

REGISTERED PROFESSIONAL ENGINEER MAZEN KASSAR Exp. 6-30-22 ELECTRICAL STATE OF CALIFORNIA

CITY ENGINEER

TED ALLEN, P.E.

DESIGN GROUP: LIC. NO. E-15809 DATE: 07/11/22

ENGINEER:
DESIGNED BY: JAMES ROBERTS
DRAWN BY: JAMES ROBERTS
CHECKED BY: MAZEN KASSAR
APPROVED BY: MAZEN KASSAR

VERT. CONTROL: BM 12-04070, 1929 (NGVD29) - 1985 ADJUSTMENT
HORIZ. CONTROL: GPS; PID AE 1704, EPOCH 1991.35

SHEET TITLE: EAST PARK BUILDING ELECTRICAL PLAN

PROJECT: SIXTH STREET PARK, ARTS AND RIVER CONNECTIVITY IMPROVEMENTS (PARC)

ADDRESS: SIXTH STREET OVER THE LOS ANGELES RIVER

WORK ORDER NO. E700235D

FILE NO. --

DRAWING NO. E-109

SHEET 174 OF 295 SHEETS

7/11/2022 8:21:26 PM - O:\PROJECTS\RIVINE\20043\200\20043-17001\CAD\SHEETFILES\E-109 EAST PARK BUILDING ELECTRICAL PLAN.DWG - ROBERTS, JAMES1

REVISION DATES (DESIGN STAGE ONLY)

Sheet Version 3.0

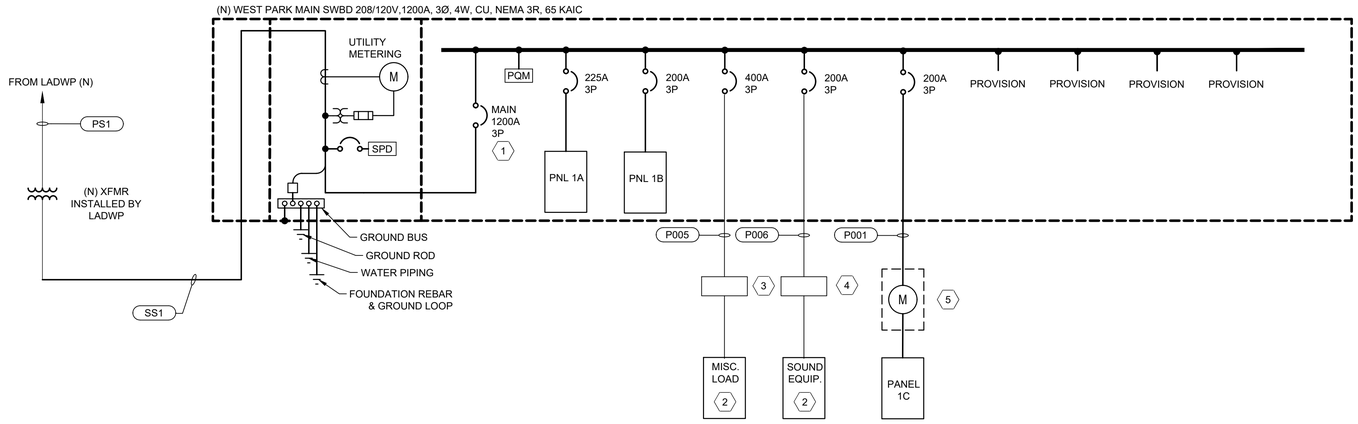

1 WEST PARK SINGLE LINE DIAGRAM
NTS

LOAD SCHEDULE		
NAME	KVA	FLA
PANEL 1A	43.47	120.7
PANEL 1B	18.82	52.2
PANEL 1C	27.75	77.0
MISC. LOAD	115.3	320.0
SOUND EQUIP.	57.64	160.0
TOTAL	263	730

NOTES:

1. INSTALL ARCFLASH REDUCTION MAINTENANCE SWITCH.
2. TEMPORARY SOUND AND LIGHTING EQUIPMENT TO BE PROVIDED BY OTHERS DURING EVENTS.
3. INSTALL LOCKABLE 400A, 3P, 5W, NEMA 3R THEATRE POWER SWITCH.
4. INSTALL LOCKABLE 200A, 3P, 5W, NEMA 3R THEATRE POWER SWITCH.
5. KWH METER FOR METERING OF PANELBOARD 1C ONLY.

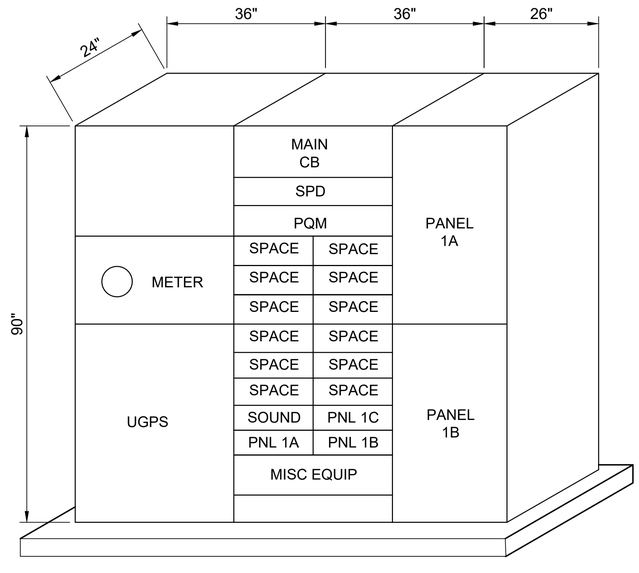

2 WEST PARK SWITCHBOARD ELEVATION
NTS

BUREAU OF ENGINEERING
OFFICIAL RECORD

PLANS PREPARED BY:
TETRA TECH, INC.
707 WILSHIRE BLVD, 23RD FLR.
LOS ANGELES, CA 90017
PHONE: (213) 239-8866

CITY OF LOS ANGELES DEPARTMENT OF PUBLIC WORKS
BUREAU OF ENGINEERING
ENGINEERING CITY OF LOS ANGELES

NO. | REVISIONS: | DATE: | BY:

BUILDING NO.

INDEX NO. MF-300501

REGISTERED PROFESSIONAL ENGINEER MAZEN KASSAR No. E 15809 Exp. 12-31-22 ELECTRICAL STATE OF CALIFORNIA

THIS PLAN WAS ELECTRONICALLY SIGNED AND STAMPED.

TED ALLEN, P.E. CITY ENGINEER
DESIGN GROUP
ENGINEER: LIC. NO. E-15809 DATE: 07/11/22
DESIGNED BY: JAMES ROBERTS
DRAWN BY: JAMES ROBERTS
CHECKED BY: MAZEN KASSAR
APPROVED BY: MAZEN KASSAR

VERT. CONTROL: BM 12-04070, 1929 (NGVD29) - 1985 ADJUSTMENT
HORIZ. CONTROL: GPS; PID AE 1704, EPOCH 1991.35

SHEET TITLE: WEST PARK SINGLE LINE DIAGRAM
PROJECT: SIXTH STREET PARK, ARTS AND RIVER CONNECTIVITY IMPROVEMENTS (PARC)
ADDRESS: SIXTH STREET OVER THE LOS ANGELES RIVER

WORK ORDER NO. E700235D
FILE NO. --
DRAWING NO. E-401
SHEET 175 OF 295 SHEETS

7/11/2022 8:21:59 PM - O:\PROJECTS\IRVINE\20043\200-20043-17001\CAD\SHEETFILES\E-401 SINGLE LINE DIAGRAM WEST PARK.DWG - ROBERTS, JAMES1

THE CITY OF LOS ANGELES OR ITS OFFICERS OR AGENTS SHALL NOT BE RESPONSIBLE FOR THE ACCURACY OR COMPLETENESS OF ELECTRONIC COPIES OF THIS PLAN SHEET.

REVISION DATES (DESIGN STAGE ONLY)

Sheet Version 3.0

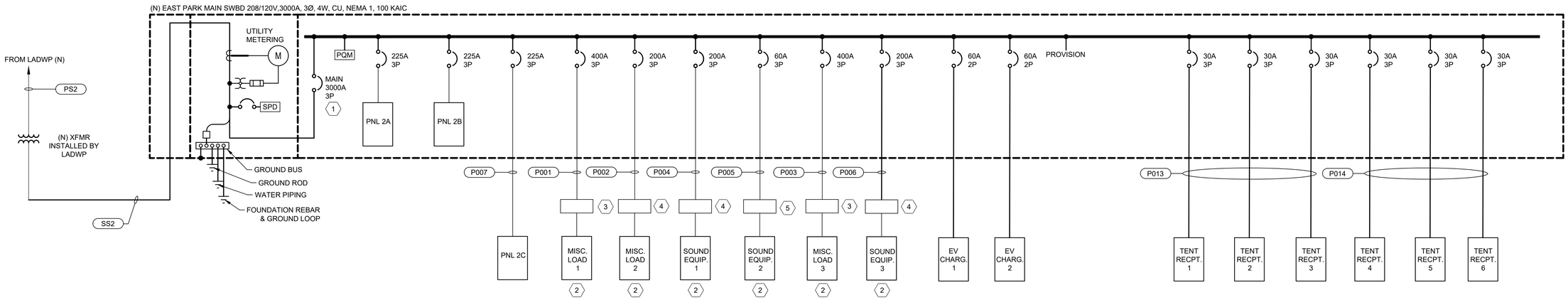

1 – EAST PARK SINGLE LINE DIAGRAM
NTS

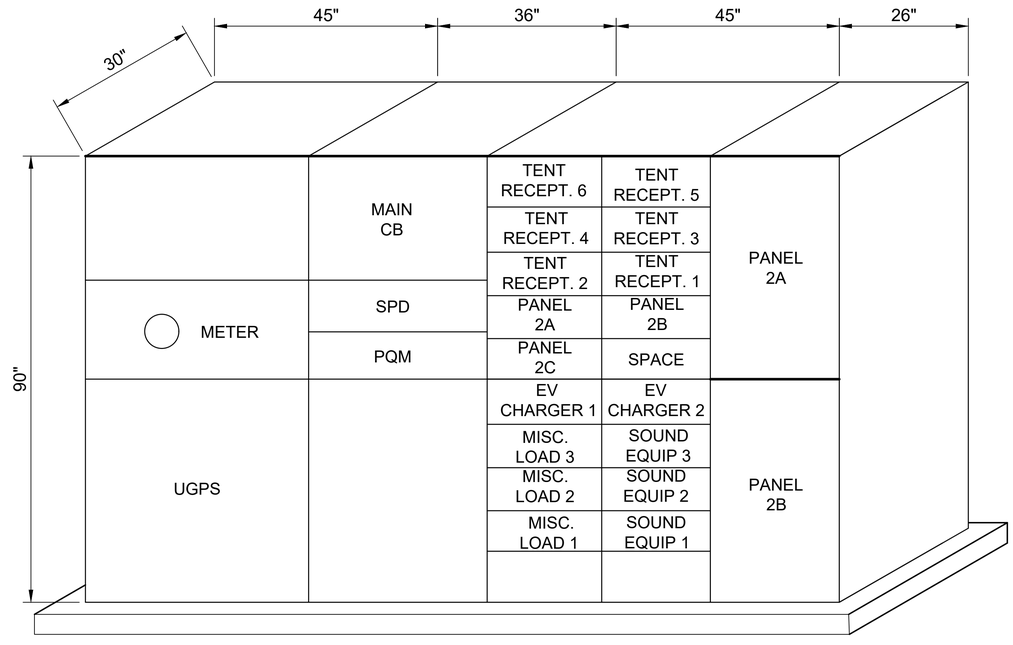

2 – EAST PARK SWITCHBOARD ELEVATION
NTS

NOTES:

1. INCLUDE ARC FLASH REDUCTION MAINTENANCE SWITCH
2. TEMPORARY SOUND AND LIGHTING EQUIPMENT TO BE PROVIDED BY OTHERS DURING EVENTS
3. INSTALL LOCKABLE 400A, 3P, 5W, NEMA 3R THEATRE POWER SWITCH
4. INSTALL LOCKABLE 200A, 3P, 5W, NEMA 3R THEATRE POWER SWITCH
5. INSTALL LOCKABLE 60A, 3P, 5W, NEMA 3R THEATRE EQUIPMENT SWITCH

LOAD SCHEDULE		
NAME	KVA	FLA
PANEL 2A	50.12	139.1
PANEL 2B	39.49	109.6
PANEL 2C	24.98	69.3
MISC. LOAD 1	115.3	320.0
MISC. LOAD 2	115.3	320.0
SOUND EQUIP. 1	57.64	160.0
SOUND EQUIP. 2	57.64	160.0
MISC. LOAD 3	57.64	160.0
SOUND EQUIP. 3	17.29	48.0
EV CHARGING STATION 1	6.66	18.5
EV CHARGING STATION 2	6.66	18.5
TENT RECPT. 1	8.65	24.0
TENT RECPT. 2	8.65	24.0
TENT RECPT. 3	8.65	24.0
TENT RECPT. 4	8.65	24.0
TENT RECPT. 5	8.65	24.0
TENT RECPT. 6	8.65	24.0
TOTAL	601	1667

THE CITY OF LOS ANGELES OR ITS OFFICERS OR AGENTS SHALL NOT BE RESPONSIBLE FOR THE ACCURACY OR COMPLETENESS OF ELECTRONIC COPIES OF THIS PLAN SHEET.

REVISION DATES (DESIGN STAGE ONLY)

Sheet Version 3.0

PLANS PREPARED BY:
TETRA TECH, INC.
707 WILSHIRE BLVD, 23RD FLR.
LOS ANGELES, CA 90017
PHONE: (213) 239-9866

BUREAU OF ENGINEERING
OFFICIAL RECORD

CITY OF LOS ANGELES DEPARTMENT OF PUBLIC WORKS
BUREAU OF ENGINEERING

ENGINEERING
CITY OF LOS ANGELES

NO. | REVISIONS: | DATE | BY:

BUILDING NO.

INDEX NO. MF-300501

THIS PLAN WAS ELECTRONICALLY SIGNED AND STAMPED.

REGISTERED PROFESSIONAL ENGINEER * MAZEN KASSAR * No. E-15809 Exp. 6-30-22 * ELECTRICAL * STATE OF CALIFORNIA

CITY ENGINEER
TED ALLEN, P.E.
DATE: 07/11/22
LIC. NO. E-15809

ENGINEER:
DESIGN GROUP
DESIGNED BY: JAMES ROBERTS
DRAWN BY: JAMES ROBERTS
CHECKED BY: MAZEN KASSAR
APPROVED BY: MAZEN KASSAR

VERT. CONTROL: BM 12-04070, 1929 (NGVD29) - 1985 ADJUSTMENT
HORIZ. CONTROL: GPS; PID AE 1704, EPOCH 1991.35

SHEET TITLE: EAST PARK SINGLE LINE DIAGRAM

PROJECT: SIXTH STREET PARK, ARTS AND RIVER CONNECTIVITY IMPROVEMENTS (PARC)

ADDRESS: SIXTH STREET OVER THE LOS ANGELES RIVER

WORK ORDER NO. E700235D
FILE NO. --
DRAWING NO. E-402
SHEET 176 OF 295 SHEETS

7/11/2022 8:22:16 PM - Q:\PROJECTS\IRVINE\20043\200-20043-170011\CAD\SHEETFILES\E-402 SINGLE LINE DIAGRAM EAST PARK.DWG - ROBERTS, JAMES1

Panel:	1A			3	Phase		Location:		WEST SWBD			Main:	MLO	
Volts:	208Y/120			4	Wire		Enclosure:		NEMA 3R			Bus:	225A	
							Mounting:		SWBD			SCCR:	65 kA	
				Quantity							Quantity			

Description	Volt-Amps A	Volt-Amps B	Volt-Amps C	LTG	REC	Misc	Breaker Amp	Pole	Circuit	Circuit	Pole	Breaker Amp	LTG	REC	Misc	Volt-Amps A	Volt-Amps B	Volt-Amps C	Description
LIGHT XF1/XF1A	750			10			20	1	1	2	1	20	8			600			LIGHT XF2
LIGHT XF4/XF4A		1,800		8			20	1	3	4	1	20	36				1,440		LIGHT XF6
LIGHT XF4			2,250	10			30	1	5	6	1	20	36					1,440	LIGHT XF6
LIGHT XF7	2,610			2			30	1	7	8	1	20			1	1,500			SECURITY OUTLET
LIGHT XF8		1,442		2			20	1	9	10	1	20			1		750		SECURITY OUTLET
LIGHT XF8			1,442	2			20	1	11	12	1	20							SPARE
LIGHT XF9	2,760			1			30	1	13	14	1	20			1	528			EXHAUST FAN EF-3
LIGHTING CONTROLS		1,200				1	20	1	15	16	1	20		2			720		RESTROOM BLDG REC
LIGHT XF13			1,152	24			20	1	17	18									SPACE
ISP DROP	500					1	20	1	19	20	1	20		4		720			POLE LTG REC
LIGHT XF14		48		30			20	1	21	22	1	20		5			900		POLE LTG REC
ART PLAZA ISO QUAD REC			1,440		4		20	1	23	24	1	20		2				360	POLE LTG REC
ART PLAZA ISO QUAD REC	1,440				4		20	1	25	26	1	20		3		540			POLE LTG REC
BATHROOM BLDG LGT.		203		7			20	1	27	28	1	20		2			360		POLE LTG REC
SPARE							20	1	29	30	1	20		3				1,080	ART PLAZA QUAD REC
WET WELL SUMP PUMP	864					1	20	1	31	32	1	20		3		1,080			ART PLAZA QUAD REC
SPACE									33	34	1	20			1		600		IRRIGATION CONTROLLER "G"
SPACE									35	36	1	20			1			1,200	ART LIGHTING
HIGH RIVER WARNING SYSTEM CONTROL CABINET	4,152					1	30	1	37	38	1	20			1	600			IRRIGATION CONTROLLER "F"
HIGH RIVER WARNING SYSTEM CONTROL CABINET		500				1	30	1	39	40	2	30			1		2,250		WATER HEATER
									41	42								2,250	
	13,076	5,193	6,284	VOLT-AMPS SUBTOTAL												5,568	7,020	6,330	
									A		B		C						
								LCL:								Panel Volt-Amps =		43,471	
								Total Volt-Amps:	18,644		12,213		12,614			FLA =		121	A @208V

Panel:	1C			3	Phase		Location:		CAFÉ BUILDING			Main:	200A	
Volts:	208Y/120			4	Wire		Enclosure:		NEMA 1			Bus:	200A	
							Mounting:		WALL MOUNTED			SCCR:	65 kA	
				Quantity							Quantity			

Description	Volt-Amps A	Volt-Amps B	Volt-Amps C	LTG	REC	Misc	Breaker Amp	Pole	Circuit	Circuit	Pole	Breaker Amp	LTG	REC	Misc	Volt-Amps A	Volt-Amps B	Volt-Amps C	Description
CAFÉ BLDG LGT.	561			21			20	1	1	2	1	20		6		1,080			CAFÉ BLDG REC
CEILING AIR CURTAIN		1,176				1	20	1	3	4	1	20					3,000		CAFÉ BLDG WATER HEATER - FUTURE
CEILING AIR CURTAIN			1,176			1	20	1	5	6								3,000	
CAFÉ RECPT. - FUTURE APPLIANCE	1,500					1	20	1	7	8	1	20		1		1,500			CAFÉ RECPT. - FUTURE APPLIANCE
CAFÉ RECPT. - FUTURE APPLIANCE		1,500				1	20	1	9	10	1	20		1			1,500		CAFÉ RECPT. - FUTURE APPLIANCE
CAFÉ RECPT. - FUTURE APPLIANCE			1,500			1	20	1	11	12	1	20		1				1,500	CAFÉ RECPT. - FUTURE APPLIANCE
CAFÉ RECPT. - FUTURE APPLIANCE	1,500					1	20	1	13	14	1	20		1		1,500			CAFÉ RECPT. - FUTURE APPLIANCE
CAFÉ BUILDING AC UNIT		5,760					40	1	15	16									
									17	18									
									19	20									
									21	22									
									23	24									
									25	26									
									27	28									
									29	30									
									31	32									
									33	34									
									35	36									
									37	38									
									39	40									
									41	42									
	3,561	8,436	2,676	VOLT-AMPS SUBTOTAL												4,080	4,500	4,500	
									A		B		C						
								LCL:								Panel Volt-Amps =		27,753	
								Total Volt-Amps:	7,641		12,936		7,176			FLA =		77	A @208V

Panel:	1B			3	Phase		Location:		WEST SWBD			Main:	MLO	
Volts:	208Y/120			4	Wire		Enclosure:		NEMA 3R			Bus:	200A	
							Mounting:		SWBD			SCCR:	65 kA	
				Quantity							Quantity			

Description	Volt-Amps A	Volt-Amps B	Volt-Amps C	LTG	REC	Misc	Breaker Amp	Pole	Circuit	Circuit	Pole	Breaker Amp	LTG	REC	Misc	Volt-Amps A	Volt-Amps B	Volt-Amps C	Description
TEMP EQUIP REC	624				1		30	3	1	2	3	30		1		624			TENT REC
		624							3	4							624		
			624						5	6								624	
TEMP EQUIP REC	624				1		30	3	7	8	3	30		1		624			TENT REC
		624							9	10							624		
			624						11	12								624	
TEMP EQUIP REC	624				1		30	3	13	14	3	30		1		624			TENT REC
		624							15	16							624		
			624						17	18								624	
TEMP EQUIP REC	624				1		30	3	19	20	3	30		1		624			TENT REC
		624							21	22							624		
			624						23	24								624	
STAGE LIGHTING CONTROLS	1,920					1	20	1	25	26									
TERRACE LIGHTING CONTROLS		1,920				1	20	1	27	28									
									29	30									
									31	32									
									33	34									
									35	36									
									37	38									
									39	40									
									41	42									
	4,416	4,416	2,496	VOLT-AMPS SUBTOTAL												2,496	2,496	2,496	
									A		B		C						
								LCL:								Panel Volt-Amps =		18,816	
								Total Volt-Amps:	6,912		6,912		4,992			FLA =		52	A @208V

THE CITY OF LOS ANGELES OR ITS OFFICERS OR AGENTS SHALL NOT BE RESPONSIBLE FOR THE ACCURACY OR COMPLETENESS OF ELECTRONIC COPIES OF THIS PLAN SHEET.

REVISION DATES (DESIGN STAGE ONLY)

Sheet Version 3.0

BUREAU OF ENGINEERING

OFFICIAL RECORD

PLANS PREPARED BY:

TETRA TECH, INC.
707 WILSHIRE BLVD. 23RD FLR.
LOS ANGELES, CA 90017
PHONE: (213) 239-8866

CITY OF LOS ANGELES DEPARTMENT OF PUBLIC WORKS

BUREAU OF ENGINEERING

ENGINEERING
CITY OF LOS ANGELES

NO.	REVISIONS:	DATE	BY:

BUILDING NO.

INDEX NO. MF-300501

THIS PLAN WAS ELECTRONICALLY SIGNED AND STAMPED.

REGISTERED PROFESSIONAL ENGINEER * MAZEN KASSAR * Exp. 6-30-22 * ELECTRICAL * STATE OF CALIFORNIA

CITY ENGINEER

ENGINEER:	TED ALLEN, P.E.	DATE:
DESIGN GROUP	LIC. NO. E-15809	07/11/22
DESIGNED BY:	JAMES ROBERTS	
DRAWN BY:	JAMES ROBERTS	
CHECKED BY:	MAZEN KASSAR	
APPROVED BY:	MAZEN KASSAR	

SHEET TITLE: WEST PARK PANEL SCHEDULES

PROJECT: SIXTH STREET PARK, ARTS AND RIVER CONNECTIVITY IMPROVEMENTS (PARC)

ADDRESS: SIXTH STREET OVER THE LOS ANGELES RIVER

VERT. CONTROL: BM 12-04070, 1929 (NGVD29) - 1985 ADJUSTMENT
HORIZ. CONTROL: GPS, PID AE 1704, EPOCH 1991.35

WORK ORDER NO. E700235D
FILE NO. --
DRAWING NO. E-403
SHEET 177 OF 295 SHEETS

7/11/2022 8:22:46 PM • O:\PROJECTS\IRVINE\20043\20043-17001\CAD\SHEETFILES\E-403 PANEL SCHEDULE I.DWG • ROBERTS, JAMES1

Panel:	2A			3	Phase		Location:	EAST SWBD			Main:	MLO	
Volts:	208Y/120			4	Wire		Enclosure:	NEMA 1			Bus:	225A	
							Mounting:	SWBD			SCCR:	65 kA	

Description	Volt-Amps A	Volt-Amps B	Volt-Amps C	Quantity LTG	Quantity REC	Quantity Misc	Breaker Amp	Pole	Circuit	Circuit	Pole	Breaker Amp	Quantity LTG	Quantity REC	Quantity Misc	Volt-Amps A	Volt-Amps B	Volt-Amps C	Description
LIGHT XF1, XF2 & XF4A	2,175			25			30	1	1	2	1	20	21			1,278			LIGHT XF2 & XF13
LIGHT XF10		3,200		1			40	1	3	4	1	20	10				750		LIGHT XF2
LIGHT XF10			3,200	1			40	1	5	6	1	50	1					500	SPORTS LTG CONTROLS
LIGHT XF10	3,200			1			40	1	7	8	1	50	2			400			PED CROSSWALK RRFB 1
LIGHT XF10		3,200		1			40	1	9	10	1	50	2				400		PED CROSSWALK RRFB 2
LIGHT XF1 & XF2			825	11			20	1	11	12	1	20	18					864	LIGHT XF13
SPACE									13	14	1	20	13			975			LIGHT XF1 & XF2
SPACE									15	16	1	50	2				400		PED CROSSWALK RRFB 3
LIGHT XF10A			1,515	1			20	1	17	18	1	20			1			600	IRRIGATION CONTROLLER "E"
LIGHT XF10A	1,515			1			20	1	19	20	1	50	8			1,200			HISTORIC LIGHTING
LIGHT - NORTH BUILDING		982		21			20	1	21	22	1	20		4			720		POLE LIGHT REC
POLE LIGHT REC			720		4		20	1	23	24	1	20		4				720	POLE LIGHT REC
POLE LIGHT REC	720				4		20	1	25	26	1	20		4		1,440			SMALL STAGE ISO REC
POLE LIGHT REC		720			4		20	1	27	28	1	20		3			1,080		SMALL STAGE ISO REC
LARGE STAGE 1 ISO REC			1,080		3		20	1	29	30	1	20		2				720	SMALL STAGE REC
LARGE STAGE 1 ISO REC	1,080				3		20	1	31	32	1	20		3		1,080			LARGE STAGE 2 ISO. REC
LARGE STAGE 1 ISO REC		720			2		20	1	33	34	1	20		3			1,080		LARGE STAGE 2 ISO. REC
LARGE STAGE 1 REC			1,440		4		20	1	35	36	1	20		2				720	LARGE STAGE 2 ISO. REC
LARGE STAGE 1 REC	720				2		20	1	37	38	1	20		4		1,440			LARGE STAGE 2 REC
SPACE									39	40	1	20		2			720		LARGE STAGE 2 REC
SPACE									41	42	1	20		3				1,080	RECPT. - NORTH BLDG
ART LIGHTING	600			1			20	1	43	44	1	20		3		1,080			RECPT. - NORTH BLDG
WET WELL SUMP PUMP		864				1	20	1	45	46	1	20			1		600		WATER CIRC PUMP
IRRIGATION CONTROLLER "A"			600			1	20	1	47	48	1	20			1			600	IRRIGATION CONTROLLER "C"
									49	50	1	20			1	600			IRRIGATION CONTROLLER "D"
									51	52									
									53	54									
	10,010	9,686	9,380	VOLT-AMPS SUBTOTAL												9,493	5,750	5,804	

	A	B	C
LCL:			
Total Volt-Amps:	19,503	15,436	15,184

Panel Volt-Amps = 50,123
FLA = 139
A @208V

Panel:	2B			3	Phase		Location:	EAST SWBD			Main:	MLO	
Volts:	208Y/120			4	Wire		Enclosure:	NEMA 1			Bus:	225A	
							Mounting:	SWBD			SCCR:	65 kA	

Description	Volt-Amps A	Volt-Amps B	Volt-Amps C	Quantity LTG	Quantity REC	Quantity Misc	Breaker Amp	Pole	Circuit	Circuit	Pole	Breaker Amp	Quantity LTG	Quantity REC	Quantity Misc	Volt-Amps A	Volt-Amps B	Volt-Amps C	Description
LARGE STAGE 1 DED. REC	624				1		30	3	1	2	3	30		1		624			LARGE STAGE 2 DED. REC
		624							3	4							624		
			624						5	6								624	
LARGE STAGE 1 DED. REC	624				1		30	3	7	8	3	30		1		624			LARGE STAGE 2 DED. REC
		624							9	10							624		
			624						11	12								624	
LARGE STAGE 1 DED. REC	624				1		30	3	13	14	3	30		1		624			LARGE STAGE 2 DED. REC
		624							15	16							624		
			624						17	18								624	
LARGE STAGE 1 DED. REC	624				1		30	3	19	20	3	30		1		624			LARGE STAGE 2 DED. REC
		624							21	22							624		
			624						23	24								624	
SMALL STAGE DED. REC	624				1		30	3	25	26	1	20			1	696			EXHAUST FAN EF-2
		624							27	28	1	20			1		864		MOTORIZED ROLL-UP DOOR
			624						29	30	2	20			1			1,500	UNIT HEATER EUH-1
SMALL STAGE DED. REC	624				1		30	3	31	32						1,500			
		624							33	34	2	20			1		1,500		UNIT HEATER EUH-2
			624						35	36								1,500	
WATER HEATER	2,250					1	30	2	37	38	2	60			1				EV CHARGING STATION 5 - FUTURE
		2,250							39	40									
MISTING PAD PUMP			2,903			1	40	3	41	42									
	2,903								43	44									
		2,903							45	46									
EV CHARGING STATION 3 - FUTURE						1	60	2	47	48									
									49	50									
EV CHARGING STATION 3 - FUTURE						1	60	2	51	52									
									53	54									
	8,897	8,897	6,647	VOLT-AMPS SUBTOTAL												4,692	4,860	5,496	

	A	B	C
LCL:			
Total Volt-Amps:	13,589	13,757	12,143

Panel Volt-Amps = 39,489
FLA = 110
A @208V

Panel:	2C			3	Phase		Location:	EAST BUILDING			Main:	225A	
Volts:	208Y/120			4	Wire		Enclosure:	NEMA 1			Bus:	225A	
							Mounting:	WALL			SCCR:	65 kA	

Description	Volt-Amps A	Volt-Amps B	Volt-Amps C	Quantity LTG	Quantity REC	Quantity Misc	Breaker Amp	Pole	Circuit	Circuit	Pole	Breaker Amp	Quantity LTG	Quantity REC	Quantity Misc	Volt-Amps A	Volt-Amps B	Volt-Amps C	Description
A/C UNIT HP-1	2,184					1	30	2	1	2	1	20			1	864			MOTORIZED SECURITY SCREENS
		2,184							3	4	1	20			1		864		MOTORIZED SECURITY SCREENS
MOTORIZED SECURITY SCREENS			864			1	20	1	5	6	1	20			1			864	MOTORIZED SECURITY SCREENS
MOTORIZED SECURITY SCREENS	864					1	20	1	7	8	1	20			1	864			MOTORIZED SECURITY SCREENS
MOTORIZED SECURITY SCREENS		864				1	20	1	9	10	1	20			1		864		MOTORIZED SECURITY SCREENS
RECPT.-REFRIGERATOR			1,200		1		20	1	11	12	1	20		4				1,080	RECPT. - SOUTH BUILDING
RECPT.-REFRIGERATOR	1,200				2		20	1	13	14	1	20		4		1,080			RECPT. - SOUTH BUILDING
RECPT.-FREEZE		1,200			2		20	1	15	16	1	20		4			720		RECPT. - SOUTH BUILDING
RECPT.-MICROWAVE			1,500		2		20	1	17	18	1	20		3				1,080	RECPT. - SOUTH BUILDING
EXHAUST FAN EF-1	528					1	20	1	19	20	1	20		4		720			RECPT. - SOUTH BUILDING
LIGHT- SOUTH BUILDING		637		25			20	1	21	22	1	20			1		500		ISP DROP
SECURITY OUTLET			1,500			1	20	1	23	24									
SECURITY OUTLET	750					1	20	1	25	26									
									27	28									
									29	30									
									31	32									
									33	34									
									35	36									
									37	38									
									39	40									
									41	42									
	5,526	4,885	5,064	VOLT-AMPS SUBTOTAL												3,528	2,948	3,024	

	A	B	C
LCL:			
Total Volt-Amps:	9,054	7,833	8,088

Panel Volt-Amps = 24,975
FLA = 69
A @208V

REVISION DATES (DESIGN STAGE ONLY)

THE CITY OF LOS ANGELES OR ITS OFFICERS OR AGENTS SHALL NOT BE RESPONSIBLE FOR THE ACCURACY OR COMPLETENESS OF ELECTRONIC COPIES OF THIS PLAN SHEET.

Sheet Version 3.0

PLANS PREPARED BY:
TETRA TECH, INC.
707 WILSHIRE BLVD. 23RD FLR.
LOS ANGELES, CA 90017
PHONE: (213) 239-8866

BUREAU OF ENGINEERING
OFFICIAL RECORD

CITY OF LOS ANGELES DEPARTMENT OF PUBLIC WORKS
BUREAU OF ENGINEERING
ENGINEERING
CITY OF LOS ANGELES

THIS PLAN WAS ELECTRONICALLY SIGNED AND STAMPED.

REGISTERED PROFESSIONAL ENGINEER MAZEN KASSAR Exp. 6-30-22 ELECTRICAL STATE OF CALIFORNIA

NO.	REVISIONS:	DATE:	BY:

BUILDING NO.
INDEX NO. MF-300501

CITY ENGINEER
TED ALLEN, P.E.
LIC. NO. E-15809
DATE: 07/11/22

ENGINEER:	DESIGN GROUP
DESIGNED BY:	JAMES ROBERTS
DRAWN BY:	JAMES ROBERTS
CHECKED BY:	MAZEN KASSAR
APPROVED BY:	MAZEN KASSAR

VERT. CONTROL: BM 12-04070, 1929 (NGVD29) - 1985 ADJUSTMENT
HORIZ. CONTROL: GPS; PID AE 1704, EPOCH 1991.35

SHEET TITLE: EAST PARK PANEL SCHEDULES

PROJECT: SIXTH STREET PARK, ARTS AND RIVER CONNECTIVITY IMPROVEMENTS (PARC)

ADDRESS: SIXTH STREET OVER THE LOS ANGELES RIVER

WORK ORDER NO. E700235D
FILE NO. --
DRAWING NO. E-404
SHEET 178 OF 295 SHEETS

7/11/2022 8:23:20 PM - O:\PROJECTS\IRVINE\20043\200-20043-17001\CAD\SHEET FILES\E-404 PANEL SCHEDULE II.DWG - ROBERTS, JAMES1

WEST PARK CONDUIT SCHEDULE							
REF NO.	CONDUIT QTY	CONDUIT SIZE	CONDUCTORS QTY & SIZE	CONDUCTORS GND	FROM	TO	COMMENTS
PS1	2	5"	BY LADWP		POINT OF CONNECTION	LADWP XFMR	
SS1	3	4"	BY LADWP		LADWP XFMR	SWITCHBOARD	
P001	1	2.5"	3#4/0	1#3	SWITCHBOARD	PANEL 1C	
P002							NOT USED
P003							NOT USED
P004							NOT USED
P005	1	3"	4#250KCMIL	1#4	SWITCHBOARD	SOUND EQUIPMENT	
P006	2	3"	4#250KCMIL	1#2	SWITCHBOARD	PLAZA MISC. EQUIPMENT	
P100	1	2"	2#4	1#8	LIGHTING PULL BOX	LIGHTS XF1, XF1A	CKT 1
P101	1	2"	2#6	1#8	LIGHTING PULL BOX	LIGHTS XF2	CKT 2
P102	1	2"	2#4	1#8	LIGHTING PULL BOX	LIGHTS XF4, XF4A	CKT 3
P103	1	2"	2#4	1#8	LIGHTING PULL BOX	LIGHTS XF4, XF4A	CKT 5
P104	1	2"	2#1/0	1#6	PANEL 1A	LIGHTS XF9	CKT 13
P105	1	2"	2#2	1#6	LIGHTING PULL BOX	LIGHTS XF6	CKT 4
P106	1	2"	2#2	1#6	LIGHTING PULL BOX	LIGHTS XF6	CKT 6
P107	1	2"	2#2	1#6	PANEL 1A	LIGHTS XF7	CKT 7
P108	1	2"	4#1/0	2#6	PANEL 1A	LIGHTS XF8	CKT 9, 11
P109	1	2"	2#4	1#8	PANEL 1A	POLE LIGHT RECEPTACLES	CKT 20
P110	1	2"	2#6	1#8	PANEL 1A	POLE LIGHT RECEPTACLES	CKT 22
P111	1	2"	2#4	1#8	PANEL 1A	POLE LIGHT RECEPTACLES	CKT 24
P112	1	2"	2#4	1#8	PANEL 1A	POLE LIGHT RECEPTACLES	CKT 26
P113	1	2"	2#1/0	1#6	PANEL 1A	POLE LIGHT RECEPTACLES	CKT 28
P114	1	1"	2#12	1#12	PANEL 1C	LIGHTS - CAFÉ BUILDING	PNL 1C, CKT 1
P115	1	1"	2#12	1#12	PANEL 1A	LIGHTS - BATHROOM BUILDING	CKT 27
P116	1	2"	2#2	1#8	LIGHTING PULL BOX	LIGHTS XF13	CKT 17
P117	1	2"	2#12	1#12	LIGHTING PULL BOX	LIGHTS XF14	CKT 21
P118	1	1"	3#6	1#10	PANEL 1A	WATER HEATER	CKT 40, 42
P119	1	1"	4#12	2#12	PANEL 1A	SECURITY OUTLETS	CKT 8, 10
P120	1	2"	2#2	1#6	PANEL 1A	ART PLAZA ISO QUAD REC	CKT 23
P121	1	2"	2#2	1#6	PANEL 1A	ART PLAZA ISO QUAD REC	CKT 25
P122	1	2"	2#2	1#6	PANEL 1A	ART PLAZA QUAD REC	CKT 30
P123	1	2"	2#2	1#6	PANEL 1A	ART PLAZA QUAD REC	CKT 32
P124	1	1"	2#8	1#10	PANEL 1C	AC UNIT HP-2	PNL 1C, CKT 15
P125	1	2"	2#10	2#12	PANEL 1A	WET WELL	CKT 31
P126	1	1"	2#10	1#12	PANEL 1A	EXHAUST FAN EF-3	CKT 14
P127	1	1"	2#12	1#12	PANEL 1A	ISP DROP	CKT 19
P128	1	2"	2#2	1#6	PANEL 1A	LIGHTING CONTROLLER	CKT 15
P129	1	1"	2#10	1#12	PANEL 1A	IRRIGATION CONTROLLER "G"	CKT 34
P130	1	1"	2#10	1#12	PANEL 1A	IRRIGATION CONTROLLER "F"	CKT 38
P131	1	1" CO			PANEL 1C	CAFÉ BLDG WATER HEATER - FUTURE	WITH PULL STRING
P132	1	1"	2#12	1#12	PANEL 1C	CEILING AIR CURTAIN	PNL 1C, CKT 3
P133	1	1"	2#12	1#12	PANEL 1C	CEILING AIR CURTAIN	PNL 1C, CKT 5
P134	1	1"	2#12	1#12	PANEL 1C	CAFÉ BLDG RECEPTACLES	PNL 1C, CKT 2
P135	1	3"	4#2	2#6	PANEL 1A	HIGH RIVER WARNING SYSTEM CONTROL CABINETS	CKT 37, 39
P136	1	2"	16#10	8#12	PANEL 1A	EXTERIOR LIGHTING CONTROL PANEL	CKT 1, 2, 3, 4, 5, 6, 17, 21
P136	1	2"	16#10	8#12	EXTERIOR LIGHTING CONTROL PANEL	LIGHTING PULL BOX	CKT 1, 2, 3, 4, 5, 6, 17, 21
P200	1	3"	8#2	2#8	PANEL 1B	TEMP EQUIPMENT REC	PNL 1B, CKT 1, 3, 5, 7, 9, 11
P201	1	3"	8#2	2#8	PANEL 1B	TEMP EQUIPMENT REC	PNL 1B, CKT 13, 15, 17, 19, 21, 23
P202	1	2"	12#10	3#10	PANEL 1B	TENT REC	PNL 1B, CKT 2, 4, 6, 8, 10, 12, 14, 16, 18
P203	1	2"	4#6	1#8	PANEL 1B	TENT REC	PNL 1B, CKT 20, 22, 24
P204	1	1" CO			PANEL 1C	CAFÉ RECPTS. - FUTURE APPLIANCE	WITH PULL STRING, PNL 1C, CKT 7, 8, 9, 10
P205	1	1" CO			PANEL 1C	CAFÉ RECPTS. - FUTURE APPLIANCE	WITH PULL STRING, PNL 1C, CKT 11, 12, 13, 14
P212	1	2"	2#2	1#6	PANEL 1B	STAGE LIGHTING CONTROLS	PNL 1B, CKT 33
P213	1	2"	2#2	1#6	PANEL 1B	TERRACE LIGHTING CONTROLS	PNL 1B, CKT 34
C100	1	1"	8#14	1#14	AC UNIT HP-2	THERMOSTAT-2	MULTICONDUCTOR CABLE
D100	1	1"	1-CAT5E		STAGE LIGHTING CONTROLS	TERRACE LIGHTING CONTROLS	BELDEN #1583A
D101	1	1"	DMX CABLE		STAGE LIGHTING CONTROLS	LIGHT XF8	BELDEN #9729
D102	1	1"	DMX CABLE		STAGE LIGHTING CONTROLS	LIGHT XF8	BELDEN #9729
D103	1	1"	DMX CABLE		STAGE LIGHTING CONTROLS	LIGHT XF8	BELDEN #9729
D104	1	1"	DMX CABLE		STAGE LIGHTING CONTROLS	LIGHT XF8	BELDEN #9729
D105	1	1"	DMX CABLE		TERRACE LIGHTING CONTROLS	LIGHT XF7	BELDEN #9729
D106	1	1"	DMX CABLE		TERRACE LIGHTING CONTROLS	LIGHT XF7	BELDEN #9729
SP01	1	2"	SPARE CONDUIT		PANEL 1A	LIGHT XF1	WITH PULL STRING
SP02	1	2"	SPARE CONDUIT		PANEL 1A	ART LIGHTING	WITH PULL STRING
SP03	1	2"	SPARE CONDUIT		PANEL 1A	LIGHT XF4	WITH PULL STRING
SP04	1	2"	SPARE CONDUIT		PANEL 1A	LIGHT XF4	WITH PULL STRING
SP05	1	4"	SPARE CONDUIT		BATHROOM BUILDING	CAFÉ BUILDING	WITH PULL STRING
SP06	1	4"	SPARE CONDUIT		BATHROOM BUILDING	(E) UTILITY POLE	WITH PULL STRING

THE CITY OF LOS ANGELES OR ITS OFFICERS OR AGENTS SHALL NOT BE RESPONSIBLE FOR THE ACCURACY OR COMPLETENESS OF ELECTRONIC COPIES OF THIS PLAN SHEET.

REVISION DATES (DESIGN STAGE ONLY)

BUREAU OF ENGINEERING

OFFICIAL RECORD

.

PLANS PREPARED BY:
TETRA TECH, INC.
707 WILSHIRE BLVD. 23RD FLR.
LOS ANGELES, CA 90017
PHONE: (213) 239-8866

CITY OF LOS ANGELES DEPARTMENT OF PUBLIC WORKS

BUREAU OF ENGINEERING

ENGINEERING
CITY OF LOS ANGELES

NO. | REVISIONS: | DATE | BY:

BUILDING NO.

INDEX NO. MF-300501

THIS PLAN WAS ELECTRONICALLY SIGNED AND STAMPED.

REGISTERED PROFESSIONAL ENGINEER * MAZEN KASSAR * No. E-15809 Exp. 6-30-22 * ELECTRICAL * STATE OF CALIFORNIA

CITY ENGINEER

TED ALLEN, P.E.

DESIGN GROUP

ENGINEER: LIC NO. E-15809 DATE: 07/11/22

DESIGNED BY: JAMES ROBERTS

DRAWN BY: JAMES ROBERTS

CHECKED BY: MAZEN KASSAR

APPROVED BY: MAZEN KASSAR

VERT. CONTROL: BM 12-04070, 1929 (NGVD29) - 1985 ADJUSTMENT
HORIZ. CONTROL: GPS; PID AE 1704, EPOCH 1991.35

SHEET TITLE: WEST PARK CONDUIT SCHEDULE

PROJECT: SIXTH STREET PARK, ARTS AND RIVER CONNECTIVITY IMPROVEMENTS (PARC)

ADDRESS: SIXTH STREET OVER THE LOS ANGELES RIVER

WORK ORDER NO. E700235D

FILE NO. --

DRAWING NO. E-405

SHEET 179 OF 295 SHEETS

7/11/2022 8:23:51 PM • O:\PROJECTS\IRVINE\20043\200-20043-17001\CAD\SHEETFILES\E-405 CONDUIT SCHEDULE I.DWG - ROBERTS, JAMES1

Sheet Version 3.0

EAST PARK CONDUIT SCHEDULE							
REF NO.	CONDUIT		CONDUCTORS		FROM	TO	COMMENTS
	QTY	SIZE	QTY & SIZE	GND			
PS2	2	5"	BY LADWP		POINT OF CONNECTION	LADWP XFMR	
SS2	8	4"	BY LADWP		LADWP XFMR	SWITCHBOARD	
P001	2	4"	4#250KCMIL	1#1	SWITCHBOARD	MISC. LOAD 1	
P002	1	3"	4#4/0	1#6	SWITCHBOARD	MISC. LOAD 2	
P003	2	4"	4#350KCMIL	1#1/0	SWITCHBOARD	MISC. LOAD 3	
P004	1	4"	4#250KCMIL	1#4	SWITCHBOARD	SOUND EQUIPMENT 1	
P005	1	3"	4#4	1#8	SWITCHBOARD	SOUND EQUIPMENT 2	
P006	1	4"	4#350KCMIL	1#3	SWITCHBOARD	SOUND EQUIPMENT 3	
P007	1	3"	3#4/0	1#3	SWITCHBOARD	PANEL "2C"	
P008	1	2"	2#4	1#8	SWITCHBOARD	EV CHARGING STATION 1	
P009	1	2"	2#4	1#8	SWITCHBOARD	EV CHARGING STATION 2	
P010							NOT USED
P011							NOT USED
P012							NOT USED
P013	1	4"	12#4	3#8	SWITCHBOARD	TENT REC	
P014	1	4"	12#1/0	3#6	SWITCHBOARD	TENT REC	
P015							NOT USED
P016							NOT USED
P100	1	2"	2#2/0	1#6	LIGHTING PULL BOX	LIGHTS - XF1, XF2 & XF4A	CKT 1
P101	1	2"	2#1/0	1#6	LIGHTING PULL BOX	LIGHTS - XF2 & XF13	CKT 2
P102	1	2"	2#4	1#8	LIGHTING PULL BOX	LIGHTS - XF2	CKT 4
P103	1	2"	4#2	2#6	PANEL 2A	LIGHTS - XF10A	CKT 17, 19
P104	1	3"	2#4/0	1#6	PANEL 2A	LIGHTS - XF10	CKT 3
P105	1	3"	2#3/0	1#6	PANEL 2A	LIGHTS - XF10	CKT 7
P106	1	3"	2#4/0	1#6	PANEL 2A	LIGHTS - XF10	CKT 5
P107	1	3"	2#3/0	1#6	PANEL 2A	LIGHTS - XF10	CKT 9
P108	1	2"	2#2	1#8	LIGHTING PULL BOX	LIGHTS - XF1 & XF2	CKT 14
P109	1	2"	2#4	1#8	LIGHTING PULL BOX	LIGHTS - XF1 & XF2	CKT 11
P110	1	2"	2#4	1#8	LIGHTING PULL BOX	LIGHTS - XF13	CKT 12
P111	1	1"	2#12	1#12	PANEL 2A	LIGHTS - NORTH BUILDING	CKT 21
P112	1	2"	12#10	6#12	PANEL 2A	EXTERIOR LIGHTING CONTROL PANEL	CKT 1, 2, 4, 11, 12, 14
P113	1	3"	2#2/0	1#6	PANEL 2A	POLE LIGHT RECEPTACLES	CKT 23
P114	1	3"	2#1/0	1#6	PANEL 2A	POLE LIGHT RECEPTACLES	CKT 22
P115	1	2"	2#4	1#8	PANEL 2A	POLE LIGHT RECEPTACLES	CKT 25
P116	1	2"	2#2	1#8	PANEL 2A	POLE LIGHT RECEPTACLES	CKT 24
P117	1	2"	2#4	1#8	PANEL 2A	POLE LIGHT RECEPTACLES	CKT 27
P118	1	2"	4#4	2#8	PANEL 2A	LARGE STAGE 1 ISOLATED REC	CKT 29, 31
P119	1	1"	2#10	1#10	PANEL 2A	LARGE STAGE 1 ISOLATED REC	CKT 33
P120	1	2"	2#4	1#8	PANEL 2A	LARGE STAGE 1 REC	CKT 35
P121	1	1"	2#10	1#10	PANEL 2A	LARGE STAGE 1 REC	CKT 37
P122	1	1"	2#10	1#10	PANEL 2A	SMALL STAGE ISOLATED REC SMALL STAGE REC	CKT 28
P123	1	1"	2#8	1#10	PANEL 2A	SMALL STAGE ISOLATED REC	CKT 26
P124	1	1"	2#10	1#10	PANEL 2A	SMALL STAGE REC	CKT 30
P125	1	2"	2#6	1#8	PANEL 2A	LARGE STAGE 2 ISOLATED REC	CKT 36
P126	1	2"	2#6	1#8	PANEL 2A	LARGE STAGE 2 REC	CKT 40
P127	1	2"	4#3	2#8	PANEL 2A	LARGE STAGE 2 ISOLATED REC	CKT 32, 34
P128	1	2"	2#3	1#8	PANEL 2A	LARGE STAGE 2 REC	CKT 38
P129	1	2"	2#3	1#8	PANEL 2A	IRRIGATION CONTROLLER "E"	CKT 18
P130	1	2"	2#6	1#10	PANEL 2A	WET WELL SUMP PUMP	CKT 45
P131	1	1"	2#12	1#12	PANEL 2A	WATER CIRC PUMP	CKT 46
P132	1	1"	2#12	1#12	PANEL 2C	ISP DROP	PNL 2C, CKT 22
P133	1	1"	2#12	1#12	PANEL 2A	HISTORIC LIGHTING	CKT 20
P134	1	1"	4#12	2#12	PANEL 2C	SECURITY OUTLETS	PNL 2C, CKT 18, 19
P135	1	1"	2#10	1#12	PANEL 2A	PED CROSSWALK RRFB 1	CKT 8
P136	1	1"	2#12	1#12	PANEL 2A	PED CROSSWALK RRFB 2	CKT 10
P137	1	1"	2#10	1#12	PANEL 2A	PED CROSSWALK RRFB 3	CKT 16
P138	1	1"	2#10	1#12	PANEL 2A	IRRIGATION CONTROLLER "D"	CKT 50
P139	1	1"	2#8	1#12	PANEL 2A	IRRIGATION CONTROLLER "C"	CKT 48
P140	1	2"	12#10	6#12	EXTERIOR LIGHTING CONTROL PANEL	LIGHTING PULL BOX	CKT 1, 2, 4, 11, 12, 14
P141	1	2"	2#4	1#8	PANEL 2A	IRRIGATION CONTROLLER "A"	CKT 47
P200	1	3"	8#1	2#6	PANEL 2B	LARGE STAGE 1 DEDICATED REC	PNL 2B, CKT 1,3,5,7,9,11
P201	1	3"	8#1	2#6	PANEL 2B	LARGE STAGE 1 DEDICATED REC	PNL 2B, CKT 13,15,17,19,21,23
P202	1	2"	8#6	2#8	PANEL 2B	SMALL STAGE DEDICATED REC	PNL 2B, CKT 25,27,29,31,33,35
P203	1	4"	12#1/0	3#6	PANEL 2B	LARGE STAGE 2 DEDICATED REC	PNL 2B, CKT 2,4,6,8,10,12
P204	1	3"	4#1/0	1#6	PANEL 2B	LARGE STAGE 2 DEDICATED REC	PNL 2B, CKT 14,16,18,20,22,24
P205	1	1"	2#12	1#12	PANEL 2B	WATER HEATER	PNL 2B, CKT 37,39
P206	1	2"	3#4	1#8	PANEL 2B	MISTING PAD	PNL 2B, CKT 41,43,45
P207	1	1"	2#10	1#12	PANEL 2B	MOTORIZED ROLL-UP DOOR	PNL 2B, CKT 28
P301	1	1"	6#12	3#12	PANEL 2C	MOTORIZED SECURITY SCREENS	PNL 2C, CKT 6,8,10
P302	1	1"	6#12	3#12	PANEL 2C	MOTORIZED SECURITY SCREENS	PNL 2C, CKT 5,7,9
P303	1	1"	2#12	1#12	PANEL 2C	MOTORIZED SECURITY SCREEN	PNL 2C, CKT 2
P304	1	1"	2#12	1#12	PANEL 2C	MOTORIZED SECURITY SCREEN	PNL 2C, CKT 4
P305	1	1"	2#12	1#12	PANEL 2C	LIGHTS - SOUTH BULDING	PNL 2C, CKT 21

EAST PARK CONDUIT SCHEDULE							
REF NO.	CONDUIT		CONDUCTORS		FROM	TO	COMMENTS
	QTY	SIZE	QTY & SIZE	GND			
C100	1	1"	8#14	1#14	AC UNIT HP-1	THERMOSTAT-1	MULTICONDUCTOR CABLE
SP01	1	2"			PANEL 2A	LIGHT-XF1, XF2	WITH PULL STRING
SP02	1	2"			PANEL 2A	LIGHT-XF1	WITH PULL STRING
SP03	1	2"			PANEL 2A	LIGHT-XF1	WITH PULL STRING
SP04	1	2"			PANEL 2A	ART LIGHTING	WITH PULL STRING
SP05	1	4"			ELECTRICAL ROOM	OFFICE BUILDING ELECTRICAL CLOSET	WITH PULL STRING
SP06	1	4"			OFFIFCE BUILDING ELECTRICAL CLOSET	(E) UTILITY POLE	WITH PULL STRING
SP07	1	2"			PANEL 2B	EV CHARGING STATION 3 - FUTURE	WITH PULL STRING
SP08	1	2"			PANEL 2B	EV CHARGING STATION 4 - FUTURE	WITH PULL STRING
SP09	1	2"			PANEL 2B	EV CHARGING STATION 5 - FUTURE	WITH PULL STRING

BUREAU OF ENGINEERING
OFFICIAL RECORD

THE CITY OF LOS ANGELES OR ITS OFFICERS OR AGENTS SHALL NOT BE RESPONSIBLE FOR THE ACCURACY OR COMPLETENESS OF ELECTRONIC COPIES OF THIS PLAN SHEET.

REVISION DATES
(DESIGN STAGE ONLY)

Sheet Version 3.0

PLANS PREPARED BY:
TETRA TECH, INC.
707 WILSHIRE BLVD, 23RD FLR.
LOS ANGELES, CA 90017
PHONE: (213) 239-9866

CITY OF LOS ANGELES DEPARTMENT OF PUBLIC WORKS
BUREAU OF ENGINEERING
ENGINEERING
CITY OF LOS ANGELES

NO. | REVISIONS: | DATE | BY:

BUILDING NO.

INDEX NO. MF-300501

THIS PLAN WAS ELECTRONICALLY SIGNED AND STAMPED.

REGISTERED PROFESSIONAL ENGINEER
MAZEN KASSAR
No. E-15809
Exp. 6-30-22
REGISTERED STATE OF CALIFORNIA
ELECTRICAL

CITY ENGINEER
LIC NO. E-15809
DATE: 07/11/22

TED ALLEN, P.E.
DESIGN GROUP

ENGINEER:
DESIGNED BY: JAMES ROBERTS
DRAWN BY: JAMES ROBERTS
CHECKED BY: MAZEN KASSAR
APPROVED BY: MAZEN KASSAR

VERT. CONTROL: BM 12-04070, 1929 (NGVD29) - 1985 ADJUSTMENT
HORIZ. CONTROL: GPS; PID AE 1704, EPOCH 1991.35

SHEET TITLE: EAST PARK CONDUIT SCHEDULE

PROJECT: SIXTH STREET PARK, ARTS AND RIVER CONNECTIVITY IMPROVEMENTS (PARC)

ADDRESS: SIXTH STREET OVER THE LOS ANGELES RIVER

WORK ORDER NO. E700235D
FILE NO. --
DRAWING NO. E-406
SHEET 180 OF 295 SHEETS

7/11/2022 8:23:55 PM - O:\PROJECTS\IRVINE\20043\200-20043-170011\CAD\SHEETFILES\E-406 CONDUIT SCHEDULE II.DWG - ROBERTS, JAMES1

LIGHTING FIXTURE SCHEDULE

FIXTURE I.D.	FIXTURE: INCAND.	FIXTURE: FLUOR.	FIXTURE: H.P.S.	FIXTURE: MET. HAL.	FIXTURE: LED	VOLTS	LAMPS: NO	LAMPS: WATTS AND TYPE	FIXTURE: RECESS	FIXTURE: SURFACE	FIXTURE: PEND.	FIXTURE: WALL	FIXTURE: POLE	DESCRIPTION AND VARIATIONS	MANUFACTURER AND CATALOG NO.
XF1 75					●	120	1	75					●	LED POLE MOUNT PEDESTRIAN LIGHT, NOMINAL 18' HEIGHT, SYMMETRIC OPTIC, DIMMABLE, WET-RATED	KIM UR20-56L-75-3K8-5W-UNV-FM33-FINISH LTRA-MOD18-51XX-FM-FINISH POLE
XF1A 75					●	120	1	75					●	LED POLE MOUNT PEDESTRIAN LIGHT, NOMINAL 10' HEIGHT, SYMMETRIC OPTIC, DIMMABLE, WET-RATED	KIM UR20-56L-75-3K8-5W-UNV-FM33-FINISH LTRA-MOD10-51XX-FM-FINISH POLE
XF2 75					●	120	1	75					●	LED POLE MOUNT PEDESTRIAN LIGHT, NOMINAL 18' HEIGHT, ASYMMETRIC HOUSE SIDE SHIELD, DIMMABLE, WET-RATED	KIM UR20-56L-75-3K8-5W-UNV-FM33-FINISH-MOD BC LTRA-MOD18-51XX-FM-FINISH POLE
XF4 225					●	120	6	37.5					●	POLE WITH (6) LED ADJUSTABLE ACCENT LIGHTS AT THE TOP, NOMINAL 20' HEIGHT, DIMMABLE, WET-RATED	BEGA (6) 84 528-K3-FINISH FIXTURE (6) 79 511 MOUNTING BLOCK (6) 71 111 GLARE SHIELD 1908HR MOD 20'-FINISH-2X3D POLE
XF4A 225					●	120	6	37.5					●	POLE WITH (6) LED ADJUSTABLE ACCENT LIGHTS AT THE TOP, NOMINAL 10' HEIGHT, DIMMABLE, WET-RATED	BEGA (6) 84 528-K3-FINISH FIXTURE (6) 79 511 MOUNTING BLOCK (6) 71 111 GLARE SHIELD 1908HR MOD 10'-FINISH-2X3D POLE
XF6 40					●	120	1	40		●				LINEAR LED LENSED DOWNLIGHT, NOMINAL 1.5" APERTURE AND 48" LENGTH, DIMMABLE, SUBMERSIBLE-RATED. PROVIDE WITH TDQ DIMMING TRANSFORMER-120V. INSTALL IN NEAREST PULL BOX	HYDREL W6348-LED-120MA-30K-24-VWFL-A3-SCF-LP WINONA TQD500
XF7 1305					●	120	12	180, 37.5					●	POLE WITH (6) ADJUSTABLE COLOR CHANGING LED THEATRICAL ELLIPSOIDAL REFLECTOR SPOTLIGHTS AND (6) LED ADJUSTABLE ACCENT LIGHTS AT TOP NOMINAL 24' HEIGHT, DMX CONTROL, DIMMABLE, WET-RATED	BEGA (6) 84 528-K3-FINISH FIXTURE (6) 79 511 MOUNTING BLOCK (6) 71 111 GLARE SHIELD 1908HR MOD 25'-FINISH-2X3D POLE COEMAR (6) LEDko EXT2 FULL SPECTRUM BEGA (6) 70 379 POLE ARMS
XF8 721					●	120	10	124, 37.5					●	POLE WITH (4) ADJUSTABLE COLOR CHANGING LED THEATRICAL PAR WASH LIGHTS AND (6) LED ADJUSTABLE ACCENT LIGHTS AT THE TOP, NOMINAL 24' HEIGHT, DMX CONTROL, DIMMABLE, WET-RATED	ETC (4) SELD60XTI-V, (2) D60XTIDPM, (4) D60XTIHH, (4) 400SC, (2) D60XTI-RM, (2) D60XTI-RW, (2) D60XTI-RXW
XF9 17.25					●	120		17.25/FT				●		IN-GRADE CONTINUOUS LINEAR COLOR CHANGING LED ADJUSTABLE WALL GRAZE LIGHT, DMX CONTROL, WET-RATED. MOUNT TO WALL PER VENDOR RECOMMENDATIONS.	LUMENPULSE LOI-100/277-12-RGBW-30X30-TSO-INTL- DMX-RDM-ASL (1) LID
XF10 3200					●	120	4	800					●	POLE WITH (4) ADJUSTABLE LED SPORTS LIGHTS AT THE TOP, NOMINAL 30' HEIGHT WITH 20 DEGREE TILT, MOUNTED PHOTOCELL, WET-RATED	NLS LIGHTING (4) VUE-4-T4L-80-50K-FSS-4-7PIN SPAULDING LIGHTING RTS-30-XX-1-MOUNTING-FINISH-ARMS
XF10A 1515					●	120	3	505					●	POLE WITH (3) ADJUSTABLE LED SPORTS LIGHTS AT THE TOP, NOMINAL 30' HEIGHT WITH 20 DEGREE TILT, MOUNTED PHOTOCELL, WET-RATED	NLS LIGHTING (3) VUE-3-TT-160L-1-50K-UNV-KM-GPH-FSS, PE7+SHORTING CAP SPAULDING LIGHTING RTS-30-XX-1-MOUNTING-FINISH-ARMS
XF11 26					●	120	1	26		●				LED LENSED DOWNLIGHT, NOMINAL 4" APERTURE, DIMMABLE, WET-RATED	ALPHABET NU4-RA-XTM19-20LM-35K-DC50-DIM10-NC
XF12 23					●	120	1	23		●				LINEAR LED LENSED STRIP LIGHT, NOMINAL 4" WIDTH, NOMINAL 48" LENGTH	MARK SLOT 4 LED SL4L-QS-LOP-4FT-FLP-80CRI-35K-600LMF
XF12A 13					●	120	1	13		●				LINEAR LED LENSED STRIP LIGHT, NOMINAL 4" WIDTH, NOMINAL 24" LENGTH	MARK SLOT 4 LED SL4L-QS-LOP-2FT-FLP-80CRI-35K-600LMF
XF13 48					●	120	1	48		●				NOMINAL 6" ARM-MOUNTED LED LINEAR ADJUSTABLE SHIELDED PATH LIGHT, NOMINAL 1.5' APERTURE AND 48" LENGTH, WET RATED	HK LIGHTING ZXLLI-BD-3K-FSS-FINISH
XF14 1.5					●	120	1	1.5		●				HANDRAIL-MOUNTED LED ASYMMETRIC DOWNLIGHT, WET RATED	ALPHABET 750-3-3-FACE-WALL, P70418-500 (1) 750 ZETA TOOLKIT
XF15 18					●	120	1	18		●				LINEAR LED LENSED STRIP LIGHT, NOMINAL 4" WIDTH, WET RATED, 24" LENGTH	PINNACLE EDGE EV3-WET-835HO-2'-IND-FLF-1
XF15A 44					●	120	1	44		●				LINEAR LED LENSED STRIP LIGHT, NOMINAL 4" WIDTH, WET RATED, 60" LENGTH	PINNACLE EDGE EV3-WET-835HO-5'-IND-FLF-1
XF15B 26					●	120	1	26		●				LINEAR LED LENSED STRIP LIGHT, NOMINAL 4" WIDTH, WET RATED, 36" LENGTH	PINNACLE EDGE EV3-WET-835HO-3'-IND-FLF-1
XF16 37					●	120	1	37		●				LINEAR LED LENSED STRIP LIGHT, NOMINAL 4" WIDTH, NOMINAL 96" LENGTH	LITHONIA LIGHTING LED LINEAR CLX-L96-6000LM-HEF-MVOLT-35K-80CRI

BUREAU OF ENGINEERING
OFFICIAL RECORD

THE CITY OF LOS ANGELES OR ITS OFFICERS OR AGENTS SHALL NOT BE RESPONSIBLE FOR THE ACCURACY OR COMPLETENESS OF ELECTRONIC COPIES OF THIS PLAN SHEET.

REVISION DATES (DESIGN STAGE ONLY)

PLANS PREPARED BY:
TETRA TECH, INC.
707 WILSHIRE BLVD. 23RD FLR.
LOS ANGELES, CA 90017
PHONE: (213) 239-8866

CITY OF LOS ANGELES DEPARTMENT OF PUBLIC WORKS
BUREAU OF ENGINEERING

VERT. CONTROL: BM 12-04070, 1929 (NGVD29) - 1985 ADJUSTMENT
HORIZ. CONTROL: GPS; PID AE 1704, EPOCH 1991.35

SHEET TITLE: LIGHTING SCHEDULE

PROJECT: SIXTH STREET PARK, ARTS AND RIVER CONNECTIVITY IMPROVEMENTS (PARC)
ADDRESS: SIXTH STREET OVER THE LOS ANGELES RIVER

WORK ORDER NO. E700235D
FILE NO. --
DRAWING NO. E-407
SHEET 181 OF 295 SHEETS

CITY ENGINEER
TED ALLEN, P.E.
DESIGN GROUP
ENGINEER: LIC. NO. E-15809 DATE: 07/11/22
DESIGNED BY: JAMES ROBERTS
DRAWN BY: JAMES ROBERTS
CHECKED BY: MAZEN KASSAR
APPROVED BY: MAZEN KASSAR

ENGINEERING
CITY OF LOS ANGELES

BUREAU OF ENGINEERING

NO. REVISIONS: DATE: BY:

BUILDING NO.

INDEX NO. MF-300501

THIS PLAN WAS ELECTRONICALLY SIGNED AND STAMPED.

REGISTERED PROFESSIONAL ENGINEER * MAZEN KASSAR * No. E-15809 Exp. 6-30-22 * ELECTRICAL * STATE OF CALIFORNIA

7/11/2022 8:24:26 PM - O:\PROJECTS\IRVINE\20043\200-20043-17001\CAD\SHEETFILES\E-407 LIGHTING SCHEDULE.DWG - ROBERTS, JAMES1

Sheet Version 3.0

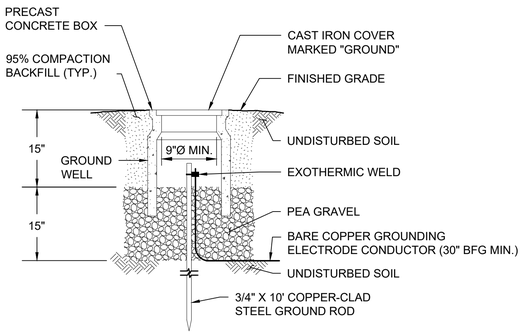

1 - GROUND ROD WELL
SCALE: N.T.S.

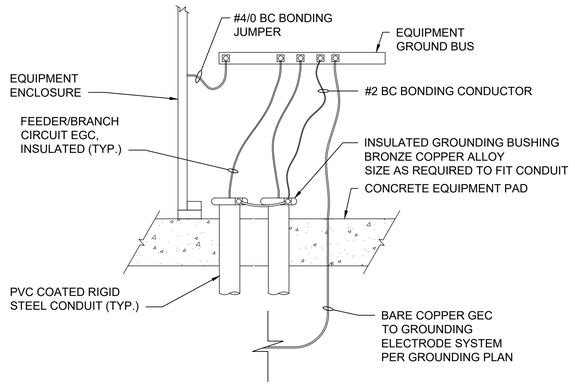

2 - ELECTRICAL EQUIPMENT GROUNDING
SCALE: N.T.S.

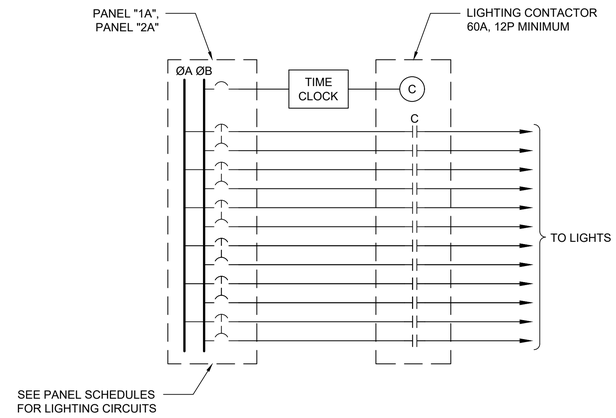

3 – EXTERIOR LIGHTING CONTROL SCHEMATIC DIAGRAM
SCALE: N.T.S.

4 - NOT USED
SCALE: N.T.S.

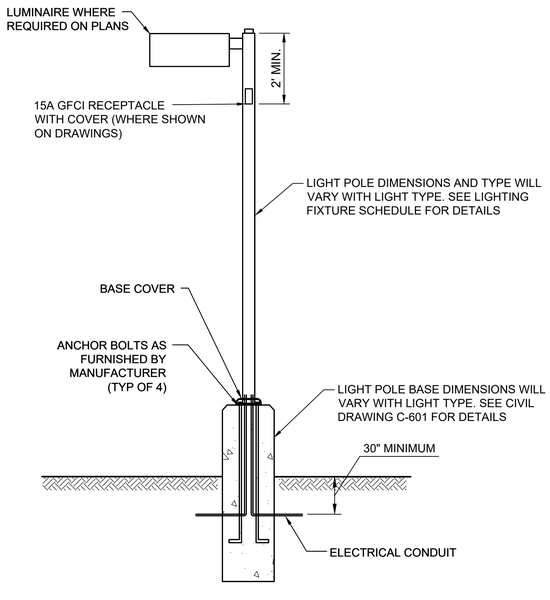

5 – LIGHT POLE DETAIL
SCALE: N.T.S.

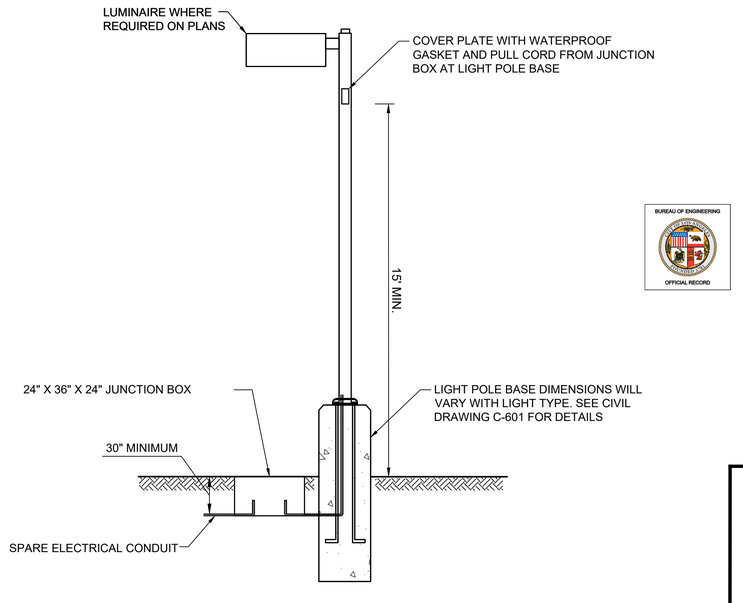

6 – WIFI ACCESS POINT DETAIL
SCALE: N.T.S.

BUREAU OF ENGINEERING
OFFICIAL RECORD

PLANS PREPARED BY:
TETRA TECH, INC.
707 WILSHIRE BLVD. 23RD FLR.
LOS ANGELES, CA 90017
PHONE: (213) 239-8866

CITY OF LOS ANGELES DEPARTMENT OF PUBLIC WORKS
BUREAU OF ENGINEERING
ENGINEERING
CITY OF LOS ANGELES

THIS PLAN WAS ELECTRONICALLY SIGNED AND STAMPED.

REGISTERED PROFESSIONAL ENGINEER * MAZEN KASSAR * No. E-15809 Exp. 6-30-22 * REGISTERED STATE OF CALIFORNIA * CIVIL/ELECTRICAL

NO.	REVISIONS:	DATE	BY:

BUILDING NO.

INDEX NO. MF-300501

CITY ENGINEER
TED ALLEN, P.E.

ENGINEER:	DESIGN GROUP	LIC. NO. E-15809	DATE: 07/11/22
DESIGNED BY:	JAMES ROBERTS		
DRAWN BY:	JAMES ROBERTS		
CHECKED BY:	MAZEN KASSAR		
APPROVED BY:	MAZEN KASSAR		

VERT. CONTROL: BM 12-04070, 1929 (NGVD29) - 1985 ADJUSTMENT
HORIZ. CONTROL: GPS, PID AE 1704, EPOCH 1991.35

SHEET TITLE: ELECTRICAL DETAILS

PROJECT: SIXTH STREET PARK, ARTS AND RIVER CONNECTIVITY IMPROVEMENTS (PARC)

ADDRESS: SIXTH STREET OVER THE LOS ANGELES RIVER

WORK ORDER NO. E700235D
FILE NO. --
DRAWING NO. E-501
SHEET 182 OF 295 SHEETS

7/11/2022 8:24:56 PM - O:\PROJECTS\IRVINE\20043\200-20043-17001\CAD\SHEETFILES\E-501 ELECTRICAL DETAILS.DWG - ROBERTS, JAMES1

REVISION DATES (DESIGN STAGE ONLY)

THE CITY OF LOS ANGELES OR ITS OFFICERS OR AGENTS SHALL NOT BE RESPONSIBLE FOR THE ACCURACY OR COMPLETENESS OF ELECTRONIC COPIES OF THIS PLAN SHEET.

Sheet Version 3.0

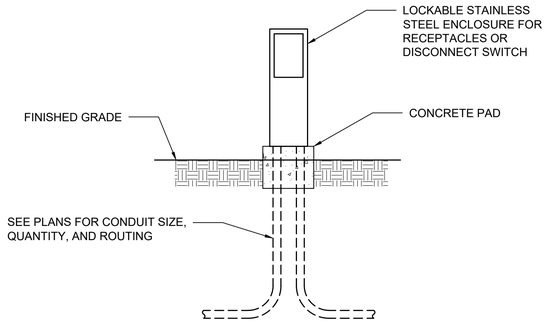

1 EQUIPMENT PEDESTAL DETAIL

SCALE: N.T.S.

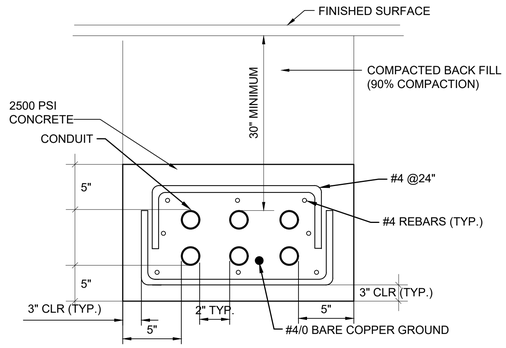

NOTE: THIS DETAIL SHOWS A TYPICAL DUCT BANK CROSS SECTION. COORDINATE NUMBER OF CONDUITS WITH PLANS AND PROVIDE DUCT BANK NECESSARY TO ACCOMMODATE ALL CONDUITS.

2 TYPICAL DUCT BANK IN ROADWAY

SCALE: N.T.S.

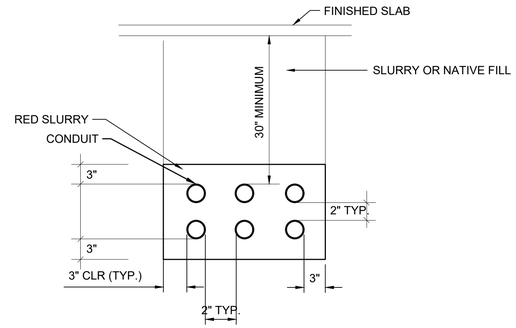

NOTE: THIS DETAIL SHOWS A TYPICAL UNDER SLAB CROSS SECTION. COORDINATE NUMBER OF CONDUITS WITH PLANS AND PROVIDE UNDER SLAB NECESSARY TO ACCOMMODATE ALL CONDUITS.

3 TYPICAL UNDER SLAB CONDUITS

SCALE: N.T.S.

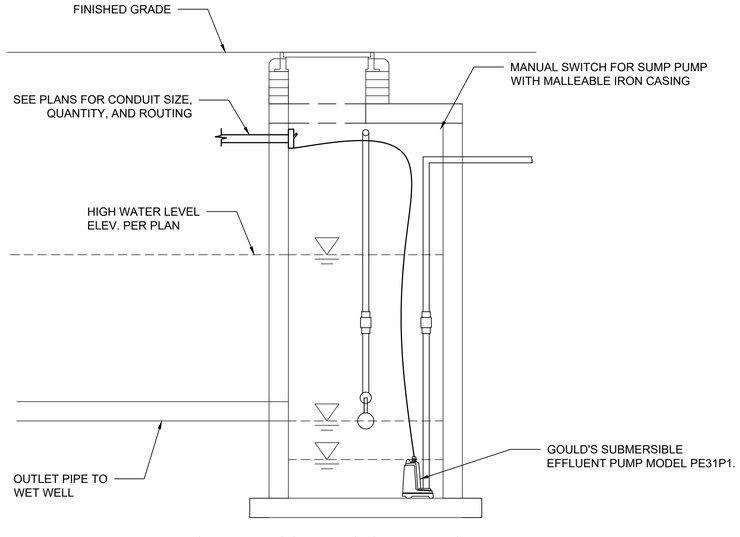

NOTE: REFER TO CIVIL PLANS FOR WET WELL SUMP PUMP DETAIL.

4 WET WELL SUMP PUMP SWITCH MOUNTING DETAIL

SCALE: N.T.S.

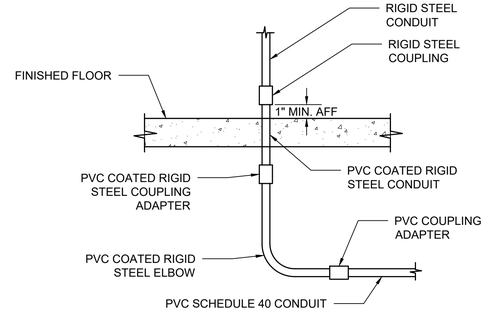

5 CONDUIT STUB-UP DETAIL

SCALE: N.T.S.

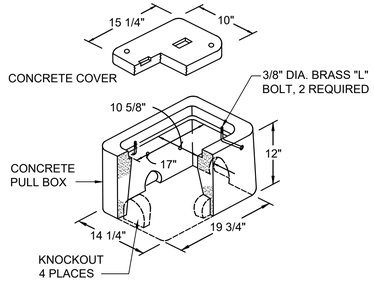

HIGH DENSITY REINFORCED CONCRETE PULL AND JUNCITON BOX WITH END AND SIDE KNOCKOUTS.

6 PULL BOX DETAIL

SCALE: N.T.S.

BUREAU OF ENGINEERING — OFFICIAL RECORD

THE CITY OF LOS ANGELES OR ITS OFFICERS OR AGENTS SHALL NOT BE RESPONSIBLE FOR THE ACCURACY OR COMPLETENESS OF ELECTRONIC COPIES OF THIS PLAN SHEET.

REVISION DATES (DESIGN STAGE ONLY)

Sheet Version 3.0

BUREAU OF ENGINEERING

ENGINEERING — CITY OF LOS ANGELES

NO. | REVISIONS: | DATE | BY:

BUILDING NO.

INDEX NO. MF-300501

THIS PLAN WAS ELECTRONICALLY SIGNED AND STAMPED.

REGISTERED PROFESSIONAL ENGINEER * MAZEN KASSAR * No. E-15809 Exp. 6-30-22 * ELECTRICAL * REGISTERED STATE OF CALIFORNIA

CITY OF LOS ANGELES — DEPARTMENT OF PUBLIC WORKS

CITY ENGINEER: TED ALLEN, P.E.

ENGINEER: DESIGN GROUP — LIC. NO. E-15809 — DATE: 07/11/22

DESIGNED BY: JAMES ROBERTS

DRAWN BY: JAMES ROBERTS

CHECKED BY: MAZEN KASSAR

APPROVED BY: MAZEN KASSAR

VERT. CONTROL: BM 12-04070, 1929 (NGVD29) - 1985 ADJUSTMENT

HORIZ. CONTROL: GPS, PID AE 1704, EPOCH 1991.35

SHEET TITLE: ELECTRICAL DETAILS

PROJECT: SIXTH STREET PARK, ARTS AND RIVER CONNECTIVITY IMPROVEMENTS (PARC) SIXTH STREET OVER THE LOS ANGELES RIVER

ADDRESS:

PLANS PREPARED BY: TETRA TECH, INC.
707 WILSHIRE BLVD. 23RD FLR.
LOS ANGELES, CA 90017
PHONE: (213) 239-8866

WORK ORDER NO. E700235D

FILE NO. --

DRAWING NO. E-502

SHEET 183 OF 295 SHEETS

7/11/2022 8:25:16 PM - O:\PROJECTS\IRVINE\20043\200-20043-17001\CAD\SHEETFILES\E-502 ELECTRICAL DETAILS 1.DWG - ROBERTS, JAMES1

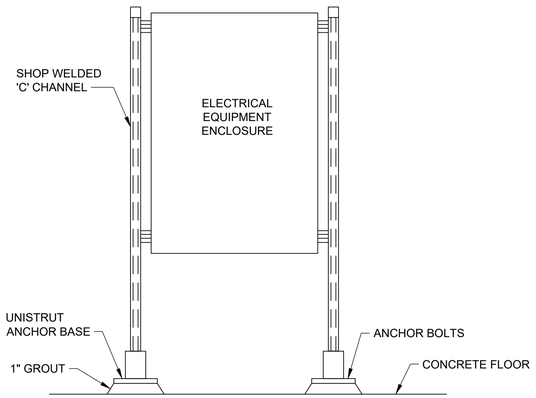

1 - EQUIPMENT MOUNT DETAIL
SCALE: N.T.S.

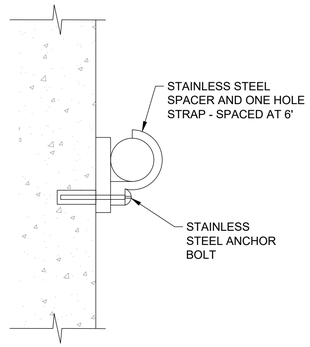

2 - CONDUIT MOUNTING DETAIL
SCALE: N.T.S.

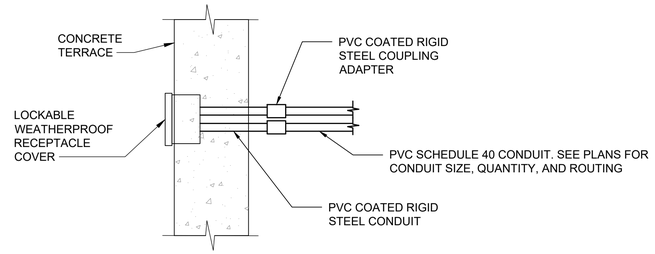

3 - CONCRETE WALL RECEPTACLE MOUNT DETAIL
SCALE: N.T.S.

4 - NOT USED
SCALE: N.T.S.

THE CITY OF LOS ANGELES OR ITS OFFICERS OR AGENTS SHALL NOT BE RESPONSIBLE FOR THE ACCURACY OR COMPLETENESS OF ELECTRONIC COPIES OF THIS PLAN SHEET.

REVISION DATES
(DESIGN STAGE ONLY)

Sheet Version 3.0

BUREAU OF ENGINEERING

ENGINEERING
CITY OF LOS ANGELES

NO.	REVISIONS:	DATE	BY:

BUILDING NO.

INDEX NO. MF-300501

THIS PLAN WAS ELECTRONICALLY SIGNED AND STAMPED.

REGISTERED PROFESSIONAL ENGINEER * MAZEN KASSAR * Exp. 6-30-22 * REGISTERED * STATE OF CALIFORNIA * ELECTRICAL

BUREAU OF ENGINEERING
OFFICIAL RECORD

PLANS PREPARED BY:
TETRA TECH, INC.
707 WILSHIRE BLVD, 23RD FLR.
LOS ANGELES, CA 90017
PHONE: (213) 239-8866

CITY OF LOS ANGELES DEPARTMENT OF PUBLIC WORKS

VERT. CONTROL: BM 12-04070, 1929 (NGVD29) - 1985 ADJUSTMENT
HORIZ. CONTROL: GPS; PID AE 1704; EPOCH 1991.35

SHEET TITLE: ELECTRICAL DETAILS

PROJECT: SIXTH STREET PARK, ARTS AND RIVER CONNECTIVITY IMPROVEMENTS (PARC)

ADDRESS: SIXTH STREET OVER THE LOS ANGELES RIVER

CITY ENGINEER
DATE: 07/11/22
LIC. NO. E-15809

TED ALLEN, P.E.

DESIGN GROUP

ENGINEER:	
DESIGNED BY:	JAMES ROBERTS
DRAWN BY:	JAMES ROBERTS
CHECKED BY:	MAZEN KASSAR
APPROVED BY:	MAZEN KASSAR

WORK ORDER NO. E700235D
FILE NO. --
DRAWING NO. E-503
SHEET 184 OF 295 SHEETS

7/11/2022 8:25:37 PM - O:\PROJECTS\IRVINE\20043\200-20043-17001\CAD\SHEETFILES\E-503 ELECTRICAL DETAILS III.DWG - ROBERTS, JAMES1

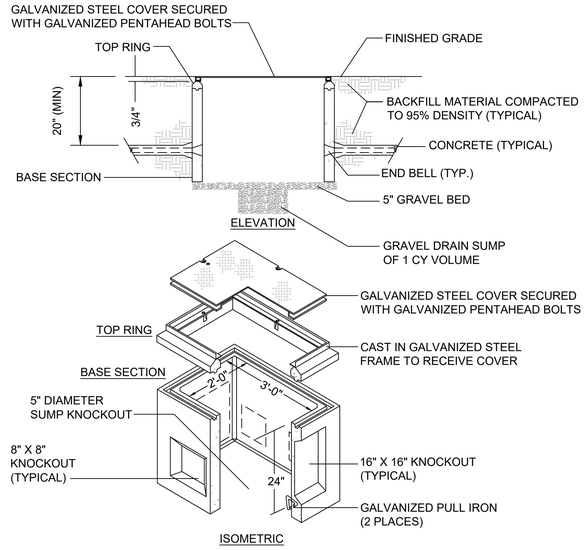

1 — NTS

PULL BOX - 24"X36"X24" DETAIL

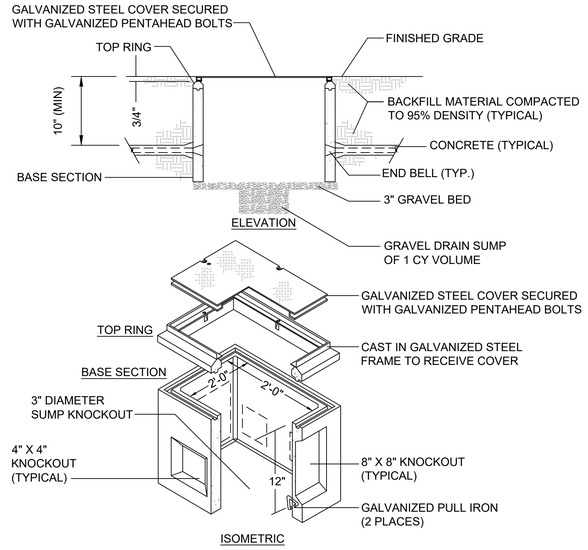

2 — NTS

PULL BOX - 24"X24"X12" DETAIL

THE CITY OF LOS ANGELES OR ITS OFFICERS OR AGENTS SHALL NOT BE RESPONSIBLE FOR THE ACCURACY OR COMPLETENESS OF ELECTRONIC COPIES OF THIS PLAN SHEET.

REVISION DATES (DESIGN STAGE ONLY)

BUREAU OF ENGINEERING
OFFICIAL RECORD

PLANS PREPARED BY:
TETRA TECH, INC.
707 WILSHIRE BLVD, 23RD FLR.
LOS ANGELES, CA 90017
PHONE: (213) 239-8866

CITY OF LOS ANGELES DEPARTMENT OF PUBLIC WORKS

BUREAU OF ENGINEERING

ENGINEERING
CITY OF LOS ANGELES

NO. | REVISIONS: | DATE | BY:

BUILDING NO.

INDEX NO. MF-300501

THIS PLAN WAS ELECTRONICALLY SIGNED AND STAMPED.

MAZEN KASSAR PROFESSIONAL ENGINEER REGISTERED STATE OF CALIFORNIA ELECTRICAL Exp. 6-30-22 No. E-15809

CITY ENGINEER
LIC. NO. E-15809
DATE: 07/11/22

TED ALLEN, P.E.

DESIGN GROUP

ENGINEER:	XXXX	LIC.
DESIGNED BY:	JAMES ROBERTS	
DRAWN BY:	JAMES ROBERTS	
CHECKED BY:	MAZEN KASSAR	
APPROVED BY:	MAZEN KASSAR	

VERT. CONTROL: BM 12-04070, 1929 (NGVD29) - 1985 ADJUSTMENT
HORIZ. CONTROL: GPS - PID AE 1704, EPOCH 1991.35

SHEET TITLE: ELECTRICAL DETAILS XXXXXXXXXX

PROJECT: SIXTH STREET PARK, ARTS AND RIVER CONNECTIVITY IMPROVEMENTS (PARC)

ADDRESS: SIXTH STREET OVER THE LOS ANGELES RIVER

WORK ORDER NO. E700235D
FILE NO. -
DRAWING NO. E-504
SHEET 185 OF 295 SHEETS

7/11/2022 8:25:57 PM - O:\PROJECTS\IRVINE\20043\200-20043-17001\CAD\SHEETFILES\E-504 ELECTRICAL DETAILS IV.DWG - ROBERTS, JAMES1

Sheet Version 3.0

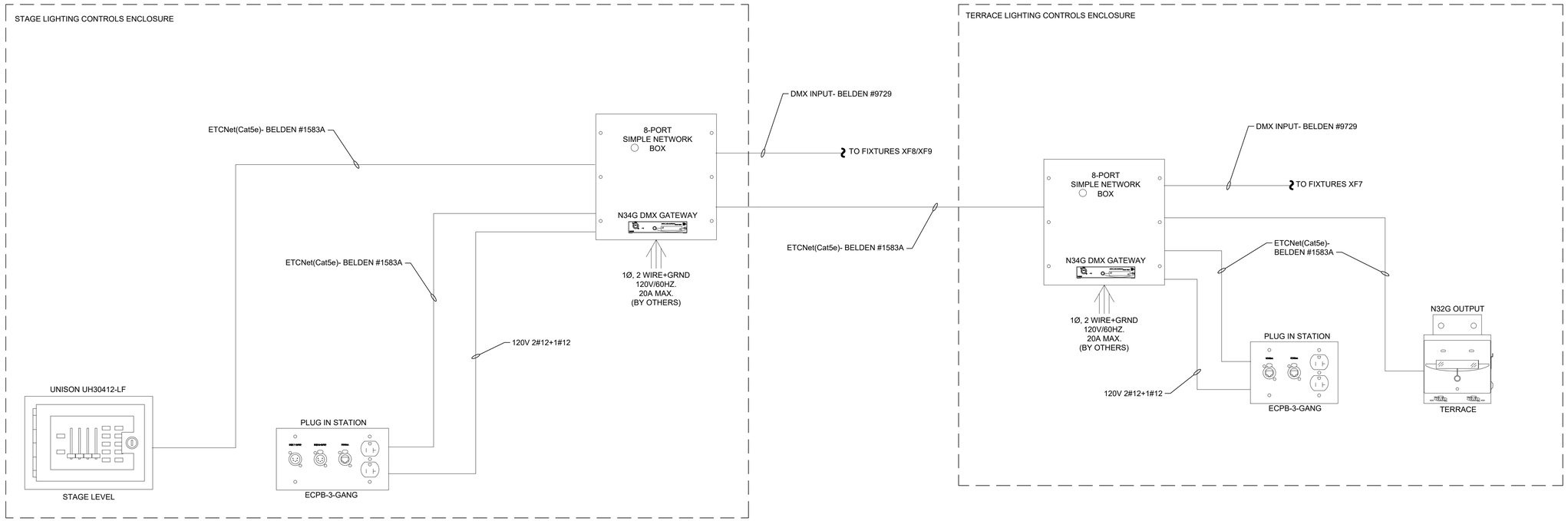

1 - ARTS PLAZA LIGHTING CONTROLS

SCALE: N.T.S.

THE CITY OF LOS ANGELES OR ITS OFFICERS OR AGENTS SHALL NOT BE RESPONSIBLE FOR THE ACCURACY OR COMPLETENESS OF ELECTRONIC COPIES OF THIS PLAN SHEET.

REVISION DATES
(DESIGN STAGE ONLY)

Sheet Version 3.0

BUREAU OF ENGINEERING

ENGINEERING
CITY OF LOS ANGELES

NO.	REVISIONS:	DATE	BY:

BUILDING NO.

INDEX NO. MF-300501

THIS PLAN WAS ELECTRONICALLY SIGNED AND STAMPED.

REGISTERED PROFESSIONAL ENGINEER
MAZEN KASSAR
Exp. 6-30-22
ELECTRICAL
STATE OF CALIFORNIA

CITY OF LOS ANGELES DEPARTMENT OF PUBLIC WORKS

CITY ENGINEER
LIC. NO. E-15809
DATE: 07/11/22

TED ALLEN, P.E.

DESIGN GROUP

ENGINEER:	
DESIGNED BY:	JAMES ROBERTS
DRAWN BY:	JAMES ROBERTS
CHECKED BY:	MAZEN KASSAR
APPROVED BY:	MAZEN KASSAR

VERT. CONTROL: BM 12-04070, 1929 (NGVD29) - 1985 ADJUSTMENT
HORIZ. CONTROL: GPS; PID AE 1704; EPOCH 1991.35

SHEET TITLE: ARTS PLAZA LIGHTING CONTROL DIAGRAM

PROJECT: SIXTH STREET PARK, ARTS AND RIVER CONNECTIVITY IMPROVEMENTS (PARC)

ADDRESS: SIXTH STREET OVER THE LOS ANGELES RIVER

BUREAU OF ENGINEERING
OFFICIAL RECORD

PLANS PREPARED BY:
TETRA TECH, INC.
707 WILSHIRE BLVD, 23RD FLR.
LOS ANGELES, CA 90017
PHONE: (213) 239-8866

WORK ORDER NO. E700235D
FILE NO. --
DRAWING NO. E-601
SHEET 186 OF 295 SHEETS

7/11/2022 8:26:31 PM - O:\PROJECTS\IRVINE\20043\200-20043-17001\CAD\SHEETFILES\E-601 LIGHTING CONTROLS ELEVATION.DWG - ROBERTS, JAMES1

STATE OF CALIFORNIA
Indoor Lighting
NRCC-LTI-E (Created 04/21) — CALIFORNIA ENERGY COMMISSION

CERTIFICATE OF COMPLIANCE — NRCC-LTI-E

This document is used to demonstrate compliance with requirements in §110.9, §110.12(c), §130.0, §130.1, §140.6, and §141.0(b)2 for indoor lighting scopes using the prescriptive path.

Project Name:	Sixth Street Park, Arts and River Connectivity Improvements	Report Page:	Page 1 of 6
Project Address:	Sixth Street over the Los Angeles River	Date Prepared:	05/26/2022

A. GENERAL INFORMATION

01	Project Location (city)	Los Angeles	04	Total Conditioned Floor Area (ft²)	163
02	Climate Zone	9	05	Total Unconditioned Floor Area (ft²)	0
03	Occupancy Types Within Project (select all that apply):		06	# of Stories (Habitable Above Grade)	1

☐ Office ☐ Retail ☐ Warehouse ☐ Hotel/Motel ☐ School ☐ Support Areas
☐ Parking Garage ☐ High-Rise Residential ☐ Relocatable ☐ Healthcare ☑ Other (write in): PARC West Restroom

B. PROJECT SCOPE

Table Instructions: Include any lighting systems that are within the scope of the permit application and are demonstrating compliance using the prescriptive path outlined in §140.6 or §141.0(b)2 for alterations. WARNING: Changing the Calculation Method in this table will result in the deletion of data previously input. If you need to change the calculation method, please open a new form or use "Save As".

Scope of Work	Conditioned Spaces		Unconditioned Spaces	
01	02	03	04	05
My Project Consists of (check all that apply):	Calculation Method	Area (ft²)	Calculation Method	Area (ft²)
☑ New Lighting System	Area Category	163	Area Category	0
☐ Altered Lighting System		0		0
Total Area of Work (ft²)	**163**		**0**	

C. COMPLIANCE RESULTS

Table Instructions: If any cell on this table says "DOES NOT COMPLY" or "COMPLIES with Exceptional Conditions" refer to Table D. for guidance.

Lighting in conditioned and unconditioned spaces must not be combined for compliance per §140.6(b)1.	Allowed Lighting Power per §140.6(b) (Watts)						Adjusted Lighting Power per §140.6(a) (Watts)				Compliance Results
	01	02	03	04	05		06	07	08		09
	Complete Building §140.6(c)1	Area Category §140.6(c)2	Area Category Additional §140.6(c)2G (+)	Tailored §140.6(c)3 (+)	**Total Allowed** (Watts)		Total Designed (Watts)	Adjustments: PAF Control Credits §140.6(a)2 (-)	**Total Adjusted** (Watts) *Includes Adjustments		**05 Must be ≥ 08** §140.6
	(See Table I)	(See Table I)	(See Table J)	(See Table K)			(See Table F)	(See Table P)			
Conditioned:		105.95	0		= **105.95**	≥	104		= **104**		**COMPLIES**
Unconditioned:					=	≥			=		

Table Continued

STATE OF CALIFORNIA
Indoor Lighting
NRCC-LTI-E (Created 04/21) — CALIFORNIA ENERGY COMMISSION

CERTIFICATE OF COMPLIANCE — NRCC-LTI-E

Project Name:	Sixth Street Park, Arts and River Connectivity Improvements	Report Page:	Page 2 of 6
Project Address:	Sixth Street over the Los Angeles River	Date Prepared:	05/26/2022

Controls Compliance (See Table H for Details)	**COMPLIES**
Rated Power Reduction Compliance (See Table Q for Details)	**Not Applicable**

D. EXCEPTIONAL CONDITIONS

This table is auto-filled with uneditable comments because of selections made or data entered in tables throughout the form.

No exceptional conditions apply to this project.

E. ADDITIONAL REMARKS

This table includes remarks made by the permit applicant to the Authority Having Jurisdiction.

F. INDOOR LIGHTING FIXTURE SCHEDULE

Table Instructions: Include all permanent designed lighting and all portable lighting in offices.

Designed Wattage: Conditioned Spaces

01	02	03	04	05	06	07	08	09	10	
Name or Item Tag	Complete Luminaire Description	Modular (Track) Fixture	Small Aperture & Color Change[1]	Watts per luminaire[2]	How Wattage is determined	Total number luminaires	Exempt per §140.6(a)3	Design Watts	Field Inspector: Pass	Field Inspector: Fail
XF15B	LED lensed strip light	☐	☐	26	Mfr. Spec[2]	4	☐	104	☐	☐
							Total Designed Watts CONDITIONED SPACES:	**104**		

[1] *FOOTNOTE: Design Watts for small aperture and color changing luminaires which qualify per §140.6(a)4B is adjusted to be 75% of their rated wattage. Table F automatically makes this adjustment, the permit applicant should enter full rated wattage in column 05.*
[2] *Authority Having Jurisdiction may ask for Luminaire cut sheets to confirm wattage used for compliance per §130.0(c) Wattage used must be the maximum rated for the luminaire, not the lamp.*

G. MODULAR LIGHTING SYSTEMS

This Section Does Not Apply

H. INDOOR LIGHTING CONTROLS (Not Including PAFs)

*Table Instructions: Please include lighting controls for conditioned and unconditioned spaces in this table. When an option having a * is selected, the notes section of this table must be completed. The lighting controls section of the Compliance Summary Table on the first page will show "DOES NOT COMPLY" if the notes are left blank.*

STATE OF CALIFORNIA
Indoor Lighting
NRCC-LTI-E (Created 04/21) — CALIFORNIA ENERGY COMMISSION

CERTIFICATE OF COMPLIANCE — NRCC-LTI-E

Project Name:	Sixth Street Park, Arts and River Connectivity Improvements	Report Page:	Page 3 of 6
Project Address:	Sixth Street over the Los Angeles River	Date Prepared:	05/26/2022

Building Level Controls

01	02	03	
Mandatory Demand Response §110.12(c)	Shut-Off Controls §130.1(c)	Field Inspector: Pass	Fail
Not Required ≤ 10,000 SF	See Area/Space Level Controls	☐	☐

Area Level Controls

04	05	06	07	08	09	10	11	12	
Area Description	Complete Building or Area Category Primary Function Area	Area Controls §130.1(a)	Multi-Level Controls §130.1(b)	Shut-Off Controls §130.1(c)	Primary/Skylit Daylighting §130.1(d)	Secondary Daylighting §140.6(d)	Interlocked Systems §140.6(a)1	Field Inspector: Pass	Fail
PARC West Restrooms	Restroom	Manual ON/ OFF	Bi-level Switch	Occ. Sensor	NA	NA	☐	☐	☐

*NOTES: Controls with a * require a note in the space below explaining how compliance is achieved.
EX: Conference 1: Primary/Skylight Daylighting: Exempt because less than 120 watts of general lighting; EXCEPTION 1 to §130.1(d)2

13
Plan Sheet Showing Daylit Zones:

I. LIGHTING POWER ALLOWANCE: COMPLETE BUILDING OR AREA CATEGORY METHODS

Table Instructions: Complete the table for each area complying using the Complete Building or Area Category Methods per §140.6(b). Indicate if additional lighting power allowances per §140.6(c) or adjustments per §140.6(a) are being used.

Conditioned Spaces

01	02	03	04	05	06	
Area Description	Complete Building or Area Category Primary Function Area	Allowed Density (W/ft²)	Area (ft²)	Allowed Wattage (Watts)	Additional Allowances / Adjustment: Area Category	PAF
PARC West Restrooms	Restroom	0.65	163	105.95	☐	☐
		TOTAL:	**163**	**105.95**	See Tables J or P for detail	

J. ADDITIONAL LIGHTING ALLOWANCE: AREA CATEGORY METHOD QUALIFYING LIGHTING SYSTEM

Table Instructions: Please complete the table for all areas indicated in Table I as using an additional allowance per the Area Category Method in Table 140.6-C.

STATE OF CALIFORNIA
Indoor Lighting
NRCC-LTI-E (Created 04/21) — CALIFORNIA ENERGY COMMISSION

CERTIFICATE OF COMPLIANCE — NRCC-LTI-E

Project Name:	Sixth Street Park, Arts and River Connectivity Improvements	Report Page:	Page 4 of 6
Project Address:	Sixth Street over the Los Angeles River	Date Prepared:	05/26/2022

K. TAILORED METHOD GENERAL LIGHTING POWER ALLOWANCE

This Section Does Not Apply

L. ADDITIONAL LIGHTING ALLOWANCE: TAILORED WALL DISPLAY

This Section Does Not Apply

M. ADDITIONAL LIGHTING ALLOWANCE: TAILORED FLOOR AND TASK LIGHTING

This Section Does Not Apply

N. ADDITIONAL LIGHTING ALLOWANCE: TAILORED ORNAMENTAL/SPECIAL EFFECTS

This Section Does Not Apply

O. ADDITIONAL LIGHTING ALLOWANCE: TAILORED VERY VALUABLE MERCHANDISE

This Section Does Not Apply

P. POWER ADJUSTMENT: LIGHTING CONTROL CREDIT (POWER ADJUSTMENT FACTOR (PAF))

This Section Does Not Apply

Q. RATED POWER REDUCTION COMPLIANCE FOR ALTERATIONS

This Section Does Not Apply

R. 80% LIGHTING POWER FOR ALTERATIONS - CONTROLS EXCEPTIONS

This Section Does Not Apply

S. DAYLIGHT DESIGN POWER ADJUSTMENT FACTOR (PAF)

This Section Does Not Apply

T. DECLARATION OF REQUIRED CERTIFICATES OF INSTALLATION

Table Instructions: Selections have been made based on information provided in previous tables of this document. If any selection needs to be changed, please explain why in Table E. Additional Remarks. These documents must be provided to the building inspector during construction and can be found online at https://ww2.energy.ca.gov/title24/2019standards/2019_compliance_documents/Nonresidential_Documents/NRCI/

BUREAU OF ENGINEERING
OFFICIAL RECORD

THE CITY OF LOS ANGELES OR ITS OFFICERS OR AGENTS SHALL NOT BE RESPONSIBLE FOR THE ACCURACY OR COMPLETENESS OF ELECTRONIC COPIES OF THIS PLAN SHEET.

REVISION DATES (DESIGN STAGE ONLY)

Sheet Version 3.0

BUREAU OF ENGINEERING
ENGINEERING — CITY OF LOS ANGELES
DATE: BY:
NO. REVISIONS:
BUILDING NO.
INDEX NO. MF-300501

REGISTERED PROFESSIONAL ENGINEER — MAZEN KASSAR — Exp. 6-30-22 — REG. ELECTRICAL — STATE OF CALIFORNIA
THIS PLAN WAS ELECTRONICALLY SIGNED AND STAMPED.

CITY OF LOS ANGELES DEPARTMENT OF PUBLIC WORKS
CITY ENGINEER: TED ALLEN, P.E.
DESIGN GROUP — LIC. NO. E-15809 — DATE: 07/11/22
ENGINEER: — DESIGNED BY: JAMES ROBERTS — DRAWN BY: JAMES ROBERTS — CHECKED BY: MAZEN KASSAR — APPROVED BY: MAZEN KASSAR

VERT. CONTROL: BM 12-04070, 1929 (NGVD29) - 1985 ADJUSTMENT
HORIZ. CONTROL: GPS; PID AE 1704, EPOCH 1991.35

SHEET TITLE: TITLE 24
PROJECT: WEST PARK RESTROOMS - INDOOR
SIXTH STREET PARK, ARTS AND RIVER CONNECTIVITY IMPROVEMENTS (PARC)
ADDRESS: SIXTH STREET OVER THE LOS ANGELES RIVER

PLANS PREPARED BY:
TETRA TECH, INC.
707 WILSHIRE BLVD. 23RD FLR.
LOS ANGELES, CA 90017
PHONE: (213) 239-8866

WORK ORDER NO. E700235D
FILE NO. --
DRAWING NO. E-701
SHEET 187 OF 295 SHEETS

7/11/2022 8:27:20 PM - O:\PROJECTS\IRVINE\20043\200-20043-17001\CAD\SHEETFILES\E-701 TITLE 24 WEST PARK RESTROOMS - INDOOR.DWG - ROBERTS, JAMES1

STATE OF CALIFORNIA

Indoor Lighting

NRCC-LTI-E (Created 04/21) — CALIFORNIA ENERGY COMMISSION

CERTIFICATE OF COMPLIANCE		NRCC-LTI-E
Project Name: Sixth Street Park, Arts and River Connectivity Improvements	Report Page:	Page 5 of 6
Project Address: Sixth Street over the Los Angeles River	Date Prepared:	05/26/2022

YES	NO	Form/Title	Field Inspector Pass	Field Inspector Fail
◉	○	NRCI-LTI-01-E - Must be submitted for all buildings	☐	☐
○	◉	NRCI-LTI-02-E - Must be submitted for a lighting control system, or for an Energy Management Control System (EMCS), to be recognized for compliance.	☐	☐
○	◉	NRCI-LTI-04-E - Must be submitted for two interlocked systems serving an auditorium, a convention center, a conference room, a multipurpose room, or a theater to be recognized for compliance.	☐	☐
○	◉	NRCI-LTI-05-E - Must be submitted for a Power Adjustment Factor (PAF) to be recognized for compliance.	☐	☐
○	◉	NRCI-LTI-06-E - Must be submitted for additional wattage installed in a video conferencing studio to be recognized for compliance.	☐	☐

U. DECLARATION OF REQUIRED CERTIFICATES OF ACCEPTANCE

Table Instructions: Selections have been made based on information provided in previous tables of this document. If any selection needs to be changed, please explain why in Table E. Additional Remarks. These documents must be provided to the building inspector during construction and any with "-A" in the form name must be completed through an Acceptance Test Technician Certification Provider (ATTCP). For more information visit: http://www.energy.ca.gov/title24/attcp/providers.html

YES	NO	Form/Title	Field Inspector Pass	Field Inspector Fail
◉	○	NRCA-LTI-02-A - Must be submitted for occupancy sensors and automatic time switch controls.	☐	☐
○	◉	NRCA-LTI-03-A - Must be submitted for automatic daylight controls.	☐	☐
○	◉	NRCA-LTI-04-A - Must be submitted for demand responsive lighting controls.	☐	☐
○	◉	NRCA-LTI-05-A - Must be submitted for institutional tuning power adjustment factor (PAF).	☐	☐
○	◉	NRCA-ENV-03-F - Must be submitted for daylighting design power adjustment factors (PAF).	☐	☐

STATE OF CALIFORNIA

Indoor Lighting

NRCC-LTI-E (Created 04/21) — CALIFORNIA ENERGY COMMISSION

CERTIFICATE OF COMPLIANCE		NRCC-LTI-E
Project Name: Sixth Street Park, Arts and River Connectivity Improvements	Report Page:	Page 6 of 6
Project Address: Sixth Street over the Los Angeles River	Date Prepared:	05/26/2022

DOCUMENTATION AUTHOR'S DECLARATION STATEMENT

I certify that this Certificate of Compliance documentation is accurate and complete

Documentation Author Name:	James Roberts	Documentation Author Signature:	
Company:	Tetra Tech	Signature Date:	
Address:	17885 Von Karman Ave, Suite 500	CEA/ HERS Certification Identification (if applicable):	
City/State/Zip:	Irvine/CA/92886	Phone:	949-809-5105

RESPONSIBLE PERSON'S DECLARATION STATEMENT

I certify the following under penalty of perjury, under the laws of the State of California:

1. **The information provided on this Certificate of Compliance is true and correct.**
2. **I am eligible under Division 3 of the Business and Professions Code to accept responsibility for the building design or system design identified on this Certificate of Compliance (responsible designer)**
3. **The energy features and performance specifications, materials, components, and manufactured devices for the building design or system design identified on this Certificate of Compliance conform to the requirements of Title 24, Part 1 and Part 6 of the California Code of Regulations.**
4. **The building design features or system design features identified on this Certificate of Compliance are consistent with the information provided on other applicable compliance documents, worksheets, calculations, plans and specifications submitted to the enforcement agency for approval with this building permit application.**
5. **I will ensure that a completed signed copy of this Certificate of Compliance shall be made available with the building permit(s) issued for the building, and made available to the enforcement agency for all applicable inspections. I understand that a completed signed copy of this Certificate of Compliance is required to be included with the documentation the builder provides to the building owner at occupancy.**

Responsible Designer Name:		Responsible Designer Signature:	
Company :	Tetra Tech	Date Signed:	
Address:	17885 Von Karman Ave, Suite 500	License:	E-15809
City/State/Zip:	Irvine/CA/92886	Phone:	949-809-5137

BUREAU OF ENGINEERING
OFFICIAL RECORD

THE CITY OF LOS ANGELES OR ITS OFFICERS OR AGENTS SHALL NOT BE RESPONSIBLE FOR THE ACCURACY OR COMPLETENESS OF ELECTRONIC COPIES OF THIS PLAN SHEET.

REVISION DATES (DESIGN STAGE ONLY)

Sheet Version 3.0

PLANS PREPARED BY:
TETRA TECH, INC.
707 WILSHIRE BLVD, 23RD FLR.
LOS ANGELES, CA 90017
PHONE: (213) 239-8866

CITY OF LOS ANGELES DEPARTMENT OF PUBLIC WORKS
BUREAU OF ENGINEERING

VERT. CONTROL: BM 12-04070, 1929 (NGVD29) - 1985 ADJUSTMENT
HORIZ. CONTROL: GPS; PID AE 1704, EPOCH 1991.35

SHEET TITLE: TITLE 24

PROJECT: WEST PARK RESTROOMS - INDOOR
SIXTH STREET PARK, ARTS AND RIVER CONNECTIVITY IMPROVEMENTS (PARC)

ADDRESS: SIXTH STREET OVER THE LOS ANGELES RIVER

WORK ORDER NO. E700235D
FILE NO. -
DRAWING NO. E-702
SHEET 188 OF 295 SHEETS

CITY ENGINEER

TED ALLEN, P.E.

ENGINEER:	DESIGN GROUP	LIC. NO.	DATE:
DESIGNED BY:	JAMES ROBERTS	E-15809	07/11/22
DRAWN BY:	JAMES ROBERTS		
CHECKED BY:	MAZEN KASSAR		
APPROVED BY:	MAZEN KASSAR		

7/11/2022 8:27:58 PM - O:\PROJECTS\IRVINE\20043\200-20043-17001\CAD\SHEETFILES\E-702 TITLE 24 WEST PARK RESTROOMS - INDOOR.DWG - ROBERTS, JAMES1

BUREAU OF ENGINEERING
ENGINEERING
CITY OF LOS ANGELES

NO.	REVISIONS:	DATE	BY:

BUILDING NO.

INDEX NO. MF-300501

THIS PLAN WAS ELECTRONICALLY SIGNED AND STAMPED.

REGISTERED PROFESSIONAL ENGINEER MAZEN KASSAR Exp. 6-30-22 ELECTRICAL STATE OF CALIFORNIA

STATE OF CALIFORNIA
Indoor Lighting
NRCC-LTI-E (Created 04/21) — CALIFORNIA ENERGY COMMISSION

CERTIFICATE OF COMPLIANCE	NRCC-LTI-E
This document is used to demonstrate compliance with requirements in §110.9, §110.12(c), §130.0, §130.1, §140.6, and §141.0(b)2 for indoor lighting scopes using the prescriptive path.	
Project Name: Sixth Street Park, Arts and River Connectivity Improvements	Report Page: Page 1 of 6
Project Address: Sixth Street over the Los Angeles River	Date Prepared: 05/26/2022

A. GENERAL INFORMATION

01	Project Location (city)	Los Angeles	04	Total Conditioned Floor Area (ft²)	577
02	Climate Zone	9	05	Total Unconditioned Floor Area (ft²)	0
03	Occupancy Types Within Project (select all that apply):		06	# of Stories (Habitable Above Grade)	1

☐ Office ☐ Retail ☐ Warehouse ☐ Hotel/Motel ☐ School ☐ Support Areas
☐ Parking Garage ☐ High-Rise Residential ☐ Relocatable ☐ Healthcare ☑ Other (write in): PARC West Cafe

B. PROJECT SCOPE

Table Instructions: Include any lighting systems that are within the scope of the permit application and are demonstrating compliance using the prescriptive path outlined in §140.6 or §141.0(b)2 for alterations. WARNING: Changing the Calculation Method in this table will result in the deletion of data previously input. If you need to change the calculation method, please open a new form or use "Save As".

Scope of Work	Conditioned Spaces		Unconditioned Spaces	
01	02	03	04	05
My Project Consists of (check all that apply):	Calculation Method	Area (ft²)	Calculation Method	Area (ft²)
☑ New Lighting System	Area Category	577	Area Category	0
☐ Altered Lighting System		0		0
Total Area of Work (ft²):	**577**		**0**	

C. COMPLIANCE RESULTS

Table Instructions: If any cell on this table says "DOES NOT COMPLY" or "COMPLIES with Exceptional Conditions" refer to Table D. for guidance.

Lighting in conditioned and unconditioned spaces must not be combined for compliance per §140.6(b)1.	Allowed Lighting Power per §140.6(b) (Watts)						Adjusted Lighting Power per §140.6(a) (Watts)				Compliance Results
	01	02	03	04		05	06	07		08	09
	Complete Building §140.6(c)1	Area Category §140.6(c)2	Area Category Additional §140.6(c)2G (+)	Tailored §140.6(c)3 (+)	=	**Total Allowed** (Watts)	Total Designed (Watts)	Adjustments PAF Control Credits §140.6(a)2 (-)	=	**Total Adjusted** (Watts) *Includes Adjustments	**05 Must be ≥ 08** §140.6
	(See Table I)	(See Table I)	(See Table J)	(See Table K)			(See Table F)	(See Table P)			
Conditioned:		548.15	0		=	**548.15**	481	33.4	=	**447.6**	**COMPLIES**
Unconditioned:					=				=		

Table Continued

STATE OF CALIFORNIA
Indoor Lighting
NRCC-LTI-E (Created 04/21) — CALIFORNIA ENERGY COMMISSION

CERTIFICATE OF COMPLIANCE	NRCC-LTI-E
Project Name: Sixth Street Park, Arts and River Connectivity Improvements	Report Page: Page 2 of 6
Project Address: Sixth Street over the Los Angeles River	Date Prepared: 05/26/2022

Controls Compliance (See Table H for Details)	**COMPLIES**
Rated Power Reduction Compliance (See Table Q for Details)	**Not Applicable**

D. EXCEPTIONAL CONDITIONS

This table is auto-filled with uneditable comments because of selections made or data entered in tables throughout the form.

No exceptional conditions apply to this project.

E. ADDITIONAL REMARKS

This table includes remarks made by the permit applicant to the Authority Having Jurisdiction.

F. INDOOR LIGHTING FIXTURE SCHEDULE

Table Instructions: Include all permanent designed lighting and all portable lighting in offices.

Designed Wattage: Conditioned Spaces

01	02	03	04	05	06	07	08	09	10	
Name or Item Tag	Complete Luminaire Description	Modular (Track) Fixture	Small Aperture & Color Change[1]	Watts per luminaire[2]	How Wattage is determined	Total number luminaires	Exempt per §140.6(a)3	Design Watts	Field Inspector	
									Pass	Fail
XF11	LED downlights	☐	☐	26	Mfr. Spec[2]	16	☐	416	☐	☐
XF12A	LED lensed strip light	☐	☐	13	Mfr. Spec[2]	5	☐	65	☐	☐
						Total Designed Watts CONDITIONED SPACES:		**481**		

[1] *FOOTNOTE: Design Watts for small aperture and color changing luminaires which qualify per §140.6(a)4B is adjusted to be 75% of their rated wattage. Table F automatically makes this adjustment, the permit applicant should enter full rated wattage in column 05.*
[2] *Authority Having Jurisdiction may ask for Luminaire cut sheets to confirm wattage used for compliance per §130.0(c) Wattage used must be the maximum rated for the luminaire, not the lamp.*

G. MODULAR LIGHTING SYSTEMS

This Section Does Not Apply

H. INDOOR LIGHTING CONTROLS (Not Including PAFs)

STATE OF CALIFORNIA
Indoor Lighting
NRCC-LTI-E (Created 04/21) — CALIFORNIA ENERGY COMMISSION

CERTIFICATE OF COMPLIANCE	NRCC-LTI-E
Project Name: Sixth Street Park, Arts and River Connectivity Improvements	Report Page: Page 3 of 6
Project Address: Sixth Street over the Los Angeles River	Date Prepared: 05/26/2022

*Table Instructions: Please include lighting controls for conditioned and unconditioned spaces in this table. When an option having a * is selected, the notes section of this table must be completed. The lighting controls section of the Compliance Summary Table on the first page will show "DOES NOT COMPLY" if the notes are left blank.*

Building Level Controls

01	02	03	
Mandatory Demand Response §110.12(c)	Shut-Off Controls §130.1(c)	Field Inspector	
		Pass	Fail
Not Required ≤ 10,000 SF	See Area/Space Level Controls	☐	☐

Area Level Controls

04	05	06	07	08	09	10	11	12	
Area Description	Complete Building or Area Category Primary Function Area	Area Controls §130.1(a)	Multi-Level Controls §130.1(b)	Shut-Off Controls §130.1(c)	Primary/Skylit Daylighting §130.1(d)	Secondary Daylighting §140.6(d)	Interlocked Systems §140.6(a)1	Field Inspector	
								Pass	Fail
PARC West Cafe	Kitchen, Food Preparation	Manual ON/ OFF	Bi-level Switch	Occ. Sensor	NA	NA	☐	☐	☐

*NOTES: Controls with a * require a note in the space below explaining how compliance is achieved.
EX: Conference 1: Primary/Skylight Daylighting: Exempt because less than 120 watts of general lighting; EXCEPTION 1 to §130.1(d)2

13
Plan Sheet Showing Daylit Zones:

I. LIGHTING POWER ALLOWANCE: COMPLETE BUILDING OR AREA CATEGORY METHODS

Table Instructions: Complete the table for each area complying using the Complete Building or Area Category Methods per §140.6(b). Indicate if additional lighting power allowances per §140.6(c) or adjustments per §140.6(a) are being used.

Conditioned Spaces

01	02	03	04	05	06	
Area Description	Complete Building or Area Category Primary Function Area	Allowed Density (W/ft²)	Area (ft²)	Allowed Wattage (Watts)	Additional Allowances / Adjustment	
					Area Category	PAF
PARC West Cafe	Kitchen, Food Preparation	0.95	577	548.15	☐	☑
			TOTAL:	**548.15**	See Tables J or P for detail	

STATE OF CALIFORNIA
Indoor Lighting
NRCC-LTI-E (Created 04/21) — CALIFORNIA ENERGY COMMISSION

CERTIFICATE OF COMPLIANCE	NRCC-LTI-E
Project Name: Sixth Street Park, Arts and River Connectivity Improvements	Report Page: Page 4 of 6
Project Address: Sixth Street over the Los Angeles River	Date Prepared: 05/26/2022

J. ADDITIONAL LIGHTING ALLOWANCE: AREA CATEGORY METHOD QUALIFYING LIGHTING SYSTEM

Table Instructions: Please complete the table for all areas indicated in Table I as using an additional allowance per the Area Category Method in Table 140.6-C.

K. TAILORED METHOD GENERAL LIGHTING POWER ALLOWANCE

This Section Does Not Apply

L. ADDITIONAL LIGHTING ALLOWANCE: TAILORED WALL DISPLAY

This Section Does Not Apply

M. ADDITIONAL LIGHTING ALLOWANCE: TAILORED FLOOR AND TASK LIGHTING

This Section Does Not Apply

N. ADDITIONAL LIGHTING ALLOWANCE: TAILORED ORNAMENTAL/SPECIAL EFFECTS

This Section Does Not Apply

O. ADDITIONAL LIGHTING ALLOWANCE: TAILORED VERY VALUABLE MERCHANDISE

This Section Does Not Apply

P. POWER ADJUSTMENT: LIGHTING CONTROL CREDIT (POWER ADJUSTMENT FACTOR (PAF))

Table Instructions: Please complete the table for all areas indicated in Table I or Table K as using a PAF credit described in §140.6(a)2.

PARC West Cafe	☒	☐	☐	☐	☐	☐	☐	☐	☐	☐	☐	XF11	26	16	416	41.6
												XF12A	13	5	65	6.5

[1] *FOOTNOTES: PAFs outlined in Table 140.6-A include 1) Daylight dimming plus OFF; 2A) Occupant sensors in offices ≤ 125 ft²; 2B) Occupant sensors in offices from 126 - 250 ft²; 2C) Occupant sensors in offices from 251 - 500 ft²; 3A) Institutional tuning, non-daylit areas; 3B) Institutional tuning, daylit areas; 4) Demand response; 5) Clerestory fenestration; 6) Horizontal slats; 7) Light shelves.*
[2] *Luminaires that qualify for PAF 5, 6, or 7 can be used in conjunction with PAF 1.*

Q. RATED POWER REDUCTION COMPLIANCE FOR ALTERATIONS

This Section Does Not Apply

R. 80% LIGHTING POWER FOR ALTERATIONS - CONTROLS EXCEPTIONS

This Section Does Not Apply

BUREAU OF ENGINEERING
OFFICIAL RECORD

PLANS PREPARED BY:
TETRA TECH, INC.
707 WILSHIRE BLVD. 23RD FLR.
LOS ANGELES, CA 90017
PHONE: (213) 239-8866

CITY OF LOS ANGELES DEPARTMENT OF PUBLIC WORKS
BUREAU OF ENGINEERING
ENGINEERING — CITY OF LOS ANGELES
"THIS PLAN WAS ELECTRONICALLY SIGNED AND STAMPED."
REGISTERED PROFESSIONAL ENGINEER — MAZEN KASSAR — Exp. 6-30-22 — STATE OF CALIFORNIA — ELECTRICAL
DATE | BY | REVISIONS: | NO.
BUILDING NO.
INDEX NO. MF-300501

CITY ENGINEER: TED ALLEN, P.E.
ENGINEER: LIC. NO. E-15809 DATE: 07/11/22
DESIGN GROUP
DESIGNED BY: JAMES ROBERTS
DRAWN BY: JAMES ROBERTS
CHECKED BY: MAZEN KASSAR
APPROVED BY: MAZEN KASSAR

VERT. CONTROL: BM 12-04070, 1929 (NGVD29) - 1985 ADJUSTMENT
HORIZ. CONTROL: GPS; PID AE 1704, EPOCH 1991.35

SHEET TITLE: TITLE 24
PROJECT: WEST PARK CAFÉ - INDOOR
SIXTH STREET PARK, ARTS AND RIVER CONNECTIVITY IMPROVEMENTS (PARC)
ADDRESS: SIXTH STREET OVER THE LOS ANGELES RIVER

WORK ORDER NO. E700235D
FILE NO. --
DRAWING NO. E-703
SHEET 189 OF 295 SHEETS

7/11/2022 8:28:29 PM - O:\PROJECTS\IRVINE\20043\200-20043-17001\CAD\SHEETFILES\E-703 TITLE 24 WEST PARK CAFE - INDOOR.DWG - ROBERTS, JAMES1

THE CITY OF LOS ANGELES OR ITS OFFICERS OR AGENTS SHALL NOT BE RESPONSIBLE FOR THE ACCURACY OR COMPLETENESS OF ELECTRONIC COPIES OF THIS PLAN SHEET.

REVISION DATES (DESIGN STAGE ONLY)

Sheet Version 3.0

STATE OF CALIFORNIA

Indoor Lighting

NRCC-LTI-E (Created 04/21) — CALIFORNIA ENERGY COMMISSION

CERTIFICATE OF COMPLIANCE		NRCC-LTI-E
Project Name: Sixth Street Park, Arts and River Connectivity Improvements	Report Page:	Page 5 of 6
Project Address: Sixth Street over the Los Angeles River	Date Prepared:	05/26/2022

S. DAYLIGHT DESIGN POWER ADJUSTMENT FACTOR (PAF)

This Section Does Not Apply

T. DECLARATION OF REQUIRED CERTIFICATES OF INSTALLATION

Table Instructions: Selections have been made based on information provided in previous tables of this document. If any selection needs to be changed, please explain why in Table E. Additional Remarks. These documents must be provided to the building inspector during construction and can be found online at https://ww2.energy.ca.gov/title24/2019standards/2019_compliance_documents/Nonresidential_Documents/NRCI/

YES	NO	Form/Title	Field Inspector Pass	Field Inspector Fail
◉	○	NRCI-LTI-01-E - Must be submitted for all buildings	☐	☐
○	◉	NRCI-LTI-02-E - Must be submitted for a lighting control system, or for an Energy Management Control System (EMCS), to be recognized for compliance.	☐	☐
○	◉	NRCI-LTI-04-E - Must be submitted for two interlocked systems serving an auditorium, a convention center, a conference room, a multipurpose room, or a theater to be recognized for compliance.	☐	☐
◉	○	NRCI-LTI-05-E - Must be submitted for a Power Adjustment Factor (PAF) to be recognized for compliance.	☐	☐
○	◉	NRCI-LTI-06-E - Must be submitted for additional wattage installed in a video conferencing studio to be recognized for compliance.	☐	☐

U. DECLARATION OF REQUIRED CERTIFICATES OF ACCEPTANCE

Table Instructions: Selections have been made based on information provided in previous tables of this document. If any selection needs to be changed, please explain why in Table E. Additional Remarks. These documents must be provided to the building inspector during construction and any with "-A" in the form name must be completed through an Acceptance Test Technician Certification Provider (ATTCP). For more information visit: http://www.energy.ca.gov/title24/attcp/providers.html

YES	NO	Form/Title	Field Inspector Pass	Field Inspector Fail
◉	○	NRCA-LTI-02-A - Must be submitted for occupancy sensors and automatic time switch controls.	☐	☐
○	◉	NRCA-LTI-03-A - Must be submitted for automatic daylight controls.	☐	☐
○	◉	NRCA-LTI-04-A - Must be submitted for demand responsive lighting controls.	☐	☐
○	◉	NRCA-LTI-05-A - Must be submitted for institutional tuning power adjustment factor (PAF).	☐	☐
○	◉	NRCA-ENV-03-F - Must be submitted for daylighting design power adjustment factors (PAF).	☐	☐

STATE OF CALIFORNIA

Indoor Lighting

NRCC-LTI-E (Created 04/21) — CALIFORNIA ENERGY COMMISSION

CERTIFICATE OF COMPLIANCE		NRCC-LTI-E
Project Name: Sixth Street Park, Arts and River Connectivity Improvements	Report Page:	Page 6 of 6
Project Address: Sixth Street over the Los Angeles River	Date Prepared:	05/26/2022

DOCUMENTATION AUTHOR'S DECLARATION STATEMENT

I certify that this Certificate of Compliance documentation is accurate and complete

Documentation Author Name:	James Roberts	Documentation Author Signature:	
Company:	Tetra Tech	Signature Date:	
Address:	17885 Von Karman Ave, Suite 500	CEA/ HERS Certification Identification (if applicable):	
City/State/Zip:	Irvine/CA/92886	Phone:	949-809-5105

RESPONSIBLE PERSON'S DECLARATION STATEMENT

I certify the following under penalty of perjury, under the laws of the State of California:

1. **The information provided on this Certificate of Compliance is true and correct.**
2. **I am eligible under Division 3 of the Business and Professions Code to accept responsibility for the building design or system design identified on this Certificate of Compliance (responsible designer)**
3. **The energy features and performance specifications, materials, components, and manufactured devices for the building design or system design identified on this Certificate of Compliance conform to the requirements of Title 24, Part 1 and Part 6 of the California Code of Regulations.**
4. **The building design features or system design features identified on this Certificate of Compliance are consistent with the information provided on other applicable compliance documents, worksheets, calculations, plans and specifications submitted to the enforcement agency for approval with this building permit application.**
5. **I will ensure that a completed signed copy of this Certificate of Compliance shall be made available with the building permit(s) issued for the building, and made available to the enforcement agency for all applicable inspections. I understand that a completed signed copy of this Certificate of Compliance is required to be included with the documentation the builder provides to the building owner at occupancy.**

Responsible Designer Name:		Responsible Designer Signature:	
Company :	Tetra Tech	Date Signed:	
Address:	17885 Von Karman Ave, Suite 500	License:	E-15809
City/State/Zip:	Irvine/CA/92886	Phone:	949-809-5137

THE CITY OF LOS ANGELES OR ITS OFFICERS OR AGENTS SHALL NOT BE RESPONSIBLE FOR THE ACCURACY OR COMPLETENESS OF ELECTRONIC COPIES OF THIS PLAN SHEET.

REVISION DATES (DESIGN STAGE ONLY)

Sheet Version 3.0

BUREAU OF ENGINEERING

OFFICIAL RECORD

PLANS PREPARED BY:

TETRA TECH, INC.

707 WILSHIRE BLVD, 23RD FLR.
LOS ANGELES, CA 90017
PHONE: (213) 239-8866

CITY OF LOS ANGELES DEPARTMENT OF PUBLIC WORKS

BUREAU OF ENGINEERING

ENGINEERING
CITY OF LOS ANGELES

NO.	REVISIONS:	DATE	BY:

BUILDING NO.

INDEX NO. MF-300501

THIS PLAN WAS ELECTRONICALLY SIGNED AND STAMPED.

REGISTERED PROFESSIONAL ENGINEER MAZEN KASSAR Exp. 6-30-22 ELECTRICAL STATE OF CALIFORNIA

CITY ENGINEER

DATE:	07/11/22
LIC. NO.	E-15809

TED ALLEN, P.E.

DESIGN GROUP

ENGINEER:	
DESIGNED BY:	JAMES ROBERTS
DRAWN BY:	JAMES ROBERTS
CHECKED BY:	MAZEN KASSAR
APPROVED BY:	MAZEN KASSAR

VERT. CONTROL: BM 12-04070, 1929 (NGVD29) - 1985 ADJUSTMENT
HORIZ. CONTROL: GPS; PID AE 1704; EPOCH 1991.35

SHEET TITLE: TITLE 24
WEST PARK CAFÉ - INDOOR

PROJECT: SIXTH STREET PARK, ARTS AND RIVER CONNECTIVITY IMPROVEMENTS (PARC)

ADDRESS: SIXTH STREET OVER THE LOS ANGELES RIVER

WORK ORDER NO. E700235D

FILE NO. 1

DRAWING NO. E-704

SHEET 190 OF 295 SHEETS

7/11/2022 8:29:04 PM - O:\PROJECTS\IRVINE\20043\200-20043-17001\CAD\SHEETFILES\E-704 TITLE 24 WEST PARK CAFÉ - INDOOR.DWG - ROBERTS, JAMES1

STATE OF CALIFORNIA
Indoor Lighting
NRCC-LTI-E (Created 04/21) CALIFORNIA ENERGY COMMISSION

CERTIFICATE OF COMPLIANCE	NRCC-LTI-E
This document is used to demonstrate compliance with requirements in §110.9, §110.12(c), §130.0, §130.1, §140.6, and §141.0(b)2 for indoor lighting scopes using the prescriptive path.	
Project Name: Sixth Street Park, Arts and River Connectivity Improvements	Report Page: Page 1 of 7
Project Address: Sixth Street over the Los Angeles River	Date Prepared: 05/26/2022

A. GENERAL INFORMATION

01	Project Location (city)	Los Angeles	04	Total Conditioned Floor Area (ft²)	1,650
02	Climate Zone	9	05	Total Unconditioned Floor Area (ft²)	0
03	Occupancy Types Within Project (select all that apply):		06	# of Stories (Habitable Above Grade)	1

☐ Office ☐ Retail ☐ Warehouse ☐ Hotel/Motel ☐ School ☐ Support Areas
☐ Parking Garage ☐ High-Rise Residential ☐ Relocatable ☐ Healthcare ☑ Other (write in): PARC East Buildings

B. PROJECT SCOPE

Table Instructions: Include any lighting systems that are within the scope of the permit application and are demonstrating compliance using the prescriptive path outlined in §140.6 or §141.0(b)2 for alterations. WARNING: Changing the Calculation Method in this table will result in the deletion of data previously input. If you need to change the calculation method, please open a new form or use "Save As".

Scope of Work	Conditioned Spaces		Unconditioned Spaces	
01	02	03	04	05
My Project Consists of (check all that apply):	Calculation Method	Area (ft²)	Calculation Method	Area (ft²)
☑ New Lighting System	Area Category	1,650	Area Category	0
☐ Altered Lighting System		0		0
Total Area of Work (ft²):	**1,650**		**0**	

C. COMPLIANCE RESULTS

Table Instructions: If any cell on this table says "DOES NOT COMPLY" or "COMPLIES with Exceptional Conditions" refer to Table D. for guidance.

Lighting in conditioned and unconditioned spaces must not be combined for compliance per §140.6(b)1.	Allowed Lighting Power per §140.6(b) (Watts)						Adjusted Lighting Power per §140.6(a) (Watts)					Compliance Results
	01	02	03	04		05	06	07		08		09
	Complete Building §140.6(c)1	Area Category §140.6(c)2	Area Category Additional §140.6(c)2G (+)	Tailored §140.6(c)3 (+)	=	**Total Allowed** (Watts)	Total Designed (Watts)	Adjustments PAF Control Credits §140.6(a)2 (-)	=	**Total Adjusted** (Watts) *Includes Adjustments		**05 Must be ≥ 08** §140.6
	(See Table I)	(See Table I)	(See Table J)	(See Table K)			(See Table F)	(See Table P)				
Conditioned:		1,016.45	0		=	**1,016.45**	≥ 767		=	**767**		**COMPLIES**
Unconditioned:					=		≥		=			

Table Continued

STATE OF CALIFORNIA
Indoor Lighting
NRCC-LTI-E (Created 04/21) CALIFORNIA ENERGY COMMISSION

CERTIFICATE OF COMPLIANCE	NRCC-LTI-E
Project Name: Sixth Street Park, Arts and River Connectivity Improvements	Report Page: Page 2 of 7
Project Address: Sixth Street over the Los Angeles River	Date Prepared: 05/26/2022

Controls Compliance (See Table H for Details)	**COMPLIES**
Rated Power Reduction Compliance (See Table Q for Details)	**Not Applicable**

D. EXCEPTIONAL CONDITIONS

This table is auto-filled with uneditable comments because of selections made or data entered in tables throughout the form.

No exceptional conditions apply to this project.

E. ADDITIONAL REMARKS

This table includes remarks made by the permit applicant to the Authority Having Jurisdiction.

F. INDOOR LIGHTING FIXTURE SCHEDULE

Table Instructions: Include all permanent designed lighting and all portable lighting in offices.

Designed Wattage: Conditioned Spaces

01	02	03	04	05	06	07	08	09	10	
Name or Item Tag	Complete Luminaire Description	Modular (Track) Fixture	Small Aperture & Color Change[1]	Watts per luminaire[2]	How Wattage is determined	Total number luminaires	Exempt per §140.6(a)3	Design Watts	Field Inspector	
									Pass	Fail
XF11	LED downlights	☐	☐	26	Mfr. Spec[2]	5	☐	130	☐	☐
XF12	LED lensed strip light	☐	☐	23	Mfr. Spec[2]	12	☐	276	☐	☐
XF15	LED lensed strip light	☐	☐	18	Mfr. Spec[2]	4	☐	72	☐	☐
XF15B	LED lensed strip light	☐	☐	26	Mfr. Spec[2]	4	☐	104	☐	☐
XF16	LED lensed strip light	☐	☐	37	Mfr. Spec[2]	5	☐	185	☐	☐
						Total Designed Watts CONDITIONED SPACES:		**767**		

[1] *FOOTNOTE: Design Watts for small aperture and color changing luminaires which qualify per §140.6(a)4B is adjusted to be 75% of their rated wattage. Table F automatically makes this adjustment, the permit applicant should enter full rated wattage in column 05.*
[2] *Authority Having Jurisdiction may ask for Luminaire cut sheets to confirm wattage used for compliance per §130.0(c) Wattage used must be the maximum rated for the luminaire, not the lamp.*

STATE OF CALIFORNIA
Indoor Lighting
NRCC-LTI-E (Created 04/21) CALIFORNIA ENERGY COMMISSION

CERTIFICATE OF COMPLIANCE	NRCC-LTI-E
Project Name: Sixth Street Park, Arts and River Connectivity Improvements	Report Page: Page 3 of 7
Project Address: Sixth Street over the Los Angeles River	Date Prepared: 05/26/2022

G. MODULAR LIGHTING SYSTEMS

This Section Does Not Apply

H. INDOOR LIGHTING CONTROLS (Not Including PAFs)

*Table Instructions: Please include lighting controls for conditioned and unconditioned spaces in this table. When an option having a * is selected, the notes section of this table must be completed. The lighting controls section of the Compliance Summary Table on the first page will show "DOES NOT COMPLY" if the notes are left blank.*

Building Level Controls

01	02	03	
Mandatory Demand Response §110.12(c)	Shut-Off Controls §130.1(c)	Field Inspector	
		Pass	Fail
Not Required ≤ 10,000 SF	See Area/Space Level Controls	☐	☐

Area Level Controls

04	05	06	07	08	09	10	11	12	
Area Description	Complete Building or Area Category Primary Function Area	Area Controls §130.1(a)	Multi-Level Controls §130.1(b)	Shut-Off Controls §130.1(c)	Primary/Skylit Daylighting §130.1(d)	Secondary Daylighting §140.6(d)	Interlocked Systems §140.6(a)1	Field Inspector	
								Pass	Fail
PARC East Buildings - Office	Office (> 250 square feet)	Manual ON/ OFF	Bi-level Switch	Occ. Sensor	NA	NA	☐	☐	☐
PARC East Buildings - Restrooms	Restroom	Manual ON/ OFF	Bi-level Switch	Occ. Sensor	NA	NA	☐	☐	☐
PARC East Buildings - Electrical/ Storage	Electrical, Mechanical, Telephone Rooms	Manual ON/ OFF	Bi-level Switch	Occ. Sensor	NA	NA	☐	☐	☐
PARC East Buildings - Concessions	Kitchen, Food Preparation	Manual ON/ OFF	Bi-level Switch	Occ. Sensor	NA	NA	☐	☐	☐

*NOTES: Controls with a * require a note in the space below explaining how compliance is achieved.
EX: Conference 1: Primary/Skylight Daylighting: Exempt because less than 120 watts of general lighting; EXCEPTION 1 to §130.1(d)2

13 Plan Sheet Showing Daylit Zones:

I. LIGHTING POWER ALLOWANCE: COMPLETE BUILDING OR AREA CATEGORY METHODS

Table Instructions: Complete the table for each area complying using the Complete Building or Area Category Methods per §140.6(b). Indicate if additional lighting power allowances per §140.6(c) or adjustments per §140.6(a) are being used.

Conditioned Spaces

STATE OF CALIFORNIA
Indoor Lighting
NRCC-LTI-E (Created 04/21) CALIFORNIA ENERGY COMMISSION

CERTIFICATE OF COMPLIANCE	NRCC-LTI-E
Project Name: Sixth Street Park, Arts and River Connectivity Improvements	Report Page: Page 4 of 7
Project Address: Sixth Street over the Los Angeles River	Date Prepared: 05/26/2022

01	02	03	04	05	06	
Area Description	Complete Building or Area Category Primary Function Area	Allowed Density (W/ft²)	Area (ft²)	Allowed Wattage (Watts)	Additional Allowances / Adjustment	
					Area Category	PAF
PARC East Buildings - Office	Office (> 250 square feet)	0.65	631	410.15	☐	☐
PARC East Buildings - Restroom	Restroom	0.65	250	162.5	☐	☐
PARC East Buildings - Electrical	Electrical, Mechanical, Telephone Rooms	0.4	530	212	☐	☐
PARC East Buildings - Concessions	Kitchen, Food Preparation	0.95	244	231.8	☐	☐
		TOTAL:	**1,655**	**1,016.45**	See Tables J or P for detail	

J. ADDITIONAL LIGHTING ALLOWANCE: AREA CATEGORY METHOD QUALIFYING LIGHTING SYSTEM

Table Instructions: Please complete the table for all areas indicated in Table I as using an additional allowance per the Area Category Method in Table 140.6-C.

K. TAILORED METHOD GENERAL LIGHTING POWER ALLOWANCE

This Section Does Not Apply

L. ADDITIONAL LIGHTING ALLOWANCE: TAILORED WALL DISPLAY

This Section Does Not Apply

M. ADDITIONAL LIGHTING ALLOWANCE: TAILORED FLOOR AND TASK LIGHTING

This Section Does Not Apply

N. ADDITIONAL LIGHTING ALLOWANCE: TAILORED ORNAMENTAL/SPECIAL EFFECTS

This Section Does Not Apply

O. ADDITIONAL LIGHTING ALLOWANCE: TAILORED VERY VALUABLE MERCHANDISE

This Section Does Not Apply

P. POWER ADJUSTMENT: LIGHTING CONTROL CREDIT (POWER ADJUSTMENT FACTOR (PAF))

This Section Does Not Apply

BUREAU OF ENGINEERING
OFFICIAL RECORD

PLANS PREPARED BY:
TETRA TECH, INC.
707 WILSHIRE BLVD. 23RD FLR.
LOS ANGELES, CA 90017
PHONE: (213) 239-8866

CITY OF LOS ANGELES DEPARTMENT OF PUBLIC WORKS
BUREAU OF ENGINEERING
ENGINEERING CITY OF LOS ANGELES
DATE: BY:
REVISIONS: NO.
BUILDING NO.
INDEX NO. MF-300501
"THIS PLAN WAS ELECTRONICALLY SIGNED AND STAMPED."
REGISTERED PROFESSIONAL ENGINEER MAZEN KASSAR Exp. 6-30-22 CIVIL STATE OF CALIFORNIA
CITY ENGINEER
TED ALLEN, P.E.
DESIGN GROUP
ENGINEER: LIC. NO. E-15809 DATE: 07/11/22
DESIGNED BY: JAMES ROBERTS
DRAWN BY: JAMES ROBERTS
CHECKED BY: MAZEN KASSAR
APPROVED BY: MAZEN KASSAR
VERT. CONTROL: BM 12-04070, 1929 (NGVD29) - 1985 ADJUSTMENT
HORIZ. CONTROL: GPS; PID AE 1704, EPOCH 1991.35
SHEET TITLE: TITLE 24
PROJECT: EAST PARK BUILDINGS - INDOOR
SIXTH STREET PARK, ARTS AND RIVER CONNECTIVITY IMPROVEMENTS (PARC)
ADDRESS: SIXTH STREET OVER THE LOS ANGELES RIVER
WORK ORDER NO. E700235D
FILE NO. --
DRAWING NO. E-705
SHEET 191 OF 295 SHEETS
7/11/2022 8:29:40 PM - O:\PROJECTS\IRVINE\20043\200-20043-17001\CAD\SHEETFILES\E-705 TITLE 24 EAST PARK BUILDINGS - INDOOR.DWG - ROBERTS, JAMES1

THE CITY OF LOS ANGELES OR ITS OFFICERS OR AGENTS SHALL NOT BE RESPONSIBLE FOR THE ACCURACY OR COMPLETENESS OF ELECTRONIC COPIES OF THIS PLAN SHEET.
REVISION DATES (DESIGN STAGE ONLY)
Sheet Version 3.0

STATE OF CALIFORNIA

Indoor Lighting

NRCC-LTI-E (Created 04/21) — CALIFORNIA ENERGY COMMISSION

CERTIFICATE OF COMPLIANCE		NRCC-LTI-E
Project Name: Sixth Street Park, Arts and River Connectivity Improvements	Report Page:	Page 5 of 7
Project Address: Sixth Street over the Los Angeles River	Date Prepared:	05/26/2022

Q. RATED POWER REDUCTION COMPLIANCE FOR ALTERATIONS

This Section Does Not Apply

R. 80% LIGHTING POWER FOR ALTERATIONS - CONTROLS EXCEPTIONS

This Section Does Not Apply

S. DAYLIGHT DESIGN POWER ADJUSTMENT FACTOR (PAF)

This Section Does Not Apply

T. DECLARATION OF REQUIRED CERTIFICATES OF INSTALLATION

Table Instructions: Selections have been made based on information provided in previous tables of this document. If any selection needs to be changed, please explain why in Table E. Additional Remarks. These documents must be provided to the building inspector during construction and can be found online at https://ww2.energy.ca.gov/title24/2019standards/2019_compliance_documents/Nonresidential_Documents/NRCI/

YES	NO	Form/Title	Field Inspector Pass	Field Inspector Fail
◉	○	NRCI-LTI-01-E - Must be submitted for all buildings	☐	☐
○	◉	NRCI-LTI-02-E - Must be submitted for a lighting control system, or for an Energy Management Control System (EMCS), to be recognized for compliance.	☐	☐
○	◉	NRCI-LTI-04-E - Must be submitted for two interlocked systems serving an auditorium, a convention center, a conference room, a multipurpose room, or a theater to be recognized for compliance.	☐	☐
○	◉	NRCI-LTI-05-E - Must be submitted for a Power Adjustment Factor (PAF) to be recognized for compliance.	☐	☐
○	◉	NRCI-LTI-06-E - Must be submitted for additional wattage installed in a video conferencing studio to be recognized for compliance.	☐	☐

STATE OF CALIFORNIA

Indoor Lighting

NRCC-LTI-E (Created 04/21) — CALIFORNIA ENERGY COMMISSION

CERTIFICATE OF COMPLIANCE		NRCC-LTI-E
Project Name: Sixth Street Park, Arts and River Connectivity Improvements	Report Page:	Page 6 of 7
Project Address: Sixth Street over the Los Angeles River	Date Prepared:	05/26/2022

U. DECLARATION OF REQUIRED CERTIFICATES OF ACCEPTANCE

Table Instructions: Selections have been made based on information provided in previous tables of this document. If any selection needs to be changed, please explain why in Table E. Additional Remarks. These documents must be provided to the building inspector during construction and any with "-A" in the form name must be completed through an Acceptance Test Technician Certification Provider (ATTCP). For more information visit: http://www.energy.ca.gov/title24/attcp/providers.html

YES	NO	Form/Title	Field Inspector Pass	Field Inspector Fail
◉	○	NRCA-LTI-02-A - Must be submitted for occupancy sensors and automatic time switch controls.	☐	☐
○	◉	NRCA-LTI-03-A - Must be submitted for automatic daylight controls.	☐	☐
○	◉	NRCA-LTI-04-A - Must be submitted for demand responsive lighting controls.	☐	☐
○	◉	NRCA-LTI-05-A - Must be submitted for institutional tuning power adjustment factor (PAF).	☐	☐
○	◉	NRCA-ENV-03-F - Must be submitted for daylighting design power adjustment factors (PAF).	☐	☐

STATE OF CALIFORNIA

Indoor Lighting

NRCC-LTI-E (Created 04/21) — CALIFORNIA ENERGY COMMISSION

CERTIFICATE OF COMPLIANCE		NRCC-LTI-E
Project Name: Sixth Street Park, Arts and River Connectivity Improvements	Report Page:	Page 7 of 7
Project Address: Sixth Street over the Los Angeles River	Date Prepared:	05/26/2022

DOCUMENTATION AUTHOR'S DECLARATION STATEMENT

I certify that this Certificate of Compliance documentation is accurate and complete

Documentation Author Name:	James Roberts	Documentation Author Signature:	
Company:	Tetra Tech	Signature Date:	
Address:	17885 Von Karman Ave, Suite 500	CEA/ HERS Certification Identification (if applicable):	
City/State/Zip:	Irvine/CA/92886	Phone:	949-809-5105

RESPONSIBLE PERSON'S DECLARATION STATEMENT

I certify the following under penalty of perjury, under the laws of the State of California:

1. **The information provided on this Certificate of Compliance is true and correct.**
2. **I am eligible under Division 3 of the Business and Professions Code to accept responsibility for the building design or system design identified on this Certificate of Compliance (responsible designer)**
3. **The energy features and performance specifications, materials, components, and manufactured devices for the building design or system design identified on this Certificate of Compliance conform to the requirements of Title 24, Part 1 and Part 6 of the California Code of Regulations.**
4. **The building design features or system design features identified on this Certificate of Compliance are consistent with the information provided on other applicable compliance documents, worksheets, calculations, plans and specifications submitted to the enforcement agency for approval with this building permit application.**
5. **I will ensure that a completed signed copy of this Certificate of Compliance shall be made available with the building permit(s) issued for the building, and made available to the enforcement agency for all applicable inspections. I understand that a completed signed copy of this Certificate of Compliance is required to be included with the documentation the builder provides to the building owner at occupancy.**

Responsible Designer Name:	Mazen Kassar	Responsible Designer Signature:	
Company :	Tetra Tech	Date Signed:	
Address:	17885 Von Karman Ave, Suite 500	License:	E-15809
City/State/Zip:	Irvine/CA/92886	Phone:	949-809-5137

BUREAU OF ENGINEERING
OFFICIAL RECORD

THE CITY OF LOS ANGELES OR ITS OFFICERS OR AGENTS SHALL NOT BE RESPONSIBLE FOR THE ACCURACY OR COMPLETENESS OF ELECTRONIC COPIES OF THIS PLAN SHEET.

REVISION DATES (DESIGN STAGE ONLY)

Sheet Version 3.0

BUREAU OF ENGINEERING • CITY OF LOS ANGELES • DEPARTMENT OF PUBLIC WORKS

ENGINEERING — CITY OF LOS ANGELES

NO. | REVISIONS: | DATE | BY:

BUILDING NO.

INDEX NO. MF-300501

THIS PLAN WAS ELECTRONICALLY SIGNED AND STAMPED.

REGISTERED PROFESSIONAL ENGINEER * MAZEN KASSAR * Exp. 6-30-22 * REGISTERED * STATE OF CALIFORNIA * ELECTRICAL

CITY ENGINEER

TED ALLEN, P.E.

DESIGN GROUP

ENGINEER:	LIC. NO. E-15809	DATE:	07/11/22
DESIGNED BY:	JAMES ROBERTS		
DRAWN BY:	JAMES ROBERTS		
CHECKED BY:	MAZEN KASSAR		
APPROVED BY:	MAZEN KASSAR		

PLANS PREPARED BY:

TETRA TECH, INC.
707 WILSHIRE BLVD. 23RD FLR.
LOS ANGELES, CA 90017
PHONE: (213) 239-8866

VERT. CONTROL: BM 12-04070, 1929 (NGVD29) - 1985 ADJUSTMENT
HORIZ. CONTROL: GPS; PID AE 1704, EPOCH 1991.35

SHEET TITLE: TITLE 24

PROJECT: EAST PARK BUILDINGS - INDOOR
SIXTH STREET PARK, ARTS AND RIVER CONNECTIVITY IMPROVEMENTS (PARC)

ADDRESS: SIXTH STREET OVER THE LOS ANGELES RIVER

WORK ORDER NO. E700235D

FILE NO. --

DRAWING NO. E-706

SHEET 192 OF 295 SHEETS

7/11/2022 8:30:14 PM - O:\PROJECTS\IRVINE\20043\20043-17001\CAD\SHEETFILES\E-706 TITLE 24 EAST PARK BUILDINGS - INDOOR.DWG - ROBERTS, JAMES1

STATE OF CALIFORNIA
Outdoor Lighting
NRCC-LTO-E (Created 01/21) CALIFORNIA ENERGY COMMISSION

CERTIFICATE OF COMPLIANCE NRCC-LTO-E

This document is used to demonstrate compliance with requirements in §110.9, §130.0, §130.2, §140.7, and §141.0(b)2L for outdoor lighting scopes using the prescriptive path.

Project Name: Sixth Street Park, Arts and River Connectivity Improvements | Report Page: Page 1 of 7
Project Address: Sixth Street over the Los Angeles River | Date Prepared: 05/24/2022

A. GENERAL INFORMATION

01	Project Location (city)	Los Angeles	04	Total Illuminated Hardscape Area (ft²)	434,200
02	Climate Zone	9			
03	Outdoor Lighting Zone per Title 24, Part 1 §10-114 or as designated by Authority Having Jurisdiction (AHJ):				

☐ LZ-0: Very Low - Undeveloped Parkland ☐ LZ-2: Moderate - Rural Areas ☐ LZ-4: High - Must be reviewed by CA Energy Commission for Approval
☐ LZ-1: Low - Developed Parkland ☑ LZ-3: Moderately High - Urban Areas

B. PROJECT SCOPE

Table Instructions: Include any outdoor lighting systems that are within the scope of the permit application and are demonstrating compliance using the prescriptive path outlined in §140.7 or §141.0(b)2L for alterations.

My project consists of:

01	02
☑ New Lighting System	Must Comply with Allowances from §140.7.
☐ Altered Lighting System	Is your alteration increasing the connected lighting load (Watts)? ◯ Yes ◯ No

03	04	05
% of Existing Luminaires Being Altered[1]	Sum Total of Luminaires Being Added or Altered	Calculation Method

[1] *FOOTNOTES: % of Existing Luminaires Being Altered = (Sum Total of Luminaires Being Added or Altered / Existing Luminaires within the Scope of the Permit Application) x 100*

C. COMPLIANCE RESULTS

Table Instructions: If any cell on this table says "DOES NOT COMPLY" or "COMPLIES with Exceptional Conditions" refer to Table D. for guidance.

Calculation of Total Allowed Lighting Power (Watts) §140.7 or §141.0(b)2L												Compliance Results		
01		02		03		04		05	06		07		08	09
General Hardscape Allowance §140.7(d)1	+	Per Application §140.7(d)2	+	Sales Frontage §140.7(d)2	+	Ornamental §140.7(d)2	+	Per Specific Area §140.7(d)2	OR Existing Power §141.0(b)2L	=	**Total Allowed** (Watts)	≥	**Total Actual** (Watts)	**07 Must be ≥ 08**
(See Table I)		(See Table J)		(See Table K)		(See Table L)		(See Table M)	(See Table N)				(See Table F)	
16,647.644	+		+		+		+		OR	=	16,647.644	≥	12,684	**COMPLIES**
Cutoff Compliance (See Table G for Details)													**Not Applicable**	
Controls Compliance (See Table H for Details)													**COMPLIES with Exceptional Conditions**	

STATE OF CALIFORNIA
Outdoor Lighting
NRCC-LTO-E (Created 01/21) CALIFORNIA ENERGY COMMISSION

CERTIFICATE OF COMPLIANCE NRCC-LTO-E
Project Name: Sixth Street Park, Arts and River Connectivity Improvements | Report Page: Page 2 of 7
Project Address: Sixth Street over the Los Angeles River | Date Prepared: 05/24/2022

D. EXCEPTIONAL CONDITIONS

This table is auto-filled with uneditable comments because of selections made or data entered in tables throughout the form.

Table F. Outdoor Lighting Fixture Schedule Permit Applicant Notes:
XF1/XF2: Exception 6 - Public right of way
XF4/XF4A: Exception 6 - Public right of way
XF6: Exception 6 - Public right of way
XF14: Exception 6 - Public right of way
XF13: Exception 6 - Public right of way
Table H. Outdoor Lighting Controls Permit Applicant Notes:
Sports Lighting: Sports lighting controls
Theater Lighting: Theater lighting controls
A luminaire in Table F may be required to comply with Cutoff Requirements, but nothing has been selected in Table F. Column 09.
Linear lighting has been indicated on Table F. For these luminaires, wattage reported in F03 is in "W/lf" and Total Number Luminaires reported in F05 indicates total linear feet (lf) of that luminaire type.

E. ADDITIONAL REMARKS

This table includes remarks made by the permit applicant to the Authority Having Jurisdiction.

F. OUTDOOR LIGHTING FIXTURE SCHEDULE

Table Instructions: For new or altered lighting systems demonstrating compliance with §140.7 (ie Table I has expanded for input), include all luminaires being installed and any existing luminaires remaining or being moved within the spaces covered by the permit application in the Table below. For altered lighting systems using the Existing Power method per §141.0(b)2L (ie Table N has expanded for input), include only new luminaires being installed and replacement luminaires being installed as part of the project scope (ie, do not include existing luminaires remaining or existing luminaires being moved).

Designed Wattage:

01 Name or Item Tag	02 Complete Luminaire Description		03 Watts per luminaire[1,2]	04 How Wattage is determined	05 Total number luminaires[2]	06 Luminaire Status[3]	07 Excluded per §140.7(a)	08 Design Watts	09 Cutoff Req. ≥ 6,200 initial lumen output §130.2(b)[4]	10 Field Inspector Pass	Fail
XF1/XF2	LED pole mounted light	☐ Linear	75	Mfr. Spec[1]	85	New	☐	6,375	Exempt*	☐	☐
XF4/XF4A	LED pole accent lights	☐ Linear	42	Mfr. Spec[1]	20	New	☐	840	Exempt*	☐	☐
XF6	LED tunnel downlights	☐ Linear	40	Mfr. Spec[1]	72	New	☐	2,880	Exempt*	☐	☐

Table Continued

CA Building Energy Efficiency Standards - 2019 Nonresidential Compliance: http://www.energy.ca.gov/title24/2019standards January 2021

STATE OF CALIFORNIA
Outdoor Lighting
NRCC-LTO-E (Created 01/21) CALIFORNIA ENERGY COMMISSION

CERTIFICATE OF COMPLIANCE NRCC-LTO-E
Project Name: Sixth Street Park, Arts and River Connectivity Improvements | Report Page: Page 3 of 7
Project Address: Sixth Street over the Los Angeles River | Date Prepared: 05/24/2022

01 Name or Item Tag	02 Complete Luminaire Description		03 Watts per luminaire[1,2]	04 How Wattage is determined	05 Total number luminaires[2]	06 Luminaire Status[3]	07 Excluded per §140.7(a)	08 Design Watts	09 Cutoff Req. ≥ 6,200 initial lumen output §130.2(b)[4]	10 Field Inspector Pass	Fail
XF7	LED colored theatrical	☐ Linear	180	Mfr. Spec[1]	12	New	☑			☐	☐
XF7/XF8	LED accent theatrical	☐ Linear	42	Mfr. Spec[1]	36	New	☑			☐	☐
XF8	LED colored theatrical	☐ Linear	124	Mfr. Spec[1]	16	New	☑			☐	☐
XF9	LED colored wall light	☒ Linear	17.25	Mfr. Spec[1]	160	New	☑			☐	☐
XF10	LED sports lights	☐ Linear	551	Mfr. Spec[1]	16	New	☑			☐	☐
XF10A	LED sports lights	☐ Linear	594	Mfr. Spec[1]	6	New	☑			☐	☐
XF10B	LED sports lights	☐ Linear	505	Mfr. Spec[1]	6	New	☑			☐	☐
XF13	LED path lighting	☐ Linear	48	Mfr. Spec[1]	53	New	☐	2,544	Exempt*	☐	☐
XF14	LED handrail downlight	☐ Linear	1.5	Mfr. Spec[1]	30	New	☐	45	Exempt*	☐	☐
		☐ Linear					☐	0		☐	☐
		☐ Linear					☐	0		☐	☐
						Total Designed Watts:		**12,684**			

* NOTES: Selections with a * require a note in the space below explaining how compliance is achieved.
EX: Luminaire is lighting a statue; EXCEPTION 2 to §130.2(b).

XF1/XF2	Exception 6 - Public right of way
XF4/XF4A	Exception 6 - Public right of way
XF6	Exception 6 - Public right of way
XF14	Exception 6 - Public right of way
XF13	Exception 6 - Public right of way

[1] *FOOTNOTES: Authority Having Jurisdiction may ask for Luminaire cut sheets to confirm wattage used for compliance per §130.0(c)*
[2] *For linear luminaires, wattage should be indicated as W/lf instead of Watts/luminaire. Total linear feet for the luminaire should be indicated in column 05 instead of number of luminaires.*
[3] *Select "New" for new luminaires in a new outdoor lighting project or for added luminaires in an alteration. Select "Altered" for replacement luminaires in an alteration. Select "Existing to Remain" for existing luminaires within the project scope that are not being altered and are remaining. Select "Existing Reinstalled" for existing luminaires which are being removed and reinstalled as part of the project scope*
[4] *Compliance with mandatory cutoff requirements is required for luminaires with initial lumen output ≥ 6,200 unless exempted by §130.2(b).*

CA Building Energy Efficiency Standards - 2019 Nonresidential Compliance: http://www.energy.ca.gov/title24/2019standards January 2021

STATE OF CALIFORNIA
Outdoor Lighting
NRCC-LTO-E (Created 01/21) CALIFORNIA ENERGY COMMISSION

CERTIFICATE OF COMPLIANCE NRCC-LTO-E
Project Name: Sixth Street Park, Arts and River Connectivity Improvements | Report Page: Page 4 of 7
Project Address: Sixth Street over the Los Angeles River | Date Prepared: 05/24/2022

G. CUTOFF REQUIREMENTS (BUG)

This Section Does Not Apply

H. OUTDOOR LIGHTING CONTROLS

Table Instructions: Complete this table demonstrating compliance with controls requirements for all new or altered luminaires installed as part of the permit application. For alteration projects, luminaires which are existing to remain (ie untouched) and luminaires which are removed and reinstalled (wiring only) do not need to be included in this table even if they are within the spaces covered by the permit application.
*When an option having a * is selected, the notes section of this table must be completed. The lighting controls section of the Compliance Summary Table on the first page will show "DOES NOT COMPLY" if the notes are left blank. For each requirement in columns 02 through 04, do not leave the field blank, instead select NA or Exempt* from the dropdown list to indicate not applicable or an exemption.*

Mandatory Controls

01 Area Description	02 Shut-Off §130.2(c)1	03 Auto-Schedule §130.2(c)2	04 Motion Sensor §130.2(c)3	05 Field Inspector Pass	Fail
Park/ Path lighting	Photocontrol	Yes		☐	☐
Sports Lighting	Other *	Yes		☐	☐
Theater Lighting	Other *	Yes		☐	☐

*NOTES: Controls with a * require a note in the space below explaining how compliance is achieved.
EX: Not permitted by health & safety to be turned off; EXCEPTION 1 to §130.2(c).

Sports Lighting	Sports lighting controls
Theater Lighting	Theater lighting controls

I. LIGHTING POWER ALLOWANCE (per §140.7)

Table Instructions: Please complete this table for areas using the allowance calculations per §140.7. General Hardscape Allowance is per Table 140.7-A while "Use it or lost it" Allowances are per Table 140.7-B. Indicate which allowances are being used to expand sections for user input. Luminaires that qualify for one of the "Use it or lose it" allowances shall not qualify for another "Use it or lose it" allowance.

01					
	"Use it or lose it" Allowances (select all that apply)				
☑ General Hardscape Allowance	☐ Per Application	☐ Sales Frontage	☐ Ornamental	☐ Per Specific Area	
Table I (below)	Table J	Table K	Table L	Table M	
Calculated General Hardscape Lighting Power Allowance per Table 140.7-A (LZ 2 & 3)					

Table Continued

CA Building Energy Efficiency Standards - 2019 Nonresidential Compliance: http://www.energy.ca.gov/title24/2019standards January 2021

THE CITY OF LOS ANGELES OR ITS OFFICERS OR AGENTS SHALL NOT BE RESPONSIBLE FOR THE ACCURACY OR COMPLETENESS OF ELECTRONIC COPIES OF THIS PLAN SHEET.
REVISION DATES (DESIGN STAGE ONLY)
Sheet Version 3.0
BUREAU OF ENGINEERING
OFFICIAL RECORD
PLANS PREPARED BY: TETRA TECH, INC. 707 WILSHIRE BLVD. 23RD FLR. LOS ANGELES, CA 90017 PHONE: (213) 239-8866
CITY OF LOS ANGELES DEPARTMENT OF PUBLIC WORKS
BUREAU OF ENGINEERING
ENGINEERING CITY OF LOS ANGELES
REVISIONS: NO. DATE BY:
BUILDING NO.
INDEX NO. MF-300501
"THIS PLAN WAS ELECTRONICALLY SIGNED AND STAMPED."
REGISTERED PROFESSIONAL ENGINEER MAZEN KASSAR Exp. 6-30-22 CIVIL STATE OF CALIFORNIA
TED ALLEN, P.E. CITY ENGINEER
ENGINEER: DESIGN GROUP LIC. NO. E-15809 DATE: 07/11/22
DESIGNED BY: JAMES ROBERTS
DRAWN BY: JAMES ROBERTS
CHECKED BY: MAZEN KASSAR
APPROVED BY: MAZEN KASSAR
VERT. CONTROL: BM 12-04070, 1929 (NGVD29) - 1985 ADJUSTMENT
HORIZ. CONTROL: GPS; PID AE 1704, EPOCH 1991.35
SHEET TITLE: TITLE 24
PROJECT: OVERALL SITE - OUTDOOR SIXTH STREET PARK, ARTS AND RIVER CONNECTIVITY IMPROVEMENTS (PARC)
ADDRESS: SIXTH STREET OVER THE LOS ANGELES RIVER
WORK ORDER NO. E700235D
FILE NO. --
DRAWING NO. E-707
SHEET 193 OF 295 SHEETS
7/11/2022 8:30:50 PM - O:\PROJECTS\IRVINE\20043\2000-20043-17001\CAD\SHEETFILES\E-707 TITLE 24 OVERALL SITE - OUTDOOR.DWG - ROBERTS, JAMES1

STATE OF CALIFORNIA

Outdoor Lighting

NRCC-LTO-E (Created 01/21) CALIFORNIA ENERGY COMMISSI19

CERTIFICATE OF COMPLIANCE		NRCC-LTO-E
Project Name: Sixth Street Park, Arts and River Connectivity Improvements	Report Page:	Page 5 of 7
Project Address: Sixth Street over the Los Angeles River	Date Prepared:	05/24/2022

02	03	04	05	06	07	08	09	10
Area Description	Surface Type	Area Wattage Allowance (AWA)			Linear Wattage Allowance (LWA)			Total General AWA + LWA (Watts)
		Illuminated Area (ft²)	Allowed Density (W/ft²)	Area Allowance (Watts)	Perimeter Length (lf)	Allowed Density (W/lf)	Linear Allowance (Watts)	
PARC	Concrete	434,200	0.03	13,026	8,179.11	0.4	3,271.644	16,297.644
								0
								0
							Initial Wattage Allowance for Entire Site (Watts):	350
							Total General Hardscape Allowance (Watts):	16,647.644

J. LIGHTING ALLOWANCE: PER APPLICATION

This Section Does Not Apply

K. LIGHTING ALLOWANCE: SALES FRONTAGE

This Section Does Not Apply

L. LIGHTING ALLOWANCE: ORNAMENTAL

This Section Does Not Apply

M. LIGHTING ALLOWANCE: PER SPECIFIC AREA

This Section Does Not Apply

N. EXISTING CONDITIONS POWER ALLOWANCE (alterations only)

This Section Does Not Apply

STATE OF CALIFORNIA

Outdoor Lighting

NRCC-LTO-E (Created 01/21) CALIFORNIA ENERGY COMMISSI19

CERTIFICATE OF COMPLIANCE		NRCC-LTO-E
Project Name: Sixth Street Park, Arts and River Connectivity Improvements	Report Page:	Page 6 of 7
Project Address: Sixth Street over the Los Angeles River	Date Prepared:	05/24/2022

O. DECLARATION OF REQUIRED CERTIFICATES OF INSTALLATION

Table Instructions: Selections have been made based on information provided in previous tables of this document. If any selection needs to be changed, please explain why in Table E. Additional Remarks. These documents must be provided to the building inspector during construction and can be found online at https://www.energy.ca.gov/title24/2019standards/2019_compliance_documents/Nonresidential_Documents/NRCI/

YES	NO	Form/Title	Field Inspector Pass	Field Inspector Fail
◉	○	NRCI-LTO-01-E - Must be submitted for all buildings.	☐	☐
◉	○	NRCI-LTO-02-E - Must be submitted for a lighting control system; or for an Energy Management Control System (EMCS), to be recognized for compliance.	☐	☐

P. DECLARATION OF REQUIRED CERTIFICATES OF ACCEPTANCE

Table Instructions: Selections have been made based on information provided in previous tables of this document. If any selection needs to be changed, please explain why in Table E. Additional Remarks. These documents must be provided to the building inspector during construction and must be completed through an Acceptance Test Technician Certification Provider (ATTCP). For more information visit: http://www.energy.ca.gov/title24/attcp/providers.html

YES	NO	Form/Title	Field Inspector Pass	Field Inspector Fail
◉	○	NRCA-LTO-02-A - Must be submitted for all outdoor lighting controls except for alterations where controls area added to ≤ 20 luminaires.	☐	☐

STATE OF CALIFORNIA

Outdoor Lighting

NRCC-LTO-E (Created 01/21) CALIFORNIA ENERGY COMMISSION

CERTIFICATE OF COMPLIANCE		NRCC-LTO-E
Project Name: Sixth Street Park, Arts and River Connectivity Improvements	Report Page:	Page 7 of 7
Project Address: Sixth Street over the Los Angeles River	Date Prepared:	05/24/2022

DOCUMENTATION AUTHOR'S DECLARATION STATEMENT

I certify that this Certificate of Compliance documentation is accurate and complete

Documentation Author Name:	James Roberts	Documentation Author Signature:	
Company:	Tetra Tech	Signature Date:	
Address:	17885 Von Karman Ave, Suite 500	CEA/ HERS Certification Identification (if applicable):	
City/State/Zip:	Irvine/CA/92886	Phone:	949-809-5105

RESPONSIBLE PERSON'S DECLARATION STATEMENT

I certify the following under penalty of perjury, under the laws of the State of California:

1. **The information provided on this Certificate of Compliance is true and correct.**
2. **I am eligible under Division 3 of the Business and Professions Code to accept responsibility for the building design or system design identified on this Certificate of Compliance (responsible designer)**
3. **The energy features and performance specifications, materials, components, and manufactured devices for the building design or system design identified on this Certificate of Compliance conform to the requirements of Title 24, Part 1 and Part 6 of the California Code of Regulations.**
4. **The building design features or system design features identified on this Certificate of Compliance are consistent with the information provided on other applicable compliance documents, worksheets, calculations, plans and specifications submitted to the enforcement agency for approval with this building permit application.**
5. **I will ensure that a completed signed copy of this Certificate of Compliance shall be made available with the building permit(s) issued for the building, and made available to the enforcement agency for all applicable inspections. I understand that a completed signed copy of this Certificate of Compliance is required to be included with the documentation the builder provides to the building owner at occupancy.**

Responsible Designer Name:	Mazen Kassar	Responsible Designer Signature:	
Company :	Tetra Tech	Date Signed:	
Address:	17885 Von Karman Ave, Suite 500	License:	E-15809
City/State/Zip:	Irvine/CA/92886	Phone:	949-809-5137

BUREAU OF ENGINEERING OFFICIAL RECORD

THE CITY OF LOS ANGELES OR ITS OFFICERS OR AGENTS SHALL NOT BE RESPONSIBLE FOR THE ACCURACY OR COMPLETENESS OF ELECTRONIC COPIES OF THIS PLAN SHEET.

REVISION DATES (DESIGN STAGE ONLY)

Sheet Version 3.0

PLANS PREPARED BY:
TETRA TECH, INC.
707 WILSHIRE BLVD. 23RD FLR.
LOS ANGELES, CA 90017
PHONE: (213) 239-8866

CITY OF LOS ANGELES DEPARTMENT OF PUBLIC WORKS
BUREAU OF ENGINEERING

VERT. CONTROL: BM 12-04070, 1929 (NGVD29) - 1985 ADJUSTMENT
HORIZ. CONTROL: GPS; PID AE 1704, EPOCH 1991.35

SHEET TITLE: TITLE 24 OVERALL SITE - OUTDOOR

PROJECT: SIXTH STREET PARK, ARTS AND RIVER CONNECTIVITY IMPROVEMENTS (PARC)

ADDRESS: SIXTH STREET OVER THE LOS ANGELES RIVER

CITY ENGINEER: TED ALLEN, P.E.
DESIGN GROUP
ENGINEER: LIC. NO. E-15809 DATE: 07/11/22
DESIGNED BY: JAMES ROBERTS
DRAWN BY: JAMES ROBERTS
CHECKED BY: MAZEN KASSAR
APPROVED BY: MAZEN KASSAR

ENGINEERING CITY OF LOS ANGELES

NO. REVISIONS: BY: DATE:

BUILDING NO.

INDEX NO. MF-300501

"THIS PLAN WAS ELECTRONICALLY SIGNED AND STAMPED."

REGISTERED PROFESSIONAL ENGINEER MAZEN KASSAR Exp. 6-30-22 CIVIL/ELECTRICAL STATE OF CALIFORNIA

WORK ORDER NO. E700235D
FILE NO. --
DRAWING NO. E-708
SHEET 194 OF 295 SHEETS

7/11/2022 8:31:24 PM - O:\PROJECTS\IRVINE\20043\200-20043-17001\CAD\SHEETFILES\E-708 TITLE 24 OVERALL SITE - OUTDOOR.DWG - ROBERTS, JAMES1

SYMBOLS

BUILDING ELEVATION

BUILDING SECTION

WALL SECTION

WALL-END-MARK-TYP

INTERIOR ELEVATION

DETAILS

DETAIL SECTION

INSULATION

ALIGN

BREAK

BUILDING REFERENCE GRID

KEY NOTE

NORTH ARROW

WALL TYPE

REVISION

EXTENT OF REVISION

SPOT ELEVATION

BUILDING ELEVATION

ROOM NAME / XXX — ROOM NUMBER

DOOR DESCRIPTION

MATCH LINE

CENTER LINE

WINDOW-TYPE

WINDOW SHADE NUMBER

CEILING FINISH & ELEVATION

EXISTING CONSTRUCTION

ABBREVIATIONS

A.F.F.	ABOVE FINISH FLOOR
ADJ	ADJACENT
ALUM	ALUMINUM
ANNOD	ANODIZED
AUD	AUDITORIUM
BLDG	BUILDING
BLW	BELOW
BM	BEAM
BOS	BLACK OUT WINDOW TREATMENT
BOT	BOTTOM
C. WALL	CURTAINWALL
CL	CLOSET
CLG	CEILING
COL	COLUMN
CONC	CONCRETE
CONST	CONSTRUCTION
CONT	CONTINUOUS or CONTINUE
DIM	DIMENSION
DKG	DECKING
DR	DOOR
DWG	DRAWING
(E)	EXISTING
EL	ELEVATION
ELEC	ELECTRIC(AL)
EP	ELECTRICAL PANEL
EX	EXISTING
EXT	EXTERIOR
F.B.O.	FURNISHED BY OTHERS
F.D.	FLOOR DRAIN
F.E.C.	FIRE EXTINGUISHER CABINET
F.F.	FINISH FLOOR
F.F.L.	FINISH FLOOR LINE
F.O.S.	FACE OF STUDS
F.R.	FIRE RATED
FLR	FLOOR
FLUR	FLUORESCENT
FND	FOUNDATION
FP'G	FIREPROOFING
FR	FRAME(ED), (ING)
FS	FLOOR SINK
FTG	FOOTING
FUR	FURRED(ING)
G.C.	GENERAL CONDITIONS
GA	GAGE, GAUGE
GV	GALVANIZED
GWB	GYPSUM WALL BOARD
H.M.	HOLLOW METAL
H.V.A.C.	HEATING, VENTILATION, AIR CONDITIONING
HOR	HORIZONTAL
INT	INTERIOR
L.PT.	LOW POINT
LAM	LAMINATE
LW	LIGHTWEIGHT
LWC	LIGHTWEIGHT CONCRETE
MAS	MASONRY
MECH	MECHANICAL
MFR	MANUFACTURER
MIN	MINIMUM
MK	ARCHITECTURAL MILLWORK
MTL	METAL
MTL PNL	METAL PANEL
N.C.	NO CEILING
N.I.C.	NOT IN CONTRACT
N.W.P.	NO WORK PROPOSED
O.X.	OUTSIDE DIAMETER
O.H.	OPPOSITE HAND
OPG	OPENING
OVERHD	OVERHEAD
P.C.	PLANTED AREA
P.L.	PROPERTY LINE
P.LAM	PLASTIC LAMINATE
PLS	PLASTER
PLYWD	PLYWOOD
R.C.P.	REFLECTED CEILING PLAN
RAD	RADIUS
REF	REFERENCE
REM	REMOVE
REV	REVERSE
REQ	REQUIRED
RFG	ROOFING
S.C.	SOLID CORE
SIM	SIMILAR
S.STL	STAINLESS STEEL
SHT	SHEET
SHT'G	SHEATHING
STRUCT	STRUCTURAL
T	TREAD
TBD	TO BE DETERMINED
T.O.	TOP OF
T.PTN	TOILET PARTITION
TEL	TELEPHONE
TV	TELEVISION
TYP	TYPICAL
U.O.N.	UNLESS OTHERWISE NOTED
VB	VINYL BASE
VERT	VERTICAL
VNR	VENEER
W.C.	WATER CLOSET
W.M.	WATERPROOFING MEMBRANE
W.PT.	WORK POINT
W/O	WITH OUT
WD	WOOD
WT	WALL THICKNESS

APPLICABLE CODES

BUILDING:	2016 CBC AS ADOPTED BY THE CITY OF LOS ANGELES 2017 LABC
GREEN BUILDING:	2016 CALIFORNIA GREEN BUILDING CODE
ELECTRICAL:	2016 CALIFORNIA ELECTRICAL CODE
MECHANICAL:	2016 CALIFORNIA MECHANICAL CODE
PLUMBING:	2016 CALIFORNIA PLUMBING CODE
ENERGY:	2016 CALIFORNIA ENERGY CODE CALIFORNIA TITLE 24, PART 2 (AND APPLICABLE ORDINANCES)
FIRE & LIFE SAFETY:	2016 CALIFORNIA FIRE CODE 2016 CALIFORNIA REFERENCED STANDARDS TITLE 8 C.C.R., CH 4, SUB-CH6—ELEVATOR SAFETY ORDERS TITLE 19 C.C.R., PUBLIC SAFETY, SFM REGULATIONS
ACCESSIBILITY:	2010 ADA STANDARDS FOR ACCESSIBLE DESIGN AMERICANS WITH DISABILITIES ACT (ADA), TITLE 2
ADMINISTRATIVE:	2016 CALIFORNIA ADMINISTRATIVE CODE

CODE NOTES

1. ANCHORAGE OF ELECTRICAL AND MECHANICAL EQUIPMENT AND ALL OTHER ESSENTIAL EQUIPMENT (INCLUDING LOCKERS, CASEWORK, ETC.) SHALL BE AS REQUIRED BY CODE.
2. ALL VOIDS AND PENETRATIONS THROUGH FLOOR SLAB FOR CONDUITS, PIPES, ETC., SHALL BE SEALED TO MAINTAIN FIRE RATINGS.
3. FIRE DEPT. CONNECTIONS MUST BE LOCATED ON ADDRESS SIDE OF BUILDING- SEE PLUMBING SERIES.

PROJECT DATA - EAST BUILDING

PROJECT DESCRIPTION	PUBLIC RESTROOM AND AUXILIARY STORAGE
PROJECT ADDRESS	641 S ANDERSON ST LOS ANGELES, CA 90023
LEGAL DESCRIPTION	STRONG AND DICKINSONS RAILROAD TRACT BLOCK A, LOTS 22 & 23
ZONING	M2-1-RIO-CUGU
SETBACKS	N/A
OWNER	CITY OF LOS ANGELES BUREAU OF ENGINEERING
HEIGHT	15'-0"
LENGTH (OVERALL BUILDING):	73'-5"
WIDTH (OVERALL BUILDING):	67'-6"
BASEMENT LEVELS	0
STORIES:	1 STORY
CONSTRUCTION TYPE	TYPE 1
SPRINKLERS	NOT SPRINKLERED
OCCUPANCY TYPE	B, S1
PROJECT AREA PER FLOOR - B - S1 - RESTROOMS - TOTAL	 870 SF 530 SF 250 SF 1,650 SF

PROJECT DATA - WEST RESTROOM

PROJECT DESCRIPTION	PUBLIC RESTROOM AND AUXILIARY STORAGE
PROJECT ADDRESS	587 S SANTA FE AVE LOS ANGELES, CA 90013
LEGAL DESCRIPTION	N/A (CITY RIGHT OF WAY)
ZONING	N/A (CITY RIGHT OF WAY)
SETBACKS	N/A
OWNER	CITY OF LOS ANGELES BUREAU OF ENGINEERING
HEIGHT	9'-2"
LENGTH (OVERALL BUILDING):	32'-6"
WIDTH (OVERALL BUILDING):	26'-6"
BASEMENT LEVELS	0
STORIES:	1 STORY
CONSTRUCTION TYPE	TYPE 1
SPRINKLERS	NOT SPRINKLERED
PROJECT AREA PER FLOOR	163 SF

PROJECT DATA - CAFE

PROJECT DESCRIPTION	CAFE, PREPACKAGED FOOD RETAIL
PROJECT ADDRESS	587 S SANTA FE AVE LOS ANGELES, CA 90013
LEGAL DESCRIPTION	N/A (CITY RIGHT OF WAY)
ZONING	N/A (CITY RIGHT OF WAY)
SETBACKS	N/A
OWNER	CITY OF LOS ANGELES BUREAU OF ENGINEERING
HEIGHT	10'-8"
LENGTH (OVERALL BUILDING):	32'-6"
WIDTH (OVERALL BUILDING):	26'-6"
BASEMENT LEVELS	0
STORIES:	1 STORY
CONSTRUCTION TYPE	TYPE 1
SPRINKLERS	NOT SPRINKLERED
PROJECT AREA PER FLOOR	577 SF

VICINITY MAP

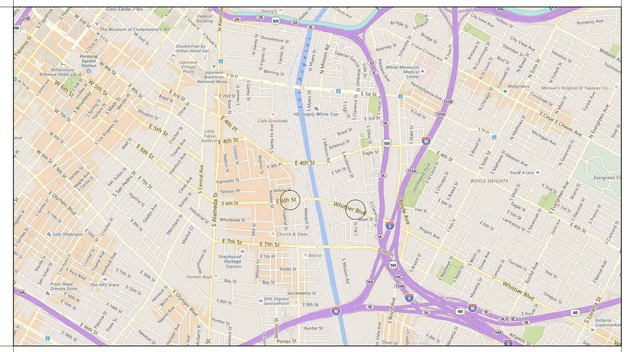

SHEET INDEX

BUREAU OF ENGINEERING — OFFICIAL RECORD

SHEET	SHEET DESCRIPTION	SCALE	35% DESIGN 12-14-2017	65% DESIGN 8/21/2018	90% DESIGN 7/25/2019	95% DESIGN 11/01/2021	BID SET 7/11/2022
GENERAL							
A0-01	INDEX, GENERAL NOTES	NONE	•	•	•	•	•
A0-02	ACCESSIBILITY NOTES & DIAGRAMS	NONE	•	•	•	•	•
A0-03	ACCESSIBILITY NOTES & DIAGRAMS	NONE	•	•	•	•	•
A0-04	GENERAL NOTES	NONE			•	•	•
A0-05	GREEN FORMS	NONE					•
A0-06	GREEN FORMS	NONE					•
A0-07	MATERIAL PRODUCT DATA	NONE					•
A0-11	PROJECT VIEWS	NONE					•
ARCHITECTURAL							
SITE							
A1-01	OVERALL SITE PLAN	1"=120'	•	•	•	•	•
A1-02	EAST BUILDING SITE PLAN	1/8"=1'-0"			•	•	•
A1-03	WEST BUILDING SITE PLAN	1/8"=1'-0"			•	•	•
A1-04	ARTS PLAZA RETAINING WALL PLAN	1/8"=1'-0"	•	•	•	•	•
A1-05	ARTS PLAZA RW ELEVATION & SECTION	1/8"=1'-0"	•	•	•	•	•
A1-06	ARTS PLAZA DETAILS (SIGNAGE)	AS NOTED			•	•	•
A1-07	BENT 10S STAIR LANDING	AS NOTED					•
EAST BUILDING							
PLAN							
AE2-00	GEOMETRY PLAN	1/4"=1'-0"		•	•	•	•
AE2-01	FLOOR PLAN	1/4"=1'-0"	•	•	•	•	•
AE2-02	RCP	1/4"=1'-0"	•	•	•	•	•
AE2-03	ROOF PLAN	1/4"=1'-0"		•	•	•	•
ELEVATIONS							
AE3-01	BUILDING ELEVATIONS	1/4"=1'-0"	•	•	•	•	•
SECTIONS							
AE4-01	BUILDING SECTIONS	1/4"=1'-0"	•	•	•	•	•
AE4-02	WALL SECTIONS	1"=1'-0"		•	•	•	•
ENLARGEMENTS							
AE5-01	ENLARGEMENTS	1/4"=1'-0"	•	•	•	•	•
AE5-02	RESTROOM ENLARGEMENTS	1/2"=1'-0"			•	•	•
AE5-03	MILLWORK	AS NOTED		•	•	•	•
AE5-04	SCHEDULES	NONE	•	•	•	•	•
DETAILS							
AE6-01	DETAILS	AS NOTED		•	•	•	•
AE6-02	DETAILS	AS NOTED		•	•	•	•
AE6-03	DETAILS	AS NOTED		•	•	•	•
WEST BUILDING							
AW2-01	FLOOR PLAN, RCP, ROOF, GEOMETRY PLAN	1/4"=1'-0"	•	•	•	•	•
AW3-01	ELEVATIONS, SCHEDULES	1/4"=1'-0"	•	•	•	•	•
AW4-01	BUILDING & WALL SECTIONS, DETAILS	AS NOTED	•	•	•	•	•
CAFE BUILDING							
AC2-01	FLOOR PLAN, RCP, ROOF, GEOMETRY PLAN	1/4"=1'-0"	•	•	•	•	•
AC3-01	ELEVATIONS, SCHEDULES	AS NOTED	•	•	•	•	•
AC4-01	BUILDING & WALL SECTIONS, DETAILS	AS NOTED	•	•	•	•	•

PLANS PREPARED BY:
TETRA TECH, INC.
350 SOUTH GRAND AVENUE, SUITE 3310
LOS ANGELES, CALIFORNIA 90071
Phone: (213) 279-3283

MICHAEL MALTZAN ARCHITECTURE
2801 HYPERION AVENUE, STUDIO 107 | LOS ANGELES, CA 90027 | (323) 913 3098

CITY OF LOS ANGELES DEPARTMENT OF PUBLIC WORKS
BUREAU OF ENGINEERING
ENGINEERING — CITY OF LOS ANGELES

THIS PLAN WAS ELECTRONICALLY SIGNED AND STAMPED.

NO.	REVISIONS:	DATE:	BY:

INDEX NO. MF-300501
BUILDING NO.

CITY ENGINEER
DATE: 7/11/2022
LIC. NO. C-29729
DESIGN GROUP
TED ALLEN, P.E.
ARCHITECT: MICHAEL MALTZAN
DESIGNED BY:
DRAWN BY:
CHECKED BY:
APPROVED BY:

CITY OF LOS ANGELES DEPARTMENT OF PUBLIC WORKS
VERT. CONTROL: LA CITY BM 12-04070 (1985 ADJ), NGVD 1929
HORIZ. CONTROL: NAD 83 (ZONE 5) COORDINATES

SHEET TITLE: SHEET INDEX & NOTES
PROJECT: SIXTH STREET PARK, ARTS AND RIVER CONNECTIVITY IMPROVEMENTS (PARC)
ADDRESS: SIXTH STREET OVER THE LOS ANGELES RIVER

WORK ORDER NO. E700235D
FILE NO. --
DRAWING NO. A0-01
SHEET 195OF 295 SHEETS

THE CITY OF LOS ANGELES OR ITS OFFICERS OR AGENTS SHALL NOT BE RESPONSIBLE FOR THE ACCURACY OR COMPLETENESS OF ELECTRONIC COPIES OF THIS PLAN SHEET.

REVISION DATES (DESIGN STAGE ONLY)

Sheet Version 3.0

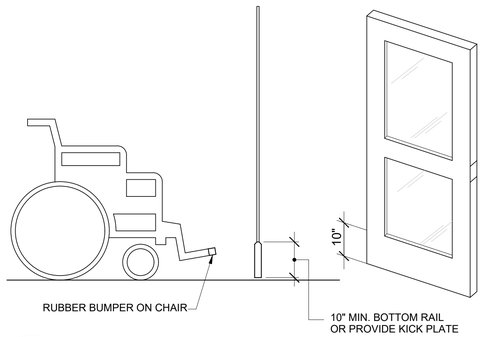

NOTE:

THE BOTTOM 10 INCHES OF ALL DOORS EXCEPT AUTOMATIC AND SLIDING DOORS SHALL HAVE A SMOOTH UNINTERRUPTED SURFACE TO ALLOW THE DOOR TO BE OPENED BY A WHEELCHAIR FOOTREST WITHOUT CREATING A TRAP OR HAZARDOUS CONDITION. WHERE NARROW FRAMED DOORS ARE USED, A 10 INCH HIGH SMOOTH PANEL SHALL BE INSTALLED ON THE PUSH SIDE OF THE DOOR.

11 DOOR KICKPLATE

SCALE: N.T.S.

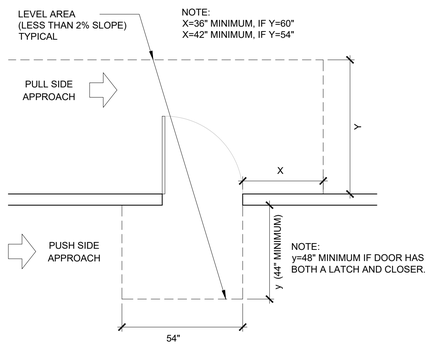

8 HINGE SIDE APPROACHES-SWINGING DOORS

SCALE: N.T.S.



REFER TO (5) FOR MOUNTING REQUIREMENTS.

THE INTERNATIONAL SYMBOL OF ACCESSIBILITY SHALL CONSIST OF A WHITE FIGURE ON A GREY BACKGROUND. THE GREY SHALL BE EQUAL IN CONTRAST TO COLOR NO. 15090 IN FEDERAL STANDARD 595B.

5 WALL SIGNAGE AT SANITARY FACILITIES

SCALE: N.T.S.

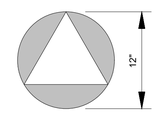

NOTE:
PICTOGRAMS AND/OR LETTERING ARE NOT REQUIRED ON DOOR-MOUNTED SIGNAGE.

THE INTERNATIONAL SYMBOL OF ACCESSIBILITY SHALL CONSIST OF A WHITE FIGURE ON A GREY BACKGROUND. THE GREY SHALL BE EQUAL IN CONTRAST TO COLOR NO. 15090 IN FEDERAL STANDARD 595B.

3 DOOR SIGNAGE AT SANITARY FACILITIES

SCALE: N.T.S.

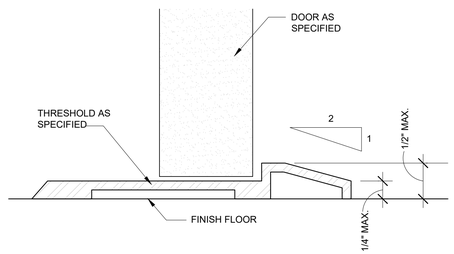

10 STANDARD DOOR THRESHOLD

SCALE: N.T.S.

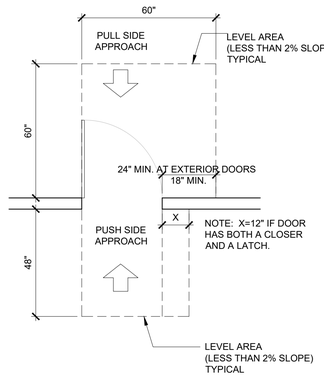

7 FRONT APPROACHES-SWINGING DOORS

SCALE: N.T.S.

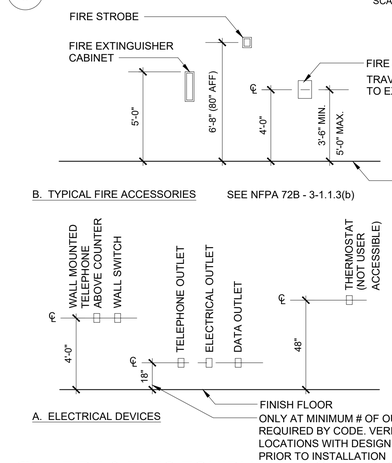

4 FIRE & ELEC EQUIPMENT MOUNTING HEIGHTS

SCALE: N.T.S.

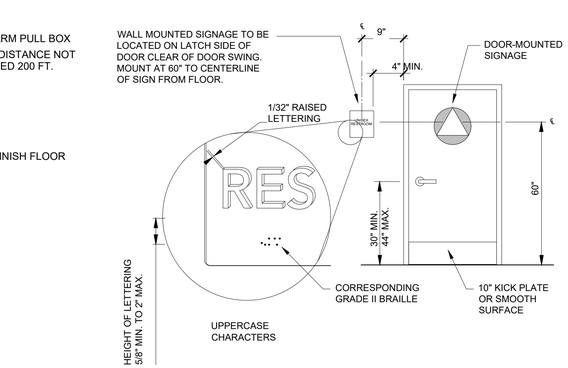

2 ID SYMBOL AT SANITARY FACILITIES

SCALE: N.T.S.

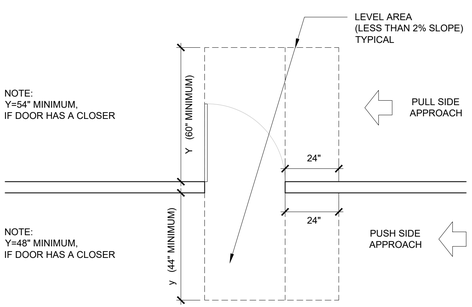

9 LATCH SIDE APPROACHES-SWINGING DOORS

SCALE: N.T.S.

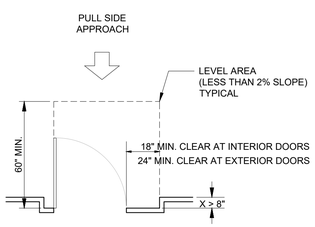

NOTE:
ALL DOORS IN ALCOVES SHALL COMPLY WITH THE CLEARANCES FOR FRONT APPROACHES.

6 DOORS LOCATED IN A RECESS OR ALCOVE

SCALE: N.T.S.

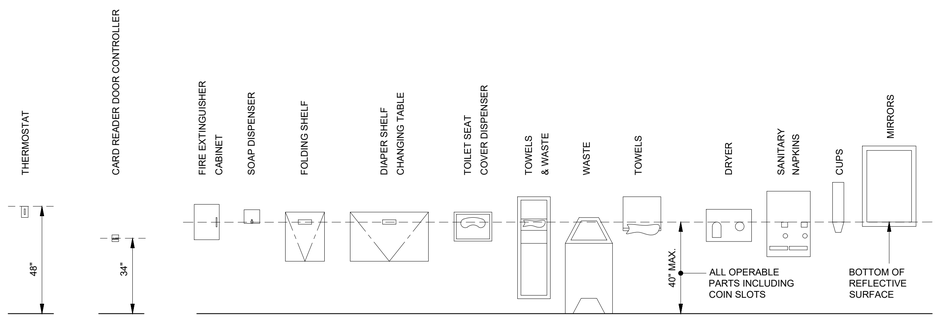

1 MOUNTING HEIGHT

SCALE: N.T.S.

BUREAU OF ENGINEERING
OFFICIAL RECORD

PLANS PREPARED BY:
TETRA TECH, INC.
350 SOUTH GRAND AVENUE, SUITE 3310
LOS ANGELES, CALIFORNIA 90071
Phone: (213) 279-3283

MICHAEL MALTZAN ARCHITECTURE
2801 HYPERION AVENUE, STUDIO 107 | LOS ANGELES, CA 90027 | (323) 913 3098

CITY OF LOS ANGELES DEPARTMENT OF PUBLIC WORKS
BUREAU OF ENGINEERING
ENGINEERING CITY OF LOS ANGELES

THIS PLAN WAS ELECTRONICALLY SIGNED AND STAMPED.

NO.	REVISIONS:	DATE:	BY:

BUILDING NO.

INDEX NO. MF-300501

CITY ENGINEER: TED ALLEN, P.E.
DESIGN GROUP
ARCHITECT: MICHAEL MALTZAN LIC. NO. C-23729 7/11/2022
DESIGNED BY:
DRAWN BY:
CHECKED BY:
APPROVED BY:

VERT. CONTROL: LA CITY BM 12-04070 (1985 ADJ), NGVD 1929
HORIZ. CONTROL: NAD 83 (ZONE 5) COORDINATES

SHEET TITLE: ACCESSIBILITY NOTES & DIAGRAMS

PROJECT: SIXTH STREET PARK, ARTS AND RIVER CONNECTIVITY IMPROVEMENTS (PARC)

ADDRESS: SIXTH STREET OVER THE LOS ANGELES RIVER

WORK ORDER NO. E700235D
FILE NO. --
DRAWING NO. A0-02
SHEET 196 OF 295 SHEETS

REVISION DATES (DESIGN STAGE ONLY)

THE CITY OF LOS ANGELES OR ITS OFFICERS OR AGENTS SHALL NOT BE RESPONSIBLE FOR THE ACCURACY OR COMPLETENESS OF ELECTRONIC COPIES OF THIS PLAN SHEET.

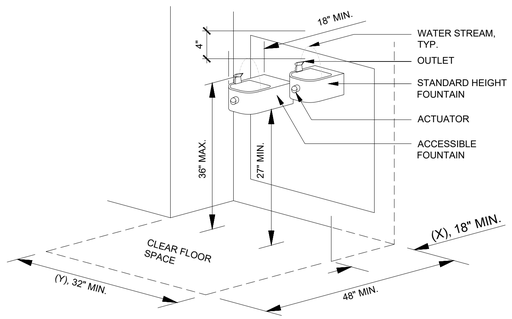

NOTES:

1. IF ALCOVE DEPTH (X) IS GREATER THAN 24", THEN ALCOVE WIDTH (Y) MUST BE A MINIMUM OF 36"

2. TOE CLEARANCE MUST BE 9" MIN. AFF AND 17" MIN. DEEP MEASURED FROM THE FRONT OF THE DF.

3. CENTERLINE OF ACCESSIBLE DRINKING FOUNTAIN MUST BE 15" MIN. FROM NEAREST ALCOVE SIDEWALL.

4. CENTERLINE OF ACCESSIBLE WHEELCHAIR DF MUST BE 18" MIN FROM NEAREST ALCOVE SIDEWALL, IF ALCOVE IS DEEPER THAN 24".

5. THE ACTIVATOR MUST PROVIDE ACCESSIBLE OPERATION AND BE WITHIN 6" OF THE FRONT EDGE OF THE DRINKING FOUNTAIN.

6. ON DRINKING FOUNTAINS WITH ROUND OR OVAL BOWLS, THE OUTLET MUST BE LOCATED SO THAT THE FLOW OF WATER IS WITHIN 3" OF THE FRONT EDGE OF THE DRINKING FOUNTAIN.

7. ON DRINKING FOUNTAINS WITH SQUARE BOWLS, THE OUTLET MUST BE WITHIN 6" OF THE FRONT EDGE OF THE DF AND PROVIDE A FLOW OF WATER THAT IS PARALLEL WITH THE FRONT EDGE AND 4" HIGH.

19 HI-LO FOUNTAIN DESIGN

Scale: N.T.S.

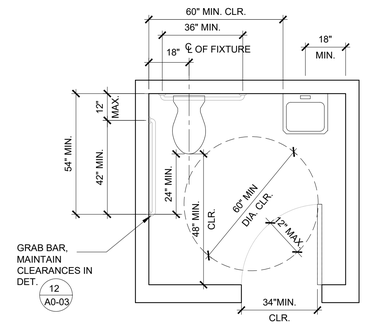

TOTAL STALL DIMENSIONS MUST INCORPORATE ALL CLEARANCES SHOWN TO COMPLY WITH BOTH STATE AND FEDERAL REQUIREMENTS

17 SINGLE ACCOMMODATION FACILITY

Scale: N.T.S.

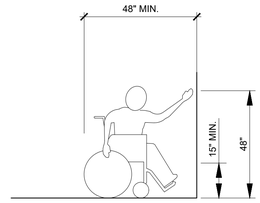

14 HIGH FORWARD REACH LIMIT

SCALE: N.T.S.

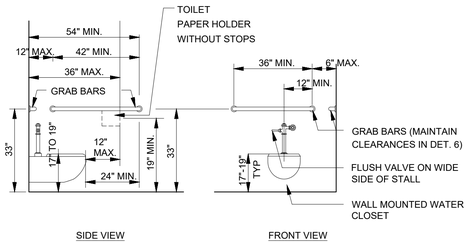

NOTE:
FLUSH CONTROLS SHALL BE OPERABLE WITH ONE HAND AND SHALL NOT REQUIRE TIGHT GRASPING, PINCHING OR TWISTING OF THE WRIST AND SHALL BE MOUNTED NO MORE THAN 44" ABOVE THE FLOOR. THE FORCE REQUIRED TO ACTIVATE CONTROLS SHALL BE NO GREATER THAN 5lbf (22.2N).

16 WATER CLOSETS

Scale: N.T.S.

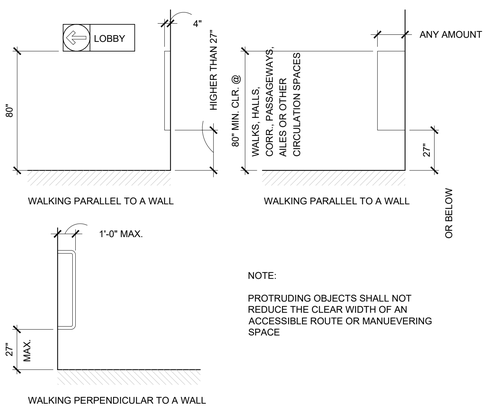

NOTE:

PROTRUDING OBJECTS SHALL NOT REDUCE THE CLEAR WIDTH OF AN ACCESSIBLE ROUTE OR MANUEVERING SPACE

15 EXCLUSION ZONES AROUND GRAB BARS

SCALE: N.T.S.

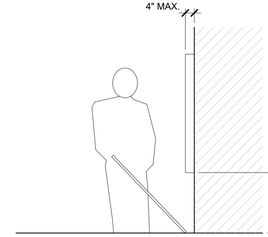

13 PROTRUDING OBJECTS

SCALE: N.T.S.

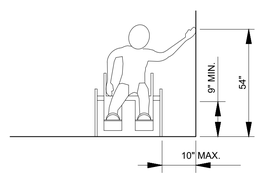

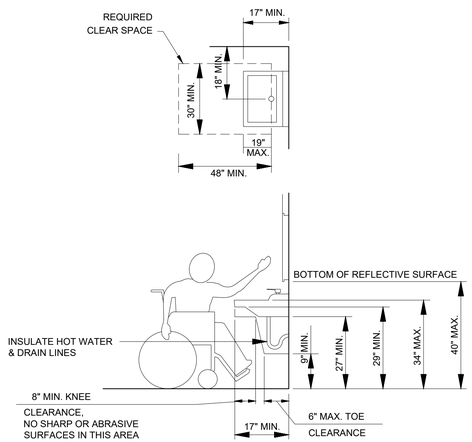

NOTE:
FAUCET CONTROLS AND OPERATING MECHANISMS SHALL BE OPERABLE WITH ONE HAND AND SHALL NOT REQUIRE TIGHT GRASPING, PINCHING OR TWISTING OF THE WRIST. THE FORCE REQUIRED TO ACTIVATE CONTROLS SHALL BE NO GREATER THAN 5lbf (22.2N). (ACCESS COMPLIANCE REFERENCE MANUAL - DSA, 1115B.2.1.2.1)

18 LAVATORIES

Scale: N.T.S.

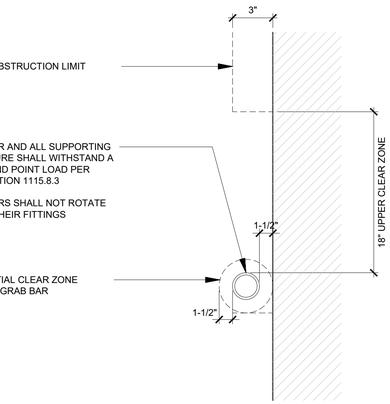

12 EXCLUSION ZONES AROUND GRAB BARS

SCALE: N.T.S.

20 HIGH AND LOW SIDE REACH LIMITS

SCALE: N.T.S.

BUREAU OF ENGINEERING
OFFICIAL RECORD

THIS PLAN WAS ELECTRONICALLY SIGNED AND STAMPED.

KAI TING WIN No. C 23729 Exp. 06/31/23 REGISTERED CIVIL ENGINEER STATE OF CALIFORNIA

ENGINEERING
CITY OF LOS ANGELES

BUILDING NO.

INDEX NO. MF-300501

BUREAU OF ENGINEERING
NO. | REVISIONS: | DATE: | BY:

CITY OF LOS ANGELES DEPARTMENT OF PUBLIC WORKS

TED ALLEN, P.E.
CITY ENGINEER

DESIGN GROUP

ARCHITECT: MICHAEL MALTZAN
LIC. NO. C-23729
DESIGNED BY:
DRAWN BY:
CHECKED BY:
APPROVED BY:
DATE: 7/11/2022

MICHAEL MALTZAN ARCHITECTURE
2801 HYPERION AVENUE, STUDIO 107 | LOS ANGELES, CA 90027 | (323) 913 3098

PLANS PREPARED BY:
TETRA TECH, INC.
350 SOUTH GRAND AVENUE, SUITE 3310
LOS ANGELES, CALIFORNIA 90071
Phone: (213) 279-3283

SHEET TITLE: ACCESSIBILITY NOTES & DIAGRAMS

PROJECT: SIXTH STREET PARK, ARTS AND RIVER CONNECTIVITY IMPROVEMENTS (PARC)

ADDRESS: SIXTH STREET OVER THE LOS ANGELES RIVER

VERT. CONTROL: LA CITY BM 12-04070 (1985 ADJ), NGVD 1929
HORIZ. CONTROL: NAD 83 (ZONE 5) COORDINATES

WORK ORDER NO. E700235D
FILE NO. --
DRAWING NO. A0-03
SHEET 197 OF 295 SHEETS

REVISION DATES (DESIGN STAGE ONLY)

THE CITY OF LOS ANGELES OR ITS OFFICERS OR AGENTS SHALL NOT BE RESPONSIBLE FOR THE ACCURACY OR COMPLETENESS OF ELECTRONIC COPIES OF THIS PLAN SHEET.

Sheet Version 3.0

GENERAL NOTES

ADMINISTRATIVE/PROCESS NOTES

1. SHOULD IT APPEAR THAT PROPOSED WORK IS NOT CLEARLY CALLED OUT, OR MATTERS RELATIVE THEREOF ARE NOT SUFFICIENTLY DETAILED OR EXPLAINED ON DRAWINGS, OR IN SPECIFICATIONS, OR IF CONTRACTOR HAS A BETTER CONSTRUCTION TECHNIQUE OR PROCEDURE, CONTRACTOR MUST APPLY TO OWNER REPRESENTATIVE FOR FURTHER DRAWINGS OR EXPLANATIONS OR SUBMIT DRAWINGS AND PROCEDURES AND MUST CONFORM TO SAME IN ORDER TO BE CONSISTENT WITH ORIGINAL DRAWINGS, SPECIFICATIONS, AND DESIGN INTENT. NOTICE OF SUCH MUST BE MADE TO OWNER'S REPRESENTATIVE WHOSE DECISION WILL BE FINAL AND CONCLUSIVE. IN NO CASE WILL WORK PROCEED IN UNCERTAINTY.
2. ALL SUBCONTRACTORS MUST REVIEW THE MANNER IN WHICH WORK FITS, ALIGNS, OR COMES INTO CONTACT WITH THE WORK OF OTHER TRADES. DEFICIENCIES RESULTING FROM FAILURE TO DO SO WILL BE REMOVED AND CORRECTED AT CONTRACTORS EXPENSE. EACH SUBCONTRACTOR IS CONSIDERED A SPECIALIST IN HIS/HER RESPECTIVE FIELD AND SHALL, PRIOR TO THE SUBMISSION OF BID OR PERFORMANCE OF HIS/HER WORK, NOTIFY THE CONTRACTOR OF ANY WORK CALLED OUT IN THESE DOCUMENTS THAT CANNOT BE EXECUTED AS SHOWN OR DESCRIBED OR CANNOT BE FULLY GUARANTEED.
3. IT SHALL BE THE RESPONSIBILITY OF THE CONTRACTOR TO CHECK WITH THE ARCHITECTURAL DRAWINGS BEFORE THE INSTALLATION OF THE STRUCTURAL, ELECTRICAL, PLUMBING OR MECHANICAL WORK. ANY DISCREPANCY BETWEEN THE ARCHITECTURAL AND THE CONSULTANTS' DRAWINGS SHALL BE BROUGHT TO THE ARCHITECT'S AND OWNER'S ATTENTION FOR CLARIFICATION.
4. THE CONTRACTOR SHALL THOROUGHLY EXAMINE THE SITE AND SATISFY HIMHERSELF AS TO THE CONDITIONS UNDER WHICH THE WORK IS TO BE PERFORMED. CONTRACTOR TO FIELD VERIFY ALL EXISTING CONDITIONS, DIMENSIONS AND DISTANCES, STRUCTURES, AND UTILITIES WITHIN LIMITS OF THE PROJECT BEFORE SUBMITTING BID OR PROCEEDING WITH THE WORK. IN CASES OF CONFLICT, THE ARCHITECT IS TO BE NOTIFIED IMMEDIATELY IN ORDER THAT CLARIFICATION MAY BE MADE.
5. ACTUAL FIELD CONDITIONS MAY VARY FROM THE PLANS. ANY DISCREPANCIES BETWEEN THE DRAWINGS AND FIELD CONDITIONS SHALL BE REPORTED IMMEDIATELY TO THE ARCHITECT. NO DEVIATION FROM THE CONTRACT DOCUMENTS SHALL BE MADE WITHOUT WRITTEN APPROVAL FROM THE ARCHITECT.
6. THE CONTRACTOR MUST CAREFULLY STUDY AND COMPARE THE CONTRACT DOCUMENTS PRIOR TO CONSTRUCTION AND MUST AT ONCE REPORT TO THE ARCHITECT ANY ERROR, INCONSISTENCY, OR OMISSION HE/SHE MAY DISCOVER AND SHALL NOT PROCEED WITH THE WORK UNTIL THE INTENT OF THE DOCUMENTS IS VERIFIED BY THE ARCHITECT.
7. ALL HOLES OR DEPRESSIONS RESULTING FROM REMOVAL OF FOOTINGS, BASEMENTS, UTILITIES, ETC. SHALL BE FILLED AND COMPACTED TO REQUIRED DENSITY USING APPROVED ON SITE OR IMPORTED MATERIALS. FINAL RESULTING GRADE SHALL BE SURVEYED AND DOCUMENTED BY THE CONTRACTOR AND SUBMITTED TO THE OWNER.
8. PRIOR TO ANY REQUIRED SITE WORK OR UTILITY DEMOLITION, FIELD VERIFY THE LOCATION AND DEPTH OF ALL EXISTING UTILITIES THAT WILL BE AFFECTED BY THE WORK. PROTECT FROM DAMAGE ANY EXISTING UTILITIES INDICATED TO REMAIN IN SERVICE.
9. THE CONTRACTOR SHALL VERIFY ALL SIZES AND PREPARATORY WORK FOR EQUIPMENT OF OTHERS AND COORDINATE WORK ON THIS CONTRACT WITH N.I.C. WORK OR WORK FURNISHED BY OTHERS.
10. COORDINATION OF TRADES:
    A. THE CONTRACTOR SHALL VERIFY AND COORDINATE ALL FOUNDATION PLAN DIMENSIONS WITH THE FLOOR PLAN DIMENSIONS AND SHALL BE RESPONSIBLE FOR PROPER EXECUTION OF ALL WORK.
    B. THE CONTRACTOR SHALL PROVIDE AND COORDINATE THE EXACT DIMENSIONS TO THE SIZES AND POSITIONS OF ALL EQUIPMENT, MOUNTINGS, ATTACHMENTS AND CONDUIT RELATING TO HIS/HER WORK.
    C. THE CONTRACTOR SHALL PROVIDE, COORDINATE AND FIELD VERIFY THE DIMENSION, SIZES AND POSITIONS OF OPENINGS IN SLABS AND WALLS NECESSARY TO INSTALLATION OF HIS/HER WORK PRIOR TO POURING CONCRETE THE CONTRACTOR SHALL VERIFY THAT ALL EMBEDDED ITEMS AND MATERIALS, INCLUDING THE WORK OF OTHER TRADES, ARE IN PLACE AND SECURELY ANCHORED.
12. PROVIDE CLEAN, WELL-MAINTAINED SANITARY FACILITIES FOR WORKMEN'S USE.
13. THE CONTRACTOR SHALL CONNECT ALL SERVICES TO PUBLIC UTILITIES. ALL UTILITIES SHALL BE CONNECTED TO PROVIDE ELECTRICITY, WATER, GAS, ETC. TO ALL EQUIPMENT SHOWN AS PART OF THIS CONTRACT. ALL EQUIPMENT SHALL FUNCTION CORRECTLY UPON COMPLETION OF THIS CONTRACT.
14. THE CONSTRUCTION SHALL NOT RESTRICT A 5' CLEAR AND UNOBSTRUCTED ACCESS TO ANY WATER OR POWER DISTRIBUTION FACILITIES (POWER POLES, PULL-BOXES, TRANSFORMERS, VAULTS, PUMPS, VALVES, METERS, APPURTENANCES, ETC.) OR TO THE LOCATION OF THE HOOK-UP. THE CONSTRUCTION SHALL NOT BE WITHIN 10' OF ANY POWER LINES - WHETHER OR NOT THE LINES ARE LOCATED ON THE PROPERTY. FAILURE TO COMPLY MAY CAUSE CONSTRUCTION DELAYS AND/OR ADDITIONAL EXPENSES.
15. CONTRACTOR SHALL PROVIDE AND INSTALL ALL STIFFENERS, BRACING, BACK-UP PLATES, AND SUPPORTING BRACKETS REQUIRED FOR THE INSTALLATION OF ALL CASEWORK AND ALL FLOOR MOUNTED OR SUSPENDED MECHANICAL, ELECTRICAL, OR PLUMBING EQUIPMENT. CONTRACTOR SHALL SUBMIT SHOP DRAWINGS AND ENGINEERING CALCULATIONS AS REQUIRED TO THE ARCHITECT AND STRUCTURAL ENGINEER FOR APPROVAL PRIOR TO FABRICATION AND INSTALLATION.
16. ALL CONDUIT, WATER LINES (HOT OR COLD), AND PIPES MUST BE CONCEALED UNLESS NOTED OTHERWISE. EXPOSED WORK SHALL BE COORDINATED AND VERIFIED WITH THE ARCHITECT PRIOR TO INSTALLATION..
17. APPROVAL BY THE BUILDING AND SAFETY INSPECTOR DOES NOT CONSTITUTE AUTHORITY TO DEVIATE FROM CONTRACT DOCUMENTS.
18. THE CONTRACTOR IS RESPONSIBLE FOR THE PROTECTION OF EXISTING STRUCTURES AND FINISHES DURING CONSTRUCTION.
19. DETAILS ARE INTENDED TO SHOW DESIGN INTENT OF COMPLETED WORK. MINOR MODIFICATIONS MAY BE REQUIRED TO SUIT THE JOB DIMENSIONS OR CONDITIONS AND ARE INCLUDED AS PART OF THE WORK.
20. CONTRACTOR TO VERIFY DOOR SIZES, SWINGS, LOCATIONS, AND DETAILS WITH JOB CONDITIONS PRIOR TO FABRICATION AND INSTALLATION.
21. CONTRACTOR TO VERIFY AND MAINTAIN REQUIRED CLEARANCES AROUND INSTALLED EQUIPMENT.
22. CONTRACTOR TO COORDINATE THE INSTALLATION OF THE VARIOUS TRADE ITEMS - INCLUDING BUT NOT LIMITED TO STRUCTURAL MEMBERS, CONDUIT, MECHANICAL DUCTS AND INSULATION, RECESSED LIGHT FIXTURES, AND CEILING CONSTRUCTION THICKNESSES - WITHIN THE SPACE ABOVE THE CEILINGS WERE CEILING OCCURS. CONTRACTOR IS RESPONSIBLE TO MAINTAIN THE FINISH CEILING HEIGHT ABOVE FINISH FLOOR AS INDICATED IN THESE DRAWINGS FOR THE VARIOUS ROOMS AND AREAS.
23. CONTRACTOR IS RESPONSIBLE FOR COORDINATION OF SUBCONTRACTOR BASED ON ENTIRE SET OF CONSTRUCTION DOCUMENTS. NO EXTRA COMPENSATION WILL BE GIVEN TO A BIDDER OR SUPPLIER WHO HAS BID FROM A PARTIAL SET OF CONSTRUCTION DOCUMENTS. IN CASE OF INCONSISTENCIES OR DISCREPANCIES BETWEEN DRAWINGS. THE MOST STRINGENT NOTE OR CONDITION WILL GOVERN. CONTRACTOR TO NOTIFY ARCHITECT IMMEDIATELY OF SUCH INCONSISTENCIES OR DISCREPANCIES.
24. CONTRACTOR TO PROVIDE ACCESS PANELS WHEREVER REQUIRED BY APPLICABLE BUILDING CODE OR WHEREVER REQUIRED FOR PROPER OPERATION OF MECHANICAL OR ELECTRICAL EQUIPMENT. CONTRACTOR TO COORDINATE LOCATION, SIZE, AND TYPE OF ACCESS PANEL WITH HIS/HER SUBCONTRACTOR'S WORK AND ARCHITECT.
25. CONTRACTOR TO VERIFY LOCATION AND SIZE OF ALL OPENINGS WITH DRAWINGS AND MANUFACTURED ITEMS WHERE APPLICABLE.
26. CONTRACTOR TO VERIFY INSERTS AND EMBEDDED ITEMS WITH DRAWINGS AND MANUFACTURED ITEMS WHERE APPLICABLE.
27. FIRE DEPARTMENT ACCESS, FIRE HYDRANTS, AND FIRE FLOW REQUIREMENTS ON THIS PROJECT SHALL BE REVIEWED BY THE CONSTRUCTION SERVICES UNIT (HYDRANTS AND ACCESS), BUREAU OF FIRE PREVENTION AND PUBLIC SAFETY.

CODE NOTES

1. APPLICABLE CODES: ALL WORK MUST CONFORM TO THE REQUIREMENTS OF THE CURRENT EDITION OF THE CITY OF LOS ANGELES BUILDING, MECHANICAL, PLUMBING, ELECTRICAL, AND PLANNING CODES AND ANY OTHER APPLICABLE CODES, ORDINANCES AND LAWS.
2. ALL CONSTRUCTION AND ALL TRADES TO COMPLY WITH THE INTERNATIONAL BUILDING CODE (CURRENT EDITION BEING USED BY THE CITY OF LOS ANGELES), CALIFORNIA ADMINISTRATIVE CODE, TITLE 24, PART 2 (AND APPLICABLE ORDINANCES), AND ALL OTHER APPLICABLE CODES.
3. ANCHORAGE OF ELECTRICAL AND MECHANICAL EQUIPMENT AND ALL OTHER ESSENTIAL EQUIPMENT (INCLUDING LOCKERS, CASEWORK, ETC.) SHALL BE AS REQUIRED BY CODE.
4. ALL VOIDS AND PENETRATIONS THROUGH FLOOR SLAB FOR CONDUITS, PIPES, ETC., SHALL BE SEALED TO MAINTAIN FIRE RATINGS.
5. FIRE DEPT. CONNECTIONS MUST BE LOCATED ON ADDRESS SIDE OF BUILDING- SEE PLUMBING SERIES.

DRAWINGS AND SPECIFICATIONS NOTES

1. DRAWINGS ARE DIVIDED INTO SEPARATE SHEETS FOR GENERAL CONVENIENCE ONLY. SHEET DESIGNATION OR NUMBERS MUST NOT BE CONSIDERED A BREAKDOWN OF AREAS OF WORK RESPONSIBILITY OR TRADES. DRAWINGS MUST BE COORDINATED WITH EACH OTHER AND WITH THE PROJECT SPECIFICATIONS IN ORDER TO COMPLETE THE PROJECT AS INTENDED.
2. DIMENSIONS:
    A. ALL DIMENSIONS ARE TO BE VERIFIED UNLESS OTHERWISE NOTED.
    B. ALL DIMENSIONS INCLUDING ELEVATIONS ARE TO FINISH UNLESS OTHERWISE NOTED OR SHOWN.
    C. CEILING HEIGHT DIMENSIONS ARE TO FINISHED SURFACES OF CEILINGS.
3. ABBREVIATIONS THROUGHOUT THE PLANS ARE THOSE IN COMMON USE. ARCHITECT WILL DEFINE THE INTENT OF ANY IN QUESTION.
4. ALL DISSIMILAR METALS MUST BE EFFECTIVELY ISOLATED FROM EACH OTHER TO PREVENT MOLECULAR BREAKDOWN.
5. REFER TO ELECTRICAL DRAWINGS FOR LOCATIONS OF AND SPECIFICATIONS FOR THE INSTALLATION OF ALL PLYWOOD BACKER BOARDS REQUIRED IN ELECTRICAL AND COMMUNICATION ROOMS.
6. THE CONTRACTOR SHALL PROVIDE CONCEALED MOUNTING PLATES AS REQUIRED BEHIND ALL WALL MOUNTED ITEMS SUCH AS HANDRAILS, TOILET PARTITIONS, LIGHT FIXTURES, EQUIPMENT, ETC.
7. LUMBER ON CONCRETE OR MASONRY WHICH IS IN CONTACT WITH EARTH MUST BE PRESSURE TREATED WOOD.
8. SPECIFIC NOTES AND DETAILS APPLY TO SIMILAR CONDITIONS UNLESS SPECIFICALLY NOTED OTHERWISE.
9. FINISHES NOTED IN FINISH SCHEDULE ON WALLS, BASES, COLUMNS, FLOORS, AND CEILINGS ARE TO BE APPLIED TO ALL WALLS, BASES, COLUMNS, FLOORS, AND CEILINGS IN AREA UNLESS OTHERWISE NOTED.
10. ALL HOSE BIBS ARE TO BE VANDAL RESISTANT.
11. ANY WINDOW TREATMENTS MUST BE NONCOMBUSTIBLE OR FLAME RETARDANT TREATED IN AN APPROVED MANNER.

CONTRACT NOTES

1. THE PRIME CONTRACT INCLUDES SERVICES, LABOR, AND MATERIALS, APPLIANCES, APPURTENANCES, AND ALL OTHER INCIDENTAL COSTS TO COMPLETE WORK INDICATED, LISTED, AND DESCRIBED IN VARIOUS SECTIONS OF THE SPECIFICATIONS AND SHOWN ON DRAWINGS FOR THE COMPLETION OF THE PROJECT.
2. PERMITS: OWNER WILL OBTAIN AND PAY FOR BUILDING DEPARTMENT PLAN CHECK FEE AND BUILDING PERMIT. THE CONTRACTOR WILL OBTAIN AND PAY COSTS OF ALL OTHER PERMITS, PLAN CHECKING FEES AND INSPECTIONS.
3. IT IS THE INTENTION OF THESE DOCUMENTS TO PROVIDE A PROJECT COMPLETE IN EVERY RESPECT. THE CONTRACTOR WILL BE RESPONSIBLE FOR THIS RESULT AND TO TURN OVER PROJECT IN COMPLETE OPERATING CONDITION REGARDLESS OF WHETHER OR NOT DRAWINGS AND SPECIFICATIONS COVER EVERY INDIVIDUAL ITEM IN MINUTE DETAIL.
4. BELOW GRADE WORK FOR CONNECTION TO LINES FOR SANITARY SEWER MAINS, WATER MAINS, GAS MAINS, STORM DRAINS AND ELECTRICAL WORK ARE A PART OF THIS CONTRACT.
5. GENERAL CONTRACTOR WILL ACT AS COORDINATOR FOR WORK AND WILL COOPERATE WITH OTHER CONTRACTORS SO THE WORK WILL PROCEED WITHOUT DELAYS OR HINDRANCES. CONTRACT REQUIRES A COMPLETE PROJECT, READY FOR USE.
6. THE PROJECT SPECIFICATIONS FOR THE PROJECT ARE PART OF THESE CONTRACT DOCUMENTS.
7. OFF-SITE WORK:
    A. THE CONTRACTOR WILL DO ALL OFF SITE WORK AS REQUIRED AND WILL OBTAIN SEPARATE PERMITS AS REQUIRED BY THE GOVERNING AUTHORITY.
    B. THE CONTRACTOR WILL PROCURE ALL NOTICES AND LICENSES REQUIRED FOR THE COMPLETION OF THE WORK. THE COST OF THESE NOTICES AND LICENSES IS INCIDENTAL TO OTHER ITEMS OF WORK AND NO ADDITIONAL PAYMENT WILL BE MADE FOR COSTS INCURRED IN OBTAINING NOTICES AND LICENSES OR IN CONFORMING TO REQUIREMENTS THEREOF.

LADBS NOTES

1. EXIT SIGNS SHALL BE INTERNALLY OR EXTERNALLY ILLUMINATED.
2. EXIT SIGNS ILLUMINATED BY AN EXTERIOR SOURCE SHALL HAVE AN INTENSITY OF NOT LESS THAN 5 FOOT CANDLES (54 LUX).
3. INTERNALLY ILLUMINATED SIGNS SHALL BE LISTED AND LABELED AND SHALL BE INSTALLED IN ACCORDANCE WITH THE MANUFACTURER INSTRUCTIONS AND SECTION 2702.
4. EXIT SIGNS SHALL BE ILLUMINATED AT ALL TIMES.
5. EXIT SIGNS SHALL BE CONNECTED TO AN EMERGENCY POWER SYSTEM THAT WILL PROVIDE AN ILLUMINATION OF NOT LESS THAN 90 MIN IN CASE OF PRIMARY POWER LOSS.

BUREAU OF ENGINEERING
OFFICIAL RECORD

PLANS PREPARED BY:
TETRA TECH, INC.
350 SOUTH GRAND AVENUE, SUITE 3310
LOS ANGELES, CALIFORNIA 90071
Phone: (213) 279-3283

MICHAEL MALTZAN ARCHITECTURE
2801 HYPERION AVENUE, STUDIO 107 | LOS ANGELES, CA 90027 | (323) 913 3098

CITY OF LOS ANGELES DEPARTMENT OF PUBLIC WORKS
BUREAU OF ENGINEERING

VERT. CONTROL: LA CITY BM 12-04070 (1985 ADJ), NGVD 1929
HORIZ. CONTROL: NAD 83 (ZONE 5) COORDINATES

SHEET TITLE: GENERAL NOTES

PROJECT: SIXTH STREET PARK, ARTS AND RIVER CONNECTIVITY IMPROVEMENTS (PARC)

ADDRESS: SIXTH STREET OVER THE LOS ANGELES RIVER

WORK ORDER NO. E700235D
FILE NO. --
DRAWING NO. A0-04
SHEET 198 OF 295 SHEETS

ENGINEERING
CITY OF LOS ANGELES

NO.	REVISIONS:	DATE:	BY:

BUILDING NO.
INDEX NO. MF-300501

THIS PLAN WAS ELECTRONICALLY SIGNED AND STAMPED.

CITY ENGINEER
TED ALLEN, P.E.
DESIGN GROUP
ARCHITECT: MICHAEL MALTZAN LIC. NO. C-23729 DATE: 7/11/2022
DESIGNED BY:
DRAWN BY:
CHECKED BY:
APPROVED BY:

THE CITY OF LOS ANGELES OR ITS OFFICERS OR AGENTS SHALL NOT BE RESPONSIBLE FOR THE ACCURACY OR COMPLETENESS OF ELECTRONIC COPIES OF THIS PLAN SHEET.

REVISION DATES (DESIGN STAGE ONLY)

Sheet Version 3.0

THE CITY OF LOS ANGELES OR ITS OFFICERS OR AGENTS SHALL NOT BE RESPONSIBLE FOR THE ACCURACY OR COMPLETENESS OF ELECTRONIC COPIES OF THIS PLAN SHEET.

LADBS DEPARTMENT OF BUILDING AND SAFETY

2020 Los Angeles Green Building Code

FORM GRN 5

MANDATORY REQUIREMENTS CHECKLIST

NEWLY CONSTRUCTED NON-RESIDENTIAL BUILDINGS

(COMPLETE AND INCORPORATE THIS FORM INTO THE PLANS)

Permit # _____ - _____ - _____ Date: _____

ITEM #	CODE SECTION	REQUIREMENT	REFERENCE SHEET (Sheet # or N/A)	COMMENTS (e.g. note #, detail # or reason for N/A)
		PLANNING AND DESIGN		
1	5.106.1	Storm water pollution prevention	A0-05	FORM GRN 1
2	5.106.4.1.1	Short-term bicycle parking	N/A	<9 STALLS
3	5.106.4.1.2	Long-term bicycle parking	N/A	<9 STALLS
4	5.106.5.2	Designated parking	14 SPACES	G-003
5	5.106.5.3	Electric vehicle charging	3 / 14 SPACES	G-003
6	5.106.8	Light pollution reduction	A0-05	GRN 15 NOTE 1
7	5.106.10	Grading and paving	L-016	SEE LANDSCAPE PLANS
8	5.106.11	Hardscape alternatives	N/A	NO SOLAR EXPOSURE
		ENERGY EFFICIENCY		
9	5.211.1	Solar ready buildings	N/A	NO SOLAR EXPOSURE
		WATER EFFICIENCY & CONSERVATION		
10	5.303.1.1	New buildings in excess of 50,000 sq. ft.	N/A	< 50,000 SF
11	5.303.1.2	Excess consumption		
12	5.303.2	Water reduction	A0-06	GRN 18N NOTE 2
13	5.303.3	Water conserving plumbing fixtures and fittings	A0-06	GRN 17
14	5.303.3.3	Showerheads	A0-06	GRN 17
15	5.304.1	Outdoor water use in landscape areas	A0-06	GRN 18N NOTE 3
16	5.304.3	Irrigation controller and sensor application	A0-06	GRN 18N NOTE 4
17	5.304.4	Outdoor water use meters	A0-06	GRN 18N NOTE 5
18	5.304.5	Exterior faucets	A0-06	GRN 18N NOTE 6
19	5.305.1	Graywater ready	A0-06	GRN 18N NOTE 7
20	5.305.2	Recycled water supply to fixtures	N/A	NO RECYCLED WATER
21	5.305.3	Cooling towers	N/A	NO COOLING TOWERS
22	5.305.4	Groundwater discharge		SEE CIVIL PLANS
		MATERIAL CONSERVATION & RESOURCE EFFICIENCY		
23	5.407.1	Weather protection	AE4-02,AW4-01	AC4-01 WALL SECTIONS
24	5.407.2.1	Sprinklers	A0-05	GRN 15 NOTE 8
25	5.407.2.2.1	Nonabsorbent floor and wall finishes	AE5-04,AW3-01	AC3-01 SEALED CONCRETE
26		Exterior door protection	N/A	COVERED BY VIADUCT
27	5.407.2.2.2	Flashing	A0-05	GRN 15 NOTE 11
28	5.408.1	Construction waste reduction	A0-05	GRN 15 NOTE 12
29	5.408.3	Excavated soil and land clearing debris	A0-05	GRN 15 NOTE 13

As a covered entity under Title II of the Americans with Disabilities Act, the City of Los Angeles does not discriminate on the basis of disability and, upon request, will provide reasonable accommodation to ensure equal access to its programs, services and activities.

LADBS DEPARTMENT OF BUILDING AND SAFETY

2020 Los Angeles Green Building Code

FORM GRN 5

ITEM #	CODE SECTION	REQUIREMENT	REFERENCE SHEET (Sheet # or N/A)	COMMENTS (e.g. note #, detail # or reason for N/A)
30	5.410.1	Recycling by occupants	N/A	BINS / PARK FACILITIES
31	5.410.2	Commissioning (> 10,000 sq. ft.)	N/A	<10,000 SF
32	5.410.2.1	– Owner's Project Requirements (OPR)	N/A	<10,000 SF
33	5.410.2.2	– Basis of Design (BOD)	N/A	<10,000 SF
34	5.410.2.3	– Commissioning plan	N/A	<10,000 SF
35	5.410.2.4	– Functional performance testing	N/A	<10,000 SF
36	5.410.2.5.1	– Systems manual	N/A	<10,000 SF
37	5.410.2.5.2	– Systems operations training	N/A	<10,000 SF
38	5.410.2.6	– Commissioning report	N/A	<10,000 SF
39	5.410.4	Testing and adjusting (< 10,000 sq. ft.)		
40	5.410.4.2	– Systems		
41	5.410.4.3	– Procedures		
42	5.410.4.4	– Reporting	A0-05	GRN 15 NOTE 14
43	5.410.4.5	– Operation and maintenance manual	A0-05	GRN 15 NOTE 15
44	5.410.4.5.1	– Inspections and reports	A0-05	GRN 15 NOTE 15
		ENVIRONMENTAL QUALITY		
45	5.503.1	Fireplace and Woodstoves	N/A	NONE IN PROJECT
46	5.504.1.3	Temporary ventilation	A0-05	GRN 15 NOTE 17
47	5.504.3	Covering of duct openings and protection of mechanical equipment during construction	A0-05	GRN 15 NOTE 18
48	5.504.4	Finish material pollutant control		
49	5.504.4.1	– Adhesives, sealants, and caulks		
50	5.504.4.3	– Paints and coatings		
51	5.504.4.3.1	– Aerosol paints and coatings	A0-05	GRN 15 NOTE 19
52	5.504.4.3.2	– Verification	A0-05	GRN 15 NOTE 20
53	5.504.4.4	Carpet systems	N/A	NONE IN PROJECT
54	5.504.4.4.1	Carpet cushion	N/A	NONE IN PROJECT
55	5.504.4.5	Composite wood products	N/A	NONE IN PROJECT
56	5.504.4.6	Resilient flooring systems	N/A	NONE IN PROJECT
57	5.504.5.3	Filters	A0-05	GRN 15 NOTE 26
58	5.504.7	Environmental tobacco smoke (ETS) control	A0-05	GRN 15 NOTE 27
59	5.505.1	Indoor moisture control	A0-05	GRN 15 NOTE 28
60	5.506.2	Carbon dioxide (CO_2) monitoring	A0-05	GRN 15 NOTE 29
61	5.507.4.1	Exterior noise transmission prescriptive method		
62		– Exterior noise transmission for roof		
63		– Exterior noise transmission for walls		
64		– Exterior noise transmission for windows		
65	5.507.4.2	Exterior noise transmission performance method		
66	5.507.4.3	Interior sound transmission	N/A	NO ADJACENCIES

As a covered entity under Title II of the Americans with Disabilities Act, the City of Los Angeles does not discriminate on the basis of disability and, upon request, will provide reasonable accommodation to ensure equal access to its programs, services and activities.

LADBS DEPARTMENT OF BUILDING AND SAFETY

2020 Los Angeles Green Building Code

FORM GRN 5

ITEM #	CODE SECTION	REQUIREMENT	REFERENCE SHEET (Sheet # or N/A)	COMMENTS (e.g. note #, detail # or reason for N/A)
67	5.508.1	Ozone depletion and greenhouse gas reductions	A0-05	GRN 15 NOTE 30
68	5.508.2	Supermarket refrigerant leak reduction	A0-05	GRN 15 NOTE 31

As a covered entity under Title II of the Americans with Disabilities Act, the City of Los Angeles does not discriminate on the basis of disability and, upon request, will provide reasonable accommodation to ensure equal access to its programs, services and activities.

LADBS DEPARTMENT OF BUILDING AND SAFETY

STORM WATER POLLUTION CONTROL

(2020 Los Angeles Green Building Code)

FORM GRN 1

Storm Water Pollution Control Requirements for Construction Activities
Minimum Water Quality Protection Requirements for All Construction Projects

The following notes shall be incorporated in the approved set of construction/grading plans and represents the minimum standards of good housekeeping which must be implemented on all construction projects.

Construction means constructing, clearing, grading or excavation that result in soil disturbance. Construction includes structure teardown (demolition). It does not include routine maintenance to maintain original line and grade, hydraulic capacity, or original purpose of facility; emergency construction activities required to immediately protect public health and safety; interior remodeling with no outside exposure of construction material or construction waste to storm water; mechanical permit work; or sign permit work. (Order No. 01-182, NPDES Permit No. CAS004001 – Part 5: Definitions)

1. Eroded sediments and pollutants shall be retained on site and shall not be transported from the site via sheet flow, swales, area drains, natural drainage or wind.
2. Stockpiles of earth and other construction-related materials shall be covered and/or protected from being transported from the site by wind or water.
3. Fuels, oils, solvents and other toxic materials must be stored in accordance with their listing and shall not contaminate the soil nor the surface waters. All approved toxic storage containers are to be protected from the weather. Spills must be cleaned up immediately and disposed of properly and shall not be washed into the drainage system.
4. Non-storm water runoff from equipment and vehicle washing and any other activity shall be contained on the project site.
5. Excess or waste concrete may not be washed into the public way or any drainage system. Provisions shall be made to retain concrete waste on-site until it can be appropriately disposed of or recycled.
6. Trash and construction –related solid wastes must be deposited into a covered receptacle to prevent contamination of storm water and dispersal by wind.
7. Sediments and other materials shall not be tracked from the site by vehicle traffic. The construction entrance roadways must be stabilized so as to inhibit sediments from being deposited into the street/public ways. Accidental depositions must be swept up immediately and may not be washed down by rain or by any other means.
8. Retention basins of sufficient size shall be provided to retain storm water runoff on-site and shall be properly located to collect all tributary site runoff.
9. Where retention of storm water runoff on-site is not feasible due to site constraints, runoff may be conveyed to the street and the storm drain system provided that an approved filtering system is installed and maintained on-site during the construction duration.

As a covered entity under Title II of the Americans with Disabilities Act, the City of Los Angeles does not discriminate on the basis of disability and, upon request, will provide reasonable accommodation to ensure equal access to its programs, services and activities.

LADBS DEPARTMENT OF BUILDING AND SAFETY

VOC AND FORMALDEHYDE LIMITS

2020 Los Angeles Green Building Code

(Incorporate this form into the plans)

FORM GRN 11

2020 Los Angeles Green Building Code Tables 4.504.1, 4.504.2, 4.504.3, 4.504.4, 4.504.5, 5.504.4.1, 5.504.4.2, 5.504.4.3, 5.504.4.5

VOC CONTENT LIMITS FOR ARCHITECTURAL COATINGS [2,3]
Grams of VOC per Liter of Coating, Less Water and Less Exempt Compounds

COATING CATEGORY [3,5]	CURRENT LIMIT
Flat coatings	50
Nonflat coatings	50
Nonflat-high gloss coatings	50
Specialty Coatings	
Aluminum roof coatings	100
Basement specialty coatings	400
Bituminous roof coatings	50
Bituminous roof primers	350
Bond breakers	350
Concrete curing compounds	100
Concrete curing compounds, Roadways & Bridges	350
Concrete/masonry sealers	100
Driveway sealers	50
Dry fog coatings	50
Faux finishing coatings	
Clear Top Coat	100
Decorative Coatings	350
Glazes	350
Japan	350
Trowel Applied Coatings	50
Fire resistive coatings	150
Floor coatings	50
Form-release compounds	100
Graphic arts coatings (sign paints)	200
High temperature coatings	420
Industrial maintenance coatings	100
Low solids coatings[1]	120
Magnesite cement coatings	450
Mastic texture coatings	100
Metallic pigmented coatings	150
Multicolor coatings	250
Pretreatment wash primers	420
Primers, sealers, and undercoaters	100
Reactive penetrating sealers	350
Recycled coatings	250
Roof coatings	50
Roof coatings, aluminum	100
Rust preventative coatings	100
Shellacs	
Clear	730
Opaque	550
Specialty primers, sealers and undercoaters	100
Stains	100
Stains, Interior	250
Stone consolidants	450
Swimming pool coatings	340
Traffic marking coatings	100
Tub and tile refinish coatings	420
Waterproofing membranes	100
Wood coatings	275
Wood preservatives	350
Zinc-rich primers	100

[1] Grams of VOC per liter of coating, including water and including exempt compounds.
[2] The specified limits remain in effect unless revised limits are listed in subsequent columns in the table.
[3] Some values in this table are derived from those specified by the California Air Resources Board, Architectural Coatings Suggested Control Measure, February 5, 2016. More information is available from the Air Resources Board.

FORMALDEHYDE LIMITS[1]
Maximum Formaldehyde Emissions in Parts per Million.

PRODUCT	CURRENT LIMIT
Hardwood plywood veneer core	0.05
Hardwood plywood composite core	0.05
Particleboard	0.09
Medium density fiberboard	0.11
Thin medium density fiberboard[2]	0.13

[1] Values in this table are derived from those specified by the California Air Resources Board, Air Toxics Control Measure for Composite Wood as tested in accordance with ASTM E 1333. For more detail information, see *California Code of Regulations*, Title 17, Sections 93120 through 93120.12.
[2] Thin medium density fiberboard has a maximum thickness of 5/16 inches (8 mm).

SEALANT VOC LIMIT
Less Water and Less Exempt Compounds in Grams per Liter

SEALANTS	CURRENT VOC LIMIT
Architectural	50
Marine deck	760
Nonmembrane roof	300
Roadway	250
Single-ply roof membrane	450
Other	420
SEALANT PRIMERS	
Architectural	
Nonporous	250
Porous	775
Modified bituminous 500	500
Marine deck	760
Other	750

Note: For additional information regarding methods to measure the VOC content specified in these tables, see South Coast Air Quality Management District Rule 1168.

ADHESIVE VOC LIMIT 1,2
Less Water and Less Exempt Compounds in Grams per Liter

ARCHITECTURAL APPLICATIONS	CURRENT VOC LIMIT
Indoor carpet adhesives	50
Carpet pad adhesives	50
Outdoor carpet adhesives	150
Wood flooring adhesive	100
Rubber floor adhesives	60
Subfloor adhesives	50
Ceramic tile adhesives	65
VCT and asphalt tile adhesives	50
Drywall and panel adhesives	50
Cove base adhesives	50
Multipurpose construction adhesives	70
Structural glazing adhesives	100
Single-ply roof membrane adhesives	250
Other adhesives not specifically listed	50
SPECIALTY APPLICATIONS	
PVC welding	510
CPVC welding	490
ABS welding	325
Plastic cement welding	100
Adhesive primer for plastic	550
Contact adhesive	80
Special purpose contact adhesive	250
Structural wood member adhesive	140
Top and trim adhesive	250
SUBSTRATE SPECIFIC APPLICATIONS	
Metal to metal	30
Plastic foams	50
Porous material (except wood)	50
Wood	30
Fiberglass	80

[1] If an adhesive is used to bond dissimilar substrates together, the adhesive with the highest VOC content shall be allowed.
[2] For additional information regarding methods to measure the VOC content specified in this table, see South Coast Air Quality Management District Rule 1168. http://www.arb.ca.gov/DRDB/SC/CURHTML/R1168.PDF.

As a covered entity under Title II of the Americans with Disabilities Act, the City of Los Angeles does not discriminate on the basis of disability and, upon request, will provide reasonable accommodation to ensure equal access to its programs, services and activities.

LADBS DEPARTMENT OF BUILDING AND SAFETY

2020 Los Angeles Green Building Code

FORM GRN 15

GREEN BUILDING CODE PLAN CHECK NOTES

NON-RESIDENTIAL BUILDINGS

1. State on plans that the outdoor lighting systems shall be designed and installed to comply with all of the following:
   a. The minimum requirements in California Energy Code for Lighting Zones 1-4
   b. Backlight, Uplight and Glare (BUG) ratings as defined in IESNA TM-15-11
   c. Allowable BUG ratings not exceeding those shown in on Table 5.106.8. (5.106.8)
2. Separate submeters shall be installed in any building or new space within a building that is projected to consume more than 1,000 gal/day. (5.303.1.2)
3. New plumbing fixtures and fittings shall not exceed the maximum allowable flow rate specified in Section 5.303.3. (5.303.3)
4. When a shower is served by more than one showerhead, the combined flow rate of all the showerheads and/or other shower outlets controlled by a single valve shall not exceed 2.0 gallons per minute at 80psi, or the shower shall be designed to only allow one showerhead to be in operation at a time. (5.303.3.3)
5. For projects that include landscape work, the *Landscape Certification*, Form GRN 12, shall be completed prior to final inspection approval. (State Assembly Bill No. 1881)
6. Installed automatic irrigation system controllers are weather- or soil-based controllers. (WMELO, § 492.7)
7. Weather-resistant exterior wall and foundation envelope shall be detailed in conformance with Los Angeles Building Code Section 1403.2 and California Energy Code Section 150. (5.407.1)
8. Automatic landscape irrigators shall be installed such that it doesn't spray on the structure. (5.407.2.1)
9. New exterior entries and openings subject to foot traffic shall be protected against water intrusion using features such as overhangs, awnings and/or recesses for a combined depth over the entry of at least 4 feet. (5.407.2.2.1)
10. Nonabsorbent interior floor and wall finishes shall be used within at least two feet around and perpendicular to new exterior entries and/or opening subject to foot traffic. (5.407.2.2.1)
11. Exterior entries shall have flashing integrated with the drainage plane. (5.407.2.2.2)
12. Only a City of Los Angeles certified hauler will be used for hauling of construction waste. (5.408.1)
13. 100% of excavated soil and vegetation resulting from land clearing shall be reused or recycled. (5.408.3)
14. A final report for the testing and adjusting of all new systems shall be completed and provided to the field inspector prior to final approval. This report shall be signed by the individual responsible for performing these services. (5.410.4.4)
15. For all new equipment, an *Operation & Systems Manual* shall be provided to the owner and the field inspector at the time of final inspection. (5.410.4.5)
16. All new gas fireplaces must be direct-vent, sealed combustion type. Wood burning fireplaces are prohibited per AQMD Rule 445. (5.503.1, AQMD Rule 445)
17. If the new HVAC system is used during construction, use return air filters with a MERV of 8. Replace all filters immediately prior to occupancy. (5.504.1.3)
18. All new ducts and other new related air distribution components openings shall be covered with tape, plastic, or sheet metal until the final startup of the heating, cooling and ventilating equipment. (5.504.3)
19. Architectural paints and coatings, adhesives, caulks and sealants shall comply with the Volatile Organic Compound (VOC) limits listed in Tables 5.504.4.1- 5.504.4.3. (5.504.4.1- 5.504.4.3)
20. The *VOC Content Verification Checklist*, Form GRN 2, shall be completed and verified prior to final inspection approval. The manufacturer's specifications showing VOC content for all applicable products shall be readily available at the job site and be provided to the field inspector for verification. (5.504.4.3.2)
21. All new carpet installed in the building interior meets the testing and product requirements of one of the following:
    a. Carpet and Rug Institute's Green Label Plus Program
    b. California Department of Public Health's Specification 01350
    c. NSF/ANSI 140 at the Gold level
    d. Scientific Certifications Systems Indoor Advantage™ Gold (5.504.4.4)
22. All new carpet cushion installed in the building interior shall meet the requirements of the Carpet and Rug Institute Green Label program. (5.504.4.4.1)
23. New hardwood plywood, particle board, and medium density fiberboard composite wood products used in the interior or exterior of the building shall meet the formaldehyde limits. (5.504.4.5, 10.504.4.5)
24. The *Formaldehyde Emissions Verification Checklist*, Form GRN 3, shall be completed prior to final inspection approval. The manufacturer's specifications showing formaldehyde content for all applicable wood products shall be readily available at the job site and be provided to the field inspector for verification. (5.504.4.5)
25. 80% of the total area receiving new resilient flooring shall comply with one or more of the following:
    a. VOC emission limits defined in the CHPS High Performance Products Database
    b. Certified under UL GREENGUARD Gold
    c. Certification under the Resilient Floor Covering Institute (RFCI) FloorScore program
    d. Meet the California Department of Public Health's Specification 01350 (5.504.4.6)
26. Mechanically ventilated buildings shall have air filter with a Minimum Efficiency Reporting Value (MERV) of 13 or higher. Filters shall be installed prior to occupancy and recommendations for maintenance with filters of the same value shall be included in the operation and maintenance manual. (5.504.5.3)
27. Designated outdoor smoking area shall be at least 25 feet from an outdoor air intake or operable windows. (5.504.7)
28. Buildings shall meet or exceed the provisions of California Building Code, CCR, Title 24, Part 2 Sections 1202 (Ventilation) and Chapter 14 (Exterior Walls). For additional measures, see Section 5.407.2 (5.505.1)
29. Buildings that use Demand Control Ventilation shall have CO_2 sensors and ventilation controls installed in accordance with the requirements of the current edition of the California Energy Code, CCR, Title 24, Part 6, Section 120.1(c). (5.506.2)
30. The HVAC, refrigeration, and fire suppression equipment shall not contain CFC or Halons. (5.508.1)
31. Retail food stores of 8,000 sq. ft. or more of conditioned area that have a commercial refrigeration system with a global warming potential (GWP) of 150 or greater shall have leak reduction measures in accordance with LAGBC Section 5.508.2. Separate mechanical plan check is required. (5.508.2)

As a covered entity under Title II of the Americans with Disabilities Act, the City of Los Angeles does not discriminate on the basis of disability and, upon request, will provide reasonable accommodation to ensure equal access to its programs, services and activities.

REVISION DATES (DESIGN STAGE ONLY)

Sheet Version 3.0

BUREAU OF ENGINEERING

BUREAU OF ENGINEERING

DATE: BY:

NO. REVISIONS:

BUILDING NO.

INDEX NO. MF-300501

ENGINEERING CITY OF LOS ANGELES

THIS PLAN WAS ELECTRONICALLY SIGNED AND STAMPED

CITY OF LOS ANGELES DEPARTMENT OF PUBLIC WORKS

CITY ENGINEER TED ALLEN, P.E.

DATE: 7/11/2022

DESIGN GROUP

LIC. NO. C-23729

ARCHITECT: MICHAEL MALTZAN

DESIGNED BY:

DRAWN BY:

CHECKED BY:

APPROVED BY:

PLANS PREPARED BY:

TETRA TECH, INC.
350 SOUTH GRAND AVENUE, SUITE 3310
LOS ANGELES, CALIFORNIA 90071
Phone: (213) 279-3283

MICHAEL MALTZAN ARCHITECTURE
2801 HYPERION AVENUE, STUDIO 107 | LOS ANGELES, CA 90027 | (323) 913 3098

VERT. CONTROL: LA CITY BM 12-04070 (1985 ADJ), NGVD 1929
HORIZ. CONTROL: NAD 83 (ZONE 5) COORDINATES

SHEET TITLE: GREEN FORMS

PROJECT: SIXTH STREET PARK, ARTS AND RIVER CONNECTIVITY IMPROVEMENTS (PARC)

ADDRESS: SIXTH STREET OVER THE LOS ANGELES RIVER

WORK ORDER NO. E700235D

FILE NO. --

DRAWING NO. A0-05

SHEET 199 OF 295 SHEETS

2020 Los Angeles Green Building Code

WORKSHEET (WS-1)
BASELINE WATER USE

BASELINE WATER USE CALCULATION TABLE										
FIXTURE TYPE	FLOW RATE		DURATION		DAILY USES		OCCUPANTS		GALLONS PER DAY
Showerheads, residential	2.0 gpm @ 80 psi	x	8 min.	x	1	x	Note 1a	=	
Showerheads, nonresidential	2.0 gpm @ 80 psi	x	5 min.	x	1	x		=	
Lavatory faucets, residential	1.2 gpm @ 60 psi	x	0.25 min.	x	3	x		=	
Lavatory Faucets nonresidential/ public uses	0.5 gpm @ 60 psi	x	0.25 min	x	3	x		=	
Kitchen faucets	1.8 gpm @ 60psi	x	4 min.	x	1	x	Note 1b	=	
Wash fountains	1.8 gpm/20 [rim space(in) @ 60 psi]	x		x	3	x		=	
Metering faucets, residential	0.25 gallons/cycle	x	0.25 min.	x	3	x		=	
Metering faucets, non-residential	0.20 gallons/cycle	x	0.25 min.	x	3	x		=	
Metering faucets for wash fountains	0.20 gal/cycle/20 [rim space (in.) @ 60 psi]	x	0.25 min.	x	3	x		=	
Water Closets	1.28 gallons/flush	x	1 flush	x	1 male[2] 3 females	x		=	
Urinals	0.125 gal/flush	x	1 flush	x	2 males	x		=	
Total daily baseline water use (BWU)								=	

1. Refer to Table A, Chapter 4 of the Los Angeles Plumbing Code, for occupant load factors.
   a. Shower use by occupants depends on the type of use of a building or portion of a building, e.g. total occupant load for a health club, but only a fraction of the occupants in an office building as determined by the anticipated number of users.
   b. Kitchen faucet use is determined by occupant load of the area served by the fixture.
2. The daily use number shall be increased to three if urinals are not installed in the room.

As a covered entity under Title II of the Americans with Disabilities Act, the City of Los Angeles does not discriminate on the basis of disability and, upon request, will provide reasonable accommodation to ensure equal access to its programs, services and activities.

2020 Los Angeles Green Building Code

WORKSHEET (WS-2)
BASELINE WATER USE

20- PERCENT REDUCTION WATER USE CALCULATION TABLE									
FIXTURE TYPE	FLOW RATE		DURATION		DAILY USES		OCCUPANTS		GALLONS PER DAY
Showerheads, residential		x	8 min.	x	1	x	Note 1a	=	
Showerheads, nonresidential		x	5 min.	x	1	x		=	
Lavatory faucets, residential		x	0.25 min.	x	3	x		=	
Lavatory Faucets nonresidential/ public uses		x	0.25 min	x	3	x		=	
Kitchen faucets		x	4 min.	x	1	x	Note 1b	=	
Wash fountains		x		x	3	x		=	
Metering faucets, residential		x	0.25 min.	x	3	x		=	
Metering faucets, Non-residential		x	0.25 min.	x	3	x		=	
Metering faucets for wash fountains		x	0.25 min.	x	3	x		=	
Water Closets		x	1 flush	x	1 male[2] 3 females	x		=	
Urinals		x	1 flush	x	2 males	x		=	
Urinals Nonwater supplied	0.0 gal/ flush	x	1 flush	x	2 male	x		=	0
Proposed water use (BWU)								=	

20% Reduction _____(BWU from WS-1) x 0.80 = _____Allowable water use
__% Reduction _____(BWU from WS-1) x 0.____ = _____Allowable water use

1. For occupancies, refer to Table A, Chapter 4, Los Angeles Plumbing Code, for occupant load factors.
   a. Shower use by occupants depends on the type of use of a building or portion of a building, e.g., total occupant load for a health club, but only a fraction of the occupants in an office building as determined by the anticipated number of users.
   b. Kitchen faucet use is determined by the occupant load of the area served by the fixture.
2. Includes single and dual flush water closets with an effective flush of 1.28 gallons or less.
   Single flush toilets - The effective flush volume shall not exceed 1.28 gallons (4.8 liters). The effective flush volume is the average flush volume when tested in accordance with ASME A112.19.2.
   Dual flush toilets - The effective flush volume shall not exceed 1.28 gallons (4.8 liters). The effective flush volume is defined as the composite, average flush volume of two reduced flushes and one full flush. Flush volumes will be tested in accordance with ASME A112.19.2 and ASME A112.19.14.
3. The daily use number shall be increased to three if urinals are not installed in the room.
4. Where complying faucets are unavailable, aerators rated at 35 gpm or other means may be used to achieve reduction.

As a covered entity under Title II of the Americans with Disabilities Act, the City of Los Angeles does not discriminate on the basis of disability and, upon request, will provide reasonable accommodation to ensure equal access to its programs, services and activities.

PLUMBING FIXTURE FLOW RATES
Non-Residential Occupancies
2020 Los Angeles Green Building Code
(Incorporate this form into the plans)

FORM GRN 17

SECTION 5.303.2
WATER REDUCTION FIXTURE FLOW RATES

FIXTURE TYPE	MAXIMUM ALLOWABLE FLOW RATE
Showerheads	1.8 gpm @ 80 psi
Lavatory faucets, residential	1.2 gpm @ 60 psi[1,3]
Lavatory Faucets, nonresidential	0.4 gpm @ 60 psi[1,3]
Kitchen faucets	1.5 gpm @ 60 psi[2,4,5]
Wash fountains	1.8 gpm for every 20 in. of rim space @60 psi
Metering faucets	0.2 gallons/cycle
Metering faucets for wash fountains	0.2 gpm for every 20 in. of rim space @ 60 psi
Gravity tank type water closets	1.28 gallons/flush[6]
Flushometer tank water closets	1.28 gallons/flush[6]
Flushometer valve water closets	1.28 gallons/flush[6]
Urinals	0.125 gallons/flush
Clothes Washers	ENERGY-STAR certified
Dishwashers	ENERGY-STAR certified

[1] Lavatory faucets shall not have a flow rate less than 0.8 gpm at 20 psi.
[2] Kitchen faucets may temporarily increase flow above the maximum rate, but not above 2.2gpm @ 60psi and must default to a maximum flow rate of 1.8 gpm @ 60psi.
[3] Where complying faucets are unavailable, aerators or other means may be used to achieve reduction.
[4] Kitchen faucets with a maximum 1.8 gpm flow rate may be installed in buildings that have water closets with a maximum flush rate of 1.06 gallons/flush installed throughout
[5] This requirement does not apply to faucets in commercial kitchens.
[6] Includes single and dual flush water closets with an effective flush of 1.28 gallons or less.
Single Flush Toilets - The effective flush volume shall not exceed 1.28 gallons (4.8 liters). The effective flush volume is the average flush volume when tested in accordance with ASME A112.19.233.2.
Dual Flush Toilets - The effective flush volume shall not exceed 1.28 gallons (4.8 liters). The effective flush volume is defined as the composite, average flush volume of two reduced flushes and one full flush. Flush volumes will be tested in accordance with ASME A112.19.2 and ASME A112.19.14.

As a covered entity under Title II of the Americans with Disabilities Act, the City of Los Angeles does not discriminate on the basis of disability and, upon request, will provide reasonable accommodation to ensure equal access to its programs, services and activities.

2020 Los Angeles Green Building Code

FORM GRN 18N

WATER CONSERVATION ORDINANCE NOTES
NON-RESIDENTIAL BUILDINGS

1. For new buildings or additions exceeding 50,000 ft^2, install a separate water meter or sub-meter for the following areas:
   A. For each individual leased, rented, or other tenant space within the building projected to consume more than 100 gpd (380 L/day).
   B. Where potable water is used for industrial/process uses, for water supplied to the following subsystems:
      a. Makeup water for cooling towers where flow through is greater than 500 gpm (30 L/s).
      b. Makeup water for evaporative coolers greater than 6 gpm (0.04 L/s).
      c. Steam and hot-water boilers with energy input more than 500,000 Btu/h (147 kW).
   C. For each building that uses more than 100 gpd on a parcel containing multiple buildings. (5.303.1.1)
2. Provide a 20% reduction in the overall potable water use for each building. The reduction shall be based on the maximum allowable water use per plumbing fixture and fittings as required by the Los Angeles Plumbing Code. New projects having a water supply of 2"or less and additions and alterations projects may use the prescriptive method outlined in this section. (5.303.2)
3. A water budget for landscape irrigation use that conforms to the California Department of Water Resources' Model Water Efficient Landscape Ordinance (MWELO) is required for new landscape areas of 500 sqft or more. The following methods to reduce potable water use in landscape areas include, but are not limited to, use of captured rainwater, recycled water, graywater, or water treated for irrigation purposes and conveyed by a water district or public entity. (5.304.1, 5.304.2)
4. New buildings on a site with 1,000 square feet or more of cumulative landscape area shall have separate meters or submeters for outdoor water use. (5.304.4)
5. Additions and alterations on a site with 1,000 square feet of cumulative landscape area which require water service upgrade shall have separate meters or submeters for outdoor water use. (5.304.4)
6. Locks shall be installed on all publicly accessible exterior faucets and hose bibs. (5.304.5)
7. Except as provided in this section, for sites with over 500 square feet of landscape area, alternate waste piping shall be installed to permit discharge from the clothes washer, bathtub, showers, and bathroom/restrooms wash basins to be used for a future graywater irrigation system (5.305.1)
8. Except as provided in this section, where City-recycled water is available within 200 feet of the property line, water closets, urinals, floor drains, and process cooling and heating in the building shall be supplied from recycled water and shall be installed in accordance with the Los Angeles Plumbing Code. (5.305.2)
9. Cooling towers shall comply with one of the following:
   A. Shall have a minimum of 6 cycles of concentration (blowdown)
   B. A minimum of 50% of the makeup water supply to the cooling towers shall come from non-potable water sources, including treated backwash. (5.305.3)
10. Develop and construct a system for onsite reuse of the groundwater where groundwater is being extracted and discharged. Alternatively, the groundwater may be discharged to the sewer. (5.305.4)
11. Provide a hot water system complying with one of the following:
    A. The hot water system shall not allow more than 0.6 gallons of water to be delivered to any fixture before hot water arrives.
    B. Where a hot water recirculation or electric resistance heat trace wire system is installed, the branch from the recirculating loop or electric resistance heat trace wire to the fixture shall contain a maximum of 0.6 gallons. (Los Angeles Plumbing Code Section 610.4.1)

As a covered entity under Title II of the Americans with Disabilities Act, the City of Los Angeles does not discriminate on the basis of disability and, upon request, will provide reasonable accommodation to ensure equal access to its programs, services and activities.

BUREAU OF ENGINEERING
OFFICIAL RECORD

THIS PLAN WAS ELECTRONICALLY SIGNED AND STAMPED.

ENGINEERING
CITY OF LOS ANGELES

BUREAU OF ENGINEERING
DATE: BY:
NO. REVISIONS:

BUILDING NO.
INDEX NO. **MF-300501**

CITY OF LOS ANGELES DEPARTMENT OF PUBLIC WORKS

CITY ENGINEER
TED ALLEN, P.E.
DESIGN GROUP
LIC. NO. C-23729 DATE: 7/11/2022
ARCHITECT: MICHAEL MALTZAN
DESIGNED BY:
DRAWN BY:
CHECKED BY:
APPROVED BY:

MICHAEL MALTZAN ARCHITECTURE
2801 HYPERION AVENUE, STUDIO 107 | LOS ANGELES, CA 90027 | (323) 913 3098

CITY OF LOS ANGELES DEPARTMENT OF PUBLIC WORKS

VERT. CONTROL: LA CITY BM 12-04070 (1985 ADJ), NGVD 1929
HORIZ. CONTROL: NAD 83 (ZONE 5) COORDINATES

SHEET TITLE: GREEN FORMS

PROJECT: SIXTH STREET PARK, ARTS AND RIVER CONNECTIVITY IMPROVEMENTS (PARC)

ADDRESS: SIXTH STREET OVER THE LOS ANGELES RIVER

PLANS PREPARED BY:
TETRA TECH, INC.
350 SOUTH GRAND AVENUE, SUITE 3310
LOS ANGELES, CALIFORNIA 90071
Phone: (213) 279-3283

WORK ORDER NO. E700235D
FILE NO. --
DRAWING NO. A0-06
SHEET 200 OF 295 SHEETS

THE CITY OF LOS ANGELES OR ITS OFFICERS OR AGENTS SHALL NOT BE RESPONSIBLE FOR THE ACCURACY OR COMPLETENESS OF ELECTRONIC COPIES OF THIS PLAN SHEET.

REVISION DATES (DESIGN STAGE ONLY)

Sheet Version 3.0

BUILDING TRUST

PRODUCT DATA SHEET

Sarnafil® G 410-48 Feltback EnergySmart

SARNAFIL G 410 ROOF MEMBRANE IS A PVC THERMOPLASTIC MEMBRANE

PRODUCT DESCRIPTION

Sarnafil® G 410-48 Feltback EnergySmart Roof Membrane is a PVC thermoplastic membrane produced with an integral fiberglass mat reinforcement for excellent dimensional stability, is highly reflective, guaranteed for thickness, with heat-weldable seams, and a unique lacquer coating applied to the top of the membrane to reduce dirt pick up.

USES

Sarnafil G 410 is used in adhered applications with various adhesives over various substrates.

Areas of Application
- New Roofs
- Reroofs
- Recovers

CHARACTERISTICS / ADVANTAGES

EnergySmart Roof®

- Highly reflective
- Excellent dimensional stability
- Factory applied lacquer coated to reduce dirt pick up
- Hot-air welded seams for long-term performance
- Proven membrane performance
- Guaranteed thickness
- Superior fire resistance

APPROVALS / STANDARDS

- FM Global
- Underwriters Laboratories
- Underwriters Laboratories of Canada
- ICC Code Compliance – ESR 1157
- Miami-Dade County
- Florida Building Code
- NSF/ANSI 347: Platinum Certified
- ENERGY STAR®
- California Title 24
- LEED / Green Globes

PRODUCT INFORMATION

Chemical Base	High-quality, PVC membrane containing ultraviolet light stabilizers, flame retardant and polyester scrim reinforcement with a unique lacquer coating on the top surface.
Recycled Content	9% Pre-consumer, 1% Post-consumer
Reinforcing Material	Fiberglass
Packaging	**48 mil (1.2 mm) Membrane*** 10 ft x 100 ft (3 m x 30 m) roll, 363 lbs (165 kg) per roll, 9 rolls per pallet * Made to order, minimum volume required, extended production lead times. Consult with Sika – Roofing representative for further information.
Appearance / Color	• Top: White, Reflective Gray, Tan, and Patina Green • Bottom: Gray
Shelf Life	N/A
Storage Conditions	Store rolls on pallets and fully protected from the weather with clean canvas tarpaulins. Unvented polyethylene tarpaulins are not accepted due to the accumulation of moisture beneath the tarpaulin in certain weather conditions that may affect the ease of membrane weldability.
Overall Thickness	48 mil (ASTM D-751) 45 mil (ASTM Type II D-4434 Spec. Requirement)
Thickness Above Scrim	22 mil (ASTM Type II D-4434 Spec. Requirement) 16 mil
Felt Weight	9 oz/yd²

TECHNICAL INFORMATION

Resistance to Static Puncture	Pass (ASTM D-5602) 33 lbf (15 kg) (ASTM Type II D-4434 Spec. Requirement)
Resistance to Dynamic Puncture	Pass (ASTM D-5635) 7.3 ft-lbf (10 J) (ASTM Type II D-4434 Spec. Requirement)
Tensile Strength	60 lbf (267 N) (ASTM D-751) 55 lbf (245 N) (ASTM Type II D-4434 Spec. Requirement)
Elongation	250 & 220 % MD & CMD[1] (ASTM D-751) 250 & 220 % MD & CMD[1] (ASTM Type II D-4434 Spec. Requirement) [1]MD = Machine Direction, CMD = Cross Machine Direction
Linear Dimensional Change	-0.02 % (ASTM D-1204) 0.1 % (ASTM Type II D-4434 Spec. Requirement)
Tear Strength	15 lbf (67 N) (ASTM D-1004) 10 lbf (45 N) (ASTM Type II D-4434 Spec. Requirement)
Seam Strength	Pass (ASTM D-751) 75 % of original[2] (ASTM Type II D-4434 Spec. Requirement) [2]Failure occurs through membrane rupture not seam failure
Low Temperature Bend	Pass (ASTM D-2136) Pass -40°F (-40°C) (ASTM Type II D-4434 Spec. Requirement)

BUILDING TRUST

Retention of Properties after Heat Ageing	Tensile Strength, % of original: Pass Elongation, % of original: Pass Tensile strength, % of original: 90 Elongation, % of original: 90	(ASTM D-3045) (ASTM D-715) (ASTM Type II D-4434 Spec. Requirement)
UV Exposure	10,000 hours 5,000 hours	(ASTM G-154) (ASTM Type II D-4434 Spec.Requirement)
	Cracking (7x magnification)	None
	Discoloration (by observation)	Negligible
	Crazing (7x magnification)	None
Weight Change after Immersion in Water	1.9 % ± 3.0 %	(ASTM D-570) (ASTM Type II D-4434 Spec. Requirement)

Solar Reflectance

EnergySmart Colors	Initial Solar Reflectance[1]	3-Year Solar Reflectance[1]
EnergySmart White[2]	0.85	0.74
EnergySmart Tan[2]	0.73	0.65
EnergySmart Reflective Gray[2]	0.73	0.66
EnergySmart Patina Green[3]	0.55	0.46

[1] Solar reflectance testing according to ASTM C-1549
[2] Meets ENERGY STAR®, LEED, Green Globes, and California's Title 24 criteria for Low and Steep Slope applications
[3] Meets ENERGY STAR®, LEED, Green Globes, and California's Title 24 criteria for Steep Slope applications

Thermal Emittance

EnergySmart Colors	Initial Thermal Emittance[1]	3-Year Thermal Emittance[1]
EnergySmart White[2]	0.86	0.84
EnergySmart Tan[2]	0.85	0.86
EnergySmart Reflective Gray[2]	0.89	0.88
EnergySmart Patina Green[3]	0.86	0.85

[1] Thermal Emittance testing according to ASTM C-1371, Slide Method
[2] Meets ENERGY STAR®, LEED, Green Globes, and California's Title 24 criteria for Low and Steep Slope applications
[3] Meets ENERGY STAR®, LEED, Green Globes, and California's Title 24 criteria for Steep Slope applications

BUILDING TRUST

Solar Reflectance Index

EnergySmart Colors	Initail Solar Reflectance Index	3-Year Solar Reflectance Index
EnergySmart White[1]	107	90
EnergySmart Tan[1]	89	78
EnergySmart Reflective Gray[1]	90	80
EnergySmart Patina Green[2]	64	51

[1] Meets ENERGY STAR®, LEED, Green Globes, and California's Title 24 criteria for Low and Steep Slope applications.
[2] Meets ENERGY STAR®, LEED, Green Globes, and California's Title 24 criteria for Steep Slope applications.

APPLICATION INSTRUCTIONS

APPLICATION

Sarnafil G 410 is installed after proper preparation of the approved substrate. The membrane is unrolled into Sarnacol adhesive in accordance with Sika's technical requirements and then pressed into place with a minimum 100 lb (45 kg) steel roller. Sarnafil G 410 seams are heat-welded together by trained operators using hot-air welding equipment. Different Sarnacol adhesives require different application methods. Please consult Sika's Specifications or Applicator Handbook for detailed installation procedures.

MAINTENANCE

Standard maintenance of Sarnafil® or Sikaplan® systems should include regular inspection of flashings, drains and termination sealants at least twice a year and after each storm.

AVAILABILITY/WARRANTY

Availability
From Sika Corporation – Roofing Authorized Applicators for use within Sarnafil or Sikaplan systems.

Warranty
Upon successful completion of the installed roof by the Sika Authorized Applicator, Sika Corporation will provide a warranty to the Building Owner via the Sika Authorized Applicator

BASIS OF PRODUCT DATA

Results may differ based upon statistical variations depending upon mixing methods and equipment, temperature, application methods, test methods, actual site conditions and curing conditions.

OTHER RESTRICTIONS

See Legal Disclaimer.

ENVIRONMENTAL, HEALTH AND SAFETY

For further information and advice regarding transportation, handling, storage and disposal of chemical products, user should refer to the actual Safety Data Sheets containing physical, environmental, toxicological and other safety related data. User must read the current actual Safety Data Sheets before using any products. In case of an emergency, call CHEMTREC at 1-800-424-9300, International 703-527-3887.

BUREAU OF ENGINEERING
OFFICIAL RECORD

BUILDING TRUST

PLANS PREPARED BY:
TETRA TECH, INC.
350 SOUTH GRAND AVENUE, SUITE 3310
LOS ANGELES, CALIFORNIA 90071
Phone: (213) 279-3283

MICHAEL MALTZAN ARCHITECTURE
2801 HYPERION AVENUE, STUDIO 107 | LOS ANGELES, CA 90027 | (323) 913 3098

ENGINEERING
CITY OF LOS ANGELES

BUREAU OF ENGINEERING
NO. | REVISIONS: | DATE: | BY:

BUILDING NO.

INDEX NO. MF-300501

THIS PLAN WAS ELECTRONICALLY SIGNED AND STAMPED.

CITY OF LOS ANGELES DEPARTMENT OF PUBLIC WORKS
CITY ENGINEER
DATE: 7/11/2022
LIC. NO. C-29729
DESIGN GROUP
TED ALLEN, P.E.
ARCHITECT: MICHAEL MALTZAN
DESIGNED BY:
DRAWN BY:
CHECKED BY:
APPROVED BY:

CITY OF LOS ANGELES
VERT. CONTROL: LA CITY BM 12-04070 (1985 ADJ), NGVD 1929
HORIZ. CONTROL: NAD 83 (ZONE 5) COORDINATES
SHEET TITLE: MATERIAL PRODUCT DATA
PROJECT: SIXTH STREET PARK, ARTS AND RIVER CONNECTIVITY IMPROVEMENTS (PARC)
ADDRESS: SIXTH STREET OVER THE LOS ANGELES RIVER

WORK ORDER NO. E700235D
FILE NO. --
DRAWING NO. A0-07
SHEET 201 OF 295 SHEETS

THE CITY OF LOS ANGELES OR ITS OFFICERS OR AGENTS SHALL NOT BE RESPONSIBLE FOR THE ACCURACY OR COMPLETENESS OF ELECTRONIC COPIES OF THIS PLAN SHEET.

REVISION DATES (DESIGN STAGE ONLY)

Sheet Version 3.0

2 CAFE & RESTROOM PERSPECTIVE VIEW
FOR REFERENCE ONLY No Scale

1 STAFF & RESTROOM PERSPECTIVE VIEW
FOR REFERENCE ONLY No Scale

BUREAU OF ENGINEERING
OFFICIAL RECORD

THE CITY OF LOS ANGELES OR ITS OFFICERS OR AGENTS SHALL NOT BE RESPONSIBLE FOR THE ACCURACY OR COMPLETENESS OF ELECTRONIC COPIES OF THIS PLAN SHEET.

REVISION DATES (DESIGN STAGE ONLY)

Sheet Version 3.0

BUREAU OF ENGINEERING

ENGINEERING
CITY OF LOS ANGELES

NO.	REVISIONS:	DATE:	BY:

BUILDING NO.

INDEX NO. MF-300501

THIS PLAN WAS ELECTRONICALLY SIGNED AND STAMPED.

CITY OF LOS ANGELES DEPARTMENT OF PUBLIC WORKS

CITY ENGINEER
TED ALLEN, P.E.
DESIGN GROUP
LIC. NO. C-23729 DATE: 7/11/2022

ARCHITECT: MICHAEL MALTZAN
DESIGNED BY:
DRAWN BY:
CHECKED BY:
APPROVED BY:

PLANS PREPARED BY:
TETRA TECH, INC.
350 SOUTH GRAND AVENUE, SUITE 3310
LOS ANGELES, CALIFORNIA 90071
Phone: (213) 279-3283

MICHAEL MALTZAN ARCHITECTURE
2801 HYPERION AVENUE, STUDIO 107 | LOS ANGELES, CA 90027 | (323) 913 3098

VERT. CONTROL: LA CITY BM 12-04070 (1985 ADJ.) NGVD 1929
HORIZ. CONTROL: NAD 83 (ZONE 5) COORDINATES

SHEET TITLE: PROJECT VIEWS

PROJECT: SIXTH STREET PARK, ARTS AND RIVER CONNECTIVITY IMPROVEMENTS (PARC)

ADDRESS: SIXTH STREET OVER THE LOS ANGELES RIVER

WORK ORDER NO. E700235D
FILE NO. --
DRAWING NO. A0-11
SHEET 202 OF 295 SHEETS

Sheet Version 3.0

REVISION DATES (DESIGN STAGE ONLY)

THE CITY OF LOS ANGELES OR ITS OFFICERS OR AGENTS SHALL NOT BE RESPONSIBLE FOR THE ACCURACY OR COMPLETENESS OF ELECTRONIC COPIES OF THIS PLAN SHEET.

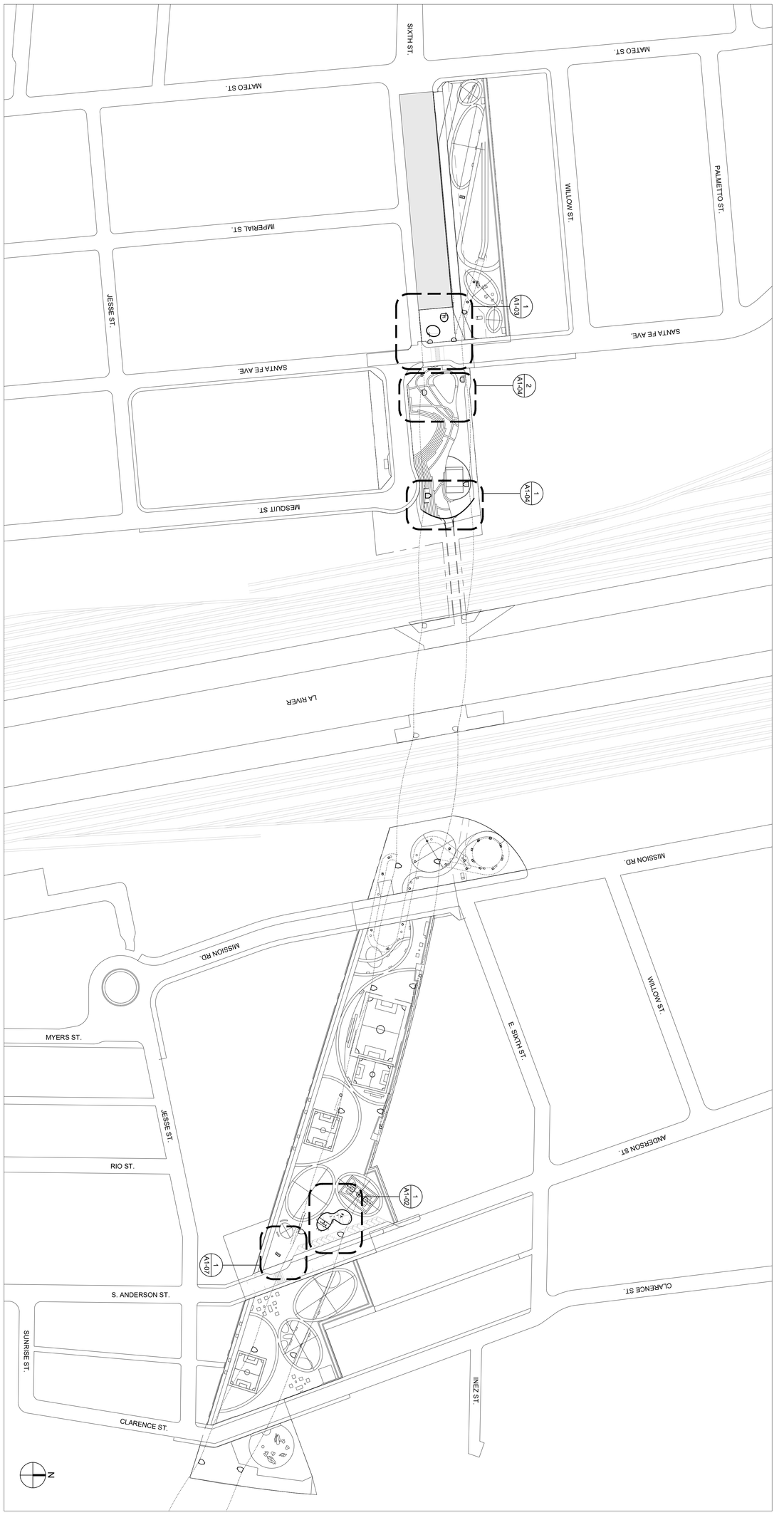

1 SITE PLAN

Scale: 1"=120'

PLANS PREPARED BY:

TETRA TECH, INC.
350 SOUTH GRAND AVENUE, SUITE 3310
LOS ANGELES, CALIFORNIA 90071
Phone: (213) 279-3283

MICHAEL MALTZAN ARCHITECTURE
2801 HYPERION AVENUE, STUDIO 107 | LOS ANGELES, CA 90027 | (323) 913 3098

CITY OF LOS ANGELES — DEPARTMENT OF PUBLIC WORKS — BUREAU OF ENGINEERING

THIS PLAN WAS ELECTRONICALLY SIGNED AND STAMPED.

SHEET 203 OF 295 SHEETS

DRAWING NO. A1-01

FILE NO. --

WORK ORDER NO. E700235D

VERT. CONTROL: LA CITY BM 12-04070 (1985 ADJ), NGVD 1929
HORIZ. CONTROL: NAD 83 (ZONE 5) COORDINATES

SHEET TITLE: SITE PLAN

PROJECT: SIXTH STREET PARK, ARTS AND RIVER CONNECTIVITY IMPROVEMENTS (PARC)

ADDRESS: SIXTH STREET OVER THE LOS ANGELES RIVER

TED ALLEN, P.E. — CITY ENGINEER

DESIGN GROUP		DATE:
ARCHITECT: MICHAEL MALTZAN	LIC. NO. C-23729	7/11/2022
DESIGNED BY:		
DRAWN BY:		
CHECKED BY:		
APPROVED BY:		

DEAR — C-23 — Exp.10/31/23 — STATE OF CALIFORNIA

NO.	REVISIONS:	DATE:	BY:

INDEX NO. MF-300501

BUILDING NO.

ENGINEERING — CITY OF LOS ANGELES

1 EAST BUILDING SITE PLAN

Scale: 1/8"=1'-0"

THE CITY OF LOS ANGELES OR ITS OFFICERS OR AGENTS SHALL NOT BE RESPONSIBLE FOR THE ACCURACY OR COMPLETENESS OF ELECTRONIC COPIES OF THIS PLAN SHEET.

REVISION DATES (DESIGN STAGE ONLY)

Sheet Version 3.0

PLANS PREPARED BY:

TETRA TECH, INC.
350 SOUTH GRAND AVENUE, SUITE 3310
LOS ANGELES, CALIFORNIA 90071
Phone: (213) 279-3283

MICHAEL MALTZAN ARCHITECTURE
2801 HYPERION AVENUE, STUDIO 107 | LOS ANGELES, CA 90027 | (323) 913 3098

CITY OF LOS ANGELES DEPARTMENT OF PUBLIC WORKS

VERT. CONTROL: LA CITY BM 12-04070 (1985 ADJ) NGVD 1929
HORIZ. CONTROL: NAD 83 (ZONE 5) COORDINATES

SHEET TITLE: WEST BUILDINGS GEOMETRY PLAN

PROJECT: SIXTH STREET PARK, ARTS AND RIVER CONNECTIVITY IMPROVEMENTS (PARC)

ADDRESS: SIXTH STREET OVER THE LOS ANGELES RIVER

CITY ENGINEER
TED ALLEN, P.E.
DESIGN GROUP
DATE:

ARCHITECT: MICHAEL MALTZAN LIC. NO. C-23729 7/11/2022
DESIGNED BY:
DRAWN BY:
CHECKED BY:
APPROVED BY:

WORK ORDER NO. E700235D
FILE NO. --
DRAWING NO. A1-02
SHEET 204 OF 295 SHEETS

BUREAU OF ENGINEERING

THIS PLAN WAS ELECTRONICALLY SIGNED AND STAMPED.

ENGINEERING
CITY OF LOS ANGELES

NO. REVISIONS: DATE: BY:

INDEX NO. MF-300501

BUILDING NO.

1 WEST BUILDING AND CAFE BUILDING SITE PLAN
Scale: 1/8"=1'-0"

THE CITY OF LOS ANGELES OR ITS OFFICERS OR AGENTS SHALL NOT BE RESPONSIBLE FOR THE ACCURACY OR COMPLETENESS OF ELECTRONIC COPIES OF THIS PLAN SHEET.

REVISION DATES (DESIGN STAGE ONLY)

BUREAU OF ENGINEERING
OFFICIAL RECORD

THIS PLAN WAS ELECTRONICALLY SIGNED AND STAMPED.

ENGINEERING
CITY OF LOS ANGELES

NO.	REVISIONS:	DATE:	BY:

BUILDING NO.

INDEX NO. **MF-300501**

KAMRAN ZAMANI C-23729 Exp 06/30/23 CIVIL STATE OF CALIFORNIA

BUREAU OF ENGINEERING • CITY OF LOS ANGELES • PUBLIC WORKS

CITY ENGINEER

TED ALLEN, P.E.

DESIGN GROUP		DATE: 7/11/2022
ARCHITECT: MICHAEL MALTZAN	LIC. NO. C-23729	
DESIGNED BY:		
DRAWN BY:		
CHECKED BY:		
APPROVED BY:		

DEPARTMENT OF PUBLIC WORKS • CITY OF LOS ANGELES

PLANS PREPARED BY:

TETRA TECH, INC.
350 SOUTH GRAND AVENUE, SUITE 3310
LOS ANGELES, CALIFORNIA 90071
Phone: (213) 279-3283

MICHAEL MALTZAN ARCHITECTURE
2801 HYPERION AVENUE, STUDIO 107 | LOS ANGELES, CA 90027 | (323) 913 3098

VERT. CONTROL: LA CITY BM 12-04070 (1985 ADJ), NGVD 1929
HORIZ. CONTROL: NAD 83 (ZONE 5) COORDINATES

SHEET TITLE: WEST BUILDINGS GEOMETRY PLAN

PROJECT: SIXTH STREET PARK, ARTS AND RIVER CONNECTIVITY IMPROVEMENTS (PARC)

ADDRESS: SIXTH STREET OVER THE LOS ANGELES RIVER

WORK ORDER NO. E700235D
FILE NO. --
DRAWING NO. A1-03
SHEET 205 OF 295 SHEETS

Sheet Version 3.0

THE CITY OF LOS ANGELES OR ITS OFFICERS OR AGENTS SHALL NOT BE RESPONSIBLE FOR THE ACCURACY OR COMPLETENESS OF ELECTRONIC COPIES OF THIS PLAN SHEET.

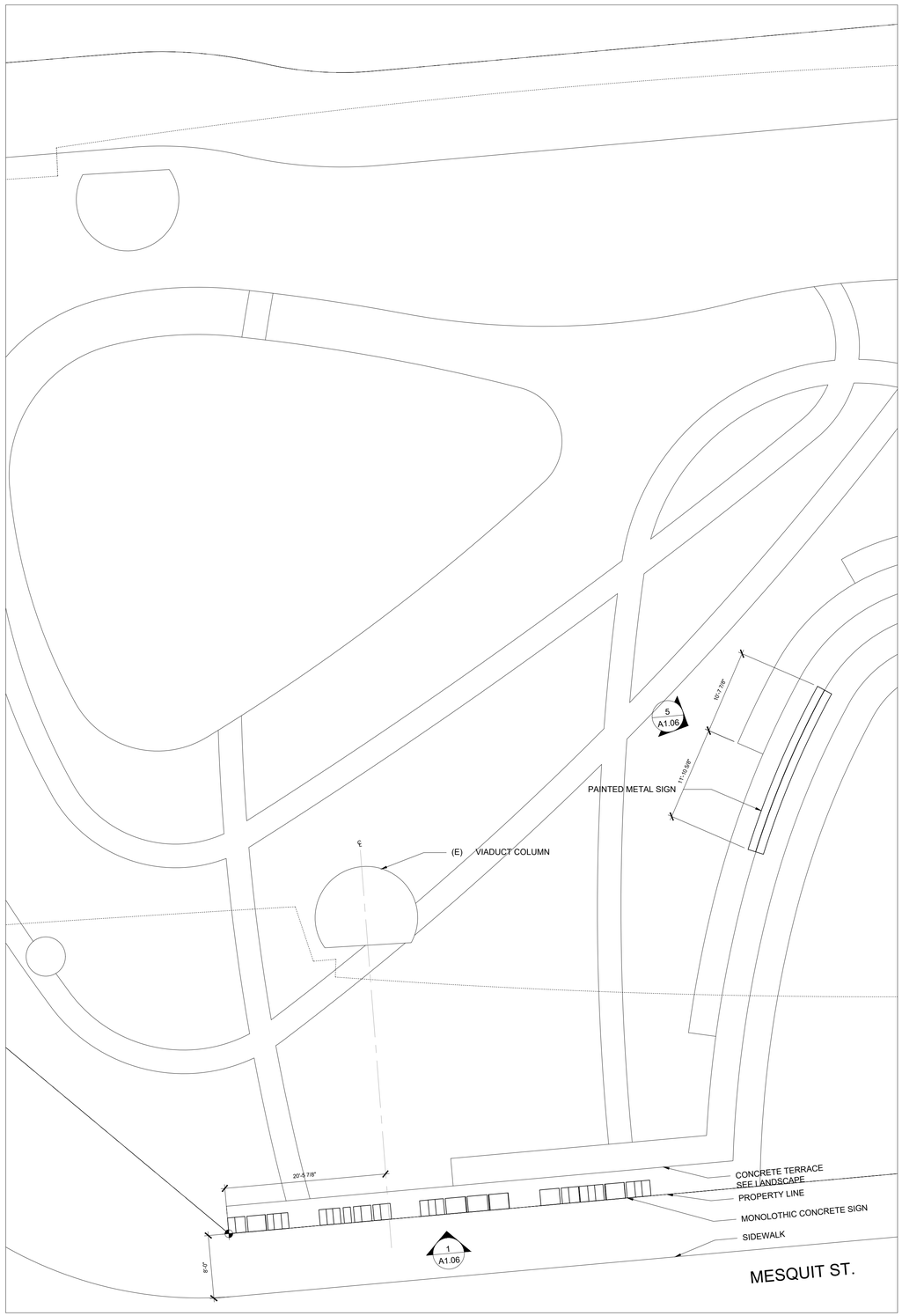

2 ARTS PLAZA SIGNAGE PLAN
-
Scale: 1/8"=1'-0"

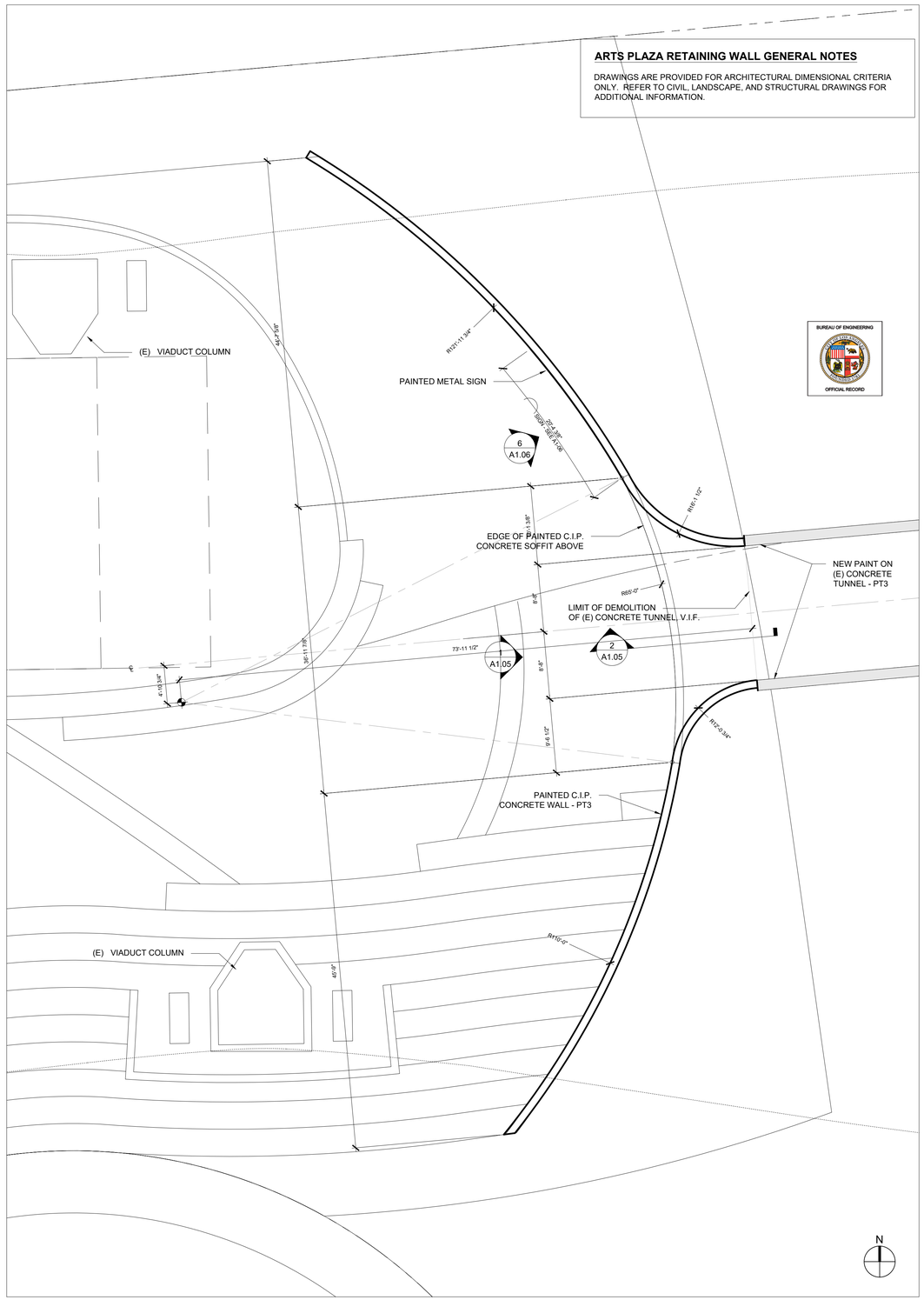

1 ARTS PLAZA RETAINING WALL PLAN
-
Scale: 1/8"=1'-0"

REVISION DATES (DESIGN STAGE ONLY)

Sheet Version 3.0

CITY OF LOS ANGELES DEPARTMENT OF PUBLIC WORKS
BUREAU OF ENGINEERING

ENGINEERING
CITY OF LOS ANGELES

NO.	REVISIONS:	DATE:	BY:
1			
2			
3			
4			

BUILDING NO.

INDEX NO. MF-300501

THIS PLAN WAS ELECTRONICALLY SIGNED AND STAMPED.

CITY ENGINEER
TED ALLEN, P.E.
DATE: 7/11/2022
DESIGN GROUP
LIC. NO. C-23729

ARCHITECT: MICHAEL MALTZAN
DESIGNED BY:
DRAWN BY:
CHECKED BY:
APPROVED BY:

PLANS PREPARED BY:
TETRA TECH, INC.
350 SOUTH GRAND AVENUE, SUITE 3310
LOS ANGELES, CALIFORNIA 90071
Phone: (213) 279-3283

MICHAEL MALTZAN ARCHITECTURE
2801 HYPERION AVENUE, STUDIO 107 | LOS ANGELES, CA 90027 | (323) 913 3098

VERT. CONTROL: LA CITY BM 12-04070 (1985 ADJ), NGVD 1929
HORIZ. CONTROL: NAD 83 (ZONE 5) COORDINATES

SHEET TITLE: ARTS PLAZA
RETAINING WALL & SIGNAGE

PROJECT: SIXTH STREET PARK, ARTS AND RIVER CONNECTIVITY IMPROVEMENTS (PARC)

ADDRESS: SIXTH STREET OVER THE LOS ANGELES RIVER

WORK ORDER NO. E700235D
FILE NO. --
DRAWING NO. A1-04
SHEET 206 OF 295 SHEETS

ARTS PLAZA RETAINING WALL GENERAL NOTES

DRAWINGS ARE PROVIDED FOR ARCHITECTURAL DIMENSIONAL CRITERIA ONLY. REFER TO CIVIL, LANDSCAPE, AND STRUCTURAL DRAWINGS FOR ADDITIONAL INFORMATION.

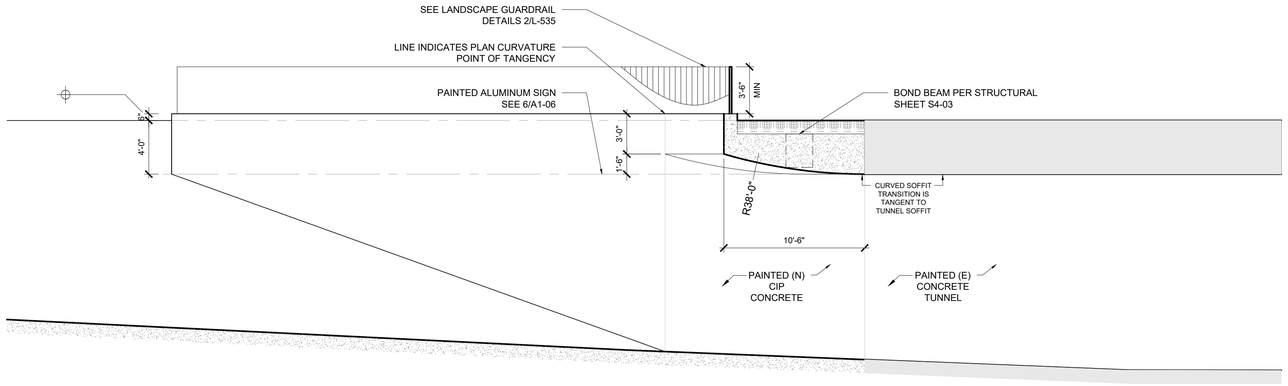

2 ARTS PLAZA RETAINING WALL SECTION
Scale: 1/8"=1'-0"

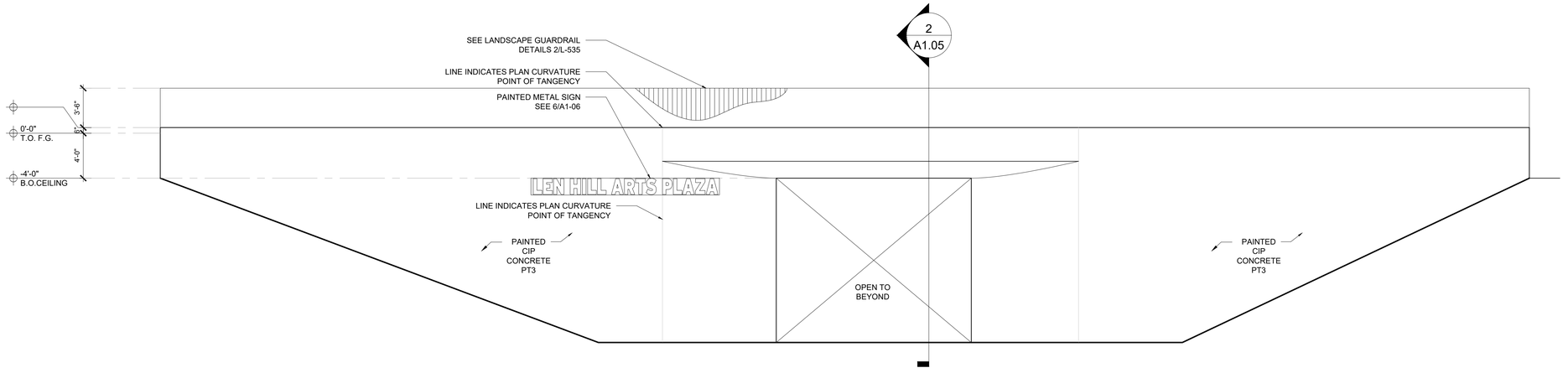

1 ARTS PLAZA RETAINING WALL ELEVATION
Scale: 1/8"=1'-0"

BUREAU OF ENGINEERING
OFFICIAL RECORD

MICHAEL MALTZAN ARCHITECTURE
2801 HYPERION AVENUE, STUDIO 107 | LOS ANGELES, CA 90027 | (323) 913 3098

PLANS PREPARED BY:
TETRA TECH, INC.
350 SOUTH GRAND AVENUE, SUITE 3310
LOS ANGELES, CALIFORNIA 90071
Phone: (213) 279-3283

CITY OF LOS ANGELES DEPARTMENT OF PUBLIC WORKS
BUREAU OF ENGINEERING

ENGINEERING
CITY OF LOS ANGELES

NO.	REVISIONS:	DATE:	BY:

BUILDING NO.

INDEX NO. MF-300501

THIS PLAN WAS ELECTRONICALLY SIGNED AND STAMPED.

CITY ENGINEER
TED ALLEN, P.E.
DESIGN GROUP
ARCHITECT: MICHAEL MALTZAN LIC.NO. C-23729 DATE: 7/11/2022
DESIGNED BY:
DRAWN BY:
CHECKED BY:
APPROVED BY:

VERT. CONTROL: LA CITY BM 12-04070 (1985 ADJ) NGVD 1929
HORIZ. CONTROL: NAD 83 (ZONE 5) COORDINATES

SHEET TITLE: ARTS PLAZA RETAINING WALL
PROJECT: SIXTH STREET PARK, ARTS AND RIVER CONNECTIVITY IMPROVEMENTS (PARC)
ADDRESS: SIXTH STREET OVER THE LOS ANGELES RIVER

WORK ORDER NO. E700235D
FILE NO. --
DRAWING NO. A1-05
SHEET 207 OF 295 SHEETS

REVISION DATES (DESIGN STAGE ONLY)

THE CITY OF LOS ANGELES OR ITS OFFICERS OR AGENTS SHALL NOT BE RESPONSIBLE FOR THE ACCURACY OR COMPLETENESS OF ELECTRONIC COPIES OF THIS PLAN SHEET.

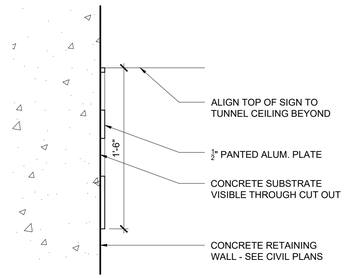

8 TUNNEL SIGN SECTION
- Scale: 1 1/2"=1'-0"

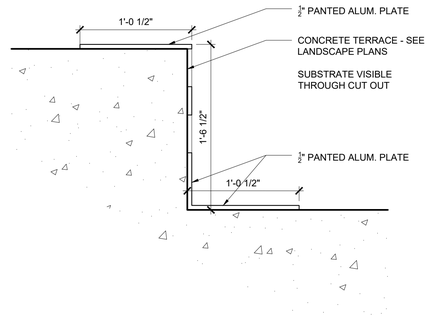

7 TERRACE SIGN SECTION
- Scale: 1 1/2"=1'-0"



6 TUNNEL SIGN UNROLLED ELEVATION
- Scale: 1/2"=1'-0"

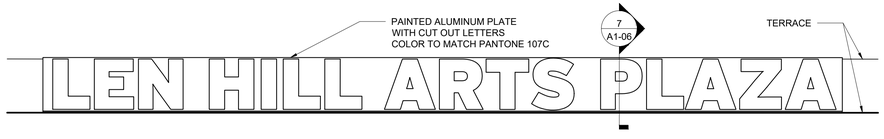

5 TERRACE SIGN UNROLLED ELEVATION
- Scale: 1/2"=1'-0"

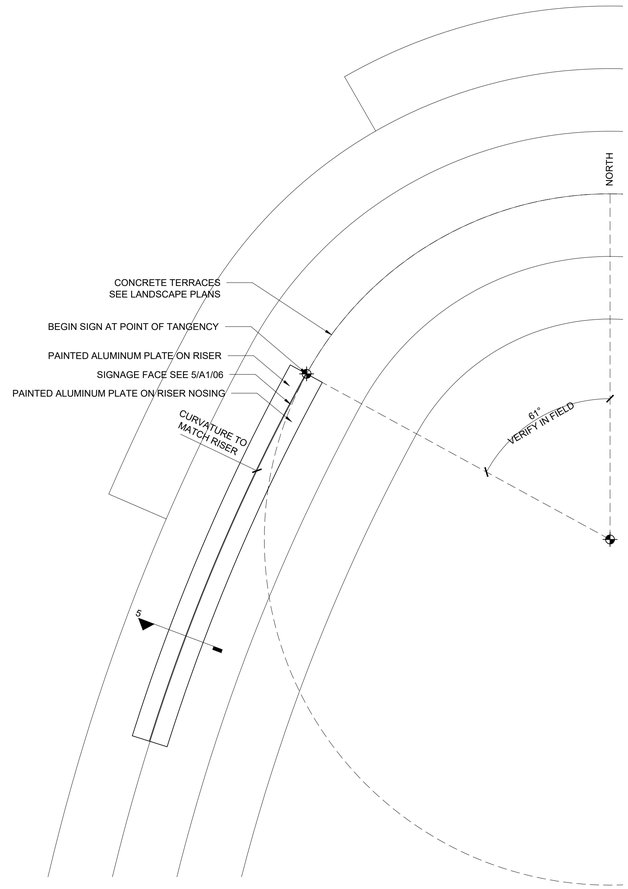

4 TERRACE SIGN PLAN
- Scale: 1/4"=1'-0"

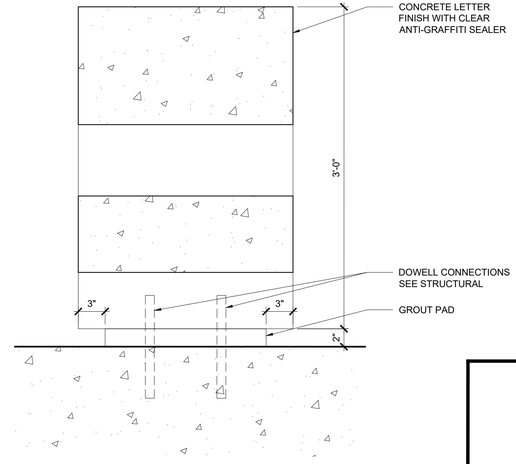

3 ARTS PLAZA SIGN SECTION
- Scale: 1 1/2"=1'-0"

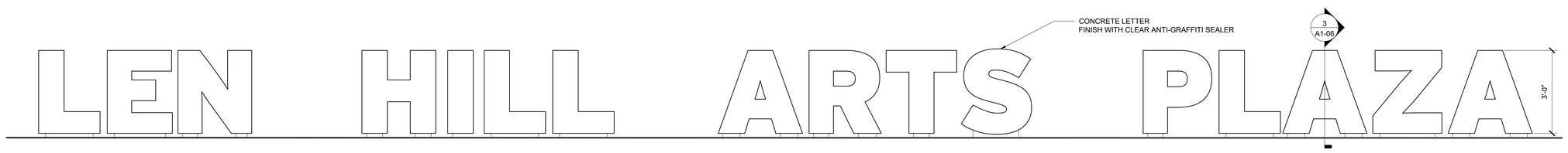

2 ARTS PLAZA SIGN ELEVATION
- Scale: 1/2"=1'-0"

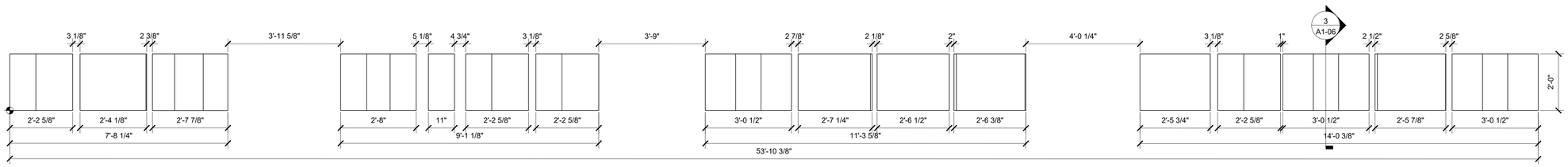

1 ARTS PLAZA SIGN PLAN
- Scale: 1/2"=1'-0"

THE CITY OF LOS ANGELES OR ITS OFFICERS OR AGENTS SHALL NOT BE RESPONSIBLE FOR THE ACCURACY OR COMPLETENESS OF ELECTRONIC COPIES OF THIS PLAN SHEET.

REVISION DATES (DESIGN STAGE ONLY)

BUREAU OF ENGINEERING
OFFICIAL RECORD

BUREAU OF ENGINEERING • CITY OF LOS ANGELES DEPARTMENT OF PUBLIC WORKS

ENGINEERING
CITY OF LOS ANGELES

NO.	REVISIONS:	DATE:	BY:

BUILDING NO.

INDEX NO. MF-300501

THIS PLAN WAS ELECTRONICALLY SIGNED AND STAMPED.

CITY ENGINEER
TED ALLEN, P.E.
DESIGN GROUP
DATE: 7/11/2022
LIC. NO. C-23729
ARCHITECT: MICHAEL MALTZAN
DESIGNED BY:
DRAWN BY:
CHECKED BY:
APPROVED BY:

PLANS PREPARED BY:
TETRA TECH, INC.
350 SOUTH GRAND AVENUE, SUITE 3310
LOS ANGELES, CALIFORNIA 90071
Phone: (213) 279-3283

MICHAEL MALTZAN ARCHITECTURE
2801 HYPERION AVENUE, STUDIO 107 | LOS ANGELES, CA 90027 | (323) 913 3098

CITY OF LOS ANGELES DEPARTMENT OF PUBLIC WORKS

VERT. CONTROL: LA CITY BM 12-04070 (1985 ADJ), NGVD 1929
HORIZ. CONTROL: NAD 83 (ZONE 5) COORDINATES

SHEET TITLE: ARTS PLAZA SIGNAGE

PROJECT: SIXTH STREET PARK, ARTS AND RIVER CONNECTIVITY IMPROVEMENTS (PARC)

ADDRESS: SIXTH STREET OVER THE LOS ANGELES RIVER

WORK ORDER NO. E700235D
FILE NO. --
DRAWING NO. A1-06
SHEET 208 OF 295 SHEETS

Sheet Version 3.0

THE CITY OF LOS ANGELES OR ITS OFFICERS OR AGENTS SHALL NOT BE RESPONSIBLE FOR THE ACCURACY OR COMPLETENESS OF ELECTRONIC COPIES OF THIS PLAN SHEET.

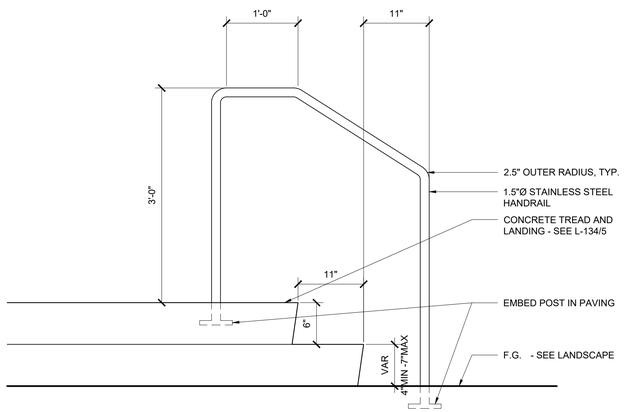

3 LANDING HANDRAIL
-
Scale: 1 1/2"=1'-0"

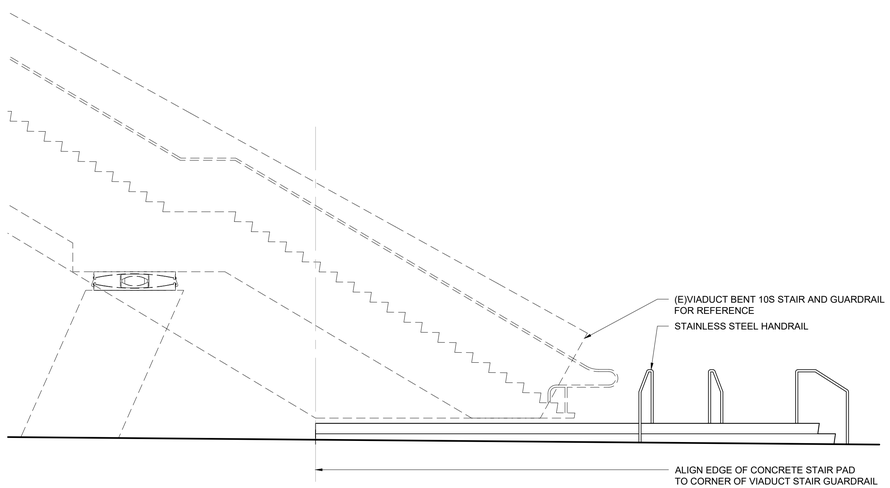

2 LANDING ELEVATION
-
Scale: 1/4"=1'-0"

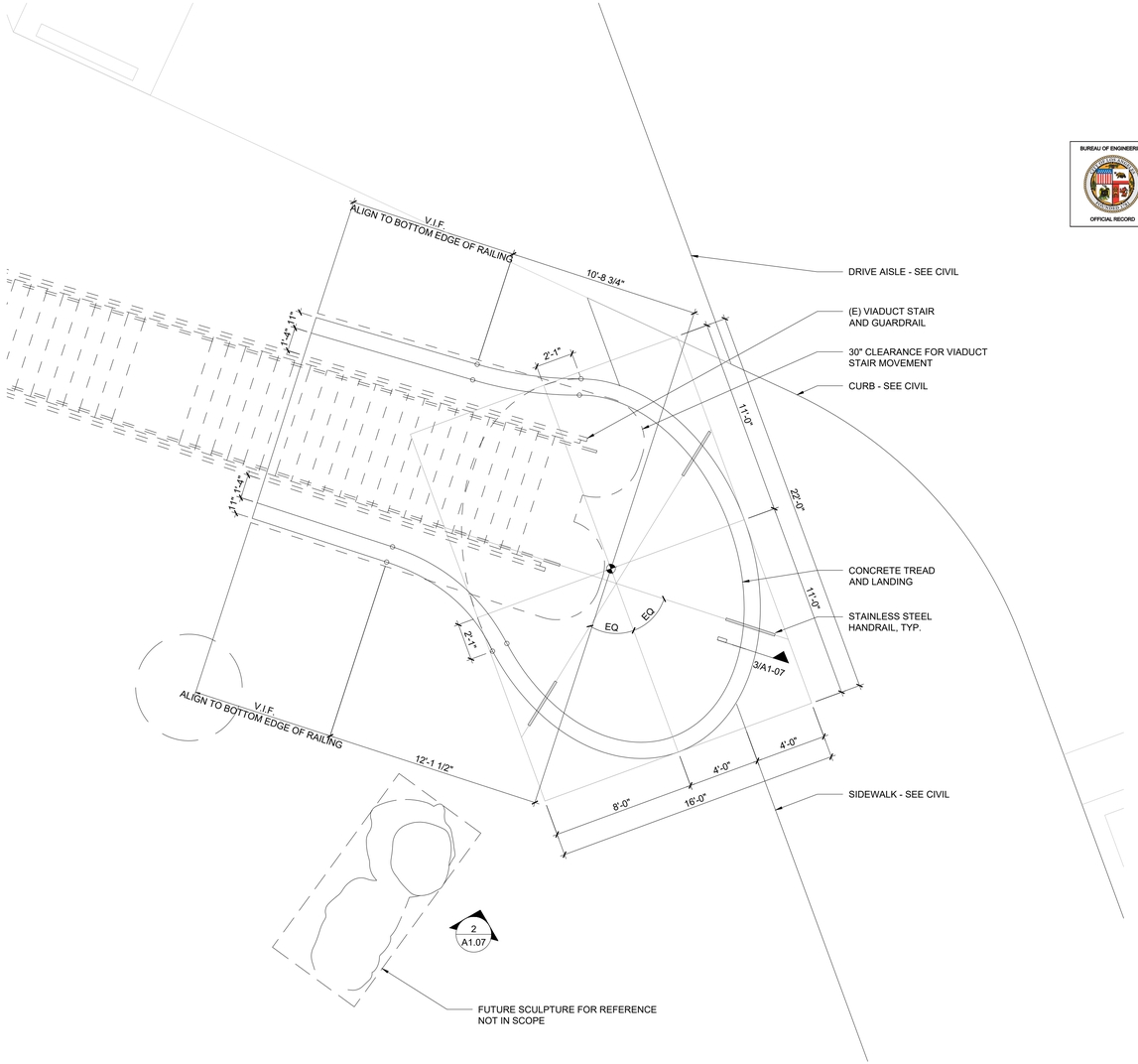

1 BENT 10S LANDING PLAN
-
Scale: 1/4"=1'-0"

BUREAU OF ENGINEERING
OFFICIAL RECORD

PLANS PREPARED BY:
TETRA TECH, INC.
350 SOUTH GRAND AVENUE, SUITE 3310
LOS ANGELES, CALIFORNIA 90071
Phone: (213) 279-3283

MICHAEL MALTZAN ARCHITECTURE
2801 HYPERION AVENUE, STUDIO 107 | LOS ANGELES, CA 90027 | (323) 913 3098

CITY OF LOS ANGELES DEPARTMENT OF PUBLIC WORKS
BUREAU OF ENGINEERING

THIS PLAN WAS ELECTRONICALLY SIGNED AND STAMPED.

ENGINEERING
CITY OF LOS ANGELES

NO.	REVISIONS:	DATE:	BY:

INDEX NO. MF-300501
BUILDING NO.

CITY ENGINEER
TED ALLEN, P.E.
DATE: 7/11/2022
DESIGN GROUP
ARCHITECT: MICHAEL MALTZAN LIC. NO. C-23729
DESIGNED BY:
DRAWN BY:
CHECKED BY:
APPROVED BY:

VERT. CONTROL: LA CITY BM 12-04070 (1985 ADJ); NGVD 1929
HORIZ. CONTROL: NAD 83 (ZONE 5) COORDINATES

SHEET TITLE: VIADUCT BENT 10S STAIR LANDING
PROJECT: SIXTH STREET PARK, ARTS AND RIVER CONNECTIVITY IMPROVEMENTS (PARC)
ADDRESS: SIXTH STREET OVER THE LOS ANGELES RIVER

WORK ORDER NO. E700235D
FILE NO. --
DRAWING NO. A1-07
SHEET 209 OF 295 SHEETS

REVISION DATES (DESIGN STAGE ONLY)

Sheet Version 3.0

REVISION DATES (DESIGN STAGE ONLY)

THE CITY OF LOS ANGELES OR ITS OFFICERS OR AGENTS SHALL NOT BE RESPONSIBLE FOR THE ACCURACY OR COMPLETENESS OF ELECTRONIC COPIES OF THIS PLAN SHEET.

Sheet Version 3.0

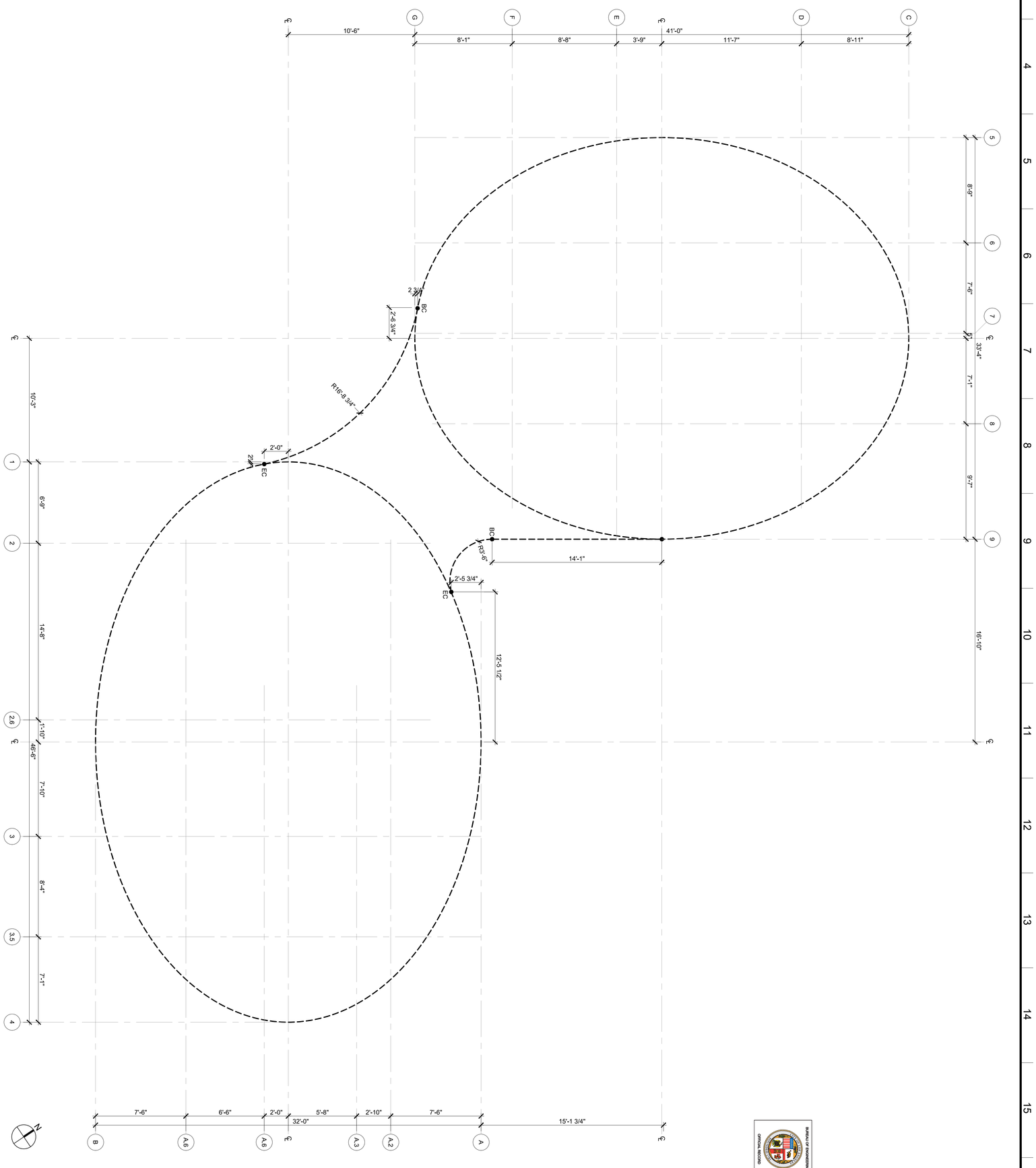

1 EAST BUILDING GEOMETRY PLAN

Scale: 1/4"=1'-0"

PLANS PREPARED BY:

TETRA TECH, INC.
350 SOUTH GRAND AVENUE, SUITE 3310
LOS ANGELES, CALIFORNIA 90071
Phone: (213) 279-3283

MICHAEL MALTZAN ARCHITECTURE
2801 HYPERION AVENUE, STUDIO 107 | LOS ANGELES, CA 90027 | (323) 913 3098

CITY OF LOS ANGELES — DEPARTMENT OF PUBLIC WORKS — BUREAU OF ENGINEERING

THIS PLAN WAS ELECTRONICALLY SIGNED AND STAMPED.

VERT. CONTROL:	LA CITY BM 12-04070 (1985 ADJ), NGVD 1929
HORIZ. CONTROL:	NAD 83 (ZONE 5) COORDINATES
SHEET TITLE:	EAST BUILDING GEOMETRY PLAN
PROJECT:	SIXTH STREET PARK, ARTS AND RIVER CONNECTIVITY IMPROVEMENTS (PARC)
ADDRESS:	SIXTH STREET OVER THE LOS ANGELES RIVER

TED ALLEN, P.E.	CITY ENGINEER	
DESIGN GROUP		DATE:
ARCHITECT: MICHAEL MALTZAN	LIC. NO. C-23729	7/11/2022
DESIGNED BY:		
DRAWN BY:		
CHECKED BY:		
APPROVED BY:		

DEAR
C-23
Exp.10/31/23
STATE OF CALIFORNIA

NO.	REVISIONS:	DATE:	BY:

INDEX NO. MF-300501

BUILDING NO.

ENGINEERING
CITY OF LOS ANGELES

WORK ORDER NO. E700235D

FILE NO. --

DRAWING NO. AE2-00

SHEET 210 OF 295 SHEETS

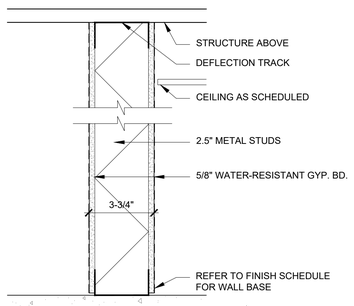

5 PARTITION TYPE 4

Scale: 1-1/2"=1'-0"

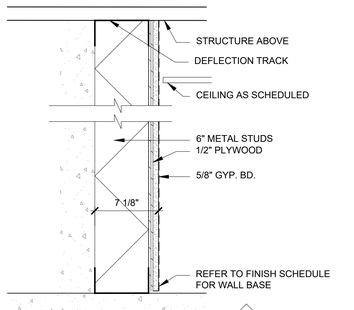

4 PARTITION TYPE 3

Scale: 1-1/2"=1'-0"

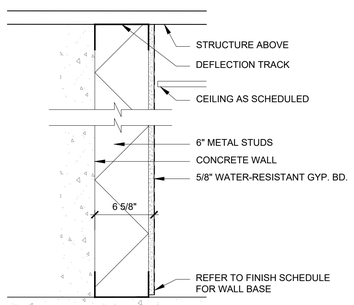

3 PARTITION TYPE 2

Scale: 1-1/2"=1'-0"

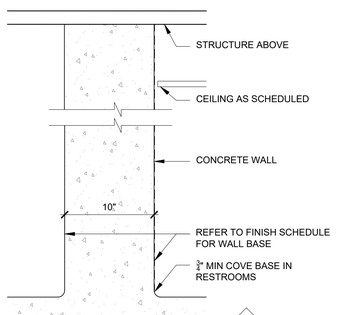

2 PARTITION TYPE 1

Scale: 1-1/2"=1'-0"

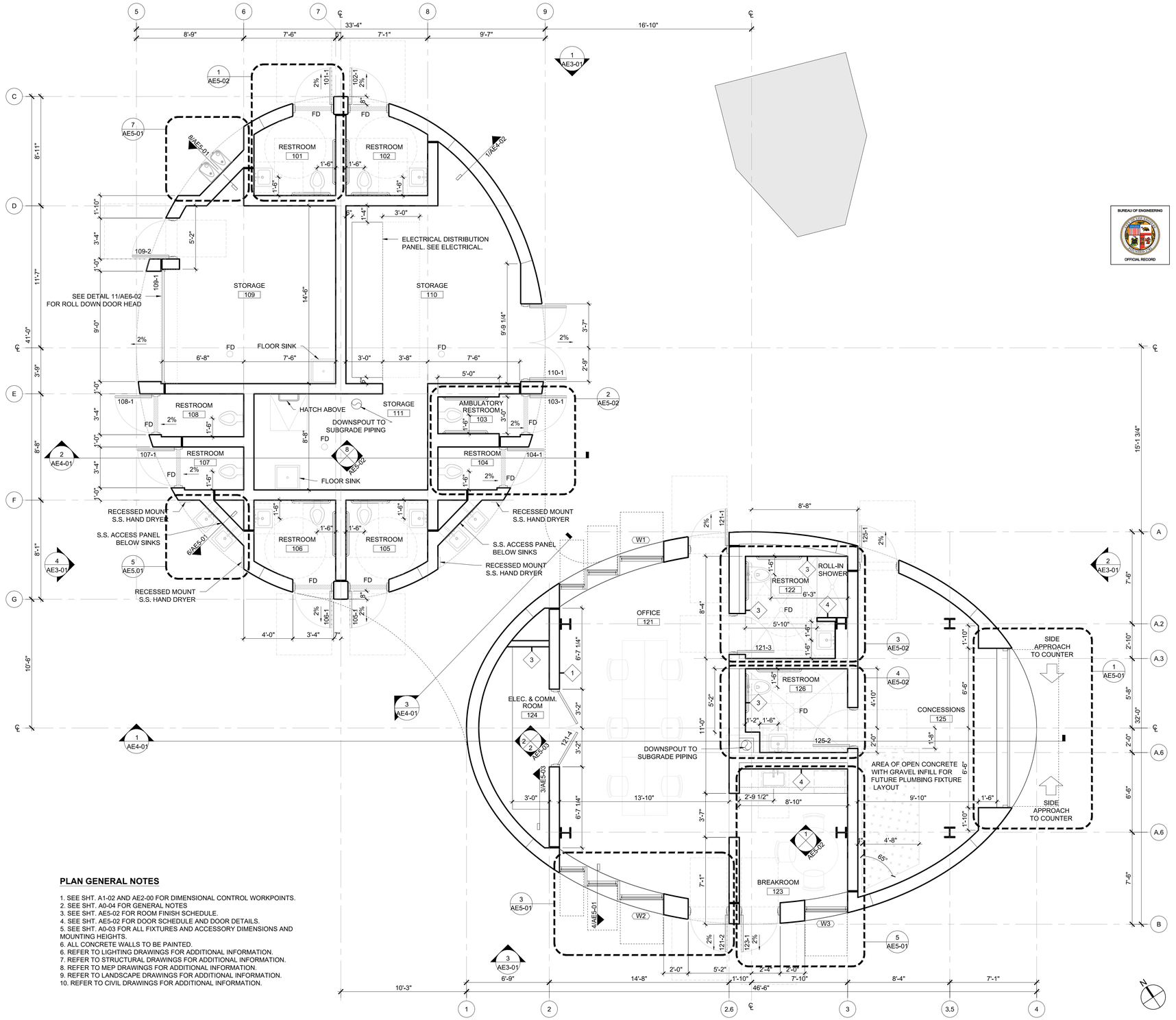

1 EAST BUILDING FLOOR PLAN

Scale: 1/4"=1'-0"

PLAN GENERAL NOTES

1. SEE SHT. A1-02 AND AE2-00 FOR DIMENSIONAL CONTROL WORKPOINTS.
2. SEE SHT. A0-04 FOR GENERAL NOTES
3. SEE SHT. AE5-02 FOR ROOM FINISH SCHEDULE.
4. SEE SHT. AE5-02 FOR DOOR SCHEDULE AND DOOR DETAILS.
5. SEE SHT. A0-03 FOR ALL FIXTURES AND ACCESSORY DIMENSIONS AND MOUNTING HEIGHTS.
6. ALL CONCRETE WALLS TO BE PAINTED.
6. REFER TO LIGHTING DRAWINGS FOR ADDITIONAL INFORMATION.
7. REFER TO STRUCTURAL DRAWINGS FOR ADDITIONAL INFORMATION.
8. REFER TO MEP DRAWINGS FOR ADDITIONAL INFORMATION.
9. REFER TO LANDSCAPE DRAWINGS FOR ADDITIONAL INFORMATION.
10. REFER TO CIVIL DRAWINGS FOR ADDITIONAL INFORMATION.

THE CITY OF LOS ANGELES OR ITS OFFICERS OR AGENTS SHALL NOT BE RESPONSIBLE FOR THE ACCURACY OR COMPLETENESS OF ELECTRONIC COPIES OF THIS PLAN SHEET.

REVISION DATES (DESIGN STAGE ONLY)

BUREAU OF ENGINEERING
OFFICIAL RECORD

MICHAEL MALTZAN ARCHITECTURE
2801 HYPERION AVENUE, STUDIO 107 | LOS ANGELES, CA 90027 | (323) 913 3098

PLANS PREPARED BY:
TETRA TECH, INC.
350 SOUTH GRAND AVENUE, SUITE 3310
LOS ANGELES, CALIFORNIA 90071
Phone: (213) 279-3283

CITY OF LOS ANGELES DEPARTMENT OF PUBLIC WORKS
BUREAU OF ENGINEERING

ENGINEERING
CITY OF LOS ANGELES

THIS PLAN WAS ELECTRONICALLY SIGNED AND STAMPED.

NO.	REVISIONS:	DATE:	BY:

BUILDING NO.

INDEX NO. MF-300501

CITY ENGINEER
TED ALLEN, P.E.
DATE: 7/11/2022
DESIGN GROUP
LIC. NO. C-23729

ARCHITECT: MICHAEL MALTZAN
DESIGNED BY:
DRAWN BY:
CHECKED BY:
APPROVED BY:

VERT. CONTROL: LA CITY BM 12-04070 (1985 ADJ), NGVD 1929
HORIZ. CONTROL: NAD 83 (ZONE 5) COORDINATES

SHEET TITLE: EAST BUILDING PLAN

PROJECT: SIXTH STREET PARK, ARTS AND RIVER CONNECTIVITY IMPROVEMENTS (PARC)

ADDRESS: SIXTH STREET OVER THE LOS ANGELES RIVER

WORK ORDER NO. E700235D
FILE NO. --
DRAWING NO. AE2-01
SHEET 211 OF 295 SHEETS

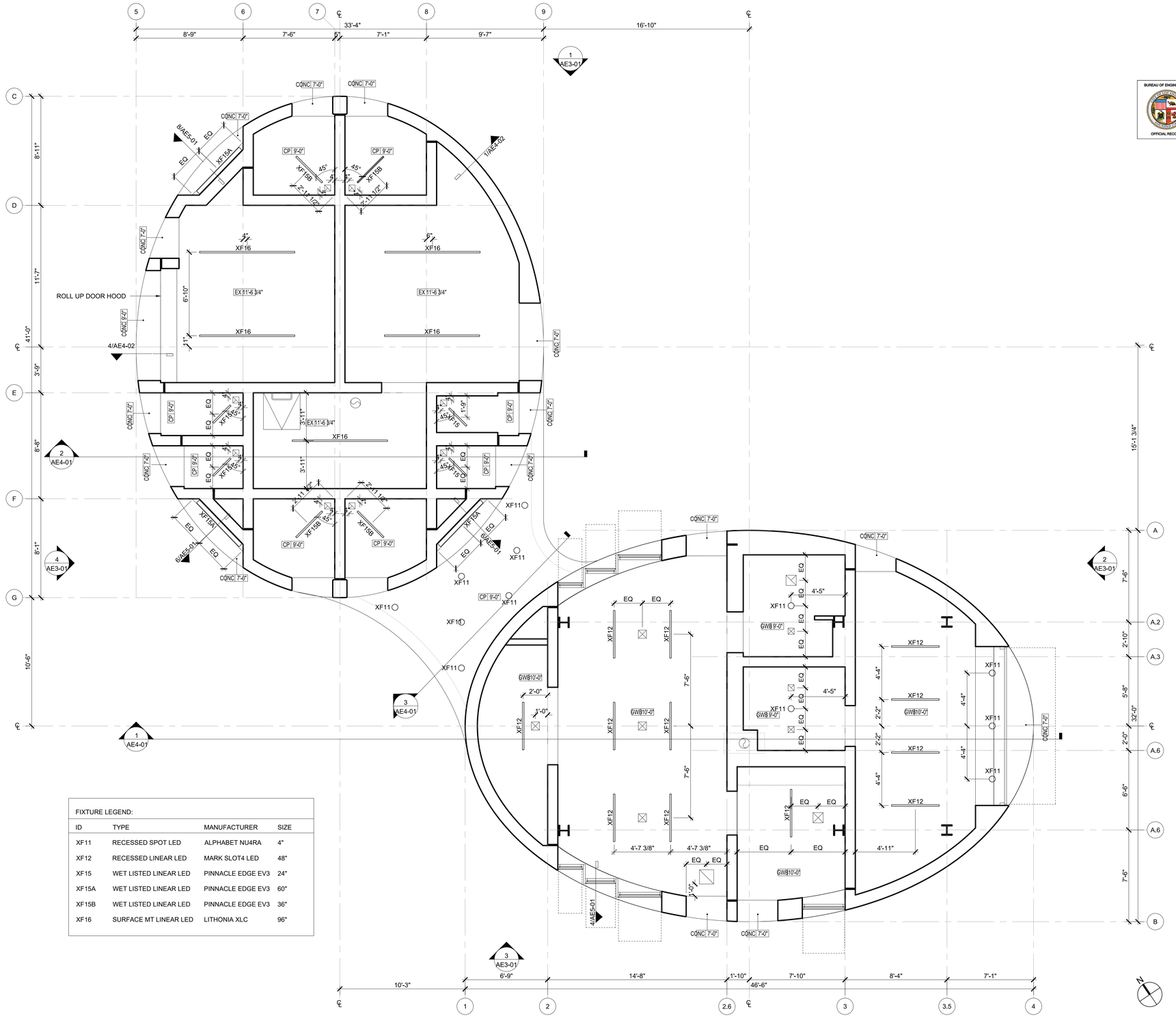

FIXTURE LEGEND:			
ID	TYPE	MANUFACTURER	SIZE
XF11	RECESSED SPOT LED	ALPHABET NU4RA	4"
XF12	RECESSED LINEAR LED	MARK SLOT4 LED	48"
XF15	WET LISTED LINEAR LED	PINNACLE EDGE EV3	24"
XF15A	WET LISTED LINEAR LED	PINNACLE EDGE EV3	60"
XF15B	WET LISTED LINEAR LED	PINNACLE EDGE EV3	36"
XF16	SURFACE MT LINEAR LED	LITHONIA XLC	96"

1 EAST BUILDING REFLECTED CEILING PLAN
Scale: 1/4"=1'-0"

BUREAU OF ENGINEERING
OFFICIAL RECORD

ENGINEERING
CITY OF LOS ANGELES

BUREAU OF ENGINEERING

NO.	REVISIONS:	DATE:	BY:

BUILDING NO.

INDEX NO. MF-300501

THIS PLAN WAS ELECTRONICALLY SIGNED AND STAMPED.

CITY OF LOS ANGELES DEPARTMENT OF PUBLIC WORKS

CITY ENGINEER
TED ALLEN, P.E.
DATE: 7/11/2022
LIC. NO. C-23729

DESIGN GROUP
ARCHITECT: MICHAEL MALTZAN
DESIGNED BY:
DRAWN BY:
CHECKED BY:
APPROVED BY:

PLANS PREPARED BY:
TETRA TECH, INC.
350 SOUTH GRAND AVENUE, SUITE 3310
LOS ANGELES, CALIFORNIA 90071
Phone: (213) 279-3283

MICHAEL MALTZAN ARCHITECTURE
2801 HYPERION AVENUE, STUDIO 107 | LOS ANGELES, CA 90027 | (323) 913 3098

VERT. CONTROL: LA CITY BM 12-04070 (1985 ADJ), NGVD 1929
HORIZ. CONTROL: NAD 83 (ZONE 5) COORDINATES

SHEET TITLE: EAST BUILDING ROOF PLAN

PROJECT: SIXTH STREET PARK, ARTS AND RIVER CONNECTIVITY IMPROVEMENTS (PARC)

ADDRESS: SIXTH STREET OVER THE LOS ANGELES RIVER

WORK ORDER NO. E700235D
FILE NO. --
DRAWING NO. AE2-02
SHEET 212 OF 295 SHEETS

REVISION DATES (DESIGN STAGE ONLY)

THE CITY OF LOS ANGELES OR ITS OFFICERS OR AGENTS SHALL NOT BE RESPONSIBLE FOR THE ACCURACY OR COMPLETENESS OF ELECTRONIC COPIES OF THIS PLAN SHEET.

Sheet Version 3.0

REVISION DATES (DESIGN STAGE ONLY)												

THE CITY OF LOS ANGELES OR ITS OFFICERS OR AGENTS SHALL NOT BE RESPONSIBLE FOR THE ACCURACY OR COMPLETENESS OF ELECTRONIC COPIES OF THIS PLAN SHEET.

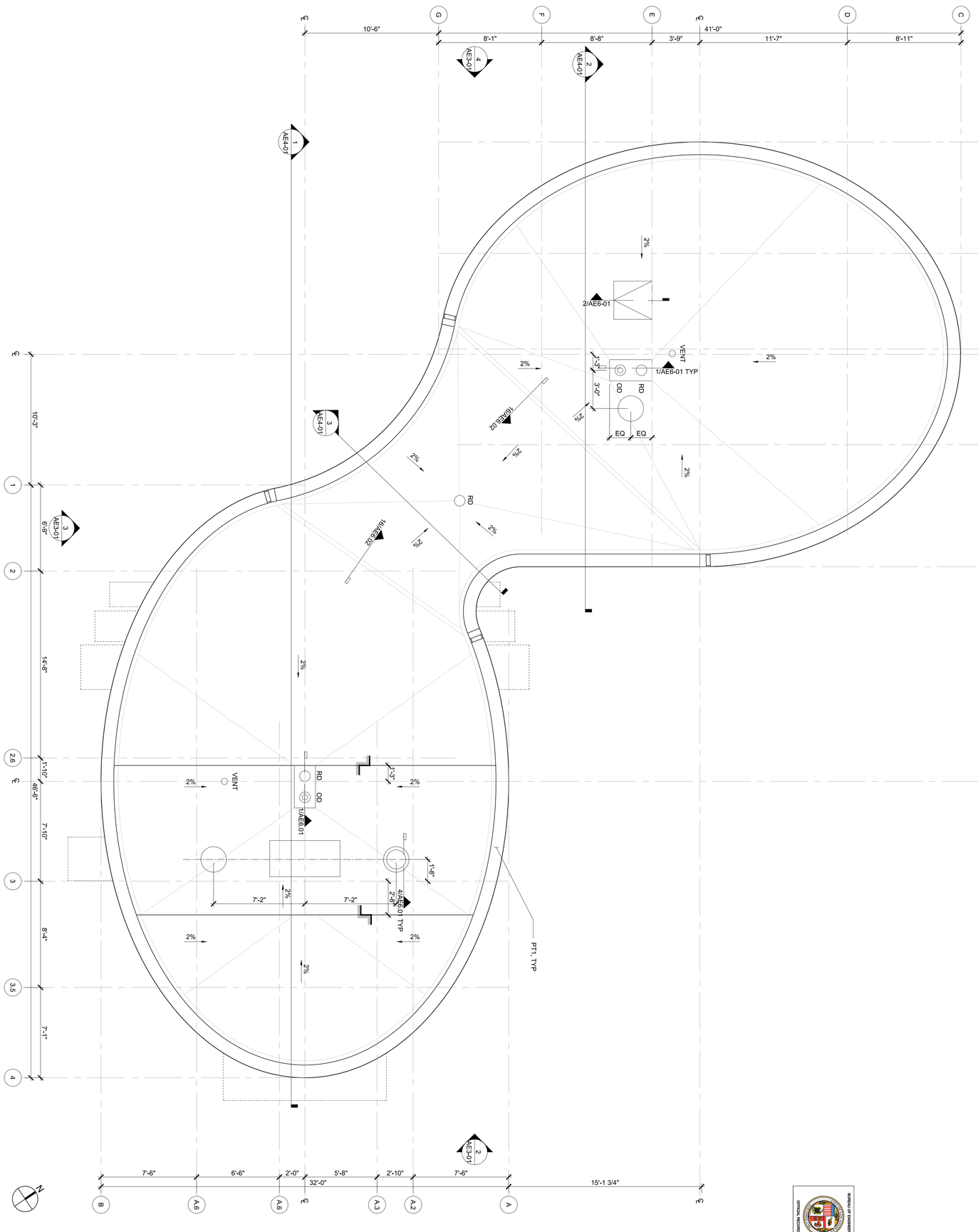

1 EAST BUILDING ROOF PLAN
Scale: 1/4"=1'-0"

PLANS PREPARED BY:

TETRA TECH, INC.
350 SOUTH GRAND AVENUE, SUITE 3310
LOS ANGELES, CALIFORNIA 90071
Phone: (213) 279-3283

MICHAEL MALTZAN ARCHITECTURE
2801 HYPERION AVENUE, STUDIO 107 | LOS ANGELES, CA 90027 | (323) 913 3098

CITY OF LOS ANGELES • DEPARTMENT OF PUBLIC WORKS • BUREAU OF ENGINEERING

THIS PLAN WAS ELECTRONICALLY SIGNED AND STAMPED.

SHEET 213 OF 295 SHEETS
DRAWING NO. AE2-03
FILE NO. —
WORK ORDER NO. E702350

VERT. CONTROL: LA CITY BM 12-04070 (1985 ADJ), NGVD 1929
HORIZ. CONTROL: NAD 83 (ZONE 5) COORDINATES

SHEET TITLE: EAST BUILDING ROOF PLAN
PROJECT: SIXTH STREET PARK, ARTS AND RIVER CONNECTIVITY IMPROVEMENTS (PARC)
ADDRESS: SIXTH STREET OVER THE LOS ANGELES RIVER

TED ALLEN, P.E. CITY ENGINEER

DESIGN GROUP	DATE:
ARCHITECT: MICHAEL MALTZAN LIC. NO. C-23729	7/11/2022
DESIGNED BY:	
DRAWN BY:	
CHECKED BY:	
APPROVED BY:	

DAVID C. DIAS No. C-23729 Exp.10/31/23 STATE OF CALIFORNIA

NO.	REVISIONS:	DATE:	BY:

INDEX NO. MF-300501

BUILDING NO.

ENGINEERING
CITY OF LOS ANGELES

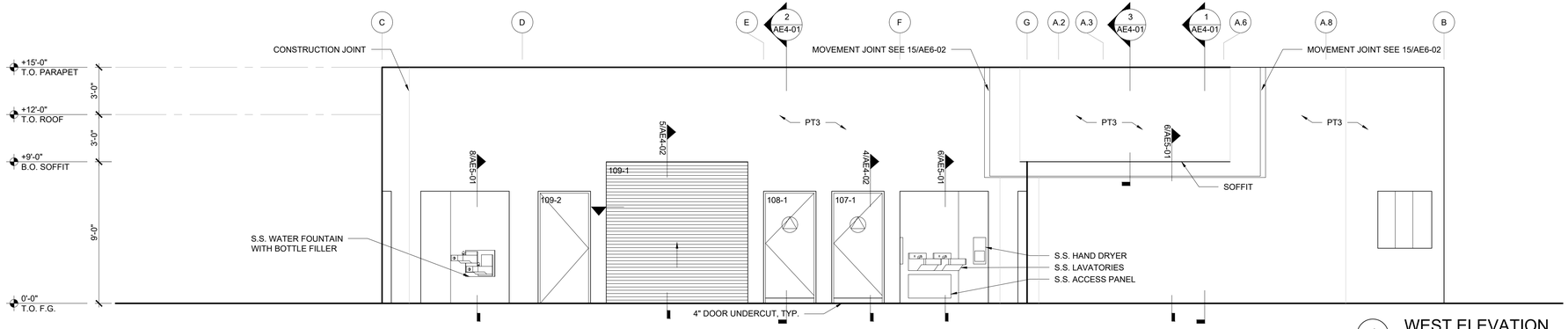

4 WEST ELEVATION
Scale: 1/4"=1'-0"

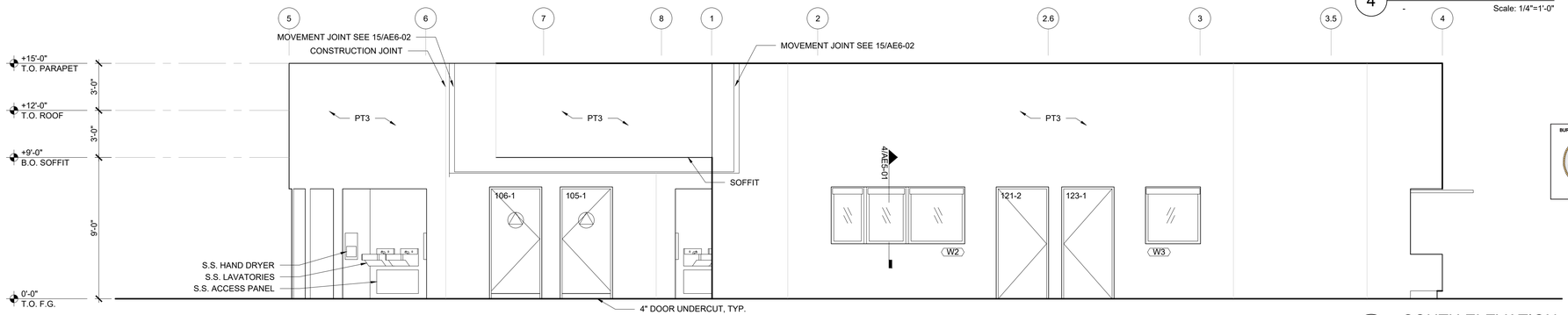

3 SOUTH ELEVATION
Scale: 1/4"=1'-0"

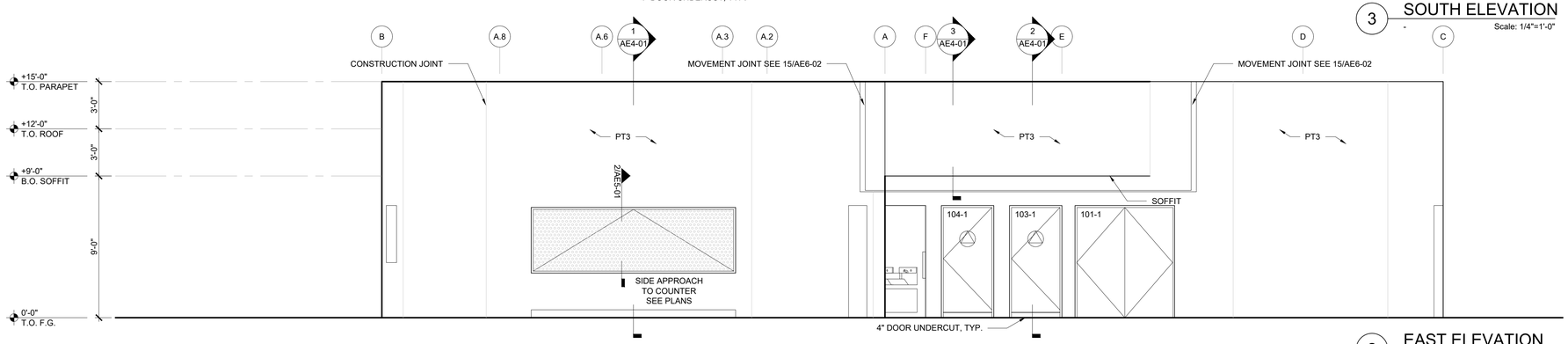

2 EAST ELEVATION
Scale: 1/4"=1'-0"

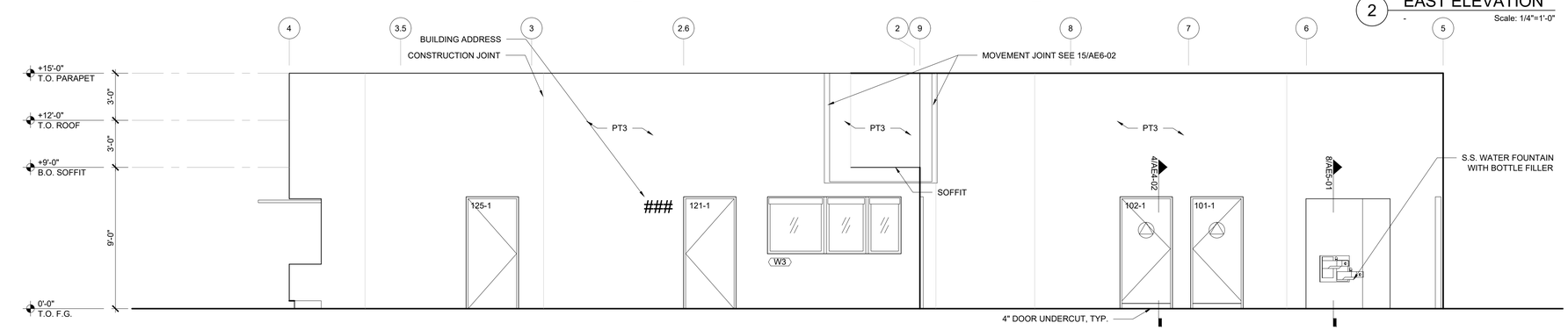

1 NORTH ELEVATION
Scale: 1/4"=1'-0"

THE CITY OF LOS ANGELES OR ITS OFFICERS OR AGENTS SHALL NOT BE RESPONSIBLE FOR THE ACCURACY OR COMPLETENESS OF ELECTRONIC COPIES OF THIS PLAN SHEET.

REVISION DATES (DESIGN STAGE ONLY)

Sheet Version 3.0

BUREAU OF ENGINEERING
OFFICIAL RECORD

THIS PLAN WAS ELECTRONICALLY SIGNED AND STAMPED.

MICHAEL MALTZAN ARCHITECTURE
2801 HYPERION AVENUE, STUDIO 107 | LOS ANGELES, CA 90027 | (323) 913 3098

TETRA TECH, INC.
350 SOUTH GRAND AVENUE, SUITE 3310
LOS ANGELES, CALIFORNIA 90071
Phone: (213) 279-3283

PLANS PREPARED BY:

CITY OF LOS ANGELES DEPARTMENT OF PUBLIC WORKS
BUREAU OF ENGINEERING

ENGINEERING
CITY OF LOS ANGELES

NO.	REVISIONS:	DATE:	BY:

BUILDING NO.

INDEX NO. MF-300501

VERT. CONTROL: LA CITY BM 12-04070 (1985 ADJ.) NGVD 1929
HORIZ. CONTROL: NAD 83 (ZONE 5) COORDINATES

SHEET TITLE: EAST BUILDING ELEVATIONS

PROJECT: SIXTH STREET PARK, ARTS AND RIVER CONNECTIVITY IMPROVEMENTS (PARC)

ADDRESS: SIXTH STREET OVER THE LOS ANGELES RIVER

CITY ENGINEER
TED ALLEN, P.E.
DESIGN GROUP
LIC. NO. C-23729
DATE: 7/11/2022

ARCHITECT: MICHAEL MALTZAN
DESIGNED BY:
DRAWN BY:
CHECKED BY:
APPROVED BY:

WORK ORDER NO. E700235D
FILE NO. --
DRAWING NO. AE3-01
SHEET 214 OF 295 SHEETS

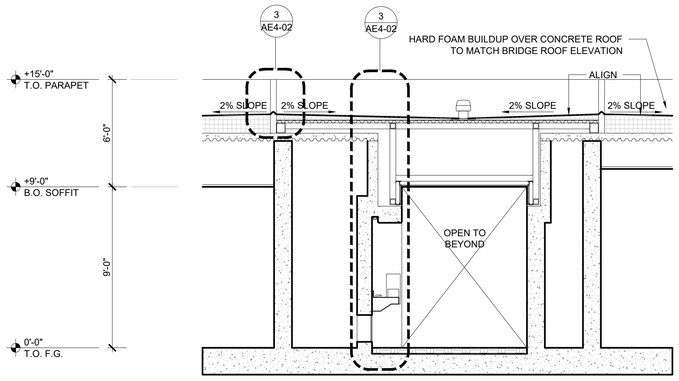

4 LONGITUDINAL SECTION THROUGH BRIDGE
Scale: 1/4"=1'-0"

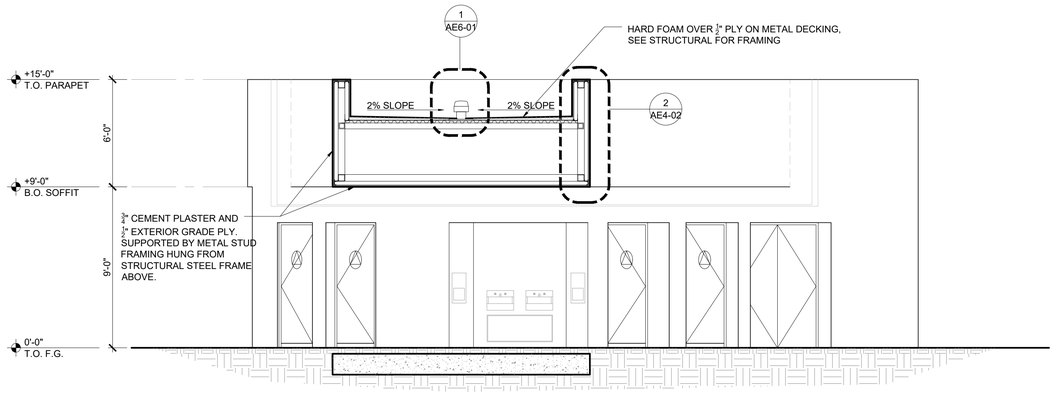

3 TRANSVERSE SECTION THROUGH BRIDGE
Scale: 1/4"=1'-0"

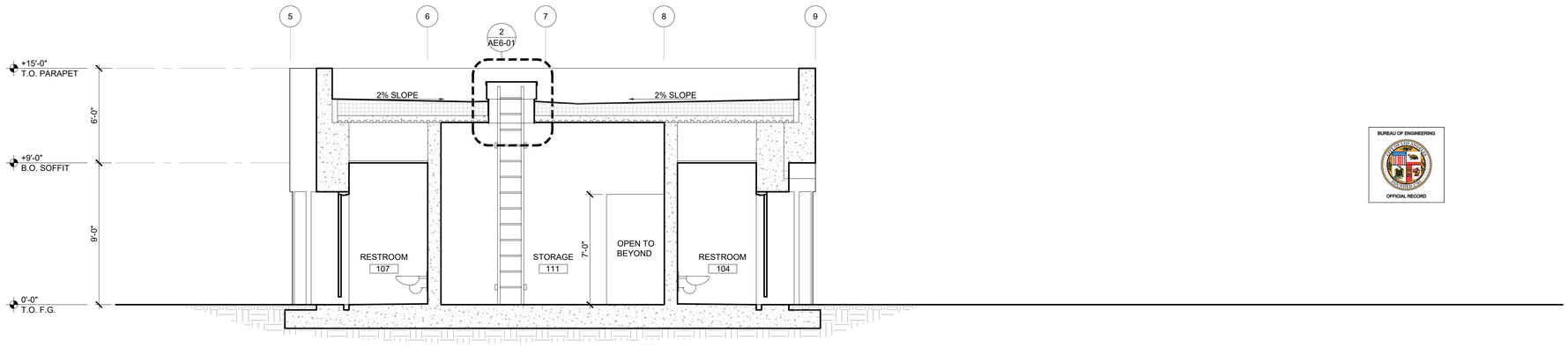

2 TRANSVERSE SECTION THROUGH RESTROOM
Scale: 1/4"=1'-0"

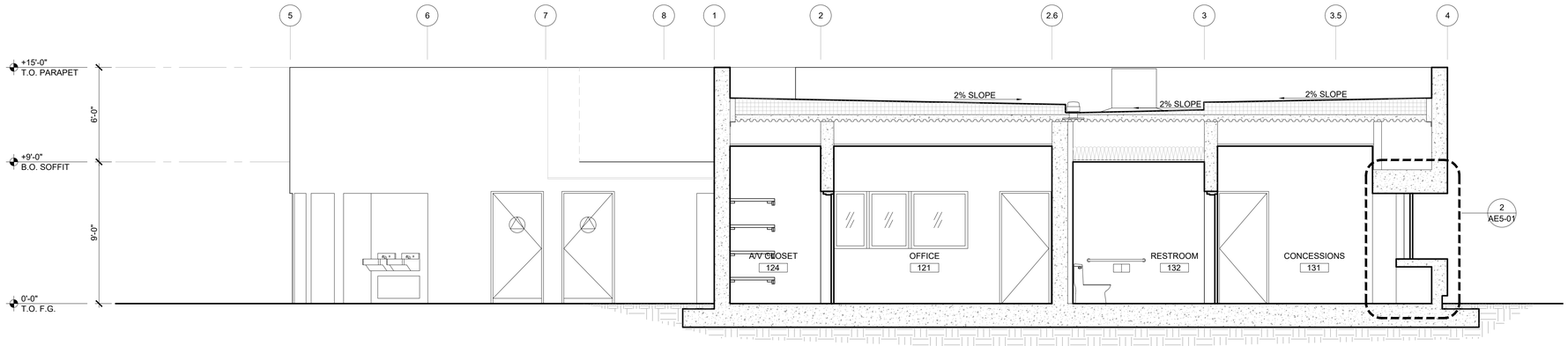

1 LONG SECTION THROUGH OFFICE
Scale: 1/4"=1'-0"

BUREAU OF ENGINEERING
OFFICIAL RECORD

MICHAEL MALTZAN ARCHITECTURE
2801 HYPERION AVENUE, STUDIO 107 | LOS ANGELES, CA 90027 | (323) 913 3098

PLANS PREPARED BY:
TETRA TECH, INC.
350 SOUTH GRAND AVENUE, SUITE 3310
LOS ANGELES, CALIFORNIA 90071
Phone: (213) 279-3283

CITY OF LOS ANGELES DEPARTMENT OF PUBLIC WORKS
BUREAU OF ENGINEERING

ENGINEERING
CITY OF LOS ANGELES

NO. REVISIONS: DATE: BY:

BUILDING NO.

INDEX NO. MF-300501

THIS PLAN WAS ELECTRONICALLY SIGNED AND STAMPED

CITY ENGINEER
TED ALLEN, P.E.
DATE: 7/11/2022
DESIGN GROUP
ARCHITECT: MICHAEL MALTZAN LIC. NO. C-23729
DESIGNED BY:
DRAWN BY:
CHECKED BY:
APPROVED BY:

VERT. CONTROL: LA CITY BM 12-04070 (1985 ADJ.) NGVD 1929
HORIZ. CONTROL: NAD 83 (ZONE 5) COORDINATES

SHEET TITLE: EAST BUILDING SECTIONS

PROJECT: SIXTH STREET PARK, ARTS AND RIVER CONNECTIVITY IMPROVEMENTS (PARC)

ADDRESS: SIXTH STREET OVER THE LOS ANGELES RIVER

WORK ORDER NO. E700235D
FILE NO. --
DRAWING NO. AE4-01
SHEET 215 OF 295 SHEETS

THE CITY OF LOS ANGELES OR ITS OFFICERS OR AGENTS SHALL NOT BE RESPONSIBLE FOR THE ACCURACY OR COMPLETENESS OF ELECTRONIC COPIES OF THIS PLAN SHEET.

REVISION DATES (DESIGN STAGE ONLY)

Sheet Version 3.0

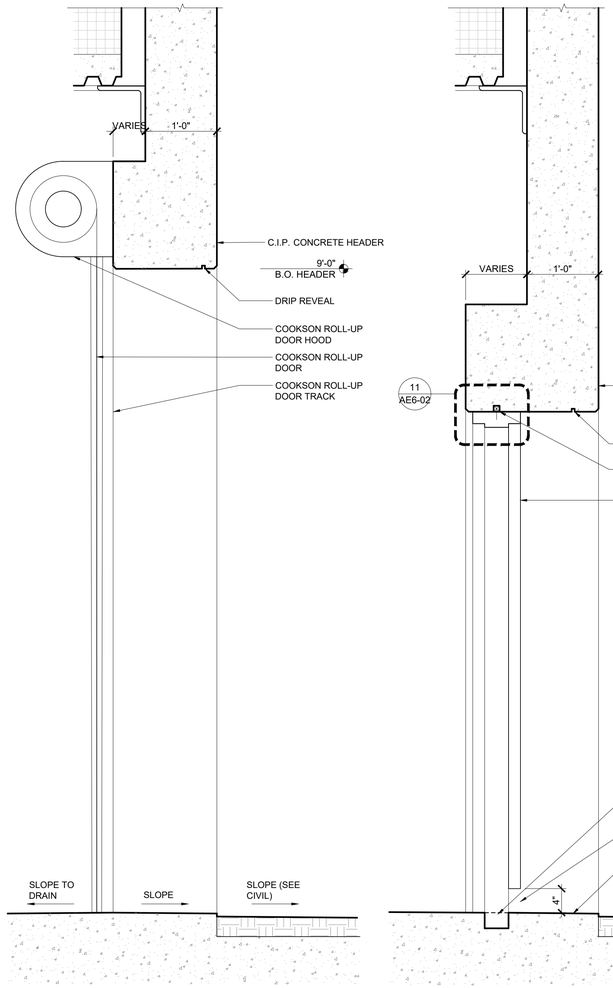

5 SECTION @ ROLL-UP DOOR
- Scale: 1"=1'-0"

4 SECTION @ RESTROOM DOOR
- Scale: 1"=1'-0"

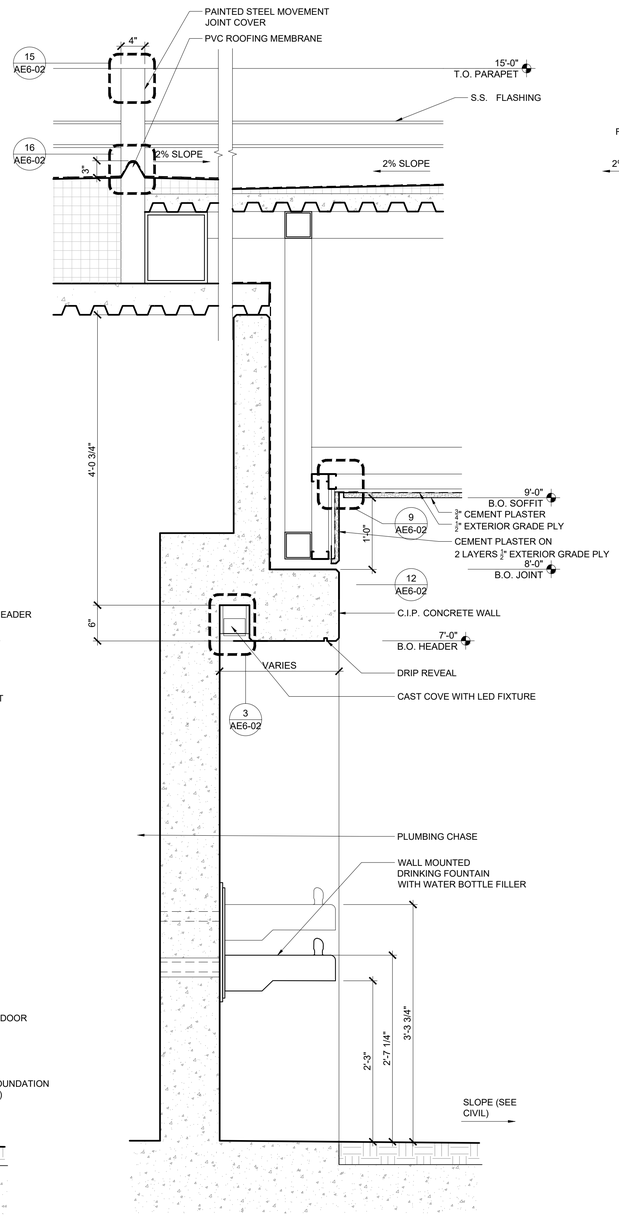

3 WALL SECTION AT BRIDGE/SINKS
- Scale: 1"=1'-0"

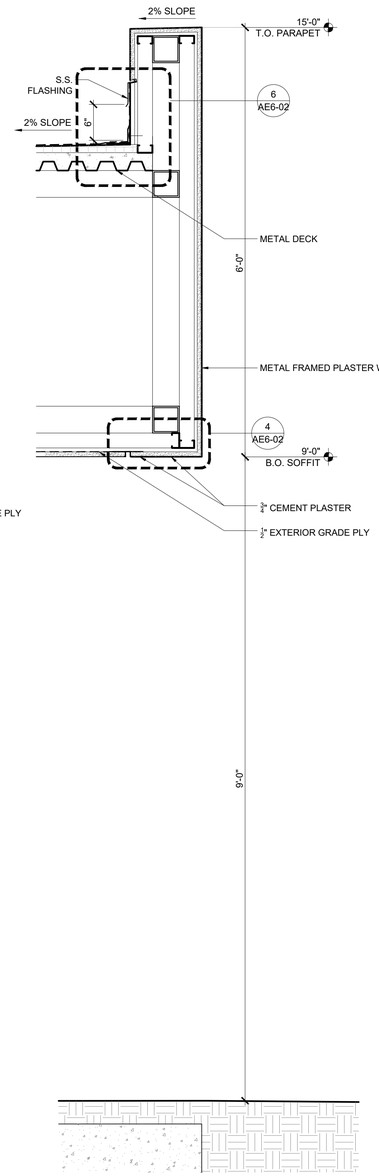

2 BRIDGE PARAPET
- Scale: 1"=1'-0"

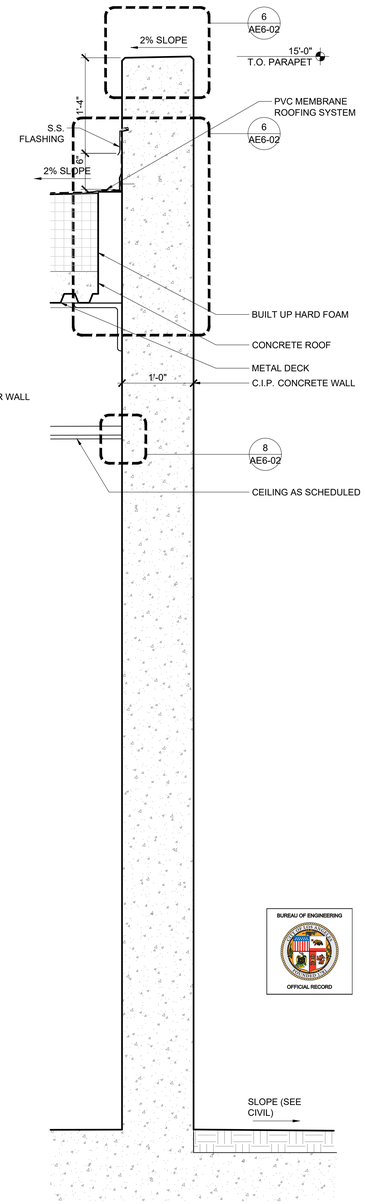

1 TYPICAL WALL SECTION
- Scale: 1"=1'-0"

THE CITY OF LOS ANGELES OR ITS OFFICERS OR AGENTS SHALL NOT BE RESPONSIBLE FOR THE ACCURACY OR COMPLETENESS OF ELECTRONIC COPIES OF THIS PLAN SHEET.

REVISION DATES
(DESIGN STAGE ONLY)

Sheet Version 3.0

BUREAU OF ENGINEERING

ENGINEERING
CITY OF LOS ANGELES

NO. REVISIONS: DATE: BY:

BUILDING NO.

INDEX NO. MF-300501

THIS PLAN WAS ELECTRONICALLY SIGNED AND STAMPED.

CITY OF LOS ANGELES DEPARTMENT OF PUBLIC WORKS

CITY ENGINEER
TED ALLEN, P.E.
DATE: 7/11/2022
LIC. NO. C-29729

DESIGN GROUP
ARCHITECT: MICHAEL MALTZAN
DESIGNED BY:
DRAWN BY:
CHECKED BY:
APPROVED BY:

PLANS PREPARED BY:
TETRA TECH, INC.
350 SOUTH GRAND AVENUE, SUITE 3310
LOS ANGELES, CALIFORNIA 90071
Phone: (213) 279-3283

MICHAEL MALTZAN ARCHITECTURE
2801 HYPERION AVENUE, STUDIO 107 | LOS ANGELES, CA 90027 | (323) 913 3098

VERT. CONTROL: LA CITY BM 12-04070 (1985 ADJ), NGVD 1929
HORIZ. CONTROL: NAD 83 (ZONE 5) COORDINATES

SHEET TITLE: EAST BUILDING WALL SECTIONS

PROJECT: SIXTH STREET PARK, ARTS AND RIVER CONNECTIVITY IMPROVEMENTS (PARC)

ADDRESS: SIXTH STREET OVER THE LOS ANGELES RIVER

BUREAU OF ENGINEERING
OFFICIAL RECORD

WORK ORDER NO. E700235D
FILE NO. --
DRAWING NO. AE4-02
SHEET 216 OF 295 SHEETS

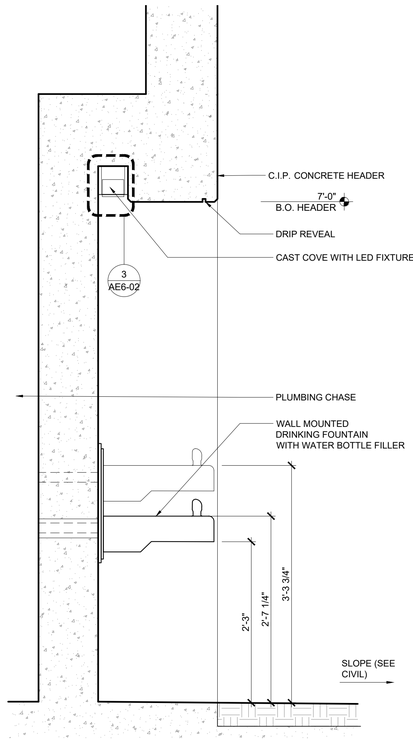

8 DRINKING FOUNTAIN SECTION
4 Scale: 1"=1'-0"

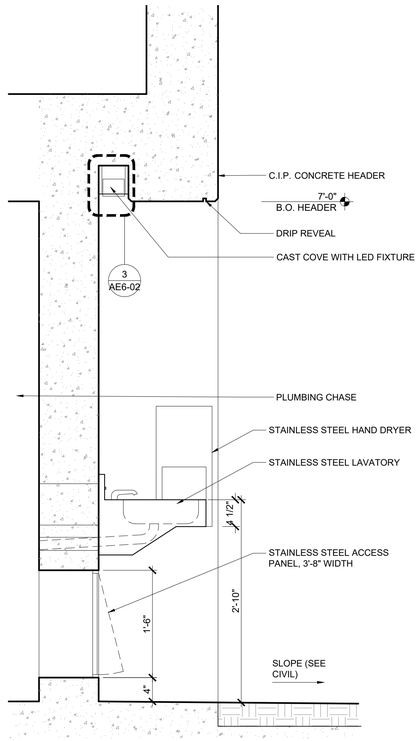

6 OUTDOOR SINK SECTION
- Scale: 1"=1'-0"

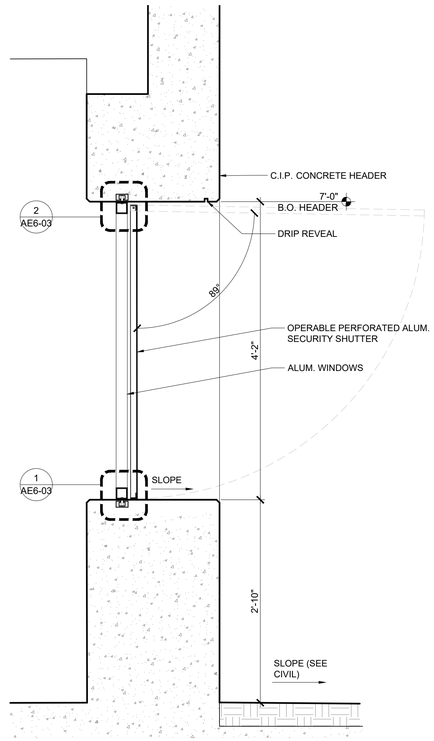

4 OFFICE WINDOW SECTION
- Scale: 1"=1'-0"

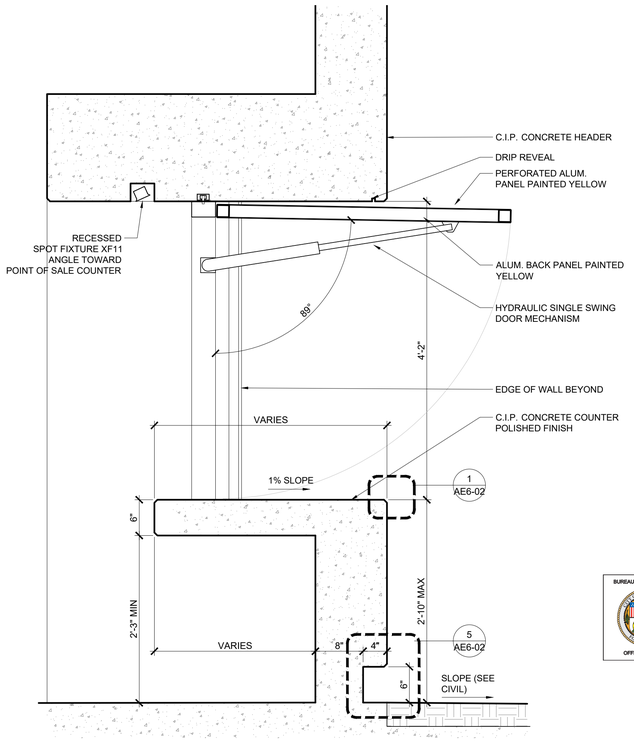

2 COUNTER SECTION
- Scale: 1"=1'-0"

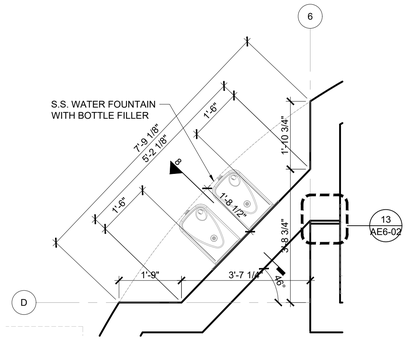

7 DRINKING FOUNTAIN RECESS
4 Scale: 1/2"=1'-0"

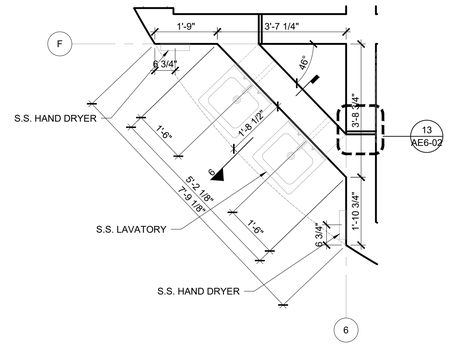

5 OUTDOOR SINK RECESS
- Scale: 1/2"=1'-0"

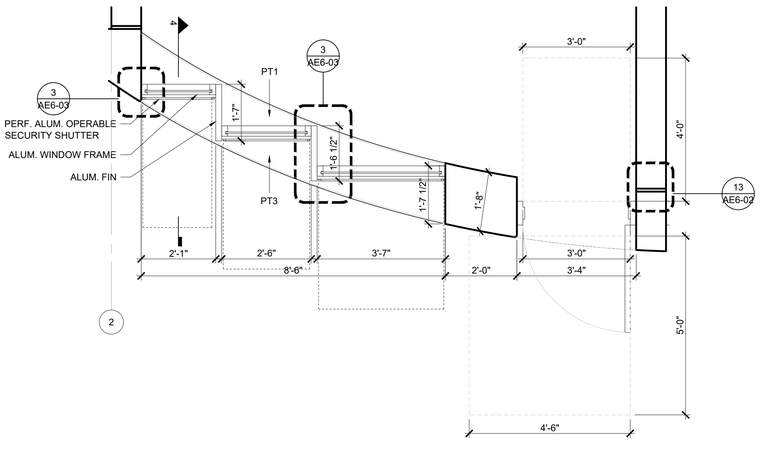

3 OFFICE WINDOW PLAN
- Scale: 1/2"=1'-0"

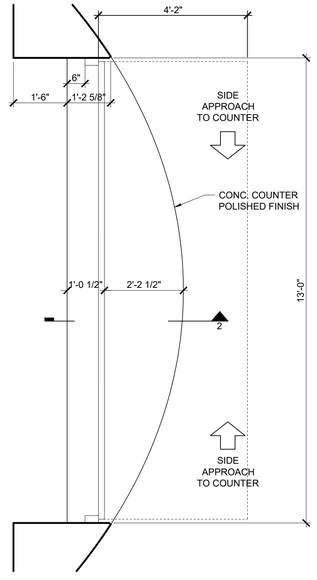

1 COUNTER PLAN
- Scale: 1/2"=1'-0"

THE CITY OF LOS ANGELES OR ITS OFFICERS OR AGENTS SHALL NOT BE RESPONSIBLE FOR THE ACCURACY OR COMPLETENESS OF ELECTRONIC COPIES OF THIS PLAN SHEET.

REVISION DATES (DESIGN STAGE ONLY)

BUREAU OF ENGINEERING
OFFICIAL RECORD

THIS PLAN WAS ELECTRONICALLY SIGNED AND STAMPED

KAMRAN MOHSENI-ZONOUZ No. 31703 Exp. 06/31/23 CIVIL STATE OF CALIFORNIA

BUREAU OF ENGINEERING

ENGINEERING CITY OF LOS ANGELES

DATE: BY:
NO. REVISIONS:

BUILDING NO.

INDEX NO. MF-300501

PLANS PREPARED BY:
TETRA TECH, INC.
350 SOUTH GRAND AVENUE, SUITE 3310
LOS ANGELES, CALIFORNIA 90071
Phone: (213) 279-3283

MICHAEL MALTZAN ARCHITECTURE
2801 HYPERION AVENUE, STUDIO 107 | LOS ANGELES, CA 90027 | (323) 913 3098

CITY OF LOS ANGELES DEPARTMENT OF PUBLIC WORKS

CITY ENGINEER
TED ALLEN, P.E.
DATE: 7/11/2022
DESIGN GROUP
LIC. NO. C-23729
ARCHITECT: MICHAEL MALTZAN
DESIGNED BY:
DRAWN BY:
CHECKED BY:
APPROVED BY:

VERT. CONTROL: LA CITY BM 12-04070 (1985 ADJ), NGVD 1929
HORIZ. CONTROL: NAD 83 (ZONE 5) COORDINATES

SHEET TITLE: EAST BUILDING ENLARGEMENTS
PROJECT: SIXTH STREET PARK, ARTS AND RIVER CONNECTIVITY IMPROVEMENTS (PARC)
ADDRESS: SIXTH STREET OVER THE LOS ANGELES RIVER

WORK ORDER NO. E700235D
FILE NO. --
DRAWING NO. AE5-01
SHEET 217 OF 295 SHEETS

Sheet Version 3.0

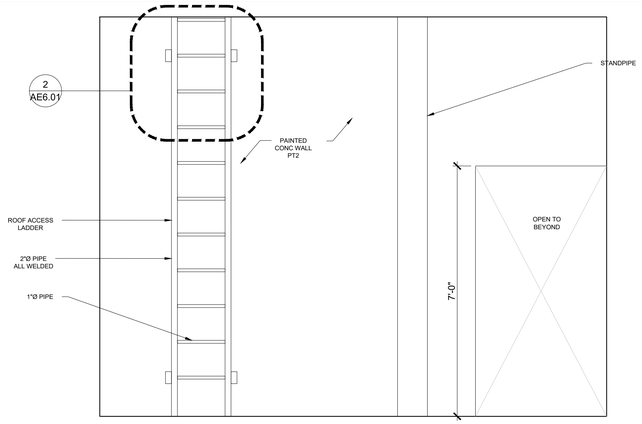

8 STORAGE ROOM INTERIOR ELEVATION
- Scale: 1/2"=1'-0"

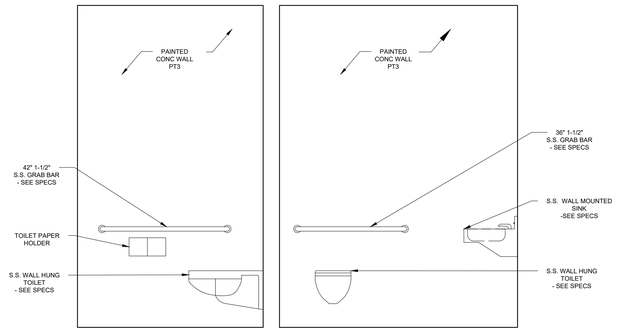

7 ACCESSIBLE RESTROOM ELEVATIONS TYPICAL
- Scale: 1/2"=1'-0"

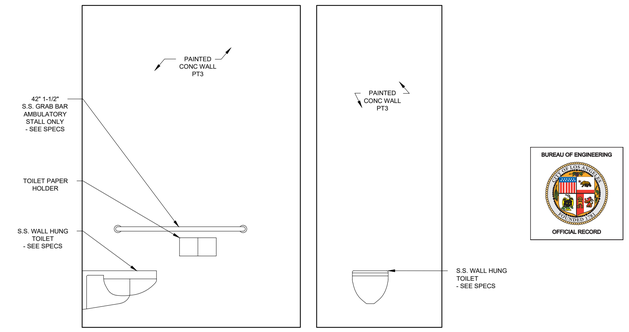

6 RESTROOM ELEVATIONS, TYPICAL
- Scale: 1/2"=1'-0"

BUREAU OF ENGINEERING
OFFICIAL RECORD

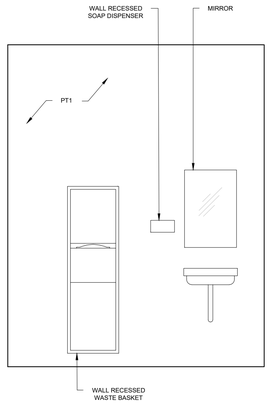

9 OFFICE RESTROOM ACCESSORIES
- Scale: 1/2"=1'-0"

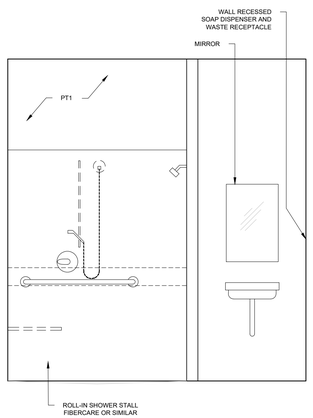

10 OFFICE RESTROOM ACCESSORIES
- Scale: 1/2"=1'-0"

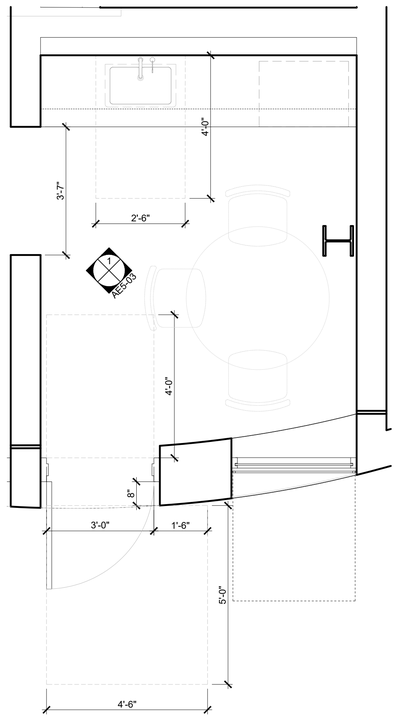

5 OFFICE BREAKROOM ENLARGED PLAN
- Scale: 1/2"=1'-0"

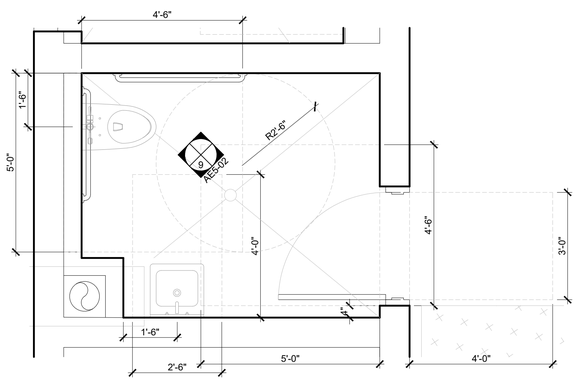

4 CONCESSION RESTROOM ENLARGED PLAN
- Scale: 1/2"=1'-0"

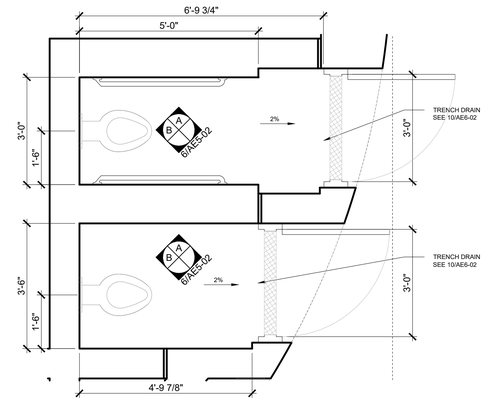

2 PUBLIC RESTROOM ENLARGED PLAN
- Scale: 1/2"=1'-0"

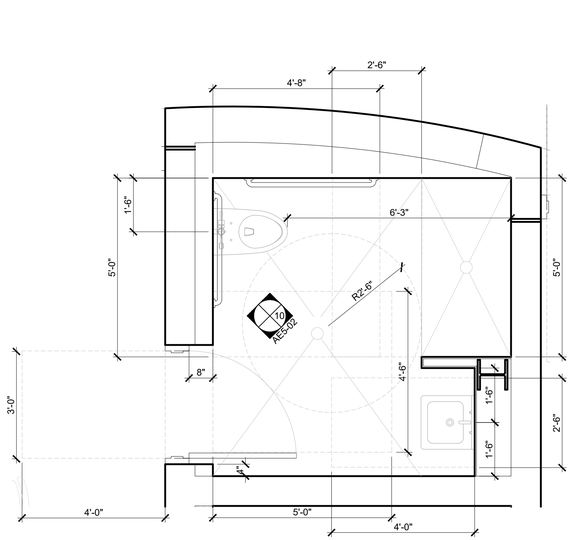

3 OFFICE RESTROOM ENLARGED PLAN
- Scale: 1/2"=1'-0"

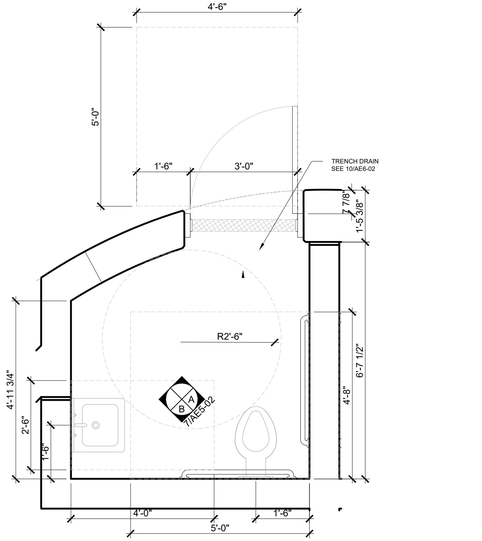

1 ACCESSIBLE RESTROOM ENLARGED PLAN
- Scale: 1/2"=1'-0"

THE CITY OF LOS ANGELES OR ITS OFFICERS OR AGENTS SHALL NOT BE RESPONSIBLE FOR THE ACCURACY OR COMPLETENESS OF ELECTRONIC COPIES OF THIS PLAN SHEET.

REVISION DATES
(DESIGN STAGE ONLY)

Sheet Version 3.0

BUREAU OF ENGINEERING
ENGINEERING
CITY OF LOS ANGELES

DATE: BY:
NO. REVISIONS:

BUILDING NO.

INDEX NO. MF-300501

THIS PLAN WAS ELECTRONICALLY SIGNED AND STAMPED.

TED ALLEN, P.E.
DESIGN GROUP

ARCHITECT: MICHAEL MALTZAN
DESIGNED BY:
DRAWN BY:
CHECKED BY:
APPROVED BY:

CITY ENGINEER
DATE: 7/11/2022
LIC. NO. C-29729

CITY OF LOS ANGELES DEPARTMENT OF PUBLIC WORKS

VERT. CONTROL: LA CITY BM 12-04070 (1985 ADJ), NGVD 1929
HORIZ. CONTROL: NAD 83 (ZONE 5) COORDINATES

SHEET TITLE: EAST BUILDING ENLARGEMENTS
PROJECT: SIXTH STREET PARK, ARTS AND RIVER CONNECTIVITY IMPROVEMENTS (PARC)
ADDRESS: SIXTH STREET OVER THE LOS ANGELES RIVER

MICHAEL MALTZAN ARCHITECTURE
2801 HYPERION AVENUE, STUDIO 107 | LOS ANGELES, CA 90027 | (323) 913 3098

PLANS PREPARED BY:
TETRA TECH, INC.
350 SOUTH GRAND AVENUE, SUITE 3310
LOS ANGELES, CALIFORNIA 90071
Phone: (213) 279-3283

WORK ORDER NO. E700235D
FILE NO. --
DRAWING NO. AE5-02
SHEET 218 OF 295 SHEETS

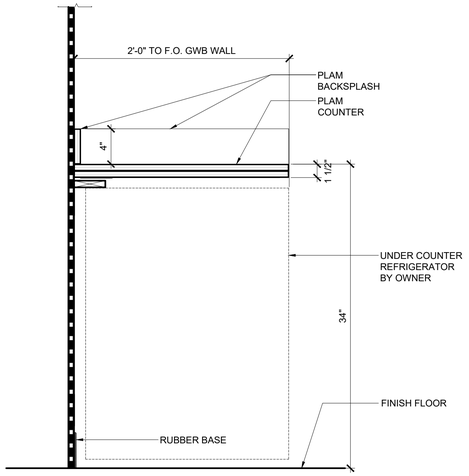

7 BREAK ROOM REFRIDGERATOR DETAIL
- Scale: 1-1/2"=1'-0"

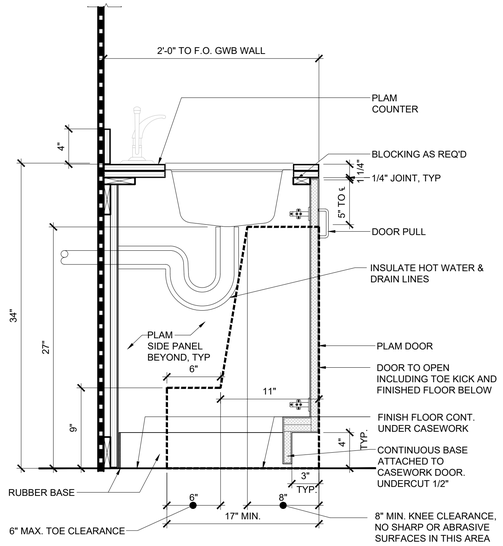

6 BREAK ROOM ACCESSIBLE KITCHEN SINK DETAIL
- Scale: 1-1/2"=1'-0"

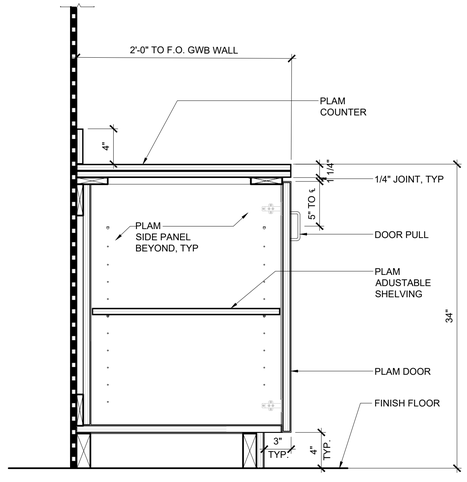

5 BREAK ROOM KITCHEN CABINET BASE DETAIL
- Scale: 1-1/2"=1'-0"

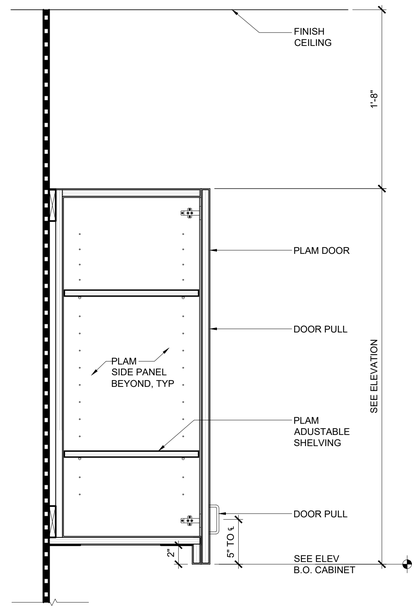

4 BREAK ROOM KITCHEN UPPER CABINET DETAIL
- Scale: 1-1/2"=1'-0"

GENERAL NOTES:
1. ALL P-LAM FINISHES TO BE WILSONART D354 DESIGNER WHITE OR SIMILAR.

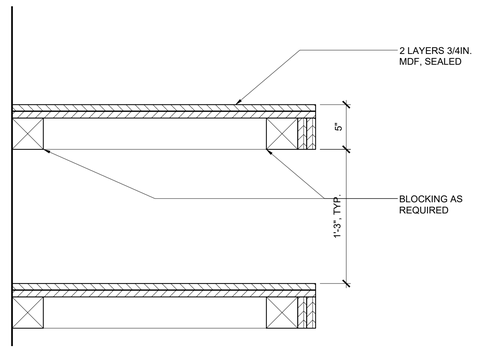

3 AV CLOSET SHELVING DETAIL
- Scale: 1-1/2"=1'-0"

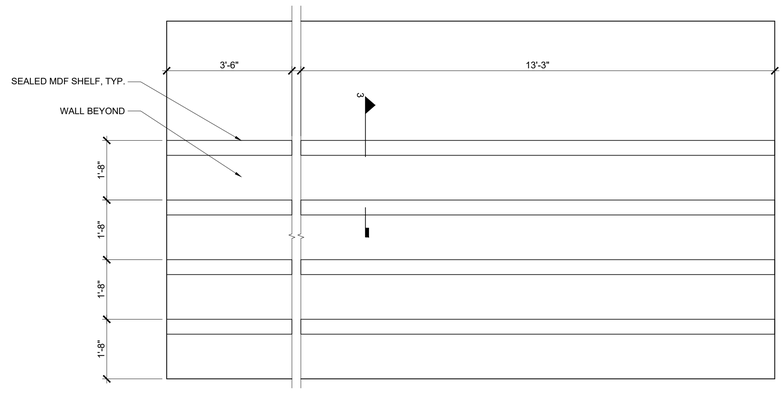

2 AV CLOSET SHELVING ELEVATION
- Scale: 1/2"=1'-0"

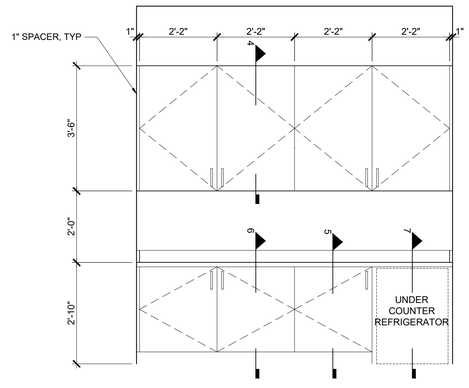

1 BREAK ROOM KITCHEN ELEVATION
- Scale: 1/2"=1'-0"

BUREAU OF ENGINEERING
OFFICIAL RECORD

THIS PLAN WAS ELECTRONICALLY SIGNED AND STAMPED.

ENGINEERING
CITY OF LOS ANGELES

BUREAU OF ENGINEERING

DATE: BY:
NO. REVISIONS:

BUILDING NO.

INDEX NO. MF-300501

KAI TED ALLEN No. 18 REGISTERED PROFESSIONAL ENGINEER Exp 06/31/23 STATE OF CALIFORNIA

CITY OF LOS ANGELES DEPARTMENT OF PUBLIC WORKS

CITY ENGINEER
TED ALLEN, P.E.
DATE: 7/11/2022
DESIGN GROUP
LIC. NO. C-23729
ARCHITECT: MICHAEL MALTZAN
DESIGNED BY:
DRAWN BY:
CHECKED BY:
APPROVED BY:

PLANS PREPARED BY:
TETRA TECH, INC.
350 SOUTH GRAND AVENUE, SUITE 3310
LOS ANGELES, CALIFORNIA 90071
Phone: (213) 279-3283

MICHAEL MALTZAN ARCHITECTURE
2801 HYPERION AVENUE, STUDIO 107 | LOS ANGELES, CA 90027 | (323) 913 3098

CITY OF LOS ANGELES DEPARTMENT OF PUBLIC WORKS
VERT. CONTROL: LA CITY BM 12-04070 (1985 ADJ), NGVD 1929
HORIZ. CONTROL: NAD 83 (ZONE 5) COORDINATES

SHEET TITLE: WEST BUILDING DETAILS
PROJECT: SIXTH STREET PARK, ARTS AND RIVER CONNECTIVITY IMPROVEMENTS (PARC)
ADDRESS: SIXTH STREET OVER THE LOS ANGELES RIVER

WORK ORDER NO. E700235D
FILE NO. --
DRAWING NO. AE5-03
SHEET 219 OF 295 SHEETS

REVISION DATES (DESIGN STAGE ONLY)

THE CITY OF LOS ANGELES OR ITS OFFICERS OR AGENTS SHALL NOT BE RESPONSIBLE FOR THE ACCURACY OR COMPLETENESS OF ELECTRONIC COPIES OF THIS PLAN SHEET.

LEGEND	
CC1	CONCRETE FLOOR, CLEAR SEALED
EX	EXPOSED CONSTRUCTION
GYP	GYPSUM BOARD
N/A	NOT APPLICABLE
PT1	PAINT, INTERIOR NON-ABSORBANT, DUNN EDWARDS DEW380 "WARM WHITE"
PT2	PAINT, EXTERIOR FINISH, MATCH PANTONE 107C OR DUNN EDWARDS DE5404 "HIGHLIGHTER"
PT3	PAINT, EXTERIOR GRAFFITI-RESISTANT FINISH, MATCH PANTONE 107C OR DUNN EDWARDS DE5404 "HIGHLIGHTER"
RB	RUBBER BASE
CT	CERAMIC TILE
CB	COVE BASE

FINISH SCHEDULE

LOCATION		FLOOR		WALLS								CEILING			NOTES
				NORTH (A)		EAST (B)		SOUTH (C)		WEST (D)					
ROOM#	ROOM NAME	FINISH	BASE	MATERIAL	FINISH	MATERIAL	FINISH	MATERIAL	FINISH	MATERIAL	FINISH	MATERIAL	FINISH	HEIGHT	
EAST BUILDING															
121	OFFICE	CC1	RB	EX	PT1	EX	PT1	EX	PT1	EX	PT1	GWB	PT1	10'-0"	
122	STAFF RESTROOM	CC1	RB	GWB	PT1	GWB	PT1	EX	PT1	GWB	PT1	GWB	PT1	9'-0"	
123	BREAKROOM	CC1	RB	GWB	PT1	EX	PT1	EX	PT1	EX	PT1	GWB	PT1	10'-0"	
124	ELEC. & COMM. ROOM	CC1	N/A	GWB	PT1	EX	PT1	EX	PT1	EX	PT1	GWB	PT1	10'-0"	
125	CONCESSIONS	CC1	CT	EX	PT2	EX	PT2	EX	PT2	EX	PT2	GWB	PT2	10'-0"	
126	RESTROOM	CC1	RB	EX	PT1	EX	PT1	EX	PT1	GWB	PT1	GWB	PT1	9'-0"	
101-108	PUBLIC RESTROOMS	CC1	CB	EX	PT3	EX	PT3	EX	PT3	EX	PT3	GWB	PT3	10'-0"	
109	STORAGE	CC1	CB	EX	PT2	EX	PT2	EX	PT2	EX	PT2	EX	N/A	10'-0"	
110	STORAGE	CC1	CB	EX	PT2	EX	PT2	EX	PT2	EX	PT2	EX	N/A	10'-0"	
111	STORAGE	CC1	CB	EX	PT2	EX	PT2	EX	PT2	EX	PT2	EX	N/A	10'-0"	

* NO BASE ON CONCRETE WALLS, GLAZING WALLS UNLESS OTHERWISE NOTED

4 FINISH SCHEDULE
- N.T.S.

HARDWARE SETS	
SET	DESCRIPTION
1	A/G EXT
2	HM EXT
3	HM INT PRIVACY
4	HM EXT PRIVACY
5	HM STOREROOM
6	HM EXT PR STOREROOM OUTSWING
7	HM INT PR STOREROOM

DOOR SCHEDULE

DOOR							FRAME		DETAILS			HDWR GROUP	ROOM NAME	NOTES
#	TYPE	WIDTH	HEIGHT	THICKNESS	MATERIAL	FINISH	MATERIAL	FINISH	JAMB	HEAD	THRESHOLD			
101-1	C	3'-0"	6'-8"	1.75"	METAL	PT3	METAL	PT3		11/AE6-02	10/AE6-02	4	PUBLIC RESTROOM	4" UNDERCUT
102-1	C	3'-0"	6'-8"	1.75"	METAL	PT3	METAL	PT3		11/AE6-02	10/AE6-02	4	PUBLIC RESTROOM	4" UNDERCUT
103-1	C	3'-0"	6'-8"	1.75"	METAL	PT3	METAL	PT3		11/AE6-02	10/AE6-02	4	PUBLIC RESTROOM	4" UNDERCUT
104-1	C	3'-0"	6'-8"	1.75"	METAL	PT3	METAL	PT3		11/AE6-02	10/AE6-02	4	PUBLIC RESTROOM	4" UNDERCUT
105-1	C	3'-0"	6'-8"	1.75"	METAL	PT3	METAL	PT3		11/AE6-02	10/AE6-02	4	PUBLIC RESTROOM	4" UNDERCUT
106-1	C	3'-0"	6'-8"	1.75"	METAL	PT3	METAL	PT3		11/AE6-02	10/AE6-02	4	PUBLIC RESTROOM	4" UNDERCUT
107-1	C	3'-0"	6'-8"	1.75"	METAL	PT3	METAL	PT3		11/AE6-02	10/AE6-02	4	PUBLIC RESTROOM	4" UNDERCUT
108-1	C	3'-0"	6'-8"	1.75"	METAL	PT3	METAL	PT3		11/AE6-02	10/AE6-02	4	PUBLIC RESTROOM	4" UNDERCUT
109-1	D	9'-0"	9'-0"		METAL	PT3	METAL	PT3		5/AE4-02	5/AE4-02	BY MFR	STORAGE 109	
109-2	A	3'-0"	7'-0"	1.75"	METAL	PT3	METAL	PT3		11/AE6-02		2	STORAGE 109	
110-1	B	6'-4"	7'-0"	1.75"	METAL	PT3	METAL	PT3		11/AE6-02		6	STORAGE 110	
121-1	A	3'-0"	7'-0"	1.75"	METAL	PT3/PT1	METAL	PT3/PT1		11/AE6-02		2	OFFICE	
121-2	A	3'-0"	7'-0"	1.75"	METAL	PT3/PT1	METAL	PT3/PT1		11/AE6-02		2	OFFICE	
121-3	A	3'-0"	7'-0"	1.75"	METAL	PT1	METAL	PT1				3	OFFICE	RESTROOM
121-4	B	6'-0"	7'-0"	1.75"	METAL	PT1	METAL	PT1				7	ELEC & COMM ROOM	
123-1	A	3'-0"	7'-0"	1.75"	METAL	PT3/PT1	METAL	PT3/PT1		11/AE6-02		2	BREAKROOM	
125-1	A	3'-0"	7'-0"	1.75"	METAL	P	METAL	PT3		11/AE6-02		2	CONCESSIONS	
125-2	A	3'-0"	7'-0"	1.75"	METAL	PT3/PT1	METAL	PT3/PT1				3	CONCESSIONS	RESTROOM

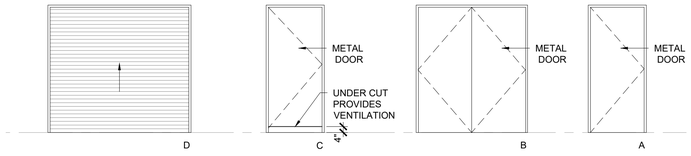

3 DOOR SCHEDULE
- N.T.S.

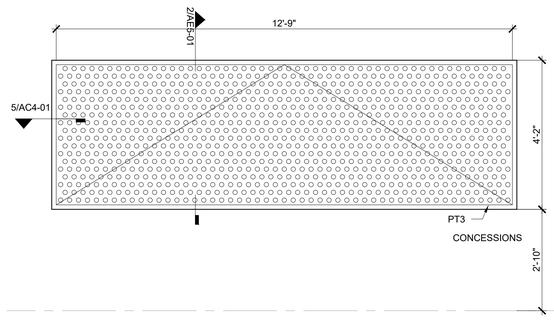

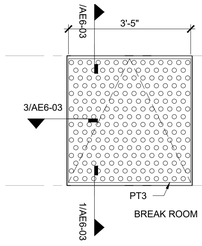

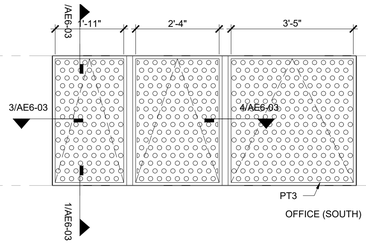

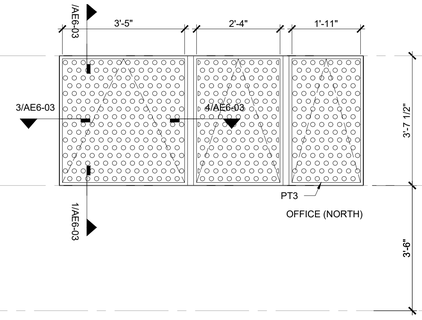

2 SECURITY SHUTTER ELEVATIONS
- 1/2"=1'-0"

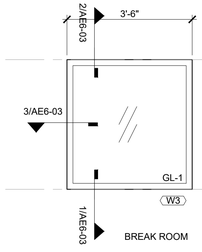

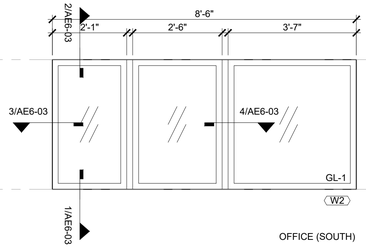

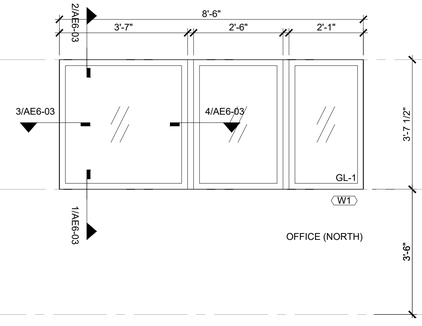

1. ALL WINDOWS ARE DRAWN. ONE SHADE PER WINDOW, TYP. NO WINDOW AT CONCESSIONS
2. ALL WINDOWS ARE FIXED

GLAZING TYPE	GLAZING DESCRIPTION	NOTES
GL-1	CLEAR 1" THICK IGU, FIXED (WESTERN WINDOWS 700 SERIES OR SIMILAR)	EAST BUILDING OFFICE WINDOWS SEE AE- SERIES
GL-2	CLEAR 1/2" THICK LAMINATED 2 LAYERS, TOP/BOTTOM/ENDS SET INTO ALUMINUM CHANNEL	CAFÉ WINDOWS SEE AC- SERIES

1 GLAZING ELEVATIONS
- 1/2"=1'-0"

BUREAU OF ENGINEERING
OFFICIAL RECORD

THIS PLAN WAS ELECTRONICALLY SIGNED AND STAMPED.

MICHAEL MALTZAN ARCHITECTURE
2801 HYPERION AVENUE, STUDIO 107 | LOS ANGELES, CA 90027 | (323) 913 3098

PLANS PREPARED BY:
TETRA TECH, INC.
350 SOUTH GRAND AVENUE, SUITE 3310
LOS ANGELES, CALIFORNIA 90071
Phone: (213) 279-3283

CITY OF LOS ANGELES DEPARTMENT OF PUBLIC WORKS
BUREAU OF ENGINEERING
ENGINEERING
CITY OF LOS ANGELES

NO.	REVISIONS:	DATE:	BY:

BUILDING NO.
INDEX NO. MF-300501

CITY ENGINEER: TED ALLEN, P.E.
DATE: 7/11/2022
DESIGN GROUP
ARCHITECT: MICHAEL MALTZAN LIC. NO. C-23729
DESIGNED BY:
DRAWN BY:
CHECKED BY:
APPROVED BY:

VERT. CONTROL: LA CITY BM 12-04070 (1985 ADJ.) NGVD 1929
HORIZ. CONTROL: NAD 83 (ZONE 5) COORDINATES

SHEET TITLE: WEST BUILDING SCHEDULES
PROJECT: SIXTH STREET PARK, ARTS AND RIVER CONNECTIVITY IMPROVEMENTS (PARC)
ADDRESS: SIXTH STREET OVER THE LOS ANGELES RIVER

WORK ORDER NO. E700235D
FILE NO. --
DRAWING NO. AE5-04
SHEET 220 OF 295 SHEETS

THE CITY OF LOS ANGELES OR ITS OFFICERS OR AGENTS SHALL NOT BE RESPONSIBLE FOR THE ACCURACY OR COMPLETENESS OF ELECTRONIC COPIES OF THIS PLAN SHEET.

REVISION DATES (DESIGN STAGE ONLY)

Sheet Version 3.0

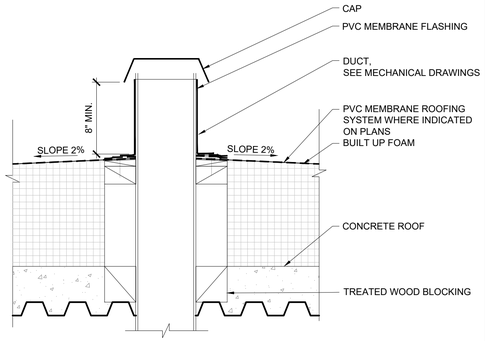

4 ROOF EXHAUST SECTION
Scale: 1-1/2"=1'-0"

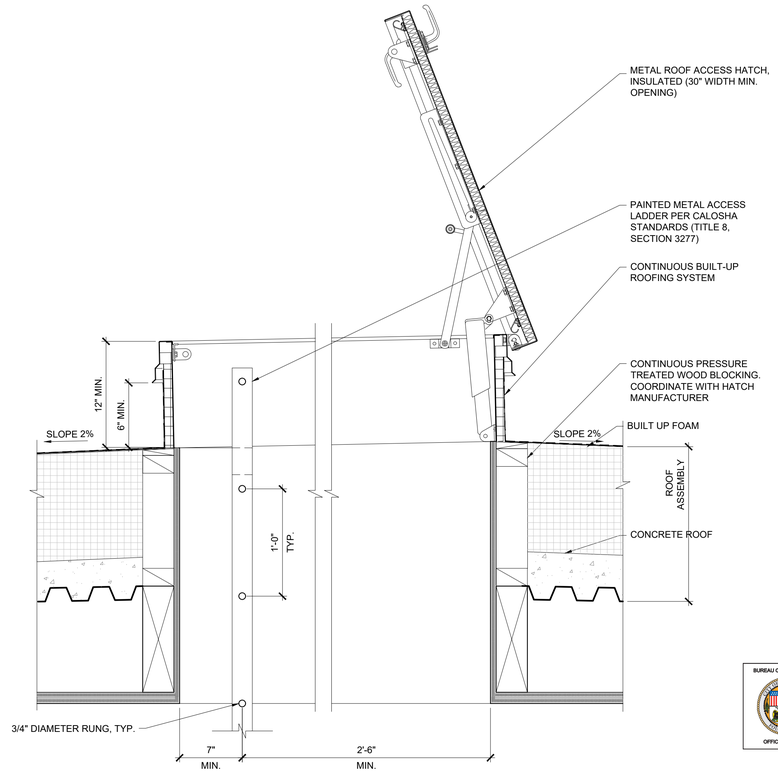

2 ROOF HATCH SECTION
Scale: 1-1/2"=1'-0"

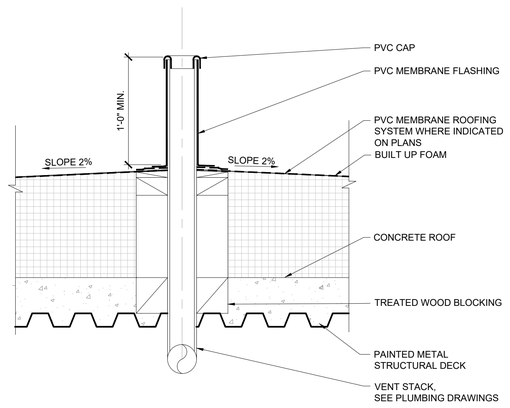

3 ROOF VENT SECTION, TYPICAL
Scale: 1-1/2"=1'-0"

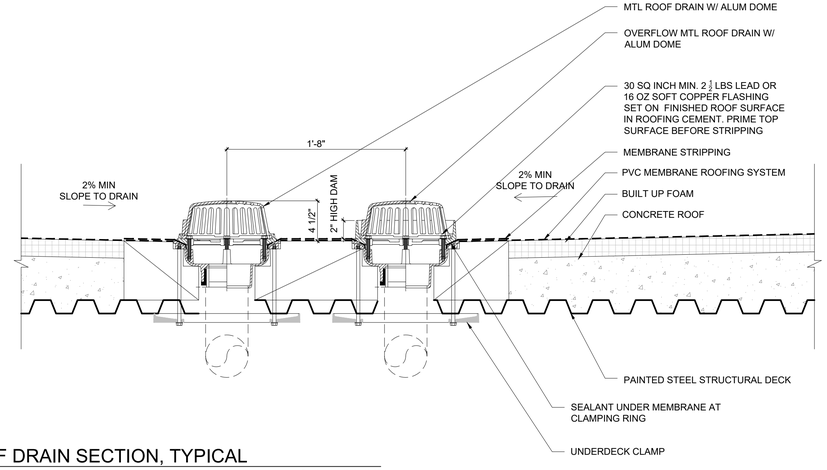

1 ROOF DRAIN SECTION, TYPICAL
Scale: 1-1/2"=1'-0"

THE CITY OF LOS ANGELES OR ITS OFFICERS OR AGENTS SHALL NOT BE RESPONSIBLE FOR THE ACCURACY OR COMPLETENESS OF ELECTRONIC COPIES OF THIS PLAN SHEET.

REVISION DATES (DESIGN STAGE ONLY)

Sheet Version 3.0

BUREAU OF ENGINEERING
OFFICIAL RECORD

ENGINEERING
CITY OF LOS ANGELES

BUILDING NO.

INDEX NO. MF-300501

NO. | REVISIONS: | DATE: | BY:

THIS PLAN WAS ELECTRONICALLY SIGNED AND STAMPED.

TED ALLEN, P.E.
DESIGN GROUP
ARCHITECT: MICHAEL MALTZAN
DESIGNED BY:
DRAWN BY:
CHECKED BY:
APPROVED BY:

CITY ENGINEER
DATE: 7/11/2022
LIC. NO. C-23729

MICHAEL MALTZAN ARCHITECTURE
2801 HYPERION AVENUE, STUDIO 107 | LOS ANGELES, CA 90027 | (323) 913 3098

PLANS PREPARED BY:
TETRA TECH, INC.
350 SOUTH GRAND AVENUE, SUITE 3310
LOS ANGELES, CALIFORNIA 90071
Phone: (213) 279-3283

VERT. CONTROL: LA CITY BM 12-04070 (1985 ADJ), NGVD 1929
HORIZ. CONTROL: NAD 83 (ZONE 5) COORDINATES

SHEET TITLE: EAST BUILDING DETAILS
PROJECT: SIXTH STREET PARK, ARTS AND RIVER CONNECTIVITY IMPROVEMENTS (PARC)
ADDRESS: SIXTH STREET OVER THE LOS ANGELES RIVER

WORK ORDER NO. E700235D
FILE NO. --
DRAWING NO. AE6-01
SHEET 221 OF 295 SHEETS

CITY OF LOS ANGELES DEPARTMENT OF PUBLIC WORKS

THE CITY OF LOS ANGELES OR ITS OFFICERS OR AGENTS SHALL NOT BE RESPONSIBLE FOR THE ACCURACY OR COMPLETENESS OF ELECTRONIC COPIES OF THIS PLAN SHEET.

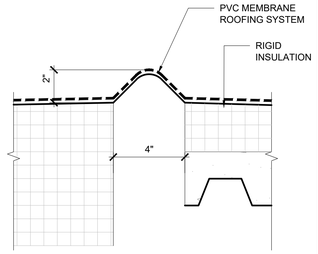

16 MEMBRANE MOVEMENT JOINT
Scale: 3"=1'-0"

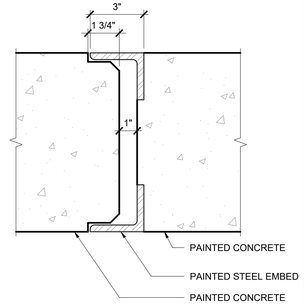

13 WALL MOVEMENT JOINT
Scale: 3"=1'-0"

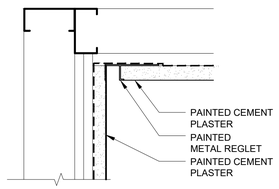

9 EXTERIOR WALL TO SOFFIT
Scale: 3"=1'-0"

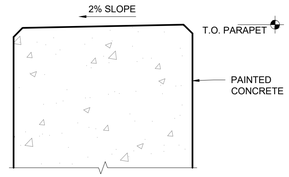

7 PARAPET
Scale: 3"=1'-0"

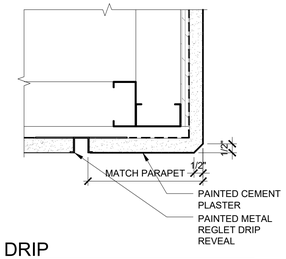

4 DRIP
Scale: 3"=1'-0"

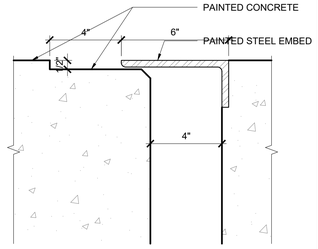

15 BRIDGE MOVEMENT JOINT
Scale: 3"=1'-0"

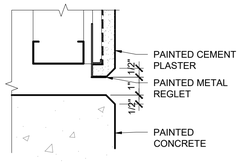

12 MOVEMENT JOINT
Scale: 3"=1'-0"

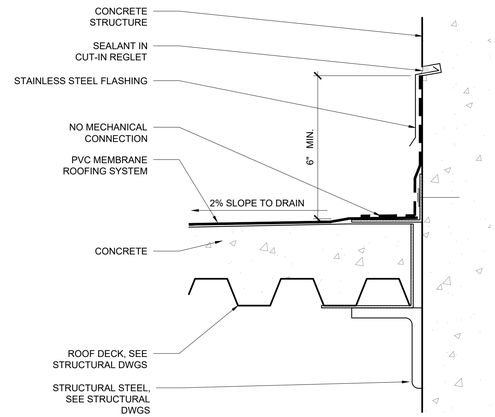

BUREAU OF ENGINEERING
OFFICIAL RECORD

6 PARAPET FLASHING
Scale: 3"=1'-0"

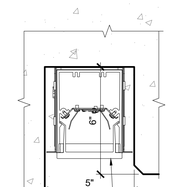

3 LIGHT COVE
Scale: 3"=1'-0"

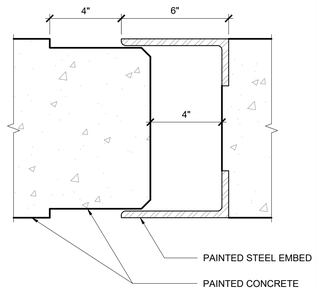

15 BRIDGE MOVEMENT JOINT
Scale: 3"=1'-0"

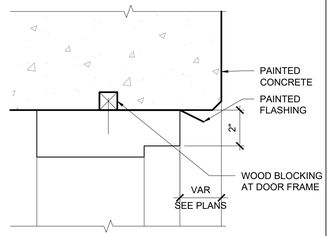

11 DOOR HEADER
Scale: 3"=1'-0"

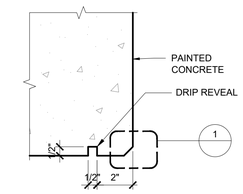

2 CHAMFER & DRIP, TYP.
Scale: 3"=1'-0"

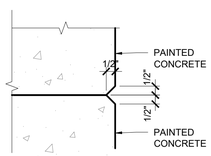

14 CONC. CONTROL JOINT
Scale: 3"=1'-0"

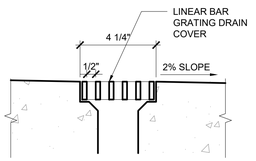

10 FLOOR DRAIN
Scale: 3"=1'-0"

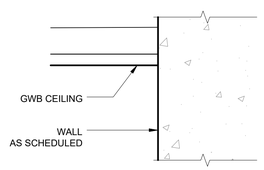

8 PARTITION TO CEILING
Scale: 3"=1'-0"

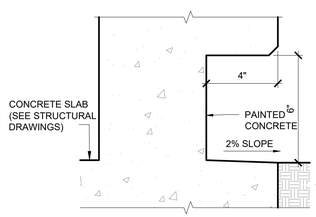

5 KICK @ CONCESSIONS
Scale: 3"=1'-0"

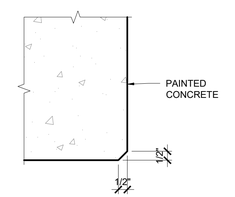

1 CHAMFER, TYP.
Scale: 3"=1'-0"

REVISION DATES (DESIGN STAGE ONLY)

Sheet Version 3.0

PLANS PREPARED BY:
TETRA TECH, INC.
350 SOUTH GRAND AVENUE, SUITE 3310
LOS ANGELES, CALIFORNIA 90071
Phone: (213) 279-3283

MICHAEL MALTZAN ARCHITECTURE
2801 HYPERION AVENUE, STUDIO 107 | LOS ANGELES, CA 90027 | (323) 913 3098

CITY OF LOS ANGELES DEPARTMENT OF PUBLIC WORKS
BUREAU OF ENGINEERING

ENGINEERING
CITY OF LOS ANGELES

NO. REVISIONS: DATE: BY:

BUILDING NO.

INDEX NO. MF-300501

THIS PLAN WAS ELECTRONICALLY SIGNED AND STAMPED.



CITY ENGINEER
TED ALLEN, P.E.
DESIGN GROUP
DATE: 7/11/2022
LIC. NO. C-39729
ARCHITECT: MICHAEL MALTZAN
DESIGNED BY:
DRAWN BY:
CHECKED BY:
APPROVED BY:

VERT. CONTROL: LA CITY BM 12-04070 (1985 ADJ), NGVD 1929
HORIZ. CONTROL: NAD 83 (ZONE 5) COORDINATES

SHEET TITLE: EAST BUILDING DETAILS

PROJECT: SIXTH STREET PARK, ARTS AND RIVER CONNECTIVITY IMPROVEMENTS (PARC)

ADDRESS: SIXTH STREET OVER THE LOS ANGELES RIVER

WORK ORDER NO. E700235D
FILE NO. --
DRAWING NO. AE6-02
SHEET 222 OF 295 SHEETS

THE CITY OF LOS ANGELES OR ITS OFFICERS OR AGENTS SHALL NOT BE RESPONSIBLE FOR THE ACCURACY OR COMPLETENESS OF ELECTRONIC COPIES OF THIS PLAN SHEET.

BUREAU OF ENGINEERING
OFFICIAL RECORD

INTERIOR

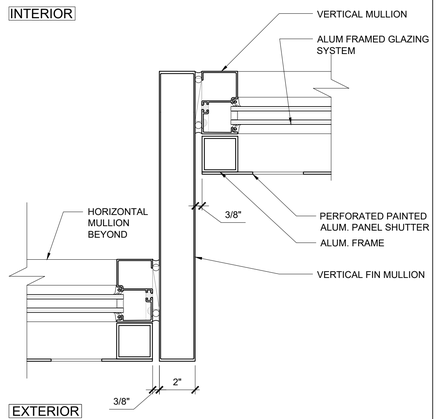

EXTERIOR

4 PLAN - VERTICAL MULLION

Scale: 3"=1'-0"

INTERIOR EXTERIOR

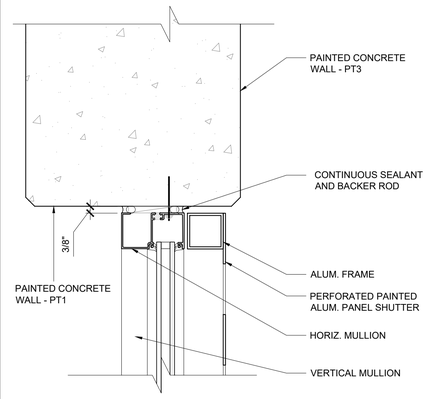

2 SECTION - HEAD

Scale: 3"=1'-0"

INTERIOR

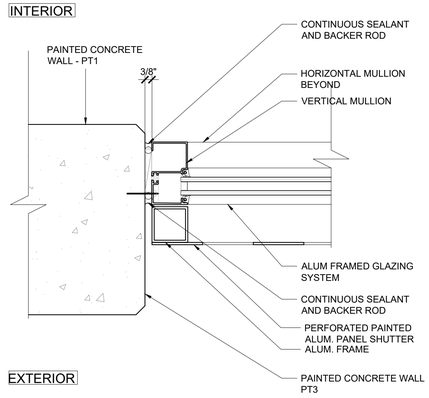

EXTERIOR

3 PLAN - JAMB

Scale: 3"=1'-0"

INTERIOR EXTERIOR

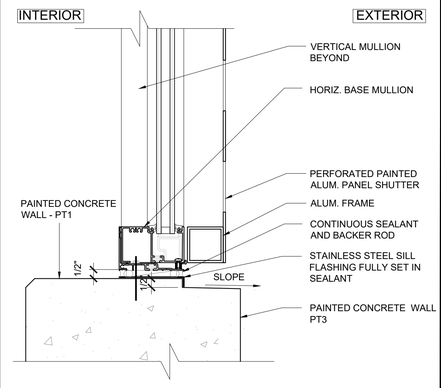

1 SECTION - SILL

Scale: 3"=1'-0"

MICHAEL MALTZAN ARCHITECTURE
2801 HYPERION AVENUE, STUDIO 107 | LOS ANGELES, CA 90027 | (323) 913 3098

PLANS PREPARED BY:
TETRA TECH, INC.
350 SOUTH GRAND AVENUE, SUITE 3310
LOS ANGELES, CALIFORNIA 90071
Phone: (213) 279-3283

CITY OF LOS ANGELES DEPARTMENT OF PUBLIC WORKS
BUREAU OF ENGINEERING

ENGINEERING
CITY OF LOS ANGELES

NO. REVISIONS: DATE: BY:

BUILDING NO.

INDEX NO. MF-300501

THIS PLAN WAS ELECTRONICALLY SIGNED AND STAMPED.

CITY ENGINEER
TED ALLEN, P.E.
DATE: 7/11/2022
DESIGN GROUP
ARCHITECT: MICHAEL MALTZAN LIC. NO. C-23729
DESIGNED BY:
DRAWN BY:
CHECKED BY:
APPROVED BY:

VERT. CONTROL: LA CITY BM 12-04070 (1985 ADJ.) NGVD 1929
HORIZ. CONTROL: NAD 83 (ZONE 5) COORDINATES

SHEET TITLE: STAFF & RESTROOM BUILDING DETAILS

PROJECT: SIXTH STREET PARK, ARTS AND RIVER CONNECTIVITY IMPROVEMENTS (PARC)

ADDRESS: SIXTH STREET OVER THE LOS ANGELES RIVER

WORK ORDER NO. E700235D
FILE NO. --
DRAWING NO. AE6-03
SHEET 223 OF 295 SHEETS

REVISION DATES (DESIGN STAGE ONLY)

Sheet Version 3.0

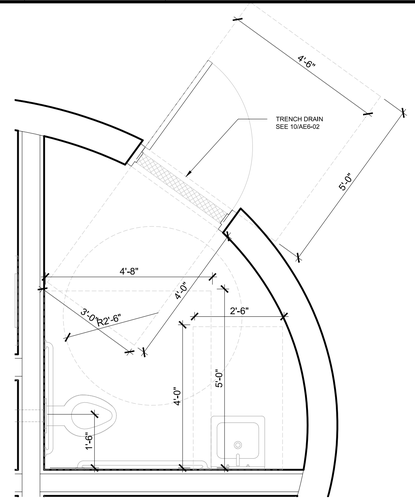

7 RESTROOM ENLARGEMENT
Scale: 1/2"=1'-0"

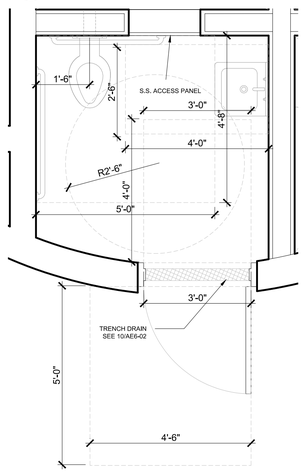

6 RESTROOM ENLARGEMENT, TYP
Scale: 1/2"=1'-0"

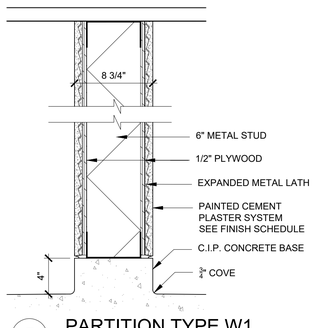

5 PARTITION TYPE W1
Scale: 1-1/2"=1'-0"

GENERAL NOTES:

1. REFER TO A0-03 FOR ALL FIXTURES AND ACCESSORY DIMENSIONS AND MOUNTING HEIGHTS.
2. SMOOTH PAINTED CONCRETE FINISH IN ALL PUBLIC RESTROOMS.
3. ALL WALLS ARE POURED IN PLACE CONCRETE UNLESS OTHERWISE NOTED ON PLANS.

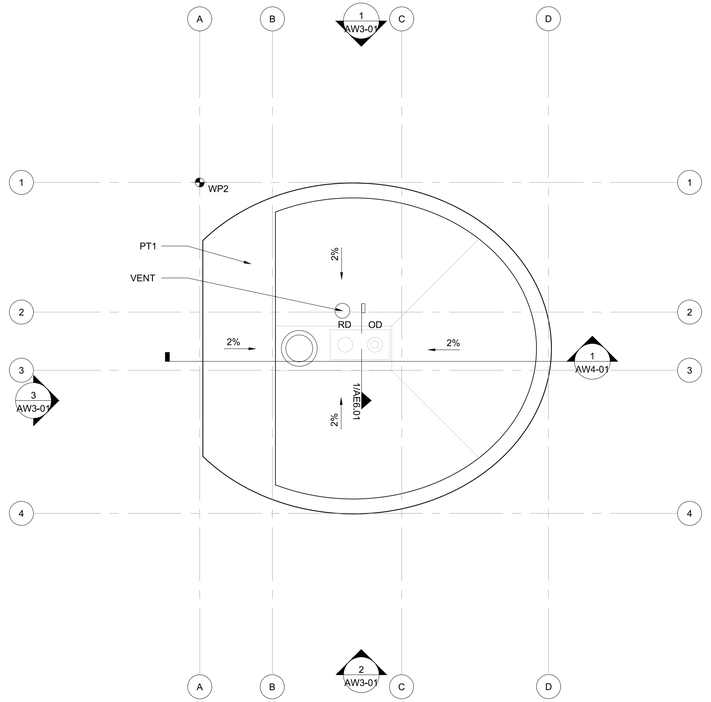

4 WEST BUILDING ROOF PLAN
Scale: 1/4"=1'-0"

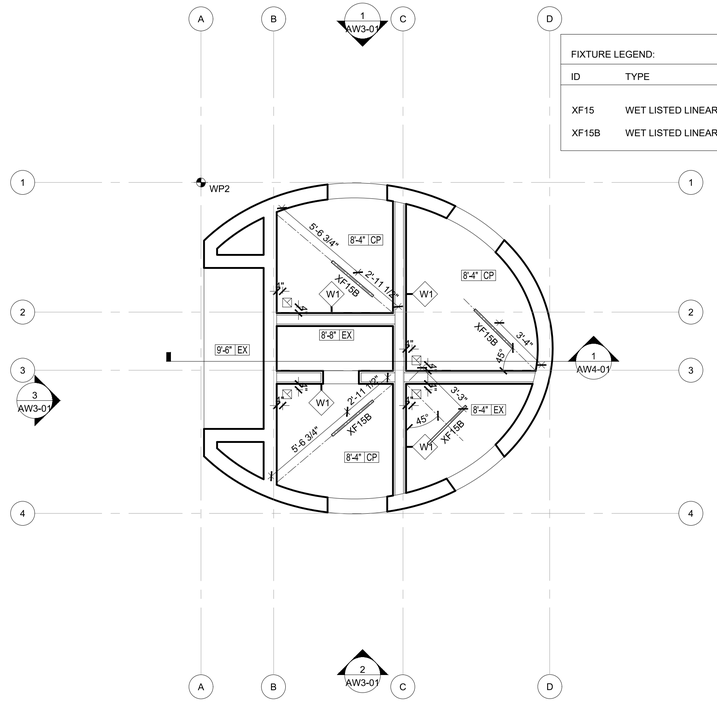

2 WEST BUILDING RCP
Scale: 1/4"=1'-0"

FIXTURE LEGEND:			
ID	TYPE	MANUFACTURER	SIZE
XF15	WET LISTED LINEAR LED	PINNACLE EDGE EV3	24"
XF15B	WET LISTED LINEAR LED	PINNACLE EDGE EV3	36"

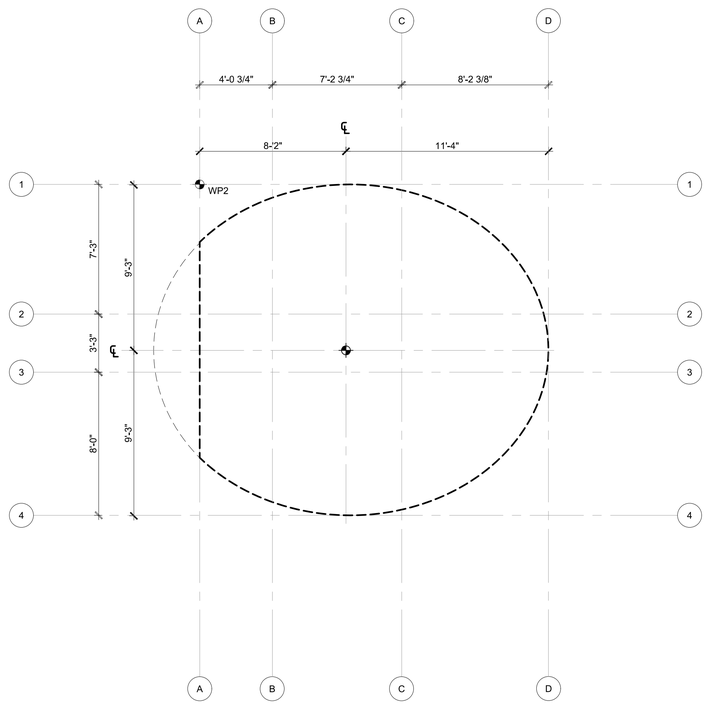

3 WEST BUILDING GEOMETRY PLAN
Scale: 1/4"=1'-0"

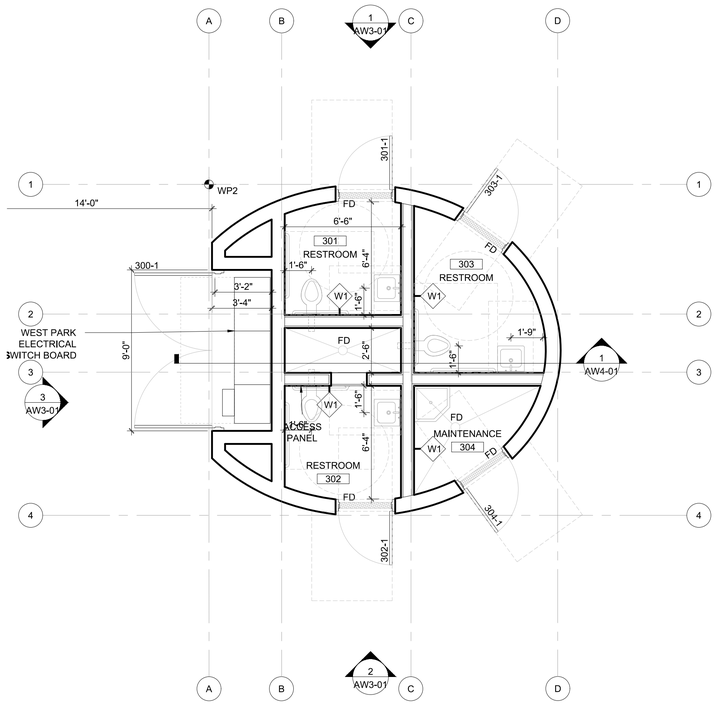

1 WEST BUILDING FLOOR PLAN
Scale: 1/4"=1'-0"

N

THE CITY OF LOS ANGELES OR ITS OFFICERS OR AGENTS SHALL NOT BE RESPONSIBLE FOR THE ACCURACY OR COMPLETENESS OF ELECTRONIC COPIES OF THIS PLAN SHEET.

REVISION DATES (DESIGN STAGE ONLY)

BUREAU OF ENGINEERING
OFFICIAL RECORD

ENGINEERING
CITY OF LOS ANGELES

BUREAU OF ENGINEERING
NO. REVISIONS: DATE: BY:

BUILDING NO.

INDEX NO. MF-300501

THIS PLAN WAS ELECTRONICALLY SIGNED AND STAMPED.



CITY OF LOS ANGELES DEPARTMENT OF PUBLIC WORKS

CITY ENGINEER
DATE: 7/11/2022
LIC. NO. C-23729
DESIGN GROUP
ARCHITECT: MICHAEL MALTZAN
DESIGNED BY:
DRAWN BY:
CHECKED BY:
APPROVED BY:
TED ALLEN, P.E.

MICHAEL MALTZAN ARCHITECTURE
2801 HYPERION AVENUE, STUDIO 107 | LOS ANGELES, CA 90027 | (323) 913 3098

PLANS PREPARED BY:
TETRA TECH, INC.
350 SOUTH GRAND AVENUE, SUITE 3310
LOS ANGELES, CALIFORNIA 90071
Phone: (213) 279-3283

VERT. CONTROL: LA CITY BM 12-04070 (1985 ADJ), NGVD 1929
HORIZ. CONTROL: NAD 83 (ZONE 5) COORDINATES

SHEET TITLE: WEST BUILDING PLAN
PROJECT: SIXTH STREET PARK, ARTS AND RIVER CONNECTIVITY IMPROVEMENTS (PARC)
ADDRESS: SIXTH STREET OVER THE LOS ANGELES RIVER

WORK ORDER NO. E700235D
FILE NO. --
DRAWING NO. AW2-01
SHEET 224 OF 295 SHEETS

Sheet Version 3.0

THE CITY OF LOS ANGELES OR ITS OFFICERS OR AGENTS SHALL NOT BE RESPONSIBLE FOR THE ACCURACY OR COMPLETENESS OF ELECTRONIC COPIES OF THIS PLAN SHEET.

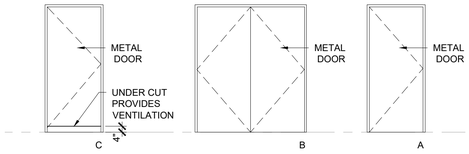

DOOR SCHEDULE

DOOR							FRAME		DETAILS			HDWR GROUP	ROOM NAME	NOTES
#	TYPE	WIDTH	HEIGHT	THICKNESS	MATERIAL	FINISH	MATERIAL	FINISH	JAMB	HEAD	THRESHOLD			
300-1	B	8'-8"	9'-2"		METAL	PT3	METAL	PT3		11/AE6-02		6	ELECTRICAL CLOSET	OVERSIZED, HEAVY DUTY
301-1	C	3'-0"	7'-0"	1.75"	METAL	PT3	METAL	PT3		11/AE6-02	10/AE6-02	4	PUBLIC RESTROOM	4" UNDERCUT
302-1	C	3'-0"	7'-0"	1.75"	METAL	PT3	METAL	PT3		11/AE6-02	10/AE6-02	4	PUBLIC RESTROOM	4" UNDERCUT
303-1	C	3'-0"	7'-0"	1.75"	METAL	PT3	METAL	PT3		11/AE6-02	10/AE6-02	4	PUBLIC RESTROOM	4" UNDERCUT
304-1	A	3'-0"	7'-0"	1.75"	METAL	PT3	METAL	PT3		11/AE6-02		2	MAINTENANCE	

HARDWARE SETS	
SET	DESCRIPTION
1	A/G EXT
2	HM EXT
3	HM INT PRIVACY
4	HM EXT PRIVACY
5	HM STOREROOM
6	HM EXT PR STOREROOM OUTSWING
7	HM INT PR STOREROOM

5 DOOR SCHEDULE
- N.T.S.

FINISH SCHEDULE

LOCATION		FLOOR		WALLS								CEILING			NOTES
				NORTH (A)		EAST (B)		SOUTH (C)		WEST (D)					
ROOM#	ROOM NAME	FINISH	BASE	MATERIAL	FINISH	MATERIAL	FINISH	MATERIAL	FINISH	MATERIAL	FINISH	MATERIAL	FINISH	HEIGHT	
WEST BUILDING															
301	UNISEX RESTROOM 1	CC1		EX	PT2	CP	PT2	CP	PT2	EX	PT2	CP	PT2	8'-4"	
302	UNISEX RESTROOM 2	CC1		CP	PT2	EX	PT2	CP	PT2	CP	PT2	CP	PT2	8'-4"	
303	UNISEX RESTROOM 3	CC1		EX	PT2	EX	PT2	CP	PT2	CP	PT2	CP	PT2	8'-4"	
304	MAINTENANCE	CC1		CP	PT2	EX	PT2	EX	PT2	CP	PT2	CP	PT2	8'-4"	

* NO BASE ON CONCRETE WALLS

LEGEND	
CC1	CONCRETE FLOOR, CLEAR SEALED
EX	EXPOSED CONSTRUCTION
PT1	PAINT, INTERIOR NON-ABSORBANT, DUNN EDWARDS DEW380 "WARM WHITE"
PT2	PAINT, EXTERIOR FINISH, MATCH PANTONE 107C OR DUNN EDWARDS DE5404 "HIGHLIGHTER"
PT3	PAINT, EXTERIOR GRAFFITI-RESISTANT FINISH, MATCH PANTONE 107C OR DUNN EDWARDS DE5404 "HIGHLIGHTER"
CP	CEMENT PLASTER

4 FINISH SECHEDULE
- N.T.S.

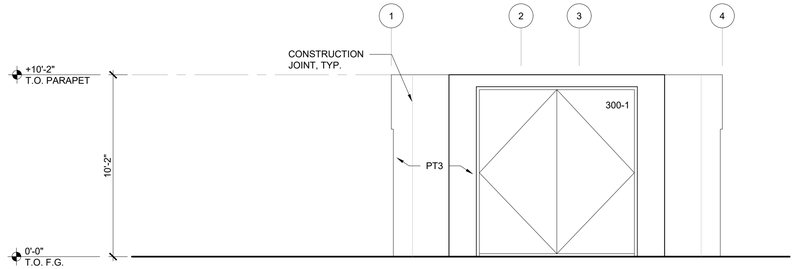

3 WEST BUILDING SOUTH ELEVATION
- Scale: 1/4"=1'-0"

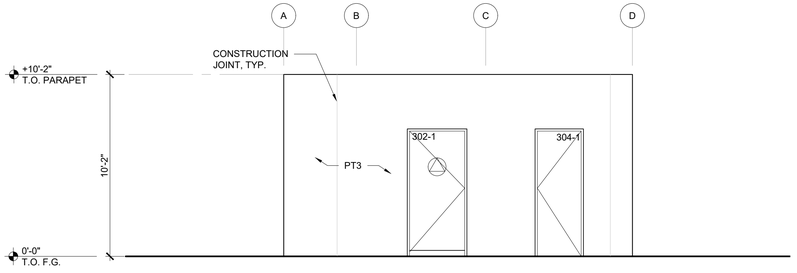

2 WEST BUILDING SOUTH ELEVATION
- Scale: 1/4"=1'-0"

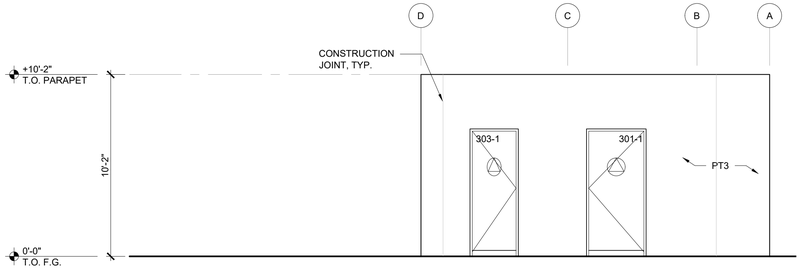

1 WEST BUILDING NORTH ELEVATION
- Scale: 1/4"=1'-0"

BUREAU OF ENGINEERING
OFFICIAL RECORD

BUREAU OF ENGINEERING • CITY OF LOS ANGELES DEPARTMENT OF PUBLIC WORKS

ENGINEERING
CITY OF LOS ANGELES

NO.	REVISIONS:	DATE:	BY:

BUILDING NO.

INDEX NO. MF-300501

THIS PLAN WAS ELECTRONICALLY SIGNED AND STAMPED.

CITY ENGINEER
TED ALLEN, P.E.
DATE: 7/11/2022
LIC. NO. C-29729

DESIGN GROUP
ARCHITECT: MICHAEL MALTZAN
DESIGNED BY:
DRAWN BY:
CHECKED BY:
APPROVED BY:

MICHAEL MALTZAN ARCHITECTURE
2801 HYPERION AVENUE, STUDIO 107 | LOS ANGELES, CA 90027 | (323) 913 3098

PLANS PREPARED BY:
TETRA TECH, INC.
350 SOUTH GRAND AVENUE, SUITE 3310
LOS ANGELES, CALIFORNIA 90071
Phone: (213) 279-3283

SHEET TITLE: WEST BUILDING ELEVATIONS
PROJECT: SIXTH STREET PARK, ARTS AND RIVER CONNECTIVITY IMPROVEMENTS (PARC)
ADDRESS: SIXTH STREET OVER THE LOS ANGELES RIVER

VERT. CONTROL: LA CITY BM 12-04070 (1985 ADJ), NGVD 1929
HORIZ. CONTROL: NAD 83 (ZONE 5) COORDINATES

WORK ORDER NO. E700235D
FILE NO. --
DRAWING NO. AW3-01
SHEET 225 OF 295 SHEETS

REVISION DATES (DESIGN STAGE ONLY)

Sheet Version 3.0

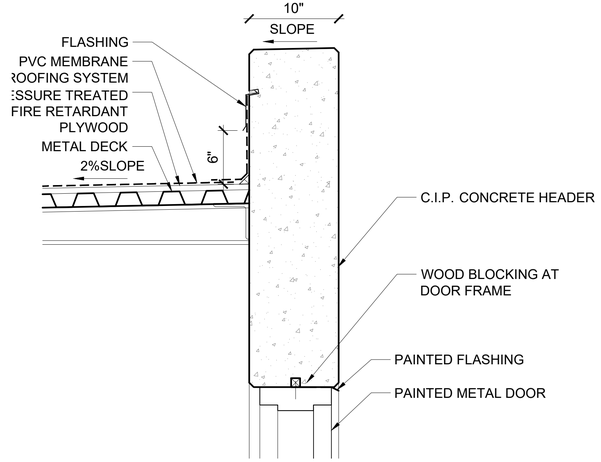

5 DOOR HEAD SECTION
- Scale: 1-1/2""=1'-0"

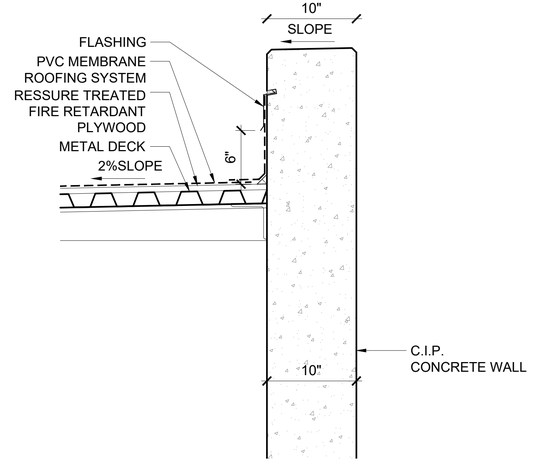

3 PARAPET SECTION
- Scale: 1-1/2""=1'-0"

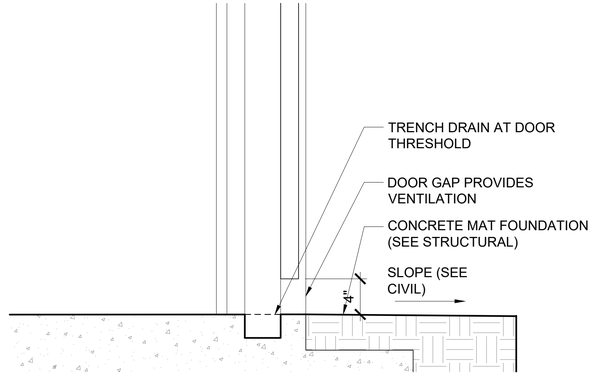

4 DOOR BASE SECTION
- Scale: 1-1/2""=1'-0"



2 WALL BASE SECTION
- Scale: 1-1/2""=1'-0"

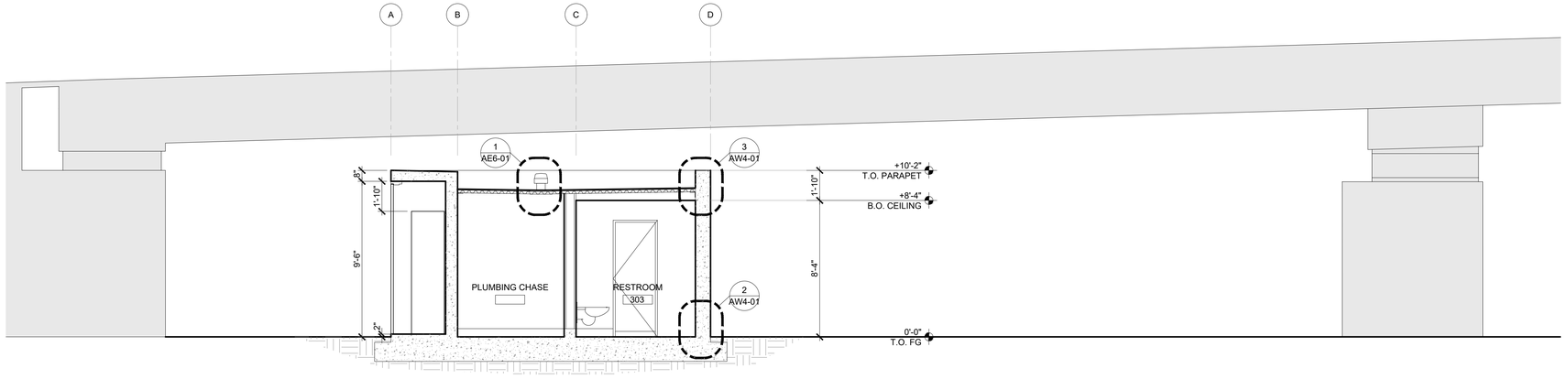

1 RESTROOM SECTION
- Scale: 1/4"=1'-0"

THE CITY OF LOS ANGELES OR ITS OFFICERS OR AGENTS SHALL NOT BE RESPONSIBLE FOR THE ACCURACY OR COMPLETENESS OF ELECTRONIC COPIES OF THIS PLAN SHEET.

REVISION DATES (DESIGN STAGE ONLY)

BUREAU OF ENGINEERING
OFFICIAL RECORD

PLANS PREPARED BY:
TETRA TECH, INC.
350 SOUTH GRAND AVENUE, SUITE 3310
LOS ANGELES, CALIFORNIA 90071
Phone: (213) 279-3283

MICHAEL MALTZAN ARCHITECTURE
2801 HYPERION AVENUE, STUDIO 107 | LOS ANGELES, CA 90027 | (323) 913 3098

CITY OF LOS ANGELES DEPARTMENT OF PUBLIC WORKS
BUREAU OF ENGINEERING

ENGINEERING
CITY OF LOS ANGELES

THIS PLAN WAS ELECTRONICALLY SIGNED AND STAMPED.

CITY ENGINEER
LIC. NO. C-23729
DATE: 7/11/2022

TED ALLEN, P.E.
DESIGN GROUP

ARCHITECT: MICHAEL MALTZAN
DESIGNED BY:
DRAWN BY:
CHECKED BY:
APPROVED BY:

NO. REVISIONS: DATE: BY:

BUILDING NO.

INDEX NO. MF-300501

VERT. CONTROL: LA CITY BM 12-04070 (1985 ADJ), NGVD 1929
HORIZ. CONTROL: NAD 83 (ZONE 5) COORDINATES

SHEET TITLE: WEST BUILDING SECTIONS

PROJECT: SIXTH STREET PARK, ARTS AND RIVER CONNECTIVITY IMPROVEMENTS (PARC)

ADDRESS: SIXTH STREET OVER THE LOS ANGELES RIVER

WORK ORDER NO. E700235D
FILE NO. --
DRAWING NO. AW4-01
SHEET 226 OF 295 SHEETS

Sheet Version 3.0

4 CAFE ROOF PLAN

Scale: 1/4"=1'-0"

FIXTURE LEGEND:			
ID	TYPE	MANUFACTURER	SIZE
XF11	RECESSED SPOT LED	ALPHABET NU4RA	4"
XF12A	RECESSED LINEAR LED	MARK SLOT4 LED	24"

2 CAFE RCP

Scale: 1/4"=1'-0"

3 CAFE GEOMETRY PLAN

Scale: 1/4"=1'-0"

1 CAFE FLOOR PLAN

Scale: 1/4"=1'-0"

THE CITY OF LOS ANGELES OR ITS OFFICERS OR AGENTS SHALL NOT BE RESPONSIBLE FOR THE ACCURACY OR COMPLETENESS OF ELECTRONIC COPIES OF THIS PLAN SHEET.

REVISION DATES (DESIGN STAGE ONLY)

BUREAU OF ENGINEERING
OFFICIAL RECORD

ENGINEERING
CITY OF LOS ANGELES

BUREAU OF ENGINEERING

NO.	REVISIONS:	DATE:	BY:

BUILDING NO.

INDEX NO. MF-300501

THIS PLAN WAS ELECTRONICALLY SIGNED AND STAMPED.

CITY OF LOS ANGELES DEPARTMENT OF PUBLIC WORKS

CITY ENGINEER

TED ALLEN, P.E.

DESIGN GROUP

DATE: 7/11/2022

LIC. NO. C-23729

ARCHITECT: MICHAEL MALTZAN

DESIGNED BY:

DRAWN BY:

CHECKED BY:

APPROVED BY:

MICHAEL MALTZAN ARCHITECTURE
2801 HYPERION AVENUE, STUDIO 107 | LOS ANGELES, CA 90027 | (323) 913 3098

PLANS PREPARED BY:
TETRA TECH, INC.
350 SOUTH GRAND AVENUE, SUITE 3310
LOS ANGELES, CALIFORNIA 90071
Phone: (213) 279-3283

VERT. CONTROL: LA CITY BM 12-04070 (1985 ADJ), NGVD 1929
HORIZ. CONTROL: NAD 83 (ZONE 5) COORDINATES

SHEET TITLE: CAFE AND RESTROOM PLAN

PROJECT: SIXTH STREET PARK, ARTS AND RIVER CONNECTIVITY IMPROVEMENTS (PARC)

ADDRESS: SIXTH STREET OVER THE LOS ANGELES RIVER

WORK ORDER NO. E700235D

FILE NO. --

DRAWING NO. AC2-01

SHEET 227 OF 295 SHEETS

Sheet Version 3.0

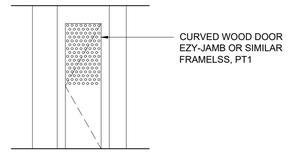

8 UTILITY CLOSET DOOR ELEVATION
- Scale: 1/4"=1'-0"

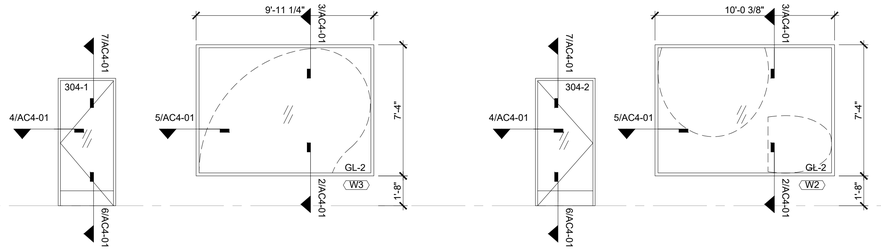

4 GLAZING ELEVATIONS
- Scale: 1/4"=1'-0"

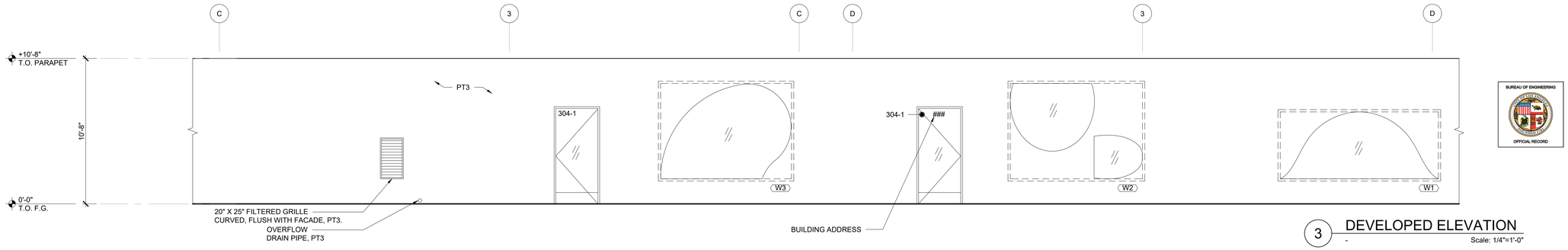

3 DEVELOPED ELEVATION
- Scale: 1/4"=1'-0"

GLAZING TYPE	GLAZING DESCRIPTION	NOTES
GL-1	CLEAR 1" THICK IGU, FIXED (WESTERN WINDOWS 700 SERIES OR SIMILAR)	EAST BUILDING OFFICE WINDOWS SEE AE- SERIES
GL-2	CLEAR 1/2" THICK LAMINATED 2 LAYERS, TOP/BOTTOM/ENDS SET INTO ALUMINUM CHANNEL	CAFÉ WINDOWS SEE AC- SERIES

7 GLAZING TYPES
- No Scale

FINISH SCHEDULE

LOCATION		FLOOR		WALLS								CEILING			NOTES
				NORTH (A)		EAST (B)		SOUTH (C)		WEST (D)					
ROOM#	ROOM NAME	FINISH	BASE	MATERIAL	FINISH	MATERIAL	FINISH	MATERIAL	FINISH	MATERIAL	FINISH	MATERIAL	FINISH	HEIGHT	
CAFE BUILDING															
201	CAFÉ	CC1	RB	GYP	PT1	GYP	PT1	GYP	PT1	GYP	PT1	GYP	PT1	8'-10"	

* NO BASE ON CONCRETE WALLS

LEGEND	
CC1	CONCRETE FLOOR, CLEAR SEALED
GYP	GYPSUM BOARD
PT1	PAINT, INTERIOR NON-ABSORBANT, DUNN EDWARDS DEW380 "WARM WHITE"
PT2	PAINT, EXTERIOR FINISH, MATCH PANTONE 107C OR DUNN EDWARDS DE5404 "HIGHLIGHTER"
PT3	PAINT, EXTERIOR GRAFFITI-RESISTANT FINISH, MATCH PANTONE 107C OR DUNN EDWARDS DE5404 "HIGHLIGHTER"
CP	CEMENT PLASTER

6 FINISH SCHEDULE
- No Scale

DOOR SCHEDULE

DOOR							FRAME		DETAILS			HDWR GROUP	ROOM NAME	NOTES
#	TYPE	WIDTH	HEIGHT	THICKNESS	MATERIAL	FINISH	MATERIAL	FINISH	JAMB	HEAD	THRESHOLD			
201-1	A	3'-0"	7'-0"	1.75"	GLAZ	N/A	ALUM	N/A		7/AC4-01	6/AC4-01	1	CAFÉ	ADDRESS, SIGN DOOR SHALL REMAIN UNLOCKED DURING BUSINESS HOURS
201-2	A	3'-0"	7'-0"	1.75"	GLAZ	N/A	ALUM	N/A		7/AC4-01	6/AC4-01	1	CAFÉ	SIGN DOOR SHALL REMAIN UNLOCKED DURING BUSINESS HOURS

HARDWARE SETS	
SET	DESCRIPTION
1	A/G EXT
2	HM EXT
3	HM INT PRIVACY
4	HM EXT PRIVACY
5	HM STOREROOM
6	HM EXT PR STOREROOM OUTSWING
7	HM INT PR STOREROOM

5 DOOR SCHEDULE
- No Scale

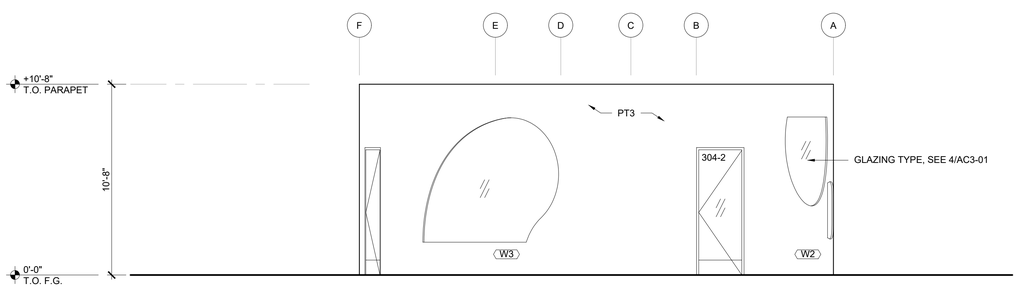

2 CAFE WEST ELEVATION
- Scale: 1/4"=1'-0"

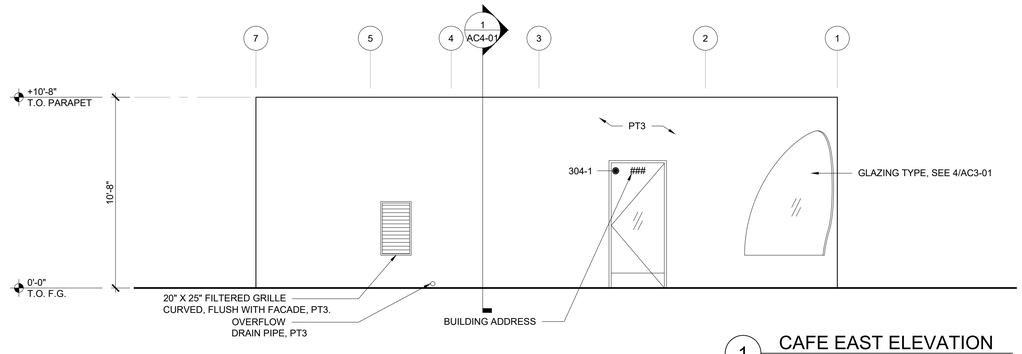

1 CAFE EAST ELEVATION
- Scale: 1/4"=1'-0"

PLANS PREPARED BY:
TETRA TECH, INC.
350 SOUTH GRAND AVENUE, SUITE 3310
LOS ANGELES, CALIFORNIA 90071
Phone: (213) 279-3283

MICHAEL MALTZAN ARCHITECTURE
2801 HYPERION AVENUE, STUDIO 107 | LOS ANGELES, CA 90027 | (323) 913 3098

CITY OF LOS ANGELES DEPARTMENT OF PUBLIC WORKS BUREAU OF ENGINEERING

ENGINEERING CITY OF LOS ANGELES

DATE: BY:

NO. REVISIONS:

BUILDING NO.

INDEX NO. MF-300501

THIS PLAN WAS ELECTRONICALLY SIGNED AND STAMPED.

TED ALLEN, P.E. No. C-39729 Exp. 06/31/23 CIVIL STATE OF CALIFORNIA

BUREAU OF ENGINEERING OFFICIAL RECORD

CITY ENGINEER
LIC. NO. C-39729 DATE: 7/11/2022

ARCHITECT: MICHAEL MALTZAN
DESIGN GROUP

DESIGNED BY:
DRAWN BY:
CHECKED BY:
APPROVED BY:

SHEET TITLE: CAFE & RESTROOM BUILDING ELEVATIONS

PROJECT: SIXTH STREET PARK, ARTS AND RIVER CONNECTIVITY IMPROVEMENTS (PARC)

ADDRESS: SIXTH STREET OVER THE LOS ANGELES RIVER

VERT. CONTROL: LA CITY BM 12-04070 (1985 ADJ), NGVD 1929
HORIZ. CONTROL: NAD 83 (ZONE 5) COORDINATES

WORK ORDER NO. E700235D
FILE NO. --
DRAWING NO. AC3-01
SHEET 228 OF 295 SHEETS

THE CITY OF LOS ANGELES OR ITS OFFICERS OR AGENTS SHALL NOT BE RESPONSIBLE FOR THE ACCURACY OR COMPLETENESS OF ELECTRONIC COPIES OF THIS PLAN SHEET.

REVISION DATES (DESIGN STAGE ONLY)

Sheet Version 3.0

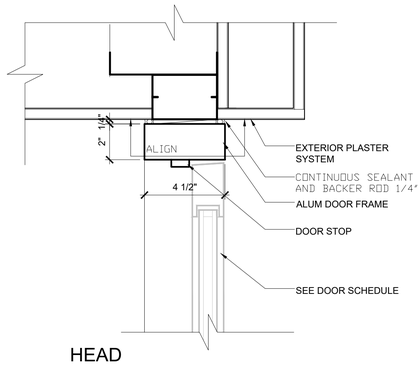

HEAD
TYP ALUM FRAMED DOOR

5 - Scale: 3"=1'-0"

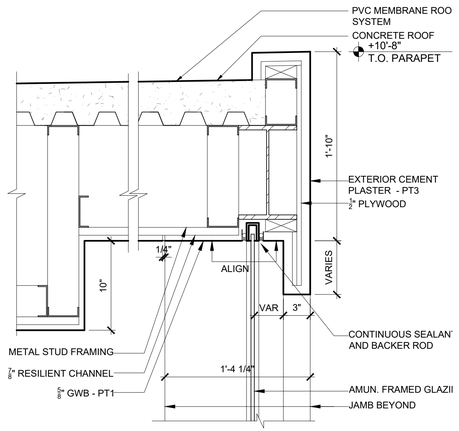

HEADER DETAIL

3 - Scale: 1 1/2"=1'-0"

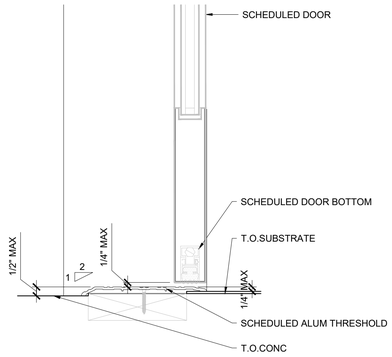

THRESHOLD
CONCRETE / CONCRETE FLOOR

4 - Scale: 3"=1'-0"

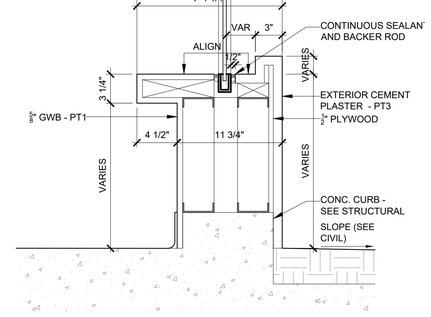

BASE DETAIL

2 - Scale: 1 1/2"=1'-0"

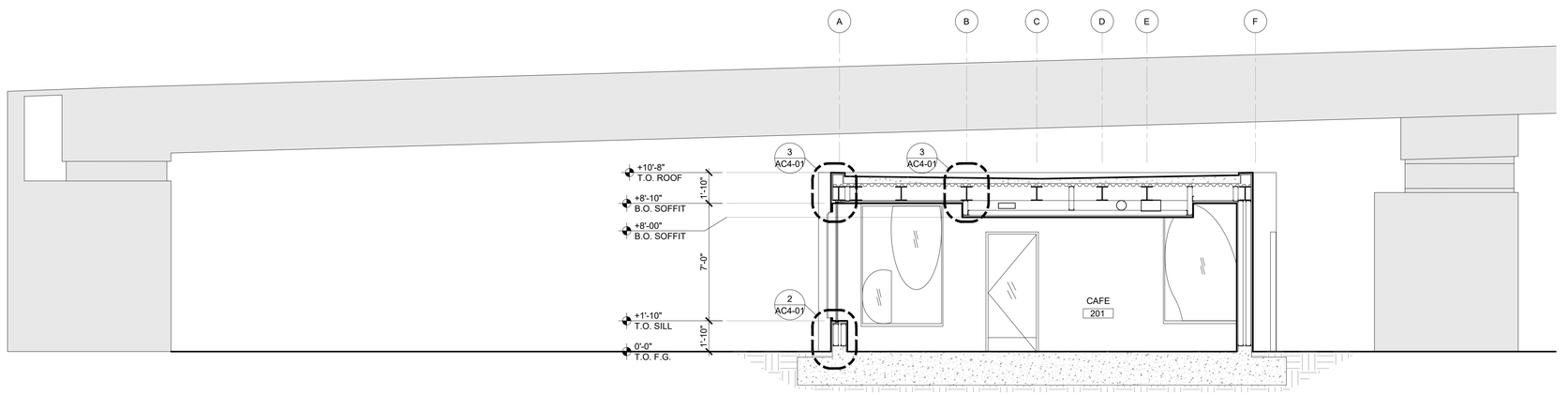

CAFE SECTION

1 - Scale: 1/4"=1'-0"

THE CITY OF LOS ANGELES OR ITS OFFICERS OR AGENTS SHALL NOT BE RESPONSIBLE FOR THE ACCURACY OR COMPLETENESS OF ELECTRONIC COPIES OF THIS PLAN SHEET.

REVISION DATES (DESIGN STAGE ONLY)

Sheet Version 3.0

BUREAU OF ENGINEERING
OFFICIAL RECORD

ENGINEERING
CITY OF LOS ANGELES

BUREAU OF ENGINEERING

NO.	REVISIONS:	DATE:	BY:

BUILDING NO.

INDEX NO. MF-300501

THIS PLAN WAS ELECTRONICALLY SIGNED AND STAMPED.

CITY OF LOS ANGELES DEPARTMENT OF PUBLIC WORKS

CITY ENGINEER
TED ALLEN, P.E.
DATE: 7/11/2022
DESIGN GROUP
LIC. NO. C-23729
ARCHITECT: MICHAEL MALTZAN
DESIGNED BY:
DRAWN BY:
CHECKED BY:
APPROVED BY:

MICHAEL MALTZAN ARCHITECTURE
2801 HYPERION AVENUE, STUDIO 107 | LOS ANGELES, CA 90027 | (323) 913 3098

PLANS PREPARED BY:
TETRA TECH, INC.
350 SOUTH GRAND AVENUE, SUITE 3310
LOS ANGELES, CALIFORNIA 90071
Phone: (213) 279-3283

CITY OF LOS ANGELES
VERT. CONTROL: LA CITY BM 12-04070 (1985 ADJ), NGVD 1929
HORIZ. CONTROL: NAD 83 (ZONE 5) COORDINATES

SHEET TITLE: CAFE & RESTROOM BUILDING SECTIONS

PROJECT: SIXTH STREET PARK, ARTS AND RIVER CONNECTIVITY IMPROVEMENTS (PARC)

ADDRESS: SIXTH STREET OVER THE LOS ANGELES RIVER

WORK ORDER NO. E700235D
FILE NO. --
DRAWING NO. AC4-01
SHEET 229 OF 295 SHEETS

GENERAL STRUCTURAL NOTES
THESE NOTES SHALL APPLY UNLESS SHOWN/INDICATED OTHERWISE ELSEWHERE IN THE STRUCTURAL DRAWINGS.

GENERAL

1. ALL MATERIALS AND CONSTRUCTION SHALL CONFORM TO THE 2019 CITY OF LOS ANGELES BUILDING CODE (L.A.B.C.), BASED UPON THE 2018 EDITION OF THE INTERNATIONAL BUILDING CODE (I.B.C.).

2. THE CONTRACTOR ACKNOWLEDGES RESPONSIBILITY FOR JOBSITE SAFETY AND ACKNOWLEDGES THAT THE ENGINEER WILL NOT HAVE SUCH RESPONSIBILITY. IF A LAWSUIT IS FILED BY ONE OF THE CONTRACTOR'S OR SUBCONTRACTOR'S EMPLOYEES, OR ANY ONE ELSE, THE CONTRACTOR WILL INDEMNIFY, DEFEND AND HOLD THE OWNER AND TETRA TECH, INC., THEIR PARENT AND SUBSIDIARY COMPANIES HARMLESS OF ANY AND ALL SUCH CLAIMS.

3. CONTRACTOR SHALL VERIFY ALL EXISTING CONDITIONS AND DIMENSIONS BEFORE STARTING WORK. SHOULD CONDITIONS EXIST WHICH ARE CONTRARY TO THOSE SHOWN ON PLANS, THE ENGINEER SHALL BE NOTIFIED IN WRITING BEFORE PROCEEDING WITH WORK.

4. IT SHALL BE THE RESPONSIBILITY OF THE CONTRACTOR TO ENSURE THAT ALL WORK IS ADEQUATELY BRACED AND SHORED DURING CONSTRUCTION. ALL BRACING/SHORING SHALL BE DESIGNED BY A REGISTERED ENGINEER HIRED BY THE CONTRACTOR. THE CONTRACTOR SHALL NOT PLACE SOIL BACKFILL AGAINST WALLS UNTIL THE CONCRETE OR MASONRY GROUT HAS REACHED THE MINIMUM SPECIFIED 28 DAY COMPRESSIVE STRENGTH (f'c) AND IS AT LEAST 10 DAYS OLD.

5. UNLESS DETAILED, SPECIFIED, OR INDICATED OTHERWISE, CONSTRUCTION SHALL BE AS INDICATED IN THE APPLICABLE TYPICAL DETAILS AND THESE GENERAL NOTES. TYPICAL DETAILS ARE MEANT TO APPLY EVEN THOUGH NOT REFERENCED AT SPECIFIC LOCATIONS ON DRAWINGS WHERE THEY OCCUR.

6. THE CONTRACT DRAWINGS AND SPECIFICATIONS REPRESENT THE FINISHED STRUCTURE. THEY DO NOT INDICATE THE METHOD OF CONSTRUCTION. THE CONTRACTOR SHALL PROVIDE ALL MEASURES NECESSARY TO PROTECT THE STRUCTURE, WORKERS AND PEDESTRIANS DURING CONSTRUCTION. SUCH MEASURES SHALL INCLUDE, BUT NOT BE LIMITED TO BRACING, SHORING FOR LOADS DUE TO CONSTRUCTION EQUIPMENT, TEMPORARY STRUCTURES, AND PARTIALLY COMPLETED WORK, ETC. OBSERVATION VISITS TO THE SITE BY THE ENGINEER SHALL NOT BE CONSIDERED AS INSPECTION OF SUCH ITEMS.

7. DIMENSIONS SHALL TAKE PRECEDENCE OVER SCALES SHOWN ON DRAWINGS.

8. ALL WORK SHALL CONFORM TO THE PLANS AND SPECIFICATIONS IN ALL RESPECTS AND SHALL BE SUBJECT TO APPROVAL BY THE ENGINEER.

9. SEE CIVIL DRAWINGS FOR SIZE AND LOCATION OF ALL OPENINGS, PIPING, ETC.

10. BY ACCEPTING THIS CONTRACT, CONTRACTOR HEREBY RELEASES AND AGREES TO INDEMNIFY, DEFEND, HOLD HARMLESS THE OWNER, ENGINEER, (HEREINAFTER TETRA TECH, INC.), THEIR PARENT AND SUBSIDIARY COMPANIES, AGENTS, EMPLOYEES, CONSULTANTS AND REPRESENTATIVES FOR ANY AND ALL DAMAGE TO PERSONS OR PROPERTY OR WRONGFUL DEATH REGARDLESS OF WHETHER OR NOT SUCH CLAIM, DAMAGE, LOSS OR EXPENSE IS CAUSED IN WHOLE OR IN PART BY THE NEGLIGENCE, ACTIVE OR PASSIVE, OF OWNER, ENGINEER, THEIR PARENT AND SUBSIDIARY COMPANIES AS WELL AS THEIR AGENTS AND EMPLOYEES, TO THE FULLEST EXTENT PERMITTED BY LAW. SUCH INDEMNIFICATION SHALL EXTEND TO ALL CLAIMS, DEMANDS, ACTIONS, OR LIABILITY FOR INJURIES, DEATH OR DAMAGES OCCURRING AFTER COMPLETION OF THE PROJECT, AS WELL AS DURING THE WORK'S PROGRESS. CONTRACTOR FURTHER AGREES THAT IT SHALL ACCOMPLISH THE ABOVE AT ITS OWN COST, EXPENSE AND RISK EXCLUSIVE OF AND REGARDLESS OF ANY APPLICABLE INSURANCE POLICY OR POSITION TAKEN BY ANY INSURANCE COMPANY REGARDING COVERAGE.

11. SOIL PROPERTIES, ALLOWABLE DESIGN VALUES, GRADING AND COMPACTION REQUIREMENTS AS PER GEOTECHNICAL REPORT BY TETRA TECH BAS, INC., PROJECT NO. TET-21-203E DATED AUGUST 2021. THIS REPORT SHALL BE CONSIDERED A PART OF THESE PLANS AND SHALL BE KEPT AT THE JOB SITE AT ALL TIMES. A COPY OF THIS REPORT IS AVAILABLE FOR REVIEW IN THE ENGINEER'S OFFICE.

12. CONTRACTOR SHALL VERIFY LOCATION OF ALL SITE UTILITIES PRIOR TO STARTING WORK, BOTH ABOVE GROUND AND BELOW GROUND, WHICH MAY BE IMPACTED BY THE WORK SHOWN ON THESE DRAWINGS. ANY CONFLICTS SHALL BE BROUGHT TO THE ATTENTION OF THE ENGINEER.

13. CONTRACTOR SHALL DEFEND, INDEMNIFY AND HOLD THE CLIENT AND TETRA TECH, INC. THEIR PARENT AND SUBSIDIARY COMPANIES, ITS EMPLOYEES, OFFICERS, OR AGENTS, HARMLESS AGAINST ANY AND ALL CLAIMS BY ANY PARTIES ARISING FROM, OR RELATED TO, ANY AND ALL DAMAGES, INCLUDING LEGAL COSTS AND ATTORNEY'S FEES, RESULTING FROM INTERFERENCE WITH, INTERRUPTION OF, DAMAGE TO, OR ANY AND ALL INJURIES WHICH RESULT FROM DAMAGE CAUSED TO SUBSURFACE INSTALLATION, WHICH IS UNFORESEEN AND DESPITE ENGINEER'S EFFORT DURING THE DESIGN PROCESS WAS NOT LOCATED, EXCEPTING ONLY THE GROSS NEGLIGENCE OR WILLFUL MISCONDUCT OF ENGINEER IN PROVIDING ITS SERVICES.

14. ALL ITEMS SHOWN ON THESE PLANS ARE NEW UNLESS NOTED (E), EXIST. OR EXISTING.

REINFORCING NOTES

1. REINFORCEMENT FOR CONCRETE SHALL BE DEFORMED BARS CONFORMING TO A.S.T.M. SPECIFICATION A615 (A706/A706M FOR WELDED REINFORCING). GRADE 60 STEEL SHALL BE USED.

2. ALL REINFORCEMENT, ANCHOR BOLTS, AND OTHER ANCHORAGES PLACED IN CONCRETE SHALL BE ACCURATELY PLACED AND POSITIVELY SECURED AND SUPPORTED BY CONCRETE BLOCKS, METAL CHAIRS, SPACERS, OR METAL HANGERS, AND SHALL BE IN POSITION BEFORE CONCRETE PLACING OR GROUTING IS BEGUN. DETAILING AND PLACING OF BARS SHALL CONFORM TO THE A.C.I. MANUAL OF STANDARD PRACTICES.

3. BARS SPECIFIED AS "CONTINUOUS" SHALL EXTEND THE FULL LENGTH OF THE MEMBER CONTAINING THEM AND MAY BE SPLICED (UNLESS NOTED OR SHOWN WITHOUT SPLICES ON THE PLANS). IN CONCRETE, PROVIDE LAPS PER DETAIL 4 ON SHEET S-501. STAGGER ALL SPLICES.

4. DOWELS SHALL BE PROVIDED AT ALL POUR JOINTS AND SHALL BE THE SAME SIZE AND SPACING AS REINFORCING DIRECTLY BEYOND POUR JOINTS.

5. WELDING OF REINFORCING STEEL, METAL INSERTS AND CONNECTIONS IN REINFORCED CONCRETE OR MASONRY CONSTRUCTION SHALL CONFORM TO ANSI/AWS D1.4-11. USE LOW HYDROGEN E-70 SERIES ELECTRODES FOR WELDING OF REINFORCING BARS. CONTINUOUS INSPECTION IS REQUIRED OF ALL FIELD WELDING IN ACCORDANCE WITH C.B.C. CHAPTER 17.

6. THE SPECIFIED DIMENSIONS OF THE VERTICAL LEGS OF "L" DOWELS, WHOSE HORIZONTAL LEGS ARE CAST INTO A FOOTING OR SLAB CAST ON TOP OF EARTH, ARE BASED UPON THE SLAB THICKNESS AS SHOWN ON THE DRAWINGS. IF A SLAB IS POURED THICKER THAN SHOWN ON THE DRAWINGS, SUCH AS FOR THE SUBGRADE OCCURRING AT A LOWER ELEVATION THAN SHOWN, THE VERTICAL LEGS MUST BE FABRICATED TO A LONGER LENGTH OR THE HORIZONTAL TAILS MUST BE SUPPORTED ABOVE SUBGRADE HIGH ENOUGH TO PROVIDE THE SAME AMOUNT OF LAP LENGTH BETWEEN THE DOWEL AND THE WALL VERTICAL REINFORCING.

CONCRETE NOTES

1. ALL EAST BUILDING AND WEST BUILDING CONCRETE SHALL HAVE A MINIMUM ULTIMATE COMPRESSIVE STRENGTH OF 4000 PSI AT 28 DAYS. ALL RETAINING WALL, U-WALL, AND TUNNEL CONCRETE SHALL HAVE A MINIMUM ULTIMATE COMPRESSIVE STRENGTH OF 5000 PSI AT 28 DAYS.AGGREGATES SHALL CONFORM TO A.S.T.M. C33. AGGREGATES FOR LIGHTWEIGHT CONCRETE SHALL CONFORM TO A.S.T.M. C330.

2. CEMENT FOR CONCRETE SHALL BE TYPE II/V PORTLAND CEMENT CONFORMING TO A.S.T.M. C150.

3. CONCRETE COVER FOR REINFORCING BARS SHALL BE:
CAST AGAINST AND PERMANENTLY EXPOSED TO EARTH = 3"
EXPOSED TO EARTH OR WEATHER: NO. 6 THROUGH NO. 18 BARS = 2"
NO. 5 BARS AND SMALLER = 1 1/2"

4. DRYPACK SHALL BE 1 PART CEMENT AND 3 PARTS SAND (BY VOLUME).

5. NO PIPES OR DUCTS SHALL BE PLACED IN STRUCTURAL CONCRETE UNLESS SPECIFICALLY DETAILED. SEE CIVIL, ARCHITECTURAL AND MECHANICAL DRAWINGS FOR LOCATION OF SLEEVES THROUGH WALLS.

6. THE LOCATION OF ALL CONSTRUCTION JOINTS NOT SPECIFICALLY NOTED OR SHOWN SHALL BE APPROVED BY THE STRUCTURAL ENGINEER.

7. "ROUGHENED SURFACE(S)" OR "ROUGHENED JOINT(S)", WHERE SPECIFIED ON THE DRAWINGS, SHALL BE MECHANICALLY ROUGHENED SUCH THAT A 1/4" AMPLITUDE (±) IS ACHIEVED BETWEEN HIGH AND LOW SPOTS OF THE ROUGHENED SURFACE. THE SURFACE SHALL BE CLEAN AND FREE OF LAITANCE.

8. BOTH FACES OF CONCRETE WALLS, EDGES OF CONCRETE FOUNDATIONS, AND OTHER FORMED CONCRETE SURFACES WHERE THE SPECIFIED CONCRETE COVER IS 2 INCHES, SHALL BE PLACED AGAINST FORMWORK WHICH COMPLIES WITH THE PROJECT SPECIFICATIONS. CONCRETE FOR THESE ELEMENTS SHALL NOT BE CAST AGAINST EARTH.

9. ANCHOR RODS SHALL BE GALVANIZED, FURNISHED WITH CHAMFERED ENDS, AND SHALL MEET STRENGTH AND DUCTILITY REQUIREMENTS EQUIVALENT ASTM F1554, GR 36.

STRUCTURAL STEEL NOTES

1. ALL WIDE FLANGE MEMBERS SHALL BE IN ACCORDANCE WITH A.S.T.M. A-992. ALL OTHER STRUCTURAL AND MISCELLANEOUS STEEL SHALL BE A.S.T.M. A36 UNLESS NOTED OTHERWISE. STRUCTURAL STEEL SHALL BE FABRICATED AND ERECTED IN ACCORDANCE WITH THE AISC SPECIFICATION FOR THE DESIGN, FABRICATION AND ERECTION OF STRUCTURAL STEEL FOR BUILDINGS. SPECIAL INSPECTION SHALL BE PROVIDED FOR ALL STRUCTURAL STEEL IN ACCORDANCE WITH IBC SECTION 1705.2.1, UNLESS FABRICATION IS PERFORMED ON THE PREMISES OF A FABRICATOR REGISTERED AND APPROVED TO PERFORM SUCH WORK WITHOUT SPECIAL INSPECTION, IN ACCORDANCE WITH THE PROJECT SPECIFICATIONS AND SECTION 1704.2.5.1 OF THE 2020 L.A.B.C. AT THE COMPLETION OF FABRICATION, THE APPROVED FABRICATOR SHALL SUBMIT A CERTIFICATE OF COMPLIANCE TO THE CITY BUILDING OFFICIAL (OR OWNER IF THE PROJECT IS NOT UNDER THE JURISDICTION OF A BUILDING DEPARTMENT) AND TO THE ENGINEER STATING THAT THE WORK WAS PERFORMED IN ACCORDANCE WITH THE CONTRACT DOCUMENTS.

2. STEEL TUBES SHALL CONFORM TO A.S.T.M. A500, GRADE B OR BETTER, U.N.O.

3. STEEL PIPES SHALL CONFORM TO A.S.T.M. A53, GRADE B.

4. BOLTS SHALL CONFORM TO ASTM A325 OR BETTER, UNLESS NOTED OTHERWISE.

5. HIGH STRENGTH BOLTS SHALL BE ASTM F3125 (OR AS NOTED OTHERWISE) AND SHALL CONFORM TO THE REQUIREMENTS THE RESEARCH COUNCIL ON STRUCTURAL CONNECTIONS (RCSC) SPECIFICATION FOR STRUCTURAL JOINTS USING HIGH STRENGTH BOLTS. CONTACT FACES OF STEEL AT CONNECTIONS WHERE HIGH STRENGTH BOLTS ARE USED SHALL NOT BE PAINTED. JOINTS WILL RECEIVE CAULKING FOLLOWING ERECTION AND COATING. COMPRESSIBLE-WASHER-TYPE DIRECT TENSION INDICATORS OR TWIST-OFF-TYPE TENSION-CONTROL BOLTS SHALL BE PROVIDED AT ALL HIGH STRENGTH BOLTED CONNECTIONS.

6. WHERE SPECIFIED, USE OF HIGH-STRENGTH BOLTS SHALL CONFORM TO THE PROVISIONS OF THE "SPECIFICATION FOR STRUCTURAL JOINTS USING A.S.T.M. A325 OR A490 BOLTS" APPROVED BY THE RESEARCH COUNCIL ON STRUCTURAL CONNECTIONS OF THE ENGINEERING FOUNDATION (RCSC). SPECIAL INSPECTION OF HIGH-STRENGTH BOLT CONNECTIONS IS REQUIRED.

7. HOLES FOR BOLTS IN STEEL SHALL BE OF SAME DIAMETER AS BOLT +1/16" MAXIMUM.

8. ALL WELDING SHALL CONFORM TO THE AMERICAN WELDING SOCIETY'S SPECIFICATION FOR THE MATERIAL BEING WELDED (AWS D1.1/D1.1M - D1.8/D1.8M). SEE STRUCTURAL WELDING SPECIFICATION UFGS 05 05 23.16.

9. ALL WELDING SHALL BE SHIELDED ARC TYPE AND SHALL BE PERFORMED BY A CERTIFIED WELDER IN A FABRICATION SHOP REGISTERED AND APPROVED IN ACCORDANCE WITH NOTE 1 ABOVE. CONTINUOUS INSPECTION IS REQUIRED OF ALL FIELD WELDING IN ACCORDANCE WITH AWS D1.1.

10. WELDING EQUIPMENT SHALL BE CHECKED PRIOR TO WELDING AS REQUIRED BY AISC 360-16 TABLE N5.4-1.

11. PRE-INSTALLATION VERIFICATION TESTING BY INSTALLATION PERSONNEL OBSERVED AND DOCUMENTED FOR FASTENER ASSEMBLIES AND METHODS USED SHALL BE PERFORMED AS REQUIRED BY AISC 360-16 TABLE N5.6-1.

12. TEMPORARY BRACING AND SHORING SHALL BE PROVIDED AS REQUIRED FOR ERECTION AND SAFETY. THESE BRACING AND SHORING MEMBERS SHALL NOT BE REMOVED UNTIL ALL BOLTING AND WELDING IS COMPLETED.

13. ALL STRUCTURAL STEEL WORK, EXCEPT THAT STEEL TO BE EMBEDDED IN CONCRETE, SHALL BE SHOP PAINTED PER SPEC SECTION 09900 PAINTING, AND TOUCHED UP IN THE FIELD AFTER ERECTION. ALL OTHER STEEL SHALL BE GALVANIZED.

14. BOLT JOINT TYPES SHALL BE SNUG-TIGHT PER AISC SPECIFICATIONS UNLESS NOTED OTHERWISE. LOCATION OF SLIP-CRITICAL JOINTS PER PLANS.

15. STRUCTURAL STEEL CONSTRUCTION AND DETAILS SHALL CONFORM TO AISC MANUAL OF STEEL CONSTRUCTION LOAD AND RESISTANCE FACTOR DESIGN (LRFD) 15TH EDITION.

16. NO STRUCTURAL STEEL MEMBER SHALL BE CUT FOR PIPES, DUCTS, ETC. UNLESS SPECIFICALLY DETAILED AND APPROVED BY STRUCTURAL ENGINEER.

17. ALL STEEL EXPOSED TO WEATHER SHALL BE HOT-DIPPED GALVANIZED IN ACCORDANCE WITH ASTM A123, AS APPLICABLE. REPAIR OF DAMAGED GALVANIZED COATING SHALL BE IN ACCORDANCE WITH ASTM A780. ALL OTHER NON-STAINLESS STEEL SHALL BE COATED WITH TWO COATS OF SHOP APPLIED PRIMER.

18. WELDING OF SEISMIC FORCE RESISTING SYSTEMS - IN ADDITION TO THE GENERAL WELDING REQUIREMENTS, THE FOLLOWING REQUIREMENTS APPLY TO WELDS USED IN MEMBERS AND CONNECTIONS WHICH ARE PART OF A SEISMIC FORCE RESISTING SYSTEM AS IDENTIFIED IN THE DRAWINGS. WELDING SHALL CONFORM TO AWS D1.8 "STRUCTURAL WELDING CODE - SEISMIC SUPPLEMENT." WELDING SHALL BE PERFORMED IN ACCORDANCE WITH A WELDING PROCEDURE SPECIFICATION AS REQUIRED IN AWS D1.1 AND AWS D1.8 AND SHALL BE APPROVED BY THE REGISTERED DESIGN PROFESSIONAL IN RESPONSIBLE CHARGE. WELDS SHALL BE MADE WITH A FILLER MEETING THE REQUIREMENTS SPECIFIED IN CLAUSE 6.3 OF AWS D1.8.

19. WELDS SPECIFIED AS "DEMAND CRITICAL" (DC) ON THE DRAWINGS SHALL BE MADE WITH A FILLER METAL MEETING THE REQUIREMENTS SPECIFIED IN CLAUSE 6.3 OF AWS D1.8.

STAINLESS STEEL NOTES

1. STAINLESS STEEL CONSTRUCTION SHALL CONFORM TO THE SPECIFICATIONS AND STANDARDS AS CONTAINED IN THE 15TH EDITION OF THE AISC MANUAL OF STEEL CONSTRUCTION IN CONJUNCTION WITH AISC DESIGN GUIDE 27.

2. STRUCTURAL SHAPES, BARS, AND PLATES INDICATED ON THE DRAWINGS SHALL BE STAINLESS STEEL TYPE 304 OR 316 AS INDICATED ON THE DRAWINGS. WHERE SHAPES, BARS OR PLATES WILL BE WELDED, THE MATERIAL SHALL BE TYPE 304 OR 316L AS INDICATED ON THE DRAWINGS.

3. PLATE, SHEET AND STRIP SHALL BE ASTM A240. BARS AND SHAPES SHALL BE ASTM A276. HOLLOW STRUCTURAL SECTIONSSHALL BE ASTM A554.

4. BOLTS AND OTHER FASTENERS SHALL BE STAINLESS STEEL TYPE 316. STAINLESS STEEL BOLTS AND THREADED ROD SHALL CONFORM TO ASTM F593 ALLOY GROUP 2 CONDITION CW. STAINLESS STEEL NUTS SHALL CONFORM TO ASTM F594 ALLOY GROUP 2 CONDITION CW. STAINLESS STEEL WASHERS SHALL BE STAINLESS STEEL TYPE 316 MEETING THE DIMENSIONAL REQUIREMENTS OF ASTM F436.

5. WELDING SHALL CONFORM TO AWS D1.6 STRUCTURAL WELDING CODE FOR STAINLESS STEEL. WELDING SHALL BE CONDUCTED BY WELDERS CERTIFIED BY THE AWS. WELD FILLER MATERIAL SHALL BE PREQUALIFIED FILLER METAL PER AWS D1.6.

6. STAINLESS STEEL SHALL CONFORM TO A.S.T.M. A276/A.I.S.I. 316. STAINLESS STEEL BOLTS SHALL CONFORM TO A.S.T.M. F593. STAINLESS STEEL NUTS SHALL CONFORM TO A.S.T.M. F594. DO NOT COAT STAINLESS STEEL.

STEEL DECK NOTES

1. REFER TO STEEL DECK SPECIFICATIONS FOR ADDITIONAL INFORMATION.

2. DECK ERECTION CONTRACTOR SHALL CUT DECK TO SUIT DETAILS AT ALL FRAMED OPENINGS AS INDICATED ON THE DRAWINGS.

3. THE OPENINGS SHOWN ON THE FRAMING PLANS INDICATE THE GENERAL ARRANGEMENT AND LOCATION ONLY. VERIFY OUTING LENGTH OF DECK WITH ELECTRICAL AND MECHANICAL DRAWINGS.

4. ALL WELDERS SHALL BE CERTIFIED FOR LIGHT GAGE STEEL WELDING IN THE CITY. ALL FIELD WELDING SHALL BE PERFORMED IN THE PRESENCE OF THE WELDING SPECIAL INSPECTOR.

5. CONTINUOUS INSPECTION BY A DEPUTY INSPECTOR IS REQUIRED OF THE WELDING.

6. THE EFFECTIVE AREA OF A 3/4" PLUG WELD SHALL NOT BE LESS THAN 1/2"Ø

7. ALL LIGHT GAGE STEEL DECKING AND FLASHING SHALL BE FABRICATED OF SHEET METAL CONFORMING TO A.S.T.M. A-446.

8. DECKING SHALL BE GALVANIZED PER COATING DESIGNATION G60 IN ACCORDANCE WITH ASTM A653, UNLESS NOTED OTHERWISE.

9. EDGE OF PERIMETER CLOSURE SHALL BE HELD WITHIN ±1/2" OF THE DIMENSIONS REQUIRED ON THE ARCHITECTURAL DRAWINGS. CONFIRM THE LOCATION OF THE BEAM AND COLUMN CENTER LINES FROM FIXED REFERENCE EDGE LINES.

10. MINIMUM DECK SECTION PROPERTIES SHALL BE AS FOLLOWS:

EAST RESTROOM BUILDING

GAUGE	DEPTH	I (IN^4)	+S(IN^3)	-S(IN^3)
16	2"	0.708	0.623	0.638

EAST RESTROOM BUILDING

GAUGE	DEPTH	I (IN^4)	+S(IN^3)	-S(IN^3)
16	2"	0.708	0.623	0.638

EAST BUILDINGS ROOF BRIDGE

GAUGE	DEPTH	I (IN^4)	+S(IN^3)	-S(IN^3)
20	1-1/2"	0.219	0.230	0.237

WEST RESTROOM BUILDING

GAUGE	DEPTH	I (IN^4)	+S(IN^3)	-S(IN^3)
16	1-1/2"	0.381	0.399	0.410

WEST CAFE BUILDING

GAUGE	DEPTH	I (IN^4)	+S(IN^3)	-S(IN^3)
16	2"	0.708	0.623	0.638

ADHESIVE ANCHORS

18. ADHESIVE ANCHORS SHALL BE "HIT HY-200" ADHESIVE ANCHORS, MANUFACTURED BY HILTI, INC. OR APPROVED EQUAL, ASTM DESIGNATION F1554 GR. 36, U.N.O. FOR CONCRETE APPLICATIONS.

19. ANCHORS SHALL BE INSTALLED IN ACCORDANCE WITH ICC-ES EVALUATION REPORT NO. 3187 FOR HILTI HY-200, AND ICC-ES EVALUATION REPORT NO. 2508 FOR SIMPSON SET-XP.

20. SPECIAL INSPECTION PER CHAPTER 1705.3 OF THE L.A.B.C. SHALL BE PROVIDED DURING ANCHOR INSTALLATION.

21. AN ALTERNATIVE ADHESIVE ANCHOR PRODUCT MAY BE SUBMITTED TO THE ENGINEER FOR APPROVAL, PROVIDED THAT IT HAS A CURRENT ICC-ES EVALUATION REPORT APPROVAL.

22. ALL ABANDONED HOLES SHALL BE FILLED WITH A DRYPACK GROUT A MINIMUM 28-DAY COMPRESSIVE STRENGTH OF 5,000 PSI. THE FILLED HOLE(S) SHALL BE PREPARED AND CLEANED AS REQUIRED BY THE GROUT MANUFACTURER.

23. LOCATE EXISTING REINFORCING USING A NON-DESTRUCTIVE METHOD (PACHOMETER OR OTHER PRIOR TO STEEL FABRICATION OF THE AFFECTED COMPONENTS AND PRIOR TO DRILLING HOLES FOR ANCHORS. MAINTAIN A MINIMUM CLEARANCE OF 1" BETWEEN THE REINFORCEMENT AND THE ANCHOR. NOTIFY ENGINEER IF ADHESIVE ANCHORS CANNOT BE INSTALLED DUE TO REBAR INTERFERENCE(S) SO STRUCTURAL STEEL DETAILING SHOWN HEREON CAN BE MODIFIED TO ACCOMMODATE.

BUREAU OF ENGINEERING
OFFICIAL RECORD

PLANS PREPARED BY:
TETRA TECH, INC.
707 WILSHIRE BLVD. 23RD FLR.
LOS ANGELES, CA 90017
PHONE: (213) 239-8866

CITY OF LOS ANGELES DEPARTMENT OF PUBLIC WORKS
BUREAU OF ENGINEERING
ENGINEERING
CITY OF LOS ANGELES

NO	REVISIONS:	DATE	BY:

BUILDING NO.

INDEX NO. MF-300501

"THIS PLAN WAS ELECTRONICALLY SIGNED AND STAMPED"
MICHAEL S. O. OLSEN — REGISTERED PROFESSIONAL ENGINEER — No. 81944 — CIVIL — STATE OF CALIFORNIA

CITY ENGINEER
DATE:
LIC. NO.

DESIGN GROUP

ENGINEER:	MICHAEL OLSEN
DESIGNED BY:	JUSTIN SMITH
DRAWN BY:	XXXX
CHECKED BY:	NATE SCHREINER
APPROVED BY:	JASON L. FUSSEL

TED ALLEN, P.E.

VERT. CONTROL: BM 12-04070, 1929 (NGVD29) - 1995 ADJUSTMENT
HORIZ. CONTROL: GPS; PID AE 1704, EPOCH 1991.35

SHEET TITLE: STRUCTURAL GENERAL NOTES

PROJECT: SIXTH STREET PARK, ARTS AND RIVER CONNECTIVITY IMPROVEMENTS (PARC)

ADDRESS: SIXTH STREET OVER THE LOS ANGELES RIVER

WORK ORDER NO. E700235D
FILE NO. --
DRAWING NO. S-001
SHEET 230 OF 295 SHEETS

7/11/2022 4:38:24 PM - C:\USERS\MARK.NAYRA\ONEDRIVE - TETRA TECH, INC\DESKTOP\PROJECT BACKUPS\6TH STREET\FINAL FILES\FINAL DRAWINGS\S-001_GENERAL NOTES - TT.DWG - NAYRA, MARK

REVISION DATES (DESIGN STAGE ONLY)

THE CITY OF LOS ANGELES OR ITS OFFICERS OR AGENTS SHALL NOT BE RESPONSIBLE FOR THE ACCURACY OR COMPLETENESS OF ELECTRONIC COPIES OF THIS PLAN SHEET.

Sheet Version 3.0

DESIGN CRITERIA

DESIGN CODES AND REFERENCES:
CITY OF LOS ANGELES BUILDING CODE, 2020 EDITION
CALIFORNIA BUILDING CODE, 2019 EDITION
ASCE 7-16 MINIMUM DESIGN LOADS FOR BUILDINGS AND OTHER STRUCTURES
AISC MANUAL OF STEEL CONSTRUCTION, LRFD 15TH EDITION
AISC 341-16 SEISMIC PROVISIONS FOR STRUCTURAL STEEL BUILDINGS
AISC 358-16 PREQUALIFIED CONNECTIONS FOR SPECIAL AND INTERMEDIATE STEEL MOMENT FRAMES FOR SEISMIC APPLICATIONS
ACI 318-14, BUILDING CODE REQUIREMENTS FOR STRUCTURAL CONCRETE
NATIONAL DESIGN SPECIFICATIONS (NDS) FOR WOOD CONSTRUCTION, 2015 EDITION

LIVE LOADS:
FLOOR LIVE LOAD = 100 PSF (LOBBY OFFICE BUILDING)
CALTRANS H-20 TRUCK (TUNNEL AND RETAINING WALLS)
ROOF LIVE LOAD = 20 PSF (ORDINARY FLAT ROOF)
CALTRANS H-20 TRUCK (TUNNEL AND RETAINING WALLS)
40 PSF (EAST BUILDINGS ROOF BRIDGE STRUCTURE)

SEISMIC DESIGN PARAMETERS:
LOCATION: LAT. 34.03851°, LONG. -118.22804°
OCCUPANCY CATEGORY: II
SITE CLASS: D
SEISMIC DESIGN CATEGORY: D

Fa = 1.0 Fv = 1.7
Ss = 1.930g S1 = 0.688g
SDs = 1.287g SD1 = 0.780g

EAST BUILDINGS:
ANALYSIS PROCEDURE USED: EQUIVALENT LATERAL FORCE PROCEDURE
SEISMIC FORCE RESISTING SYSTEM: SPECIAL REINFORCED CONCRETE SHEAR WALLS AND SPECIAL MOMENT FRAMES (ASCE 7-16, TABLE 12.2-1)
RISK CATEGORY: II
Ie = 1.0
R = 5
Cs = 0.257
DESIGN BASE SHEAR = 0.257*W

EAST BUILDINGS ROOF BRIDGE STRUCTURE:
ANALYSIS PROCEDURE USED: MODAL ANALYSIS
ALL OTHER SELF-SUPPORTING STRUCTURES
RISK CATEGORY: II
Ie = 1.0
R = 1.25
ap = 2.50
Fp = 3.1 PSF

EAST BUILDINGS EXTERIOR CONCRETE SELF-SUPPORTING CURTAIN WALL:
ANALYSIS PROCEDURE USED: EQUIVALENT LATERAL FORCE PROCEDURE
ALL OTHER SELF-SUPPORTING STRUCTURES
RISK CATEGORY: II
Ie = 1.0
R = 1.25
Cs = 1.03

WEST BUILDING:
ANALYSIS PROCEDURE USED: EQUIVALENT LATERAL FORCE PROCEDURE
SEISMIC FORCE RESISTING SYSTEM: SPECIAL REINFORCED CONCRETE SHEAR WALL
RISK CATEGORY: II
Ie = 1.0
R = 5
Cs = 0.257
DESIGN BASE SHEAR = 0.257*W

CAFE BUILDING:
ANALYSIS PROCEDURE USED: EQUIVALENT LATERAL FORCE PROCEDURE
SEISMIC FORCE RESISTING SYSTEM: SPECIAL CANTILEVER COLUMN SYSTEM
RISK CATEGORY: II
Ie = 1.0
R = 2.5
Cs = 0.515
DESIGN BASE SHEAR = 0.515*W

TUNNEL AND RETAINING WALL:
ALL OTHER SELF-SUPPORTING STRUCTURES
RISK CATEGORY: II
Ie = 1.0
R = 1.25

WIND LOAD DESIGN PARAMETERS:
EAST BUILDINGS
NOMINAL DESIGN WIND SPEED: 95 MPH
RISK CATEGORY: II
EXPOSURE CATEGORY: C
INTERNAL PRESSURE COEFFICIENT: ±0.18

EAST BUILDINGS ROOF BRIDGE STRUCTURE
NOMINAL DESIGN WIND SPEED: 95 MPH
RISK CATEGORY: II
EXPOSURE CATEGORY: C
COMBINED PRESSURE COEFFICIENT: +1.9 / -1.5

EAST BUILDINGS EXTERIOR CONCRETE CURTAIN WALL
NOMINAL DESIGN WIND SPEED: 95 MPH
RISK CATEGORY: II
EXPOSURE CATEGORY: C
NET FORCE COEFFICIENT: 1.4

WEST BUILDING
NOMINAL DESIGN WIND SPEED: 95 MPH
RISK CATEGORY: II
EXPOSURE CATEGORY: C
INTERNAL PRESSURE COEFFICIENT: ±0.18

CAFE BUILDING
NOMINAL DESIGN WIND SPEED: 95 MPH
RISK CATEGORY: II
EXPOSURE CATEGORY: C
INTERNAL PRESSURE COEFFICIENT: ±0.18

SOIL DESIGN PARAMETERS:
RETAINING WALL AND U-WALL FOUNDATIONS
ALLOWABLE SOIL BEARING = 3200 PSF (1/3 INCREASE FOR TRANSIENT LOADING)
PASSIVE SOIL PRESSURE = 350 PSF/FT AT LEVEL BACKFILL (3500 PCF MAX. @ 10'-0" DEPTH)
FRICTION COEFFICIENT = 0.39 BETWEEN WALL FOOTING AND UNDERLYING SOIL
LATERAL EARTH PRESSURE
ACTIVE (LEVEL BACKFILL) = 40 PSF/FT (DRAINED)
AT-REST (LEVEL BACKFILL) = 60 PSF/FT (DRAINED)
CONSTRUCTION LIVE LOAD = 120 PSF (UNIFORM LOADING)
SEISMIC LOAD = 13.5 PSF/FT (INVERTED TRIANGULAR LOADING)

MAT FOUNDATIONS (ALL BUILDING STRUCTURES)
ALLOWABLE SOIL BEARING = 1500 PSF (1/3 INCREASE FOR TRANSIENT LOADING)
PASSIVE SOIL PRESSURE = 350 PSF/FT AT LEVEL BACKFILL
FRICTION COEFFICIENT = 0.35 BETWEEN WALL FOOTING AND UNDERLYING SOIL

COUNTY OF L.A. STRUCTURAL NOTES:

1. THE USE OF ROLLED STEEL SECTIONS AND/OR BOLTS MANUFACTURED OUTSIDE THE UNITED STATES WILL REQUIRE VERIFICATION THAT THE PRODUCTS COMPLY WITH APPLICABLE ASTM STANDARDS. MILL CERTIFICATES WILL BE REQUIRED FOR ALL STEEL. STEEL GRADES OTHER THAN ASTM A36 WILL REQUIRE TESTING BY AN APPROVED LABORATORY. ALL FOREIGN BOLTS MUST BE APPROVED BY L.A. COUNTY BUILDING AND SAFETY PRIOR TO THEIR USE.
2. SPECIAL INSPECTION BY A LOS ANGELES COUNTY REGISTERED DEPUTY INSPECTOR IS REQUIRED FOR FIELD WELDING, CONCRETE STRENGTH GREATER THAN 2500 PSI, HIGH STRENGTH BOLTING, SPRAYED-ON FIREPROOFING, HIGH-STRENGTH MASONRY, HIGH-LIFT GROUTING, PRESTRESSED CONCRETE, AND SPECIAL MOMENT RESISTING CONCRETE FRAMES.
3. THE PERIMETER WALLS ARE NOT TO BE BACKFILLED UNTIL THE FLOOR SLABS ARE POURED AND CURED.
4. A COMPACTION REPORT SHALL BE SUBMITTED TO THE COUNTY BUILDING INSPECTOR PRIOR TO FOOTING INSPECTION.

EXISTING UNDERGROUND UTILITY NOTES:

1. THE CIVIL AND STRUCTURAL ENGINEERS ARE NOT RESPONSIBLE FOR THE LOCATIONS OF EXISTING UNDERGROUND UTILITIES WHETHER OR NOT SHOWN ON THE DRAWINGS. THE LOCATION OF ANY EXISTING UNDERGROUND UTILITIES SHOWN ON THE DRAWINGS ARE APPROXIMATE. THE CONTRACTOR SHALL IMMEDIATELY NOTIFY THE OWNER SHOULD ANY SUCH UNIDENTIFIED CONDITIONS BE DISCOVERED.
2. THE CONTRACTOR SHALL BE RESPONSIBLE FOR ANY DAMAGES WHICH MAY RESULT FROM HIS FAILURE TO EXACTLY LOCATE AND PRESERVE ALL EXISTING UNDERGROUND UTILITIES.

ADDITIONAL NOTES PER LADBS:

1. CONTRACTOR IS RESPONSIBLE FOR THE CONSTRUCTION OF A WIND OR SEISMIC FORCE RESISTING SYSTEM/COMPONENT LISTED IN THE "STATEMENT OF SPECIAL INSPECTION" SHALL SUBMIT A WRITTEN STATEMENT OF RESPONSIBILITY TO THE LADBS INSPECTORS AND THE OWNER PRIOR TO THE COMMENCEMENT OF WORK ON SUCH SYSTEM OR COMPONENT PER SEC 1709.1.
2. CONTINUOUS SPECIAL INSPECTION BY A REGISTERED DEPUTY INSPECTOR IS REQUIRED FOR FIELD WELDING, CONCRETE STRENGTH F'C > 2500 PSI, HIGH STRENGTH BOLTING.
3. A COPY OF THE LOS ANGELES RESEARCH REPORT AND/OR CONDITIONS OF LISTING SHALL BE MADE AVAILABLE AT THE JOB SITE.
4. NUTS OF THE PRIMARY AND SECONDARY ANCHORS FASTENERS SHALL BE FINGER TIGHT WITH 1/2 WRENCH TURN PRIOR TO INSPECTION AND COVERING.
5. EXTERIOR ANCHOR BOLTS AND POST BASES SHALL BE GALVANIZED AND EACH ANCHOR BOLT SHALL HAVE AT LEAST TWO GALVANIZED NUTS ABOVE THE BASE PLATE.
6. ALL MAIN FOOTING REINFORCEMENT STEEL SHALL BE BENT INTO THE INTERSECTING FOOTING AND FULLY DEVELOPED AROUND EACH CORNER AND INTERSECTION.
7. CONTINUOUS INSPECTION BY A LOS ANGELES CITY LICENSED DEPUTY INSPECTOR IS REQUIRED FOR ALL STRUCTURAL CONNECTIONS, FOOTINGS, GRADE BEAMS AND RETAINING WALLS DURING INSTALLATION.
8. STRUCTURAL OBSERVATION BY THE ENGINEER OR ARCHITECT OF RECORD IS REQUIRED IN ACCORDANCE WITH LA INFORMATION BULLETIN P/BC 2008-024. COMPLETE ATTACHED FORM.
9. FIELD WELDING TO BE DONE BY WELDERS CERTIFIED BY LADBS FOR STRUCTURAL STEEL, REINFORCING STEEL & LIGHT GAUGE STEEL. CONTINUOUS INSPECTION BY A DEPUTY INSPECTOR IS REQUIRED.
10. SHOP WELDS MUST BE PERFORMED IN A LICENSED LADBS FABRICATOR'S SHOP.
11. LADBS LICENSED FABRICATOR IS REQUIRED FOR STRUCTURAL STEEL.
12. ALL BOLT HOLES SHALL BE DRILLED 1/32" TO 1/16" OVERSIZED.

SHORING AND EXCAVATION NOTES:

1. THE CONTRACTOR SHALL PROVIDE FOR THE DESIGN, APPROVALS, PERMITS, INSTALLATION AND MONITORING OF ALL TEMPORARY SHORING AND BRACING AS REQUIRED TO SUPPORT EXISTING FRAMING WHERE SUPPORT ELEMENTS (BEAMS, COLUMNS, AND BEARING WALLS / RETAINING WALLS) ARE TO BE REMOVED.
2. ALL WORK SHALL BE PERFORMED IN ACCORDANCE WITH THE LATEST EDITION OF THE CALIFORNIA CONSTRUCTION SAFETY ORDERS (CAL-OSHA).
3. TEMPORARY CUTS SHALL NOT EXCEED SLOPES RECOMMENDED IN THE SOIL REPORT, NOR THOSE SHOWN ON THE SHORING DRAWINGS FOR CONSTRUCTION OF FOUNDATIONS.
4. THE INSTALLATION OF SHORING AND EXCAVATIONS SHALL BE PERFORMED UNDER THE CONTINUOUS INSPECTION AND APPROVAL OF THE GEOTECHNICAL ENGINEER.
5. THE DESIGN OF THE SHORING SYSTEM SHALL BE BASED UPON RECOMMENDATIONS CONTAINED IN THE SOIL REPORT. THE SHORING CONTRACTOR SHALL FAMILIARIZE THEMSELVES WITH ALL DATA THEREIN AND SHALL KEEP A COPY OF THE REPORT AT THE JOB SITE AT ALL TIMES.

STRUCTURAL ABBREVIATIONS

A.B.	ANCHOR BOLT
A.C.I.	AMERICAN CONCRETE INSTITUTION
A.I.S.C.	AMERICAN INSTITUTE OF STEEL CONSTRUCTION
A.N.S.I.	AMERICAN NATIONAL STANDARDS INSTITUTE
ARCH.	ARCHITECT
A.S.T.M.	AMERICAN SOCIETY FOR TESTING AND MATERIALS
A.W.S.	AMERICAN WELDING SOCIETY
BLDG	BUILDING
BTM.	BOTTOM
B.O.C.	BOTTOM OF CEILING
B.O.R.	BOTTOM OF ROOF
C.B.C.	CALIFORNIA BUILDING CODE
CIDH	CAST-IN-DRILLED HOLE PILE
C/J	CONSTRUCTION JOINT
CLR.	CLEAR
CMU	CONCRETE MASONRY UNIT
CONC.	CONCRETE
CONST.	CONSTRUCTION
CONT.	CONTINUOUS
C.R.S.I.	CONCRETE REINFORCING STEEL INSTITUTE
DIA.	DIAMETER
DTL	DETAIL
(E)	EXISTING
EA.	EACH
E.F.	EACH FACE
EL.	ELEVATION
ELEV.	ELEVATION
EQ.	EQUAL
E.W.	EACH WAY
EXIST.	EXISTING
FDN.	FOUNDATION
F.F.	FINISH FLOOR
F.G.	FINISH GRADE
GA.	GAUGE
GALV.	GALVANIZED
G.C.	GENERAL CONTRACTOR
GEN.	GENERAL
H	HIGH
HORIZ.	HORIZONTAL
HSS	HOLLOW STEEL SECTION
HT.	HEIGHT
I	MOMENT OF INERTIA
IBC	INTERNATIONAL BUILDING CODE
ICC	INTERNATIONAL CODE COUNCIL
I.J.	ISOLATION JOINT
IN	INCH
INV	INVERT
K	KIPS
KSI	KIPS PER SQUARE INCH
LABC	CITY OF LOS ANGELES BUILDING CODE
L.A.C.B.C.	LOS ANGELES COUNTY BUILDING CODE
LADWP	LOS ANGELES DEPARTMENT OF WATER AND POWER
L_d	DEVELOPMENT LENGTH
MAX.	MAXIMUM
MECH.	MECHANICAL
MFR.	MANUFACTURER
MIN.	MINIMUM
M.O.	MASONRY OPENING
No.	NUMBER
N.T.S.	NOT TO SCALE
O.C.	ON CENTER
PCF	POUNDS PER CUBIC FOOT
PSF	POUNDS PER SQUARE FOOT
PSI	POUNDS PER SQUARE INCH
PT.	POINT
REINF.	REINFORCING
REQ'D.	REQUIRED
S	SECTION MODULUS
SF	SQUARE FEET
SIM.	SIMILAR
SPECS.	SPECIFICATIONS
S.M.S.	SHEET METAL SCREW
SQ.	SQUARE
S.S.	STAINLESS STEEL
STRUCT.	STRUCTURAL
T&B	TOP & BOTTOM
T.O.	TOP OF
T.O.F.	TOP OF FOOTING
T.O.R.	TOP OF ROOF
T.O.S.	TOP OF STEEL
T.O.W.	TOP OF WALL
TYP.	TYPICAL
U.N.O.	UNLESS NOTED OTHERWISE
VERT.	VERTICAL
W	WIDE
W.S.	WATERSTOP
w/	WITH
WF	WIDE FLANGE
@	AT
&	AND
#	NUMBER

BUREAU OF ENGINEERING
OFFICIAL RECORD

THE CITY OF LOS ANGELES OR ITS OFFICERS OR AGENTS SHALL NOT BE RESPONSIBLE FOR THE ACCURACY OR COMPLETENESS OF ELECTRONIC COPIES OF THIS PLAN SHEET.

REVISION DATES (DESIGN STAGE ONLY)

Sheet Version 3.0

PLANS PREPARED BY:
TETRA TECH, INC.
707 WILSHIRE BLVD. 23RD FLR.
LOS ANGELES, CA 90017
PHONE: (213) 239-8866

CITY OF LOS ANGELES DEPARTMENT OF PUBLIC WORKS BUREAU OF ENGINEERING
VERT. CONTROL: BM # 24-0470, 1929 (NGVD29) - 1988 ADJUSTMENT
HORIZ. CONTROL: GPS; PID AE 1770, EPOCH 1991.35

SHEET TITLE: STRUCTURAL GENERAL NOTES 2
PROJECT: SIXTH STREET PARK, ARTS AND RIVER CONNECTIVITY IMPROVEMENTS (PARC)
ADDRESS: SIXTH STREET OVER THE LOS ANGELES RIVER

WORK ORDER NO. E700235D
FILE NO. --
DRAWING NO. S-002
SHEET 231 OF 295 SHEETS

CITY ENGINEER: TED ALLEN, P.E.
DESIGN GROUP | LIC. NO.
ENGINEER: MICHAEL OLSEN
DESIGNED BY: JUSTIN SMITH
DRAWN BY: XXXX
CHECKED BY: NATE SCHREINER
APPROVED BY: JASON L. FUSSEL

NO.	REVISIONS:	DATE	BY:

BUILDING NO.
INDEX NO. MF-300501

"THIS PLAN WAS ELECTRONICALLY SIGNED AND STAMPED"
REGISTERED PROFESSIONAL ENGINEER MICHAEL S. O. OLSEN No. 81944 CIVIL STATE OF CALIFORNIA

ENGINEERING
CITY OF LOS ANGELES

7/11/2022 2:11:05 PM - O:\PROJECT\SIRVINE\20043\200-20043-T700\CAD\SHEETFILES\S-002_GENERAL NOTES - TT.DWG - BOEHMKE, BRETT

SPECIAL INSPECTIONS REQUIRED

SPECIAL INSPECTIONS REQUIRED FOR THIS PROJECT SHALL BE PERFORMED IN ACCORDANCE WITH THE L.A.B.C., SPECIAL INSPECTIONS SHALL BE PERFORMED BY AN APPROVED INSPECTION AGENCY U.N.O, EMPLOYED BY THE OWNER.

THE SPECIAL INSPECTOR SHALL BE CERTIFIED BY THE INTERNATIONAL CODE COUNCIL (I.C.C.) TO PERFORM INSPECTION FOR THE PARTICULAR TYPE OF CONSTRUCTION OR OPERATION REQUIRING SPECIAL INSPECTION PRIOR TO THE COMPLETION OF THAT PHASE OF THE WORK.

THE SPECIAL INSPECTOR SHALL FURNISH INSPECTION REPORTS TO THE BUILDING OFFICIAL AND/OR THE ENGINEER. ALL DISCREPANCIES SHALL BE BROUGHT TO THE IMMEDIATE ATTENTION OF THE CONTRACTOR FOR CORRECTION, THEN, IF UNCORRECTED, TO THE STRUCTURAL ENGINEER AND TO THE BUILDING OFFICIAL.

THE SPECIAL INSPECTOR SHALL SUBMIT A FINAL SIGNED REPORT STATING WHETHER THE WORK REQUIRING SPECIAL INSPECTION WAS, TO THE BEST OF THE INSPECTOR'S KNOWLEDGE, IN CONFORMANCE WITH THE APPROVED PLANS AND SPECIFICATIONS AND THE APPLICABLE WORKMANSHIP PROVISIONS OF THIS CODE.

IT SHALL BE THE CONTRACTOR'S SOLE RESPONSIBILITY TO PROVIDE AT LEAST 48 HOURS ADVANCE NOTICE TO THE OWNER/OWNER'S REPRESENTATIVE WHEN HIS WORK IS READY FOR ANY REQUIRED SPECIAL INSPECTIONS.

SHOP INSPECTION OF STEEL CONSTRUCTION IS NOT REQUIRED WHEN THE WORK IS DONE ON THE PREMISES OF A FABRICATOR REGISTERED AND APPROVED TO PERFORM SUCH WORK WITHOUT SPECIAL INSPECTION. APPROVAL SHALL BE BASED UPON REVIEW OF THE FABRICATOR'S WRITTEN PROCEDURAL AND QUALITY CONTROL MANUALS AND PERIODIC AUDITING OF FABRICATION PRACTICES BY AN APPROVED SPECIAL INSPECTION AGENCY. AT COMPLETION OF FABRICATION, THE APPROVED FABRICATOR SHALL SUBMIT A CERTIFICATE OF COMPLIANCE TO THE BUILDING OFFICIAL STATING THAT THE WORK WAS PERFORMED IN ACCORDANCE WITH THE APPROVED CONSTRUCTION DOCUMENTS.

CONTRACTOR RESPONSIBILITY
EACH CONTRACTOR RESPONSIBLE FOR THE CONSTRUCTION OF A MAIN WIND- OR SEISMIC-FORCE-RESISTING SYSTEM, DESIGNATED SEISMIC SYSTEM OR A WIND- OR SEISMIC-RESISTING COMPONENT LISTED IN THE STATEMENT OF SPECIAL INSPECTIONS SHALL SUBMIT A WRITTEN STATEMENT OF RESPONSIBILITY TO THE BUILDING OFFICIAL AND THE OWNER PRIOR TO THE COMMENCEMENT OF WORK ON THE SYSTEM OR COMPONENT. THE CONTRACTOR'S STATEMENT OF RESPONSIBILITY SHALL CONTAIN ACKNOWLEDGMENT OF AWARENESS OF THE SPECIAL REQUIREMENTS CONTAINED IN THE STATEMENT OF SPECIAL INSPECTION.

OWNER OR OWNER'S REPRESENTATIVE SHALL BE SYNONYMOUS WITH 'BUILDING OFFICIAL' IN THE FOREGOING IF THE PROJECT IS NOT UNDER THE JURISDICTION OF A BUILDING DEPARTMENT

SPECIAL INSPECTION SHALL BE PROVIDED FOR THE FOLLOWING TYPES OF WORK PERFORMED IN THE FIELD, OR NOT PERFORMED IN AN APPROVED FABRICATION SHOP AS DEFINED ABOVE, UNLESS NOTED AS "N/A".

SPECIAL INSPECTIONS REQUIRED (■ YES ☐ NO)

	CONT	PERIODIC	N/A
REQUIRED VERIFICATION AND INSPECTION OF SOILS (TO BE PERFORMED BY A LICENSED GEOTECHNICAL ENGINEER):			
1. VERIFY MATERIALS BELOW SHALLOW FOUNDATIONS ARE ADEQUATE TO ACHIEVE THE DESIGN BEARING CAPACITY	☐	■	☐
2. VERIFY EXCAVATIONS ARE EXTENDED TO PROPER DEPTH AND HAVE REACHED PROPER MATERIAL	■	☐	☐
3. PERFORM CLASSIFICATION AND TESTING OF COMPACTED FILL MATERIALS	☐	■	☐
4. PERFORM CLASSIFICATION AND TESTING OF NATIVE SOILS TO VERIFY ANY SOIL PROPERTIES ASSUMED AS PART OF DESIGN FOR THIS PROJECT (SEE SOIL PROPERTIES ON SHEETS S-001). THIS TESTING SHALL BE PERFORMED IN ADVANCE OF ANY CONSTRUCTION. THE STRUCTURAL ENGINEER SHALL BE NOTIFIED IF THE ASSUMED VALUES ARE NOT VALID.	☐	■	☐
5. VERIFY USE OF PROPER MATERIALS, DENSITIES AND LIFT THICKNESSES DURING PLACEMENT AND COMPACTION OF COMPACTED FILL	■	☐	☐
6. PRIOR TO PLACEMENT OF COMPACTED FILL, OBSERVE SUBGRADE AND VERIFY THAT SITE HAS BEEN PREPARED PROPERLY	☐	■	☐
CONCRETE CONSTRUCTION:			
1. INSPECTION OF REINFORCING STEEL, INCLUDING PRESTRESSING TENDONS, AND PLACEMENT	☐	■	☐
2. INSPECTION OF REINFORCING STEEL WELDING IN ACCORDANCE WITH C.B.C. TABLE 1705.2.2, ITEM 2B.	■	☐	☐
3. INSPECTION OF ANCHORS CAST IN CONCRETE	☐	■	☐
4. INSPECTION OF ANCHORS POST-INSTALLED IN HARDENED CONCRETE MEMBERS	☐	■	☐
5. VERIFYING USE OF REQUIRED DESIGN MIX	☐	■	☐
6. AT THE TIME FRESH CONCRETE IS SAMPLED TO FABRICATE SPECIMENS FOR STRENGTH TESTS, PERFORM SLUMP AND AIR CONTENT TEST, AND DETERMINE THE TEMPERATURE OF THE CONCRETE	■	☐	☐
7. INSPECTION OF CONCRETE AND SHOTCRETE PLACEMENT FOR PROPER APPLICATION TECHNIQUES	■	☐	☐
8. INSPECTION FOR MAINTENANCE OF SPECIFIED CURING TEMPERATURE AND TECHNIQUES	☐	■	☐
9. INSPECTION OF PRESTRESSED CONCRETE:			
A. APPLICATION OF PRESTRESSING FORCES	☐	☐	■
B. GROUTING OF BONDED PRESTRESSING TENDONS IN THE SEISMIC-FORCE-RESISTING SYSTEM	☐	☐	■
10. ERECTION OF PRECAST CONCRETE MEMBERS	☐	☐	■
11. VERIFICATION OF IN-SITU CONCRETE STRENGTH, PRIOR TO STRESSING OF TENDONS IN POST-TENSIONED CONCRETE AND PRIOR TO REMOVAL OF SHORES AND FORMS FROM BEAMS AND STRUCTURAL SLABS	☐	■	☐
12. INSPECT FORMWORK FOR SHAPE, LOCATION AND DIMENSIONS OF CONCRETE MEMBER BEING FORMED	☐	■	☐
13. INSPECTION OF CONCRETE OVER 2500 PSI	■	☐	☐

STEEL CONSTRUCTION (STRUCTURAL STEEL):
R - INSPECT THESE ITEMS ON A RANDOM BASIS. OPERATIONS NEED NOT BE DELAYED PENDING THESE INSPECTIONS
C - INSPECT THESE ITEMS ON A CONTINUOUS BASIS

	C	R	N/A
1. INSPECTION TASKS PRIOR TO WELDING			
A. WELDING PROCEDURE SPECIFICATIONS (WPSs) AVAILABLE	■	☐	☐
B. MANUFACTURERS CERTIFICATIONS FOR WELDING CONSUMABLES AVAILABLE	■	☐	☐
C. MATERIAL IDENTIFICATION (TYPE/GRADE)	☐	■	☐
D. WELDER IDENTIFICATION SYSTEM	☐	■	☐
E. FIT-UP OF GROOVE WELDS (INCLUDING GEOMETRY)	☐	■	☐
- JOINT PREPARATION			
- DIMENSIONS (ALIGNMENT, ROOT OPENING, ROOT FACE, BEVEL)			
- CLEANLINESS (CONDITION OF STEEL SURFACES)			
- TACKING (TACK WELD QUALITY AND LOCATION)			
- BACKING TYPE AND FIT (IF APPLICABLE)			
F. CONFIGURATION AND FINISH OF ACCESS HOLES	☐	■	☐
G. FIT-UP OF FILLET WELDS	☐	■	☐
- DIMENSIONS (ALIGNMENT, GAPS AT ROOT)			
- CLEANLINESS (CONDITION OF STEEL SURFACES)			
- TACKING (TACK WELD QUALITY AND LOCATION)			
2. INSPECTION TASKS DURING WELDING			
A. USE OF QUALIFIED WELDERS	☐	■	☐
B. CONTROL AND HANDLING OF WELDING CONSUMABLES	☐	■	☐
- PACKAGING			
- EXPOSURE CONTROL			
C. NO WELDING OVER CRACKED TACK WELDS	☐	■	☐
D. ENVIRONMENTAL CONDITIONS	☐	■	☐
- WIND SPEED WITHIN LIMITS			
- PRECIPITATION AND TEMPERATURE			
E. WPS FOLLOWED	☐	■	☐
- SETTINGS ON WELDING EQUIPMENT			
- TRAVEL SPEED			
- SELECTED WELDING MATERIALS			
- SHIELDING GAS TYPE/FLOW RATE			
- PREHEAT APPLIED			
- INTERPASS TEMPERATURE MAINTAINED (MIN./MAX.)			
- PROPER POSITION (F, V, H, OH)			
F. WELDING TECHNIQUES	☐	■	☐
- INTERPASS AND FINAL CLEANING			
- EACH PASS WITHIN PROFILE LIMITATIONS			
- EACH PASS MEETS QUALITY REQUIREMENTS			
3. INSPECTION TASKS AFTER WELDING			
A. WELDS CLEANED	☐	■	☐
B. SIZE, LENGTH AND LOCATION OF WELDS	■	☐	☐
C. WELDS MEET VISUAL ACCEPTANCE CRITERIA	■	☐	☐
- CRACK PROHIBITION			
- WELD/BASE-METAL FUSION			
- CRATER CROSS SECTION			
- WELD PROFILES			
- WELD SIZE			
- UNDERCUT			
- POROSITY			
D. ARC STRIKES	■	☐	☐
E. K-AREA	■	☐	☐
- WHEN WELDING OF DOUBLER PLATES, CONTINUITY PLATES OR STIFFENERS HAS BEEN PERFORMED IN THE K-AREA, VISUALLY INSPECT THE WEB K-AREA FOR CRACKS WITHIN 3 IN. (75 MM) OF THE WELD			
F. BACKING REMOVED AND WELD TABS REMOVED (IF REQUIRED)	■	☐	☐
G. REPAIR ACTIVITIES	■	☐	☐
H. DOCUMENT ACCEPTANCE OR REJECTION OF WELDED JOINT OR MEMBER	■	☐	☐
7. INSPECTION OF STEEL ELEMENTS OF COMPOSITE CONSTRUCTION PRIOR TO CONCRETE PLACEMENT			
A. PLACEMENT AND INSTALLATION OF STEEL DECK	☐	☐	■
B. PLACEMENT AND INSTALLATION OF STEEL HEADED STUD ANCHORS	☐	■	☐
C. DOCUMENT ACCEPTANCE OR REJECTION OF STEEL ELEMENTS	■	☐	☐

ADHESIVE ANCHORS:	CONT	PERIODIC	N/A
1. VERIFY ANCHOR TYPE:	☐	■	☐
2. VERIFY ADHESIVE IDENTIFICATION AND EXPIRATION DATE	☐	■	☐
3. VERIFY ANCHOR DIMENSIONS:	☐	■	☐
4. VERIFY CONCRETE TYPE:	☐	■	☐
5. VERIFY CONCRETE COMPRESSIVE STRENGTH	☐	■	☐
6. VERIFY HOLE DRILLING METHOD	☐	■	☐
7. VERIFY HOLE DIMENSIONS	☐	■	☐
8. VERIFY HOLE CLEANING PROCEDURES	☐	■	☐
9. VERIFY ANCHOR SPACING	☐	■	☐
10. VERIFY EDGE DISTANCES	☐	■	☐
11. VERIFY CONCRETE THICKNESS	☐	■	☐
12. VERIFY ANCHOR EMBEDMENT	☐	■	☐
13. VERIFY TIGHTENING TORQUE	☐	■	☐
14. VERIFY ADHERENCE TO THE MANUFACTURER'S PRINTED INSTALLATION INSTRUCTIONS	☐	■	☐

THE SPECIAL INSPECTOR MUST VERIFY THE INITIAL INSTALLATIONS OF EACH TYPE AND SIZE OF ADHESIVE ANCHOR INSTALLED BY THE CONSTRUCTION PERSONNEL ON SITE. SUBSEQUENT INSTALLATIONS OF THE SAME ANCHOR TYPE AND SIZE BY THE SAME CONSTRUCTION PERSONNEL MAY BE PERMITTED, WITH THE APPROVAL OF THE ENGINEER AND THE SPECIAL INSPECTOR, TO BE PERFORMED IN THE ABSENCE OF THE SPECIAL INSPECTOR. ANY CHANGE IN THE ANCHOR PRODUCT BEING INSTALLED OR THE PERSONNEL PERFORMING THE INSTALLATION REQUIRES AN INITIAL INSPECTION. FOR ONGOING INSTALLATIONS OVER AN EXTENDED PERIOD, THE SPECIAL INSPECTOR MUST MAKE REGULAR INSPECTIONS TO CONFIRM CORRECT HANDLING AND INSTALLATION OF THE PRODUCT. THE SPECIAL INSPECTOR SHALL INFORM THE ENGINEER OF THE FREQUENCY OF THE PERIODIC ANCHOR INSPECTIONS. THE ENGINEER MAY REQUEST ADDITIONAL INSPECTIONS AT ANY TIME.

SHOP DRAWINGS AND SUBMITTALS

1. REVIEW OF SHOP DRAWINGS AND SUBMITTALS BY THE EOR IS FOR GENERAL COMPLIANCE WITH THE CONTRACT DOCUMENTS.
2. SHOP DRAWINGS SHALL BE SUBMITTED TO EOR FOR REVIEW PRIOR TO FABRICATION. THE CONTRACTOR WILL REMAIN RESPONSIBLE FOR ALL ERRORS OF DETAILING, FABRICATION, AND FOR CORRECT FITTING OF ALL STRUCTURAL MEMBERS INCLUDING COORDINATION WITH OTHER TRADES.
   A. SHOP DRAWINGS SHALL BE SUBMITTED A MINIMUM OF 4 WEEKS PRIOR TO SCHEDULED FABRICATION.
   B. EOR WILL RETURN SHOP DRAWING AND SUBMITTALS CLEARLY MARKED WITH COMMENTS. ANY REQUIRED RECORD SET COPIES SHALL BE MADE FROM THIS RETURNED SET.
   C. REPRODUCTION OF THE STRUCTURAL PLANS AND DETAILS FOR SHOP DRAWINGS IS PROHIBITED. SUBCONTRACTOR/FABRICATOR IS TO PROVIDE INDEPENDENTLY CREATED DRAWINGS BASED ON THE STRUCTURAL PLANS AND DETAILS.
   D. THE CONTRACTOR SHALL UTILIZE THREE-DIMENSIONAL (3D) MODELING AND TWO-DIMENSIONAL (2D) MODELING WHEN DEVELOPING REINFORCING FABRICATION AND STRUCTURAL STEEL FABRICATION DRAWINGS FOR THE EAST PARK BUILDINGS AND BRIDGING ELEMENT, WEST RESTROOM BUILDING AND WEST CAFE BUILDING.
   E. ANY PROPOSED CHANGES TO THE STRUCTURAL DOCUMENTS MUST BE SUBMITTED IN WRITING AS A REQUEST FOR SUBSTITUTION TO THE ARCHITECT AND EOR FOR APPROVAL.
3. THE FOLLOWING LIST SUMMARIZES IMPORTANT STRUCTURAL SUBMITTALS FOR THIS PROJECT. REFER TO THE SPECIFICATIONS FOR A COMPLETE LIST AND ADDITIONAL REQUIREMENTS.

CONCRETE REINFORCEMENT:
A. MANUFACTURER'S PRODUCT DATA, SPECIFICATIONS AND INSTALLATION PROCEDURES FOR PROPRIETARY MATERIALS AND REINFORCEMENT.
B. STEEL PRODUCER CERTIFICATES OF MILL ANALYSIS, TENSILE AND BEND TESTS.
C. SHOP DRAWINGS FOR FABRICATION BENDING AND PLACEMENT.

CAST-IN-PLACE CONCRETE:
A. DESIGN MIX FOR EACH CONCRETE MIX.
B. MATERIAL TEST REPORTS.
C. MATERIAL CERTIFICATES FOR CEMENT, AGGREGATES AND ADMIXTURES.
D. MANUFACTURER'S PRODUCT DATA FOR BONDING AGENTS, VAPOR RETARDERS, JOINT FILLER, CURING MATERIALS AND FLOOR.
E. TREATMENT SHOP DRAWINGS FOR PROPOSED LOCATIONS OF ADDITIONAL CONSTRUCTION OR CONTROL JOINTS NOT SHOWN ON THE STRUCTURAL PLANS.
F. MINUTES FROM PREINSTALLATION CONFERENCE.

BUREAU OF ENGINEERING
OFFICIAL RECORD

THE CITY OF LOS ANGELES OR ITS OFFICERS OR AGENTS SHALL NOT BE RESPONSIBLE FOR THE ACCURACY OR COMPLETENESS OF ELECTRONIC COPIES OF THIS PLAN SHEET.

REVISION DATES (DESIGN STAGE ONLY)

Sheet Version 3.0

ENGINEERING
CITY OF LOS ANGELES

BUREAU OF ENGINEERING

NO.	REVISIONS:	DATE	BY:

BUILDING NO.

INDEX NO. MF-300501

"THIS PLAN WAS ELECTRONICALLY SIGNED AND SEALED"

REGISTERED PROFESSIONAL ENGINEER MICHAEL S. O. OLSEN No. 81944 CIVIL STATE OF CALIFORNIA

CITY OF LOS ANGELES DEPARTMENT OF PUBLIC WORKS

CITY ENGINEER
DATE:
TED ALLEN, P.E.
LIC. NO.

DESIGN GROUP	
ENGINEER:	MICHAEL OLSEN
DESIGNED BY:	JUSTIN SMITH
DRAWN BY:	XXXX
CHECKED BY:	NATE SCHREINER
APPROVED BY:	JASON L. FUSSEL

PLANS PREPARED BY:
TETRA TECH, INC.
707 WILSHIRE BLVD. 23RD FLR.
LOS ANGELES, CA 90017
PHONE: (213) 239-8866

VERT. CONTROL: BM 12-04070, 1939 (NGVD29) - 1985 ADJUSTMENT
HORIZ. CONTROL: GPS; PID AE 1704; EPOCH 1991.35

SHEET TITLE: STRUCTURAL GENERAL NOTES 3

PROJECT: SIXTH STREET PARK, ARTS AND RIVER CONNECTIVITY IMPROVEMENTS (PARC)

ADDRESS: SIXTH STREET OVER THE LOS ANGELES RIVER

WORK ORDER NO. E700235D
FILE NO. --
DRAWING NO. S-003
SHEET 232 OF 295 SHEETS

7/11/2022 2:12:13 PM - O:\PROJECTS\IRVINE\20043\200-20043-17001\CAD\SHEETFILES\S-003_GENERAL NOTES - TT.DWG - BOEHMKE, BRETT

LADBS STRUCTURAL OBSERVATION FORM:

Los Angeles Regional Uniform Code Program

STRUCTURAL OBSERVATION REPORT FORM

STRUCTURAL OBSERVATION *means the visual observation of the structural system, for general conformance to the approved plans and specifications, at significant construction stages and at completion of the structural system. Structural observation does not include or waive the responsibility for the inspections required by Section 108, 1704 or other sections of the code.*

Report No. _____

This report includes all construction work through _____ day of _____ , 20___ Page No. _____ of ____

Project Address:		Structural Observer of Record (SOR):	Phone No. of SOR:
Building Permit No.:	Structural Observation performed by:	Professional Lic./Reg. No. of Observer:	Phone No. of Observer:

OBSERVED STRUCTURAL ELEMENTS AND THEIR CONNECTIONS

FOUNDATION	WALL	FRAME	FLOOR	ELEMENT/ CONNECTION OBSERVATION LOCATION
☐ Footing, Stem Walls, Piers	☐ Concrete	☐ Steel Moment Frame	☐ Concrete	
☐ Mat Foundation	☐ Modulus of Elasticity* Concrete Shear Walls	☐ Steel Braced Frame	☐ Steel Deck	
☐ Caisson, Piles, Grade Beams	☐ Masonry	☐ Concrete Moment Frame	☐ Wood	
☐ Retaining Foundation Hillside Special Anchors	☐ Wood	☐ Modulus of Elasticity* Seismic Moment Frames	☐ Others:	
☐ Others:	☐ Others:	☐ Others:		

* For concrete buildings more than 160 feet in Structural Height: Concrete mix meets the modulus of elasticity requirements in design for seismic force resisting systems.

NOTED DEFICIENCIES with the proposed corresponding corrective actions with respect to general conformance with the approved plans or in the load path: (*A final report by the structural observer which states that all observed deficiencies have been resolved is required before acceptance of the work by the building officials.*)

_____

_____

_____

_____

I DECLARE THAT THE FOLLOWING STATEMENTS ARE TRUE TO THE BEST OF MY KNOWLEDGE:

1. **I AM THE ENGINEER OR ARCHITECT RETAINED BY THE OWNER TO BE IN RESPONSIBLE CHARGE FOR THE STRUCTURAL OBSERVATION IN ACCORDANCE WITH THE REQUIREMENTS OF THE CITY OF LOS ANGELES.**
2. **I, OR ANOTHER ENGINEER OR ARCHITECT WHO I HAVE DESIGNATED ABOVE AND IS UNDER MY RESPONSIBLE CHARGE, HAS PERFORMED THE REQUIRED SITE VISITS AT EACH SIGNIFICANT CONSTRUCTION STAGE TO VERIFY IF THE STRUCTURE IS IN GENERAL CONFORMANCE WITH APPROVED PLANS AND SPECIFICATIONS;**
3. **ALL NOTED DEFICIENCIES WHICH REMAIN TO BE CORRECTED HAVE BEEN INDICATED ABOVE;**
4. **I RECOMMEND THAT ACCEPTANCE OF THE STRUCTURAL SYSTEMS BY THE CITY OF LOS ANGELES BE WITHHELD UNTIL ALL OBSERVED DEFICIENCIES ARE CORRECTED.**

SIGNATURE OF STRUCTURAL OBSERVER — DATE — STAMP OF STRUCTURAL OBSERVER

IN/Form.08 (Part 1) (Rev. 06/18/17)

Los Angeles Regional Uniform Code Program

Committee I-3: Structural Observation

STRUCTURAL OBSERVATION PROGRAM AND DESIGNATION OF THE STRUCTURAL OBSERVER

PROJECT ADDRESS: _____ PERMIT APPL. NO.: _____

Description of Work: SIXTH STREET PARC PROJECT

Owner: _____ Architect: _____ Engineer: SIXTH STREET PARC PROJECT

STRUCTURAL OBSERVATION
(only checked items are required)

Firm or Individual to be responsible for the Structural Observation:

Name: Phone: ( ) Calif. Registration:

FOUNDATION	WALL	FRAME	DIAPHRAGM
■ Footing, Stem Walls, Piers	■ Concrete	■ Steel Moment Frame	■ Concrete
■ Mat Foundation	☐ Masonry	☐ Steel Braced Frame	■ Steel Deck
☐ Caisson, Piles, Grade Beams	☐ Wood	☐ Concrete Moment Frame	☐ Wood
■ Step'g/Retain'g Foundation, Hillside Special Anchors	☐ Others:	☐ Others:	☐ Others:
☐ Others:			

DECLARATION BY OWNER

I, the Owner of the project, declare that the above listed firm or individual is hired **by me** to be the Structural Observer.

_____
Signature Date

DECLARATION BY ARCHITECT OR ENGINEER OF RECORD (required if the Structural Observer is different from the Architect or Engineer of Record)

I, the Architect or Engineer of record for the project, declare that the above listed firm or individual is designated by me to be responsible for the Structural Observation.

_____
Signature License No. Date

IN/Form.08 (Part 2) (Rev. 06/18/17)

STRUCTURAL OBSERVATION

THE STRUCTURAL ENGINEER, OR ANOTHER ENGINEER DESIGNATED BY THE STRUCTURAL ENGINEER SHALL BE RETAINED BY THE OWNER TO PERFORM STRUCTURAL OBSERVATION AS REQUIRED BY I.B.C. CHAPTER 17. STRUCTURAL OBSERVATION SHALL BE PROVIDED DURING THE STAGES OF CONSTRUCTION LISTED BELOW. IT SHALL BE THE SOLE RESPONSIBILITY OF THE CONTRACTOR TO PROVIDE AT LEAST 48 HOURS ADVANCE NOTICE TO THE STRUCTURAL ENGINEER WHEN HIS WORK IS READY FOR STRUCTURAL OBSERVATION FOR EACH OF THESE STAGES.

1. CONCRETE:
   REINFORCING STEEL AND EMBEDDED STRUCTURAL ANCHORAGES PRIOR TO PLACEMENT OF CONCRETE FOR THE FOLLOWING:
   - A. FOUNDATIONS
   - B. SLABS-ON-GRADE (EXCEPT SITE PAVING AND FLATWORK)
   - C. WALLS
   - D. STRUCTURAL FLOOR SLABS AND BEAMS NOT SUPPORTED ON-GRADE
   - E. ROOF SLABS AND BEAMS
2. STRUCTURAL STEEL:
   - A. ERECTED COLUMN, BEAMS AND GIRDERS, PRIOR TO INSTALLATION OF ROOF AND FLOOR JOISTS, TRUSSES AND DECKING
3. WOOD FRAMING:
   - A. PLYWOOD ROOF, FLOOR AND WALL SHEATHING PRIOR TO INSTALLATION OF ROOFING AND ANY OTHER BUILDING MATERIALS THAT WOULD CONCEAL THE NAILING

BUREAU OF ENGINEERING
OFFICIAL RECORD

THE CITY OF LOS ANGELES OR ITS OFFICERS OR AGENTS SHALL NOT BE RESPONSIBLE FOR THE ACCURACY OR COMPLETENESS OF ELECTRONIC COPIES OF THIS PLAN SHEET.

REVISION DATES
(DESIGN STAGE ONLY)

Sheet Version 3.0

PLANS PREPARED BY:
TETRA TECH, INC.
707 WILSHIRE BLVD. 23RD FLR.
LOS ANGELES, CA 90017
PHONE: (213) 239-8866

CITY OF LOS ANGELES DEPARTMENT OF PUBLIC WORKS BUREAU OF ENGINEERING

VERT. CONTROL: BM 12-04070, 1929 (NGVD29) - 1985 ADJUSTMENT
HORIZ. CONTROL: GPS; PID AE 1704, EPOCH 1991.35

SHEET TITLE: STRUCTURAL GENERAL NOTES 4

PROJECT: SIXTH STREET PARK, ARTS AND RIVER CONNECTIVITY IMPROVEMENTS (PARC)

ADDRESS: SIXTH STREET OVER THE LOS ANGELES RIVER

CITY ENGINEER
DATE:
LIC. NO.

DESIGN GROUP
ENGINEER: MICHAEL OLSEN
DESIGNED BY: JUSTIN SMITH
DRAWN BY: XXXX
CHECKED BY: NATE SCHREINER
APPROVED BY: JASON L. FUSSEL

TED ALLEN, P.E.

BUREAU OF ENGINEERING

NO.	REVISIONS:	DATE	BY:

BUILDING NO.

INDEX NO. MF-300501

THIS PLAN WAS ELECTRONICALLY SIGNED AND STAMPED

MICHAEL S. O. OLSEN — No. 81944 — REGISTERED PROFESSIONAL ENGINEER — CIVIL — STATE OF CALIFORNIA

WORK ORDER NO. E700235D
FILE NO. --
DRAWING NO. S-004
SHEET 233 OF 295 SHEETS

7/11/2022 2:13:27 PM - O:\PROJECTS\IRVINE\20043200-20043-17001\CAD\SHEETFILES\S-004_STRUCTURAL OBSERVATION FORMS.DWG - BOEHMKE, BRETT

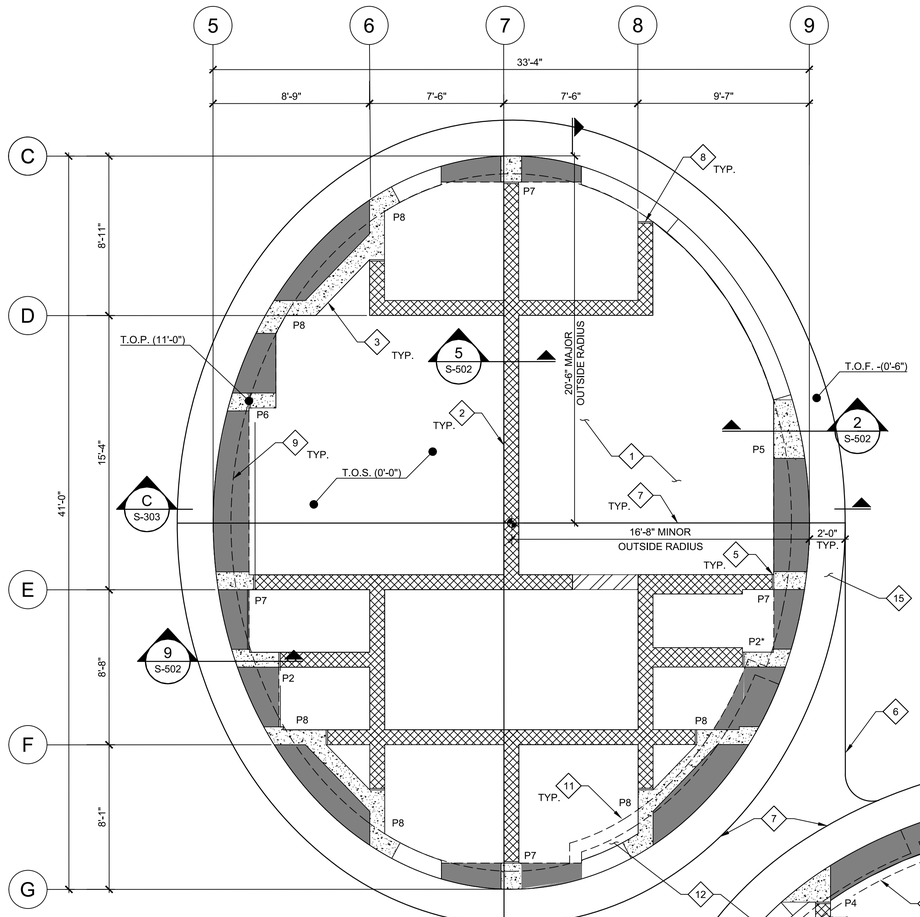

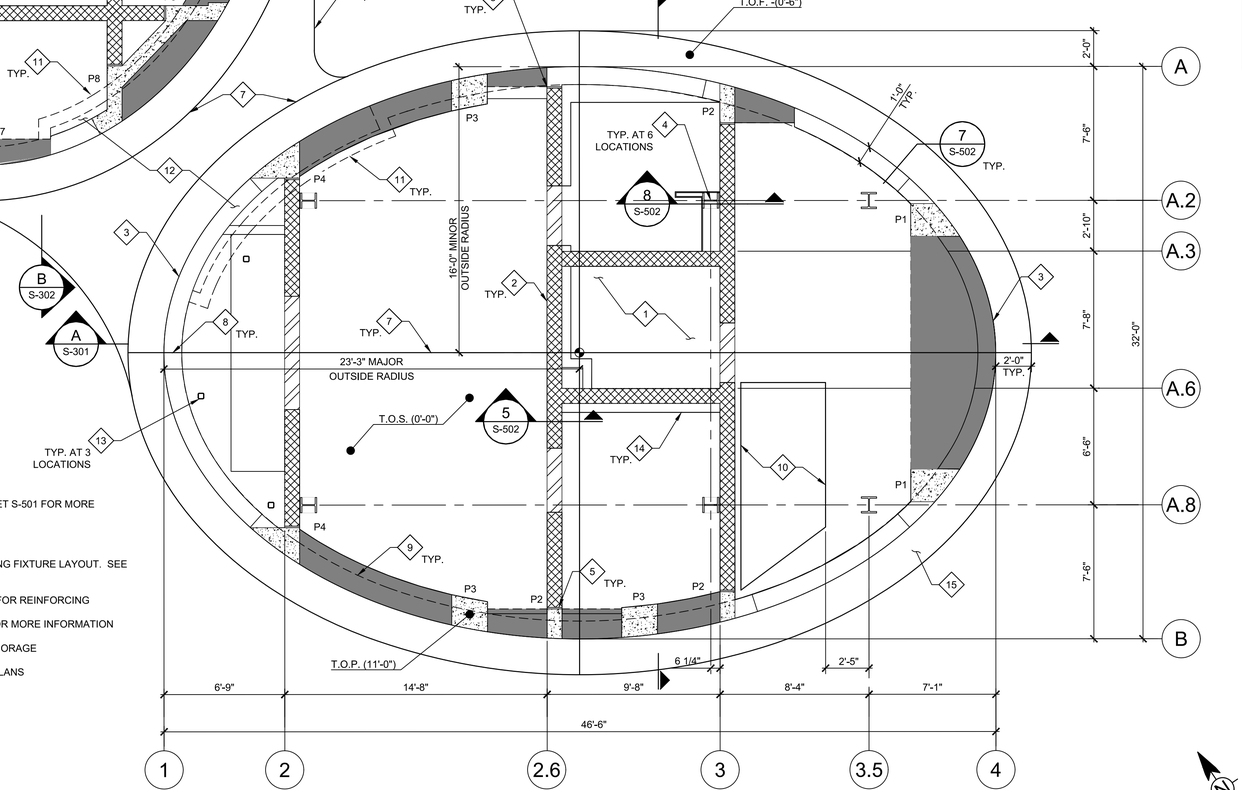

LEGEND:

- FULL HEIGHT INTERIOR CONCRETE SHEAR WALL
- FULL HEIGHT CANTILEVER EXTERIOR CONCRETE CURTAIN WALL
- CONCRETE COUPLING BEAMS ABOVE AT CONCRETE SHEAR WALLS
- CONCRETE LINTEL ABOVE AT CONCRETE CURTAIN WALLS
- SPECIAL PIER WALL REINFORCING - SEE PIER REINFORCING SCHEDULE ON THIS SHEET

KEYNOTES:

1. 1'-6" THICK CONCRETE MAT FOUNDATION w/ #7 @ 12" O.C., TOP & BOTTOM, EACH WAY. LOCATE REINFORCING 2" CLEAR FROM TOP OF MAT. SLOPE TOWARDS FLOOR DRAIN AT 1% SLOPE MINIMUM.
2. 10" THICK CAST-IN-PLACE CONCRETE SHEAR WALL. REFER TO REINFORCING SCHEDULE SHOWN HEREON, CONCRETE NOTES ON SHEET S-001 AND SPECIAL INSPECTION REQUIREMENTS ON SHEET S-003. REFER TO STRUCTURAL DETAILS FOR ADDITIONAL REINFORCING.
3. 12" THICK CAST-IN-PLACE CONCRETE WALL. REFER TO REINFORCING SCHEDULE SHOWN HEREON, CONCRETE NOTES ON SHEET S-001 AND SPECIAL INSPECTION REQUIREMENTS ON SHEET S-003. REFER TO STRUCTURAL DETAILS FOR ADDITIONAL REINFORCING.
4. W10x88 COLUMN FOR SPECIAL MOMENT FRAME - SEE DETAIL 8 ON SHEET S-502 FOR FOUNDATION CONNECTION.
5. EXPANSION JOINT BETWEEN EXTERIOR WALLS AND INTERIOR WALLS. SEE DETAIL 3 ON SHEET S-502 FOR MORE INFORMATION.
6. EDGE OF CONCRETE MAT FOUNDATION
7. MAT FOUNDATION CONSTRUCTION JOINT. SEE DETAIL 7 ON S-501 FOR MORE INFORMATION.
8. VERTICAL WALL CONSTRUCTION JOINT. SEE DETAIL 9 ON SHEET S-501 FOR MORE INFORMATION.
9. 1'-0" THICK PARAPET WALL ABOVE
10. MAT SLAB OPENING WITH GRAVEL INFILL FOR FUTURE PLUMBING FIXTURE LAYOUT. SEE ARCHITECTURAL PLANS FOR MORE INFORMATION.
11. 8" THICK CONC WALL ABOVE - SEE SCHEDULE ON THIS SHEET FOR REINFORCING
12. CONCRETE CORBEL ABOVE - SEE SHEETS S-102 AND S-102A FOR MORE INFORMATION
13. HSS4x4x3/8 COLUMN - SEE DETAIL 8 ON SHEET S-510 FOR ANCHORAGE
14. COLD-FORMED STEEL WALL FURRING - SEE ARCHITECTURAL PLANS
15. 6" INFILL SLAB w/ #4 @ 12" O.C., CENTERED IN SLAB.

DATUM
DATUM (0'-0") IS AT FINISHED FLOOR (F.F.) AROUND THE PERIMETER OF BUILDING. REFER TO GRADING PLANS FOR ELEVATIONS.

EAST BUILDING FOUNDATION PLAN

SCALE: 1/4" = 1'-0"

SCALE: 1/4" = 1'-0"

EAST BLDGS CONCRETE INTERIOR WALL REINFORCING SCHEDULE

REINFORCING	SIZE AND SPACING	LOCATION	REMARKS
SHEAR WALL VERTICAL	#6 @ 6" (MAX)	TYPICAL U.N.O.	LOCATE VERTICAL BARS IN INNER MOST LAYERS OF WALL REINF.
SHEAR WALL HORIZONTAL	#6 CONT. @ 6" (MAX)	TYPICAL U.N.O.	LOCATE HORIZONTAL BARS IN OUTER MOST LAYERS OF WALL REINF.

EAST BLDGS CONCRETE EXTERIOR WALL REINFORCING SCHEDULE

REINFORCING	SIZE AND SPACING	LOCATION	REMARKS
CURTAIN WALL VERTICAL	#6 @ 6"	TYPICAL U.N.O.	LOCATE VERTICAL BARS IN OUTER MOST LAYERS OF WALL REINF.
CURTAIN WALL HORIZONTAL	#6 CONT. @ 6"	TYPICAL U.N.O.	LOCATE HORIZONTAL BARS IN INNER MOST LAYERS OF WALL REINF. CONTINUE BARS ACROSS ALL WALL PIERS U.N.O.
CONCRETE LINTEL	#8 CONT. (QTY VARIES)	EACH FACE	ABOVE WALL OPENINGS. WIDTHS VARY. PROVIDE 5 BARS AT TOP AND BOT MIN. U.N.O. SEE DETAILS 6 ON SHEET S-504.
PIER WALL VERTICAL	SEE PIER WALL REINF. SCHED.		SEE PIER WALL REINF. SCHED.
BOND BEAMS	#6 @ 6" EA. WAY	AT TOP AND BOT. AT EXTERIOR WALLS	

EAST BUILDINGS PIER WALL REINFORCING SCHEDULE

PIER WALL	QUANTITY AND SIZE	STIRRUPS	REMARKS
P1	20 #8	#4 @ 6"	SEE DETAIL 1 ON SHEET S-508
P2	10 #8	#4 @ 6"	SEE DETAIL 9 ON SHEET S-502
P3	14 #8	#4 @ 6"	SEE DETAIL 10 ON SHEET S-502
P4	15 #8	#4 @ 4"	SEE DETAIL 11 ON SHEET S-502
P5	18 #8	#4 @ 4"	SEE DETAIL 12 ON SHEET S-502
P6	14 #8	#4 @ 4"	SEE DETAIL 6 ON SHEET S-508
P7	10 #8	#4 @ 6"	SEE DETAIL 7 ON SHEET S-508
P8	#8 @ 6" EA FACE, EA WAY	#4 @ 4"	AT FOUNTAIN AREA WALL LOCATIONS

BUREAU OF ENGINEERING
OFFICIAL RECORD

PLANS PREPARED BY:
TETRA TECH, INC.
707 WILSHIRE BLVD, 23RD FLR.
LOS ANGELES, CA 90017
PHONE: (213) 239-8866

CITY OF LOS ANGELES DEPARTMENT OF PUBLIC WORKS
BUREAU OF ENGINEERING
ENGINEERING
CITY OF LOS ANGELES

CITY ENGINEER: TED ALLEN, P.E.
DESIGN GROUP
ENGINEER: MICHAEL OLSEN — LIC. NO.
DESIGNED BY: JUSTIN SMITH — DATE
DRAWN BY: BRET BOEHMKE — BY:
CHECKED BY: NATE SCHREINER
APPROVED BY: JASON L. FUSSEL
NO. REVISIONS:

BUILDING NO.
INDEX NO. MF-300501

"THIS PLAN WAS ELECTRONICALLY SIGNED AND SEALED"
REGISTERED PROFESSIONAL ENGINEER S. O. OLSEN No. 81944 CIVIL STATE OF CALIFORNIA

VERT. CONTROL: BM 12-04070, 1929 (NGVD29) - 1996 ADJUSTMENT
HORIZ. CONTROL: GPS; PRD AE 1704, EPOCH 1991.35

SHEET TITLE: EAST BUILDING FOUNDATION PLAN

PROJECT: SIXTH STREET PARK, ARTS AND RIVER CONNECTIVITY IMPROVEMENTS (PARC)

ADDRESS: SIXTH STREET OVER THE LOS ANGELES RIVER

WORK ORDER NO. E700235D
FILE NO. --
DRAWING NO. S-101
SHEET 234 OF 295 SHEETS

7/11/2022 2:16:07 PM - O:\PROJECTS\IRVINE\20043\200-20043-17001\CAD\SHEETFILES\S-101_FOUNDATION - TT.DWG - BOEHMKE, BRETT

REVISION DATES (DESIGN STAGE ONLY)

THE CITY OF LOS ANGELES OR ITS OFFICERS OR AGENTS SHALL NOT BE RESPONSIBLE FOR THE ACCURACY OR COMPLETENESS OF ELECTRONIC COPIES OF THIS PLAN SHEET.

Sheet Version 3.0

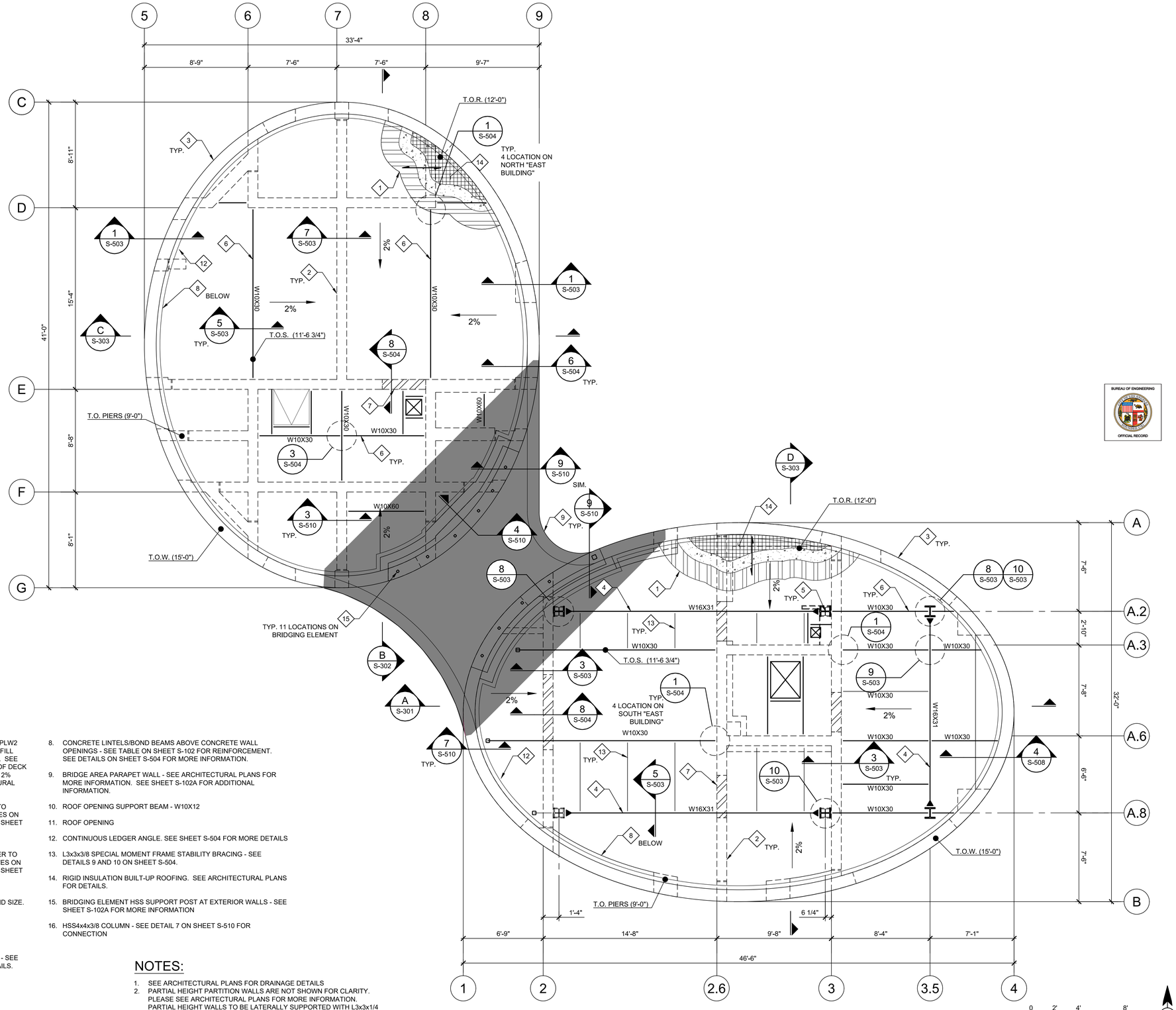

LEGEND:

CONCRETE COUPLING BEAMS AT CONCRETE SHEAR WALLS. SEE DETAIL 8 ON SHEET S-504.

MOMENT FRAME CONNECTION. ALL MOMENT FRAME WELDED CONNECTIONS SHALL BE DEMAND CRITICAL. SEE GENERAL NOTES FOR MORE INFORMATION.

KEYNOTES:

1. CONCRETE FILLED METAL ROOF DECK - 16 GAUGE, 2" DEEP PLW2 OR W2 FORMLOK w/ 5 1/4" TOTAL LIGHT-WEIGHT CONCRETE FILL (110 PCF MAX) w/ 6X6-W4XW4 WELDED WIRE FABRIC (60 KSI). SEE DETAIL 5 ON SHEET S-503 FOR ATTACHMENT PATTERN. ROOF DECK TO SPAN AS SHOWN ON THE PLANS (3-SPAN MIN). PROVIDE 2% SLOPE TO ROOF DRAINS AS SPECIFIED ON THE ARCHITECTURAL PLANS.
2. 10" THICK CAST-IN-PLACE CONCRETE SHEAR WALL. REFER TO REINFORCING SCHEDULE ON SHEET S-101, CONCRETE NOTES ON SHEET S-001 AND SPECIAL INSPECTION REQUIREMENTS ON SHEET S-003. REFER TO STRUCTURAL DETAILS FOR ADDITIONAL REINFORCING.
3. 12" THICK CAST-IN-PLACE EXTERIOR CONCRETE WALL. REFER TO REINFORCING SCHEDULE SHOWN HEREON, CONCRETE NOTES ON SHEET S-001 AND SPECIAL INSPECTION REQUIREMENTS ON SHEET S-003. REFER TO STRUCTURAL DETAILS FOR ADDITIONAL REINFORCING.
4. SPECIAL MOMENT FRAME BEAM - SEE PLANS FOR SHAPE AND SIZE. SEE DETAIL 8 ON SHEET S-503.
5. SPECIAL MOMENT FRAME COLUMN - W10X88 (6 TOTAL)
6. COLLECTOR BEAM - SEE PLANS FOR SHAPE AND SIZE.
7. CONCRETE COUPLING BEAMS AT CONCRETE SHEAR WALLS - SEE DETAIL 8 ON SHEET S-504 FOR REINFORCEMENTS AND DETAILS.
8. CONCRETE LINTELS/BOND BEAMS ABOVE CONCRETE WALL OPENINGS - SEE TABLE ON SHEET S-102 FOR REINFORCEMENT. SEE DETAILS ON SHEET S-504 FOR MORE INFORMATION.
9. BRIDGE AREA PARAPET WALL - SEE ARCHITECTURAL PLANS FOR MORE INFORMATION. SEE SHEET S-102A FOR ADDITIONAL INFORMATION.
10. ROOF OPENING SUPPORT BEAM - W10X12
11. ROOF OPENING
12. CONTINUOUS LEDGER ANGLE. SEE SHEET S-504 FOR MORE DETAILS
13. L3x3x3/8 SPECIAL MOMENT FRAME STABILITY BRACING - SEE DETAILS 9 AND 10 ON SHEET S-504.
14. RIGID INSULATION BUILT-UP ROOFING. SEE ARCHITECTURAL PLANS FOR DETAILS.
15. BRIDGING ELEMENT HSS SUPPORT POST AT EXTERIOR WALLS - SEE SHEET S-102A FOR MORE INFORMATION
16. HSS4x4x3/8 COLUMN - SEE DETAIL 7 ON SHEET S-510 FOR CONNECTION

NOTES:

1. SEE ARCHITECTURAL PLANS FOR DRAINAGE DETAILS
2. PARTIAL HEIGHT PARTITION WALLS ARE NOT SHOWN FOR CLARITY. PLEASE SEE ARCHITECTURAL PLANS FOR MORE INFORMATION. PARTIAL HEIGHT WALLS TO BE LATERALLY SUPPORTED WITH L3x3x1/4 BRACES STAGGERED AT 4'-0" MAX. ON CENTER - SEE SECTIONS FOR DETAILS.

DATUM
DATUM (0'-0") IS AT FINISHED FLOOR (F.F.) AROUND THE PERIMETER OF BUILDING. REFER TO GRADING PLANS FOR ELEVATIONS.

EAST BUILDING ROOF FRAMING PLAN

SCALE: 1/4" = 1'-0"

THE CITY OF LOS ANGELES OR ITS OFFICERS OR AGENTS SHALL NOT BE RESPONSIBLE FOR THE ACCURACY OR COMPLETENESS OF ELECTRONIC COPIES OF THIS PLAN SHEET.

REVISION DATES:
DESIGN STAGE (ONLY)

Sheet Version 3.0

BUREAU OF ENGINEERING
OFFICIAL RECORD

ENGINEERING
CITY OF LOS ANGELES

BUREAU OF ENGINEERING

NO.	REVISIONS:	DATE	BY:

BUILDING NO.

INDEX NO. MF-300501

"THIS PLAN WAS ELECTRONICALLY SIGNED AND STAMPED"

REGISTERED PROFESSIONAL ENGINEER S. O. OLSEN No. 81944 CIVIL STATE OF CALIFORNIA

CITY OF LOS ANGELES DEPARTMENT OF PUBLIC WORKS

CITY ENGINEER

DATE:

TED ALLEN, P.E.

DESIGN GROUP

ENGINEER:	MICHAEL OLSEN	LIC. NO.
DESIGNED BY:	JUSTIN SMITH	
DRAWN BY:	BRETT BOEHMKE	
CHECKED BY:	NATE SCHREINER	
APPROVED BY:	JASON L. FUSSEL	

VERT. CONTROL: BM 12-0470, 1929 (NGVD29) - 1985 ADJUSTMENT
HORIZ. CONTROL: GPS; PID AE 1704 EPOCH 1991.35

SHEET TITLE: EAST BUILDING ROOF FRAMING PLAN

PROJECT: SIXTH STREET PARK, ARTS AND RIVER CONNECTIVITY IMPROVEMENTS (PARC)

ADDRESS: SIXTH STREET OVER THE LOS ANGELES RIVER

PLANS PREPARED BY:

TETRA TECH, INC.
707 WILSHIRE BLVD. 23RD FLR.
LOS ANGELES, CA 90017
PHONE (213) 239-9866

WORK ORDER NO. E700235D

FILE NO. --

DRAWING NO. S-102

SHEET 235 OF 295 SHEETS

7/11/2022 2:19:55 PM - O:\PROJECTS\IRVINE\20043200-20043-17001\CAD\SHEETFILES\S-102_ROOF FRAMING - TT.DWG - BOEHMKE, BRETT

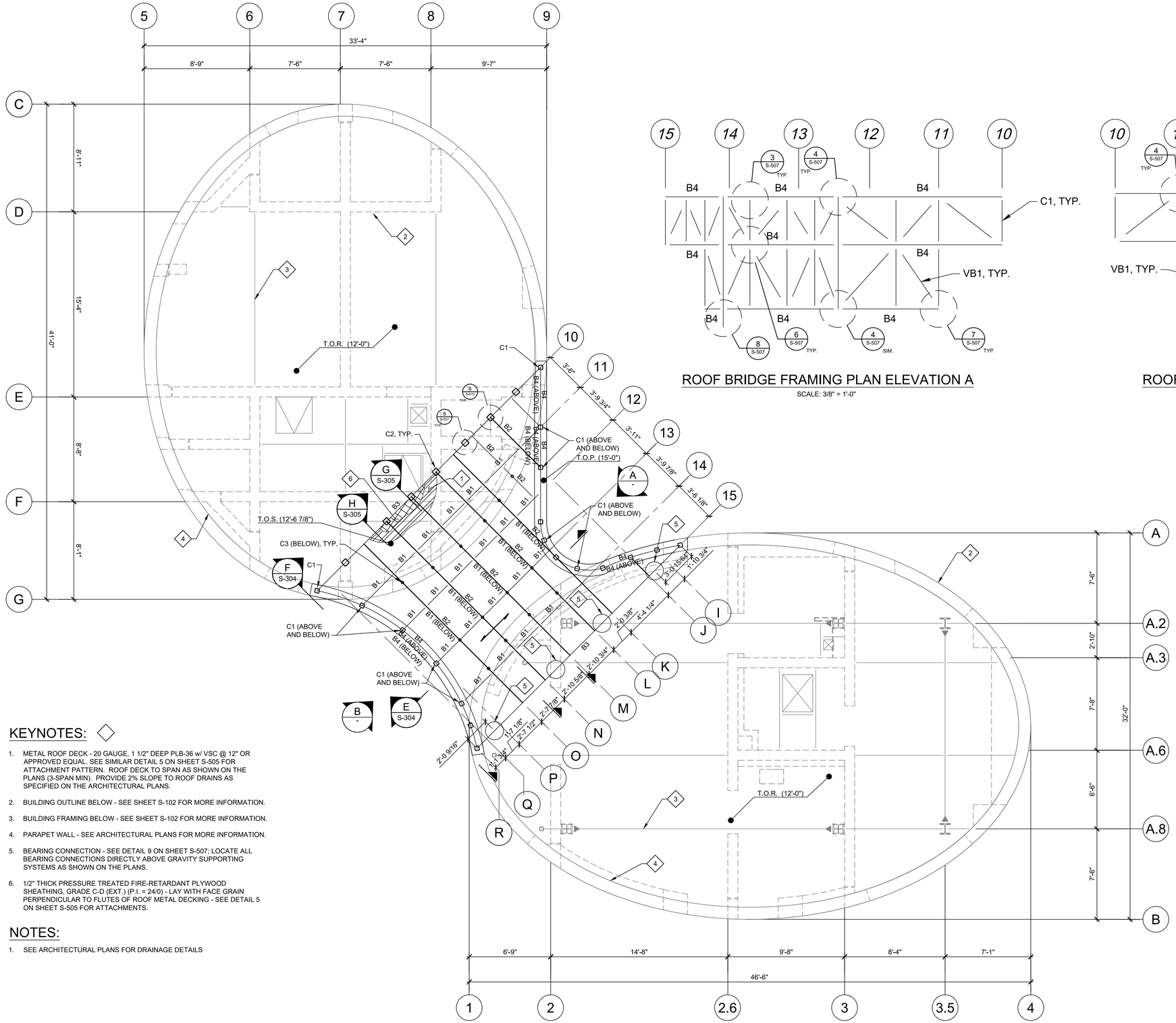

EAST BUILDING ROOF BRIDGE FRAMING PLAN

SCALE: 1/4" = 1'-0"

ROOF BRIDGE FRAMING PLAN ELEVATION A

SCALE: 3/8" = 1'-0"

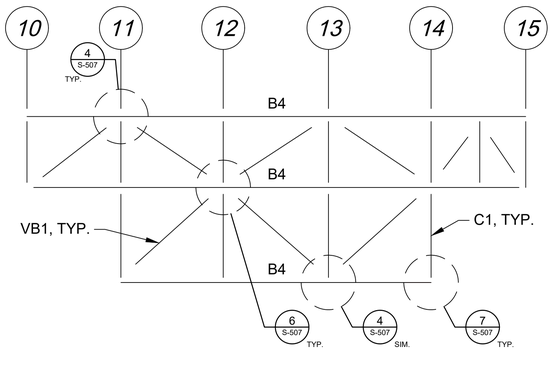

ROOF BRIDGE FRAMING PLAN ELEVATION B

SCALE: 3/8" = 1'-0"

STRUCTURAL COLUMN SCHEDULE	
MARK	SECTION
C1	HSS 4-1/2x4-1/2x1/2
C2	HSS 6x6x1/2
C3	HSS 2-1/2x2-1/2x5/16

STRUCTURAL BEAM SCHEDULE	
MARK	SECTION
B1	HSS 2-1/2x2-1/2x1/4
B2	HSS 5x5x1/2
B3	HSS 6x6x1/2
B4	HSS 4-1/2x4-1/2x1/2
VB1	HSS 2x2x1/4

KEYNOTES:

1. METAL ROOF DECK - 20 GAUGE, 1 1/2" DEEP PLB-36 w/ VSC @ 12" OR APPROVED EQUAL. SEE SIMILAR DETAIL 5 ON SHEET S-505 FOR ATTACHMENT PATTERN. ROOF DECK TO SPAN AS SHOWN ON THE PLANS (3-SPAN MIN). PROVIDE 2% SLOPE TO ROOF DRAINS AS SPECIFIED ON THE ARCHITECTURAL PLANS.
2. BUILDING OUTLINE BELOW - SEE SHEET S-102 FOR MORE INFORMATION.
3. BUILDING FRAMING BELOW - SEE SHEET S-102 FOR MORE INFORMATION.
4. PARAPET WALL - SEE ARCHITECTURAL PLANS FOR MORE INFORMATION.
5. BEARING CONNECTION - SEE DETAIL 9 ON SHEET S-507; LOCATE ALL BEARING CONNECTIONS DIRECTLY ABOVE GRAVITY SUPPORTING SYSTEMS AS SHOWN ON THE PLANS.
6. 1/2" THICK PRESSURE TREATED FIRE-RETARDANT PLYWOOD SHEATHING, GRADE C-D (EXT.) (P.I. = 24/0) - LAY WITH FACE GRAIN PERPENDICULAR TO FLUTES OF ROOF METAL DECKING - SEE DETAIL 5 ON SHEET S-505 FOR ATTACHMENTS.

NOTES:

1. SEE ARCHITECTURAL PLANS FOR DRAINAGE DETAILS

DATUM
DATUM (0'-0") IS AT FINISHED FLOOR (F.F.) AROUND THE PERIMETER OF BUILDING. REFER TO GRADING PLANS FOR ELEVATIONS.

SCALE: 1/4" = 1'-0"

BUREAU OF ENGINEERING
OFFICIAL RECORD

PLANS PREPARED BY:
TETRA TECH, INC.
707 WILSHIRE BLVD, 23RD FLR.
LOS ANGELES, CA 90017
PHONE: (213) 239-8866

CITY OF LOS ANGELES DEPARTMENT OF PUBLIC WORKS BUREAU OF ENGINEERING

ENGINEERING
CITY OF LOS ANGELES

NO.	REVISIONS:	DATE	BY:

BUILDING NO.

INDEX NO. MF-300501

"THIS PLAN WAS ELECTRONICALLY SIGNED AND STAMPED"

REGISTERED PROFESSIONAL ENGINEER S. O. OLSEN No. 81944 CIVIL STATE OF CALIFORNIA

TED ALLEN, P.E.
CITY ENGINEER
DATE:

DESIGN GROUP	LIC NO.
ENGINEER: MICHAEL OLSEN	
DESIGNED BY: JUSTIN SMITH	
DRAWN BY: 236	
CHECKED BY: NATE SCHREINER	
APPROVED BY: JASON L. FUSSELL	

APPROVED BY: JASON L. FUSSELL
7/11/2022 2:23:13 PM - O:\PROJECTS\IRVINE\20043\200-20043-17001\CAD\SHEETFILES\S-102A_EAST BUILDING ROOF BRIDGE FRAMING PLAN.DWG - BOEHMKE, BRETT

VERT. CONTROL: BM 12-04070, 1929 (NGVD29) - 1996 ADJUSTMENT
HORIZ. CONTROL: GPS; PHD AE 1704, EPOCH 1991.35

SHEET TITLE: EAST BUILDING ROOF BRIDGE FRAMING PLAN

PROJECT: SIXTH STREET PARK, ARTS AND RIVER CONNECTIVITY IMPROVEMENTS (PARC)

ADDRESS: SIXTH STREET OVER THE LOS ANGELES RIVER

WORK ORDER NO. E700235D
FILE NO. --
DRAWING NO. S-102A
SHEET 236 OF 295 SHEETS

THE CITY OF LOS ANGELES OR ITS OFFICERS OR AGENTS SHALL NOT BE RESPONSIBLE FOR THE ACCURACY OR COMPLETENESS OF ELECTRONIC COPIES OF THIS PLAN SHEET.

REVISION DATES (DESIGN STAGE ONLY)

Sheet Version 3.0

CFS INFILL STUD WALL, PARTITION WALLS AND CEILING NOTES:

1. SCHEMATIC DETAILS SHOWN ON ARCHITECTURAL DRAWINGS. GENERAL CONTRACTOR (GC) SHALL PROVIDE DETAILS (INCLUDING STUD SIZES, CONNECTIONS, ETC.), STRUCTURAL CALCULATIONS AND SHOP DRAWINGS. GC TO SUBMIT FOR REVIEW PRIOR TO FABRICATION.
2. STRUCTURAL CALCULATIONS SHALL BE SIGNED AND STAMPED BY A DULY LICENSED CIVIL OR STRUCTURAL ENGINEER IN THE STATE OF CALIFORNIA.
3. ALTERNATE CONNECTION DETAILS MAY BE SUBMITTED FOR REVIEW.
4. CFS DETAILS NOT SHOWN OR CALLED OUT ON STRUCTURAL DRAWINGS FOR CLARITY.

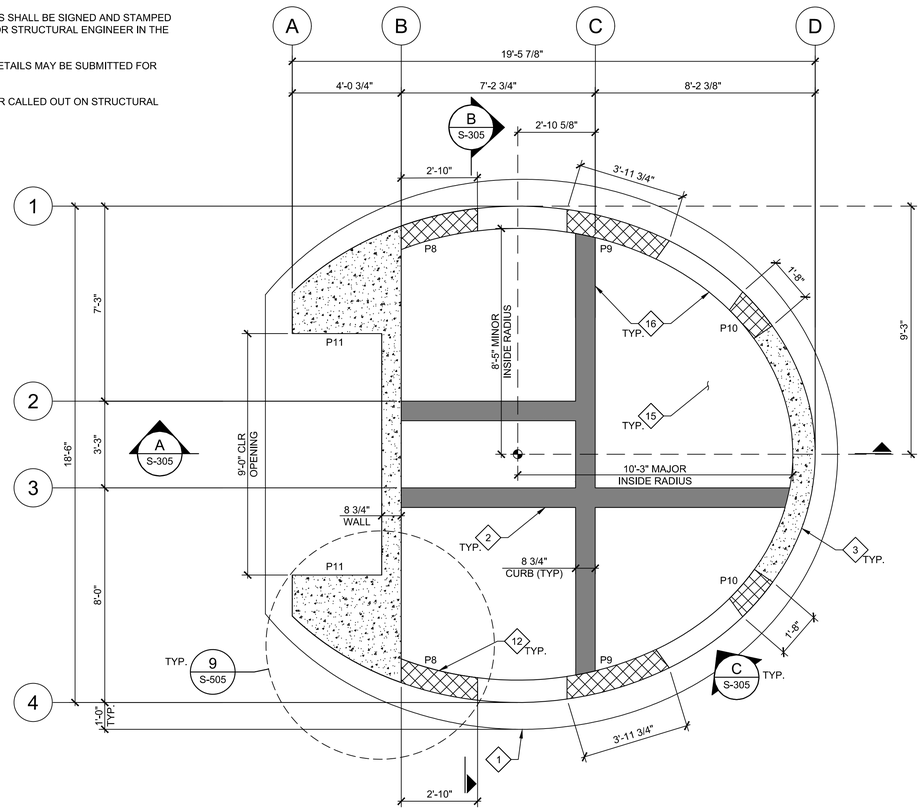

WEST RESTROOM BUILDING FOUNDATION PLAN

SCALE: 3/8" = 1'-0"

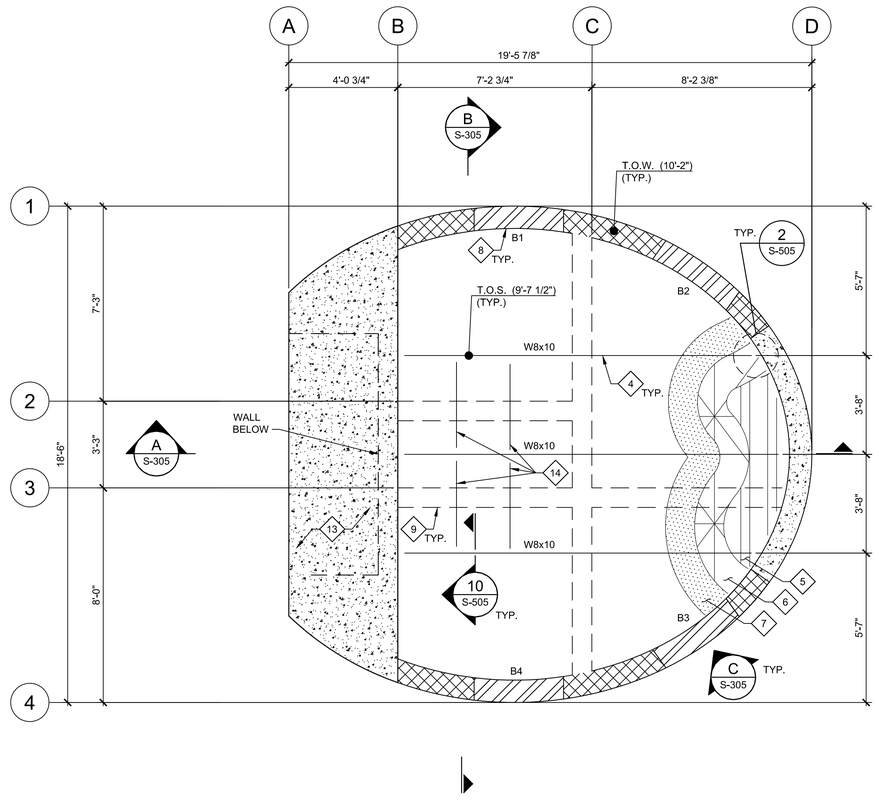

WEST RESTROOM BUILDING ROOF PLAN

SCALE: 3/8" = 1'-0"

LEGEND:

- FULL HEIGHT CONCRETE SHEAR WALL
- CONCRETE CURB WALLS
- CONCRETE COUPLING BEAMS ABOVE AT CONCRETE SHEAR WALLS
- CONCRETE SHEAR WALL BOUNDARY ELEMENT

KEYNOTES:

1. 1'-6" THICK CONCRETE MAT FOUNDATION w/ #7 @ 12" O.C., TOP AND BOTTOM, EACH WAY. LOCATE REINFORCING 2" CLEAR FROM TOP OF MAT. SLOPE TOWARDS FLOOR DRAIN AT 1% SLOPE MINIMUM.
2. CONCRETE CURB WALL AT INTERIOR WALLS - SEE DETAIL 1 ON SHEET S-505.
3. 10" THICK CAST-IN-PLACE CONCRETE SHEAR WALL. REFER TO REINFORCING SCHEDULE SHOWN HEREON, CONCRETE NOTES ON SHEET S-001 AND SPECIAL INSPECTION REQUIREMENTS ON SHEET S-003. REFER TO STRUCTURAL DETAILS FOR ADDITIONAL REINFORCING.
4. W8X10 ROOF RAFTERS AT 5'-0" O.C. MAX. UNLESS OTHERWISE SPECIFIED.
5. METAL ROOF DECK - 16 GAUGE, 1 1/2" DEEP PLB-36 OR HSB-36. TSW @ 12" OR APPROVED EQUAL. SEE DETAIL 5 ON SHEET S-505 FOR ATTACHMENT PATTERN. ROOF DECK TO SPAN AS SHOWN ON THE PLANS.
6. 3/4" THICK PRESSURE TREATED FIRE-RETARDANT PLYWOOD SHEATHING, GRADE C-D (EXT.) (P.I. = 24/0) - LAY WITH FACE GRAIN PERPENDICULAR TO FLUTES OF ROOF METAL DECKING - SEE DETAIL 5 ON SHEET S-505FOR ATTACHMENTS.
7. MEMBRANE ROOFING - SEE PROJECT SPECIFICATION FOR MATERIALS AND INSTALLATION REQUIREMENTS.
8. CONCRETE COUPLING BEAMS AT CONCRETE SHEAR WALLS - SEE DETAIL 7 ON SHEET S-505 FOR REINFORCEMENTS AND DETAILS.
9. INTERIOR METAL STUD PARTITION WALL - SEE ARCHITECTURAL PLANS FOR DETAIL.
10. ROOF OPENING SUPPORT BEAM - HSS4x4x3/8
11. NOT USED.
12. CONCRETE SHEAR WALL BOUNDARY ELEMENT PER DETAIL 8 SHEET S-505.
13. 7" THICK CONCRETE ROOF SLAB w/ #5 @ 12" O.C., E.W., CENTERED.
14. C7x9.8 SUPPLEMENTAL ROOF FRAMING. FIELD LOCATE AS REQUIRED TO SUPPORT MECHANICAL EQUIPMENT.
15. 6" SLAB ON GRADE w/ #4 @ 12" O.C., CENTERED, EACH WAY.
16. 1/2" ISOLATION JOINT IN SLAB ON GRADE PER DETAIL 11 SHEET S-501.

DATUM
DATUM (0'-0") IS AT FINISHED FLOOR (F.F.) AROUND THE PERIMETER OF BUILDING. REFER TO GRADING PLANS FOR ELEVATIONS.

WEST BUILDINGS CONCRETE WALL REINFORCING SCHEDULE

REINFORCING	SIZE AND SPACING	LOCATION	REMARKS
VERTICAL	#6 @ 12"	TYPICAL U.N.O.	LOCATE VERTICAL BARS IN INNER MOST LAYERS OF WALL REINF.
HORIZONTAL	#4 CONT. @ 12"	TYPICAL U.N.O.	LOCATE HORIZONTAL BARS IN OUTER MOST LAYERS OF WALL REINF.
HORIZONTAL CHORD BARS	2-#6 CONT. SPACED VERTICALLY APART @ 8"	AT TOP OF WALL	
CONCRETE LINTEL	2-#6 CONT. BAR	EACH FACE	AT WALL OPENINGS
PIER WALL VERT.	#6 @ 12"	EACH FACE	LOCATE VERTICAL BARS IN OUTER MOST LAYERS OF WALL REINF.

WEST RESTROOM BUILDING PIER WALL REINFORCING SCHEDULE

PIER WALL	QUANTITY AND SIZE	STIRRUPS	REMARKS
P8	12 #6	#5 @ 6"	SEE DETAIL 9 ON SHEET S-505
P9	16 #6	#5 @ 6"	SEE TYPICAL DETAIL 8 ON SHEET S-505
P10	8 #6	#5 @ 6"	SEE TYPICAL DETAIL 8 ON SHEET S-505
P11	15 #6	#5 @ 6"	SEE DETAIL 9 ON SHEET S-505

WEST RESTROOM BUILDING COUPLING BEAM SCHEDULE

COUPLING BEAM	NOMINAL LENGTH	ANGLE, START*	ANGLE, END*	REMARKS
B1	3'-4"	-9.75°	11.90°	SEE DETAIL 7 ON SHEET S-505
B2	3'-4"	35.31°	54.90°	SEE DETAIL 7 ON SHEET S-505
B3	3'-4"	125.10°	144.70°	SEE DETAIL 7 ON SHEET S-505
B4	3'-4"	168.12°	189.73°	SEE DETAIL 7 ON SHEET S-505

*NOTE:
COUPLING BEAM ANGLES ARE MEASURED FROM LINE ORIGINATING AT CENTER OF ELLIPTICAL BUILDING HEADING PLAN NORTH

0 1'-4" 2'-8" 5'-4"
SCALE: 3/8" = 1'-0"

BUREAU OF ENGINEERING
OFFICIAL RECORD

THE CITY OF LOS ANGELES OR ITS OFFICERS OR AGENTS SHALL NOT BE RESPONSIBLE FOR THE ACCURACY OR COMPLETENESS OF ELECTRONIC COPIES OF THIS PLAN SHEET.

REVISION DATES (DESIGN & STAGE ONLY)

Sheet Version 3.0

PLANS PREPARED BY:
TETRA TECH, INC.
707 WILSHIRE BLVD, 23RD FLR.
LOS ANGELES, CA 90017
PHONE (213) 239-8866

CITY OF LOS ANGELES DEPARTMENT OF PUBLIC WORKS
BUREAU OF ENGINEERING
ENGINEERING CITY OF LOS ANGELES

NO.	REVISIONS:	DATE:	BY:

BUILDING NO.
INDEX NO. MF-300501

THIS PLAN WAS ELECTRONICALLY SIGNED AND STAMPED

REGISTERED PROFESSIONAL ENGINEER S. O. OLSEN No. 81944 CIVIL STATE OF CALIFORNIA

CITY ENGINEER
TED ALLEN, P.E.
DATE:
LIC. NO.

DESIGN GROUP
ENGINEER: MICHAEL OLSEN
DESIGNED BY: JUSTIN SMITH
DRAWN BY: BRETT BOEHMKE
CHECKED BY: NATE SCHREINER
APPROVED BY: JASON L. FUSSEL

VERT. CONTROL: BM 12-04070, 1928 (NGVD29); 1985 ADJUSTMENT
HORIZ. CONTROL: GPS, PID AC 1764, EPOCH 1991.35

SHEET TITLE: WEST RESTROOM BUILDING FOUNDATION & ROOF PLAN
PROJECT: SIXTH STREET PARK, ARTS AND RIVER CONNECTIVITY IMPROVEMENTS (PARC)
ADDRESS: SIXTH STREET OVER THE LOS ANGELES RIVER

WORK ORDER NO. E700235D
FILE NO. --
DRAWING NO. S-103
SHEET 237 OF 295 SHEETS

7/11/2022 4:23:19 PM - O:\PROJECTS\IRVINE\200435200-200443-T700\CAD\SHEETFILES\S-103_WEST RESTROOM BUILDING FOUNDATION & ROOF PLAN.DWG - BOEHMKE, BRETT

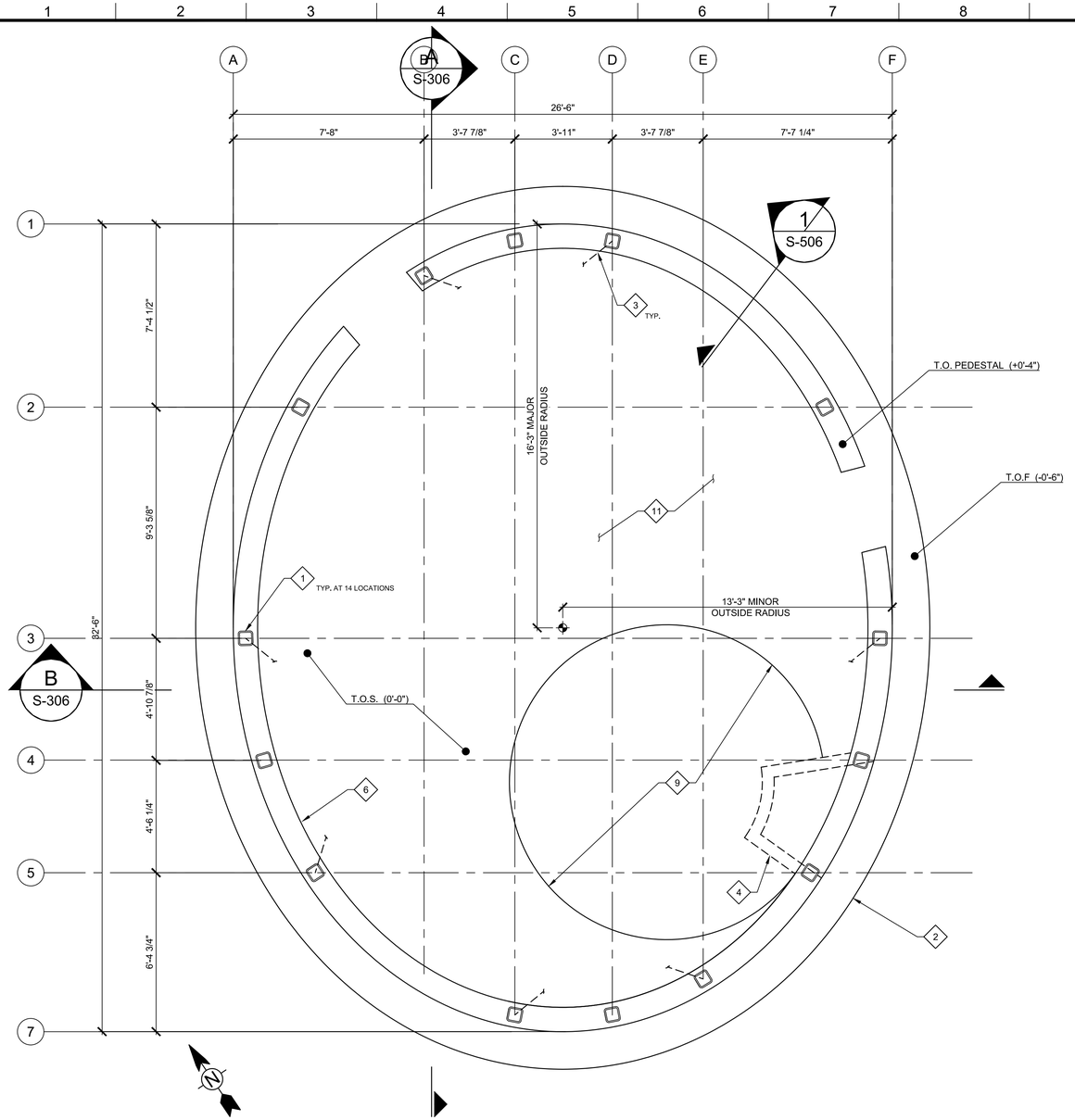

WEST CAFE BUILDING FOUNDATION PLAN

SCALE: 3/8" = 1'-0"

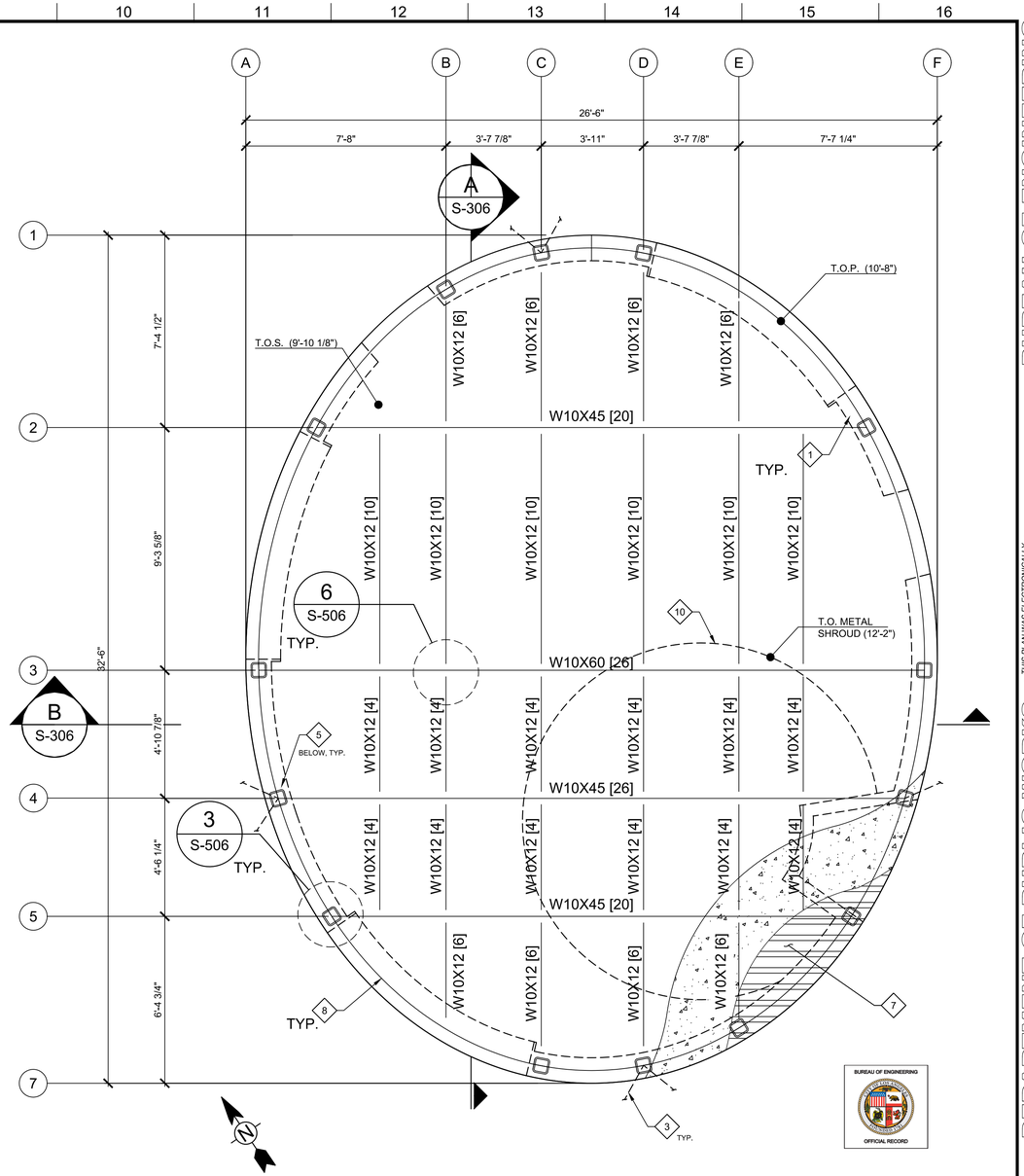

WEST CAFE BUILDING ROOF PLAN

SCALE: 3/8" = 1'-0"

KEYNOTES:

1. HSS7x7x5/8 SQUARE COLUMN
2. 2'-0" THICK CONCRETE MAT FOUNDATION w/ #7 @ 12" O.C., TOP AND BOTTOM, EACH WAY.
3. HSS3x3x3/8 VERTICAL BRACE - SEE ELEVATIONS ON SHEET S-306A FOR MORE INFORMATION.
4. METAL STUD WALL UTILITY ENCLOSURE
5. METAL STUD WALL
6. 11-3/4" WIDE BY 4" HIGH CONCRETE CURB FOR GLASS CURTAIN WALL SUPPORT - SEE DETAIL 1 ON SHEET S-506.
7. CONCRETE FILLED METAL ROOF DECK - 16 GAUGE, 2" DEEP PLW2 OR W2 FORMLOK w/ 4" TOTAL LIGHTWEIGHT CONCRETE FILL (110 PCF MAX) w/ 6X6-W1.4XW1.4 WELDED WIRE FABRIC (60 KSI). TSW @ 12" OR APPROVED EQUAL. SEE DETAIL 5 ON SHEET S-503 FOR ATTACHMENT PATTERN. ROOF DECK TO SPAN AS SHOWN ON THE PLANS (3-SPAN MIN). PROVIDE 2% SLOPE TO ROOF DRAINS AS SPECIFIED ON THE ARCHITECTURAL PLANS.

DATUM
DATUM (0'-0") IS AT FINISHED FLOOR (F.F.) AROUND THE PERIMETER OF BUILDING AT ELEVATION ± 251.50'. G.C. TO FIELD VERIFY

8. CONTINUOUS CURVED W10X45 BEAM AT BUILDING ROOF PERIMETER - SEE DETAIL 12 ON SHEET S-506 FOR SPLICE CONNECTION
9. SLAB OPENING WITH GRAVEL INFILL FOR FUTURE PLUMBING FIXTURE LAYOUT. SEE ARCHITECTURAL PLANS FOR MORE INFORMATION.
10. METAL SHROUD. SEE ARCHITECTURAL PLANS FOR DETAILS.
11. 6" INFILL SLAB w/ #4 @ 12" O.C., CENTERED IN SLAB.

CFS INFILL STUD WALL, PARTITION WALLS AND CEILING NOTES:

1. SCHEMATIC DETAILS SHOWN ON ARCHITECTURAL DRAWINGS. GENERAL CONTRACTOR (GC) SHALL PROVIDE DETAILS (INCLUDING STUD SIZES, CONNECTIONS, ETC.), STRUCTURAL CALCULATIONS AND SHOP DRAWINGS. GC TO SUBMIT FOR REVIEW PRIOR TO FABRICATION.
2. STRUCTURAL CALCULATIONS SHALL BE SIGNED AND STAMPED BY A DULY LICENSED CIVIL OR STRUCTURAL ENGINEER IN THE STATE OF CALIFORNIA.
3. ALTERNATE CONNECTION DETAILS MAY BE SUBMITTED FOR REVIEW.
4. CFS DETAILS NOT SHOWN OR CALLED OUT ON STRUCTURAL DRAWINGS FOR CLARITY.

THE CITY OF LOS ANGELES OR ITS OFFICERS OR AGENTS SHALL NOT BE RESPONSIBLE FOR THE ACCURACY OR COMPLETENESS OF ELECTRONIC COPIES OF THIS PLAN SHEET.

REVISION DATES
(ASSIGN A STAGE ONLY)

Sheet Version 3.0

PLANS PREPARED BY:
TETRA TECH, INC.
707 WILSHIRE BLVD. 23RD FLR.
LOS ANGELES, CA 90017
PHONE: (213) 239-8866

BUREAU OF ENGINEERING
OFFICIAL RECORD

ENGINEERING
CITY OF LOS ANGELES

BUREAU OF ENGINEERING

NO.	REVISIONS:	DATE	BY:

BUILDING NO.

INDEX NO. MF-300501

"THIS PLAN WAS ELECTRONICALLY SIGNED AND STAMPED"

REGISTERED PROFESSIONAL ENGINEER
S. O. OLSEN
No. 81944
CIVIL
STATE OF CALIFORNIA

CITY OF LOS ANGELES DEPARTMENT OF PUBLIC WORKS

CITY ENGINEER: TED ALLEN, P.E.
DATE:
LIC. NO.

DESIGN GROUP	
ENGINEER:	MICHAEL OLSEN
DESIGNED BY:	JUSTIN SMITH
DRAWN BY:	BRETT BOEHMKE
CHECKED BY:	NATE SCHREINER
APPROVED BY:	JASON L. FUSSEL

APPROVED BY: JASON L. FUSSEL
7/11/2022 2:27:54 PM - O:\PROJECTS\IRVINE\20043\200-20043-17001\CAD\SHEETFILES\S-104_WEST CAFE BUILDING FOUNDATION & ROOF PLAN - TT.DWG - BOEHMKE, BRETT

VERT. CONTROL: BM 12-04070, 1929 (NGVD29) - 1985 ADJUSTMENT
HORIZ. CONTROL: GPS; PID AE 1704, EPOCH 1991.35

SHEET TITLE: WEST CAFE BUILDING FOUNDATION & ROOF PLAN

PROJECT: SIXTH STREET PARK, ARTS AND RIVER CONNECTIVITY IMPROVEMENTS (PARC)

ADDRESS: SIXTH STREET OVER THE LOS ANGELES RIVER

WORK ORDER NO. E700235D

FILE NO. --

DRAWING NO. S-104

SHEET 238 OF 295 SHEETS

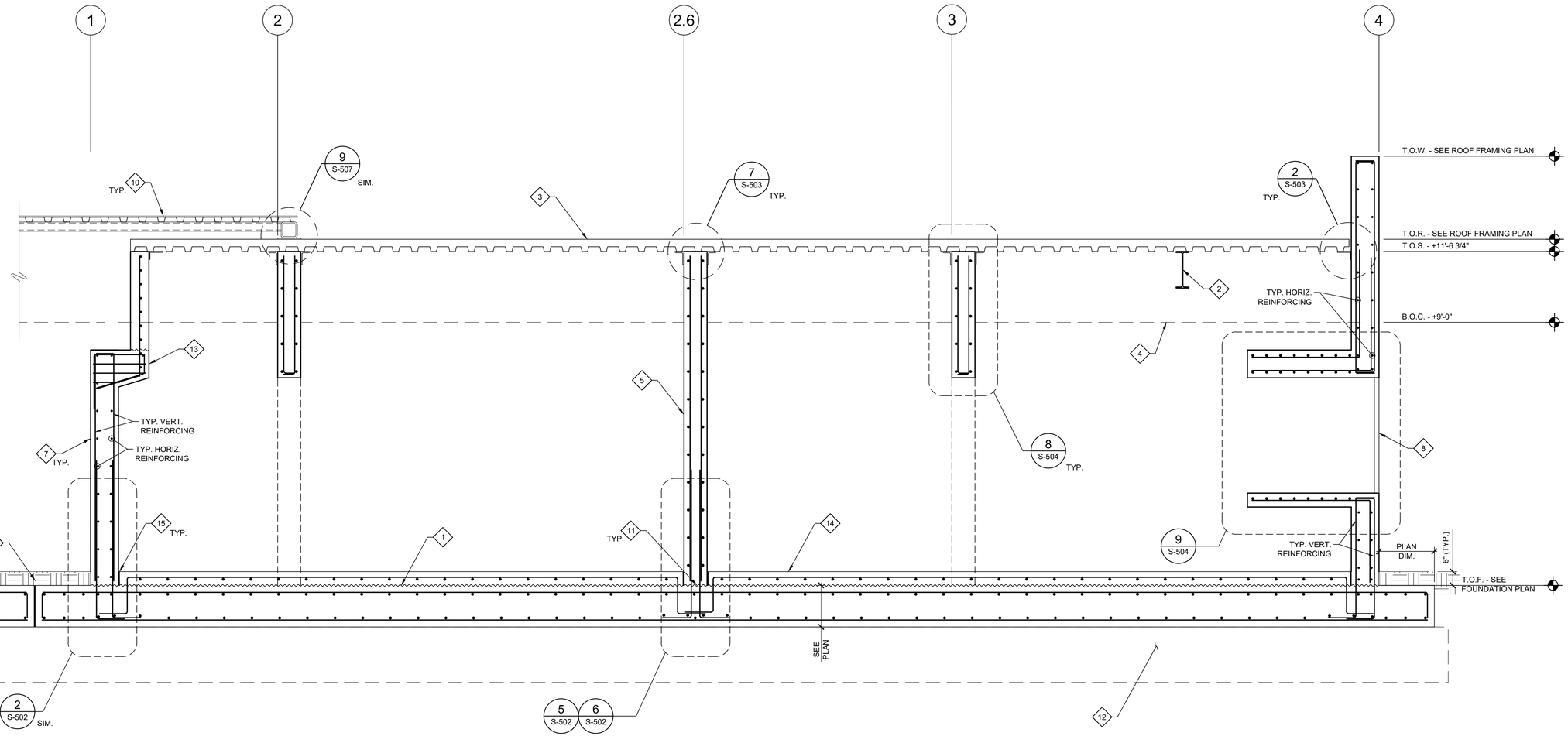

KEYNOTES:

1. CONCRETE MAT FOUNDATION - FOR REINFORCING SEE SHEET S-101
2. SPECIAL MOMENT FRAME BEAM - SEE SHEET S-102 FOR LOCATION, TYPE AND SIZE
3. CONCRETE FILLED METAL ROOF DECK - SEE SHEET S-102 AND PROJECT SPECIFICATIONS FOR DECK TYPE. PROVIDE 3" SEPARATION BETWEEN DECK EDGE AND EXTERIOR CONCRETE WALLS.
4. DROP DOWN CEILING
5. CAST-IN-PLACE INTERIOR CONCRETE SHEAR WALL - SEE SHEET S-101 FOR REINF.
6. NOT USED
7. CAST-IN-PLACE EXTERIOR CONCRETE WALL - SEE SHEET S-101 FOR REINF.
8. OPERABLE TRACK SLIDING METAL PANEL ENCLOSURE - SEE ARCHITECTURAL PLANS FOR DETAILS
9. JOINT SEALANT
10. EAST BUILDING ROOF BRIDGE FRAMING - SEE SHEET S-102A FOR SHAPES, SIZES AND LOCATION
11. ROUGHENED JOINT
12. OVEREXCAVATION AND RECOMPACTION PER DETAIL 1 ON SHEET S-509 - REFER TO GEOTECHNICAL REPORT FOR ADDITIONAL INFORMATION
13. CONCRETE CORBEL - SEE DETAIL 5 ON S-510
14. CONCRETE SLAB INFILL - SEE SHEET S-101 FOR REINFORCING
15. 1/2" ISOLATION JOINT PER DETAIL 11 SHEET S-501

A / S-101 SECTION
SCALE: 1/2"=1'-0"

BUREAU OF ENGINEERING
OFFICIAL RECORD

PLANS PREPARED BY:
TETRA TECH, INC.
707 WILSHIRE BLVD. 23RD FLR.
LOS ANGELES, CA 90017
PHONE: (213) 239-8866

CITY OF LOS ANGELES DEPARTMENT OF PUBLIC WORKS
BUREAU OF ENGINEERING
ENGINEERING CITY OF LOS ANGELES

NO.	REVISIONS:	DATE	BY:

BUILDING NO.

INDEX NO. MF-300501

"THIS PLAN WAS ELECTRONICALLY SIGNED AND STAMPED"

CITY ENGINEER
TED ALLEN, P.E.
DATE:

DESIGN GROUP	LIC. NO.	
ENGINEER:	MICHAEL OLSEN	
DESIGNED BY:	JUSTIN SMITH	
DRAWN BY:	BRETT BOEHMKE	
CHECKED BY:	NATE SCHREINER	
APPROVED BY:	JASON L. FUSSEL	

APPROVED BY: JASON L. FUSSEL
7/11/2022 8:37:39 PM - C:\USERS\MARK.NAYRA\ONEDRIVE - TETRA TECH, INC\DESKTOP\PROJECT BACKUP\S6TH STREET\FINAL FILES\FINAL DRAWINGS\S-301_BUILDING SECTION.DWG - NAYRA, MARK

VERT. CONTROL: BM 12-04070, 1929 (NGVD29) - 1996 ADJUSTMENT
HORIZ. CONTROL: GPS; PID AE 1704, EPOCH 1991.35

SHEET TITLE: EAST BUILDING SECTION

PROJECT: SIXTH STREET PARK, ARTS AND RIVER CONNECTIVITY IMPROVEMENTS (PARC)

ADDRESS: SIXTH STREET OVER THE LOS ANGELES RIVER

WORK ORDER NO. E700235D
FILE NO. --
DRAWING NO. S-301
SHEET 239 OF 295 SHEETS

REVISION DATES (DESIGN STAGE ONLY)

THE CITY OF LOS ANGELES OR ITS OFFICERS OR AGENTS SHALL NOT BE RESPONSIBLE FOR THE ACCURACY OR COMPLETENESS OF ELECTRONIC COPIES OF THIS PLAN SHEET.

Sheet Version 3.0

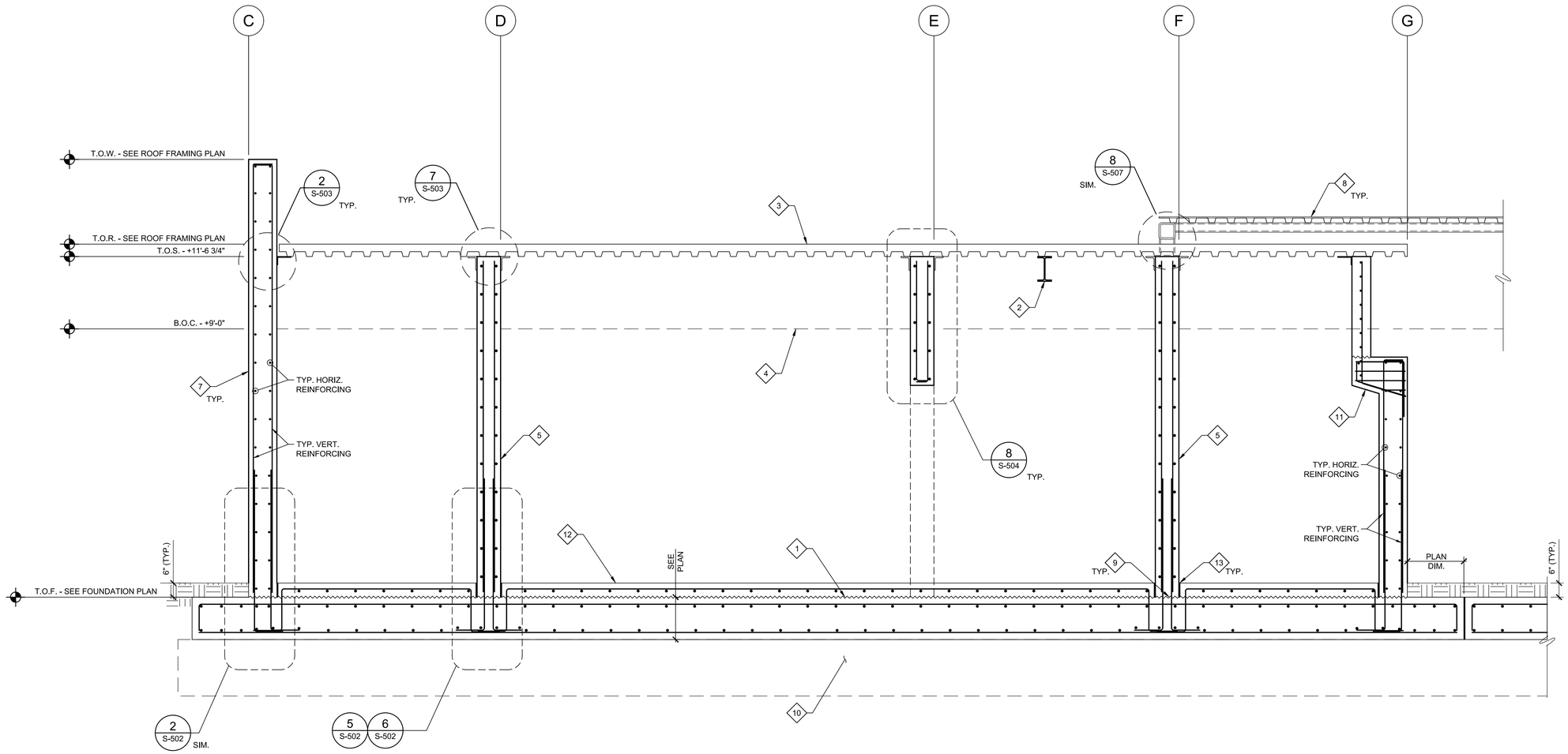

KEYNOTES:

1. CONCRETE MAT FOUNDATION - FOR REINFORCING SEE SHEET S-101
2. COLLECTOR BEAM - SEE SHEET S-102 FOR LOCATION, TYPE AND SIZE
3. CONCRETE FILLED METAL ROOF DECK - SEE SHEET S-102 AND PROJECT SPECIFICATIONS FOR DECK TYPE. PROVIDE 3" SEPARATION BETWEEN DECK EDGE AND EXTERIOR CONCRETE WALLS.
4. DROP DOWN CEILING
5. CAST-IN-PLACE INTERIOR CONCRETE SHEAR WALL - SEE SHEET S-101 FOR REINF.
6. JOINT SEALANT
7. CAST-IN-PLACE EXTERIOR CONCRETE WALL - SEE SHEET S-101 FOR REINF.
8. EAST BUILDING ROOF BRIDGE FRAMING - SEE SHEET S-102A FOR SHAPES, SIZES AND LOCATION
9. ROUGHENED JOINT
10. OVEREXCAVATION AND RECOMPACTION PER DETAIL 1 ON SHEET S-509 - REFER TO GEOTECHNICAL REPORT FOR ADDITIONAL INFORMATION
11. CONCRETE CORBEL - SEE DETAIL 5 ON S-510
12. CONCRETE SLAB INFILL - SEE SHEET S-101 FOR REINFORCING
13. 1/2" ISOLATION JOINT PER DETAIL 11 SHEET S-501

B / S-101 SECTION
SCALE: 1/2"=1'-0"

BUREAU OF ENGINEERING
OFFICIAL RECORD

THE CITY OF LOS ANGELES OR ITS OFFICERS OR AGENTS SHALL NOT BE RESPONSIBLE FOR THE ACCURACY OR COMPLETENESS OF ELECTRONIC COPIES OF THIS PLAN SHEET.

REVISION DATES: DESIGN STAGE ONLY

Sheet Version 3.0

PLANS PREPARED BY:
TETRA TECH, INC.
707 WILSHIRE BLVD. 23RD FLR.
LOS ANGELES, CA 90017
PHONE (213) 239-9866

CITY OF LOS ANGELES DEPARTMENT OF PUBLIC WORKS
BUREAU OF ENGINEERING

VERT. CONTROL: BM 12-04070, 1929 (NGVD29) - 1985 ADJUSTMENT
HORIZ. CONTROL: GPS; PID AE 1704, EPOCH 1991.35

SHEET TITLE: EAST BUILDING SECTION

PROJECT: SIXTH STREET PARK, ARTS AND RIVER CONNECTIVITY IMPROVEMENTS (PARC)

ADDRESS: SIXTH STREET OVER THE LOS ANGELES RIVER

WORK ORDER NO. E700235D
FILE NO. --
DRAWING NO. S-302
SHEET 240 OF 295 SHEETS

7/11/2022 2:34:25 PM - O:\PROJECTS\RVINE\20043\200-20043-17001\CAD\SHEETFILES\S-302_BUILDING SECTION.DWG - BOEHMKE, BRETT

CITY ENGINEER
DATE:

DESIGN GROUP | LIC. NO.
ENGINEER: MICHAEL OLSEN
DESIGNED BY: JUSTIN SMITH
DRAWN BY: BRETT BOEHMKE
CHECKED BY: NATE SCHREINER
APPROVED BY: JASON L. FUSSEL

TED ALLEN, P.E.

BUILDING NO.

INDEX NO. MF-300501

NO.	REVISIONS:	DATE	BY:

"THIS PLAN WAS ELECTRONICALLY SIGNED AND STAMPED"

REGISTERED PROFESSIONAL ENGINEER
S. O. OLSEN
No. 81944
CIVIL
STATE OF CALIFORNIA

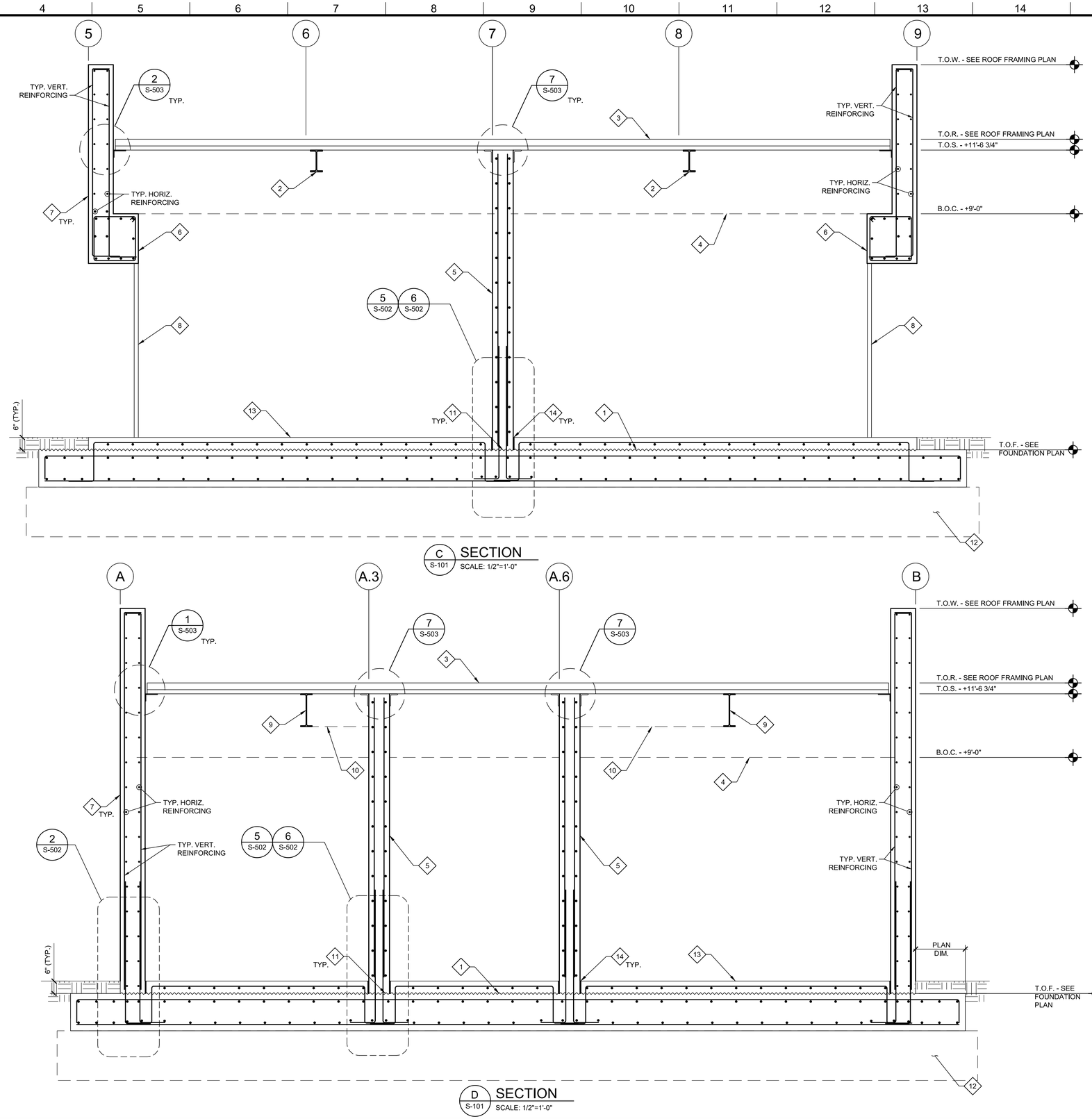

C S-101 SECTION
SCALE: 1/2"=1'-0"

D S-101 SECTION
SCALE: 1/2"=1'-0"

KEYNOTES:

1. CONCRETE MAT FOUNDATION - FOR REINFORCING SEE SHEET S-101
2. COLLECTOR BEAM - SEE SHEET S-102 FOR LOCATION, TYPE AND SIZE
3. CONCRETE FILLED METAL ROOF DECK - SEE SHEET S-102 AND PROJECT SPECIFICATIONS FOR DECK TYPE. PROVIDE 3" SEPARATION BETWEEN DECK EDGE AND EXTERIOR CONCRETE WALLS.
4. DROP DOWN CEILING
5. CAST-IN-PLACE INTERIOR CONCRETE SHEAR WALL - SEE SHEET S-101 FOR REINF.
6. CAST-IN-PLACE CONCRETE LINTEL - SEE SHEET S-102 FOR REINF.
7. CAST-IN-PLACE EXTERIOR CONCRETE WALL - SEE SHEET S-101 FOR REINF.
8. TYPICAL DOOR - SEE ARCHITECTURAL PLANS FOR DETAILS
9. SPECIAL MOMENT FRAME BEAM - SEE SHEET S-102 FOR LOCATION, TYPE AND SIZE
10. SPECIAL MOMENT FRAME BEAM STABILITY BRACING - SEE DETAIL 10 ON SHEET S-504
11. ROUGHENED JOINT
12. OVEREXCAVATION AND RECOMPACTION PER DETAIL 1 ON SHEET S-509 - REFER TO GEOTECHNICAL REPORT FOR ADDITIONAL INFORMATION
13. CONCRETE SLAB INFILL - SEE SHEET S-101 FOR REINFORCING
14. 1/2" ISOLATION JOINT PER DETAIL 11 SHEET S-501

THE CITY OF LOS ANGELES OR ITS OFFICERS OR AGENTS SHALL NOT BE RESPONSIBLE FOR THE ACCURACY OR COMPLETENESS OF ELECTRONIC COPIES OF THIS PLAN SHEET.

REVISION DATES (DESIGN STAGE ONLY)

Sheet Version 3.0

PLANS PREPARED BY:
TETRA TECH, INC.
707 WILSHIRE BLVD. 23RD FLR.
LOS ANGELES, CA 90017
PHONE (213) 239-9866

CITY OF LOS ANGELES DEPARTMENT OF PUBLIC WORKS BUREAU OF ENGINEERING

ENGINEERING CITY OF LOS ANGELES

NO.	REVISIONS:	DATE	BY:

BUILDING NO.

INDEX NO. MF-300501

"THIS PLAN WAS ELECTRONICALLY SIGNED AND STAMPED"

REGISTERED PROFESSIONAL ENGINEER S. O. OLSEN No. 81944 CIVIL STATE OF CALIFORNIA

CITY ENGINEER
TED ALLEN, P.E.
DATE:

DESIGN GROUP	LIC. NO.
ENGINEER: MICHAEL OLSEN	
DESIGNED BY: JUSTIN SMITH	
DRAWN BY: BRETT BOEHMKE	
CHECKED BY: NATE SCHREINER	
APPROVED BY: JASON L. FUSSEL	

APPROVED DWG - BOEHMKE, BRETT

BUREAU OF ENGINEERING OFFICIAL RECORD

VERT. CONTROL: BM 12-04070, 1928 (NGVD29) - 1985 ADJUSTMENT
HORIZ. CONTROL: GPS; PID AE 1704, EPOCH 1991.35

SHEET TITLE: EAST BUILDING SECTION

PROJECT: SIXTH STREET PARK, ARTS AND RIVER CONNECTIVITY IMPROVEMENTS (PARC)

ADDRESS: SIXTH STREET OVER THE LOS ANGELES RIVER

WORK ORDER NO. E700235D
FILE NO. --
DRAWING NO. S-303
SHEET 241 OF 295 SHEETS

7/11/2022 2:36:23 PM - O:\PROJECTS\IRVINE\20043200-20043-17001\CAD\SHEETFILES\S-303_BUILDING SECTION.DWG - BOEHMKE, BRETT

THE CITY OF LOS ANGELES OR ITS OFFICERS OR AGENTS SHALL NOT BE RESPONSIBLE FOR THE ACCURACY OR COMPLETENESS OF ELECTRONIC COPIES OF THIS PLAN SHEET.

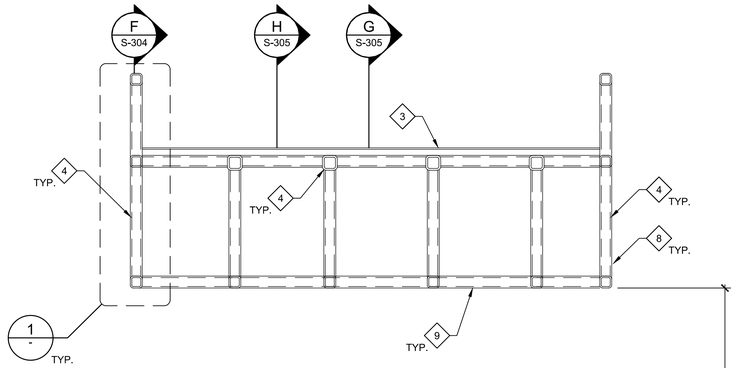

E S-101 SECTION
SCALE: 1/2"=1'-0"

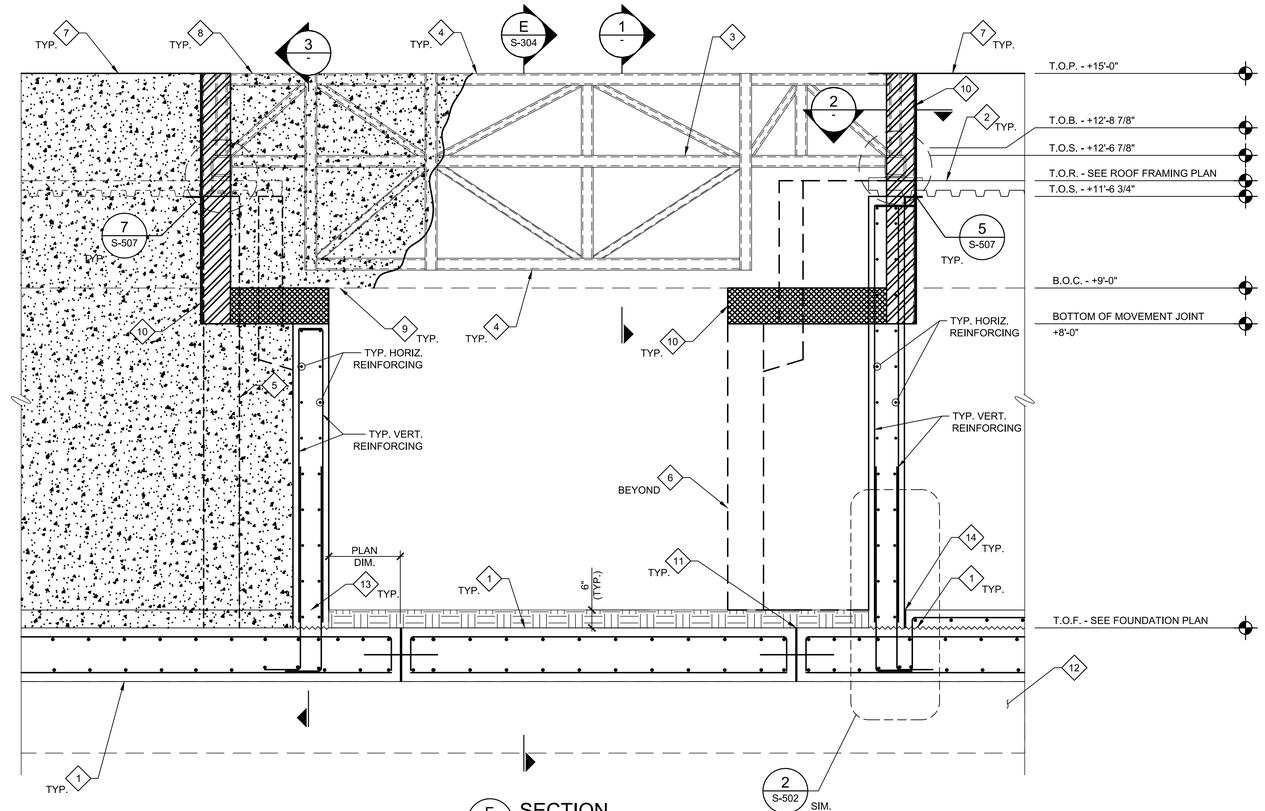

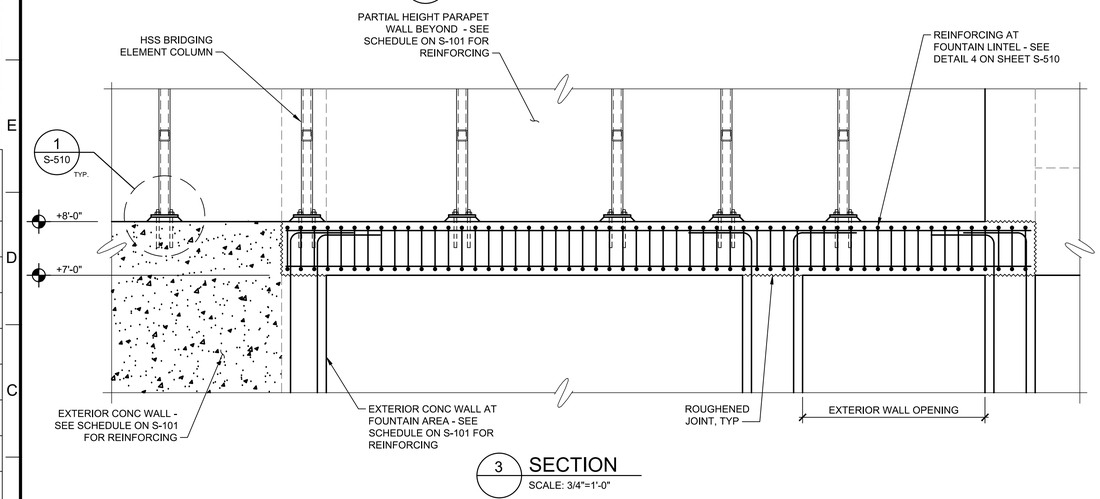

3 SECTION
SCALE: 3/4"=1'-0"

F S-101 SECTION
SCALE: 1/2"=1'-0"

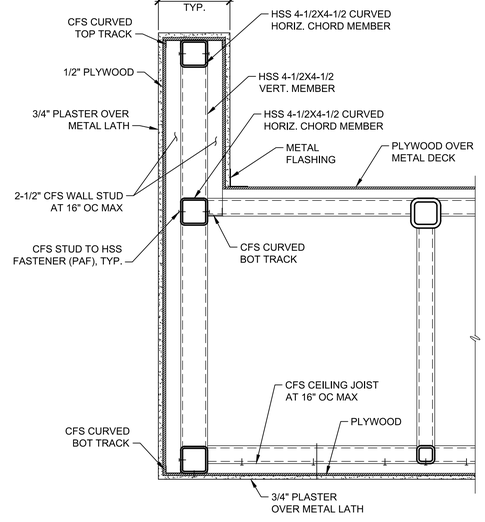

1 SECTION
SCALE: 1"=1'-0"

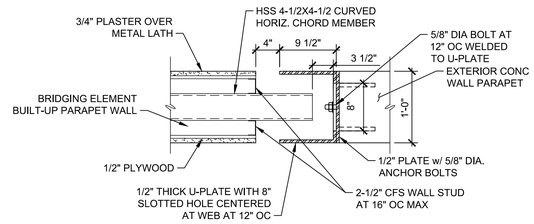

2 SECTION
SCALE: 1"=1'-0"

KEYNOTES:

1. CONCRETE MAT FOUNDATION - FOR REINFORCING SEE SHEET S-101
2. CONCRETE FILLED METAL ROOF DECK - SEE SHEET S-102 AND PROJECT SPECIFICATIONS FOR DECK TYPE. PROVIDE 1" SEPARATION BETWEEN DECK EDGE AND EXTERIOR CONCRETE WALLS.
3. METAL ROOF DECK - 20 GAUGE, 1 1/2" DEEP PLB-36 w/ VSC @ 12" OR APPROVED EQUAL. SEE DETAIL 5 ON SHEET S-505. ROOF DECK TO SPAN AS SHOWN ON THE PLANS. PROVIDE 2% SLOPE TO ROOF DRAINS AS SPECIFIED ON THE ARCHITECTURAL PLANS.
4. EAST BUILDING ROOF BRIDGE FRAMING - SEE SHEET S-102A FOR SHAPES, SIZES AND LOCATION.
5. CAST-IN-PLACE INTERIOR CONCRETE SHEAR WALL - SEE SHEET S-101 FOR REINF.
6. CAST-IN-PLACE EXTERIOR CONCRETE WALL - SEE SHEET S-101 FOR REINF.
7. PARAPET AT CAST-IN-PLACE EXTERIOR CONCRETE WALL - SEE SHEET S-101 FOR REINF.
8. PARAPET WALL AT ROOF BRIDGE - SEE DETAIL 1 ON THIS SHEET
9. DROP-DOWN CEILING
10. SEISMIC EXPANSION JOINT - SEE DETAIL 2 ON THIS SHEET
11. JOINT SEALANT
12. OVEREXCAVATION AND RECOMPACTION PER DETAIL 1 ON SHEET S-509 - REFER TO GEOTECHNICAL REPORT FOR ADDITIONAL INFORMATION
13. ROUGHENED JOINT
14. 1/2" ISOLATION JOINT PER DETAIL 11 SHEET S-501

REVISION DATES (DESIGN STAGE ONLY)

Sheet Version 3.0

PLANS PREPARED BY:
TETRA TECH, INC.
707 WILSHIRE BLVD. 23RD FLR.
LOS ANGELES, CA 90017
PHONE (213) 239-9866

CITY OF LOS ANGELES DEPARTMENT OF PUBLIC WORKS BUREAU OF ENGINEERING

ENGINEERING CITY OF LOS ANGELES

NO.	REVISIONS:	DATE	BY:

BUILDING NO.

INDEX NO. MF-300501

"THIS PLAN WAS ELECTRONICALLY SIGNED AND STAMPED"

REGISTERED PROFESSIONAL ENGINEER S. O. OLSEN No. 81944 CIVIL STATE OF CALIFORNIA

CITY ENGINEER
DATE:

TED ALLEN, P.E.

DESIGN GROUP	LIC. NO.
ENGINEER: MICHAEL OLSEN	
DESIGNED BY: JUSTIN SMITH	
DRAWN BY: BRETT BOEHMKE	
CHECKED BY: NATE SCHREINER	
APPROVED BY: JASON L. FUSSEL	

APPROVED DWG - BOEHMKE, BRETT

BUREAU OF ENGINEERING OFFICIAL RECORD

VERT. CONTROL: BM 12-04070, 1929 (NGVD29) - 1985 ADJUSTMENT
HORIZ. CONTROL: GPS; PID AE 1704, EPOCH 1991.35

SHEET TITLE: EAST BUILDING SECTION

PROJECT: SIXTH STREET PARK, ARTS AND RIVER CONNECTIVITY IMPROVEMENTS (PARC)

ADDRESS: SIXTH STREET OVER THE LOS ANGELES RIVER

WORK ORDER NO. E700235D
FILE NO. --
DRAWING NO. S-304
SHEET 242 OF 295 SHEETS

7/11/2022 2:39:03 PM - O:\PROJECTS\RVINE\20043\200-20043-17001\CAD\SHEETFILES\S-304_BUILDING SECTION.DWG

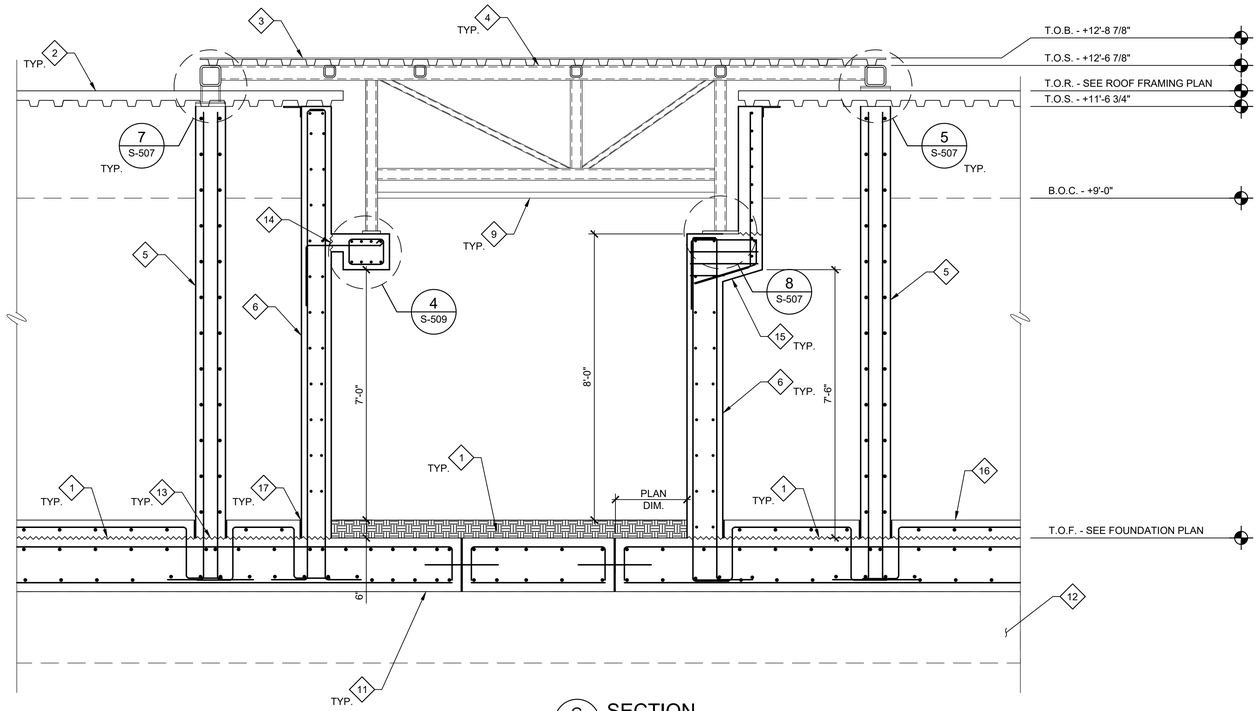

G S-101 SECTION
SCALE: 1/2"=1'-0"

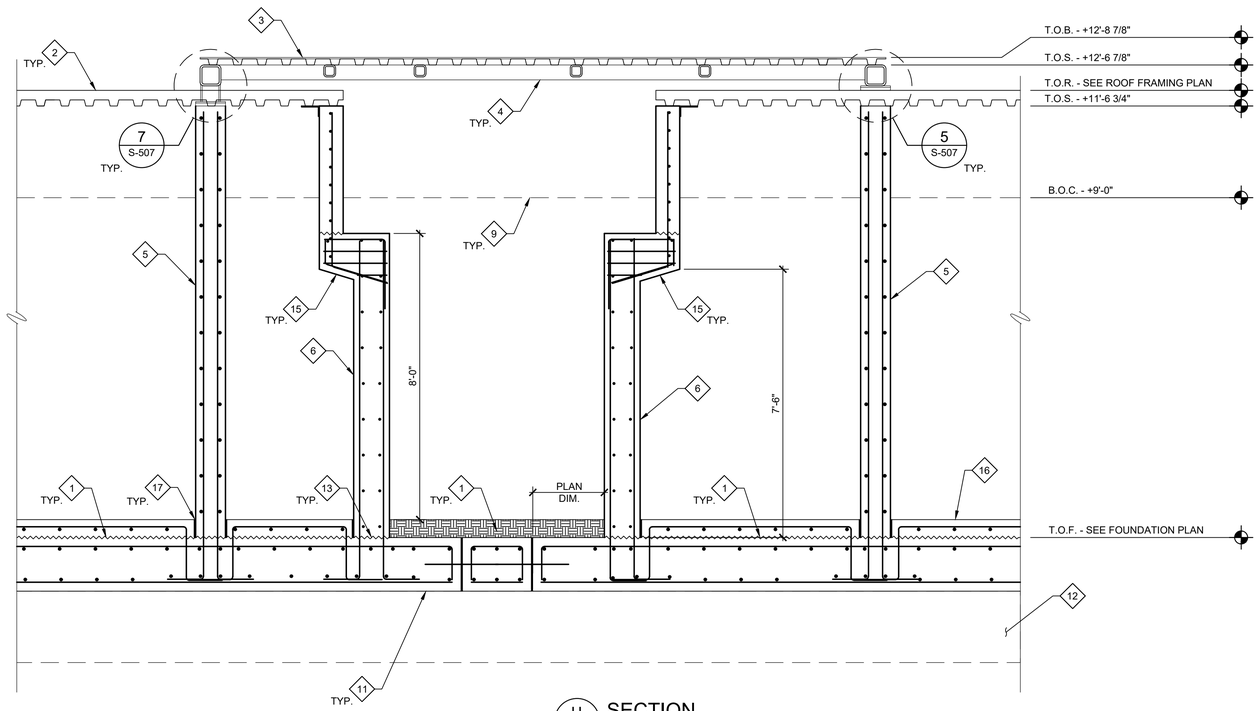

H S-101 SECTION
SCALE: 1/2"=1'-0"

KEYNOTES:

1. CONCRETE MAT FOUNDATION - FOR REINFORCING SEE SHEET S-101
2. CONCRETE FILLED METAL ROOF DECK - SEE SHEET S-102 AND PROJECT SPECIFICATIONS FOR DECK TYPE. PROVIDE 1" SEPARATION BETWEEN DECK EDGE AND EXTERIOR CONCRETE WALLS.
3. METAL ROOF DECK - 20 GAUGE, 1 1/2" DEEP PLB-36 w/ VSC @ 12" OR APPROVED EQUAL. SEE DETAIL 5 ON SHEET X. ROOF DECK TO SPAN AS SHOWN ON THE PLANS. PROVIDE 2% SLOPE TO ROOF DRAINS AS SPECIFIED ON THE ARCHITECTURAL PLANS.
4. EAST BUILDING ROOF BRIDGE FRAMING - SEE SHEET S-102A FOR SHAPES, SIZES AND LOCATION.
5. CAST-IN-PLACE INTERIOR CONCRETE SHEAR WALL - SEE SHEET S-101 FOR REINF.
6. CAST-IN-PLACE EXTERIOR CONCRETE WALL - SEE SHEET S-101 FOR REINF.
7. PARAPET AT CAST-IN-PLACE EXTERIOR CONCRETE WALL - SEE SHEET S-101 FOR REINF.
8. SHOTCRETE PARAPET WALL AT ROOF BRIDGE - SEE SHEET X FOR REINF.
9. DROP-DOWN CEILING
10. 2" THICK SEISMIC EXPANSION JOINT
11. JOINT SEALANT
12. OVEREXCAVATION AND RECOMPACTION PER DETAIL 1 ON SHEET S-509 - REFER TO GEOTECHNICAL REPORT FOR ADDITIONAL INFORMATION
13. ROUGHENED JOINT
14. CONTROL JOINT
15. CONCRETE CORBEL - SEE DETAIL 5 ON S-510
16. CONCRETE SLAB INFILL - SEE SHEET S-101 FOR REINFORCING
17. 1/2" ISOLATION JOINT PER DETAIL 11 SHEET S-501

THE CITY OF LOS ANGELES OR ITS OFFICERS OR AGENTS SHALL NOT BE RESPONSIBLE FOR THE ACCURACY OR COMPLETENESS OF ELECTRONIC COPIES OF THIS PLAN SHEET.

REVISION DATES (DESIGN STAGE ONLY)

Sheet Version 3.0

BUREAU OF ENGINEERING • DEPARTMENT OF PUBLIC WORKS • CITY OF LOS ANGELES

ENGINEERING
CITY OF LOS ANGELES

NO.	REVISIONS:	DATE	BY:

BUILDING NO.

INDEX NO. MF-300501

"THIS PLAN WAS ELECTRONICALLY SIGNED AND STAMPED"

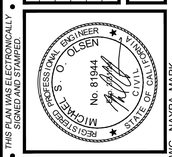

CITY ENGINEER
DATE:
LIC. NO.

TED ALLEN, P.E.

DESIGN GROUP

ENGINEER: MICHAEL OLSEN
DESIGNED BY: JUSTIN SMITH
DRAWN BY: XXXX
CHECKED BY: NATE SCHREINER
APPROVED BY: JASON L. FUSSEL

BUREAU OF ENGINEERING
OFFICIAL RECORD

PLANS PREPARED BY:
TETRA TECH, INC.
707 WILSHIRE BLVD. 23RD FLR.
LOS ANGELES, CA 90017
PHONE: (213) 239-8866

VERT. CONTROL: BM # 24-04070, 1929 (NGVD29) - 1988 ADJUSTMENT
HORIZ. CONTROL: GPS, PID AE 1704, EPOCH 1991.35

SHEET TITLE: EAST BUILDING SECTION

PROJECT: SIXTH STREET PARK, ARTS AND RIVER CONNECTIVITY IMPROVEMENTS (PARC)

ADDRESS: SIXTH STREET OVER THE LOS ANGELES RIVER

WORK ORDER NO. E7002350
FILE NO. --
DRAWING NO. S-304A
SHEET 243 OF 295 SHEETS

7/11/2022 5:54:30 PM - C:\USERS\MARK.NAYRA\ONEDRIVE - TETRA TECH, INC\DESKTOP\PROJECT BACKUPS\6TH STREET\FINAL FILES\FINAL DRAWINGS\S-304A_EAST BUILDING SECTION.DWG - NAYRA, MARK

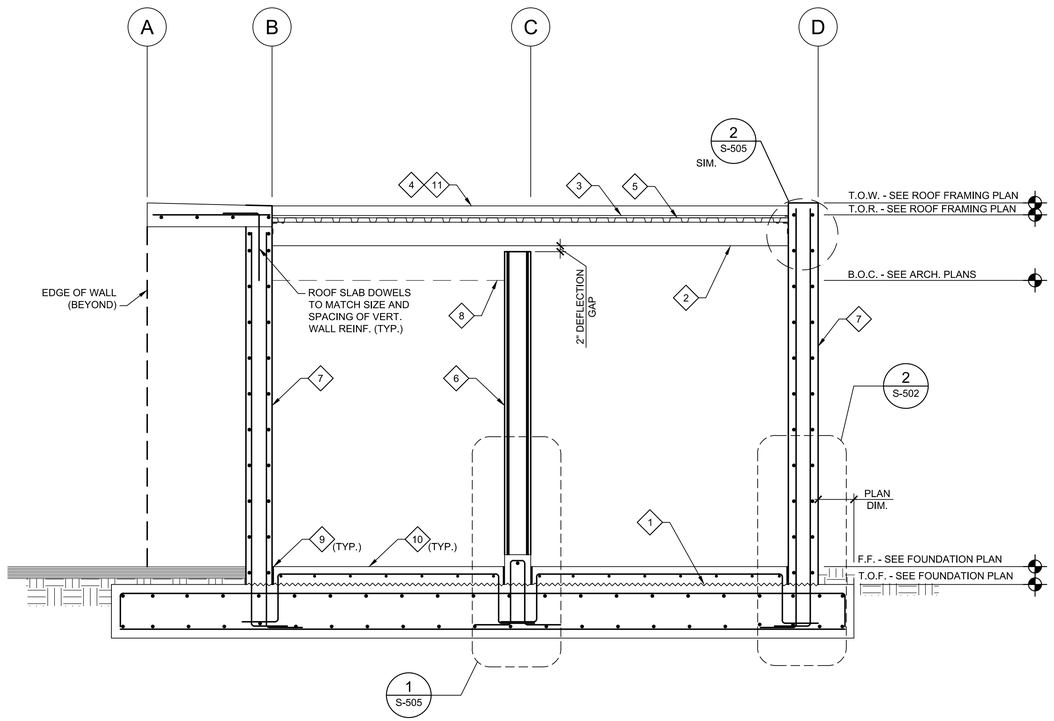

A S-103 SECTION
SCALE: 1/2"=1'-0"

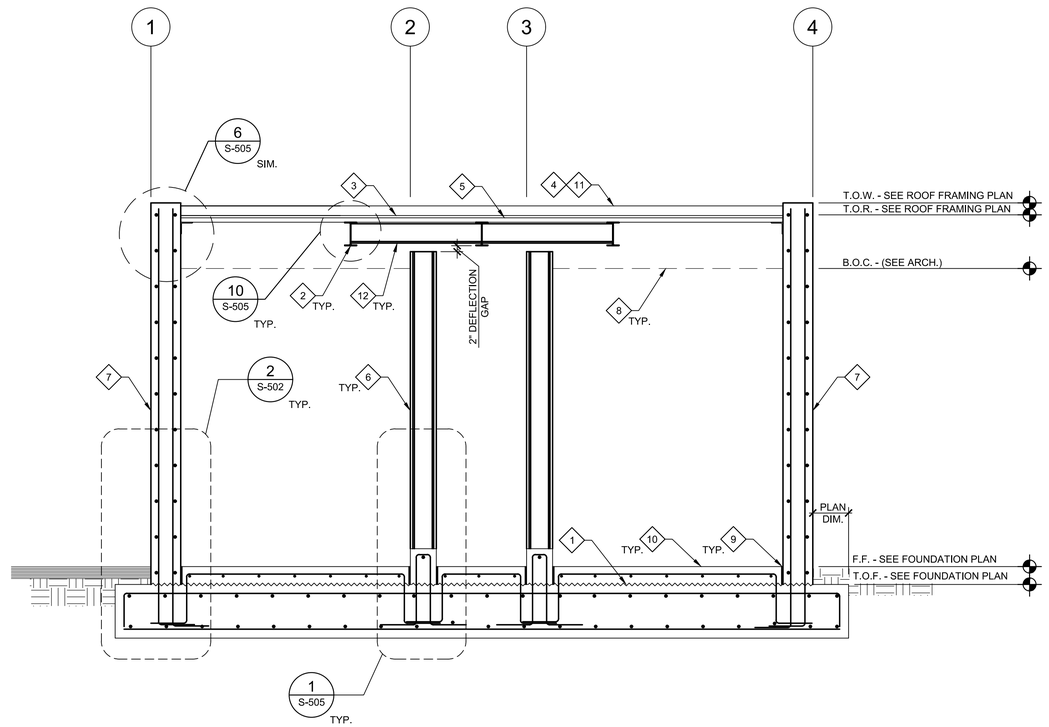

B S-103 SECTION
SCALE: 1/2"=1'-0"

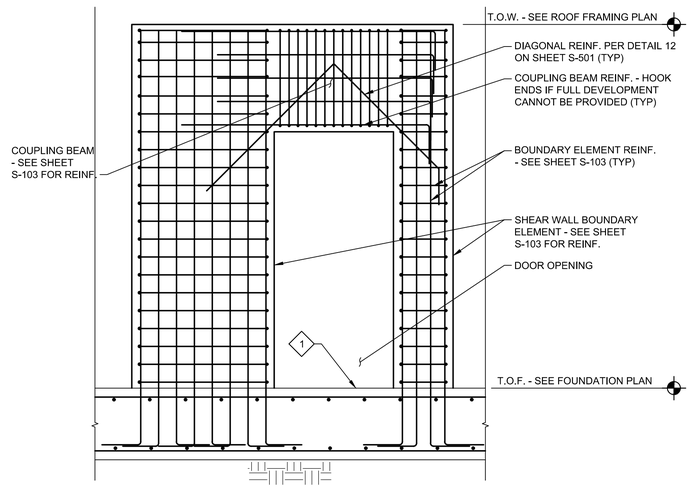

C S-103 ELEVATION
SCALE: 1/2"=1'-0"

KEYNOTES:

1. CONCRETE MAT FOUNDATION - SEE SHEET S-103 FOR MORE INFORMATION.
2. ROOF FRAMING - SEE SHEET S-103 FOR LOCATION, TYPE AND SIZE.
3. PLYWOOD SHEATHING - SEE SHEET S-103 FOR MORE INFORMATION.
4. MEMBRANE ROOFING - SEE SHEET S-103 FOR MORE INFORMATION.
5. METAL DECKING - SEE SHEET S-103 FOR MORE INFORMATION.
6. METAL STUD WALL - SEE ARCHITECTURAL DRAWINGS FOR ALL WALL DETAILS. BRACE TOP OF WALL PER DETAIL 4 SHEET S-505.
7. CAST-IN-PLACE EXTERIOR CONCRETE WALL - SEE SHEET S-103 FOR REINF.
8. DROP DOWN CEILING
9. 1/2" ISOLATION JOINT PER DETAIL 11 SHEET S-501
10. SLAB ON GRADE - SEE SHEET S-103 FOR MORE INFORMATION.
11. ROOF INSULATION - SEE ARCH.
12. C7 SUPPLEMENTAL ROOF FRAMING PER PLAN.

CFS INFILL STUD WALL, PARTITION WALLS AND CEILING NOTES:

1. SCHEMATIC DETAILS SHOWN ON ARCHITECTURAL DRAWINGS. GENERAL CONTRACTOR (GC) SHALL PROVIDE DETAILS (INCLUDING STUD SIZES, CONNECTIONS, ETC.), STRUCTURAL CALCULATIONS AND SHOP DRAWINGS. GC TO SUBMIT FOR REVIEW PRIOR TO FABRICATION.
2. STRUCTURAL CALCULATIONS SHALL BE SIGNED AND STAMPED BY A DULY LICENSED CIVIL OR STRUCTURAL ENGINEER IN THE STATE OF CALIFORNIA.
3. ALTERNATE CONNECTION DETAILS MAY BE SUBMITTED FOR REVIEW.
4. CFS DETAILS NOT SHOWN OR CALLED OUT ON STRUCTURAL DRAWINGS FOR CLARITY.

BUREAU OF ENGINEERING
OFFICIAL RECORD

0 1'-0" 2'-0" 4'-0"
SCALE: 1/2" = 1'-0"

THE CITY OF LOS ANGELES OR ITS OFFICERS OR AGENTS SHALL NOT BE RESPONSIBLE FOR THE ACCURACY OR COMPLETENESS OF ELECTRONIC COPIES OF THIS PLAN SHEET.

REVISION DATES
(DESIGN STAGE ONLY)

Sheet Version 3.0

PLANS PREPARED BY:
TETRA TECH, INC.
707 WILSHIRE BLVD. 23RD FLR.
LOS ANGELES, CA 90017
PHONE (213) 239-9866

CITY OF LOS ANGELES
DEPARTMENT OF PUBLIC WORKS
BUREAU OF ENGINEERING

VERT. CONTROL: BM 12-04070, 1928 (NGVD29) - 1985 ADJUSTMENT
HORIZ. CONTROL: GPS, PID AE 1704, EPOCH 1991.35

SHEET TITLE: WEST RESTROOM BUILDING SECTION 1

PROJECT: SIXTH STREET PARK, ARTS AND RIVER CONNECTIVITY IMPROVEMENTS (PARC)

ADDRESS: SIXTH STREET OVER THE LOS ANGELES RIVER

WORK ORDER NO.
E700235D
FILE NO.
–
DRAWING NO.
S-305
SHEET 244 OF 295 SHEETS

CITY ENGINEER
TED ALLEN, P.E.
DATE:

DESIGN GROUP	LIC. NO.
ENGINEER: MICHAEL OLSEN	
DESIGNED BY: JUSTIN SMITH	
DRAWN BY: BRETT BOEHMKE	
CHECKED BY: NATE SCHREINER	
APPROVED BY: JASON L. FUSSEL	

BUILDING NO.
INDEX NO. MF-300501

NO.	REVISIONS:	BY:	DATE

ENGINEERING
CITY OF LOS ANGELES

"THIS PLAN WAS ELECTRONICALLY SIGNED AND STAMPED"

REGISTERED PROFESSIONAL ENGINEER
S. O. OLSEN
No. 81944
CIVIL
STATE OF CALIFORNIA

7/1/2022 5:04:52 PM - O:\PROJECTS\IRVINE\20043200-20043-17001\CAD\SHEETFILES\S-305_WEST BUILDING SECTION.DWG - BOEHMKE, BRETT

KEYNOTES:

1. CONCRETE MAT FOUNDATION - SEE SHEET S-104 FOR MORE INFORMATION.
2. ROOF FRAMING - SEE SHEET S-104 FOR LOCATION, TYPE AND SIZE.
3. CONCRETE FILLED METAL ROOF DECK - SEE SHEET S-104 FOR MORE INFORMATION.
4. HSSx COLUMN - SEE SHEET S-104 FOR SIZES AND LOCATIONS.
5. COLD-FORMED STEEL WALL
6. 4" CONCRETE CURB
7. EXTERIOR STUCCO
8. GYPSUM WALL BOARD
9. DROP DOWN CEILING
10. CURVED PERIMETER Wx BEAM - SEE SHEET S-104 FOR LOCATION AND SIZE.
11. OVEREXCAVATION AND RECOMPACTION PER DETAIL 1 ON SHEET S-509 - REFER TO GEOTECHNICAL REPORT FOR ADDITIONAL INFORMATION
12. GRAVEL PIT OPENING AT MAT SLAB - SEE ARCHITECTURAL AND MECHANICAL PLANS FOR MORE INFORMATION
13. CONCRETE SLAB INFILL - SEE SHEET S-104 FOR REINFORCING
14. 1/2" ISOLATION JOINT PER DETAIL 11 SHEET S-501

CFS INFILL STUD WALL, PARTITION WALLS AND CEILING NOTES:

1. SCHEMATIC DETAILS SHOWN ON ARCHITECTURAL DRAWINGS. GENERAL CONTRACTOR (GC) SHALL PROVIDE DETAILS (INCLUDING STUD SIZES, CONNECTIONS, ETC.), STRUCTURAL CALCULATIONS AND SHOP DRAWINGS. GC TO SUBMIT FOR REVIEW PRIOR TO FABRICATION.
2. STRUCTURAL CALCULATIONS SHALL BE SIGNED AND STAMPED BY A DULY LICENSED CIVIL OR STRUCTURAL ENGINEER IN THE STATE OF CALIFORNIA.
3. ALTERNATE CONNECTION DETAILS MAY BE SUBMITTED FOR REVIEW.
4. CFS DETAILS NOT SHOWN OR CALLED OUT ON STRUCTURAL DRAWINGS FOR CLARITY.

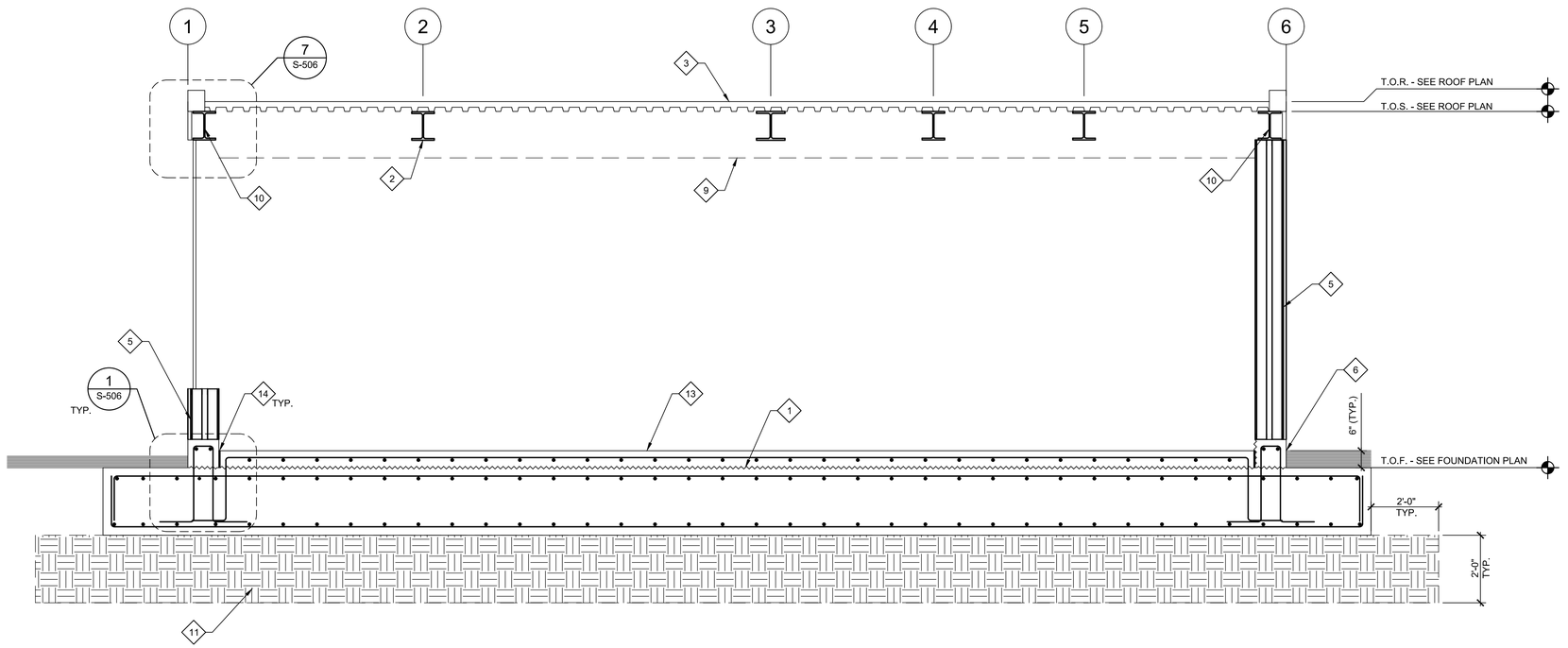

A S-103 SECTION
SCALE: 1/2"=1'-0"

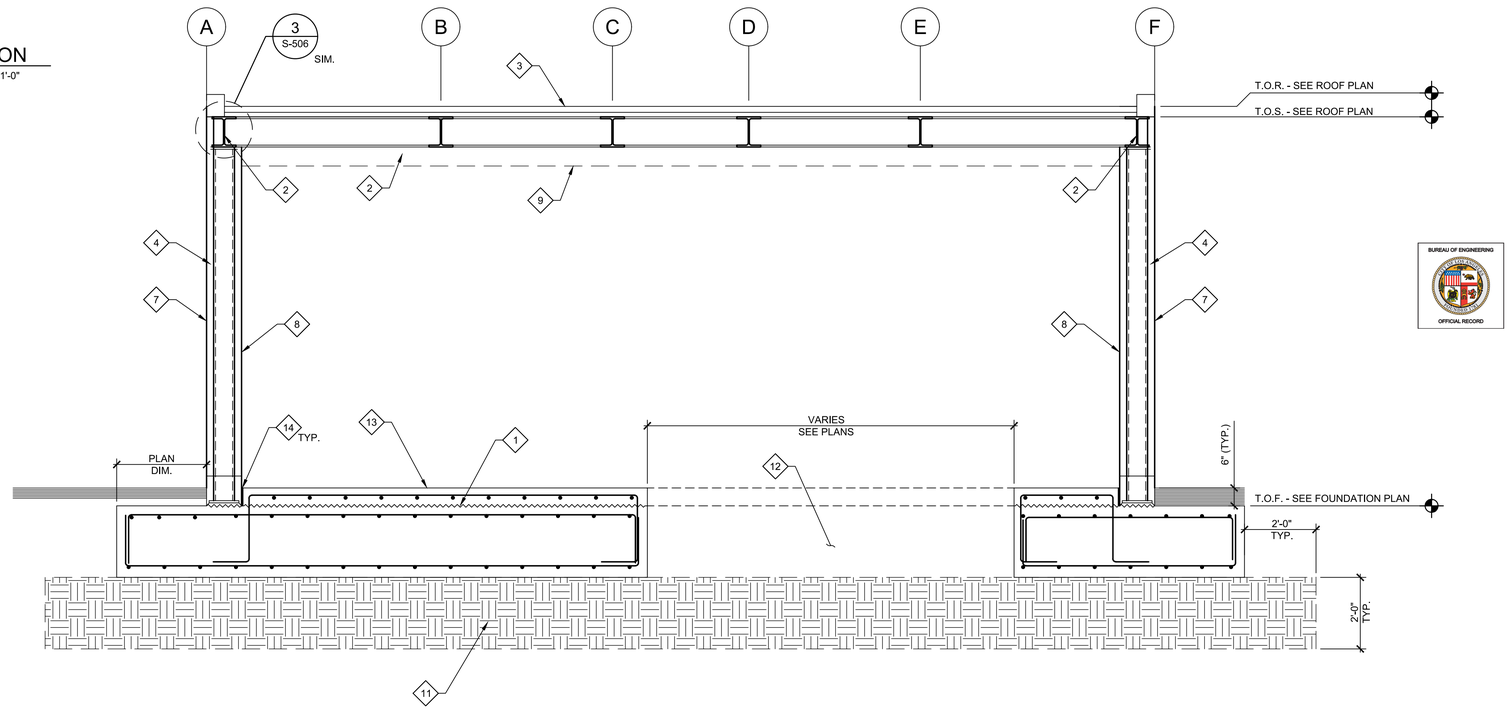

B S-103 SECTION
SCALE: 1/2"=1'-0"

THE CITY OF LOS ANGELES OR ITS OFFICERS OR AGENTS SHALL NOT BE RESPONSIBLE FOR THE ACCURACY OR COMPLETENESS OF ELECTRONIC COPIES OF THIS PLAN SHEET.

REVISION DATES (DESIGN STAGE ONLY)

Sheet Version 3.0

PLANS PREPARED BY:
TETRA TECH, INC.
707 WILSHIRE BLVD. 23RD FLR.
LOS ANGELES, CA 90017
PHONE (213) 239-9866

CITY OF LOS ANGELES DEPARTMENT OF PUBLIC WORKS BUREAU OF ENGINEERING

ENGINEERING CITY OF LOS ANGELES

NO.	REVISIONS:	DATE	BY:

BUILDING NO.

INDEX NO. MF-300501

THIS PLAN WAS ELECTRONICALLY SIGNED AND STAMPED

REGISTERED PROFESSIONAL ENGINEER MICHAEL S. O. OLSEN No. 81944 CIVIL STATE OF CALIFORNIA

TED ALLEN, P.E.
CITY ENGINEER
DATE:

DESIGN GROUP	LIC. NO.
ENGINEER: MICHAEL OLSEN	
DESIGNED BY: JUSTIN SMITH	
DRAWN BY: BRETT BOEHMKE	
CHECKED BY: NATE SCHREINER	
APPROVED BY: JASON L. FUSSEL	

BUREAU OF ENGINEERING OFFICIAL RECORD

VERT. CONTROL: BM 12-04070, 1928 (NGVD29) - 1985 ADJUSTMENT
HORIZ. CONTROL: GPS; PID AE 1704, EPOCH 1991.35

SHEET TITLE: WEST CAFE BUILDING SECTION

PROJECT: SIXTH STREET PARK, ARTS AND RIVER CONNECTIVITY IMPROVEMENTS (PARC)

ADDRESS: SIXTH STREET OVER THE LOS ANGELES RIVER

WORK ORDER NO. E700235D
FILE NO. --
DRAWING NO. S-306
SHEET 245 OF 295 SHEETS

7/1/2022 2:46:44 PM - O:\PROJECTS\RVINE\20043200-20043-17001\CAD\SHEETFILES\S-306_WEST RESTROOM BUILDING SECTION 2.DWG - BOEHMKE, BRETT

KEYNOTES:

1. CONCRETE MAT FOUNDATION - SEE SHEET S-104 FOR MORE INFORMATION.
2. CONCRETE FILLED METAL ROOF DECK - SEE SHEET S-104 FOR MORE INFORMATION.
3. HSSx COLUMN - SEE SHEET S-104 FOR SIZES AND LOCATIONS.
4. 4" CONCRETE CURB
5. CURVED PERIMETER Wx BEAM - SEE SHEET S-104 FOR LOCATION AND SIZE.
6. OVEREXCAVATION AND RECOMPACTION PER DETAIL 1 ON SHEET S-509 - REFER TO GEOTECHNICAL REPORT FOR ADDITIONAL INFORMATION
7. PARAPET - SEE ARCH DRAWINGS FOR MORE INFORMATION
8. HSSx VERTICAL BRACE - SEE SHEET S-104 FOR SIZES AND LOCATIONS
9. ROUGHENED JOINT

CFS INFILL STUD WALL, PARTITION WALLS AND CEILING NOTES:

1. SCHEMATIC DETAILS SHOWN ON ARCHITECTURAL DRAWINGS. GENERAL CONTRACTOR (GC) SHALL PROVIDE DETAILS (INCLUDING STUD SIZES, CONNECTIONS, ETC.), STRUCTURAL CALCULATIONS AND SHOP DRAWINGS. GC TO SUBMIT FOR REVIEW PRIOR TO FABRICATION.
2. STRUCTURAL CALCULATIONS SHALL BE SIGNED AND STAMPED BY A DULY LICENSED CIVIL OR STRUCTURAL ENGINEER IN THE STATE OF CALIFORNIA.
3. ALTERNATE CONNECTION DETAILS MAY BE SUBMITTED FOR REVIEW.
4. CFS DETAILS NOT SHOWN OR CALLED OUT ON STRUCTURAL DRAWINGS FOR CLARITY.

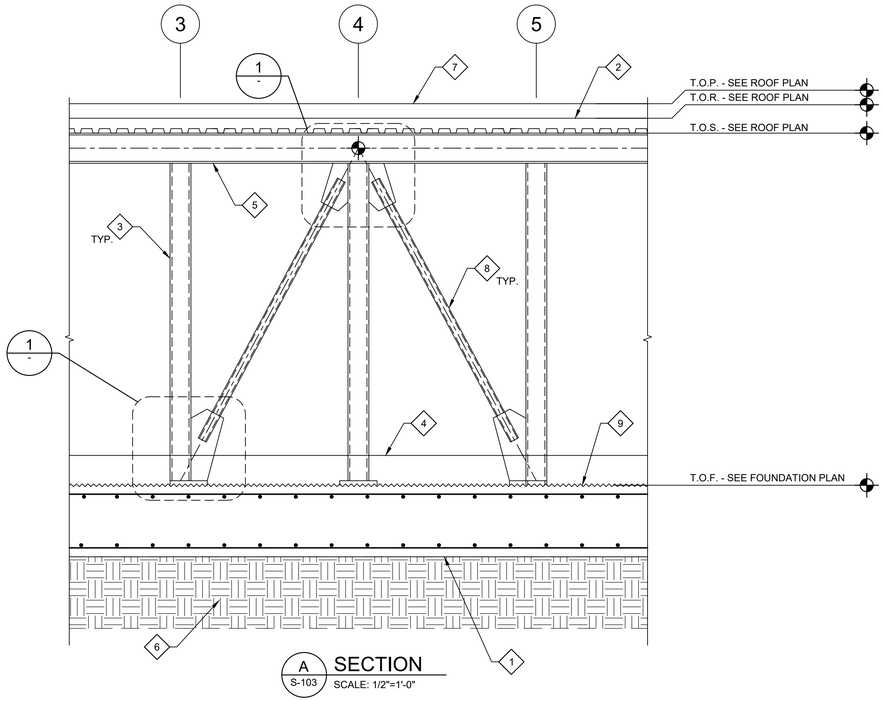

A S-103 SECTION
SCALE: 1/2"=1'-0"

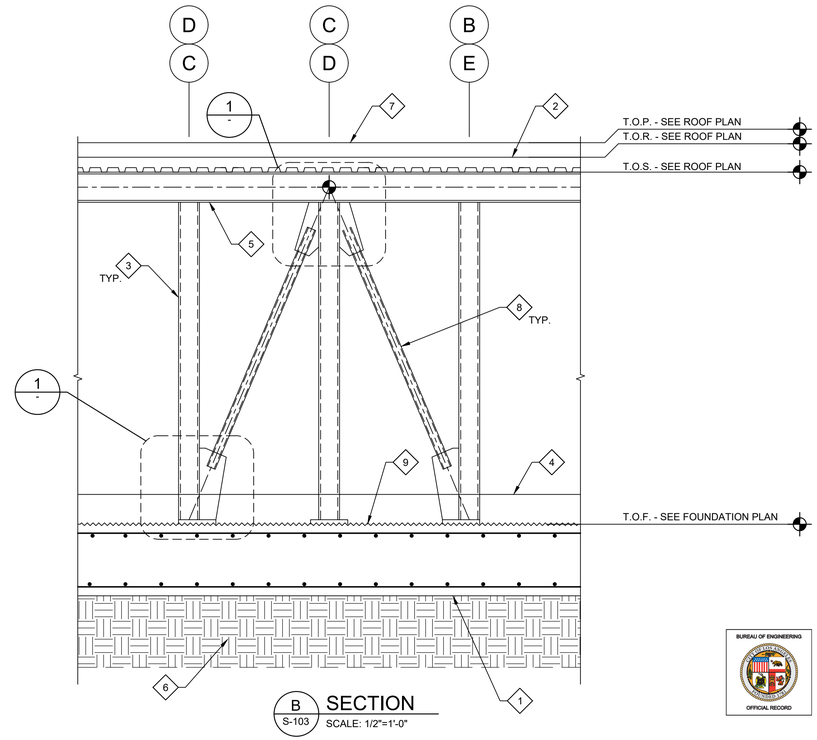

B S-103 SECTION
SCALE: 1/2"=1'-0"

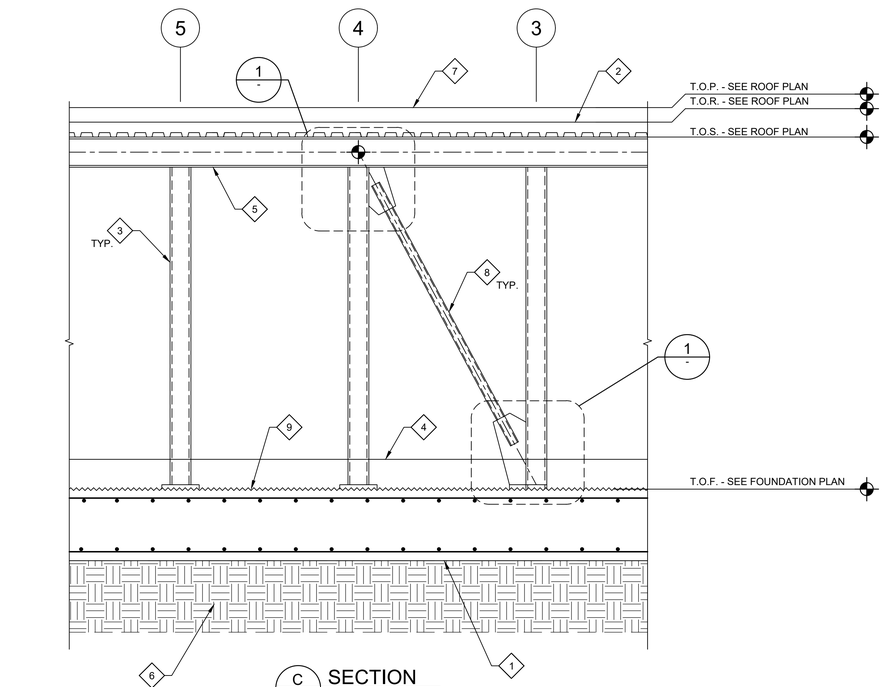

C S-103 SECTION
SCALE: 1/2"=1'-0"

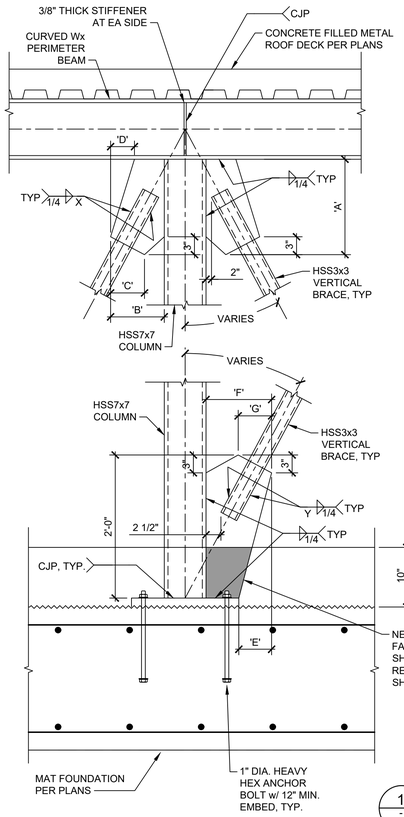

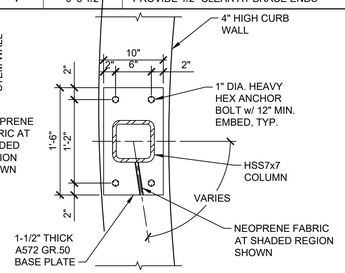

1 BRACE FRAME DETAILS
SCALE: 1"=1'-0"

GUSSET PLATE SCHEDULE (GRID 3/4/5)

ID	DIMENSION	REMARKS
A	1'-4"	3/8" THICK A572 GR.50 GUSSET PLATE
B	0'-9"	3/8" THICK A572 GR.50 GUSSET PLATE
C	0'-5 1/2"	3/8" THICK A572 GR.50 GUSSET PLATE
D	0'-4"	3/8" THICK A572 GR.50 GUSSET PLATE
E	0'-5 1/2"	3/8" THICK A572 GR.50 GUSSET PLATE
F	0'-11"	3/8" THICK A572 GR.50 GUSSET PLATE
G	0'-6"	3/8" THICK A572 GR.50 GUSSET PLATE
X	0'-6"	PROVIDE 1/2" CLEAR AT BRACE ENDS
Y	0'-8 1/2"	PROVIDE 1/2" CLEAR AT BRACE ENDS

GUSSET PLATE SCHEDULE (GRID B/C/D/E)

ID	DIMENSION	REMARKS
A	1'-6"	3/8" THICK A572 GR.50 GUSSET PLATE
B	0'-9"	3/8" THICK A572 GR.50 GUSSET PLATE
C	0'-7 1/2"	3/8" THICK A572 GR.50 GUSSET PLATE
D	0'-5"	3/8" THICK A572 GR.50 GUSSET PLATE
E	0'-3 1/2"	3/8" THICK A572 GR.50 GUSSET PLATE
F	0'-9"	3/8" THICK A572 GR.50 GUSSET PLATE
G	0'-7"	3/8" THICK A572 GR.50 GUSSET PLATE
X	0'-3 3/4"	PROVIDE 1/2" CLEAR AT BRACE ENDS
Y	0'-3 1/2"	PROVIDE 1/2" CLEAR AT BRACE ENDS

BUREAU OF ENGINEERING
OFFICIAL RECORD

ENGINEERING
CITY OF LOS ANGELES

BUREAU OF ENGINEERING • DEPARTMENT OF PUBLIC WORKS • CITY OF LOS ANGELES

NO.	REVISIONS:	DATE	BY:

BUILDING NO.

INDEX NO. MF-300501

"THIS PLAN WAS ELECTRONICALLY SIGNED AND STAMPED"

REGISTERED PROFESSIONAL ENGINEER S. O. OLSEN MICHAEL No. 81944 CIVIL STATE OF CALIFORNIA

CITY ENGINEER: TED ALLEN, P.E.
DESIGN GROUP
ENGINEER: MICHAEL OLSEN — LIC. NO. C-85736 — DATE: 07/11/22
DESIGNED BY: JUSTIN SMITH
DRAWN BY: BRETT BOEHMKE
CHECKED BY: NATE SCHREINER
APPROVED BY: JASON L. FUSSEL

SHEET TITLE: WEST CAFE BUILDING BRACE FRAME ELEVATIONS
PROJECT: SIXTH STREET PARK, ARTS AND RIVER CONNECTIVITY IMPROVEMENTS (PARC)
ADDRESS: SIXTH STREET OVER THE LOS ANGELES RIVER

VERT. CONTROL: BM 12-04070, 1929 (NGVD29) - 1985 ADJUSTMENT
HORIZ. CONTROL: GPS; PID AE 1704, EPOCH 1991.35

PLANS PREPARED BY:
TETRA TECH, INC.
707 WILSHIRE BLVD. 23RD FLR.
LOS ANGELES, CA 90017
PHONE: (213) 239-9866

WORK ORDER NO. E700235D
FILE NO. --
DRAWING NO. S-306A
SHEET 246 OF 295 SHEETS

REVISION DATES (DESIGN STAGE ONLY)

THE CITY OF LOS ANGELES OR ITS OFFICERS OR AGENTS SHALL NOT BE RESPONSIBLE FOR THE ACCURACY OR COMPLETENESS OF ELECTRONIC COPIES OF THIS PLAN SHEET.

7/11/2022 7:40:26 PM - \\TT1.LOCAL\ER\PROJECTS\IRVINE\200493\200-200493-17001\CAD\SHEETFILES\S-306A_WEST CAFE BUILDING SECTION.DWG - NAYRA, MARK

Sheet Version 3.0

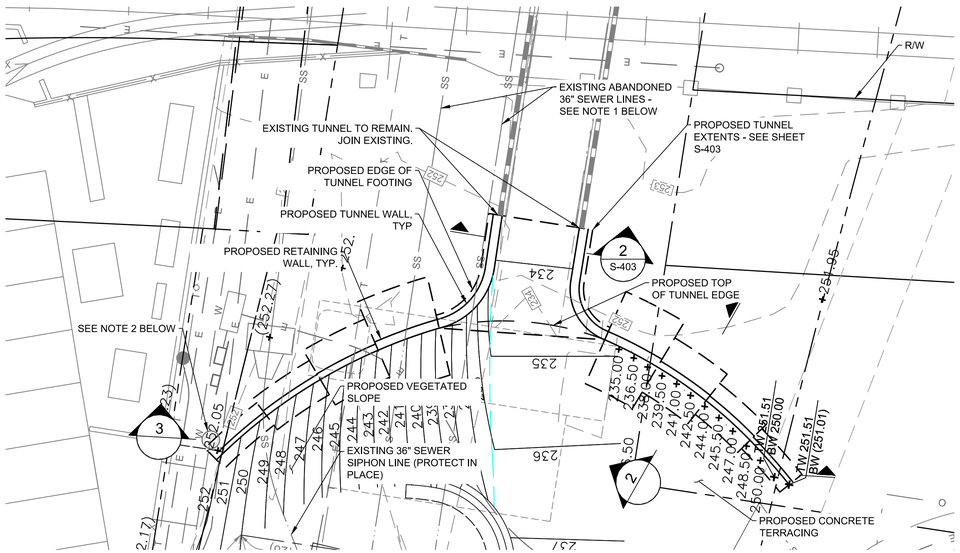

1 RETAINING WALL PLAN LAYOUT
SCALE: 1/16"=1'-0"

0 8' 16' 32'
SCALE: 1/16" = 1'-0"

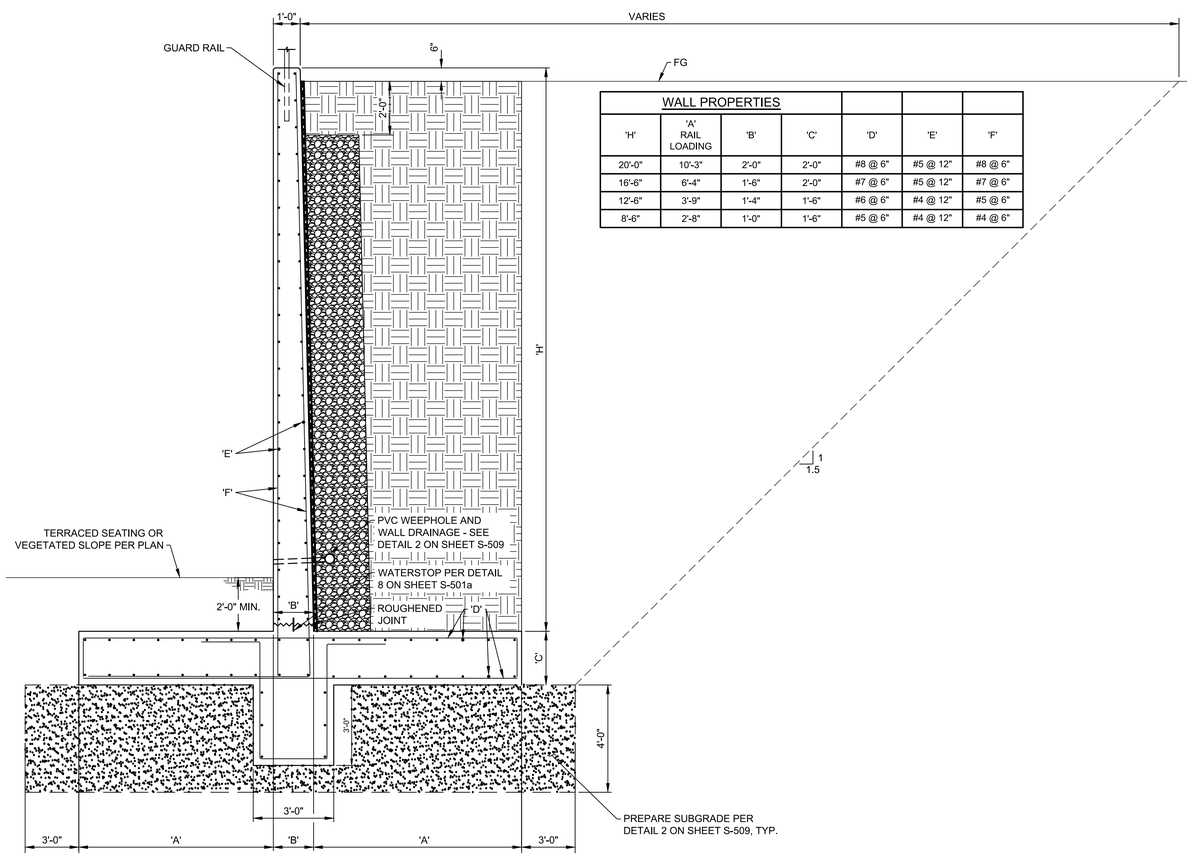

WALL PROPERTIES						
'H'	'A' RAIL LOADING	'B'	'C'	'D'	'E'	'F'
20'-0"	10'-3"	2'-0"	2'-0"	#8 @ 6"	#5 @ 12"	#8 @ 6"
16'-6"	6'-4"	1'-6"	2'-0"	#7 @ 6"	#5 @ 12"	#7 @ 6"
12'-6"	3'-9"	1'-4"	1'-6"	#6 @ 6"	#4 @ 12"	#5 @ 6"
8'-6"	2'-8"	1'-0"	1'-6"	#5 @ 6"	#4 @ 12"	#4 @ 6"

2 EAST RETANING WALL TYPICAL SECTION (14'-6" WALL SHOWN)
SCALE: 3/8"=1'-0"

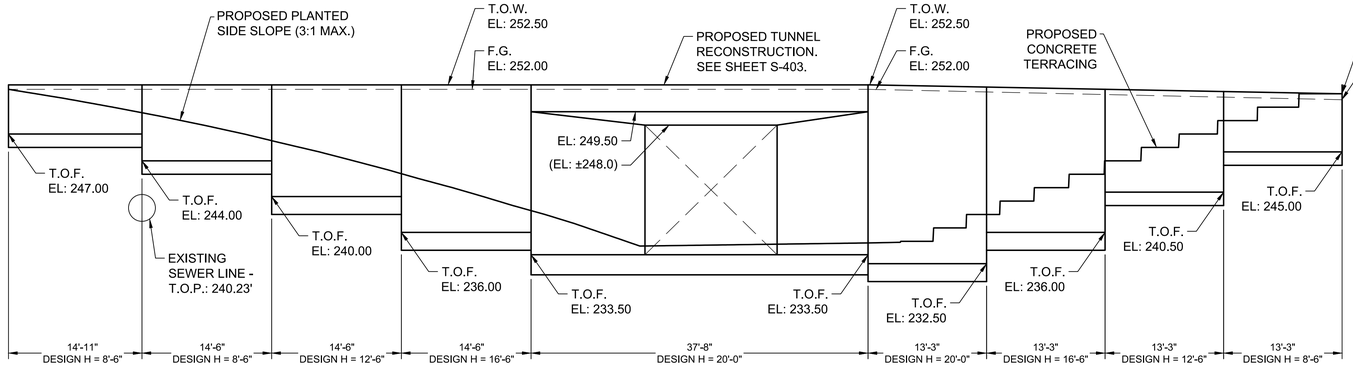

NOTES:
1. REMOVE PORTIONS OF EXISTING SEWER LINE THAT CONFLICT WITH PROPOSED RETAINING WALL / TUNNEL. REFER TO DEMOLITION PLANS.
2. REMOVE EXISTING ABANDONED SEWER MANHOLE. REFER TO DEMOLITION PLANS.

3 EAST WALL ELEVATION
SCALE: 1/8"=1'-0"

BUREAU OF ENGINEERING
OFFICIAL RECORD

THE CITY OF LOS ANGELES OR ITS OFFICERS OR AGENTS SHALL NOT BE RESPONSIBLE FOR THE ACCURACY OR COMPLETENESS OF ELECTRONIC COPIES OF THIS PLAN SHEET.

REVISION DATES (DESIGN STAGE ONLY)

Sheet Version 3.0

BUREAU OF ENGINEERING

ENGINEERING
CITY OF LOS ANGELES

NO.	REVISIONS:	DATE	BY:

BUILDING NO.

INDEX NO. MF-300501

"THIS PLAN WAS ELECTRONICALLY SIGNED AND SEALED"

REGISTERED PROFESSIONAL ENGINEER S. O. OLSEN No. 81944 MECHANICAL CIVIL STATE OF CALIFORNIA

CITY OF LOS ANGELES DEPARTMENT OF PUBLIC WORKS

TED ALLEN, P.E.
CITY ENGINEER
DATE:

DESIGN GROUP	
ENGINEER:	MICHAEL OLSEN
LIC. NO.	
DESIGNED BY:	JUSTIN SMITH
DRAWN BY:	XXXX
CHECKED BY:	NATE SCHREINER
APPROVED BY:	JASON L. FUSSEL

VERT. CONTROL: BM 12-24070, 1928 (NGVD29) - 1985 ADJUSTMENT
HORIZ. CONTROL: GPS; PID AE 1704, EPOCH 1991.35

SHEET TITLE: RETAINING WALL FOUNDATION PLAN

PROJECT: SIXTH STREET PARK, ARTS AND RIVER CONNECTIVITY IMPROVEMENTS (PARC)

ADDRESS: SIXTH STREET OVER THE LOS ANGELES RIVER

7/11/2022 2:55:26 PM - O:\PROJECTS\IRVINE\20043\200-20043-17001\CAD\SHEETFILES\S-401_RETAINING WALL FOUNDATION PLAN - TT.DWG - BOEHMKE, BRETT

PLANS PREPARED BY:
TETRA TECH, INC.
707 WILSHIRE BLVD. 23RD FLR.
LOS ANGELES, CA 90017
PHONE: (213) 239-8866

WORK ORDER NO. E700235D
FILE NO. --
DRAWING NO. S-401
SHEET 247 OF 295 SHEETS

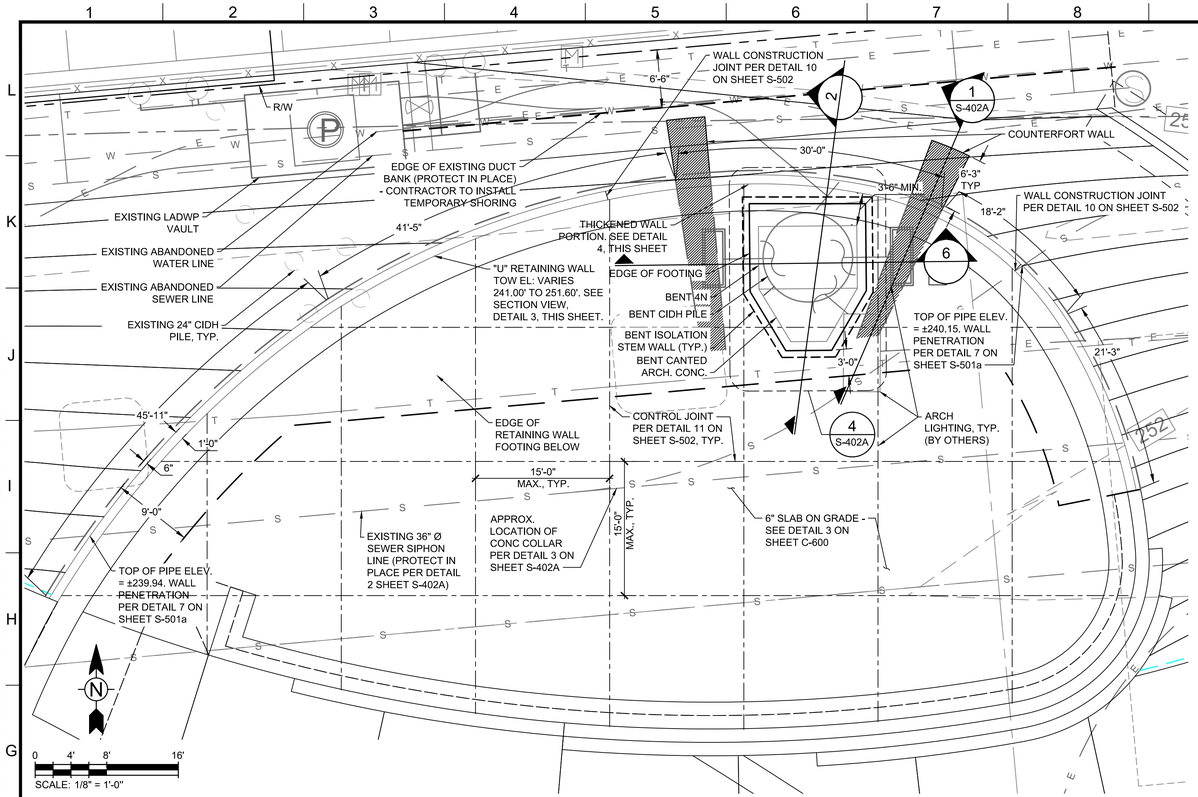

LEGEND:

DENOTES 3'-9" THICKENED FOOTING BENEATH PIER WALL

1 "U" RETAINING WALL PLAN
SCALE: 1/8"=1'-0"

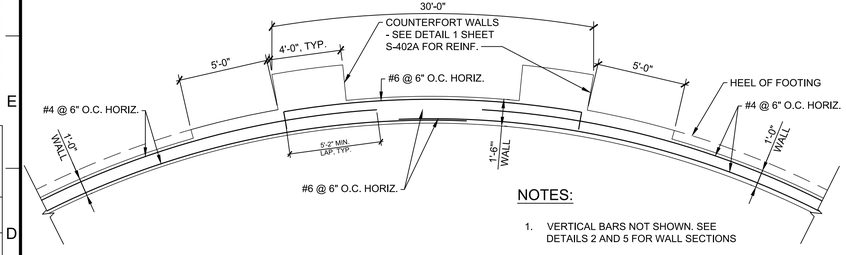

NOTES:

1. VERTICAL BARS NOT SHOWN. SEE DETAILS 2 AND 5 FOR WALL SECTIONS

4 THCKENED "U" RETAINING WALL REINFORCING PLAN
SCALE: 1/4"=1'-0"

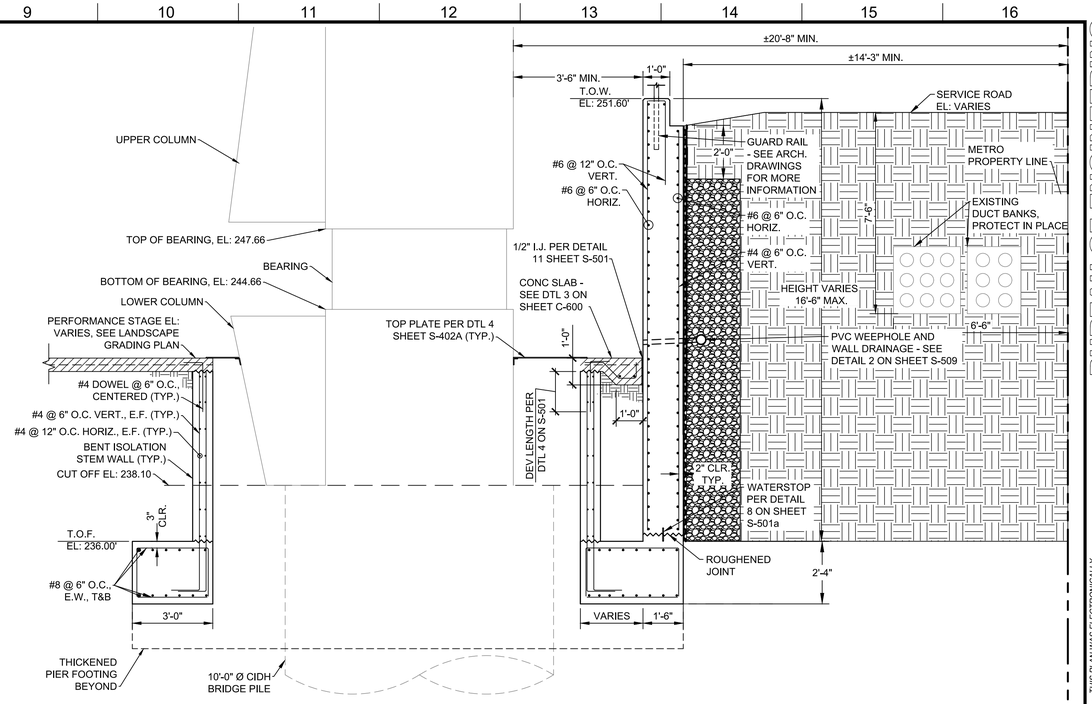

2 1'-6" THICKENED "U" RETAINING WALL SECTION WITHOUT FOOTING
SCALE: 3/8"=1'-0"

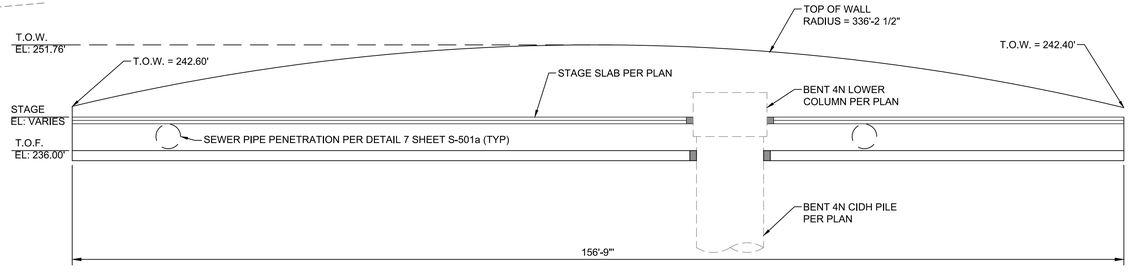

DIMENSION AND REINFORCEMENT SCHEDULE		
H	HORIZ. REINF.	VERT. REINF.
8'-0" ≥ H	#4 HORIZ. @ 6" O.C.	#7 VERT. @ 12" O.C.
10'-0" ≥ H > 8'-0"	#4 HORIZ. @ 6" O.C.	#7 VERT. @ 6" O.C.
11'-0" ≥ H > 10'-0"	#4 HORIZ. @ 6" O.C.	#7 VERT. @ 12" O.C.
14'-0" ≥ H > 11'-0"	#4 HORIZ. @ 6" O.C.	#7 VERT. @ 12" O.C.
15'-0" ≥ H > 14'-0"	#4 HORIZ. @ 6" O.C.	#6 VERT. @ 12" O.C.
16'-0" ≥ H > 15'-0"	#6 HORIZ. @ 6" O.C.	#6 VERT. @ 12" O.C.

BUREAU OF ENGINEERING — OFFICIAL RECORD

3 "U" WALL PROFILE
SCALE: NTS

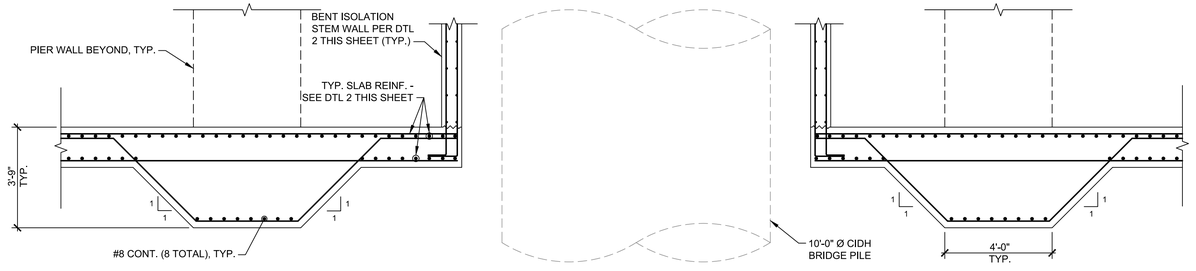

6 THICKENED WALL PIER FOOTING SECTION
SCALE: 3/8"=1'-0"

U-WALL RETAINING WALL CONSTRUCTION NOTES:

1. EXISTING DUCT BANKS SHALL BE PROTECTED IN PLACE DURING CONSTRUCTION. THE GENERAL CONTRACTOR (GC) IS RESPONSIBLE FOR PROVIDING TEMPORARY SHORING FOR THE EXCAVATION THAT DOES NOT IMPACT THE EXISTING STRUCTURE. SHOULD TEMPORARY SHORING BE REQUIRED FOR EXCAVATION FOR SECTIONS OF WALL TO OCCUR BEHIND THE DUCT BANKS, THE GC SHALL IMPLEMENT TEMPORARY SUPPORTS AND BRACING SO THAT EXISTING DUCT BANKS ARE NOT DAMAGED. STRUCTURAL CALCULATIONS AND SCHEMATIC PLANS SHALL BE SUBMITTED TO THE OWNER AND ENGINEER FOR APPROVAL PRIOR TO CONSTRUCTION.
2. RETAINING WALL LOCATED CLOSER TO THE PROPERTY LINE THAN THE HEIGHT OF THE WALL SHALL BE BACKFILLED NO LATER THAN 10 DAYS AFTER CONSTRUCTION OF THE WALL HAS BEEN COMPLETED.

THE CITY OF LOS ANGELES OR ITS OFFICERS OR AGENTS SHALL NOT BE RESPONSIBLE FOR THE ACCURACY OR COMPLETENESS OF ELECTRONIC COPIES OF THIS PLAN SHEET.

REVISION DATES (DESIGN STAGE ONLY)

Sheet Version 3.0

ENGINEERING — CITY OF LOS ANGELES — BUREAU OF ENGINEERING

NO.	REVISIONS:	DATE	BY:

BUILDING NO.

INDEX NO. MF-300501

"THIS PLAN WAS ELECTRONICALLY SIGNED AND STAMPED"

REGISTERED PROFESSIONAL ENGINEER — S. O. OLSEN — No. 81944 — CIVIL — STATE OF CALIFORNIA

CITY OF LOS ANGELES — DEPARTMENT OF PUBLIC WORKS

CITY ENGINEER: TED ALLEN, P.E.
DATE:
LIC. NO.
DESIGN GROUP
ENGINEER: MICHAEL OLSEN
DESIGNED BY: JUSTIN SMITH
DRAWN BY: XXXX
CHECKED BY: NATE SCHREINER
APPROVED BY: JASON L. FUSSEL

VERT. CONTROL: BM 12-04070, 1929 (NGVD29) - 1985 ADJUSTMENT
HORIZ. CONTROL: GPS; PID AE 1704, EPOCH 1991.35

SHEET TITLE: "U" RETAINING WALL FOUNDATION PLAN

PROJECT: SIXTH STREET PARK, ARTS AND RIVER CONNECTIVITY IMPROVEMENTS (PARC)

ADDRESS: SIXTH STREET OVER THE LOS ANGELES RIVER

PLANS PREPARED BY:
TETRA TECH, INC.
707 WILSHIRE BLVD. 23RD FLR.
LOS ANGELES, CA 90017
PHONE: (213) 239-8866

WORK ORDER NO. E700235D
FILE NO. --
DRAWING NO. S-402
SHEET 248 OF 295 SHEETS

7/11/2022 3:04:04 PM - O:\PROJECTS\IRVINE\20043\200-20043-17001\CAD\SHEETFILES\S-402_U RETAINING WALL FOUNDATION PLAN - TT.DWG - BOEHMKE, BRETT

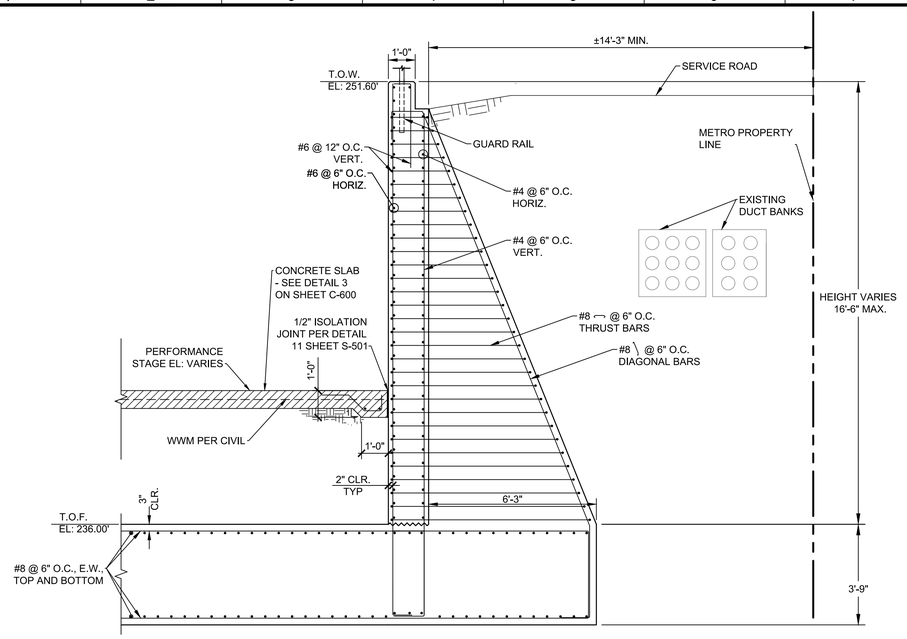

1 — COUNTERFORT WALL SECTION
SCALE: 3/8"=1'-0"

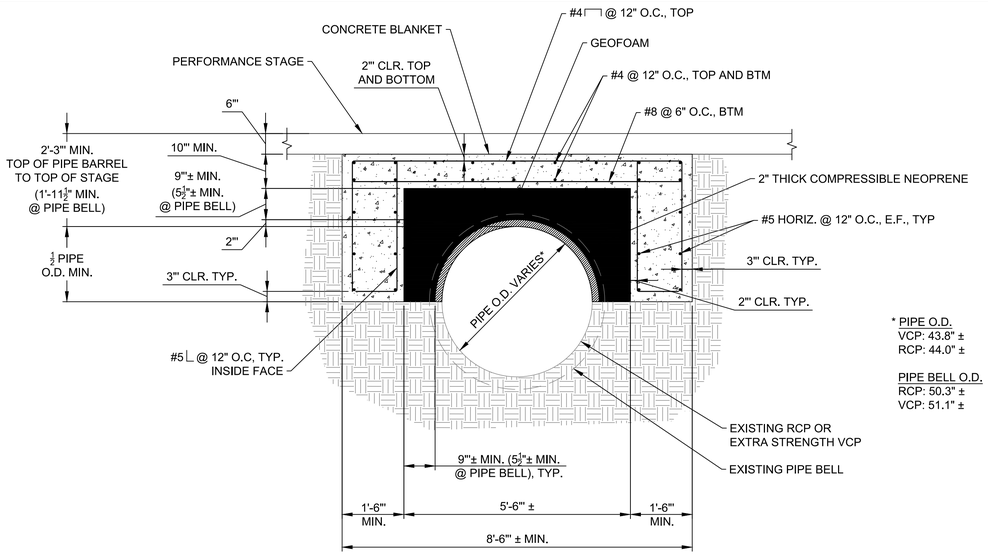

* PIPE O.D.
VCP: 43.8" ±
RCP: 44.0" ±

PIPE BELL O.D.
RCP: 50.3" ±
VCP: 51.1" ±

2 — CONCRETE BLANKET DETAIL
SCALE: 1/2"=1'-0"

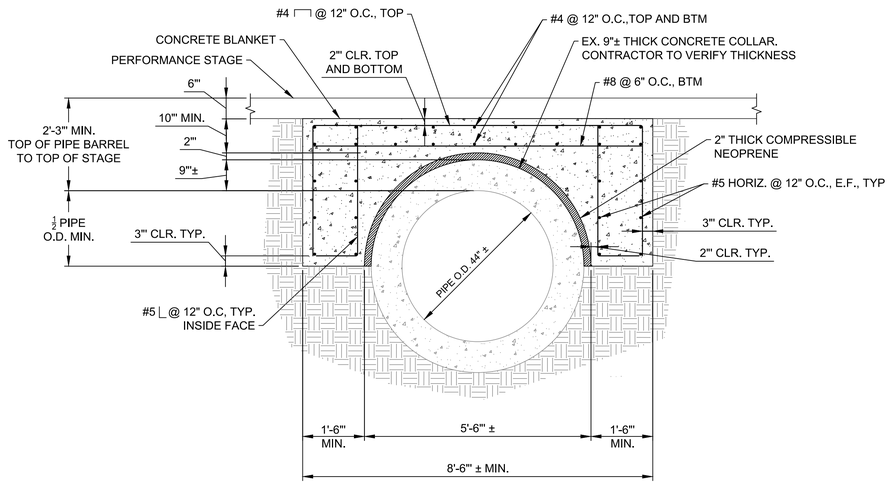

3 — CONCRETE BLANKET AT CONCRETE COLLAR
SCALE: 1/2"=1'-0"

4 — BENT ISOLATION ENLARGED PLAN
SCALE: 1/2"=1'-0"

BUREAU OF ENGINEERING
OFFICIAL RECORD

ENGINEERING
CITY OF LOS ANGELES

BUREAU OF ENGINEERING

NO.	REVISIONS:	DATE	BY:

BUILDING NO.

INDEX NO. MF-300501

* THIS PLAN WAS ELECTRONICALLY SIGNED AND SEALED

REGISTERED PROFESSIONAL ENGINEER
S. O. OLSEN
No. 81944
CIVIL
STATE OF CALIFORNIA

CITY OF LOS ANGELES DEPARTMENT OF PUBLIC WORKS

CITY ENGINEER
TED ALLEN, P.E.
DATE:

	DESIGN GROUP	LIC. NO.
ENGINEER:	MICHAEL OLSEN	
DESIGNED BY:	JUSTIN SMITH	
DRAWN BY:	XXXX	
CHECKED BY:	NATE SCHREINER	
APPROVED BY:	JASON L. FUSSEL	

VERT. CONTROL: BM 12-04070, 1929 (NGVD29) - 1986 ADJUSTMENT
HORIZ. CONTROL: GPS; RHD AE 1704, EPOCH 1991.35

SHEET TITLE: "U" RETAINING WALL SECTION

PROJECT: SIXTH STREET PARK, ARTS AND RIVER CONNECTIVITY IMPROVEMENTS (PARC)

ADDRESS: SIXTH STREET OVER THE LOS ANGELES RIVER

PLANS PREPARED BY:
TETRA TECH, INC.
707 WILSHIRE BLVD, 23RD FLR.
LOS ANGELES, CA 90017
PHONE: (213) 239-8866

WORK ORDER NO.
E700235D

FILE NO.
--

DRAWING NO.
S-402A

SHEET 249 OF 295 SHEETS

7/11/2022 3:08:10 PM - O:\PROJECTS\IRVINE\20043\200-20043-17001\CAD\SHEETFILES\S-402A_FOUNDATION DWG - BOEHMKE, BRETT

REVISION DATES
(DESIGN STAGE ONLY)

THE CITY OF LOS ANGELES OR ITS OFFICERS OR AGENTS SHALL NOT BE RESPONSIBLE FOR THE ACCURACY OR COMPLETENESS OF ELECTRONIC COPIES OF THIS PLAN SHEET.

Sheet Version 3.0

KEYNOTES:

1. 2'-3" THICK MAT FOUNDATION w/ #9 @ 6" O.C., TOP & BOTTOM, EACH WAY.
2. 3'-0" THICK CAST-IN-PLACE CONCRETE ROOF SLAB w/ #9 @ 12" O.C., TOP & BOTTOM, EACH WAY.
3. TUNNEL WALL
4. BOND BEAM PER SECTION 4 THIS SHEET.

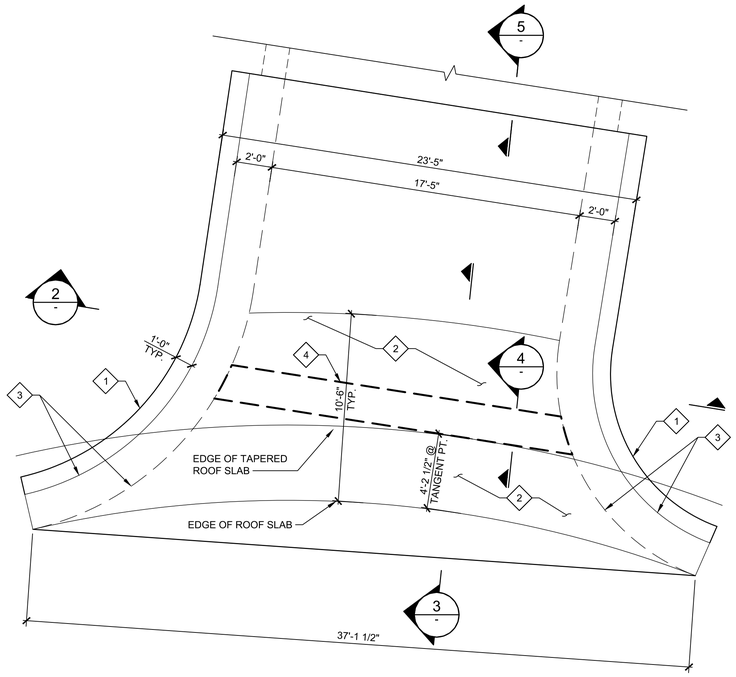

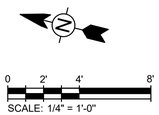

SCALE: 1/4" = 1'-0"

1 — TUNNEL PLAN
SCALE: 1/4"=1'-0"

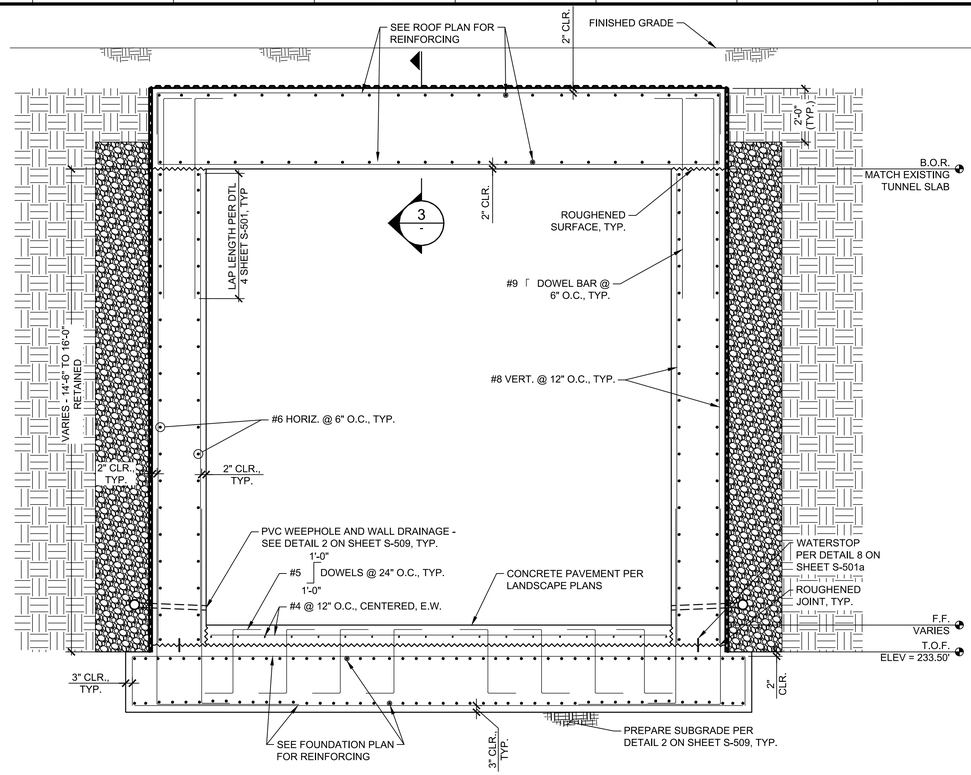

2 — TUNNEL WALL SECTION
SCALE: 3/8"=1'-0"

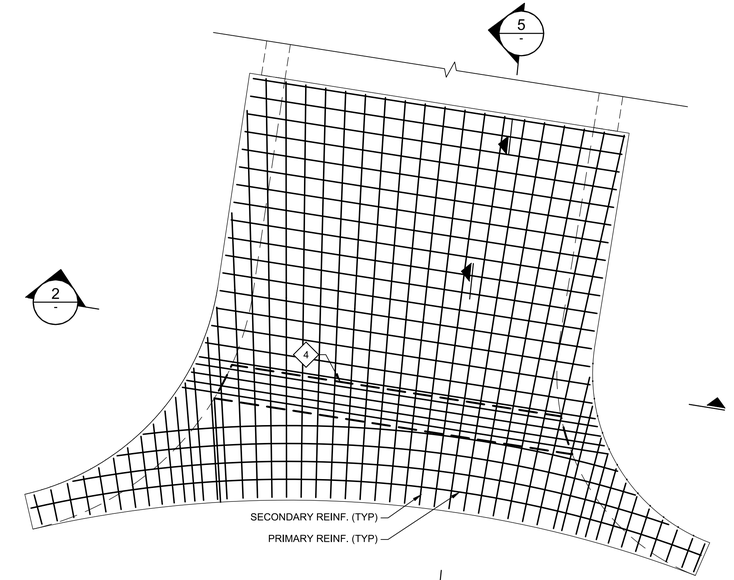

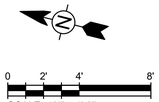

SCALE: 1/4" = 1'-0"

1A — TUNNEL ROOF SLAB REINFORCING PLAN
SCALE: 1/4"=1'-0"

NOTES:
1. EXISTING AS-BUILTS COULD NOT BE LOCATED AT TIME OF DESIGN. THICKNESS OF (E) ROOF SLAB TO BE VERIFIED, DETAILS SUBJECT TO CHANGE PENDING FURTHER INFORMATION OF (E) CONDITIONS.
2. PROPOSED TUNNEL STRUCTURE IS NOT DESIGNED TO SUPPORT RAILWAY LOADING.

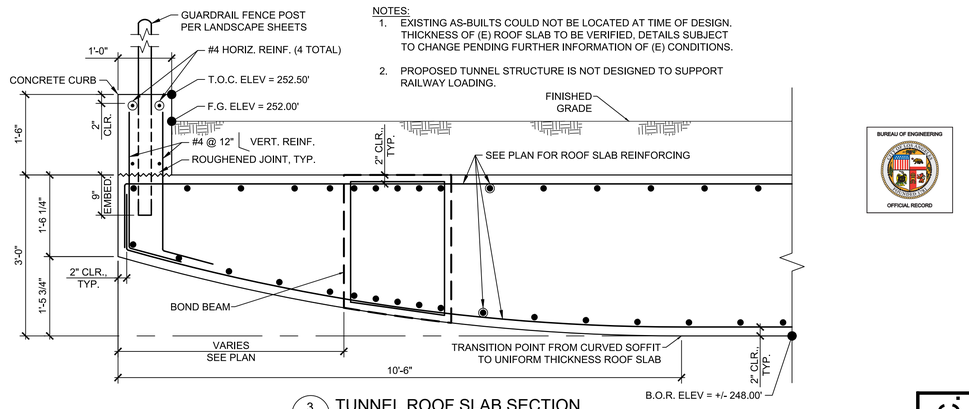

3 — TUNNEL ROOF SLAB SECTION
SCALE: 3/4"=1'-0"

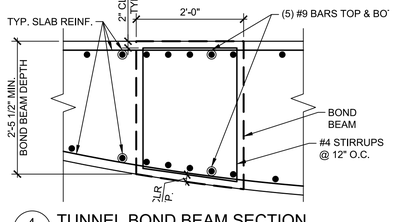

4 — TUNNEL BOND BEAM SECTION
SCALE: 3/4"=1'-0"

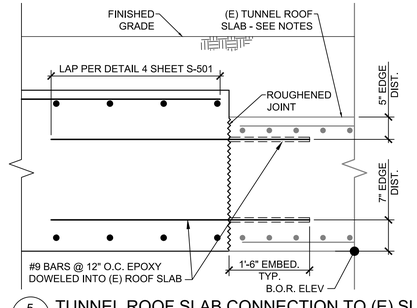

5 — TUNNEL ROOF SLAB CONNECTION TO (E) SLAB
SCALE: 3/4"=1'-0"

BUREAU OF ENGINEERING
OFFICIAL RECORD

PLANS PREPARED BY:
TETRA TECH, INC.
707 WILSHIRE BLVD. 23RD FLR.
LOS ANGELES, CA 90017
PHONE: (213) 239-8866

CITY OF LOS ANGELES DEPARTMENT OF PUBLIC WORKS
BUREAU OF ENGINEERING

VERT. CONTROL: BM 12-04070, 1929 (NGVD29) - 1965 ADJUSTMENT
HORIZ. CONTROL: GPS; PID AE 1704, EPOCH 1991.35

SHEET TITLE: TUNNEL DETAILS
PROJECT: SIXTH STREET PARK, ARTS AND RIVER CONNECTIVITY IMPROVEMENTS (PARC)
ADDRESS: SIXTH STREET OVER THE LOS ANGELES RIVER

WORK ORDER NO. E700235D
FILE NO. --
DRAWING NO. S-403
SHEET 250 OF 295 SHEETS

CITY ENGINEER
DATE:
LIC. NO.

TED ALLEN, P.E.
DESIGN GROUP

ENGINEER:	MICHAEL OLSEN
DESIGNED BY:	JUSTIN SMITH
DRAWN BY:	BRETT BOEHMKE
CHECKED BY:	NATE SCHREINER
APPROVED BY:	JASON L. FUSSEL

7/11/2022 3:14:00 PM - O:\PROJECTS\IRVINE2004\3200-20043-17001\CAD\SHEETFILES\S-403_TUNNEL DETAILS.DWG - BOEHMKE, BRETT

ENGINEERING
CITY OF LOS ANGELES

NO.	REVISIONS:	DATE	BY:

BUILDING NO.

INDEX NO. MF-300501

"THIS PLAN WAS ELECTRONICALLY SIGNED AND SEALED"

REGISTERED PROFESSIONAL ENGINEER MICHAEL S. O. OLSEN No. 81944 CIVIL STATE OF CALIFORNIA

REVISION DATES (DESIGN STAGE ONLY)

THE CITY OF LOS ANGELES OR ITS OFFICERS OR AGENTS SHALL NOT BE RESPONSIBLE FOR THE ACCURACY OR COMPLETENESS OF ELECTRONIC COPIES OF THIS PLAN SHEET.

Sheet Version 3.0

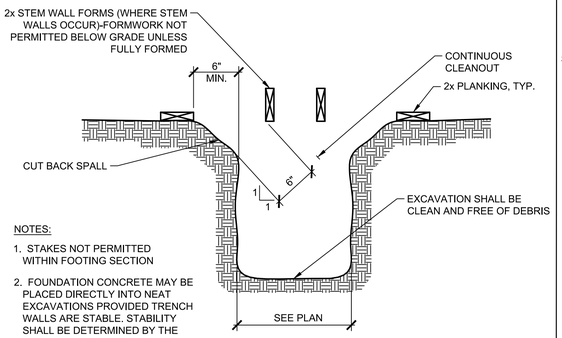

NOTES:

1. STAKES NOT PERMITTED WITHIN FOOTING SECTION
2. FOUNDATION CONCRETE MAY BE PLACED DIRECTLY INTO NEAT EXCAVATIONS PROVIDED TRENCH WALLS ARE STABLE. STABILITY SHALL BE DETERMINED BY THE ENGINEER.

1 TYPICAL FOOTING EXCAVATION

SCALE: NTS

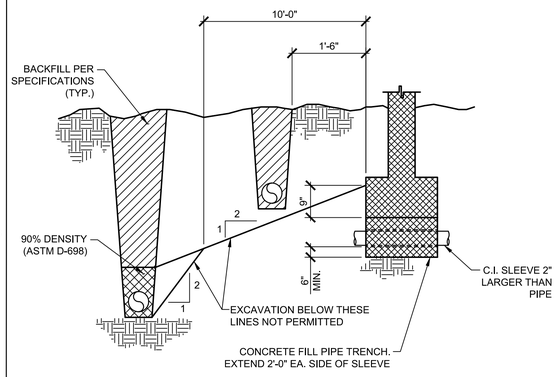

2 SLEEVE THRU FOOTING AND PIPE TRENCH LOCATION

SCALE: 1 1/2" = 1'-0"

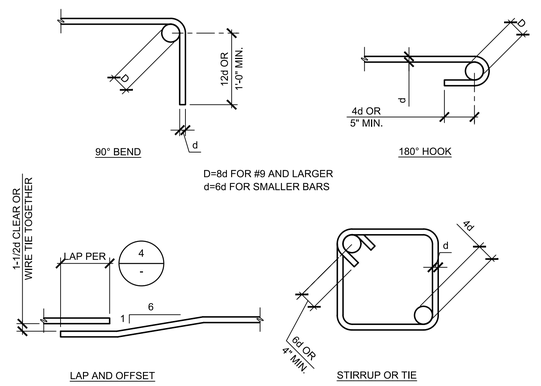

3 TYPICAL BAR BENDS

SCALE: NTS

REINFORCING LAP SPLICE SCHEDULE

BAR	f'c=2500	f'c=3000	f'c=4000	f'c=5000
	L (inches)	L (inches)	L (inches)	L (inches)
3	24	22	19	17
4	32	29	25	23
5	39	36	31	28
6	47	43	37	34
7	69	63	54	49
8	78	72	62	56
9	88	81	70	63

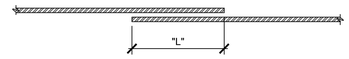

NOTES:

1. LAPS SHOWN IN THIS TABLE ARE CLASS B, CATEGORY 3 TYPE SPLICES. LAP LENGTH IS BASED UPON SMALLER OF TWO BARS BEING SPLICED WHEN NOT THE SAME SIZE.
2. INCREASE LAP LENGTHS BY A FACTOR OF 1.3 FOR HORIZONTAL REINFORCEMENT SO PLACED THAT MORE THAN 12 INCHES OF CONCRETE IS CAST IN THE MEMBER BELOW THIS REINFORCEMENT.

4 CONC. REINFORCING LAP SPLICE SCHEDULE

SCALE: NTS

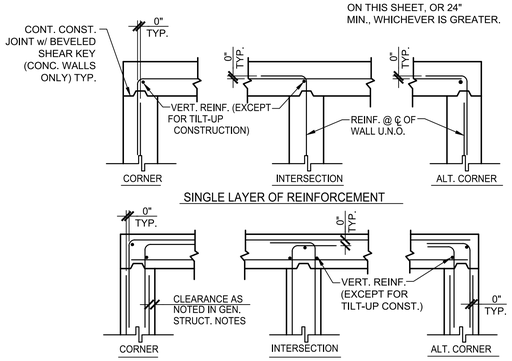

5 WALL & FOOTING REINF. AT CORNERS & INTERSECTIONS

SCALE: NTS

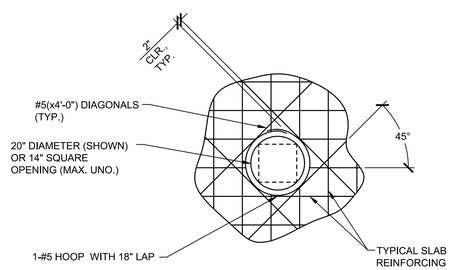

6 TYPICAL REINFORCING FOR OPENINGS THRU NON-STRUCTURAL SLABS SUPPORTED ON-GRADE

SCALE: NTS

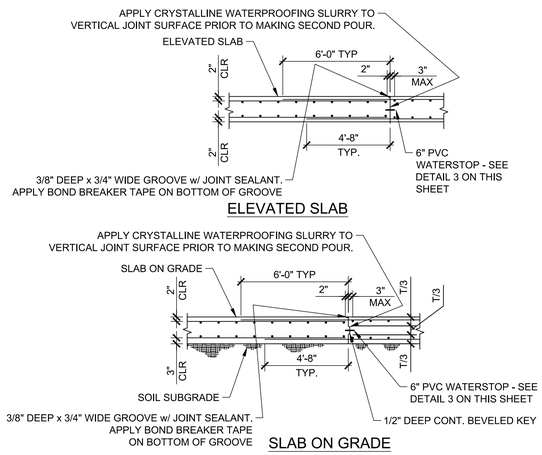

7 TYPICAL HORIZ. SLAB CONSTRUCTION JOINT

SCALE: NTS

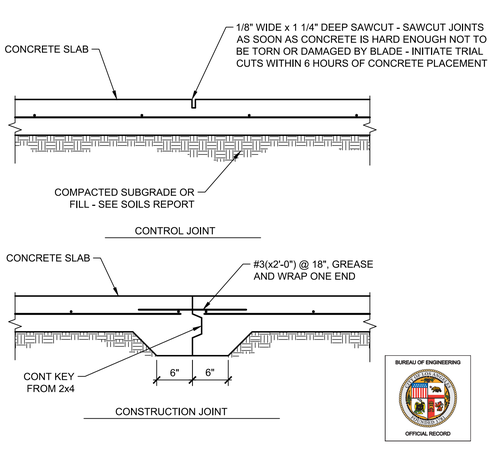

8 TYPICAL FLOOR SLAB JOINTS

SCALE: NTS

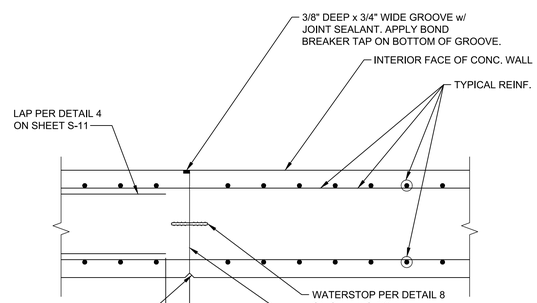

NOTE:
THIS CONSTRUCTION JOINT SHALL ONLY BE USED WHERE SHOWN ON THESE DRAWINGS AND WHERE APPROVED BY THE ENGINEER.

9 TYPICAL VERTICAL WALL JOINT

SCALE: NTS

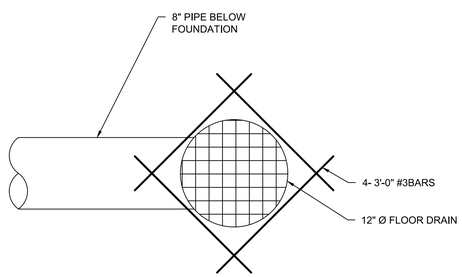

10 FLOOR DRAIN DETAIL

SCALE: NTS

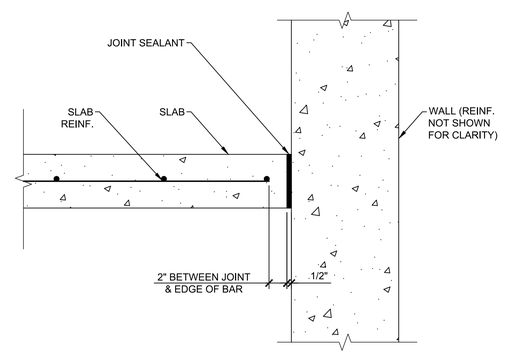

11 SLAB TO WALL ISOLATION JOINT

SCALE: NTS

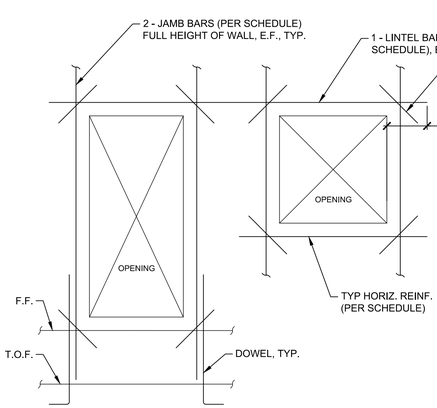

12 TYPICAL REINFORCING AT WALL OPENINGS

SCALE: NTS

THE CITY OF LOS ANGELES OR ITS OFFICERS OR AGENTS SHALL NOT BE RESPONSIBLE FOR THE ACCURACY OR COMPLETENESS OF ELECTRONIC COPIES OF THIS PLAN SHEET.

REVISION DATES (DESIGN STAGE ONLY)

Sheet Version 3.0

BUREAU OF ENGINEERING

ENGINEERING CITY OF LOS ANGELES

NO.	REVISIONS:	DATE	BY:

BUILDING NO.

INDEX NO. MF-300501

THIS PLAN WAS ELECTRONICALLY SIGNED AND SEALED

REGISTERED PROFESSIONAL ENGINEER TED O. OLSEN No. 81944 CIVIL STATE OF CALIFORNIA

CITY OF LOS ANGELES DEPARTMENT OF PUBLIC WORKS

CITY ENGINEER: TED ALLEN, P.E.

DESIGN GROUP: BUREAU OF ENGINEERING

LIC. NO.: ----

DATE:

ENGINEER: MICHAEL OLSEN

DESIGNED BY: JUSTIN SMITH

DRAWN BY: BRETT BOEHMKE

CHECKED BY: NATE SCHREINER

APPROVED BY: JASON L. FUSSEL

PLANS PREPARED BY:

TETRA TECH, INC.
707 WILSHIRE BLVD, 23RD FLR.
LOS ANGELES, CA 90017
PHONE: (213) 239-8866

SHEET TITLE: TYPICAL DETAILS

PROJECT: SIXTH STREET PARK, ARTS AND RIVER CONNECTIVITY IMPROVEMENTS (PARC)

ADDRESS: SIXTH STREET OVER THE LOS ANGELES RIVER

VERT. CONTROL: BM 12-04070, 1929 (NGVD29) - 1986 ADJUSTMENT
HORIZ. CONTROL: GPS; RID AE 1704, EPOCH 1991.35

OFFICIAL RECORD

WORK ORDER NO. E700235D

FILE NO. --

DRAWING NO. S-501

SHEET 251 OF 295 SHEETS

7/11/2022 3:18:37 PM - O:\PROJECTS\IRVINE\20043\200-20043-17001\CAD\SHEETFILES\S-501_TYPICAL DETAILS.DWG - BOEHMKE, BRETT

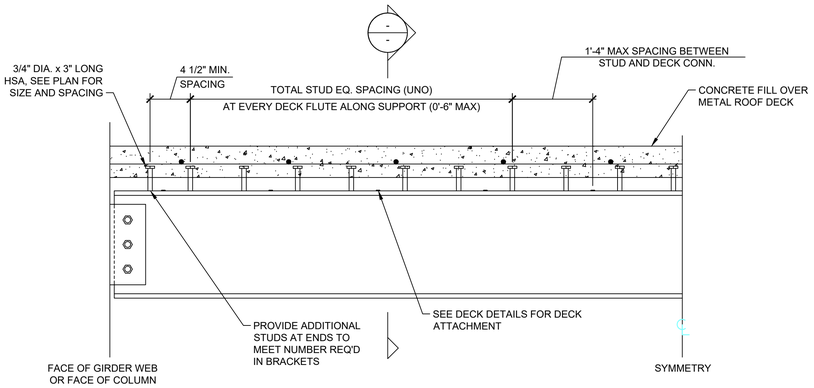

DECK PARALLEL

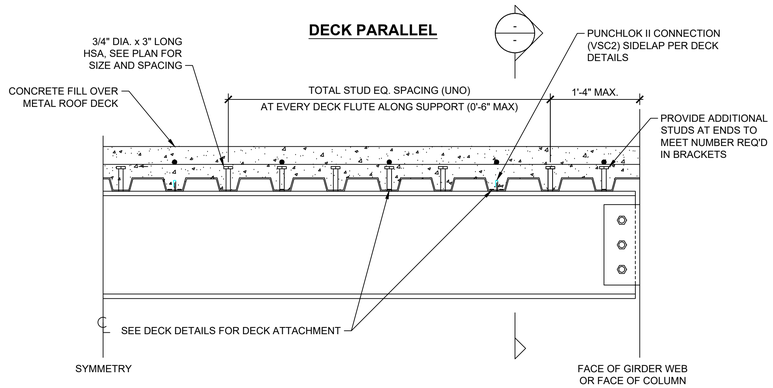

DECK PERPENDICULAR

NOTES:

1. THE MIN. NUMBER OF STUDS REQUIRED IS SHOWN AS [X] ON THE FRAMING PLANS. [X-Y-Z] INDICATES NUMBER OF STUDS ON A GIRDER BETWEEN BEAM CONNECTION POINTS. NO STUDS ARE REQUIRED WHERE NO DESIGNATION IS GIVEN. ADDITIONAL STUDS MAY BE REQUIRED TO MEET THE ABOVE MAX SPACING REQUIREMENTS.
2. WHERE THE NUMBER OF STUDS EXCEED THE NUMBER OF FLUTES, PROVIDE TWO STUDS IN EVERY OTHER FLUTE, STARTING AT EACH END OF THE BEAM. THE TRANSVERSE SPACING BETWEEN STUDS IN A SINGLE FLUTE SHALL BE 4 x STUD DIAMETER (MIN).
3. NO HAND WELDING STUDS TO STEEL BEAMS SHALL BE PERMITTED. SEE GENERAL NOTES.
4. TURN NATURAL BEAM CAMBER UP.
5. SEE ARCHITECTURAL DRAWING FOR MORE INFORMATION.
6. GC SHOULD REFER TO ESR REPORT FOR SPACING BETWEEN DECK ATTACHMENT AND METAL SHEAR STUDS.

5 - COMPOSITE BEAM DETAILS
SCALE: NTS

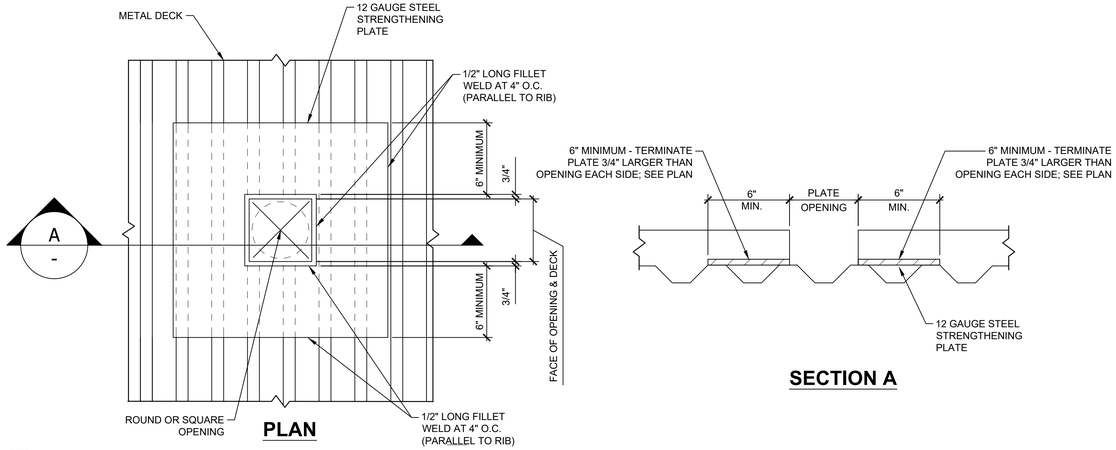

3 - DECK OPENING (FOR OPENING GREATER THAN 4" AND UP TO 9" DIA OR SQUARE)
SCALE: NTS

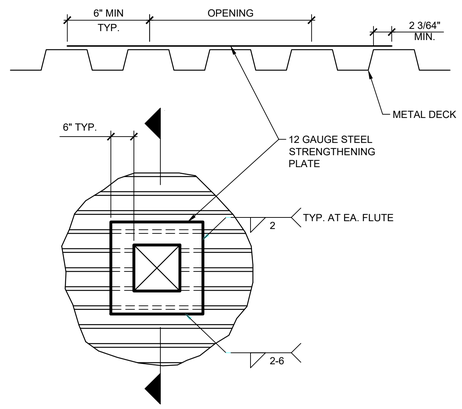

6 - TYP. DECK OPENINGS 6" AND LARGER BUT LESS THAN 12"
SCALE: NTS

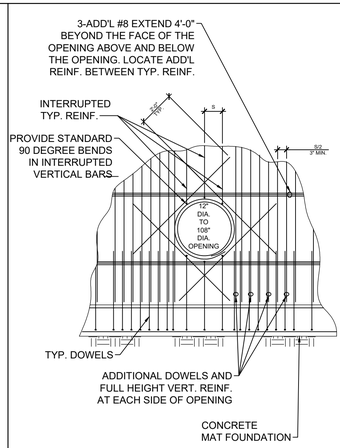

7 - ADDITIONAL REINFORCEMENT AT PIPE PENETRATIONS AT CONCRETE WALLS
SCALE: NTS

NOTES:

1. NUMBER OF ADDITIONAL DOWELS AND FULL HEIGHT VERTICAL BARS ON EACH SIDE OF OPENING SHALL BE EQUAL TO HALF OF THE NUMBER OF INTERRUPTED BARS IN EACH LAYER OF REINFORCING.
2. SIZE OF ADDITIONAL BARS SHALL MATCH THE SIZE OF INTERRUPTED REINFORCING BARS.
3. PROVIDE STANDARD HOOKS ON BARS IF LAP LENGTH EXTENSION CANNOT BE OBTAINED.
4. PLACE ADDITIONAL BARS IN SAME PLANE AS INTERRUPTED REINFORCING. PLACE #5 ⊗ & ○ EACH FACE INSIDE OF PLANE OF INTERRUPTED AND ADDITIONAL REINFORCING.
5. ALL REINFORCING SHALL CLEAR EDGE OF OPENING, PIPE OR FLANGE COLLARS BY 2".
6. EXTEND ADDED BARS PAST EDGE OF OPENING A DISTANCE EQUAL TO THE OPENING DIAMETER OR 48 BAR DIAMETERS, WHICHEVER IS GREATER.
7. WHERE SPECIFIED LENGTHS CANNOT BE ACHIEVED, BEND REINFORCING AND PROVIDE A STANDARD 90° BEND OR 180° HOOK.

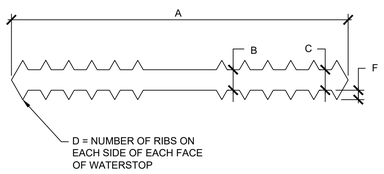

A	B	C	D	F	GREENSTREAK
6"	3/8"	1/4"	7	1/8"	783

NOTES:

SPLICES AT CORNERS AND INTERSECTIONS OF WATERSTOPS SHALL BE SHOP MITERED AND WELDED. ONLY BUTT SPLICES MAY BE DONE IN FIELD. ALL SPLICES SHALL BE MADE IN ACCORDANCE WITH MANUFACTURER'S RECOMMENDATIONS. SUBMIT SHOP DRAWINGS PRIOR TO INSTALLATION OR SPLICING WATERSTOPS.

8 - WATERSTOP SCHEDULE
SCALE: NTS

9 - NOT USED
SCALE: NTS

10 - NOT USED
SCALE: NTS

11 - NOT USED
SCALE: NTS

BUREAU OF ENGINEERING
OFFICIAL RECORD

PLANS PREPARED BY:
TETRA TECH, INC.
707 WILSHIRE BLVD. 23RD FLR.
LOS ANGELES, CA 90017
PHONE: (213) 239-9866

CITY OF LOS ANGELES DEPARTMENT OF PUBLIC WORKS BUREAU OF ENGINEERING

TED ALLEN, P.E. CITY ENGINEER

DESIGN GROUP	LIC. NO.	DATE:
ENGINEER: MICHAEL OLSEN		
DESIGNED BY: JUSTIN SMITH		
DRAWN BY: MARK NAYRA		
CHECKED BY: NATE SCHREINER		
APPROVED BY: JASON L. FUSSEL		

NO.	REVISIONS:	DATE	BY:

BUILDING NO.

INDEX NO. MF-300501

THIS PLAN WAS ELECTRONICALLY SIGNED AND STAMPED

JASON L. FUSSEL ENGINEER No. 81944 CIVIL STATE OF CALIFORNIA REGISTERED PROFESSIONAL ENGINEER

VERT. CONTROL: BM 12-04070, 1929 (NGVD29) - 1985 ADJUSTMENT
HORIZ. CONTROL: GPS; PID AE 1704, EPOCH 1991.35

SHEET TITLE: TYPICAL DETAILS

PROJECT: SIXTH STREET PARK, ARTS AND RIVER CONNECTIVITY IMPROVEMENTS (PARC)

ADDRESS: SIXTH STREET OVER THE LOS ANGELES RIVER

WORK ORDER NO. E700235D
FILE NO. --
DRAWING NO. S-501A
SHEET 252 OF 295 SHEETS

7/11/2022 6:06:12 PM - C:\USERS\MARK.NAYRA\ONEDRIVE - TETRA TECH, INC\DESKTOP\PROJECT BACKUPS\6TH STREET\FINAL FILES\FINAL DRAWINGS\S-501A_TYPICAL DETAILS.DWG - NAYRA, MARK

REVISION DATES: [DESIGN STAGE ONLY]

THE CITY OF LOS ANGELES OR ITS OFFICERS OR AGENTS SHALL NOT BE RESPONSIBLE FOR THE ACCURACY OR COMPLETENESS OF ELECTRONIC COPIES OF THIS PLAN SHEET.

Sheet Version 3.0

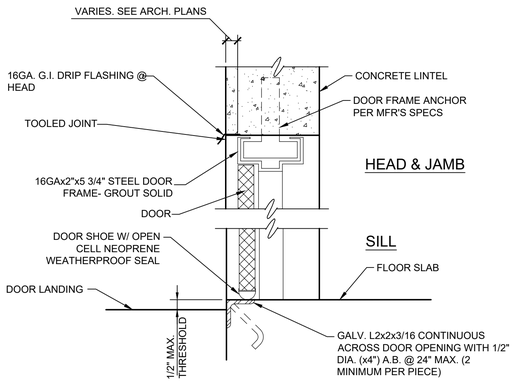

1 - DOOR, SILL, HEAD & JAMB
SCALE: NTS

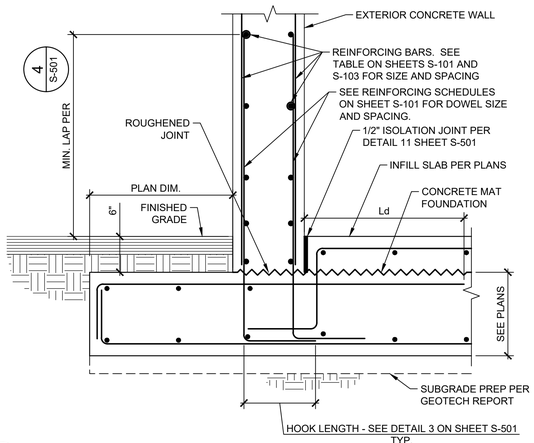

2 - TYPICAL EXTERIOR WALL FOOTING
SCALE: NTS

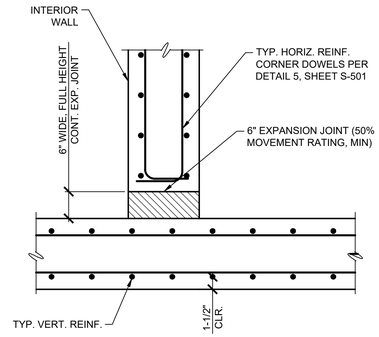

3 - EXPANSION JOINT BETWEEN EXTERIOR WALLS AND INTERIOR WALLS
SCALE: NTS

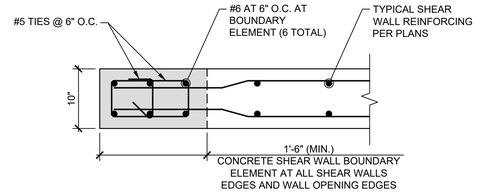

4 - TYPICAL SHEAR WALL BOUNDARY ELEMENT REINFORCING
SCALE: NTS

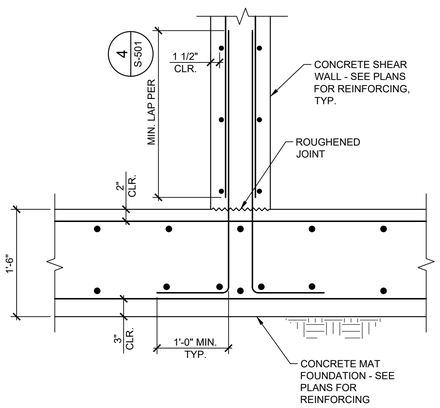

5 - TYPICAL INTERIOR CONCRETE SHEAR WALL TO MAT FOUNDATION
SCALE: NTS

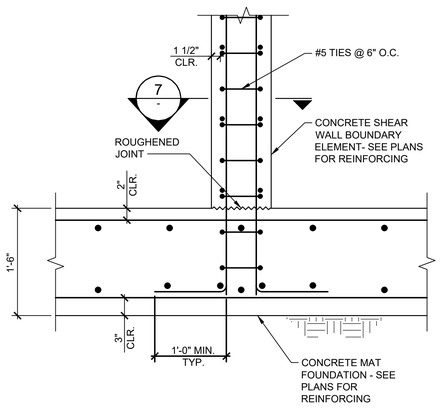

6 - INTERIOR CONCRETE SHEAR WALL TO MAT FOUNDATION AT BOUNDARY ELEMENTS
SCALE: NTS

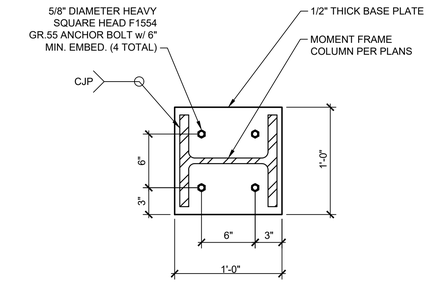

7 - MOMENT FRAME COLUMN BASE PLATE
SCALE: NTS

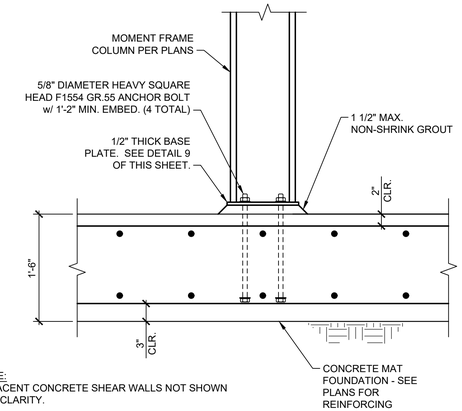

NOTE:
ADJACENT CONCRETE SHEAR WALLS NOT SHOWN FOR CLARITY.

8 - MOMENT FRAME COLUMN TO MAT FOUNDATION CONNECTION
SCALE: NTS

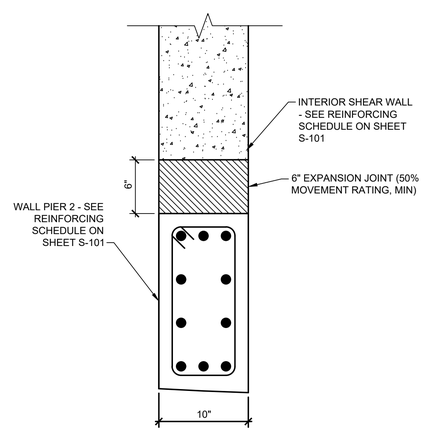

9 - WALL PIER 2 (P2) REINFORCING DETAIL
SCALE: 1-1/2"=1'-0"

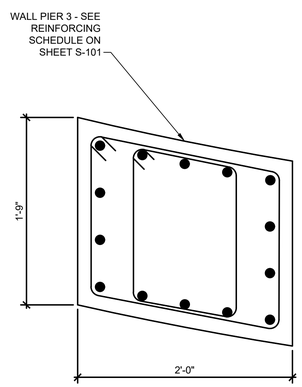

10 - WALL PIER 3 (P3) REINFORCING DETAIL
SCALE: 1-1/2"=1'-0"

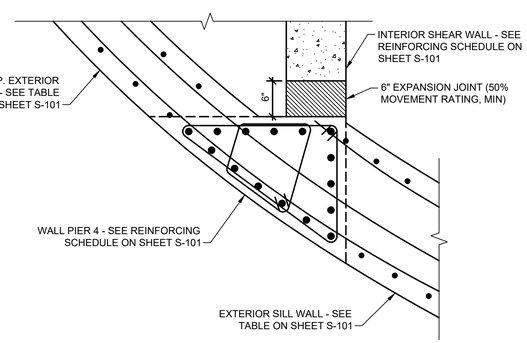

11 - WALL PIER 4 (P4) REINFORCING DETAIL
SCALE: 1"=1'-0"

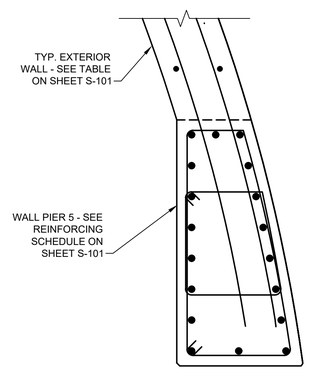

12 - WALL PIER 5 (P5) REINFORCING DETAIL
SCALE: 1-1/2"=1'-0"

BUREAU OF ENGINEERING
OFFICIAL RECORD

PLANS PREPARED BY:
TETRA TECH, INC.
707 WILSHIRE BLVD. 23RD FLR.
LOS ANGELES, CA 90017
PHONE: (213) 239-8866

ENGINEERING
CITY OF LOS ANGELES

BUREAU OF ENGINEERING

NO.	REVISIONS:	DATE:	BY:

BUILDING NO.

INDEX NO. MF-300501

"THIS PLAN WAS ELECTRONICALLY SIGNED AND STAMPED"

REGISTERED PROFESSIONAL ENGINEER S. O. OLSEN No. 81944 CIVIL STATE OF CALIFORNIA

CITY OF LOS ANGELES DEPARTMENT OF PUBLIC WORKS

CITY ENGINEER: TED ALLEN, P.E.
DATE:
LIC. NO.
DESIGN GROUP
ENGINEER: MICHAEL OLSEN
DESIGNED BY: JUSTIN SMITH
DRAWN BY: BRETT BOEHMKE
CHECKED BY: NATE SCHREINER
APPROVED BY: JASON L. FUSSEL

VERT. CONTROL: BM 12-04070, 1929 (NGVD29) - 1985 ADJUSTMENT
HORIZ. CONTROL: GPS; PID AE 1704, EPOCH 1991.35

SHEET TITLE: FOUNDATION WALL DETAILS

PROJECT: SIXTH STREET PARK, ARTS AND RIVER CONNECTIVITY IMPROVEMENTS (PARC)

ADDRESS: SIXTH STREET OVER THE LOS ANGELES RIVER

WORK ORDER NO. E700235D
FILE NO. --
DRAWING NO. S-502
SHEET 253 OF 295 SHEETS

7/11/2022 6:29:36 PM - C:\USERS\MARK.NAYRA\ONEDRIVE - TETRA TECH, INC\DESKTOP\PROJECT BACKUPS\6TH STREET\FINAL FILES\FINAL DRAWINGS\S-502_FOUNDATION WALL DETAILS.DWG - NAYRA, MARK

REVISION DATES (DESIGN STAGE ONLY)

THE CITY OF LOS ANGELES OR ITS OFFICERS OR AGENTS SHALL NOT BE RESPONSIBLE FOR THE ACCURACY OR COMPLETENESS OF ELECTRONIC COPIES OF THIS PLAN SHEET.

Sheet Version 3.0

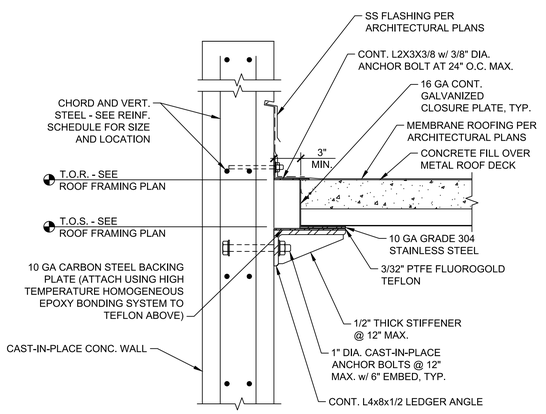

1 - TYPICAL LEDGER (METAL DECK FLUTE PERPENDICULAR TO LEDGER)

SCALE: 1 1/2" = 1'-0"

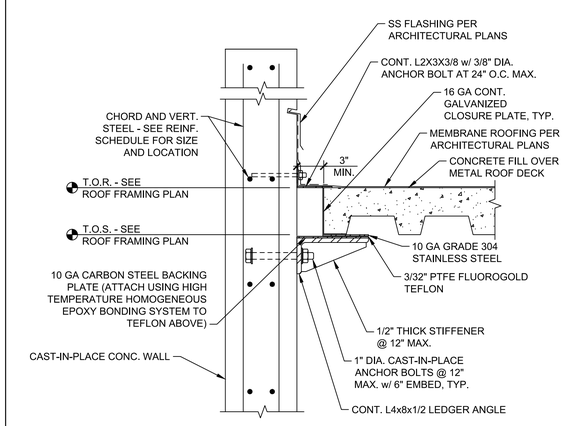

2 - TYPICAL LEDGER (METAL DECK FLUTE PARALLEL TO LEDGER)

SCALE: 1 1/2" = 1'-0"

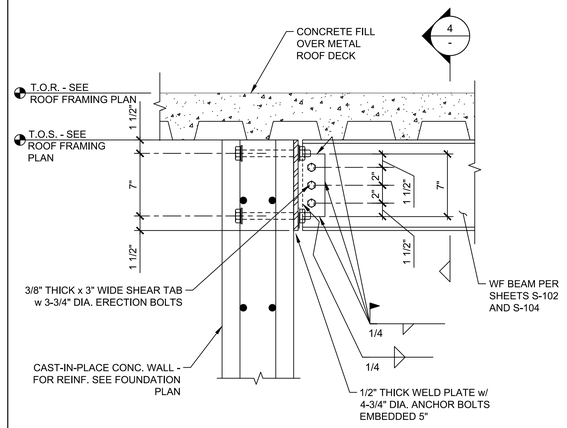

3 - BEAM TO INTERIOR WALL CONNECTION

SCALE: 1 1/2" = 1'-0"

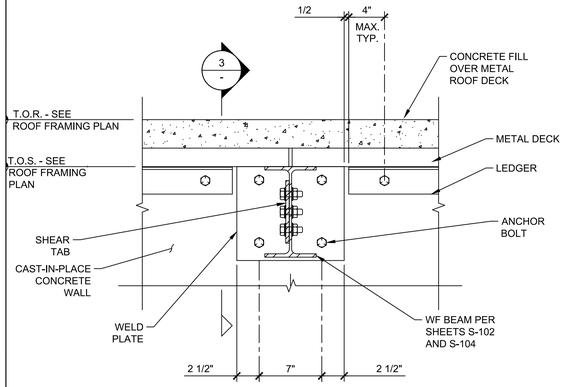

4 - BEAM TO INTERIOR WALL CONNECTION

SCALE: 1 1/2" = 1'-0"

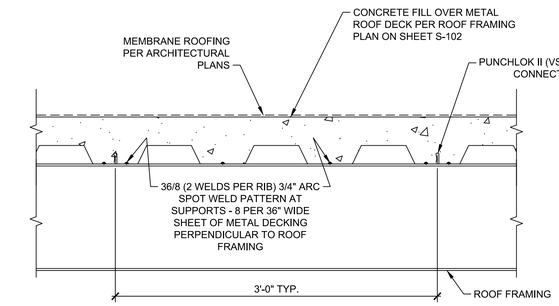

ROOF DECK PERPENDICULAR TO ROOF FRAMING

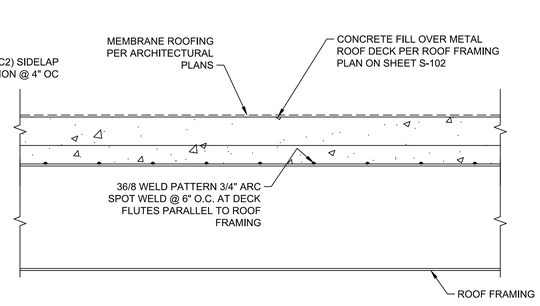

ROOF DECK PARALLEL TO ROOF FRAMING

5 - CONCRETE FILLED METAL ROOF DECK FOR EAST BUILDINGS

SCALE: 1 1/2" = 1'-0"

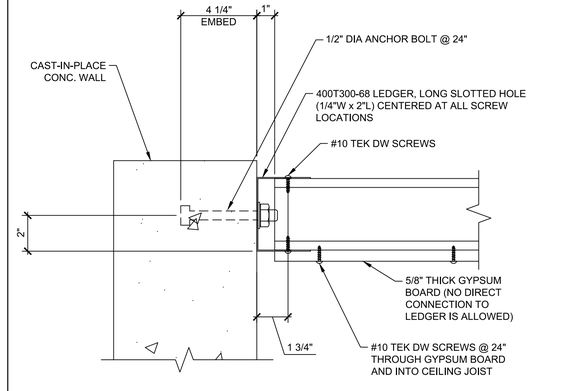

6 - CEILING JOIST TO WALL CONNECTION

SCALE: 3" = 1'-0"

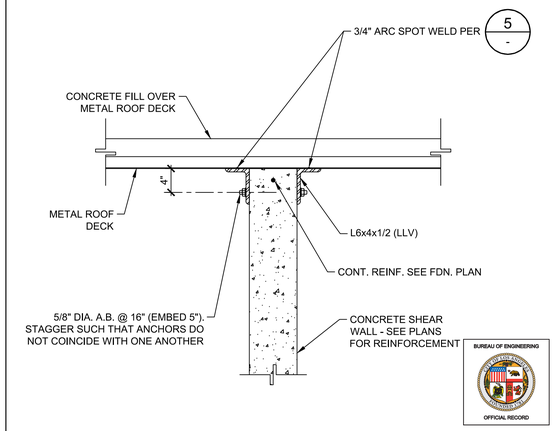

7 - ROOF DECK TO INTERIOR CONCRETE WALL CONNECTION

SCALE: 1" = 1'-0"

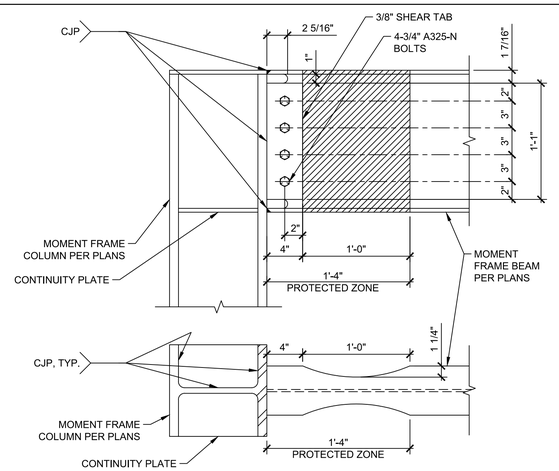

8 - RBS MOMENT FRAME

SCALE: 1 1/2" = 1'-0"

NOTES:

1. ROOF DECK NOT SHOWN FOR CLARITY.
2. NO ATTACHMENT OF LATERAL BRACING SHALL BE MADE TO THE BEAM IN THE PROTECTED ZONE.
3. SHEAR STUDS SHALL NOT BE WELDED WITHIN PROTECTED ZONES AS SPECIFIED ON SPECIAL MOMENT FRAME BEAMS PART OF THE SEISMIC FORCE RESISTING SYSTEM (SFRS).
4. ANY DISCONTINUITIES CREATED DURING ERECTION OR FABRICATION MUST BE IMMEDIATELY REPAIRED AND REPORTED TO THE ENGINEER OF RECORD.
5. ANY ATTACHMENTS OR SUPPORT FOR FACADES, PIPING, DUCTING OR OTHER CONSTRUCTION SHALL BE POSITIONED AND LOCATED OUTSIDE THE PROTECTED ZONE.
6. BEAM FLANGE CJP WELDS SHALL CONFORM TO THE REQUIREMENTS FOR DEMAND CRITICAL (DC) WELDS.
7. FIRST LATERAL STABILITY BRACING TO BE LOCATED WITHIN D/2 MAX. OUTSIDE OF THE PROTECTED ZONE AT EACH END OF THE MOMENT FRAME BEAM.

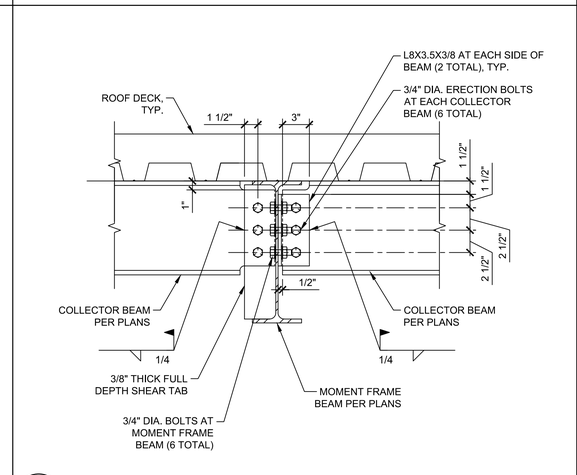

9 - BEAM TO GIRDER CONNECTION

SCALE: 1 1/2" = 1'-0"

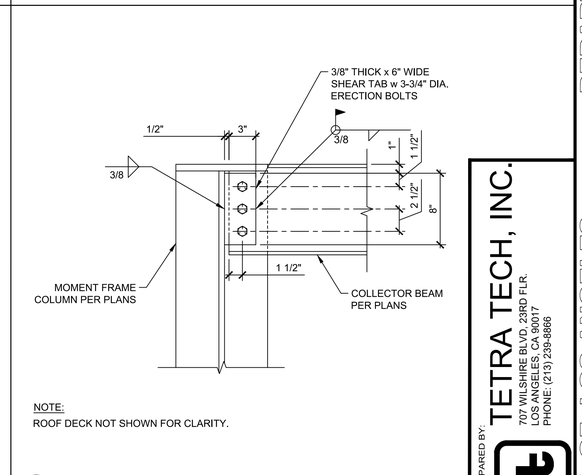

NOTE:

ROOF DECK NOT SHOWN FOR CLARITY.

10 - BEAM TO COLUMN WEB CONNECTION

SCALE: 1 1/2" = 1'-0"

PLANS PREPARED BY:

TETRA TECH, INC.

707 WILSHIRE BLVD, 23RD FLR.
LOS ANGELES, CA 90017
PHONE: (213) 239-8866

THE CITY OF LOS ANGELES OR ITS OFFICERS OR AGENTS SHALL NOT BE RESPONSIBLE FOR THE ACCURACY OR COMPLETENESS OF ELECTRONIC COPIES OF THIS PLAN SHEET.

REVISION DATES (DESIGN STAGE ONLY)

Sheet Version 3.0

BUREAU OF ENGINEERING

ENGINEERING
CITY OF LOS ANGELES

NO.	REVISIONS:	DATE	BY:

BUILDING NO.

INDEX NO. MF-300501

"THIS PLAN WAS ELECTRONICALLY SIGNED AND STAMPED"

REGISTERED PROFESSIONAL ENGINEER S. O. OLSEN No. 81944 CIVIL STATE OF CALIFORNIA

CITY OF LOS ANGELES DEPARTMENT OF PUBLIC WORKS

TED ALLEN, P.E.
CITY ENGINEER

DATE:

DESIGN GROUP	LIC. NO.
ENGINEER: MICHAEL OLSEN	
DESIGNED BY: JUSTIN SMITH	
DRAWN BY: BRETT BOEHMKE	
CHECKED BY: NATE SCHREINER	
APPROVED BY: JASON L. FUSSEL	

APPROVED BY: JASON L. FUSSEL

7/11/2022 3:34:13 PM - O:\PROJECTS\IRVINE\20043\200-20043-17001\CAD\SHEETFILES\S-503_ROOF FRAMING.DWG - BOEHMKE, BRETT

VERT. CONTROL: BM 12-04070, 1929 (NGVD29) - 1966 ADJUSTMENT
HORIZ. CONTROL: GPS, PHD AE 1704, EPOCH 1991.35

SHEET TITLE: EAST BUILDINGS ROOF FRAMING DETAILS

PROJECT: SIXTH STREET PARK, ARTS AND RIVER CONNECTIVITY IMPROVEMENTS (PARC)

ADDRESS: SIXTH STREET OVER THE LOS ANGELES RIVER

WORK ORDER NO. E700235D

FILE NO. --

DRAWING NO. S-503

SHEET 254 OF 295 SHEETS

BUREAU OF ENGINEERING OFFICIAL RECORD

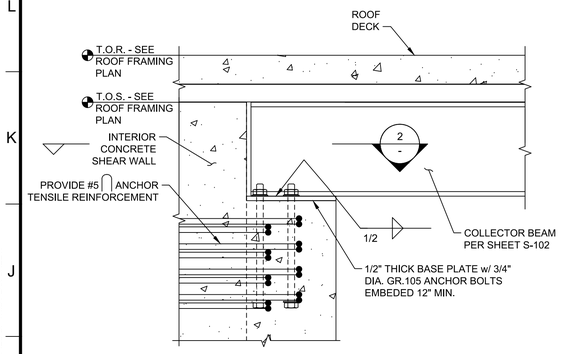

1 - COLLECTOR BEAM TO WALL CONNECTION

SCALE: 1 1/2" = 1'-0"

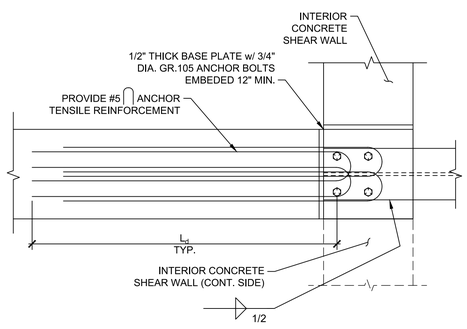

2 - COLLECTOR BEAM TO WALL CONNECTION

SCALE: 1 1/2" = 1'-0"

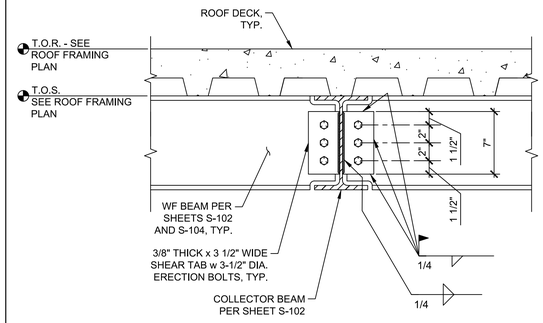

3 - COLLECTOR BEAM TO ROOF FRAMING CONNECTION

SCALE: 1 1/2" = 1'-0"

4 - NOT USED

SCALE: 1 1/2" = 1'-0"

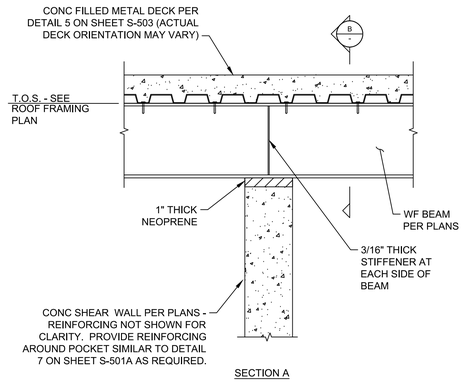

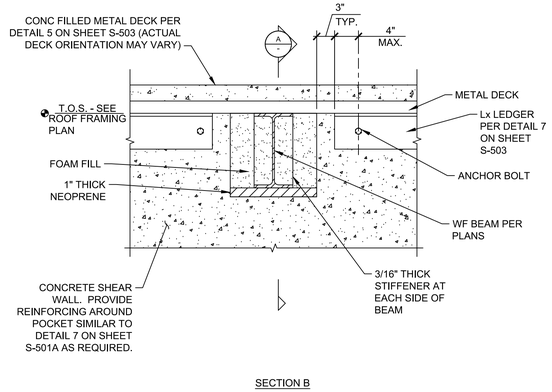

5 - BEAM POCKET

SCALE: 1" = 1'-0"

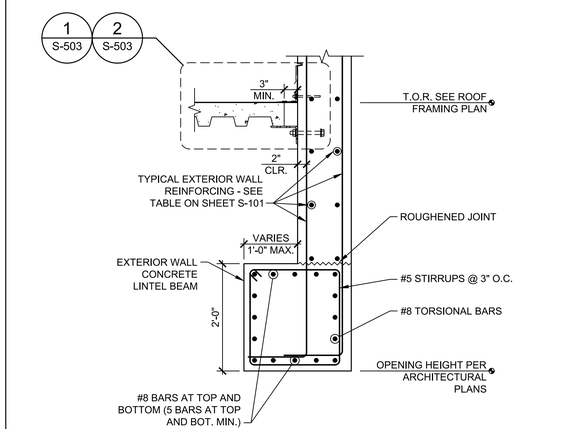

6 - EAST BUILDING CONCRETE LINTEL

SCALE: 1" = 1'-0"

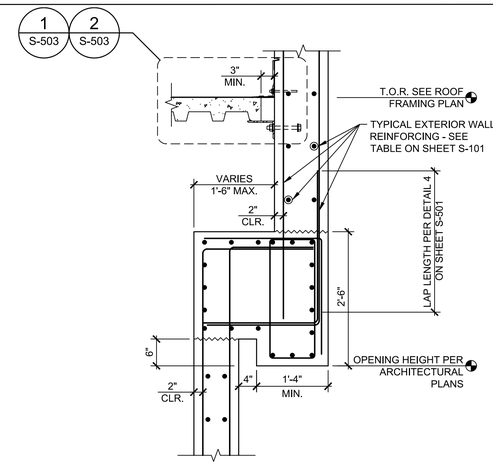

7 - EAST BUILDING WALL RECESS

SCALE: 1" = 1'-0"

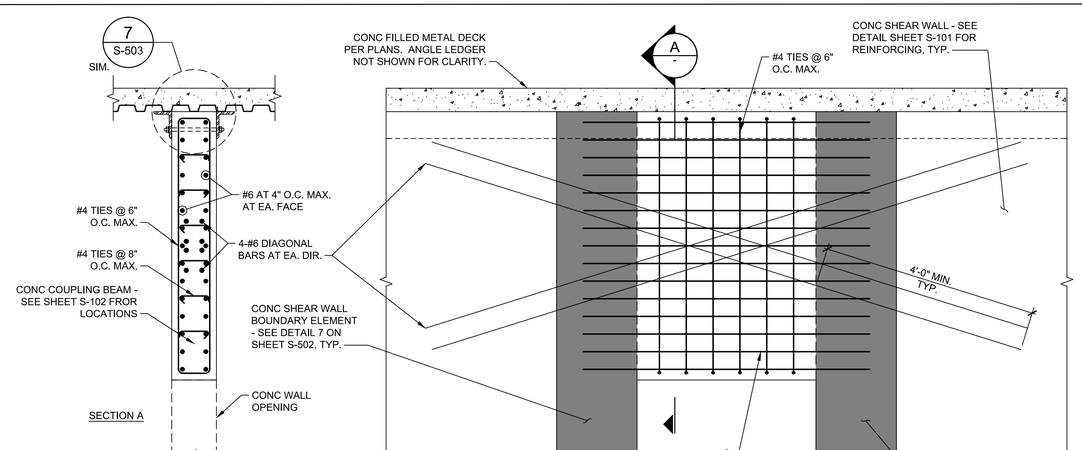

8 - EAST BUILDING COUPLER BEAM DETAIL

SCALE: 1" = 1'-0"

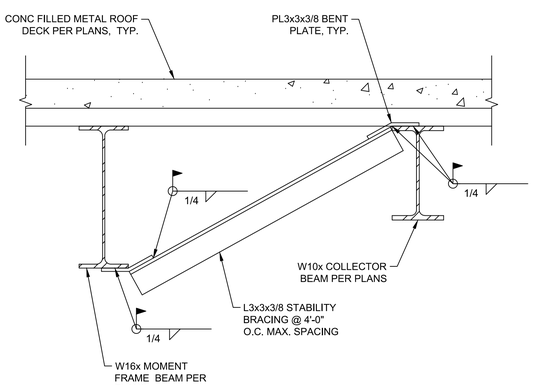

9 - EAST BUILDING SMF STABILITY BRACING

SCALE: 1 1/2" = 1'-0"

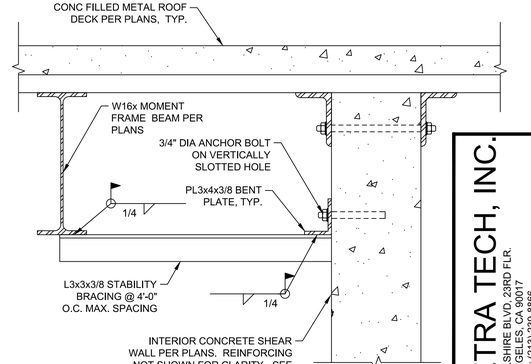

10 - EAST BUILDING SMF STABILITY BRACING

SCALE: 1 1/2" = 1'-0"

BUREAU OF ENGINEERING

OFFICIAL RECORD

ENGINEERING
CITY OF LOS ANGELES

BUREAU OF ENGINEERING

NO.	REVISIONS:	DATE	BY:

BUILDING NO.

INDEX NO. MF-300501

THIS PLAN WAS ELECTRONICALLY SIGNED AND STAMPED.

REGISTERED PROFESSIONAL ENGINEER TED O. OLSEN No. 81944 CIVIL STATE OF CALIFORNIA

CITY OF LOS ANGELES DEPARTMENT OF PUBLIC WORKS

CITY ENGINEER: TED ALLEN, P.E.
DATE:
LIC. NO.
DESIGN GROUP
ENGINEER: MICHAEL OLSEN
DESIGNED BY: JUSTIN SMITH
DRAWN BY: MEGAN HANRAHAN
CHECKED BY: NATE SCHREINER
APPROVED BY: JASON L. FUSSEL

VERT. CONTROL: BM 12-04070, 1929 (NGVD29) - 1996 ADJUSTMENT
HORIZ. CONTROL: CPS; RID AE 1704, EPOCH 1991.35

SHEET TITLE: EAST BUILDINGS ROOF FRAMING DETAILS

PROJECT: SIXTH STREET PARK, ARTS AND RIVER CONNECTIVITY IMPROVEMENTS (PARC)

ADDRESS: SIXTH STREET OVER THE LOS ANGELES RIVER

PLANS PREPARED BY:
TETRA TECH, INC.
707 WILSHIRE BLVD, 23RD FLR.
LOS ANGELES, CA 90017
PHONE: (213) 239-8866

WORK ORDER NO. E700235D
FILE NO. --
DRAWING NO. S-504
SHEET 255 OF 295 SHEETS

7/11/2022 3:42:51 PM - O:\PROJECTS\IRVINE\20043\200-20043-17001\CAD\SHEETFILES\S-504_ROOF FRAMING.DWG - BOEHMKE, BRETT

REVISION DATES (DESIGN STAGE ONLY)

THE CITY OF LOS ANGELES OR ITS OFFICERS OR AGENTS SHALL NOT BE RESPONSIBLE FOR THE ACCURACY OR COMPLETENESS OF ELECTRONIC COPIES OF THIS PLAN SHEET.

Sheet Version 3.0

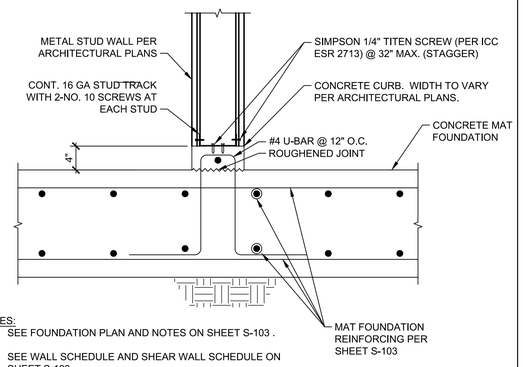

NOTES:
1. SEE FOUNDATION PLAN AND NOTES ON SHEET S-103 .
2. SEE WALL SCHEDULE AND SHEAR WALL SCHEDULE ON SHEET S-103.

1 - MAT FOUNDATION DETAIL AT INTERIOR WALLS
SCALE: 1" = 1'-0"

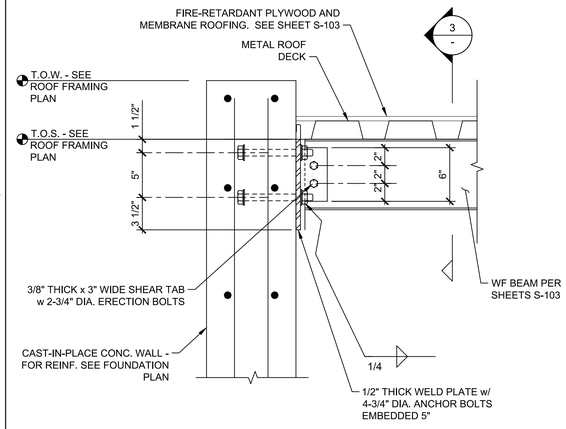

2 - BEAM TO EXTERIOR WALL CONNECTION
SCALE: 1 1/2" = 1'-0"

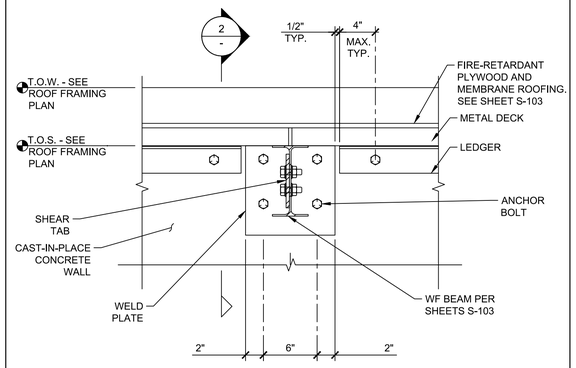

3 - BEAM TO EXTERIOR WALL CONNECTION
SCALE: 1 1/2" = 1'-0"

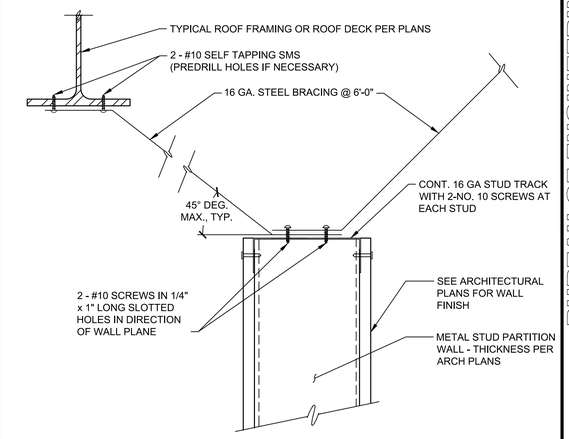

4 - PARTITION WALL BRACING
SCALE: 1 1/2" = 1'-0"

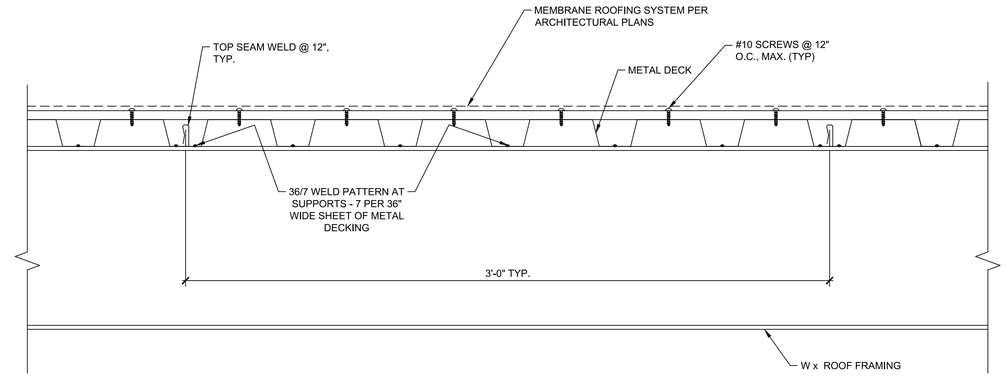

5 - METAL ROOF DECK FOR WEST BUILDINGS
SCALE: 3" = 1'-0"

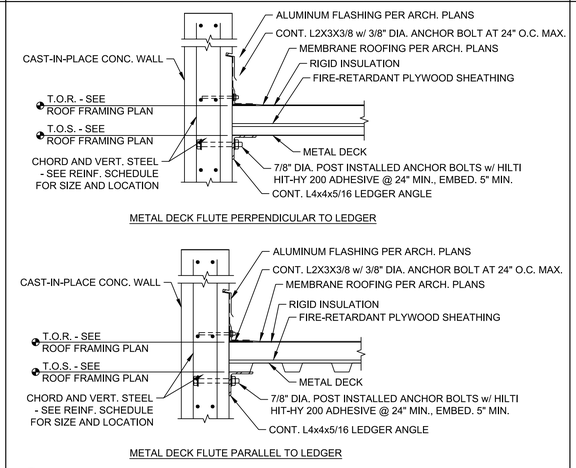

6 - LEDGER CONNECTION DETAIL
SCALE: 1 1/2" = 1'-0"

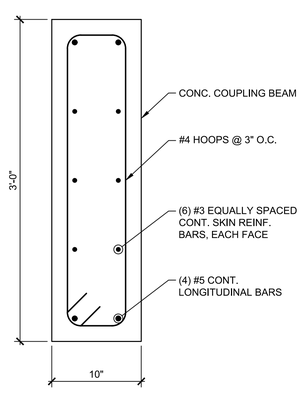

7 - SHEAR WALL COUPLING BEAM DETAIL
SCALE: 1 1/2" = 1'-0"

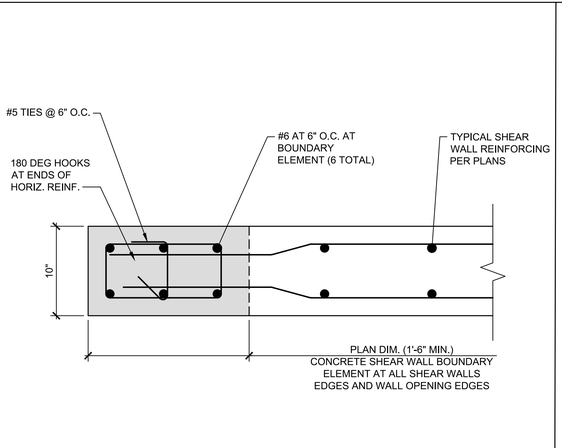

8 - SHEAR WALL BOUNDARY ELEMENT REINFORCING
SCALE: 1 1/2" = 1'-0"

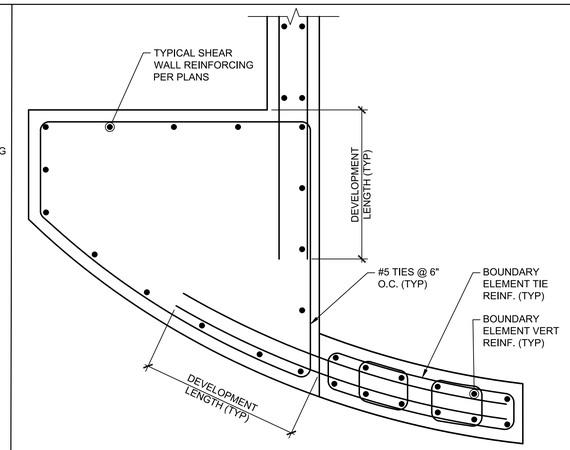

9 - WALL PIER DETAIL
SCALE: 1" = 1'-0"

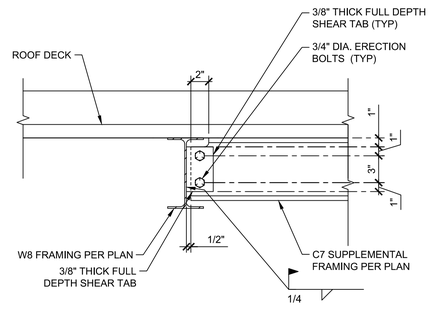

10 - SUPPLEMENTAL FRAMING CONNECTION DETAIL
SCALE: 1 1/2" = 1'-0"

BUREAU OF ENGINEERING
OFFICIAL RECORD

PLANS PREPARED BY:
TETRA TECH, INC.
707 WILSHIRE BLVD. 23RD FLR.
LOS ANGELES, CA 90017
PHONE: (213) 239-8866

CITY OF LOS ANGELES DEPARTMENT OF PUBLIC WORKS
BUREAU OF ENGINEERING
ENGINEERING
CITY OF LOS ANGELES

NO.	REVISIONS:	DATE	BY:

BUILDING NO.

INDEX NO. MF*300501

THIS PLAN WAS ELECTRONICALLY SIGNED AND STAMPED

REGISTERED PROFESSIONAL ENGINEER TED O. OLSEN No. 81944 CIVIL STATE OF CALIFORNIA

TED ALLEN, P.E.
CITY ENGINEER
DATE:

DESIGN GROUP	LIC. NO.
ENGINEER: MICHAEL OLSEN	
DESIGNED BY: JUSTIN SMITH	
DRAWN BY: BRETT BOEHMKE	
CHECKED BY: NATE SCHREINER	
APPROVED BY: JASON L. FUSSEL	

SHEET TITLE: WEST RESTROOM BUILDING DETAILS 1

PROJECT: SIXTH STREET PARK, ARTS AND RIVER CONNECTIVITY IMPROVEMENTS (PARC)

ADDRESS: SIXTH STREET OVER THE LOS ANGELES RIVER

CITY OF LOS ANGELES DEPARTMENT OF PUBLIC WORKS
VERT. CONTROL: BM 12-04070, 1929 (NGVD29) - 1996 ADJUSTMENT
HORIZ. CONTROL: GPS; PID AE 1704, EPOCH 1991.35

WORK ORDER NO. E7002350
FILE NO. --
DRAWING NO. S-505
SHEET 256 OF 295 SHEETS

7/11/2022 3:49:42 PM - O:\PROJECTS\RVINE\20043\200-20043-17001\CAD\SHEETFILES\S-505_WEST RESTROOM BUILDING DETAILS 1.DWG - BOEHMKE, BRETT

REVISION DATES (DESIGN STAGE ONLY)

THE CITY OF LOS ANGELES OR ITS OFFICERS OR AGENTS SHALL NOT BE RESPONSIBLE FOR THE ACCURACY OR COMPLETENESS OF ELECTRONIC COPIES OF THIS PLAN SHEET.

Sheet Version 3.0

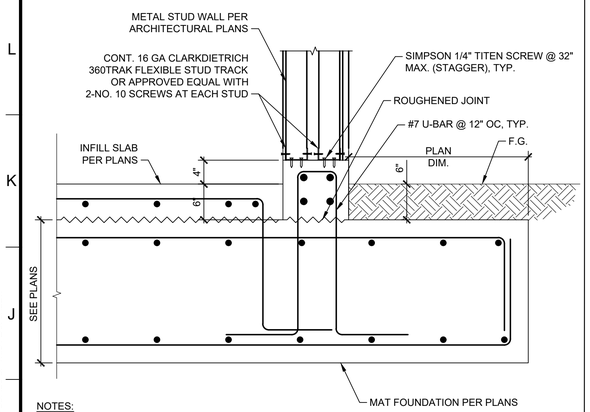

NOTES:
1. SEE FOUNDATION PLAN AND NOTES ON SHEET S-104 FOR SLAB THICKNESS AND REINFORCING.

1 - SLAB-ON-GRADE DETAIL
SCALE: 1" = 1'-0"

2 - NOT USED
SCALE: 1-1/2" = 1'-0"

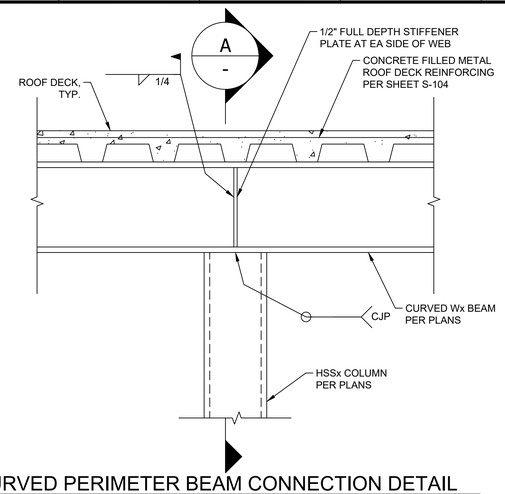

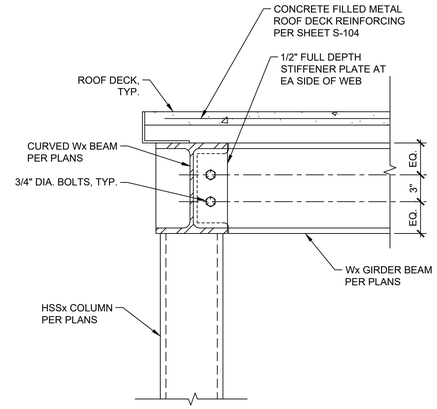

SECTION A

3 - CURVED PERIMETER BEAM CONNECTION DETAIL
SCALE: 1-1/2" = 1'-0"

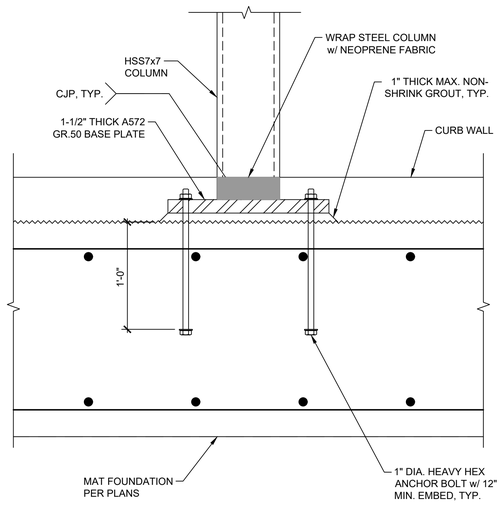

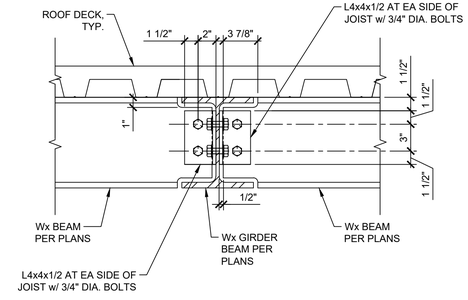

6 - BEAM TO GIRDER CONNECTION DETAIL
SCALE: 1-1/2" = 1'-0"

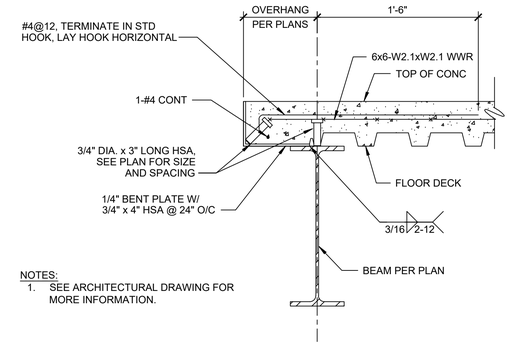

NOTES:
1. SEE ARCHITECTURAL DRAWING FOR MORE INFORMATION.

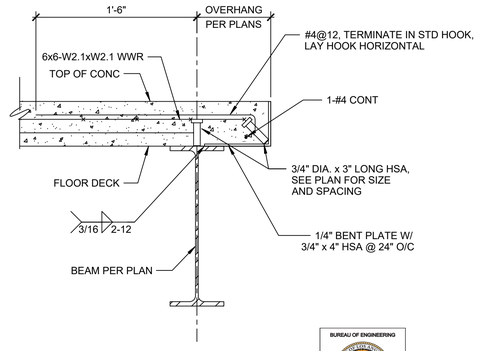

7 - DECK EDGE DETAIL
SCALE: 1-1/2" = 1'-0"

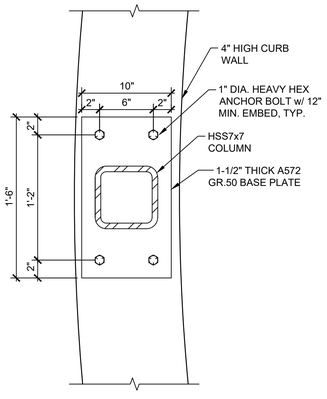

9 - COLUMN BASE PLATE DETAIL
SCALE: 1-1/2" = 1'-0"

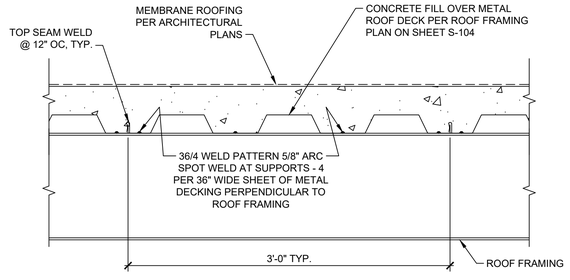

ROOF DECK PERPENDICULAR TO ROOF FRAMING

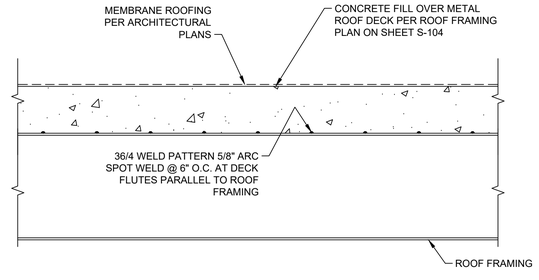

ROOF DECK PARALLEL TO ROOF FRAMING

10 - CONCRETE FILLED METAL ROOF DECK FOR WEST CAFE BUILDING
SCALE: 1-1/2" = 1'-0"

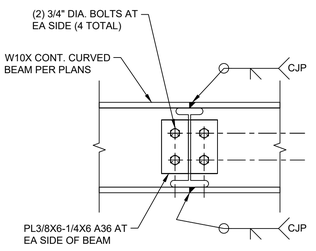

12 - CONT. CURVED BEAM SPLICE
SCALE: 1-1/2"=1'-0"

REVISION DATES (DESIGN STAGE ONLY)

THE CITY OF LOS ANGELES OR ITS OFFICERS OR AGENTS SHALL NOT BE RESPONSIBLE FOR THE ACCURACY OR COMPLETENESS OF ELECTRONIC COPIES OF THIS PLAN SHEET.

BUREAU OF ENGINEERING
ENGINEERING
CITY OF LOS ANGELES

NO.	REVISIONS:	DATE	BY:

BUILDING NO.

INDEX NO. MF-300501

THIS PLAN WAS ELECTRONICALLY SIGNED AND STAMPED

TED S. O. OLSEN
No. 81944
REGISTERED PROFESSIONAL ENGINEER
CIVIL
STATE OF CALIFORNIA

CITY OF LOS ANGELES DEPARTMENT OF PUBLIC WORKS

CITY ENGINEER: TED ALLEN, P.E.
DATE:
LIC. NO.

DESIGN GROUP	
ENGINEER:	MICHAEL OLSEN
DESIGNED BY:	JUSTIN SMITH
DRAWN BY:	SPENCER GOSPE
CHECKED BY:	NATE SCHREINER
APPROVED BY:	JASON L. FUSSEL

VERT. CONTROL: BM 12-04070, 1929 (NGVD29) - 1985 ADJUSTMENT
HORIZ. CONTROL: GPS; PID AE 1704; EPOCH 1991.35

SHEET TITLE: WEST CAFE BUILDING DETAILS

PROJECT: SIXTH STREET PARK, ARTS AND RIVER CONNECTIVITY IMPROVEMENTS (PARC)

ADDRESS: SIXTH STREET OVER THE LOS ANGELES RIVER

PLANS PREPARED BY:
TETRA TECH, INC.
707 WILSHIRE BLVD. 23RD FLR.
LOS ANGELES, CA 90017
PHONE: (213) 239-8866

BUREAU OF ENGINEERING
OFFICIAL RECORD

WORK ORDER NO. E700235D
FILE NO. --
DRAWING NO. S-506
SHEET 257 OF 295 SHEETS

7/11/2022 8:43:53 PM - C:\USERS\MARK.NAYRA\ONEDRIVE - TETRA TECH, INC\DESKTOP\PROJECT BACKUPS\6TH STREET\FINAL FILES\FINAL DRAWINGS\S-506_WEST CAFE BUILDING DETAILS.DWG - NAYRA, MARK

Sheet Version 3.0

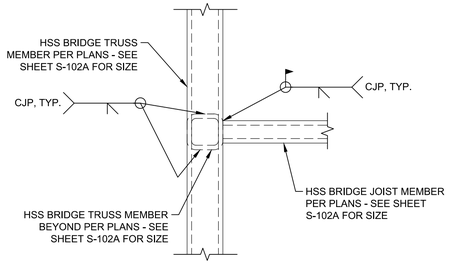

1 BRIDGE ELEMENT CONNECTION DETAIL
SCALE: 1 1/2" = 1'-0"

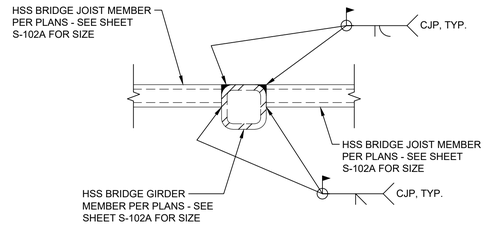

2 BRIDGE ELEMENT CONNECTION DETAIL
SCALE: 1 1/2" = 1'-0"

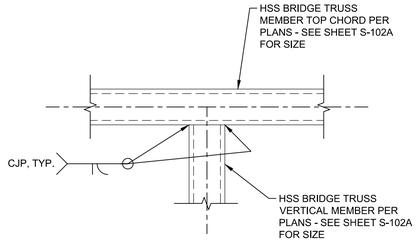

3 BRIDGE ELEMENT CONNECTION DETAIL
SCALE: 1 1/2" = 1'-0"

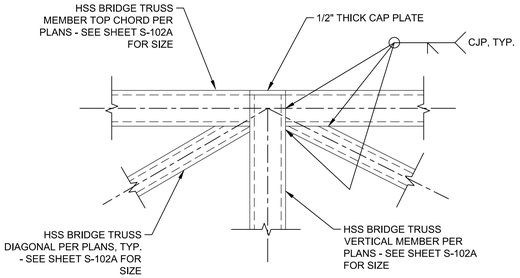

4 BRIDGE ELEMENT CONNECTION DETAIL
SCALE: 1 1/2" = 1'-0"

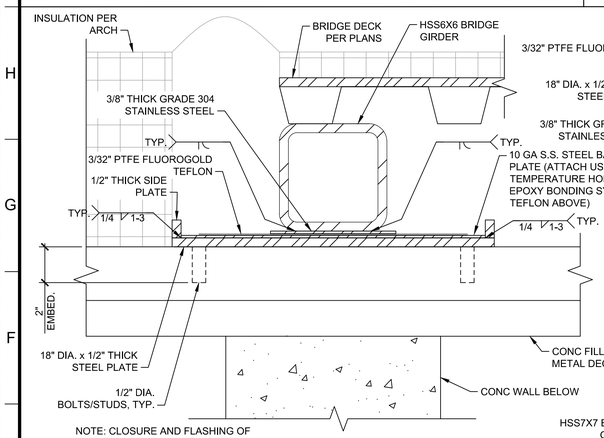

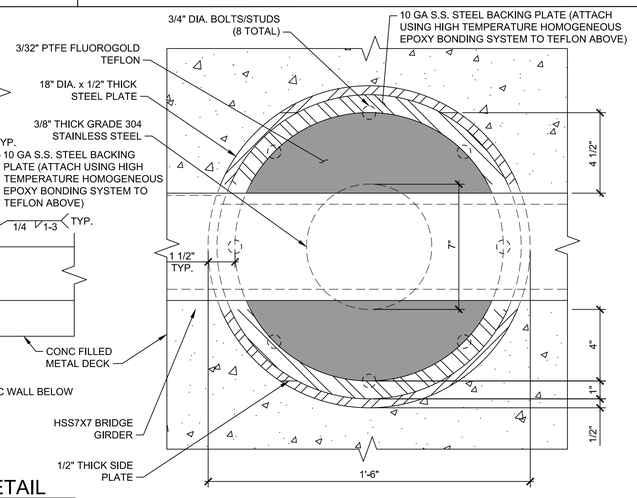

5 BRIDGE ELEMENT ROLLER CONNECTION DETAIL
SCALE: 1" = 1'-0"

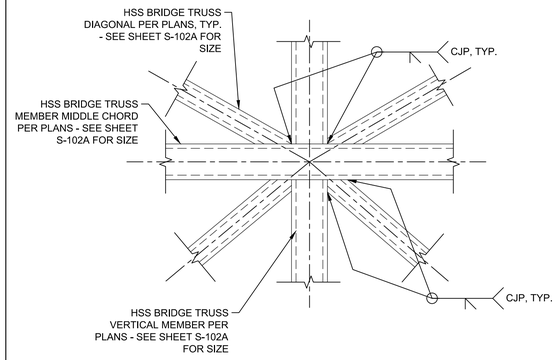

6 BRIDGE ELEMENT CONNECTION DETAIL
SCALE: 1-1/2" = 1'-0"

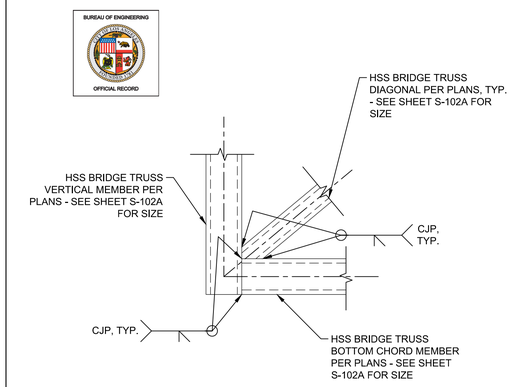

7 BRIDGE ELEMENT CONNECTION DETAIL
SCALE: 1-1/2" = 1'-0"

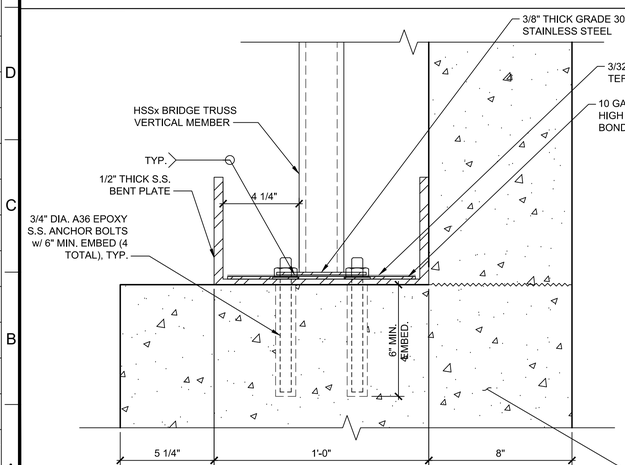

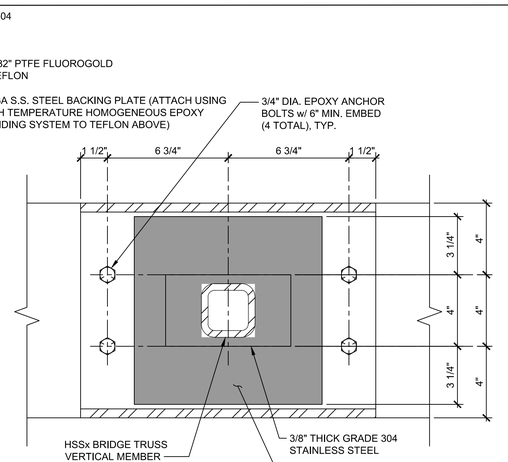

8 ROLLER CONNECTION AT WALL DETAIL
SCALE: 3" = 1'-0"

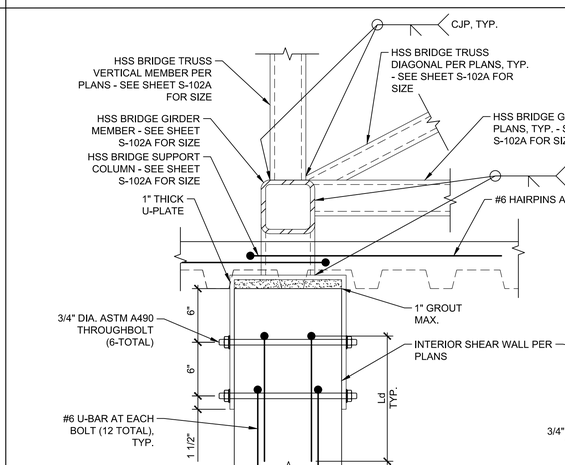

9 BRIDGE ELEMENT ANCHORAGE DETAIL
SCALE: 2" = 1'-0"

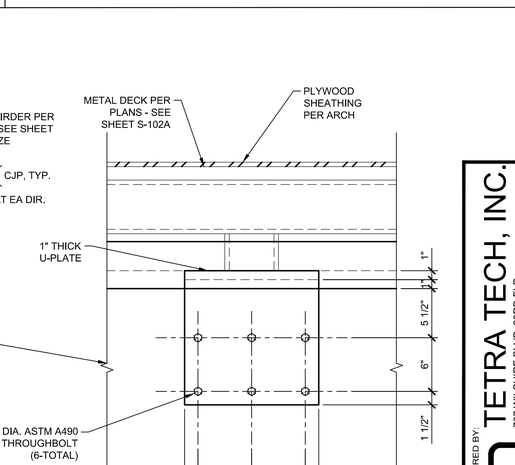

BUREAU OF ENGINEERING
OFFICIAL RECORD

THIS PLAN WAS ELECTRONICALLY SIGNED AND SEALED

REGISTERED PROFESSIONAL ENGINEER S. O. OLSEN No. 81944 CIVIL STATE OF CALIFORNIA

ENGINEERING
CITY OF LOS ANGELES

BUREAU OF ENGINEERING

NO.	REVISIONS:	DATE	BY:

BUILDING NO.

INDEX NO. MF-300501

DEPARTMENT OF PUBLIC WORKS
CITY OF LOS ANGELES

TED ALLEN, P.E.
CITY ENGINEER
DATE:

DESIGN GROUP
LIC. NO.
ENGINEER: MICHAEL OLSEN
DESIGNED BY: JUSTIN SMITH
DRAWN BY: XXXX
CHECKED BY: NATE SCHREINER
APPROVED BY: JASON L. FUSSEL

PLANS PREPARED BY:
TETRA TECH, INC.
707 WILSHIRE BLVD. 23RD FLR.
LOS ANGELES, CA 90017
PHONE: (213) 239-8866

SHEET TITLE: EAST BUILDINGS ROOF FRAMING DETAILS

PROJECT: SIXTH STREET PARK, ARTS AND RIVER CONNECTIVITY IMPROVEMENTS (PARC)

ADDRESS: SIXTH STREET OVER THE LOS ANGELES RIVER

VERT. CONTROL: BM # 12-04070, 1929 (NGVD29) - 1985 ADJUSTMENT
HORIZ. CONTROL: GPS; PID AE 1774, EPOCH 1991.35

WORK ORDER NO. E700235D
FILE NO. --
DRAWING NO. S-507
SHEET 258 OF 295 SHEETS

7/11/2022 7:17:23 PM - C:\USERS\MARK.NAYRA\ONEDRIVE - TETRA TECH, INC\DESKTOP\PROJECT BACKUPS\6TH STREET\FINAL FILES\FINAL DRAWINGS\S-507_EAST BUILDINGS ROOF FRAMING DETAILS.DWG - NAYRA, MARK

THE CITY OF LOS ANGELES OR ITS OFFICERS OR AGENTS SHALL NOT BE RESPONSIBLE FOR THE ACCURACY OR COMPLETENESS OF ELECTRONIC COPIES OF THIS PLAN SHEET.

REVISION DATES (DESIGN STAGE ONLY)

Sheet Version 3.0

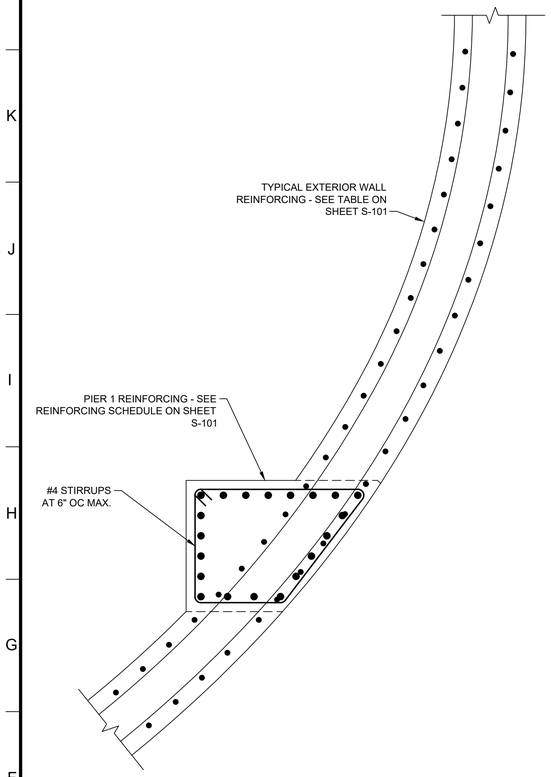

1 - EAST OFFICE BLDG WALL SECTION AT CONCESSIONS
SCALE: 1"=1'-0"

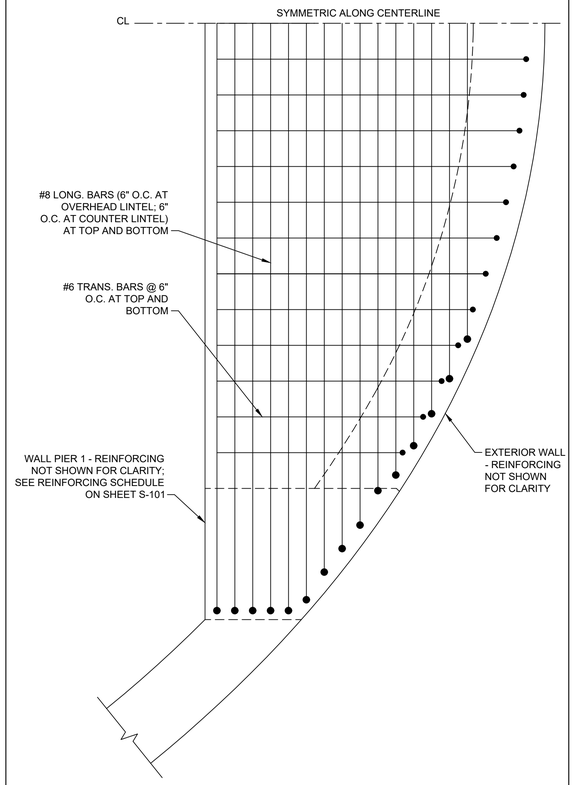

2 - EAST OFFICE BLDG WALL SECTION AT CONCESSIONS
SCALE: 1"=1'-0"

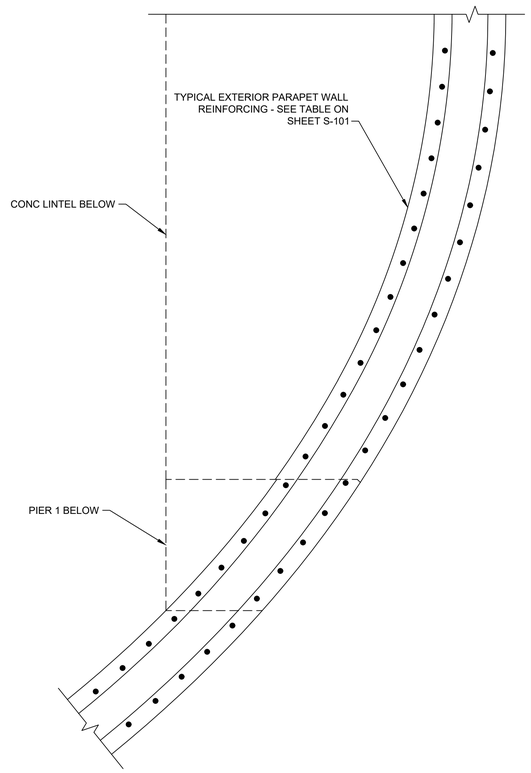

3 - EAST OFFICE BLDG WALL SECTION AT CONCESSIONS
SCALE: 1"=1'-0"

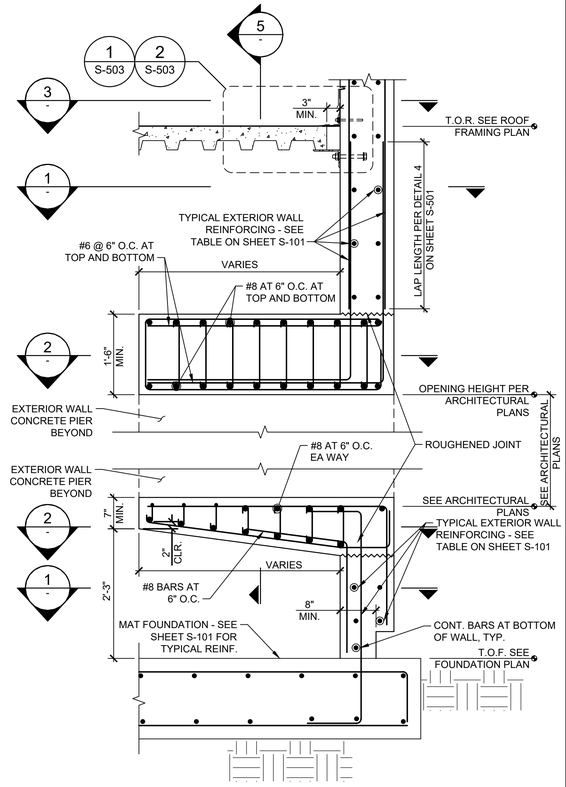

4 - EAST OFFICE BLDG WALL SECTION AT CONCESSIONS
SCALE: 3/4"=1'-0"

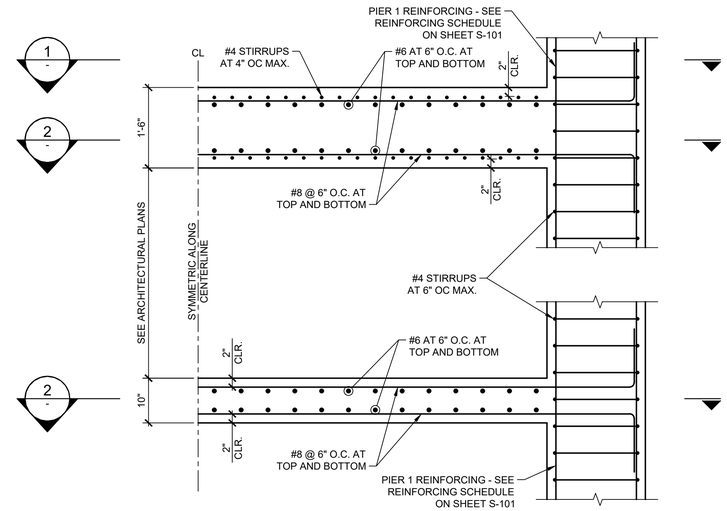

5 - EAST OFFICE BUILDING LINTEL AND PIER SECTION
SCALE: 3/4"=1'-0"

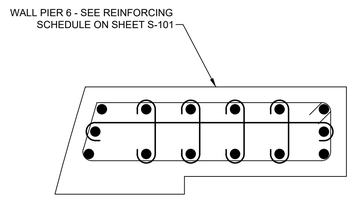

6 - WALL PIER 6 (P6) REINFORCING DETAIL
SCALE: 1-1/2"=1'-0"

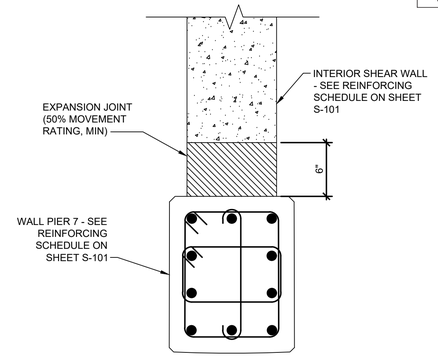

7 - WALL PIER 7 (P7) REINFORCING DETAIL
SCALE: 1-1/2"=1'-0"

BUREAU OF ENGINEERING
OFFICIAL RECORD

THE CITY OF LOS ANGELES OR ITS OFFICERS OR AGENTS SHALL NOT BE RESPONSIBLE FOR THE ACCURACY OR COMPLETENESS OF ELECTRONIC COPIES OF THIS PLAN SHEET.

REVISION DATES (DESIGN STAGE ONLY)

Sheet Version 3.0

BUREAU OF ENGINEERING
ENGINEERING
CITY OF LOS ANGELES

NO.	REVISIONS:	DATE	BY:

BUILDING NO.

INDEX NO. MF-300501

"THIS PLAN WAS ELECTRONICALLY SIGNED AND STAMPED"

CALIFORNIA PROFESSIONAL ENGINEER S. O. OLSEN No. 81944 REGISTERED MICHAEL CIVIL STATE OF CALIFORNIA

BUREAU OF PUBLIC WORKS
CITY OF LOS ANGELES DEPARTMENT OF PUBLIC WORKS

CITY ENGINEER: TED ALLEN, P.E.
DATE:
LIC. NO.
DESIGN GROUP
ENGINEER: MICHAEL OLSEN
DESIGNED BY: JUSTIN SMITH
DRAWN BY: XXXX
CHECKED BY: NATE SCHREINER
APPROVED BY: JASON L. FUSSEL

PLANS PREPARED BY:
TETRA TECH, INC.
707 WILSHIRE BLVD, 23RD FLR.
LOS ANGELES, CA 90017
PHONE: (213) 239-8866

VERT. CONTROL: BM 12-04070, 1929 (NGVD29) - 1996 ADJUSTMENT
HORIZ. CONTROL: GPS; PID AE 1704, EPOCH 1991.35

SHEET TITLE: FOUNDATION WALL DETAILS XXXXXXXXXX

PROJECT: SIXTH STREET PARK, ARTS AND RIVER CONNECTIVITY IMPROVEMENTS (PARC)

ADDRESS: SIXTH STREET OVER THE LOS ANGELES RIVER

WORK ORDER NO. E700235D
FILE NO. --
DRAWING NO. S-508
SHEET 259 OF 295 SHEETS

7/11/2022 3:08:23 PM - C:\USERS\MARK.NAYRA\ONEDRIVE - TETRA TECH, INC\DESKTOP\PROJECT BACKUPS\6TH STREET\FINAL FILES\FINAL DRAWINGS\S-508_FOUNDATION WALL DETAILS.DWG - NAYRA, MARK

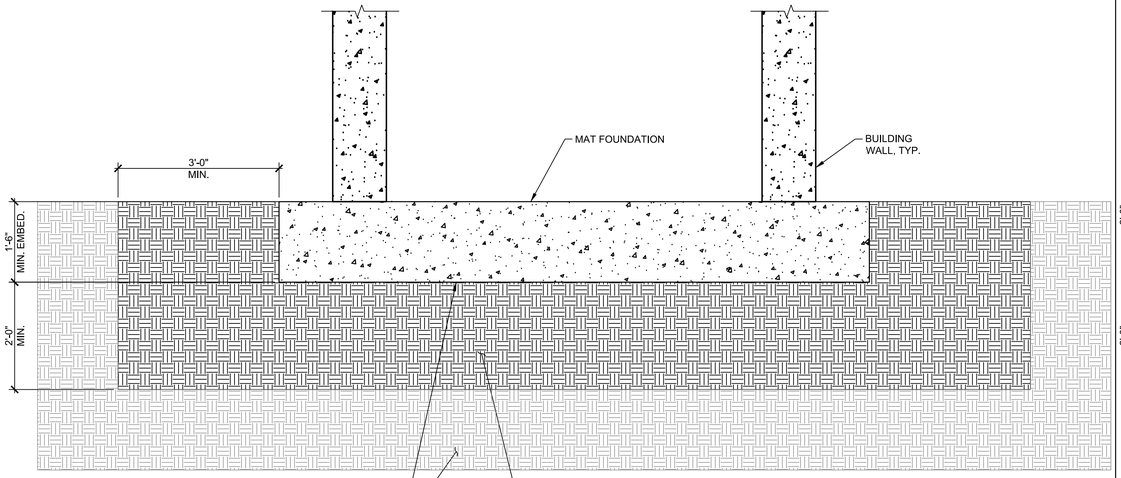

10-MIL THICK PLASTIC VAPOR BARRIER

UPPER 8" OF THE EXCAVATION BOTTOM SHOULD BE SCARIFIED, MOISTURE-CONDITIONED TO APPROXIMATELY 2% ABOVE THE OPTIMUM MOISTURE CONTENT, AND RECOMPACTED TO AT LEAST 90% OF THE MAXIMUM DRY DENSITY PER ASTM D1557 (MODIFIED PROCTOR TEST, LATEST EDITION).

2 FEET OF COMPACTED CLEAN "GRANULAR" SOILS (SOILS HAVING LESS THAN 30% PASSING STANDARD SIEVE #200, FREE OF DEBRIS, VEGETATION, AND WITH NO PARTICLE SIZE GREATER THAN 3", CONFIRMED WITH LABORATORY TESTING PRIOR TO CONSTRUCTION), MOISTURE CONDITIONED TO 3% ABOVE THE OPTIMUM MOISTURE CONTENT, AND EXTENDING TO A ZONE OF 3'-0" BEYOND THE EDGE OF THE FOOTINGS AND BUILDING STRUCTURE/FOOTPRINTS, COMPACTED IN 8" THICK LIFTS (MEASURED IN LOOSE STATE) TO A MINIMUM OF 95% RELATIVE COMPACTION PER ASTM D1557 (MODIFIED PROCTOR, LATEST EDITION).

NOTE: REFER TO GEOTECHNICAL REPORT FOR ADDITIONAL INFORMATION AND REQUIREMENTS.

1 - SUBGRADE PREPARATION FOR WEST PARK CAFE BLDG, WEST RESTROOM BLDG, AND EAST PARK BLDGS

SCALE: 3/4"=1'-0"

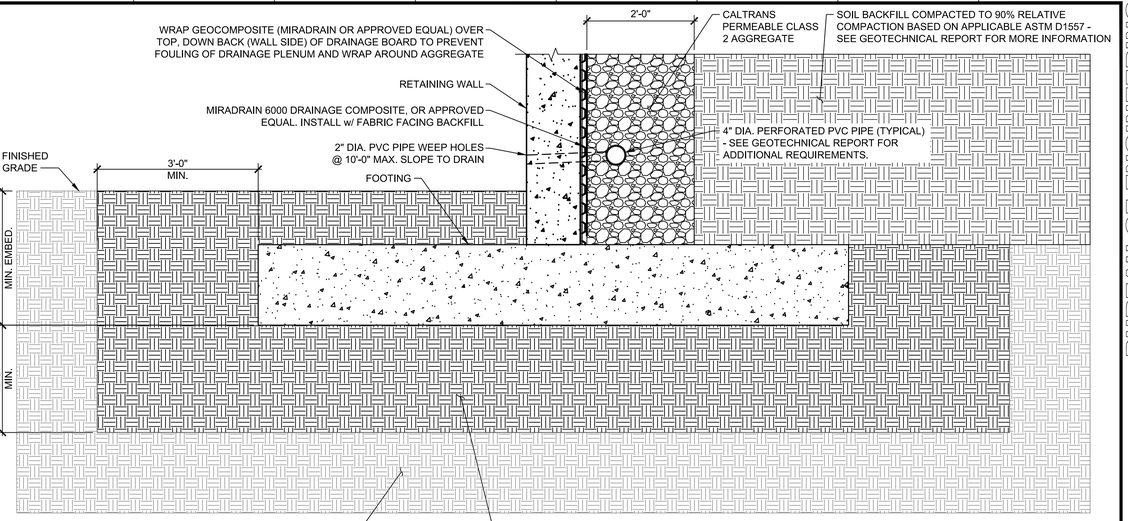

UPPER 8" OF THE EXCAVATION BOTTOM SHOULD BE SCARIFIED, MOISTURE-CONDITIONED TO APPROXIMATELY 2% ABOVE THE OPTIMUM MOISTURE CONTENT, AND RECOMPACTED TO AT LEAST 90% OF THE MAXIMUM DRY DENSITY PER ASTM D1557 (MODIFIED PROCTOR TEST, LATEST EDITION).

2 FEET OF COMPACTED CLEAN "GRANULAR" SOILS (SOILS HAVING LESS THAN 30% PASSING STANDARD SIEVE #200, FREE OF DEBRIS, VEGETATION, AND WITH NO PARTICLE SIZE GREATER THAN 3", CONFIRMED WITH LABORATORY TESTING PRIOR TO CONSTRUCTION), MOISTURE CONDITIONED TO 3% ABOVE THE OPTIMUM MOISTURE CONTENT, AND EXTENDING TO A ZONE OF 3'-0" BEYOND THE EDGE OF THE FOOTINGS AND BUILDING STRUCTURE/FOOTPRINTS, COMPACTED IN 8" THICK LIFTS (MEASURED IN LOOSE STATE) TO A MINIMUM OF 95% RELATIVE COMPACTION PER ASTM D1557 (MODIFIED PROCTOR, LATEST EDITION).

NOTE: REFER TO GEOTECHNICAL REPORT FOR ADDITIONAL INFORMATION AND REQUIREMENTS.

2 - SUBGRADE PREPARATION AND WALL DRAINAGE FOR RETAINING WALL STRUCTURES

SCALE: 3/4"=1'-0"

BUREAU OF ENGINEERING
OFFICIAL RECORD

THE CITY OF LOS ANGELES OR ITS OFFICERS OR AGENTS SHALL NOT BE RESPONSIBLE FOR THE ACCURACY OR COMPLETENESS OF ELECTRONIC COPIES OF THIS PLAN SHEET.

REVISION DATES (DESIGN STAGE ONLY)

PLANS PREPARED BY:
TETRA TECH, INC.
707 WILSHIRE BLVD. 23RD FLR.
LOS ANGELES, CA 90017
PHONE (213) 239-9866

CITY OF LOS ANGELES DEPARTMENT OF PUBLIC WORKS
BUREAU OF ENGINEERING

VERT. CONTROL: BM 12-04070, 1928 (NGVD29) - 1985 ADJUSTMENT
HORIZ. CONTROL: GPS; PID AE 1704, EPOCH 1991.35

SHEET TITLE: SUBGRADE PREP DETAILS XXXXXXXXXX

PROJECT: SIXTH STREET PARK, ARTS AND RIVER CONNECTIVITY IMPROVEMENTS (PARC)

ADDRESS: SIXTH STREET OVER THE LOS ANGELES RIVER

WORK ORDER NO. E700235D
FILE NO. --
DRAWING NO. S-509
SHEET 260 OF 295 SHEETS

CITY ENGINEER
DATE:

TED ALLEN, P.E.

DESIGN GROUP		LIC. NO.
ENGINEER:	MICHAEL OLSEN	
DESIGNED BY:	JUSTIN SMITH	
DRAWN BY:	BRETT BOEHMKE	
CHECKED BY:	NATE SCHREINER	
APPROVED BY:	JASON L. FUSSEL	

NO.	REVISIONS:	DATE:	BY:

BUILDING NO.

INDEX NO. MF-300501

ENGINEERING
CITY OF LOS ANGELES

"THIS PLAN WAS ELECTRONICALLY SIGNED AND STAMPED"

REGISTERED PROFESSIONAL ENGINEER
MICHAEL S. O. OLSEN
No. 81944
CIVIL
STATE OF CALIFORNIA

7/11/2022 4:08:36 PM - O:\PROJECTS\R\VINE\20043\200-20043-17001\CAD\SHEETFILES\S-509_SUBGRADE PREP DETAILS.DWG - BOEHMKE, BRETT

Sheet Version 3.0

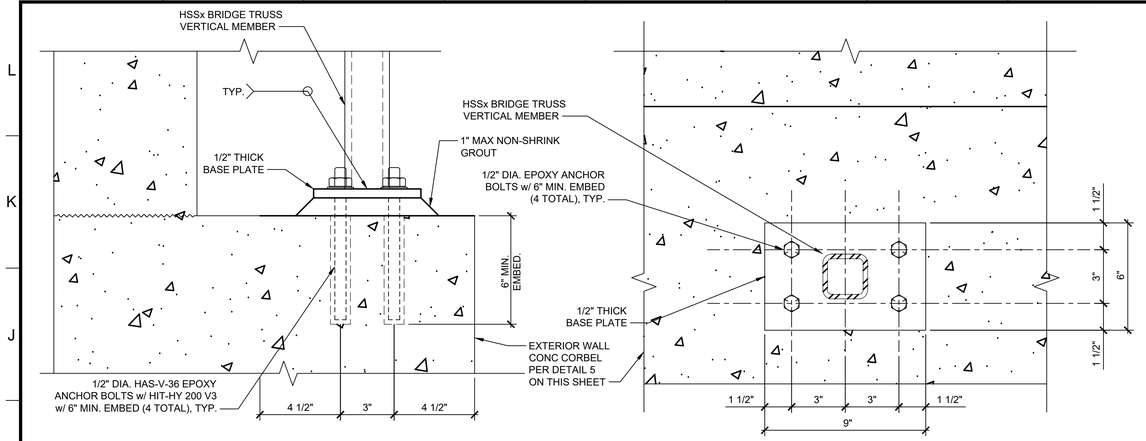

1 - BRIDGING ELEMENT ANCHORAGE AT EXTERIOR WALL
SCALE: 3"=1'-0"

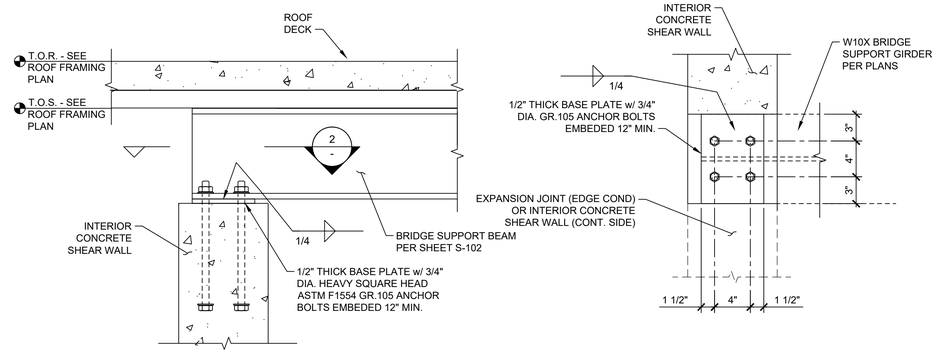

3 - ROOF BRIDGE TO WALL ANCHORAGE
SCALE: 1 1/2" = 1'-0"

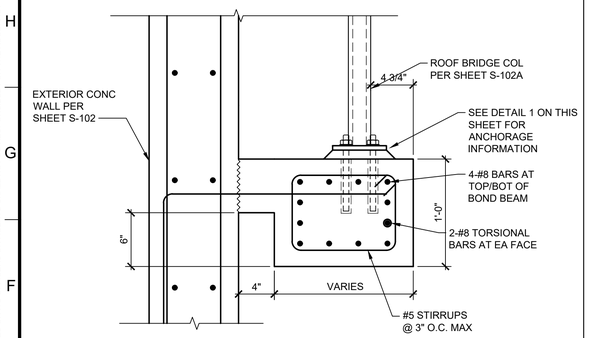

4 - ANCHORAGE AT EXTERIOR WALL (FOUNTAIN LINTEL LOCATION)
SCALE: 1-1/2"=1'-0"

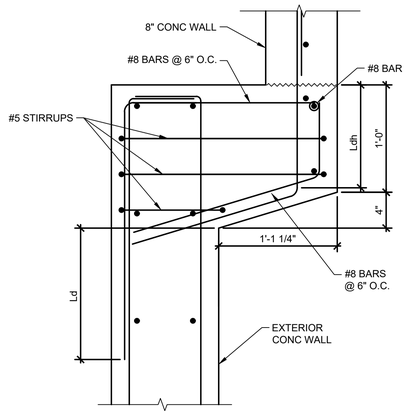

5 - CONCRETE CORBEL
SCALE: 1-1/2"=1'-0"

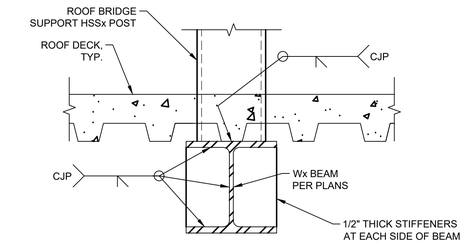

6 - ROOF BRIDGE SUPPORT POST TO BEAM
SCALE: 1-1/2" = 1'-0"

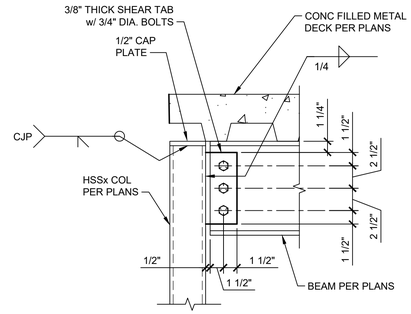

7 - BEAM TO COLUMN CONNECTION
SCALE: 1-1/2" = 1'-0"

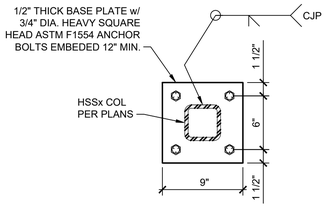

8 - COLUMN BASE PLATE
SCALE: 1-1/2"=1'-0"

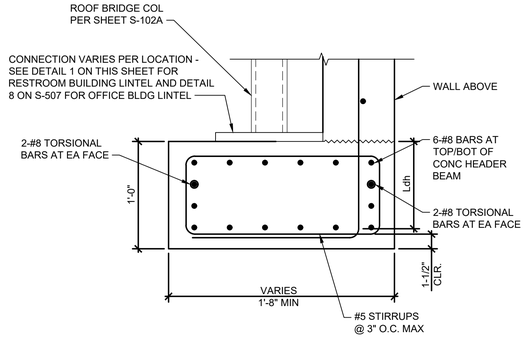

9 - ANCHORAGE AT LINTELS WALL
SCALE: 1-1/2"=1'-0"

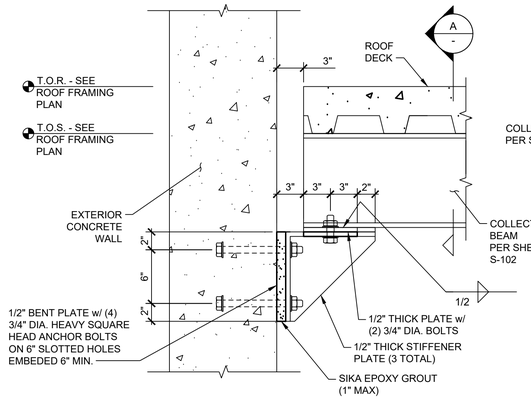

10 - COLLECTOR ANCHORAGE AT EXTERIOR WALL
SCALE: 1-1/2"=1'-0"

OFFICIAL RECORD

PLANS PREPARED BY:
TETRA TECH, INC.
707 WILSHIRE BLVD. 23RD FLR.
LOS ANGELES, CA 90017
PHONE: (213) 239-9866

CITY OF LOS ANGELES DEPARTMENT OF PUBLIC WORKS BUREAU OF ENGINEERING

ENGINEERING
CITY OF LOS ANGELES

NO.	REVISIONS:	DATE	BY:

BUILDING NO.

INDEX NO. MF-300501

"THIS PLAN WAS ELECTRONICALLY SIGNED AND STAMPED"

REGISTERED PROFESSIONAL ENGINEER S. O. OLSEN No. 81944 CIVIL STATE OF CALIFORNIA

CITY ENGINEER
TED ALLEN, P.E.
DATE: 07/11/22
LIC. NO. C-85736

DESIGN GROUP	
ENGINEER:	MICHAEL OLSEN
DESIGNED BY:	JUSTIN SMITH
DRAWN BY:	XXXX
CHECKED BY:	NATE SCHREINER
APPROVED BY:	JASON L. FUSSEL

SHEET TITLE: SUBGRADE PREP DETAILS XXXXXXXXXX

PROJECT: SIXTH STREET PARK, ARTS AND RIVER CONNECTIVITY IMPROVEMENTS (PARC)

ADDRESS: SIXTH STREET OVER THE LOS ANGELES RIVER

VERT. CONTROL: BM 12-0407D, 1928 (NGVD29) - 1988-ADJUSTMENT
HORIZ. CONTROL: GPS; PID AE 1704, EPOCH 1991.35

WORK ORDER NO. E700235D
FILE NO. --
DRAWING NO. S-510
SHEET 261 OF 295 SHEETS

7/11/2022 2:40:01 PM - C:\USERS\MARK.NAYRA\ONEDRIVE - TETRA TECH, INC\DESKTOP\PROJECT BACKUPS\6TH STREET\FINAL FILES\FINAL DRAWINGS\S-510_EAST BLDG DETAILS.DWG - NAYRA, MARK

REVISION DATES: (DESIGN STAGE ONLY)

THE CITY OF LOS ANGELES OR ITS OFFICERS OR AGENTS SHALL NOT BE RESPONSIBLE FOR THE ACCURACY OR COMPLETENESS OF ELECTRONIC COPIES OF THIS PLAN SHEET.

Sheet Version 3.0

DUCTWORK SYMBOLS

24x12 / 24x12	RECTANGULAR DUCT. FIRST NUMBER INDICATES SIDE IN VIEW, SECOND NUMBER INDICATES SIDE IN DEPTH.
12 Ø / 12 Ø	ROUND DUCT. NUMBER INDICATES DUCT DIAMETER
	90° RADIUS ELBOW DOWN. USE 90° ELBOW W/ TURNING VANES WHEN RADIUS DOES NOT FIT
	DUCT SECTION-SUPPLY AIR/ OSA DUCT
	DUCT SECTION-RETURN AIR/ EXHAUST AIR DUCT
FC / FC	FLEXIBLE CONNECTOR
	FLEXIBLE DUCT
	FIRE DAMPER
VD / VD	VOLUME DAMPER
BDD / BDD	BACKDRAFT DAMPER
CD-4 (Y)	SUPPLY CEILING DIFFUSER SIZE 4-AIR QUANTITY (Y) CFM
CG-4 (Y)	CEILING EXHAUST AND RETURN AIR REGISTER(GRILLE) SIZE 4-AIR QUANTITY (Y) CFM
SG-4 OR SR-4 (Y)	SUPPLY GRILLE OR REGISTER SIZE 4-AIR QUANTITY (Y) CFM
RR-4 (Y)	RETURN/EXHAUST GRILLE OR REGISTER SIZE 4-AIR QUANTITY (Y) CFM
DL	DOOR LOUVER
T	THERMOSTAT OR TEMPERATURE SENSOR
S	WALL SWITCH
Ø	INDICATES ROUND OR OVAL DUCT.

ABBREVIATIONS

AFF	ABOVE FINISHED FLOOR
AP	ACCESS PANEL
BDD	BACKDRAFT DAMPER
BTUH	BRITISH THERMAL UNITS/HOUR
CD	CEILING DIFFUSER
CFM	CUBIC FEET PER MINUTE
C.L.	CENTER LINE
CLG	CEILING
CONC	CONCRETE
CONT	CONTINUATION
D	DRAIN
DB	DRY BULB
DEG	DEGREE
DET	DETAIL
DIA	DIAMETER
DN	DOWN
EA	EXHAUST AIR
ea	EACH
EAT	ENTERING AIR TEMPERATURE
EFF	EFFICIENCY
EG	EXHAUST GRILLE
EL	ELEVATION
ELEC	ELECTRICAL
ENT	ENTERING
EXH	EXHAUST
EXST	EXISTING
DEG F	DEGREES FAHRENHEIT
FC	FLEXIBLE CONNECTION
FD	FIRE DAMPER
FLA	FULL LOAD AMPERES
FLR	FLOOR
FPM	FEET PER MINUTE
FT	FEET
FT2	SQUARE FEET
GA	GAUGE OR GAGE
HP	HORSE POWER
HR	HOUR
HVAC	HEATING, VENTILATION, AND AIR CONDITIONING
HZ	HERTZ
ID	INSIDE DIAMETER
IN	INCH
INWG	INCH OF WATER GAUGE
LAT	LEAVING AIR TEMPERATURE
LB	POUND
MAX	MAXIMUM
MBH	THOUSAND BTU PER HOUR
MCA	MINIMUM CURRENT AMPERES
MECH	MECHANICAL
MIN	MINIMUM
MOCP	MAX OVERCURRENT PROTECTION
NIC	NOT IN CONTRACT
NTS	NOT TO SCALE
N/A	NOT APPLICABLE
OSA	OUTSIDE AIR
OPNG	OPENING
PD	PRESSURE DROP
PH	PHASE
PSI	POUND PER SQUARE INCH
RA	RETURN AIR
RH	RELATIVE HUMIDITY
RPM	REVOLUTIONS PER MINUTE
RR	RETURN AIR REGISTER
RTN	RETURN
SF	SQUARE FEET
SG	SUPPLY GRILLE
SP	STATIC PRESSURE
SR	SUPPLY AIR REGISTER
SS	STAINLESS STEEL
TD	TRANSFER DUCT
TEMP	TEMPERATURE
TG	TRANSFER GRILLE
T STAT	THERMOSTAT
TYP	TYPICAL
UTR	UP THRU ROOF
V	VENT
VD	VOLUME DAMPER
W	WATT
W/	WITH
WB	WET BULB
WC	WATER COLUMN
WG	WATER GAUGE
WT	WEIGHT
YR	YEAR

GENERAL NOTES

A. ALL DIMENSIONS ARE IN ENGLISH UNITS.

B. DUCT DIMENSIONS ARE INSIDE CLEAR DIMENSIONS, EXCEPT FACTORY BUILT SUPPLY AND RETURN PLENUM. DUCT DIMENSIONS FOR FACTORY BUILT PLENUM ARE OUTSIDE DIMENSIONS.

C. VERIFY AND COORDINATE EQUIPMENT LAYOUT, SIZE, AND CONNECTING SERVICES WITH EQUIPMENT ACTUALLY SELECTED FOR INSTALLATION.

D. DO NOT SCALE DUCTWORK AND EQUIPMENT FOR SIZE.

E. COORDINATE ENTIRE INSTALLATION OF THE HVAC SYSTEMS WITH THE WORK OF ALL OTHER TRADES PRIOR TO ANY FABRICATION OR INSTALLATION.

F. COORDINATE EXACT LOCATION AND SIZES OF REQUIRED OPENINGS AND SUPPORTS FOR FURNISHED EQUIPMENT WITH THE GENERAL CONTRACTOR.

G. ALL EQUIPMENT SHALL BE INSTALLED IN STRICT ACCORDANCE WITH THE EQUIPMENT MANUFACTURER'S REQUIREMENTS.

H. PROVIDE ALL FITTINGS, TRANSITIONS, DAMPERS, VALVES, AND OTHER DEVICES REQUIRED FOR COMPLETE WORKABLE INSTALLATION.

I. ALL EQUIPMENT, DUCTS, PIPING, AND OTHER DEVICES OR MATERIAL EXPOSED TO THE WEATHER SHALL BE COMPLETELY WEATHERPROOF.

J. ALL VALVES, CONTROLS, DAMPERS, FANS, ETC. SHALL BE INSTALLED IN ACCESSIBLE LOCATION. PROVIDE ADEQUATELY SIZED ACCESS DOOR OR PANELS WHERE REQUIRED.

K. PROVIDE ALL MATERIALS AND EQUIPMENT AND PERFORM ALL LABOR REQUIRED TO INSTALL COMPLETE AND OPERABLE MECHANICAL SYSTEMS AS INDICATED ON THE DRAWINGS, AS SPECIFIED AND AS REQUIRED BY CODE.

L. CONTRACT DOCUMENT DRAWINGS FOR MECHANICAL WORK ARE DIAGRAMMATIC AND ARE INTENDED TO CONVEY SCOPE AND GENERAL ARRANGEMENT ONLY.

M. ALL CONTROL WIRING SHALL COMPLY WITH THE NATIONAL ELECTRICAL CODE AND DIVISION 26 OF THE SPECIFICATIONS.

N. MECHANICAL CONTRACTOR SHALL COORDINATE THE INSTALLATION OF ALL CONCRETE EQUIPMENT PADS WITH THE STRUCTURAL DRAWINGS AND THE ACTUAL SELECTED EQUIPMENT. PAD THICKNESS AS IDENTIFIED ON THE STRUCTURAL DRAWINGS IS CONSIDERED A MINIMUM.

O. PROVIDE SEISMIC BRACING OF MECHANICAL EQUIPMENT INCLUDING OVERHEAD UTILITIES AND FIXTURES WEIGHING OVER 30 POUNDS IN ACCORDANCE WITH SPECIFICATION SECTION 15020.

P. ALL SUPPLY/EXHAUST AIR REGISTERS SHALL BE PROVIDED WITH BALANCING DAMPERS IN THE RESPECTIVE BRANCH DUCTS UNLESS SPECIFICALLY INDICATED OTHERWISE.

EQUIPMENT DESIGNATION

EF	EXHAUST FAN
IH	INFRARED HEATER
HP	HEAT PUMP

THE CITY OF LOS ANGELES OR ITS OFFICERS OR AGENTS SHALL NOT BE RESPONSIBLE FOR THE ACCURACY OR COMPLETENESS OF ELECTRONIC COPIES OF THIS PLAN SHEET.

REVISION DATES (DESIGN STAGE ONLY)

Sheet Version 3.0

BUREAU OF ENGINEERING

OFFICIAL RECORD

PLANS PREPARED BY:
TETRA TECH, INC.
350 SOUTH GRAND AVENUE, SUITE 3310
LOS ANGELES, CALIFORNIA 90071
Phone: (213) 279-3283

CITY OF LOS ANGELES DEPARTMENT OF PUBLIC WORKS BUREAU OF ENGINEERING

ENGINEERING CITY OF LOS ANGELES

NO.	REVISIONS:	DATE	BY:

BUILDING NO.

INDEX NO. MF-300501

THIS PLAN WAS ELECTRONICALLY SIGNED AND STAMPED

REGISTERED PROFESSIONAL ENGINEER KENNETH P. KULONIS No. 27379 Exp. 6-30-2023 MECHANICAL STATE OF CALIFORNIA

CITY ENGINEER

DATE:

TED ALLEN, P.E.

ENGINEER:	KEN KULONIS	DESIGN GROUP
DESIGNED BY:	KEN KULONIS	LIC. NO. M27379
DRAWN BY:	KEN KULONIS	
CHECKED BY:	JASON L. FUSSEL	
APPROVED BY:		

VERT. CONTROL: BM 12-04070, 1929 (NGVD29) - 1985 ADJUSTMENT
HORIZ. CONTROL: GPS; PID AE 1704, EPOCH 1991.35

SHEET TITLE: MECHANICAL ABBREVIATIONS, SYMBOLS AND NOTES

PROJECT: SIXTH STREET PARK, ARTS AND RIVER CONNECTIVITY IMPROVEMENTS (PARC)

ADDRESS: SIXTH STREET OVER THE LOS ANGELES RIVER

WORK ORDER NO. E700235D

FILE NO. --

DRAWING NO. M-001

SHEET 262 OF 295 SHEETS

7/8/2022 6:25:29 PM - C:\USERS\KEN.KULONIS\DESKTOP\PARC\CAD\SHEETFILES\M-001_ABBREVIATIONS_LEGEND_GENERALNOTES - TT.DWG - KULONIS, KEN

STAFF AND RESTROOM BULIDING SITE PLAN

THE CITY OF LOS ANGELES OR ITS OFFICERS OR AGENTS SHALL NOT BE RESPONSIBLE FOR THE ACCURACY OR COMPLETENESS OF ELECTRONIC COPIES OF THIS PLAN SHEET.

REVISION DATES (DESIGN STAGE ONLY)

Sheet Version 3.0

BUREAU OF ENGINEERING

ENGINEERING
CITY OF LOS ANGELES

NO. | REVISIONS: | DATE | BY:

BUILDING NO.

INDEX NO. **MF-300501**

REGISTERED PROFESSIONAL ENGINEER
KENNETH P. KULONIS
No. 27379
Exp. 6-30-2023
MECHANICAL
STATE OF CALIFORNIA

THIS PLAN WAS ELECTRONICALLY SIGNED AND STAMPED

BUREAU OF ENGINEERING
OFFICIAL RECORD

CITY OF LOS ANGELES DEPARTMENT OF PUBLIC WORKS

TED ALLEN, P.E.
CITY ENGINEER

DESIGN GROUP

ENGINEER:	KEN KULONIS	LIC. NO.	M27379
DESIGNED BY:	KEN KULONIS	DATE:	
DRAWN BY:	KEN KULONIS		
CHECKED BY:	JASON L. FUSSEL		
APPROVED BY:			

SHEET TITLE: MECHANICAL SITE PLAN - STAFF AND SHOP BUILDINGS

PROJECT: SIXTH STREET PARK, ARTS AND RIVER CONNECTIVITY IMPROVEMENTS (PARC)

ADDRESS: SIXTH STREET OVER THE LOS ANGELES RIVER

VERT. CONTROL: BM 12-04070, 1929 (NGVD29) - 1985 ADJUSTMENT
HORIZ. CONTROL: GPS, PID AE 1704, EPOCH 1991.35

PLANS PREPARED BY:
TETRA TECH, INC.
350 SOUTH GRAND AVENUE, SUITE 3310
LOS ANGELES, CALIFORNIA 90071
Phone: (213) 279-3283

WORK ORDER NO. E700235D
FILE NO. --
DRAWING NO. **M-100**
SHEET 263 OF 295 SHEETS

7/8/2022 6:26:58 PM - C:\USERS\KEN.KULONIS\DESKTOP\PARC\CAD\SHEETFILES\M-100_MECHANICAL SITE PLAN_STAFF AND RESTROOM BLDGS - TT.DWG - KULONIS, KEN

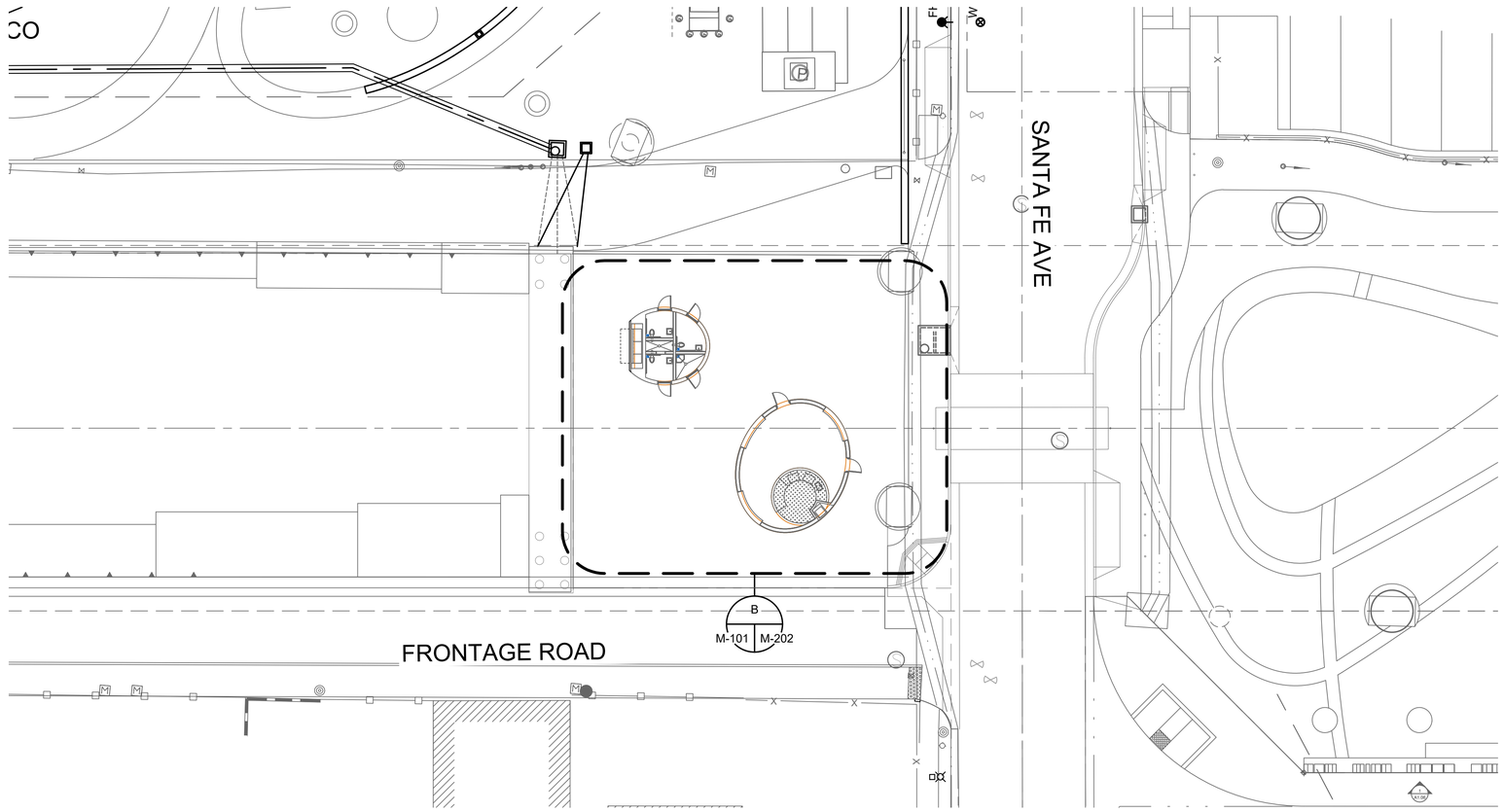

CAFE AND RESTROOM BULIDING SITE PLAN

0 8' 16' 32'
SCALE: 1/16" = 1'-0"

BUREAU OF ENGINEERING
OFFICIAL RECORD

THE CITY OF LOS ANGELES OR ITS OFFICERS OR AGENTS SHALL NOT BE RESPONSIBLE FOR THE ACCURACY OR COMPLETENESS OF ELECTRONIC COPIES OF THIS PLAN SHEET.

REVISION DATES (DESIGN STAGE ONLY)

Sheet Version 3.0

CITY OF LOS ANGELES DEPARTMENT OF PUBLIC WORKS

BUREAU OF ENGINEERING

ENGINEERING
CITY OF LOS ANGELES

NO.	REVISIONS:	DATE	BY:

BUILDING NO.

INDEX NO. MF-300501

REGISTERED PROFESSIONAL ENGINEER
KENNETH P. KULONIS
No. 27379
Exp. 6-30-2023
MECHANICAL
STATE OF CALIFORNIA

THIS PLAN WAS ELECTRONICALLY SIGNED AND STAMPED

TED ALLEN, P.E.
CITY ENGINEER
DESIGN GROUP
DATE:

ENGINEER:	KEN KULONIS	LIC. NO. M27379
DESIGNED BY:	KEN KULONIS	
DRAWN BY:	KEN KULONIS	
CHECKED BY:	JASON L. FUSSEL	
APPROVED BY:		

PLANS PREPARED BY:
TETRA TECH, INC.
350 SOUTH GRAND AVENUE, SUITE 3310
LOS ANGELES, CALIFORNIA 90071
Phone: (213) 279-0283

VERT. CONTROL: BM 12-04070, 1929 (NGVD29) - 1985 ADJUSTMENT
HORIZ. CONTROL: GPS, PID AE 1734, EPOCH 1991.35

SHEET TITLE: MECHANICAL SITE PLAN
RESTROOM AND CAFE

PROJECT: SIXTH STREET PARK, ARTS AND RIVER CONNECTIVITY IMPROVEMENTS (PARC)

ADDRESS: SIXTH STREET OVER THE LOS ANGELES RIVER

WORK ORDER NO. E700235D
FILE NO. -
DRAWING NO. M-101
SHEET 264 OF 295 SHEETS

7/8/2022 8:28:23 PM - C:\USERS\KEN.KULONIS\DESKTOP\PARC\CAD\SHEETFILES\M-101_MECHANICAL SITE PLAN_CAFE AND RESTROOM - TT DWG - KULONIS, KEN



STAFF AND RESTROOM BUILDING FLOOR PLAN

THE CITY OF LOS ANGELES OR ITS OFFICERS OR AGENTS SHALL NOT BE RESPONSIBLE FOR THE ACCURACY OR COMPLETENESS OF ELECTRONIC COPIES OF THIS PLAN SHEET.

REVISION DATES (DESIGN STAGE ONLY)

Sheet Version 3.0

BUREAU OF ENGINEERING

ENGINEERING
CITY OF LOS ANGELES

NO.	REVISIONS:	DATE:	BY:

BUILDING NO.

INDEX NO. MF-300501

THIS PLAN WAS ELECTRONICALLY SIGNED AND STAMPED.

REGISTERED PROFESSIONAL ENGINEER
KENNETH P. KULONIS
No. 27379
Exp. 6-30-2023
MECHANICAL
STATE OF CALIFORNIA

CITY OF LOS ANGELES DEPARTMENT OF PUBLIC WORKS

TED ALLEN, P.E.
CITY ENGINEER

		DATE:
ENGINEER:	KEN KULONIS	
DESIGNED BY:	KEN KULONIS	
DRAWN BY:	KEN KULONIS	
CHECKED BY:	JASON L. FUSSEL	
APPROVED BY:		

DESIGN GROUP
LIC. NO. M27379

VERT. CONTROL: BM 12-04070, 1929 (NGVD29) - 1985 ADJUSTMENT
HORIZ. CONTROL: GPS; PID AE 1704; EPOCH 1991.35

SHEET TITLE: MECHANICAL FLOOR PLANS
SHOP AND STAFF

PROJECT: SIXTH STREET PARK, ARTS AND RIVER CONNECTIVITY IMPROVEMENTS (PARC)

ADDRESS: SIXTH STREET OVER THE LOS ANGELES RIVER

PLANS PREPARED BY:
TETRA TECH, INC.
350 SOUTH GRAND AVENUE, SUITE 3310
LOS ANGELES, CALIFORNIA 90071
Phone: (213) 279-3283

WORK ORDER NO. E700235D
FILE NO. --
DRAWING NO. M-201
SHEET 265 OF 295 SHEETS

7/8/2022 6:30:09 PM - C:\USERS\KEN.KULONIS\DESKTOP\PARC\CAD\SHEETFILES\M-201_MECHANICAL FLOOR PLAN_STAFF AND RESTROOM BLDGS - TT.DWG - KULONIS, KEN

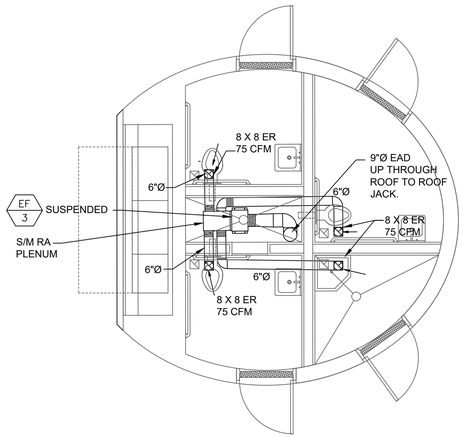

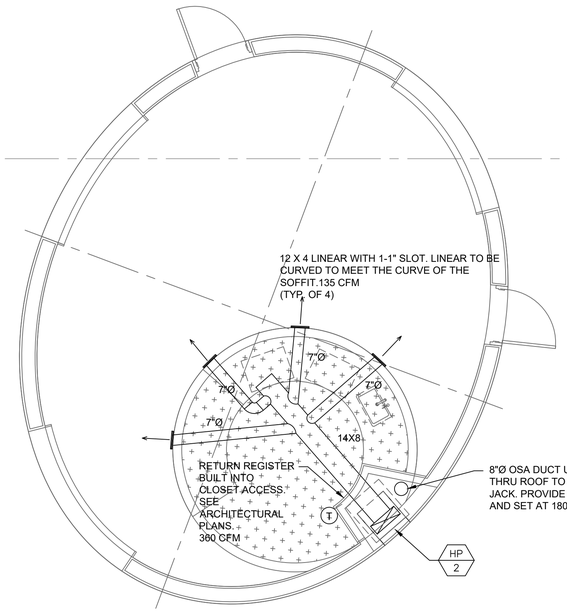

CAFE AND RESTROOM BUILDING FLOOR PLAN

SCALE: 1/4" = 1'-0"

THE CITY OF LOS ANGELES OR ITS OFFICERS OR AGENTS SHALL NOT BE RESPONSIBLE FOR THE ACCURACY OR COMPLETENESS OF ELECTRONIC COPIES OF THIS PLAN SHEET.

REVISION DATES
(DESIGN STAGE ONLY)

Sheet Version 3.0

CITY OF LOS ANGELES DEPARTMENT OF PUBLIC WORKS

BUREAU OF ENGINEERING

ENGINEERING
CITY OF LOS ANGELES

NO.	REVISIONS:	DATE	BY:

BUILDING NO.

INDEX NO. MF-300501

THIS PLAN WAS ELECTRONICALLY SIGNED AND STAMPED.

REGISTERED PROFESSIONAL ENGINEER
KENNETH P. KULONIS
No. 27379
Exp. 6-30-2023
MECHANICAL
STATE OF CALIFORNIA

CITY ENGINEER

TED ALLEN, P.E.

DESIGN GROUP		DATE:	
ENGINEER:	KEN KULONIS	LIC. NO.	M27379
DESIGNED BY:	KEN KULONIS		
DRAWN BY:	KEN KULONIS		
CHECKED BY:	JASON L. FUSSEL		
APPROVED BY:			

BUREAU OF ENGINEERING
OFFICIAL RECORD

PLANS PREPARED BY:

TETRA TECH, INC.
350 SOUTH GRAND AVENUE, SUITE 3310
LOS ANGELES, CALIFORNIA 90071
Phone: (213) 279-3283

VERT. CONTROL: BM 12-04070, 1929 (NGVD29) - 1985 ADJUSTMENT
HORIZ. CONTROL: GPS; PID AE 1704, EPOCH 1991.35

SHEET TITLE: MECHANICAL FLOOR PLAN
RESTROOM AND CAFE

PROJECT: SIXTH STREET PARK, ARTS AND RIVER
CONNECTIVITY IMPROVEMENTS (PARC)

ADDRESS: SIXTH STREET OVER THE
LOS ANGELES RIVER

WORK ORDER NO.
E700235D

FILE NO.
--

DRAWING NO.
M-202

SHEET 266 OF 295 SHEETS

7/8/2022 6:34:07 PM - C:\USERS\KEN.KULONIS\DESKTOP\PARC\CAD\SHEETFILES\M-202_MECHANICAL FLOOR PLAN_CAFE AND RESTROOM - TT.DWG - KULONIS, KEN

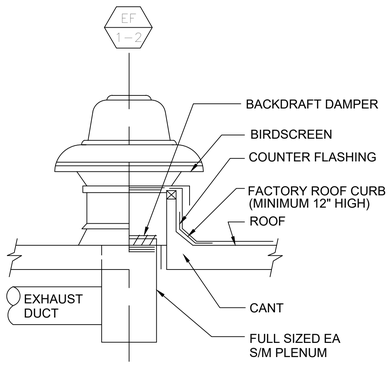

1 ROOF MOUNTED EXHAUST FAN DETAIL
VARIES | M501 SCALE: NONE

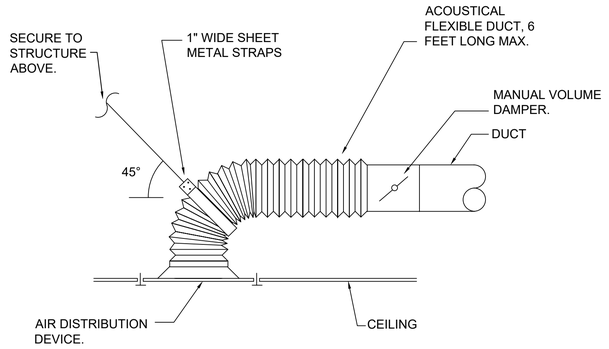

2 DIFFUSER/REGISTER DETAIL
VARIES | M501 NOT TO SCALE

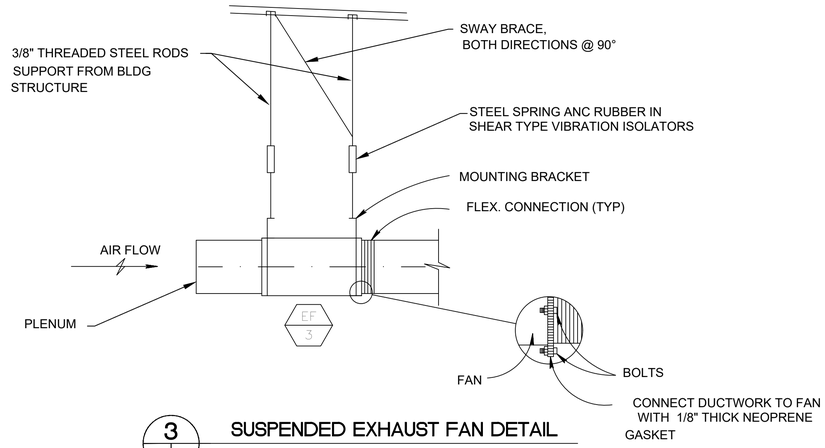

3 SUSPENDED EXHAUST FAN DETAIL
M202 | M501 NOT TO SCALE

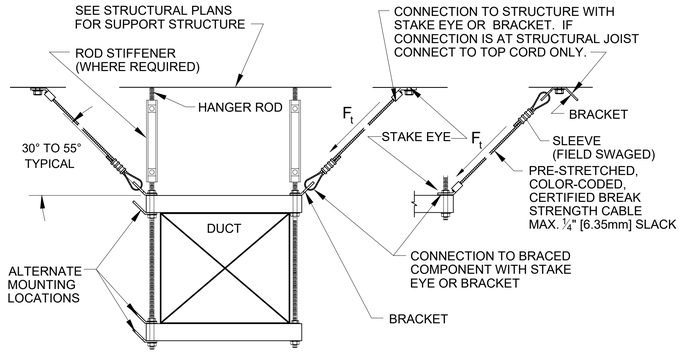

TYPICAL SEISMIC CABLE LAYOUT FOR DUCT

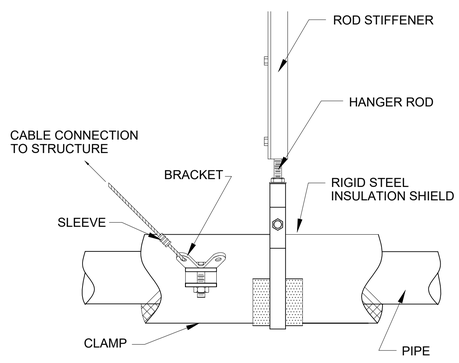

TYPICAL SEISMIC CABLE LAYOUT
LONGITUDINAL/TRANSVERSE PIPE RESTRAINT

NOTE:

1. CONTRACTOR IS RESPONSIBLE FOR DETERMINING LAYOUT, SPACING, AND ATTACHMENTS.

4 SEISMIC RESTRIANT DETAILS
VARIES | M502 NOT TO SCALE

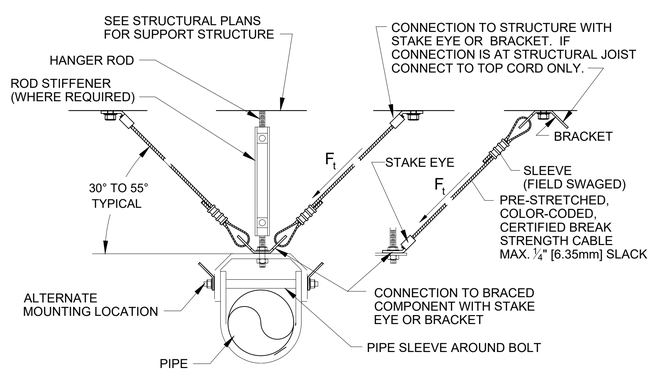

TYPICAL SEISMIC CABLE LAYOUT TRANSVERSE PIPE RESTRAINT

BUREAU OF ENGINEERING
OFFICIAL RECORD

PLANS PREPARED BY:
TETRA TECH, INC.
350 SOUTH GRAND AVENUE, SUITE 3310
LOS ANGELES, CALIFORNIA 90071
Phone: (213) 279-3283

CITY OF LOS ANGELES DEPARTMENT OF PUBLIC WORKS
BUREAU OF ENGINEERING

ENGINEERING
CITY OF LOS ANGELES

NO.	REVISIONS:	DATE:	BY:

BUILDING NO.

INDEX NO. MF-300501

THIS PLAN WAS ELECTRONICALLY SIGNED AND STAMPED.

REGISTERED PROFESSIONAL ENGINEER
KENNETH P. KULONIS
No. 27379
Exp. 6-30-2023
MECHANICAL
STATE OF CALIFORNIA

CITY ENGINEER: TED ALLEN, P.E.
DATE:
DESIGN GROUP
ENGINEER: KEN KULONIS LIC. NO. M27379
DESIGNED BY: KEN KULONIS
DRAWN BY: KEN KULONIS
CHECKED BY: JASON L FUSSEL
APPROVED BY:

VERT. CONTROL: BM 12-04070, 1929 (NGVD29) - 1985 ADJUSTMENT
HORIZ. CONTROL: GPS; PID AE 1704, EPOCH 1991.35

SHEET TITLE: MECHANICAL DETAILS

PROJECT: SIXTH STREET PARK, ARTS AND RIVER CONNECTIVITY IMPROVEMENTS (PARC)

ADDRESS: SIXTH STREET OVER THE LOS ANGELES RIVER

WORK ORDER NO. E700235D
FILE NO. --
DRAWING NO. M-501
SHEET 267 OF 295 SHEETS

7/8/2022 6:35:53 PM - C:\USERS\KEN.KULONIS\DESKTOP\PARC\CAD\SHEETFILES\M-501_MECHANICAL DETAILS - TI.DWG - KULONIS, KEN

REVISION DATES (DESIGN STAGE ONLY)

THE CITY OF LOS ANGELES OR ITS OFFICERS OR AGENTS SHALL NOT BE RESPONSIBLE FOR THE ACCURACY OR COMPLETENESS OF ELECTRONIC COPIES OF THIS PLAN SHEET.

Sheet Version 3.0

PACKAGED HEAT PUMP SCHEDULE

MARK	MANUF.	MODEL NUMBER	SUPPLY FAN				SERVICE	COOLING DATA			HEATING DATA		AUX HEAT	ELECTRICAL					OPER. WEIGHT	REMARKS
			CFM	OSA	ESP	MOTOR HP		TOTAL CAP. MBH	SENS. CAP. MBH	SEER	TOTAL CAP. MBH	COP	KW	VOLT	PH	HZ	MCA	MAX. FUSE		
HP 1	GOODMAN	GPH1424H41D	720	225	0.5	1/2	STAFF	24.0	17.8	14.5	22.8	3.8	8	208	1	60	57	60	315	PROVIDE OVERFLOW CONDENSATE SWITCH, MFR ROOF MOUNTING CURB, & SINGLE POINT KIT
HP 2	FRIEDRICH	VHA24K	540	180	0.3	-	CAFE	22.5	15.7	14.0	19.5	3.3	5.0	208	1	60	29	30	225	PROVIDE OVERFLOW CONDENSATE SWITCH, SINGLE POINT KIT

UNIT HEATER SCHEDULE

SYM.	MFGR MODEL	TYPE	LOCATION FLOOR AREA	SERVICE	CFM	CAPACITY			ELECTRICAL		OPER. WT. (LBS)	REMARKS
						INPUT (MBH)	OUTPUT (MBH)	KW	V-PH	FLA		
EUH 1	REZNOR EGHB-3	ELECTRIC	ELECTRIC ROOM SUSPENDED	GENERAL HEAT	510	–	10.2	3	208-1	–	45	
EUH 2	REZNOR EGHB-3	ELECTRIC	ELECTRIC ROOM SUSPENDED	GENERAL HEAT	510	–	10.2	3	208-1	–	45	

EXHAUST FAN SCHEDULE

SYM.	MFGR MODEL	TYPE	LOCATION FLOOR AREA	SERVICE	FLOW (CFM)	S.P. ("wc)	RPM	VOLTAGE	FAN (HP)	OPER. WT. (LBS)	REMARKS
EF 1	GREENHECK G-080-VG	ROOF MOUNTED	STAFF AREA ROOF	TOILET ROOM EXHAUST	225	0.3	1275	120-1	1/10	27	PROVIDE MANUFACTURERS ROOF CURB, BACKDRAFT DAMPER, AND DISCONNECT SWITCH
EF 2	GREENHECK GB-101-4	ROOF MOUNTED	SHOP AREA ROOF	TOILET ROOM EXHAUST	825	0.5	1329	120-1	1/4	56	PROVIDE MANUFACTURERS ROOF CURB, BACKDRAFT DAMPER, AND DISCONNECT SWITCH
EF 3	GREENHECK CSP-A390-VG	INLINE SUSPENDED	RESTROOM BLDG.	TOILET ROOM EXHAUST	300	0.3	995	120-1	55 WATTS	24	PROVIDE SPRING ISOLATION, BACKDRAFT DAMPER, AND DISCONNECT SWITCH

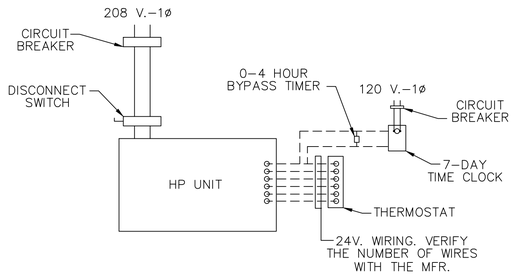

HEAT PUMP CONTROL DIAGRAM

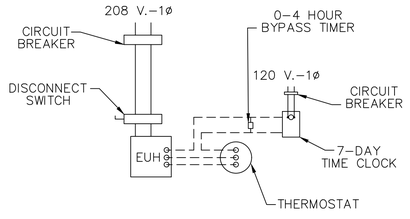

ELECTRIC UNIT HEATER CONTROL DIAGRAM

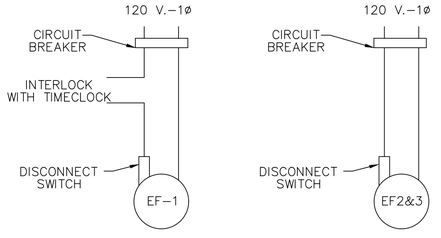

EXHAUST FAN CONTROL DIAGRAM

BUREAU OF ENGINEERING
OFFICIAL RECORD

THE CITY OF LOS ANGELES OR ITS OFFICERS OR AGENTS SHALL NOT BE RESPONSIBLE FOR THE ACCURACY OR COMPLETENESS OF ELECTRONIC COPIES OF THIS PLAN SHEET.

REVISION DATES (DESIGN STAGE ONLY)

Sheet Version 3.0

BUREAU OF ENGINEERING
NO. | REVISIONS: | DATE | BY:

BUILDING NO.

INDEX NO. MF-300501

REGISTERED PROFESSIONAL ENGINEER KENNETH P. KULONIS No. 27379 Exp. 6-30-2023 MECHANICAL STATE OF CALIFORNIA

THIS PLAN WAS ELECTRONICALLY SIGNED AND STAMPED.

ENGINEERING
CITY OF LOS ANGELES

CITY OF LOS ANGELES DEPARTMENT OF PUBLIC WORKS

CITY ENGINEER: TED ALLEN, P.E.
DATE:
LIC. NO. M27379

ENGINEER: KEN KULONIS
DESIGN GROUP
DESIGNED BY: KEN KULONIS
DRAWN BY: KEN KULONIS
CHECKED BY: JASON L. FUSSEL
APPROVED BY:

SHEET TITLE: MECHANICAL SCHEDULES

PROJECT: SIXTH STREET PARK, ARTS AND RIVER CONNECTIVITY IMPROVEMENTS (PARC)

ADDRESS: SIXTH STREET OVER THE LOS ANGELES RIVER

VERT. CONTROL: BM 12-04070, 1929 (NGVD29) - 1985 ADJUSTMENT
HORIZ. CONTROL: GPS; PID AE 1704, EPOCH 1991.35

PLANS PREPARED BY:
TETRA TECH, INC.
350 SOUTH GRAND AVENUE, SUITE 3310
LOS ANGELES, CALIFORNIA 90071
Phone: (213) 279-3283

WORK ORDER NO. E700235D
FILE NO. --
DRAWING NO. M-601
SHEET 268 OF 295 SHEETS

7/8/2022 6:37:11 PM - C:\USERS\KEN.KULONIS\DESKTOP\PARC\CAD\SHEETFILES\M-601_MECHANICAL SCHEDULES - TT.DWG - KULONIS, KEN

STATE OF CALIFORNIA
Envelope Component Approach
NRCC-ENV-E — CALIFORNIA ENERGY COMMISSION

CERTIFICATE OF COMPLIANCE		NRCC-ENV-E
Project Name:	PARC Staff Building	Report Page: (Page 1 of 8)
Project Address:		Date Prepared: 2022-06-27T17:05:34-04:00

This document is used to demonstrate compliance with mandatory requirements in §110.8(g) and §120.7(b) for newly constructed buildings, and §141.0(b)1 for alterations, related to roof, wall and floor assemblies. It is also used to demonstrate compliance with prescriptive requirements in §140.3 for newly constructed buildings, and §141.0 for additions and alterations, related to roof, wall, floor, door, fenestration and daylighting requirements.

A. GENERAL INFORMATION

01	Project Location (city)	Los Angeles	05	# of Stories (Habitable Above Grade)	0
02	Zipcode	90023	06	Total Conditioned Floor Area (ft²)	1650
03	Climate Zone	9	07	Total Unconditioned Floor Area (ft²)	200
04	Occupancy Types Within Project: (select all that apply): If one occupancy constitutes >= 80% of the conditioned floor area, the entire building envelope may be designed to comply with the provisions of that occupancy per §100.0(f).		08	☐ Project includes unconditioned enclosed space(s) > 5,000 ft² under a roof with a ceiling height of at least 15 ft.[1]	

☒ All Nonresidential, including Relocatable Public School Building certified for use in one climate zone Occupancy: A / B / E / F / H / M / S / U ☐ Relocatable Public School Building for use in all climate zones Occupancy: E ☐ High-Rise Residential Occupancy: R-2 / R-3 ☐ Hotel/Motel Guest Rooms Occupancy: R-1

[1] *FOOTNOTE: Enclosed spaces > 5,000 ft² directly under roof with ceiling height > 15 ft in climate zones 2 through 15 are required to meet the minimum daylighting requirements defined in §140.3(c). Compliance with §140.3(c) is documented in Table L. This is the only prescriptive requirement which applies to unconditioned spaces.*

B. PROJECT SCOPE

This table specifies project envelope components within the permit application demonstrating compliance using the prescriptive paths outlined in §140.3, and §141.0(a)1 and §141.0(b)1 and 2 for additions and alterations.

My project consists of (check all that apply)	Component Types					
01	02					
☒ New Construction or Newly Conditioned Space	☒	Roof	☒	Walls	☒	Exterior Doors
☐ One or more enclosed spaces > 5,000 ft² directly under roof with ceiling height > 15ft			☐	Floors	☒	Fenestration/ Glazed Doors[1]
☐ Addition of conditioned space	☐	Roof	☐	Walls	☐	Exterior Doors
☐ One or more enclosed spaces > 5,000 ft² directly under roof with ceiling height > 15ft			☐	Floors	☐	Fenestration/ Glazed Doors[1]
☐ Alteration of conditioned space	☐	Roof Assembly	☐	Walls		Exterior Doors NA. for Alts.
☐ One or more enclosed spaces > 5,000 ft² directly under roof with ceiling height > 15ft and lighting system installed for the first time	☐	Roofing Material	☐	Floors	☐	Fenestration/ Glazed Doors

[1]*FOOTNOTE: Doors that are more than 25% glass in area are considered Glazed Doors and should be documented on table K with fenestration.*

Registration Number: | Registration Date/Time: | Registration Provider: Energy Code Ace

CA Building Energy Efficiency Standards - 2019 Nonresidential Compliance | Report Version: 2019.1.003 Schema Version: rev 20200601 | Report Generated: 2022-06-27 14:05:51

STATE OF CALIFORNIA
Envelope Component Approach
NRCC-ENV-E — CALIFORNIA ENERGY COMMISSION

CERTIFICATE OF COMPLIANCE		NRCC-ENV-E
Project Name:	PARC Staff Building	Report Page: (Page 2 of 8)
Project Address:		Date Prepared: 2022-06-27T17:05:34-04:00

C. COMPLIANCE RESULTS

Results in this table are automatically calculated from data input and calculations in Tables F through L. Note: If any cell on this table says "COMPLIES with Exceptional Conditions" refer to Table D. Exceptional Conditions for guidance or see the applicable table referenced below.

Opaque Envelope Components					Fenestration	Daylighting Spaces > 5,000ft²	Compliance Results
Roof Assembly	Roofing Materials	Walls	Floors	Doors			
01	02	03	04	05	06	07	08
(See Table F)	(See Table G)	(See Table H)	(See Table I)	(See Table J)	(See Table K)	(See Table L)	COMPLIES with Exceptional Conditions
Yes	Yes	Yes		Yes	Yes		

D. EXCEPTIONAL CONDITIONS

This table is auto-filled with uneditable comments because of selections made or data entered in tables throughout the form.

Table H indicates an area weighted average is being used for one or more wall assemblies to demonstrate compliance. Area-weighted average tables are included at the bottom of Table H.

E. ADDITIONAL REMARKS

This table includes remarks made by the permit applicant to the Authority Having Jurisdiction.

F. ROOF ASSEMBLY SCHEDULE

This table demonstrates compliance for prescriptive roof assembly requirements in §140.3(a)1B for new construction or additions, or §141.0(b)2Biii for alterations,

01 Indicate roof types included in the project: ☐ Framed ☐ SIPS ☒ Span Deck & Concrete ☐ Metal Panels ☐ Metal Building

Framed Roof Assemblies

Structural Insulated Panels (SIPS) Roof/Ceiling Assemblies

Span Deck And Concrete Roof Assemblies

01 ☐ Include Span Deck and Concrete Roof Assemblies in Area-Weighted Average U-factor Calculation[1]

02	03	04	05	06
Tag/Plan Detail ID	Name/Description	Status	Exception to Roof Insulation Requirements in §141.0(b)2Biii (Alts. Only)	Occupancy Type
Detail 2-AE6-01	Roof Hatch Section	New		Nonresidential/ Relocatable 1 CZ

Registration Number: | Registration Date/Time: | Registration Provider: Energy Code Ace

CA Building Energy Efficiency Standards - 2019 Nonresidential Compliance | Report Version: 2019.1.003 Schema Version: rev 20200601 | Report Generated: 2022-06-27 14:05:51

STATE OF CALIFORNIA
Envelope Component Approach
NRCC-ENV-E — CALIFORNIA ENERGY COMMISSION

CERTIFICATE OF COMPLIANCE		NRCC-ENV-E
Project Name:	PARC Staff Building	Report Page: (Page 3 of 8)
Project Address:		Date Prepared: 2022-06-27T17:05:34-04:00

F. ROOF ASSEMBLY SCHEDULE

07	08	09	10	11	12	13	14		15
Tag/Plan Detail ID	How Design U-factor was determined	Fireproofing	Concrete Topping Thickness (in.)	Continuous Insulation per Design	Thermal Performance Unit	Required Thermal Performance	U-factor per Design		Net Area[3] ft²
Detail 2-AE6-01	JA4 Tables	No	4 in.	R-30	U-factor	0.034	per JA4	0.031	
							per Software/ Other		

[1]*FOOTNOTES: If any individual assembly is non-compliant, assemblies may show compliance using an area-weighted calculation. Metal building roofs may not be combined with other roof types. The area-weighted compliance option is not available for alterations demonstrating compliance with R-values in Table 141.0-C.*

[2] *If "R-value" is shown in cell 13 as the Thermal Performance Unit, the R-value shown here is for continuous insulation per Table 141.0-C.*

[3] *Roof area minus any fenestration/ skylight area*

Metal Panel Assemblies

Metal Building Roof Assemblies

Area-Weighted Average U-factor Compliance Calculation for Framed/ SIPs/ Span Deck & Concrete/ Metal Panel Roofs

Area-Weighted Average U-factor Compliance Calculation for Metal Building Roof

G. RATED ROOFING MATERIAL (COOL ROOF)

This table demonstrates compliance with prescriptive roof material requirements in §140.3(a)1A for new construction or additions, or §141.0(b)2B for alterations.

01	02	03	04	05	06	07	08		09		10
Tag/Plan Detail ID	Name/Description	Status	Occupancy Type	Roof Slope	Roof Material	Compliance Method	Required Minimum Material Performance		Designed Material Performance		U-factor of Assembly
4-AE-6-01	Roof Exhaust Section	New	Nonresidential/ Relocatable 1 CZ	<2:12 (Low)	Polymer or Composite	Solar Reflectance (Initial)/ Emittance	Reflectance	0.63	Reflectance	0.64	
							Emittance	0.75	Emittance	0.75	
							SRI		SRI		

Registration Number: | Registration Date/Time: | Registration Provider: Energy Code Ace

CA Building Energy Efficiency Standards - 2019 Nonresidential Compliance | Report Version: 2019.1.003 Schema Version: rev 20200601 | Report Generated: 2022-06-27 14:05:51

STATE OF CALIFORNIA
Envelope Component Approach
NRCC-ENV-E — CALIFORNIA ENERGY COMMISSION

CERTIFICATE OF COMPLIANCE		NRCC-ENV-E
Project Name:	PARC Staff Building	Report Page: (Page 4 of 8)
Project Address:		Date Prepared: 2022-06-27T17:05:34-04:00

H. WALL ASSEMBLY SCHEDULE

This table demonstrates compliance with prescriptive wall assembly requirements in §140.3(a)2 and §140.3(a)3 for new constructions or additions, or mandatory wall assembly requirements in §141.0(b)1B for alterations.

01 Indicate wall types included in the project:[1] ☐ Framed ☒ Mass (new only) ☐ Concrete Sandwich Panel (new only) ☐ SIPS ☐ ICF (new only) ☐ Metal Panels ☐ Metal Building ☐ Spandrel/ Curtain Wall ☐ Straw Bale ☐ Log Home (new only)

[1] *FOOTNOTES: Wall types indicated above as "(new only)" do not have Title 24, Part 6 requirements for alterations. New construction and additions do have requirements and should be clicked above and compliance demonstrated within this table.*

Mass Walls (new walls only)

01 ☐ Calculate Area-Weighted Average U-factor for Mass Walls[1]

02	03	04	05	06	07	08	09	10	11		12
Tag/Plan Detail ID	Occupancy Type	How Design U-factor was determined	Mass Information			Additional Insulation Information		Maximum U-factor Allowed[2]	U-factor per Design		Net Area[3] ft²
			Mass Material	Fill Options	Thickness (in)	Frame Material & Thickness	Cavity Insulation per Design		per JA4	0.63	
Detail 1-AE4-02	Nonresidential/ Relocatable 1 CZ	JA4 Tables	Concrete	Solid Unit	12 in			0.6899	per Software/ Other		

[1]*FOOTNOTES: If any individual assembly is non-compliant, assemblies may show compliance using an area-weighted calculation. Mass walls are combined with concrete sandwich panel, log and ICF wall types. Mass walls must meet mandatory requirements in §120.7(b), but may area-weight to comply with prescriptive requirements in Table 140.3 for new construction.*

[2] *Mass walls are defined as "light" or "heavy" depending on their Heat Capacity. Heat Capacity is determined in Tables 4.3.5 and 4.3.6 in Joint Appendix 4. Walls with Heat Capacity of 15 or greater are "heavy" while walls with Heat Capacity from 7 to less than 15 are "light". Walls with heat capacity less than 7 would be categorized as "Wood framed and Other" for compliance purposes.*

[3] *Wall area minus any fenestration area*

I. FLOOR ASSEMBLY SCHEDULE

This section does not apply to this project.

Registration Number: | Registration Date/Time: | Registration Provider: Energy Code Ace

CA Building Energy Efficiency Standards - 2019 Nonresidential Compliance | Report Version: 2019.1.003 Schema Version: rev 20200601 | Report Generated: 2022-06-27 14:05:51

BUREAU OF ENGINEERING — OFFICIAL RECORD

THE CITY OF LOS ANGELES OR ITS OFFICERS OR AGENTS SHALL NOT BE RESPONSIBLE FOR THE ACCURACY OR COMPLETENESS OF ELECTRONIC COPIES OF THIS PLAN SHEET.

REVISION DATES (DESIGN STAGE ONLY)

Sheet Version 3.0

BUREAU OF ENGINEERING — CITY OF LOS ANGELES ENGINEERING

DATE: BY: NO. REVISIONS:

BUILDING NO.

INDEX NO. MF-300501

REGISTERED PROFESSIONAL ENGINEER KENNETH P. KULONIS No. 27379 Exp. 6-30-2023 MECHANICAL STATE OF CALIFORNIA

THIS PLAN WAS ELECTRONICALLY SIGNED AND STAMPED

BUREAU OF PUBLIC WORKS — CITY OF LOS ANGELES DEPARTMENT OF PUBLIC WORKS

CITY ENGINEER: TED ALLEN, P.E. DATE:

DESIGN SUPV: KEN KULONIS LIC. NO. M27379

ENGINEER: KEN KULONIS

DESIGNED BY: KEN KULONIS

DRAWN BY: KEN KULONIS

CHECKED BY: JASON L. FUSSEL

APPROVED BY:

VERT. CONTROL: BM 12-04070, 1929 (NGVD29) - 1985 ADJUSTMENT

HORIZ. CONTROL: GPS; PID AE 1704, EPOCH 1991.35

SHEET TITLE: TITLE 24 FORMS-STAFF BLDG.

PROJECT: SIXTH STREET PARK, ARTS AND RIVER CONNECTIVITY IMPROVEMENTS (PARC)

ADDRESS: SIXTH STREET OVER THE LOS ANGELES RIVER

PLANS PREPARED BY: TETRA TECH, INC. 350 SOUTH GRAND AVENUE, SUITE 3310 LOS ANGELES, CALIFORNIA 90071 Phone: (213) 279-3283

WORK ORDER NO. E700235D

FILE NO. --

DRAWING NO. M-800

SHEET 269 OF 295 SHEETS

7/8/2022 6:38:04 PM - C:\USERS\KEN.KULONIS\DESKTOP\PARC\CAD\SHEETFILES\M-800_TITLE 24 FORMS-STAFF-ENVELOPE.DWG - KULONIS, KEN

STATE OF CALIFORNIA
Envelope Component Approach
NRCC-ENV-E — CALIFORNIA ENERGY COMMISSION

CERTIFICATE OF COMPLIANCE			**NRCC-ENV-E**
Project Name:	PARC Staff Building	**Report Page:**	**(Page 5 of 8)**
Project Address:		**Date Prepared:**	2022-06-27T17:05:34-04:00

J. EXTERIOR DOOR SCHEDULE

This table demonstrates compliance with prescriptive exterior door requirements in §140.3(a)7 for new construction or additions. Doors which are being replaced (alterations) do not need to be documented in this table because there are no Title 24, Part 6 requirements that apply. Exterior doors separate conditioned space from unconditioned space or from ambient air. Doors that are more than 25% glass in area are considered Glazed Doors and should be documented on Table K with fenestration per Table B.

01	02	03	04	05	06	07	
Tag/Plan Detail ID	Name/Description	Occupancy Type	Door Type	Door Insulation	Maximum Allowed U-factor	U-factor per Design	
Type C doors	3/AE5-04	Nonresidential/ Relocatable 1 CZ	Swinging	Insulated metal swing doors	0.7	per JA4	0.5
Type D door	3/AE5-04	Nonresidential/ Relocatable 1 CZ	Non-swinging	Insulated single layer metal sectional doors with EPS	1.45	per JA4	0.179

K. FENESTRATION AND GLAZED DOOR SCHEDULE

This table demonstrates compliance with prescriptive fenestration requirements in §140.3(a)5 for new constructions or additions, or §140.1(b)2A for alterations. Exterior doors that are more than one-half glass in area are considered Glazed Doors and should be documented on this table with fenestration.

01	Indicate fenestration types included in the project:[1]	☐ Vertical (alterations)	☒ Vertical (new)	☐ Skylights	☐ Glazed Doors (new only)

[1] FOOTNOTES: Fenestration types indicated above as "(new only)" do not have Title 24, Part 6 requirements for alterations. New construction and additions do have requirements and should be clicked above and compliance demonstrated within this table.

Vertical Fenestration and Glazed Doors- Total Building & West Facing Area (New Construction & Additions Only)

01	02	03	04	05
Elevation Item Tag/ Description	Orientation (Azimuth)[1]	Gross Exterior Wall Area[2]	Display Perimeter Length[2]	Vertical Fenestration Area per Design[3]
1/AE5-04	North Facing	310	0	34
1/AE5-04	South Facing	310	0	49

06	Maximum Allowed Vertical Fenestration (ft^2)- All Orientations	248	07	Total Vertical Fenestration (ft^2) per design- All Orientations	83
08	Maximum Allowed Vertical Fenestration (ft^2)- West Facing	0	09	Total Vertical Fenestration (ft^2) per design- West Facing	0

[1] FOOTNOTES: Orientation between 226 deg and 315 deg are considered "West Facing". A diagram has been provided in the Nonresidential Compliance Manual for visual reference.

[2] Do not include demising walls per §140.3(a)5 .

[3] Includes glazed door fenestration area .

Registration Number: | Registration Date/Time: | Registration Provider: Energy Code Ace

CA Building Energy Efficiency Standards - 2019 Nonresidential Compliance | Report Version: 2019.1.003 Schema Version: rev 20200601 | Report Generated: 2022-06-27 14:05:51

STATE OF CALIFORNIA
Envelope Component Approach
NRCC-ENV-E — CALIFORNIA ENERGY COMMISSION

CERTIFICATE OF COMPLIANCE			**NRCC-ENV-E**
Project Name:	PARC Staff Building	**Report Page:**	**(Page 7 of 8)**
Project Address:		**Date Prepared:**	2022-06-27T17:05:34-04:00

N. DECLARATION OF REQUIRED CERTIFICATES OF ACCEPTANCE

Selections have been made based on information provided in previous tables of this document. If any selection needs to be changed, form user must provide an explanation in Table E Additional Remarks. These documents must be provided to the building inspector during construction and can be found online at https://www.energy.ca.gov/title24/2019standards/2019_compliance_documents/Nonresidential_Documents/NRCA/. Individuals who perform the field testing and verification work, and provide the information required for completion of the fenestration Certificate of Acceptance documentation are not required to be licensed professionals. However, the person who signs the Certificate of Acceptance document to certify compliance with the acceptance requirements shall be licensed as specified in Standards Section 10-103(a)4 and NA7.3.1

Form/Title	Systems/Spaces To Be Field Verified	Field Inspector	
		Pass	Fail
NRCA-ENV-02-F must be submitted for all new, added or altered fenestration.		☐	☐

Registration Number: | Registration Date/Time: | Registration Provider: Energy Code Ace

CA Building Energy Efficiency Standards - 2019 Nonresidential Compliance | Report Version: 2019.1.003 Schema Version: rev 20200601 | Report Generated: 2022-06-27 14:05:51

STATE OF CALIFORNIA
Envelope Component Approach
NRCC-ENV-E — CALIFORNIA ENERGY COMMISSION

CERTIFICATE OF COMPLIANCE			**NRCC-ENV-E**
Project Name:	PARC Staff Building	**Report Page:**	**(Page 6 of 8)**
Project Address:		**Date Prepared:**	2022-06-27T17:05:34-04:00

K. FENESTRATION AND GLAZED DOOR SCHEDULE

Vertical Fenestration And Glazed Doors- U-factor, Solar Heat Gain Coefficient (RSHGC/ SHGC), Visible Transmittance (VT)

01	☐	Calculate Area-Weighted Average U-factor for Vertical Fenestration and Glazed Doors[1]
02	☐	Calculate Area-Weighted Average (R)SHGC for Vertical Fenestration and Glazed Doors[1]
03	☐	Calculate Area-Weighted Average VT for Vertical Fenestration and Glazed Doors[1]

Vertical Fenestration And Glazed Doors- U-factor, Solar Heat Gain Coefficient (RSHGC/ SHGC), Visible Transmittance (VT)

04	05	06	07	08	09	10	11	12	13
Tag/Plan Detail ID	Fenestration Type	Occupancy & Status	(R)SHGC Compliance Method	VT Compliance Method	Calculation Method for Performance Values per Design[2]	Product Performance Unit	Required Product Performance	Product Performance per Design	Area ft^2

[1] FOOTNOTES: If any individual fenestration product is non-compliant, products may show compliance using an area-weighted calculation. Chromogenic glazing is not included in area-weighted calculations. Area-weighted calculation shown in separate area-weighted table below.

[2] The NA6 Default Calculation can only be used for buildings with less than 200ft^2 of site built glazing. If the project has greater than 200ft^2, the only options for determining fenestration values are NFRC Certification or the Default Tables in 110.6.

[3] Overhangs must extend past the left and right window the same distance as the depth of the overhang or greater to show an affect on the RSHGC. If an overhang does not meet this requirement, the affect of the overhang will be ignored.

[4] Projecting includes casement and awning windows.

L. DAYLIGHT IN LARGE ENCLOSED SPACES

This section does not apply to this project.

M. DECLARATION OF REQUIRED CERTIFICATES OF INSTALLATION

Selections have been made based on information provided in this document. If any selection have been changed by the permit applicant, an explanation should be included in Table E Additional Remarks. These documents must be provided to the building inspector during construction and can be found online at https://www.energy.ca.gov/title24/2019standards/2019_compliance_documents/Nonresidential_Documents/NRCI/

Form/Title	Field Inspector	
	Pass	Fail
NRCI-ENV-01-E - Must be submitted for all buildings	☐	☐

Registration Number: | Registration Date/Time: | Registration Provider: Energy Code Ace

CA Building Energy Efficiency Standards - 2019 Nonresidential Compliance | Report Version: 2019.1.003 Schema Version: rev 20200601 | Report Generated: 2022-06-27 14:05:51

STATE OF CALIFORNIA
Envelope Component Approach
NRCC-ENV-E — CALIFORNIA ENERGY COMMISSION

CERTIFICATE OF COMPLIANCE			**NRCC-ENV-E**
Project Name:	PARC Staff Building	**Report Page:**	**(Page 8 of 8)**
Project Address:		**Date Prepared:**	2022-06-27T17:05:34-04:00

DOCUMENTATION AUTHOR'S DECLARATION STATEMENT

I certify that this Certificate of Compliance documentation is accurate and complete.

Documentation Author Name: Ken Kulonis	Documentation Author Signature:
Company:	Signature Date:
Address:	CEA/ HERS Certification Identification (if applicable):
City/State/Zip:	Phone:

RESPONSIBLE PERSON'S DECLARATION STATEMENT

I certify the following under penalty of perjury, under the laws of the State of California:

1. The information provided on this Certificate of Compliance is true and correct.
2. I am eligible under Division 3 of the Business and Professions Code to accept responsibility for the building design or system design identified on this Certificate of Compliance (responsible designer)
3. The energy features and performance specifications, materials, components, and manufactured devices for the building design or system design identified on this Certificate of Compliance conform to the requirements of Title 24, Part 1 and Part 6 of the California Code of Regulations.
4. The building design features or system design features identified on this Certificate of Compliance are consistent with the information provided on other applicable compliance documents, worksheets, calculations, plans and specifications submitted to the enforcement agency for approval with this building permit application.
5. I will ensure that a completed signed copy of this Certificate of Compliance shall be made available with the building permit(s) issued for the building, and made available to the enforcement agency for all applicable inspections. I understand that a completed signed copy of this Certificate of Compliance is required to be included with the documentation the builder provides to the building owner at occupancy.

Responsible Designer Name:	Responsible Designer Signature:
Company:	Date Signed:
Address:	License:
City/State/Zip:	Phone:

Registration Number: | Registration Date/Time: | Registration Provider: Energy Code Ace

CA Building Energy Efficiency Standards - 2019 Nonresidential Compliance | Report Version: 2019.1.003 Schema Version: rev 20200601 | Report Generated: 2022-06-27 14:05:51

BUREAU OF ENGINEERING
OFFICIAL RECORD

ENGINEERING — CITY OF LOS ANGELES

BUREAU OF ENGINEERING • CITY OF LOS ANGELES • DEPARTMENT OF PUBLIC WORKS

REVISIONS: NO. | DATE | BY:

BUILDING NO.

INDEX NO. MF-300501

THIS PLAN WAS ELECTRONICALLY SIGNED AND STAMPED

REGISTERED PROFESSIONAL ENGINEER — KENNETH D. KULONIS — No. 27379 — Exp. 6-30-2023 — MECHANICAL — STATE OF CALIFORNIA

CITY ENGINEER — DATE:
TED ALLEN, P.E. — DESIGN GROUP
LIC. NO. M27379

ENGINEER: KEN KULONIS
DESIGNED BY: KEN KULONIS
DRAWN BY: KEN KULONIS
CHECKED BY: JASON L. FUSSEL
APPROVED BY:

PLANS PREPARED BY:
TETRA TECH, INC.
350 SOUTH GRAND AVENUE, SUITE 3310
LOS ANGELES, CALIFORNIA 90071
Phone: (213) 279-3283

VERT. CONTROL: BM 12-04070, 1929 (NGVD29) - 1985 ADJUSTMENT
HORIZ. CONTROL: GPS; PID AE 1704, EPOCH 1991.35

SHEET TITLE: TITLE 24 FORMS-STAFF BLDG.

PROJECT: SIXTH STREET PARK, ARTS AND RIVER CONNECTIVITY IMPROVEMENTS (PARC)

ADDRESS: SIXTH STREET OVER THE LOS ANGELES RIVER

WORK ORDER NO. E700235D
FILE NO. --
DRAWING NO. M-801
SHEET 270OF 295 SHEETS

7/8/2022 6:38:58 PM: C:\USERS\KEN.KULONIS\DESKTOP\PARC\CAD\SHEETFILES\M-801_TITLE 24 FORMS-STAFF-ENVELOPE.DWG - KULONIS, KEN

THE CITY OF LOS ANGELES OR ITS OFFICERS OR AGENTS SHALL NOT BE RESPONSIBLE FOR THE ACCURACY OR COMPLETENESS OF ELECTRONIC COPIES OF THIS PLAN SHEET.

REVISION DATES (DESIGN STAGE ONLY)

Sheet Version 3.0

Envelope Mandatory Measures:
110.6(a)1 MANUFACTURED FENESTRATION PRODUCT AND EXTERIOR DOOR AIR LEAKAGE MANUFACTURED FENESTRATION PRODUCTS AND EXTERIOR DOORS SHALL HAVE AIR INFILTRATION RATES CERTIFIED BY THE MANUFACTURER NOT EXCEEDING 0.3 CFM/FT^2 OF WINDOW AREA, 0.3 CFM/FT^2 OF DOOR AREA FOR NONRESIDENTIAL SINGLE DOORS (SWINGING AND SLIDING), AND 1.0 CFM/FT^2 FOR NONRESIDENTIAL DOUBLE DOORS (SWINGING), WHEN TESTED ACCORDING TO NFRC-400 OR ASTM E283 AT A PRESSURE DIFFERENTIAL OF 75 PASCALS.
110.6(a)2-4 MANUFACTURED FENESTRATION PRODUCT AND EXTERIOR DOOR RATING ALL MANUFACTURED FENESTRATION PRODUCTS AND EXTERIOR DOORS SHALL BE RATED FOR U-FACTOR ACCORDING TO NFRC PROCEDURES OR USE THE DEFAULT FENESTRATION VALUES IN TABLE 110.6-A AND DOOR VALUES IN JA4.5. ALL MANUFACTURED FENESTRATION PRODUCTS AND EXTERIOR DOORS SHALL BE RATED FOR SHGC ACCORDING TO NFRC PROCEDURES OR USE THE DEFAULT VALUES IN TABLE 110.6-B. ALL MANUFACTURED FENESTRATION PRODUCTS SHALL BE RATED FOR VT ACCORDING TO NFRC PROCEDURES.
110.7 EXTERIOR JOINTS ALL EXTERIOR JOINTS, PENETRATIONS, AND OPENINGS IN THE BUILDING ENVELOPE THAT ARE POTENTIAL SOURCES OF AIR LEAKAGE SHALL BE CAULKED, GASKETED, WEATHER-STRIPPED, OR OTHERWISE SEALED.
110.8(a) INSULATION CERTIFICATION INSTALLED INSULATION SHALL BE CERTIFIED BY THE DEPARTMENT OF CONSUMER AFFAIRS PER TITLE 24, PART 12, CHAPTERS 12-13, ARTICLE 3 "STANDARDS FOR INSULATING MATERIAL."
110.8(b) UREA FORMALDEHYDE INSULATION UREA FORMALDEHYDE INSULATION SHALL NOT BE INSTALLED UNLESS IN EXTERIOR SIDE WALLS WITH A FOUR-MIL-THICK PLASTIC SHEATHING VAPOR RETARDER INSTALLED BETWEEN THE UREA FORMALDEHYDE FOAM INSULATION AND THE INTERIOR SPACE.
110.8(c) INSULATING MATERIAL ALL INSULATING MATERIALS SHALL BE INSTALLED IN COMPLIANCE WITH THE FLAME SPREAD RATING AND SMOKE DENSITY REQUIREMENTS OF THE CALIFORNIA BUILDING CODE
110.8(i) RATED ROOFING PRODUCTS ALL ROOFING PRODUCTS SPECIFIED TO MEET AGED SOLAR REFLECTANCE/THERMAL EMITTANCE REQUIREMENTS SHALL BE CERTIFIED AND LABELED BY THE COOL ROOF RATING COUNCIL (CRRC) PER 10-113, OR USE DEFAULT VALUES IN 110.8(i) ASPHALT SHINGLES: 0.08/0.75 ALL OTHERS: 0.10/0.75 LIQUID APPLIED ROOF COATING FOR LOW SLOPE ROOF SHALL MEET COVERAGE, THICKNESS, AND PERFORMANCE VALUES PER 110.8-C
110.8(j) RADIANT BARRIER: RADIANT BARRIERS SHALL HAVE EMITTANCE <= .05, TESTED ACCCORDING WITH ASTM C1371 OR ASTM E408, CERTIFIED BY TITLE 24 PART 12

Envelope Mandatory Measures:
120.7(a) ROOF/CEILING INSULATION: WEIGHTED AVERAGE U-FACTOR OF ROOF ASSEMBLY SHALL BE: <=0.098 FOR METAL BUILDING <=0.075 FOR WOOD FRAMED AND OTHER TYPES INSULATION PLACEMENT SHALL BE PER §120.7(a)3 REQUIREMENTS: 120.7(a)3A SHALL BE IN DIRECT CONTACT WITH ROOF OR CEILING SEALED TO LIMIT INFILTRATION AND EXFILTRATION. 120.7(a)3B WHEN INSULTATION IS INSTALLED AT ROOF, FIXED VENTS SHALL NOT BE INSTALLED, UNLESS IT IS CONSIDERED ATTIC SPACE. 120.7(a)3C SHALL NOT BE INSTALLED ON SUSPENDED CEILINGS UNLESS ITS 2000 FT2 OR LESS AND THERE IS MORE THAN 12 FT BETWEEN ROOF AND CEILING. NOTE: ASSEMBLY OPTIONS CAN BE FOUND IN REFERENCE JOINT APPENDIX JA4
120.7(b)1-6 WALL INSULATION : OPAQUE PORTIONS OF WALLS SEPARATING CONDITIONED SPACE FROM UNCONDITIONED SPACES OR AMBIENT AIIR SHALL MEET THE FOLLOWING: METAL BUILDING: WEIGHTED AVERAGE U-FACTOR OF WALL ASSEMBLY <=0.113 METAL FRAMED: WEIGHTED AVERAGE U-FACTOR OF WALL ASSEMBLY <=0.151 LIGHT MASS WALLS: U-FACTOR FOR 6" OR GREATER HOLLOW CORE CONCRETE MASONRY UNIT <=0.440 HEAVY MASS WALLS: U-FACTOR FOR 8" OR GREATER HOLLOW CORE CONCRETE MASONRY UNIT <=0.690 WOOD FRAMED AND OTHER TYPES: WEIGHTED AVERAGE U-FACTOR OF WALL ASSEMBLY <=0.110 SPANDREL PANELS AND CURTAIN WALLS: WEIGHTED AVERAGE U-FACTOR OF WALL ASSEMBLY <=0.280 NOTE: ASSEMBLY OPTIONS CAN BE FOUND IN REFERENCE JOINT APPENDIX JA4
NOTE: CLOSER STUD SPACING AND/OR LOWER BATT R-VALUE AND/OR SMALLER STUDS REQUIRES CONTINUOUS INSULATION SHEATHING. *NOTE: INSULATION IS NOT REQUIRED FOR NON-FRAMED DEMISING WALLS.*
NOTE: INSULATION IS NOT REQUIRED FOR NON-FRAMED DEMISING WALLS.
NOTE: ASSEMBLY OPTIONS CAN BE FOUND IN REFERENCE JOINT APPENDIX JA4

BUREAU OF ENGINEERING
OFFICIAL RECORD

THE CITY OF LOS ANGELES OR ITS OFFICERS OR AGENTS SHALL NOT BE RESPONSIBLE FOR THE ACCURACY OR COMPLETENESS OF ELECTRONIC COPIES OF THIS PLAN SHEET.

REVISION DATES (DESIGN STAGE ONLY)

Sheet Version 3.0

PLANS PREPARED BY:
TETRA TECH, INC.
350 SOUTH GRAND AVENUE, SUITE 3310
LOS ANGELES, CALIFORNIA 90071
Phone: (213) 279-3283

CITY OF LOS ANGELES DEPARTMENT OF PUBLIC WORKS
BUREAU OF ENGINEERING

ENGINEERING
CITY OF LOS ANGELES

NO. | REVISIONS: | DATE | BY:

BUILDING NO.

INDEX NO. MF-300501

REGISTERED PROFESSIONAL ENGINEER
KENNETH P. KULONIS
No. 27379
Exp. 6-30-2023
MECHANICAL
STATE OF CALIFORNIA

THIS PLAN WAS ELECTRONICALLY SIGNED AND STAMPED

CITY ENGINEER
DATE:
LIC. NO. M27379

TED ALLEN, P.E.
DESIGN GROUP

ENGINEER: KEN KULONIS
DESIGNED BY: KEN KULONIS
DRAWN BY: KEN KULONIS
CHECKED BY: JASON L. FUSSEL
APPROVED BY:

VERT. CONTROL: BM 12-04070, 1929 (NGVD29) - 1985 ADJUSTMENT
HORIZ. CONTROL: GPS; PID AE 1704; EPOCH 1991.35

SHEET TITLE: TITLE 24 FORMS-STAFF BLDG.-MM

PROJECT: SIXTH STREET PARK, ARTS AND RIVER CONNECTIVITY IMPROVEMENTS (PARC)

ADDRESS: SIXTH STREET OVER THE LOS ANGELES RIVER

WORK ORDER NO. E700235D
FILE NO. --
DRAWING NO. M-802
SHEET 271 OF 295 SHEETS

7/8/2022 6:40:17 PM - C:\USERS\KEN.KULONIS\DESKTOP\PARC\CAD\SHEETFILES\M-802_TITLE 24 FORMS-STAFF-ENVE MM.DWG - KULONIS, KEN

STATE OF CALIFORNIA
Mechanical Systems
NRCC-MCH-E

CALIFORNIA ENERGY COMMISSION

CERTIFICATE OF COMPLIANCE		NRCC-MCH-E
This document is used to demonstrate compliance for mechanical systems that are within the scope of the permit application and are demonstrating compliance using the prescriptive path outlined in §140.4, or §141.0(b)2 for alterations.		
Project Name:	PARC Staff Building	**Report Page:** (Page 1 of 8)
Project Address:		**Date Prepared:** 2022-06-27T17:38:57-04:00

A. GENERAL INFORMATION

01	Project Location (city)	Los Angeles	04	Total Conditioned Floor Area	1650
02	Climate Zone	9	05	Total Unconditioned Floor Area	200
03	Occupancy Types Within Project:		06	# of Stories (Habitable Above Grade)	1
☒ Office (B)	☐ Retail (M)		☐ Non-refrigerated Warehouse (S)		
☐ Hotel/ Motel Guest Rooms (R-1)	☐ School (E)		☐ Healthcare Facility (I)		
☐ High-Rise Residential (R-2/R-3)	☐ Relocatable Class Bldg (E)		☐ Other (write in)		

B. PROJECT SCOPE

This table includes mechanical systems or components that are within the scope of the permit application and are demonstrating compliance using the prescriptive path outlined in §140.4, or §141.0(b)2 for alterations.

01	02	03
Air System(s)	Wet System Components	Dry System Components
☒ Heating Air System	☐ Water Economizer	☐ Air Economizer
☒ Cooling Air System	☐ Pumps	☐ Electric Resistance Heat
Mechanical Controls	☐ System Piping	☐ Fan Systems
☐ Mechanical Controls (existing to remain, altered or new)	☐ Cooling Towers	☐ Ductwork (existing to remain, altered or new)
	☐ Chillers	☒ Ventilation
	☐ Boilers	☐ Zonal Systems/ Terminal Boxes

Registration Number:

CA Building Energy Efficiency Standards - 2019 Nonresidential Compliance

Registration Date/Time:

Report Version: 2019.1.003
Schema Version: rev 20200601

Registration Provider: Energy Code Ace

Report Generated: 2022-06-27 14:39:13

STATE OF CALIFORNIA
Mechanical Systems
NRCC-MCH-E

CALIFORNIA ENERGY COMMISSION

CERTIFICATE OF COMPLIANCE		NRCC-MCH-E
Project Name:	PARC Staff Building	**Report Page:** (Page 3 of 8)
Project Address:		**Date Prepared:** 2022-06-27T17:38:57-04:00

F. HVAC SYSTEM SUMMARY (DRY & WET SYSTEMS)

This table is used to demonstrate compliance for mechanical equipment with mandatory requirements found in §110.1 and §110.2(a) and prescriptive requirements found in §140.4(a), §140.4(b) and §140.4(k) or §141.0(b)2 for alterations.

Dry System Equipment Sizing (includes air conditioners, condensers, heat pumps, VRF, furnaces and unit heaters)

01	02	03	04	05	06	07	08	09	10	11
				Equipment Sizing per Mechanical Schedule (kBtu/h) §140.4 (a&b)						
				Heating Output[2,3]			Cooling Output[2,3]		Load Calculations[3,4]	
Name or Item Tag	Equipment Category per Tables 110.2	Equipment Type per Tables 110.2 / Title 20	Smallest Size Available[1] §140.4(a)	Per Design (kBtu/h)	Rated (kBtu/h)	Supp. Heating Output (kBtu/h)	Sensible Per Design (kBtu/h)	Rated (kBtu/h)	Total Heating Load (kBtu/h)	Total Sensible Cooling Load (kBtu/h)
HP-1, HP-2tHANKS	Unitary Heat Pumps	Air-cooled, pkg (1phase)	Yes	39	42.3	44.3	30	46.5	39	46.5

[1]*FOOTNOTES: Equipment shall be the smallest size, within the available options of the desired equipment line, necessary to meet the design heating and cooling loads of the building per §140.4(a). Healthcare facilities are excepted.*

[2]*It is common practice to show rated output capacity on the equipment schedule. Sensible cooling output comes from specification sheet tables.*

[3] *If equipment is heating only, leave cooling output and load blank. If equipment is cooling only, leave heating output and load blank.*

[4] *Authority Having Jurisdiction may ask for load calculations used for compliance per §140.4(b).*

Dry System Equipment Efficiency (other than Package Terminal Air Conditioners (PTAC) and Package Terminal Heat Pumps (PTHP))

01	02	03	04	05	06	07	08	09
		Heating Mode				Cooling Mode		
Name or Item Tag	Size Category (Btu/h)	Rating Condition (°F)	Efficiency Unit	Minimum Efficiency Required per Tables 110.2 / Title 20	Design Efficiency	Efficiency Unit	Minimum Efficiency Required per Tables 110.2 / Title 20	Design Efficiency
HP-1, HP-2tHANKS	<65,000		HSPF	8	8	SEER	14	14.5

Registration Number:

CA Building Energy Efficiency Standards - 2019 Nonresidential Compliance

Registration Date/Time:

Report Version: 2019.1.003
Schema Version: rev 20200601

Registration Provider: Energy Code Ace

Report Generated: 2022-06-27 14:39:13

STATE OF CALIFORNIA
Mechanical Systems
NRCC-MCH-E

CALIFORNIA ENERGY COMMISSION

CERTIFICATE OF COMPLIANCE		NRCC-MCH-E
Project Name:	PARC Staff Building	**Report Page:** (Page 2 of 8)
Project Address:		**Date Prepared:** 2022-06-27T17:38:57-04:00

C. COMPLIANCE RESULTS

Table C will indicate if the project data input into the compliance document is compliant with mechanical requirements. This table is not editable by the user. If this table says "DOES NOT COMPLY" or "COMPLIES with Exceptional Conditions" refer to Table D., or the table indicated as not compliant for guidance.

01		02		03		04		05		06		07		08	09
System Summary §110.1, §110.2, §140.4	AND	Pumps §140.4(k)	AND	Fans/ Economizers §140.4(c), §140.4(e)	AND	System Controls §110.2, §120.2, §140.4(f)	AND	Ventilation §120.1	AND	Terminal Box Controls §140.4(d)	AND	Distribution §120.3, §140.4(l)	AND	Cooling Towers §110.2(e)2	Compliance Results
(See Table F)		(See Table G)		(See Table H)		(See Table I)		(See Table J)		(See Table K)		(See Table L)		(See Table M)	
Yes	AND		AND		AND	Yes	AND	Yes	AND		AND		AND		COMPLIES with Exceptional Conditions
Mandatory Measures Compliance (See Table Q for Details)								COMPLIES							

D. EXCEPTIONAL CONDITIONS

This table is auto-filled with uneditable comments because of selections made or data entered in tables throughout the form.

Transfer air is being used in at least one zone to meet minimum ventilation requirements. See Table J for details. Transfer air must be designed per §120.1(g) for air classification and recirculation limitations and be documented within construction documents.

E. ADDITIONAL REMARKS

This table includes remarks made by the permit applicant to the Authority Having Jurisdiction.

Registration Number:

CA Building Energy Efficiency Standards - 2019 Nonresidential Compliance

Registration Date/Time:

Report Version: 2019.1.003
Schema Version: rev 20200601

Registration Provider: Energy Code Ace

Report Generated: 2022-06-27 14:39:13

STATE OF CALIFORNIA
Mechanical Systems
NRCC-MCH-E

CALIFORNIA ENERGY COMMISSION

CERTIFICATE OF COMPLIANCE		NRCC-MCH-E
Project Name:	PARC Staff Building	**Report Page:** (Page 4 of 8)
Project Address:		**Date Prepared:** 2022-06-27T17:38:57-04:00

G. PUMPS

This section does not apply to this project.

H. FAN SYSTEMS & AIR ECONOMIZERS

This section does not apply to this project.

I. SYSTEM CONTROLS

This table is used to demonstrate compliance with mandatory controls in §110.2 and §120.2 and prescriptive controls in §140.4(f) and (n) or requirements in §141.0(b)2E for altered space conditioning systems.

01	02	03	04	05	06	07	08	09
System Name	System Zoning	Conditioned Floor Area Being Served (ft^2)	Thermostats §110.2(b) & (c)[1], §120.2(a)or §141.0(b)2E	Shut-Off Controls §120.2(e)	Isolation Zone Controls §120.2(g)	Demand Response §110.12 and §120.2(b)	Supply Air Temp. Reset §140.4(f)	Window Interlocks per §140.4(n)
HP-1 & HP-2	Single zone	<= 25,000 ft^2	Setback	Auto Timer Switch	4 Hour Timer	NA: PTAC, PTHP, Rm AC, HP	NA: Single Zone	NA: No operable windows

[1]*FOOTNOTES: Gravity gas wall heaters, gravity floor heaters, gravity room heaters, non-central electric heaters, fireplaces or decorative gas appliances, wood stoves are not required to have setback thermostats.*

*Notes: Controls with a * require a note in the space below explaining how compliance is achieved. EX: system 1: SA Temp Reset: Exempt because zones compliant with §140.4(d) ; EXCEPTION 1 to §140.4(f)

J. VENTILATION AND INDOOR AIR QUALITY

This table is used to demonstrate compliance with mandatory ventilation requirements in §120.1 and §120.2(e)3B for all nonresidential, high-rise residential and hotel/motel occupancies. For alterations, only ventialtion systems being altered within the scope of the permit application need to be documented in this table. In lieu of this table, the required outdoor ventilation rates and airflows may be shown on the plans or the calculations can be presented in a spreadsheet.

01	☐	Check the box if the project is showing ventilation calculations on the plans, or attaching the calculations instead of completing this table.
02	☒	Check this box if the project included Nonresidential or Hotel/Motel spaces
	☐	Check this box if the project included new or altered high-rise residential dwelling units.
03	☐	Check the box if the project is using natural ventilation in any nonresidential or hotel/motel spaces to meet required ventilation rates per §120.1(c)2.
Nonresidential and Hotel/ Motel Ventilation Systems		

Registration Number:

CA Building Energy Efficiency Standards - 2019 Nonresidential Compliance

Registration Date/Time:

Report Version: 2019.1.003
Schema Version: rev 20200601

Registration Provider: Energy Code Ace

Report Generated: 2022-06-27 14:39:13

BUREAU OF ENGINEERING
OFFICIAL RECORD

PLANS PREPARED BY:
TETRA TECH, INC.
350 SOUTH GRAND AVENUE, SUITE 3310
LOS ANGELES, CALIFORNIA 90071
Phone: (213) 279-3283

CITY OF LOS ANGELES DEPARTMENT OF PUBLIC WORKS BUREAU OF ENGINEERING

ENGINEERING
CITY OF LOS ANGELES

DATE: BY:
NO. REVISIONS:

BUILDING NO.

INDEX NO. MF-300501

THIS PLAN WAS ELECTRONICALLY SIGNED AND STAMPED

REGISTERED PROFESSIONAL ENGINEER
KENNETH D. KULONIS
No. 27379
Exp. 6-30-2023
MECHANICAL
STATE OF CALIFORNIA

CITY ENGINEER
DATE:
LIC. NO. M27379

TED ALLEN, P.E.

DESIGN GROUP

ENGINEER:	KEN KULONIS
DESIGNED BY:	KEN KULONIS
DRAWN BY:	KEN KULONIS
CHECKED BY:	JASON L. FUSSEL
APPROVED BY:	KEN KULONIS

VERT. CONTROL: BM 12-04070, 1929 (NGVD29) - 1985 ADJUSTMENT
HORIZ. CONTROL: GPS; PID AE 1704, EPOCH 1991.35

SHEET TITLE: TITLE 24 FORMS-STAFF BLDG.

PROJECT: SIXTH STREET PARK, ARTS AND RIVER CONNECTIVITY IMPROVEMENTS (PARC)

ADDRESS: SIXTH STREET OVER THE LOS ANGELES RIVER

WORK ORDER NO. E700235D
FILE NO. --
DRAWING NO. M-803
SHEET 272 OF 295 SHEETS

7/8/2022 6:41:18 PM - C:\USERS\KEN.KULONIS\DESKTOP\PARC\CAD\SHEET\FLESM-803_TITLE 24 FORMS-STAFF-MECH.DWG - KULONIS, KEN

THE CITY OF LOS ANGELES OR ITS OFFICERS OR AGENTS SHALL NOT BE RESPONSIBLE FOR THE ACCURACY OR COMPLETENESS OF ELECTRONIC COPIES OF THIS PLAN SHEET.

REVISION DATES (DESIGN STAGE ONLY)

Sheet Version 3.0

STATE OF CALIFORNIA
Mechanical Systems
NRCC-MCH-E
CALIFORNIA ENERGY COMMISSION

CERTIFICATE OF COMPLIANCE			**NRCC-MCH-E**
Project Name:	PARC Staff Building	**Report Page:**	**(Page 5 of 8)**
Project Address:		**Date Prepared:**	2022-06-27T17:38:57-04:00

J. VENTILATION AND INDOOR AIR QUALITY

04		05			06			07	
System Name	HP-1 & HP-2	System Design OA CFM Airflow[1]		405	System Design Transfer Air CFM		1260	Air Filtration per §120.1(c) and §141.0(b)2 [2] Provided per §120.1(c) (NR and Hotel/Motel))	
08	09	10	11	12	13	14	15	16	
Space Name ot item Tag	Mechanical Ventilation Required per §120.1(c)3 [3]					Exh. Vent per §120.1(c)4		DCV or Sensor Controls per §120.1(d)3, §120.1(d)5, and §120.1(e)3 [6]	
	Occupancy Type[4]	Conditioned Floor Area (ft^2)	# of Shower heads/ toilets	# of people[5]	Required Min OA CFM	Required Min CFM	Provided per Design CFM		
Staff	Office space	1450		5	217.5			DCV	Provided per §120.1(d)4
								Occ Sensor	Provided per §120.1(d)5
17	Total System Required Min OA CFM				217.5	18	Ventilation for this System Complies?		Yes

[1] *FOOTNOTES: System CFM should include both mechanical and natural ventilation for the zone/system*

[2] *Air filtration requirements apply to the following three system types per §120.1(c)1A : space conditioning systems utilizing ducts to supply air to occupiable space; supply-only ventilation systems providing outside air to occupiable space; supply side of balanced ventilation systems including heat recovery and energy recovery ventilation systems providing outside air to occupiable space.*

[3] *Uniform Mechanical Code may have more stringent ventilation requirements; the most stringent code requirement takes precedence.*

[4] *See Standards Tables 120.1-A and 120.1-B.*

[5] *For lecture halls with fixed seating, the expected number of occupants shall be shall be determined in accordance with the California Building Code.*

[6] *§120.2(e)3 requires systems serving rooms that are required by §130.1(c) to have lighting occupancy sensing controls to also have occupancy sensing zone controls for ventilation. Examples of spaces which require lighting occupancy sensors include offices 250ft^2 or smaller, multipurpose rooms less than 1,000 ft^2, classrooms, conference rooms, restrooms, aisles and open areas in warehouses, library book stack aisles, corridors, stairwells, parking garages, and loading and unloading zones, unless excepted by §130.1(c).*

K. TERMINAL BOX CONTROLS

This section does not apply to this project.

Registration Number:
CA Building Energy Efficiency Standards - 2019 Nonresidential Compliance

Registration Date/Time:
Report Version: 2019.1.003
Schema Version: rev 20200601

Registration Provider: Energy Code Ace
Report Generated: 2022-06-27 14:39:13

STATE OF CALIFORNIA
Mechanical Systems
NRCC-MCH-E
CALIFORNIA ENERGY COMMISSION

CERTIFICATE OF COMPLIANCE			**NRCC-MCH-E**
Project Name:	PARC Staff Building	**Report Page:**	**(Page 6 of 8)**
Project Address:		**Date Prepared:**	2022-06-27T17:38:57-04:00

L. DISTRIBUTION (DUCTWORK and PIPING)

This section does not apply to this project.

M. COOLING TOWERS

This section does not apply to this project.

N. DECLARATION OF REQUIRED CERTIFICATES OF INSTALLATION

Selections have been made based on information provided in previous tables of this document. If any selection needs to be changed, please explain why in Table E Additional Remarks. These documents must be provided to the building inspector during construction and can be found online at https://www.energy.ca.gov/title24/2019standards/2019_compliance_documents/Nonresidential_Documents/NRCI/

Form/Title	Field Inspector	
	Pass	Fail
NRCI-MCH-01-E - Must be submitted for all buildings	☐	☐

O. DECLARATION OF REQUIRED CERTIFICATES OF ACCEPTANCE

Selections have been made based on information provided in previous tables of this document. If any selection needs to be changed, please explain why in Table E Additional Remarks. These documents must be provided to the building inspector during construction and can be found online at https://www.energy.ca.gov/title24/2019standards/2019_compliance_documents/Nonresidential_Documents/NRCA/

Form/Title	Systems/Spaces To Be Field Verified	Field Inspector	
		Pass	Fail
NRCA-MCH-02-A - Outdoor Air must be submitted for all newly installed HVAC units. Note: MCH-02-A can be performed in conjunction with MCH-07-A Supply Fan VFD Acceptance (if applicable) since testing activities overlap.	HP-1 & HP-2	☐	☐
NRCA-MCH-06-A Demand Control Ventilation Systems must be submitted for all systems required to employ demand controlled ventilation (refer to §120.1(c)3) can vary outside ventilation flow rates based on maintaining interior carbon dioxide (CO_2) concentration setpoints.	Staff	☐	☐
NRCA-MCH-19-A Occupancy Sensor Controls	HP-1 & HP-2	☐	☐

P. DECLARATION OF REQUIRED CERTIFICATES OF VERIFICATION

There are no NRCV forms required for this project.

Registration Number:
CA Building Energy Efficiency Standards - 2019 Nonresidential Compliance

Registration Date/Time:
Report Version: 2019.1.003
Schema Version: rev 20200601

Registration Provider: Energy Code Ace
Report Generated: 2022-06-27 14:39:13

STATE OF CALIFORNIA
Mechanical Systems
NRCC-MCH-E
CALIFORNIA ENERGY COMMISSION

CERTIFICATE OF COMPLIANCE			**NRCC-MCH-E**
Project Name:	PARC Staff Building	**Report Page:**	**(Page 7 of 8)**
Project Address:		**Date Prepared:**	2022-06-27T17:38:57-04:00

Q. MANDATORY MEASURES DOCUMENTATION LOCATION

This table is used to indicate where mandatory measures are documented in the plan set or construction documentation.

01		02
Compliance with Mandatory Measures documented through MCH Mandatory Measures Note Block	No	

03	04
Mandatory Measure	**Plan sheet or construction document location**
Heating Equipment Efficiency per §110.1	M-801
Cooling Equipment Efficiency per §110.1	M-801
Furnace Standby Loss Control per §110.2(d)	NA
Heat Pump with Supplemental electric Resistance Heater Controls per §110.2(b)	M-601
Kitchen range hoods shall be rated for sound in accordance with Section 7.2 of ASHRAE 62.2	NA

MF

Registration Number:

Registration Date/Time:

Registration Provider: Energy Code Ace
Report Generated: 2022-06-27 14:39:13

STATE OF CALIFORNIA
Mechanical Systems
NRCC-MCH-E
CALIFORNIA ENERGY COMMISSION

CERTIFICATE OF COMPLIANCE			**NRCC-MCH-E**
Project Name:	PARC Staff Building	**Report Page:**	**(Page 8 of 8)**
Project Address:		**Date Prepared:**	2022-06-27T17:38:57-04:00

DOCUMENTATION AUTHOR'S DECLARATION STATEMENT

I certify that this Certificate of Compliance documentation is accurate and complete.

Documentation Author Name: Ken Kulonis	Documentation Author Signature:
Company:	Signature Date:
Address:	CEA/ HERS Certification Identification (if applicable):
City/State/Zip:	Phone:

RESPONSIBLE PERSON'S DECLARATION STATEMENT

I certify the following under penalty of perjury, under the laws of the State of California:

1. The information provided on this Certificate of Compliance is true and correct.
2. I am eligible under Division 3 of the Business and Professions Code to accept responsibility for the building design or system design identified on this Certificate of Compliance (responsible designer)
3. The energy features and performance specifications, materials, components, and manufactured devices for the building design or system design identified on this Certificate of Compliance conform to the requirements of Title 24, Part 1 and Part 6 of the California Code of Regulations.
4. The building design features or system design features identified on this Certificate of Compliance are consistent with the information provided on other applicable compliance documents, worksheets, calculations, plans and specifications submitted to the enforcement agency for approval with this building permit application.
5. I will ensure that a completed signed copy of this Certificate of Compliance shall be made available with the building permit(s) issued for the building, and made available to the enforcement agency for all applicable inspections. I understand that a completed signed copy of this Certificate of Compliance is required to be included with the documentation the builder provides to the building owner at occupancy.

Responsible Designer Name:	Responsible Designer Signature:
Company:	Date Signed:
Address:	License:
City/State/Zip:	Phone:

Registration Number:
CA Building Energy Efficiency Standards - 2019 Nonresidential Compliance

Registration Date/Time:
Report Version: 2019.1.003
Schema Version: rev 20200601

Registration Provider: Energy Code Ace
Report Generated: 2022-06-27 14:39:13

BUREAU OF ENGINEERING
OFFICIAL RECORD

PLANS PREPARED BY:
TETRA TECH, INC.
350 SOUTH GRAND AVENUE, SUITE 3310
LOS ANGELES, CALIFORNIA 90071
Phone: (213) 279-3283

CITY OF LOS ANGELES
DEPARTMENT OF PUBLIC WORKS
BUREAU OF ENGINEERING
ENGINEERING
CITY OF LOS ANGELES

NO.	REVISIONS:	DATE	BY:

BUILDING NO.
INDEX NO. MF-300501

REGISTERED PROFESSIONAL ENGINEER KENNETH D. KULONIS No. 27379 Exp. 6-30-2023 MECHANICAL STATE OF CALIFORNIA

THIS PLAN WAS ELECTRONICALLY SIGNED AND STAMPED

CITY ENGINEER
DATE:
TED ALLEN, P.E.
LIC. NO. M27379

DESIGN GROUP		
ENGINEER:	KEN KULONIS	
DESIGNED BY:	KEN KULONIS	
DRAWN BY:	KEN KULONIS	
CHECKED BY:	JASON L. FUSSEL	
APPROVED BY:		

VERT. CONTROL: BM 12-04070, 1929 (NGVD29) - 1985 ADJUSTMENT
HORIZ. CONTROL: GPS; PID AE 1704, EPOCH 1991.35

SHEET TITLE: TITLE 24 FORMS-STAFF BLDG.
PROJECT: SIXTH STREET PARK, ARTS AND RIVER CONNECTIVITY IMPROVEMENTS (PARC)
ADDRESS: SIXTH STREET OVER THE LOS ANGELES RIVER

WORK ORDER NO. E700235D
FILE NO. --
DRAWING NO. M-804
SHEET 273 OF 295 SHEETS

7/8/2022 8:42:35 PM - C:\USERS\KEN.KULONIS\DESKTOP\PARC\CAD\SHEETFILES\M-804_TITLE 24 FORMS-STAFF-MECH.DWG - KULONIS, KEN

REVISION DATES (DESIGN STAGE ONLY)

THE CITY OF LOS ANGELES OR ITS OFFICERS OR AGENTS SHALL NOT BE RESPONSIBLE FOR THE ACCURACY OR COMPLETENESS OF ELECTRONIC COPIES OF THIS PLAN SHEET.

Sheet Version 3.0

STATE OF CALIFORNIA

Domestic Water Heating System

NRCC-PLB-E — CALIFORNIA ENERGY COMMISSION

CERTIFICATE OF COMPLIANCE		NRCC-PLB-E
This document is used to demonstrate compliance for nonresidential occupancies with requirements in §110.1, §110.3, §120.3, and §140.5, and with requirements in §141.0 for additions and alterations, for domestic water heating scopes using the prescriptive path. For high-rise residential and hotel/motel occupancies compliance is demonstrated with requirements in §110.1, §110.3, §120.3, §150.0 and §150.1(c)8, and with requirements §150.2 for additions.		
Project Name:	PARC Staff Building	**Report Page:** (Page 1 of 6)
Project Address:		**Date Prepared:** 2022-06-15T13:50:38-04:00

A. GENERAL INFORMATION

01	Project Location (city)	Los Angeles	02	Climate Zone	9
03	Occupancy Types Within Project (select all that apply):				
☒ Nonresidential	☐ High-Rise Residential	☐ Hotel/Motel			
☐ State Building	☐ Healthcare Facility	☐ Other (Write In)			

B. PROJECT SCOPE

This table includes domestic water heating systems that are within the scope of the permit application and are demonstrating compliance using the prescriptive paths outlined in §140.5, §150.1(c)8, and §141.0(a), or §141.0(b)2N for additions or alterations. Solar water heating systems are documented on the NRCC-SRA compliance document. Combined hydronic water heating systems are documented on the NRCC-MCH compliance document.

01	02	03		
My project consists of (check all that apply):	System Type[1,2]	System Components		
☒ New system (DHW system being installed for the first time in newly constructed building)	Individual System (serving nonresidential spaces)	☒ Equipment	☒ Distribution	☒ Controls
☐ System Alteration (equipment, distribution or controls)		☐ Equipment	☐ Distribution	☐ Controls

[1]*FOOTNOTES: Point of use water heaters, or other non-central systems used to serve nonresidential spaces, are considered individual systems.*

[2] *Dwelling units refers to hotel/motel guest rooms and units in a high-rise residential occupancy.*

Registration Number: — Registration Date/Time: — Registration Provider: Energy Code Ace

CA Building Energy Efficiency Standards - 2019 Nonresidential Compliance — Report Version: 2019.1.003 — Report Generated: 2022-06-15 10:50:44

STATE OF CALIFORNIA

Domestic Water Heating System

NRCC-PLB-E — CALIFORNIA ENERGY COMMISSION

CERTIFICATE OF COMPLIANCE		NRCC-PLB-E
Project Name:	PARC Staff Building	**Report Page:** (Page 2 of 6)
Project Address:		**Date Prepared:** 2022-06-15T13:50:38-04:00

C. COMPLIANCE RESULTS

Table C will indicate if the project data input into the compliance document is compliant with water heating requirements. If this table says "DOES NOT COMPLY" or "COMPLIES with Exceptional Conditions" refer to Table D. or the table indicated as not compliant for guidance.

01	02	03	04
Domestic Hot Water Equipment	Distribution Systems	Controls	**Compliance Results**
Table F	Table G	Table H	
Yes	Yes	Yes	COMPLIES

D. EXCEPTIONAL CONDITIONS

This table is auto-filled with uneditable comments because of selections made or data entered in tables throughout the form.

E. ADDITIONAL REMARKS

This table is includes remarks made by the permit applicant to the Authority Having Jurisdiction.

Registration Number: — Registration Date/Time: — Registration Provider: Energy Code Ace

CA Building Energy Efficiency Standards - 2019 Nonresidential Compliance — Report Version: 2019.1.003 — Report Generated: 2022-06-15 10:50:44

Schema Version: rev 20200601

STATE OF CALIFORNIA

Domestic Water Heating System

NRCC-PLB-E — CALIFORNIA ENERGY COMMISSION

CERTIFICATE OF COMPLIANCE		NRCC-PLB-E
Project Name:	PARC Staff Building	**Report Page:** (Page 3 of 6)
Project Address:		**Date Prepared:** 2022-06-15T13:50:38-04:00

F. DOMESTIC HOT WATER EQUIPMENT

This table is used to demonstrate compliance with mandatory equipment requirements in §110.1 and §110.3. For high-rise residential and hotel/motel occupancies, compliance with prescriptive requirements in §150.1(c)8 must also be demonstrated and with §150.2 for addition and alteration scopes.

Equipment Schedule: Individual Systems

01	02	03	04	05	06
Name or Item Tag	Equipment Type	Volume (gal)	Max GPM/ First Hour Rating (FHR)	Rated Uniform Energy Factor (UEF)	Minimum Required Uniform Energy Factor (UEF)[1]
WH-1	Electric Storage	31-40	51 <= FHR <75	0.92	0.92

[1]*FOOTNOTE: Compliant equipment may be found in the Modernized Appliance Efficiency Database System (MAEDBS) on the Energy Commission website: https://cacertappliances.energy.ca.gov/Pages/Search/AdvancedSearch.aspx*

Water Heating Equipment All Occupancies

	Yes	No	Not Applicable	Requirement
18	☒	☐	☐	Unfired storage tank insulation shall have Internal + External >=R-16 OR External >=R-12. Label required per §110.3(c)3
19	☐	☐	☒	New state buildings 60% of energy for service water heating from site solar energy or recovered energy per §110.3(c)5
20	☐	☐	☒	Isolation valves for instantaneous water heater with input rating >6.8 kBTUH or 2 kW has been specified per §110.3(c)6

G. DOMESTIC HOT WATER DISTRIBUTION SYSTEM

This table is used to demonstrate compliance for nonresidential occupancies with distribution requirements in §120.3 and §140.5. For high-rise residential and hotel/motel occupancies, compliance is demonstrated with requirements §110.3(c), §120.3, §150.0, §150.1

Mandatory Pipe Insulation All Occupancies

12	☒	For systems serving nonresidential spaces, pipe insulation for the following applications is specified to comply with Table 120.3-A (see below) per §120.3 : • Recirculating system piping, including supply and return piping of the water heater • The first 8 ft of hot and cold outlet piping, including between storage tank and heat trap, for a nonrecirculating storage system • Pipes that are externally heated
13	☒	Insulation shall be protected from damage, including that due to sunlight, moisture, equipment maintenance, and wind. Insulation exposed to weather shall be installed with a cover suitable for outdoor service per §120.3(b) and §150.0(j)3

Registration Number: — Registration Date/Time: — Registration Provider: Energy Code Ace

CA Building Energy Efficiency Standards - 2019 Nonresidential Compliance — Report Version: 2019.1.003 — Report Generated: 2022-06-15 10:50:44

STATE OF CALIFORNIA

Domestic Water Heating System

NRCC-PLB-E — CALIFORNIA ENERGY COMMISSION

CERTIFICATE OF COMPLIANCE		NRCC-PLB-E
Project Name:	PARC Staff Building	**Report Page:** (Page 4 of 6)
Project Address:		**Date Prepared:** 2022-06-15T13:50:38-04:00

G. DOMESTIC HOT WATER DISTRIBUTION SYSTEM

TABLE 120.3-A PIPE INSULATION THICKNESS

Fluid Temperature Range (°F)	Conductivity Range (Btu-in per hour per ft² per °F)	Insulation Mean Rating Temp (°F)	Nominal Pipe Diameter (in)		
			< 1	1 to < 1.5	1.5 to < 4
			Minimum Insulation Required		
105-140	0.22 - 0.28	100	1.0 in or R-7.7	1.5 in or R-12.5	1.5 in or R-11

H. DOMESTIC HOT WATER CONTROLS

This table is used to demonstrate compliance with control requirements in §110.3 for all occupancies. For high-rise residential and hotel/motel occupancies, compliance is also demonstrated with requirements in §150.1(c)8.

	Yes	No	Not Applicable	Requirement
01	☒	☐	☐	Construction documents require manufacturer certification that service water-heating systems are equipped with automatic temperature controls capable of adjusting temperature settings per §110.3(a).
02	☐	☐	☒	Systems with capacity > 167,000 BTUH equipped with outlet temperature controls per §110.3(c)1 unless covered by California Plumbing Code 613.0.
03	☒	☐	☐	Controls for circulating pumps or electrical heat trace systems are capable of automatically turning off the system per §110.3(c)2 unless systems serves healthcare facility.
04	☐	☐	☒	For recirculation systems serving multiple dwelling units, design includes automatic pump controls per §150.1(c)8Bii, or §150.2 for additions or alterations.
05	☐	☐	☒	For recirculation systems serving individual dwelling units, design includes manual on/off controls as specified in Reference Appendix RA4.4.9 per §150.1(c)8.
06	☐	☐	☒	For replacement single heat pump water heaters serving individual dwelling units in climate zone 1-15, design includes communication interface that meets demand responsive control requirements of §110.12(a) per §150.2(b)1Hiii.

Registration Number: — Registration Date/Time: — Registration Provider: Energy Code Ace

CA Building Energy Efficiency Standards - 2019 Nonresidential Compliance — Report Version: 2019.1.003 — Report Generated: 2022-06-15 10:50:44

Schema Version: rev 20200601

BUREAU OF ENGINEERING — OFFICIAL RECORD

THIS PLAN WAS ELECTRONICALLY SIGNED AND STAMPED

REGISTERED PROFESSIONAL ENGINEER — KENNETH P. KULONIS — No. 27379 — Exp. 6-30-2023 — MECHANICAL — STATE OF CALIFORNIA

BUREAU OF ENGINEERING — CITY OF LOS ANGELES — ENGINEERING

BUILDING NO. —

INDEX NO. MF-300501

NO.	REVISIONS:	DATE	BY:

CITY OF LOS ANGELES — DEPARTMENT OF PUBLIC WORKS

CITY ENGINEER — DATE: — LIC. NO. M27379

TED ALLEN, P.E.

DESIGN GROUP

ENGINEER:	KEN KULONIS
DESIGNED BY:	KEN KULONIS
DRAWN BY:	KEN KULONIS
CHECKED BY:	JASON L. FUSSEL
APPROVED BY:	

VERT. CONTROL: BM 12-04070, 1929 (NGVD29) - 1985 ADJUSTMENT

HORIZ. CONTROL: GPS; PID AE 1704; EPOCH 1991.35

SHEET TITLE: TITLE 24 FORMS-STAFF BLDG.

PROJECT: SIXTH STREET PARK, ARTS AND RIVER CONNECTIVITY IMPROVEMENTS (PARC)

ADDRESS: SIXTH STREET OVER THE LOS ANGELES RIVER

PLANS PREPARED BY:

TETRA TECH, INC.
350 SOUTH GRAND AVENUE, SUITE 3310
LOS ANGELES, CALIFORNIA 90071
Phone: (213) 279-3283

WORK ORDER NO. E700235D

FILE NO. --

DRAWING NO. M-805

SHEET 274 OF 295 SHEETS

7/8/2022 6:43:28 PM - C:\USERS\KEN.KULONIS\DESKTOP\PARC\CAD\SHEETFILES\M-805_TITLE 24 FORMS-STAFF-PLB.DWG - KULONIS, KEN

REVISION DATES (DESIGN STAGE ONLY)

THE CITY OF LOS ANGELES OR ITS OFFICERS OR AGENTS SHALL NOT BE RESPONSIBLE FOR THE ACCURACY OR COMPLETENESS OF ELECTRONIC COPIES OF THIS PLAN SHEET.

Sheet Version 3.0

STATE OF CALIFORNIA

Domestic Water Heating System

NRCC-PLB-E — CALIFORNIA ENERGY COMMISSION

CERTIFICATE OF COMPLIANCE			NRCC-PLB-E
Project Name:	PARC Staff Building	**Report Page:**	**(Page 5 of 6)**
Project Address:		**Date Prepared:**	2022-06-15T13:50:38-04:00

I. DECLARATION OF REQUIRED CERTIFICATES OF INSTALLATION

Selections have been made based on information provided in this document. If any selection have been changed by permit applicant, an explanation should be included in Table E. Additional Remarks. These documents must be provided to the building inspector during construction and can be found online at https://www.energy.ca.gov/title24/2019standards/2019_compliance_documents/Nonresidential_Documents/NRCI/

Form/Title	Field Inspector	
	Pass	Fail
NRCI-PLB-01-E - Must be submitted for all buildings	☐	☐

J.DECLARATION OF REQUIRED CERTIFICATES OF ACCEPTANCE

There are no Certificates of Acceptance applicable to service water heating requirements.

K. DECLARATION OF REQUIRED CERTIFICATES OF VERIFICATION

There are no NRCV forms required for this project.

Registration Number: | Registration Date/Time: | Registration Provider: Energy Code Ace

CA Building Energy Efficiency Standards - 2019 Nonresidential Compliance | Report Version: 2019.1.003 | Report Generated: 2022-06-15 10:50:44

Service Water Heating Mandatory Measures:

110.3(a) CERTIFICATION BY MANUFACTURERS
ANY SERVICE WATER HEATING SYSTEM OR EQUIPMENT MAY BE INSTALLED ONLY IF CERTIFIED TO THE ENERGY COMMISSION TO MEET ALL APPLICABLE 110.3 REQUIREMENTS

110.3(a)1 TEMPERATURE CONTROLS
SERVICE WATER HEATING SYSTEMS SHALL BE EQUIPPED WITH AUTOMATIC TEMPERATURE CONTROLS CAPABLE OF BEING ADJUSTED FROM LOWEST TO HIGHEST ACCEPTABLE TEMPERATURES FOR THE INTENDED USE AS LISTED IN TABLE 3, CHAPTER 50 OF THE ASHRAE HANDBOOK, HVAC APPLICATIONS VOLUME, OR TABLE 613.1 OF THE CALIFORNIA PLUMBING CODE FOR HEALTHCARE FACILITIES. RESIDENTIAL OCCUPANCIES ARE EXEMPT FROM TEMPERATURE CONTROL REQUIREMENTS

110.3(b) EFFICIENCY
EQUIPMENT SHALL MEET THE APPLICABLE REQUIREMENTS OF THE APPLIANCE EFFICIENCY REGULATIONS AS REQUIRED BY 110.1.

110.3(c)2 CONTROLS FOR HOT WATER DISTRIBUTION SYSTEMS
SERVICE HOT WATER SYSTEMS WITH CIRCULATING PUMPS OR WITH ELECTRICAL HEAT TRACE SYSTEMS SHALL BE CAPABLE OF AUTOMATICALLY TURNING OFF THE SYSTEM.

110.3(c)3 INSULATION
UNFIRED WATER HEATER STORAGE TANKS AND BACKUP TANKS FOR SOLAR WATER-HEATING SYSTEMS SHALL HAVE:

A. EXTERNAL INSULATION WITH AN INSTALLED R-VALUE >= R-12; OR
B. INTERNAL AND EXTERNAL INSULATION WITH A COMBINED R-VALUE >=R-16; OR
C. THE HEAT LOSS OF THE TANK SURFACE BASED ON AN 80 °F WATER-AIR TEMPERATURE DIFFERENCE SHALL BE < 6.5 BTU/HR/FT2.

110.8(a) INSULATION CERTIFICATION
INSTALLED INSULATION SHALL BE CERTIFIED BY THE DEPARTMENT OF CONSUMER AFFAIRS PER TITLE 24, PART 12, CHAPTERS 12-13, ARTICLE 3 "STANDARDS FOR INSULATING MATERIAL."

110.8(b) UREA FORMALDEHYDE INSULATION
UREA FORMALDEHYDE INSULATION SHALL NOT BE INSTALLED UNLESS IN EXTERIOR SIDE WALLS WITH A FOUR-MIL-THICK PLASTIC POLYETHYLENE VAPOR RETARDER OR EQUIVALENT PLASTIC SHEATHING VAPOR RETARDER IS INSTALLED BETWEEN THE UREA FORMALDEHYDE FOAM INSULATION AND THE INTERIOR SPACE.

110.8(c) INSULATING MATERIAL
ALL INSULATING MATERIALS SHALL BE INSTALLED IN COMPLIANCE WITH THE FLAME SPREAD RATING AND SMOKE DENSITY REQUIREMENTS OF THE CALIFORNIA BUILDING CODE.

Service Water Heating Mandatory Measures:

120.3 PIPE INSULATION
PIPE INSULATION THAT COMPLIES WITH TABLE 120.3-A, OR INSULATION THICKNESS EQUATION IN 120.3(c) IS REQUIRED FOR:

- RECIRCULATION SYSTEM PIPING, INCLUDING WATER HEATER SUPPLY AND RETURN;
- THE FIRST 8 FEET OF HOT AND COLD OUTLET PIPING, INCLUDING PIPING BETWEEN THE STORAGE TANK AND A HEAT TRAP, FOR NONRECIRCULATION STORAGE SYSTEM;
- PIPES THAT ARE EXTERNALLY HEATED

PIPE INSULATION SHALL BE PROTECTED FROM DAMAGE, INCLUDING THAT DUE TO SUNLIGHT, MOISTURE, EQUIPMENT MAINTENANCE, AND WIND. PROTECTION SHALL INCLUDE BUT NOT BE LIMITED TO THE FOLLOWING:

- INSULATION EXPOSED TO WEATHER SHALL BE PROTECTED BY A COVER SUITABLE FOR OUTDOOR SERVICE. THE COVER SHALL BE WATER RETARDANT AND PROVIDE SHIELDING FORM SOLAR RADIATION THAT CAN CAUSE DEGRADATION OF THE MATERIAL. ADHESIVE TAPE SHALL NOT BE USED TO PROVIDE THIS PROTECTION.
- PIPE INSULATION BURIED BELOW GRADE MUST BE INSTALLED IN A WATER PROOF AND NON-CRUSHABLE CASING OR SLEEVE.

STATE OF CALIFORNIA

Domestic Water Heating System

NRCC-PLB-E — CALIFORNIA ENERGY COMMISSION

CERTIFICATE OF COMPLIANCE			NRCC-PLB-E
Project Name:	PARC Staff Building	**Report Page:**	**(Page 6 of 6)**
Project Address:		**Date Prepared:**	2022-06-15T13:50:38-04:00

DOCUMENTATION AUTHOR'S DECLARATION STATEMENT

I certify that this Certificate of Compliance documentation is accurate and complete.

Documentation Author Name:	Documentation Author Signature:
Ken Kulonis	
Company:	Signature Date:
Address:	CEA/ HERS Certification Identification (if applicable):
City/State/Zip:	Phone:

RESPONSIBLE PERSON'S DECLARATION STATEMENT

I certify the following under penalty of perjury, under the laws of the State of California:

1. The information provided on this Certificate of Compliance is true and correct.
2. I am eligible under Division 3 of the Business and Professions Code to accept responsibility for the building design or system design identified on this Certificate of Compliance (responsible designer)
3. The energy features and performance specifications, materials, components, and manufactured devices for the building design or system design identified on this Certificate of Compliance conform to the requirements of Title 24, Part 1 and Part 6 of the California Code of Regulations.
4. The building design features or system design features identified on this Certificate of Compliance are consistent with the information provided on other applicable compliance documents, worksheets, calculations, plans and specifications submitted to the enforcement agency for approval with this building permit application.
5. I will ensure that a completed signed copy of this Certificate of Compliance shall be made available with the building permit(s) issued for the building, and made available to the enforcement agency for all applicable inspections. I understand that a completed signed copy of this Certificate of Compliance is required to be included with the documentation the builder provides to the building owner at occupancy.

Responsible Designer Name:	Responsible Designer Signature:
Ken Kulonis	
Company:	Date Signed:
Address:	License:
City/State/Zip:	Phone:

Registration Number: | Registration Date/Time: | Registration Provider: Energy Code Ace

CA Building Energy Efficiency Standards - 2019 Nonresidential Compliance | Report Version: 2019.1.003 Schema Version: rev 20200601 | Report Generated: 2022-06-15 10:50:44

BUREAU OF ENGINEERING OFFICIAL RECORD

THE CITY OF LOS ANGELES OR ITS OFFICERS OR AGENTS SHALL NOT BE RESPONSIBLE FOR THE ACCURACY OR COMPLETENESS OF ELECTRONIC COPIES OF THIS PLAN SHEET.

REVISION DATES (DESIGN STAGE ONLY)

Sheet Version 3.0

BUREAU OF ENGINEERING — CITY OF LOS ANGELES — DEPARTMENT OF PUBLIC WORKS

ENGINEERING — CITY OF LOS ANGELES

NO. | REVISIONS: | DATE | BY:

BUILDING NO.

INDEX NO. MF-300501

REGISTERED PROFESSIONAL ENGINEER — KENNETH P. KULONIS — No. 27379 — Exp. 6-30-2023 — MECHANICAL — STATE OF CALIFORNIA

THIS PLAN WAS ELECTRONICALLY SIGNED AND STAMPED

CITY ENGINEER

DATE:

LIC. NO. M27379

DESIGN GROUP:

TED ALLEN, P.E.

ENGINEER:	KEN KULONIS
DESIGNED BY:	KEN KULONIS
DRAWN BY:	KEN KULONIS
CHECKED BY:	JASON L. FUSSEL
APPROVED BY:	

VERT. CONTROL: BM 12-04070, 1929 (NGVD29) - 1985 ADJUSTMENT
HORIZ. CONTROL: GPS; PID AE 1704; EPOCH 1991.35

SHEET TITLE: TITLE 24 FORMS-STAFF BLDG.

PROJECT: SIXTH STREET PARK, ARTS AND RIVER CONNECTIVITY IMPROVEMENTS (PARC)

ADDRESS: SIXTH STREET OVER THE LOS ANGELES RIVER

PLANS PREPARED BY:
TETRA TECH, INC.
350 SOUTH GRAND AVENUE, SUITE 3310
LOS ANGELES, CALIFORNIA 90071
Phone: (213) 279-3283

WORK ORDER NO. E700235D
FILE NO. --
DRAWING NO. M-806
SHEET 275 OF 295 SHEETS

7/8/2022 6:44:58 PM - C:\USERS\KEN.KULONIS\DESKTOP\PARC\CAD\SHEETFILES\M-806_TITLE 24 FORMS-STAFF-PLB.DWG - KULONIS, KEN

STATE OF CALIFORNIA
Envelope Component Approach
NRCC-ENV-E — CALIFORNIA ENERGY COMMISSION

CERTIFICATE OF COMPLIANCE		NRCC-ENV-E
Project Name:	PARC Cafe	Report Page: (Page 1 of 8)
Project Address:		Date Prepared: 2022-06-27T19:34:27-04:00

This document is used to demonstrate compliance with mandatory requirements in §110.8(g) and §120.7(b) for newly constructed buildings, and §141.0(b)1 for alterations, related to roof, wall and floor assemblies. It is also used to demonstrate compliance with prescriptive requirements in §140.3 for newly constructed buildings, and §141.0 for additions and alterations, related to roof, wall, floor, door, fenestration and daylighting requirements.

A. GENERAL INFORMATION

01	Project Location (city)	Los Angeles	05	# of Stories (Habitable Above Grade)	0
02	Zipcode	90023	06	Total Conditioned Floor Area (ft²)	577
03	Climate Zone	9	07	Total Unconditioned Floor Area (ft²)	0
04	Occupancy Types Within Project: (select all that apply): If one occupancy constitutes >= 80% of the conditioned floor area, the entire building envelope may be designed to comply with the provisions of that occupancy per §100.0(f).		08	☐ Project includes unconditioned enclosed space(s) > 5,000 ft² under a roof with a ceiling height of at least 15 ft.[1]	

☒ All Nonresidential, including Relocatable Public School Building certified for use in one climate zone Occupancy: A / B / E / F / H / M / S / U ☐ Relocatable Public School Building for use in all climate zones Occupancy: E ☐ High-Rise Residential Occupancy: R-2 / R-3 ☐ Hotel/Motel Guest Rooms Occupancy: R-1

[1] FOOTNOTE: Enclosed spaces > 5,000 ft² directly under roof with ceiling height > 15 ft in climate zones 2 through 15 are required to meet the minimum daylighting requirements defined in §140.3(c). Compliance with §140.3(c) is documented in Table L. This is the only prescriptive requirement which applies to unconditioned spaces.

B. PROJECT SCOPE

This table specifies project envelope components within the permit application demonstrating compliance using the prescriptive paths outlined in §140.3, and §141.0(a)1 and §141.0(b)1 and 2 for additions and alterations.

My project consists of (check all that apply)	Component Types					
01	02					
☒ New Construction or Newly Conditioned Space	☒	Roof	☒	Walls	☐	Exterior Doors
☐ One or more enclosed spaces > 5,000 ft² directly under roof with ceiling height > 15ft	☐		☐	Floors	☒	Fenestration/ Glazed Doors[1]
☐ Addition of conditioned space	☐	Roof	☐	Walls	☐	Exterior Doors
☐ One or more enclosed spaces > 5,000 ft² directly under roof with ceiling height > 15ft			☐	Floors	☐	Fenestration/ Glazed Doors[1]
☐ Alteration of conditioned space	☐	Roof Assembly	☐	Walls		Exterior Doors NA. for Alts.
☐ One or more enclosed spaces > 5,000 ft² directly under roof with ceiling height > 15ft and lighting system installed for the first time	☐	Roofing Material	☐	Floors	☐	Fenestration/ Glazed Doors

[1]FOOTNOTE: Doors that are more than 25% glass in area are considered Glazed Doors and should be documented on table K with fenestration.

Registration Number: — Registration Date/Time: — Registration Provider: Energy Code Ace

CA Building Energy Efficiency Standards - 2019 Nonresidential Compliance — Report Version: 2019.1.003, Schema Version: rev 20200601 — Report Generated: 2022-06-27 16:34:43

STATE OF CALIFORNIA
Envelope Component Approach
NRCC-ENV-E — CALIFORNIA ENERGY COMMISSION

CERTIFICATE OF COMPLIANCE		NRCC-ENV-E
Project Name:	PARC Cafe	Report Page: (Page 2 of 8)
Project Address:		Date Prepared: 2022-06-27T19:34:27-04:00

C. COMPLIANCE RESULTS

Results in this table are automatically calculated from data input and calculations in Tables F through L. Note: If any cell on this table says "COMPLIES with Exceptional Conditions" refer to Table D. Exceptional Conditions for guidance or see the applicable table referenced below.

Opaque Envelope Components					Fenestration	Daylighting Spaces > 5,000ft²	Compliance Results
Roof Assembly	Roofing Materials	Walls	Floors	Doors			
01	02	03	04	05	06	07	08
(See Table F)	(See Table G)	(See Table H)	(See Table I)	(See Table J)	(See Table K)	(See Table L)	COMPLIES with Exceptional Conditions
Yes	Yes	Yes			Yes		

D. EXCEPTIONAL CONDITIONS

This table is auto-filled with uneditable comments because of selections made or data entered in tables throughout the form.

Table K indicates that overhangs are being used to adjust vertical fenestrationSHGC to RSHGC. Overhang details are included in Table K for the fenestration assembly being adjusted.

Table H indicates an area weighted average is being used for one or more wall assemblies to demonstrate compliance. Area-weighted average tables are included at the bottom of Table H.

E. ADDITIONAL REMARKS

This table includes remarks made by the permit applicant to the Authority Having Jurisdiction.

F. ROOF ASSEMBLY SCHEDULE

This table demonstrates compliance for prescriptive roof assembly requirements in §140.3(a)1B for new construction or additions, or §141.0(b)2Biii for alterations,

01 Indicate roof types included in the project: ☐ Framed ☐ SIPS ☒ Span Deck & Concrete ☐ Metal Panels ☐ Metal Building

Framed Roof Assemblies

Structural Insulated Panels (SIPS) Roof/Ceiling Assemblies

Span Deck And Concrete Roof Assemblies

01	☐	Include Span Deck and Concrete Roof Assemblies in Area-Weighted Average U-factor Calculation[1]		
02	03	04	05	06
Tag/Plan Detail ID	Name/Description	Status	Exception to Roof Insulation Requirements in §141.0(b)2Biii (Alts. Only)	Occupancy Type

Registration Number: — Registration Date/Time: — Registration Provider: Energy Code Ace

CA Building Energy Efficiency Standards - 2019 Nonresidential Compliance — Report Version: 2019.1.003, Schema Version: rev 20200601 — Report Generated: 2022-06-27 16:34:43

STATE OF CALIFORNIA
Envelope Component Approach
NRCC-ENV-E — CALIFORNIA ENERGY COMMISSION

CERTIFICATE OF COMPLIANCE		NRCC-ENV-E
Project Name:	PARC Cafe	Report Page: (Page 3 of 8)
Project Address:		Date Prepared: 2022-06-27T19:34:27-04:00

F. ROOF ASSEMBLY SCHEDULE

Span Deck And Concrete Roof Assemblies

1/AC4-01	Café Section	New		Nonresidential/ Relocatable 1 CZ

07	08	09	10	11	12	13	14		15
Tag/Plan Detail ID	How Design U-factor was determined	Fireproofing	Concrete Topping Thickness (in.)	Continuous Insulation per Design	Thermal Performance Unit	Required Thermal Performance	U-factor per Design		Net Area[3] ft²
1/AC4-01	JA4 Tables	No	6 in.	R-30	U-factor	0.034	per JA4	0.031	
							per Software/ Other		

[1]FOOTNOTES: If any individual assembly is non-compliant, assemblies may show compliance using an area-weighted calculation. Metal building roofs may not be combined with other roof types. The area-weighted compliance option is not available for alterations demonstrating compliance with R-values in Table 141.0-C.

[2] If "R-value" is shown in cell 13 as the Thermal Performance Unit, the R-value shown here is for continuous insulation per Table 141.0-C.

[3] Roof area minus any fenestration/ skylight area

Metal Panel Assemblies

Metal Building Roof Assemblies

Area-Weighted Average U-factor Compliance Calculation for Framed/ SIPs/ Span Deck & Concrete/ Metal Panel Roofs

Area-Weighted Average U-factor Compliance Calculation for Metal Building Roof

G. RATED ROOFING MATERIAL (COOL ROOF)

This table demonstrates compliance with prescriptive roof material requirements in §140.3(a)1A for new construction or additions, or §141.0(b)2B for alterations.

01	02	03	04	05	06	07	08		09		10
Tag/Plan Detail ID	Name/Description	Status	Occupancy Type	Roof Slope	Roof Material	Compliance Method	Required Minimum Material Performance		Designed Material Performance		U-factor of Assembly
1/AC4-01	Café Section	New	Nonresidential/ Relocatable 1 CZ	<2:12 (Low)	Polymer or Composite	Solar Reflectance (Initial)/ Emittance	Reflectance	0.63	Reflectance	0.74	
							Emittance	0.75	Emittance	0.75	
							SRI		SRI		

Registration Number: — Registration Date/Time: — Registration Provider: Energy Code Ace

CA Building Energy Efficiency Standards - 2019 Nonresidential Compliance — Report Version: 2019.1.003, Schema Version: rev 20200601 — Report Generated: 2022-06-27 16:34:43

STATE OF CALIFORNIA
Envelope Component Approach
NRCC-ENV-E — CALIFORNIA ENERGY COMMISSION

CERTIFICATE OF COMPLIANCE		NRCC-ENV-E
Project Name:	PARC Cafe	Report Page: (Page 4 of 8)
Project Address:		Date Prepared: 2022-06-27T19:34:27-04:00

H. WALL ASSEMBLY SCHEDULE

This table demonstrates compliance with prescriptive wall assembly requirements in §140.3(a)2 and §140.3(a)3 for new constructions or additions, or mandatory wall assembly requirements in §141.0(b)1B for alterations.

01 Indicate wall types included in the project:[1] ☒ Framed ☐ Mass (new only) ☐ Concrete Sandwich Panel (new only) ☐ SIPS ☐ ICF (new only) ☐ Metal Panels ☐ Metal Building ☐ Spandrel/ Curtain Wall ☐ Straw Bale ☐ Log Home (new only)

[1] FOOTNOTES: Wall types indicated above as "(new only)" do not have Title 24, Part 6 requirements for alterations. New construction and additions do have requirements and should be clicked above and compliance demonstrated within this table.

Framed Walls

01	☐	Calculate Area-Weighted Average U-factor for Metal Framed Walls[1]
02	☐	Include Wood Framed Walls in Area-Weighted Average U-factor Calculation[1]

03	04	05	06	07	08	09	10	11	12		13
Tag/Plan Detail ID	Occupancy & Status	How Design U-factor was determined	Location	Frame Material, Spacing & Depth	Cavity Insulation per Design	Continuous Insulation per Design	Thermal Performance Unit	Required Thermal Performance	U-factor per Design		Net Area[3] ft²
2/AE4-01	Nonresidential/ Relocatable 1 CZ: New	JA4 Tables	Exterior wall	Metal 16" OC 2x8	R-30	R-10	U-factor	0.062	per JA4	0.061	
									per Software/ Other		

[1]FOOTNOTES: If any individual assembly is non-compliant, assemblies may show compliance using an area-weighted calculation. Metal framed walls may not be combined with other wall types. Wood framed walls are combined with SIPS, spandrel & curtain, metal panel and straw bale wall types. The area-weighted compliance option is not available for alterations demonstrating compliance with R-values in Table 141.0-C.

[2] If "R-value" is shown in cell 10 as the Thermal Performance Unit, the R-value shown here is for cavity insulation per §141.0(b)1B.

[3] Wall area minus any fenestration area

I. FLOOR ASSEMBLY SCHEDULE

This section does not apply to this project.

Registration Number: — Registration Date/Time: — Registration Provider: Energy Code Ace

CA Building Energy Efficiency Standards - 2019 Nonresidential Compliance — Report Version: 2019.1.003, Schema Version: rev 20200601 — Report Generated: 2022-06-27 16:34:43

BUREAU OF ENGINEERING OFFICIAL RECORD

THE CITY OF LOS ANGELES OR ITS OFFICERS OR AGENTS SHALL NOT BE RESPONSIBLE FOR THE ACCURACY OR COMPLETENESS OF ELECTRONIC COPIES OF THIS PLAN SHEET.

REVISION DATES (DESIGN STAGE ONLY)

Sheet Version 3.0

BUREAU OF ENGINEERING — CITY OF LOS ANGELES — DEPARTMENT OF PUBLIC WORKS

ENGINEERING — CITY OF LOS ANGELES

NO. | REVISIONS: | DATE | BY:

BUILDING NO.

INDEX NO. MF-300501

THIS PLAN WAS ELECTRONICALLY SIGNED AND STAMPED

REGISTERED PROFESSIONAL ENGINEER — KENNETH D. KULONIS — No. 27379 — Exp. 6-30-2023 — MECHANICAL — STATE OF CALIFORNIA

CITY ENGINEER — DATE:

LIC. NO. M27379

DESIGN GROUP: MECHANICAL

TED ALLEN, P.E.

ENGINEER:	KEN KULONIS
DESIGNED BY:	KEN KULONIS
DRAWN BY:	KEN KULONIS
CHECKED BY:	JASON L. FUSSEL
APPROVED BY:	

PLANS PREPARED BY:

TETRA TECH, INC.
350 SOUTH GRAND AVENUE, SUITE 3310
LOS ANGELES, CALIFORNIA 90071
Phone: (213) 279-3283

VERT. CONTROL: BM 12-04070, 1929 (NGVD29) - 1985 ADJUSTMENT
HORIZ. CONTROL: GPS; PID AE 1704, EPOCH 1991.35

SHEET TITLE: TITLE 24 FORMS-Cafe

PROJECT: SIXTH STREET PARK, ARTS AND RIVER CONNECTIVITY IMPROVEMENTS (PARC)

ADDRESS: SIXTH STREET OVER THE LOS ANGELES RIVER

WORK ORDER NO. E700235D

FILE NO. --

DRAWING NO. M-807

SHEET 276 OF 295 SHEETS

7/8/2022 6:45:58 PM - C:\USERS\KEN.KULONIS\DESKTOP\PARC\CAD\SHEETFILES\M-807_TITLE 24 FORMS-CAFE-ENVE.DWG - KULONIS, KEN

STATE OF CALIFORNIA
Envelope Component Approach
NRCC-ENV-E — CALIFORNIA ENERGY COMMISSION

CERTIFICATE OF COMPLIANCE		NRCC-ENV-E
Project Name:	PARC Cafe	Report Page: (Page 5 of 8)
Project Address:		Date Prepared: 2022-06-27T19:34:27-04:00

J. EXTERIOR DOOR SCHEDULE
This section does not apply to this project.

K. FENESTRATION AND GLAZED DOOR SCHEDULE
This table demonstrates compliance with prescriptive fenestration requirements in §140.3(a)5 for new constructions or additions, or §140.1(b)2A for alterations. Exterior doors that are more than one-half glass in area are considered Glazed Doors and should be documented on this table with fenestration.

01	Indicate fenestration types included in the project:[1]	☐	Vertical (alterations)	☒	Vertical (new)	☐	Skylights	☐	Glazed Doors (new only)

[1] *FOOTNOTES: Fenestration types indicated above as "(new only)" do not have Title 24, Part 6 requirements for alterations. New construction and additions do have requirements and should be clicked above and compliance demonstrated within this table.*

Vertical Fenestration and Glazed Doors- Total Building & West Facing Area (New Construction & Additions Only)

01	02	03	04	05
Elevation Item Tag/ Description	Orientation (Azimuth)[1]	Gross Exterior Wall Area[2]	Display Perimeter Length[2]	Vertical Fenestration Area per Design[3]
Sheet AC3-01	North Facing	194	0	63
Sheet AC3-01	South Facing	194	0	77
Sheet AC3-01	East Facing	194	0	55
Sheet AC3-01	West Facing	194	0	21

06	Maximum Allowed Vertical Fenestration (ft^2)- All Orientations	310.39	07	Total Vertical Fenestration (ft^2) per design- All Orientations	216
08	Maximum Allowed Vertical Fenestration (ft^2)- West Facing	77.59	09	Total Vertical Fenestration (ft^2) per design- West Facing	21

[1] *FOOTNOTES: Orientation between 226 deg and 315 deg are considered "West Facing". A diagram has been provided in the Nonresidential Compliance Manual for visual reference.*

[2] *Do not include demising walls per §140.3(a)5 .*

[3] *Includes glazed door fenestration area .*

Vertical Fenestration And Glazed Doors- U-factor, Solar Heat Gain Coefficient (RSHGC/ SHGC), Visible Transmittance (VT)

01	☐	Calculate Area-Weighted Average U-factor for Vertical Fenestration and Glazed Doors[1]
02	☐	Calculate Area-Weighted Average (R)SHGC for Vertical Fenestration and Glazed Doors[1]
03	☐	Calculate Area-Weighted Average VT for Vertical Fenestration and Glazed Doors[1]

Registration Number: CA Building Energy Efficiency Standards - 2019 Nonresidential Compliance
Registration Date/Time: Report Version: 2019.1.003 Schema Version: rev 20200601
Registration Provider: Energy Code Ace
Report Generated: 2022-06-27 16:34:43

STATE OF CALIFORNIA
Envelope Component Approach
NRCC-ENV-E — CALIFORNIA ENERGY COMMISSION

CERTIFICATE OF COMPLIANCE		NRCC-ENV-E
Project Name:	PARC Cafe	Report Page: (Page 7 of 8)
Project Address:		Date Prepared: 2022-06-27T19:34:27-04:00

M. DECLARATION OF REQUIRED CERTIFICATES OF INSTALLATION
Selections have been made based on information provided in this document. If any selection have been changed by the permit applicant, an explanation should be included in Table E Additional Remarks. These documents must be provided to the building inspector during construction and can be found online at https://www.energy.ca.gov/title24/2019standards/2019_compliance_documents/Nonresidential_Documents/NRCI/

Form/Title	Field Inspector Pass	Field Inspector Fail
NRCI-ENV-01-E - Must be submitted for all buildings	☐	☐

N. DECLARATION OF REQUIRED CERTIFICATES OF ACCEPTANCE
Selections have been made based on information provided in previous tables of this document. If any selection needs to be changed, form user must provide an explanation in Table E Additional Remarks. These documents must be provided to the building inspector during construction and can be found online at https://www.energy.ca.gov/title24/2019standards/2019_compliance_documents/Nonresidential_Documents/NRCA/. Individuals who perform the field testing and verification work, and provide the information required for completion of the fenestration Certificate of Acceptance documentation are not required to be licensed professionals. However, the person who signs the Certificate of Acceptance document to certify compliance with the acceptance requirements shall be licensed as specified in Standards Section 10-103(a)4 and NA7.3.1

Form/Title	Systems/Spaces To Be Field Verified	Field Inspector Pass	Field Inspector Fail
NRCA-ENV-02-F must be submitted for all new, added or altered fenestration.	4/AC3-01;	☐	☐

Registration Number: CA Building Energy Efficiency Standards - 2019 Nonresidential Compliance
Registration Date/Time: Report Version: 2019.1.003 Schema Version: rev 20200601
Registration Provider: Energy Code Ace
Report Generated: 2022-06-27 16:34:43

STATE OF CALIFORNIA
Envelope Component Approach
NRCC-ENV-E — CALIFORNIA ENERGY COMMISSION

CERTIFICATE OF COMPLIANCE		NRCC-ENV-E
Project Name:	PARC Cafe	Report Page: (Page 6 of 8)
Project Address:		Date Prepared: 2022-06-27T19:34:27-04:00

K. FENESTRATION AND GLAZED DOOR SCHEDULE
Vertical Fenestration And Glazed Doors- U-factor, Solar Heat Gain Coefficient (RSHGC/ SHGC), Visible Transmittance (VT)

04	05	06	07	08	09	10	11	12	13
Tag/Plan Detail ID	Fenestration Type	Occupancy & Status	(R)SHGC Compliance Method	VT Compliance Method	Calculation Method for Performance Values per Design[2]	Product Performance Unit	Required Product Performance	Product Performance per Design	Area ft^2
4/AC3-01	Fixed window	Nonresidential/ Relocatable 1 CZ : New	Table 140.3-B/C/D	Table 140.3-B/C/D	NFRC Certified	U-factor (max)	0.36	0.32	188
					☒ Overhang used for RSHGC	(R)SHGC (max)	0.25	0.15	
						VT (min)	0.42	0.77	

Overhang Details for RSHGC per §140.3

26	27	28	29	30	31	32
SHGC of Window	Depth (ft)	Height from Bottom of Sill to Overhang (ft)	Left Extent[3] (ft)	Right Extent[3] (ft)	Orientation	RSHGC
0.35	20	10	20	20	East/West Facing	0.1505

[1] *FOOTNOTES: If any individual fenestration product is non-compliant, products may show compliance using an area-weighted calculation. Chromogenic glazing is not included in area-weighted calculations. Area-weighted calculation shown in separate area-weighted table below.*

[2] *The NA6 Default Calculation can only be used for buildings with less than 200ft^2 of site built glazing. If the project has greater than 200ft^2, the only options for determining fenestration values are NFRC Certification or the Default Tables in 110.6.*

[3] *Overhangs must extend past the left and right window the same distance as the depth of the overhang or greater to show an affect on the RSHGC. If an overhang does not meet this requirement, the affect of the overhang will be ignored.*

[4] *Projecting includes casement and awning windows.*

L. DAYLIGHT IN LARGE ENCLOSED SPACES
This section does not apply to this project.

Registration Number: CA Building Energy Efficiency Standards - 2019 Nonresidential Compliance
Registration Date/Time: Report Version: 2019.1.003 Schema Version: rev 20200601
Registration Provider: Energy Code Ace
Report Generated: 2022-06-27 16:34:43

STATE OF CALIFORNIA
Envelope Component Approach
NRCC-ENV-E — CALIFORNIA ENERGY COMMISSION

CERTIFICATE OF COMPLIANCE		NRCC-ENV-E
Project Name:	PARC Cafe	Report Page: (Page 8 of 8)
Project Address:		Date Prepared: 2022-06-27T19:34:27-04:00

DOCUMENTATION AUTHOR'S DECLARATION STATEMENT
I certify that this Certificate of Compliance documentation is accurate and complete.

Documentation Author Name: Ken Kulonis	Documentation Author Signature:
Company:	Signature Date:
Address:	CEA/ HERS Certification Identification (if applicable):
City/State/Zip:	Phone:

RESPONSIBLE PERSON'S DECLARATION STATEMENT
I certify the following under penalty of perjury, under the laws of the State of California:

1. The information provided on this Certificate of Compliance is true and correct.
2. I am eligible under Division 3 of the Business and Professions Code to accept responsibility for the building design or system design identified on this Certificate of Compliance (responsible designer)
3. The energy features and performance specifications, materials, components, and manufactured devices for the building design or system design identified on this Certificate of Compliance conform to the requirements of Title 24, Part 1 and Part 6 of the California Code of Regulations.
4. The building design features or system design features identified on this Certificate of Compliance are consistent with the information provided on other applicable compliance documents, worksheets, calculations, plans and specifications submitted to the enforcement agency for approval with this building permit application.
5. I will ensure that a completed signed copy of this Certificate of Compliance shall be made available with the building permit(s) issued for the building, and made available to the enforcement agency for all applicable inspections. I understand that a completed signed copy of this Certificate of Compliance is required to be included with the documentation the builder provides to the building owner at occupancy.

Responsible Designer Name:	Responsible Designer Signature:
Company:	Date Signed:
Address:	License:
City/State/Zip:	Phone:

BUREAU OF ENGINEERING — OFFICIAL RECORD

Registration Number: CA Building Energy Efficiency Standards - 2019 Nonresidential Compliance
Registration Date/Time: Report Version: 2019.1.003 Schema Version: rev 20200601
Registration Provider: Energy Code Ace
Report Generated: 2022-06-27 16:34:43

THE CITY OF LOS ANGELES OR ITS OFFICERS OR AGENTS SHALL NOT BE RESPONSIBLE FOR THE ACCURACY OR COMPLETENESS OF ELECTRONIC COPIES OF THIS PLAN SHEET.
REVISION DATES (DESIGN STAGE ONLY)
Sheet Version 3.0

PLANS PREPARED BY:
TETRA TECH, INC.
350 SOUTH GRAND AVENUE, SUITE 3310
LOS ANGELES, CALIFORNIA 90071
Phone: (213) 279-3283

CITY OF LOS ANGELES — DEPARTMENT OF PUBLIC WORKS — BUREAU OF ENGINEERING
ENGINEERING — CITY OF LOS ANGELES
THIS PLAN WAS ELECTRONICALLY SIGNED AND STAMPED
REGISTERED PROFESSIONAL ENGINEER — KENNETH P. KULONIS — No. 27379 — Exp. 6-30-2023 — MECHANICAL — STATE OF CALIFORNIA
DATE: BY: NO. REVISIONS:
BUILDING NO.
INDEX NO. MF-300501
CITY ENGINEER
DATE:
LIC. NO. M27379
TED ALLEN, P.E.
DESIGN GROUP
ENGINEER: KEN KULONIS
DESIGNED BY: KEN KULONIS
DRAWN BY: KEN KULONIS
CHECKED BY: JASON L. FUSSEL
APPROVED BY:
SHEET TITLE: TITLE 24 FORMS-Cafe
PROJECT: SIXTH STREET PARK, ARTS AND RIVER CONNECTIVITY IMPROVEMENTS (PARC)
ADDRESS: SIXTH STREET OVER THE LOS ANGELES RIVER
VERT. CONTROL: BM 12-04070, 1929 (NGVD29) - 1985 ADJUSTMENT
HORIZ. CONTROL: GPS; PID AE 1704; EPOCH 1991.35
WORK ORDER NO. E700235D
FILE NO. --
DRAWING NO. M-808
SHEET 277 OF 295 SHEETS
7/8/2022 6:46:54 PM - C:\USERS\KEN.KULONIS\DESKTOP\PARC\CAD\SHEETFILES\M-808_TITLE 24 FORMS-CAFE-ENVE.DWG - KULONIS, KEN

Envelope Mandatory Measures:

110.6(a)1 MANUFACTURED FENESTRATION PRODUCT AND EXTERIOR DOOR AIR LEAKAGE
MANUFACTURED FENESTRATION PRODUCTS AND EXTERIOR DOORS SHALL HAVE AIR INFILTRATION RATES CERTIFIED BY THE MANUFACTURER NOT EXCEEDING 0.3 CFM/FT^2 OF WINDOW AREA, 0.3 CFM/FT^2 OF DOOR AREA FOR NONRESIDENTIAL SINGLE DOORS (SWINGING AND SLIDING), AND 1.0 CFM/FT^2 FOR NONRESIDENTIAL DOUBLE DOORS (SWINGING), WHEN TESTED ACCORDING TO NFRC-400 OR ASTM E283 AT A PRESSURE DIFFERENTIAL OF 75 PASCALS.

110.6(a)2-4 MANUFACTURED FENESTRATION PRODUCT AND EXTERIOR DOOR RATING
ALL MANUFACTURED FENESTRATION PRODUCTS AND EXTERIOR DOORS SHALL BE RATED FOR U-FACTOR ACCORDING TO NFRC PROCEDURES OR USE THE DEFAULT FENESTRATION VALUES IN TABLE 110.6-A AND DOOR VALUES IN JA4.5.

ALL MANUFACTURED FENESTRATION PRODUCTS AND EXTERIOR DOORS SHALL BE RATED FOR SHGC ACCORDING TO NFRC PROCEDURES OR USE THE DEFAULT VALUES IN TABLE 110.6-B.

ALL MANUFACTURED FENESTRATION PRODUCTS SHALL BE RATED FOR VT ACCORDING TO NFRC PROCEDURES.

110.6(a)5 MANUFACTURED FENESTRATION PRODUCT AND EXTERIOR DOOR LABELING
ALL MANUFACTURED FENESTRATION PRODUCTS AND EXTERIOR DOORS USING THE COMPONENT MODELING APPROACH (cma) SHALL BE LABELED ACCORDING TO 110.6(a)5.

110.7 EXTERIOR JOINTS
ALL EXTERIOR JOINTS, PENETRATIONS, AND OPENINGS IN THE BUILDING ENVELOPE THAT ARE POTENTIAL SOURCES OF AIR LEAKAGE SHALL BE CAULKED, GASKETED, WEATHER-STRIPPED, OR OTHERWISE SEALED.

110.8(a) INSULATION CERTIFICATION
INSTALLED INSULATION SHALL BE CERTIFIED BY THE DEPARTMENT OF CONSUMER AFFAIRS PER TITLE 24, PART 12, CHAPTERS 12-13, ARTICLE 3 "STANDARDS FOR INSULATING MATERIAL."

110.8(b) UREA FORMALDEHYDE INSULATION
UREA FORMALDEHYDE INSULATION SHALL NOT BE INSTALLED UNLESS IN EXTERIOR SIDE WALLS WITH A FOUR-MIL-THICK PLASTIC SHEATHING VAPOR RETARDER INSTALLED BETWEEN THE UREA FORMALDEHYDE FOAM INSULATION AND THE INTERIOR SPACE.

110.8(c) INSULATING MATERIAL
ALL INSULATING MATERIALS SHALL BE INSTALLED IN COMPLIANCE WITH THE FLAME SPREAD RATING AND SMOKE DENSITY REQUIREMENTS OF THE CALIFORNIA BUILDING CODE

110.8(i) RATED ROOFING PRODUCTS
ALL ROOFING PRODUCTS SPECIFIED TO MEET AGED SOLAR REFLECTANCE/THERMAL EMITTANCE REQUIREMENTS SHALL BE CERTIFIED AND LABELED BY THE COOL ROOF RATING COUNCIL (CRRC) PER 10-113, OR USE DEFAULT VALUES IN 110.8(i)
ASPHALT SHINGLES: 0.08/0.75
ALL OTHERS: 0.10/0.75
LIQUID APPLIED ROOF COATING FOR LOW SLOPE ROOF SHALL MEET COVERAGE, THICKNESS, AND PERFORMANCE VALUES PER 110.8-C

110.8(j) RADIANT BARRIER:
RADIANT BARRIERS SHALL HAVE EMITTANCE <= .05, TESTED ACCCORDING WITH ASTM C1371 OR ASTM E408, CERTIFIED BY TITLE 24 PART 12

Envelope Mandatory Measures:

120.7(a) ROOF/CEILING INSULATION:
WEIGHTED AVERAGE U-FACTOR OF ROOF ASSEMBLY SHALL BE:
<=0.098 FOR METAL BUILDING
<=0.075 FOR WOOD FRAMED AND OTHER TYPES

INSULATION PLACEMENT SHALL BE PER §120.7(a)3 REQUIREMENTS:
120.7(a)3A SHALL BE IN DIRECT CONTACT WITH ROOF OR CEILING SEALED TO LIMIT INFILTRATION AND EXFILTRATION.
120.7(a)3B WHEN INSULTATION IS INSTALLED AT ROOF, FIXED VENTS SHALL NOT BE INSTALLED, UNLESS IT IS CONSIDERED ATTIC SPACE.
120.7(a)3C SHALL NOT BE INSTALLED ON SUSPENDED CEILINGS UNLESS ITS 2000 FT2 OR LESS AND THERE IS MORE THAN 12 FT BETWEEN ROOF AND CEILING.
NOTE: ASSEMBLY OPTIONS CAN BE FOUND IN REFERENCE JOINT APPENDIX JA4

120.7(b)1-6 WALL INSULATION :
OPAQUE PORTIONS OF WALLS SEPARATING CONDITIONED SPACE FROM UNCONDITIONED SPACES OR AMBIENT AIIR SHALL MEET THE FOLLOWING:
METAL BUILDING: WEIGHTED AVERAGE U-FACTOR OF WALL ASSEMBLY <=0.113
METAL FRAMED: WEIGHTED AVERAGE U-FACTOR OF WALL ASSEMBLY <=0.151
LIGHT MASS WALLS: U-FACTOR FOR 6" OR GREATER HOLLOW CORE CONCRETE MASONRY UNIT <=0.440
HEAVY MASS WALLS: U-FACTOR FOR 8" OR GREATER HOLLOW CORE CONCRETE MASONRY UNIT <=0.690
WOOD FRAMED AND OTHER TYPES: WEIGHTED AVERAGE U-FACTOR OF WALL ASSEMBLY <=0.110
SPANDREL PANELS AND CURTAIN WALLS: WEIGHTED AVERAGE U-FACTOR OF WALL ASSEMBLY <=0.280
NOTE: ASSEMBLY OPTIONS CAN BE FOUND IN REFERENCE JOINT APPENDIX JA4

NOTE: CLOSER STUD SPACING AND/OR LOWER BATT R-VALUE AND/OR SMALLER STUDS REQUIRES CONTINUOUS INSULATION SHEATHING.
NOTE: INSULATION IS NOT REQUIRED FOR NON-FRAMED DEMISING WALLS.
NOTE: INSULATION IS NOT REQUIRED FOR NON-FRAMED DEMISING WALLS.
NOTE: ASSEMBLY OPTIONS CAN BE FOUND IN REFERENCE JOINT APPENDIX JA4

BUREAU OF ENGINEERING
OFFICIAL RECORD

THE CITY OF LOS ANGELES OR ITS OFFICERS OR AGENTS SHALL NOT BE RESPONSIBLE FOR THE ACCURACY OR COMPLETENESS OF ELECTRONIC COPIES OF THIS PLAN SHEET.

REVISION DATES (DESIGN STAGE ONLY)

Sheet Version 3.0

BUREAU OF ENGINEERING • THIS PLAN WAS ELECTRONICALLY SIGNED AND STAMPED

ENGINEERING
CITY OF LOS ANGELES

NO.	REVISIONS:	DATE	BY:

BUILDING NO.

INDEX NO. **MF-300501**

REGISTERED PROFESSIONAL ENGINEER KENNETH P. KULONIS No. 27379 Exp. 6-30-2023 MECHANICAL STATE OF CALIFORNIA

CITY OF LOS ANGELES • DEPARTMENT OF PUBLIC WORKS

TED ALLEN, P.E.
CITY ENGINEER

	DESIGN GROUP	LIC. NO. M27379	DATE:
ENGINEER:	KEN KULONIS		
DESIGNED BY:	KEN KULONIS		
DRAWN BY:	KEN KULONIS		
CHECKED BY:	JASON L FUSSEL		
APPROVED BY:			

PLANS PREPARED BY:
TETRA TECH, INC.
350 SOUTH GRAND AVENUE, SUITE 3310
LOS ANGELES, CALIFORNIA 90071
Phone: (213) 279-3283

VERT. CONTROL: BM 12-04070, 1929 (NGVD29) - 1985 ADJUSTMENT
HORIZ. CONTROL: GPS; PID AE 1704, EPOCH 1991.35

SHEET TITLE: TITLE 24 FORMS-Cafe

PROJECT: SIXTH STREET PARK, ARTS AND RIVER CONNECTIVITY IMPROVEMENTS (PARC)

ADDRESS: SIXTH STREET OVER THE LOS ANGELES RIVER

WORK ORDER NO. E700235D
FILE NO. --
DRAWING NO. **M-809**
SHEET 278 OF 295 SHEETS

7/8/2022 6:47:44 PM - C:\USERS\KEN.KULONIS\DESKTOP\PARC\CAD\SHEETFILES\M-809_TITLE 24 FORMS-CAFE-ENVE MM.DWG - KULONIS, KEN

STATE OF CALIFORNIA
Mechanical Systems
NRCC-MCH-E — CALIFORNIA ENERGY COMMISSION

CERTIFICATE OF COMPLIANCE		NRCC-MCH-E
This document is used to demonstrate compliance for mechanical systems that are within the scope of the permit application and are demonstrating compliance using the prescriptive path outlined in §140.4, or §141.0(b)2 for alterations.		
Project Name:	PARC Cafe	**Report Page:** (Page 1 of 6)
Project Address:		**Date Prepared:** 2022-06-27T19:50:34-04:00

A. GENERAL INFORMATION

01	Project Location (city)	Los Angeles	04	Total Conditioned Floor Area	577
02	Climate Zone	9	05	Total Unconditioned Floor Area	0
03	Occupancy Types Within Project:		06	# of Stories (Habitable Above Grade)	1
☐ Office (B)		☐ Retail (M)	☐ Non-refrigerated Warehouse (S)		
☐ Hotel/ Motel Guest Rooms (R-1)		☐ School (E)	☐ Healthcare Facility (I)		
☐ High-Rise Residential (R-2/R-3)		☐ Relocatable Class Bldg (E)	☒ Other (write in)		Café

B. PROJECT SCOPE
This table Includes mechanical systems or components that are within the scope of the permit application and are demonstrating compliance using the prescriptive path outlined in §140.4, or §141.0(b)2 for alterations.

01 Air System(s)		02 Wet System Components		03 Dry System Components	
☒	Heating Air System	☐	Water Economizer	☐	Air Economizer
☒	Cooling Air System	☐	Pumps	☐	Electric Resistance Heat
	Mechanical Controls	☐	System Piping	☐	Fan Systems
☐	Mechanical Controls (existing to remain, altered or new)	☐	Cooling Towers	☐	Ductwork (existing to remain, altered or new)
		☐	Chillers	☐	Ventilation
		☐	Boilers	☐	Zonal Systems/ Terminal Boxes

Registration Number: | Registration Date/Time: | Registration Provider: Energy Code Ace

CA Building Energy Efficiency Standards - 2019 Nonresidential Compliance | Report Version: 2019.1.003 Schema Version: rev 20200601 | Report Generated: 2022-06-27 16:50:43

STATE OF CALIFORNIA
Mechanical Systems
NRCC-MCH-E — CALIFORNIA ENERGY COMMISSION

CERTIFICATE OF COMPLIANCE		NRCC-MCH-E
Project Name:	PARC Cafe	**Report Page:** (Page 2 of 6)
Project Address:		**Date Prepared:** 2022-06-27T19:50:34-04:00

C. COMPLIANCE RESULTS
Table C will indicate if the project data input into the compliance document is compliant with mechanical requirements. This table is not editable by the user. If this table says "DOES NOT COMPLY" or "COMPLIES with Exceptional Conditions" refer to Table D., or the table indicated as not compliant for guidance.

01		02		03		04		05		06		07		08	09
System Summary §110.1, §110.2, §140.4	AND	Pumps §140.4(k)	AND	Fans/ Economizers §140.4(c), §140.4(e)	AND	System Controls §110.2, §120.2, §140.4(f)	AND	Ventilation §120.1	AND	Terminal Box Controls §140.4(d)	AND	Distribution §120.3, §140.4(l)	AND	Cooling Towers §110.2(e)2	Compliance Results
(See Table F)		(See Table G)		(See Table H)		(See Table I)		(See Table J)		(See Table K)		(See Table L)		(See Table M)	
Yes	AND		AND		AND	Yes	AND		AND		AND		AND		COMPLIES
Mandatory Measures Compliance (See Table Q for Details)										COMPLIES					

D. EXCEPTIONAL CONDITIONS
This table is auto-filled with uneditable comments because of selections made or data entered in tables throughout the form.

E. ADDITIONAL REMARKS
This table includes remarks made by the permit applicant to the Authority Having Jurisdiction.

Registration Number: | Registration Date/Time: | Registration Provider: Energy Code Ace

CA Building Energy Efficiency Standards - 2019 Nonresidential Compliance | Report Version: 2019.1.003 Schema Version: rev 20200601 | Report Generated: 2022-06-27 16:50:43

STATE OF CALIFORNIA
Mechanical Systems
NRCC-MCH-E — CALIFORNIA ENERGY COMMISSION

CERTIFICATE OF COMPLIANCE		NRCC-MCH-E
Project Name:	PARC Cafe	**Report Page:** (Page 3 of 6)
Project Address:		**Date Prepared:** 2022-06-27T19:50:34-04:00

F. HVAC SYSTEM SUMMARY (DRY & WET SYSTEMS)
This table is used to demonstrate compliance for mechanical equipment with mandatory requirements found in §110.1 and §110.2(a) and prescriptive requirements found in §140.4(a), §140.4(b) and §140.4(k) or §141.0(b)2 for alterations.

Dry System Equipment Sizing (includes air conditioners, condensers, heat pumps, VRF, furnaces and unit heaters)

01	02	03	04	05	06	07	08	09	10	11
				Equipment Sizing per Mechanical Schedule (kBtu/h) §140.4 (a&b)						
				Heating Output[2,3]			Cooling Output[2,3]		Load Calculations[3,4]	
Name or Item Tag	Equipment Category per Tables 110.2	Equipment Type per Tables 110.2 / Title 20	Smallest Size Available[1] §140.4(a)	Per Design (kBtu/h)	Rated (kBtu/h)	Supp. Heating Output (kBtu/h)	Sensible Per Design (kBtu/h)	Rated (kBtu/h)	Total Heating Load (kBtu/h)	Total Sensible Cooling Load (kBtu/h)
HP-2	Unitary Heat Pumps	Air-cooled, split (1phase)	Yes	18	19.5	17	13	15.7	18	22.5

[1]*FOOTNOTES: Equipment shall be the smallest size, within the available options of the desired equipment line, necessary to meet the design heating and cooling loads of the building per §140.4(a). Healthcare facilities are excepted.*

[2]*It is common practice to show rated output capacity on the equipment schedule. Sensible cooling output comes from specification sheet tables.*

[3] *If equipment is heating only, leave cooling output and load blank. If equipment is cooling only, leave heating output and load blank.*

[4] *Authority Having Jurisdiction may ask for load calculations used for compliance per §140.4(b).*

Dry System Equipment Efficiency (other than Package Terminal Air Conditioners (PTAC) and Package Terminal Heat Pumps (PTHP))

01	02	03	04	05	06	07	08	09
		Heating Mode				Cooling Mode		
Name or Item Tag	Size Category (Btu/h)	Rating Condition (°F)	Efficiency Unit	Minimum Efficiency Required per Tables 110.2 / Title 20	Design Efficiency	Efficiency Unit	Minimum Efficiency Required per Tables 110.2 / Title 20	Design Efficiency
HP-2	<65,000		HSPF	8.19	8.19	SEER	14	14

G. PUMPS
This section does not apply to this project.

Registration Number: | Registration Date/Time: | Registration Provider: Energy Code Ace

CA Building Energy Efficiency Standards - 2019 Nonresidential Compliance | Report Version: 2019.1.003 Schema Version: rev 20200601 | Report Generated: 2022-06-27 16:50:43

STATE OF CALIFORNIA
Mechanical Systems
NRCC-MCH-E — CALIFORNIA ENERGY COMMISSION

CERTIFICATE OF COMPLIANCE		NRCC-MCH-E
Project Name:	PARC Cafe	**Report Page:** (Page 4 of 6)
Project Address:		**Date Prepared:** 2022-06-27T19:50:34-04:00

H. FAN SYSTEMS & AIR ECONOMIZERS
This section does not apply to this project.

I. SYSTEM CONTROLS
This table is used to demonstrate compliance with mandatory controls in §110.2 and §120.2 and prescriptive controls in §140.4(f) and (n) or requirements in §141.0(b)2E for altered space conditioning systems.

01	02	03	04	05	06	07	08	09
System Name	System Zoning	Conditioned Floor Area Being Served (ft^2)	Thermostats §110.2(b) & (c)[1], §120.2(a)or §141.0(b)2E	Shut-Off Controls §120.2(e)	Isolation Zone Controls §120.2(g)	Demand Response §110.12 and §120.2(b)	Supply Air Temp. Reset §140.4(f)	Window Interlocks per §140.4(n)
HP-2	Single zone	<= 25,000 ft^2	Setback	Auto Timer Switch	4 Hour Timer	NA: PTAC, PTHP, Rm AC, HP	NA: Single Zone	NA: No operable windows

[1]*FOOTNOTES: Gravity gas wall heaters, gravity floor heaters, gravity room heaters, non-central electric heaters, fireplaces or decorative gas appliances, wood stoves are not required to have setback thermostats.*

*Notes: Controls with a * require a note in the space below explaining how compliance is achieved. EX: system 1: SA Temp Reset: Exempt because zones compliant with §140.4(d) ; EXCEPTION 1 to §140.4(f)

J. VENTILATION AND INDOOR AIR QUALITY
This section does not apply to this project.

K. TERMINAL BOX CONTROLS
This section does not apply to this project.

L. DISTRIBUTION (DUCTWORK and PIPING)
This section does not apply to this project.

M. COOLING TOWERS
This section does not apply to this project.

Registration Number: | Registration Date/Time: | Registration Provider: Energy Code Ace

CA Building Energy Efficiency Standards - 2019 Nonresidential Compliance | Report Version: 2019.1.003 Schema Version: rev 20200601 | Report Generated: 2022-06-27 16:50:43

BUREAU OF ENGINEERING — OFFICIAL RECORD

PLANS PREPARED BY:
TETRA TECH, INC.
350 SOUTH GRAND AVENUE, SUITE 3310
LOS ANGELES, CALIFORNIA 90071
Phone: (213) 279-3283

CITY OF LOS ANGELES — DEPARTMENT OF PUBLIC WORKS
BUREAU OF ENGINEERING
ENGINEERING — CITY OF LOS ANGELES

TED ALLEN, P.E.
DESIGN GROUP
CITY ENGINEER — DATE:
ENGINEER: KEN KULONIS — LIC. NO. M27379
DESIGNED BY: KEN KULONIS
DRAWN BY: KEN KULONIS
CHECKED BY: JASON L. FUSSEL
APPROVED BY:

NO. | REVISIONS: | DATE | BY:

BUILDING NO.
INDEX NO. MF-300501

THIS PLAN WAS ELECTRONICALLY SIGNED AND STAMPED.
REGISTERED PROFESSIONAL ENGINEER — KENNETH P. KULONIS — No. 27379 — Exp. 6-30-2023 — MECHANICAL — STATE OF CALIFORNIA

SHEET TITLE: TITLE 24 FORMS-CAFE
PROJECT: SIXTH STREET PARK, ARTS AND RIVER CONNECTIVITY IMPROVEMENTS (PARC)
ADDRESS: SIXTH STREET OVER THE LOS ANGELES RIVER

VERT. CONTROL: BM 12-04070, 1929 (NGVD29) - 1985 ADJUSTMENT
HORIZ. CONTROL: GPS; PID AE 1704, EPOCH 1991.35

WORK ORDER NO. E700235D
FILE NO. --
DRAWING NO. M-810
SHEET 279 OF 295 SHEETS

7/8/2022 6:48:50 PM - C:\USERS\KEN.KULONIS\DESKTOP\PARC\CAD\SHEETFILES\M-810_TITLE 24 FORMS-CAFE-MECH.DWG - KULONIS, KEN

THE CITY OF LOS ANGELES OR ITS OFFICERS OR AGENTS SHALL NOT BE RESPONSIBLE FOR THE ACCURACY OR COMPLETENESS OF ELECTRONIC COPIES OF THIS PLAN SHEET.

REVISION DATES (DESIGN STAGE ONLY)

Sheet Version 3.0

STATE OF CALIFORNIA
Mechanical Systems
NRCC-MCH-E
CALIFORNIA ENERGY COMMISSION

CERTIFICATE OF COMPLIANCE		NRCC-MCH-E
Project Name: PARC Cafe	**Report Page:**	**(Page 5 of 6)**
Project Address:	**Date Prepared:**	2022-06-27T19:50:34-04:00

N. DECLARATION OF REQUIRED CERTIFICATES OF INSTALLATION

Selections have been made based on information provided in previous tables of this document. If any selection needs to be changed, please explain why in Table E Additional Remarks. These documents must be provided to the building inspector during construction and can be found online at https://www.energy.ca.gov/title24/2019standards/2019_compliance_documents/Nonresidential_Documents/NRCI/

Form/Title	Field Inspector	
	Pass	Fail
NRCI-MCH-01-E - Must be submitted for all buildings	☐	☐

O. DECLARATION OF REQUIRED CERTIFICATES OF ACCEPTANCE

There are no NRCA forms required for this project.

P. DECLARATION OF REQUIRED CERTIFICATES OF VERIFICATION

There are no NRCV forms required for this project.

Q. MANDATORY MEASURES DOCUMENTATION LOCATION

This table is used to indicate where mandatory measures are documented in the plan set or construction documentation.

01		02
Compliance with Mandatory Measures documented through MCH Mandatory Measures Note Block	No	
03		**04**
Mandatory Measure		**Plan sheet or construction document location**
Heating Equipment Efficiency per §110.1		M-601
Cooling Equipment Efficiency per §110.1		M-601
Furnace Standby Loss Control per §110.2(d)		M-601
Heat Pump with Supplemental electric Resistance Heater Controls per §110.2(b)		M-601

Registration Number:
CA Building Energy Efficiency Standards - 2019 Nonresidential Compliance

Registration Date/Time:
Report Version: 2019.1.003
Schema Version: rev 20200601

Registration Provider: Energy Code Ace
Report Generated: 2022-06-27 16:50:43

STATE OF CALIFORNIA
Mechanical Systems
NRCC-MCH-E
CALIFORNIA ENERGY COMMISSION

CERTIFICATE OF COMPLIANCE		NRCC-MCH-E
Project Name: PARC Cafe	**Report Page:**	**(Page 6 of 6)**
Project Address:	**Date Prepared:**	2022-06-27T19:50:34-04:00

DOCUMENTATION AUTHOR'S DECLARATION STATEMENT

I certify that this Certificate of Compliance documentation is accurate and complete.

Documentation Author Name: Ken Kulonis	Documentation Author Signature:
Company:	Signature Date:
Address:	CEA/ HERS Certification Identification (if applicable):
City/State/Zip:	Phone:

RESPONSIBLE PERSON'S DECLARATION STATEMENT

I certify the following under penalty of perjury, under the laws of the State of California:

1. The information provided on this Certificate of Compliance is true and correct.
2. I am eligible under Division 3 of the Business and Professions Code to accept responsibility for the building design or system design identified on this Certificate of Compliance (responsible designer)
3. The energy features and performance specifications, materials, components, and manufactured devices for the building design or system design identified on this Certificate of Compliance conform to the requirements of Title 24, Part 1 and Part 6 of the California Code of Regulations.
4. The building design features or system design features identified on this Certificate of Compliance are consistent with the information provided on other applicable compliance documents, worksheets, calculations, plans and specifications submitted to the enforcement agency for approval with this building permit application.
5. I will ensure that a completed signed copy of this Certificate of Compliance shall be made available with the building permit(s) issued for the building, and made available to the enforcement agency for all applicable inspections. I understand that a completed signed copy of this Certificate of Compliance is required to be included with the documentation the builder provides to the building owner at occupancy.

Responsible Designer Name:	Responsible Designer Signature:
Company:	Date Signed:
Address:	License:
City/State/Zip:	Phone:

Registration Number:
CA Building Energy Efficiency Standards - 2019 Nonresidential Compliance

Registration Date/Time:
Report Version: 2019.1.003
Schema Version: rev 20200601

Registration Provider: Energy Code Ace
Report Generated: 2022-06-27 16:50:43

BUREAU OF ENGINEERING
OFFICIAL RECORD

THE CITY OF LOS ANGELES OR ITS OFFICERS OR AGENTS SHALL NOT BE RESPONSIBLE FOR THE ACCURACY OR COMPLETENESS OF ELECTRONIC COPIES OF THIS PLAN SHEET.

REVISION DATES (DESIGN STAGE ONLY)

Sheet Version 3.0

BUREAU OF ENGINEERING • THIS PLAN WAS ELECTRONICALLY SIGNED AND STAMPED

ENGINEERING
CITY OF LOS ANGELES

NO. | REVISIONS: | DATE | BY:

BUILDING NO.

INDEX NO. MF-300501

REGISTERED PROFESSIONAL ENGINEER KENNETH P. KULONIS No. 27379 Exp. 6-30-2023 MECHANICAL STATE OF CALIFORNIA

CITY OF LOS ANGELES • DEPARTMENT OF PUBLIC WORKS

CITY ENGINEER
TED ALLEN, P.E.
DATE:
LIC. NO. M27379

DESIGN SUP.
ENGINEER: KEN KULONIS
DESIGNED BY: KEN KULONIS
DRAWN BY: KEN KULONIS
CHECKED BY: JASON L. FUSSEL
APPROVED BY:

VERT. CONTROL: BM 12-04070, 1929 (NGVD29) - 1985 ADJUSTMENT
HORIZ. CONTROL: GPS; PID AE 1704; EPOCH 1991.35

SHEET TITLE: TITLE 24 FORMS-CAFE

PROJECT: SIXTH STREET PARK, ARTS AND RIVER CONNECTIVITY IMPROVEMENTS (PARC)

ADDRESS: SIXTH STREET OVER THE LOS ANGELES RIVER

PLANS PREPARED BY:
TETRA TECH, INC.
350 SOUTH GRAND AVENUE, SUITE 3310
LOS ANGELES, CALIFORNIA 90071
Phone: (213) 279-3283

WORK ORDER NO. E700235D
FILE NO. --
DRAWING NO. M-811
SHEET 280 OF 295 SHEETS

7/8/2022 6:49:49 PM - C:\USERS\KEN.KULONIS\DESKTOP\PARC\CAD\SHEETFILES\M-811_TITLE 24 FORMS-CAFE-MECH.DWG - KULONIS, KEN

STATE OF CALIFORNIA
Domestic Water Heating System
NRCC-PLB-E — CALIFORNIA ENERGY COMMISSION

CERTIFICATE OF COMPLIANCE		NRCC-PLB-E
Project Name:	PARC Restroom	Report Page: (Page 1 of 6)
Project Address:		Date Prepared: 2022-06-27T18:09:55-04:00

This document is used to demonstrate compliance for nonresidential occupancies with requirements in §110.1, §110.3, §120.3, and §140.5, and with requirements in §141.0 for additions and alterations, for domestic water heating scopes using the prescriptive path. For high-rise residential and hotel/motel occupancies compliance is demonstrated with requirements in §110.1, §110.3, §120.3, §150.0 and §150.1(c)8, and with requirements §150.2 for additions.

A. GENERAL INFORMATION

01	Project Location (city)	Los Angeles	02	Climate Zone	9
03	Occupancy Types Within Project (select all that apply):				
☐ Nonresidential	☐ High-Rise Residential	☐ Hotel/Motel			
☐ State Building	☐ Healthcare Facility	☒ Other (Write In)	Restroom Building		

B. PROJECT SCOPE

This table includes domestic water heating systems that are within the scope of the permit application and are demonstrating compliance using the prescriptive paths outlined in §140.5, §150.1(c)8, and §141.0(a), or §141.0(b)2N for additions or alterations. Solar water heating systems are documented on the NRCC-SRA compliance document. Combined hydronic water heating systems are documented on the NRCC-MCH compliance document.

01	02	03		
My project consists of (check all that apply):	System Type[1,2]	System Components		
☒ New system (DHW system being installed for the first time in newly constructed building)	Central System (serving nonresidential spaces)	☒ Equipment	☒ Distribution	☒ Controls
☐ System Alteration (equipment, distribution or controls)		☐ Equipment	☐ Distribution	☐ Controls

[1] *FOOTNOTES: Point of use water heaters, or other non-central systems used to serve nonresidential spaces, are considered individual systems.*

[2] *Dwelling units refers to hotel/motel guest rooms and units in a high-rise residential occupancy.*

Registration Number: — Registration Date/Time: — Registration Provider: Energy Code Ace

CA Building Energy Efficiency Standards - 2019 Nonresidential Compliance — Report Version: 2019.1.003 Schema Version: rev 20200601 — Report Generated: 2022-06-27 15:10:00

STATE OF CALIFORNIA
Domestic Water Heating System
NRCC-PLB-E — CALIFORNIA ENERGY COMMISSION

CERTIFICATE OF COMPLIANCE		NRCC-PLB-E
Project Name:	PARC Restroom	Report Page: (Page 2 of 6)
Project Address:		Date Prepared: 2022-06-27T18:09:55-04:00

C. COMPLIANCE RESULTS

Table C will indicate if the project data input into the compliance document is compliant with water heating requirements. If this table says "DOES NOT COMPLY" or "COMPLIES with Exceptional Conditions" refer to Table D. or the table indicated as not compliant for guidance.

01	02	03	04
Domestic Hot Water Equipment	Distribution Systems	Controls	Compliance Results
Table F	Table G	Table H	
Yes	Yes	Yes	COMPLIES

D. EXCEPTIONAL CONDITIONS

This table is auto-filled with uneditable comments because of selections made or data entered in tables throughout the form.

E. ADDITIONAL REMARKS

This table is includes remarks made by the permit applicant to the Authority Having Jurisdiction.

Registration Number: — Registration Date/Time: — Registration Provider: Energy Code Ace

CA Building Energy Efficiency Standards - 2019 Nonresidential Compliance — Report Version: 2019.1.003 Schema Version: rev 20200601 — Report Generated: 2022-06-27 15:10:00

STATE OF CALIFORNIA
Domestic Water Heating System
NRCC-PLB-E — CALIFORNIA ENERGY COMMISSION

CERTIFICATE OF COMPLIANCE		NRCC-PLB-E
Project Name:	PARC Restroom	Report Page: (Page 3 of 6)
Project Address:		Date Prepared: 2022-06-27T18:09:55-04:00

F. DOMESTIC HOT WATER EQUIPMENT

This table is used to demonstrate compliance with mandatory equipment requirements in §110.1 and §110.3. For high-rise residential and hotel/motel occupancies, compliance with prescriptive requirements in §150.1(c)8 must also be demonstrated and with §150.2 for addition and alteration scopes.

Equipment Schedule: Central Systems

07	08	09	10	11	12	13	14	15
Name or Item Tag	Equipment Type	Volume (gal)	Rated Input Capacity (Btu/h)	Rated Efficiency (%)	Minimum Efficiency Required (%)	Efficiency Unit	Designed Standby Loss[1]	Maximum Standby Loss[1]
WH-1	Electric Storage Water Heater	36	15,354	0.92			1.02	1.05

[1] *FOOTNOTE: For gas water heaters/boilers, standby loss is in BTUH. for electric storage water heaters, standby loss is in %/hr.*

Water Heating Equipment All Occupancies

	Yes	No	Not Applicable	Requirement
18	☒	☐	☐	Unfired storage tank insulation shall have Internal + External >=R-16 OR External >=R-12. Label required per §110.3(c)3
19	☐	☐	☒	New state buildings 60% of energy for service water heating from site solar energy or recovered energy per §110.3(c)5
20	☐	☐	☒	Isolation valves for instantaneous water heater with input rating >6.8 kBTUH or 2 kW has been specified per §110.3(c)6

Registration Number: — Registration Date/Time: — Registration Provider: Energy Code Ace

CA Building Energy Efficiency Standards - 2019 Nonresidential Compliance — Report Version: 2019.1.003 Schema Version: rev 20200601 — Report Generated: 2022-06-27 15:10:00

STATE OF CALIFORNIA
Domestic Water Heating System
NRCC-PLB-E — CALIFORNIA ENERGY COMMISSION

CERTIFICATE OF COMPLIANCE		NRCC-PLB-E
Project Name:	PARC Restroom	Report Page: (Page 4 of 6)
Project Address:		Date Prepared: 2022-06-27T18:09:55-04:00

G. DOMESTIC HOT WATER DISTRIBUTION SYSTEM

This table is used to demonstrate compliance for nonresidential occupancies with distribution requirements in §120.3 and §140.5. For high-rise residential and hotel/motel occupancies, compliance is demonstrated with requirements §110.3(c), §120.3, §150.0, §150.1

Recirculation Loops in Central Systems Serving Dwelling Units or Nonresidential Spaces

	Yes	No	Not Applicable	Requirement
01	○	○	●	Air release valve or vertical pump installation per §110.3(c)4A
02	○	○	●	Check valve or similar located between recirculation pump and water heating equipment to prevent backflow per §110.3(c)4B
03	○	○	●	Hose bibb installed between pump and equipment and isolation valve between hose bibb and equipment per §110.3(c)4C
04	○	○	●	Isolation valves on both sides of the pump per §110.3(c)4D
05	○	○	●	Cold water and recirculation loop piping shall not be connected to the hot water storage tank drain port per §110.3(c)4E
06	●	○	○	Check valve installed on cold water supply between hot water system and next closest tee on cold water supply per §110.3(c)4F
07	○	○	●	For central systems serving multiple dwelling units, design includes two or more recirculation loops serving separate dwelling units per §150.1(c)8Bii unless building has <=8 dwelling units.

Mandatory Pipe Insulation All Occupancies

12	☒	For systems serving nonresidential spaces, pipe insulation for the following applications is specified to comply with Table 120.3-A (see below) per §120.3 : • Recirculating system piping, including supply and return piping of the water heater • The first 8 ft of hot and cold outlet piping, including between storage tank and heat trap, for a nonrecirculating storage system • Pipes that are externally heated
13	☒	Insulation shall be protected from damage, including that due to sunlight, moisture, equipment maintenance, and wind. Insulation exposed to weather shall be installed with a cover suitable for outdoor service per §120.3(b) and §150.0(j)3

TABLE 120.3-A PIPE INSULATION THICKNESS

Fluid Temperature Range (°F)	Conductivity Range (Btu-in per hour per ft² per °F)	Insulation Mean Rating Temp (°F)	Nominal Pipe Diameter (in)		
			< 1	1 to < 1.5	1.5 to < 4
			Minimum Insulation Required		
105-140	0.22 - 0.28	100	1.0 in or R-7.7	1.5 in or R-12.5	1.5 in or R-11

Registration Number: — Registration Date/Time: — Registration Provider: Energy Code Ace

CA Building Energy Efficiency Standards - 2019 Nonresidential Compliance — Report Version: 2019.1.003 Schema Version: rev 20200601 — Report Generated: 2022-06-27 15:10:00

BUREAU OF ENGINEERING
OFFICIAL RECORD

PLANS PREPARED BY:
TETRA TECH, INC.
350 SOUTH GRAND AVENUE, SUITE 3310
LOS ANGELES, CALIFORNIA 90071
Phone: (213) 279-3283

ENGINEERING — CITY OF LOS ANGELES
BUREAU OF ENGINEERING
DATE: BY: NO. REVISIONS:
BUILDING NO.
INDEX NO. MF-300501
THIS PLAN WAS ELECTRONICALLY SIGNED AND STAMPED
REGISTERED PROFESSIONAL ENGINEER — KENNETH P. KULONIS — No. 27379 — Exp. 6-30-2023 — MECHANICAL — STATE OF CALIFORNIA

CITY OF LOS ANGELES — DEPARTMENT OF PUBLIC WORKS
CITY ENGINEER — DATE:
TED ALLEN, P.E. — DESIGN ENGINEER:
ENGINEER: KEN KULONIS — LIC. NO. M27379
DESIGNED BY: KEN KULONIS
DRAWN BY: KEN KULONIS
CHECKED BY: JASON L. FUSSEL
APPROVED BY:
VERT. CONTROL: BM 12-04070, 1929 (NGVD29) - 1985 ADJUSTMENT
HORIZ. CONTROL: GPS; PID AE 1704, EPOCH 1991.35
SHEET TITLE: TITLE 24 FORMS-RESTROOM BLDG.
PROJECT: SIXTH STREET PARK, ARTS AND RIVER CONNECTIVITY IMPROVEMENTS (PARC)
ADDRESS: SIXTH STREET OVER THE LOS ANGELES RIVER

WORK ORDER NO. E700235D
FILE NO. --
DRAWING NO. M-812
SHEET 281 OF 295 SHEETS

7/8/2022 6:50:38 PM - C:\USERS\KEN.KULONIS\DESKTOP\PARC\CAD\SHEETFILES\M-812_TITLE 24 FORMS-RR+PLB.DWG - KULONIS, KEN

THE CITY OF LOS ANGELES OR ITS OFFICERS OR AGENTS SHALL NOT BE RESPONSIBLE FOR THE ACCURACY OR COMPLETENESS OF ELECTRONIC COPIES OF THIS PLAN SHEET.

REVISION DATES (DESIGN STAGE ONLY)

Sheet Version 3.0

STATE OF CALIFORNIA

Domestic Water Heating System

NRCC-PLB-E

CALIFORNIA ENERGY COMMISSION

CERTIFICATE OF COMPLIANCE			NRCC-PLB-E
Project Name:	PARC Restroom	Report Page:	(Page 5 of 6)
Project Address:		Date Prepared:	2022-06-27T18:09:55-04:00

H. DOMESTIC HOT WATER CONTROLS

This table is used to demonstrate compliance with control requirements in §110.3 for all occupancies. For high-rise residential and hotel/motel occupancies, compliance is also demonstrated with requirements in §150.1(c)8.

	Yes	No	Not Applicable	Requirement
01	☒	☐	☐	Construction documents require manufacturer certification that service water-heating systems are equipped with automatic temperature controls capable of adjusting temperature settings per §110.3(a).
02	☐	☐	☒	Systems with capacity > 167,000 BTUH equipped with outlet temperature controls per §110.3(c)1 unless covered by California Plumbing Code 613.0.
03	☐	☐	☒	Controls for circulating pumps or electrical heat trace systems are capable of automatically turning off the system per §110.3(c)2 unless systems serves healthcare facility.
04	☐	☐	☒	For recirculation systems serving multiple dwelling units, design includes automatic pump controls per §150.1(c)8Bii, or §150.2 for additions or alterations.
05	☐	☐	☒	For recirculation systems serving individual dwelling units, design includes manual on/off controls as specified in Reference Appendix RA4.4.9 per §150.1(c)8.
06	☐	☐	☒	For replacement single heat pump water heaters serving individual dwelling units in climate zone 1-15, design includes communication interface that meets demand responsive control requirements of §110.12(a) per §150.2(b)1Hiii.

I. DECLARATION OF REQUIRED CERTIFICATES OF INSTALLATION

Selections have been made based on information provided in this document. If any selection have been changed by permit applicant, an explanation should be included in Table E. Additional Remarks. These documents must be provided to the building inspector during construction and can be found online at https://www.energy.ca.gov/title24/2019standards/2019_compliance_documents/Nonresidential_Documents/NRCI/

Form/Title	Field Inspector	
	Pass	Fail
NRCI-PLB-01-E - Must be submitted for all buildings	☐	☐

J.DECLARATION OF REQUIRED CERTIFICATES OF ACCEPTANCE

There are no Certificates of Acceptance applicable to service water heating requirements.

K. DECLARATION OF REQUIRED CERTIFICATES OF VERIFICATION

There are no NRCV forms required for this project.

Registration Number:

CA Building Energy Efficiency Standards - 2019 Nonresidential Compliance

Registration Date/Time:

Report Version: 2019.1.003
Schema Version: rev 20200601

Registration Provider: Energy Code Ace

Report Generated: 2022-06-27 15:10:00

Service Water Heating Mandatory Measures:

110.3(a) CERTIFICATION BY MANUFACTURERS
ANY SERVICE WATER HEATING SYSTEM OR EQUIPMENT MAY BE INSTALLED ONLY IF CERTIFIED TO THE ENERGY COMMISSION TO MEET ALL APPLICABLE 110.3 REQUIREMENTS

110.3(a)1 TEMPERATURE CONTROLS
SERVICE WATER HEATING SYSTEMS SHALL BE EQUIPPED WITH AUTOMATIC TEMPERATURE CONTROLS CAPABLE OF BEING ADJUSTED FROM LOWEST TO HIGHEST ACCEPTABLE TEMPERATURES FOR THE INTENDED USE AS LISTED IN TABLE 3, CHAPTER 50 OF THE ASHRAE HANDBOOK, HVAC APPLICATIONS VOLUME, OR TABLE 613.1 OF THE CALIFORNIA PLUMBING CODE FOR HEALTHCARE FACILITIES. RESIDENTIAL OCCUPANCIES ARE EXEMPT FROM TEMPERATURE CONTROL REQUIREMENTS

110.3(b) EFFICIENCY
EQUIPMENT SHALL MEET THE APPLICABLE REQUIREMENTS OF THE APPLIANCE EFFICIENCY REGULATIONS AS REQUIRED BY 110.1.

110.3(c)3 INSULATION
UNFIRED WATER HEATER STORAGE TANKS AND BACKUP TANKS FOR SOLAR WATER-HEATING SYSTEMS SHALL HAVE:

A. EXTERNAL INSULATION WITH AN INSTALLED R-VALUE >= R-12; OR
B. INTERNAL AND EXTERNAL INSULATION WITH A COMBINED R-VALUE >=R-16; OR
C. THE HEAT LOSS OF THE TANK SURFACE BASED ON AN 80 °F WATER-AIR TEMPERATURE DIFFERENCE SHALL BE < 6.5 BTU/HR/FT2.

110.8(a) INSULATION CERTIFICATION
INSTALLED INSULATION SHALL BE CERTIFIED BY THE DEPARTMENT OF CONSUMER AFFAIRS PER TITLE 24, PART 12, CHAPTERS 12-13, ARTICLE 3 "STANDARDS FOR INSULATING MATERIAL."

110.8(b) UREA FORMALDEHYDE INSULATION
UREA FORMALDEHYDE INSULATION SHALL NOT BE INSTALLED UNLESS IN EXTERIOR SIDE WALLS WITH A FOUR-MIL-THICK PLASTIC POLYETHYLENE VAPOR RETARDER OR EQUIVALENT PLASTIC SHEATHING VAPOR RETARDER IS INSTALLED BETWEEN THE UREA FORMALDEHYDE FOAM INSULATION AND THE INTERIOR SPACE.

110.8(c) INSULATING MATERIAL
ALL INSULATING MATERIALS SHALL BE INSTALLED IN COMPLIANCE WITH THE FLAME SPREAD RATING AND SMOKE DENSITY REQUIREMENTS OF THE CALIFORNIA BUILDING CODE.

120.3 PIPE INSULATION
PIPE INSULATION THAT COMPLIES WITH TABLE 120.3-A, OR INSULATION THICKNESS EQUATION IN 120.3(c) IS REQUIRED FOR:

- RECIRCULATION SYSTEM PIPING, INCLUDING WATER HEATER SUPPLY AND RETURN;
- THE FIRST 8 FEET OF HOT AND COLD OUTLET PIPING, INCLUDING PIPING BETWEEN THE STORAGE TANK AND A HEAT TRAP, FOR NONRECIRCULATION STORAGE SYSTEM;
- PIPES THAT ARE EXTERNALLY HEATED

PIPE INSULATION SHALL BE PROTECTED FROM DAMAGE, INCLUDING THAT DUE TO SUNLIGHT, MOISTURE, EQUIPMENT MAINTENANCE, AND WIND. PROTECTION SHALL INCLUDE BUT NOT BE LIMITED TO THE FOLLOWING:

- INSULATION EXPOSED TO WEATHER SHALL BE PROTECTED BY A COVER SUITABLE FOR OUTDOOR SERVICE. THE COVER SHALL BE WATER RETARDANT AND PROVIDE SHIELDING FORM SOLAR RADIATION THAT CAN CAUSE DEGRADATION OF THE MATERIAL. ADHESIVE TAPE SHALL NOT BE USED TO PROVIDE THIS PROTECTION.
- PIPE INSULATION BURIED BELOW GRADE MUST BE INSTALLED IN A WATER PROOF AND NON-CRUSHABLE CASING OR SLEEVE.

STATE OF CALIFORNIA

Domestic Water Heating System

NRCC-PLB-E

CALIFORNIA ENERGY COMMISSION

CERTIFICATE OF COMPLIANCE			NRCC-PLB-E
Project Name:	PARC Restroom	Report Page:	(Page 6 of 6)
Project Address:		Date Prepared:	2022-06-27T18:09:55-04:00

DOCUMENTATION AUTHOR'S DECLARATION STATEMENT

I certify that this Certificate of Compliance documentation is accurate and complete.

Documentation Author Name: Ken Kulonis	Documentation Author Signature:
Company:	Signature Date:
Address:	CEA/ HERS Certification Identification (if applicable):
City/State/Zip:	Phone:

RESPONSIBLE PERSON'S DECLARATION STATEMENT

I certify the following under penalty of perjury, under the laws of the State of California:

1. The information provided on this Certificate of Compliance is true and correct.
2. I am eligible under Division 3 of the Business and Professions Code to accept responsibility for the building design or system design identified on this Certificate of Compliance (responsible designer)
3. The energy features and performance specifications, materials, components, and manufactured devices for the building design or system design identified on this Certificate of Compliance conform to the requirements of Title 24, Part 1 and Part 6 of the California Code of Regulations.
4. The building design features or system design features identified on this Certificate of Compliance are consistent with the information provided on other applicable compliance documents, worksheets, calculations, plans and specifications submitted to the enforcement agency for approval with this building permit application.
5. I will ensure that a completed signed copy of this Certificate of Compliance shall be made available with the building permit(s) issued for the building, and made available to the enforcement agency for all applicable inspections. I understand that a completed signed copy of this Certificate of Compliance is required to be included with the documentation the builder provides to the building owner at occupancy.

Responsible Designer Name:	Responsible Designer Signature:
Company:	Date Signed:
Address:	License:
City/State/Zip:	Phone:

Registration Number:

CA Building Energy Efficiency Standards - 2019 Nonresidential Compliance

Registration Date/Time:

Report Version: 2019.1.003
Schema Version: rev 20200601

Registration Provider: Energy Code Ace

Report Generated: 2022-06-27 15:10:00

BUREAU OF ENGINEERING OFFICIAL RECORD

THE CITY OF LOS ANGELES OR ITS OFFICERS OR AGENTS SHALL NOT BE RESPONSIBLE FOR THE ACCURACY OR COMPLETENESS OF ELECTRONIC COPIES OF THIS PLAN SHEET.

REVISION DATES (DESIGN STAGE ONLY)

Sheet Version 3.0

PLANS PREPARED BY:
TETRA TECH, INC.
350 SOUTH GRAND AVENUE, SUITE 3310
LOS ANGELES, CALIFORNIA 90071
Phone: (213) 279-3283

CITY OF LOS ANGELES DEPARTMENT OF PUBLIC WORKS
BUREAU OF ENGINEERING
ENGINEERING
CITY OF LOS ANGELES

NO. | REVISIONS: | DATE | BY:

BUILDING NO.

INDEX NO. MF-300501

THIS PLAN WAS ELECTRONICALLY SIGNED AND STAMPED.

REGISTERED PROFESSIONAL ENGINEER KENNETH D. KULONIS No. 27379 Exp. 6-30-2023 MECHANICAL STATE OF CALIFORNIA

TED ALLEN, P.E.
CITY ENGINEER
DATE:
LIC. NO. M27379

DESIGN GROUP:	
ENGINEER:	KEN KULONIS
DESIGNED BY:	KEN KULONIS
DRAWN BY:	KEN KULONIS
CHECKED BY:	JASON L. FUSSEL
APPROVED BY:	

VERT. CONTROL: BM 12-04070, 1929 (NGVD29) - 1985 ADJUSTMENT
HORIZ. CONTROL: GPS; PID AE 1704, EPOCH 1991.35

SHEET TITLE: TITLE 24 FORMS-RESTROOM BLDG.

PROJECT: SIXTH STREET PARK, ARTS AND RIVER CONNECTIVITY IMPROVEMENTS (PARC)

ADDRESS: SIXTH STREET OVER THE LOS ANGELES RIVER

WORK ORDER NO. E700235D
FILE NO. --
DRAWING NO. M-813
SHEET 282 OF 295 SHEETS

7/8/2022 6:51:32 PM - C:\USERS\KEN.KULONIS\DESKTOP\PARC\CAD\SHEETFILES\M-813_TITLE 24 FORMS-RR+PLB.DWG - KULONIS, KEN

PIPING SYMBOLS

- CD — CONDENSATE DRAIN LINE
- UNION
- CAP
- HOSE END CONNECTION
- FLEXIBLE CONNECTOR
- CONNECTION, BOTTOM
- CONNECTION, TOP
- PIPE TURNING DOWN
- PIPE TURNING UP
- TEE, OUTLET UP
- TEE, OUTLET DOWN
- GATE VALVE
- BALL VALVE
- CHECK VALVE
- THERMOSTATIC MIXING VALVE
- PUMP
- PRESSURE REDUCING VALVE
- PRESSURE/TEMPERATURE RELIEF VALVE (PTRV)
- DOMESTIC COLD WATER
- DOMESTIC HOT WATER
- DOMESTIC HOT WATER RETURN
- WASTE BELOW SLAB
- VENT

- COMBINATION EMERGENCY SHOWER AND EYEWASH (WITH PRIVACY CURTAIN)
- EMERGENCY EYEWASH

ABBREVIATIONS

AFF	ABOVE FINISHED FLOOR
CLG	CEILING
CO	CLEANOUT
CONC	CONCRETE
CONT	CONTINUATION
CW	COLD WATER
CD	CONDENSATE DRAIN
DEG	DEGREE
DET	DETAIL
DIA	DIAMETER
DN	DOWN
EFF	EFFICIENCY
EL	ELEVATION
FC	FLEXIBLE CONNECTION
FFE	FINISHED FLOOR ELEVATION
FLEX	FLEXIBLE
FLR	FLOOR
FS	FLOOR SINK
GA	GAGE or GAUGE
GAL	GALLON
HP	HORSE POWER
HR	HOUR
HW	HOT WATER
KS	KITCHEN SINK
LAV	LAVATORY
MBH	(1000) BTU'S
MIN	MINIMUM
MS	MOP SINK
NTS	NOT TO SCALE
N/A	NOT APPLICABLE
OD	OUTSIDE DIAMETER
OPNG	OPENING
PH	PHASE
POC	POINT OF CONNECTION
PSIG	POUNDS PER SQUARE INCH (GAUGE)
PTRV	PRESSURE/TEMPERATURE RELIEF VALVE
RHW	RECIRCULATED HOT WATER
RM	ROOM
RPM	REVOLUTIONS PER MINUTE
SK	SINK
TEMP	TEMPERATURE
T STAT	THERMOSTAT
TYP	TYPICAL
U	URINAL
UTR	UP THRU ROOF
V	VOLT, VENT
VTR	VENT THROUGH ROOF
W	WATT, WASTE
W/	WITH
WC	WATER CLOSET
WG	WATER GAUGE
WT	WEIGHT

BUREAU OF ENGINEERING
OFFICIAL RECORD

REVISION DATES (DESIGN STAGE ONLY)

THE CITY OF LOS ANGELES OR ITS OFFICERS OR AGENTS SHALL NOT BE RESPONSIBLE FOR THE ACCURACY OR COMPLETENESS OF ELECTRONIC COPIES OF THIS PLAN SHEET.

Sheet Version 3.0

PLANS PREPARED BY:
TETRA TECH, INC.
350 SOUTH GRAND AVENUE, SUITE 3310
LOS ANGELES, CALIFORNIA 90071
Phone: (213) 279-3283

CITY OF LOS ANGELES DEPARTMENT OF PUBLIC WORKS
BUREAU OF ENGINEERING

VERT. CONTROL: BM 12-04070, 1929 (NGVD29) - 1985 ADJUSTMENT
HORIZ. CONTROL: GPS; PID AE 1704; EPOCH 1991.35

SHEET TITLE: PLUMBING ABBREVIATIONS, SYMBOLS AND NOTES
PROJECT: SIXTH STREET PARK, ARTS AND RIVER CONNECTIVITY IMPROVEMENTS (PARC)
ADDRESS: SIXTH STREET OVER THE LOS ANGELES RIVER

WORK ORDER NO. E700235D
FILE NO. --
DRAWING NO. P-001
SHEET 283 OF 295 SHEETS

CITY ENGINEER
TED ALLEN, P.E.
DESIGN SUP.
ENGINEER: KEN KULONIS LIC. NO. M27379 DATE:
DESIGNED BY: KEN KULONIS
DRAWN BY: KEN KULONIS
CHECKED BY: JASON L. FUSSEL
APPROVED BY:

ENGINEERING
CITY OF LOS ANGELES

BUREAU OF ENGINEERING

NO. | REVISIONS: | DATE | BY:

BUILDING NO.

INDEX NO. MF-300501

REGISTERED PROFESSIONAL ENGINEER KENNETH D. KULONIS No. 27379 Exp. 6-30-2023 MECHANICAL STATE OF CALIFORNIA

THIS PLAN WAS ELECTRONICALLY SIGNED AND STAMPED

7/8/2022 6:56:16 PM - C:\USERS\KEN.KULONIS\DESKTOP\PARC\CAD\SHEETFILES\P-001_ABBREVIATIONS_LEGEND_GENERALNOTES - TT.DWG - KULONIS, KEN

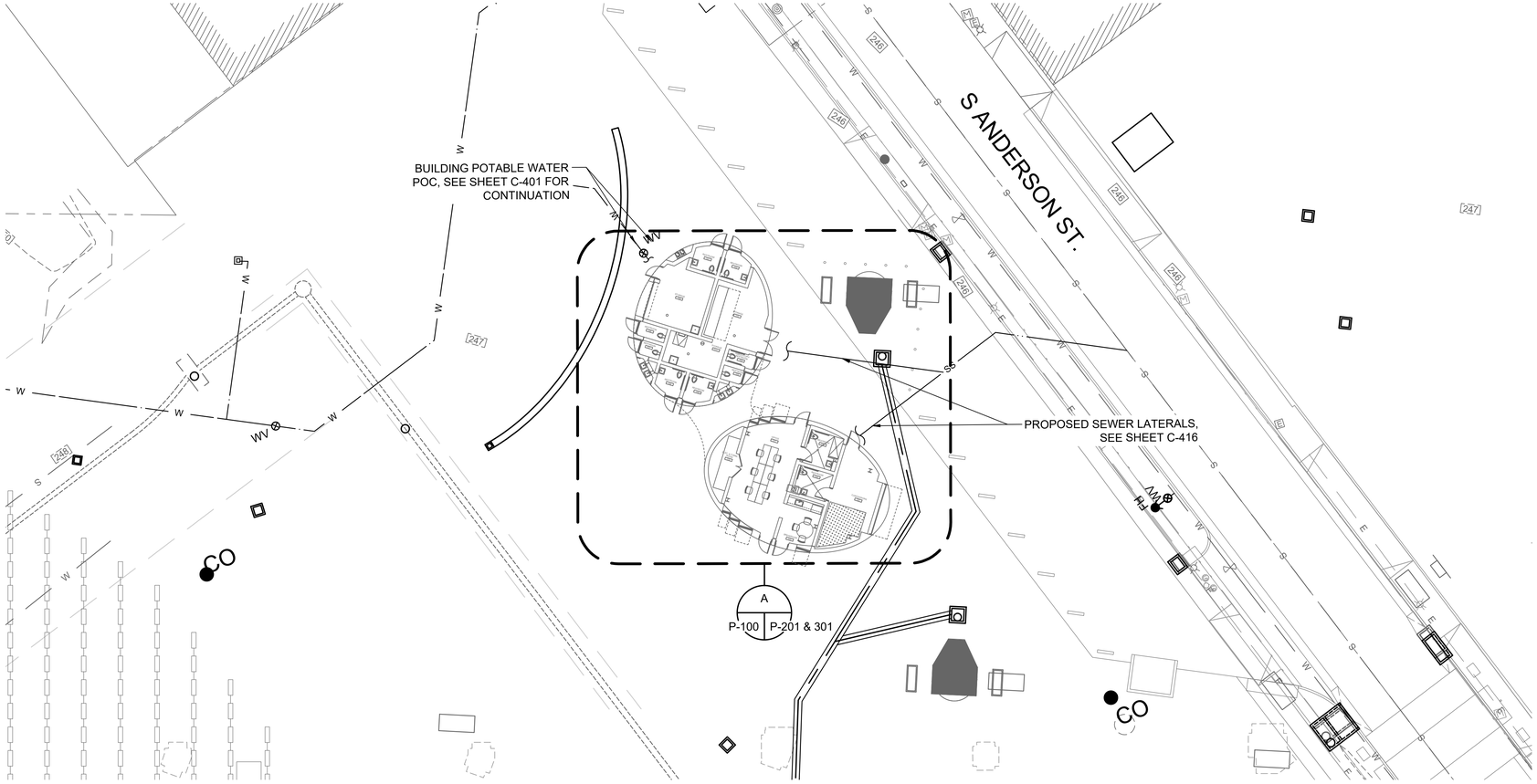

STAFF AND RESTROOM BULIDING SITE PLAN

THE CITY OF LOS ANGELES OR ITS OFFICERS OR AGENTS SHALL NOT BE RESPONSIBLE FOR THE ACCURACY OR COMPLETENESS OF ELECTRONIC COPIES OF THIS PLAN SHEET.

REVISION DATES: (DESIGN STAGE ONLY)

Sheet Version 3.0

BUREAU OF ENGINEERING

ENGINEERING
CITY OF LOS ANGELES

NO.	REVISIONS:	DATE	BY:

BUILDING NO.

INDEX NO. MF-300501

REGISTERED PROFESSIONAL ENGINEER
KENNETH P. KULONIS
No. 27379
Exp. 6-30-2023
MECHANICAL
STATE OF CALIFORNIA

THIS PLAN WAS ELECTRONICALLY SIGNED AND STAMPED.

CITY OF LOS ANGELES DEPARTMENT OF PUBLIC WORKS

BUREAU OF ENGINEERING

CITY ENGINEER: TED ALLEN, P.E.
DESIGN GROUP:
DATE:

ENGINEER:	KEN KULONIS	LIC. NO. M27379
DESIGNED BY:	KEN KULONIS	
DRAWN BY:	KEN KULONIS	
CHECKED BY:	JASON L. FUSSEL	
APPROVED BY:		

PLANS PREPARED BY:
TETRA TECH, INC.
350 SOUTH GRAND AVENUE, SUITE 3310
LOS ANGELES, CALIFORNIA 90071
Phone: (213) 279-3283

VERT. CONTROL: BM 12-04070, 1929 (NGVD29) - 1985 ADJUSTMENT
HORIZ. CONTROL: GPS; PID AE 1704, EPOCH 1991.35

SHEET TITLE: PLUMBING SITE PLAN - STAFF & SHOP BUILDINGS

PROJECT: SIXTH STREET PARK, ARTS AND RIVER CONNECTIVITY IMPROVEMENTS (PARC)

ADDRESS: SIXTH STREET OVER THE LOS ANGELES RIVER

WORK ORDER NO. E700235D

FILE NO. --

DRAWING NO. P-100

SHEET 284 OF 295 SHEETS

BUREAU OF ENGINEERING
OFFICIAL RECORD

7/8/2022 6:57:44 PM - C:\USERS\KEN.KULONIS\DESKTOP\PARC\CAD\SHEETFILES\P-100_PLUMBING SITE PLAN_STAFF AND RESTROOM BLDGS - TT.DWG - KULONIS, KEN

Xref ..\SupportFiles\EBASE.dwg

THE CITY OF LOS ANGELES OR ITS OFFICERS OR AGENTS SHALL NOT BE RESPONSIBLE FOR THE ACCURACY OR COMPLETENESS OF ELECTRONIC COPIES OF THIS PLAN SHEET.

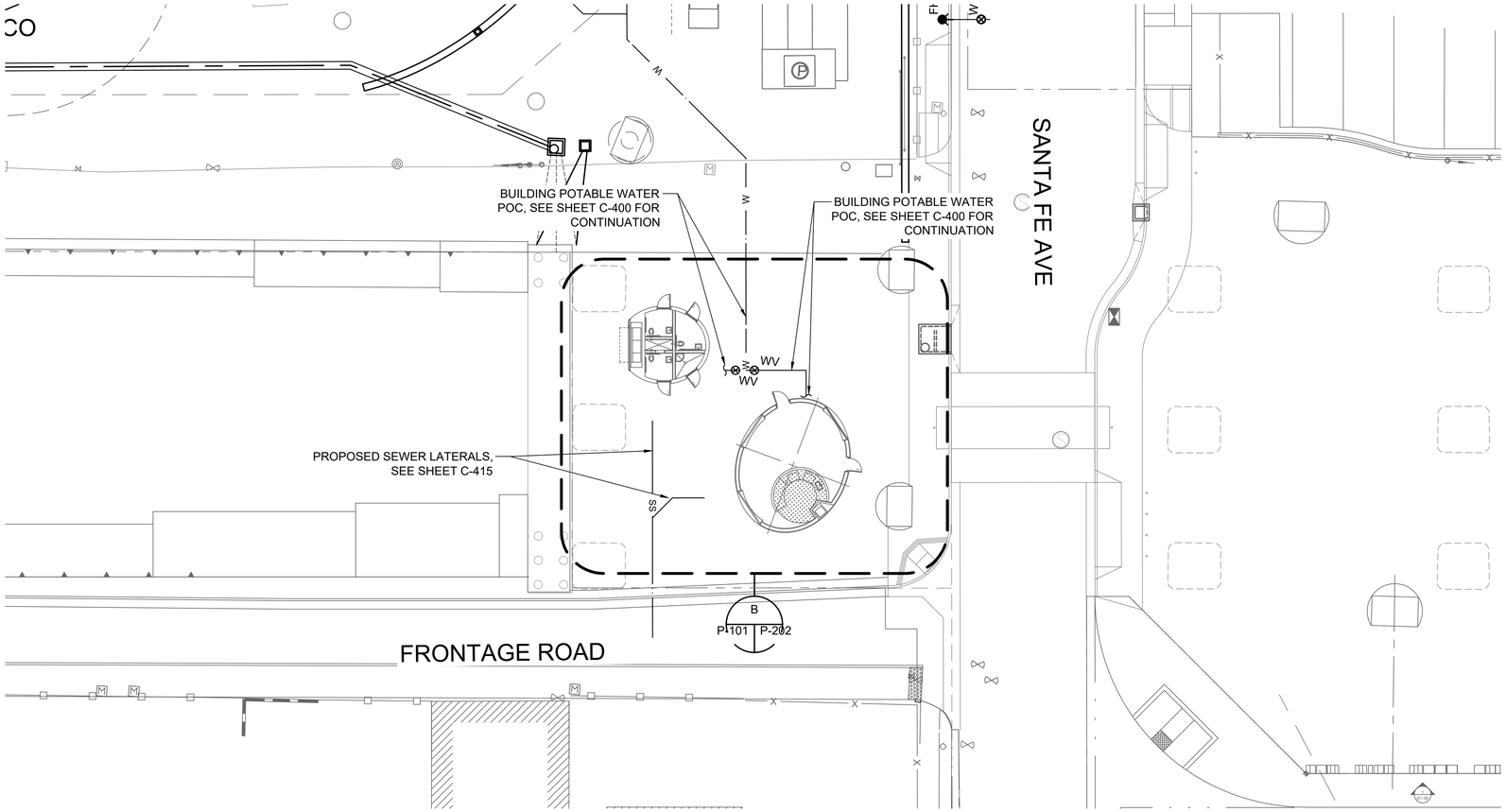

CAFE AND RESTROOM BULIDING SITE PLAN

GENERAL NOTES

1.

BUREAU OF ENGINEERING
OFFICIAL RECORD

SCALE: 1/16" = 1'-0"

PLANS PREPARED BY:
TETRA TECH, INC.
350 SOUTH GRAND AVENUE, SUITE 3310
LOS ANGELES, CALIFORNIA 90071
Phone: (213) 279-3283

CITY OF LOS ANGELES DEPARTMENT OF PUBLIC WORKS
BUREAU OF ENGINEERING

ENGINEERING
CITY OF LOS ANGELES

NO.	REVISIONS:	DATE	BY:

BUILDING NO.

INDEX NO. MF-300501

REGISTERED PROFESSIONAL ENGINEER
KENNETH P. KULONIS
No. 27379
Exp. 6-30-2023
MECHANICAL
STATE OF CALIFORNIA

THIS PLAN WAS ELECTRONICALLY SIGNED AND STAMPED.

CITY ENGINEER
TED ALLEN, P.E.
DATE:
LIC. NO. M27379

ENGINEER:	KEN KULONIS	DESIGN GROUP
DESIGNED BY:	KEN KULONIS	
DRAWN BY:	KEN KULONIS	
CHECKED BY:	JASON L. FUSSEL	
APPROVED BY:		

SHEET TITLE: PLUMBING SITE PLAN
PROJECT: CAFE AND RESTROOM BUILDINGS
SIXTH STREET PARK, ARTS AND RIVER CONNECTIVITY IMPROVEMENTS (PARC)
ADDRESS: SIXTH STREET OVER THE LOS ANGELES RIVER

VERT. CONTROL: BM 12-04070, 1929 (NGVD29) - 1985 ADJUSTMENT
HORIZ. CONTROL: GPS; PID AE 1704, EPOCH 1991.35

WORK ORDER NO. E700235D
FILE NO. --
DRAWING NO. P-101
SHEET 285 OF 295 SHEETS

REVISION DATES: (DESIGN STAGE ONLY)

Sheet Version 3.0

7/8/2022 6:59:35 PM - C:\USERS\KEN.KULONIS\DESKTOP\PARC\CAD\SHEETFILES\P-101_PLUMBING SITE PLAN_CAFE AND RESTROOM - TT.DWG - KULONIS, KEN

Xref ..\SupportFiles\1610_Rcp.dwg

THE CITY OF LOS ANGELES OR ITS OFFICERS OR AGENTS SHALL NOT BE RESPONSIBLE FOR THE ACCURACY OR COMPLETENESS OF ELECTRONIC COPIES OF THIS PLAN SHEET.



STAFF AND RESTROOM BUILDING FLOOR PLAN

SCALE: 1/4" = 1'-0"

BUREAU OF ENGINEERING
OFFICIAL RECORD

PLANS PREPARED BY:
TETRA TECH, INC.
350 SOUTH GRAND AVENUE, SUITE 3310
LOS ANGELES, CALIFORNIA 90071
Phone: (213) 279-3283

CITY OF LOS ANGELES DEPARTMENT OF PUBLIC WORKS
BUREAU OF ENGINEERING

VERT. CONTROL: BM 12-04070, 1929 (NGVD29) - 1985 ADJUSTMENT
HORIZ. CONTROL: GPS; PID AE 1704, EPOCH 1991.35

SHEET TITLE: STAFF AND SHOP BUILDINGS WASTE & VENT FLOOR PLANS
PROJECT: SIXTH STREET PARK, ARTS AND RIVER CONNECTIVITY IMPROVEMENTS (PARC)
ADDRESS: SIXTH STREET OVER THE LOS ANGELES RIVER

WORK ORDER NO. E700235D
FILE NO. --
DRAWING NO. P-201
SHEET 286 OF SHEETS 295

CITY ENGINEER
DATE:
LIC. NO. M27379

TED ALLEN, P.E.

ENGINEER:	KEN KULONIS	DESIGN GROUP:
DESIGNED BY:	KEN KULONIS	LIC. NO.
DRAWN BY:	KEN KULONIS	
CHECKED BY:	JASON L. FUSSEL	
APPROVED BY:		

ENGINEERING
CITY OF LOS ANGELES

BUREAU OF ENGINEERING

NO.	REVISIONS:	DATE	BY:

BUILDING NO.

INDEX NO. MF-300501

REGISTERED PROFESSIONAL ENGINEER
KENNETH D. KULONIS
No. 27379
Exp. 6-30-2023
MECHANICAL
STATE OF CALIFORNIA

THIS PLAN WAS ELECTRONICALLY SIGNED AND STAMPED

REVISION DATES (DESIGN STAGE ONLY)

7/8/2022 7:05:22 PM - C:\USERS\KEN.KULONIS\DESKTOP\PARC\CAD\SHEETFILES\P-201_PLUMBING WASTE AND VENT FLOOR PLAN_STAFF AND RESTROOM BLDGS - TT.DWG - KULONIS, KEN

Sheet Version 3.0

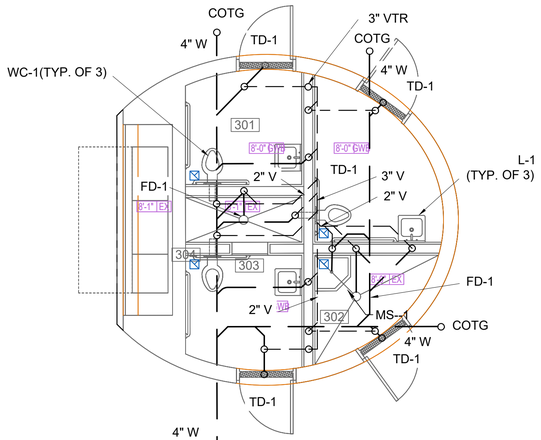

POC TO EXISTING SEWER
IE: 48" BELOW FF

2% MINIMUM SLOPE, TYP.

CO

2-WAY COTG

SS

SS

SS

SS

CO

4" W

POC TO EXISTING SEWER
IE:48" BELOW FF

REFER TO CIVIL SHEET
C-415 FOR CONTINUATION

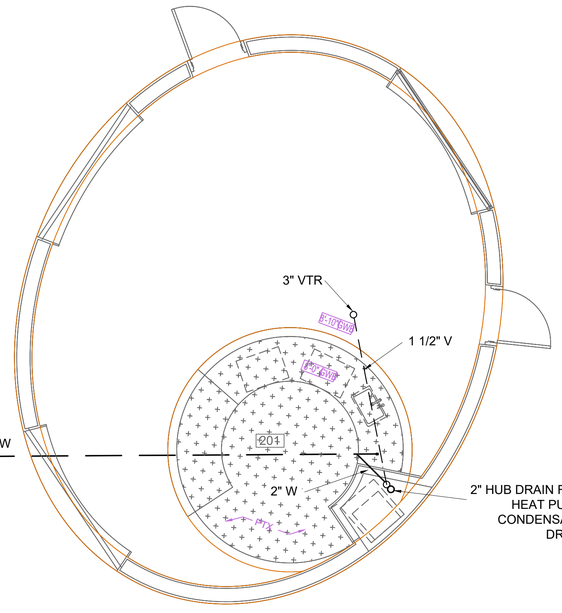

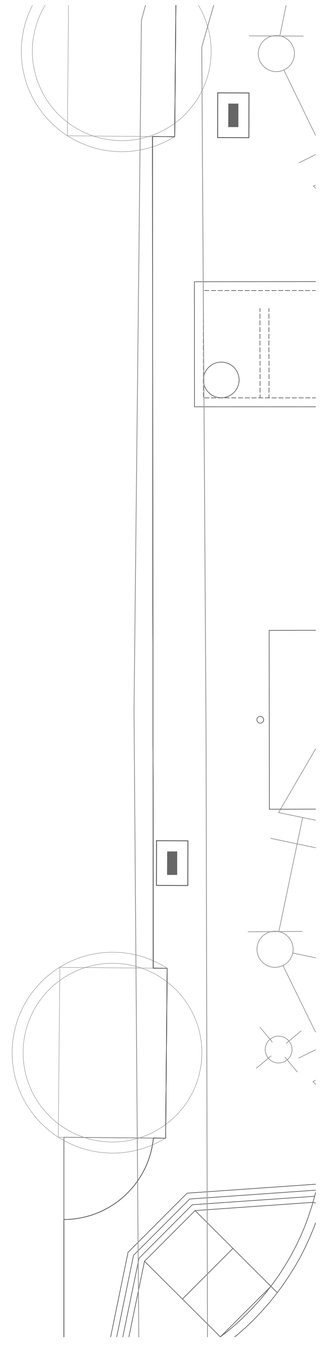

CAFE AND RESTROOM BUILDING FLOOR PLAN

SCALE: 1/4" = 1'-0"

BUREAU OF ENGINEERING
OFFICIAL RECORD

PLANS PREPARED BY:
TETRA TECH, INC.
350 SOUTH GRAND AVENUE, SUITE 3310
LOS ANGELES, CALIFORNIA 90071
Phone: (213) 279-3283

CITY OF LOS ANGELES DEPARTMENT OF PUBLIC WORKS
BUREAU OF ENGINEERING

ENGINEERING
CITY OF LOS ANGELES

NO. | REVISIONS: | DATE | BY:

BUILDING NO.

INDEX NO. MF-300501

REGISTERED PROFESSIONAL ENGINEER
KENNETH P. KULONIS
No. 27379
Exp. 6-30-2023
MECHANICAL
STATE OF CALIFORNIA

THIS PLAN WAS ELECTRONICALLY SIGNED AND STAMPED

CITY ENGINEER
DATE:
LIC. NO. M27379
DESIGN GROUP

TED ALLEN, P.E.

ENGINEER: KEN KULONIS
DESIGNED BY: KEN KULONIS
DRAWN BY: KEN KULONIS
CHECKED BY: KEN KULONIS
APPROVED BY: JASON FUSSEL

SHEET TITLE: CAFE & RESTROOM BUILDING WASTE & VENT FLOOR PLANS
PROJECT: SIXTH STREET PARK, ARTS AND RIVER CONNECTIVITY IMPROVEMENTS (PARC)
ADDRESS: SIXTH STREET OVER THE LOS ANGELES RIVER

VERT. CONTROL: BM 12-04070, 1929 (NGVD29) - 1985 ADJUSTMENT
HORIZ. CONTROL: GPS; PID AE 1704, EPOCH 1991.35

WORK ORDER NO. E700235D
FILE NO. --
DRAWING NO. P-202
SHEET 287 OF 295 SHEETS

7/8/2022 7:14:25 PM - C:\USERS\KEN.KULONIS\DESKTOP\PARC\CAD\SHEETFILES\P-202_PLUMBING WASTE AND VENT FLOOR PLAN_CAFE AND RESTROOM - TT.DWG - KEN.KULONIS.DWG

REVISION DATES (DESIGN STAGE ONLY)

THE CITY OF LOS ANGELES OR ITS OFFICERS OR AGENTS SHALL NOT BE RESPONSIBLE FOR THE ACCURACY OR COMPLETENESS OF ELECTRONIC COPIES OF THIS PLAN SHEET.

Sheet Version 3.0



STAFF AND RESTROOM BUILDING FLOOR PLAN

SCALE: 1/4" = 1'-0"

0 2' 4' 8'

THE CITY OF LOS ANGELES OR ITS OFFICERS OR AGENTS SHALL NOT BE RESPONSIBLE FOR THE ACCURACY OR COMPLETENESS OF ELECTRONIC COPIES OF THIS PLAN SHEET.

REVISION DATES (DESIGN STAGE ONLY)

Sheet Version 3.0

PLANS PREPARED BY:
TETRA TECH, INC.
350 SOUTH GRAND AVENUE, SUITE 3310
LOS ANGELES, CALIFORNIA 90071
Phone: (213) 279-3283

VERT. CONTROL: BM 12-04070, 1929 (NGVD29) - 1985 ADJUSTMENT
HORIZ. CONTROL: GPS, PID AE 1704, EPOCH 1991.35

SHEET TITLE: STAFF & SHOP BUILDINGS
DOMESTIC HOT & COLD WATER FLOOR PLANS

PROJECT: SIXTH STREET PARK, ARTS AND RIVER CONNECTIVITY IMPROVEMENTS (PARC)

ADDRESS: SIXTH STREET OVER THE LOS ANGELES RIVER

WORK ORDER NO. E700235D
FILE NO. --
DRAWING NO. P-301
SHEET 288 OF 295 SHEETS

BUREAU OF ENGINEERING
OFFICIAL RECORD

CITY OF LOS ANGELES DEPARTMENT OF PUBLIC WORKS
BUREAU OF ENGINEERING

ENGINEERING
CITY OF LOS ANGELES

NO. REVISIONS: DATE: BY:

BUILDING NO.

INDEX NO. MF-300501

REGISTERED PROFESSIONAL ENGINEER KENNETH D. KULONIS No. 27379 Exp. 6-30-2023 MECHANICAL STATE OF CALIFORNIA

THIS PLAN WAS ELECTRONICALLY SIGNED AND STAMPED.

CITY ENGINEER
TED ALLEN, P.E.
DATE:

DESIGN GROUP:
ENGINEER: KEN KULONIS LIC. NO. M27379
DESIGNED BY: KEN KULONIS
DRAWN BY: KEN KULONIS
CHECKED BY: JASON L. FUSSEL
APPROVED BY:

7/8/2022 7:15:37 PM - C:\USERS\KEN.KULONIS\DESKTOP\PARC\CAD\SHEETFILES\P-301_PLUMBING DOMESTIC WATER FLOOR PLAN_STAFF AND RESTROOM BLDGS - TT.DWG - KULONIS, KEN

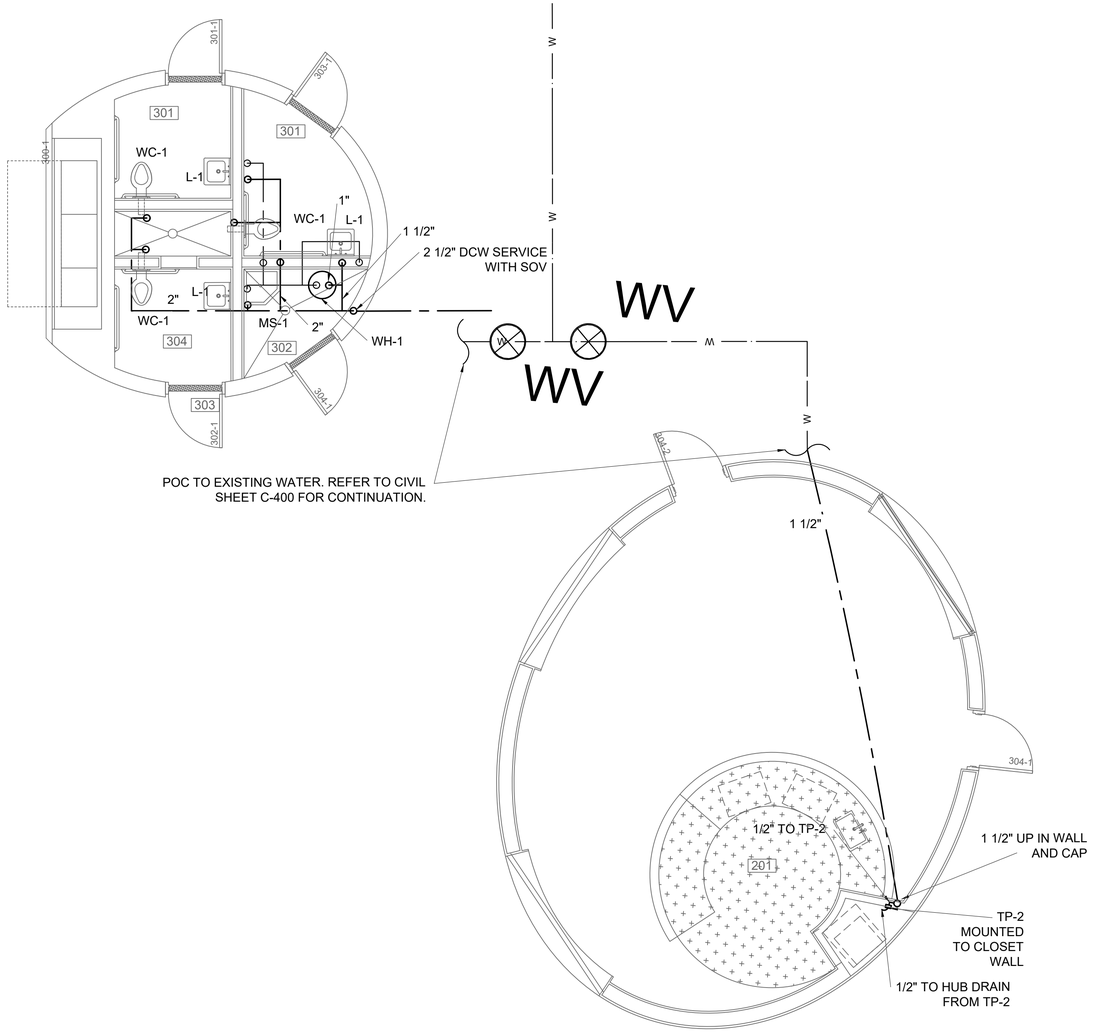

CAFE AND RESTROOM BUILDING FLOOR PLAN

SCALE: 1/4" = 1'-0"

THE CITY OF LOS ANGELES OR ITS OFFICERS OR AGENTS SHALL NOT BE RESPONSIBLE FOR THE ACCURACY OR COMPLETENESS OF ELECTRONIC COPIES OF THIS PLAN SHEET.

REVISION DATES (DESIGN STAGE ONLY)

Sheet Version 3.0

BUREAU OF ENGINEERING

ENGINEERING
CITY OF LOS ANGELES

NO. | REVISIONS: | DATE | BY:

BUILDING NO.

INDEX NO. MF-300501

THIS PLAN WAS ELECTRONICALLY SIGNED AND STAMPED.

REGISTERED PROFESSIONAL ENGINEER
KENNETH P. KULONIS
No. 27379
Exp. 6-30-2023
MECHANICAL
STATE OF CALIFORNIA

BUREAU OF ENGINEERING
OFFICIAL RECORD

PLANS PREPARED BY:
TETRA TECH, INC.
350 SOUTH GRAND AVENUE, SUITE 3310
LOS ANGELES, CALIFORNIA 90071
Phone: (213) 279-3283

CITY OF LOS ANGELES
DEPARTMENT OF PUBLIC WORKS

VERT. CONTROL: BM 12-04070, 1929 (NGVD29) - 1985 ADJUSTMENT
HORIZ. CONTROL: GPS; PID AE 1704; EPOCH 1991.35

SHEET TITLE: CAFE & RESTROOM BUILDINGS
DOMESTIC HOT & COLD WATER FLOOR PLANS
PROJECT: SIXTH STREET PARK, ARTS AND RIVER
CONNECTIVITY IMPROVEMENTS (PARC)
ADDRESS: SIXTH STREET OVER THE
LOS ANGELES RIVER

WORK ORDER NO. E700235D
FILE NO. --
DRAWING NO. P-302
SHEET 289 OF 295 SHEETS

CITY ENGINEER
DATE:
TED ALLEN, P.E.
LIC. NO. M27379

DESIGN SUP.
ENGINEER: KEN KULONIS
DESIGNED BY: KEN KULONIS
DRAWN BY: KEN KULONIS
CHECKED BY: JASON L. FUSSEL
APPROVED BY:

7/8/2022 7:17:45 PM - C:\USERS\KEN.KULONIS\DESKTOP\PARC\CAD\SHEETFILES\P-302_PLUMBING DOMESTIC WATER FLOOR PLAN_CAFE AND RESTROOM - TT.DWG - KULONIS, KEN

NOTES:

1. CONTRACTOR RESPONSIBLE FOR WATER HEATER SUPPORTS.

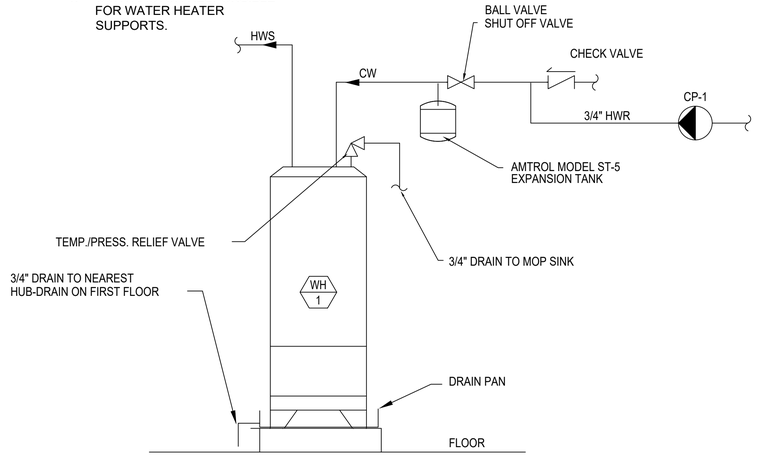

1 WATER HEATER DETAIL
VARIES | P501 NOT TO SCALE

1 4" SLAB ON GRADE
2 FINISH FLOOR
3 TOPPING SLAB
4 MEMBRANE
5 VENTED TRAP
6 ADJUSTABLE STRAINER
7 CLAMPING RING
8 TRAP PRIMER PORT

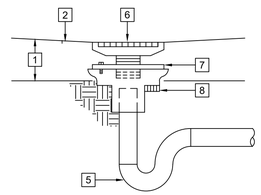

FLOOR DRAIN

2 FLOOR/TRENCH DRAIN DETAIL
VARIES | P501 NOT TO SCALE

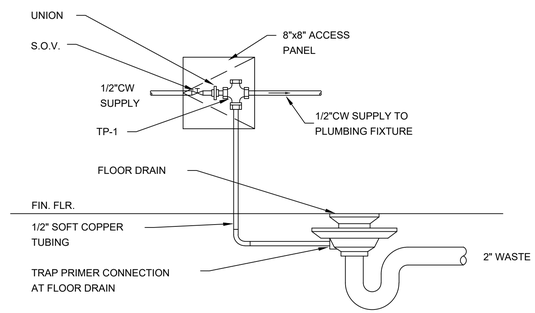

3 TRAP PRIMER DETAIL
VARIES | P501 NOT TO SCALE

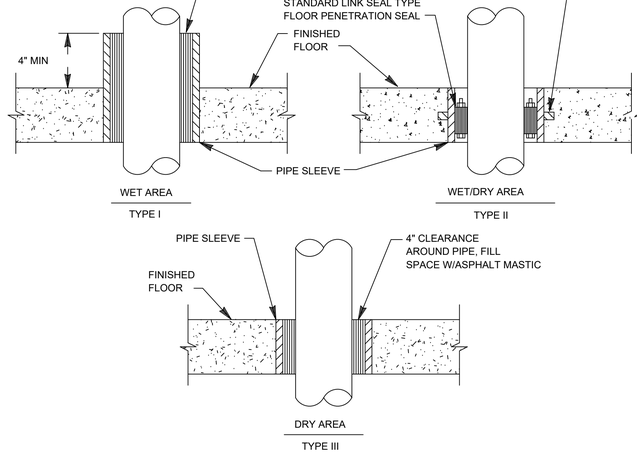

4 PIPE PENETRATION THRU WATERPROOF FLOOR
VARIES | P501 NOT TO SCALE

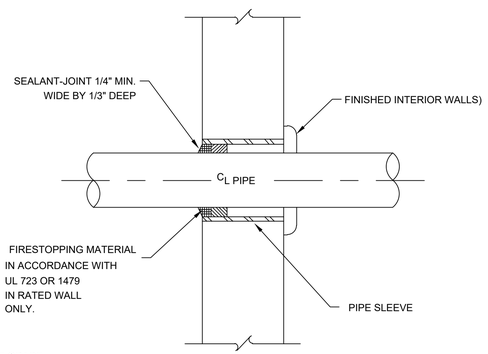

NON-INSULATED, ABOVE GRADE

5 RATED/NON-RATED WALL PENETRATION DETAIL
VARIES | P-501 NOT TO SCALE

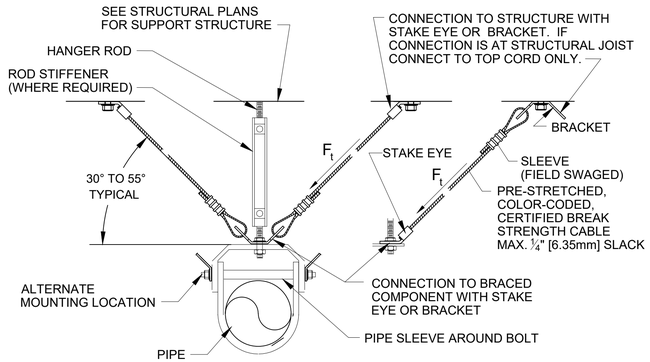

NOTE:

1. CONTRACTOR IS RESPONSIBLE FOR DETERMINING LAYOUT, SPACING, AND ATTACHMENTS.

TYPICAL SEISMIC CABLE LAYOUT TRANSVERSE PIPE RESTRAINT

6 SEISMIC RESTRIANT DETAILS
VARIES | M501 NOT TO SCALE

BUREAU OF ENGINEERING
OFFICIAL RECORD

ENGINEERING
CITY OF LOS ANGELES

BUREAU OF ENGINEERING
DEPARTMENT OF PUBLIC WORKS
CITY OF LOS ANGELES

NO.	REVISIONS:	DATE	BY:

BUILDING NO.

INDEX NO. MF-300501

REGISTERED PROFESSIONAL ENGINEER
KENNETH P. KULONIS
No. 27379
Exp. 6-30-2023
MECHANICAL
STATE OF CALIFORNIA

THIS PLAN WAS ELECTRONICALLY SIGNED AND STAMPED.

CITY ENGINEER
TED ALLEN, P.E.
DATE:
DESIGN GROUP:
LIC. NO. M27379
ENGINEER: KEN KULONIS
DESIGNED BY: KEN KULONIS
DRAWN BY: KEN KULONIS
CHECKED BY: JASON L. FUSSEL
APPROVED BY:

PLANS PREPARED BY:
TETRA TECH, INC.
350 SOUTH GRAND AVENUE, SUITE 3310
LOS ANGELES, CALIFORNIA 90071
Phone: (213) 279-3283

VERT. CONTROL: BM 12-04070, 1929 (NGVD29) - 1985 ADJUSTMENT
HORIZ. CONTROL: GPS; PID AE 1704; EPOCH 1991.35

SHEET TITLE: PLUMBING DETAILS

PROJECT: SIXTH STREET PARK, ARTS AND RIVER CONNECTIVITY IMPROVEMENTS (PARC)

ADDRESS: SIXTH STREET OVER THE LOS ANGELES RIVER

WORK ORDER NO. E700235D
FILE NO. --
DRAWING NO. P-501
SHEET 290 OF 295 SHEETS

7/8/2022 7:19:03 PM - C:\USERS\KEN.KULONIS\DESKTOP\PARC\CAD\SHEETFILES\P-501_PLUMBING DETAILS - TT.DWG - KULONIS, KEN

REVISION DATES (DESIGN STAGE ONLY)

THE CITY OF LOS ANGELES OR ITS OFFICERS OR AGENTS SHALL NOT BE RESPONSIBLE FOR THE ACCURACY OR COMPLETENESS OF ELECTRONIC COPIES OF THIS PLAN SHEET.

Sheet Version 3.0

FIXTURE SCHEDULE

ITEM	FIXTURE*	ROUGH-IN CONNECTIONS					REMARKS
		WASTE	TRAP	VENT	COLD WATER	HOT WATER	
WC-1	WATER CLOSET	4"	INT	2"	1"	-	WALL MOUNTED DUAL FLUSH, 1.6/1.1 GPF. ELECTRONIC FLUSH VALVE. ZURN MODEL Z1201-N_4 CARRIER, ADA APPROVED
WC-2	WATER CLOSET	4"	INT	2"	1"	-	FLOOR MOUNTED DUAL FLUSH, 1.6/1.1 GPF. TANK TYPE. MOUNT AT ADA APPROVED HEIGHT.
MS-1	MOP SINK	3"	3"	2"	3/4"	3/4"	FLOOR MOUNTED, TERRAZZO. 24 x 24 x 12 DEEP. PROVIDE YOKE UTILITY FAUCET WITH VACUUM BREAKER
L-1	LAVATORY	1 1/2"	1 1/2"	1 1/2"	1/2"	1/2"	AMER. STD. MODEL 0440.444EC, W/ DELTA MODEL 2529LF-HDF FAUCET, WITH GRID DRAIN
L-2	LAVATORY	1 1/2"	1 1/2"	1 1/2"	1/2"	1/2"	AMER. STD. MODEL 0440.444EC, W/ DELTA MODEL 2529LF-HDF FAUCET, WITH GRID DRAIN
L-3	LAVATORY	1 1/2"	1 1/2"	1 1/2"	1/2"	1/2"	AMER. STD. MODEL 0440.444EC, W/ DELTA MODEL 2529LF-HDF FAUCET, WITH GRID DRAIN
SH-1	SHOWER	2"	1 1/2"	1 1/2"	1/2"	1/2"	FD-1 DRAIN WITH LEVER LANDLE BALANCE PRESSURE VALVE.
KS-1	KITCHEN SINK	2"	1 1/2"	1 1/2"	1/2"	1/2"	JUST MODEL SLF-1921-A-GR 18 GA. TYPE 304 STAINLESS STEEL SELF RIMMING 21 X 19 SINGLE COMPARTMENT SINK WITH JUST MODEL JRL1191 FAUCET AND HOSE SPRAY, COMPLETE WITH CUP STRAINER.
TD-1	TRENCH DRAIN	2"	2"	1 1/2"	-	-	J.R. SMITH MODEL270 CAST IRON 36" LONG.
FD-1	FLOOR DRAIN	2"	2"	1 1/2"	-	-	J.R. SMITH MODEL 2005 W/ ROUND NICKLE BRONZE GRATE, AND TRAP PRIMER CONNECTION.
RD/ OD-1	ROOF DRAIN/ OVERFLOW DRAIN	3"*	-	-	-	-	JR SMITH DRAIN MODEL 1800 RD/OD COMBO.
HB-1	HOSE BIBB	-	-	-	3/4"	-	WOODFORD MODEL 24 PROVIDE VACUUM BREAKER
DF-1	DRINKING FOUNTAIN	-	-	-	3/4"	-	

* PIPE TO STORM DRAIN

PIPE SCHEDULE

AG: ABOVE GRADE
BG: BELOW GRADE

SERVICES		C.I. NO-HUB	C.I. HUB & SPIGOT	PVC SCH. 40	INDUSTRIAL APH	SCH 40 BLACK STEEL	SCH 80 GALV. STEEL	COPPER TYPE "K"	COPPER TYPE "L"	COPPER TYPE "M"	STAINLESS STEEL (304)	REMARKS
		PIPE MATERIALS										
COLD WATER	AG							●				
	BG						●					(1)
WASTE (DOMESTIC)	AG			●								
	BG			●								
VENT	AG			●								
	BG			●								
INDIRECT WASTE	AG			●								
	BG											
HOT WATER	AG							●				
	BG											

(1) PROVIDE 6 MIL POLYETHYLENE PIPE SLEEVE. SLEEVE COLOR TO BE BLUE.

EQUIPMENT SCHEDULE

WH-1	WATER HEATER	A.O. SMITH PRO-LINE MODEL ENT-40, 21 GPH RECOVERY @ 90° RISE, 40 GALLON STORAGE, 53 GALLON FIRST HOUR RATING, 4500 WATT INPUT, 208 V. -1Ø ELECTRICAL CIRCUIT
CP-1	CIRC PUMP	TACO MODEL 007-FS, 5 GPM @ 9 FT. 1/25 HP, 120 V.-1Ø
WHA-1	WATER HAMMER ARRESTOR	PPP MODEL SC-500A W/ACCESS PANEL
TP-1	TRAP PRIMER	PPP MODEL CPO-500 W/ACCESS PANEL
TP-2	TRAP PRIMER	PPP MODEL MPB-500 W/ACCESS PANEL. 115V.-1Ø, 2 AMPS.
TMV-1	THERMOSTATIC MIXING VALVE	LEONARD MODEL TM-186-20015020-PRV-RF-STSTL-REC MIN FLOW 1 GPM, MAX FLOW 350 GPM. PRESSURE DROP 5 PSI @ 160 GPM.

BUREAU OF ENGINEERING
OFFICIAL RECORD

PLANS PREPARED BY:
TETRA TECH, INC.
350 SOUTH GRAND AVENUE, SUITE 3310
LOS ANGELES, CALIFORNIA 90071
Phone: (213) 279-3283

CITY OF LOS ANGELES DEPARTMENT OF PUBLIC WORKS
BUREAU OF ENGINEERING

ENGINEERING
CITY OF LOS ANGELES

NO. | REVISIONS: | DATE | BY:

BUILDING NO.

INDEX NO. MF-300501

REGISTERED PROFESSIONAL ENGINEER KENNETH P. KULONIS No. 27379 Exp. 6-30-2023 MECHANICAL STATE OF CALIFORNIA

THIS PLAN WAS ELECTRONICALLY SIGNED AND STAMPED

CITY ENGINEER
DATE:
LIC. NO. M27379
DESIGN GROUP

TED ALLEN, P.E.

ENGINEER: KEN KULONIS
DESIGNED BY: KEN KULONIS
DRAWN BY: KEN KULONIS
CHECKED BY: JASON L. FUSSEL
APPROVED BY:

SHEET TITLE: PLUMBING SCHEDULES

PROJECT: SIXTH STREET PARK, ARTS AND RIVER CONNECTIVITY IMPROVEMENTS (PARC)

ADDRESS: SIXTH STREET OVER THE LOS ANGELES RIVER

VERT. CONTROL: BM 12-04070, 1929 (NGVD29) - 1985 ADJUSTMENT
HORIZ. CONTROL: GPS; PID AE 1704; EPOCH 1991.35

WORK ORDER NO. E700235D
FILE NO. --
DRAWING NO. P-601
SHEET 291 OF 295 SHEETS

7/8/2022 7:19:34 PM - C:\USERS\KEN.KULONIS\DESKTOP\PARC\CAD\SHEETFILES\P-601_PLUMBING SCHEDULES - TT.DWG - KULONIS, KEN

THE CITY OF LOS ANGELES OR ITS OFFICERS OR AGENTS SHALL NOT BE RESPONSIBLE FOR THE ACCURACY OR COMPLETENESS OF ELECTRONIC COPIES OF THIS PLAN SHEET.

REVISION DATES (DESIGN STAGE ONLY)

Sheet Version 3.0

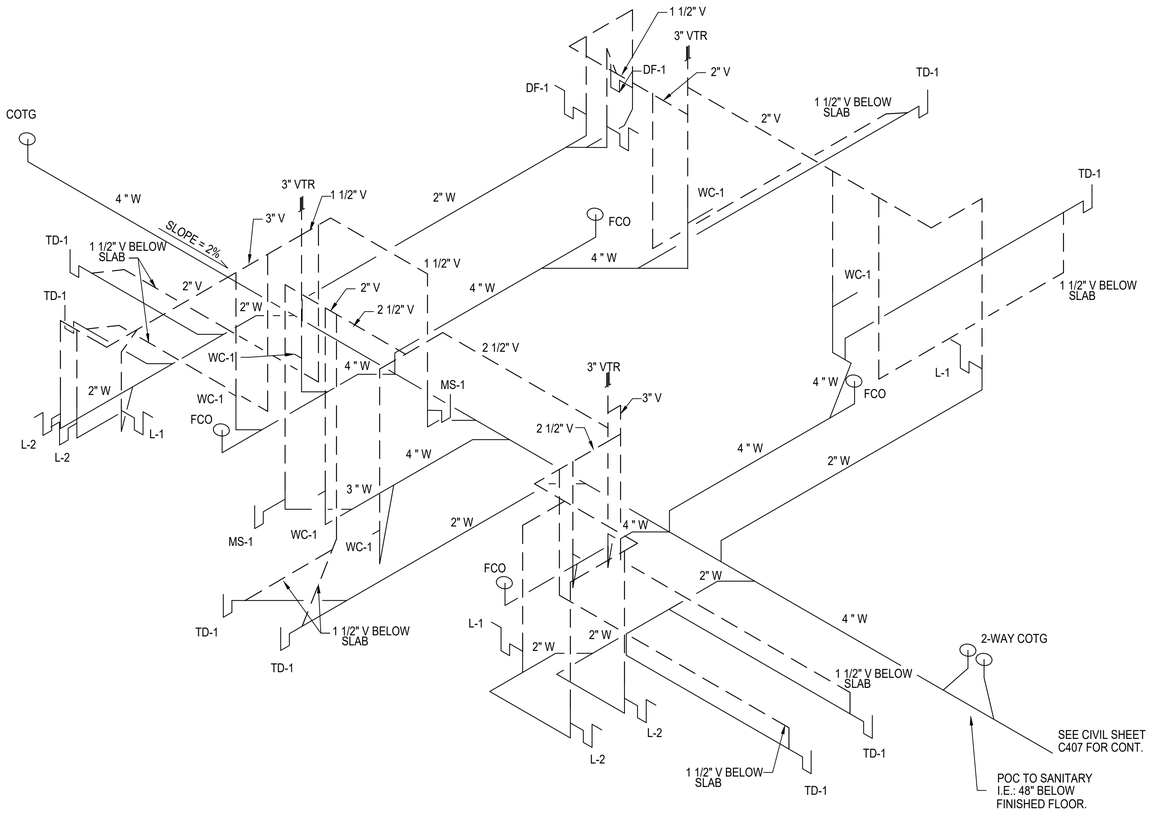

1 WASTE + VENT ISOMETRIC-RESTROOM/SHOP
VARIES | P301 NOT TO SCALE

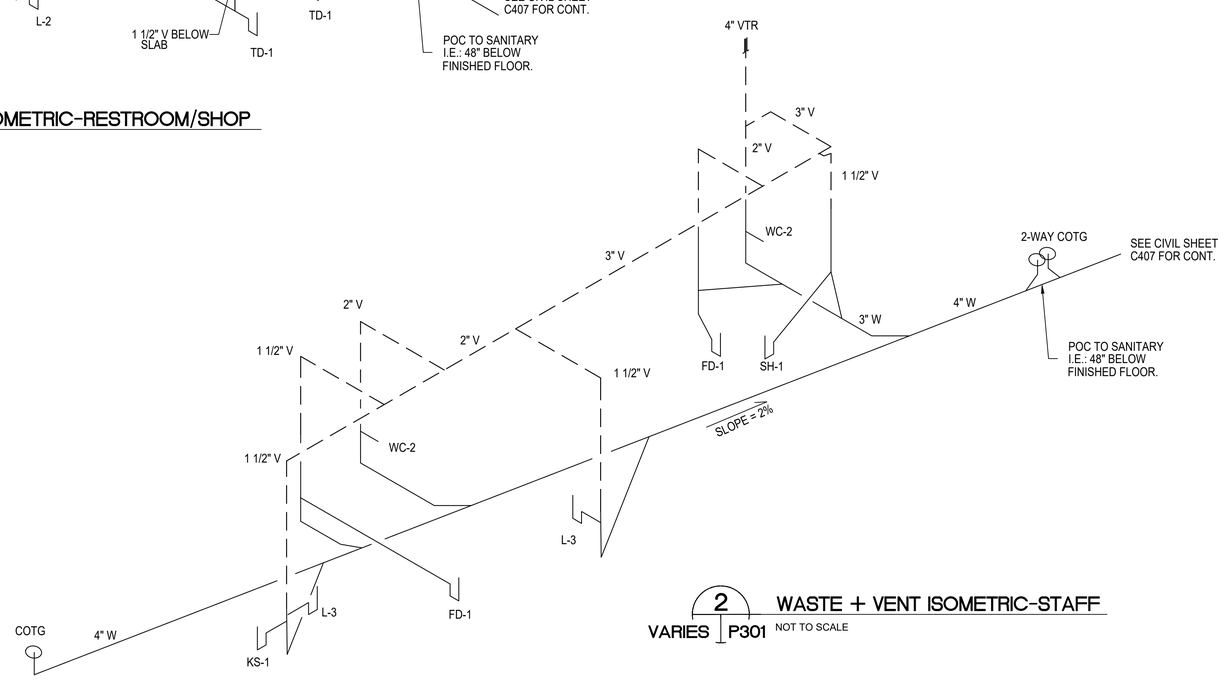

2 WASTE + VENT ISOMETRIC-STAFF
VARIES | P301 NOT TO SCALE

OFFICIAL RECORD

THE CITY OF LOS ANGELES OR ITS OFFICERS OR AGENTS SHALL NOT BE RESPONSIBLE FOR THE ACCURACY OR COMPLETENESS OF ELECTRONIC COPIES OF THIS PLAN SHEET.

REVISION DATES (DESIGN STAGE ONLY)

Sheet Version 3.0

BUREAU OF ENGINEERING
ENGINEERING
CITY OF LOS ANGELES

NO.	REVISIONS:	DATE	BY:

BUILDING NO.

INDEX NO. MF-300501

THIS PLAN WAS ELECTRONICALLY SIGNED AND STAMPED.

REGISTERED PROFESSIONAL ENGINEER
KENNETH P. KULONIS
No. 27379
Exp. 6-30-2023
MECHANICAL
STATE OF CALIFORNIA

CITY OF LOS ANGELES DEPARTMENT OF PUBLIC WORKS

CITY ENGINEER

DATE:

LIC. NO. M27379

TED ALLEN, P.E.

DESIGN SUP.

ENGINEER:	KEN KULONIS
DESIGNED BY:	KEN KULONIS
DRAWN BY:	KEN KULONIS
CHECKED BY:	JASON L. FUSSEL
APPROVED BY:	

VERT. CONTROL: BM 12-04070, 1929 (NGVD29) - 1985 ADJUSTMENT
HORIZ. CONTROL: GPS; PID AE 1704, EPOCH 1991.35

SHEET TITLE: WASTE & VENT ISOMETRIC-STAFF

PROJECT: SIXTH STREET PARK, ARTS AND RIVER CONNECTIVITY IMPROVEMENTS (PARC)

ADDRESS: SIXTH STREET OVER THE LOS ANGELES RIVER

PLANS PREPARED BY:
TETRA TECH, INC.
350 SOUTH GRAND AVENUE, SUITE 3310
LOS ANGELES, CALIFORNIA 90071
Phone: (213) 279-3283

WORK ORDER NO. E700235D
FILE NO. --
DRAWING NO. P-901
SHEET 292 OF 295 SHEETS

7/8/2022 7:20:04 PM - C:\USERS\KEN.KULONIS\DESKTOP\PARC\CAD\SHEETFILES\P-901_STAFF WAV ISOMETRICS - TT.DWG - KULONIS, KEN

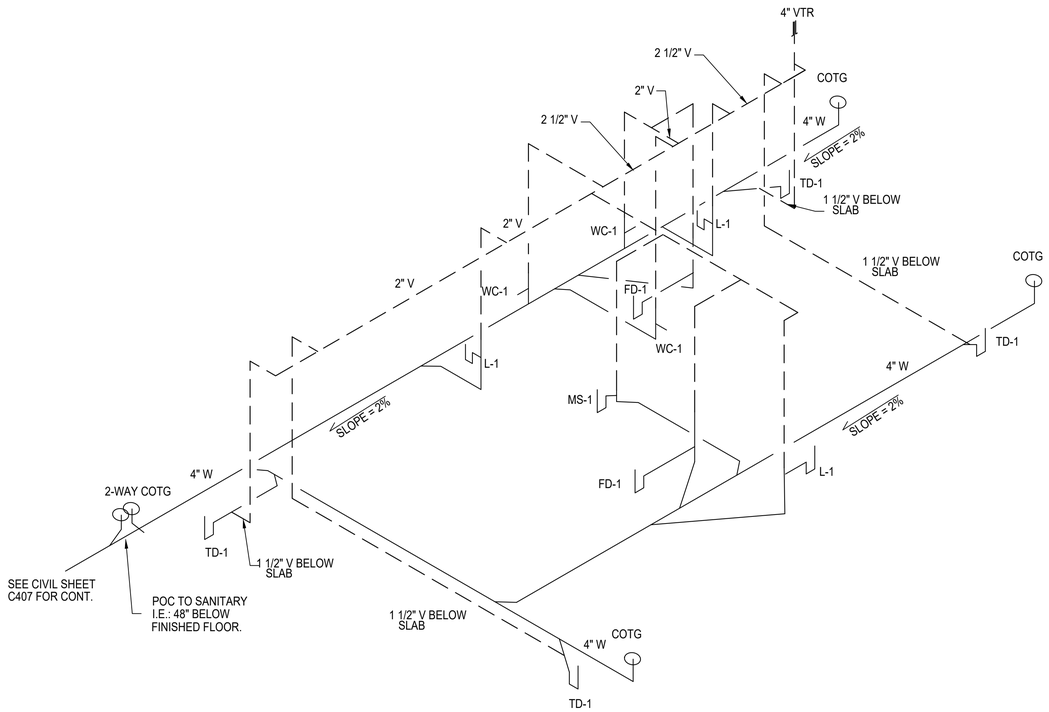

1 WASTE + VENT ISOMETRIC-RESTROOM
VARIES | P202 NOT TO SCALE

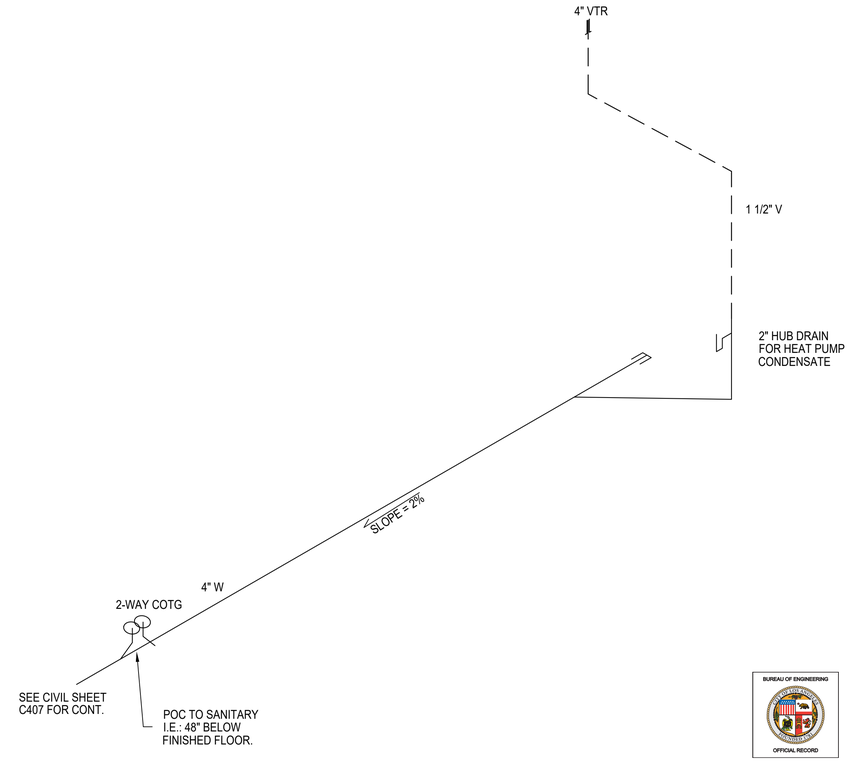

2 WASTE + VENT ISOMETRIC-CAFE'
VARIES | P202 NOT TO SCALE

BUREAU OF ENGINEERING
OFFICIAL RECORD

THE CITY OF LOS ANGELES OR ITS OFFICERS OR AGENTS SHALL NOT BE RESPONSIBLE FOR THE ACCURACY OR COMPLETENESS OF ELECTRONIC COPIES OF THIS PLAN SHEET.

REVISION DATES (DESIGN STAGE ONLY)

Sheet Version 3.0

CITY OF LOS ANGELES DEPARTMENT OF PUBLIC WORKS BUREAU OF ENGINEERING

ENGINEERING
CITY OF LOS ANGELES

NO. | REVISIONS: | DATE | BY:

BUILDING NO.

INDEX NO. MF-300501

REGISTERED PROFESSIONAL ENGINEER KENNETH D. KULONIS No. 27379 Exp. 6-30-2023 MECHANICAL STATE OF CALIFORNIA

* THIS PLAN WAS ELECTRONICALLY SIGNED AND STAMPED.

CITY ENGINEER

DATE:

LIC. NO. M27379

DESIGN GROUP

TED ALLEN, P.E.

ENGINEER: KEN KULONIS
DESIGNED BY: KEN KULONIS
DRAWN BY: KEN KULONIS
CHECKED BY: JASON L. FUSSEL
APPROVED BY:

VERT. CONTROL: BM 12-04070, 1929 (NGVD29) - 1985 ADJUSTMENT
HORIZ. CONTROL: GPS; PID AE 1704; EPOCH 1991.35

SHEET TITLE: WASTE & VENT ISOMETRIC-CAFE/RR

PROJECT: SIXTH STREET PARK, ARTS AND RIVER CONNECTIVITY IMPROVEMENTS (PARC)

ADDRESS: SIXTH STREET OVER THE LOS ANGELES RIVER

PLANS PREPARED BY:
TETRA TECH, INC.
350 SOUTH GRAND AVENUE, SUITE 3310
LOS ANGELES, CALIFORNIA 90071
Phone: (213) 279-3283

WORK ORDER NO. E700235D
FILE NO. --
DRAWING NO. P-902
SHEET 293 OF 295 SHEETS

7/8/2022 7:20:30 PM - C:\USERS\KEN.KULONIS\DESKTOP\PARC\CAD\SHEETFILES\P-902_CAFE-RR W&V ISOMETRICS - TT.DWG - KULONIS, KEN

THE CITY OF LOS ANGELES OR ITS OFFICERS OR AGENTS SHALL NOT BE RESPONSIBLE FOR THE ACCURACY OR COMPLETENESS OF ELECTRONIC COPIES OF THIS PLAN SHEET.

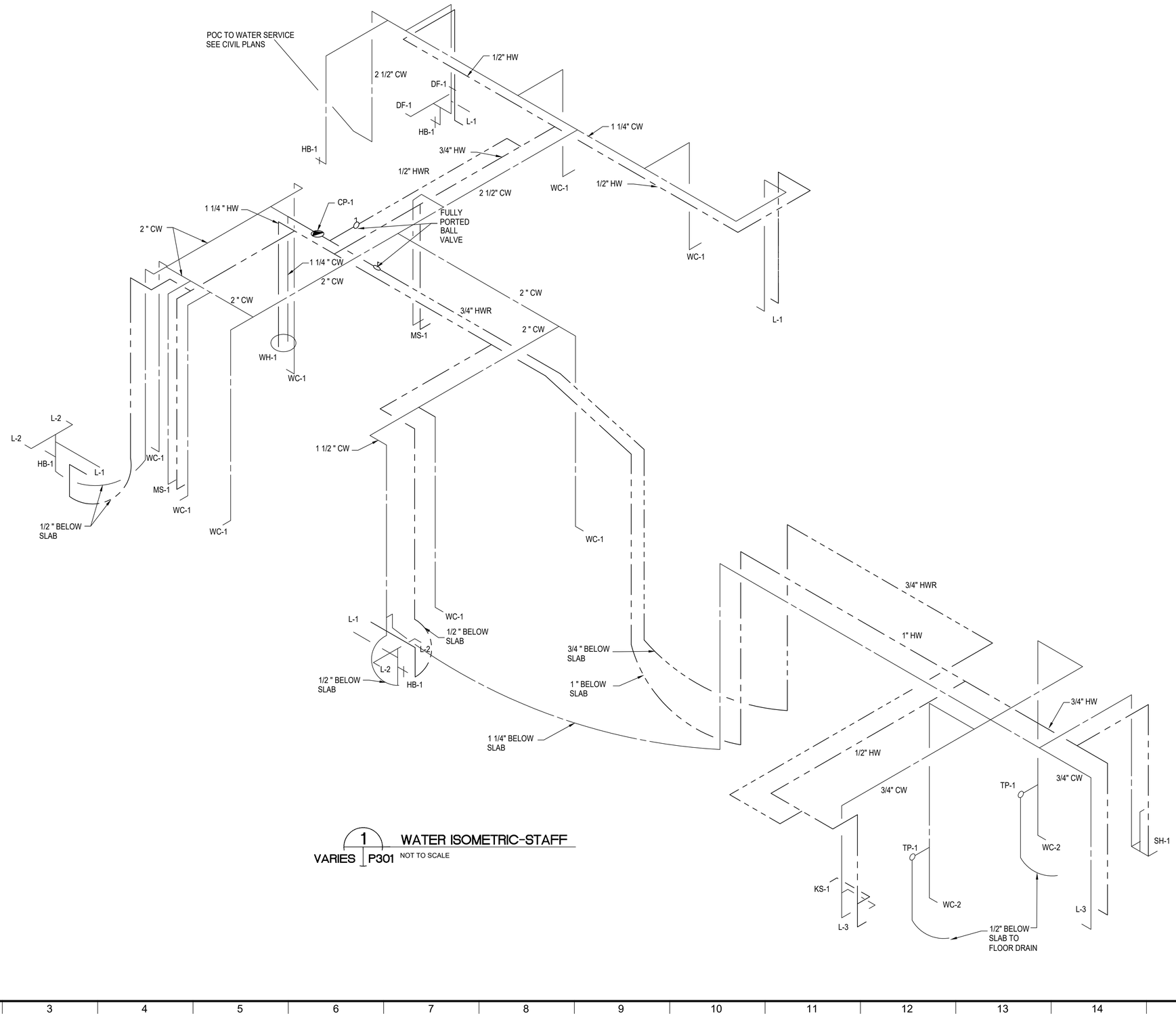

1 WATER ISOMETRIC-STAFF
VARIES | P301 NOT TO SCALE

BUREAU OF ENGINEERING
OFFICIAL RECORD

PLANS PREPARED BY:
TETRA TECH, INC.
350 SOUTH GRAND AVENUE, SUITE 3310
LOS ANGELES, CALIFORNIA 90071
Phone: (213) 279-3283

CITY OF LOS ANGELES DEPARTMENT OF PUBLIC WORKS
BUREAU OF ENGINEERING

VERT. CONTROL: BM 12-04070, 1929 (NGVD29) - 1985 ADJUSTMENT
HORIZ. CONTROL: GPS; PID AE 1704, EPOCH 1991.35

SHEET TITLE: WATER ISOMETRIC-STAFF

PROJECT: SIXTH STREET PARK, ARTS AND RIVER CONNECTIVITY IMPROVEMENTS (PARC).

ADDRESS: SIXTH STREET OVER THE LOS ANGELES RIVER

CITY ENGINEER
TED ALLEN, P.E.
DESIGN GROUP
ENGINEER: KEN KULONIS
DESIGNED BY: KEN KULONIS
DRAWN BY: KEN KULONIS
CHECKED BY: JASON L FUSSEL
APPROVED BY:
LIC. NO. M27379
DATE:

NO. REVISIONS: DATE: BY:

BUILDING NO.

INDEX NO. MF-300501

REGISTERED PROFESSIONAL ENGINEER
KENNETH P. KULONIS
No. 27379
Exp. 6-30-2023
MECHANICAL
STATE OF CALIFORNIA

* THIS PLAN WAS ELECTRONICALLY SIGNED AND STAMPED.

WORK ORDER NO. E700235D
FILE NO. --
DRAWING NO. P-903
SHEET 294 OF 295 SHEETS

REVISION DATES (DESIGN STAGE ONLY)

Sheet Version 3.0

7/8/2022 7:21:10 PM - C:\USERS\KEN.KULONIS\DESKTOP\PARC\CAD\SHEETFILES\P-903_STAFF WATER ISOMETRICS - TT.DWG - KULONIS, KEN

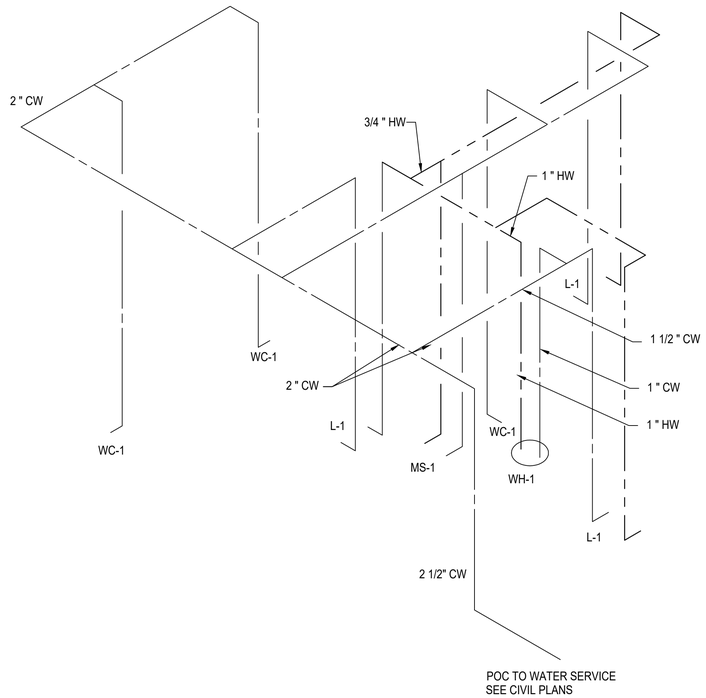

1 WATER ISOMETRIC-RESTROOM

VARIES | P302 NOT TO SCALE

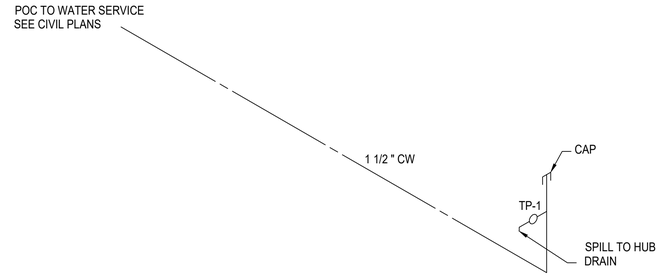

2 WATER ISOMETRIC-CAFE

VARIES | P302 NOT TO SCALE

THE CITY OF LOS ANGELES OR ITS OFFICERS OR AGENTS SHALL NOT BE RESPONSIBLE FOR THE ACCURACY OR COMPLETENESS OF ELECTRONIC COPIES OF THIS PLAN SHEET.

REVISION DATES (DESIGN STAGE ONLY)

Sheet Version 3.0

BUREAU OF ENGINEERING

NO. | REVISIONS: | DATE | BY:

BUILDING NO.

INDEX NO. MF-300501

ENGINEERING
CITY OF LOS ANGELES

REGISTERED PROFESSIONAL ENGINEER
KENNETH P. KULONIS
No. 27379
Exp. 6-30-2023
MECHANICAL
STATE OF CALIFORNIA

"THIS PLAN WAS ELECTRONICALLY SIGNED AND STAMPED"

CITY OF LOS ANGELES DEPARTMENT OF PUBLIC WORKS

CITY ENGINEER

DATE:

LIC. NO. M27379

TED ALLEN, P.E.

DESIGN SUP.

ENGINEER: KEN KULONIS

DESIGNED BY: KEN KULONIS

DRAWN BY: KEN KULONIS

CHECKED BY: JASON L. FUSSEL

APPROVED BY:

VERT. CONTROL: BM 12-04070, 1929 (NGVD29) - 1985 ADJUSTMENT

HORIZ. CONTROL: GPS; PID AE 1704, EPOCH 1991.35

SHEET TITLE: WATER ISOMETRIC-RR/CAFE

PROJECT: SIXTH STREET PARK, ARTS AND RIVER CONNECTIVITY IMPROVEMENTS (PARC)

ADDRESS: SIXTH STREET OVER THE LOS ANGELES RIVER

PLANS PREPARED BY:

TETRA TECH, INC.
350 SOUTH GRAND AVENUE, SUITE 3310
LOS ANGELES, CALIFORNIA 90071
Phone: (213) 279-3283

BUREAU OF ENGINEERING
OFFICIAL RECORD

WORK ORDER NO.
E700235D

FILE NO.
--

DRAWING NO.
P-904

SHEET 295 OF 295 SHEETS

7/8/2022 7:21:34 PM - C:\USERS\KEN.KULONIS\DESKTOP\PARC\CAD\SHEETFILES\P-904_RR-CAFE WATER ISOMETRICS - TT.DWG - KULONIS, KEN

BUREAU OF ENGINEERING

SIXTH STREET PARK, ARTS AND RIVER CONNECTIVITY IMPROVEMENTS (PARC)
WORK ORDER NO. E700235D

GENERAL CONDITIONS
GENERAL REQUIREMENTS
TECHNICAL SPECIFICATIONS
ATTACHMENTS

BID SUBMITTAL
July 2022

City of Los Angeles
California

Department of Public Works
Bureau of Engineering

ENGINEERING
CITY OF LOS ANGELES

TABLE OF CONTENTS

GENERAL CONDITIONS
DIVISION 00 – GENERAL CONDITIONS

00010 GENERAL CONDITIONS

GENERAL REQUIREMENTS
DIVISION 01 – GENERAL REQUIREMENTS

01100 SUMMARY

01111 ABBREVIATIONS AND REFERENCE STANDARDS
01112 DESCRIPTION OF WORK
01113 DIVISIONS OF TECHNICAL SECTIONS OF PROJECT MANUAL
01114 ISSUANCE OF DRAWINGS AND THE PROJECT MANUAL
01115 MANDATORY PROVISIONS
01116 ELECTRONIC DOCUMENT CONTROL
01120 INTERFACE / COORDINATION REQUIREMENTS
01140 CONTRACTOR'S USE OF THE PREMISES
01150 STORAGE OF MATERIALS AND EQUIPMENT

01200 PRICE AND PAYMENT PROCEDURES

01212 FIXED CASH ALLOWANCE ITEMS
01230 ALTERNATIVES
01251 CHANGE ORDER REQUESTS
01253 DIFFERING SITE CONDITION
01254 CHANGE ORDERS
01255 PRICE REDUCTION FOR DEFECTIVE COST OR PRICING DATA
01270 MEASUREMENT OF QUANTITIES FOR UNIT PRICE WORK
01280 MEASUREMENT AND PAYMENT
01291 NOTICE TO WITHHOLD AND/OR STOP NOTICE
01292 PAYMENTS
01298 SCHEDULE OF VALUES / CONTRACT PRICE BREAKDOWN

01300 ADMINISTRATIVE REQUIREMENTS

01311 PRECONSTRUCTION SAFETY CONFERENCE
01312 PROJECT MEETINGS
01313 WORK BY CITY OR OTHERS
01321 CONTRACTOR'S CONSTRUCTION SCHEDULE AND REPORTS
01322 CONSTRUCTION PROGRESS PHOTOGRAPHY
01323 CONSTRUCTION STATUS REPORTS
01330 SHOP DRAWINGS / SUBMITTALS
01350 AUDIT AND ACCESS TO RECORDS
01351 ESCROW BID DOCUMENTS
01353 OPPORTUNITY TO PARTNER

01400 QUALITY REQUIREMENTS

01410 REGULATORY REQUIREMENTS
01411 CONFINED SPACE ENTRY
01412 ENHANCED ELECTRICAL SAFETY POLICY
01420 UNITS OF MEASURE
01421 SYMBOLS
01430 MANUFACTURER'S FIELD SERVICE
01452 INSPECTION OF THE WORK
01453 SAMPLING, TESTING AND FABRICATION INSPECTION
01454 WEIGHING AND METERING EQUIPMENT
01455 CALIBRATION OF TESTING EQUIPMENT

01500 TEMPORARY FACILITIES AND CONTROLS

01561 ENVIRONMENTAL CONTROL
01562 ENVIRONMENTAL MITIGATION
01563 POLLUTION CONTROL -SEWAGE SPILL PREVENTION AND RESPONSE REQUIREMENTS
01571 STORMWATER POLLUTION CONTROL MEASURES FOR CONSTRUCTION ACTIVITIES
01572 CONSTRUCTION AND DEMOLITION WASTE MANAGEMENT
01581 PROJECT SIGNS

01600 PRODUCT REQUIREMENTS

01601 BUY CLEAN CALIFORNIA ACT
01611 GUARANTY / WARRANTY
01630 SUBSTITUTIONS AND "OR EQUAL" SUBMITTAL

01700 EXECUTION REQUIREMENTS

01711 SITE INVESTIGATION
01712 SUBSURFACE DATA
01721 MOBILIZATION
01722 SURVEYING
01723 RIGHT OF WAY
01731 CUTTING AND PATCHING
01732 ADDITIONAL POTHOLING
01740 REMOVAL, CLEANUP, AND DEMOBILIZATION
01770 PROJECT CLOSEOUT
01783 PROJECT RECORD DOCUMENTS

TECHNICAL SPECIFICATIONS

DIVISION 02 – SITE WORK

02205 HISTORIC RESTORATION PROCEDURES
02210 CLEARING, GRUBBING AND STRIPPING
02220 SITE DEMOLITION
02225 LEAD BASED PAINT REMOVAL
02240 SHEETING, SHORING AND BRACING SYSTEMS
02310 EARTHWORK
02330 SOIL STABILIZATION
02501 MAINTENANCE AND SUPPORT OF UTILITIES
02510 WATER DISTRIBUTION
02515 WATER PIPELINE TESTING AND DISINFECTION
02525 SANITARY SEWER SYSTEM TESTING
02540 SITE SANITARY SEWER UTILITIES
02545 STORM DRAIN SYSTEM
02710 YARD WORK AND STREET WORK
02720 UNIT PAVING
02730 CRUSHED STONE SURFACING
02795 ALL-WEATHER TURF AND SUB-BASE DRAINAGE
02810 IRRIGATION SYSTEM
02821 CHAIN LINK FENCING AND GATES
02822 DECORATIVE METAL FENCES AND GATES
02823 STAINLESS STEEL RAILINGS
02824 FOG MISTER SYSTEM
02870 SITE FURNISHINGS
02871 STONE BOULDERS
02900 LANDSCAPING

DIVISION 03 – CONCRETE

03100 CONCRETE FORMWORK
03200 REINFORCEMENT STEEL
03250 CONCRETE ACCESSORIES
03290 JOINTS IN CONCRETE
03300 CAST-IN-PLACE CONCRETE
03302 UNDER SLAB VAPOR BARRIOR/RETARDER
03314 SURFACE CLEANING AND PREPARATION
03315 GROUT
03370 CONCRETE CURING
03400 PRECAST CONCRETE
03740 CONCRETE REPAIR

DIVISION 04 – MASONRY

04210 BRICK MASONRY
04230 REINFORCED HOLLOW UNIT MASONRY

DIVISION 05 – METALS

05035 ANODIC FINISH COATINGS
05120 STRUCTURAL STEEL
05300 METAL DECK
05400 COLD-FORMED METAL FRAMING (METAL STUD)
05500 METAL FABRICATIONS
05510 METAL STAIRS
05520 HANDRAILS AND RAILINGS
05530 FABRICATED GRATING
05700 PREFORMED METAL PANELS

DIVISION 06 – WOOD AND PLASTICS

06100 ROUGH CARPENTRY
06400 CUSTOM CASEWORK

DIVISION 07 – THERMAL AND MOISTURE PROTECTION

07110 MEMBRANE WATERPROOFING
07182 FLOORING/PAVING SEALER TREATMENT
07211 BUILDING INSULATION
07290 WATERPROOFING
07500 MEMBRANE ROOFING
07552 BUILT UP ROOFING
07600 FLASHING AND SHEET METAL
07830 ROOF HATCHES
07900 JOINT SEALANTS
07920 CAULKING AND SEALANTS

DIVISION 08 – DOORS AND WINDOWS

08110 METAL DOORS AND FRAMES
08305 ACCESS PANELS
08331 STEEL ROLLING DOORS
08416 ALUMINUM ENTRANCES AND STOREFRONTS
08520 ALUMINIMUM WINDOWS
08710 FINISH HARDWARE
08800 GLASS AND GLAZING

DIVISION 09 – FINISHES

09200 LATH AND PLASTER
09260 GYPSUM BOARD SYSTEMS
09900 PAINTING

DIVISION 10 – SPECIALTIES

10411 IDENTIFYING DEVICES
10443 DISABLED ACCESSIBILITY PARKING SIGNAGE
10520 FIRE PROTECTION SPECIALTIES
10800 TOILET ROOM ACCESSORIES

DIVISION 15 – MECHANICAL

15015	BUILDING VALVES, GENERAL
15020	NOISE, VIBRATION AND SEISMIC CONTROL
15050	BASIC MECHANICAL MATERIALS AND METHODS
15060	PLUMBING FIXTURES
15070	PLUMBING EQUIPMENT
15080	PLUMBING PUMPS
15120	HEATING EQUIPMENT
15130	AIR CONDITIONING AND AIR HANDLING EQUIPMENT
15160	FANS
15170	AIR TRANSMISSION AND AIR HANDLING EQUIPMENT
15210	METAL DUCTWORK
15240	TEMPERATURE CONTROL SYSTEMS
15260	TESTING, ADJUSTING AND BALANCING
15400	PLUMBING, GENERAL
15410	BUILDING PLUMBING PIPING
15510	BUILDING MECHANICAL INSULATION
15610	PIPING, GENERAL
15640	PVC PIPE, FITTINGS, AND VALVES
15690	COPPER TUBING AND BRASS PIPE, FITTINGS, AND VALVES

DIVISION 16 – ELECTRICAL

16020	MUNICIPAL FACILITIES GENERAL ELECTRICAL REQUIREMENTS
16110	RACEWAYS
16150	CONDUCTORS, 600 VOLTS AND BELOW
16170	CABINETS AND ENCLOSURES
16180	WIRING DEVICES
16190	ELECTRICAL IDENTIFICATION
16210	SWITCHES, DISCONNECT AND SAFETY
16250	ELECTRICAL SERVICE AND DISTRIBUTION
16270	SERVICE AND DISTRIBUTION SWITCHBOARDS
16290	MUNICIPAL FACILITIES GROUNDING SYSTEMS
16320	TRANSFORMERS
16330	PANELBOARDS
16360	MUNICIPAL FACILITIES LIGHTING
16430	LIFE SAFETY FIRE ALARM SYSTEMS
16440	SECURITY SYSTEMS
165010	ARCHITECTURAL LIGHTING FIXTURES, LAMPS, AND BALLASTS
16550	CONTACTORS, RELAYS, AND TIME SWITCHES
16560	MUNICIPAL FACILITIES ELECTRICAL SYSTEMS COMMISSIONING
16570	MUNICIPAL FACILITIES ELECTRICAL TESTING REQUIREMENTS

ATTACHMENTS

ATTACHMENT 1	SOIL INVESTIGATIONS
ATTACHMENT 2	SOIL REMEDIATION
ATTACHMENT 3	SIXTH STREET VIADUCT SOIL REMEDIATION
ATTACHMENT 4	PRODUCT DATA AND CUT SHEETS
ATTACHMENT 5	PROP K AND PROP 68 SIGNAGE
ATTACHMENT 6	VIADUCT EROSION AND SEDIMENT CONTROL PLANS
ATTACHMENT 7	CITY STANDARD PLANS
ATTACHMENT 8	HISTORIC LIGHT POLE AS-BUILT PLANS
ATTACHMENT 9	SIXTH STREET VIADUCT AS-BUILT PLANS

BUREAU OF ENGINEERING

SIXTH STREET PARK, ARTS AND RIVER CONNECTIVITY IMPROVEMENTS (PARC) WORK ORDER NO. E700235D

GENERAL CONDITIONS

BID SUBMITTAL
JULY 2022

City of Los Angeles
California

Department of Public Works
Bureau of Engineering

ENGINEERING
CITY OF LOS ANGELES

GENERAL CONDITIONS
TABLE OF CONTENTS

ARTICLE		Page
00100	DEFINITIONS (9/18/07)	3
00101 – 00199	NOT USED	8
00200	SCOPE (10/17/01)	8
00201	AUTHORITY OF THE BOARD, ENGINEER, AND INSPECTOR (5/2/02)	8
00202	INTENT OF CONTRACT DOCUMENTS (2/09/95)	8
00203	NOT USED (9/18/07)	9
00204	PLANS AND SPECIFICATIONS (9/18/07)	9
00205	PRECEDENCE OF CONTRACT DOCUMENTS (9/18/07)	9
00206	ACCURACY OF PLANS AND SPECIFICATIONS (12/6/01)	10
00207	EXAMINATION OF COVERED WORK (12/6/01)	10
00208	UNNOTICED DEFECTS (10/17/01)	10
00209	CODES AND REGULATIONS (10/17/01)	10
00210	LENGTH OF WORKDAY AND WORK WEEK (9/18/07)	11
00211	PAYMENT OF EMPLOYEES (12/6/01)	11
00212	CONVICT-MADE MATERIALS (12/6/01)	11
00213	SALES OR USE TAX / EXEMPTION FROM FEDERAL EXCISE TAX (10/17/01)	11
00214	NONDISCRIMINATION IN EMPLOYMENT (10/17/01)	12
00215	APPRENTICE UTILIZATION (4/12/95)	12
00216	LAWS AND REGULATIONS (9/18/07)	12
00217	PERMITS AND CONSTRUCTION EASEMENTS (9/18/07)	12
00218	PARTIES EXCLUDED FROM FEDERAL PROCUREMENT AND NON PROCUREMENT PROGRAMS (10/17/01)	13
00219	BUSINESS TAX REGISTRATION CERTIFICATES (11/21/01)	13
00220	CONTRACTOR PROPOSED ALTERNATES AND “OR EQUALS” (12/6/01)	13
00221	CONTRUCTION AND DEMOLITION WASTE MANAGEMENT (8/12/11)	14
00222 – 00299	NOT USED	14
00300	FINANCIAL LIABILITY (4/12/95)	14
00301	CONTRACTOR’S OBLIGATIONS (3/21/14)	14
00302	CONTRACTOR’S REPRESENTATIVE AT THE SITE (1/30/03)	15
00303	FAMILIARITY WITH PLANS AND SPECIFICATIONS (9/18/07)	16
00304	JOB CONDITIONS (9/18/07)	16
00305	JOB BULLETIN BOARD (11/27/01)	17
00306	RESPONSIBILITY FOR SITE (10/17/01)	17

00307 WORKMANSHIP AND MATERIALS (4/12/95) 17
00308 INJURY AND ILLNESS PREVENTION - SAFETY MEASURES (9/18/07) 17
00309 PROTECTION OF PERSONS AND PROPERTY AND RESTORATION OF EXISTING IMPROVEMENTS (9/18/07) 18
00310 NON-CONFORMING WORK (1/30/03) 21
00311 SUBCONTRACTORS AND SUB-SUBCONTRACTORS (10/28/14) 21
00312 RESPONSIBILITY OF CONTRACTOR TO ACT IN EMERGENCY (11/21/01) 26
00313 ASSIGNMENT (2/09/95) 26
00314 NOTIFICATION OF HAZARDOUS SUBSTANCES (10/17/01) 26
00315 INDEPENDENT CONTRACTOR (10/21/99) 27
00316 INDEMNIFICATION (10/17/01) 27
00317 INSURANCE (1/05/10) 28
00318 SERVICE OF NOTICE (2/09/94) 32
00319 AGENT TO ACCEPT SERVICE (10/21/99) 33
00320 – 00399 NOT USED 33
00400 TEMPORARY SUSPENSION OR DELAY OF WORK (9/18/07) 33
00401 UNAVOIDABLE DELAY (10/17/01) 34
00402 ARCHAEOLOGICAL AND PALEONTOLOGICAL DISCOVERIES (9/18/07) 34
00403 COORDINATION WITH OTHER CONTRACTS (1/30/03) 34
00404 TERMINATION OF CONTRACT BY CITY (CONTRACTOR NOT AT FAULT) (9/18/07) 35
00405 TERMINATION OF CONTRACT BY CITY (CONTRACTOR DEFAULT) (9/18/07) 37
00406 PARTIAL ACCEPTANCE (9/18/07) 38
00407 FINAL ACCEPTANCE (02/21/08) 39
00408 LIQUIDATED DAMAGES (9/18/07) 39
00409 – 00499 NOT USED 40
00500 CHANGES AND EXTRA WORK (9/18/07) 40
00501 DIFFERING SITE CONDITIONS (9/18/07) 41
00502 – 00599 NOT USED 41
00600 CLAIMS AND PROTESTS (9/18/07) 42
00601 COMMENCEMENT OF STATUTE OF LIMITATIONS (11/21/01) 44
00602 GOVERNING LAW (11/21/01) 44
00603 VENUE (2/09/95) 44
00604 NO WAIVER OF RIGHTS (4/12/95) 44
00605 ACCEPTANCE OF FINAL PAYMENT CONSTITUTES RELEASE (4/12/95) 44
00606 PATENTS AND COPYRIGHTS (10/17/01) 44
00607 PUBLIC RECORDS ACT (4/06/00) 45

00100 DEFINITIONS (9/18/07)

Unless otherwise stated, the words "directed, required, permitted, ordered, instructed, designated, considered necessary, prescribed, approved, acceptable, satisfactory," or words of like meaning, refer to actions, statements, judgments, conclusions, and decisions within the responsibility of the Engineer or the Inspector.

Addenda: Written documents issued during the Bidding Period which modify, supersede, or supplement the original Contract Documents.

Additions and Amendments to the Standard Specifications for Public Works Construction (SSPWC): Also known as the “Brownbook”. Previous editions of the document were titled Standard Plan S-610.

“as shown”, “as indicated”, or “as specified”: These words are understood to be followed by the phrase "in the Contract Documents."

Bid: The offer of the Bidder submitted on the prescribed forms setting forth the price(s) for the Work.

Bid Proposal: The notice that informs prospective Bidders of the opportunity to submit a Bid, bidding procedures and other requirements.

Bid Guaranty: The certified check or Bidder’s Surety Bond accompanying the Bid as a guaranty that the Bidder will enter into a contract with the Board for the performance of the Work.

Bidder: The person or persons, partnership, firm or corporation submitting a Bid or proposal for the Work defined in the Contract Documents.

Bidding Period: The time period allocated to the Bidder to enable preparation of a Bid.

Board: The Board of Public Works, of the City of Los Angeles.

Bond: Bid bond, performance and payment bond or other instrument of security.

“Brownbook”: City of Los Angeles, Department of Public Works, Additions and Amendments to the SSPWC.

Calendar day: All days beginning with the date specified in the Notice to Proceed, and ending with the date the City issues the Statement of Completion.

Change Order: A written order to the Contractor signed by the Engineer directing an addition, deletion or revision in the Work, or an adjustment in the Contract Price or time which is issued after the effective date of the Contract and effects less modification than is effected by a Supplemental Agreement. A Change Order may or may not also be signed by the Contractor.

County Sealer: The Director of Weights & Measures of the County of Los Angeles.

City: The City of Los Angeles, a municipal corporation.

Claim: A written demand or assertion by one of the parties seeking, as a matter of right, an interpretation of the Contract Documents, payment of money, extension of time or other relief. The party asserting the Claim must set forth the facts and circumstances for which the other party is responsible.

Code: Codes of the State of California as well as any other Federal or local law, statute, ordinance, rule or regulation.

Contract: The agreement between the City and the Contractor for the Work described in the Contract Documents.

Contract Documents: Includes, but is not limited to, the Notice Inviting Bids, Bid Proposal, Notice(s) to Bidders, Contractor's Bid, Performance bond, Payment bond, General and Supplementary Conditions, Special Provisions, General Requirements, Federal and State Requirements, Standard and Reference Specifications, Technical and Nontechnical Specifications, Geotechnical Baseline Report, Geotechnical Design Summary Report, Soil Reports and Subsurface Investigation Reports, Standard Plans, Plans, Summary of First Notice Replies, and Addenda, Plan Clarifications, Request for Information, Supplemental Agreements, Change Orders issued after Contract award and other documents designated by the Engineer.

Contract Price: The total amount of money for which the Contract is awarded.

Contract Unit Price: The amount stated in the Bid for a single unit of an item of Work.

Contractor: A person or persons, partnership, firm or corporation licensed by the State of California as a general contractor. The terms "Prime Contractor" and Contractor are synonymous.

Contractor's Representative: A representative of the Contractor present at the site to supervise, organize, coordinate and direct daily construction activities and who is authorized to receive and fulfill instructions from the Engineer or Inspector.

"days": Consecutive calendar days unless otherwise specifically stated.

Drawings: See Plans.

"easement": Permission to access or utilize property not owned by the City.

Engineer: The City Engineer, head of the Bureau of Engineering, or an authorized representative.

Equal: See "or equal".

Final Field Acceptance: Verification by the Final Inspector that all physical corrections required by the Final Inspection Correction List have been completed. This verification will be evidenced by issuance of a Statement of Completion, which will establish the date of the completion of the Work.

GBR: See Geotechnical Baseline Report.

GDR: See Geotechnical Data Report.

General Conditions: Instructions to the Contractor setting forth its responsibilities and the City's responsibilities for proper execution of the Work indicated herein.

General Requirements: Division 1 of the Specifications.

Geotechnical Baseline Report: This report establishing the baselines for geotechnical conditions anticipated to be encountered during underground and subsurface construction. This report establishes the basis for identification of changed site/ground conditions.

Geotechnical Data Report: This report contains factual information gathered during exploration and design. It may include logs of exploratory borings, laboratory test data, and geologic, seismic or environmental data.

“Greenbook”: Standard Specifications for Public Works Construction (SSPWC) published by Public Works Standards, Inc, latest edition.

“holiday”: In reference to days, the holidays and dates as observed by the City. A list of such holidays is available from the Board office.

Illegal Subcontractor Substitution: Anyone other than the Bid-listed or approved subcontractor(s) performing any portion of the Work designated to be performed by said subcontractor without prior approval of the Inspector.

“immediately notify”: The obligation to cause verbal notification of Engineer and Inspector of some condition or event as soon as possible upon discovery or knowledge of the condition or event and in all instances, no more than two (2) hours.

Inspector: The Inspector of Public Works, (Director of the Bureau of Contract Administration), or an authorized representative designated by the Bureau of Contract Administration.

“jobsite”: The area upon or in which the Contractor’s operations are carried on and such other areas adjacent thereto as may be designated as such by the Contract Documents.

“law”: Any Federal, State or local law, statute, ordinance, rule, regulation or Code.

“liquidated damages”: The amount the Contractor shall pay to the City, as determined by rates and amounts as fixed in the Contract Documents, due to the Contractor’s failure to complete the Work within the time specified.

“non-conforming work”: Unapproved construction, defective work or damaged materials that does not fully comply with the Contract Documents.

Notice of Award: The written notice by the City to the successful Bidder stating that upon compliance by the successful Bidder of required conditions, the City will execute the Contract.

Notice to Proceed: The written notice by the City to the successful Bidder stating that the Work or portions of the Work shall commence.

Notice to Withhold: The written notice by the City to the Contractor advising that certain payments shall be withheld due to unacceptable execution of the Work by the Contractor.

“or equal”: In reference to products, equipment, or materials proposed by the Contractor for use in the Work.

Partial Acceptance: Any portion of the Work that has been completed in accordance with the plans and specifications and has been accepted in writing by the Inspector ("Statement of Partial Completion" form).

“person”: Any individual, firm, association, partnership, corporation, trust, joint venture, or other legal entity.

Plans: The drawings, profiles, cross sections, shop drawings, and supplemental drawings, or reproductions thereof, issued or approved by the Engineer, which show the location, character, dimensions or details of the Work.

Private Contract: Work subject to City inspection, control, and approval, involving private funds, not administered by the City.

Project: The Work and/or construction operations executed through the performance of this Contract.

Project Manual: See Contract Documents.

Protest: See Claim.

Reference Specifications: Those bulletins, standards, rules, methods of analysis or test, codes, and specifications of other agencies, engineering societies, or industrial associations referred to in the Contract Documents. These refer to the edition, including amendments in effect and published at the time of advertising the project, adopted by the Board, if applicable, unless specifically referred to by edition, volume, or date.

"right of entry": Written permission from an owner of a facility or property to access the facility or property for a specific purpose.

Special Provisions: Any provision which supplements or modifies the Specifications.

Specifications: Written requirements describing the commercial, legal, technical and nontechnical aspects of the project. Specifications include but are not limited to Terms, Provisions, General Conditions, General Requirements, Technical Specifications, Equipment Schedules, and all revisions made to the specifications in Addenda, and Change Orders.

Standard Plans or "Std. Plan": Details of standard structures, devices or instructions referred to on the Plans or in the Specifications by title or number.

State: The State of California.

Statement of Completion: A form issued by the Bureau of Contract Administration following Final Inspection and upon completion of all physical corrections required by the Final Inspection Correction List. This shall signify the acceptance of all field work and establish the date of completion of the Work.

Statement of Partial Completion: A form issued by the Bureau of Contract Administration following Partial Final Inspection and upon completion of all physical corrections required by the Partial Final Inspection Correction List. This shall signify the acceptance of a specific portion, or portions, of the Work to be so utilized or otherwise placed into service.

Subcontractor: Any individual, firm, or corporation, other than an employee of the Contractor, having a direct contract with the Contractor or with any other subcontractor for the performance of the Work. A Subcontractor is a contractor who is licensed pursuant to California Business and Professions Code, Section 7000 et. seq. A Subcontractor does not have any direct contract with the City related to the project.

Subcontractor Substitution: Anyone other than the Bid-listed or approved subcontractor(s), including the Contractor, performing any portion of the Work designated to be performed by said subcontractor.

Sub-subcontractor: A "Sub-Subcontractor" is a Subcontractor, within the definition of that term, who has a contract with a Subcontractor and has no Contract with the City related to the project.

Supervision: With reference to supervision by the Engineer, the performance of obligations, and the exercise of rights, specifically imposed upon and granted to the City in becoming a party to the Contract. Except as specifically stated herein, supervision by the City shall not mean active and direct superintendence of details of the Work.

Supplemental Agreement: A written amendment of the Contract Documents, signed by the Contractor and City.

Supplier: An individual, organization, or firm who may not be required for the purposes of the Work to be licensed pursuant to California Business and Professions Code as a contractor, or subcontractor, within the meanings of those terms as defined herein above, who provides equipment and/or materials for the Work, to the Contractor, a Subcontractor, or a Sub-Subcontractor, including that fabricated to a special design, but who does not perform labor at the site except for labor or labor supervision required by some manufacturers as part of their equipment installation for warranty or other purposes. The term "supplier" also includes fabricator, manufacturer, or vendor.

Surety: Any individual, firm or corporation bound with and for the Contractor for the acceptable performance, execution and completion of the Work, and for the satisfaction of all obligations incurred.

Unauthorized Subcontractor Substitution: Any reduction, increase, or other change to any Subcontractor dollar amount without written approval by the Inspector.

Unavoidable Delay: Delay arising from causes beyond the control and without the fault or negligence of the Contractor and its Subcontractors at all tiers, and solely due to acts of God, acts of government in its sovereign capacity, riots, insurrections, wars, fires, floods, earthquakes, tidal waves, epidemics, quarantine restrictions, industry-wide strikes, freight embargoes, or unusually severe weather.

Work: Includes all material, labor, utility services, tools, expendable equipment, and all appliances, machinery, transportation, appurtenances and specified services necessary to perform and complete the Contract; and such additional items not specifically indicated or described that can be reasonably inferred as belonging to the item described or indicated and as required by good practice to provide a complete and operable satisfactory system or structure. As used herein, "provide" shall be understood to mean "furnish and install, complete in place."

Workday: All days beginning with the date specified in the Notice to Proceed, and ending with the date the City issues the Statement of Completion, except for the following days:

A) Saturday,

B) Sunday,

C) any day designated as a holiday by the City,

D) any day designated as a holiday in a Master Labor Agreement binding the Contractor,

E) any day the Contractor is prevented from working for cause as established by "Unavoidable Delay" of these General Conditions; and

F) any day the Contractor is prevented from working during the first five (5) hours of the workday with at least sixty percent (60%) of the normal Work force for cause as established by "Unavoidable Delay" of these General Conditions.

Worksite: See "jobsite."

00101 – 00199 NOT USED

00200 SCOPE (10/17/01)

The work to be performed under this Contract shall consist of furnishing all tools, equipment, materials, supplies and manufactured articles, all transportation, services, including fuel, power and water, and essential communications, and the performance of all labor, Work, required calculations testing, inspections or operations, or operations required for the fulfillment of the Contract, in strict accordance with the specifications, schedules, and Plans, all of which are made a part hereof, and including such detail sketches as may be furnished by the Engineer from time to time during the construction in explanation of said Plans. The Work shall be complete and all material, and services incidentals, quality or not specifically called for quality and conditions noted, in the Specifications, or not shown on the Plans, which may be necessary for complete and proper construction to carry out the Contract in good faith and a satisfactory manner shall be performed, furnished, and installed by the Contractor at no increase in cost to the City.

00201 AUTHORITY OF THE BOARD, ENGINEER, AND INSPECTOR (5/2/02)

The Board has the final authority in all matters affecting the Work. The Contractor shall promptly comply with instructions from the Engineer or the Inspector.

The Engineer is authorized to require performance of the Work consistent with the meaning of the Plans and the Contract Documents. On all questions related to the interpretation of Plans or Specifications, the decision of the Engineer is final and binding. As authorized by the Board, the Engineer may issue Change Orders to increase, decrease or modify the scope of work.

The Inspector is authorized to enforce compliance with the Contract Documents, to determine the acceptability, quality and quantity of materials and workmanship, administer requirements with respect to subcontracts, and to prepare and process progress payment estimates. Unless otherwise ordered by the Board, the Inspector's determination of satisfactory performance is a condition precedent to payment under this Contract. For such matters, the decision of the Inspector is final and binding. In the event of a dispute between the Contractor and the Inspector, the latter is authorized to reject materials or suspend the Work until any questions at issue can be referred to and decided by the Board or, in engineering matters, by the Engineer.

The Inspector is authorized to sample and test all materials to be incorporated into the Work. The Inspector may delegate this authority to sample materials and perform tests to the Department of General Services, Standards Division, or other approved agencies.

The Engineer may delegate street lighting matters to the Director of the Bureau of Street Lighting.

00202 INTENT OF CONTRACT DOCUMENTS (2/09/95)

The Contract Documents are complementary, and what is called for by one part shall be as binding as if called for by all. The intent of the Documents is to include all Work consistent therewith and reasonably inferable therefrom as being necessary for completion of the contract. Materials or Work described in words that indicate the proper execution and a well known technical or trade designation shall be held to refer to such recognized standards.

It is understood and agreed that the written terms and provisions of the Contract Documents represent the entire and integrated agreement between the parties hereto and supersede all prior negotiations, representations, or agreements, either written or oral. The Contract Documents shall not be construed to create any contractual relationship of any kind between the Engineer (or the Inspector) and the Contractor.

00203 NOT USED (9/18/07)

00204 PLANS AND SPECIFICATIONS (9/18/07)

As shown on the Plans or described in the Specifications, each element of the Work must be furnished complete, finished and functional. Whether shown or not, include all materials and ancillary equipment necessary to provide a complete installation. The Plans, Specifications and other Contract Documents are intended to be complementary and cooperative to describe and provide for a complete project. Anything in the Specifications and not on the Plans, or on the Plans and not in the Specifications, shall be as though shown or mentioned in both. Details shown for an item of Work are typical and shall apply to similar items of Work.

Do not deviate from the Plans and Specifications without written authorization from the Engineer.

The Engineer does not warrant the accuracy of scaled dimensions. Dimensions indicated by figures or numerals shall govern. Larger scale drawings shall take precedence over smaller scale drawings. Detailed drawings will take precedence over general drawings.

The Engineer may furnish additional details pertaining to the Work and the same shall be considered part of the Contract.

References made to other specifications and codes refer to the edition including amendments in effect and published at the time of advertising the project, unless specifically referred to by edition, volume, or date as noted in the Contract Documents.

00205 PRECEDENCE OF CONTRACT DOCUMENTS (9/18/07)

In resolving inconsistencies or ambiguities among two (2) or more components of the Contract Documents, the more stringent requirements shall prevail. The secondary priority will be based upon the precedence of the documents. The precedence shall be:

1. Permits from other agencies as may be required by law.

2. Bid Proposal

3. General Conditions

4. General Requirements

5. Technical Specifications

6. Plans

7. Geotechnical Baseline Report

8. Geotechnical Data Report

9. Brownbook

10. Greenbook

11. Standard Plans

12. Reference Specifications

13. Reference Plans

Supplemental Agreements, Change Orders, Engineer's written interpretations and clarifications, and Addenda, will take precedence over all other components of the Contract Documents.

00206 ACCURACY OF PLANS AND SPECIFICATIONS (12/6/01)

Omissions from the Plans and Specifications shall not relieve the Contractor from the responsibility of furnishing, making, or installing all items required by law or usually furnished, made, or installed in a project of the scope and character indicated by the Plans and Specifications.

The Plans show conditions as they are supposed or believed by the Engineer to exist, but it is not intended or to be inferred that the conditions as shown thereon constitute a representation or warranty, expressed or implied, by the City or its officers, that such conditions are actually existent, nor shall the City, or any of its officers, be liable for any loss sustained by the Contractor as a result of any variance between conditions as shown on the Plans, and the actual conditions revealed during progress of the Work or otherwise, except as indicated in "Differing Site Conditions" of these General Conditions.

00207 EXAMINATION OF COVERED WORK (12/6/01)

If any Work is covered without inspection, approval or consent of the Inspector, an examination may be required by the Inspector. The cost for uncovering the work, inspection, testing required by the Inspector, remedial work and restoring the work is at the Contractor's expense.

00208 UNNOTICED DEFECTS (10/17/01)

The Contractor is responsible for ensuring that all Work complies with the Contract Documents. Upon discovery, all defective or noncompliant Work must be immediately repaired or replaced by the Contractor. Failure by the Engineer or the Inspector to condemn or reject non-conforming Work shall not constitute acceptance or implied acceptance of such Work.

00209 CODES AND REGULATIONS (10/17/01)

The Contractor shall perform the Work in accordance with all applicable regulations, laws, and ordinances, even though such requirements may not be specifically mentioned in the Specifications or shown on the Plans.

It is not the responsibility of the Contractor to ensure that the Contract Documents comply with applicable laws, statutes, codes and regulations. If the Contractor believes that any part of the Contract Documents does not comply, the Contractor shall promptly notify the Engineer in writing. Do not proceed with those affected Work items until the Engineer issues written instructions to the Contractor.

If the Contractor proceeds with those Work items without written instruction from the Engineer, the Contractor will bear the costs and impacts of any corrective work.

00210 LENGTH OF WORKDAY AND WORK WEEK (9/18/07)

Eight (8) hours of labor shall constitute a calendar day's work for employees of the Contractor under this Contract. Said employees shall be paid not less than the prevailing wage rate for the first eight (8) hours work of each day.

Unless noted elsewhere in the Contract documents, a working day shall be Monday through Friday, and work shall be between 7:00 a.m. and 4:00 p.m., unless otherwise approved by the Engineer or the Board or revised by City Ordinance.

When work in excess of eight (8) hours per day, or forty (40) hours during any one (1) week is performed, wages for all hours over eight (8) hours in any day or over forty (40) hours during any one (1) week shall be paid at the prevailing wage rate, as required by City, state and federal requirements.

00211 PAYMENT OF EMPLOYEES (12/6/01)

The Contractor and each Subcontractor shall pay each employee engaged in Work on the project under this Contract in compliance with the Federal and State wage provisions indicated on the appropriate page of the Bid Proposal (General Instruction and Information for Bidders), and “Length of Workday and Work Week” of these General Conditions.

The certified payroll and the Statement of Compliance shall be submitted to the Inspector by the Contractor and all Subcontractors performing Work on the project, regardless of dollar amount or type of contract.

If there is a difference between the Federal and State minimum wage rates for similar classifications of labor, the Contractor and its Subcontractors shall pay not less than the higher wage rate. When the Contractor intends to use a craft or classification not shown on the general prevailing wage determinations, it will be required to pay the wage rate of that craft or classification most closely related to it as shown in the general prevailing wage determinations. In case of disagreement between the Contractor and the City, the Inspector shall make the final determination as to the prevailing wages for the Work.

00212 CONVICT-MADE MATERIALS (12/6/01)

Unless otherwise noted, no materials manufactured or produced in a penal or correctional institution shall be incorporated in the project under this Contract.

00213 SALES OR USE TAX / EXEMPTION FROM FEDERAL EXCISE TAX (10/17/01)

Purchases of materials and equipment which will be incorporated or installed permanently in the Work, or which will be used in the operation of the Contractor or Subcontractors, and not incorporated in the Work, are not exempt from City of Los Angeles and California State Sales or Use Taxes as applicable.

Purchase of materials and equipment which will be incorporated or installed permanently in the Work are exempt from Federal excise tax in effect at the time of purchase, as applicable. Prices included in the Contract amount shall reflect such exemptions. A Federal Tax Exemption Certificate will be furnished by the City, on request, as acknowledgment that materials and equipment for which exemption is requested by the Contractor, is valid where provided for the exclusive use of the City. Lists of exempt articles provided by the Contractor and Subcontractor shall be submitted to the City by the Contractor. Purchases of materials and equipment which will be used in the operations of the Contractor or Subcontractors and not incorporated in the Work are not exempt from excise tax.

00214 NONDISCRIMINATION IN EMPLOYMENT (10/17/01)

The Contractor shall comply with all of the provisions of the Los Angeles Administrative Code, Mandatory Provision Pertaining to Nondiscrimination in Employment.

The Contractor shall submit Monthly Ethnic Composition of Work Force Reports to the Inspector indicating the number of employees in the various work categories and ethnic groups and gender on forms furnished by the City.

Nondiscrimination Clause: "The Contractor shall not discriminate during the performance of this Contract against any employee or applicant for employment because of employee's or applicant's race, religion, national origin, ancestry, sex, age, sexual orientation or physical handicap." The Contractor shall include the same Nondiscrimination Clause in all subcontracts awarded under this Contract.

If conflicts exist between these provisions and the Federal Rules and Regulations governing the same, the more stringent requirements shall prevail.

00215 APPRENTICE UTILIZATION (4/12/95)

Any Contract awarded hereunder will require the Contractor to comply with the provisions of the California Labor Code relating to apprentice employment and training; and will require the Contractor to assume full responsibility for compliance with said section with respect to all Apprenticing Occupations involved in the Project. (Compliance with said Apprentice Utilization provisions of the Labor Code is not required for Public Works contracts involving less than $30,000 or less than twenty (20) Working days in duration).

00216 LAWS AND REGULATIONS (9/18/07)

The Contractor shall observe and comply with all Federal, State, and local laws, ordinances, Codes, orders, and regulations which in any manner affect those engaged or employed on the Work, the materials used in the Work, or the conduct of the Work. If any discrepancy or inconsistency should be discovered in this Contract in relation to any such law, ordinance, Code, order, or regulation, the Contractor shall report the same in writing to the Engineer. The Contractor shall indemnify and hold harmless the City, and its officers, agents, and employees, against all claims or liability arising from violation of any such law, ordinance, Code, order, or regulation, whether by itself or by its employees or Subcontractors as stated in these Contract Documents. Any particular law or regulation specified or referred to elsewhere in these specifications shall not in any way limit the obligation of the Contractor to comply with all other provisions of Federal, State, and local laws and regulations.

00217 PERMITS AND CONSTRUCTION EASEMENTS (9/18/07)

The Contractor shall obtain and pay for all permits necessary for performance of the Work. Within thirty (30) calendar days after the Notice to Proceed, the Contractor shall obtain and pay all costs incurred and submit to the Engineer copies of all permits required for the construction and installation of all Work called for on this project.

When the Bid Proposal provides an allowance for “Permits”, only certain types of permits and certain permit fees are reimbursable. The reimbursable permit must be exclusively for permanent Work shown on the Plans and reimbursement will be limited to the actual permit fee shown on the permit’s receipt. The allowance for “Permits” cannot be used for any other costs such as those necessary to physically obtain the permit. The allowance for “Permits” also cannot be used for contractor-designed items, annual permits, temporary construction, or general permits that are useable for other projects. The Contractor will only be reimbursed for those permits that are included in the list below, unless otherwise specified:

1) Night Work, overload, grading, excavation, demolition, foundation, and building permits.

2) Electrical permits.

3) Mechanical permits.

4) Plumbing permits.

5) South Coast Air Quality Management District permits.

6) Fire sprinkler permit.

7) All Federal, State, County and City issued permits.

Rights of ways, easements, or rights of entry for the Work will be provided by the City. The Contractor shall make arrangements, pay for, and assume all responsibility for acquiring, using, and disposing of Work areas and facilities temporarily required which are necessary in addition to those provided by the City. The Contractor shall indemnify and hold the City harmless for all claims for damages caused by such actions.

00218 PARTIES EXCLUDED FROM FEDERAL PROCUREMENT AND NON PROCUREMENT PROGRAMS (10/17/01)

A list of individuals, firms and organizations which have been debarred, suspended or have voluntarily excluded themselves from Federal Procurement and Non Procurement Program is maintained by US General Services Administration. A copy can be obtained from Superintendent of Documents, US Government Printing Office, Washington, DC 20402, Tel: (202) 783-3238.

The City will not conduct business with an individual, firm or organization, and the Contractor shall not employ or otherwise utilize any Subcontractor, supplier or equipment vendor at any tier which is on the U.S. General Services Administration "List of Parties Excluded from Federal Procurement and Non Procurement Programs". The Contractor shall not utilize or otherwise employ any Subcontractors or suppliers on the list of nonresponsible bidders maintained by the City Bureau of Contract Administration.

00219 BUSINESS TAX REGISTRATION CERTIFICATES (11/21/01)

The Contractor represents that it has, or will obtain upon award, the Business Tax Registration Certificate(s) required by the Los Angeles City Business Tax Ordinance. The Contractor shall maintain, or obtain as necessary, all such Certificates required of it under said Ordinance and shall not cause or allow any such Certificate to be revoked or suspended.

The City requires all firms that have business activity within the City of Los Angeles to pay City business taxes.

Payments for goods or services will be withheld unless proof of tax compliance is provided to the City. All firms and individuals that do business with the City will be required to provide a Business Tax Registration Certificate number or an exemption number as proof of compliance with Los Angeles City business tax requirements in order to receive payment for goods or services.

The Tax and Permit Division of the City Office of Finance has the sole authority to determine whether a firm is covered by business tax requirements.

00220 CONTRACTOR PROPOSED ALTERNATES AND "OR EQUALS" (12/6/01)

Unless otherwise noted, the Contractor may propose products, equipment, or materials to be an "or equal" to those specified in the Contract. These proposals must be submitted within thirty (30) days after Notice to Proceed along with sufficient substantiating data for the Engineer to determine equivalence. The substantiating data must demonstrate equivalence in terms of function, performance, reliability, quality, and general configuration to the items specified in the Contract Documents. The Engineer will be the sole arbiter of equivalence. Proposals that are submitted late or with incomplete substantiation are "Not Equal" and subject to summary rejection.

Contractor-proposed "or equals" that are accepted by the Engineer shall be coordinated with other items of Work and incorporated into the Work without time extensions and at no additional cost to the City.

00221 CONTRUCTION AND DEMOLITION WASTE MANAGEMENT (8/12/11)

The Contractor shall divert all Construction and Demolition (C&D) waste generated from the project in accordance with the City's C&D Waste Recycling Ordinance. Los Angeles Municipal Code requires that all mixed C&D waste material generated within the City of Los Angeles be taken to a City Certified C&D Waste Processor. Further, mixed C&D waste can only be legally collected, removed, or transported by City of Los Angeles Permitted Solid Waste Haulers. If the Contractor plans on collecting, removing, or transporting its own waste, it must first apply for and obtain a Solid Waste Hauler Permit from the Solid Resources Citywide Recycling Division of the Bureau of Sanitation.

Failure to meet the C&D waste recycling requirements as detailed above will result in the assessment of penalties up to $5,000 per each load of C&D waste not taken to City Certified Processors. Further, collecting, removing or transporting C&D waste within the City without a valid Solid Waste Hauler Permit is a criminal misdemeanor subject to fines and/or imprisonment.

Other sections of the Specification may require specific recycling rates in addition to the Los Angeles Municipal Code requirements.

00222 – 00299 NOT USED

00300 FINANCIAL LIABILITY (4/12/95)

The City's liability under this Contract shall not exceed the City's appropriation to fund the Contract at the time of Contract award. However, if the City shall appropriate funds for any successive years, the City's maximum liability shall not exceed the extent of such appropriation, subject to the terms and conditions of this Contract.

00301 CONTRACTOR'S OBLIGATIONS (3/21/14)

Only competent workers shall be employed on the Work.

Any person employed who is found by the Engineer or the Inspector to be incompetent, disorderly or otherwise objectionable, or who fails or refuses to perform Work properly, acceptably and as directed shall be immediately removed from the Work by the Contractor and not be reemployed on the Work.

The Contractor, at its sole cost and expense, shall perform all labor and services and furnish all the materials, tools, and appliances, except as hereinafter otherwise definitely provided, necessary or proper for performing and completing the Work required, in the manner and within the time stipulated in these specifications. The Contractor shall furnish, erect, maintain, and remove the construction plant and such temporary works as may be required. If, at any time before the commencement or during the progress of the Work or any part of it, the Contractor's methods or appliances appear to the Engineer or the Inspector to be unsafe, inefficient, or inadequate for securing the safety of the workers, the quality of the Work required, or the rate of progress stipulated, the Engineer or the Inspector may order the Contractor to

increase their safety and efficiency or to improve their character, and the Contractor shall comply with such orders at its own expense. Neither the making of such demands by the Engineer nor the failure to make such demands shall relieve the Contractor of its obligation to secure the safe conduct of the Work, the quality of Work required, and the rate of progress stipulated in the Contract. The Contractor shall be fully responsible for the safety, efficiency, and adequacy of its plant, appliances, and methods, and for any damage which may result from their failure or their improper construction, maintenance, or operation.

All of the labor shall be performed and materials furnished pursuant to and in strict conformance with the Contract Documents, and in accordance with approved shop drawings. The Contractor shall complete the entire Work to the satisfaction of the Inspector and in accordance with the Specifications and Plans herein mentioned, at the prices fixed in the Contract.

Where articles or materials are especially manufactured or fabricated for delivery under these specifications, the Contractor shall at all times employ such workforce, plant, materials, and tools as will be sufficient to complete the performance of the Contract and every part thereof within the time limits stipulated herein. If the Contractor fails to employ sufficient workforce, plant, materials, tools, or to maintain adequate progress, the Engineer may require an increase in progress at any point or points or a modification of Plans and procedure in such a manner as to accelerate the Work. Failure to adequately staff the project shall be just cause for the City to terminate the Contract.

00302 CONTRACTOR'S REPRESENTATIVE AT THE SITE (1/30/03)

A technically qualified and English-speaking project representative shall be designated in writing as the Contractor's Representative at the job site, who shall supervise the Work and shall provide competent supervision of the Work until its completion. The Contractor's Representative shall be assigned full time and exclusively to this project. Alternate representatives with qualifications equal to or better than the previous representative may be designated. The Contractor's Representatives shall have at least five (5) years of verifiable experience as the person primarily responsible for supervision of the Work on projects of the same or similar size and nature as this project. Within five (5) days after the Notice of Award the Contractor shall provide a statement to the Engineer and the Inspector with the following:

1) Identification and resume, showing the qualifications and experience of the Contractor's Representative and the alternate appointed to act in the place of the Contractor's Representative.

2) References of not less than two (2) previous projects on which the Contractor's Representative and the alternate had supervisory responsibility on a project of a similar nature and at least one-half or more of the cost of this project. Such references shall include names, addresses, and telephone numbers of owner representatives who worked on the project as well as project information such as project type, size, location and duration.

The Engineer and the Inspector reserve the right to disapprove any candidate named as the Contractor's Representative or alternate who fails to meet the provisions set forth herein. The Engineer and the Inspector reserve the right to remove, without any right to work on the project, either the Contractor's Representative or alternate, who in the sole opinion of the Engineer or the Inspector, has demonstrated incompetence, lack of ability, or other unsuitability to perform supervision of the Work.

If the Contractor's Representative or alternate leave the employ of the Contractor, the Contractor will be required to replace the individual(s) and fulfill the requirements of this Article within fifteen (15) calendar days. In no event shall any Work proceed in the absence of an approved representative.

The Contractor's Representative or alternate shall have full authority to act on behalf of the Contractor, including, but not limited to final approval of Change Orders and Supplemental Agreements. All directions given by the Engineer or the Inspector to said representative or alternate shall be considered as having been given to the Contractor. Such instructions given by the Engineer or the Inspector to the Contractor's Representative or alternate will be confirmed in writing. All instructions and directions given by the

Engineer or the Inspector will be limited to matters properly falling within the Engineer's or the Inspector's authority as specified in "Authority of the Board, Engineer and Inspector" of these General Conditions.

The Contractor's Representative or alternate shall be present at the worksite at all times while Work is in progress. Failure to observe this requirement constitutes a suspension of the Work by the Contractor, until such time the Contractor's Representative or alternate is again present at the worksite. All Work performed while the Contractor's Representative or alternate is absent from the worksite is ineligible for payment. Work performed in violation of these provisions shall be removed and reconstructed, refabricated, or reinstalled under the required supervision. The Contractor is ineligible for time extensions or additional payment for costs or impact that directly or indirectly are caused by said suspension. Those ineligible costs and impacts include what the Contractor may incur for slowdown, delays, idled equipment, removals, reconstruction, refabricating, reinstalling and other. During such periods of noncompliance when the Contractor's Representative is not on site, written instructions issued by the Engineer or the Inspector to *any* employee of the Contractor is considered adequate notice to the Contractor.

Whenever the Work is defined as being suspended under the provisions of this Article, any such suspension in excess of ten (10) calendar days shall constitute just cause for the City to terminate the Contract under the provisions of "Termination of Contract by City (Contractor Default)" of these General Conditions.

00303 FAMILIARITY WITH PLANS AND SPECIFICATIONS (9/18/07)

It shall be the responsibility of the Contractor to be thoroughly familiar with all details of the Project, including the work of the Contractor's forces and all Subcontractors. The Contractor shall call the following to the attention of both the Engineer and the Inspector in writing within twenty-four (24) hours of discovery, before any Work is performed:

1) Errors and omissions in the Plans and Specifications, including, but not limited to, code violations, typographical errors and notational errors where ambiguity or inadequate description exists;

2) Work on the Plans or in the Specifications which, if so constructed, would result in a conflict or interference with other Work or the Work of other trades, including the location of fixtures and equipment;

3) Existing improvements visible at the job site, for which no existing disposition is made on the Plans or in the Specifications but which could reasonably be assumed to interfere with the satisfactory completion of the improvements contemplated by the Plans and Specifications.

Failure to notify shall constitute a waiver by the Contractor of any claim for delay or other damages occasioned by such defect. If the Contractor proceeds with the Work without instructions from the Engineer, the incorrect Work shall be removed and corrections made to comply with the Engineer's instructions, at no cost to the City.

00304 JOB CONDITIONS (9/18/07)

The Contractor shall determine the nature and types of work to be performed, ascertain all conditions affecting construction procedure and sequencing of Work operations in the execution of the Work, including condition of available roads and streets, or clearances, restrictions and other limitations affecting transportation and ingress and egress to the job site. This determination must be made during the Bidding Period with any costs and impact included within the Bid.

The Contractor shall observe any "Site Security" restrictions described in the General Requirements or the Plans.

Whenever the Work requires entry into an operating plant, occupied building, working facility or other secured location, observe the following unless otherwise noted:

1) No vehicles are allowed except delivery trucks and Contractor's identified vehicles and equipment.

2) It shall be the Contractor's sole responsibility to arrange and pay for offsite employee parking and to provide transportation from the parking area to the Work site.

3) The Contractor shall fully cooperate with all authorities on the job site and other contractors not related to the Work of this Contract who might be at the job site.

4) The Contractor shall fully comply with all regulations in force at the job site.

00305 JOB BULLETIN BOARD (11/27/01)

When a Field Office is required, the Contractor shall provide and mount a Job Bulletin Board at the field office in a location where it can be readily seen by all of the Contractor employees. The bulletin board shall be substantially built to a minimum size of 900 mm high x 1200 mm wide (3' x 4') shall be fitted with a framed safety glass door and lock. The glass on the outside shall be protected with a 12 mm x 12 mm (½" x ½") galvanized wire mesh screen permanently attached to the frame. The bulletin board shall be finished inside and outside with two (2) coats of an exterior paint.

00306 RESPONSIBILITY FOR SITE (10/17/01)

The Contractor is in full charge of and responsible for the job site and the Work. The "Interface/ Coordination Requirements" of the General Requirements describe interfaces with other contractors working on the job site. No other operations of any nature shall be performed except as specifically authorized in the Contract Documents or as authorized by the Engineer.

The Contractor shall exercise care not to damage improvements and adjacent land. The Contractor shall correct any damage caused within seventy-two (72) hours by restoring the land and improvements damaged to their original condition and shall indemnify and hold the City harmless for any such damage as specified in "Indemnification" of these General Conditions.

00307 WORKMANSHIP AND MATERIALS (4/12/95)

All materials, parts and equipment furnished by the Contractor for the Work shall be new, high grade and free from defects. Materials and work quality shall be subject to the Inspector's approval.

00308 INJURY AND ILLNESS PREVENTION - SAFETY MEASURES (9/18/07)

Safety is the responsibility of the Contractor. The Contractor shall observe and comply with the safety provisions of all applicable laws, building and construction Codes, safety and health regulations of the California Code of Regulations, and with applicable City Safety Policies.

Every employer (Prime Contractor and/or Subcontractor) employed on the Project shall establish, implement, and maintain an effective Injury and Illness Prevention Program in accordance with Section 3203 of the General Industry Safety Orders.

Each Contractor/Subcontractor shall make the applicable Injury and Illness Prevention Program specific for site conditions and type of Work to be performed on the Project.

Each prime Contractor and Subcontractor working on the Project shall make its Injury and Illness Prevention Program available to the Inspector and the Engineer prior to beginning any Work on the Project.

If a work procedure or site condition exists that violates the Contractor's/Subcontractor's Injury and Illness Prevention Program or any other safety standard, the Engineer or Inspector may order the Contractor to immediately comply with said safety provisions, and the Contractor shall comply with such orders at its own expense. If the Contractor fails to act promptly, the Engineer or Inspector is authorized to suspend the Work. Failure of the Engineer or the Inspector to make such demands shall not relieve the Contractor of its obligations to secure the safe conduct of the Work.

If a work procedure or site condition creates an immediate hazard to the health or safety of the public, City employees, property, or a licensee, the City may suspend all work on the project. Without prior notice, the City may also correct such hazardous conditions using other forces or contractors, at the Contractor's sole expense. Any delays or impacts arising on the Work as a result of such an emergency shall be at the sole expense of the Contractor with no time extension, additional reimbursement for extended overhead, or interest on monies due, allowed for the Contractor.

First aid facilities and supplies shall be kept and maintained by the Contractor at the site of the Work.

The Contractor shall cause all persons within the construction area to wear protective helmets. In addition, all employees of the Contractor and its Subcontractors shall be provided with, and required to use, personal protective and life saving equipment set forth in California Construction Safety Orders and the OSHA Safety and Health Standards for Construction.

The Contractor shall provide safety equipment, material, and assistance to City personnel to properly inspect all phases of the Work, including final inspection. Such equipment, material and assistance shall include, but not be limited to testing for the presence of explosive or toxic gases and oxygen deficiency in confined spaces, blowers, ventilators, first aid supplies and equipment, ladders, scaffolds, shoring, and personnel for standby assistance as required. Personal safety devices such as harnesses, lanyards, and self-contained breathing apparatus will be provided by the Bureau of Contract Administration, unless otherwise noted. When the Work requires specialized safety equipment, the Contractor shall provide new sets of such equipment, the training deemed necessary by the Inspector, and maintenance of such equipment. When asbestos is being removed, the requirements of the CCR, Title 8, Div. 1, Chapter 4, Subchapter 4, "Construction Safety Orders," and Subchapter 7, "General Industry Safety Orders," shall be implemented.

In cases involving exposure of City personnel to toxic/hazardous materials and/or elements, the City Personnel Department, Occupational Safety Office, shall have field review authority over the Contractor's operations.

For additional requirements, refer to "Safety and Preconstruction Safety Conference" of the General Requirements.

00309 PROTECTION OF PERSONS AND PROPERTY AND RESTORATION OF EXISTING IMPROVEMENTS (1/05/10)

The Contractor shall not destroy, remove, or otherwise disturb any existing survey monuments or reference points without authorization from the Engineer. No pavement breaking or excavation shall be started until all survey monuments or other reference points that will be disturbed by the construction operations have been properly referenced by the Engineer. It shall be the Contractor's responsibility to notify the Engineer and the Inspector of the time and location that Work will be done. Such notification shall be sufficiently in advance of construction so that there will be no delay due to waiting for survey points to be satisfactorily referenced for restoration. All survey monuments or reference points disturbed,

without authorization by the Engineer, shall be accurately restored by the City at the Contractor's sole expense after all street or roadway resurfacing has been completed.

Unless otherwise noted, all construction operations shall preserve existing drainage paths, vehicular and pedestrian access. The Contractor shall also regularly attend to dust, mud, trash, noise, debris, and etceteras, caused by their construction operations to prevent a public nuisance.

All paved areas including asphalt concrete berms cut or damaged as a result of construction shall be replaced with similar materials and of equal thickness to match the existing adjacent undisturbed areas, except where specific resurfacing requirements have been called for in the Contract Documents or in the requirements of the agency issuing the permit. All temporary and permanent pavement shall conform to the requirements of the affected pavement owner. All pavement which is subject to partial removal shall be neatly saw cut in straight lines.

In order to obtain a satisfactory junction with adjacent surfaces, the Contractor shall saw cut back and trim the edge so as to provide a clean, sound, vertical joint before permanent replacement of an excavated or damaged portion of pavement. Damaged edges of pavement along excavations and elsewhere shall be trimmed back by saw cutting in straight lines. All pavement restoration and other facilities restoration shall be constructed to finish grades compatible with adjacent undisturbed pavement.

Where sidewalks have been removed for purposes of construction, the Contractor shall place suitable temporary sidewalks, properly protected, promptly after backfilling and shall maintain them in satisfactory condition until the final restoration thereof has been made.

When existing planted areas are regraded, or removed and replaced because of the Contractor's operations, the soil in these areas shall be prepared and the area replanted-in-kind. All landscape materials shall conform to the requirements of the owner of the affected planted area.

All utilities encountered along the line of the Work shall be maintained continuously in service during all the operations under the Contract, unless other arrangements satisfactory to the Engineer are made. Utilities shall include, but not be limited to, all above or below-ground conduit, pipes, ducts, cables, and appurtenances associated with oil, gas, water, steam, irrigation, process, sewer, storm drain, wastewater, air, electrical, power, instrumentation, communication, telephone, cable, TV, and lighting systems, whether or not owned by the City.

The Contractor shall protect all existing utilities and improvements not designated for removal. Potholing for utilities and structures shown or addressed on the drawings shall be accomplished at the Contractor's expense. The Contractor shall determine the exact locations and depths of all utilities indicated on the Drawings. The Contractor shall make exploratory excavations of all utilities. The Contractor, in conformance with City Ordinance No. 150,478, shall pothole existing subsurface installations carrying unstable substances to determine their locations and elevations before commencing excavation. All such exploratory excavations shall be performed as soon as practicable after award of the Contract and in any event, a sufficient time in advance of construction to avoid possible delays to the Contractor's Work. When such exploratory excavations show the utility location as indicated on the Drawings to be in error, the Contractor shall so notify the Inspector and the Engineer. The Contractor should not rely upon plan designation of location of underground utilities. The number of exploratory excavations and extent of potholing required shall be that number which is sufficient to determine the alignment and grade of the utility. These costs are a part of the Bid.

Prior to any excavation in the vicinity of any existing underground facilities, the Contractor shall notify the Inspector and the Engineer, and the respective authorities representing the owners or agencies responsible for such facilities, not less than three (3) Workdays, nor more than five (5) Workdays, of their intention to begin excavation. The Contractor shall make arrangements for and provide access such that a representative of said owners or agencies may be present during such Work. If the proposed excavation is within 10 feet of a high priority subsurface installation, as defined by Section 4216 of the

California Government Code, the Contractor shall conduct an onsite meeting with the owner of the utility to determine actions or activities required to verify the location of the high priority subsurface installation before proceeding with any excavation activities.

Before commencing any excavation, the Contractor shall obtain an Underground Service Alert (USA) inquiry I.D. number. Two workdays, shall be allowed after the I.D. number is obtained and before the excavation work is started so that utility owners can be notified. If the utility owner is the City, a confirmation number indicating the City has been notified shall be obtained by USA and/or the Contractor from the appropriate City department. The I.D. number together with the date acquired shall be reported to the Inspector when calling for inspection. I.D. numbers will not be given more than ten (10) Workdays before starting excavation work.

Unless otherwise indicated on the Plans or Specifications, where the proper completion of the Work requires the temporary or permanent removal and/or relocation of an existing utility or other improvement, which is shown on the Plans, the Contractor shall, at its own expense, remove and, without unnecessary delay, temporarily replace or relocate such utility or improvement to a place and in a manner as directed by the Engineer, and the owner of the facility. In all cases of such temporary removal or relocation, restoration to former location shall be accomplished by the Contractor in a manner that will restore or replace the utility or improvement as nearly as possible to its former locations and to as good or better condition than found prior to removal. When utilities that are to be removed are encountered within the area of operations, the Contractor shall notify the Engineer not less than fifteen (15) days in advance for necessary measures to be taken to prevent interruption of service.

The Contractor shall notify the Engineer thirty (30) calendar days in advance of any proposed connection, and shall notify the Engineer and the Inspector twenty-four (24) hours prior to the actual connection, to any existing utility.

Any utility or improvement which is damaged by the Contractor shall be immediately repaired at the Contractor's expense, to a condition equal to, or better than, the condition it was in prior to such damage or temporary relocation. If the Contractor fails or refuses to promptly repair the utility or improvement, the City may perform the necessary Work at the Contractor's expense. The Contractor will also not be entitled to any time extension, additional reimbursement, extended overhead, or interest on monies due. The Contractor is not relieved of provisions of this Article even in the event such damage occurs after backfilling or is not discovered until after completion of backfilling.

All repairs to a damaged improvement shall be inspected and approved by the Inspector and an authorized representative of the improvement owner before being concealed by backfill or other Work. In case of damage, which in the opinion of the Engineer or the Inspector, threatens the safety of persons or property, the Contractor shall immediately make all repairs necessary for removal of the hazard. Should the Contractor fail to promptly take all necessary action, the City has the option to remove any hazard resulting from damages caused by the Contractor at the Contractor's expense without waiving any other rights the City may have. The Contractor will also not be entitled to any time extension, additional reimbursement, extended overhead, or interest on monies due.

In the event that the Contractor damages any existing utilities that are not shown on the Plans or the locations of which are not made known to the Contractor prior to excavation, the Contractor shall immediately notify the Inspector and take all measures necessary to prevent further damage. The Contractor shall then immediately make a written report to the Engineer and shall make repairs as directed by the Engineer.

Notwithstanding that an existing utility or substructure is not shown on the original Plans and Specifications, if the existence and location thereof was made known to the Contractor prior to excavation, the utility or substructure constitutes an existing known condition, and the Contractor is responsible for protecting the utility or substructure.

Damage to a utility known to the Contractor shall be repaired at the Contractor's expense.

00310 NON-CONFORMING WORK (1/30/03)

Except as set forth in this Article, all non-conforming Work and materials, in place or not, shall be removed immediately from the site or corrected to conform to all requirements of the Contract Documents, by the Contractor, at the sole expense of the Contractor.

If the Contractor fails to remove, replace or correct any non-conforming Work or materials within seventy-two (72) hours of discovery, the Inspector or the Engineer may cause such Work or materials to be removed and replaced. Such removal and replacement shall be at the sole expense of the Contractor with no entitlement to time extensions, additional reimbursement, extended overhead, or interest on monies due. In addition, all such cost shall be deducted from any amounts that are due or may become due to the Contractor.

Failure of the Inspector or the Engineer to notify the Contractor of any non-conforming Work shall not constitute acceptance of any non-conforming Work. The Contractor's obligation to remove, replace or correct any non-conforming Work, whenever discovered, shall continue to the end of the guaranty-warranty period provided for in "Guaranty-Warranty" of the General Requirements. The City reserves and retains all rights and remedies at law against the Contractor and their Surety for correction of any and all latent defects discovered after the guaranty-warranty period.

Any delays or impacts arising on the Work as a result of construction, fabrication or delivery of non-conforming work or materials shall be at the Contractor's sole expense, with no time extension, additional reimbursement for extended overhead, or interest on monies due allowed.

Examination of covered Work may be ordered by the Engineer or the Inspector for any reason. The Work shall be uncovered by the Contractor and if such Work is found to be in accordance with the Contract Documents, the City will issue a Change Order authorizing payment for the cost of examination and replacement. If such Work is found to be not in conformance with the Contract Documents, the Contractor shall correct the non-conforming Work and the cost of examination and correction of the non-conforming Work shall be borne solely by the Contractor.

Failure of the Contractor to comply with the requirements of this Article shall constitute default of the Contract by the Contractor and the City may terminate the Contract as provided for in Termination of Contract by City (Contractor Default).

00311 SUBCONTRACTORS AND SUB-SUBCONTRACTORS (10/28/14)

The Contractor shall perform on the site and with its own organization not less than fifty percent (50%) of the total Contract Price, unless a different percentage is designated in the Bid Proposal. Any items designated "specialty items" in the Bid Proposal may be performed by subcontract and the amount of all such "specialty items" may be deducted from the Contract Price before computing the amount of Work required to be performed by the Contractor with its own organization. The dollar value included in the percentage performed by the Contractor shall include the value of labor, materials and equipment to be incorporated or used in the Work and directly purchased by the Contractor and shall not include the value of Work, including labor, materials and equipment, incorporated or used in the Work, performed or provided by Subcontractors.

To be eligible for award of this Project, the Board requires Bidders to subcontract a minimum of its total Bid to qualified Subcontractors, as discussed in the "Mandatory Subcontracting Minimum (MSM) Requirements" of the Bid Proposal. Failure to list Subcontractors and the subcontracted dollar amounts on the applicable pages of the Bid Proposal to satisfy the MSM is cause for the Bid to be declared nonresponsive and rejected by the Board.

Bidders must list all Subcontractors in the Bid, regardless of the dollar amount of the work to be performed, if the Bidder wishes to have the Subcontract amount credited toward meeting both the MSM and MBE/WBE levels of participation of the Project. Subcontractors added to the project following acceptance of the Bid and award of the Project will not be credited toward meeting the required MSM and/or MBE/WBE levels of participation for this Project.

MSM credit will not be given to a joint venture partner listed as a Subcontractor by a joint venture.

Listed vendors and/or Suppliers will be limited to 60% of their listed dollar value toward achieving both the MSM and the anticipated MBE/WBE levels of participation for this Project, unless the vendor and/or Supplier manufactures or substantially alters the materials/supplies.

The designated percentage of the total Contract Price the Contractor is to perform may not be reduced below that level by the addition of Subcontractor's added after Award of the Project.

The Inspector, acting on behalf of the Board, will be responsible for approval of all Subcontractors, whether Bid-listed or not, and all Sub-subcontractors, at any level, employed on the Project.

Each Subcontractor who will perform Work or render services in an amount in excess of one-half of 1 percent of the Contractor's total Bid or $10,000.00, whichever is greater, must be listed in the original Bid.

Subletting or Subcontracting of any portion of the Work in excess of one-half of 1 percent of the Contractor's original total Bid or $10,000.00, whichever is greater, for which no Subcontractor was designated in the original Bid shall only be permitted in cases of public emergency or necessity, and then only after a finding reduced to writing as a public record of the Inspector setting forth the facts constituting the emergency or necessity.

If the Contractor fails to specify a Subcontractor, or if the Contractor specifies more than one Subcontractor for the same portion of Work to be performed under the Contract in excess of one-half of 1 percent of the Contractor's total original Bid or $10,000.00, whichever is greater, the Contractor agrees that it is fully qualified to perform that portion of Work itself, and that it shall perform that portion itself.

The Contractor shall set forth in its Bid the following: The name, location of the place of business, telephone number, California State Contractor's License Number and dollar amount of each Subcontractor who will perform Work, labor, service, supply specifically fabricated materials or equipment in an amount in excess of one-half of 1 percent of the Contractor's total Bid, or $10,000.00, whichever is greater.

The Contractor shall list only one Subcontractor for each portion of Work as defined by the Contractor in its Bid.

Acceptance by the Board of its Bid is dependent upon each Bid listed Subcontractor, and all subsequently approved additional Subcontractors, performing the dollar value of Work listed or approved. Any reduction, increase, or other change to any Subcontract amount without prior approval is considered an Unauthorized Subcontractor Substitution and is subject to a penalty of ten (10) percent of the Subcontract amount, whether Bid-listed or not. A Subcontract dollar value increased or reduced as the result of a Change Order issued by the Engineer to add or delete from the original scope of Work shall not be subject to a penalty for an Unauthorized Subcontract Substitution.

Acceptance by the Board of its Bid shall not entitle Subcontractors to recognition for any direct or contractual relationship with the City, nor shall it constitute approval of the use of any materials other than those specified.

The Contractor shall be responsible for all acts of all Subcontractors at all tiers. The Contractor shall coordinate all work performed by subcontractors in the interest of the City.

All Subcontractors, at all tiers, who will be working on the Project shall be approved in writing by the Inspector prior to beginning Work, regardless of the dollar amount of Work to be performed, and whether or not they were listed in the original Bid.

Requests for approval of all Subcontractors, or request for substitution of a Subcontractor, shall be made in writing to the Inspector, and said request shall contain the following information for each Subcontractor:

1) Project Name

2) Project Work Order Number

3) Subcontractor's Name

4) Subcontractor's Address

5) Subcontractor's Phone Number

6) Subcontractor's Status (WBE, MBE, OBE)

7) Subcontractor's State of California Contractor License Number

8) Subcontractor's City Business Tax Registration Certificate Number (BTRC)

9) Dollar amount of Subcontract work to be performed

10) Description of Subcontract work to be performed

Failure to provide any of the information listed will result in denial of approval until such time as the information is provided.

Failure to obtain approval of the Inspector prior to each Subcontractor, at any level, performing Work on the Project may result in suspension of Work by that Subcontractor, removal of Work performed by unapproved Subcontractors, assessment of penalties, and possible sanctions against the Contractor. Failure to obtain approval of any Subcontractor or Sub-subcontractor at any level is subject to a penalty of ten (10) percent of the total amount of work performed by said Subcontractor.

Additional Subcontractors may be added after the time of original Bid. The value of Work to be performed by additional Subcontractors may not be greater than one-half of 1 percent of the Contractor's original total Bid or ten thousand dollars ($10,000.00), whichever is greater, unless the Subcontractor will be performing Work added by Change Order causing changes or deviations from the original Contract.

The Contractor shall provide the dollar amount of Work to be performed in all requests for additional Subcontractors and/or Sub-subcontractors. Failure to specify a dollar amount of Work to be performed will result in denial of additional Subcontractors until such time as the amount is provided.

Failure of the Contractor to request and obtain approval for a reduction in either a Bid-listed Subcontract amount or the Subcontract amount of a Subcontract added after the original Bid shall result in a penalty of ten percent of the Subcontract amount.

A Contractor whose Bid is accepted may not:

1) Substitute any person as Subcontractor in place of a Subcontractor listed in the original Bid, except that the Inspector, acting on behalf of the Board, may consent to the substitution of another Subcontractor for one of the following situations:

A) When the Subcontractor listed in the original Bid or proposal after having had a reasonable opportunity to do so fails or refuses to execute a written contract, when that written contract, based upon the general terms, conditions, plans and specifications for the project involved or the terms of that Subcontractor's written bid, is presented to the subcontractor by the Contractor.

B) When the listed Subcontractor becomes bankrupt or insolvent.

C) When the listed Subcontractor fails or refuses to perform its subcontract.

D) When the listed Subcontractor fails or refuses to meet the bond requirements of the Contractor as set forth herein.

E) When the Contractor demonstrates to the Inspector's satisfaction that the name of the Subcontractor was listed as a result of an inadvertent clerical error.

F) When the listed Subcontractor is not licensed pursuant to the State of California Contractor's License Law.

G) When the listed Subcontractor refuses to obtain a City of Los Angeles Business Tax Receipt Certificate (BTRC).

H) When the Inspector concurs with the Contractor that the Work being performed by the listed Subcontractor is unsatisfactory and not in substantial accordance with the Contract Documents, or the listed Subcontractor is delaying or disrupting the progress of the work.

I) When the listed Subcontractor fails to submit an Affirmative Action Plan acceptable to the Inspector.

J) When the Board determines that a listed Subcontractor is not a responsible contractor.

2) Permit a Subcontract to be voluntarily assigned or transferred or allow it to be performed by anyone other than the original Subcontractor listed in the original Bid, without the consent of the Inspector.

3) Other than in the performance of Change Orders causing changes or deviations from the original Contract, sublet or Subcontract any portion of the Work in excess of one half of 1 percent of the Contractor's total Bid as to which its original Bid did not designate a Subcontractor.

4) Reduce the dollar amount of a Bid-listed Subcontract without the written approval of the Inspector.

A request for substitution of any Subcontractor, at any level, whether Bid-listed or not, must be made in writing to the Inspector and must include letter(s) of explanation as to the reason for the requested substitution.

It is considered a substitution if anyone other than the Bid-listed and/or approved Subcontractor(s), including the Contractor, performs any portion of the Work designated to be performed by said Subcontractor.

Failure to obtain approval for a Subcontractor substitution may result in rejection of the affected Work, a penalty of ten (10) percent of the total amount of the Subcontract, and possible sanctions by the City.

All substitutions of Subcontractors, whether MBE/WBE or not, shall be approved in writing by the Board prior to any Work being performed by the substituting Subcontractor.

The Contractor shall conduct a Good Faith Effort prior to approval of any requested Subcontractor substitution, regardless of the status (WBE/MBE/OBE/DBE) of the contractor being substituted for. For MBE/WBE/OBE Subcontractor substitution requests, the Contractor shall comply with the Good Faith Effort requirements of Part III (F) (2) of the Bid Proposal. The Good Faith Effort for any requested Subcontractor substitution must be reviewed and approved by the Special Research and Investigation Section of the General Services Division of the Bureau of Contract Administration, whether the Subcontractor was Bid listed or approved after the Award of the Project.

There shall be no decrease in dollar value of Work to be performed by Subcontractors approved as a substitute for a Bid-listed Subcontractor without a change in scope of the Work to be performed by the originally Bid-listed Subcontractor. Written evidence of a change of scope must be provided by the Engineer prior to approval of a change in dollar value of a Bid-listed Subcontractor.

Prior to approval of the Contractor's request for substitution, the Inspector shall give notice in writing to the Subcontractor affected by the Contractor's request to substitute and of the reasons for the request. The notice shall be served by certified or registered mail to the last known address of the Subcontractor. The listed Subcontractor who has been so notified shall have five (5) Workdays within which to submit written objections to the substitution. Failure to file these written objections within five (5) Workdays of notification shall constitute the listed Subcontractor's consent to the substitution. Notification by the Inspector may be made by phone in lieu of written notification via certified or registered mail if agreed to by the listed Subcontractor and followed by written request. Upon notification by phone, the listed Subcontractor may file written objections within five (5) days of notification.

If written objections are filed, the Inspector shall give notice of at least five (5) Workdays to the listed Subcontractor of a hearing on the Contractor's request for substitution.

The Contractor, as a condition to assert a claim of Inadvertent Clerical Error in the listing of a Subcontractor, shall within two Workdays after the time of the original Bid opening by the Board give written notice to the Inspector and copies of such notice to both the Subcontractor he claims to have listed in error and the intended Subcontractor who had bid to the Contractor prior to Bid opening.

Written notice of an Inadvertent Clerical Error shall be forwarded within two (2) days after the time of the original Bid opening by every Contractor claiming such an error. Failure to forward such notice within the time prescribed shall make any such subsequent claim of Inadvertent Clerical Error invalid.

Any listed Subcontractor who has been notified by the Contractor of an Inadvertent Clerical Error shall be allowed six (6) Workdays from the time of the Bid opening to submit to the Inspector and to the Contractor written objection to the Contractor's claim of Inadvertent Clerical Error. Failure of such listed Subcontractor to file such written notice within the six (6) Workdays shall constitute agreement that an advertent clerical error was made.

The Inspector shall, in the absence of compelling reasons to the contrary, consent to the requested substitution based on an Inadvertent Clerical Error if:

1) The Contractor, the Subcontractor listed in error, and the intended Subcontractor each submit an affidavit to the Inspector along any additional information as the parties may wish to submit that an Inadvertent Clerical Error was in fact made, provided that the affidavits from each of the three parties are filed within eight (8) Workdays from the time of the original Bid opening, or

2) If such affidavits are filed by both the Contractor and the intended Subcontractor within eight days of the original Bid opening but the Subcontractor whom the Contractor claims to have listed in

error does not submit within six (6) Workdays, to the Inspector and to the Contractor, written objection to the Contractor's claim of Inadvertent Clerical Error as provided in this article.

If such affidavits are filed by both the Contractor and the intended Subcontractor but the listed Subcontractor has, within six (6) Workdays from the time of the original Bid opening, submitted to the Inspector and to the Contractor written objection to the Contractor's claim of Inadvertent Clerical Error, the Inspector shall investigate the claims of all parties and schedule a public hearing before the Board to determine the validity of such claims. Any determination shall be based on the facts contained in the declarations submitted under penalty of perjury by all three parties and supported by testimony given to the Board. The Board may, on its motion or that of any other party, admit testimony of other Contractors, any Bid registries or depositories, or any other party in possession of facts, which may have a bearing on the decision of the Board. The findings of the Board shall be final.

The Contractor shall pay its Subcontractors, within seven (7) days of receipt of each progress payment, the respective amounts allowed the Contractor on account of the work performed by its Subcontractors, to the extent of each Subcontractor's interest therein. Payments to Subcontractors shall be made based on the payment estimate approved for payment by the Inspector.

The Contractor shall forward to the Inspector a monthly report indicating the date and amount of each payment made to its Subcontractors from the most recent progress payment. If the Contractor has a written agreement with any Subcontractor allowing for payment later than 7 days after receipt of each progress payment, the Contractor shall include the written agreement(s) in its monthly report.

00312 RESPONSIBILITY OF CONTRACTOR TO ACT IN EMERGENCY (11/21/01)

When an emergency arises creating an imminent hazard to persons or threatening the loss or damage to property, the Contractor shall take prudent action without instruction from the City. The Contractor shall immediately notify the Engineer and the Inspector of any emergency action taken. During such emergencies, if the Contractor fails to act, the Engineer or Inspector may instruct the Contractor to take action. Should the Contractor still fail to act, the Engineer or Inspector may respond to the emergency with other forces or contractors at the Contractor's sole expense. Claims for additional time, compensation or interest will be rejected if the Contractor's actions or inaction created the emergency. Similarly, any Claims will be offset by the amount that the Contractor's actions or inaction aggravated the emergency.

00313 ASSIGNMENT (2/09/95)

The Contractor shall not assign, transfer, convey or otherwise dispose of this Contract or any of the proceeds thereunder unless written consent of the City has been obtained. No right under this Contract or claim for any proceeds due or to become due hereunder shall be asserted against the City, or persons acting for the City, by reason of any so-called assignment, transfer or conveyance of this Contract or any part thereof unless such assignment, transfer or conveyance has been authorized by the written consent of the City. The instrument of assignment, transfer or conveyance shall contain a clause subordinating the claim of the assignee, transfer or conveyor to all prior liens for services rendered or materials supplied for the execution of the Work.

00314 NOTIFICATION OF HAZARDOUS SUBSTANCES (10/17/01)

The existing facilities or Jobsite may contain asbestos, PCBs, corrosives, carcinogens, or other hazardous materials. Should the Contractor or any of its Subcontractors, while performing Work on or in the vicinity of existing facilities, unexpectedly encounter any material identified in the California Code of Regulations, Title 8, as a hazardous material not shown on the Plans or addressed in the specifications, or have reason to believe that any other material encountered may be a hazard to human health and safety and/or the environment, the Contractor shall stop the Work, cordon off the affected area to secure

entry, and shall immediately notify the Inspector and the Engineer. Removal and disposal of the hazardous material not shown on the Plans or addressed in the specifications, if the Engineer deems it necessary, will be done by and at the expense of the City. The City will provide the Contractor, upon request, with copies of Material Safety Data Sheets (MSDS) covering hazardous materials identified by the Contractor that are encountered in existing facilities during the course of the Work and that are not removed by the City.

In the event that the Contractor is delayed in the completion of the Contract solely because of such hazardous materials or conditions not previously identified in the Contract Documents, the Contractor shall be entitled to an extension of time in accordance with "Unavoidable Delay" of these General Conditions.

For new construction Work and for all Contractor furnished supplies and equipment that may contain hazardous materials, the Contractor shall develop and implement a written Hazard Communication Program for its employees in accordance with the California Code of Regulations. The Contractor's basic written Hazard Communication Program shall be submitted to the Engineer and the Inspector prior to the start of Work at the site, and shall be revised and kept current as required by the continuing progress of the Work. The Contractor's Hazard Communication Program shall also include the MSDS for all hazardous materials the Contractor will be using at the facility. All provisions concerning MSDS for hazardous materials shall be met before the hazardous material is delivered to the site.

The Engineer shall be provided with three (3) copies and the Inspector with four (4) copies of the Contractor's written Hazard Communication Program, Contractor provided MSDS, and all revisions and modifications thereto.

The Contractor and Subcontractors shall comply with all State and Federal statutes and regulations on training, handling, storage, public notification, and disposal of hazardous materials and hazardous wastes. In the event that the Contractor or its Subcontractors spills or releases hazardous materials, the Contractor shall immediately notify the Inspector and the Engineer and any required agencies of the spill or release and the Contractor shall stop the Work, and cordon off the affected area to secure entry. Removal and disposal of the hazardous material, if the Engineer deems it necessary, will be done by the City at the Contractor's expense. Further, the Contractor shall notify the Engineer and the Inspector when hazardous materials are brought on-site and when hazardous materials and hazardous wastes are removed from the site. Hazardous Materials brought on site shall be accompanied by four (4) copies of MSDS, which shall be provided to the Inspector before such materials are unloaded.

00315 INDEPENDENT CONTRACTOR (10/21/99)

The Contractor represents that it is fully experienced and properly qualified to perform the class of Work required for the Contract and that it is properly licensed, equipped, organized and financed to perform the Work. The Contractor shall be an independent contractor. The Contractor is not an agent of the City in the performance of the Contract, and shall maintain complete control over its employees and its Subcontractors and Suppliers of any tier. Nothing contained in the Contract or any Subcontract awarded by the Contractor shall create any relationship between any Subcontractor and the City. The Contractor shall perform the Work in accordance with its own methods, in compliance with the terms of the Contract.

00316 INDEMNIFICATION (10/17/01)

Except for the active negligence or willful misconduct of the City, the Contractor undertakes and agrees to defend, indemnify and hold harmless, through legal counsel acceptable to the City, the City, and any and all of the City's Boards, Officers, Agents, Employees, Assigns, and Successors in Interest from and against all suits and causes of action, claims, losses, demands and expenses, including, but not limited to, attorney's fees and cost of litigation, damage or liability of any nature whatsoever, arising out of or related to the performance or nonperformance by Contractor or its Subcontractors, Sub-Subcontractors, or Suppliers, of any tier, of any portion of the construction of the Project, including but not limited to

Contractor's negligent acts, errors, omissions, breach of contract, breach of warranty (express or implied), or willful misconduct.

It is agreed that such defense and indemnity shall extend to the City's Architect/Engineer or other Design Consultant providing services under written agreement with the City covering any portion of the Project. Provided, however, that the Design Consultant shall be solely responsible for the enforcement of any request made by said Consultant for indemnification or defense by the Contractor. It is further provided that the City shall have no liability whatsoever for any failure of the Contractor to comply with any request from the consultant for indemnity or defense.

It is further agreed that the defense and indemnity obligations of the Contractor under this Article shall not extend to the liability of the Design Consultant or its agents, employees or subconsultants, arising as a result of such indemnitee's own active negligence, errors or omissions or from (1) the preparation or approval of maps, Plans, opinions, reports, surveys, change orders, designs or Specifications, or (2) the giving of or failure to give directions or instructions by the indemnitee provided that such giving or failure to give is the primary cause of the damage or injury.

00317 INSURANCE (1/05/10)

These provisions apply unless otherwise noted in the General Requirements.

A) GENERAL

During the term of this Contract and without limiting the Contractor's indemnification of the City, the Contractor shall provide and maintain at its own expense, insurance having the limits customarily carried and actually arranged by the Contractor but not less than the amounts and types listed on the Insurance Requirements Form in these Contract Documents, covering its operations hereunder subject to the following conditions as they may variously apply:

1) ADDITIONAL INSURED/ADDITIONAL INTEREST/LOSS PAYEE

The City, its Boards, Officers, Agents, and Employees shall be included as:

a) Additional Insureds in all required General Liability and Automobile Liability insurance.

b) Named Insureds in all required Owners and Contractors Protective Liability and Builder's Risk insurance policies.

c) Loss Payee As Its Interest May Appear in all required property, fidelity or Surety coverages.

2) INSURANCE APPROVAL

All insurance required hereunder shall conform to the City requirements established by Charter, ordinance or policy. Evidence of insurance shall be approved by the Office of the City Administrative Officer, Risk Management prior to commencement of any Work or tenancy under this Contract in accordance with the Los Angeles Administrative Code.

3) ALTERNATIVE PROGRAMS/SELF-INSURANCE

Alternative Risk Financing mechanisms such as Risk Retention Groups, Risk Purchasing Groups, off-shore carriers, captive insurance programs and self-insurance programs are subject to separate approval after the City has reviewed their financial statements.

4) ADMITTED CARRIER/LICENSED CALIFORNIA BROKER

All Insurance must be provided by an insurer admitted to do business in California or written through a California-licensed surplus lines broker or through an insurer otherwise acceptable to the City.

Non-admitted coverage must also contain a Service of Suit provision whereby the underwriters will submit as necessary to any court of competent jurisdiction in California and agree that all matters arising thereunder will be determined in accordance with the law and practice of such court. It must further give the name and address of the underwriter's agent for service of process located within California or must nominate the California Insurance Commissioner as such agent.

5) CONTRIBUTION NOT REQUIRED

The Contractor's insurance shall be primary and will not require contribution or shall be endorsed to effect these provisions.

6) CANCELLATION/REDUCTION IN COVERAGE NOTICE

With respect to the interest of the City, if an insurance company elects to cancel insurance before the stated expiration date, or declines to renew in the case of a continuous policy, or materially reduces the coverage period by changing the retroactive date (if any), or the extended discovery period (if any), or reduces the stated limits other than by impairment of an aggregate limit, or materially reduces the scope of coverage which affects the City's interest, the company will provide the City at least thirty (30) calendar days (ten (10) calendar days for non-payment of premium) prior written notice of such election. Notice will be addressed as follows: CAO-RISK MANAGEMENT, MAIL STOP 132, CITY HALL EAST 1240, 200 NORTH MAIN STREET, LOS ANGELES, CA 90012-4190.

7) ACCEPTABLE EVIDENCE

Electronic submission via Track4LA™, the City's online insurance compliance system (http://track4la.lacity.org), is the preferred method for submitting evidence of insurance. Track4LA™ can be used by insurance brokers and agents to submit Contractor insurance certificates directly to the City using the ACORD 25 Certificate of Liability Insurance in electronic format. Insurance Industry Certificates of Insurance other than the ACORD 25 may also be accepted. However **all** Certificates must provide a thirty (30 days' notice provision (ten (10) days for non-payment of premium) AND an Additional Insured Endorsement naming the City an additional insured completed by Contractor's insurance company or its designee. If the policy includes an automatic or blanket additional insured endorsement, the Insurance Certificate must state that the City is an automatic or blanket additional insured. An endorsement naming the City as an insured is required on all Builder's Risk policies. An endorsement naming the City as Loss Payee as its Interest may appear is required on all property, fidelity or Surety coverages.

Alternatively, the Contractor may submit a copy of the full insurance policy containing language which complies with subparagraphs 1) through 6) above.

Additional Insured Endorsements DO NOT apply to the following:

- Indication of compliance with statute, such as Workers' Compensation Law.
- Professional Liability insurance.

8) SEPARATION OF INSUREDS

Except with respect to the insurance company's limits of liability, each liability insurance policy shall apply separately to each insured against whom a claim or suit is brought. The inclusion of any person or organization as an insured shall not affect any right which such person or organization would have as a claimant if not so included.

9) RENEWAL

Once the insurance has been approved by City, evidence of renewal of an expiring policy may be submitted on a manually signed renewal endorsement or certificate form. If the policy or carrier has changed, however, new evidence as specified in paragraphs 1) through 8) above, must be submitted.

B) AGGREGATE LIMITS/REDUCTION IN COVERAGE

If any of the required insurance coverages contain annual aggregate limits, the Contractor must give the City written notice of any pending claim or lawsuit which will materially diminish the aggregate within thirty (30) days of knowledge of same. Further, the Contractor must take appropriate steps to restore the impaired aggregate limits or provide replacement insurance protection within thirty (30) days of knowledge of same. The City may, at its option, specify a minimum acceptable aggregate for each line of coverage required.

The Contractor shall not make any substantial reductions in scope of coverage (e.g., elimination of contractual liability or reduction of discovery period) which may affect the City's protection without the City's prior written consent.

C) MODIFICATION OF COVERAGE

The City reserves the right at any time during the term of this Contract to change the amounts and types of insurance required hereunder by giving the Contractor ninety (90) calendar days advance written notice of such change. If such change should result in substantial additional cost to the Contractor, the City agrees to negotiate additional compensation.

D) FAILURE TO PROCURE INSURANCE

The Contractor's failure to procure or maintain required insurance or a self-insurance program during the entire term of this Contract shall constitute a material breach of this Contract under which the City may immediately suspend or terminate this Contract or, at its discretion, procure or renew such insurance to protect the City's interests and pay any and all premiums in connection therewith, and recover all monies so paid from the Contractor.

E) UNDERLYING INSURANCE

The Contractor shall be responsible for requiring indemnification and insurance as it deems appropriate from its consultants, agents and Subcontractors, if any, to protect the Contractor's and the City's interests, and for ensuring that such persons comply with any applicable insurance statutes. The Contractor should seek professional advice in this regard.

F) WORKERS' COMPENSATION

By signing this Contract, the Contractor hereby certifies that it is aware of the provisions of Section 3700 et seq., of the Labor Code which require every employer to be insured against liability for Workers' Compensation or to undertake self-insurance in accordance with the

provisions of that Code, and that it will comply with such provisions at all such times as they may apply during the performance of the Work pursuant to this Contract.

A waiver of subrogation in favor of the City will be required when Work is performed on City premises under hazardous conditions. The Contractor's Workers' Compensation and Employer's Liability insurance shall be endorsed accordingly.

G) ALL RISK BUILDER'S RISK/INSTALLATION FLOATER

During the course of construction, the Contractor shall secure and maintain an All Risk Builder's Risk Insurance policy covering loss, damage or destruction of property, including materials in transit and stored on and off site, in an amount equal to the value of the construction and materials on hand.

An Installation Risk or "Floater" Policy, written to cover only specific types of equipment during construction, may be provided to cover damage to Work or high valued equipment or materials.

Coverage shall remain in force until the Work is completed and accepted by the City. Acceptable evidence of coverage shall be in the form of an endorsement to the policy which names the City as a Named Insured and as Loss Payee As Its Interest May Appear.

H) TYPICAL COVERAGES REQUIRED

The coverages required in A above shall be at least as broad as:

1) General Liability: Insurance Services Office Commercial General Liability coverage (Occurrence Form CG 00 01) with an edition date prior to 2004. Coverage shall include protection for the City as additional insured with regard to the completed operations hazard.

2) Automobile Liability: Insurance Services Office Form Number CA 00 01 covering Automobile Liability, code 1 (any auto).

3) Professional Liability: If applicable, errors and omissions liability appropriate to the consultant's profession, with a discovery period of not less than twelve (12) months after completion of Work or termination of Contract.

I) TYPICAL LIMITS OF LIABILITY

Unless otherwise specified in Form Gen. 146/IR, the Contractor shall maintain limits no less than:

1) General Liability: $1,000,000 per occurrence, $2,000,000 aggregate for bodily injury and property damage. A separate aggregate shall apply to completed operations.

2) Automobile Liability: $1,000,000 per accident for bodily injury and property damage.

3) Employer's Liability: $1,000,000 per accident for bodily injury or disease.

1) Professional Liability: $1,000,000 per claim.

K) CONTRACT BONDS

Before the execution of the Contract by the Board, the Bidder shall file with the Board Surety bonds satisfactory to the Board in the amounts and for purposes noted below. Bonds shall be duly executed by a responsible corporate Surety, authorized to issue such bonds in the State of

California and secured through an authorized agent with an office in California. Bonds shall be issued by a Surety who is listed in the latest revision of U.S. Department of Treasury Circular 570, is authorized to issue bonds in California, and whose bonding limitation shown in said circular is sufficient to provide Bonds in the amount required by the Contract. The Bidder shall pay all Bond premiums, costs, and incidentals. On Contracts estimated by the Engineer to be less than $2 million, Bonds may be obtained from an insurance company with a Certificate of Authority from the California Insurance Commissioner authorizing the company to write Surety insurance within the State of California.

Each Bond shall be signed by both the Bidder and the Surety, and the signature of the authorized agent of the Surety shall be notarized.

The Bidder shall provide two good and sufficient surety bonds. The "Payment Bond" (Material and Labor Bond) shall be for not less than one hundred percent (100%) of the Contract Price, to satisfy claims of material suppliers and of mechanics and laborers employed by it on the Work. The bond shall be maintained by the Contractor in full force and effect until the Work is accepted by the Board, and until all claims for materials and labor are paid, and shall otherwise comply with the California Civil Code.

The "Performance Bond" shall be for one hundred percent (100%) of the Contract Price to guaranty faithful performance of all Work, within the time period prescribed, in a manner satisfactory to the Board, and that all materials and Workmanship will be free from original or developed defects, and comply with requirements and guaranty specified in “Guaranty-Warranty” of the General Requirements.

Should any Surety at any time be unsatisfactory to the Board, notice will be given the Contractor to that effect. No further payments shall be deemed due or will be made under the Contract until a new Surety shall qualify and be accepted by the Board.

Changes in the Work, or extensions of time, made pursuant to the Contract, shall in no way release the Contractor or Surety from its obligations. Notice of such changes or extensions shall be waived by the Surety. In addition to the bonds detailed above, the Contractor shall provide a guarantee bond as detailed in “Guaranty-Warranty” of the General Requirements.

Assistance in obtaining the City-required bid, payment and performance surety bonds is available through the City of Los Angeles Bond Assistance Program at (213) 258-3000 or http://cao.lacity.org/risk/BondAssistanceProgram.pdf.

00318 SERVICE OF NOTICE (2/09/94)

The delivering of any notice, instruction, claim or protest, or other written communication, personally to the Contractor or the Contractor’s Representative or to the Engineer, the Inspector, or to the City Clerk of the City shall constitute service therefore upon the Contractor, the Engineer, the Inspector, or the City, respectively.

The depositing of a post-paid (Registered Mail) wrapper directed to the official address of the Contractor, the Engineer, the Inspector, or the City in any post office, of any notice, instruction, claim or protest, or written communication, shall be deemed sufficient service thereof upon the Contractor, the Engineer, the Inspector, or the City, respectively, and the date of said service shall be the day following the date of postmark.

The official address of the Contractor shall be the address given in the accepted Bid or such other address as the Contractor may subsequently designate in writing either to the Engineer or to the City. The official address of the Engineer, the Inspector, and the City will be supplied to the Contractor after the award.

00319 AGENT TO ACCEPT SERVICE (10/21/99)

The Contractor shall maintain within Los Angeles County a duly authorized agent as identified in the Article entitled Service of Notice to accept service of legal process on its behalf, and shall keep the City advised of such agent's name and address during the duration of the Contract and for three (3) years after the Final Payment, or as long as the Contractor has warranty obligations under the Article entitled "Guaranty-Warranty" of General Requirements, whichever period terminates later. In the event that no such duly authorized agent is on file with the City, the Contractor agrees that the Secretary of State of the State of California shall be the Contractor's agent for service of legal process.

00320 – 00399 NOT USED

00400 TEMPORARY SUSPENSION OR DELAY OF WORK (9/18/07)

If the Work of the Contract is suspended or delayed, the Contractor shall so notify the Engineer within twenty-four (24) hours after the start thereof. If the Contractor is entitled to reimbursement for such suspension or delay, as specified hereinafter, the Contractor shall submit a completely detailed statement of the costs thereof, to the Engineer, within twenty (20) calendar days after the termination thereof. Failure to submit such statement of costs or notification within the time specified shall be deemed a waiver of any claims for delay or damages or both by the Contractor.

If the Work of the Contract is suspended or delayed through no fault of the City, except as provided for in Unavoidable Delay of these General Conditions, all expenses and losses shall be borne by the Contractor with no time extension, additional reimbursement for extended overhead, or interest on monies due, allowed to the Contractor.

If the Work of the Contract is suspended or delayed by an act of the City, or by failure of the City to furnish required information, and the Contractor thereby incurs expenses or sustains losses which could not have been avoided by the judicious handling of forces and equipment, and if by a diligent prosecution of the Work the Contractor could not have completed the Work before such suspension, the Contractor will be paid such amount as the Engineer may find to be a fair and reasonable compensation for such part of the Contractor's actual loss. In no case shall any compensation be made to cover any loss other than actual cash paid for wages, rental of equipment, and materials used in protection of the Work, all of which must be supported by satisfactory written evidence. Such wages shall not include the wages or salary of any individual not necessary for protection of the Work. The Contractor shall not be entitled to any mark-up for overhead or profit on damages or for extended duration or for interest on monies due for work satisfactorily completed prior to the suspension or delay.

The Contractor shall maintain complete and accurate daily records of all costs due to delay, clearly distinguishing them from the costs of other portions of the Work, and shall submit a detailed written report of such costs to the Engineer and the Inspector within twenty (20) calendar days of incurring the delay. Failure to comply shall result in waiver by the Contractor to any claims for additional payment and schedule change. In addition, the Contractor shall submit evidence of any cause of delay specified herein if it has not already done so.

As soon as practicable, following receipt of such report and evidence, if required, the Engineer will determine the nature and extent of such costs and will, if the Engineer finds that payment is due, issue a Change Order therefor, subject to the provisions in "Change Orders" of the General Requirements. If the Engineer determines that payment is not due, the Contractor will be so advised in writing. Should the Contractor disagree with such finding, Contractor may submit a notice of protest to the Engineer as provided in Claims and Protests. The Contractor shall provide the Engineer with access to its daily cost records or certified copies thereof as requested. All such records shall be retained by the Contractor and open to inspection and audit by the City and the Engineer. Except for the additional compensation

provided hereinbefore, the Contractor shall have no claim for damage or compensation for any delay or hindrance whether or not contemplated by the Contract.

00401 UNAVOIDABLE DELAY (10/17/01)

Should the Contractor be obstructed or delayed in the completion of the Work from causes beyond its control and without its fault or negligence, and solely due to acts of God, acts of government in its sovereign capacity, riots, insurrections, wars, fires, floods, earthquakes, tidal waves, epidemics, quarantine restrictions, industry-wide strikes, freight embargoes, or unusually severe weather, it shall be entitled to a noncompensable extension of time.

The Contractor shall only be entitled to a noncompensable extension of time for Unavoidable delay in the Work which negatively impacts the critical path of the approved project schedule, and causes the Work of the project to extend beyond the approved Contract Completion date.

The Contractor shall be entitled to a noncompensable time extension only if it notifies the Engineer and the Inspector immediately at the time the Contractor is prevented from proceeding with the Work and follows with written notification of the causes of the delay within five (5) calendar days from the beginning of any delay. Also, the Contractor shall notify the Engineer and the Inspector immediately at the end of the delay and follow up with written notification of the cessation of delay within five (5) calendar days from the end of the delay.

Any claim for a time extension shall be made in writing within twenty (20) calendar days after the conclusion of the delay. The Engineer and the Inspector shall ascertain the facts and the extent of the delay and extend the time for completing the Work if, in their judgement, the findings of fact justify such an extension. The Engineer's decision shall be final and conclusive, subject only to appeal as provided by Claims and Protests.

00402 ARCHAEOLOGICAL AND PALEONTOLOGICAL DISCOVERIES (9/18/07)

If items of archaeological or paleontological interest are discovered, the Contractor shall immediately cease excavation in the area of discovery and shall not continue until ordered by the Engineer. When resumed, excavation operations within the area of discovery shall be as directed by the Engineer.

Such discoveries include antiquated dwelling sites, stone implements or other artifacts, animal bones, human bones, fossils and the like. The Contractor shall be entitled to an extension of time and compensation in accordance with the provisions of Temporary Suspension or Delay of Work.

00403 COORDINATION WITH OTHER CONTRACTS (1/30/03)

The Board may allow other work at the site by the City's own forces, utility owners or other direct contracts. If such other work to be performed was not noted in the Contract Documents, written notice thereof will be given to the Contractor prior to starting any such other work; and, if the Contractor believes that such performance will involve additional expense to the Contractor or requires additional time and the parties are unable to agree as the extent thereof, the Contractor may make a claim therefor as provided under Claims and Protests.

Paving of roadway areas shall be withheld until planned utility changes or installations have been made under City permits and until verifications of completion of all such changes or installations have been received by the Inspector. The Contractor is responsible for assuring that verifications are submitted by the utilities. Underground final inspection and acceptance of sewer and storm drain installations shall precede paving operations.

The Contractor shall afford each utility owner and other contractor who is a party to such a direct contract (or the City, if the City is performing the additional work with City employees) proper and safe access to

the site and a reasonable opportunity for the introduction and storage of materials and equipment and the execution of such work, and shall properly connect and coordinate the Work with theirs. The Contractor shall do all cutting, fitting and patching of the Work that may be required to make its several parts come together properly and integrate with such other work. The Contractor shall not endanger any work of others by cutting, excavating or otherwise altering their work and will only cut or alter their work with the written consent of the Engineer and the others whose work will be affected. The duties and responsibilities of the Contractor under this Article are for the benefit of such utility owners and other contractors to the extent that there are comparable provisions for the benefit of the Contractor in said direct contracts between the City and such utility owners and other contractors.

If any part of the Contractor's work depends upon proper execution or results of the work of any such other contractor or utility owner or the City, the Contractor shall inspect and promptly report to the Engineer in writing any delays, defects or deficiencies in such work that renders it unavailable or unsuitable for such proper execution and results. The Contractor's failure to do so will constitute an acceptance of the other Work as fit and proper for integration with the Contractor's Work. The exception is latent defects in the other work.

00404 TERMINATION OF CONTRACT BY CITY (CONTRACTOR NOT AT FAULT) (9/18/07)

The Contract may be terminated, in whole or in part, at any time, by the City, at its sole discretion, without cause and for the City's convenience. Such termination will be accomplished by delivery of a written "Notice of Termination" to the Contractor, specifying the extent to which performance of the Work under the Contract or portion of the Contract shall be terminated and the date upon which such termination shall become effective.

After receipt of a Notice of Termination, except as otherwise directed by the City, the Contractor shall:

1) Stop Work under the Contract on the date and to the extent specified in the Notice of Termination.

2) Notify the City in writing of all outstanding orders, Subcontracts and contracts entered into by Contractor for performance of the Work, including the (I) name and address of the vendor, supplier or Subcontractor; (ii) a copy of the complete contract, order or Subcontract; (iii) an accounting of the Work performed and compensation earned by the vendor, supplier or Subcontractor, and (iv) such other information as the City may request to assist it in determining whether to terminate or accept assignment of the order, Subcontract or contract.

3) Upon written notice by City, terminate all Subcontracts, orders and contracts, of any tier, related to the performance of the Work that the City determines shall be terminated and not assigned. Place no further orders or Subcontracts for Goods or services, except as may be necessary for completion of that portion of the Work that has not been assigned.

4) Place no further orders or Subcontracts for Goods or services, except as may be necessary for completion of that portion of the Work that has not been terminated.

5) Settle outstanding liabilities and Claims arising out of such termination of orders and Subcontracts, with the Acceptance of the City if required (which Acceptance shall be final for the purposes of this Article).

6) Assign to the City in the manner, at the times, and to the extent directed by the City all of the rights, titles, and interests of the Contractor under such orders, contracts and Subcontracts so terminated.

7) Transfer title and deliver to the City in the manner, at the times and to the extent directed by it, the fabricated or unfabricated parts, Work in process, completed Work, supplies, and other

Goods procured as a part of, or acquired in connection with the performance of the Work terminated; and completed or partially completed plans, drawings, information and other items that would have been required (per the Specifications) to be furnished to the City if the Contract had been completed.

8) Use its best efforts to sell the property of the types referred to above in the manner, at the times, to the extent, and at the price(s) directed or authorized by the City, providing that the:

   A) Contractor is not required to extend credit to any purchaser;

   B) Contractor may acquire any such property under the prescribed conditions; and/or proceeds of any such transfer or disposition are applied or otherwise credited to reduce payments made by the City to the Contractor under the Contract.

9) Take any action that may be necessary, or that the City may direct, for the protection and preservation of the property related to the Contract that is in the possession of the Contractor and in which the City has or may acquire an interest.

10) Complete performance of that portion of the Work that has not been terminated by the Notice of Termination, as applicable and in accordance with the Contract.

After receipt of a Notice of Termination for the City's convenience, the Contractor shall submit its termination Claim to the City requesting payment of such sums as are permitted under the terms of this Article, in the form and with the certification(s) prescribed by the City for Claims and Protests. Such Claim shall be submitted promptly but in no event later than thirty (30) days from the effective date of termination, unless one or more extensions are granted in writing by the City upon written request by the Contractor during such six-month period or authorized extension thereof. However, the City may receive and act upon any termination Claim at any time after the thirty (30) days period or any extension thereof, if it determines that the facts justify such action. Upon failure of the Contractor to submit its termination Claim within the time specified, the City will determine the amount due the Contractor, if any, on the basis of information available, and will pay the Contractor the amount so determined. Such determination shall be final and binding and payment shall be in full settlement for the Work performed under the Contract.

Subject to the provisions of this Article, the Contractor and the City may agree upon the total or partial amount to be paid to the Contractor by reason of the total or partial termination pursuant to this Article. The agreed upon amount shall under no circumstances include any sum for lost profits on the terminated portion of the Work or for consequential damages, of any kind. If agreement is reached, the Contract will be amended by Modification accordingly and the Contractor will be paid the agreed upon amount.

In the event of failure of the Contractor and the City to agree on the total amount to be paid the Contractor by reason of the termination of Work pursuant to this Article, the City will pay the Contractor the amounts determined by the City as follows, exclusive of any amounts agreed upon in accordance with the preceding Paragraph:

The Contractor’s actual cost for the Work properly performed by the Contractor as of the date of termination, including a 5% allowance for profit on such costs; plus, the reasonable cost of preserving and protecting property; plus, other reasonable costs incidental to the termination of the Work under the Contract, including expense incurred to determine the amounts due; provided however, that the maximum payable or paid for any portion of the completed Work shall not exceed the values listed in the corresponding bid item of Schedule of Values.

The total sum to be payable or paid to the Contractor, exclusive of the settlement amounts described in the Paragraph immediately above, shall not exceed the total Contract Price less the:

1) Payments made previously by the City for the Work; plus

2) A prorated portion of the total Contract Price for the terminated portion of the Work as determined by the Engineer.

Except for normal spoilage and to the extent that the City will have otherwise expressly assumed the risk of loss, the fair value (as determined by the City) of property that is destroyed, lost, stolen, or damaged (so as to become undeliverable to the City or other buyer as described above) shall be excluded from the amounts paid to the Contractor.

In arriving at the amount due the Contractor under this Article, a deduction shall be made for the following:

1) Any claim that the City may have against the Contractor in connection with the Contract; and

2) The agreed upon price for and/or proceeds from the sale of goods or other items acquired or sold by the Contractor that have not been otherwise recovered by or credited to the City.

Under such terms and conditions as it may prescribe and at its sole discretion, the City may make partial payments against costs incurred by the Contractor in connection with terminated portion of the Contract whenever the City decides that the aggregate of such payments is within the amount to which the Contractor is entitled hereunder. If the total of such payments is in excess of the amount finally agreed upon or determined to be due under this Article, such excess shall be payable by the Contractor to the City upon demand together with interest at a rate equal to that set forth in California Code of Civil Procedure, Section 685.010.

Under no circumstances shall the Contractor be entitled to anticipatory or unearned profits or consequential damages as a result of a termination of partial termination under this Article, or for any other termination by the City. The payment to the Contractor determined in accordance with this Article shall constitute the exclusive remedy of the Contractor for termination hereunder.

Anything contained in the Contract to the contrary notwithstanding, a termination under this Article shall not waive any right or claim to damages that the City may have; the City may pursue any course of action that it may have by law or under the Contract; and shall not relieve Contractor of its warranty obligations with respect to any Work performed prior to such termination.

If the termination hereunder is only for a part of the Work, the Contract Price shall be reduced by the amount of the Contract Price applicable to the portion of the Work which is terminated, including overhead and profit, on the basis of one or more of the following:

1) Unit prices stated in the Contract or agreed upon by the City and the Contractor.

2) A lump sum determined by the Engineer, based on the estimate costs including overhead and profit of the terminated portions of the Work.

00405 TERMINATION OF CONTRACT BY CITY (CONTRACTOR DEFAULT) (9/18/07)

In the event of conduct by the Contractor which is determined by the Engineer or the Inspector to constitute default, the City may either suspend the Work under the provisions of Temporary Suspension or Delay of Work of these General Conditions or, upon ten (10) calendar days' written notice to the Contractor, terminate the Contract as provided herein. Default by the Contractor shall occur whenever it shall declare bankruptcy; become insolvent or assign its assets for the benefit of its creditors; fail to provide materials, equipment, or workmanship meeting the requirements of the Specifications; disregard or violate provisions of the Contract Documents or the Engineer’s or the Inspector’s instructions; cause a material breach of the Contract; fail to prosecute the Work according to the approved progress schedule; or fail to provide a qualified representative, competent workers or Subcontractors. Upon request, the

Contractor will be provided a hearing by the Board to contest the recommendation of the Engineer or the Inspector as to default by the Contractor.

In the event the Contract is terminated pursuant to this Article, the City may take possession of the Work and of all materials, tools, equipment, and property of the Contractor, which have been provided in connection with the Work, and may complete the Work by whatever method or means the City may select. The unpaid balance of the Contract cost for completing the Contract Work shall be used to complete the Work in accordance with the Contract Documents. If cost of completing the Work exceeds the unpaid balance, the Contractor shall pay the excess amount to the City. If such cost is less than the unpaid balance, the Contractor shall not have claim to the difference except to such extent as may be necessary, in the opinion of the Engineer, to reimburse the Contractor or the Contractor's sureties for any unpaid expense properly incurred for materials, tools, equipment, property, and labor devoted to the prosecution of the Work, or which the City shall have received the benefit. In computing such expenses, as it relates to equipment and property, the salvage value at completion of Work shall be deducted from the salvage value at the time the Contract was terminated, and the difference shall be considered as an expense. If after termination for failure of the Contractor to fulfill contractual obligations (Contractor Default), it is determined by a Court of competent jurisdiction that the Contractor had not failed to fulfill contractual obligations, the termination shall be deemed to have been for the convenience of the City. In such an event, adjustment of the Contract Price shall be made as provided in Termination of Contract by City (Contractor Not at Fault)".

00406 PARTIAL ACCEPTANCE (9/18/07)

The City shall have the right to utilize or place into service any item of equipment or other usable portion of the Work prior to completion of the entire project. The Engineer will notify the Contractor in writing identifying the specific portion or portions of the Work to be so utilized or otherwise placed into service. Following inspection by the Bureau of Contract Administration's Final Inspector and completion of a Partial Final Inspection Correction List, a "Statement of Partial Completion" will be issued.

It shall be understood by the Contractor that until a "Statement of Partial Completion" is issued, all responsibility for care and maintenance of all items or portions of the Work to be placed in use shall be borne by the Contractor. Upon issuance of a "Statement of Partial Completion", the City will accept responsibility for the protection and maintenance of all such items or portions of the Work described in the written notice, and it is further understood that the manufacturer's warranties of any affected equipment will commence not later than the date for commencement of the warranties indicated on the "Statement of Partial Completion". However, the Contractor shall retain full responsibility for satisfactory operation of the total project and the Contractor's guarantee period shall commence only after the issuance of the Statement of Completion. Such guarantee of total systems operation shall include that portion or portions of work covered by the "Statement of Partial Completion".

The issuance of a "Statement of Partial Completion" for any part of the Work shall not relieve the Contractor of its obligation to promptly remedy any omissions and latent or unnoticed defects in the Work covered by the "Statement of Partial Completion". The City shall have the right to restrict the Contractor's use of the occupied portion of the Work but shall allow the Contractor reasonable access to complete or correct items required by the Contract Documents.

The City may, if the Work is progressing satisfactorily, release part of the retention on portions of the Work for which a "Statement of Partial Completion" has been issued, provided that the following conditions have been met:

1) Partial Final Inspection corrections have been completed to the satisfaction of the Inspector on the portions of work to be utilized or placed into service;

2) The Contractor submits a written request to the Inspector for release of retention which includes a verifiable valuation of the identified portions of the Work covered by the "Statement of Partial Completion";

3) Impacted Subcontractors, major suppliers and the Contractor's Surety all agree in writing to release of retention;

4) There are no Stop Notices on file with the Board against the Contractor involving any portion of the affected Work; and

5) Both the Engineer and Inspector agree that a portion of the retention should be released for the affected Work.

00407 FINAL ACCEPTANCE (02/21/08)

When all work has been completed to the satisfaction of the Inspector, the Inspector shall request in writing a Full Final Inspection be performed by the Final Inspector. The Full Final Inspection conducted by the Final Inspector may include the Contractor and the Engineer. A Final Inspection Correction List will be provided to the Contractor and the Engineer upon completion of the Final Inspection. All corrections listed on the Final Inspection Correction List shall be completed within thirty (30) days of issuance of the Final Inspection Correction List. Failure to complete all corrections within thirty (30) days of issuance of the Final Inspection Correction List shall result in the Final Inspection being performed again.

The date of completion of the Project shall be the date of Final Field Acceptance of the Project when all physical corrections have been completed. The Final Inspector will issue the Statement of Completion indicating the date of Final Field Acceptance of the Project.

If there are no physical corrections to be completed following the Full Final Inspection, the Final Inspector will issue the Statement of Completion indicating the date of Final Field Acceptance of the Project.

Final Field Acceptance of the Project shall establish the following:

1) Start date of the Contractor's material and workmanship Guaranty-Warranty for the total Project.

2) Start date of any equipment or material warranties which had not previously been started.

3) Date the City assumes responsibility for maintenance, security, and safety of the Project.

Upon issuance of the Statement of Completion by the Final Inspector and completion of all administrative requirements of the contract, the Inspector of Public Works and City Engineer shall prepare a Joint Report which contains the recommendation of the Inspector of Public Works that the Board accept the Project. The Board will formally accept the project based on the information contained in the Joint Report.

00408 LIQUIDATED DAMAGES (9/18/07)

Time is of the essence in completing the Work required by the Contract. If the Contractor fails or refuses to complete the Work or any part thereof within the time fixed by the terms of the Contract, or any approved extension thereof, the actual damage to the City due to the delay will be difficult or impossible to determine. In lieu thereof, the Contractor shall pay to the City, as fixed and agreed, liquidated damages for each day of delay in completion, the sum or sums as set forth in the Contract Documents. The Contractor shall be liable for the amount thereof. The City reserves the right, however, to terminate the

Contractor's completion of the Work, charging against the Contractor and its sureties any excess cost occasioned the City thereby, together with liquidated damages accruing until such time as the City may reasonably complete the Work.

Permitting the Contractor to continue and complete the Work, or any portion thereof, after the time fixed herein for completion, or after the expiration of any extensions of said time, shall in no way operate as a waiver on the part of the City of any of its rights under the Contract.

00409 – 00499 NOT USED

00500 CHANGES AND EXTRA WORK (9/18/07)

The Engineer may, at any time, without notice to the Sureties, by written order designated or indicated to be a Change Order, order performance of extra work or make any change, addition or deletion in the Work, including but not limited to changes in the Specifications including Plans and designs; in the time, method or manner of performance of the Work; in the City furnished facilities, equipment, materials, services, or site; or directing acceleration in the performance of the Work.

Upon receipt of such Change Order, the Contractor shall promptly proceed with the Work covered thereby, which shall be performed in accordance with the provisions of the Contract Documents except as otherwise specifically provided.

In the event that Contractor receives any written order or direction by the Engineer or Inspector that is not so designated or indicated to be a Change Order, but which Contractor believes to constitute an extra, change, addition or deletion in the Work, then Contractor shall, prior to performance of any Work related thereto, give written notice to the Engineer and Inspector confirming Contractor's belief that such order or direction is believed to be a Change Order within one (1) working day of Contractor's receipt of such order or direction. Compensation for the extra, change, addition, or deletion in the Work will be in accordance with the provisions of "Change Orders" of the General Requirements.

Contractor conclusively waives any right to additional compensation, costs, expenses, damages or extension of time associated with an extra, change, addition or deletion to the Work that is performed by Contractor without either (i) a written order signed by the Engineer designated or indicated to be a Change Order and any change, addition or deletion, or (ii) a written notice issued by Contractor in accordance with the provisions of this Article.

During the progress of the Work, it may be necessary for the Engineer to issue written field orders in the form of an Emergency Change Order. Upon receipt, The Contractor shall immediately proceed with the Engineer's written directive to the limits described in Authority of the Board, Engineer, and Inspector.

Except as provided in this Article, no other order, statement, or conduct of the Engineer or Inspector shall be treated as a change under this Article or shall entitle the Contractor to an adjustment in the Contract Price or Contract Completion Date.

Except for claims based on defective Specifications, no Claim for any change under this Article shall be allowed for any costs incurred more than twenty (20) calendar days before the Contractor gives written notice as required. Except as otherwise provided in the Contract Documents, in the case of defective specifications for which the Engineer is responsible, the adjustment shall include any increased cost the Contractor reasonably incurred in attempting to comply with those defective specifications.

If the Contractor intends to assert a Claim for an adjustment in the Contract Price under this Article, it must, within twenty (20) calendar days after receipt of a written Change Order or the furnishing of a

written confirmation notice as hereinbefore specified, submit a written statement to the Engineer setting forth the general nature and monetary extent of such claim and all factual grounds therefor, including documented actual costs. The Contractor may include the statement of claim in the written notice as hereinbefore specified. Failure to comply with the twenty (20) calendar day notice requirement shall be deemed a waiver of Claims by the Contractor.

No adjustment shall be made under this Article for any suspension, delay, interruption, change or any other cause, to the extent that an adjustment is provided for or excluded under any other provision of the Contract.

Recovery of compensation, costs, expenses or damages resulting from delay, disruption, hindrance, or interference in the performance of the Work (including without limitation interruption of schedules, extended, excess or extraordinary field overhead and indirect overhead costs, loss of productivity and the impact, ripple or cumulative effect on other Work), shall not be permitted, and all rights thereto are conclusively waived by Contractor.

No Claim by the Contractor shall be allowed if the Claim is made after final payment under this Contract.

00501 DIFFERING SITE CONDITIONS (9/18/07)

Upon discovery and before further disturbance of any differing site conditions, the Contractor shall immediately notify the Inspector and the Engineer, followed by a written notice to the Engineer within twenty-four (24) hours of subsurface or latent physical conditions at the site differing materially from those indicated in the Contract Documents; or unknown physical conditions at the site, of an unusual nature, differing materially from those ordinarily encountered and generally recognized as inherent in the Work of the character provided for in this Contract; or materially differing from that represented in the Contract Documents which the Contractor believes may be hazardous waste (as defined in the California Health and Safety Code and is required to be removed to a Class I, Class II or Class III disposal site in accordance with provisions of existing law).

The Engineer will promptly investigate the conditions. If the Engineer finds that conditions materially differ and will cause an increase or decrease in the Contractor's cost or the time required to perform any part of the Work, the Engineer will adjust the Contract by Change Order.

If the Contractor disagrees with the Engineer's determination the Contractor may request an adjustment to the Contract Price or Contract Completion Date. Within twenty (20) calendar days after it first discovered, or should have discovered in the exercise of diligence and extreme care, the existence of such Differing Site Condition, submit a written statement setting forth a detailed cost breakdown described in "Change Orders" of the General Requirements. The statement must include the Contractor's basis and calculation of the costs saved or incurred, detailed information demonstrating the effect on the Contractor's schedule of performance (in the same manner as required by the Contract Documents for requesting an extension of time), identification of the Escrow Bid Documents that formed the basis of the Contractor's Bid to perform the Work affected by such conditions, and a complete and detailed explanation of the factual basis for the request.

Failure by the Contractor to strictly comply with the requirements of this Article concerning the timing and content of any notice of Differing Site Conditions or of any request for adjustment in Contract Price or Contract Completion Date based on Differing Site Conditions shall be deemed a waiver of any Claim by the Contractor for increase in the Contract Price or extension of the Contract Completion Date by reason of such conditions.

No Claim by the Contractor for an adjustment hereunder shall be allowed if asserted after final payment under this Contract.

00502 – 00599 NOT USED

00600 CLAIMS AND PROTESTS (9/18/07)

A Claim that involves an extra, change, addition or deletion to the Work as set forth in Changes and Extra Work shall arise upon issuance of a final decision of the Engineer denying, in whole or in part, a request for adjustment in the Contract Price or Contract Completion Date; provided however, that failure to comply with the requirements of the articles for Changes and Extra Work or Differing Site Conditions shall be conclusively deemed to constitute grounds to deny such Claim.

A Claim that does not involve an extra, change, addition or deletion to the Work may be asserted only if the Contractor shall immediately and prior to performing the Work affected thereby give written notice to the Engineer and the Inspector of such circumstances and of Contractor's intention to file a Claim based thereon. Unless otherwise directed by the Engineer, the Contractor shall proceed without delay to perform the Work and to conform to any order, instruction, or decision of the Engineer with respect thereto.

The Contractor shall, within twenty (20) calendar days after it first knew, or in the exercise of diligence and extreme care should have known, of the circumstances giving rise to the Claim, file a written Claim with the Engineer, stating in detail all objections, grounds and reasons therefor. The Contractor shall, upon instruction by the Engineer or the Inspector, provide, within ten (10) days or such other time as agreed to between the Engineer, and the Contractor, any and all documents, records or other materials identified by the Engineer or the Inspector as necessary for the resolution of the Contractor's Claim.

Claims seeking time extensions shall be accompanied by such documentation as is required by "Contractor's Construction Schedule and Reports" of the General Requirements. Claims seeking recovery of compensation or adjustments to the Contract Price, whether or not based on extras, changes, additions or deletions to the Work, shall be in the form of Change Order Cost Quotations prepared in accordance with and subject to all of the requirements of "Change Orders" of the General Requirements, including without limitation the prohibition on use of "total cost" and "modified total cost" methodologies.

Contractor waives all rights to assert any claims or seek any relief in the form of extensions of time or recovery of additional compensation, costs, expenses, damages from the City that are not presented as a Claim in the manner specified and within the time stated herein. Contractor further hereby agrees that in the interest of avoiding the additional expense and potential inequity of piecemeal resolution of Claims, all decisions by Engineer shall be final and binding not only as to all matters asserted in the Claim, but also as to all matters (including without limitation all rights to extensions of time and recovery of extra compensation, costs, expenses and damages) not asserted in the Claim that were known to Contractor, or that could have been reasonably discovered by Contractor in the exercise of diligence and extreme care, at the time of submission of the Claim and that are in any way related to the subject matter of the Claim. All orders, instructions and decisions of the Engineer or the Inspector will be limited to matters properly falling within their respective authority as specified in Authority of the Board, Engineer and Inspector.

The Contractor will be informed of the Engineer's or the Inspector's decision within thirty (30) days after the Contractor last submits data pertinent to the Claim previously mentioned. In the case of a Claim that involves an extra, change, addition or deletion to the Work as set forth in Changes and Extra Work, if the Contractor accepts the decision of the Engineer or Inspector, then the Contractor and City shall enter into a Change Order adjusting the Contract Price and Contract Completion Date in accordance with such decision. In case a Claim does not involve an extra, change, addition or deletion to the Work as set forth in Changes and Extra Work and the Contractor accepts the decision of the Engineer or Inspector, then the Contractor and City shall enter into a Change Order setting forth the terms of the decision and, if appropriate, its effect on the Contract Price or Contract Completion Date. If the Contractor does not

accept the decision of the Engineer or Inspector, it is recommended that further appeal of the Engineer's decision be conducted in accordance with the Issue Resolution Ladder, as defined in "Opportunity to Partner" of the General Requirements. If the dispute cannot be settled, the Contractor must elevate the appeal to the Dispute Review Board (if provided for under the terms of the General Requirements) or to the Board of Public Works (if the Contract Documents do not provide for a Dispute Resolution Board) in writing within twenty (20) calendar days after receipt of the Engineer's decision. The Board shall afford the Contractor an opportunity to be heard and to offer evidence in support of its appeal. All determinations of the Board with respect to Claims shall be final and binding.

In all matters concerning the validity, interpretation, performance, effect or otherwise of the Contract, the Federal regulations (if and to the extent expressly incorporated by reference in the Contract Documents), the laws of the State of California, and the Charter of the City of Los Angeles shall govern and be applicable. Pending final disposition of a Claim, the Contractor shall proceed diligently with the performance of the Contract and in accordance with the previously mentioned decision.

Any Claim, including without limitation any Claim filed on behalf of or having its source in a claim by Subcontractor, Sub-Subcontractor, or Supplier, at any tier, which the Contractor chooses to make to the City, shall be accompanied by the certification language set forth below signed by a responsible managing officer of the Contractor's organization, who has the authority to sign Subcontracts or Purchase Orders on behalf of the Contractor, and who has personally investigated and confirmed the truth and accuracy of the matters set forth in such certification. Submission of certification in accordance herewith is a condition precedent to the City's consideration of or decision on the Claim and to the filing and maintenance of any legal action or proceeding to enforce or recover monies under such Claim. Failure to submit such a certification along with the Claim shall result in the Claim being returned to the Contractor without any decision, and shall waive the Contractor's right to pursue the Claim either on its own behalf or on behalf of such Subcontractor or Supplier.

I hereby certify under penalty of perjury that I am a managing officer of _____(Contractor's name)_____ and that I have reviewed the Claim presented herewith on Contractor's behalf and/or on behalf of (Subcontractor's/Supplier's name(s)) and that the following statements are true and correct:

1) The facts alleged in or that form the basis for the Claim are true and accurate; and,

2) Contractor does not know of any facts or circumstances, not alleged in the Claim, that by reason of their not being alleged render any fact or statement alleged in the Claim materially misleading; and,

3) Contractor has, with respect to any request for money or damages alleged in or that forms the basis for the Claim, reviewed the job cost records (including those maintained by Contractor and by any Subcontractor or Supplier, of any tier, that is asserting all or any portion of the Claim) and confirmed with mathematical certainty that the losses or damages suffered by Contractor and /or such Subcontractor or Supplier were in fact suffered in the amounts and for the reasons alleged in the Claim; and,

4) Contractor has, with respect to any request for extension of time or claim of delay, disruption, hindrance or interference alleged in or that forms the basis for the Claim, reviewed the job schedules (including those maintained by Contractor and by any Subcontractor or Supplier, of any tier, that is asserting all or any portion of the Claim) and confirmed on an event-by-event basis that the delays or disruption suffered by Contractor and /or such Subcontractor or Supplier were in fact experienced for the durations, in the manner, and with the consequent effects on the time and/or sequence of performance of the Work, as alleged in the Claim; and,

5) Contractor has not received payment from City for, nor has Contractor previously released City from, any portion of the Claim.

Signature: _____

Name: _____

Title: _____

Company: _____

Date: _____

No Claim by the Contractor shall be allowed if made after final payment under this Contract.

00601 COMMENCEMENT OF STATUTE OF LIMITATIONS (11/21/01)

Any applicable statute of limitations shall commence to run and any alleged cause of action by the Contractor against the City arising out of or related to the Project shall be deemed to have accrued in any and all events no later than 30 days after Contractor's submittal of its last application for progress payment of Contract or Change Order Work satisfactorily performed.

00602 GOVERNING LAW (11/21/01)

The terms and conditions of this Contract shall be construed and interpreted under, and all respective rights and duties shall be governed by, the laws of the State of California. Wherever applicable each provision of these Contract Documents shall be interpreted in such a manner as to be effective and valid under applicable law, but if any provision of these Contract Documents shall be prohibited by or invalid under applicable law, such provision shall be ineffective to the extent of such prohibition or invalidity, without invalidating the remainder of such provision or the remaining provisions of these Contract Documents.

Unless otherwise provided in this Contract, all claims, counterclaims, disputes and other matters in question between the City and the Contractor arising out of or relating to this Contract or the breach of it will be decided by a Court of competent jurisdiction. It is understood that this Contract is executed and to be performed within the City and County of Los Angeles.

00603 VENUE (2/09/95)

This Contract will be executed and performed within the City and County of Los Angeles, California.

00604 NO WAIVER OF RIGHTS (4/12/95)

Neither the inspection by the City, nor any order by the City for payment of money, nor any payment for or acceptance of the whole or any part of the Work by the City, nor any extension of time, nor any possession taken by the City, shall operate as a waiver of any provision of this Contract, or any power herein reserved to the City, or any right to damages herein provided, nor shall any waiver of any breach in this Contract be held to be a waiver of any other or subsequent breach.

00605 ACCEPTANCE OF FINAL PAYMENT CONSTITUTES RELEASE (4/12/95)

The acceptance by the Contractor of final payment shall release the City, the Engineer, the Inspector, their officers, agents, representatives, or employees, as representatives of the City, from all claims and all liability to the Contractor for all things done or furnished in connection with the Work and every act of the City relating to or arising out of the Work.

00606 PATENTS AND COPYRIGHTS (10/17/01)

The Contractor shall include in its Bid the patent fees or royalties on any patented article or process which may be furnished or used in the Work. The Contractor shall indemnify and hold the City harmless from any legal action that may be brought for infringement of patents. The Contractor's attention is directed to "Notice of Patents, Data, and Copyright Regulations" of the Federal Labor Standards.

The Contractor shall bear all costs arising from the use of patented goods and /or processes used on and/or incorporated into the Work. When use of these goods and/or processes is judged to be an infringement and their use is banned, the Contractor, at its own expense, shall, with concurrence of the Engineer, do one of the following:

1) Secure for the City the right to continue using goods and/or processes by suspension of the injunction or by procuring a license(s);

2) Replace said goods and/or processes with non-infringing goods and /or processes;

3) Modify said goods and/or processes so that they become non-infringing; or

4) Remove said goods and/or processes and refund the sum paid therefor without prejudice to any other rights of the City.

The preceding shall not apply to any goods manufactured to the detailed design of the City contained in the Contract Documents.

00607 PUBLIC RECORDS ACT (4/06/00)

All records, documents, Plans, specifications and all other information relating to the conduct of the City's business, including information submitted by the Contractor, shall become the exclusive property of the City and except as provided by law shall be deemed public records. Said information shall be subject to the provisions of the California Public Records Act (Government Code Sections 6250 et seq.).

Under no circumstances will the City be responsible or liable to the Contractor, submitter or any other party for the disclosure of any records or information submitted to the City, regardless of whether such records or information are labeled "Trade Secret", "Confidential", or "Proprietary" (or words to similar effect) and regardless of whether the disclosure is required by law or a court order or occurs through inadvertence, mistake, or negligence on the part of the City or its officers, employees, and/or contractors.

The City will not advise as to the nature or content of documents entitled to protection from disclosure under the California Public Records Act", including interpretations of the Act or the definition of "Trade Secret". The submitting party shall be solely responsible for all determinations made under the Act, and where appropriate for clearly and prominently marking each and every page or sheet of information with "Trade Secret", "Confidential", or "Proprietary". Each submitting party is advised to contact its own legal counsel concerning the California Public Records Act and its applicability to the submitting party's own circumstances.

In the event of litigation concerning the disclosure of any information submitted by the submitting party, the City's sole involvement will be as a stakeholder, retaining the information until otherwise ordered by a court. The submitting party, at its sole expense and risk, shall be responsible for any and all fees and costs for prosecuting or defending any action concerning the information, and shall indemnify and hold the City harmless from all costs and expenses including attorneys' fees, in connection with such action.

END OF SECTION

BUREAU OF ENGINEERING

SIXTH STREET PARK, ARTS AND RIVER CONNECTIVITY IMPROVEMENTS (PARC) WORK ORDER NO. E700235D

GENERAL REQUIREMENTS

BID SUBMITTAL
JULY 2022

City of Los Angeles
California

Department of Public Works
Bureau of Engineering

ENGINEERING
CITY OF LOS ANGELES

TABLE OF CONTENTS
DIVISION 01 – GENERAL REQUIREMENTS

01100 SUMMARY

01111 ABBREVIATIONS AND REFERENCE STANDARDS
01112 DESCRIPTION OF WORK
01113 DIVISIONS OF TECHNICAL SECTIONS OF PROJECT MANUAL
01114 ISSUANCE OF DRAWINGS AND THE PROJECT MANUAL
01115 MANDATORY PROVISIONS
01116 ELECTRONIC DOCUMENT CONTROL
01120 INTERFACE / COORDINATION REQUIREMENTS
01140 CONTRACTOR'S USE OF THE PREMISES
01150 STORAGE OF MATERIALS AND EQUIPMENT

01200 PRICE AND PAYMENT PROCEDURES

01212 FIXED CASH ALLOWANCE ITEMS
01230 ALTERNATIVES
01251 CHANGE ORDER REQUESTS
01253 DIFFERING SITE CONDITION
01254 CHANGE ORDERS
01255 PRICE REDUCTION FOR DEFECTIVE COST OR PRICING DATA
01270 MEASUREMENT OF QUANTITIES FOR UNIT PRICE WORK
01280 MEASUREMENT AND PAYMENT
01291 NOTICE TO WITHHOLD AND/OR STOP NOTICE
01292 PAYMENTS
01298 SCHEDULE OF VALUES / CONTRACT PRICE BREAKDOWN

01300 ADMINISTRATIVE REQUIREMENTS

01311 PRECONSTRUCTION SAFETY CONFERENCE
01312 PROJECT MEETINGS
01313 WORK BY CITY OR OTHERS
01321 CONTRACTOR'S CONSTRUCTION SCHEDULE AND REPORTS
01322 CONSTRUCTION PROGRESS PHOTOGRAPHY
01323 CONSTRUCTION STATUS REPORTS
01330 SHOP DRAWINGS / SUBMITTALS
01350 AUDIT AND ACCESS TO RECORDS
01351 ESCROW BID DOCUMENTS
01353 OPPORTUNITY TO PARTNER

01400 QUALITY REQUIREMENTS

01410 REGULATORY REQUIREMENTS
01411 CONFINED SPACE ENTRY
01412 ENHANCED ELECTRICAL SAFETY POLICY
01420 UNITS OF MEASURE
01421 SYMBOLS
01430 MANUFACTURER'S FIELD SERVICE
01452 INSPECTION OF THE WORK
01453 SAMPLING, TESTING AND FABRICATION INSPECTION
01454 WEIGHING AND METERING EQUIPMENT
01455 CALIBRATION OF TESTING EQUIPMENT

01500 TEMPORARY FACILITIES AND CONTROLS

01561 ENVIRONMENTAL CONTROL
01562 ENVIRONMENTAL MITIGATION
01563 POLLUTION CONTROL -SEWAGE SPILL PREVENTION AND RESPONSE REQUIREMENTS
01571 STORMWATER POLLUTION CONTROL MEASURES FOR CONSTRUCTION ACTIVITIES
01572 CONSTRUCTION AND DEMOLITION WASTE MANAGEMENT
01581 PROJECT SIGNS

01600 PRODUCT REQUIREMENTS

01601 BUY CLEAN CALIFORNIA ACT
01611 GUARANTY / WARRANTY
01630 SUBSTITUTIONS AND "OR EQUAL" SUBMITTAL

01700 EXECUTION REQUIREMENTS

01711 SITE INVESTIGATION
01712 SUBSURFACE DATA
01721 MOBILIZATION
01722 SURVEYING
01723 RIGHT OF WAY
01731 CUTTING AND PATCHING
01732 ADDITIONAL POTHOLING
01740 REMOVAL, CLEANUP, AND DEMOBILIZATION
01770 PROJECT CLOSEOUT
01783 PROJECT RECORD DOCUMENTS

SECTION 01111
ABBREVIATIONS AND REFERENCE STANDARDS

1.1 ABBREVIATIONS

A. The abbreviations herein, together with others in general use, are applicable to this Project Manual, Contract Drawings, and other Contract Documents.

All abbreviations and symbols used on Contract Drawings for structural steel construction shall conform to those given by the "Manual of Steel Construction" published by the American Institute of Steel Construction, Inc.

B. Common Usage: Whenever the following abbreviations are used, they shall have the meanings indicated:

ABAN	Abandon
ABAND	Abandoned
ABUT	Abutment
ABS	Acrylonitrile – butadiene – styrene
AC	Asphalt concrete
ACP	Asbestos cement pipe
ACWS	Asphalt concrete wearing surface
ADA	Americans with Disabilities Act
AGB	Alley grating basin
AL	Allowance
ALT	Alternate
AMER STD	American Standard
AQMD	Air Quality Management District
ARHM	Asphalt-rubber hot-mix
ATSAC	Automated Traffic Surveillance and Control System
AT&T	Local and long distance telephone company (formerly SBC and Pacific Bell)
AWG	American Wire Gage (nonferrous wire)
BAGR	Bridge approach guard railing
BB	Beginning of Bridge
BC	Beginning of curve
BCR	Beginning of curb return
BDRY	Boundary
BF	Bottom of footing
BM	Bench mark
BMP	Best Management Practice
BPW	Board of Public Works
BSJ	Bell and spigot joint
BSL	Bureau of Street Lighting
BVC	Beginning of vertical curve
B/W	Back of wall
C/C	Center to center
CAB	Crushed aggregate base
CAC	California Administrative Code
CAP	Corrugated aluminum pipe
CASQA	California Storm Water Quality Association
CB	Catch Basin
Cb	Curb

CBP	Catch Basin Connection Pipe
CBR	California Bearing Ratio
CCR	California Code of Regulations
CCTV	Closed Circuit TV
CF	Curb face or Cubic foot
C&G	Curb and gutter
CGB	Curbside grating basin
CFR	Code of Federal Regulations
CIDH	Cast-in-drilled-hole
CIP	Cast iron pipe or Cast-in-place
CIPP	Cast-in place pipe
CL	Clearance, center line
CLF	Chain link fence
CLSM	Controlled Low Strength Material
CMB	Crushed miscellaneous base
CMC	Cement mortar-coated
CML	Cement mortar-lined
CMP	Corrugated Metal Pipe
CO	Cleanout (sewer)
COL	Column
CONC	Concrete
CONN	Connection
CONST	Construct, Construction
COORD	Coordinate
CQC	Contractor Quality Control
CSP	Corrugated steel pipe
CTB	Cement treated base
CV	Check valve
CY	Cubic yard
D	Load of pipe
dB	Decibels
DBE	Disadvantaged Business Enterprise
DBL	Double
DF	Douglas fir
DFT	Dry Film Thickness
DIA	Diameter
DIP	Ductile iron pipe
DL	Dead load
DMBB	Double metal beam barrier
DT	Drain Tile
DWG	Drawing
DWPPS	Los Angeles Department of Water & Power, Power System
DWPWS	Los Angeles Department of Water & Power, Water System
DWY	Driveway
DWY APR	Driveway approach
EA	Each
EB	End of bridge
EC	End of curve
ECR	End of curb return
EF	Each face
EG	Edge of gutter
EGL	Energy grade line
El	Elevation
ELC	Electrolier lighting conduit

ELT	Extra long ton
ENGR	Engineer, Engineering
EP	Edge of pavement
EPA	Environmental Protection Agency
ESA	Environmentally Sensitive Area
ESAL	Equivalent Single Axle Load
ESRP	Emergency Spill Response Plan
ESMT	Easement
ETB	Emulsion-treated base
EVC	End of vertical curb
EXC	Excavation
EXP JT	Expansion joint
EXST	Existing
F	Fahrenheit
F&C	Frame and cover
F&I	Furnish and install
FAB	Fabricate
FAS	Flashing arrow sign
FD	Floor drain
FDN	Foundation
FED SPEC	Federal Specification
FG	Finished grade
FH	Fire hydrant
FL	Flow line
FRP	Fiberglass reinforced plastic
FRPM	Fiberglass reinforced plastic mortar
FS	Finished surface
FTA	Fully traffic actuated
FT-LB	Foot-pound
FTG	Footing
FW	Face of wall
GA	Gauge
GALV	Galvanized
GC	Grade change
GCASP	State General Construction Activity Stormwater Permit
GIP	Galvanized iron pipe
GL	Ground line or grade line
GM	Gas meter
GP	Guy pole
GR	Grade
GRTG	Grating
GSP	Galvanized steel pipe
GTE	General Telephone Company
H	High or height
HB	Hose bib
HC	House connection
HDPE	High density polyethylene
HDWL	Headwall
HGL	Hydraulic grade line
HORIZ	Horizontal
HP	Horsepower
HPG	High pressure gas
HPS	High pressure sodium (Light)
HS	High strength

HYDR	Hydraulic
ID	Inside diameter
INCL	Including
INSP	Inspection
INV	Invert
IP	Iron pipe
IPW	Inspector of Public Works
JC	Junction chamber
JCT	Junction
JS	Junction structure
JT	Joint
L	Length
LAAC	Los Angeles Administrative Code
LAB	Laboratory
LADBS	Los Angeles Department of Building and Safety
LADGS	Los Angeles Department of General Services
LADOT	Los Angeles Department of Transportation
LACDPW	Los Angeles County Department of Public Works
LAMC	Los Angeles Municipal Code
LARWQCB	Los Angeles Regional Water Quality Control Board
LAT	Lateral
LB	Pound
LD	Local depression
LF	Linear foot
LH	Lamp hole
LL	Live load
LOL	Layout line
LONG	Longitudinal
LP	Lamp post
LPS	Low pressure sodium (Light)
LS	Lump sum
LTS	Lime treated soil
MA	Mast Arm
MAINT	Maintenance
MAX	Maximum
MB	Metal beam
MBB	Metal beam barrier
MBGR	Metal beam guard railing
MBE	Minority Business Enterprise
MCR	Middle of curb return
MEAS	Measure
MED	Median
MH	Manhole, maintenance hole
MIL SPEC	Military Specification
MISC	Miscellaneous
MOD	Modified, modify
MON	Monument
MSM	Mandatory subcontracting minimum
MTA	Metropolitan Transportation Authority (of LA County)
MTH	Month
MTL	Material
MULT	Multiple
MUTCD	Manual on Uniform Traffic Control Devices
MVL	Mercury vapor light

MWD	Metropolitan Water district
NOI	Notice of Intent
NPDES	National Pollutant Discharge Elimination System
NRCP	Nonreinforced concrete pipe
OBE	Other Business Enterprise
OBS	Obsolete
OC	On center
OD	Outside diameter
OE	Outer edge
OH	Overhead
OPP	Opposite
ORIG	Original
OSA	Office of the State Architect
OSHA	Occupational Safety and Health Administration (Dept. Of Labor)
PACBELL	Pacific Bell (Pacific Telesis Group)
PAV	Pressure Aging Vessel
PB	Pull box
PC	Point of curvature
PCC	Portland cement concrete or Point of compound curvature
PCVC	Point of compound vertical curve
PE	Polyethylene
PG	Performance Graded
PI	Point of intersection
PL	Property line
PMB	Processed miscellaneous base
POC	Point on curve
POT	Point on tangent
PP	Power pole
PRC	Point of revere curve
PRVC	Point of reverse vertical curve
PSI	Pounds per square inch
PT	Point of tangency
PVC	Polyvinyl chloride
PVMT	Pavement
PVT R/W	Private right-of-way
Q	Rate of flow in cubic feet per second
QA	Quality Assurance
QC	Quality Control
QUAD	Quadrangle, Quadrant
R	Radius
R&O	Rock and oil
R/W	Right-of-way
RA	Recycling agent
RAC	Recycled asphalt concrete
RAP	Reclaimed asphalt pavement
RBAC	Rubberized asphalt concrete
RC	Reinforced concrete
RCB	Reinforced concrete box
RCC	Rail Construction Corporation
RCE	Registered civil engineer
RCP	Reinforced concrete pipe
RCV	Remote control valve
REAS	Rubberized Emulsion-Aggregate Slurry
REF	Reference

REINF	Reinforced or reinforcement
RES	Reservoir
RGE	Registered geotechnical engineer
RR	Railroad
RSE	Registered structural engineer
RTE	Registered traffic engineer
RTFO	Rolling Thin Film Oven
S	Slope
SCAQMD	South Coast Air Quality Management District
SCCP	Steel cylinder concrete pipe
SCG	Southern California Gas Company
SCHED	Schedule
SCRRA	Southern California Regional Rail Authority
SD	Storm drain
SDR	Standard thermoplastic pipe dimension ratio (ratio of pipe O.D. to minimum wall thickness)
SE	Sand Equivalent
SEC	Section
SF	Square foot
SI	International System of Units (Metric)
SOCB	Side opening catch basin
SPEC	Specifications
SPPWC	Standard Plans for Public Works Construction
SR	Standard ratio
SRJ	Steel ring joint (for RCP)
SS	Sanitary sewer
SSB	Select sub-base
SSPWC	Standard Specifications for Public Works Construction
ST HWY	State highway
STA	Station
STD	Standard
STR	Straight
STR GR	Straight grade
STRUC	Structural/Structure
SW	Sidewalk
SWD	Sidewalk drain
SWMP	Storm Water Management Plan
SWPPP	Storm Water Pollution Prevention Plan
SWRCB	State (of California) Water Resources Control Board
SY	Square yard
TAN	Tangent
TC	Top of curb
TCP	Traffic control plan
TEL	Telephone
TF or T/F	Top of footing
TH	Test hole
TOPO	Topography
TR	Tract
TRANS	Transition
TS	Traffic signal or transition structure
TSC	Traffic signal conduit
TSS	Traffic signal standard
TW	Top of wall
TYP	Typical

USA	Underground Service Alert
V	Volt
VAR	Varies, Variable
VB	Valve box
VC	vertical curve
VCP	Vitrified clay pipe
VECP	Value Engineering Change Proposal
VERT	Vertical
VOL	Volume
VT	Variable thickness
W	Wider or width
WATCH	Work Area Traffic Control Handbook
WBE	Women Business Enterprise
WDID	Waste Discharge Identification Number
WI	Wrought iron
WM	Water meter
WPCP	Water Pollution Control Plan
WPJ	Weakened plane joint
WUT	Western Union Telegraph
WWECP	Wet Weather Erosion Control Plan
XCONN	Cross connection
XSEC	Cross section

C. Institutions: Wherever the following abbreviations are used they shall have the meanings indicated:

AASHTO	American Association of State Highway and Transportation Officials
ACI	American Concrete Institute
ACRI	Air Conditioning and Refrigeration Institute
ADA	Americans with Disabilities Act
AGA	American Gas Association
AGMA	American Gear Manufacturers' Association
AI	Asphalt Institute
AISC	American Institute of Steel Construction
AISI	American Iron & Steel Institute
AITC	American Institute of Timber Construction
AAMA	American Architectural Manufacturer’s Association
AMCA	Air Movement and Control Association
ANSI	American National Standards Institute
APA	American Plywood Association
API	American Petroleum Institute
APWA	American Public Works Association
AQMD	Air Quality Management District
AREA	American Railway Engineering Association
ASCE	American Society of Civil Engineers
ASHRAE	American Society of Heating, Refrigerating, and Air Conditioning Engineers
ASME	American Society of Mechanical Engineers
ASQC	American Society for Quality Control
ASTM	American Society for Testing and Materials
AWPA	American Wood Preservers Association
AWPI	American Wood Preservers Institute
AWS	American Welding Society

AWWA	American Water Works Association
BHMA	Building Hardware Manufacturer's Association
CAC	California Administrative Code
CAL/ABL	State of California/Architectural Barriers Laws
CAL/OSHA	State of California/Occupational Safety and Health Administration
CALTRANS	California Department of Transportation
CASQA	California Stormwater Quality Association
CBM	Certified Ballast Manufacturers
CITY	City of Los Angeles
CRSI	Concrete Reinforcing Steel Institute
CSI	Construction Specifications Institute
EIA/TIA	Electronic Industries Association
EPA	Environmental Protection Agency
ETL	Department of Building & Safety Electrical Test Laboratory
FCI	Fluid Control Institute, Inc.
FIA	Factory Insurance Association
FM	Factory Mutual Association
FS	Federal Specifications
GA	Gypsum Association
GRI	Geosynthetic Research Institute
ICBO	International Conference of Building Officials
ICEA	Insulated Cable Engineers Association
IEEE	Institute of Electrical and Electronics Engineers
ISA	Instrument Society of America
LA	City of Los Angeles
LABC	City of Los Angeles Building Code
LAMC	City of Los Angeles Municipal Code
NAAMM	National Architectural Association of Metal Manufacturers
NEC	National Electrical Code
NECA	National Electrical Contractors Association
NEMA	National Electrical Manufacturers Association
NFC	National Fire Code
NFPA	National Fire Protection Association
NWMA	National Wood Manufacturer's Association
NWWDA	National Wood Window and Door Association
NOAA	National Oceanic and Atmospheric Administration (Dept. of Commerce)
OSA	Office of the State Architect
OSHA	Occupational Safety and Health Administration (Dept. of Labor)
PCA	Portland Cement Association
RA	Rule of General Application – Department & Safety
RCSC	Research Council on Structural Connections of the Engineering Foundation
SAMA	Scientific Apparatus Manufacturer's Association
SDI	Steel Deck Institute
SMACNA	Sheet Metal and Air Conditioning Contractor's National Association
SSPC	Steel Structures Painting Council
SSPWC	Standard Specifications for Public Works Construction
SWRCB	State Water Resources Control Board
UBC	Uniform Building Code, International Conference of Building Officials
UL	Underwriters Laboratories, Inc.

USGS	United States Geological Survey
VERIZON	Verizon Communications (Formerly General Telephone & Electronics
WATCH	Work Area Traffic Control Handbook
WCLIB	West Coast Lumber Inspection Bureau
WCRSI	Western Concrete Reinforcing Steel Institute
WIC	Woodwork Institute of California
WRI	Wire Reinforcement Institute
WWPA	Western Wood Products Association

1.2 REFERENCE STANDARDS

A. Applicable Publications: Whenever in these Specifications / Project Manual references are made to published specifications, codes, standards, or other requirements, it shall be understood that wherever no date is specified, only the latest specifications, standards, or requirements of the respective issuing agencies which have been published as of the date that the Work is advertised for bids shall apply; except to the extent that said standards or requirements may be in conflict with applicable laws, ordinances or governing codes. No requirements set forth herein or shown on the Drawings shall be waived because of any provision of, or omission from, said standards or requirements.

B. Specialists' Assignments: In certain instances, specification text requires (or implies) that specific work is to be assigned to specialists or expert entities, who must be engaged for the performance of that work. Such assignments shall be recognized as special requirements over which the CONTRACTOR has no choice or option. These requirements shall not be interpreted so as to conflict with the enforcement of building codes and similar regulations governing the Work; also they are not intended to interfere with local union jurisdiction settlements and similar conventions. Such assignments are intended to establish which party or entity involved in a specific unit of work is recognized as "expert" for the indicated construction processes or operations. Nevertheless, the final responsibility for fulfillment of the entire set of contract requirements remains with the CONTRACTOR.

C. Codes and Safety Standards: Without limiting the generality of other requirements of the Specifications, all work specified herein shall conform to or exceed the applicable requirements of the following Codes and Safety Standards.

1. Applicable Codes:

- City of Los Angeles Building Code
- City of Los Angeles Mechanical Code
- City of Los Angeles Plumbing Code
- City of Los Angeles Fire Code
- City of Los Angeles Electrical Code

References herein to "Building Code" shall mean City of Los Angeles Building Code. Similarly references to "Mechanical Code," "Plumbing Code," "Fire Code," and "Electric Code" shall mean City of Los Angeles Mechanical Code, City of Los Angeles Plumbing Code, City of Los Angeles Fire Code, and City of Los Angeles Electric Code respectively.

2. Applicable Safety Standards:

- OSHA Regulations for Construction
- OSHA Standard
- Cal-OSHA

References herein to "OSHA Regulations for Construction" shall mean Title 29, Part 1926, Construction Safety and Health Regulations, Code of Federal Regulations (OSHA), including all changes and amendments thereto.

References herein to "OSHA Standards" shall mean Title 29, Part 1910, Occupational Safety and Health Standards, Code of Federal Regulations (OSHA), including all changes and amendments thereto.

References herein to "Cal-OSHA" shall mean State of California, Department of Industrial Relations, as amended to date, and all changes and amendments there to which are effective as of the date of construction.

The latest edition of the codes as approved and adopted for use by the CITY as of the date of award shall apply to the Work herein, including all addenda, modifications, amendments, or other lawful changes thereto.

D. Standard Specifications: References in the Contract Documents to "Standard Specifications" shall mean the Standard Specifications for Public Works Construction, including all current supplements, addenda, and revisions thereof.

E. Standard Plans: References herein to "Standard Plans" shall mean the Standard Plans issued by the City of Los Angeles which drawings are hereby incorporated in and made a part of these Contract Documents, and copies of which are available for a fee.

F. Conflict between Codes, Safety Standards, Reference Standards, Drawings and other Contract Documents: In case of conflict between codes, reference standards, drawings and other Contract Documents, the most stringent requirements shall govern. All conflicts shall be brought to the attention of the ENGINEER for clarification and directions prior to ordering or providing any materials or labor. The CONTRACTOR shall bid for the most stringent requirements.

(END OF SECTION)

SECTION 01112
DESCRIPTION OF WORK

PART ONE -- GENERAL

1.1 SUMMARY

A. The work to be done under this Contract includes the furnishing of project management, labor, materials, tools and equipment for the construction of the Sixth Street Park, Arts and River Connectivity Improvements (PARC) for the City of Los Angeles, all in accordance with the Contract Documents, including the GENERAL CONDITIONS, DIVISION 1 - GENERAL REQUIREMENTS and other Sections of the Project Manual.

1.2 GENERAL SCOPE OF WORK

A. Work In This Contract: Work in this Contract includes all labor, materials and equipment necessary for construction of the Sixth Street Park, Arts and River Connectivity Improvements (PARC) as noted on the Contract Drawings and in the Project Manual and all other Contract Documents including the GENERAL CONDITIONS and GENERAL REQUIREMENTS.

B. Work Not In This Contract: "Work not in this Contract," "Work by others" and "Work by others but arranged and paid for by CONTRACTOR" are listed as follows:

1. All work or equipment indicated on the Contract Drawings or in this Project Manual as "Not in Contract" or "N.I.C." or anything which implied exclusion from the Contract in any manner.

2. All work or equipment indicated on the Contract Drawings or in this project as "work by others," and "work by others, but arranged and paid for by CONTRACTOR." The CONTRACTOR shall provide all necessary coordination, arrangement, and scheduling in accordance with General Conditions and other Sections of this Project Manual. CONTRACTOR shall appropriately pay for all charges, fees and costs specified to be paid for by the CONTRACTOR.

3. Department of Water and Power shall furnish and install electric service conductors from street utility line to new transformers or switchboards, and electric meters; in accordance with Division 16. CONTRACTOR shall make all necessary arrangements. All fees and charges shall be paid with a fixed cash allowance that has been allocated as a bid item in the SCHEDULE OF WORK AND PRICES.

4. Telephone conductors and telephone equipment (except terminal cabinets) for telephones system shall be installed by the CITY to be retained and paid for by the CONTRACTOR, in accordance with Division 16.

5. Permanent Water Meter and Service Line: CONTRACTOR shall arrange for installation of permanent meter and water service line by the Department of Water and Power at their convenience. All fees and

charges shall be paid with a fixed cash allowance that has been allocated as a bid item in the SCHEDULE OF WORK AND PRICES. Construction light, power and water to be provided and paid for by the CONTRACTOR in accordance with the GENERAL REQUIREMENTS.

6. Child Play Area Surface and Equipment shall be furnished and installed by the City.

C. Related Work:

1. Documents affecting work of this Contract include, but are not limited to, the GENERAL CONDITIONS, DIVISION 1 - GENERAL REQUIREMENTS, and other Sections of the Project Manual.

2. The work of other Contracts is described in the various Contract Documents. Lists of these documents are in the possession of the CITY and where they are available for inspection by interested parties. Other Contracts within the Project vicinity include the Sixth Street Viaduct Replacement Project, ATP-2 Boyle Heights Pedestrian Linkages Project, and ATP-3 Downtown Los Angeles Arts District Pedestrian and Cyclist Safety Project.

D. Construction Sequence Plan: Work in this Contract shall be constructed in accordance with the sequencing indicated on the Plans. The CONTRACTOR shall first perform the site remediation described within the Project's Remedial Action Plan (RAP) followed by the construction of the main line storm drains that are to connect the Sixth Street Viaduct drain lines to the adjacent storm drain facilities. The CONTRACTOR shall be responsible for managing the runoff from the Sixth Street Viaduct drain lines, including implementing all necessary erosion and sediment controls, until the Sixth Street Viaduct drains are able to be connected to the PARC storm drain systems.

1.3 PROJECT IDENTIFICATION

A. General:

1. The Project Name is Sixth Steet Park, Arts and River Connectivity Improvements (PARC), located under and adjacent to the Sixth Street Viaduct between Mateo Street and the United States Highway 101 in the City of Los Angeles.

2. Contract Documents have been prepared by:

Tetra Tech
707 Wilshire Blvd., 23rd Floor
Los Angeles, CA 90017

Hargreaves Jones Landscape Architecture
315 Bay Street, 3rd Floor
San Francisco, California 94133

Michael Maltzan Architecture
2801 Hyperion Avenue, Studio 107,
Los Angeles, CA 90027

Sustainable Landesign
1545 Wild Rye Way
Arroyo Grande, CA 93420

3. Project Manual and Contract Drawings are dated: July 11, 2022

4. Project elements included as part of this project under a separate plan and specification package include:
    a. CBD Sewer Rehab Unit 11A – 6th St. Siphon to Santa Fe Ave, Work Order No. SZC14224
    b. LA Hands Art Sculpture Foundations, Project No. 2211

B. The extent of Contracted Work is indicated on the Contract Drawings and in the following Sections of the Project Manual.

1. Division 1 – General Requirements
2. Division 2 - Sitework
3. Division 3 – Concrete
4. Division 4 – Masonry
5. Division 5 – Metals
6. Division 6 – Wood and Plastics
7. Division 7 – Thermal and Moisture Protection
8. Division 8 – Standard Steel Doors and Frames, etc.
9. Division 9 – Finishes
10. Division 10 – Specialties
11. Division 11 – Equipment
12. Division 12 – Furnishings
13. Division 13 – Special Construction
14. Division 15 – Mechanical
15. Division 16 – Electrical

C. In addition to provisions noted in Section 01112 – DESCRIPTION OF WORK in Division 1 GENERAL REQUIREMENTS, the following listed drawings are, but not limited to, a part of the Contract Documents::

Drawing Index:

General:

G-001	Title Sheet
G-002	Notice to Contractors Sheet 1
G-003	Notice to Contractors Sheet 2
G-004	Sheet Index
G-005	Boring Logs Sheet 1
G-006	Boring Logs Sheet 2
G-007	Boring Logs Sheet 3
G-008	Boring Logs Sheet 4
G-009	Overall Construction Sequence Plan Sheet 1
G-010	Overall Construction Sequence Plan Sheet 2
G-011	Accessibility Plan Sheet 1
G-012	Accessibility Plan Sheet 2
G-013	Overall Site Plan Sheet 1
G-014	Overall Site Plan Sheet 2

G-015	Legend

Civil:

CD-001	Demolition Plan Sheet 1
CD-002	Demolition Plan Sheet 2
CD-003	Demolition Plan Sheet 3
CD-004	Demolition Plan Sheet 4
CD-005	Demolition Plan Sheet 5
C-100	Erosion and Sediment Control Plan Sheet 1
C-101	Erosion and Sediment Control Plan Sheet 2
C-102	Erosion and Sediment Control Plan Sheet 3
C-103	Erosion and Sediment Control Plan Sheet 4
C-104	Erosion and Sediment Control Plan Sheet 5
C-105	Erosion and Sediment Control Details
C-200	Horizontal Control Plan Sheet 1
C-201	Horizontal Control Plan Sheet 2
C-202	Horizontal Control Plan Sheet 3
C-203	Horizontal Control Plan Sheet 4
C-204	Horizontal Control Plan Sheet 5
C-205	Horizontal Control Line Tables
C-206	Horizontal Control Curve Tables
C-207	Horizontal Control Point Tables Sheet 1
C-208	Horizontal Control Point Tables Sheet 2
C-209	Horizontal Control Point Tables Sheet 3
C-210	Horizontal Control Point Tables Sheet 4
C-211	Horizontal Control Point Tables Sheet 5
C-212	Horizontal Control Point Tables Sheet 6
C-213	Horizontal Control Point Tables Sheet 7
C-400	Domestic Water Plan Sheet 1
C-401	Domestic Water Plan Sheet 2
C-402	Domestic Water Plan Sheet 3
C-403	Storm Drain Plan Sheet 1
C-403A	Storm Drain Plan & Profile Sheet 2
C-404	Storm Drain Plan Sheet 3
C-405	Storm Drain Plan & Profile Sheet 4
C-406	Storm Drain Plan & Profile Sheet 5
C-407	Storm Drain Plan & Profile Sheet 6
C-408	Storm Drain Plan & Profile Sheet 7
C-409	Storm Drain Plan & Profile Sheet 8
C-410	Storm Drain Plan & Profile Sheet 9
C-411	Storm Drain Plan Sheet 10
C-415	Sewer Plan Sheet 1
C-416	Sewer Plan Sheet 2
C-500	Street Improvements Santa Fe Avenue
C-501	Street Improvements Mission Road
C-502	Street Improvements Anderson Street
C-503	Street Improvements Clarence Street
C-504	Signing and Striping Notes
C-505	Signing and Striping Santa Fe Avenue
C-506	Signing and Striping Mission Road
C-507	Signing and Striping Anderson Street
C-508	Signing and Striping Clarence Street
C-600	Civil Details Sheet 1
C-601	Civil Details Sheet 2

C-602	Civil Details Sheet 3
C-603	Civil Details Sheet 4
C-604	Civil Details Sheet 5
C-605	Civil Details Sheet 6
C-606	Civil Details Sheet 7
C-607	Civil Details Sheet 8
C-608	Civil Details Sheet 9
C-609	Civil Details Sheet 10
C-610	Civil Details Sheet 11
C-611	Civil Details Sheet 12
C-612	Civil Details Sheet 13
C-613	Civil Details Sheet 14
C-614	Civil Details Sheet 15

Landscape:

L-001	Landscape Notes & Abbreviations
L-016	Site Grading Plan
L-017	Site Hardscape Plan
L-019	Site Tree and Understory Plan
L-030	Materials Legend and Schedule
L-040	Furnishing Legend and Schedule
L-041	Furnishing and Lighting Legend and Schedule Sheet 1
L-042	Furnishing and Lighting Legend and Schedule Sheet 2
L-050	Soils Legend and Schedule
L-060	Understory Legend and Schedule
L-065	Tree and Understory Species Legend and Schedule
L-066	Understory Species Legend and Schedule
L-121	Grading Plan Sheet 1
L-122	Grading Plan Sheet 2
L-123	Grading Plan Sheet 3
L-124	Grading Plan Sheet 4
L-125	Grading Plan Sheet 5
L-131	Hardscape Plan Sheet 1
L-132	Hardscape Plan Sheet 2
L-133	Hardscape Plan Sheet 3
L-134	Hardscape Plan Sheet 4
L-135	Hardscape Plan Sheet 5
L-141	Furniture & Signage Plan Sheet 1
L-142	Furniture & Signage Plan Sheet 2
L-143	Furniture & Signage Plan Sheet 3
L-144	Furniture & Signage Plan Sheet 4
L-145	Furniture & Signage Plan Sheet 5
L-151	Soils Plan Sheet 1
L-152	Soils Plan Sheet 2
L-153	Soils Plan Sheet 3
L-154	Soils Plan Sheet 4
L-155	Soils Plan Sheet 5
L-161	Tree Planting Plan Sheet 1
L-162	Tree Planting Plan Sheet 2
L-163	Tree Planting Plan Sheet 3
L-164	Tree Planting Plan Sheet 4
L-165	Tree Planting Plan Sheet 5
L-166	Tree Planting Plan Sheet 6
L-171	Understory Planting Plan Sheet 1

L-172	Understory Planting Plan Sheet 2
L-173	Understory Planting Plan Sheet 3
L-174	Understory Planting Plan Sheet 4
L-175	Understory Planting Plan Sheet 5
L-301	Site Sections Sheet 1
L-302	Site Sections Sheet 2
L-303	Site Sections Sheet 3
L-400	Enlargements Key Plan
L-401	Enlargement: West Park – Dog Park & Fitness Layout
L-402	Enlargement: Arts Plaza – Planting Area Fence Layout
L-403	Enlargement: Arts Plaza – Guardrail & Fence Layout
L-404	Enlargement: East Park – Northern Edge Fence Layout
L-405	Enlargement: East Park – Soccer Field Layout
L-406	Enlargement: East Park – Basketball Court Layout
L-407	Enlargement: East Park – Misting Pad Layout
L-408	Enlargement: East Park Planting Area Fence Layout
L-409	Enlargement: East Park – Planting Area Fence & Fitness Layout
L-410	Enlargement: East Park – Dog Park Layout
L-505	Details – Grading
L-530	Detail – Paving & Curbs
L-535	Details – Guardrails
L-536	Details – Fence Sheet 1
L-537	Details – Fence Sheet 2
L-538	Details – Fence Sheet 3
L-539	Details – Sports
L-540	Details – Furniture Sheet 1
L-541	Details – Furniture Sheet 2
L-542	Details – Furniture Sheet 3
L-543	Details – Furniture Sheet 4
L-544	Details – Furniture Sheet 5
L-545	Details – Furniture Sheet 6
L-550	Planting – Trees Sheet 1
L-551	Planting – Trees Sheet 2
L-552	Planting – Trees Sheet 3
L-555	Planting – Understory

Irrigation:

I-001	Irrigation Plan Sheet 1
I-002	Irrigation Plan Sheet 2
I-003	Irrigation Plan Sheet 3
I-004	Irrigation Plan Sheet 4
I-005	Irrigation Plan Sheet 5
I-006	Irrigation Plan Sheet 6
I-007	Irrigation Notes
I-008	Irrigation Water Allowance
I-009	Irrigation Details Sheet 1
I-010	Irrigation Details Sheet 2
I-011	Irrigation Details Sheet 3

Electrical:

E-001	Electrical Symbol, Legends, and Abbreviations
E-101	West Park Electrical Overall Site Plan
E-102	Electrical Site Plan I

E-103	Electrical Site Plan II
E-104	East Park Electrical Overall Plan
E-105	Electrical Site Plan III
E-106	Electrical Site Plan IV
E-107	Electrical Site Plan V
E-108	West Park Building Electrical Plan
E-109	East Park Building Electrical Plan
E-401	West Park Single Line Diagram
E-402	East Park Single Line Diagram
E-403	West Park Panel Schedule
E-404	East Park Panel Schedule
E-405	West Park Conduit Schedule
E-406	East Park Conduit Schedule
E-407	Lighting Schedule
E-501	Electrical Details Sheet 1
E-502	Electrical Details Sheet 2
E-503	Electrical Details Sheet 3
E-504	Electrical Details Sheet 4
E-601	Arts Plaza Lighting Control Diagram
E-701	Title 24 West Restrooms – Indoor Sheet 1
E-702	Title 24 West Restrooms – Indoor Sheet 2
E-703	Title 24 West Park Café – Indoor Sheet 1
E-704	Title 24 West Park Café – Indoor Sheet 2
E-705	Title 24 East Park Buildings – Indoor Sheet 1
E-706	Title 24 East Park Buildings – Indoor Sheet 2
E-707	Title 24 Overall Site – Outdoor Sheet 1
E-708	Title 24 Overall Site – Outdoor Sheet 2

Architectural:

A0-01	Sheet Index & Notes
A0-02	Accessibility Notes & Diagrams Sheet 1
A0-03	Accessibility Notes & Diagrams Sheet 2
A0-04	General Notes
A0-05	Green Forms Sheet 1
A0-06	Green Forms Sheet 2
A0-07	Material Product Data
A0-11	Project Views
A1-01	Site Plan
A1-02	East Building Geometry Plan
A1-03	West Building Geometry Plan
A1-04	Arts Plaza Retaining Wall & Signage
A1-05	Arts Plaza Retaining Wall
A1-06	Arts Plaza Signage
A1-07	Viaduct Bent 10S Stair Landing
AE2-00	East Building Geometry Plan
AE2-01	East Building Plan
AE2-02	East Building Roof Plan Sheet 1
AE2-03	East Building Roof Plan Sheet 2
AE3-01	East Building Elevations
AE4-01	East Building Sections
AE4-02	East Building Wall Sections
AE5-01	East Building Enlargements Sheet 1
AE5-02	East Building Enlargements Sheet 2
AE5-03	East Building Details

AE5-04	East Building Schedules
AE6-01	East Building Details Sheet 1
AE6-02	East Building Details Sheet 2
AE6-03	Staff & Restrooms Building Details
AW2-01	West Building Plan
AW3-01	West Building Elevations
AW4-01	West Building Sections
AC2-01	Cafe and Restroom Plan
AC3-01	Cafe & Restroom Building Elevations
AC4-01	Cafe & Restroom Building Sections

Structural:

S-001	Structural General Notes Sheet 1
S-002	Structural General Notes Sheet 2
S-003	Structural General Notes Sheet 3
S-004	Structural General Notes Sheet 4
S-101	East Building Foundation Plan
S-102	East Building Roof Framing Plan
S-102A	East Building Bridge Framing Plan
S-103	West Restroom Building Foundation & Roof Plan
S-104	West Cafe Building Foundation & Roof Plan
S-301	East Building Section Sheet 1
S-302	East Building Section Sheet 2
S-303	East Building Section Sheet 3
S-304	East Building Section Sheet 4
S-304A	East Building Section Sheet 5
S-305	West Restroom Building Section
S-306	West Café Building Section
S-306A	West Café Building Brace Frame Elevations
S-401	Retaining Wall Foundation Plan
S-402	“U” Retaining Wall Foundation Plan
S-402A	“U” Retaining Wall Sections
S-403	Tunnel Details
S-501	Typical Details Sheet 1
S-501A	Typical Details Sheet 2
S-502	Foundation Wall Details
S-503	East Building Roof Framing Details Sheet 1
S-504	East Building Roof Framing Details Sheet 2
S-505	West Restroom Building Details
S-506	West Cafe Building Details
S-507	East Buildings Roof Framing Details Sheet 3
S-508	Foundation Wall Details
S-509	Subgrade Prep Details
S-510	East Building Details

Mechanical:

M-001	Mechanical Abbreviations, Symbols and Notes
M-100	Mechanical Site Plan Staff and Shop Buildings
M-101	Mechanical Site Plan Restroom and Cafe
M-201	Mechanical Floor Plan Shop and Staff
M-202	Mechanical Floor Plan Restroom and Cafe
M-501	Mechanical Details
M-601	Mechanical Schedules
M-800	Title 24 Forms – Staff Bldg Sheet 1

M-801	Title 24 Forms – Staff Bldg Sheet 2
M-802	Title 24 Forms – Staff Bldg MM
M-803	Title 24 Forms – Staff Bldg Sheet 3
M-804	Title 24 Forms – Staff Bldg Sheet 4
M-805	Title 24 Forms – Staff Bldg Sheet 5
M-806	Title 24 Forms – Staff Bldg Sheet 6
M-807	Title 24 Forms – Café Sheet 1
M-808	Title 24 Forms – Café Sheet 2
M-809	Title 24 Forms – Café Sheet 3
M-810	Title 24 Forms – Café Sheet 4
M-811	Title 24 Forms – Café Sheet 5
M-812	Title 24 Forms – Restroom Bldg Sheet 1
M-813	Title 24 Forms – Restroom Bldg Sheet 2

Plumbing:

P-001	Plumbing Abbreviations Symbols and Notes
P-100	Plumbing Site Plan Staff and Shop Buildings
P-101	Plumbing Site Plan Cafe and Restroom Buildings
P-201	Staff and Shop Buildings Waste & Vent Floor Plans
P-202	Café & Restroom Building Waste & Vent Floor Plans
P-301	Staff & Shop Buildings Domestic Hot & Cold Water Floor Plans
P-302	Café & Restroom Buildings Domestic Hot & Cold Water Floor Plans
P-501	Plumbing Details
P-601	Plumbing Schedules
P-901	Waste & Vent Isometric – Staff
P-902	West & Vent Isometric – Café/RR
P-903	Water Isometric – Staff
P-904	Water Isometric – RR/Café

1.4 SUMMARY OF REFERENCES

A. Contracted Work can be summarized by references to the Contract General Conditions, Sections in the Project Manual, Contract Drawings, Addenda, Notice to Bidders and Modifications to the Contract Documents.

B. It is recognized that the Contracted Work may also be unavoidably affected or influenced by other governing codes and Regulations, natural phenomenon, including weather conditions and other forces outside the Contract Documents.

1.5 SUPPLEMENTAL INFORMATION

A. Soil Investigation:
   1. Update of Draft Geotechnical Report dated August 3, 2021 (Attachment No. 1)
   2. Draft Geotechnical Site Investigation dated January 2018 (Attachment No. 1)

B. Soil Remediation
   1. Remedial Action Plan dated February 24, 2022 (Attachment No. 2)
   2. Final Report on Environmental Site Investigations (HAZMAT) dated May 2019 (Attachment No. 2)

C. Sixth Street Viaduct Soil Remediation
   1. Sixth Street Viaduct – Area of Concern 1A Soil Remediation Report dated April 8, 2022 (Attachment No. 3)

D. Product Data and Cut Sheets (Attachment No. 4)

E. Prop K and Prop 68 Signage (Attachment No. 5)

F. Viaduct Erosion and Sediment Control Plans (Attachment No. 6)

G. City Standard Plans (Attachment No. 7)

H. Historic Light Pole As-built Plans (Attachment No. 8)

I. Sixth Street Viaduct As-Built Plans (Attachment No. 9)

1.6 GROUND BREAKING CEREMONY

The Ground Breaking Ceremony for this project may be requested and may occur before the Notice-to-Proceed is issued. The CONTRACTOR shall include in the contract cost and verify with the ENGINEER the ceremony schedule after the award of the contract. The CONTRACTOR shall prepare, after the award of the contract, all submittals for the construction sign and secure all necessary approvals. The CONTRACTOR shall provide necessary coordination for the Ground Breaking Ceremony, occurring before or during the construction at no additional cost to the CITY.

(END OF SECTION)

SECTION 01113
DIVISIONS OF TECHNICAL SECTIONS OF PROJECT MANUAL

1.1 THE REQUIREMENT

A. The Technical Section of the Project Manual, including the General Conditions and General Requirements, are arranged into the Construction Specifications Institute (C.S.I.) sixteen (16) Divisions - Section format with an additional Division 17 for Instrumentation and Controls. Each "Section" constitutes a unit of work and related "Sections" are grouped under broad generic headings called Divisions.

B. The organization of the Technical Sections of the Project Manual into Division, Sections, and articles shall not control or limit the CONTRACTOR in dividing the work among Subcontractors, a Sub-subcontractor, or to establish the extent of work to be performed by any trade. The CONTRACTOR shall be solely responsible for all subcontract arrangements of work regardless of the Project Manual organization.

(END OF SECTION)

SECTION 01114
ISSUANCE OF DRAWINGS AND THE PROJECT MANUAL

1.1 THE REQUIREMENT

A. Unless otherwise provided in the Contract Documents, the ENGINEER will furnish to the CONTRACTOR one (1) set and one (1) CD containing each of the Drawings, Project Manual and, where applicable, Geotechnical Data Report (GDR) without charge. Additional sets desired by the CONTRACTOR or Subcontractors will be furnished upon request, but at the CONTRACTOR'S expense.

B. All Drawings, Specifications, Special Provisions, and copies thereof are the property of the CITY. They are not to be used on other work. All necessary bid documents will be available to prospective bidders via the City of Los Angeles Business Assistance Virtual Network (www.labavn.org).

(END OF SECTION)

SECTION 01115
MANDATORY PROVISIONS

1.1 THE REQUIREMENT

A. Any mention in the Divisions of this Project Manual which follow the General Requirements or indication on drawings of articles, materials, operations, or methods requires that the CONTRACTOR provide each item mentioned or indicated, of quality or subject to qualifications noted; perform according to conditions stated, each operation the same prescribed; and provide therefore all necessary labor, equipment, and incidentals, even though such mention of articles, materials, operations, methods, quality, qualifications, or conditions is not expressed in complete sentences.

(END OF SECTION)

SECTION 01116
ELECTRONIC DOCUMENT CONTROL

1.1 USE OF ELECTRONIC DOCUMENT CONTROL SYSTEM

A. The CONTRACTOR shall use the City's cloud-based electronic document control system to submit and receive all construction related documentation on this project. The system used is "e2020" and all costs associated with the use of the software have been paid for by the City. The website address to be used will be provided by the ENGINEER after award of the contract. The CITY will provide training to the CONTRACTOR on the use of the system. As coordinated with other sections of these project specifications, the information to be generated, transmitted and tracked by the e2020 document control system shall include, but not be limited to the following:

1. Correspondence (including Engineer's Communication).
2. Plan Clarifications.
3. Request for Information (RFI's).
4. Submittals & Shop Drawings.
5. Change Orders.
6. Allowance Orders.
7. Progress Photos.
8. Project Schedules.
9. Meeting Minutes.
10. Permits.
11. Partnering (Issue Resolution Ladder, Charter).
12. Claims Resolution
13. Building Information Modeling Coordination

B. When large drawings or product samples are required to be submitted that cannot be submitted through e2020, the CONTRACTOR shall:

1. Upload a transmittal sheet for the submittal in e2020,
2. Submit six (6) full-size hard copies,
3. Submit one half-sized hard copy (not exceeding 11x17 inches),
4. Transmit electronic files to the ENGINEER in Adobe Acrobat (.PDF) format.

C. The CONTRACTOR shall be responsible for the installation of its own computer system and scanner. In addition, the CONTRACTOR shall be responsible for the procurement of an Internet Service Provider (ISP) with a high-speed broadband internet connection for its own use, as well as the ENGINEER's/INSPECTOR's use at the site offices to access the document control system.

D. At the request of the ENGINEER, the CONTRACTOR must provide a hard copy of approved submittals to the INSPECTOR, at no additional cost to the CITY.

(END OF SECTION)

SECTION 01120
INTERFACE / COORDINATION REQUIREMENTS

1.1 THE REQUIREMENT

A. Traffic and Access

1. The CONTRACTOR'S operations shall cause no unnecessary inconvenience. The access rights of the public shall be considered at all times. Unless otherwise authorized, traffic shall be permitted to pass through the Work, or an approved detour shall be provided.

2. Safe and adequate pedestrian and vehicular access shall be provided and maintained to: residences; fire hydrants; commercial and industrial establishments; churches, schools and parking lots; service stations and motels; hospitals; police and fire stations; and establishments of similar nature. Access to these facilities shall be continuous and unobstructed unless otherwise approved by the ENGINEER.

3. The CONTRACTOR shall provide and install steel plates to bridge any excavation in the public right-of-way. Such bridging shall be in accordance with the provisions of the latest edition of the Work Area Traffic Control Handbook (WATCH), and in addition, shall have a nonskid surface with coefficient of friction of 0.35 per California Test 342 for all steel plates within the traveled roadway of streets and alleys. When required by the INSPECTOR, the CONTRACTOR shall certify in writing to the INSPECTOR that steel plates to be used in the Work meet the required static coefficient of friction. Also, when required by the INSPECTOR, the CONTRACTOR shall have steel plates to be used in the Work tested in accordance with the above standards for the verification of required static coefficients of friction. Testing shall be done by an independent laboratory approved by the INSPECTOR. The CONTRACTOR shall pay for any costs associated with the testing of steel plates.

4. At least ten (10) days before the start of construction, the CONTRACTOR is required to notify, in writing, abutting property occupants of the proposed construction start date. A copy of said written notification shall be provided to the INSPECTOR.

5. The CONTRACTOR shall notify the MTA Special Events Desk at (213) 922-4632, (213) 922-4692(Fax) at least forty-eight (48) hours before any work that will affect normal bus operations. If no answer, call MTA Dispatch at any time, (213)-922-4634.

6. Safe and adequate pedestrian zones and public transportation stops, as well as pedestrian crossings of the Work at intervals not exceeding 90m (300 feet), shall be maintained unless otherwise approved by the ENGINEER. If required by the construction, the CONTRACTOR may close only one crosswalk at a time at intersections having four crosswalks. If construction requires closure of two or more crosswalks at an intersection, the CONTRACTOR shall obtain LADOT approval before implementation of the closure. LADOT approval is required prior to

closing of any crosswalk at intersections having fewer than four crosswalks.

7. Vehicular access to residential and commercial driveways shall be maintained to the property line except when necessary construction precludes such access for reasonable periods of time. If backfill has been completed to the extent that safe access may be provided, and the street is opened to local traffic, the CONTRACTOR shall immediately clear the street and driveways and provide the maintained access.

8. The CONTRACTOR shall cooperate with the various parties involved in the delivery of mail and the collection and removal of trash and garbage to maintain existing schedules for these services.

9. Grading operations, roadway excavation and fill construction shall be conducted by the CONTRACTOR in a manner to provide a reasonably satisfactory surface for traffic. When rough grading is completed, the roadbed surface shall be brought to a smooth, even condition satisfactory for traffic.

10. Work shall be performed in only one-half of the roadway at one time. One-half of the roadway shall be kept open and unobstructed until the opposite side is ready for use by traffic. The CONTRACTOR shall phase the removal operations so as to maintain the specified traffic lanes on the existing pavement until sufficient new pavement is constructed to accommodate the traffic requirements. If one-half of a street is only being improved, a smooth, even surface and a condition satisfactory for traffic shall be maintained on the other one-half.

11. Where no pavement exists in a roadway, and traffic is to be maintained through the Worksite, the CONTRACTOR shall conduct its operations in a manner to provide a smooth, even surface satisfactory for traffic, reasonably free of mud and dirt.

12. The CONTRACTOR shall include in its Bid all costs for the above requirements.

B. Street Closures, Detours, Barricades

1. The CONTRACTOR shall comply with all applicable State, County and CITY requirements for closure of streets. The CONTRACTOR shall provide barriers, guards, lights, signs, temporary bridges, flagpersons, and watchpersons. The CONTRACTOR shall be responsible for compliance with additional public safety requirements that may arise. The CONTRACTOR shall furnish and install signs and warning devices and promptly remove them upon completion of the Work.

2. The CONTRACTOR shall obtain and pay for all permits for closure of streets, alleys or sidewalks, as required by the Bureau of Street Services (800) 996-2489 and LADOT (213) 972-4990.

3. At least forty-eight (48) hours in advance of closing, partially closing, or reopening any street, alley, or other public thoroughfare, the CONTRACTOR shall notify the Police, Fire, Traffic, and Engineering Departments, and comply with their requirements. Deviations must first be approved in writing by the ENGINEER.

4. When specified on the Plans or permit, the CONTRACTOR shall install advance construction notice signs per Standard Plan S-791, not less than seven (7) days before the start of construction. The CONTRACTOR shall maintain the signs for the duration of construction, removing them only after completion of the work. All costs incurred in furnishing, installing, maintaining and removing the signs shall be included in the CONTRACTOR'S Bid.

5. The CONTRACTOR shall secure approval, in advance, from authorities concerned with the use of temporary bridges proposed by the CONTRACTOR for public use. Temporary bridges shall be clearly posted as to load limit, with signs and posting conforming to current requirements covering "signs" as set forth in the California Manual of Uniform Traffic Control Devices (MUTCD). (The California MUTCD is available on the internet athttp://www.dot.ca.gov/hq/traffops/engineering/mutcd/ca_mutcd2014.htm . This manual shall also apply to street closures, barricades, detours, lights, and other safety devices that may be required.

6. The CONTRACTOR shall comply with the requirements of the latest adopted edition of the "Work Area Traffic Control Handbook", obtainable from Building News, Inc., 10801 National Blvd., Los Angeles, CA 90064, (800) 873-6397 or the LADOT Worksite Traffic Control Plan (S-488.0) available from LADOT, 100 S. Main Street, 9th Floor, Los Angeles, CA 90012.

7. A street with local traffic crossing a street in which Work is being performed may be closed to traffic, providing the adjacent cross streets are kept open. The CONTRACTOR shall notify the Police and Fire Departments whenever such a street is to be closed to traffic. A similar notification shall then be made at the time the street is again opened to traffic. If the closing is to be of short duration or different sections of the street are to be closed at different times, the notification to the Police and Fire Departments shall be on a day-by-day basis, giving information regarding the conditions expected to prevail on the next working day. The CONTRACTOR shall notify the INSPECTOR which streets are to be closed, duration of closures, and person(s) and telephone numbers contacted in the Fire and Police Department.

8. All signs, including offsite detour signs, lights, or devices installed by the CONTRACTOR shall conform to the California Manual of Uniform Traffic Control Devices (MUTCD), and be approved by LADOT before use. Offsite detour signs shall be installed, maintained, and removed by the CONTRACTOR. "No Parking" signs shall be posted and removed only by LADOT upon request from the CONTRACTOR. LADOT will charge and collect its actual cost for each temporary sign installed and for each sign replaced during the authorized period. To be enforceable, temporary "No Parking" signs shall be installed by LADOT twenty-four (24) hours before the time when needed. Their removal by LADOT shall take place as the Work progresses to restore parking spaces. See Section 01313 – WORK BY CITY OR OTHERS of the GENERAL REQUIREMENTS.

9. The CONTRACTOR shall include in its Bid all costs for the above requirements.

10. Vehicular and pedestrian traffic adjacent to the laydown area and/or within the jobsite must be maintained. If an existing street in the CONTRACTOR'S Work area is to be demolished or obstructed, the CONTRACTOR shall be responsible for providing access through or around the effected area, including signs, barricades, and lights, as approved by the ENGINEER and any local agencies having jurisdiction over any public access areas. The CONTRACTOR shall follow WATCH standards and the California Manual of Uniform Traffic Control Devices (MUTCD), for all traffic, including a minimum traffic lane of ten (10) feet for vehicles and four (4) feet for pedestrians. (The California MUTCD is available on the internet at http://www.dot.ca.gov/hq/traffops/signtech/mutcdsupp/ ca_mutcd.htm).

11. The CONTRACTOR shall not park any vehicles (including concrete, hauling and delivery trucks) in any facility street at any time unless approved by the ENGINEER. Access must be maintained at all times for emergencies, sampling, equipment operations, maintenance, and like items.

12. Before altering any vehicular or pedestrian access, the CONTRACTOR shall notify the ENGINEER thirty (30) calendar days in advance on forms provided by the ENGINEER. The CONTRACTOR shall then request the alteration on forms provided by the ENGINEER. Requests shall include reasons for the alteration, times, boundary limits, special safety measures, proposed traffic rerouting with widths of such route, and a map detailing the above. Such requests shall be submitted to the ENGINEER not less than fifteen (15) calendar days before the requested date of the access alteration. If any of the information changes, an additional fifteen (15) calendar days may be required after the changes are brought to the attention of the ENGINEER. Approval when granted will always be conditional. Final approval of the request, including date and time, will be given three (3) calendar days in advance. The CITY retains the right to ticket and impound vehicles blocking traffic.

13. The following shall be taken into consideration in preparing the proposed schedule of construction operation:
    - Maintaining access to the Sixth Street Viaduct and its ancillary pedestrian connections.
    - Coordination with ATP-2 Boyle Heights Pedestrian Linkages Project
    - Coordination with ATP-3 Downtown Los Angeles Arts District Pedestrian and Cyclist Safety Project
    - Coordination with any other Projects adjacent to the Project site.

(END OF SECTION)

SECTION 01140
CONTRACTOR'S USE OF THE PREMISES

1.1 THE REQUIREMENT

A. General

1. This Section applies to all situations in which the CONTRACTOR or his representatives, including but not necessarily limited to, suppliers, Subcontractors, employees and field engineers, who enter upon the CITY'S property.

2. CONTRACTOR shall commence the Contract Work and provide security and protection to existing facility and job site within 5 days from the issuance of Notice-To-Proceed letter, unless noted otherwise.

B. Access to the Job-site

1. As instructed by the ENGINEER, the CONTRACTOR shall restrict CONTRACTOR'S employees to the immediate Work areas on the job-site and in no way go beyond the Work limits noted on the Contract Drawings or as otherwise directed by the ENGINEER.

a. All CONTRACTOR or suppliers' vehicles shall enter the site through existing entrances along Mateo St., S Santa Fe Ave., S Mission Rd., S Anderson St., S. Clarence St., or other entrance as designated by the ENGINEER.

2. CONTRACTOR shall in no way block such entrance(s) to the job-site when Contracted Work occurs at an existing CITY facility. At any time, the CONTRACTOR shall not block any other entrance.

3. Use of such accesses to the job-site will only be for the purpose of parking, delivery and/or removal of materials equipment, tools, vehicles and removal of rubbish and debris, and shall be kept free of obstructions and in a safe condition at all times during extent of Contracted Work.

4. For existing electrical transformers or vaults, which are maintained by the Department of Water and Power, the CONTRACTOR shall arrange and obtain the permission for access and to do work from the Department of Water and Power.

C. City Occupation of the Premises

The CITY will not occupy the existing premises during construction operations, except as indicated in the GENERAL REQUIREMENTS Section 01313 – WORK BY CITY OR OTHERS, and in Section 00406 – PARTIAL ACCEPTANCE of the GENERAL CONDITIONS. However, the CONTRACTOR must provide the City with maintenance access to the Sixth Street Viaduct, sanitary sewer facilities, and LADWP facilities within the work zones.

D. Contractor's Use of the Premises

1. Do not interfere with the construction operations of the adjacent ATP Projects during Contracted Work operations, as directed by the ENGINEER.

2. Exercise care during Contracted Work operations not to interfere with or damage adjacent facilities, including but not limited to the ground level Sixth Street Viaduct stairs, columns, bents, bearings, ramps, railings, electrical equipment, etc. These elements shall remain open for uninterrupted access.

3. The CONTRACTOR shall protect the following listed items, as directed by the ENGINEER or the Consultant. CONTRACTOR shall be responsible for disposing of any portions of the previously salvaged items that are not reinstalled by the project.

    a. Salvaged Piece of Viaduct Arch removed by the bridge contractor.

    b. Salvaged Viaduct Light Poles removed by the bridge contractor.

4. All items, materials and equipment remaining on the premises (job site), which are not specified to be protected in place or salvaged in Item C above or elsewhere, shall become the property of the CONTRACTOR and shall be removed from the job site. The CITY makes no claims or assumes any value in any of these items, materials and/or equipment if they are removed from the job site or vandalized prior to and/or during the Contract period. The CITY assumes no responsibility for any additional operation or works as a result of the conditions described herein.

E. Parking

1. CONTRACTOR will be allowed to use the job site for parking. Locations to be determined by the ENGINEER and CONTRACTOR. Parking shall be coordinated so as not to interfere with work operations, traffic, construction trailer access, and/or use of such facilities by others. All vehicles parked on the premises shall be kept locked at all times.

F. Security

1. Restrict the access of all persons entering upon the CITY'S property in connection with the Contracted Work to the Access Route and to the actual site of the work.

2. In addition to the responsibilities specified in other Sections of these GENERAL REQUIREMENTS, and the GENERAL CONDITIONS, the CONTRACTOR shall be responsible for the security of all its construction equipment, materials, tools, facilities, and vehicles (personal, private, or contractual) while performing the work of this Contract. This requirement shall be effective twenty-four (24) hours per day for the duration of the Contract.

3. CONTRACTOR shall furnish and maintain approved type site security protection (as directed by the ENGINEER, INSPECTOR, or other authority having jurisdiction) between the Work areas and other areas. All such site security protection shall remain for the duration of this Contract.

G. Protections

1. Required: Where necessary for the safety of the public and the protection of the adjacent street improvements and adjacent properties, provide and maintain adequate protection, fences and gates and barricades to separate Work areas from areas outside the job-site limits**.** Such protections shall comply with provisions of Section 01120 – INTERFACE / COORDINATION REQUIREMENTS and Section 01721 – MOBILIZATION of the GENERAL REQUIREMENTS, and shall remain in place during extent of this Contract or as otherwise directed by the INSPECTOR.

2. CONTRACTOR shall provide protections, barricades, signs, etc., as necessary so that persons will be protected from the Work areas where trenching and excavations occur for foundation, underground utilities, underground fuel storage tanks etc. on the job-site. Upon completion of such work operations, such protections shall be removed. Such protections shall not disrupt the existing facilities adjacent to the job-site.

3. All equipment, material, soil, debris and any heavy loaded object shall not be stock piled in adjacent area to create any surcharging to the trench or excavation.

4. Protection of Existing Structures and Site Conditions:

   a. Construct and maintain a suitable type partition, approved by the ENGINEER, to prevent dust, noise and any other nuisance to occupants within areas adjacent to the Work area(s) of this Project.

   b. Protect existing surfaces in areas where work of this Contract is being performed or passed through for access to the Work areas from damage in a manner approved by the ENGINEER. Take all necessary precautions to protect and preserve the integrity of all existing work. Any damage will be subject to requirements

hereinafter specified. Submit protection plans or details as required by the ENGINEER.

c. Provide adequate protection for existing wall, fencing, post or sign, lighting, plant, traffic signal equipment including loop detectors, paving, etc. indicated to remain within the Work area. CONTRACTOR shall make necessary repair to damages occurred under CONTRACTOR'S responsibility or jurisdiction.

5. Controlled Work area: All controlled Work areas shall be prepared and protected in accordance with Section 02225 - LEAD-BASED PAINT REMOVAL and all Code requirements.

H. Repair of Damages

1. Required: Repair or replace any damage to existing facilities and equipment located inside or outside the work limits damaged during construction operations.

2. Methods: Repair or replace damaged work with new materials as necessary to restore the damaged areas or surfaces to a condition equal to and matching such conditions existing prior to damage or start of Work of this Contract, to the full satisfaction of the ENGINEER, and at no added cost to the CITY. Submit repair method for approval as required by the ENGINEER.

3. Matching or Existing Work:

a. Finish of all existing wood, plaster, masonry and/or concrete work indicated on the Drawings to be altered, repaired or patched to match and be flush with adjoining surfaces, subject to the approval of the ENGINEER.

b. Finish of all new masonry and/or concrete work (to adjoin remaining work) to match and be flush with adjoining surfaces, unless otherwise noted on the Drawings, subject to the approval of the ENGINEER.

I. Interruption of Services

1. CONTRACTOR shall make all provisions to accomplish Contracted Work without undue interference with the CITY operations of the existing facilities on the job-site premises.

J. Non-interference With Others

1. CONTRACTOR shall confine Contracted Work operations to the immediate boundaries of the job-site and shall execute work operations in a manner to minimize interference with CITY operations and/or work operations of other CONTRACTORS working on the premises; as directed by the ENGINEER.

2. CONTRACTOR shall provide and maintain adjacent pedestrian and vehicular accesses in accordance with Work area Traffic Control

Handbook (W.A.T.C.H.), latest edition, and the California Manual of Uniform Traffic Control Devices (MUTCD).

3. CONTRACTOR shall obtain approval of ENGINEER and local authorities having jurisdiction such as Department of Transportation, Police Department, Bureau of Street Services, etc. prior to any street, alley or sidewalk closure.

K. Underground Service Alert

1. Before commencing any excavation, the CONTRACTOR shall obtain an underground service alert inquiry I.D. Number by calling 1 (800) 422-4133. Two (2) working days shall be allowed after the I.D. Number is obtained and before the excavation work starts so that utility owners can be notified. The I.D. Number must be reported to the Bureau of Contract Administration when calling for inspection. I.D. Numbers will not be given more than ten (10) calendar days prior to starting excavation work.

L. Job Safety

1. CONTRACTOR shall observe all safety rules and regulations of the Los Angeles City Building Code and CAL/OSHA as applicable to the safety of the CONTRACTOR, CONTRACTOR'S personnel and CITY employees during Contracted Work operations and especially during asbestos removal operations.

M. HAZARDOUS WORK CONDITIONS

1. The Work of this Contract will be performed in hazardous areas which contain soil contamination and the removal of lead-based paint. Perform all Work operations of this Contract in accordance with the latest applicable requirements of Federal, State, County, and City of Los Angeles Safety Codes including that of Los Angeles City Fire Department.

   a. CONTRACTOR shall provide adequate fire extinguishers for the specific hazard on the premises during the Contract period. Type and sizes as recommended by the National Board of Fire Underwriters as necessary to control a particular kind of fire and instruct his employees as to the proper use of such fire extinguishers.

   b. Place all such fire extinguishers ready for use in the immediate area where the hazardous work operations will occur.

   c. CONTRACTOR shall take special precautions in the use of acetylene torches, welding equipment, tar pots and kettles when working in a hazardous area.

   d. See Section 02225 – LEAD-BASED PAINT REMOVAL, The Environmental Site Investigations (HAZMAT) Report in Section 01112 – DESCRIPTION OF WORK and Section 01411 – CONFINED SPACE ENTRY for additional information.

(END OF SECTION)

SECTION 01150
STORAGE OF MATERIALS AND EQUIPMENT

1.1 THE REQUIREMENT

A. All materials and equipment shall be stored and protected in accordance with the manufacturer's instructions, with seals and labels intact and legible. Store sensitive products in weatherproof, climate controlled enclosures. Where indoor storage is required, the equipment shall be stored inside a completely enclosed building, with the temperature controlled between 60 degrees Fahrenheit and 100 degrees Fahrenheit (60°F – 100°F) and a maximum relative humidity of ninety percent (90%) noncondensing.

B. For exterior storage of material or equipment, the materials or equipment shall be placed on sloped supports above ground. Material or equipment subject to deterioration shall be covered with an impervious covering. Where necessary ventilation and heating shall be provided to avoid condensation.

C. The CONTRACTOR shall exercise all measures necessary to ensure preservation of the quality, quantity, and fitness of the materials or equipment and shall perform the manufacturers recommended maintenance of the material or equipment.

D. The CONTRACTOR shall inspect the material and equipment, and submit a written monthly report to the INSPECTOR listing all the equipment stored, the results of their inspection, and the maintenance performed.

E. The materials and equipment shall not show signs of pitting, rust, decay or other deleterious effects of storage when incorporated in to the work.

F. Pumps, motors, electrical equipment, and other equipment with anti-friction or sleeve bearings shall be stored in weather tight structures maintained at a temperature above sixty degrees Fahrenheit (60°F). Electrical equipment, controls, and insulation shall be protected against moisture and water damage. All space heaters furnished in electrical equipment shall be immediately energized and operated continuously until the equipment is placed into service.

G. The CONTRACTOR shall grant the INSPECTOR and ENGINEER access to the storage facility at any time and assist the INSPECTOR and ENGINEER in conducting a full view, piece by piece, inventory of all such material or equipment.

H. The CONTRACTOR shall absorb any and all cost incurred to store, protect, and maintain the materials and equipment without modification to the Contract amount.

I. For CITY furnished equipment delivered to the site, the CONTRACTOR shall take all necessary measures to protect the equipment from damage due to the CONTRACTOR’s activities. The CONTRACTOR shall also ensure that all measures required by the CITY’s vendor to preserve and protect their equipment are maintained and are not disturbed including, but not limited to, providing for the continuous operation of space heaters furnished in electrical equipment.

(END OF SECTION)

SECTION 01212
FIXED CASH ALLOWANCE ITEMS

1.1 THE REQUIREMENT

A. A fixed cash allowance has been allocated to each of the following items of the Bid Breakdown (see Bid Proposal). Requirements for each Fixed Cash Allowance Item are specified in the GENERAL REQUIREMENTS (GR) section referenced below. Overhead and Profit, at the rates listed below, shall be added to the actual invoiced amount.

Bid Item No.	Description	Overhead and Profit
2.	Allowance for Electrical and Water Service Fees (GR Section 01112)	0%
3.	Allowance for Engineer's and Inspector's Field Office Supplies (GR Section 01212)	5%
4.	Allowance for Differing Site Conditions (GR Section 01253)	Per Sec. 01254
5.	Allowance for Payment for Permits (GR Sections 01292 and 01721)	0%
6.	Allowance for Opportunity to Partner (GR Section 01353)	0%
7.	Allowance for City Inspection (GR Section 01453)	0%
8.	Allowance for Sewer Bypass (GR Section 01563)	5%
9.	Allowance for Additional Potholing (GR Section 01732)	Per Sec. 01254
10.	Allowance for Archeological Monitoring (GR Section 01212 and 01562)	0%
11.	Allowance for Street Damage Restoration Fee (Section 02710)	0%

B. If these items are not executed, or are only partially executed, or the allowance for any item is not expended or partially expended, then a deductive Change Order shall be issued for the amount that is not expended. If, however, these items are over expended (with ENGINEER'S prior approval), then an appropriate Change Order shall be executed in accordance with the provisions of the GENERAL REQUIREMENTS Section 01254 –- CHANGE ORDERS, except for Overhead and Profit wherein the above listed rates shall apply.

C. The ENGINEER'S AND INSPECTOR'S field office supply allowance is to be used at the ENGINEER'S and/or INSPECTOR'S discretion to purchase office supplies and/or office equipment, perform repairs to field offices or equipment owned or leased by the City, pay field office utility bills, purchase reference documents, etc. The items covered by this allowance are in addition to those required to be furnished by the CONTRACTOR under GR Section 01721-Mobilization. The CONTRACTOR shall be reimbursed the actual invoice amount plus the markup allowed by Section A, above.

(END OF SECTION)

SECTION 01230
ALTERNATES

PART ONE - GENERAL

1.1 RELATED DOCUMENTS

A. Drawings, GENERAL CONDITIONS, Division 1 **-** GENERAL REQUIREMENTS and other Sections of the Project Manual, apply to this Section.

1.2 SUMMARY

A. This Section specifies administrative and procedural requirements for Alternates.

B. Definition: An Alternate is for certain construction activity defined in the Bidding Requirements that may be added to or deducted from Total Contract Bid amount if the CITY decides to accept a corresponding change in either the amount of construction to be completed, or in the products, materials, equipment, systems or installation methods described in the Contract Documents. Bidders are required to submit a cost amount for each Alternate listed on the Bid Form, which shall be separate from the Basic Bid for the remaining balance of the Contract Work. Determination of the lowest responsible bidder will be based upon the Base Bid and will not include the amounts for alternates.

C. Coordination: Coordinate related Work and modify or adjust adjacent Work as necessary to ensure that Work affected by each accepted Alternate is complete and fully integrated into the project.

D. Notification: Immediately following the award of the Contract, the ENGINEER will prepare and distribute to each party involved, notification of the status of each Alternate. Indicate whether Alternates have been accepted, rejected or deferred for consideration at a later date. Include a complete description of negotiated modifications to Alternates. CONTRACTOR shall at the earliest practical date advise the ENGINEER of the date when the final selection of the Alternative and purchase of each product or system described by the Alternative must be completed to avoid delaying the Work.

E. General Requirements**:**

1. Requirement to use if the cost amount for the Alternate is part of the total contract cost: When, during the progress of the project, the ENGINEER intends to proceed with the Alternate, the ENGINEER shall notify the CONTRACTOR in writing. If the ENGINEER decides not to proceed with the Alternate, it shall be deleted in accordance with provisions in Section 01254 CHANGE ORDERS of the GENERAL REQUIREMENTS, and an adjustment to contract cost shall be based on the cost amount submitted for the Alternate by the CONTRACTOR.

2. Requirement to use if the cost amount for the Alternate is not part of the total contract cost: If the ENGINEER intends to proceed with the Alternate, the ENGINEER shall issue a Change Order to the CONTRACTOR in accordance with the provisions in Section 01254 –

CHANGE ORDERS of the GENERAL REQUIREMENTS, based on the cost amount submitted for the Alternate by the CONTRACTOR.

3. In any case, execution of the Alternate shall be made by the ENGINEER within twenty-one (21) calendar days after the Notice-to-Proceed, and adjustment of Contract cost shall be based on the amount submitted for the Alternate by the CONTRACTOR. There shall not be any additional overhead and profit allowance, extra compensation or time extension to the CONTRACTOR.

F. Schedule: A "Schedule of Alternates" is included at the end of this Section. Technical Sections referenced in the Schedule of this Section contain requirements for materials and methods necessary to achieve the Work described under each Alternate.

1. Include as part of each Alternate miscellaneous devices, accessory objects, and similar items incidental to or required for a complete installation whether or not mentioned as part of the Alternate.

PART TWO - PRODUCTS (NOT APPLICABLE)

PART THREE - EXECUTION

1.1 SCHEDULE OF ALTERNATES

A. NOT APPLICABLE

(END OF SECTION)

SECTION 01251
CHANGE ORDER REQUESTS

1.1 THE REQUIREMENT

A. All quotations for preliminary change orders for extras, changes, additions, or deletions to the Work as described in CHANGES AND EXTRA WORK of the GENERAL CONDITIONS shall be submitted to the ENGINEER, in writing, on the Change Order Cost Quotation Form provided by the ENGINEER, and in conformance with the requirements of CHANGE ORDERS of the GENERAL REQUIREMENTS (See Attachment 01251-A1). The quotation shall be firm for a period of not less than sixty (60) calendar days from the date of receipt of the quotation by the ENGINEER. The CONTRACTOR shall submit its written cost quotation and Time Impact Analysis not later than fifteen (15) days after being requested to provide such quotation, unless the ENGINEER allows more time. Delays in submitting quotations beyond the fifteen (15) days set forth herein, which cause a delay in the issuance of a Change Order or a delay to the completion date of the project, shall not be cause for a claim or a time extension under the Contract.

B. The ENGINEER'S request for quotation on a preliminary change shall not be considered authorization to proceed with the changed work prior to the issuance of a final Lump Sum or Time & Material Change Order, unless directed otherwise, in writing, by the ENGINEER, nor shall such request constitute justification for a delay to the existing Work or a time extension under the Contract.

(END OF SECTION)

(SEE ATTACHMENT)

ATTACHMENT TO SECTION 01251

Attachments to General Requirements Section 01251 consists of one (1) document, as follows:

ATTACHMENT NUMBER	TITLE OF ATTACHMENT	NUMBER OF PAGES IN THIS ATTACHMENT
01251-A1	Change Order Cost Summary Form	1

Change Order Cost Summary Form

		Direct Labor	Direct Materials	Direct Equipment		Totals
(1):	Lump Sum Work by Prime Contractor	$	$	$		
(2):	"T&M" Work by Prime Contractor	$	$	$		
(3):	Subtotal - Direct Work (Prime Contractor)	$	$	$		
(4):	All Lump Sum Work by subcontractors (any tier)	$	$	$		
(5):	All "T&M" Work by subcontractors (any tier)	$	$	$		
(6):	Subtotal - Direct Work (all subcontractors)	$	$	$		$
					Add each of the three columns across and enter to the right.	
(3)+(6)=(7):	Total - Direct Costs	$	$	$		$
(8):	Markup	(20% of direct labor) $	(15% of direct mat'l) $	(15% of direct equip) $		$
(9):	Prime Contractor Markup for subcontractors				5% of line (6) direct sub work	$
(10):	Bonds & Insurance				1% of line (7) all direct work	$
(11):	Additional amount (if any) permitted by Contract					$
(12):	**GRAND TOTAL**				Add sums of lines) (7), (8), (9), (10) and (11)	$

SECTION 01253
DIFFERING SITE CONDITIONS

1.1 THE REQUIREMENT

A. During the course of construction, the CONTRACTOR may encounter existing utilities, structures, etc. that are not shown on the contract drawings or are not specified and which may interfere with or may impact construction activities. In the event of this occurrence, the ENGINEER may direct the CONTRACTOR to proceed with necessary exploratory or corrective work to alleviate the situation. The cost for such directed work shall be paid for under the bid item DIFFERING SITE CONDITIONS of the SCHEDULE OF WORK AND PRICES. Costs shall be calculated in accordance with Section 01254 CHANGE ORDERS, subsection TIME AND MATERIALSWORK, of the GENERAL REQUIREMENTS.

B. If the total cost of the Work directed under the DIFFERING SITE CONDITIONS clause is different from the amount set forth in the SCHEDULE OF WORK AND PRICES, the Contract Price shall be adjusted by a Change Order. The adjustment shall be the difference between the total actual cost and the amount included in the Bid, as either an additional amount due the CONTRACTOR or as a credit to the CITY, as appropriate.

(END OF SECTION)

SECTION 01254
CHANGE ORDERS

1.1 The Requirement

Payment to the Contractor, or credit to the City, for any change, addition, deletion or extra to the Work, or settlement of any Claim, covered by any Change Order, shall be determined by the methods set forth herein. The Engineer may change the Plans and Specifications, character of the Work, or quantity of Work provided the total net dollar value of all such changes, taking into consideration both additive and deductive changes, does not exceed twenty-five percent (25%) of the original Contract Price. (The total net dollar value requires that additive and deductive changes offset each other, and only after the total net dollar value of the changes exceeds 25% of the original Contract Price, will a Supplemental Agreement be required). Should it become necessary to exceed this limitation, the change shall be by written Supplemental Agreement between the Contractor and the City, which shall be executed by a Change Order.

Unless otherwise stipulated, “Unit Prices” and “Stipulated Prices” include all costs necessary to furnish, install and complete the Work. The “Unit Prices” and “Stipulated Prices” include all direct costs for labor, equipment and materials, all insurance and bond costs, all field and office supervisors and assistants, all onsite project administration, security costs, the cost of small tools and consumables, incidental job burdens, and all general home office expenses and no separate allowance will be made therefor. Assistants to field and office supervisors include all clerical, stenographic, and general office help. Incidental job burdens include, but is not limited to, office equipment and supplies, temporary toilets, telephone, utilities, safety equipment, warning devices, personal protective equipment, and conformance to OSHA requirements. Project administration includes, but is not limited to, review and coordination, estimating, engineering, scheduling, and expediting relative to Change Orders, and updating and furnishing Record Drawings to incorporate changes, schedule update, supervision not applied solely to the Work of the Change Order, home office salaries and expenses, and City of Los Angeles Business Tax.

A. Unit Prices

Unit prices stipulated in the Schedule of Work and Prices (Bid) or itemized in the approved Schedule of Values shall be utilized, where they are applicable and determined reasonable by the Engineer. In the event that the Change Order results in a change in the Bid quantity of more than twenty-five percent (25%), either increase or decrease, then either the Engineer or the Contractor may request a review of the unit price to determine if a new unit price shall be mutually determined by negotiation. Any new unit price mutually determined under this Subsection shall only apply to the units in excess of one hundred twenty five percent (125%) of the Bid quantity for overruns. In case of underruns, the new mutually determined unit price shall only apply to the units up to seventy-five percent (75%) of the Bid quantity. When the final quantity is less than 75% of the Bid quantity, the total payment for that item shall not be more than 75% of the Bid quantity times the Bid unit price.

At the City’s option, payment for Unit Price Work in excess of 125% of the Bid quantity, or less than 75% of the Bid quantity, will be made on a Time and Materials basis as provided in Subsection C if a new unit price cannot be agreed upon.

Renegotiated unit prices or unit prices for new items added to the Contract by Change Order shall be determined in accordance with Subsections B through G. Whether stipulated in the Bid, itemized in the approved Schedule of Values or renegotiated, the

unit prices used for payment constitute the total adjustment with no further costs owed for overhead, impact, profit, delay or impact to unchanged portions of the Contract, or any other reason. The unit price shall be full and final compensation as described in Subsection D.

The cost proposals for renegotiated unit prices shall be presented in accordance with the provisions of Subsections B through G. Should any Bid Item be deleted in its entirety, the amount bid for that Bid Item shall be subtracted from the total Contract amount. The Contractor shall be paid only for the actual cost incurred prior to the notification of such deletion for that Bid Item.

B. Lump Sum

The Engineer may initiate a change in the Work by issuing a Preliminary Change Order (PCO). A PCO will include a detailed description of the proposed additions, deletions, or revisions with supplementary sketches or revised Contract Drawings and/or Specifications, and will request from the Contractor a lump sum cost quotation and time impact analysis for the proposed Change Order Work. The Contractor shall submit its PCO cost quotation and time impact analysis, if applicable, to the City within 14 calendar days after receipt of a PCO. The Contractor shall summarize the total cost and furnish a breakdown of the proposed lump sum costs satisfactory to the Engineer in accordance with Subsections B through G. Such lump sum costs shall be full and final compensation as described in Subsection D. The Contractor's quotation shall conform to the requirements of Section 01251- Change Order Requests, and be submitted in the Change Order Cost Summary Form provided (see Attachment 01251-A1). The Change Order Cost Summary Form cannot be used to nullify or supersede any specification or contractual provision.

If the method or amount of payment cannot be agreed upon prior to performing the Change Order Work, the Engineer may issue a Unilateral Change Order in the amount determined reasonable by the Engineer for the Change Order Work and direct the Contractor to proceed immediately. The Engineer also has the option to issue a Time and Materials Change Order directing the Change Order Work be performed on a time and materials basis with the Contractor providing all labor, equipment, and materials necessary to complete the Change Order Work in a satisfactory manner and within a reasonable period of time. Estimates for lump sum quotations and accounting for Time and Materials Work shall be limited to direct expenditures necessitated specifically by the subject Change Order Work, and shall be segregated as follows:

1. Labor: The cost of labor shall include all employees of the Contractor or Subcontractor(s), up to and including working foremen, who are used in the actual and direct performance of the Change Order Work. Employees identified as superintendents or non-working foremen shall not be charged as labor on the Change Order Work. The labor rates used to price the Change Order Work shall be those listed on the Bureau of Engineering's website at http://eng.lacity.org/contractors/. The Change Order Labor Rates include State of California Prevailing Wages, Fringe Benefits (health & welfare, pension, vacation, training and other payments) as established by negotiated labor agreements, Payroll Taxes (FICA, Federal and State unemployment taxes) as established by law, and Insurance costs (Worker's Compensation and General Liability Insurance, but shall not include Automobile Liability Insurance, Umbrella or any other insurance costs). No other subcomponents of labor costs shall be considered, unless approved in writing by the Engineer.

The Change Order Labor Rates are calculated using the most current published prevailing wage and fringe benefits determination, applicable to the Los Angeles County and the particular labor classification, from the State of California Director of Industrial Relations. To the Total Base Hourly Wage Rate (Column D), will be added Payroll Taxes at 8.65% (Column E), and Worker's Compensation & General Liability Insurance at 13% (Column F) of the base wages (Columns A+B), respectively.

Copies of the prevailing wage and fringe benefit determinations are available on the internet at http://www.dir.ca.gov/OPRL/PWD/. Payment to a craft of classification not shown on the prevailing wage rate determinations shall comply with the rate of the craft or classification most closely related to it.

The Engineer may approve a higher markup for insurance by review of current invoice(s) of insurance premium, as prepared by insurance companies for the Contractor or its Subcontractors at all tiers, to be submitted by the Contractor within ten (10) working days after issuance of the Notice to Proceed.

Except when provided otherwise by specific labor agreements, the overtime compensation will be at 1.5 times for more than 8 hours per day and Saturday work (Column H) and 2 times for Sunday and Holiday work (Column I).

The labor cost is not allowed to be increased by using labor classifications with paygrades higher than necessary to accomplish the Change Order Work. Owners, business partners, stock holders, corporate officers, next of kin, relatives and other stake holders of the contracting company (whose classifications are directly chargeable to the project) may be chargeable to the Change Order Work, provided that these personnel/workers perform direct labor in accordance with their classification and have the approval of the Inspector. The rates shall not exceed the prevailing wage rate for the classification they are performing. Foreman/General Foreman classification shall include a premium not exceeding the allowable premium in the Master Labor Agreement over the highest prevailing wage he is supervising. All labor classifications considered for the work shall be presented to the City, via a submittal, for review and approval before change order work is performed.

Reimbursement at the computed Change Order Labor Rates is subject to verification by certified payroll.

2. Materials: The cost of materials used in performing the Change Order Work will be the direct cost, including sales tax and freight, to the purchaser, whether Contractor, Subcontractor or other forces, from the supplier thereof, except as follows:

   a. Cash or trade discounts available to the purchaser shall be credited to the City notwithstanding the fact that such discounts may not have been taken by the Contractor.

   b. For materials secured by other than a direct purchase and direct billing to the purchaser, the cost shall be deemed to be the price paid to the actual supplier as determined by the Engineer. Supplier markup, except for actual costs incurred in the handling of such materials, will not be allowed.

c. Payment for materials from sources owned wholly or in part by the purchaser shall not exceed the price paid by the purchaser for similar materials from said sources on contract items or the current wholesale price for such materials delivered to the Jobsite, whichever price is lower.

d. If, in the opinion of the Engineer, the cost of materials is excessive, or the Contractor does not furnish satisfactory evidence of the cost of such materials, then the cost shall be deemed to be the lowest current wholesale price for the quantity concerned, delivered to the Jobsite less cash or trade discount. The City reserves the right to furnish materials for the Work and no claim shall be made by the Contractor for costs and profit on such materials.

e. For the purposes of this Section, a "Supplier" is defined as any person or persons, firm or business, who supplies materials of construction and/or permanent equipment, but who does not perform any portion of the Work of the Contract on site, for the Contractor, except that labor or labor supervision which may be required by some manufacturers as part of their equipment installation for warranty or other purposes.

3. Equipment: The cost of equipment shall include ownership, lease or rental costs, as well as operating costs, for individual equipment units whose replacement value is in excess of $1,000. Transportation and set up costs shall be included, but only if the equipment is imported to the worksite solely to perform work on the Changed/ Extra Work described in the Change Order and the Contractor can demonstrate that the changed work cannot or could not be performed economically with equipment already at the site. Equipment costs shall be determined in accordance with the requirements set forth in Subsection G.

4. Small tools, equipment, consumables and incidental costs: No separate payment will be made for the use of small tools or equipment with a replacement value of $1,000 or less. This applies to tools and equipment owned by the Contractor or its Subcontractors, at any tier. Also, no separate payment will be made for fuel, lubricants, tool or equipment repairs, tool or equipment maintenance, consumables, drinking water, sanitary facilities or other incidentals. These costs are already included as a part of Markup.

5. Subcontractor Costs, including their overhead and profit, provided that such costs are direct costs to the Contractor for performing the Change Order Work as set forth in Subsections B through G.

C. Time and Materials Work

The costs of all Changed/Extra Work submitted under the Time and Materials (T&M) method shall be formulated in accordance with the provisions of Subsections B through I.

Unless otherwise stipulated on the Change Order, the “Not-to-Exceed” amount for all T&M Change Orders is $25,000. The Contractor is responsible for tracking costs and for notifying the Engineer in writing when costs approach 50% and 75% of the “Not-to-Exceed” amount. In addition, if the Changed/Extra Work cannot be completed within the “Not-to-Exceed” limit, the Contractor shall notify the Engineer in writing, and in a timely manner, that the limit requires an increase. The City will only reimburse eligible costs up to the “Not-to-Exceed” amount.

The Contractor shall notify the Inspector at the beginning of each day when T&M Change Order Work is being performed. The Contractor shall notify the Inspector of the T&M Change Order Work being performed and describe the personnel involved, whether by Contractor forces or by its Subcontractors, at any tier. Failure to notify the Inspector prior to the start of T&M Change Order Work serves as the Contractor's waiver to claim for compensation on that day.

For each day work is performed on the T&M Change Order, the Contractor shall submit a "Daily Report of Time and Material Work" to the Inspector. The "Daily Report" consists of Bureau of Contract Administration Form BCA-165 for labor supplied, and Form BCA-166 for equipment and materials supplied. The Inspector will only consider Forms that are properly completed as described below.

1. Separate forms must be used for labor and for equipment/materials.

2. Labor, equipment, material or expenditures that are not included on Bureau of Contract Administration Forms BCA-165 and/or BCA-166 are ineligible for payment. There will be no exceptions to this requirement. It is the responsibility of the Contractor to include any and all items of labor, equipment, or material for which it requests compensation for each day's work completed.

3. Information required on the Labor form shall include name of personnel, personnel classification, and only the number of hours worked on T&M Change Order Work for the day being reported. Since the overhead allowance already includes all necessary supervision, any hours for additional supervision or non-working foremen are ineligible for additional payment. The premium pay for a general foreman is eligible for payment only if the general foreman is a working foreman and a general foreman was required by a Union Labor Agreement or otherwise approved by the Inspector. The general foreman rate is eligible for payment only during the time that a general foreman was required for the T&M Change Order Work.

4. Information required on the Equipment/Material form shall include Contractor-owned equipment and/or tools, and rented equipment or tools for which compensation is requested. Information shall include the type of equipment, size of equipment, equipment identification number, appurtenances, and only the number of hours worked on the T&M Change Order Work.

5. The only allowable materials are materials delivered to the job site and/or incorporated only into the T&M Change Order Work. The allowable materials shall be listed on the Equipment/Material form for the day that they are delivered to the job site and/or incorporated into the T&M Change Order Work.

6. Delivery ticket(s) and/or bill(s) of lading for rental equipment and/or tools delivered to the site and/or material incorporated into the T&M Change Order Work for the day being reported must be attached with the T&M sheet for that day. No payment will be allowed for materials and/or rented equipment unless receipt(s) or bill(s) of lading is attached. If the request for payment is not substantiated by original vendor/supplier invoices, acceptable copies of original invoices, or other documentation acceptable to the Inspector, the City may establish the cost of the item(s) at the lowest possible wholesale price or rental rate applicable while the T&M Change Order Work was being performed.

7. Failure to submit the required “Daily Report of Time and Material Work” by the close of the next working day shall waive all rights for that day unless otherwise approved by the Inspector. Any T&M Change Order Work that cannot be substantiated by a “Daily Report”, approved and signed by the Inspector, is ineligible for payment.

8. The Contractor is responsible for preparing the “Daily Report” for the T&M Change Order Work performed by its Subcontractors and submitting the forms to the Inspector on time.

9. The Contractor must have each “Daily Report” verified by the Inspector. After the “Daily Report” is approved by the Inspector, both the Contractor and Inspector sign the report. The original “Daily Report” is retained by the Inspector with a copy provided to the Contractor.

10. When the “Daily Report” is signed by the Inspector and the Contractor, it is binding on the Contractor and its Subcontractors.

11. When agreed to by the Inspector, the Contractor may submit a supplemental “Daily Report” for labor, materials, or equipment for which the Contractor requests compensation, but failed to list on the original daily report.

    a. These supplemental forms shall be marked “SUPPLEMENTAL”.

    b. Unless otherwise approved by the Inspector, the supplemental forms may only be submitted for approval up to two (2) working days following the date when the work was performed.

No payment will be allowed for labor, materials, or equipment included on T&M sheets not signed by the Contractor and the Inspector. Payment will not be allowed for labor, materials, or equipment included on T&M sheets signed by anyone other than the Inspector or the Inspector’s immediate supervisor.

D. General

It is the intent of the City to settle all Change Orders full and final at the time the Change Order is issued. Therefore, the following paragraph will be incorporated, in writing, on all Change Orders:

> “The compensation (time and cost) set forth in a Change Order comprises the total compensation due the Contractor, all Subcontractors, and all Suppliers, for the Work or change defined in the Change Order, including impact on unchanged work. By signing the Change Order, the Contractor acknowledges and agrees on behalf of himself, all Subcontractors, and all Suppliers, that the stipulated compensation includes payment for all work contained in the Change Order, plus all payment for the interruption of schedules, extended field overhead costs, delay, and all impact, ripple effect or cumulative impact on all other work under this Contract. The signing of the Change Order indicates that the Change Order constitutes full mutual accord and satisfaction for the change, and that the time and/or cost under the Change Order constitutes the total equitable adjustment owed the Contractor, all Subcontractors, and all Suppliers as a result of the change. The Contractor, on behalf of himself, all subcontractors, and all Suppliers, agrees to waive all rights, without exception or reservation of any kind whatsoever, to file any further claim related to this Change Order. No further

claim or request for equitable adjustment of any type for any reasonably foreseeable cause shall arise out of or as a result of this Change Order or the impact of this Change Order on the remainder of the Work under this Contract."

Costs which shall not be paid in Change Orders under this Contract include, but are not limited to, interest costs of any type; claim preparation or filing costs; legal expenses; the costs of preparing or reviewing proposed Change Orders or Change Order proposals; lost revenue; lost profits; lost income or earnings; rescheduling costs; costs of idled equipment when such equipment is not at the site or has not yet been employed on the Work; lost earnings or interest on unpaid retainage; claims consulting costs; and the costs of corporate officer or staff visiting the site; any compensation due to the fluctuation of foreign currency conversion or exchange rates; loss of other business; changes in taxes or increased tax rates of any kind or any costs identified as unallowable under the provisions of the Federal Acquisition Regulations.

Extensions of time shall be based solely upon the effect of delays to the Work as a whole. Extensions of time shall not be granted for delays to the Work, unless the Contractor can clearly demonstrate, through analysis of the current updated schedule, that the delay to the Work as a whole arose or will arise from causes other than normal weather, beyond the control and without fault or negligence of the Contractor, or any Subcontractor, at any tier, and that such delays will, in fact, delay the progress of the Work as a whole. The Contractor shall not be entitled to a time extension unless it submits a Time Impact Analysis which is a calculation of the extent of the delay to the end date of the Work and which shows that the Work will be extended beyond the current Contract completion date. A Time Impact Analysis is a scheduling procedure which utilizes the networking techniques (fragnets) and a written analysis of the facts associated with the alleged delay to demonstrate the effect of the alleged delay on the critical path of the schedule. A "fragnet" is defined as a sequence of new activities and/or activity revisions that are proposed to be added to the existing current updated schedule to demonstrate (mathematically and graphically) the influence of the alleged delay on the end date of the Work and shall be the sole method for incorporating delays and impacts into the schedule. The objective of a Time Impact Analysis is to pinpoint, isolate, and quantify all time impact associated with a specific issue and determine its time relationship to current or future delays. Time extensions shall not be allowed for delays to parts of the Work that are not on the critical path of the currently approved monthly updated project schedule. Time extensions shall not be granted, nor delay damages of any kind whatsoever paid to the Contractor, until all available float, slack, or contingency time on the project is used and the end date of the Work is moved beyond the current, adjusted Contract completion date.

The cost summary, cost breakdowns and requests for cost reimbursement submitted by the Contractor (for delay, disruption, hindrance and interference associated with the changes, additions, deletions or extras) shall be itemized in a manner that, with mathematical certainty and without reliance upon probabilities or inferences, segregates the direct, actual reimbursable costs associated with each individual, change, addition, deletion, extra and (on an event-by-event basis) each individual delay or disruption event. Such cost summaries, breakdowns or requests shall not be based, in whole or in part, upon any methodology (such as "total cost" or "modified total cost" methodologies) that purports to calculate the Contractor's additional costs of performance of the extra, change, addition or deletion (including without limitation the additional costs of delay, disruption or other impact) based on the difference between Contractor's total actual Project or line item costs (with or without fee) and its original bid estimate for the Project or any original bid estimate line item. In connection with the foregoing, Contractor represents and warrants that it has the ability to generate and maintain complete and

accurate cost accounting records that will reflect (i) the actual costs incurred or saved for each individual item of Extra Work, change, addition, deletion (including without limitation any costs of associated delay, disruption, interference, hindrance and the cumulative impact of each extra, change, addition, deletion on other parts of the Work); and, (ii) on an event-by-event basis, the effect of each delay or disruption that forms the basis of each request for extension of time, regardless of their scope, number, complexity, cumulative effect, or time of issuance or occurrence.

Except as provided in "Temporary Suspension or Delay of Work" of the General Conditions, Contractor shall have no right to recovery of any compensation, costs, expenses or damages resulting from delay, disruption, interference, or hindrance in the performance of the Work (including without limitation interruption of schedules, excess or extraordinary extended field and indirect overhead costs, loss of productivity and the impact, ripple or cumulative effect on other Work).

Contractor waives any claim or rights and remedies based on abandonment, quantum merit, rescission or other similar legal theory by reason of any of the following circumstances, which the Contractor acknowledges and agrees are within the reasonable contemplation of the parties: (i) changes, additions, deletions and extras to the Work after execution of the Contract and issued from time to time throughout the period of construction, regardless of their scope, number, cumulative value, or complexity, to correct errors, omissions, conflicts, and ambiguities in the Contract Documents, or to implement discretionary changes to the scope of Work requested by the City; (ii) the issuance and performance of changes, additions, deletions and extras in a manner that is not in sequence with the as-built or as-planned progress of the Work; (iii) changes due to Differing Site Conditions; (iv) suspensions of the Work or parts thereof, or limitations on access to portions or all of the Work, for the convenience of City or in the interests of the Project; (v) delay or disruption to the Work due to failure of the City, Engineer or Inspector to timely perform any contractual obligation.

E. Markups – Overhead and Profit

1. In addition to the direct expenditures specified for labor, materials and equipment in Subsection B, a fixed markup percentage will be paid for all overhead and profit, including: All insurance costs other than specifically mentioned in this Section, all field and office supervisors and assistants, all onsite project administration, security costs, the cost of small tools and consumables, incidental job burdens, and all general home office expenses and no separate allowance will be made therefor. Assistants to field and office supervisors include all clerical, stenographic, and general office help. Incidental job burdens include, but is not limited to, office equipment and supplies, temporary toilets, telephone, utilities, safety equipment, warning devices, personal protective equipment, and conformance to OSHA requirements. Project administration includes, but is not limited to, review and coordination, estimating, engineering, scheduling, and expediting relative to Change Orders, and updating and furnishing Record Drawings to incorporate changes, schedule update, supervision not applied solely to the Work of the Change Order, home office salaries and expenses, and City of Los Angeles Business Tax. The following maximum markup percentages shall be applied to the total amount of direct expenditures of the Contractor and Subcontractors, as noted in the Change Order Cost Summary Form.

Changed/Extra Work – Direct Costs	Markup Percentage
Contractor Direct Labor	20%
Contractor Direct Materials, Equipment, Other Items	15%
Subcontractor (of any tier) Direct Labor	20%
Subcontractor (of any tier) Direct Materials, Equipment, Other Items	15%
Contractor Administrative Fee for Subcontractor's (of any tier) Direct Labor, Materials, Equipment, Other Items	5%

2. Bonds and Insurance

An additional allowance of one percent (1%) of all direct costs (less markup) is allowed.

3. Add/ Deduct Changes

The overhead rates determined above shall be applied to all additive Change Orders, except those utilizing as-bid Unit Prices or Stipulated prices listed in the Bid Proposal.

Any change in the Work involving both extras and credits shall show a net total cost, including subcontracts. Allowances for overhead and profit to the net total cost, as specified herein above, shall be applied if the net total cost is an extra; overhead and profit allowances shall not be applied if the net total cost is a credit. When the credit is due to a reduction in unit price quantity, the Contractor shall not be entitled to retain the markups in E.1 above for the reduced quantity. The estimated cost of deductions shall be based on labor and material prices on the date the Contract was signed.

F. City Furnished Materials, Equipment and Services

The Engineer reserves the right to furnish materials, equipment and services deemed expedient for use on the Change Order Work. The Contractor shall have no claim for profit or overhead on the cost of such materials, equipment and services.

G. Equipment Costs

The rates for rental or leased equipment shall not exceed the rates listed in the Rental Rate Blue Book (the Blue Book) published by Primedia Information, Inc., San Jose, California, as adjusted to the regional area of the Work under this Contract. For T&M Change Orders, the rates are established by the actual paid invoice(s) that comply with the requirements of Subsections G.1 and G.3. Owned equipment costs shall not exceed the rates established by Subsection G.2. The most recent published edition in effect at the commencement of actual equipment use on Change Order Work shall be used.

The rates paid for any rented or leased equipment or tools shall include the cost of fuel, oil, lubrication, supplies, small tools, necessary attachments, repairs and maintenance of any kind, depreciation, storage, insurance and all incidental costs associated with the operation of the equipment or tools.

It is the responsibility of the Contractor to include any appurtenances added to equipment which would increase the basic rate for said equipment (i.e., hoe-ram, oversize bucket, etc.) as established in the acceptable rental rate guide. All equipment and/ or tools shall be acceptable to the Inspector, in good working condition, suitable for the purpose for which it is to be used, and necessary to complete the Change Order Work. Payment will be based on the manner in which the equipment was actually powered, operated and modified per the equipment manufacturer's recommendations.

1. Rented or Leased Equipment

For equipment rented or leased (including lease with purchase option) in arm's length transactions from outside vendors, the Contractor shall be paid the actual invoiced, rented or leased rates provided that the invoiced lease or rental rates do not exceed the rates set forth in the Blue Book. Arm's length rental or lease transactions are those in which the firm involved in rental or lease of such equipment is not associated with, owned by, have common management, directorship, facilities, or stockholders with the firm renting the equipment. Submittal by a Contractor of a rental or leased invoice from the lessor will be prima facie proof of compliance with the above. However, such invoices are not conclusive proof; if questioned, the burden of proof remains with the Contractor. In no event shall the leased equipment rate billed to the City be at rates exceeding those prescribed in the following table:

Actual Usage (Change Order & Contract Work Combined)	Payment Category
Less than 8 hours	Hourly Rate
8 or more hours but less than 7 days	Daily Rate
7 or more days but less than 30 days	Weekly Rate
30 calendar days or more	Monthly Rate

a. When in Use:

Actual equipment use time documented by the Inspector shall be the basis that the equipment was utilized on the changed work and paid for under the T&M Change Order. In addition to the lease or rental rate, equipment-operating costs shall not exceed the estimated hourly operating rate as set forth in the Blue Book. The hours of operation shall be based upon actual equipment usage on the T&M Change Order Work as recorded by the Inspector. For multiple shift work sequences, the allowable equipment rate shall not exceed fifty percent (50%) of the base rate, for second or third shifts.

b. When Idle:

Idle equipment is equipment on site and necessary to perform the T&M Change Order Work, but periodically not in actual use due solely to the impact of the changed work. Equipment operating costs due to idle time, documented by the Inspector, shall be paid at the rate determined in "G" (1) above. The "ESTIMATED OPERATING COST $/HR" will not be paid when the equipment is idle. Idle time shall include a reasonable time allowance to and from the project site. Payment for equipment necessary to be on the site to complete the Work, but not in actual use due solely to

the impact of the T&M Change Order Work, shall be paid per Caltrans Standard Specifications Section 8-1.07C, provided that its presence and necessity on the site has been documented by the Inspector, and further provided that the equipment was idled solely by actions of the City.

Payment for equipment or tools shall be limited to hours actually used on the T&M Change Order Work if the equipment or tool is already on site for Work under the original Contract. No “standby” time will be paid for equipment already on site for Work under the original Contract.

If equipment or tools are used intermittently and, when not in use, could be returned to the rental source at less expense than holding it at the work site, it shall be returned, unless the Contractor elects to keep it at the work site at no expense to the City.

2. Owned and Other Equipment

Equipment rates for owned equipment or equipment provided in other than arm's length transactions shall not exceed the total hourly costs as set forth in the Caltrans “Labor Surcharge and Equipment Rental Rates” effective at the time the T&M Change Order Work is performed. (The Caltrans equipment rental rates are available on the internet at http://www.dot.ca.gov/hq/construc/equipmnt.html.) If the equipment is not listed in Caltrans, then the Rental Rate Blue Book shall be used. When using the Blue Book, the hourly rate for any period less than 7 days shall be the weekly rate divided by 40, plus the Operating Cost. Except as noted herein below, this equipment hourly rate plus the estimated operating cost per hour from the Blue Book will be paid for each hour the equipment actually performs the T&M Change Order Work. Daily records listing the equipment units and their respective operators, identification code, and actual usage on the T&M Change Order Work, as certified at the end of each work day (or work shift if the Work is being performed in multiple work shift sequence) by the Inspector shall be the record upon which actual equipment use shall be based. For multiple shift work sequences, the Caltrans overtime factor shall be applied. When using the Blue Book, one-half the Non-Operating Cost will be deducted for second and third shifts. The Non-Operating Costs are the Blue Book monthly or weekly/40 rates, as applicable. It is agreed that this rate shall represent payment in full for all the Contractor’s and Subcontractor’s direct costs.

a. When Idle:

Payment for equipment necessary to be on the site to complete the Work, but not in actual use due solely to the impact of the changed work, shall be paid per Caltrans Standard Specifications Section 8-1.07C, provided that its presence and necessity on the site has been documented by the Inspector, and further provided that the equipment was idled solely by actions of the City. (When using the Blue Book the payment for idle time shall not exceed fifty percent (50%) of the Non-Operating Cost.) Idle equipment time will only be paid as a function of delays specifically directed or caused by the City's actions. In no event shall the idle time claimed in a day for a particular piece of equipment exceed the normal work schedule established for the project - usually eight (8) hours per day or forty (40) hours per week, and excluding Saturdays, Sundays, and holidays. For multiple shift work sequence, the allowable idle equipment rate shall not be allowed, for second or third shifts. It is agreed that this

rate shall represent payment in full for all the Contractor's and Subcontractor's direct costs.

3. Equipment Haulage and Set-up Costs

Documented and actual equipment haulage and set-up costs shall be paid for, if applicable as set forth in Subsection B.3.

4. Other Equipment Cost Guides

In the event that a piece of equipment used on a Change Order is not listed in Caltrans or the Blue Book, costs may be derived from the Associated General Contractor's of America Equipment Ownership Guide, the Associated Equipment Dealers Guide, or the Equipment Rate Guide published by the U.S. Army Corps of Engineers as adjusted appropriately for the type of work and use and the regional area of the Work under this Contract.

H. Records

At any time should the Contractor deviate substantially from the schedule, method and sequence of operation, equipment, cost or pricing data furnished by the Contractor and agreed to by the City in connection with the Change Order or should the City determine that any price negotiated in connection with the Change Order is defective due to such deviation or the fault of the Contractor, the City reserves the right to reduce the Change Order cost and reissue the Change Order at the amount in which the City determines to be the actual costs to complete the Change Order Work.

Whenever any material or process is indicated or specified by patent or a proprietary name, or by name of a manufacturer in the Change Order, such direction shall not relieve the Contractor's responsibility or obligation to perform Work in accordance with the Contract requirements. The Contractor shall be solely responsible for, and have control over construction means, methods, techniques, sequences and procedures, coordination of all portions of the Contract and Change Order Work.

The Contractor shall on a weekly basis submit an approximate accounting of the amount expended on the T&M Change Order Work to date and an estimate of the Impact to the time of performance of the Contract Work.

I. Partial Payments for Time and Materials Change Order Work.

Progress payments for T&M Change Order Work shall only be made if the anticipated cost of the changed work is in excess of $100,000 and/or the time to perform the changed work will exceed two (2) months duration. To receive payments for T&M Change Order Work, the Contractor shall submit to the Engineer an invoice of the daily reports which were verified by the Inspector, with details and documents, verifying the Contractor's and Subcontractor's actual costs incurred for the T&M Change Order Work as set forth in Subsections B through H. Costs shall be submitted within thirty (30) calendar days after the T&M Change Order Work has been satisfactorily completed unless an extension of time for submittal is authorized in writing by the Inspector.

J. Field Office Overhead - Rate Per Day:

Subject to the provisions of this Subsection and "Temporary Suspension or Delay of Work" of General Conditions, for each day of approved time extension due solely to

extras, changes, and additions to the Work, Contractor shall be entitled to compensation for additional Daily Field Office Overhead as set forth herein. As a further condition to the Contractor's right to such additional compensation, the Contractor shall submit a detailed listing of the Daily Field Office Overhead cost components which are time related. The individual cost components shall represent costs which have been or will be incurred or increased as a sole or direct result of the time extension. This listing may include, but is not limited to, onsite project management, supervision, engineering, and clerical salaries; onsite office utilities and rent; onsite company vehicles and their operating expenses; site maintenance and security expenses. Daily Field Office Overhead costs which are unaffected by the increased time or time extension in the Change Order shall not be allowable costs of the Daily Field Office Overhead rates. These cost components include, but are not limited to, acquisition and installation of plant, stationary equipment, temporary construction facilities, utilities and office furnishings (unless such items are rented or leased); the preparation of the site including clearing, grubbing, grading, and fencing; and mobilization and demobilization expenses. The listing of the Daily Field Office Overhead cost components described above must be based on the Contractor's actual Field Office Overhead costs. This listing must be submitted with the first Change Order proposal that includes a time extension request per Subsection D. If the Contractor's time related Daily Field Office Overhead cost changes for subsequent compensable delays, then the Contractor shall submit a new Daily Field Office Overhead rate based on the Contractor's time related Daily Field Office Overhead costs at the time of the subsequent delay. If change order work is performed during a compensable delay, any Daily Field Office Overhead costs paid by that change order shall be deducted from the compensation owed for additional Daily Field Office Overhead during the same time period.

The Daily Field Office Overhead rate shall be multiplied by the number of days the Contract is to be extended in the Change Order, and shall then be added to the agreed upon costs of the Change Order. No markup for overhead costs and no profit allowance shall be allowed on the Extended Daily Field Office Overhead cost component of the Change Order. The derivation of an extended home office overhead rate and its application to Contract time extensions shall not be allowed.

The information submitted above shall be submitted in sufficient detail to allow review, and shall be prepared in accordance with generally accepted accounting principles and applicable portions of the Federal Acquisition Regulations. The Engineer shall have the right to have an audit of the Contractor's costs performed, at the Contractor's sole expense, if the costs submitted are considered by the Engineer to be excessive, questionable, or unsupported. The overhead rates determined above shall be applied to all additive Change Orders, except those utilizing original as-bid unit prices under Subsection A.

(END OF SECTION)

SECTION 01255
PRICE REDUCTION FOR DEFECTIVE COST OR PRICING DATA

1.1 THE REQUIREMENT

A. If the ENGINEER determines that any price, including profit or fee, negotiated in connection with any Change Order under this Contract, or any cost reimbursable under this Contract, was increased because:

1. the CONTRACTOR furnished cost or pricing data which was not accurate, complete, and current as certified in the CONTRACTOR'S Certificate of Current Cost or Pricing Data;

2. a Subcontractor or prospective Subcontractor furnished cost or pricing data was submitted in support of a subcontract cost estimate furnished by the CONTRACTOR but which was not accurate, complete, and/or current as of the date certified in the CONTRACTOR'S Certificate of Current Cost or Pricing Data; or,

3. the CONTRACTOR or a Subcontractor or prospective Subcontractor, at any tier, furnished any data not within subsection 1.1A(1) or 1.1A(2),above, which was not accurate as submitted;

then the price shall be reduced accordingly, and the Contract shall be modified in writing as may be necessary to reflect such reduction. However, any reduction in the Contract price due to defective subcontract data of a perspective Subcontractor, when the subcontract was not subsequently awarded to such Subcontractor, will be limited to the amount (plus applicable overhead and profit allowances) by which the actual subcontract or actual cost to the CONTRACTOR if there was no subcontract, was less than the prospective subcontract cost estimate submitted by the CONTRACTOR; provided that the actual subcontract price was not affected by defective cost or pricing data.

B. The following certification from the CONTRACTOR is required to be provided on all Change Order quotations or requests for equitable adjustment in excess of ten-thousand dollars ($10,000).

CERTIFICATION OF CURRENT COST
AND PRICING DATA

This is to certify that, to the best of my knowledge and belief, cost or pricing data submitted in writing, or specifically identified in writing if actual submission of the data is impracticable, to the CITY in support of [CONTRACTOR is to insert appropriate identification such as Change Order quotation, proposal quotation, price adjustment, etc.] are accurate, complete, and current as of [CONTRACTOR to insert date].

CONTRACT NO.: _____
PROPOSED CHANGE ORDER NO.: _____
FIRM: _____
NAME: _____
TITLE: _____
DATE: _____
SIGNATURE: _____

(END OF SECTION)

SECTION 01270
MEASUREMENT OF QUANTITIES FOR UNIT PRICE WORK

1.1 THE REQUIREMENT

A. General

1. Unless otherwise specified, quantities of work shall be determined from measurements or dimensions in horizontal planes. However, linear quantities of pipe, piling, fencing and timber shall be considered as being the true length measured along longitudinal axis.

2. Unless otherwise provided in Specifications, volumetric quantities shall be the product of the mean area of vertical or horizontal sections and the intervening horizontal or vertical dimension. The planimeter shall be considered an instrument of precision adapted to measurement of all areas.

B. Methods of Measurement

1. Materials and items of Work which are to be paid for on basis of measurement shall be measured in accordance with methods stipulated in the particular sections involved.

C. Certified Weights

1. When payment is to be made on the basis of weight, the weighing shall be done on certified platform scales or, when approved by the ENGINEER, on a completely automated weighing and recording system. The CONTRACTOR shall furnish the ENGINEER with duplicate licensed weighmaster's certificates showing actual net weights. The CITY will accept the certificates as evidence of weights delivered.

D. Units of Measurement

1. Measurements shall be in accordance with Section 01420 – UNITS OF MEASURE of the GENERAL REQUIREMENTS. A metric ton or "tonne" is equal to 1,000 kilograms and the unit of liquid measure is a Liter (in U.S. Standard Measures, a pound is an avoirdupois pound; a ton is 2,000 pounds avoirdupois; and the unit of liquid measure is a gallon).

(END OF SECTION)

SECTION 01291
NOTICE TO WITHHOLD AND/OR STOP NOTICE

1.1 THE REQUIREMENT

A. When a "Notice to Withhold" or "Stop Notice" is served upon the CITY, or the Board, pursuant to the lien statutes of the State of California, to withhold sufficient funds from payments to the CONTRACTOR in support of a claim resulting from default by the CONTRACTOR in payment for labor or materials used in prosecution of the Contract, the CITY shall withhold from payment due the CONTRACTOR an amount of money equal to the amount of the claim stated in the "Notice to Withhold" or "Stop Notice," and an additional amount equal to twenty-five percent (25%) of the amount of said claim, to defray the costs of litigation in the event of court action on the claim, for a total withholding of one and one quarter (1-1/4) times the stated amount of the claim. At the discretion of the CITY, the CITY may allow the CONTRACTOR to file with the CITY the bond referred to in the Civil Code of the State of California after which said monies will not be withheld on account of such "Notice to Withhold" or "Stop Notice."

B. In the event the Contract is terminated for CONTRACTOR default, any funds due the CONTRACTOR and retained by the CITY in accordance with SECTION 01292 -PAYMENTS of these GENERAL REQUIREMENTS, shall become the property of the CITY to the extent necessary to repay to the CITY any excess in the Contract Price above the cost of the Work completed at the time of termination. After issuance of Notice To Discontinue Work, no further payments will be made to the CONTRACTOR for the Work covered by the notice until completion of work and final settlement has been made.

(END OF SECTION)

SECTION 01292
PAYMENTS

1.1 PAYMENT FOR MOBILIZATION

A. Payment for mobilization shall be limited to those items of work described in MOBILIZATION of these GENERAL REQUIREMENTS. Whether Mobilization is included as a Contract Bid Item in the Bid Proposal Form or specified as part of the lump sum in the Contract Documents, the amount shall include full compensation for furnishing the labor, materials, tools, equipment and incidentals for all of the Work involved in mobilization in advance of construction operations. The CONTRACTOR shall submit to the ENGINEER for approval the Contract Price Breakdown with the amount established for mobilization.

B. The CONTRACTOR shall submit to the INSPECTOR for approval a breakdown of the amount established for mobilization. Total payment (100%) for obtaining insurance and bonds will be made upon proof of payment for those items. The payment for all other items of mobilization will be made when those items of mobilization have been completed and as specified below:

1. When the monthly partial payment estimate of the amount earned, not including the amount earned for mobilization, is five percent (5%) or more of the original Contract amount, the total amount earned for mobilization may be up to fifty percent (50%) of the Contract item price for mobilization. This amount will be included in the said estimate for payment.

2. When the monthly partial payment estimate of the amount earned, not including the amount earned for mobilization, is ten percent (10%) or more of the original Contract amount, the total amount earned for mobilization may be up to seventy-five (75%) of the Contract item price for mobilization. This amount will be included in the said estimate for payment.

3. When the monthly partial payment estimate of the amount earned, not including the amount earned for mobilization, is twenty percent (20%) or more of the original Contract amount, the total amount earned for mobilization may be up to ninety-five percent (95%) of the Contract item price for mobilization. This amount will be included in the said estimate for payment.

4. When the monthly partial payment estimate of the amount earned, not including the amount earned for mobilization, is fifty percent (50%) or more of the original Contract amount, the total amount earned for mobilization may be up to one hundred percent (100%) of the Contract item price for mobilization. This amount will be included in the said estimate for payment.

C. The adjustment provisions in CHANGE ORDERS of these GENERAL REQUIREMENTS, and the retention of funds provisions in this Section, shall not apply to the Contract lump sum item for Mobilization.

D. When other Contract items are adjusted as provided in CHANGE ORDERS of these GENERAL REQUIREMENTS, if the costs applicable to such item of work include mobilization costs, such mobilization costs will be deemed to have been recovered by the CONTRACTOR by the payments made for mobilization and will be excluded from consideration in determining compensation under said Article.

E. When the Contract does not include a Contract pay item for mobilization as specified above, full compensation for any necessary mobilization required shall be considered as included in the prices paid for the various Contract items of work involved and no additional compensation will be allowed.

1.2 PAYMENT FOR PERMITS

A. The Contractor shall obtain and pay for all permits necessary for performance of the Work in accordance with the provisions of PERMITS AND CONSTRUCTION EASEMENTS of the GENERAL CONDITIONS. If the Bid Proposal provides an allowance for Permits, the CONTRACTOR shall include in the Bid the amount stipulated under PERMITS in the SCHEDULE OF WORK AND PRICES in the Bid Proposal as an allowance for the costs of all required permits. Costs shall be limited to the actual fees paid to the agencies and will be reimbursed based on original receipts only and no overhead or profit shall be added to the cost of the permits. The CONTRACTOR shall deliver to the ENGINEER with each permit the original receipt. After all permits have been obtained and delivered, the actual costs of all permits shall be reviewed by the CONTRACTOR and the ENGINEER. If the total costs differ from the amount set forth in the SCHEDULE OF WORK AND PRICES, the Contract Price shall be adjusted by a Change Order for the difference between the total actual costs and the amount included in the Bid, as an additional amount due the CONTRACTOR or a credit to the CITY, as appropriate.

1.3 MONTHLY PROGRESS PAYMENTS

A. General

1. The quantities listed in the Bid schedule will not govern final payment. Payment to the CONTRACTOR will be made only for actual quantities of Contract items constructed in accordance with the Plans and Specifications. Upon completion of construction, if the actual quantities show either an increase or decrease from the quantities given in the Bid schedule, the Contract Unit Prices will prevail subject to the provisions of CHANGE ORDERS of these GENERAL REQUIREMENTS.

2. The unit and/or lump sum prices to be paid shall be full compensation for the items of work and all appurtenant work, including furnishing all materials, labor, equipment, tools, and incidentals.

3. Payment will not be made for materials wasted or disposed of in a manner not called for under the Contract. This includes rejected material not unloaded from vehicles, material rejected after it has been placed, and material placed outside of the Plan lines. No compensation will be allowed for disposing of rejected or excess material.

4. Payment for work performed or materials furnished under an Assessment Act Contract will be made as provided in particular proceedings or legislative act under which such Contract was awarded.

5. Whenever any portion of the Work is performed by the CITY at the CONTRACTOR'S request, the cost thereof shall be charged against the CONTRACTOR, and may be deducted from any amount due or becoming due from the CITY.

6. Whenever immediate action is required to prevent injury, death, or property damage, and precautions which are the CONTRACTOR'S responsibility have not been taken and are not reasonably expected to be taken, the CITY may, after reasonable attempt to notify the CONTRACTOR, cause such precautions to be taken and shall charge the cost thereof against the CONTRACTOR, or may deduct such cost from any amount due or becoming due from the CITY. CITY action or inaction under such circumstances shall not be construed as relieving the CONTRACTOR or its Surety from liability.

7. Guarantee periods shall not be affected by any payment, but shall commence on the date equipment or material is placed into service at the direction of the CITY. In the event such items are not placed into service, prior to partial or final completion of the project, the guarantee period will commence on the date of completion.

8. If the Contract comprises two or more major units of work readily separable and divisible, and for which separate prices are stipulated in the Contract, the CONTRACTOR may make separate requests for progress payment on each such unit, and the CITY will make such progress payments, statement of completion, acceptance, retention, and final payment in accordance with the procedure specified above for the entire Contract.

9. The making of any payment to the CONTRACTOR under this Contract shall not relieve the CONTRACTOR of any obligations hereunder. The CONTRACTOR is obligated to complete the Contract in its entirety and to deliver to the CITY such acceptably completed work, finished product or structure as is specified in the Contract, at the time or times specified. Until this Contract is fully performed by the CONTRACTOR, and the Work, product, or structure produced thereby is accepted by the CITY, the CONTRACTOR shall also be obligated to repair, replace, restore, or rebuild any fully or partially completed work or structure, or any materials or equipment required to be provided under the Contract which may be damaged, lost, stolen, or otherwise injured in any way. This particular obligation of the CONTRACTOR, with respect to any major unit of the type mentioned in this Section, will terminate upon the completion by the CONTRACTOR and acceptance by the CITY of such major unit.

B. Monthly Request for Payment

1. Unless otherwise prescribed by law, three (3) working days prior to the last work day of each month, or other such date mutually agreed upon by the CONTRACTOR and the INSPECTOR, the CONTRACTOR shall prepare and submit to the INSPECTOR, an estimate of the cumulative

amount and value of acceptable Work performed by the CONTRACTOR at the Jobsite up to that date. The value of the completed Work shall be based on the approved Schedule of Values in accordance with the provisions of SCHEDULE OF VALUES/CONTRACT PRICE BREAKDOWN of these GENERAL REQUIREMENTS. Said amount shall also include the value of all acceptable materials and equipment for the Contract that have been delivered and suitably stored but not yet used in the Work, subject to the requirements of this Section.

2. The CONTRACTOR will be required to make all monthly requests for payment on the CITY'S Contract Payment Request Form. CONTRACTOR shall submit Contract Payment Request Form with the approved Payment Request estimate of work to the INSPECTOR. That form requires that the CONTRACTOR certify, under penalty of perjury, to the following:

   a. No workers were required or permitted to work more than eight (8) hours in any one calendar day, except in cases of emergency, and except as provided by law.

   b. Not less than the prevailing rates of wages, as set forth in the Contract for this Work, have been paid all laborers, workers, and mechanics employed to perform this Work.

   c. There were no substitutions of Subcontractors, no assignment or transferences of Subcontractors or Sub-Subcontractors, except as approved by the Board of Public Works.

   d. All of the provisions of Los Angeles Administrative Code, Section 10.8, pertaining to non-discrimination in employment have been complied with.

C. Payments for undelivered equipment, specifically manufactured equipment to be incorporated into the Work, excluding "off the shelf" or catalog items, will be made when all of the following conditions exist:

   1. The equipment must be specifically designated in the Technical Specifications for partial payment prior to delivery,

   2. The equipment to be specifically manufactured for the Project could neither be readily utilized on, nor diverted to, another job; and,

   3. A fabrication period of more than six (6) months is anticipated.

D. On lump-sum Contracts the INSPECTOR'S estimate of the monthly payment due the CONTRACTOR is an estimate of work acceptably completed and will not be required to be made by strict measurement.

E. Upon verification and approval by the INSPECTOR, the progress payment estimate shall be forwarded to the Payment Section of the Bureau of Contract Administration for processing.

F. Payment to the CONTRACTOR shall be made within 30 days after an undisputed and properly submitted payment request is received from the CONTRACTOR by the Bureau of Contract Administration Payment Section.

G. The CITY shall retain a portion of the amount otherwise due to the CONTRACTOR, as follows:

1. Retention of five percent (5%) will be held on the original Contract value on each approved payment claim until the amount paid of the original Contract equals fifty percent (50%). The INSPECTOR may then, at its sole discretion, discontinue further retention on the original Contract value for all subsequently approved payment claims.

2. At any time during the course of the Contract, the INSPECTOR may, at its sole discretion, reinstate the five percent (5%) retention.

3. In the event the Contract is terminated for CONTRACTOR default, any funds due the CONTRACTOR and retained by the CITY in accordance with these provisions, shall become the property of the CITY to the extent necessary to repay to the CITY any excess in the Contract Price above the cost of the Work completed at the time of termination. After issuance of Notice To Discontinue Work, no further payments will be made to the CONTRACTOR for the Work covered by the notice until completion of work and final settlement has been made.

H. Additional deductions will be made from each monthly payment request for amounts due the CITY as follows:

1. Equipment or materials furnished by the CITY.

2. Services rendered to the CONTRACTOR by the CITY.

3. Amounts due the CITY for liquidated damages under the terms of the Contract.

4. Amounts required to be deducted by federal, state, or local governmental authority or other provisions of these Contract Documents.

I. From the balance thus determined will be deducted the amount of all previous payments, and the remainder shall constitute the monthly payment due the CONTRACTOR.

J. The monthly payments may be withheld or reduced, for the following reasons:

1. If the CONTRACTOR is not diligently or efficiently complying with the express intent of the Contract;

2. If there are unresolved Notices of Non-Compliance;

3. If Technical Manuals are not submitted;

4. If Record Drawings are not kept up-to-date;

5. If progress photographs are not submitted;

6. If construction schedules are not submitted in accordance with these General Requirements; or

7. If the Solid Waste Diversion and Disposal Report is not submitted with progress payment estimate.

8. Failure of the CONTRACTOR to maintain insurance as required by the CONTRACT.

9. Upon written request of the ENGINEER.

K. The CONTRACTOR shall promptly submit the following in response to requests by the INSPECTOR:

1. All information and records necessary to determine the cost of the Work for purposes of estimating monthly payment.

2. All itemized statements, in a form satisfactory to the INSPECTOR, of the actual cost of all acceptable materials delivered by the CONTRACTOR to the site.

L. The making of any payment to the CONTRACTOR shall not relieve the CONTRACTOR from Contractual obligations. These payments shall not be construed as the transfer of ownership of any equipment or materials to the CITY.

M. Responsibility of ownership shall remain with the CONTRACTOR who shall be obligated to store, protect, repair, replace, rebuild or otherwise restore any fully or partially completed work or structure for which payment has been made. The CONTRACTOR shall replace any materials or equipment required to be provided under the Contract which may be damaged, lost, stolen, or otherwise degraded in any way prior to acceptance of the Work under the Contract.

N. Escrow Account for Retention Payments

1. Under Section 22300 of the Public Contract Code, the CONTRACTOR has the option to deposit securities with an Escrow Agent as a substitute for the CITY withholding the required five percent (5%) retention from progress payments to ensure performance of any contract entered into between the CITY and the CONTRACTOR. Provided adequate value of securities is on deposit with the Escrow Agent, retention payments are then made directly to the CONTRACTOR by the CITY. As an option, Section 22300 also permits the CONTRACTOR to have retention payments made directly to the Escrow Agent, with no requirement for the CONTRACTOR to deposit securities with the Escrow Agent. If the CONTRACTOR requests neither of the above alternatives, the retention funds will be retained by the CITY and invested by the City Treasurer, in which case, interest earned will accrue to the benefit of the CITY.

2. Under the terms of the Escrow agreement, the CONTRACTOR has the option to arrange to deposit securities up front for up to the full five percent (5%) of the total amount of the Contract (Option “A”), or to have

the CITY make payments directly to the Escrow Agent for the amount the CITY withholds for the required retentions with no requirement for the CONTRACTOR to deposit securities in advance (Option "B"). These arrangements are set forth in the Escrow Agreement.

3. At the CONTRACTOR'S request, the Bureau of Accounting will provide the necessary paperwork to establish the Escrow Account. For information contact:

City of Los Angeles
Office of Accounting
200 N. Spring Street
9th Floor, City Hall
Los Angeles, CA 90012
(213) 978-0994

1.4 PAYMENT FOR MATERIALS OR EQUIPMENT DELIVERED AND STORED ON THE JOBSITE

A. Materials and/or equipment are eligible for partial payment when delivered and stored at the Worksite as follows:

1. Each individual piece of the material or equipment must be valued at $5,000 minimum.

2. The materials and equipment are intended for permanent installation.

3. The materials or equipment are specifically delineated in the Contract, specially manufactured for this project and not readily useable on other projects.

4. The CONTRACTOR shall store the materials and equipment as required in STORAGE OF MATERIALS AND EQUIPMENT in these GENERAL REQUIREMENTS.

5. Living, perishable, degradable or standard stocked items are ineligible.

B. The partial payment is limited to the lesser of 1) Ninety-five percent (95%) of the invoice cost, or 2) The bid item amount less an estimate by the City for installation.

C. The CONTRACTOR shall include cost-loaded scheduling activities for items of material and equipment that the CONTRACTOR intends to request "Partial Payment for Materials or Equipment Delivered and Stored on the Job Site".

D. The CONTRACTOR shall provide all documentation necessary to establish the cost of such materials and equipment for the "Schedule of Values".

E. Prior to start of Work, the CONTRACTOR shall provide the INSPECTOR with a list of all materials or equipment proposed to receive partial payment under the provisions of this Article, along with its supplier, fabricator or manufacturer.

F. Change orders and/or time extensions will not be issued for any costs or impacts related to compliance with this section, including documentation, special

handling, or special storage.

1.5 PAYMENT FOR MATERIALS OR EQUIPMENT STORED OFF THE JOBSITE

A. Partial payment for materials or equipment stored off the Jobsite shall be subject to the following conditions:

1. Payment will not be made for any materials or equipment unless each individual piece of the material or equipment becomes a permanent part of the Work and has a value of more than $5,000.

2. The materials and/or equipment are required by the Specifications, and are specifically manufactured for the Project and could not readily be utilized or diverted to another job.

3. No payment will be made for living or perishable plant material, or for degradable materials such as rock, sand, cement, or for reinforcing steel, miscellaneous piping, off the shelf and catalog items, or similar items, until they are incorporated into the Work.

4. Payment for the materials or equipment stored shall not exceed sixty percent (60%) of the invoice cost of the materials or equipment. Percent of the invoice paid shall be at the discretion of the CITY. The amount paid shall not exceed the total amount of the Bid item less an amount estimated for installation.

B. The CONTRACTOR shall include cost loaded activities for the materials and equipment, for which payment will be requested, in the Schedule of Values. The CONTRACTOR shall provide all documentation necessary to establish the cost of the materials or equipment.

C. All suppliers, fabricators, or manufacturers who intend to furnish materials or equipment to the CITY must file a notice with the CITY in accordance with the State of California lien laws.

D. Each supplier, fabricator or manufacturer shall file a list, with the INSPECTOR, indicating the materials or equipment to be furnished to the Project. They shall also provide a notarized declaration from their company indicating the employees authorized to sign an unconditional release for the company. The persons signing the declaration and the unconditional release shall be identified by name and title.

E. Each request for payment shall include a notarized Unconditional Release that conforms to the California Civil Code for no less than 60% of the invoice cost of the materials or equipment. The release shall be signed by an authorized employee identified in the corporate declaration. The request shall include the suppliers invoice for the materials or equipment.

F. The CONTRACTOR shall store the materials and equipment as required in STORAGE OF MATERIALS AND EQUIPMENT of these GENERAL REQUIREMENTS, in a bonded warehouse or facility approved by the INSPECTOR. The storage site shall be located within fifty (50) miles of the geographic limits of the CITY. The materials and equipment shall be physically segregated from all other materials or equipment within the facility and shall be

identified as being the "PROPERTY OF THE CITY OF LOS ANGELES". The CONTRACTOR shall exercise all measures necessary to ensure preservation of the quality, quantity, and fitness of such materials or equipment and shall perform the manufacturers' recommended maintenance of the materials or equipment. The CONTRACTOR shall inspect the materials and equipment, and submit a monthly written report to the INSPECTOR listing all the equipment stored, results of their inspection, and the maintenance performed.

G. The CONTRACTOR shall grant the INSPECTOR and the ENGINEER access to the storage facility at any time and assist the INSPECTOR and the ENGINEER in conducting a full view, piece by piece, inventory of all such material or equipment.

H. The CONTRACTOR shall provide all additional insurance necessary to insure the materials or equipment against loss of damage. The insurance provided shall be provided as stated in INSURANCE of the GENERAL CONDITIONS. The insurance shall cover the material or equipment, while stored at the approved site, while in transit to the Jobsite, while being off-loaded at the site and until the material or equipment is incorporated into the Work and the CONTRACT is accepted by the BOARD.

I. The CONTRACTOR shall be responsible for any damage to, defects therein, mis-fabrication thereof, or loss of the materials or equipment.

J. The CONTRACTOR shall be responsible for any resulting project delays or consequential damages as if the CONTRACTOR were the owner of the material or equipment until it is incorporated in the Work and accepted by the CITY.

K. The CONTRACTOR shall absorb any and all cost incurred to meet the requirements of this article without modification in the Contract amount.

L. The CONTRACTOR shall present the storage arrangements in writing and sign a Security Agreement, which shall be submitted to the INSPECTOR for approval by the City Attorney. This agreement shall set forth the terms of ownership, storage and insurance necessary to insure the material or equipment against damage or loss.

1.6 FINAL PAYMENT

A. Final Payment of all monies owed the CONTRACTOR shall be made within 60 days of the date of Final Field Acceptance by the Final Inspector after deducting all prior payments and all amounts to be withheld under the provisions of the Contract, including the following items:

1. Liquidated damages, as applicable;

2. "Disputed Funds" including, but not limited to, the following:

a. Penalty and/or restitution for failure of the CONTRACTOR to pay prevailing wages as required by the contract.

b. Penalty for failure of the CONTRACTOR to receive approval of all Subcontractor(s) prior to said Subcontractor working on the project.

c. Penalty for failure of the contractor to receive approval for Subcontractor substitution(s).

d. Penalty for failure of the contractor to receive approval for a reduction in the dollar amount paid a bid-listed and/or approved Subcontractor;

3. Lien claims or Stop Notices filed on behalf of suppliers, Subcontractors, and labor performed in connection with the project; except, that upon submittal of a Stop Notice Release Bond issued by an approved Surety Company executed in favor of the CONTRACTOR, the CITY will release such portion of the retained funds to said CONTRACTOR that is being held solely to cover Stop Notice Claims.

B. No claim of the CONTRACTOR under this Article shall be allowed unless the CONTRACTOR has given the required written notice. Nor shall a claim by the CONTRACTOR for an equitable adjustment hereunder be allowed if asserted after final payment under this Contract.

C. The acceptance by the CONTRACTOR of final payment and retention shall release the CITY, its officers, agents, representatives or employees, as representatives of the CITY, from all claims and all liability to the CONTRACTOR for all matter in connection with the Work and all acts of the CITY relating to or arising out of the Work.

(END OF SECTION)

SECTION 01298
SCHEDULE OF VALUES / CONTRACT PRICE BREAKDOWN

1.1 THE REQUIREMENT

A. The Schedule of Values shall be used as a basis for determining progress payments on a lump sum contract or any designated lump sum bid item. The Schedule of Values shall be a schedule of cost loaded construction activities equal, in total, to the lump sum bid and shall be in such form and sufficient detail to correctly represent a reasonable apportionment of the lump sum. Prior to submitting an invoice for payment, the CONTRACTOR shall have submitted a detailed Schedule of Values and obtained approval from the INSPECTOR.

B. Each lump sum bid item on the Schedule of Work and Prices, as set forth in the Bid must be broken down separately. The breakdown of each lump sum bid item must cover the cost of construction required by the Drawings and Project Manual for that item. The sum of the values for the construction activities, within a bid item, must equal the total bid amount for that item. The breakdown shall include subcontract amounts which shall not deviate from the amounts submitted in the Bid Proposal. The CONTRACTOR shall provide certification from the Subcontractors certifying the subcontract amounts.

C. Each activity in the Schedule of Values shall delineate one construction activity. For example, the placement of concrete between construction joints, the construction of an electrical duct bank or pipeline between points A & B. The costing for each activity should include all costs for the labor and materials or equipment required to complete the activity. For example, concrete construction activities should include all costs for the forming, placing of reinforcement, placing concrete and curing. The cost for pipeline construction activities should include materials, equipment and installation including pipeline supports or thrust blocks. The excavation and backfill for a pipeline or structure may be separate activities. The Contract Price breakdown shall include the itemized costs for the plant establishment and any maintenance services to be performed before the final project acceptance is made. No non-construction activity shall be cost loaded.

D. The CONTRACTOR shall use cost loaded construction activities from the Construction Schedule as a Schedule of Values. Each construction activity shall be encoded to its bid item and a sort provided for each bid item totaling the cost loaded amount. The total of the Cost Loaded amounts for each bid item shall equal the amount bid for that item. The total of the Schedule of Values shall equal the current Contract value at all times. At any time during the progress of the Work of the Contract the INSPECTOR reserves the right to review the cost loading of the Schedules of Values and direct necessary revisions. When requested by the INSPECTOR, the CONTRACTOR shall provide all information necessary to substantiate the cost loading.

(END OF SECTION)

SECTION 01311
PRECONSTRUCTION SAFETY CONFERENCE

1.1 THE REQUIREMENT

A. The CONTRACTOR's Project Manager, Project Engineer, Safety Coordinator and Superintendent(s) shall attend a Pre-Construction Safety Conference conducted by the INSPECTOR and the ENGINEER. The CONTRACTOR will be informed of the date, time, and location of the Pre-Construction Safety Conference by the ENGINEER. The Pre-Construction Safety Conference shall take place within twenty-one (21) calendar days after Notice of Award and prior to the start of any Work at the site. The CONTRACTOR shall select additional personnel from its field staff, vendors, suppliers, and manufacturers, and from every Subcontractor, at any tier, to attend the Pre-Construction Safety Conference.

B. The CONTRACTOR shall provide to the ENGINEER and the INSPECTOR, at the Pre-Construction Safety Conference, the following documents:

1. Injury and Illness Prevention Program which shall address site specific concerns and shall also Include the following, as a minimum:

   a. Occupational Injury and Illness Investigation and Reporting System, including a system for providing all injury reports to the INSPECTOR and the ENGINEER.

   b. Safety Inspection System.

   c. Hazard Communication Program.

   d. Methods of identifying hazards including a procedure for notifying the INSPECTOR and the ENGINEER when a hazard is identified.

   e. Training Documentation System.

   f. Safety Communication and Remediation Procedures.

   g. Other specific safety activities which pertain to the Work.

2. Identification of person(s) responsible for safety of this site, who will be assigned to the site during the performance of the work, for the CONTRACTOR and all Subcontractors at any tier.

3. Emergency Action and Fire Prevention Plan.

4. Hazardous Materials Procurement, Storage, Handling, Waste Control and Disposal Procedures.

   a. The CONTRACTOR's Lock Out/Tag Out, Confined Space Entry, Hazardous Materials/Waste Control and all other site specific safety programs shall meet or exceed the Bureau of Sanitation's

standards for this site. These standards are available to the CONTRACTOR upon request from the ENGINEER.

5. It shall be the CONTRACTOR's responsibility to assure that all field forces know and obey all safety and emergency procedures to be maintained at the job site. The CONTRACTOR shall further assure that a supervisor is present at all times during any field work who is knowledgeable of and responsible for the enforcement of the CONTRACTOR's required safety procedures.

(END OF SECTION)

SECTION 01312
PROJECT MEETINGS

PART ONE - GENERAL

1.1 DESCRIPTION

A. Work Included:

1. Required to enable orderly review during pre-installation conference and progress of Contracted Work, and to provide for systematic discussion of installation problems and other construction problems arisen, the ENGINEER will conduct project meetings throughout the construction period. Conform to the Pre-Construction Scheduling Conference and Project Schedule Review Meeting provisions in Section 01321 – CONTRACTOR'S CONSTRUCTION SCHEDULE AND REPORTS of the GENERAL REQUIREMENTS.

B. Related Work:

1. Documents affecting work of this Section include, but are not necessarily limited to, GENERAL CONDITIONS, DIVISION 1 - GENERAL REQUIREMENTS

2. The CONTRACTOR'S relations with his Subcontractors and materials suppliers, and discussions relative thereto, are the CONTRACTOR'S responsibility and normally are not part of project meetings content.

3. Pretesting Procedural Conference in Section 01453 – SAMPLING, TESTING AND FABRICATION INSPECTION of the GENERAL REQUIREMENTS.

4. CONTRACTOR'S CONSTRUCTION SCHEDULE AND REPORTS in Section 01321 of the GENERAL REQUIREMENTS.

1.2 SUBMITTALS

A. Conform to provisions of Section 01330 – SHOP DRAWINGS **/** SUBMITTALS of GENERAL REQUIREMENTS.

B. Agenda Items:

1. To the maximum extent practicable, advise the ENGINEER at least twenty-four (24) hours in advance of project meetings regarding items to be added to the agenda or requesting the cancellation of any Meeting.

C. Minutes:

1. The ENGINEER will compile minutes of each project meeting and will furnish one copy to the CONTRACTOR**,** INSPECTOR, ENGINEER and all other involved parties.

2. Recipients of copies may make and distribute such other copies as they wish.

3. Special denotation mutually agreed by all parties shall be used in Meeting Minutes to identify old and new business, to distinguished new discussion/statement made in subsequent meeting from previous meetings, or any revision to any part of the minutes.

1.3 QUALITY ASSURANCE

A. For those persons designated by the CONTRACTOR to attend and participate in project meetings, provide required authority to commit the CONTRACTOR to solutions agreed upon in the project meetings. Refer to provisions indicated in Section 00302 - CONTRACTOR'S REPRESENTATIVE AT THE SITE of the GENERAL CONDITIONS.

PART TWO - PRODUCTS (NOT APPLICABLE)

PART THREE - EXECUTION

3.1 MEETING SCHEDULE

A. Except as noted below for Preconstruction Meeting, project meetings will be held weekly or as otherwise directed by the ENGINEER.

B. Coordinate as necessary to establish mutually acceptable schedule for additional meetings.

3.2 MEETING LOCATION

A. The ENGINEER will establish the meeting location. To the maximum extent practicable, meetings will be held in CONTRACTOR'S job office at the Jobsite.

3.3 PRECONSTRUCTION MEETING

A. Preconstruction Meeting will be scheduled to be held within fifteen (15) working days after the City has issued the Notice to Proceed.

1. Provide attendance by authorized representatives of the CONTRACTOR and major Subcontractors.

2. The ENGINEER will advise other interested parties.

B. Minimum Agenda: Data will be distributed and discussed on at least the following items.

1. Organizational arrangement of CONTRACTOR'S forces and personnel, and those of the subcontractors, and materials suppliers.

2. Organizational arrangement of the CITY'S forces and personnel, such as the Project Manager, Consultant, CITY'S Scheduler, CITY'S Abatement

Consultant, Soil Engineer, CITY'S Surveyor, INSPECTOR and other authorized representatives.

3. Channels and procedures for communication.

4. Construction schedule, including sequence of critical work.

5. Contract Documents, including distribution of required copies of original Documents and revisions.

6. Processing of Shop Drawings and other data submitted to the ENGINEER for review.

7. Processing of Bulletin, addenda, field decisions, Requests for Information and Change Orders.

8. Rules and regulations governing performance of the Work.

9. Procedures for site security, Project quality control, housekeeping, and related matters.

10. It is the responsibility of the CONTRACTOR for Job Site Safety & First Aid, however, it shall be on the agenda.

11. Procedures to request air monitoring services, soil inspection, survey, etc. if specified, shall be provided by the CITY.

12. Emergency Information: The name, addresses, telephone and fax numbers of the CONTRACTOR, and Subcontractors, or their representatives, shall be filed with the ENGINEER prior to start of Contracted Work.

3.4 PROJECT MEETINGS

A. Attendance:

1. To the maximum extent practicable, the Project Superintendent and other representatives who have full knowledge of the project and full authority to act for the CONTRACTOR shall represent the CONTRACTOR at Project Meetings throughout the progress of the Work. All representatives must conform to the provisions indicated in Section 00302 - CONTRACTOR'S REPRESENTATIVE AT THE SITE of the GENERAL CONDITIONS.

2. Subcontractors, materials suppliers, and others may be invited to attend these Project Meetings in which their aspect of the Work is involved.

3. CONTRACTOR may not cancel or be absent from any meeting without advanced approval from the ENGINEER. The CONTRACTOR must submit a written request with reason to the ENGINEER twenty-four (24) hours before the scheduled meeting. If approved, the CONTRACTOR shall notify all parties of the cancellation.

B. Minimum Agenda:

1. Review, revise as necessary, and approve minutes of previous meeting.

2. Review progress of the Work since last meeting. Review actual starts and finish dates of activities.

3. Review status (total complete and outstanding) of submittal for approval, Request-for-Information and Change Orders.

4. Identify old and new problems, which impede planned progress**,** identify responsible party for the follow-up actions. Mutually agree to a common solution and date of correction.

5. Develop corrective measures and procedures to regain lost time on the planned schedule.

6. Review Weekly Progress Reports including the forecasts as required in Section 01321 – CONTRACTOR'S CONSTRUCTION SCHEDULE AND REPORTS of the GENERAL REQUIREMENTS.

7. Status of Record drawings and the Record Project Manual.

8. Jobsite Walk-Through. Record all discussion and follow-up actions.

9. Any Jobsite health and/or accident or safety issues.

C. Revisions to Minutes:

1. Unless published minutes are challenged in writing prior to the next regularly scheduled progress meeting, they will be accepted as properly stating the activities and decisions of the meeting.

2. Persons challenging published minutes shall reproduce and distribute copies of the challenge to all indicated recipients of the particular set of minutes.

3. Challenge to minutes shall be settled as priority portion of "old business" at the next regularly scheduled meeting.

3.5 SITE MEETINGS

A. Required when necessary to enable orderly review and discussion of site conditions and problems requiring solution during the progress of the contracted work. Notify the ENGINEER of the need for additional site meetings as early as possible to resolve the problem without any impact to the Project Schedule.

B. Provide necessary labor, tools, and equipment such as shoring, scaffolding, ladder, etc. to gain access to the site.

C. CONTRACTOR or CONTRACTOR'S authorized representative shall be present at all times.

D. All discussion and follow-up actions shall be recorded by ENGINEER and the minutes shall be distributed at the next meeting or at earliest time.

(END OF SECTION)

SECTION 01313
WORK BY CITY OR OTHERS

1.1 THE REQUIREMENT

A. The CONTRACTOR shall be responsible for ascertaining the nature and extent of any simultaneous, collateral and essential work by others. The CITY, its employees and contractors, and others, shall have the right to operate within or adjacent to the worksite to perform such work.

B. The CITY, the CONTRACTOR, their employees, Subcontractors and others, shall coordinate their operations and cooperate to hold interference to a minimum.

C. The CONTRACTOR shall include in its Bid and schedule all costs and time involved as a result of coordinating its work with others. The CONTRACTOR shall not be entitled to additional compensation from the CITY for damages resulting from such simultaneous, collateral and essential work. The CONTRACTOR'S coordinating efforts shall include redeployment of his work forces to other parts of the Work.

D. Should the CONTRACTOR be delayed by the CITY, and such delay could not reasonably have been foreseen and prevented by the CONTRACTOR, the ENGINEER will determine the extent of the delay, the effect of the delay on the project as a whole, and any commensurate extension of time.

E. The CONTRACTOR is required to notify affected CITY offices of Work to be done as specified in the following table:

Item	Office of LADOT to be notified	Cost to be borne by	Required Notice (working days)
Work on signal – controlled intersection	Traffic Signal Inspector: Central Area: (213) 485-1071 Western Area: (213) 485-6834 Valley Area: (818) 779-9433 ATSAC Project Engineer: (213) 972-8664	Contractor	3
Traffic Signal and Interconnect damage	Signal Superintendent: Daytime: (213) 473-8465 After Hours: (818) 374-4823		Immediate
Parking meter damage	Parking Meter Supervisor: (213) 473-0644		
Parking meter removal and replacement	Parking Meter Planning Supervisor: (213) 473-0644	City**	5
Material and labor by LADOT	For Scheduling of: Sign/Striping: (213) 485-9331 Signal: (213) 485-6818		
Traffic Sign removal, relocation and replacement	Appropriate District Transportation Engineer*: Central District: (213) 972-4990		
Parking restrictions, changes relating to temporary striping			10
Final traffic striping and pavement marking	East Valley District: (818) 374-4688	Contractor	5
Temporary Traffic Control Plan	Hollywood District: (323) 957-6843		30
Temporary striping installation mark out	West Valley District: (818) 774-4306		2
Offsite Detour Signs	Western District (310) 575-8138 Southern District: (310) 732-4599		5
Placement of temporary “No Parking” signs	Special Traffic Control Section: (213) 485-2298		4

* For B-Permit projects, notify citywide investigations (213) 972-8687.

**On B-Permit projects, the costs shall be charged to the permittee as required by Section 62.110 of the Los Angeles Municipal Code.

(END OF SECTION)

SECTION 01321
CONTRACTOR'S CONSTRUCTION SCHEDULE AND REPORTS

1. THE REQUIREMENT

A. Progress of the Work

1. It is expressly understood and agreed that the time of beginning, the rate of progress, and the time of completion of the Work are of the essence of this Contract. The Work shall be executed with such progress as required to prevent any delay to other CONTRACTORS that may be working on other contracts at the site, the Contract milestones, and the general completion of the Contract.

B. CONTRACTOR'S Construction Scheduler

1. The CONTRACTOR shall continuously employ or retain the services of a Construction Scheduler. The Construction Scheduler shall have at least three (3) years of verifiable experience as the person primarily responsible for preparing and maintaining detailed project schedules on projects of the same or similar size and nature as this project. The Construction Scheduler is required to attend all meetings pertaining to scheduling and progress of the Work. If the Construction Scheduler leaves employment of the CONTRACTOR, the CONTRACTOR must fulfill the requirements of B.2 a and b within thirty (30) days.

2. Within five (5) calendar days after the Notice of Award the CONTRACTOR shall provide a statement to the ENGINEER with the following:

a. Identification, qualifications, and experience of the CONTRACTOR'S Construction Scheduler and all other members of the CONTRACTOR'S scheduling staff.

b. References of not less than two (2) previous projects on which the CONTRACTOR'S Construction Scheduler has utilized CPM scheduling.

(As used in this Section, "days" mean consecutive calendar days unless otherwise noted.)

The ENGINEER and the INSPECTOR reserve the right to disapprove any scheduling candidate or scheduling system proposed for the project. The ENGINEER and the INSPECTOR reserve the right to remove, without rights to work on the project, any member of the CONTRACTOR'S scheduling staff, that is, in the ENGINEER'S or INSPECTOR'S opinion, incompetent in scheduling.

C. General

1. Schedule Methodology

The scheduling method to be used shall be a Critical Path Method schedule in the form of an activity on node Precedence Diagram Network

(PDN) with capabilities of identifying the critical path. The principles and definitions of the terms used herein shall be as set forth in the Associated General CONTRACTOR'S publication "CPM in Construction", latest edition. To the extent there are any conflicts between the Associated General CONTRACTOR'S publication and the Specifications, the Specifications shall govern.

2. Work Breakdown Structure

a. The CONTRACTOR shall submit to the ENGINEER for approval, at the Preconstruction Scheduling Conference, the following:

(1) A Work breakdown structure.

(2) The associated alphanumeric coding structure to implement the Work breakdown structure.

(3) The activity identification system for labeling all Work activities.

3. The first code field shall designate the bid item. The second code field shall identify the type of activity. (Types of activities shall be defined as "submittal", "review/approval", "procurement/fabrication", "delivery", and "construction/installation" or "Change Order".) The third code field shall identify which Specification section the activity shall be paid under. The fourth code field shall identify who is responsible to perform the activity (i.e., CONTRACTOR, Subcontractor(s), Supplier, etc.). The fifth code field shall identify the area being worked in or the facility, if appropriate. The sixth code field shall identify the construction phase or project element (if phasing of Work or project elements are identified in the Contract.) All Change Orders and Notices of Non-Compliance shall be included as separate code fields.

4. Scheduling System

The CONTRACTOR shall use Primavera P6 (latest edition) and a hardware system commensurate with the size of the program. This shall be referred to as the Scheduling System. The Scheduling System shall be capable of handling, processing, printing, and plotting data to satisfy all requirements of this Section.

D. Preconstruction Scheduling Conference

1. The ENGINEER will schedule and conduct a Preconstruction Scheduling Conference with the CONTRACTOR'S Project Manager and Construction Scheduler within seven (7) calendar days after Notice of Award, to commence development of the required Schedule. At this meeting, the requirements of this Section, as they apply to the Contract, will be reviewed with the CONTRACTOR. The CONTRACTOR shall be prepared to review and discuss its methodology for developing the Schedule, its proposed sequence of operations, and cost, manpower, and equipment loading methodology.

The Contractor shall include the effects of adverse weather in the Schedule in terms of working days (wds). The number of wds, Monday through Friday, excluding any day designated as a holiday by the City or in a Master Labor Agreement binding the Contractor, of normal adverse weather per month is as follows: January-3 wds, February-2 wds, March-3 wds, April-1 wd, October-1 wd, November-2 wds, December-2 wds. Unusually severe weather (see GC 00401 – Unavoidable Delay) is defined as the number of working days over what is normal adverse weather, as defined in the previous sentence. For partial months, the aforementioned numbers shall be prorated and rounded to the nearest whole number. There shall be no extension of time for adverse weather unless the Contractor is prevented from working during the first five (5) hours of a workday with at least sixty percent (60%) of the normal work force on more days per month than listed above. Even if there is unusually severe weather, a non-compensable extension of time will not be granted unless the other conditions required by GC 00401 are met, including negative impact to the critical path and delay beyond the current Contract Completion Date.

E. CONTRACTOR'S Construction Schedules

1. CONTRACTOR'S Preliminary Schedule

a. Within fifteen (15) calendar days after the Preconstruction Scheduling Conference, the CONTRACTOR shall submit to the ENGINEER the detailed plan of operations for the first ninety (90) calendar days of Work after Notice to Proceed, as well as a general approach for the remainder of the Work. The initial submittal of the Preliminary Schedule shall include three (3) copies of the time scaled network diagram covering at least the first 90 days after Notice to Proceed. The network diagram shall be based on the "early" schedule dates. The network diagram shall list activity I.D. number, description, original duration and early dates. The submittal shall include a predecessor/successor report which matches the network diagram. The predecessor/successor report (sorted by activity ID) shall list (as a minimum) activity ID number, original duration, description, early dates and detailed predecessor/successor listing. The Preliminary Schedule submittal shall include electronic files uploaded to e2020 containing the CPM file matching the network diagram and predecessor/successor report. Any resubmittals of the Preliminary Schedule shall be the same detail and quantity as the initial submittal.

b. The ENGINEER, the INSPECTOR, and the CONTRACTOR shall meet within seven (7) calendar days after submittal of the Preliminary Schedule to review and make any necessary adjustments or revisions. The Preliminary Schedule, when revised, will represent the CONTRACTOR'S planned means, methods, and sequences for performance of the Work during the first ninety (90) calendar days after Notice to Proceed and is to be incorporated as the first ninety (90) calendar days of the CONTRACTOR'S Construction Baseline Schedule (the Schedule).

c. The CONTRACTOR shall submit the revised Preliminary Schedule within seven (7) calendar days after the meeting, for approval by the ENGINEER and the INSPECTOR.

d. At the same time, and as part of the submittal of the Preliminary Schedule, the CONTRACTOR shall submit to the ENGINEER and the INSPECTOR, for approval, a schedule of manpower and costs assigned to each activity on the Preliminary Schedule. Costs assigned will generally conform to the CONTRACTOR'S bid item unit prices and such lump sum bid item breakdowns as the INSPECTOR shall approve. The schedule of manpower and costs shall be realistic and level so as to not have any unusual manpower requirements.

e. The resultant Preliminary Schedule, when approved by the ENGINEER and the INSPECTOR, shall be the sole basis of partial or progress payments made for Work performed during the first ninety (90) calendar days after Notice to Proceed.

f. Submittal and approval of the Preliminary Schedule is a condition precedent to the issuance and payment of progress payments. Therefore, no progress payments will be made until the Preliminary Schedule has been approved by the ENGINEER and the INSPECTOR.

g. The Preliminary Schedule shall be updated monthly during the first ninety (90) calendar days after Notice to Proceed as a part of the payment application process. All appropriate reports and network diagrams required by H of this Section shall be submitted, as agreed upon between the ENGINEER, the INSPECTOR, and the CONTRACTOR.

2. CONTRACTOR'S Construction Baseline Schedule

a. Fifteen (15) calendar days after approval of the Preliminary Schedule, the CONTRACTOR shall provide to the ENGINEER an update on the progress in the development of the Schedule. The CONTRACTOR shall prepare and submit to the ENGINEER the Contractor's Construction Baseline Schedule (the Schedule) within forty-five (45) calendar days after approval of the Preliminary Schedule.

b. The Schedule shall show the sequence and interdependence of activities required for complete performance of the Work, beginning with the date of the Notice to Proceed and concluding with the Contract Completion Date based on the completion time (calendar days) allowed in the Contract.

c. Pursuant to the float sharing requirements of the Contract, use of float suppression techniques such as preferential sequencing, special lead/lag logic restraints, extended activity times or imposed dates shall be cause for rejection of the Schedule and any revisions or updates. The use of float time disclosed or

implied by the use of alternative float suppression techniques shall be shared as directed by the ENGINEER.

d. If the CONTRACTOR submits a Baseline Schedule showing completion of the Work more than thirty (30) calendar days in advance of the Contract Completion Date, the Schedule shall show the time between the early completion date and the current Contract Completion Date as "project float". The CONTRACTOR agrees that the ENGINEER may, at no cost to the CITY, decrease the Contract duration by issuance of a Change Order which will change the appropriate Milestone Date(s) and the Contract Completion Date to the completion date reflected on the Schedule. Any approved Schedule, revision, or update having an early completion date shall show the time between the early completion date and the current Contract Completion Date as “project float”.

e. The ENGINEER will review and make comments on the Schedule. Meetings will be held between the ENGINEER, the CONTRACTOR, and all Subcontractors and Suppliers whom the CONTRACTOR may desire to invite or whom the ENGINEER may request be present.

f. Comments made by the ENGINEER on the Schedule, during review, will not relieve the CONTRACTOR from compliance with requirements of the Contract Documents. To the extent that there are any conflicts between the approved Schedule and the requirements of the Contract Documents, the Contract Documents shall govern.

g. If requested by the ENGINEER at any time during the project, the CONTRACTOR shall provide highly detailed, a short-term schedule for specific crucial items (work-around, start-up, etc.).

F. Network Details

1. The Schedule shall include time-scaled network diagrams, based on calendar days, as well as computer tabulations. It shall be constructed to show the order in which the CONTRACTOR proposes to carry out the Work, to indicate restrictions of access and to show availability of Work areas, and availability and use of manpower, materials and equipment. The CONTRACTOR shall utilize the Schedule in planning, scheduling, coordinating, and performing the Work under the Contract (including all activities of Subcontractors, equipment vendors, and Suppliers). The CONTRACTOR will provide the ENGINEER with written confirmation of the concurrence of all major trade Subcontractors and Suppliers with the Schedule. (The term "major Subcontractors and Suppliers" as used in this Section, shall include any Subcontractor or Supplier with five (5) percent or more of the value of the Contract.) The logic shall be determined by which activity must be completed before a successor can start; maximum concurrent work; and manpower or equipment constraints which prevent concurrent work.

2. The Schedule shall provide the ENGINEER with a tool to monitor and follow the progress of all phases of the Work. The Schedule submitted to the ENGINEER shall comply with all limits imposed by the scope of Work, with all contractually specified intermediate milestone and completion dates, and with all constraints, restraints or sequences included in the Contract. The degree of detail shall include factors to the satisfaction of the ENGINEER, including, but not limited to:

   a. Physical breakdown of the project.

   b. Contract milestones and completion dates, substantial completion dates, constraints, restraints, sequences of Work shown in the Contract, the planned substantial completion date, and the final completion date.

   c. Type of Work to be performed, the sequences, and the labor trades involved.

   d. All purchases, submittals, submittal reviews, manufacturing, tests, delivery, and installation activities for all major materials and equipment, and a separate list of all major material items or items of equipment for which the CONTRACTOR intends to seek payment prior to installation.

   e. Deliveries of CITY furnished equipment and/or materials in accordance with the dates or schedule windows of such items set forth in the Contract or furnished by the ENGINEER, or items to be salvaged and delivered to the CITY.

   f. Preparation, submittal and approval of Shop and/or Working Drawings and material samples showing a twenty-one (21) day minimum time specified for the ENGINEER'S review of normal or routine submittals and a forty five (45) day review time for all major submittals, so identified in the technical specifications, and the same time frame shall be allowed for at least one (1) resubmittal on all major submittals so identified in the Contract Documents.

   g. Approvals required by regulatory agencies or other third parties' notifications to utility companies, and request of services.

   h. Plans for all subcontract Work, concrete placement sequence, structural steel, plumbing, heat, ventilation, air conditioning, electrical, etc.

   i. Assignment of responsibility for performing specific activities, notifications to utility companies and request of services.

   j. Access to and availability of Work areas including all anticipated plant shutdowns, if applicable.

   k. Identification of interfaces and dependencies with preceding, concurrent and follow-on CONTRACTORS and utilities as shown on the Plans or called out in the Specifications.

l. Resource loading for cost, manpower, material, and equipment.

m. Actual tests by the CONTRACTOR and the CITY, submission of test reports, and approval of test results.

n. All start up, testing, training, and assistance required under the Contract.

o. Planning for phased or total takeover by the CITY.

p. Punchlist and final cleanup.

q. Identification of any manpower, material, or equipment restrictions, as well as any activity requiring unusual shift work, such as two shifts, six (6) day weeks, specified overtime, or work at times other than regular days or hours, shall be clearly identified in the Schedule.

3. The activities included in the Schedule shall be analyzed in detail to determine activity durations in units of project working days. Durations shall be based on the labor, equipment, and materials required to perform each activity on a normal Workday basis. No on-site activity shall have a duration over fifteen (15) working days except non-construction activities such as submittals, submittal reviews, procurement and delivery of materials or equipment, and concrete curing. Only on-site construction activities will be shown in their resource loaded state to reflect cost, manpower, materials and equipment except for those activities specifically identified under 1.1F.2d of this Section. The manpower and equipment, by item designation, shall be shown for each construction activity for the network on a tabular listing, and in information furnished in accordance with O and P of this Section.

4. Critical or near critical paths resulting from the use of manpower or equipment restraints shall be kept to a minimum. Near critical paths shall be defined as those paths having fifteen (15) working days or less of total float at the time of initial submission. Restraints related to resource loading must be identified as “For resource loading only”.

5. The estimated cost to perform each work activity shall be noted for each activity in the network on a tabular listing. The sum of the costs assigned to all activities shall equal the Contract value. No activity costs shall be assigned to submittals or submittal reviews. The accepted cost loaded Project Schedule shall constitute the Schedule of Values in accordance with the SCHEDULE OF VALUES / CONTRACT PRICE BREAKDOWN of these GENERAL REQUIREMENTS, from which monthly progress payments will be made in accordance with the provisions of PARTIAL PAYMENTS in these GENERAL REQUIREMENTS. Acceptance of the Cost Loaded Schedule by the CITY does not relieve the CONTRACTOR’S responsibility to submit any cost information or data as requested by the ENGINEER for verification of cost.

6. The network diagram shall be prepared on (E) size sheets (28 inches by 40 inches), shall have a title block in the lower right-hand corner, and a

timeline on each page. Exceptions to the size of the network sheets and the use of computer graphics to generate the networks shall be subject to the approval of the ENGINEER.

7. All networks shall be drafted time scaled to show a continuous flow of information from left to right. The primary path(s) of criticality shall be clearly and graphically identified on the network(s).

G. Schedule Reports

1. The Schedule submitted to the ENGINEER shall include the time scaled network diagram. Network diagrams shall be based on early start and early finish dates of activities shown. The network diagrams submitted to the ENGINEER shall also be accompanied by a computer-generated mathematical analysis for each activity included in the Schedule. Such mathematical analysis shall be submitted to the ENGINEER and shall include at a minimum, the following:

   a. A list of all activities sorted by Activity I.D. Number with predecessor and successor activity numbers and descriptions;

   b. Activity number and description.

   c. Activity code(s).

   d. Schedule and actual/remaining duration for each activity.

   e. Earliest start date (by calendar date).

   f. Earliest finish date (by calendar date).

   g. Actual start date (by calendar date).

   h. Actual finish date (by calendar date).

   i. Latest start date (by calendar date).

   j. Latest finish date (by calendar date).

   k. Float in work days.

   l. Monetary value and cost-to-date of each activity.

   m. Percentage of activity complete and remaining duration for incomplete activities.

   n. Cumulative value of Work completed based on the CONTRACTOR'S reported portion of activities complete and accepted.

   o. Imposed constraints.

2. The following printed computer outputs shall be required as part of the Schedule submittal and each revision or update thereafter as a condition precedent to receipt of progress payments:

   a. Activity listing sorted by I.D. number showing predecessor and successor activities in numerical order, with original and remaining duration, early start, early completion, late start, late completion and total float.

   b. A sublisting of materials and equipment sorted by Specification Section number. The sublisting of materials and equipment shall include the following activities: preparation of Shop Drawings, submittal to the ENGINEER, review by the ENGINEER, and fabrication, testing, and/or delivery of material and equipment which shall be interfaced with the earliest start date that the material or equipment is to be installed on the project.

   c. Activity sort(s) by organizational responsibility, including submittals to the ENGINEER for all major items or material and equipment, the number of shifts, crew sizes of each craft and construction equipment to accomplish the activity;

3. Outputs 1 and 2, above, shall show all activities, including restraints, for the duration of the project.

4. The CONTRACTOR shall also prepare and submit a time-scaled Master Bar Chart Summary Schedule on a single sheet that shows the total project in approximately 25-100 activities, as agreed to by the CONTRACTOR and the ENGINEER. This schedule will accurately summarize the current Project Schedule and shall have common events for correlating the two levels of schedule indenture. All Contract milestones shall be shown. The Master Summary Schedule shall be updated monthly.

H. Approval Of The Baseline Schedule

1. The Schedule network diagram and computer tabulations, the Cash Flow Projection, and the Manpower and Equipment Requirements Forecast shall be submitted to the ENGINEER for approval on e2020:

   a. The Network Diagram and Master Bar Chart Summary Schedule.

   b. Computer tabulations, Predecessor/Successor Report.

   c. Manpower Requirements.

   d. Cash Flow Projection.

   e. All required reports specified in F and G of this Section.

   f. Written confirmation of concurrence of all major trade Subcontractors and Suppliers.

2. Approval Process:

a. The ENGINEER shall approve or disapprove, in writing, the CONTRACTOR'S submission within twenty-one (21) calendar days after receipt of all required information. The Schedule, once approved, becomes the Baseline Schedule which shall be used for monitoring and evaluating all facets of Contract performance including, but not limited to, progress, changes, and delays.

b. The CONTRACTOR, the CONTRACTOR'S Construction Scheduler, and those major trade Subcontractors and Suppliers, as required by the ENGINEER, shall be required to participate in all meetings necessary to reach mutual agreement and approval of the Baseline Schedule, the Manpower Requirements Forecast, and the Cash Flow Projection.

c. The CONTRACTOR shall revise the Baseline Schedule, as required by the ENGINEER, to reflect project construction. If any of the required submissions are returned to the CONTRACTOR for corrections or revisions, they shall be resubmitted along with a new CD and a hard copy listing of each change (Claim Digger report) for approval within seven (7) calendar days after receipt. Resubmittals shall be as required in H.1 and H.2 of this Section. Review and response by the ENGINEER shall be given within seven (7) calendar days after receipt of each new submission.

d. Should the Baseline Schedule, submitted for approval, show variances from the requirements of the Contract, the CONTRACTOR shall make specific mention of such variations in the letter of transmittal, in order that, if accepted, proper adjustments to the Baseline Schedule can be made. Otherwise, the CONTRACTOR will not be relieved of the responsibility for executing the Work in strict accordance with the requirements of the Contract Documents.

e. Submittal and approval of the Baseline Schedule, the Manpower Requirements Forecast, the Cash Flow Projection, major trade Subcontractor and Supplier confirmation in writing, or CD(s), within the time prescribed, or revisions thereof within the required time, is a condition precedent to the issuance and payment of progress payments.

f. Failure of the CONTRACTOR to submit the Baseline Schedule, or any required resubmittals, in a timely, accurate manner and in accordance with the requirements of this Section will result in costs to the CITY which are difficult if not impossible to determine; therefore, the CONTRACTOR shall pay the CITY liquidated damages in the amount of $1,000 per calendar day, for every work day the schedule submittal, revision, or resubmittal is late. This amount shall be subtracted from any monies due and shall be forfeited by the CONTRACTOR.

I. Revisions To Approved Baseline Schedule

1. The CONTRACTOR shall execute the Work in accordance with the approved Baseline Schedule. Out of sequence construction, defined as a change in the Baseline Schedule, requires prior approval of the ENGINEER as defined below.

2. Upon approval of a Time Impact Analysis the change shall be reflected in the next schedule submittal by the CONTRACTOR.

3. No change (except for resubmittals) to the approved Baseline Schedule shall be made without the prior written approval of the ENGINEER. If the CONTRACTOR desires to make a change to the approved Baseline Schedule, the CONTRACTOR shall request permission from the ENGINEER in writing, stating the reasons for the change as well as the specifics, such as revisions to activities, logic, durations, etc. The ENGINEER will provide a response within five (5) calendar days. Actual status and/or forecast dates for revised submittals shall be added without prior acceptance by the ENGINEER. They are still subject to review by the ENGINEER.

4. If the ENGINEER considers a change to the Baseline Schedule to be of a major nature, the ENGINEER may require the CONTRACTOR to revise and submit for acceptance all of the affected portion(s) of the Baseline Schedule including an analysis to show the effect on the entire project. The proposed revision and analysis shall be submitted to the ENGINEER within fifteen (15) calendar days after the ENGINEER notifies the CONTRACTOR the revision is of a major nature. A change will be considered to be of a major nature if the time estimated for an activity or sequence of activities is varied from the original plan to the degree that there is reasonable doubt that the Contract completion date will be met, or if the change impacts the Work of other CONTRACTORS at the Jobsite. Changes to activities having adequate float shall be considered as minor changes, except that an accumulation of minor changes may be considered a major change when such changes affect the Contract completion date. (Activities having adequate float are activities which are not critical after the change is made.).

5. Only upon approval of a change by the ENGINEER shall it be reflected in the next Schedule update submitted by the CONTRACTOR.

J. Updates To Approved Baseline Schedule And Progress Payments

1. Monthly Updates:

a. All updated or revised Schedules shall be submitted in the same detail as the original submittal, unless modified in writing by the ENGINEER. Written confirmation of the major trade Subcontractors and Suppliers shall be required quarterly.

b. The initial Schedule update shall be submitted within fourteen (14) calendar days after approval of the Baseline Schedule. The Schedule update shall be cost loaded. Subsequent Schedule updates shall be submitted at the beginning of each month thereafter for the duration of the Contract. The data date shall be the first working day of the month unless otherwise directed by

the ENGINEER. The Schedule and computer tabulations shall be reviewed by the CONTRACTOR'S Construction Scheduler at a joint update meeting with the ENGINEER and the INSPECTOR.

2. Monthly Schedule Updates:

a. The CONTRACTOR shall submit the Monthly Schedule Update to the ENGINEER each month, on a date assigned by the ENGINEER. The proposed Monthly Schedule Update prepared by the CONTRACTOR shall include all information available as of the cutoff date established by the ENGINEER. A detailed list of all proposed schedule changes (logic, duration, status, additions, and deletions) shall be submitted with the update (Claim Digger report). Prior to the monthly update review meeting, the CONTRACTOR shall obtain from his Subcontractors, Suppliers, and staff the necessary information as required to reflect progress to date. A proposed Monthly Schedule Update containing the information set forth below shall be available for review at the meeting.

(1) For activities started and/or completed during the previous period: Actual start and actual completion dates, and number of shifts used to accomplish the activity.

(2) For activities begun but not yet complete to date: Remaining duration of the Work, estimated percent complete, and estimated completion date. The schedule shall be calculated using remaining durations and progress override.

(3) For activities not yet started: Estimated start dates, revised duration's, and estimated completion dates, as necessary.

(4) For authorized Change Orders, including Emergency Change Orders, Time and Material Change Orders, and Unilateral Change Orders: Revised and original activities, number of shifts, crew sizes by craft, construction equipment required, cost, and durations, and status of all outstanding Notices of Non-Compliance, where required.

(5) The monthly update of the Network Diagram shall be for the whole project. The previous month's activities shall be reported as they actually took place and designated as complete, if actually completed, on the network diagram update.

(6) The electronic file of the submitted Network Diagrams and the related reports shall constitute a clear record of progress of the Work from Notice to Proceed to final completion.

(7) The monthly submittal to the ENGINEER shall be accompanied by three (3) copies of the Schedule Narrative Report. The Schedule Narrative Report shall describe the physical progress during the report period, Plans for continuing the Work during the forthcoming report period, actions planned to correct any negative float predictions, and an explanation of potential delays and/or problems and their estimated impact on performance and the overall project completion date. In addition, alternatives for possible schedule recovery to mitigate any potential delay and/or cost increases shall be included for consideration by the ENGINEER The report shall follow the outline set forth below:

CONTRACTOR'S Schedule Narrative Report Outline:

a) CONTRACTOR'S Transmittal Letter.

b) Description of problem areas.

c) Current and anticipated delays:
   1) Cause of the delay.
   2) Corrective action and schedule adjustments to correct the delay.
   3) Impact of the delay on other activities, milestones, and completion dates.

d) Changes in construction sequences.

e) Pending items and status thereof:
   1) Permits.
   2) Change Orders.
   3) Time extensions.
   4) Non-Compliance Notices.

f) Contract Completion Date(s) status:
   1) Ahead of schedule and number of working days.
   2) Behind schedule and number of working days.

g) Other project or scheduling concerns including any plant shutdowns, duration of each shutdown, and analysis of any Work to be performed during the shutdown period.

h) Include reviewed and updated Network Diagram and Reports.

i) Include revised Cost Loading and Cash Flow Information of this Section.

j) Include substantial revisions to manpower and equipment requirements

(8) The CONTRACTOR shall provide to the ENGINEER, the Network Diagram, the Predecessor/Successor Report sorted by activity number, the list of all changes made to the previously approved Schedule, and the Schedule Narrative Report. The data required to provide all other scheduling reports called for in of this Section shall be provided on e2020.

3. The CONTRACTOR'S Construction Scheduler and representatives from major Subcontractors and Suppliers (as requested by the ENGINEER shall attend the monthly update meetings with the above data prepared in advance for each meeting to provide, as of the end of the updating period, a complete and accurate report of the current procurement schedule (in accordance with the requirements of CONSTRUCTION STATUS REPORTS of the GENERAL REQUIREMENTS), construction progress, and a depiction of how the CONTRACTOR plans to continue the Work of the project to meet all Contract Completion Dates. All network changes and status dates agreed to during each update meeting shall be considered as acceptable by all parties unless written notice of exception is given by an objecting party within five (5) calendar days after the update meeting. For major network changes that cannot be agreed to during an update meeting, the CONTRACTOR shall submit, in writing, such revisions for the ENGINEER'S approval prior to inserting such changes into the network. Submissions may be in the form of marked-up networks, fragnets, or schedule abstracts provided they are submitted with a letter of transmittal. The submission and approval procedures for this information shall follow the same timetable described in H.2 of this Section.

4. Predicated on the results of the ENGINEER'S review of Monthly Schedule Update submittals and accompanying reports, the CONTRACTOR may be required to revise the Monthly Schedule Update. Conditions under which a revision will be made are as follows:

   a. When a delay in the completion of any Work item or sequence of Work items results in an indicated extension of the project completion or interim milestone dates detailed herein by thirty (30) calendar days.

   b. When delays in submittals or deliveries or Work stoppages are encountered which make replanning, rescheduling, or resequencing of the Work necessary.

   c. When the schedule does not represent the actual execution and progress of the project.

5. Required revisions of the Monthly Schedule Update are due within five (5) calendar days of notice by the ENGINEER that a revision is required. All revisions and additions to the Schedule are subject to the review of the ENGINEER. No changes (except resubmittal cycles) are to be implemented in the Schedule by the CONTRACTOR without the prior

approval of the ENGINEER. When the Monthly Schedule Update or its required revision is approved by the ENGINEER, it then becomes the Current Schedule Update. The Current Schedule Update will be used for the period from which it is approved until its successor is submitted and approved.

6. Three (3) copies each of the Schedule Narrative Report, the updated Project Schedule (networks, and computer computations), the Cash Flow Projection, the updated network diagram, and one (1) copy of the updated CD reflecting the status of the project agreed to at the updating meeting, shall be submitted to the ENGINEER within five (5) calendar days after each updating meeting.

7. The update report shall show the activities or portions of activities completed during the reporting period and their total value as the basis for the CONTRACTOR'S request for partial payment. Payments made pursuant to PARTIAL PAYMENTS of these GENERAL REQUIREMENTS will be based on the total value of such activities completed or partially completed after verification by the INSPECTOR. The report shall state the percentage of the Work actually complete as of the report date. If the project is behind schedule, progress along other paths with negative float shall also be reported.

8. Failure of the CONTRACTOR to submit the Monthly Schedule Updates in a timely, accurate manner and in accordance with the requirements of this Section will result in costs to the CITY which are difficult, if not impossible to determine; therefore, the CONTRACTOR shall pay the CITY liquidated damages in the amount of $1,000 per calendar day for every work day the submittal is late or not in full compliance with the requirements of this Section. This amount shall be deducted from any monies due, and forfeited by the CONTRACTOR. In addition to the liquidated damages, if the CONTRACTOR fails to submit any of the Monthly Schedule Update deliverables, or to meet any of the other updating requirements, progress payments will be withheld until such time as the required update information is submitted.

K. Weekly Progress Reports

1. Once each week, on a day established by the ENGINEER, the CONTRACTOR shall submit:

   a. A progress schedule listing the activities completed and in progress for the previous week and the activities scheduled for the succeeding two (2) weeks. The activity designations shall be consistent with the activity designations in the Current Schedule Update. A bar chart shall be used to display the information in pictorial form. The appropriate schedule activity number shall be listed for each bar.

L. Cost Loading and Cash Flow

1. With the initial Baseline Schedule submittal, each Monthly Schedule Update, and each revision, the CONTRACTOR shall also submit a schedule of cost loading and cash flow to the ENGINEER. There shall be

a strict correlation between the sum of individual activity costs and the total values indicated for bid items. That is, each individual activity within the Schedule shall employ a code, which in summary, attaches its cost, if any, to the appropriate bid items. The sum of activity costs within a specific code shall equal the cost of its corresponding bid items and approved Change Orders.

2. Expected payment requests for each month shall be included with proposed updates. The cash flow shall show the net payment requests for each month. The cumulative payment requests to date shall also be shown after deducting retainage and any other monies withheld. The cash flow shall be shown in tabular format and in graphic format.

3. The CONTRACTOR, at the Preconstruction Scheduling Conference, shall explain in detail the procedure to be used to develop the Schedule activity cost loading and cash flow. This procedure is subject to the review and approval of the ENGINEER and the INSPECTOR. Receipt and approval of the Schedule Cost Loading and Cash Flow Summary is a condition precedent to the making of any payments under the Contract. Therefore, failure to submit an acceptable schedule cost loading and cash flow summary shall be cause for withholding any progress payments due or that may become due under this Contract, until such time as an acceptable cost loading and cash flow summary is received.

4. In accordance with the updating procedures, when an activity is deemed substantially complete by the ENGINEER, then such activity will no longer be treated as an activity affecting the critical path or successor activities on the project. The cost of correction of any punchlist items associated with substantially completed activities will be covered by amounts deemed by the ENGINEER and the INSPECTOR to be adequate to cover such costs.

M. Responsibility For Completion

1. Whenever it becomes apparent from the current Monthly Schedule Update that phasing, milestone, constraint, restraint, or Contract Completion Date will not be met, the CONTRACTOR shall submit a plan to recover the delay using some or all of the following remedial actions;

   a. Increase construction manpower in such quantities and crafts as necessary to eliminate the backlog of work and meet the current Contract Completion Date.

   b. Increase the number of working hours per shift, shifts per working day, working days per week, the amount of construction equipment, or any combination thereof to eliminate the backlog of Work.

   c. Reschedule the Work in conformance with the Specification requirements.

2. Prior to implementing any of the above actions, the CONTRACTOR shall notify the ENGINEER and obtain approval from the ENGINEER. If such actions are approved, the Schedule revisions shall be incorporated by

the CONTRACTOR into the Network Diagram before the next Monthly Schedule Update is due.

3. Under no circumstances will the addition of equipment or construction forces, increasing the Working hours or any other method, manner, or procedure to return to the contractually required Contract Completion Date be considered justification for a Change Order or be treated as acceleration where the need for a recovery schedule has been caused by the CONTRACTOR and/or its Subcontractors or Suppliers, at any tier.

4. The ENGINEER may elect to withhold progress payments until the CONTRACTOR'S progress indicates that the milestone date(s) and/or the Contract Completion Date will be met.

N. Schedule Time Extensions

1. When Change Orders or delays are experienced by the CONTRACTOR and a time extension is requested, the CONTRACTOR shall submit to the ENGINEER, a written Time Impact Analysis illustrating the influence of all changes or all delays on the current Contract Completion Date. The Time Impact Analysis shall be based on an As-Built Schedule Analysis approach. The As-Built Schedule that will be created will incorporate all Actual Start and Finish dates, actual durations of activities, and actual sequences of construction. This Time Impact Analysis shall incorporate all delays (including CITY, CONTRACTOR, and Third-Party delays without exception) in the time frame they occurred with actual logic ties. The As-Built Schedule data shall be obtained from the most recent accepted Baseline Schedule or Monthly Schedule Update as of the time the Preliminary Change Order, Emergency Change Order, Unilateral Change Order, or Allowance Order was issued to the CONTRACTOR. The As-Built Schedule shall be created as an early start schedule. The As-Built Schedule shall use the original activity durations for all incomplete work and the actual logic driving all activities. All requests for time extensions shall be based upon an analysis of this As-Built Schedule. The critical path will be established, and all CITY caused delays on the critical path will be identified. The time extension will be based solely upon the cumulative duration of all CITY and Third Party caused delays (as set forth in UNAVOIDABLE DELAY of the GENERAL CONDITIONS) which are on the critical path. Any time extensions to the project Interim Milestone Dates shall be non-compensable time extensions only.

2. Time extensions will be granted only to the extent that equitable time adjustments for the activity or activities affected exceed the total or remaining float along the critical path of activities at the time of actual delay, or at the time the Preliminary Change Order, the Emergency Change Order, the Unilateral Change Order, or the Allowance Order was issued to the CONTRACTOR. Float or slack time is not for the exclusive use or benefit of the ENGINEER or the CONTRACTOR but is an expiring resource available to all parties as needed to meet Contract milestones and the Contract Completion Date. Time extensions shall not be granted nor delay damages paid until;

a. A delay occurs which is beyond the control and without the fault or negligence of the CONTRACTOR and its Subcontractors or Suppliers, at any tier; and

b. Which extends actual performance of the Work beyond the applicable current Contract Completion Date and the most recent date predicted for completion of the project on the approved Monthly Schedule Update, current as of the time of the delay or as of the time of issuance of the Preliminary Change Order, the Emergency Change Order, the Unilateral Change Order, or the Allowance Order was issued to the CONTRACTOR.

3. Each Time Impact Analysis shall be submitted in triplicate, within fifteen (15) calendar days after a delay occurs, or issuance of the Preliminary Change Order, Emergency Change Order, Time and Materials Change Order, or Unilateral Change Order. If the CONTRACTOR does not submit a Time Impact Analysis for a specific Change Order or delay within the specified period of time, the CONTRACTOR shall be deemed to have irrevocably waived any rights to additional time and cost.

4. Since float time within the Schedule is jointly owned, it is acknowledged and agreed by the CONTRACTOR that CITY caused delays on the project may be offset by CITY caused time savings (including, but not limited to: critical path submittals returned in less time than allowed for in the Contract, approval of substitution requests which result in a savings of time along the critical path for the CONTRACTOR, etc.). In such an event the CONTRACTOR shall not be entitled to receive an extension of time or delay damages until all CITY caused time savings are exceeded and the Contract Completion Date is also exceeded.

5. Approval or rejection of each Time Impact Analysis by the ENGINEER shall be made within fifteen (15) calendar days after receipt of each Time Impact Analysis, unless subsequent meetings and negotiations are necessary. Upon approval, a copy of a Time Impact Analysis signed by the ENGINEER shall be returned to the CONTRACTOR for incorporation into the next Monthly Schedule Update.

6. Upon mutual agreement by both parties, fragnets illustrating the influence of Change Orders and delays shall be incorporated into the Schedule during the first update after agreement is reached.

7. In the event the CONTRACTOR does not agree with the decision of the ENGINEER regarding the impact of a change or delay, it shall be resolved in accordance with CLAIMS AND PROTESTS of the GENERAL CONDITIONS.

O. Manpower

The CONTRACTOR shall submit with the initial Baseline Schedule a histogram depicting total project manpower for its own forces and for each of its Subcontractors for each month. The histogram shall be based upon and shall be in substantive agreement with the number of shifts and crew sizes in the Schedule and shall be updated monthly and submitted with the Monthly progress report. The update shall show actual

manpower for each month during the construction period to date and required manpower for both base scope and Change Order Work each month, necessary to complete all remaining activities to insure timely project completion.

P. Construction Equipment

1. The CONTRACTOR shall submit with the initial Baseline Schedule a tabular report listing each major piece of construction equipment for itself and each of its Subcontractors for each month. This major equipment is the equipment that is or will be used at the Worksite. Each major piece of the CONTRACTOR'S and the Subcontractor's equipment shall be separately described, identified, and numbered in the report. The tabular report shall be based upon and in substantive agreement with the number of shifts and crew sizes by craft in the Schedule and shall be updated monthly and submitted with the monthly progress report. The update shall show actual construction equipment for each month during the construction period to date and the required construction equipment for each month necessary to complete all remaining activities including the Change Order Work, on the early finish date.

Q. Submittal Of "As-Built" Schedule

1. As a condition precedent to any release of retention, the last update to the Schedule submitted shall be identified by the CONTRACTOR as the "As-Built Schedule". The "As-Built Schedule" shall reflect the exact manner in which the project was actually constructed (including start and completion dates, activities, sequences, and logic) and shall be signed and certified by the CONTRACTOR'S Project Manager and Construction Scheduler as being a true reflection of the way in which the project was actually constructed.

(END OF SECTION)

SECTION 01322
CONSTRUCTION PROGRESS PHOTOGRAPHY

PART ONE - GENERAL

1.1 SUMMARY

A. Required**:** Provide photographs taken at the Jobsite at the specified stages of Contracted Work in accordance with provisions of this Section. Install a live webcam at each for each of the major work areas (West Park, Arts Plaza, and East Park).

1. Take three (3) views of each major improvement or other feature as directed by the ENGINEER at thirty (30) day intervals during the period of Contracted Work.

2. Take first photographs just before CONTRACTOR starts any work operations at the Jobsite.

3. Take final photographs when all Contracted Work has been completed, regardless of time interval since previous photographs were taken. These photographs shall be suitable for use in City presentations and publications.

B. Related Work:

1. Documents affecting work of this Section include, but are not necessarily limited to, GENERAL CONDITIONS, DIVISION 1 - GENERAL REQUIREMENTS and other Sections of the Project Manual.

1.2 SUBMITTALS

A. Comply with pertinent provisions of Section 01330 – SHOP DRAWINGS / SUBMITTALS of the GENERAL REQUIREMENTS.

B. Except as otherwise directed by the ENGINEER, upload copies of photographs to the project e2020 website.

1.3 QUALITY ASSURANCE

A. Secure the services of a full-time professional photographer who is skilled and experienced in construction photography and whose work samples are acceptable to the ENGINEER.

B. Do not replace the photographer without the ENGINEER'S written approval.

C. Do not permit prints to be issued for any other purpose without specific written approval from the ENGINEER.

D. Photographs and prints to be of professional quality; clear, in focus, with high resolution and sharpness, and with minimum distortion. Require the photographer to retain the negatives for at least one year following Date of Substantial Completion, and to provide additional prints to the CITY during that

period at the prevailing commercial rates for such prints. If photographs are taken electronically, the minimum resolution shall be 8 megapixels.

PART TWO - PRODUCTS

2.1 CONSTRUCTION PHOTOGRAPHS

A. Provide Color photographs at a minimum of 5 megapixels.

B. Upon upload to the project e2020 website, identify the following:

1. Job name and address;

2. Location from which photographed;

3. Date of photograph;

4. Photographer's name and address, and the photograph number.

PART THREE - EXECUTION

3.1 CONSTRUCTION PHOTOGRAPHY

A. View Locations: As directed by the ENGINEER**.** Location(s) to provide diversified overall view of the Work from a position that is expected to remain accessible throughout progress of the Contracted Work for added photography.

Continue to take photographs at same view position of the Works to show continuous progress of the Works until the Works are completed or as directed by the ENGINEER**.**

B. Notifications: Notify the ENGINEER seven (7) days in advance of proposed day of photography.

C. Weather Conditions: When inclement weather is anticipated, consult with the ENGINEER to determine acceptable alternate arrangements.

D. Timing of Photography: To the maximum extent practicable, take photographs at the same time of day throughout progress of the Contracted Work. Timing shall be approved by the ENGINEER**.**

E. On Contract Drawing: Photographer to identify each photograph location or by such other means as acceptable to the ENGINEER, to enable future photographs to be taken from the same location and position.

F. Change of Locations: When so directed by the ENGINEER because of construction, change one or more of the locations inside or outside of the building(s).

(END OF SECTION)

SECTION 01323
CONSTRUCTION STATUS REPORTS

1.1 THE REQUIREMENT

A. Weekly Status Report

During the construction phase of the Work, the CONTRACTOR shall submit weekly written status reports to the ENGINEER and the INSPECTOR. The report shall contain a record of inspections and tests, not performed by CITY forces, for all Work accomplished subsequent to the previous report and shall include the following information:

1. Type of work under way during the time frame of the report (e.g., earthwork, concrete work, structural steel erection, equipment manufacturing, component installation).

2. Inspections and tests, and location of inspections and tests that were made.

3. Results of inspections.

4. Reports of tests performed, including those specified, with the results of the tests, and acceptance criteria, including failures and remedial action to be taken. Test results, including all computations, shall be attached to the report form. Where test results cannot be completed by the time the report is submitted, a notation shall be made that the test was performed, including the approximate expected date that test results will be reported.

5. Report of any nonconforming items/activities. Nonconformance report forms designed solely for this purpose shall be utilized.

6. Results of inspections of material and equipment done upon their arrival at the Jobsite and prior to their incorporation into the Work. This includes, but is not limited to, compliance with approved submittals, damage, and proper storage requirements.

7. Offsite quality control activities.

8. Instructions received from the ENGINEER or INSPECTOR.

9. In all cases, the report must be verified and signed by the CONTRACTOR'S representative. The verification is to contain the statement that all supplies and materials incorporated in the Work are in compliance with the terms of the Contract except where noted.

B. Monthly Procurement and Delivery Status Report

1. The CONTRACTOR shall prepare and submit to the INSPECTOR and the ENGINEER a comprehensive Monthly Procurement and Delivery Status Report covering the procurement and delivery of equipment and materials to the Jobsite. This report shall outline the purchasing status of

all material, equipment and contracts. The purchasing status report shall include the following information:

a. Specification, purchase order, and Contract number;

b. Submittal Number;

c. Item or service description;

d. Required job site date; and

e. Project Delivery Date.

In addition, this report shall contain a three (3) month "Look Ahead Projection" of all factory tests, shipments to be inspected, or any other supplier activity which the CONTRACTOR, the ENGINEER, or the INSPECTOR, has the right to witness and accept. The report shall detail arrangements which are planned for meeting the witnessing and acceptance requirements, and for recording tests passed.

2. The CONTRACTOR shall obtain a submittal schedule for technical data, Shop Drawings, material and test certificates, O&M manuals, spare parts lists, and other submittals, from each supplier. This schedule shall be monitored and updated on a monthly basis and shall be submitted to the INSPECTOR and the ENGINEER with the Monthly Procurement and Delivery Status Report.

C. Miscellaneous Submittals

Required: CONTRACTOR shall prepare a Daily Construction Report recording the following information concerning events at the job-site and submit duplicate copies to the Consultant or ENGINEER at weekly intervals:

1. List of Subcontractors and Sub-Subcontractors at the site**,** types of works and job location.

2. Approximate count of CONTRACTOR'S personnel at the site**,** name, type of work and job location.

3. Construction equipments at the site.

4. High and low temperatures, general weather conditions.

5. Accidents and unusual events.

6. Meetings and significant decisions.

7. Stoppages, delays, shortages, losses.

8. Meter readings and similar recordings.

9. Emergency procedures.

10. Inspection, Orders and requests of governing authorities**,** type of work.

11. Change Orders received, implemented.

12. Services connected, disconnected.

13. Notice of Non-Compliance, Notice-To-Correct, and Job-Memorandum received.

14. Equipment or system tests and start-ups.

15. Preparation of Record Drawings and Project Manual.

16. Equipment or material delivered to site.

17. Partial completions, occupancies

18. Substantial completions authorized.

(END OF SECTION)

SECTION 01330
SHOP DRAWINGS / SUBMITTALS

1.1 THE REQUIREMENT

A. The CONTRACTOR shall prepare, approve, sign and submit to the ENGINEER any and all Shop Drawings, Manufacturers' Project Data, Job References, Certificates, Wiring Diagrams, Operation and Maintenance Manuals and Samples required by the Contract Documents on “e2020” (the City’s web-based construction management application.)

NOTE: All references in the Technical Sections under "Shop Drawings" or “Submittal” to the words "approval of" shall mean "reviewed by".

B. The CONTRACTOR, by preparing, reviewing, approving and submitting the Shop Drawings, Manufacturers' Product Data, Job References, Certifications, Wiring Diagrams, Operation and Maintenance Manuals and Samples, represents that the CONTRACTOR has determined and verified all materials, field measurements and filed construction criteria related thereto, and has checked and coordinated the information contained within such submittals with the requirements of the Work, the Project and the Contract Documents.

C. The CONTRACTOR shall inform the ENGINEER, in writing, of any and all deviations and/or questions regarding the Contract Documents, and shall properly identify these areas of concern in the transmittal of the Shop Drawings, Manufacturers' Product Data, Job References, Certification, Wiring Diagram and Samples for proper written disposition respectively by the ENGINEER. The CONTRACTOR shall provide Shop Drawings in accordance with Specification Section 01116 of the General Requirements.

D. Transmittal sheets for all Shop Drawings, Manufacturers' Product Data, Wiring Diagrams, Job References, Certifications, Operation and Maintenance Manuals and Samples shall be uploaded in e2020 in accordance with Specification Section 01116 of the General Requirements.

E. The CONTRACTOR is not relieved of the responsibility for any deviation from the requirements of the Contract Documents, by virtue of CONTRACTOR’S approval and submittal of the Shop Drawings, Manufacturers' Product Data, Wiring Diagrams, Operation and Maintenance Manuals and Samples to the ENGINEER. All deviations and/or interpretations of the Contract Documents must be approved in writing by the ENGINEER.

F. The review of the Shop Drawings, Manufacturers' Product Data, Job References, Certifications, Wiring Diagrams, Operation and Maintenance Manuals; and Samples by the ENGINEER does not relieve the CONTRACTOR of its responsibility from any requirements of the Contract Document, or any errors or omissions in such submittals, or for any failure to perform the requirements and intent of Contract Documents.

G. The Shop Drawings shall include such fabrication, erection, and setting drawings; manufacturer’s standard drawings or catalog cuts, performance and test data;

Job References, Certifications, wiring and control diagrams; schedules; samples; and descriptive data pertaining to material, machinery and methods of construction as may be necessary to carry out the intent of contract Drawings and Project Manual and shall not relieve the CONTRACTOR from the responsibility for proper fitting and construction of the Work, nor from furnishing materials and Work required by the Contract, which may or may not be indicated on the Shop Drawings.

The CONTRACTOR shall perform no portion of the Work requiring submittal and review of Shop Drawings, Product Data, Job References, Certifications, samples, etc. until such submittals have been reviewed by the ENGINEER.

H. Shop Drawings shall show in detail the size, sections and dimensions of all the members, the arrangement and construction of all connections and joints and other pertinent details; also, all holes, straps and other fittings required by other CONTRACTORS for attaching their work. When required, by the ENGINEER or by Standard Practice of the CONTRACTOR, engineering computations shall be submitted for the record. The CONTRACTOR shall be responsible to coordinate with other trades, collect all necessary data or information for preparation of shop Drawings and deliver approved copies of Shop Drawings to all others whose work is dependent thereon.

I. At all times, the CONTRACTOR shall maintain at the site of the project, a complete file of Shop Drawings and Manufacturers' Data of its own and all Subcontractors. All Shop Drawings and Manufacturers' Data shall be reviewed and by the CONTRACTOR.

J. Submittals shall be made within the times specified in the various Divisions, of the Project Manual. If time is not specified, they shall be made within a period which will cause no delay in the work. The CONTRACTOR shall allow twenty-one (21) calendar days on the project construction schedule for each item submitted for the review by the ENGINEER.

K. In the event the ENGINEER finds the submittal to be incomplete, it will be returned to the CONTRACTOR for required revised drawings. The CONTRACTOR will revise the drawings and resubmit as directed on original submittals. Any delay resulting from the need for resubmittals shall be the CONTRACTOR'S responsibility.

L. In the event, the Contract Documents are prepared by a Consultant Architect or ENGINEER, the pertinent requirements of this Section will be effective, except as follows or as otherwise modified in the Divisions that follow:

1. All references in the Contract Documents to the Consultant shall mean the Consultant Architect or Consultant Engineer

2. Submittals shall be uploaded in e2020 in accordance with Specification Section 01116 of the General Requirements.

3. If submittal is found to be incomplete and revised drawings are required, CONTRACTOR will be notified by the Consultant or ENGINEER.

4. When Shop Drawings are required in accordance with the Contract, due to “substitutions” or for "or equal" determination or review as indicated hereinbefore, after final check, said drawings, reviewed and signed by Consultant shall be forwarded to the ENGINEER, Bureau of Engineering for final review and distribution electronically, through e2020.

5. Unless otherwise specified for Operation and Maintenance Manuals, four (4) copies are required and all copies should be delivered to the Consultant Architect for review. After reviewed and signed by the Consultant, scan and electronically upload in e2020 for final review.. Once approved by the ENGINEER on e2020, four (4) copies shall be forwarded to the ENGINEER for distribution to the CITY maintenance staff. The CONTRACTOR will receive a transmittal of acceptance of Operation and Maintenance Manual Submittal.

M. In the event the Contract Documents are prepared by CITY personnel, four (4) copies of each Operation and Maintenance Manuals, shall be sent to the ENGINNER by the CONTRACTOR for review and final distribution. Distribution requirements described in Items L(4) and L(5) hereinbefore remain effective.

N. CONTRACTOR’S Coordination:

1. Consultant or ENGINEER will return and will not review unrelated submittals.

2. The CONTRACTOR may be required to provide drawings, setting diagrams and similar information necessary for proper coordination of Contracted Work. Such data shall remain between the CONTRACTOR and CONTRACTOR’S Subcontractor and will not be reviewed by the Consultant or ENGINEER unless specifically called for in the Contract Documents.

3. Consultant or ENGINEER will not review any required Structural Shop Drawings, Structural Calculations, etc., not prepared or signed by a State of California licensed ENGINEER.

4. Consultant or ENGINEER will return and will not review any submittal requiring coordination with other submittals until such other submittals or required information are received by the Consultant or ENGINEER.

O. CONTRACTOR’S Submittals: CONTRACTOR’S submittals required for performance of Contracted Work shall be electronically submitted in e2020 construction subsections 8.1 through 8.22, and shall include, but are not limited to, the following:

1. Contract Price (Cost Breakdown)

2. Construction Schedule and Notification to ENGINEER of completion of each milestone or percentage increment of the Work as required.

3. Submittal Schedule

4. Daily Construction Reports

5. Shop Drawings and Structural Calculations.

6. Manufacturer's Data and Specifications.

7. Samples

8. Templates

9. Certificate of Compliance

10. Construction Photographs

11. Substitutions

12. Record Drawings and Record Project Manual

13. Operation & Maintenance Manuals

14. Stock Materials, Spare parts, tools

15. Material Testing Results

16. Daily Statements of cost-plus percentage Change Order

17. Survey grade sheets

18. Copies of Notice-To-Correction or Notice of Non-Compliance from governing authorities.

19. Maintenance Logs and Maintenance Schedule.

P. Administrative Submittals include, but are not limited to the following:

1. Permits

2. Request for Payments

3. Performance and Payment Bonds

4. Insurance Certificates

5. List of Subcontractors and proof of qualifications

6. Hazardous Communication Program.

7. Certified weekly payroll records.

8. Ethnic Composition of Work Force Report.

9. Third Party Testing Agency

Q. CONTRACTOR shall conform to the provisions of the Contract Document and as may be specifically directed by the Consultant or ENGINEER.

1. Preparation and processing of submittals shall be coordinated with Contracted Work operations, which includes fabrication, purchasing and delivery of work items so as not to delay Contracted Work operations.

2. In each copy of the Submittal, mark every applicable material, product, equipment, manufacturer's data, product information, color samples, rating or values, part and model numbers, etc. by red color circle. Each of the submittal items must be clearly distinguishable from other unrelated or similar items listed in the Manufacturer's Catalog or Technical Specifications, Manuals, etc.

R. Coordination and Submittals:

1. Carefully review and coordinate all aspects of each item being submitted.

2. Carefully review contract drawings and technical sections, verify all work as laid out or indicated meeting the applicable codes and standards.

3. Ensure ample time for reviewing and processing of the submittals by the CITY or other authorized agencies, delays resulting from improper and untimely submittals shall be the responsibility of the CONTRACTOR.

4. Verify that all such submittal items conform to the Project Manual requirements noted in the Technical Sections.

5. Verify all site conditions and provide all required dimensions and measurements in Shop Drawings.

6. Where necessary, review the CITY'S comments, make changes and resubmit to local governing agencies for approval. Upload the approved plans or drawings for review on e2020 and furnish copies of said drawings at the ENGINEER'S request.

S. CONTRACTOR shall affix to each submittal, the CONTRACTOR'S signature certifying that required coordination has been performed and include on an attached label for processing and recording action taken, noting the following:

1. Name of the Project

2. Date of the Submittal

3. Name and address of Consultant

4. Name and address of the CONTRACTOR

5. Name and address of the Subcontractor(s)

6. Name and address of the Supplier

7. Name and address of the Manufacturer

8. Reference to Specification Section Number and Title

9. Reference to Drawing Sheet Number and detail(s)

10. Submittal Number

11. Priority Number and expected return date.

T. CONTRACTOR shall ,verify on e2020 that the CONTRACTOR has met the following CITY requirements:

1. Conformance in all respect to the Contract Document requirements.

2. Has reviewed and coordinated all aspects of each submitted item relative to manufacturer's product data, Specifications, etc.

3. Has verified with site conditions and all dimensions.

4. That all questions and/or comments prepared by the Consultant or ENGINEER have been reviewed and answered.

5. CONTRACTOR is not relieved from responsibilities for errors, omissions and any deviation in the required submittals as revealed resulting from the CITY'S or Consultant's review of such submittals.

6. CONTRACTOR shall add and sign the following paragraph on all submittals:

"It is hereby certified that the equipment, material, color samples, or details shown and marked in this submittal are that proposed to be incorporated into the project; are in compliance with the Contract Drawings and Project Manual and can be installed in the allocated space,"

Failure to add the above written statement for compliance will result in return of submittals without review.

7. In each Section of the Project Manual, all required lists of material, product or equipment; manufacturer's data; and etc., shall be appropriately grouped and submitted to the CITY for review as one submittal. Piece meal submittals will not be acceptable.

Any submittal with outstanding product data, manufacturer's specification or any required information shall deem to be incomplete and subject for rejection without any review. Subsequent submittal shall be considered as second submission.

8. Exception:
For Division 16 - ELECTRICAL, CONTRACTOR may submit all required list of material, product or equipment, manufacturer's data, wiring diagram, product information and etc., from various Sections in one submittal.

9. Exception:
For Section 05120 - STRUCTURAL STEEL, Section 15400 – PLUMBING and Section 15600 - HEATING, VENTILATING & AIR CONDITIONING, CONTRACTOR may submit the required lists of material, products, equipments, manufacturer's data, product information, color or material samples, structural calculations, and etc., of each section in two separate submittals. Each submittal shall be allowed for two (2) submissions or reviews without additional charge. In the first submittal, CONTRACTOR shall provide a complete list of submittal items and a list of the outstanding product data, manufacturer's specification and etc., to be submitted in the second submittal. Failure to submit said listings shall deem the submittal to be incomplete and causing the submittal to be rejected without review.

10. All Shop Drawings shall be provided with dimensions and measurements verified at the site as stated hereinbefore. If the CONTRACTOR decides to submit the dimensions and measurements at a later time, the CONTRACTOR must state the reason, for the ENGINEER'S approval, why the dimensions and measurements cannot be taken. If approval is granted, the CONTRACTOR shall re-submit the approved submittal with the final dimensions and measurements after the Works are completed. The CONTRACTOR is not relieved from the responsibilities of error and omission, or any problem that may arise during the fabrication or installation.

11. It is considered reasonable that the CONTRACTOR shall make a complete and acceptable submittal to the ENGINEER or Consultant by the second submission of a submittal item. The CITY reserves the right to withhold moneys due to the CONTRACTOR to cover additional costs of the ENGINEER or Consultant's review beyond the second submittal. On the third submittal by CONTRACTOR, the CONTRACTOR will be charged $150 per hour of CITY'S or Consultant's review time and no additional Contract time shall be allowed.

U. Comply with pertinent provisions of the GENERAL CONDITIONS and GENERAL REQUIREMENTS as applicable**,** but not limited**,** to the following:

1. Record Drawings, Record Project Manual, Record Product Data, Record Sample and Record Submittals.

2. Operation and Maintenance Manuals.

3. Manufacturer's Reference Data.

4. Qualification of CONTRACTOR.

5. Certification of Warranty and Guarantee.

6. Manufacturer's Recommended Installation Procedures.

7. Materials List of items proposed to be provided as specified in the Technical Sections of the Project Manual.

8. Samples, illustrating assembly details, workmanship, fabrication techniques, connections, color selection to be submitted as specified in the Technical Sections of the Project Manual.

9. Regarding Concrete Work, submit Portland Cement Mill Certificates, Concrete Mix and Curing Designs, Load Tickets and Product Data.

10. Regarding shop-Inspected fabricated items, submit Shop INSPECTOR Tag, copy of the billing of lading, delivery receipt for materials or equipment.

11. Mock-ups shall be delivered to or constructed at the project site. The Contractor shall submit a Transmittal sheet including a picture of the mockup uploaded to e2020. Submit the following Mock-ups for the project:

    a. Sample Panel – Unit Paving

    b. Sample Concrete Block Panel - Masonry Work

    c. Sample Cabinet - Custom Casework

    d. Sample Plaster Finish Panel - Lathing and Plastering Work

    e. Sample Texture Panel - Gypsum Wall Board

    f. Color Sample at Site - Painting and Coating Work

    g. Full Size Sample - Toilet Room Accessories

    h. Sample Panel – Historic Material Repair

    i. Sample Panel – Decorative Metal Fencing and Gates

    j. Sample Panel – Crushed Stone Surfacing

    k. Sample Panel – Stainless Steel Railings

    l. Sample Panel – Finished Concrete Surfaces

    m. Sample Equipment and Components – Fog Mister System

    n. Sample – Stone Boulders

    o. Color Sample at Site – Sports Court Colored Surfacing

    p. Sample Panel – Safety Surfacing

    q. Sample Panel – Synthetic Turf

r. Sample Panel – Surface Sealer Treatments and Joint Sealants

s. Sample Panel – Aluminum Entrances and Storefronts

t. Sample Panel – Aluminum Windows

u. Sample Hardware – Finish Hardware

v. Sample Panel – Glass and Glazing

w. Sample Panel – Identifying Devices

x. Sample Lighting – Light Fixture Mockups

V. The CONTRACTOR shall comply with all submittal requirements in the Contract Documents. For convenience, a checklist of submittals required in all the Technical Sections is included, but is not necessarily limited to the following:

02205 – HISTORIC RESTORATION PROCEDURES	• Historic Preservation Operations Plans • Mock-up
02210 – CLEARING, GRUBBING, AND STRIPPING	• Schedule of clearing, grubbing, and erosion control measures
02225 – LEAD BASED PAINT REMOVAL	• Contractor or subcontractor qualifications • Removal plan • Local exhaust equipment • Permits and notifications • Project log book • Landfill information • Monitoring results • Air pressure differential recordings • Hazardous manifest
02240 – SHEETING, SHORING, AND BRACING SYSTEMS	• Design and calculations • Shop drawings • Permits • Certification form • Shoring monitoring data • Notification to adjacent owners
02237 – SEWER BYPASSING	• Drawings and Complete Design Data

02310 – EARTHWORK	• Sources of imported materials • Backfill and compaction methods • Dewatering plans • California General Construction Activity Stormwater Permit • Waste Discharge ID No. • Wet Weather Erosion Control Plan or SWPPP • Test reports
02330 – SOIL STABILIZATION	• Sketches of injection techniques and patterns • Compliance data • Test data • Contractor qualifications
02501 – MAINTENANCE AND SUPPORT OF UTILITIES	• Product data • Drawings and methods of utility relocation and protection • Engineer qualifications • Certifications • Quality control plans • Notifications
02510 – WATER DISTRIBUTION	• Layout • Shop drawings • Product data • Purging and disinfecting reports
02515 – WATER PIPELINE TESTING AND DISINFECTION	• Testing schedule
02525 – SANITARY SEWER SYSTEM TESTING	• Plans for testing, water conveyance, control and disposal • Written 48-hour notice of proposed testing schedule
02540 – SITE SANITARY SEWER UTILITIES	• Product data • Contractor's qualifications • Shop drawings • Testing data and reports
02545 – STORM DRAIN SYSTEM	• Product data • Contractor's qualifications • Shop drawings • Testing data and reports

02585 – MANHOLE & PRECAST VAULT CONSTRUCTION	• Shop drawings
02710 – YARD WORK AND STREET WORK	• Portland cement mill certificate • Design mix and curing methods • Asphaltic concrete mix design • Asphalt paving subcontractor certification • Product data • Shop drawings • Spreading schedule
02720 – UNIT PAVING	• Product data • Adhesion and compatibility test reports • Sieve analysis • Samples • Stone shop drawings • Material certificates • Stone fabricator qualification • Material test reports • Installer qualifications • Mockups
02730 – CRUSHED STONE SURFACING	• Qualifications Data • Material & Product Certificates • Material Test Reports • Method Statement • Field Quality Control Tests • Binder Manufacturer's Field Report • Maintenance Data • Mockups
02810 – IRRIGATION SYSTEM	• Shop drawings • Procurement list • Manufacturer's installation procedure • Manufacturer's specifications
02821 – CHAIN LINK FENCING AND GATES	• Manufacturer's list of items • Manufacturer's specifications • Manufacturer's recommended installation procedure • Manufacturer's certification of compliance • Shop drawings

02822 – DECORATIVE METAL FENCES AND GATES	• Product data • Shop drawings • Samples • Field quality control reports • Product test reports • Installer qualifications
02823 – STAINLESS STEEL RAILINGS	• Product Data • Samples • Design and Calculations • Shop Drawings • Mockups • Field Verification Report • Qualifications Data • Material & Product Certificates • Welding Certificates • Maintenance Data
02824 – FOG MISTER SYSTEM	• Design and Calculations • Product Data • Coordination Drawings • Shop Drawings • Field Verification Report • Qualifications Data • Material List • Certifications • Test Reports • Record Drawings • Operating Data • Warranty Information • Maintenance Data • Mockups
02870 – SITE FURNISHING	• Product data • Samples • Material certificates • Welding qualifications • Fabricator qualifications • Maintenance Data
02871 – STONE BOULDERS	• Product Data • Samples • Mockups • Shop Drawings • Field Verification Report • Qualifications Data

02900 – LANDSCAPING	• Materials and equipment list • Agronomic Soil Testing and Analysis • Fertilizer data • Soil amendment data • Planting tablet, stake, and root barrier data • Herbicide/pesticide application program • Detailed layout of plants • Certification of licensed horticulturist or qualified plant pathologist • Shop drawings • Procurement list • Work certification • Bonds
02795 – SYNTHETIC TURF	• Installation Qualifications • Sample • Warranty • Testing and Quality Control Data • Material and Product Data • Maintenance and Operating Data • Striping Layouts
03100 – CONCRETE FORMWORK	• Falsework calculations and drawings • Scaffolding calculations and drawings • Detailed plans of falsework and scaffolding
03200 – REINFORCEMENT STEEL	• Shop drawings • Mechanical couplers (LADBS approval, manufacturer's recommendations, certified test reports, shop drawings) • Welding (mill test reports, written welding procedure for each weld type) • Buy Clean California Act Submittal

03250 – CONCRETE ACCESSORIES	• Mill certificates and certified compliance of high strength anchor bolts • Shop drawings • Catalog cuts • Manufacturer's recommendations
03290 – JOINTS IN CONCRETE	• Waterstop sample • Joint sealant product information and certified test reports • Shipping certification • Placement shop drawings
03300 – CAST-IN-PLACE-CONCRETE	• Product data • Samples • Laboratory test reports • Portland cement mill certificates • Concrete mix and curing design • Certified delivery tickets • Certificate of compliance • Buy Clean California Act Submittal
03302 – UNDER SLAB VAPOR BARRIER/RETARDER	• Product data • Samples • Qualification data • Material certificates • Field quality control test and inspection reports
03314 – SURFACE CLEANING AND PREPARATION	• Product data • Working drawings and method statements • Qualifications • Certifications • Quality control plan • Notifications • Test results
03315 – GROUT	• Certified test results • Manufacturer's instructions and recommendations
03370 – CONCRETE CURING	• Product Data • Manufacturer's instructions and recommendations

03400 – PRECAST CONCRETE	• Shop drawings • Samples • Mix proportions • Test reports • Certificate of compliance • Manufacturer's qualifications
03740 – CONCRETE REPAIR	• Certified test results • Detailed written epoxy injection procedures • Mockups
04210 – BRICK MASONRY	• Materials list • Samples • Manufacturer's specifications • Shop drawings
04230 – REINFORCED HOLLOW UNIT MASONRY	• Manufacturer's literature • Sample panel • Bar reinforcement drawings and details • Manufacturer's certificate
05035 – ANODIC FINISH COATINGS	• Samples
05120 – STRUCTURAL STEEL	• Certifications • Qualifications • Product data • Erection plan • Test reports • Welding procedure specifications and qualification tests • Buy Clean California Act Submittal
05300 – METAL DECK	• Product research reports • Shop and erection drawings
05400 – COLD-FORMED METAL FRAMING (METAL STUD)	• Product data • Manufacturer's recommended installation procedures • Horizontal and vertical fastener schedule • Shop drawings • Manufacturer's mill certificate • Welder's certificate

05500 – METAL FABRICATIONS	• Materials list • Shop drawings • Samples • Templates • Manufacturer's specifications • Manufacturer's recommended installation procedures • Certificates
05510 – METAL STAIRS	• Materials list • Shop drawings • Manufacturer's recommended installation procedures
05520 – HANDRAILS AND RAILINGS	• Shop drawings • Calculations
05530 – FABRICATED GRATING	• Product data • Installation instructions • Shop drawings • Factory test reports • Manufacturer's certification of compliance • Laboratory test report • Manufacturer's report
05700 – PREFORMED METAL PANELS	• Detailed design drawings • Erection drawings • Samples • Manufacturer's installation instructions • Research reports
06100 – ROUGH CARPENTRY	• Shop drawings
06400 – CUSTOM CASEWORK	• Samples • Shop drawings • Proof of qualification and certifications • Manufacturer's recommended installation procedures
07110 – MEMBRANE WATERPROOFING	• Product data • Manufacturer's recommended installation procedures
07182 – FLOORING/PAVING SEALER TREATMENT	• Certification • Shop drawings • Samples • Product data • Test reports

07211 – BUILDING INSULATION	• Product data • Certification
07290 – WATERPROOFING	• Certification • Compliance • Manufacturer's recommended installation procedures • Manufacturer's specifications • Materials list
07552 – BUILT UP ROOFING	• Product Data • Shop Drawings • Samples • Certifications
07500 – MEMBRANE ROOFING	• Product data • Shop drawings • Manufacturer's data • Compliance • Manufacturer's certification
07600 – FLASHING AND SHEET METAL	• Materials list • Shop drawings • Manufacturer's specifications • Manufacturer's recommended installation procedures • Samples
07830 – ROOF HATCHES	• Manufacturer's data • Shop drawings
07900 – JOINT SEALANTS	• Product Data • Samples • Qualifications
07920 – CAULKING AND SEALANTS	• Manufacturer's data • Samples
08110 – METAL DOORS AND FRAMES	• Materials list • Shop drawings • Manufacturer's specifications • Manufacturer's recommended installation procedures
08305 – ACCESS PANELS	• Product data • Shop drawings • Materials list/schedule

08331 – STEEL ROLLING DOORS	• Materials list • Shop/erection drawings • Manufacturer's recommended installation procedures • Manufacturer's specifications and data • Wiring and control diagrams • O&M instructions
08416 – ALUMINUM ENTRANCES AND STOREFRONTS	• Shop/erection drawings • Manufacturer's specifications and data • Materials list • Manufacturer's recommended installation procedures • Samples • Certificates
08520 – ALUMINUM WINDOWS	• Shop/erection drawings • Manufacturer's recommended installation instructions • Manufacturer's certification • Samples
08710 – FINISH HARDWARE	• Finish hardware schedule • Finish hardware floor plans • Product data • Templates • Samples • Product certification and guarantee
08800 – GLASS AND GLAZING	• Material list • Manufacturer's data • Samples • Labeling • Manufacturer's recommended installation procedures • Buy Clean California Act Submittal
09200 – LATH AND PLASTER	• Product data • Material list • Samples

09260 – GYPSUM BOARD SYSTEMS	• Samples • Product data • Material list • Manufacturer's specifications • Preparation procedures • Manufacturer's recommended installation procedures
09900 – PAINTING	• Product data • Shop drawings • Samples
10411 – IDENTIFYING DEVICES	• Product data • Samples • Typical layout
10800 – TOILET ROOM ACCESSORIES	• Product data • Shop drawings • Samples • Non-stock items
10443 – DISABLED ACCESSIBILITY PARKING SIGNAGE	• Product data • Shop drawings
10520 FIRE PROTECTION SPECIALTIES	• Product data • Installation Instructions • Details
15015 – BUILDING VALVES, GENERAL	• Product Data • Installation Instructions
15020 – NOISE VIBRATION AND SEISMIC CONTROL	• Materials list • Shop drawings • Torsional and lateral vibration analysis • Torsional natural frequency calculations • Equipment vibration field test procedures • Certification of compliance • Certified factory noise tests • Certified test reports
15050 – BASIC MECHANICAL MATERIALS AND METHODS	• Product data • Samples • Shop drawings • Coordination drawings • Welder certificates

15060 – PLUMBING FIXTURES	• Product Data • Installation Instructions
15070 – PLUMBING EQUIPMENT	• Product Data • Installation Instructions • Operation, maintenance, and inspection data • Replacement part numbers • Service depot locations and telephone numbers
15080 – PLUMBING PUMPS	• Product Data • Shop Drawings • Installation Instructions • Wiring Diagrams • Maintenance Data
15120 – HEATING EQUIPMENT	• Manufacturer's data • Shop drawings • Manufacturer's recommended installation procedures • Modifications to contract drawings
15130 – AIR CONDITIONING AND AIR HANDLING EQUIPMENT	• Product Data • Shop Drawings • Installation Instructions
15160 – FANS	• Product Data • Shop Drawings • Coordination Drawings • Maintenance Data
15170 – AIR TRANSMISSION AND AIR DISTRIBUTION SYSTEMS	• Material Lists • Manufacturer's Specifications • Shop Drawings • Qualifications
15210 – METAL DUCTWORK	• Shop drawings • Coordination drawings • Welding certificates • Field quality-control test reports

15240 – TEMPERATURE CONTROL SYSTEMS	• Item list • Manufacturer's specifications • Manufacturer's recommended installation procedures • Shop drawings • Operating instructions • Guarantee
15260 – TESTING, ADJUSTING AND BALANCING	• Work certification • Test and balance procedures • Agenda • Preliminary report • Complete test reports
15400 – PLUMBING, GENERAL	• Product data • Design drawings • Calculations • Manufacturer's catalogs and samples • Materials list • Record drawings • O&M data
15410 – BUILDING PLUMBING PIPING	• Water samples • Test results • Reports • Coordination drawings
15510 – BUILDING MECHANICAL INSULATION	• Item list • Manufacturer's specifications • Shop drawings • Cut sheets • Manufacturer's data • Display sample • Manufacturer's recommended method of installation procedures
15610 – PIPING, GENERAL	• Shop drawings • Pipe fabricator certification • Program outline
15640 – PVC PIPE, FITTINGS, AND VALVES	• Product data • Shop Drawings • Certifications
15690 – COPPER TUBING AND BRASS PIPE, FITTINGS, AND VALVES	• Product data • Shop Drawings • Certifications

16020 – MUNICIPAL FACILITIES GENERAL ELECTRICAL REQUIREMENTS	• Shop drawings • Manufacturer's certification • Equipment floor plans • Materials list • Test reports • O&M manuals
16110 – RACEWAYS	• Cut sheets • Manufacturer's certified test reports
16150 – CONDUCTORS, 600 VOLTS AND BELOW	• Manufacturer's recommended procedures and practices
16170 – CABINETS AND ENCLOSURES	• Product Data • Shop Drawings • Installation Instructions
16180 – WIRING DEVICES	• Product data • Maintenance data
16270 – SERVICE AND DISTRIBUTION SWITCHBOARD	• Product data • Shop drawings • Layout drawings • Wiring diagrams • Field test reports • Maintenance data • Load-current and overload-relay heater list • Field test agency qualifications
16290 – MUNICIPAL FACILITIES GROUNDING SYSTEMS	• Product data • Field test and observation reports
16320 - TRANSFORMERS	• Product data • Shop drawings • Wiring diagrams
16330 - PANELBOARDS	• Product data • Maintenance Data
16430 – LIFE SAFETY FIRE ALARM SYSTEMS	• Shop Drawings • Data Sheets • Manufacturer's Certificates • Test Procedures • Operating and Maintenance Instruction Manual

165010 – ARCHITECTURAL LIGHTING FIXTURES, LAMPS, BALLASTS	• Catalog cut sheets • Samples/mockups • Certificate of compliance • Shop drawings • Engineered line drawings • Installation instructions • Controls Design

W. CONTRACTOR shall submit requests for changes in products, materials, equipment and methods of construction required by the Contract Documents, and all submittals shall conform to the provisions of Section 01630 – SUBSTITUTIONS AND "OR EQUAL" SUBMITTAL of the GENERAL REQUIREMENTS of the Project Manual immediately after the issuance of Notice-To-Proceed.

1. All substitution requests shall be made by the CONTRACTOR and shall imply the CONTRACTOR'S approval of such substitutions.

X. The Following Are Not Considered As Substitutions:

1. Substitutions requested by Bidders during the bidding period or prior to award of contract will not be considered or accepted.

2. Revisions to Contract Documents requested by the ENGINEER or the Consultant.

3. Specified options of products and construction methods included in Contract Documents.

4. The CONTRACTOR'S determination of and compliance with governing regulations and orders issued by governing authorities.

Y. CONTRACTOR shall perform no portion of the Contracted Work requiring submittal and review of Shop Drawings, Product Data, Samples, etc. until such submittals have been reviewed by the Consultant or ENGINEER. All work not shown on Shop Drawings or not conforming to Contract shall be removed without additional cost to the CITY.

Z. CONTRACTOR shall be responsible for procurement and installation of equipment or material without deviation upon receipt of the reviewed submittal from the ENGINEER or Consultant bearing the stamp of "No Exception Taken". Be responsible for the coordination with other trade, proper fitting and construction of the work, furnishing other material and work required which may not be indicated on the Contract Drawings or Submittals. All submittals shall be reviewed by the CITY for general design or compliance. CONTRACTOR will be responsible for deviation from the drawings or Project Manual, and for errors or omissions of any sort in the Submittals.

AA. CONTRACTOR shall review and attend to all "Note Markings" and/or "Comments Attached" as noted by the ENGINEER or the Consultant on the Submittal. Make corrections or modifications to equipment or material as required.

AB. CONTRACTOR shall omit any article disapproved or noted “Reject” by the ENGINEER, or any article not conforming to the contract, or not of proper quality or grade and provide suitable articles, in lieu thereof in conforming with the Contract.

AC. CONTRACTOR shall resubmit all submittals with corrections as noted by the ENGINEER or the Consultant or as required in timely manner without delay or impact to the contract.

(END OF SECTION)

SECTION 01350
AUDIT AND ACCESS TO RECORDS

1.1 THE REQUIREMENT

A. The CONTRACTOR shall maintain books, records, estimates, communications, payroll documents and other evidence directly pertinent to performance of Work under this Contract in accordance with generally accepted accounting principles and practices consistently applied for a period of no less than four (4) years from the date of the Project acceptance by the Board of Public Works. The CONTRACTOR shall also maintain the financial information and data used by the CONTRACTOR in the preparation or support of any cost submissions required for this Contract, or any Modifications or claims, and a copy of the cost summary submitted to the CITY. The CITY authorized representatives shall have access, at all times during normal business hours, to such books, records, documents and other evidence for the purpose of inspection, audit and copying. The CONTRACTOR will provide proper facilities for such access and inspection.

B. The CONTRACTOR agrees to make A through G of this Article applicable to this Contract and all Modifications or claims affecting the Contract price. The CONTRACTOR agrees to include A through G of this Article in all his contracts and all tier subcontracts in excess of $10,000, and to make A through G of this Article applicable to all Modifications and claims related to project performance.

C. Audits conducted under this Article shall be in accordance with generally accepted auditing standards and established procedures and guidelines of the reviewing or audit agency.

D. The CONTRACTOR agrees to the disclosure of all information and reports resulting from access to records under A and B of this Article, to the CITY and affected agencies.

E. Records under A and B of this Article shall be maintained and made available during performance of Work under this Contract within the time period specified in A of the Article. In addition, those records which relate to any portion of this Contract, to any Modification, to any dispute, to litigation, to the settlement of claims arising out of such performance, or to costs or items to which an audit exception has been taken, shall be maintained and made available within the time period specified in A of the Article.

F. This right of access Article applies to financial records pertaining to this Contract and all Contract Modifications. In addition this right of access applies to all records pertaining to all contracts, contract modifications, and contract amendments:

1. To the extent the records pertain directly to Contract performance;

2. If there is any indication that fraud, gross abuse or corrupt practices may be involved; or

3. If the Contract is terminated for default or for convenience.

G. Access to records is not limited to the required retention periods. The authorized representatives designated in A of this Article shall have access to records at any reasonable time for as long as the records are maintained.

H. Provided that CITY has made demand for access or audit, pursuant to this Section, CONTRACTOR'S compliance with provisions A through G of this Section shall be a condition precedent to maintenance of any legal action or proceeding by the CONTRACTOR against the CITY and to CONTRACTOR'S right to Progress or Final Payment. Without limitation to the foregoing, or to any other provisions for withholding set forth in the Contract Documents, CITY shall have the right, in its sole discretion and in addition to any right of withholding of retention, to further withhold from any payment to CONTRACTOR a sum of up to ten percent (10%) of the total amount set forth in CONTRACTOR'S current, unpaid Application(s) for Payment, until CONTRACTOR has complied with any outstanding and unsatisfied request by CITY for audits under this Section. Upon CONTRACTOR'S compliance with this Section, any monies withheld pursuant to this Paragraph solely due to CONTRACTOR'S failure to permit an audit requested by CITY shall be released to CONTRACTOR.

I. CONTRACTOR hereby consents and agrees that any failure by CONTRACTOR to provide access to records as provided in A through G of this Section shall be specifically enforceable by issuance of a preliminary and/or permanent mandatory injunction by a court of competent jurisdiction based on affidavits submitted to such court, without the necessity of oral testimony, to compel CONTRACTOR to permit access and inspection of the records or to require delivery of the records to CITY for inspection.

(END OF SECTION)

SECTION 01351
ESCROW BID DOCUMENTS

1.1 THE REQUIREMENT

A. Scope

1. This Article requires that the three (3) low bidders submit, within the specified time after receipt of bids, one (1) copy of all documentary information including, but not limited to, electronic files generated in preparation of bid prices for this project. This material is hereinafter referred to as "Escrow Bid Documents". The Escrow Bid Documents of the CONTRACTOR will be held in escrow for the duration of the Contract.

2. The successful Bidder agrees, as a condition of the award of the Contract, that the Escrow Bid Documents constitute all of the information used in preparation of the Bid, and that no other bid preparation information shall be considered in resolving disputes or claims. The successful bidder also agrees that nothing in the Escrow Bid Documents shall change or modify the terms or conditions of the Contract Documents.

B. Ownership

1. The Escrow Bid Documents are, and shall always remain, the property of the CONTRACTOR, subject to joint review by the CITY and the CONTRACTOR as provided herein. The Escrow Bid Documents are proprietary and secret information belonging to the CONTRACTOR and exempt from the Federal Freedom of Information Act, California Public Records Act, and the Los Angeles CITY Freedom of Information Act.

2. The CITY stipulates and expressly acknowledges that the Escrow Bid Documents, as defined herein, constitute trade secrets. This acknowledgment is based on the CITY'S express understanding that the information contained in the Escrow Bid Documents is not known outside the Bidder's business, is known only to a limited extent and only to a limited number of employees of the Bidder, is safeguarded while in the Bidder's possession, is extremely valuable to the Bidder and could be extremely valuable to the Bidder's competitors by virtue of it reflecting the Bidder's contemplated techniques of construction. The CITY acknowledges that the Bidder expended substantial sums of money in developing the information included in the Escrow Bid Documents and further acknowledges that it would be difficult for a competitor to replicate the information contained therein. The CITY further acknowledges that the Escrow Bid Documents and the information contained therein are made available to the CITY only because such action is an express prerequisite to award of the Contract. The CITY acknowledges that the Escrow Bid Documents include a compilation of information used in the Bidder's business, intended to give the Bidder an opportunity to obtain an advantage over competitors who do not know of or use the contents of the documentation. The CITY further agrees to safeguard the Escrow

Bid Documents, and all information contained therein, against disclosure to the fullest extent permitted by law.

C. Purpose

1. The purpose of the Escrow Bid Documents procedure is intended to create a spirit of cooperation in an atmosphere of honesty and candor between the CITY and the CONTRACTOR.

2. Escrow Bid Documents will be used to assist in the negotiation of price adjustments and Change Orders and in the settlement of disputes and claims. They will not be used for pre-award evaluation of the CONTRACTOR'S anticipated methods of construction or to assess the CONTRACTOR'S qualifications for performing the WORK.

D. Format and Contents

1. Bidders may submit Escrow Bid documents in their usual cost estimation format; a standard format is not required. It is not the intention of this Article to cause the Bidder extra work during the preparation of the Bid, but to ensure that the Escrow Bid Documents will be adequate to enable complete understanding and proper interpretation for their intended use. The Escrow Bid Documents shall be in English.

2. It is required that the Escrow Bid Documents clearly itemize the estimated costs of performing the WORK of each Bid item contained in the Bid schedule. Bid items should be separated into sub-items as required to present a complete and detailed cost estimate and allow a detailed cost review. The Escrow Bid Documents shall include all quantity takeoffs, crew, equipment, calculations of rates of production and progress, copies of quotations from Subcontractors and Suppliers, and memoranda, narratives, add/deduct sheets, and all other information used by the Bidder to arrive at the prices contained in the Bid. Estimated costs should be broken down into the Bidder's usual estimate categories such as direct labor, repair labor, equipment ownership and operation, expendable materials, permanent materials, and subcontract cost, as appropriate. Plant and equipment and indirect costs should be detailed in the Bidder's usual format. The CONTRACTOR'S reallocation of indirect costs, contingencies, markup and other items to each bid item shall be identified.

3. All estimates for items of Work that are based in whole or in part upon any baseline statements or information in the Geotechnical Baseline Report (GBR), shall clearly reference the baseline statements used. CONTRCTOR shall have no right to an adjustment in the Contract Price or the Contract Completion Date (due to Differing Site Conditions of the General Conditions) unless such baseline statements have been clearly identified in the Escrow Bid Documents.

4. All cost shall be identified. For bid items amounting to less than $10,000, estimated units costs are acceptable without a detailed cost estimate, provided that labor, equipment, materials, and subcontracts, as applicable, are included and provided that indirect costs, contingencies, and markups, as applicable, are allocated. Bid documents provided by

the CITY need not be included in the Escrow Bid Documents unless needed to comply with the following requirements.

E. Submittal

1. The Escrow Bid Documents shall be submitted to the Board of Public Works Office, by the three (3) low Bidders, in sealed containers, within forty-eight (48) hours after the time for receipt of Bids. The containers shall be clearly marked on the outside with the Bidder's name, date of submittal, project name and the words "Escrow Bid Documents".

2. The Escrow Bid Documents shall be accompanied with the certification (a sample is included), signed by an individual authorized by the Bidder to execute Bids, stating that the material in the Escrow Bid Documents constitutes all the documentary information used in preparation of the Bid and that the Bidder has personally examined the contents of the Escrow Bid Documents container and has found that the documents in the container are complete.

BID DOCUMENTATION CERTIFICATION

THE UNDERSIGNED HEREBY CERTIFIES THAT THE BID DOCUMENTATION CONTAINED HEREIN CONSTITUTES ALL OF THE INFORMATION USED IN PREPARATION OF THE BID AND THAT I HAVE PERSONALLY EXAMINED THESE CONTENTS AND HAVE FOUND THAT THIS BID DOCUMENTATION IS COMPLETE.

SIGNATURE: _____

NAME: _____

TITLE: _____

FIRM: _____

DATE: _____

3. Within 14 Calendar days following the receipt of bids, the Escrow Bid Documents of the apparent successful Bidder will be examined, organized and inventoried by representatives of the CITY, together with members of the CONTRACTOR'S staff who are knowledgeable of how the Bid was prepared. This examination is to ensure that the Escrow Bid Documents are legible and complete. It will not constitute approval of proposed construction methods, estimating assumptions, or interpretations of Contract Documents. Examination will not alter any condition or term of the Contract.

4. If all the documentation required in Section D, "Format and Contents", has not been included in the original submittal, additional documentation shall be submitted, at the CITY'S sole discretion, within twenty-four (24) hours after the original inventory and examination of the Escrow Bid Documents and prior to award of the Contract. The detailed breakdown of estimated costs shall be reconciled and revised, if appropriate, by

agreement between the CONTRACTOR and the CITY before making the award. If the Contract is not awarded to the apparent successful Bidder, the Escrow Bid Documents of the Bidder next to be considered for award shall be processed as described above.

5. Submission of complete Escrow Bid Documents is an essential element of the Bidder's responsiveness and a prerequisite to a Contract award. Failure to provide the necessary Escrow Bid Documents within the forty-eight (48) hour time limit, may render the Bid non-responsive. Escrow Bid Documents of the unsuccessful Bidders will be returned following award of the Contract.

6. If any Bidder's Bid is based on subcontracting any part of the WORK, each Subcontractor, whose total subcontract price exceeds five percent (5%) of the total Contract price bid by the Bidder, shall provide separate Escrow Bid Documents to be included with those of the Bidder. Such documents shall be opened and examined in the same manner and at the same time as the examination described above for the apparent successful Bidder.

7. If the CONTRACTOR wishes to subcontract any portion of the WORK after award, the CITY retains the right to require the CONTRACTOR to submit Escrow Bid Documents from the Subcontractor before the subcontract is approved.

F. Storage

1. The Escrow Bid Documents will be placed in lockable container, with provisions for the Contractor and the City to provide separate locks, for the life of the Contract, and stored in a mutually agreeable location at or near the jobsite. The cost of storage will be paid by the CITY.

G. Examination

1. The Escrow Bid Documents shall be examined by both the CITY and the CONTRACTOR, at any time deemed necessary by either the CITY or the CONTRACTOR, to assist in the negotiation of price adjustments and Change Orders or the settlement of disputes and claims.

2. Examination of the Escrow Bid Documents is subject to the following conditions:

   a. As trade secrets, the Escrow Bid Documents are proprietary and confidential.

   b. The CITY and the CONTRACTOR shall each designate, in writing to the other party and within ten (10) days after execution of the Contract, representatives who are authorized to examine the Escrow Bid Documents, with the exception of the initial reviewers as specified in Section 1.1.E.3 above. No other person shall have access to the Escrow Bid Documents.

c. Access to the Escrow Bid Documents may take place only in the presence of duly designated representatives of both the CITY and the CONTRACTOR.

3. The Escrow Bid Documents at all times remain the property of the CONTRACTOR and the CITY will take all reasonable steps necessary to protect confidentiality.

H. Final Disposition

1. The Escrow Bid Documents will be returned to the CONTRACTOR at such time as the following conditions have been satisfied.

   a. The Contract has been completed.

   b. Final payment has been issued by the CITY.

   c. All litigation has been completed, and a written agreement has been executed between the CITY and the CONTRACTOR that no further litigation will be made.

2. The Escrow Bid Documents will be sealed and promptly returned to the CONTRACTOR by the party in charge of the Escrow Bid Documents. Reproduction of any portion of the Escrow Bid Documents will not be permitted at any time without the written permission of the CONTRACTOR.

(END OF SECTION)

SECTION 01353
OPPORTUNITY TO PARTNER

1.1 THE REQUIREMENT

A. The successful bidder will have the opportunity to enter into a cooperative partnership agreement with the CITY for the contract. Participation in Partnering is highly encouraged. Partnering will create a framework for conflict resolution, improved communications, reduced litigation, and cost containment. During the partnering session, all parties will participate in developing an Issue Resolution Ladder, which will help establish and communicate the chain of command in each organization (See Attachment 01353–A1). Each level of the organization is expected to work cooperatively to resolve issues. However, if issues cannot be resolved in a timely manner or are beyond the authority granted that level, each party understands that the issue must be elevated to the next level.

B. The objective of this Partnering agreement would be effective completion of the Work on time and to achieve a standard of quality that would be a source of pride to both the CITY and the CONTRACTOR. Partnering is intended only to establish an environment of cooperation between the parties and will not affect the terms of this contract.

C. An initial one (1) day training session is recommended to initiate the partnership agreement, along with two (2) follow-up sessions. The cost of this training, excluding staff labor charges, will be paid from a fixed cash allowance that has been allocated as the bid item Opportunity to Partner in the SCHEDULE OF WORK AND PRICES. No Overhead and Profit shall be added to the cost of the training. If the total cost of the partnering training differs from the amount set forth in the SCHEDULE OF WORK AND PRICES, the Contract Price shall be adjusted by a Change Order for the difference between the total actual cost and the amount included in the Bid, as an additional amount due the CONTRACTOR or a credit to the CITY, as appropriate.

D. The third party partnering moderator shall be chosen jointly by the Engineer and the Contractor. The City or Contractor may suggest the use of certain moderator, however each party shall have the right to agree or deny the use of the suggested moderator.

(END OF SECTION)

(SEE ATTACHMENT)

ATTACHMENT TO SECTION 01353

Attachments to General Requirements Section 01353 consists of one (1) document, as follows:

ATTACHMENT NUMBER	TITLE OF ATTACHMENT	NUMBER OF PAGES IN THIS ATTACHMENT
01353-A1	Issue Resolution Ladder – Line Management Form	1

City of Los Angeles, Department of Public Works
Bureaus of Engineering and Contract Administration

Contractor: **{name}**

Project Title: **{title}**

Issue Resolution Ladder – Line Management

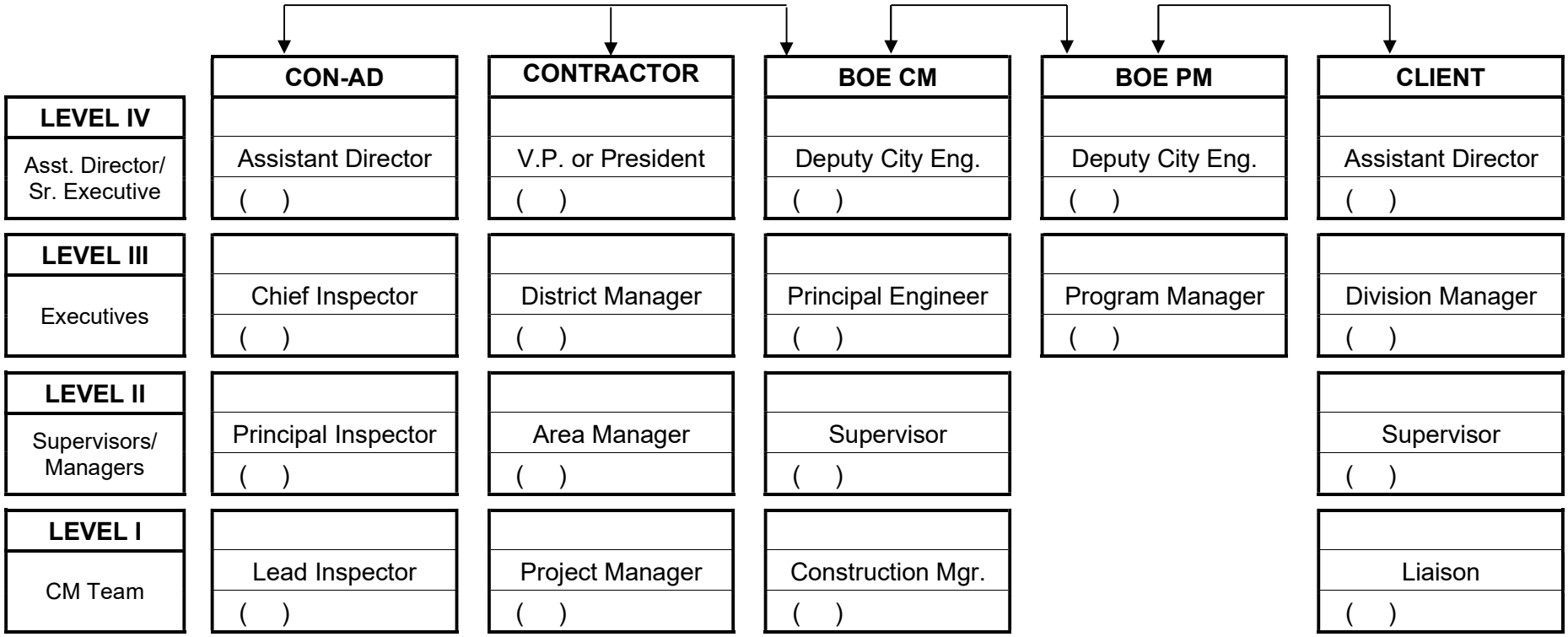

SECTION 01410
REGULATORY REQUIREMENTS

PART ONE - GENERAL

1.1 SUMMARY OF WORK

A. Building Codes and Regulations:

1. The CONTRACTOR shall perform the Contracted Work in accordance with the requirements of the latest edition of the Los Angeles City Building Codes and Amendments and all other regulations, laws, and ordinances, even though such requirements are not specifically mentioned in the Project Manual or shown on the Contract Drawings.

2. When the Work required by the Drawings and Project Manual are in conflict with any such law or ordinance, the CONTRACTOR shall notify the ENGINEER. The CONTRACTOR shall comply with the more stringent requirements, unless notified by the ENGINEER and the CONTRACTOR shall not proceed with the Work until the ENGINEER has so ordered.

3. This Section specifies procedural and administrative requirements for compliance with governing regulations, codes, and standards imposed upon the Contracted Work. These requirements include obtaining permits, licenses, inspections, releases, and similar documentation, as well as payments, statements, and similar requirements associated with the regulations, codes, and standards.

B. Related Documents:

1. Contract Documents: Work of this Section shall comply with all the Contract Documents, including General Conditions and Supplementary Conditions and other Sections, DIVISION 1 - GENERAL REQUIREMENTS.

1.2 CODES AND REGULATIONS

A. The design and construction of this Project have been selected and depicted on the Contract Documents in compliance with all applicable codes, which govern the various work, materials, devices, equipment, systems, and procedures in effect at the time the Project is issued to bid by the Board of Public Works. These include, but are not limited to, the following:

1. CITY of Los Angeles Building Code and Amendments, latest edition.

2. Los Angeles CITY "Standard Specifications for Public Works Construction", (The Green Book).

3. CAC Title 24.

4. California Building Code (CBC).

5. CAL/OSHA (Occupational and Safety Code).

6. California State Architectural Barrier's Law (CAL/ABL).

7. California State Fire Marshall requirements.

8. California Electrical, Plumbing and Mechanical Codes.

9. Los Angeles CITY Fire Code.

10. State Energy Standards Title 24.

11. Americans with Disabilities Act (ADA).

12. Los Angeles CITY Electrical, Plumbing and Mechanical Codes and Amendments, latest editions.

13. Los Angeles CITY Elevator Code, C.A.C. 3041 and Barclay's California Code of Regulation (Sub-article E620)

14. Los Angeles CITY Municipal Code, latest edition.

15. Uniform Building Code (UBC).

16. All other Codes and Regulations that may be noted in the Technical Sections of the Project Manual.

B. The procedure followed by the ENGINEER has been to contact governing authorities, where necessary, to obtain information needed for the purpose of preparing Contract Documents, recognizing that such information may or may not be of significance in relation to the CONTRACTOR'S responsibilities for performing the Work. Direct contact, by the CONTRACTOR, with such governing authorities can be made for necessary information and decisions that have a bearing on the performance of the Work, if necessary.

C. CONTRACTOR shall be familiar with all codes, regulations and all necessary procedures to obtain and pay for all permits, arrange all inspections, and secure necessary releases or sign-offs, which are prerequisite to any utility service connection work.

D. When conflict or violation of law or codes are found during any inspection by the governing agencies, the CONTRACTOR shall request such allegation of code conflict or violation, or Request of Correction to be on a written form from the governing agencies. The CONTRACTOR shall furnish the ENGINEER and the INSPECTOR each a duplicate copy of such written notice for review.

PART TWO - PRODUCTS (NOT APPLICABLE)

PART THREE - EXECUTION

3.1 PERMIT INFORMATION

A. CONTRACTOR shall contact the ENGINEER to obtain the proper CITY (owner) information to be used in the manifest or notification prior to start of any abatement work.

B. All information used by the CONTRACTOR including the CITY'S (Owner's) and CITY authorized representative's names, addresses and telephone numbers shall be consistent with the information shown on the permit and plan-check applications obtained by the CITY.

(END OF SECTION)

SECTION 01411
CONFINED SPACE ENTRY

1.1 THE REQUIREMENT

A. Confined Space Entry Program

1. The CONTRACTOR shall be responsible for implementing, administering and maintaining a confined space entry program (CSEP) in accordance with Sections 5156, 5157 and 5158, Title 8, CCR.

2. Prior to starting the Work, the CONTRACTOR shall prepare and submit its comprehensive CSEP to the ENGINEER. The CSEP shall address all potential physical and environmental hazards and contain procedure for safe entry into confined spaces, including, but not limited to, the following:

a. Training of personnel

b. Purging and cleaning the space of materials and residue

c. Potential isolation and control of energy and material inflow

d. Controlled access to the space

e. Atmospheric testing of the space

f. Ventilation of the space

g. Special hazards consideration

h. Personal protective equipment

i. Rescue plan provisions.

3. The CONTRACTOR'S submittal shall include the names of its personnel, including Subcontractor personnel, assigned to the project, who will have CSEP responsibilities, their CSEP training, and their specific assignment and responsibility in carrying out the CSEP.

B. Permit-Required Confined Spaces

1. Entry into permit-required confined spaces, as defined in Section 5157, Title 8, CCR, may be required as a part of the Work. All maintenance holes, tanks, vaults, pipelines, excavations, or other enclosed or partially enclosed spaces shall be considered permit-required confined spaces until the pre-entry procedures demonstrate otherwise. The CONTRACTOR shall implement a permit space program prior to performing any Work in a permit-required confined space. A copy of the permit shall be available at all times for review by CONTRACTOR and CITY personnel at the Worksite.

C. Payment

1. Payment for implementing, administering, and providing all equipment and personnel to perform the CSEP shall be included in the bid items for which the CSEP is required.

(END OF SECTION)

SECTION 01412
ENHANCED ELECTRICAL SAFETY POLICY

1.1 The Requirement

The Board of Public Works Enhanced Electrical Safety Policy is applicable for all projects with on-site electrical work estimated at $100,000.00 or more. See Proposal, Part III for Federal funded projects, or Part IV for City funded projects.

A. The key elements of the Enhanced Electrical Safety Policy are:

1. Requiring a minimum of 70 percent of all “Journeyman Wiremen” to be graduates of a State of California Approved Electrical Apprenticeship Program or hold a valid C-10 California Contractor’s License issued by the State of California.

2. Requiring a minimum of 20 percent of the jobsite electrical workers to be OSHA 10-hour General Industry Safety and Health Certified.

3. Requiring at least one jobsite electrical worker to be OSHA 30-hour General Industry Safety and Health Certified.

B. The Contractor is required to certify their compliance. The Contractor shall complete and sign BCA Form 168 and submit with their Bid Proposal. Failure to sign and submit BCA Form 168 may result in the contractor’s bid being deemed non-responsive.

1. To guarantee that required levels of compliance are maintained, the Contractor is required to submit the BCA Form 168 to the Project Inspector prior to commencing work and at any time there are significant changes to staffing levels performing electrical work for the duration of the project.

C. Electrical Work is defined as placement, installation, erection, or connection of any electrical wires, fixtures, appliances, apparatus, raceways, conduits, solar photovoltaic cells, or any part thereof, which generates, transmits, transforms, or utilizes electrical energy in any form for any purpose, regardless of voltage.

D. Electrical Work is to be performed by Journeyman Electrician, Transportation System Electrician, Transportation System Technician, or Apprentices currently being trained in a California Approved Electrical Apprenticeship Program under the supervision of a Journeyman electrician.

(END OF SECTION)

ATTACHMENT TO SECTION 01412

Attachment to General Requirements Section 01412 consist of one (1) document, as follows:

ATTACHMENT NUMBER	TITLE OF ATTACHMENT	NUMBER OF PAGES IN THIS ATTACHMENT
01412-A1	Electrical Safety Policy – Implementation Plan BCA Form 168	1

BCA 168
(06/11/07)

DEPARTMENT OF PUBLIC WORKS
Bureau of Contract Administration

ELECTRICAL SAFETY POLICY IMPLEMENTATION PLAN

PROJECT: _____ W.O. _____

INSPECTOR: _____ DATE: _____

THE CONTRACTOR SHALL: PLAN AND IMPLEMENT THE ELECTRICAL SAFETY POLICY IN ACCORDANCE WITH THE BOARD OF PUBLIC WORKS POLICY:

Electrical Work is to be performed by Journeyman Electricians, Transportation System Electrician, Transportation System Technician, or Apprentices currently being trained in a California Approved Electrical Apprenticeship Program under the supervision of a Journeyman Electrician.

APPRENTICES AND JOURNEY-LEVEL WORKERS:

	All apprentices will be registered in a State of California Approved Apprenticeship Program
	The use of Journey-Level workers will comply with all State of California labor laws.

THE WORKFORCE OF PROJECTS DESIGNATED AS REQUIRING "ENHANCED ELECTRICAL SAFETY CRITERIA" SHALL COMPLY WITH THE FOLLOWING

	70% of all "Journeyman Wireman" will be graduates of a State of California Approved Electrical Apprenticeship Program or hold a valid C-10 California Contractor's License issued by the State of California.
	20% of the jobsite electrical workers will be OSHA 10-hour General Industry Safety and Health Certified
	At least one jobsite electrical worker will be OSHA 30-hour General Industry Safety and Health Certified

	The required workforce ratios will be determined by verifying the workforce composition on a daily basis

Electrical Work is defined as placement, installation, erection, or connection of any electrical wires, fixtures, appliances, apparatus, raceways, conduits, solar photovoltaic cells, or any part thereof, which generates, tranmits, transforms, or utilizes electrical energy in any form or for any purpose regardless of voltage.

FAILURE TO FULY IMPLEMENT AND MONITOR THE ELECTRICAL SAFETY POLICY MAY RESULT IN AN ASSESSMENT OF PENALTIES AND/OR POSSIBLE SANCTIONS AGAINST THE CONTRACTOR.

Distribution: Contractor
Job File
Project Engineer

As the contractor's representative, I understand and agree to comply with the above Electrical Safety Policy.

_____ _____
Signature Date

SECTION 01420
UNITS OF MEASURE

1.1 THE REQUIREMENT

A. General

1. The International System of Units, also referred to as SI or the metric system, is the principal measurement system in these specifications and shall be used for construction, unless otherwise stated in the Contract documents. U.S. Standard Measures, also called U.S. Customary System, are included in parenthesis. SI units and U.S. Standard Measures in parenthesis may or may not be exactly equivalent. If U.S. Standard Measures are specified for use in the contract documents, then all values used for construction shall be U.S. Standard Measures shown in parenthesis. However, certain material specifications and test requirements contained herein use SI units specifically and conversions to U.S. Standard Measure have not been included in these circumstances. When U.S. Standard Measures are not included in parenthesis, then the SI units shall control.

2. Reference is also made to ASTM E 380 for definitions of various units of the SI system and a more extensive set of conversion factors.

B. Units of Measure and Their Abbreviations (abbreviations noted within parentheses):

U.S. Customary Unit (Abbreviations)	Equal to	SI Unit (Abbreviations)
1 mil (= 0.001 in)	=	25.4 micrometer (µm)
1 inch (in)	=	25.4 millimeter (mm)
1 inch (in)	=	2.54 centimeter (cm)
1 foot (ft)	=	0.3048 meter (m)
1 yard (yd)	=	0.9144 meter (m)
1 mile (mi)	=	1.6093 kilometer (km)
1 square foot (ft^2)	=	0.0929 square meter (m^2)
1 square yard (yd^2)	=	0.8361 square meter (m^2)
1 cubic foot (ft^3)	=	0.0283 cubic meter (m^3)
1 cubic yard (yd^3)	=	0.7646 cubic meter (m^3)
1 acre	=	0.4047 hectare (ha)
1 U.S. gallon (gal)	=	3.7854 Liter (L)
1 fluid ounce (fl. oz.)	=	29.5735 milliliter (mL)
1 pound mass (lb) (avoirdupois)	=	0.4536 kilogram (kg)
1 ounce mass (oz)	=	0.0283495 kilogram (kg)
1 Ton (= 2,000 lb avoirdupois)	=	0.9072 Tonne (= 1,000 kg)
1 Poise	=	0.1 pascal · second (Pa · s)
1 centistoke (cs)	=	1 square millimeters per second (mm^2/s)
1 pound force (lbf)	=	4.4482 Newton (N)
1 pound per square inch (psi)	=	6.8948 Kilopascal (kPa)
1 pound force per foot (lbf/ft)	=	1.4594 Newton per meter (N/m)
1 foot-pound force (ft-lbf)	=	1.3558 Joules (J)
1 foot-pound force per second ([ft-lbf]/s)	=	1.3558 Watt (W)
1 part per million (ppm)	=	1 milligram/liter (mg/L)

C. Temperature Units and Their Abbreviations (abbreviations noted within parentheses):

Degree Fahrenheit (Abbreviation: °F)	Degree Celsius (Abbreviation: °C)
°F = (1.8 x °C) + 32	°C = (°F – 32)/1.8

D. SI Units Commonly Used in Both Systems and their Abbreviations (abbreviations noted within parentheses):

1 Ampere (A)
1 Volt (V)
1 Candela (cd)
1 Lumen (lm)
1 second (s)

E. Common Metric Prefixes and Their Abbreviations (abbreviations noted within parentheses):

kilo (k)	10^{3}
centi (c)	10^{-2}
milli (m)	10^{-3}
micro (μ)	10^{-6}
nano (n)	10^{-9}
pico (p)	10^{-12}

(END OF SECTION)

SECTION 01421
SYMBOLS

1.1 THE REQUIREMENT

A. The symbols as shown shall mean:

Symbol	Definition
Δ	Delta, the central angle or angle between tangents
∠	Angle
%	Percent
'	Feet or minutes
"	Inches or seconds
#	Number
/	Per or (between words)
°	Degree
℄	Property line
℄	Centerline
℄	Survey line or station line

(END OF SECTION)

SECTION 01430
MANUFACTURER'S FIELD SERVICES

1.1 THE REQUIREMENT

A. Prior to the startup of the facility, an experienced, competent, and authorized representative of the manufacturer of each item of equipment incorporated into the Work, for which field services are indicated in specified equipment sections, shall visit the site of the Work and inspect, check, adjust if necessary, and approve the equipment installation. In each case, the representative shall revisit the Jobsite as often as necessary until all trouble is corrected and the equipment installation and operation are satisfactory in the opinion of the ENGINEER. Each manufacturer's representative shall furnish to the ENGINEER and the INSPECTOR a written report certifying that the equipment has been properly installed, and lubricated; is in accurate alignment; is free from any undue stress imposed by connecting piping or anchor bolts; and has been operated under full load conditions and that it operated satisfactorily. All costs for these services shall be included in the CONTRACTOR'S Bid.

(END OF SECTION)

SECTION 01452
INSPECTION OF THE WORK

1.1 THE REQUIREMENT

A. Whenever the CONTRACTOR intends to carry on the Work of this Contract on a Saturday, Sunday, or holiday, or more than eight (8) hours a day on Monday through Friday, or any variation in the time of the workday as set forth in the GENERAL CONDITIONS, length of the workday and work week, notification shall be given to the INSPECTOR and the ENGINEER of such intention at least forty-eight (48) hours in advance so that inspection may be arranged. No Work shall be allowed during these times without the approval of the INSPECTOR and no demolition will be permitted on Saturdays, Sundays, or holidays without the prior approval of the Board. All CITY inspection required by the CONTRACTOR on holidays, weekends and overtime for the sole convenience of the CONTRACTOR shall be accomplished at the sole expense of the CONTRACTOR by issuance of a deductive Change Order.

B. The Work shall be conducted under the general observation of the ENGINEER and shall be subject to inspection by the INSPECTOR to ensure compliance with the requirements of the Contract Documents. Such inspection may include mill, plant, shop or field inspection, as required. The INSPECTOR shall be permitted access to all parts of the Work, including plants where materials or equipment are manufactured or fabricated. All materials and articles furnished by the CONTRACTOR shall be subject to inspection and no materials or articles shall be used in the Work until they have been inspected and accepted by the INSPECTOR.

C. No Work shall be backfilled, buried, cast in concrete, hidden or otherwise covered until it has been inspected by the INSPECTOR, and other Agencies for which a permit is required. Whenever the CONTRACTOR is ready to backfill, bury, cast in concrete, hide, or otherwise cover any Work under the Contract, the CONTRACTOR shall notify the INSPECTOR not less than forty-eight (48) hours in advance to request inspection before beginning any such Work of covering. Failure of the CONTRACTOR to notify the INSPECTOR at least forty-eight (48) hours in advance of any such inspections shall be cause for the INSPECTOR to require a sufficient delay in the progress of Work to allow time for such inspections and any remedial or corrective work required, and all costs of such delays, including its effect upon other portions of the work, shall be borne by the CONTRACTOR. Any Work so covered in the absence of inspection shall be subject to uncovering at the sole expense of the CONTRACTOR. Where uninspected Work cannot be uncovered, such as in concrete cast over reinforcing steel, all such Work shall be subject to demolition, removal, and reconstruction under proper inspection, and no additional payment will be allowed therefor.

D. The presence of the ENGINEER or the INSPECTOR shall not relieve the CONTRACTOR of the responsibility for the proper execution of the Work in accordance with all requirements of the Contract Documents. Compliance is a duty of the CONTRACTOR, and said duty shall not be avoided by any act or omission on the part of the ENGINEER or the INSPECTOR. If the CONTRACTOR fails to replace any defective or damaged Work or material after reasonable notice, the ENGINEER may withhold progress payment for the Work

or material, reserve the right to notify the CONTRACTOR'S Bond and Insurance Companies, and/or may cause such Work or materials to be replaced. The replacement shall be deducted from the amount to be paid to the CONTRACTOR, otherwise the CONTRACTOR shall pay the CITY if there remains insufficient or no amount to be paid by the CITY to the CONTRACTOR.

E. The INSPECTOR shall have the right, at all times and places, to reject any articles or materials to be furnished hereunder which, in any respect, fail to meet the requirements of these specifications, regardless of whether the defect in such articles or materials are detected at the point of manufacture or after completion of the Work at the site. If the ENGINEER or the INSPECTOR, through an oversight or otherwise, has not rejected materials or work which is defective or which is contrary to the specifications, such material, no matter in what stage or condition of manufacture, delivery, or erection, may be rejected by the INSPECTOR upon discovery. The CONTRACTOR shall promptly remove rejected articles or materials from the site of the Work after notification of rejection. All costs of removal and replacement of rejected articles or materials as specified herein shall be borne by the CONTRACTOR.

F. At the completion of Work, after completion of all corrections, a final inspection will be made by the INSPECTOR, the ENGINEER, and the CONTRACTOR, as applicable. The INSPECTOR will provide a Final Inspection Correction List itemizing all work necessary to complete the Project satisfactorily.

G. When the correction work is found to be in compliance with the Contract Documents, the construction Work will be considered complete and the Contract time will stop. The CONTRACTOR shall proceed with the maintenance work if required by the Contract. If the correction work is found to be non-compliant with the Contract Documents, the Contract time shall be continued to be assessed until the correction is satisfactorily made and accepted by the CITY.

H. The CONTRACTOR shall notify the INSPECTOR and ENGINEER, for the inspection of the Maintenance Work, as specified in the Contract Documents and CONTRACTOR'S maintenance schedule. CONTRACTOR shall make all necessary corrections or replacements in accordance with the Drawings and Project Manual and as directed by the INSPECTOR and/or ENGINEER. The CONTRACTOR shall notify the INSPECTOR and ENGINEER of the final inspection of the Maintenance Work. The CITY may extend the maintenance period if the Maintenance Work is found unsatisfactory or defective.

I. If the Maintenance Work and necessary correction(s) are satisfactorily completed, and the guarantee faithful performance bond is submitted for the remaining guarantee and warranty provisions, the ENGINEER shall make final payment and notify the BOARD for project acceptance.

(END OF SECTION)

SECTION 01453
SAMPLING, TESTING AND FABRICATION INSPECTION

1.1 THE REQUIREMENT

A. General

1. All materials and fabricated articles furnished by the CONTRACTOR shall be subject to inspection and testing and no materials or fabricated articles shall be incorporated into the Work until they have been inspected and accepted by the INSPECTOR. The CONTRACTOR shall ensure that all items requiring shop inspection are inspected at their source by the INSPECTOR or by an independent inspection or testing laboratory (IITL) that has been approved by the INSPECTOR.

2. Fabrication shall be subject to inspection by the INSPECTOR, to ensure strict compliance with the requirements of the Contract Documents. Such inspection shall include mill, plant, shop or field inspection, as required. The INSPECTOR shall be permitted access to all parts of the Work, including plants where materials or equipment are manufactured or fabricated. When a third party INSPECTOR is approved, monthly meetings may be scheduled with the INSPECTOR at the manufacturing facility to review the progress of the Work and the inspection activities. The INSPECTOR will determine the number of trips based on the manufacturing schedule for the material or fabricated article(s). The CONTRACTOR shall include in the Bid all costs associated with these inspections, except for the costs for CITY personnel as set forth herein which shall be reimbursed under the Bid Item ALLOWANCE FOR CITY INSPECTION, if provided in the SCHEDULE OF WORK AND PRICES.

3. All fabricated items shall be fabricated from Shop Drawings, which have been submitted to the ENGINEER and approved in accordance with SUBMITTALS of the GENERAL REQUIREMENTS. Shop inspection shall be provided on all materials and/or equipment so designated on the CONTRACTOR'S approved Shop Drawings or Contract Documents. The CONTRACTOR shall provide approved Shop Drawings and the corresponding Contract Specification to the INSPECTOR or IITL for use in the inspection and testing of the items to be fabricated.

4. Any item requiring inspection that is delivered to the job site without having been inspected and approved by the Bureau of Contract Administration or an approved third party inspection agency will be rejected by the Project Inspector. The BCA Materials Control Group will not perform any inspection at the job site. It is the Prime CONTRACTOR'S responsibility to ensure that all items requiring shop inspection are inspected at their source by the BCA Materials Control Group, or by an inspection or testing laboratory that has been approved by the BCA Materials Control Group. The City shall be held harmless for any delays resulting from the CONTRACTOR'S or fabricator's failure to obtain the required inspections.

5. Prior to any fabrication, there shall be a Prefabrication Meeting either at the fabricator's location or via telephonic conference. A representative of the CITY and the IITL, if retained, the Prime CONTRACTOR, the fabricator's plant superintendent and the fabricator's quality control person, shall be present at the Prefabrication Meeting. The items to be discussed are the required inspections, tests and reports, based on the approved Shop Drawings and the corresponding Contract Specifications. The IITL shall take minutes of the pre-fabrication meeting and distribute the same to the individuals in attendance. The IITL shall submit an inspection plan to the INSPECTOR for approval two (2) weeks prior to the Prefabrication Meeting. The CONTRACTOR is directed to notify the INSPECTOR and the ENGINEER three (3) weeks in advance of the date and time of the Prefabrication Meeting. The CONTRACTOR shall include in the Bid all costs associated with these meetings except for the costs for CITY personnel as set forth herein which shall be reimbursed under the Bid Item ALLOWANCE FOR CITY INSPECTION, if provided in the SCHEDULE OF WORK AND PRICES.

6. If a Bid Item ALLOWANCE FOR CITY INSPECTION has been included in the SCHEDULE OF WORK AND PRICES in the Bid Proposal, this allowance shall only be used to reimburse the CONTRACTOR for the cost of CITY inspection and travel requirements, as set forth herein, and shall not be used for any portion of the costs of the CONTRACTOR'S independent third party INSPECTOR or inspection laboratory. Reimbursement of approved expenses shall be made on the basis of original invoices and are not subject to markup for overhead and profit. If at the end of the Project, the total costs differ from the amount set forth in the SCHEDULE OF WORK AND PRICES, the Contract Price shall be adjusted by a Change Order for the difference between the total actual costs and the amount included in the Bid, as an additional amount due the CONTRACTOR or a credit to the CITY, as appropriate.

7. The CONTRACTOR shall coordinate all sampling, testing and fabrication inspections with the INSPECTOR and is responsible for maintaining the inspection schedules. Subject to the terms contained herein, costs for CITY personnel travel will be paid from the Bid item ALLOWANCE FOR CITY INSPECTION. In the event that the scheduled inspection is postponed or delayed by the CONTRACTOR, through no fault of the CITY, and CITY personnel are required to extend their travel duration resulting in additional travel costs, these increased costs, including per diem travel allowances, shall be borne by the CONTRACTOR and are not eligible for payment from the Bid item ALLOWANCE FOR CITY INSPECTION.

8. In addition to the approval of the Bureau of Contract Administration, approval may be required from the Department of Building and Safety, Materials Control Section, for certification of both the manufacturer of structural items/materials and/or the testing laboratory/inspection company. For certification information, contact:

Senior Building Inspector
Materials Control section

Dept. of Building and Safety
Telephone: (213) 482-0388

B. Samples And Test Specimens

1. Samples and test specimens required under these Specifications shall be furnished, prepared for testing, and delivered, at no cost to the CITY, in ample time for the completion of the necessary tests and analysis before said article or materials are to be used. The time and location of the delivery shall be designated by the INSPECTOR.

2. In addition to any other inspection or quality assurance provisions that may be specified, the ENGINEER or the INSPECTOR shall have the right to independently select, test, and analyze, at the expense of the CITY, additional test specimens of any or all of the materials to be used. Whenever any portion of the Work fails to meet the requirements of the Specifications, as shown by the results of independent testing or investigation, all costs of such independent inspection and investigation, and all costs of removal, correction, and reconstruction or repair of any such Work, shall be borne solely by the CONTRACTOR.

3. The INSPECTOR may allow the manufacturer, fabricator, supplier, or Subcontractor to provide the results of tests from samples taken at the mill, factory, or warehouse. The INSPECTOR will accept the test reports provided that the following conditions are met:

   a. The Testing Agency was approved by the INSPECTOR prior to performing the tests, and that all necessary certifications were valid at the time the tests were performed.

   b. The tests were performed in conformity with the Specifications for the specified materials or items.

   c. The reports are made in the form of an affidavit specified hereinafter.

4. Whenever the approved independent testing laboratory or INSPECTOR takes samples of materials other than at the site, the deliveries to the site of materials represented by such samples shall be identified as specified for the specific material. The results of such tests shall be reported to the INSPECTOR in the form of affidavits attested to by the testing agency. Such affidavits shall furnish the following information with respect to the material sampled:

   a. Manufacturer's name and brand.

   b. Place of sampling.

   c. Sufficient information to identify the lot, group, bin, or silo from which the samples were taken.

d. Amount of material in the lot sampled.

e. Statement that the material has passed the requirements.

f. Notarized signature and title of the person making the affidavit and the date of execution of the affidavit.

C. Shop Inspection And Testing

1. Shop Inspection and/or Material Sampling and Testing are the sole jurisdiction and responsibility of the Inspector of Public Works through the Bureau of Contract Administration's Materials Control Group. Shop Inspection and/or Material Sampling and Testing cannot be approved, waived, or otherwise altered by any other City Department, Bureau, Division, or individual. Shop Inspection required by this section is in addition to any inspections required by applicable building codes.

2. The CONTRACTOR is responsible for coordinating shop inspection with the INSPECTOR. The CONTRACTOR is to estimate the time required for Shop testing of the fabricated article(s) or equipment, and so inform the INSPECTOR. The Contractor is responsible for contacting the Bureau of Contract Administration, Materials Control Group, regarding scheduling for all Shop Inspection and/or Material Sampling and Testing. Please contact the Materials Control Supervisor at (213) 847-2442.

3. A final inspection by the INSPECTOR may be required prior to shipment. No fabricator or CONTRACTOR shall deliver fabricated materials to the project site without the approval of the BCA Materials Control Group.

4. Where the CONTRACTOR is specifically required by the Technical Specifications to demonstrate performance of major equipment prior to delivery, a testing procedure must be developed by the manufacturer and approved by the ENGINEER prior to scheduling the shop performance testing. Both the INSPECTOR and the ENGINEER are required to witness the performance testing. The ENGINEER will evaluate performance-testing data and notify the INSPECTOR whether the equipment meets the performance requirements of the Contract. The INSPECTOR will be responsible for releasing the equipment for delivery to the Jobsite. This procedure will also apply to field performance testing required as a condition precedent to acceptance of the equipment as described under the PARTIAL ACCEPTANCE and FINAL ACCEPTANCE provision of the Contract.

5. Inspection at Locations Within Thirty (30) Miles from CITY

a. When the CONTRACTOR intends to purchase materials, fabricated products, or manufactured equipment from sources located within thirty (30) miles (48 km) of the geographical limits of the CITY, the CONTRACTOR shall notify the INSPECTOR at least 24 hours prior to the scheduled date of tests at all stages of manufacture to allow for arrangements specified herein.

b. Except as otherwise provided in these Specifications, performance of the required sampling and tests will be under the direction of the INSPECTOR, from samples provided by the CONTRACTOR, and the cost of performing the test(s) will be borne by the CITY, except for the costs of any retests which show unsatisfactory results which shall be borne by the CONTRACTOR.

6. Inspection at Locations More Than Thirty (30) Miles From the CITY

a. When the CONTRACTOR intends to purchase materials, fabricated products, or equipment from sources located more than thirty (30) miles (48 km) outside the geographical limits of the CITY, an IITL approved by the INSPECTOR, shall be engaged by the CONTRACTOR, at the CONTRACTOR'S sole expense, to inspect the materials, equipment and/or process, unless the City elects to perform the inspection with BCA Materials Control Personnel,. Approval of the IITL shall be obtained from the BCA Materials Control Group before producing any material or equipment. The IITL shall judge the materials and fabricated articles by the requirements of the Plans and Specifications and approved submittals. The IITL shall be accountable to the BCA Materials Control Group and shall provide written records of all inspections performed to the Group in a format approved by that Group. No equipment or material shall be shipped nor shall any processing, fabrication and/or treatment of such equipment or materials be done without the required inspection and approval by IITL. Approval by IITL shall not relieve the CONTRACTOR of its responsibility to comply with the Contract requirements. The City retains the right to perform inspection or testing at any remote site with City personnel. If the City exercises this right, the contractor will be required to pay for all costs associated with this inspection and testing, except the Inspectors' wages, unless reimbursement is provided under the bid item ALLOWANCE FOR CITY INSPECTION as listed in the SCHEDULE OF WORK AND PRICES.

b. The CITY retains the right to perform inspection or testing at such remote sites with CITY personnel in lieu of a third party inspector. In the event the CITY exercises this right, the CONTRACTOR shall administer travel arrangements as specified herein Paragraph C.10, CITY PERSONNEL TRAVEL REQUIREMENTS.

7. Inspection Outside Continental United States

a. Requirements and procedures for inspection and testing of materials, fabrication of products and equipment from sources outside the continental United States shall be the same (including the requirement for an accredited inspection agency and/or testing laboratory pre-qualified by the CITY Department of Building and Safety and approved by the INSPECTOR) as

provided in the Paragraph C.7 SHOP INSPECTION & TESTING of this Section. In addition to the requirements of Paragraph C.10, City Personnel Travel Requirements, of this Section, the CONTRACTOR shall provide the following, the cost of which shall be reimbursed out of the ALLOWANCE FOR CITY INSPECTION item, if provided in the SCHEDULE OF WORK AND PRICES.

(1) A minimum of five (5) calendar days hotel accommodation shall be required for each shop inspection visit made by the INSPECTOR.

(2) A minimum advance notice of ten (10) working days shall be required for all hold points (mandatory) inspection.

(3) The approximate rates for allowances given as a guideline in Paragraph C.10, City Personnel Travel Requirements, of this Section, shall be adjusted to match the rates in the foreign locality for similar types of facilities and amenities.

8. Third Party Inspection Requirements

a. The proposed third party inspection and/or testing company must gain approval by the INSPECTOR after award. This approval shall be obtained before producing any material or manufacturing any product or equipment. The approved inspection and/or testing agency shall not sublet or assign its work to any other agency.

b. The approved third party inspection and/or testing agency shall take direction from, and be responsible to, the INSPECTOR.

c. The CONTRACTOR shall also comply with requirements regarding the Prefabrication Meeting as contained herein.

d. The Work and activities of the third party inspection and/or testing agency shall be monitored by the INSPECTOR during monthly meetings to ensure compliance with the Contract Documents.

9. Third Party Testing and Inspection Laboratory Approval Procedures

a. The INSPECTOR will approve third party inspection and/or testing agencies/laboratories. The City of Los Angeles has a contract only with the Prime CONTRACTOR. The City of Los Angeles has no Third Party agreement with any subcontractor, plant, manufacturer, or fabricator. All are considered employees of the Prime CONTRACTOR and the Prime CONTRACTOR shall be responsible for their work. The Supervisor of the Materials Control Group of the Bureau of Contract Administration

acts on behalf of the INSPECTOR of Public Works Therefore, all requests for the approval of a third party inspection or testing company shall be from the Prime CONTRACTOR, typewritten on the Prime CONTRACTOR'S letterhead, addressed to the Supervisor of the BCA Materials Control Group (213) 847-2442 as follows:

Bureau of Contract Administration
General Services Division
Materials Control Group
1149 S. Broadway, Suite 300
Los Angeles, CA 90015

One (1) duplicate copy of the request shall be sent to the ENGINEER.

b. The letter requesting approval of a third party test lab or private inspection company shall contain all of the following information:

PROJECT DATA

(1) Complete title of the project.
(2) The project work order number.
(3) The approved submittal number(s) and a brief description of the item(s) to be inspected tested with their Specification Division and Section number.

PROPOSED INSPECTION

(1) Names of two (2) proposed testing laboratories or inspection companies.
(2) Addresses and telephone numbers of the proposed test labs/inspection companies.
(3) Contact person at the proposed test labs/ inspection companies.
(4) Description and history of the proposed test laboratories/inspection companies.
(5) Resumes of at least two (2) or more inspectors (primary and alternate) who will perform the physical inspections.
(6) Samples of all inspection reporting documents utilized by the provider and a written description of the reporting methodology.

FABRICATOR DATA

(1) Company name, address, and telephone number of the actual production site for each fabricator.
(2) Contact person at each fabricator.
(3) Fabrication schedule.

c. The INSPECTOR will notify the CONTRACTOR by letter if the testing laboratory/inspection agency has been approved.

d. The Materials Control Group may order modifications of the inspection reporting procedure utilized by the provider prior to approval.

10. CITY Personnel Travel Requirements

a. The CONTRACTOR shall administer the travel and furnish the following services for CITY personnel who are attending Prefabrication Meetings and performing inspection services.

(1) Purchase airline tickets (Coach Class only).

(2) Make hotel reservations and prepay for the planned number of nights. (Three Star or American Automobile Association (AAA) Three Star approved.)

(3) Make rental car reservations and prepay for the planned number of days if the manufacturer's or fabricator's facility is greater than one (1) mile from the departing and arrival airport or hotel.

(4) The estimated per diem travel allowance will be at least fifty U.S. dollars ($50.00) per day for meals, en route expenses, and other miscellaneous expenses. CITY personnel will submit an expense statement to the CITY for approval of actual expenses incurred.

(5) For CITY paid advances, the CONTRACTOR shall reimburse the CITY for these actual expenses by deductive Change Order to be deducted from the Bid item, ALLOWANCE FOR CITY INSPECTION.

(6) When requested by the ENGINEER or the INSPECTOR, the CONTRACTOR shall provide an advance check, for the estimated costs of all travel allowance costs, to the ENGINEER or the INSPECTOR, no later than forty eight (48) hours prior to the departure time. Failure to provide all accommodations described herein in such a manner to adequately facilitate the travel activity will cause the inspection visit to be canceled, and any costs or delays owing to such rescheduling shall be born by the contractor.

b. As the basis for cost reimbursement under SCHEDULE OF WORK AND PRICES of the Bid Proposal, the CONTRACTOR shall submit receipts or invoices for payment to the ENGINEER with a cover letter referencing the following:

(1) INSPECTOR’S or ENGINEER’S name.

(2) Project title.

(3) Project Work Order Number.

(4) CONTRACTOR'S:

(a) Name

(b) Address

(c) Telephone Number.

(d) CONTRACTOR'S contact person and telephone number(s)

(5) Reference Technical Specification and submittal number.

(6) Purpose of inspection.

(7) Address and location of inspection:

(8) Country

(9) State

(10) City.

(11) Date(s) of inspection.

(12) Description of items enclosed as set forth herein

11. Shop Inspected Equipment/Materials:

a. Without waiving any specific requirement of the Contract Documents, the following items of equipment and/or material are examples of, but not limited to those items that are subject to shop inspection as noted herein below.

Equipment/ Materials	Spec. Sect.	Insp. Req'd	Product Identification	See Notes
Aluminum Fabrication	05530/08410/08416/08520	YES	Inspector Witness – Yellow Tag	G.N.1
Aluminum Railings	05520	YES	Yellow Tag	G.N.5
Anodizing	05035/09800	YES	Yellow Tag	G.N.18
Asphalt Material	02710	YES	Batch Plant Insp. Report #1101	G.N.8
Base Material	02310	NO	Standards Div. Approves Source	
Bearing Pads	05120	YES	Yellow Tag	G.N.31
Bolting	05120	YES	Inspector Witness - Yellow Tag	G.N.2
Bitumen	07160	YES	Insp. Witness & meas. thickness	G.N.18
Boilers	11915	YES	Yellow Tag	G.N.7
Castings	05530	YES	Stamped **"L.A. City Approved"**	G.N.4
Coatings	Div. 9/05530	YES	Insp. Witness & meas. thickness	G.N.18
Cabinets – Wood	06200/06400	NO		G.N.17
Compressors	11870/11875/11880	YES	Yellow Tag	G.N.20
Crane Systems	14320/14600/14630	YES	Yellow Tag	G.N.19
Conveyors	14605	YES	Yellow Tag	G.N.19
Concrete	03300	YES	Batch Plant Insp. Report # 1101	G.N.8
Concrete-Fiberglass Reinf.	03400	YES	Batch Plant Insp. Report # 1101	G.N.12
Concrete – mix Designs	03300	YES	Batch Plant Insp. Report # 1101	G.N.8
Concrete – Precast	03400	YES	Stamped **"LA City Approved"**	G.N.9
Concrete – Prestressed	02465/03400	YES	Yellow Tag or Stamped	G.N.9
Concrete Vaults	02585	YES	Stamped "**LA City Approved**"	G.N.11
Catch Basins	02545	YES	Yellow tag for bulb Angle & Grating	G.N.11
Chain Link Fabric	02821	YES	Yellow Tag	G.N.18
Doors – Metal	08110	YES	Yellow Tag	G.N.6
Door Frames - Metal	08110	YES	Yellow Tag	G.N.6

Ductwork – Fiberglass	13390/15170	YES	Yellow Tag	G.N.27
Ductwork – Flexible	15170	NO		G.N.27
Ductwork – Metal	15210	NO		G.N.27
Ductwork – Stainless steel	15210	YES	Yellow Tag	G.N.27
Electrical - Controls	17400/17410	YES		G.N.24
Electrical Motors	16490	YES	Yellow Tag	G.N.20
Electrical Panels	16330	YES	Yellow Tag	G.N.22
Electrical Switchgear	16240	YES	Yellow Tag	G.N.22
Electrical Testing	16030	YES	Inspector Witness	G.N.25
Electrical Transformers	16230/16320	YES	Yellow Tag	G.N.22

TABLE *Continued*

Equipment/ Materials	Spec. Sect.	Insp. Req'd	Product Identification	See Notes
Electrical Units	Div 16	YES	Yellow Tag	G.N.25
Electrical Wiring	16150/16160	YES	Inspector Witness	G.N.24
Escalators	Div 14	YES	Yellow Tag	G.N.19
Elevators	14200/14241	NO		G.N.19
Fiberglass	06610	YES	Yellow Tag	G.N.30
Frames – Metal	05500	YES	Yellow Tag	G.N.6
Forgings	Div. 5	YES	Stamped **"LA City Approved"**	G.N.4
Galvanizing	Div. 5	YES	Inspector Witness – Yellow Tag	G.N.18
Gratings	Div. 5	YES	Yellow Tag	G.N.4
Gaskets	07900	YES	Yellow Tag	G.N.11
Generators	16410	YES	Yellow Tag	G.N.22
Glue-Laminated Beams	06181	NO	Certificate of Compliance (Forestry)	G.N.16
Grout	04230	YES	Batch Plant Insp. Report #1101	G.N.13
Gypsum	09200	YES	Batch Plant Insp. Report #1101	G.N.13
Gypsum –Fiberglass Reinf	03520	YES	Batch Plant Insp. Report #1101	G.N.12
Hoists	14320/14600	YES	Yellow Tag	G.N.19
HVAC	15130	NO		G.N.26
Linings – Pipe	09800	YES	Inspector Witness – Yellow Tag	G.N.18
Lumber	06100	NO	Treated Lumber Stamped "LA"	G.N.16
Lighting Fixtures	16360/16370	NO		G.N.23
Lamps	16360/16370	NO		G.N.23
Motors	16490	YES	Yellow Tag	G.N.20
M.H. –Frames/Covers Cast Iron	02585	YES	Stamped "LA" on Cover & Frame	G.N.4
M.H. –Frames/Covers Steel	02585	YES	Stamped "LA" on Inner-Cover only	G.N.4
M.H. –Precast w/Epoxy Coating	02585	YES	Stamped "LA" or Yellow Tag	
M.H. –Shafts/Grade Rings	02585	YES	Stamped "LA" or Yellow Tag	G.N.11
Masonry	04230	NO		G.N.14
Mechanical Equipment	Div. 15	YES	Yellow Tag	G.N.20
Millwork	06200	NO		G.N.17
Misc. Metal Fabrication	05500	YES	Yellow Tag	G.N.1
Mortar	04230	YES	Batch Plant Insp. Report #1101	G.N.13
Non-Destructive Testing	05120	YES	Inspector Witness	G.N.1

TABLE *Continued*

Equipment/ Materials	Spec. Sect.	Insp. Req'd	Product Identification	See Notes
Pressure Vessels	Div. 13	YES	Yellow Tag	G.N.7
Painting (Coating Systems)	09900/ 09905	YES	Yellow Tag	G.N.18
Pilings	02465/ 02460/ 02470	YES	Yellow Tag	G.N.9
Pipe – Fiberglass		YES	Yellow Tag	G.N.15
Pipe - Plastic	02510	NO	Standards Div will issue a batch #	G.N.29
Pipe – Reinf. Concrete	02250/ 2560/0 2565	YES	**LA City Approved** stamp w/ a 3 digit # if approved and a 5 digit number if not approved	G.N.11
Pipe - Steel	Div 15	YES	Yellow Tag	G.N.15
Pipe Supports	15770	YES		G.N.15
Pipe – Vitrified Clay	GB	NO	Standards Division will stamp 3-digit number and **"LA City Approved DPW"** inside full lengths of pipe	G.N.15
Pipe Welding	15610	YES		G.N.15
Plastic Liner Plate	09800	YES		G.N.29 (a)
Pullbox – Street Light & Traffic Signal.		YES	Stamped **"LA City Approved"** on the inside of the box	
Pre-Engineered Metal Buildings		YES		G.N.1
Pumps	Div. 11	YES	Yellow Tag	G.N.20
PVC Liner	09800	YES		G.N.29 (a)
Railings	05520	YES	Yellow Tag	G.N.5
Rebar	03200	YES	Yellow Tag	G.N.3
Sandblasted Steel Items	Div. 5	YES		
Slide Gates	11815	YES	Yellow Tag	G.N.21
Sluice Gates	11182 0	YES	Yellow Tag	G.N.21
Steel Doors	08110	YES	Yellow Tag	G.N.6
Steel – Stainless	05500	YES		G.N.1
Steel Structural	05120	YES	Yellow Tag	G.N.1

Steel Supports	05120	YES	Yellow Tag	G.N.1
Store Fronts	08410/ 08416	YES	Yellow Tag	G.N.28
Street Lgt. Standards	03400	YES	Stamped **"LA City Approved"** or **"Third Party Insp. Agency"** at the bottom of the base	G.N.10
T-Lock Liner Plate		YES	Yellow Tag	

TABLE *Continued*

Equipment/ Materials	**Spec. Sect.**	**Insp. Req'd**	**Product Identification**	**See Notes**
Tanks – Storage	Div. 13	YES	Yellow Tag	G.N.7
Tanks – Steel	13310	YES	Yellow Tag	G.N.7
Tree Well – Cast Iron		YES	Stamped **"LA"** or Yellow Tag	
Tree Well – Architectural		YES	Stamped **"LA"** or Yellow Tag	
Tree Well – Per Std. Plans		NO		
Vessels	Div. 13	YES	Yellow Tag	G.N.7
Vaults	02585	YES	Stamped **"LA"** or Yellow Tag	G.N.11
Valves	1Div. 15	YES	Yellow Tag	G.N.20
Welding	Div. 5	YES	Inspector Witness – Yellow Tag	G.N.1
Wire Rope		YES	Yellow Tag	
Wood Paneling	06200	NO		G.N.17
Wood Trusses-Engineered		NO	Provide Manufacturer's Certification	

NOTES:

1. Fabrication of ferrous materials, which may include welding, high strength bolting or non-destructive testing shall be shop inspected.

2. Bolting with ASTM A-325 bolts, ASTM A-490 bolts or other alternate fasteners shall require shop inspection. Bolting with ASTM A-307 bolts does not require shop inspection.

3. Reinforcing steel is normally sampled at the Jobsite, but for expediency, the sampling will be performed at the point of fabrication by the CITY'S Standards Division.

4. All forging and castings made at the foundry shall be shop inspected, approved and stamped prior to delivery to the Jobsite.

5. Steel stairways and handrails (ferrous) require shop inspection for welding and specified coatings.

6. Metal door and frame fabrication requires shop inspection.

7. Pressure vessels, tanks, boilers and related equipment do require inspection of fabrication, welding, and testing.

8. Concrete, asphalt concrete and mix designs are inspected at the batch plant. These products are shop inspected for conformance to Specifications and verification by the INSPECTOR.

9. Both pre-cast and pre-stressed concrete are subject to shop inspection and approval before delivery to the Jobsite.

10. Street lighting standards of either steel, aluminum or concrete are required to be shop inspected.

11. Reinforced concrete vaults catch basins, and reinforced pipe are required to be shop inspected. (See Note 9.) Maintenance hole shafts and grade rings without reinforcement or linings do not require shop inspection. Gaskets used for reinforced concrete pipe require testing.

12. FGRC and FGRG (Fiberglass Reinforced Concrete and Fiberglass Reinforced Gypsum) should be manufactured in an approved shop and be shop inspected.

13. Mortar, grout and gypsum shall be inspected at the batch plant, unless the products are mixed at the Jobsite from approved packages under the inspection of the INSPECTOR.

14. Concrete Masonry Units (CMU) shall be inspected and sampled at the Jobsite.

15. Lining and coating of ductile iron pipe and fiberglass pipe, as well as welded supports, are subject to shop inspection. Vitrified Clay Pipe (VCP) is exempt, as are non-welded pipe supports which can be classified as standard or catalog items. The CITY'S Standards Division will provide the inspection and testing for VCP.

16. Shop inspection is not required for lumber, unless it is treated lumber. Glue-laminated products do not require shop inspection. Each "Glue Lam" shall come with an individual Certificate of Compliance.

17. Millwork and wood products are not required to be shop inspected, unless the Specifications call for equivalency or inspection by the Woodworking Institute of California (W.I.C.).

18. Specified coatings including, but not limited to, anodizing, bitumen, epoxy, galvanizing, polyvinylidene fluoride, and pipe linings and coatings shall be shop inspected.

19. Conveying equipment, such as elevators, escalators, or conveyors are exempt from shop inspection. However, the structural framework of the escalators, hoists, cranes and lifts do require inspection.

20. Mechanical equipment, such as compressors, pumps, motors and valves, require shop inspection for fabrication, tests of windings, and any specified coating. Pumps, valves and motors may be exempt if they are standard or catalog items.

21. Fabrications of sluice gates and slide gates are subject to shop inspection for fabrication, welding and coating.

22. Transformers rated at 600 volts and higher, transformers rated at 100 KVA and higher, generators, switchgear motor drives and complex wired panel boards require shop inspection.

23. Lighting fixtures and lamps are considered standard or catalog items and are exempt from shop inspection.

24. Electrical wiring and testing, performed in the shop, requires inspection to verify conformance with applicable Specifications.

25. Shop tests specified in the Specifications including, but not limited to, voltage, grounding, loads, performance, installation, temperature, or noise levels will require shop inspection.

26. HVAC (heating, ventilation and air conditioning) are subject to shop inspection for fabrication and welding. Each component will be evaluated for possible inspection.

27. Sheet metal ductwork is not shop inspected. Flexible ductwork is considered a standard or catalog item and no shop inspection is required. Ductwork made of aluminum, stainless steel, or fiberglass will require shop inspection.

28. Storefronts and wall systems are shop inspected. Fixed windows are standard items and have no need of inspection.

29. Plastic pipe, such as ABS or PVC does not require shop inspection. The pipe will be inspected and sampled for testing at the Jobsite. (a) Extruded plastic liner plate and PVC Liner will require shop inspection.

30. Fiberglass products, because of the resins and the fiber reinforcement, do require shop inspection.

31. Elastomeric bearing pads shall be tested according to Cal-Trans Standard Specification Section 51-1.12H. Sampling will be done by the INSPECTOR.

(END OF SECTION)

SECTION 01454
WEIGHING AND METERING EQUIPMENT

1.1 THE REQUIREMENT

A. It is the CONTRACTOR'S responsibility to ensure that all scales and metering equipment used for proportioning materials shall be inspected for accuracy and certified within the past twelve (12) months by the State of California Bureau of Weights and Measures, by the County Director or Sealer of Weights and Measures, or by a scale mechanic registered with or licensed by the County.

B. The accuracy of the work of a scale service agency, except as stated herein, shall meet the standards of the California Business and Professions Code and the California Code of Regulations pertaining to weighing devices. A certificate of compliance shall be presented, prior to operation, to the ENGINEER for approval and shall be renewed whenever required by the ENGINEER at no cost to the CITY.

C. All scales shall be arranged so they may be read easily from the operator's platform or area. They shall indicate the true net weight without the application of any factor. The figures of the scales shall be clearly legible. Scales shall be accurate to within one percent (1%) when tested with the plant shut down. Weighing equipment shall be so insulated against vibration or moving of other operating equipment in the plant area that the error in weighing with the entire plant running will not exceed two percent (2%) for any setting nor one-and-one-half percent (1.5%) for any batch.

(END OF SECTION)

SECTION 01455
CALIBRATION OF TESTING EQUIPMENT

1.1 THE REQUIREMENT

A. It is the CONTRACTOR'S responsibility to ensure that testing equipment such as, but not limited to, pressure gages, metering devices, hydraulic systems, force (load) measuring instruments, and strain-measuring devices shall be calibrated by a testing agency acceptable to the ENGINEER at intervals not to exceed twelve (12) months and following repairs, modification, or relocation of the equipment. Calibration certificates shall be provided when requested by the ENGINEER.

(END OF SECTION)

SECTION 01561
ENVIRONMENTAL CONTROL

1.1 THE REQUIREMENT

A. Explosives for Blasting

1. The use of explosives for blasting purposes on the work shall not be permitted.

B. Fugitive Dust and Smoke Control

1. The CONTRACTOR shall furnish all labor, equipment, and means required and shall carry out effective measures wherever and as often as necessary to prevent its operation from producing dust in amounts damaging to property, cultivated vegetation, or domestic animals, or causing a nuisance as defined by the ENGINEER. The CONTRACTOR shall be responsible for any damage resulting from any dust originating from its operations. The dust abatement measures shall be continued until the CONTRACTOR is relieved of further responsibility by the ENGINEER. No separate payment shall be allowed for dust abatement measures and all costs thereof shall be included in the CONTRACTOR's Bid. The use of water resulting in mud on streets, sidewalks, driveways, shall not be permitted as a substitute for sweeping or other methods of dust control.

2. The CONTRACTOR shall not discharge smoke, dust, or any other air contaminants into the atmosphere in such quantity as will violate the regulations of any legally constituted authority.

3. The CONTRACTOR shall comply with the requirements of Title 8, California Code of Regulations, concerning handling of asbestos dust.

C. Rubbish Control

1. Through all phases of construction, including suspension of Work and until final acceptance of the Project, the CONTRACTOR shall keep the Worksite and other areas used by it in a neat and clean condition, and free from any accumulation of rubbish and debris. The CONTRACTOR shall dispose of all rubbish and waste materials of any nature occurring at the Worksite and shall establish regular intervals of collection and disposal of such materials and waste. The CONTRACTOR shall also keep its haul roads free from dirt, rubbish, and unnecessary obstructions resulting from its operations. Care shall be taken to prevent spillage on haul routes. Any such spillage shall be removed immediately and the area cleaned by the CONTRACTOR. Equipment and material storage shall be confined to areas approved by the ENGINEER. Disposal of all rubbish and surplus materials shall be off the site of construction, at the CONTRACTOR's expense, all in accordance with local codes and ordinances governing locations and methods of disposal, and in conformance with all applicable safety laws, and the requirements of the OSHA Safety and Health Standards for Construction. All cleanup cost shall be included in the CONTRACTOR's Bid.

D. Sanitation

1. Fixed or portable chemical toilets shall be provided for the use of the CONTRACTOR's employees. These accommodations shall be maintained in a neat and sanitary condition. Toilets at construction sites shall conform to the requirements of Title 8, California Code of Regulations.

2. Wastewater conveyance and disposal shall not be interrupted. Should the CONTRACTOR disrupt existing sewer facilities, sewage shall be conveyed in closed conduits and disposed of in a sanitary sewer system. Sewage shall not be permitted to flow in trenches or be covered by backfill.

3. The CONTRACTOR shall establish a regular schedule for collection of all sanitary and organic waste. All wastes and refuse from sanitary facilities provided by the CONTRACTOR or organic material wastes from any other source related to the CONTRACTOR's operations shall be disposed of away from the site in a manner satisfactory to the INSPECTOR and in accordance with all laws and regulations pertaining thereto. Disposal of all such wastes shall be at the CONTRACTOR's expense.

E. Chemicals

1. The following paragraph does not relieve the CONTRACTOR from its responsibility for obtaining prior approval from the ENGINEER for chemical usage when otherwise required.

2. The CONTRACTOR shall provide four (4) copies of the MSDS to the INSPECTOR for all chemicals used during project construction or furnished for project operation, prior to bringing them on site, whether defoliant, soil sterilant, herbicide, pesticide, disinfectant, polymer, reactant, or of other classification, which shall show approval of either the U.S. Environmental Protection Agency or the U.S. Department of Agriculture. Use of all such chemicals and disposal of residues shall be in strict accordance with the printed instructions of the manufacturer and with all other applicable laws and regulations.

F. Lead paint notification

1. The CONTRACTOR is hereby notified that the facility under this Contract may contain Lead (Pb), Chromium (Cr) and Molybdenum (Mo).

2. If any paints containing Lead or Chromium are to be physically disturbed or made airborne during the progress of the Work by activities such as abrasive blasting, welding, cutting or torch burning, the CONTRACTOR shall provide appropriate worker protection in accordance with OSHA Lead in Construction Standard and in any other applicable regulations.

3. All paint which is removed or disturbed during the progress of the Work or any demolition debris which contains these paints, either of which contains in excess of 5 ppm (mg/l) Lead or Hexavalent Chromium when

tested in accordance with the Waste Extraction Test (WET) method of the California Code of Regulations, Title 22, shall be disposed of as hazardous waste. The CONTRACTOR shall be responsible for such disposal in accordance with all applicable laws and regulations.

G. Hazardous Waste

1. Hazardous waste generated by the CONTRACTOR at the site shall be disposed of in accordance with NOTIFICATION OF HAZARDOUS SUBSTANCES of the General Conditions.

H. Odor Control

1. The CONTRACTOR shall furnish all labor, materials, and equipment required and shall carry out effective measures whenever and as often as necessary to prevent the discharge of a nuisance odor from its operation into the atmosphere in such quantity as will violate the regulations of any legally constituted authority. During construction, the CONTRACTOR shall notify the ENGINEER and the INSPECTOR at least forty-eight (48) hours in advance when potential odor-causing activities are scheduled for construction.

I. Drainage Control

1. The CONTRACTOR shall maintain drainage within and through the Work areas. Earth dams will not be permitted in paved areas. Temporary dams of sandbags, asphaltic concrete, or other acceptable material will be permitted when necessary. Such dams shall be removed from the site as soon as their use is no longer necessary.

J. Graffiti Control

1. Throughout all phases of Work, including suspension of work, and until final acceptance, the CONTRACTOR shall keep all equipment, field offices, storage facilities and other facilities free of graffiti. Graffiti shall be painted over, masked or cleaned off within twenty-four (24) hours after notification by the INSPECTOR

K. Vermin Control

1. At the time of acceptance, structures entirely constructed under the Contract shall be free of rodents, insects, vermin, and pests. Necessary extermination work shall be arranged and paid for by the CONTRACTOR as part of the work within the contract time, and shall be performed by a licensed exterminator in accordance with requirements of governing authorities. The CONTRACTOR shall be liable for injury to persons or property and responsible for the elimination of offensive odors resulting from extermination operations.

L. Pre and Post Construction Survey (PCS)

1. The CONTRACTOR shall be responsible for any damages to the adjacent properties caused by the CONTRACTOR or its Subcontractors. This includes damage to all existing properties adjacent to the perimeter

of the project, within the project areas, and as identified by the ENGINEER.

2. The CONTRACTOR shall implement assessment damage prevention and measures as necessary. As a minimum, the CONTRACTOR shall secure the services of a property assessment company to prepare a PCS report for adjacent premises and structures at the locations listed below to differentiate the existing conditions from post constructions:

    a. Existing properties along the northern boundary of West Park and the Arts Plaza.
    b. Existing properties along the northern and southern boundaries of East Park.
    c. Existing Sixth Street Viaduct structures along and within the project areas including but not limited to bents, columns, walls, stairs, electrical equipment, etc.

3. The property assessment company shall have a minimum experience of 10 years performing similar work including have establish forms and procedures for petitioning right-of-entry from property owners and renters. The lead investigator/assessor of the property assessment company shall have a minimum of 5 years experiences in conducting this type of work on over 30 similar properties and / or structures

4. Report shall be in color, minimum three (3) hard copies, and an electronic (pdf) copy. Each property/structure shall have its own separate report. The interior and exterior survey includes but is not limited to visual observation of: the interior ceilings, walls, floors, windows, doors, basement, stairs, the exterior walls, roof, walkways, driveways, retaining walls, perimeter walls, and other special features currently on the properties, with accompanying photographs. All reports shall be signed by both the lead assessor and executive level representatives. Property owners shall be provided with a hard copy of each report.

5. Each photograph shall include date, time, location and direction of view. The PSC report includes attached “Notification Letter” to be signed by the property or/and rental owners. Also, any observed existing damage shall be identified as “low”, ”medium”, or of “high” severity, or similar rating system.

6. The preconstruction survey and report shall be conducted and prepared just prior to implementing any work adjacent to identified addresses and locations. However, ample time shall be scheduled to secure Right-of-Entry in advance of actual survey.

7. The post construction survey and report shall be conducted and prepared immediately after substantial completion of work at each address and/or location, or as directed in writing by the ENGINEER.

8. The CONTRACTOR shall be responsible for all the repair costs if the damages to existing facilities are caused by CONTRACTOR.

9. All costs for performing the PCS report shall be included within the Bid Prices. The City has the option to cancel the need for conducting the post construction survey and related report for any identified item and receive corresponding credit.

(END OF SECTION)

SECTION 01562
ENVIRONMENTAL MITIGATION

1.1 THE REQUIREMENT

A. The CONTRACTOR shall mitigate the adverse environmental impacts associated with the Work of the Contract. The CONTRACTOR shall indemnify and hold harmless the CITY from any and all fines, penalties or damages incurred by the CITY for violation of any environmental mitigation measures or permit caused by the CONTRACTOR's failure to comply with environmental mitigation measures of this Article. The measures that the CONTRACTOR shall take to mitigate environmental impacts include, but are not limited to the following:

1. Implement a Fugitive Dust and Erosion Control Plan (FDECP) that meets or exceeds SCAQMD requirements and the CITY'S FDECP for this site.

2. Comply with the General Construction Activity Storm Water Permit and the Storm Water Pollution Prevention Plan for this site.

3. Comply with the requirements of NOTIFICATION OF HAZARDOUS SUBSTANCES of the General Conditions.

4. Protect sensitive habitats and species through the use of fencing, to prohibit construction personnel access to adjacent habitat areas, and with dust control measures of the FDECP, and such other measures that may be called for by the Environmental Impact Report for this project.

5. Test all excavated soil for contamination and perform a waste profile complying with the waste facility’s acceptance guidelines and procedures. One soil sample shall be taken every 200 cubic yards.

6. Comply with the following emission control measures to minimize construction activity emissions, at no additional cost to the CITY:

   a. Stop construction activities during Stage II smog alerts which will be announced to the CONTRACTOR by the ENGINEER;

   b. Reduce construction equipment emissions by shutting off all equipment not in actual use;

   c. Reduce construction-related traffic congestion;

   d. Provide rideshare incentives for construction personnel;

   e. Tune and maintain construction equipment properly;

   f. Use low-sulfur/low nitrogen fuel for construction equipment, if available;

   g. Provide transit incentives for construction personnel;

h. Configure construction parking to minimize traffic interference;

i. Minimize obstruction of through-traffic lanes;

j. Provide a flagperson to facilitate traffic flow and prevent traffic congestion;

k. Schedule operations affecting roadways for off-peak traffic hours.

7. Comply with the Mitigation Monitoring Program (see Attachment 01562-A1). Mitigation measures and best management practices include, but are not limited to, the following:

a. MM-AQ-1: Newer/Tier 4 Engines in Haul Trucks and Construction Equipment

(1) Include in all construction contracts the requirement to use 2010 and newer diesel haul trucks (e.g., material delivery trucks and soil import/export).

(2) Include in all construction contracts the requirement that all off-road diesel-fueled construction equipment greater than 50 horsepower shall meet Tier 4 off-road emission standards. In addition, if not already supplied with a factory-equipped diesel particulate filter, all construction equipment shall be outfitted with Best Available Control Technology (BACT) devices certified by California Air Resources Board (CARB). Any emissions control device used by the contractor shall achieve emissions reductions that are no less than what could be achieved by a Level 3 diesel emissions control strategy for a similarly sized engine as defined by CARB regulations. To the extent locally available, construction equipment shall incorporate emissions savings technology such as hybrid drives. In the event that any equipment required under this mitigation measure is not available, provide documentation as information becomes available. A copy of each unit's certified tier specification, BACT documentation, and CARB or Southern California Air Quality Management District (SCAQMD) operating permit at the time of mobilization of each applicable unit of equipment shall be provided.

(3) To the extent possible, the import and export of onsite materials shall be scheduled to minimize empty return trips.

b. MM-AQ-2: Construction Equipment Requirements

(1) All on- and off-road diesel-fueled equipment shall not idle for more than 5 minutes when not in use. The idling of diesel-fueled equipment and haul trucks within 1,000-feet of nearby residential land uses shall be prohibited. Signs shall be posted in the designated queuing areas and or job sites to remind drivers and operators of the 5-minute-idling limit

(2) Staging and queuing areas shall be located at the furthest distance possible from nearby residential land uses.

(3) Use alternatively fueled (e.g., compressed natural gas, liquefied natural gas, propane), gasoline-fueled, or electrified construction equipment in place of diesel-fueled equipment to the extent locally available.

c. MM-AQ-3: Fugitive Dust Controls

(1) Non-toxic soil stabilizers shall be applied to all inactive construction areas (previously graded areas inactive for 20 days or more, assuming no rain) according to manufacturers' specifications.

(2) All excavating and grading operations shall be suspended when wind gusts (as instantaneous gust) exceed 25 miles per hour.

(3) Streets shall be swept at the end of the day if visible soil material is carried onto adjacent paved public roads and use of SCAQMD Rule 1186 and 1186.1 certified street sweepers or roadway.

(4) All trucks that are to haul excavated or graded material on-site shall comply with State Vehicle Code Section 23114 (Spilling Loads on Highways), with special attention to Sections 23114(b)(F), (e)(4) as amended, regarding the prevention of such material spilling onto public streets and roads.

(5) Conduct continuous, direct-reading, near real-time ambient monitoring of Particulate Matter (PM)10. Install appropriate signage and notify the SCAQMD in accordance with Rule 1466, Control of Particulate Emissions from Soils with Toxic Air Contaminants, prior to conducting any earth-moving activities on any site meeting the applicability of the rule.

d. MM-HAZ-5: Soil Gas Sampling

(1) Additional soil gas sampling and testing is recommended for completion in PARC Areas 1A, 5, 6, 7, and 8. The

additional sampling could potentially eliminate or reduce the need for soil gas remediation.

Ambient air and soil gas samples shall be tested for VOCs. If soil gas samples in PARC Area 6 yield ILCR values below the de minimis risk target or within the risk management range, no further mitigation and/or remedial actions will be required. If ILCR values are above the de minimis risk target, additional remedial actions will be taken to lower values to within the risk management range, such as applying SVE to a maximum depth of 15- to 20-feet bgs.

e. MM-HAZ-6: Methane Mitigation and Testing

(1) Methane mitigation applies to PARC Area 1A, which is located within the Methane Zone, and portions of PARC Area 7, where soil gases were detected and impervious surfaces are to be constructed adjacent to existing buildings. Any buildings (except naturally vented) to be constructed in Area 1A shall have methane mitigation systems meeting Level II requirements involving membrane and passive venter per Table 71 unless additional testing indicates no subsurface gas pressure and lower methane concentrations. In addition, paved areas that are over 5,000 square feet in area and within 15-feet of the exterior wall of a commercial, industrial, institutional building, shall be vented in accordance with the Methane Mitigation Standards, design Level II, unless additional testing indicates no subsurface gas pressure and lower methane concentrations.

Additional testing for methane concentrations and subsurface pressure shall be completed in accordance with the Division 71 Methane Seepage Regulations testing requirements should any buildings or paved areas over 5,000 square feet be proposed in PARC Area 1A and in PARC Area 7 where methane was detected.

f. MM-HYDRO-1: Public Safety Plan

(1) Comply with the Public Safety Plan and incorporate it into the Environmental Compliance Plan.

g. MM-NOISE-1: Construction-Noise Management Plan

(1) Prepare a Construction-Noise Management Plan (CNMP).

(2) CNMP shall include the following, at a minimum:

(a) Construction activities shall be restricted outside the hours of 7:00 a.m. to 9:00 p.m. Monday through Friday, and between the hours of 8:00

a.m. to 6:00 p.m. on Saturdays. While the intention is not to conduct work on Sundays, occasional Sunday work may be required to ensure the Project schedule is met. If it is determined that Sunday work is necessary, the proper permits will need to be obtained through the Police Commission. Construction activities shall be prohibited on federal holidays.

(b) Construction equipment shall be properly maintained and equipped with mufflers.

(c) Equipment shall be turned off when not in use for an excess of five minutes, except for equipment that requires idling to maintain performance.

(d) A public liaison shall be appointed for project construction and shall be responsible for addressing public concerns about construction activities, including excessive noise. As needed, the liaison shall determine the cause of the concern (e.g., starting too early, bad muffler) and implement measures to address the concern. The liaison will work directly with the construction contractor to ensure implementation of the noise control plan.

(e) The liaison shall work directly with the construction contractor to ensure implementation of the noise control plan.

(f) The public shall be notified in advance of the location and dates of construction hours and activities.

(g) Where necessary, temporary sound barriers shall be installed.

(h) Signage and notification on where to report construction-generated noise shall be posted on-site and around the construction area, as well as on the Bureau of Engineering website.

(i) Staging and queuing areas shall be located at the furthest distance possible from nearby residential land uses, as well as any other noise-sensitive land uses identified in the Project Area at the time of construction (e.g., transient lodging, schools, libraries, churches, hospitals, and nursing homes).

(j) Limit noise/vibration intensive activities occurring within 10-feet of existing structures and

occupied land uses. Where possible and to the extent locally available, select low-noise/vibration generating equipment when activities occur within 10-feet of adjacent existing structures.

h. BMP-AES-2: Construction Staging and Construction Staging Area

(1) Construction staging shall be coordinated with the construction and maintenance of the Viaduct Replacement Project as needed; therefore, additional use or acquisition of public space for equipment and vehicles will not be required. The construction area shall be fenced to obscure views of construction activities, materials, and staged equipment.

i. BMP-AQ-3: Construction Equipment Maintenance

(1) The contractor shall maintain construction equipment by conducting regular tune-ups according to the manufacturers' recommendations.

j. BMP-BIO-2: Trash and Construction Debris Removal

(1) All trash and construction debris shall be removed from the LA River construction areas on a daily basis. All water quality BMP materials shall be properly maintained during project construction and removed upon completion of construction activities. After completion of proposed construction activities, all construction equipment and materials shall be removed from the Project Area, and the Project Area shall be returned to pre-project conditions.

k. BMP-BIO-3: Work Area Limitations

(1) No work for the Project shall be conducted on the Fourth Street Bridge or Seventh Street Bridge structures.

l. BMP-BIO-6: Hazardous Materials BMPs

(1) Appropriate hazardous material BMPs shall be implemented to reduce the potential for chemical spills or contaminant releases into the LA River, including any non-stormwater discharge.

m. BMP-PAL-1: Paleontological Sensitivity Training

(1) Prior to the start of construction, all field personnel shall be briefed regarding the types of fossils that could be found and the procedures to follow should paleontological resources be encountered. Specifically, the training shall provide a description of the fossil

resources that may be encountered, outline steps to follow when a fossil discovery is made and provide contact information for a qualified paleontologist. The training shall be developed by a qualified paleontologist and provided as hand-outs or a PowerPoint Presentation that may be presented concurrently with other pre-construction training.

n. BMP-GHG-1: Off-Road Equipment Construction Requirements

(1) Idling shall be limited for vehicles and off-road equipment. Off-road equipment shall meet Tier 4 emission standards and newer. Efficient on-road haul trucks shall be used, where practicable.

o. BMP-HYDRO-1: Construction Drainage Design

(1) The Project shall incorporate drainage designs that direct stormwater runoff or irrigation runoff away from structures or the top of the slopes. No stormwater will be allowed to discharge over the top of a cut or fill slope.

p. BMP-HYDRO-2: Off-Site Sediment Transport

(1) All entrances and exits to the construction site shall be stabilized to reduce transport of sediment off-site. Any sediment or other materials tracked off-site shall be removed within a reasonable time.

q. BMP-TRANS-1: Temporary Detour Routes

(1) During proposed construction activities, temporary detours shall be provided for any affected pedestrian and bicycle facilities.

r. BMP-TRANS-2: Construction Staging Plan

(1) A construction staging plan shall be developed to reduce impacts related to noise, dust, traffic, and other health hazards. In addition, construction site BMPs (e.g., fencing, signs, and detours) shall be implemented to minimize hazards and prevent safety issues on the roadways and sidewalks surrounding the construction site.

s. BMP-TRANS-3: Construction Traffic

(1) Construction-related trips shall be scheduled with increased frequency during off-peak hours to minimize impacts to commuters.

t. BMP-TRANS-4: Access to Parcels

(1) If access to any existing parcels are removed during proposed construction activities, temporary access shall be provided, and/or new points of access shall be constructed.

u. BMP-USS-1: Wastewater Treatment

(1) Any wastewater produced as a result of proposed construction activities, such as water containing diesel and oil, paint, solvents, cleaners, and other chemicals, as well as construction debris and dirt, shall be collected in settlement tanks and screened. The clean water shall be discharged, and the remaining sludge shall be disposed of in accordance with water and solid waste disposal regulations, including the CWA, the Porter-Cologne Water Quality Control Act, and the RCRA.

v. BMP-USS-2: Temporary Stormwater Drainage Measures

(1) Temporary stormwater drainage measures to prevent polluted runoff in the construction site shall include, but not be limited to, the installation of earth dikes, drainage swales, and ditches, silt fences, desilting basins, and stormwater drain inlet protection.

B. Comply with the more stringent requirements of the current CITY or local noise ordinances, which may include:

1. Construction of noise barriers;

2. Use of low-noise-generating construction equipment;

3. Maintenance of mufflers and ancillary noise abatement equipment;

4. Use of vibration pile drivers and other techniques that result in less noise than impact pile drivers;

5. Scheduling high noise producing activities during periods that are least sensitive;

6. Routing construction related truck traffic away from noise-sensitive areas;

7. Reducing construction vehicle speeds.

C. The CONTRACTOR, a minimum of thirty (30) days prior to beginning work on each new major activity, shall submit a written plan to the ENGINEER, for approval, detailing how the environmental impacts for the activity shall be mitigated in accordance with the Mitigation Monitoring Program. The plan shall include, at a minimum:

1. Anticipated site conditions;

2. Equipment to be utilized;

3. Means and methods of construction;

4. Impacts likely to occur;

5. Mitigation methods to be employed.

(END OF SECTION)

(SEE ATTACHMENT)

ATTACHMENTS TO SECTION 01562

Attachments to General Requirements Section 01562 consists of one (1) document, as follows:

ATTACHMENT NUMBER	TITLE OF ATTACHMENT	NUMBER OF PAGES IN THIS ATTACHMENT
01562-A1	Mitigation Monitoring Program	37

ATTACHMENT 01562-A1

REQUIREMENTS FOR MITIGATION MONITORING

MITIGATION MONITORING PROGRAM

Sixth Street Park, Arts, River & Connectivity (PARC) Project

SCH #2017041045

MITIGATION MONITORING PROGRAM



March 2022

PREPARED FOR:

City of Los Angeles, Department of Public Works
Bureau of Engineering, Environmental Management Group
1149 S. Broadway, Suite 600, Los Angeles CA 90015
Contact: Dr. Jan Green Rebstock, Environmental Supervisor II
213-485-5761, Jan.Green.Rebstock@lacity.org

WITH ASSISTANCE FROM:

GPA Consulting

ENGINEERING
CITY OF LOS ANGELES

TRANSMITTAL NO. 4

This page intentionally left blank.

Mitigation Monitoring Program

Introduction

The Mitigation Monitoring Reporting Program ("MMP") has been prepared pursuant to Public Resources Code Section 21081.6, which requires a Lead Agency to adopt a "reporting or monitoring program for changes to the project or conditions of project approval, adopted in order to mitigate or avoid significant effects on the environment." In addition, Section 15097(a) of the California Environmental Quality Act (CEQA) Guidelines requires that a public agency adopt a program for monitoring or reporting mitigation measures and project revisions, which it has required to mitigate or avoid significant environmental effects. This MMP has been prepared in compliance with the requirements of CEQA, Public Resources Code Section 21081.6, and Section 15097 of the State CEQA Guidelines.

The City of Los Angeles (City), the Lead Agency on behalf of the Los Angeles Department of Public Works (LADPW), Bureau of Engineering (LABOE), is the Lead Agency for the Sixth Street PARC Project (proposed Project), and therefore is responsible for administering and implementing the MMP. A public agency may delegate reporting or monitoring responsibilities to another public agency or to a private entity that accepts the delegation. However, until mitigation measures have been completed, the Lead Agency remains responsible for ensuring that implementation of the mitigation measures occurs in accordance with the program.

Purpose

The purpose of the MMP is to do the following:

- Coordinate all mitigation monitoring activities
- Manage the preparation, approval, and filing of monitoring or permit compliance records
- Maintain records concerning the status of all approved mitigation measures (MM) and best management practices (BMP)
- Provide quality control assurance of field monitoring personnel
- Coordinate with other agencies regarding compliance with mitigation or permit requirements
- Review and recommend acceptance and certification of implementation documentation
- Act as a contact for interested parties or surrounding property owners who wish to register concerns regarding environmental issues; verifying any such circumstances; and developing any necessary corrective actions.

Organization

As shown in the following pages, each identified mitigation measure for the proposed Project is listed and categorized by environmental issue area, with accompanying discussion of:

- Time Frame for Implementation: When the measure will be implemented.

- Monitoring Period: Indicates when monitoring for compliance with the measure will occur.
- Monitoring Agency: The agency to which reports involving feasibility, compliance, implementation, and development are made.
- Verification of Compliance: The date that monitoring is complete to ensure compliance with the measure.

Monitoring and Reporting Procedures

This MMP shall be enforced throughout all phases of the proposed Project. LABOE shall be responsible for implementing each project design feature and mitigation measure and shall be obligated to provide verification, as identified below, to the appropriate monitoring and enforcement agencies that each project design feature and mitigation measure has been implemented. LABOE shall maintain records demonstrating compliance with each project design feature and mitigation measure listed below.

All applicable construction-related mitigation measures and best management practices will be included in any bid specification released for construction of the proposed Project. Prior to the release of the bid specifications, construction plans and specifications will be provided to LABOE's Environmental Management Group (EMG) for review and approval regarding environmental mitigation. Unless otherwise specified herein, LABOE will be responsible for taking all actions necessary to implement the mitigation measures according to the provided specifications and demonstrating that each action has been successfully completed. LABOE, at its discretion, may delegate implementation responsibility or portions thereof to a licensed contractor. This MMP for the proposed Project will be in place through design, construction, and operation. LABOE will be responsible for administering the MMP and ensuring that all parties comply with its provisions. LABOE may delegate monitoring responsibilities to staff, consultants, or contractors.

The construction contractor shall submit an Environmental Compliance Plan for LABOE Construction Management and LABOE EMG approval prior to the beginning of ground-disturbing construction activities. The Environmental Compliance Plan will document how the contractor intends to comply with all environmental measures applicable to the contract, including application of BMPs. LABOE Construction Management will also ensure that monitoring is documented in an Environmental Compliance Report and that deficiencies are promptly corrected. A designated environmental monitor with LABOE Construction Management will track and document compliance with mitigation measures, note any problems that may result, and take appropriate action to rectify problems. LABOE will monitor compliance with operational mitigation measures.

During the construction phase and prior to going through plan check review, LABOE shall retain an independent Construction Monitor (either via the City or through a third-party consultant), who shall be responsible for monitoring implementation of mitigation measures and best management practices during construction activities consistent with the monitoring phase and frequency set forth in this MMP.

The Construction Monitor shall also prepare documentation of the City's compliance with the project design features and mitigation measures during construction every 90 days in a form satisfactory to

LABOE. The documentation must be signed by LABOE and the Construction Monitor and be included as part of the City's Compliance Report. The Construction Monitor shall be obligated to immediately report to the Enforcement Agency any non-compliance with mitigation measures and project design features within two businesses days if the non-compliance is not corrected within a reasonable time or if the non-compliance is repeated.

Changes to Mitigation Measures

Changes to Mitigation Measures Under CEQA, mitigation measures may be modified or deleted if the relevant decision-maker approves such action, gives a legitimate reason for making the change, and supports those reasons with substantial evidence, including an appropriate subsequent CEQA document. Any substantive change to the MMP shall be documented in writing. Modifications to the mitigation measures/BMPs may be made by the LABOE subject to one of the following findings and documented by evidence included in the record:

1. The measure/BMP included in the EIR and the MMP is no longer required because the significant environmental impact identified in the EIR has been found not to exist, or to occur at a level which makes the impact less than significant as a result of changes in the Project, changes in conditions of the environment, or other factors.

   OR

   2. The modified or substitute mitigation measure/BMP to be included in the MMRP provides a level of environmental protection equal to or greater than that afforded by the mitigation measure included in the EIR and the MMP.

   AND

   3. The modified or substitute mitigation measure/BMP does not have significant adverse effect on the environment in addition to or greater than those which were considered by LABOE in its decisions regarding the EIR and the Proposed Project.

   AND

   4. The modified or substitute mitigation measure/BMP is feasible, and LABOE, through measures included in the MMP or other established procedures, can assure its implementation.

Findings and related documentation supporting the findings involving modifications to mitigation measures shall be maintained in the Project file with the MMP and shall be made available to the public upon request.

Mitigation Monitoring Program

Mitigation Measures

Air Quality

MM-AQ-1: Newer/Tier 4 Engines in Haul Trucks and Construction Equipment

- Measures:
  - Include in all construction contracts the requirement to use 2010 and newer diesel haul trucks (e.g., material delivery trucks and soil import/export).
  - Include in all construction contracts the requirement that all off-road diesel-fueled construction equipment greater than 50 horsepower shall meet Tier 4 off-road emission standards. In addition, if not already supplied with a factory-equipped diesel particulate filter, all construction equipment shall be outfitted with Best Available Control Technology (BACT) devices certified by California Air Resources Board (CARB). Any emissions control device used by the contractor shall achieve emissions reductions that are no less than what could be achieved by a Level 3 diesel emissions control strategy for a similarly sized engine as defined by CARB regulations. To the extent locally available, construction equipment shall incorporate emissions savings technology such as hybrid drives. In the event that any equipment required under this mitigation measure is not available, provide documentation as information becomes available. A copy of each unit's certified tier specification, BACT documentation, and CARB or Southern California Air Quality Management District (SCAQMD) operating permit at the time of mobilization of each applicable unit of equipment shall be provided.
  - Maintain construction equipment by conducting regular tune-ups according to the manufacturers' recommendations.
  - To the extent possible, the import and export of onsite materials shall be scheduled to minimize empty return trips.
- Time Frame for Implementation:

Design Phase:

Timing/Schedule: Prior to Project construction.

Implementation: LABOE Project Engineer shall include requirement in contract specs and plans. Mitigation measures shall be included in contractor bid documents and Environmental Compliance Plan prepared by the contractor.

Enforcement: LABOE Project Manager and LABOE EMG will review specs and plans for compliance

Construction Phase:

Timing/Schedule: Throughout Project construction.

Implementation: LABOE Project Engineer and Construction contractor shall implement mitigation measure and review engine and equipment certified tier specification and best available control

technology documentation. Similarly, contractor may provide the ARB or SCAQMD operating permit at the time of mobilization of each applicable unit of equipment. Considered complete after end of Project construction.

Enforcement: LABOE Construction Manager and LADPW, Bureau of Contracts Administration, Construction Inspector. BOE EMG will review Environmental Compliance Plan prepared by Contractor, the Environmental Compliance Report and the Project Acceptance and Closeout Report.

MM-AQ-2: Construction Equipment Requirements

- Measures:
  - All on- and off-road diesel-fueled equipment shall not idle for more than 5 minutes when not in use. The idling of diesel-fueled equipment and haul trucks within 1,000-feet of nearby residential land uses shall be prohibited. Signs shall be posted in the designated queuing areas and or job sites to remind drivers and operators of the 5-minute-idling limit.
  - Staging and queuing areas shall be located at the furthest distance possible from nearby residential land uses.
  - Use alternatively fueled (e.g., compressed natural gas, liquefied natural gas, propane), gasoline-fueled, or electrified construction equipment in place of diesel-fueled equipment to the extent locally available.

Design Phase:

Timing/Schedule: Prior to Project construction.

Implementation: LABOE Project Engineer shall include requirement in contract specs and plans. Mitigation measures shall be included in contractor bid documents and Environmental Compliance Plan prepared by contractor.

Enforcement: LABOE Project Manager and LABOE EMG will review specs and plans for compliance

Construction Phase:

Timing/Schedule: Throughout Project construction.

Implementation: LABOE Project Engineer and Construction contractor

Enforcement: LABOE Construction Manager and LADPW, Bureau of Contracts Administration, Construction Inspector. BOE EMG will review Environmental Compliance Plan prepared by Contractor, the Environmental Compliance Report and the Project Acceptance and Closeout Report.

MM-AQ-3: Fugitive Dust Controls

- Measures:
  - All active portions of the construction site shall be watered twice daily to prevent excessive amounts of dust.

- Non-toxic soil stabilizers shall be applied to all inactive construction areas (previously graded areas inactive for 20 days or more, assuming no rain) according to manufacturers' specifications.
- All excavating and grading operations shall be suspended when wind gusts (as instantaneous gust) exceed 25 miles per hour.
- On-site off-road equipment and on-road vehicles used on-site shall be limited to 15 miles per hour.
- All on-site roads shall be paved as soon as feasible, watered twice daily, or chemically stabilized.
- Visible dust beyond the property line which emanates from the project shall be prevented to the maximum extent feasible.
- All material transported off-site shall be either sufficiently watered or securely covered to prevent excessive amounts of dust prior to departing the job site.
- Track-out devices shall be used at all construction site access points.
- All delivery truck tires shall be watered down and/or scraped down prior to departing the job site.
- Streets shall be swept at the end of the day if visible soil material is carried onto adjacent paved public roads and use of SCAQMD Rule 1186 and 1186.1 certified street sweepers or roadway.
- Replace ground cover in disturbed areas as quickly as possible.
- All trucks that are to haul excavated or graded material on-site shall comply with State Vehicle Code Section 23114 (Spilling Loads on Highways), with special attention to Sections 23114(b)(F), (e)(4) as amended, regarding the prevention of such material spilling onto public streets and roads.
- Conduct continuous, direct-reading, near real-time ambient monitoring of Particulate Matter (PM)10. Install appropriate signage and notify the SCAQMD in accordance with Rule 1466, Control of Particulate Emissions from Soils with Toxic Air Contaminants, prior to conducting any earth-moving activities on any site meeting the applicability of the rule.

Design Phase:

Timing/Schedule: Prior to Project construction.

Implementation: LABOE Project Engineer shall include requirement in contract specs and plans. Mitigation measures shall be included in contractor bid documents and Environmental Compliance Plan prepared by contractor.

Enforcement: LABOE Project Manager and LABOE EMG will review specs and plans for compliance

Construction Phase:

- Timing/Schedule: Throughout Project construction.
- Implementation: LABOE Project Engineer and Construction contractor

- Enforcement: LABOE Construction Manager and LADPW, Bureau of Contracts Administration, Construction Inspector. BOE EMG will review Environmental Compliance Plan prepared by Contractor, the Environmental Compliance Report and the Project Acceptance and Closeout Report.

Hazards and Hazardous Materials

MM-HAZ-1: Remediation Category 1A

- Measures: The City shall be required to implement the following measures in areas where Resource Conservation and Recovery Act (RCRA) Level Heavy Metals, polychlorinated biphenyls (PCB), or total petroleum hydrocarbon diesel range organics (TPH DRO) will be excavated and disposed of at Class 1 Hazardous Waste Landfills:
  - Soils will be excavated as needed up to a maximum depth of 4.5-feet below ground surface (bgs), consistent with the limits designated on Figures 3.8-3a and 3.8-3b, Areas of Concern with Contamination.
  - The transport and disposal of RCRA hazardous waste will be accompanied with a Hazardous Waste Manifest (i.e., documentation accompanying the transport, treatment, storage and disposal of hazardous waste) completed by a licensed transporter. A site-specific California Environmental Protection Agency (CalEPA) Hazardous Waste Generator Identification Number will be obtained for each RCRA hazardous waste. Additional sampling and testing will likely be required by the facility accepting the soil for disposal.
  - For excavations deeper than 4-feet, shoring or other approved means will be required to maintain stability of the excavation walls.
  - During excavation activities, dust and runoff controls will be implemented to prevent windborne or surface waterborne migration of the soil from the Project Site. The soils will be directly loaded into the transport trucks, which will require tarps to prevent spillage or windblown loss of soil during transport. These controls will be verified and monitored by an independent third party.
  - A site-specific Health and Safety Plan (HASP) will be prepared and implemented during all proposed construction activities, including full time perimeter sampling and testing of particulates and dust from the Project Site.
  - All onsite workers and supervisors will complete a 40-hour Occupational Safety and Health Administration (OSHA) Hazardous Waste Operations and Emergency Response (HAZWOPER) training course and be equipped with the appropriate personal protective equipment.
  - Excavated areas will be backfilled with certified clean soil.

Design Phase:

Timing/Schedule: During Project design, prior to Project construction.

Implementation: LABOE Project Engineer shall include requirement in contract specs and plans. Mitigation measures shall be included in contractor bid documents and Environmental Compliance Plan prepared by contractor.

Enforcement: LABOE Project Manager and LABOE EMG will review specs and plans for compliance

Construction Phase:

- Timing/Schedule: Throughout Project construction.
- Implementation: LABOE Project Engineer and Construction contractor
- Enforcement: LABOE Construction Manager and LADPW, Bureau of Contracts Administration, Construction Inspector. BOE EMG will review Environmental Compliance Plan prepared by Contractor, the Environmental Compliance Report and the Project Acceptance and Closeout Report.

MM-HAZ-2: Remediation Category 2A and 2B

Remediation Category 2A

- Measures: The City shall be required to implement the following measures in areas where soils contaminated with Heavy Metals and/or TPH DRO that are classified as non-RCRA hazardous waste will be excavated. These contaminated soils shall be disposed at Class 2 Landfills:
  - Soils will be excavated as needed up to a maximum depth of 6-feet bgs, consistent with the limits designated on Figures 3.8-3a and 3.8-3b, Areas of Concern with Contamination.
  - The transport and disposal of non-RCRA hazardous waste will be accompanied with a Hazardous Waste Manifest completed by a licensed transporter. A CalEPA Non-RCRA Hazardous Waste Generator Identification Number will be obtained. Additional sampling and testing will likely be required by the facility accepting the soil for disposal.
  - For excavations deeper than 4-feet, shoring or other approved means shall be required to maintain stability of the excavation walls.
  - During excavation activities, dust and runoff controls will be implemented to prevent windborne or surface waterborne migration of the soil from the Project Site. The soils will be directly loaded into the transport trucks, which will require tarps to prevent spillage or windblown loss of soil during transport. These controls will be verified and monitored by an independent third party.
  - A site-specific Health and Safety Plan (HASP) will be prepared and implemented during all proposed construction activities, including full time perimeter sampling and testing of particulates and dust from the Project Site.
  - All onsite workers and supervisors will complete a 40-hour OSHA HAZWOPER training course and be equipped with the appropriate personal protective equipment.
  - Excavated areas will be backfilled with certified clean soil.

Remediation Category 2B

- Measures: In addition to the measures above, the following measures shall be implemented in areas where volatile organic compounds (VOC) were observed in soil gases:
  - Emission controls will be used to clear the area of emitting VOCs (i.e., spraying water or applying foam agents to all exposed soil surfaces and/or using large, spark-free fans). Full-time monitoring will be required to verify that the emission controls are effective in preventing the VOCs from impacting workers or the public. Monitoring will comply with SCAQMD Rule 1166.
  - A detailed HASP will be prepared and implemented during the excavation and transport of contaminated soils.
  - The excavation, transport, and disposal of contaminated soils will require permitting and approval by the Certified Unified Program Agency (CUPA), CalEPA/Department of Toxic Substances Control (DTSC), and SCAQMD. A detailed Work Plan/Remedial Action Plan will be prepared and submitted to these agencies for review and approval. Under Rule 1166, a Mitigation Management Plan for potential VOC emissions during excavation will be submitted to SCAQMD and subject to SCAQMD approval. A site-specific CalEPA Hazardous Waste Generator Identification Number will be obtained and manifests completed by the licensed transporter.
  - A soil vapor extraction (SVE) system will be designed and installed to remove and treat VOCs in the soil gases. If Health Risk Assessments indicate the need, a vertical barrier/line will be installed around the perimeter of the area to prevent soil gases with VOCs from migrating back into the area. Gases migrating from below the clean backfill or deeper depths will be extracted through the SVE slotted wells and treated by the SVE treatment system. Treatment for VOCs typically involves carbon filtration unless hydrogen sulfide is detected in the gas stream. Operating and maintenance procedures for the SVE system and permit applications will be prepared and approved by the oversight agency and SCAQMD.
  - If the City determines it is necessary, a "Pilot Study" will be designed and implemented to evaluate the sustainable flow rate and concentration of VOCs in the soil gas stream and to determine the size of the final SVE system components.
  - Design of the SVE system, preparation of a Design Report and Work Plan/Remedial Action Plan (including HASP) will be submitted to and subject to approval by the CUPA and Los Angeles County Fire Department (LACoFD) Site Mitigation Unit.
  - The SVE will be implemented and monitored. This may require several months to over a year.
  - The City shall provide documentation to the CUPA, LACoFD Site Mitigation Unit, and SCAQMD when the SVE has reached the specified clean-up goals.
  - Excavated areas will be backfilled with certified clean soil.

Design Phase:

Timing/Schedule: During Project design, prior to Project construction.

Implementation: LABOE Project Engineer shall include requirement in contract specs and plans. Mitigation measures shall be included in contractor bid documents and Environmental Compliance Plan prepared by contractor.

Enforcement: LABOE Project Manager and LABOE EMG will review specs and plans for compliance.

Construction Phase:

- Timing/Schedule: Throughout Project construction.
- Implementation: LABOE Project Engineer and Construction contractor
- Enforcement: LABOE Construction Manager and LADPW, Bureau of Contracts Administration, Construction Inspector. BOE EMG will review Environmental Compliance Plan prepared by Contractor, the Environmental Compliance Report and the Project Acceptance and Closeout Report.

MM-HAZ-3: Remediation Category 3

Option 1

- Measures: This alternative will involve the same measures as described under Category 2b above. Contaminated soils will be removed to a depth of up to 15-feet or more and shoring of the excavation walls will be necessary. A liner will be installed on the bottom of the excavation area to prevent contaminated soil gas from re-entering the backfill soils. Gas migration from the side walls will be mitigated by either installation of a vertical liner placed on the side walls of the excavation or SVE wells installed vertically outside the limits of the excavation after backfilling is done. The backfill soil will be certified clean fill and placement will need to meet the geotechnical specifications of the Project design. During the process, the site will require strict emissions controls and monitoring.

Option 2

- Measures: This alternative, the SVE treatment method, utilizes extraction and monitoring wells (In Situ Method) or excavation and encapsulation of impacted soils in above ground piles with horizontal slotted piping (On Site Method), a vacuum pump or pumps, and carbon filtration units to extract and remove VOCs from the soil gas. The process requires several steps as follows:
  - Design and implementation of a "Pilot Study" to evaluate the sustainable flow rate and concentration of VOCs in the soil gas stream and to size the final SVE system components.
  - Design of the SVE system, preparation of a Design Report and Work Plan/Remedial Action Plan (including HASP) for submittal to and approval by the CUPA and CalEPA/DTSC.
  - Solicitation of bids for construction and implementation of the remediation.
  - Implementation and monitoring of the SVE. This may require several months to over a year.
  - Reporting to the agencies with documentation that the SVE has reached the specified clean up goals.

Option 3

- Measures: This alternative will mitigate the impact of the VOCs and/or methane and hydrogen sulfide by precluding soil gases migration from the subsurface soil and intrusion into structures or other facilities and surface emissions. Depending on the type of soil gases and pressure in the soil gas, the systems can include several of the following components:
  - Shallow excavation (3- to 4-feet bgs) to allow installation of the mitigation components (some of the soil will be used to backfill trenches)
  - Gravel layers and slotted piping for gas collection
  - Liner installation above the slotted piping and extending side wide
  - Vacuum pumps for gas extraction or air injection blowers
  - Filtration systems to remove VOCs and/or hydrogen sulfide from the gas stream
  - Geomembrane barriers placed beneath concrete slabs and/or foundations or fill areas
  - Installation of automated and/or manual monitoring systems

Design Phase:

Timing/Schedule: During Project design, prior to Project construction.

Implementation: LABOE Project Engineer shall include requirement in contract specs and plans. Mitigation measures shall be included in contractor bid documents and Environmental Compliance Plan prepared by contractor.

Enforcement: LABOE Project Manager and LABOE EMG will review specs and plans for compliance.

Construction Phase:

- Timing/Schedule: Throughout Project construction.
- Implementation: LABOE Project Engineer and Construction contractor
- Enforcement: LABOE Construction Manager and LADPW, Bureau of Contracts Administration, Construction Inspector. BOE EMG will review Environmental Compliance Plan prepared by Contractor, the Environmental Compliance Report and the Project Acceptance and Closeout Report.

MM-HAZ-4: Remediation Category 4

- Measures: The City shall be required to implement the following measure in areas within Caltrans right-of-way (ROW) where soil contains aerially deposited lead (ADL):
  - In accordance with the Caltrans/DTSC ADL Agreement, soils above a depth of approximately 2.9-feet bgs will require 1-foot of clean soil cover to remain on site per the Caltrans/DTSC ADL Agreement.
- Time Frame for Implementation: Prior to construction

- Monitoring Period: Prior to construction
- Monitoring Agency: LADPW, Contracts Administration Bureau, Construction Inspector

Design Phase:

Timing/Schedule: During Project design, prior to Project construction.

Implementation: LABOE Project Engineer shall include requirement in contract specs and plans. Mitigation measures shall be included in contractor bid documents and Environmental Compliance Plan prepared by contractor.

Enforcement: LABOE Project Manager and LABOE EMG will review specs and plans for compliance.

Construction Phase:

- Timing/Schedule: Throughout Project construction.
- Implementation: LABOE Project Engineer and Construction contractor
- Enforcement: LABOE Construction Manager and LADPW, Bureau of Contracts Administration, Construction Inspector. BOE EMG will review Environmental Compliance Plan prepared by Contractor, the Environmental Compliance Report and the Project Acceptance and Closeout Report.

MM-HAZ-5: Soil Gas Sampling

- Measures: Additional soil gas sampling and testing is recommended for completion in PARC Areas 1A, 5, 6, 7, and 8. The additional sampling could potentially eliminate or reduce the need for soil gas remediation.

  Ambient air and soil gas samples shall be tested for VOCs. If soil gas samples in PARC Area 6 yield ILCR values below the de minimis risk target or within the risk management range, no further mitigation and/or remedial actions will be required. If ILCR values are above the de minimis risk target, additional remedial actions will be taken to lower values to within the risk management range, such as applying SVE to a maximum depth of 15- to 20-feet bgs.

Design Phase:

Timing/Schedule: During Project design, prior to Project construction.

Implementation: LABOE Project Engineer shall include requirement in contract specs and plans. Mitigation measures shall be included in contractor bid documents and Environmental Compliance Plan prepared by contractor.

Enforcement: LABOE Project Manager and LABOE EMG will review specs and plans for compliance.

Construction Phase:

- Timing/Schedule: Throughout Project construction.
- Implementation: LABOE Project Engineer and Construction contractor

- Enforcement: LABOE Construction Manager and LADPW, Bureau of Contracts Administration, Construction Inspector. BOE EMG will review Environmental Compliance Plan prepared by Contractor, the Environmental Compliance Report and the Project Acceptance and Closeout Report.

MM-HAZ-6: Methane Mitigation and Testing

- Measures: Methane mitigation applies to PARC Area 1A, which is located within the Methane Zone, and portions of PARC Area 7, where soil gases were detected and impervious surfaces are to be constructed adjacent to existing buildings. Any buildings (except naturally vented) to be constructed in Area 1A shall have methane mitigation systems meeting Level II requirements involving membrane and passive venter per Table 71 unless additional testing indicates no subsurface gas pressure and lower methane concentrations. In addition, paved areas that are over 5,000 square feet in area and within 15-feet of the exterior wall of a commercial, industrial, institutional building, shall be vented in accordance with the Methane Mitigation Standards, design Level II, unless additional testing indicates no subsurface gas pressure and lower methane concentrations.

  Additional testing for methane concentrations and subsurface pressure shall be completed in accordance with the Division 71 Methane Seepage Regulations testing requirements should any buildings or paved areas over 5,000 square feet be proposed in PARC Area 1A and in PARC Area 7 where methane was detected.

Design Phase:

Timing/Schedule: During Project design, prior to Project construction.

Implementation: LABOE Project Engineer shall include requirement in contract specs and plans. Mitigation measures shall be included in contractor bid documents and Environmental Compliance Plan prepared by contractor.

Enforcement: LABOE Project Manager and LABOE EMG will review specs and plans for compliance.

Construction Phase:

- Timing/Schedule: Throughout Project construction.
- Implementation: LABOE Project Engineer and Construction contractor
- Enforcement: LABOE Construction Manager and LADPW, Bureau of Contracts Administration, Construction Inspector. BOE EMG will review Environmental Compliance Plan prepared by Contractor, the Environmental Compliance Report and the Project Acceptance and Closeout Report.

Hydrology and Water Quality

MM-HYDRO-1: Public Safety Plan

- Measures: The City, in coordination with United States Army Corps. of Engineers, shall publish a Public Safety Plan in order to reduce the potential for safety impacts related to flooding. The Public Safety Plan shall include an evacuation plan and protocols for protecting pedestrians and potential homeless populations (e.g., vehicular deterrents such as bollards and safety warning devices) in the LA River Access Tunnel during flood conditions.
- Time Frame for Implementation: Design, Construction, and Operation
- Monitoring Period: Design, Construction and Operation
- Monitoring Agency: LADPW, Department of Recreation and Parks

Design Phase:

Timing/Schedule: During Project design, prior to Project construction.

Implementation: LABOE Project Engineer shall lead preparation of the Public Safety Plan and coordinate with Recreation and Parks, other relevant City departments and the United States Army Corp. The LABOE Project Engineer shall include any physical deterrents or safety warning devices in the contract specs and plans. The Contractor bid documents and Environmental Compliance Plan prepared by contractor shall reflect these items.

Enforcement: LABOE Project Manager and LABOE EMG will review specs and plans for compliance.

Construction Phase:

- Timing/Schedule: Must be completed prior to end of construction.
- Implementation: LABOE Project Engineer and required stakeholders (publish Public Safety Plan prior to project operations) and Construction contractor (physical elements)
- Enforcement: LABOE Construction Manager and LADPW, Bureau of Contracts Administration, Construction Inspector for physical plan elements.

Operations Phase:

- Timing/Schedule: ongoing
- Implementation: City of Los Angeles, Department of Recreation and Parks, Los Angeles Police Department, US Army Corp, and other relevant stakeholders

Noise and Vibration

MM-NOISE-1: Construction-Noise Management Plan

- Measures: A construction-noise management plan (CNMP) shall be prepared for the Project. The CNMP shall, at a minimum, include the following measures:

- Construction activities shall be restricted outside the hours of 7:00 a.m. to 9:00 p.m. Monday through Friday, and between the hours of 8:00 a.m. to 6:00 p.m. on Saturdays. While the intention is not to conduct work on Sundays, occasional Sunday work may be required to ensure the Project schedule is met. If it is determined that Sunday work is necessary, the proper permits will need to be obtained through the Police Commission. Construction activities shall be prohibited on federal holidays.
- Construction equipment shall be properly maintained and equipped with mufflers.
- Equipment shall be turned off when not in use for an excess of five minutes, except for equipment that requires idling to maintain performance.
- A public liaison shall be appointed for project construction and shall be responsible for addressing public concerns about construction activities, including excessive noise. As needed, the liaison shall determine the cause of the concern (e.g., starting too early, bad muffler) and implement measures to address the concern. The liaison will work directly with the construction contractor to ensure implementation of the noise control plan.
- The liaison will work directly with the construction contractor to ensure implementation of the noise control plan.
- The public shall be notified in advance of the location and dates of construction hours and activities.
- Where necessary, temporary sound barriers shall be installed.
- Signage and notification on where to report construction-generated noise shall be posted on-site and around the construction area, as well as on the Bureau of Engineering website.
- Staging and queuing areas shall be located at the furthest distance possible from nearby residential land uses, as well as any other noise-sensitive land uses identified in the Project Area at the time of construction (e.g., transient lodging, schools, libraries, churches, hospitals, and nursing homes).
- Limit noise/vibration intensive activities occurring within 10-feet of existing structures and occupied land uses. Where possible and to the extent locally available, select low-noise/vibration generating equipment when activities occur within 10-feet of adjacent existing structures.

Design Phase:

Timing/Schedule: During Project design, prior to Project construction.

Implementation: LABOE Project Engineer shall include requirement in contract specs and plans. Mitigation measures shall be included in contractor bid documents and Environmental Compliance Plan prepared by contractor.

Enforcement: LABOE Project Manager and LABOE EMG will review specs and plans for compliance.

Construction Phase:

- Timing/Schedule: Throughout Project construction.

- Implementation: LABOE Project Engineer and Construction contractor
- Enforcement: LABOE Construction Manager and LADPW, Bureau of Contracts Administration, Construction Inspector. BOE EMG will review Environmental Compliance Plan prepared by Contractor, the Environmental Compliance Report and the Project Acceptance and Closeout Report.

Transportation and Traffic

MM-TRANS-1: Mobility Hub

- Measures: The City shall reserve space for a mobility hub at the Project Site, including additional amenities for bicyclists, drivers, and transit users, to encourage event attendees to use alternative modes of transportation.

Design Phase:

Timing/Schedule: During Project design, prior to Project construction.

Implementation: LABOE Project Engineer shall include requirement in contract specs and plans. Mitigation measures shall be included in contractor bid documents and Environmental Compliance Plan prepared by contractor.

Enforcement: LABOE Project Manager and LABOE EMG will review specs and plans for compliance.

Construction Phase:

- Timing/Schedule: Throughout Project construction.
- Implementation: LABOE Project Engineer and Construction contractor
- Enforcement: LABOE Construction Manager and LADPW, Bureau of Contracts Administration, Construction Inspector. BOE EMG will review Environmental Compliance Plan prepared by Contractor, the Environmental Compliance Report and the Project Acceptance and Closeout Report.

MM-TRANS-2: Bicycle Facilities

- Measures: The City shall reserve space for a Bike Share hub at the Project Site to allow Bike Share participants to dock bicycles and scooters.

Design Phase:

Timing/Schedule: During Project design, prior to Project construction.

Implementation: LABOE Project Engineer shall include requirement in contract specs and plans. Mitigation measures shall be included in contractor bid documents and Environmental Compliance Plan prepared by contractor.

Enforcement: LABOE Project Manager and LABOE EMG will review specs and plans for compliance.

Construction Phase:

- Timing/Schedule: Throughout Project construction.
- Implementation: LABOE Project Engineer and Construction contractor
- Enforcement: LABOE Construction Manager and LADPW, Bureau of Contracts Administration, Construction Inspector. BOE EMG will review Environmental Compliance Plan prepared by Contractor, the Environmental Compliance Report and the Project Acceptance and Closeout Report.

MM-TRANS-3: Rideshare Zones

- Measures: The City shall create permanent rideshare pick-up and drop-off zones for the East Park and West Park. Rideshare pick-up/drop-off zones could be located on South Santa Fe Street adjacent to the proposed West Park and South Mission Road adjacent to the proposed East Park. The pick-up/drop-off zones shall be clearly marked, and wayfinding signage shall be installed throughout the Project Site.

Design Phase:

Timing/Schedule: During Project design, prior to Project construction.

Implementation: LABOE Project Engineer shall include requirement in contract specs and plans. Mitigation measures shall be included in contractor bid documents and Environmental Compliance Plan prepared by contractor.

Enforcement: LABOE Project Manager and LABOE EMG will review specs and plans for compliance.

Construction Phase:

- Timing/Schedule: Throughout Project construction.
- Implementation: LABOE Project Engineer and Construction contractor

Enforcement: LABOE Construction Manager and LADPW, Bureau of Contracts Administration, Construction Inspector. BOE EMG will review Environmental Compliance Plan prepared by Contractor, the Environmental Compliance Report and the Project Acceptance and Closeout Report.

MM-TRANS-4: Public Transportation

- Measures: The City shall reserve space at the Project Site to accommodate a future Sixth Street Metro Station in the Arts Plaza.

Design Phase:

Timing/Schedule: During Project design, prior to Project construction.

Implementation: LABOE Project Engineer shall include requirement in contract specs and plans. Mitigation measures shall be included in contractor bid documents and Environmental Compliance Plan prepared by contractor.

Enforcement: LABOE Project Manager and LABOE EMG will review specs and plans for compliance.

Construction Phase:

- Timing/Schedule: Throughout Project construction.
- Implementation: LABOE Project Engineer and Construction contractor
- Enforcement: LABOE Construction Manager and LADPW, Bureau of Contracts Administration, Construction Inspector. BOE EMG will review Environmental Compliance Plan prepared by Contractor, the Environmental Compliance Report and the Project Acceptance and Closeout Report.

Best Management Practices

As standard best practices, the BOE Project Engineer shall incorporate the following requirements in the contract specs and plans and ensure the contractor includes the best management practices in the Environmental Compliance Plan prepared by the contractor. The BOE Construction Manager and Contracts Administration Bureau Construction Inspector will ensure the BMPs are implemented during construction. BMPs related to operations will be implemented by the Department of Recreation and Parks and/or other appropriate organizations.

Aesthetics

BMP-AES-1: Construction Lighting

- Measures: If nighttime lighting at the construction site is required, lighting shall be directed downward, on-site, and away from surrounding land uses.
- Implementation Phase: Construction
- Monitoring Phase: Construction
- Enforcement Agency: LADPW, Contracts Administration Bureau, Construction Inspector

BMP-AES-2: Construction Staging and Construction Staging Area

- Measures: Construction staging shall be coordinated with the construction and maintenance of the Viaduct Replacement Project as needed; therefore, additional use or acquisition of public space for equipment and vehicles will not be required. The construction area shall be fenced to obscure views of construction activities, materials, and staged equipment.
- Implementation Phase: Prior to Construction and Construction
- Monitoring Phase: Construction
- Enforcement Agency: LADPW, Contracts Administration Bureau, Construction Inspector

BMP-AES-3: Operational Lighting

- Measures: Outdoor lighting for recreational activities shall be limited to the proposed operating hours.

- Implementation Phase: Operation
- Monitoring Phase: Operation
- Enforcement Agency: LABOE and Department of Recreation and Parks

BMP-AES-4: Regulatory Requirements for Lighting

- Measures:
  - Project illumination shall comply with the provisions in the City's Municipal Code, including LAMC Chapter 1, Article 2, Sec. 12.21A5(k); LAMC Chapter 1, Article 7, Sec. 17.08C; and LAMC Chapter 9, Article 3, Section 93.0117.
  - The new walkway lighting shall be compliant with all regulations set forth by the City's Bureau of Street Lighting Design Standards and Guidelines to ensure that the area receives lighting that meets national illumination standards for vehicular and pedestrian traffic, does not emit light pollution, and produces little glare.
  - Lighting for sports fields and courts shall operate in compliance with Los Angeles City Recreation and Parks (RAP) illuminance level standards for outdoor sports and recreational facilities.
  - Lighting for security shall be illuminated in accordance with the Illuminating Engineering Society (IES) standards, IES RP-33-14 *Lighting for Exterior Environments* and IES G-1-03 *Security Lighting for People, Property and Public Spaces*, as updated by IES G-1-16 *Guide for Security Lighting for People, Property and Critical Infrastructure*.
- Implementation Phase: Design, Operation
- Monitoring Phase: Design, Operation
- Enforcement Agency: LADPW and Department of Recreation and Parks

Air Quality

BMP-AQ-1: SCAQMD Rules and Regulations

- Measures: The contractor shall implement measures to ensure that all construction activities are consistent with SCAQMD rules and regulations.
- Implementation Phase: Construction
- Monitoring Phase: Construction
- Enforcement Agency: LADPW, Contracts Administration Bureau, Construction Inspector

BMP-AQ-2: Construction Worker Incentives

- Measures: The City shall offer ride-share and transit incentives for construction workers to reduce emissions associated with motor vehicle use.
- Implementation Phase: Construction
- Monitoring Phase: Construction

- Enforcement Agency: LADPW, Contracts Administration Bureau, Construction Inspector

BMP-AQ-3: Construction Equipment Maintenance

- Measures: The contractor shall maintain construction equipment by conducting regular tune-ups according to the manufacturers' recommendations.
- Implementation Phase: Construction
- Monitoring Phase: Construction
- Enforcement Agency: LADPW, Contracts Administration Bureau, Construction Inspector

Biological Resources

BMP-BIO-1: Pre-Construction Wildlife Surveys

- Measures: Pre-construction wildlife surveys shall be completed by a qualified biologist no more than 48 hours prior to clearing, grubbing, or other construction activities to determine the presence/absence of wildlife species, including special-status species, within 100-feet of the construction area. Special attention will be focused on any existing burrowing, roosting, and nesting habitat within the Project Area. Surveys shall be repeated if construction activities are suspended for five days or more. If any wildlife species are identified, appropriate BMPs shall be developed and implemented to reduce potential impacts on these species, in consultation with regulatory agencies where appropriate.
- Implementation Phase: Prior to construction
- Monitoring Phase: Construction if construction activities are suspended for five days or more
- Enforcement Agency: LADPW (Project Biologist)

BMP-BIO-2: Trash and Construction Debris Removal

- Measures: All trash and construction debris shall be removed from the LA River construction areas on a daily basis. All water quality BMP materials shall be properly maintained during project construction and removed upon completion of construction activities. After completion of proposed construction activities, all construction equipment and materials shall be removed from the Project Area, and the Project Area shall be returned to pre-project conditions.
- Implementation Phase: Construction
- Monitoring Phase: Construction
- Enforcement Agency: LADPW, Contracts Administration Bureau, Construction Inspector

BMP-BIO-3: Work Area Limitations

- Measures: No work for the Project shall be conducted on the Fourth Street Bridge or Seventh Street Bridge structures.
- Implementation Phase: Construction
- Monitoring Phase: Construction

- Enforcement Agency: LADPW, Contracts Administration Bureau, Construction Inspector

BMP-BIO-4: Nesting Bird Survey

- Measures: If vegetation trimming or clearing is conducted during the nesting season (typically February 15 through September 15), nesting bird surveys shall be completed by a qualified biologist within 300-feet of potential bird-nesting areas and 500-feet of potential raptor-nesting areas no more than 48 hours prior to trimming/removal activities to determine if nesting birds are within the affected vegetation. Surveys shall be repeated if trimming or removal activities are suspended for five days or more.
- Implementation Phase: Construction during the nesting season (February 15 through September 15)
- Monitoring Phase: None unless active nests are discovered
- Enforcement Agency: LADPW (Project Biologist)

BMP-BIO-5: Nesting Bird Buffer

- Measures: If nesting birds protected under the MBTA and California Fish and Game Code Sections are found in the Project Area, appropriate buffer consisting of orange flagging/fencing or similar (typically up to 300-feet for songbirds and 500-feet for raptors shall be installed and maintained until nesting activity has ended, as determined in coordination with the project biologist and regulatory agencies, as appropriate, to ensure that nesting birds and active nests are not harmed.
- Implementation Phase: Construction
- Monitoring Phase: Construction
- Enforcement Agency: LADPW (Project Biologist)

BMP-BIO-6: Hazardous Materials BMPs

- Measures: Appropriate hazardous material BMPs shall be implemented to reduce the potential for chemical spills or contaminant releases into the LA River, including any non-stormwater discharge.
- Implementation Phase: Construction
- Monitoring Phase: Construction
- Enforcement Agency: LADPW, Contracts Administration Bureau, Construction Inspector

BMP-BIO-7: Equipment Maintenance

- Measures: All equipment refueling and maintenance shall be conducted in the staging area. In addition, vehicles and equipment shall be checked daily for fluid and fuel leaks, and drip pans shall be placed under all equipment that is parked and not in operation.
- Implementation Phase: Construction
- Monitoring Phase: Construction

- Enforcement Agency: LADPW, Contracts Administration Bureau, Construction Inspector

BMP-BIO-8: Regulatory Permits

- Measures: The City shall consult with the appropriate responsible resource agency (e.g., California Department of Fish and Wildlife [CDFW] and Regional Water Quality Control Board [RWQCB]) to determine permanent and temporary impact areas. Prior to undertaking ground-disturbing activities within or immediately adjacent to any aquatic resource areas, the City and/or their consultant shall obtain a Clean Water Act (CWA) Section 401 Water Quality Certification, and California Fish and Game Code Section 1602 Streambed Alteration Agreement.
- Implementation Phase: Prior to Construction
- Monitoring Phase: Construction
- Enforcement Agency: LABOE, LADPW, Contracts Administration Bureau, Construction Inspector

BMP-BIO-9: Pre-Construction Bat Surveys

- Measures: At least 30 days prior to construction, alterations to the LA River Access Tunnel shall be surveyed by a qualified biologist to assess the presence of bats or potential bat-roosting cavities. If bats or bat-roosting cavities are identified, then during the non-breeding and active season (typically October), bats shall be safely evicted, to the extent feasible, under the direction of a qualified biologist. Once it has been determined that all roosting bats have been safely evicted from roosting cavities, exclusionary devices shall be installed and maintained where appropriate to prevent bats from roosting in these cavities prior to construction.
- Implementation Phase: 30 days prior to construction
- Monitoring Phase: Survey work only
- Enforcement Agency: LADPW (Project Biologist)

BMP-BIO-10: Monitoring During LA River Access Tunnel Alteration

- Measures: In the event that all bats are not able to be excluded from affected roosting habitat, a qualified biologist shall monitor LA River Access Tunnel alterations. If bats are disturbed, work shall be safely suspended until all bats leave the vicinity on their own, or alternative measures can be identified under the direction of a qualified biologist. Work shall resume only once the bats have left the site and/or approval to resume work is given by a qualified biologist.
- Implementation Phase: Construction
- Monitoring Phase: Construction
- Enforcement Agency: LADPW (Project Biologist)

BMP-BIO-11: Bat Monitoring

- Measures: In the event that all bats are not able to be excluded from affected roosting habitat, a qualified biologist shall monitor structure alteration activities. If bats are disturbed, work shall be safely suspended until all bats leave the vicinity of the LA River Access Tunnel on their own, or alternative measures shall be identified under the direction of a qualified biologist. Work shall

resume only once the bats have left the site and/or approval to resume work is given by a qualified biologist.

- Surveys and exclusion measures are expected to prevent maternal colonies from becoming established in structures to be removed or altered. In the event that a maternal colony of bats is found, no work shall be conducted within 100-feet of the maternal roosting site until the maternal season is over or the bats have left the site, or as otherwise directed by a qualified biologist. The site shall be designated as a sensitive area and protected as such until the bats have left the site. No activities shall be authorized adjacent to the roosting site. Combustion equipment, such as generators, pumps, and vehicles, shall not be parked or operated under or adjacent to the roosting site. Construction personnel shall not be authorized to enter areas beneath the colony, especially during the evening exodus.

- Implementation Phase: Construction
- Monitoring Phase: Construction
- Enforcement Agency: LADPW (Project Biologist)

Cultural Resources

BMP-CUL-1: Archeological Monitoring During Excavation

- Measures: A qualified archaeological monitor shall conduct archaeological monitoring in the West Park and East Park for excavations at depths greater than 5-feet. Monitoring efforts may be reduced or eliminated for those portions of the Project Area shown to have been recently disturbed by construction activities associated with the Sixth Street Viaduct Project.
- Implementation Phase: Construction activities involving excavations greater than 5-feet
- Monitoring Phase: Construction activities involving excavations greater than 5-feet
- Enforcement Agency: LADPW

BMP-CUL-2: Tribal Cultural Resources Sensitivity Training

- Measures: The City shall invite a qualified tribal representative from the Gabrieleño Band of Mission Indians to a pre-construction meeting to provide a training session to the construction contractor regarding potential tribal resources that could be encountered during construction activities and procedures to follow should a tribal resource be encountered.
- Implementation Phase: Prior to construction
- Monitoring Phase: Prior to construction
- Enforcement Agency: LABOE and qualified Tribal representative from the Gabrieleño Band of Mission Indians

BMP-CUL-3: Tribal Cultural Resources Monitoring During Excavation

- Measures: The City shall retain and compensate for the services of a tribal monitor who is both approved by the Gabrieleño Band of Mission Indians-Kizh Nation Tribal Government and is listed under the California Native American Heritage's (NAHC) Tribal Contact list for the Project Area.

The Tribal monitor shall only be present on-site during the construction phases that involve ground-disturbing activities in the proposed Arts Plaza. Monitoring efforts may further be reduced or eliminated for those portions of the in the proposed Arts Plaza that (1) are underlain with artificial fill of known origin, (2) require superficial scraping of land at depths less than 5-feet, or (3) are demonstrated to have been recently disturbed by construction activities associated with the Sixth Street Viaduct Project. The on-site monitoring shall cease when the grading and excavation activities in the proposed Arts Plaza are completed, or when the Tribal representatives and monitor have indicated that the site has a low potential for impacting tribal cultural resources.

- Implementation Phase: Construction
- Monitoring Phase: Construction activities involving ground-disturbing activities in the proposed Arts Plaza
- Enforcement Agency: LADPW (Tribal Monitor)

BMP-CUL-4: Unanticipated Discovery of Archaeological and Tribal Cultural Resources

- Measures: In the event that potentially significant buried archaeological materials are encountered within the Project Area, all work in the vicinity must stop until the archaeological and Tribal monitor can visit the site and assess the significance of the resource. If the resources are Native American in origin, the Gabrieleño Band of Mission Indians-Kizh Nation shall coordinate with the City regarding treatment and curation of these resources. Work may continue on other parts of the Project Area while evaluation and, if necessary, mitigation takes place (CEQA Guidelines Section 15064.5 [f]).
- Implementation Phase: Construction
- Monitoring Phase: Construction
- Enforcement Agency: LADPW (Tribal Monitor)

BMP-CUL-5: Unanticipated Discovery of Human Remains

- Measures: Health and Safety Code Section 7050.5, Section 15064.5(e) of the CEQA Guidelines, and PRC Section 5097.98 mandate the process to be followed in the unlikely event of an unanticipated discovery of human remains in a location other than a dedicated cemetery. The Los Angeles County Coroner must be notified within 24 hours of the discovery of potentially human remains. The Coroner must then determine within two working days of being notified if the remains are subject to his or her authority.
    - If the Coroner recognizes the human remains (including bone fragments and funerary objects) to be Native American, he or she must contact the NAHC by phone within 24 hours. The NAHC then designates a Most Likely Descendant (MLD) with respect to the human remains within 48 hours of notification. The MLD will then have the opportunity to recommend to the Project proponent means for treating or disposing of, with appropriate dignity, the human remains and associated grave goods within 24 hours of notification.
- Implementation Phase: Construction

- Monitoring Phase: Construction
- Enforcement Agency: LADPW, Contracts Administration Bureau, Construction Inspector

Geology and Soils

BMP-GEO-1: Erosion Control

- Measures: The contractor shall implement standard BMPs, such as the use of fiber rolls and silt fencing, to reduce the amount of dust and dirt from leaving the construction area.
- Implementation Phase: Construction
- Monitoring Phase: Construction
- Enforcement Agency: LADPW, Contracts Administration Bureau, Construction Inspector

BMP-GEO-2: Geotechnical Site Investigation Recommendations

- Measures: The Geotechnical Site Investigation report for the Project includes recommendations to ensure that the Project Area is suitable for construction, and to ensure that appropriate measures are taken to reduce impacts during earthwork, excavation, utility trenching, backfilling, and other construction activities (Hushmand Associates, Inc., 2018). Backfill soils shall be moisture-conditioned and recompacted to meet ASTM International standards to counteract the potential adverse effects of soil expansiveness. If import soils are used, the import soil shall not exhibit an Expansion Index greater than 20 or contain more than 35 percent fines (i.e., fine-grained soils), and shall be screened by the geotechnical engineer to meet ASTM International standards.
- Implementation Phase: Construction
- Monitoring Phase: Construction
- Enforcement Agency: LADPW, Contracts Administration Bureau, Construction Inspector

BMP-PAL-1: Paleontological Sensitivity Training

- Measures: Prior to the start of construction, all field personnel shall be briefed regarding the types of fossils that could be found and the procedures to follow should paleontological resources be encountered. Specifically, the training shall provide a description of the fossil resources that may be encountered, outline steps to follow when a fossil discovery is made and provide contact information for a qualified paleontologist. The training shall be developed by a qualified paleontologist and provided as hand-outs or a PowerPoint Presentation that may be presented concurrently with other pre-construction training.
- Implementation Phase: Prior to construction
- Monitoring Phase: Prior to construction
- Enforcement Agency: LADPW (Project Paleontologist), Contracts Administration Bureau, Construction Inspector

BMP-PAL-2: Unanticipated Paleontological Resource Discoveries

- Measures: In the event that an unanticipated fossil discovery is made during construction, a qualified professional paleontologist shall be retained to examine the find and to determine whether further paleontological resource mitigation is warranted in accordance with Society of Vertebrate Paleontology (2010) guidelines.
- Implementation Phase: Construction
- Monitoring Phase: Construction
- Enforcement Agency: LADPW (Project Paleontologist)

Greenhouse Gas Emissions

BMP-GHG-1: Off-Road Equipment Construction Requirements

- Measures: Idling shall be limited for vehicles and off-road equipment. Off-road equipment shall meet Tier 4 emission standards and newer. Efficient on-road haul trucks shall be used, where practicable.
- Implementation Phase: Construction
- Monitoring Phase: Construction
- Enforcement Agency: LADPW, Contracts Administration Bureau, Construction Inspector

Hazards and Hazardous Materials

BMP-HAZ-1: Coordination with Regulatory Agencies

- Measures: The City shall coordinate with Metro, U.S. EPA, and DTSC during construction activities to minimize health risks to the public or the environment associated with ongoing cleanup actions within the Project Area.
- Implementation Phase: Construction
- Monitoring Phase: Construction
- Enforcement Agency: LABOE

BMP-HAZ-2: Compliance with SCAQMD Rules and Regulations

- Measures: The contractor shall implement measures to ensure that all construction activities are consistent with SCAQMD rules and regulations, including Rule 1166 - Volatile Organic Compound Emissions from Decontamination of Soil and Rule 1466 - Control of Particulate Emissions from Soils with Toxic Air Contaminants.
- Implementation Phase: Construction
- Monitoring Phase: Construction
- Enforcement Agency: LADPW, Contracts Administration Bureau, Construction Inspector

Hydrology and Water Quality

BMP-HYDRO-1: Construction Drainage Design

- Measures: The Project shall incorporate drainage designs that direct stormwater runoff or irrigation runoff away from structures or the top of the slopes. No stormwater will be allowed to discharge over the top of a cut or fill slope.
- Implementation Phase: Design and Construction
- Monitoring Phase: Design and Construction
- Enforcement Agency: LADPW, Contracts Administration Bureau, Construction Inspector

BMP-HYDRO-2: Off-Site Sediment Transport

- Measures: All entrances and exits to the construction site shall be stabilized to reduce transport of sediment off-site. Any sediment or other materials tracked off-site shall be removed within a reasonable time.
- Implementation Phase: Construction
- Monitoring Phase: Construction
- Enforcement Agency: LADPW, Contracts Administration Bureau, Construction Inspector

BMP-HYDRO-3: Storm Drain Message and Signage

- Measures: Existing and proposed storm drain catch basins within the vicinity of the Project Site shall be marked and maintained.
- Implementation Phase: Construction and Operation
- Monitoring Phase: Construction and Operation
- Enforcement Agency: Construction Contractor (Construction), LADPW (Operation)

BMP-HYDRO-4: Outdoor Material Storage Area Design

- Measures: Proposed outdoor storage areas shall be organized and maintained to prevent stored materials from being permitted to runoff with stormwater. The outdoor storage of toxic and hazardous materials is not permitted.
- Implementation Phase: Construction and Operation
- Monitoring Phase: Construction and Operation
- Enforcement Agency: Construction Contractor (Construction), LADPW (Operation)

BMP-HYDRO-5: Outdoor Trash Storage Area Design

- Measures: Proposed outdoor trash storage enclosures shall be organized and maintained to prevent the transportation of trash and debris in stormwater. Bins and dumpsters shall remain covered.
- Implementation Phase: Construction and Operation

- Monitoring Phase: Construction and Operation
- Enforcement Agency: Construction Contractor (Construction), LADPW (Operation)

BMP-HYDRO-6: Employee Training

- Measures: Operations and maintenance employees shall be trained and made aware of the source controls, LID BMPs, educational materials, and maintenance requirements for the Project at first hire and yearly thereafter.
- Implementation Phase: Construction and Operation
- Monitoring Phase: Construction and Operation
- Enforcement Agency: LADPW (Construction), RAP (Operation)

BMP-HYDRO-7: Common Area Landscape Management

- Measures: A landscape maintenance program shall be established prior to construction in order to optimize water efficiency, limit pollutant introduction from fertilizers and pesticides, manage landscape waste, and prevent soil erosion.
- Implementation Phase: Prior to Construction and Operation
- Monitoring Phase: Operation
- Enforcement Agency: LADPW (Prior to Construction), RAP (Operation)

BMP-HYDRO-8: Common Area Litter Control

- Measures: A waste management program shall be implemented to inspect the Project Site for litter and pick up any litter as necessary on a regular basis.
- Implementation Phase: Construction and Operation
- Monitoring Phase: Operation
- Enforcement Agency: Construction Contractor (Construction), RAP (Operation)

BMP-HYDRO-9: Common Area Catch Basin Inspection

- Measures: Catch basins shall be inspected and maintained, at a minimum, yearly and prior to the rainy season.
- Implementation Phase: Construction and Operation
- Monitoring Phase: Construction and Operation
- Enforcement Agency: Construction Contractor (Construction), LADWP (Construction), RAP (Operation)

BMP-HYDRO-10: Street Sweeping Parking Lots

- Measures: The angled parking spaces along Anderson Street shall be vacuum swept, at a minimum, yearly and prior to the rainy season.
- Implementation Phase: Operation

- Monitoring Phase: Operation
- Enforcement Agency: RAP

BMP-HYDRO-11: BMP Maintenance

- Measures: Proposed structural source controls, non-structural source controls, and LID BMPs shall be maintained as outlined in the Operations and Maintenance Plan that would be developed for the Project.
- Implementation Phase: Operation
- Monitoring Phase: Operation
- Enforcement Agency: LADPW and RAP

BMP-HYDRO-12: Structural and Low-Impact Development (LID) BMPs

- Measures:
  - Runoff from the Project Site and tributary Viaduct areas shall be captured by proposed stormwater drainage systems, routed to a variety of structural and LID BMPs and discharged to the existing stormwater drainage facilities adjacent to the site. In addition, the Project Site shall include a combination of paved surfaces and landscaped areas to provide soil stability and further minimize erosion.
  - Structural BMPs (i.e., hydrodynamic separators) shall be installed to treat the runoff from the Viaduct to the maximum extent practicable
  - The remaining localized rainfall falling on the portion of the Project Site outside of the Viaduct's footprint shall be treated through a combination of incidental infiltration during sheet flow along pervious land areas, incidental infiltration within localized vegetated basins, and below-grade capture and use systems below some of the proposed lawn areas in areas with a larger impervious area footprint. The incidental infiltration or capture and use of the stormwater will remove pollutants of concern. Larger storm events will be captured and conveyed through proposed local storm drainage systems to new connections to the existing storm drainage system.
- Implementation Phase: Construction and Operation
- Monitoring Phase: Construction and Operation
- Enforcement Agency: LABOE, LADWP, and the Construction Contractor

BMP-HYDRO-13: Regulatory Requirements for Water Quality

- Measures:
  - To comply with the provisions of the National Pollutant Discharge Elimination System (NPDES) MS4 Permit, the Project shall implement a Stormwater Pollution Prevention Plan (SWPPP) that includes construction site BMPs to control erosion and sedimentation. BMPs include silt fencing, fiber rolls, sandbag barriers, drainage inlet protections, and berms at the top of all

grade slopes. The SWPPP shall also include post-construction stormwater management measures to control pollutants in stormwater discharges during operation of the Project.

- If groundwater is encountered, the contractor shall develop a dewatering plan, and a Dewatering Permit with the Los Angeles RWQCB will also be required. Should dewatering be required, the Project shall comply with the General Waste Discharge Requirements for Discharges of Groundwater from Construction and Project Dewatering to Surface Waters in Coastal Watersheds of Los Angeles and Ventura Counties.
- Proposed construction activities shall comply with all applicable federal, state, and local requirements to reduce the potential for the release of hazardous waste and other contaminants into groundwater. In addition, construction activities will be subject to the provisions of the CWA and Porter-Cologne Act; and other federal, state, and local requirements to ensure that stormwater pollutants resulting from construction will not substantially degrade water quality.
- A water diversion plan is not anticipated for the Project because Phase II construction activities shall be performed during the dry season (April 15 through October 15). However, if work in a flowing stream is unavoidable, a water diversion plan shall be required, and the entire stream flow shall be diverted around the work area by a barrier, temporary culvert, new channel, or other means approved by the CDFW. Should water diversion be necessary, a 401/404 permit will also be required.
- An emergency evacuation plan shall be prepared for Phase II construction within the LA River. If measurable rain with 25 percent or greater probability is predicted within 72 hours during project-related activities, all activities within the LA River shall cease and protective measures to prevent siltation/erosion shall be implemented/maintained. With the implementation of BMPs, alterations to drainage patterns during construction in the LA River channel will not result in substantial erosion or siltation onsite or offsite.
- A Notice of Intent (NOI) for stormwater discharges associated with construction activities may also be required under the NPDES General Permit.
- Stormwater BMPs shall follow the latest California Stormwater Quality Association's Stormwater Best Management Practices Handbook. All entrances and exits to a construction site will be stabilized to reduce transport of sediment off-site. Any sediment or other materials tracked off-site will be removed within a reasonable time.
- Any non-stormwater discharge shall be controlled and properly disposed of through the sanitary sewer system or transported to an approved processing facility to prevent the contamination of site soils and groundwater.
- The handling, storage, and disposal of contaminants shall comply with all applicable federal, state, and local requirements. The Project Site shall be remediated to standards acceptable to LACoFD and other regulatory agencies as required, thereby reducing the area affected by contaminants.

- Implementation Phase: Prior to Construction

- Monitoring Phase: Construction
- Enforcement Agency: LADPW, Contracts Administration Bureau, Construction Inspector

Land Use and Planning

BMP-LAND-1: Coordination with Los Angeles City Planning

- Measures: LABOE shall continue to work with the Los Angeles Department of City Planning to ensure that the Project is consistent with future zoning changes.
- Implementation Phase: Ongoing
- Monitoring Phase: Ongoing
- Enforcement Agency: LABOE

BMP-LAND-2: Coordination with Viaduct Replacement Project

- Measures: Any necessary land use entitlements shall be secured prior to the start of construction activities and shall be coordinated with construction and maintenance of the Viaduct Replacement Project as needed.
- Implementation Phase: Prior to Construction
- Monitoring Phase: Prior to Construction
- Enforcement Agency: LABOE and LADWP

BMP-LAND-3: Construction Area

- Measures: Construction equipment, materials storage, and construction activities shall be contained within the limits of construction, and construction areas shall be fenced.
- Implementation Phase: Construction
- Monitoring Phase: Construction
- Enforcement Agency: LADPW, Contracts Administration Bureau, Construction Inspector

Noise and Vibration

BMP-NOISE-1: Construction Equipment Requirements

- Measures: Construction equipment shall be properly maintained and equipped with mufflers.
- Implementation Phase: Construction
- Monitoring Phase: Construction
- Enforcement Agency: LADPW, Contracts Administration Bureau, Construction Inspector

Transportation and Traffic

BMP-TRANS-1: Temporary Detour Routes

- Measures: During proposed construction activities, temporary detours shall be provided for any affected pedestrian and bicycle facilities.
- Implementation Phase: Construction
- Monitoring Phase: Construction
- Enforcement Agency: LADPW, Contracts Administration Bureau, Construction Inspector

BMP-TRANS-2: Construction Staging Plan

- Measures: A construction staging plan shall be developed to reduce impacts related to noise, dust, traffic, and other health hazards. In addition, construction site BMPs (e.g., fencing, signs, and detours) shall be implemented to minimize hazards and prevent safety issues on the roadways and sidewalks surrounding the construction site.
- Implementation Phase: Prior to construction
- Monitoring Phase: Construction
- Enforcement Agency: LADPW, Contracts Administration Bureau, Construction Inspector

BMP-TRANS-3: Construction Traffic

- Measures: Construction-related trips shall be scheduled with increased frequency during off-peak hours to minimize impacts to commuters.
- Implementation Phase: Prior to construction
- Monitoring Phase: Construction
- Enforcement Agency: LADPW, Contracts Administration Bureau, Construction Inspector

BMP-TRANS-4: Access to Parcels

- Measures: If access to any existing parcels are removed during proposed construction activities, temporary access shall be provided, and/or new points of access shall be constructed.
- Implementation Phase: Prior to construction
- Monitoring Phase: Construction
- Enforcement Agency: LADPW, Contracts Administration Bureau, Construction Inspector

BMP-TRANS-5:Site-Specific Traffic Control and Transit Plan for Large Events

- Measures: Large event permittees shall develop a site-specific traffic control plan to provide information on parking and circulation and highlight transit options for event attendees to minimize congestion and vehicle miles traveled. Traffic control strategies for events will include inbound/outbound flex lanes and sheriff-controlled intersections. Traffic control plans will also identify nearby public parking facilities and identify passenger pick-up/drop-off locations.

Permittees will be required to consider the cumulative traffic impacts of their event in relation to other events in the Project Area. The traffic control plans will also identify emergency services egress and access.

- Implementation Phase: Operation (larger events)
- Monitoring Phase: Operation (larger events)
- Enforcement Agency: LABOE, RAP, and Individual Permittees

Utilities and Service Systems

BMP-USS-1: Wastewater Treatment

- Measures: Any wastewater produced as a result of proposed construction activities, such as water containing diesel and oil, paint, solvents, cleaners, and other chemicals, as well as construction debris and dirt, shall be collected in settlement tanks and screened. The clean water shall be discharged, and the remaining sludge shall be disposed of in accordance with water and solid waste disposal regulations, including the CWA, the Porter-Cologne Water Quality Control Act, and the RCRA.
- Implementation Phase: Construction
- Monitoring Phase: Construction
- Enforcement Agency: LADPW, Contracts Administration Bureau, Construction Inspector

BMP-USS-2: Temporary Stormwater Drainage Measures

- Measures: Temporary stormwater drainage measures to prevent polluted runoff in the construction site shall include, but not be limited to, the installation of earth dikes, drainage swales, and ditches, silt fences, desilting basins, and stormwater drain inlet protection.
- Implementation Phase: Construction
- Monitoring Phase: Construction
- Enforcement Agency: LADPW, Contracts Administration Bureau, Construction Inspector

BMP-USS-3: Coordination with Service Providers

- Measures: The location of underground utilities shall be confirmed prior to proposed construction activities by contacting the Underground Service Alert of Southern California (DigAlert). If necessary, the City shall work in close coordination with utility providers to develop a relocation plan to minimize possible impacts and disruption to service utilities.
- Implementation Phase: Prior to Construction
- Monitoring Phase: Prior to Construction and Ongoing
- Enforcement Agency: LADPW

BMP-USS-4: Reduced Consumption of Water Resources

- Measures: Design features to reduce the consumption of water resources shall be implemented, such as low-flow water fixtures and water efficient irrigation design and practices. In addition, drought-tolerant landscaping shall be planted to further reduce water consumption.
- Implementation Phase: Design
- Monitoring Phase: Design
- Enforcement Agency: LADPW

BMP-USS-5: High voltage electrical conductors

- Measures: The ROW contains high-voltage electrical conductors. Only such equipment, material, and construction techniques that are permitted under applicable safety ordinances and statutes, including the following, shall be used: California Code of Regulations, Title 8, Industrial Relations, Chapter 4, Division of Industrial Safety, Subchapter 5, Electrical Safety Orders, and California Public Utilities Commission, General Order No. 95, Rules for Overhead Electric Line Construction.
- Implementation Phase: Construction
- Monitoring Phase: Construction
- Enforcement Agency: LADWP

SECTION 01563
POLLUTION CONTROL - SEWAGE SPILL PREVENTION AND RESPONSE REQUIREMENTS

1.1 THE REQUIREMENT

A. General

1. The CONTRACTOR shall observe and comply with the CITY's policy of "ZERO SANITARY SEWER OVERFLOWS".

2. The CONTRACTOR shall be in full charge and be responsible for the Jobsite, the construction Work of this Contract, and subject to the directions of the ENGINEER or the INSPECTOR.

3. The CONTRACTOR shall observe and comply with all Federal, State, and local laws, ordinances, codes, orders, and regulations which in any manner affect the conduct of the work, specifically as it relates to sewage spills.

4. The CONTRACTOR shall be fully responsible for preventing sewage spillage, containing any sewage spillage, recovery and legal disposal of any spilled sewage, any and all fines, penalties, claims and liability arising from negligently causing a sewage spillage and any violation of any law, ordinance, code, order, or regulation as a result of the spillage.

5. The CONTRACTOR shall exercise care not to damage existing public and private improvements, interrupt existing services and/or facility operations which may cause a sewage spill. Any reasonably anticipated utility and/or improvement which is damaged by the CONTRACTOR shall be immediately repaired at the CONTRACTOR's expense. In the event that the CONTRACTOR damages an existing utility, interrupts an existing service which causes a sewage spill, the CONTRACTOR shall immediately notify the CITY representatives. The CONTRACTOR shall request and obtain from the ENGINEER an emergency roster of the designated CITY representatives with their respective telephone numbers, pager numbers, and cellular phone numbers. The CONTRACTOR shall take all measures necessary to prevent further damage or service interruption, and to control, contain and clean up the resultant impacts of the damage, service interruption and any resulting sewage spill(s) as mentioned in Section 1.1.A. 6, below.

6. Prior to the start of construction, the CONTRACTOR shall develop and submit to the ENGINEER, for review and approval, a written Spill Response Plan. The Spill Response Plan shall be developed to respond to any construction related sewage spill. This shall include, but is not limited to:

   a. The CONTRACTOR shall identify all nearby waterways, channels, catch basins and entrances to underground existing storm drains and furnishing all of the necessary materials, supplies, tools equipment, labor and other services.

b. The CONTRACTOR shall make arrangements for an emergency response unit comprised of emergency response equipment and trained personnel to be immediately dispatched to the Jobsite in the event of a sewage spill(s).

c. The CONTRACTOR shall develop and include an emergency notification procedure, which includes an emergency response roster with telephone numbers and arrangements for backup personnel and equipment and an emergency notification roster of the design CITY representatives. The CONTRACTOR shall designate a primary and secondary representative and include their respective phone numbers, pager numbers, and cellular phone numbers. The CONTRACTOR's representatives shall be accessible and available at all times to respond immediately to any construction related emergency.

7. If called for in the Plans and/or Specifications, or if sewer bypass is needed to construct the Project, the CONTRACTOR shall continuously monitor the flow levels downstream and upstream of the construction location to detect any possible failure that may cause a sewage backup and spill. The CONTRACTOR shall include the means and methods of monitoring the flow in their Spill Response Plan.

a. In case of sewage spill, the CONTRACTOR shall act immediately without instructions from the CITY, to control the spill and take all appropriate steps to contain it in accordance with their Spill Response Plan. The CONTRACTOR shall immediately notify the CITY representatives of the spill and all actions taken. The CONTRACTOR shall, within three (3) working days from the occurrence of the spill, submit to the ENGINEER a written confirmation describing the following information related to the spill: the location on a current Thomas Bros. guide map; the nature and volume; the date and time; the duration; the cause; the type of remedial and/or preventive action taken; and the water body impacted and results of any necessary monitoring. Requests for additional compensation for the handling of the spill shall be submitted to the ENGINEER as a construction claim. The CONTRACTOR shall assure the validity, accuracy, and correctness of the claim under penalty of perjury. The ENGINEER may institute further corrective actions, as deemed necessary, to fully comply with existing law, ordinance, code, order or regulation. The CONTRACTOR shall be responsible for all costs incurred for the corrective actions.

b. It shall be the CONTRACTOR's responsibility to assure that all field forces, including Subcontractors, know and obey all safety and emergency procedures, including the Spill Response Plan, to be maintained and followed at the Jobsite.

B. Sewer Bypass

1. The CONTRACTOR shall provide temporary means to maintain and handle the sewage flow in the existing system as required to complete the necessary construction.

2. The CONTRACTOR shall prepare and submit a detailed bypass plan to the ENGINEER for approval of the ENGINEER and the facility OWNER before the bypass is installed.

3. The CONTRACTOR shall size the bypass system to handle the peak flow of the system. The CONTRACTOR shall include a one-hundred percent (100%) backup in the bypass system. The CONTRACTOR shall utilize the backup system to mitigate any additional wet weather flows, perform the necessary maintenance and repairs on the bypass system, and exercise and ensure the operability of the backup system. Each pump, including the backup pumps, shall be a complete unit with its own suction and discharging pumping. The CONTRACTOR shall operate the backup bypass system for a minimum of twenty-five percent (25%) of the time on a weekly basis. The backup bypass system shall be fully installed and operational.

4. Prior to the full operation of the bypass system, the CONTRACTOR shall demonstrate, to the satisfaction of the ENGINEER and INSPECTOR, that both the primary and backup bypass systems are fully functional and adequate, and shall certify the same, in writing, to the ENGINEER in a manner acceptable to the ENGINEER.

5. The CONTRACTOR shall provide one dedicated fuel tank for every single pump/generator if fuel/generator driven pumps are used. The CONTRACTOR shall provide a fuel level indictor outside each fuel tank. The CONTRACTOR shall continuously (while in use) monitor the fuel level in the tanks and ensure that the fuel level does not drop below a level equivalent to two (2) hours of continuous bypass system operation. The CONTRACTOR shall take the necessary measures to ensure the fuel supply is protected against contamination. This includes, but is not limited to, fuel line water traps, fuel line filters, and protecting fuel stores from precipitation.

6. The CONTRACTOR shall provide an emergency standby power generator, if electric power driven pumps are used.

7. The CONTRACTOR shall continuously (while in use) monitor the operation of the bypass system and all impacted facilities. The CONTRACTOR shall submit, as part of their bypass plan, their monitoring procedure and frequency. The CONTRACTOR shall maintain a log of the monitoring in a manner acceptable to the ENGINEER and INSPECTOR.

8. The CONTRACTOR shall continuously monitor the flow levels downstream and upstream of the bypass to detect any possible failure that may cause a sewage backup and/or spill. The CONTRACTOR shall include the means and methods of monitoring the flow in their Spill Response Plan.

9. The CONTRACTOR shall routinely inspect and maintain the bypass system, including the backup system. The CONTRACTOR shall submit as part of their bypass plans their maintenance procedures and frequency. The CONTRACTOR shall maintain a log of all pertinent inspection, maintenance and repair records in a manner acceptable to the ENGINEER and INSPECTOR.

10. All costs associated with sewer bypass requirements listed above (Section B-1 through B-9) shall be reimbursed through the allowance for Sewer Bypass.

C. Additional Insurance Requirements

1. The CONTRACTOR shall obtain and maintain an additional insurance coverage for Pollution Liability with limits and requirements set forth in Part III of the Proposal for Federal Funded projects, or Part IV of the Proposal for City funded projects. The limits and requirements for Pollution Liability shall be in an amount sufficient to cover potential losses from sudden and accidental pollution. All costs associated with the requirements for "Sewage Spill Prevention and Response Requirements", including additional insurance, shall be included in the prices bid for other related bid items. However, CONTRACTORS will be required to submit, with their bid, a cost breakdown for the items required by the "Sewage Spill Prevention and Response Requirements".

(END OF SECTION)

SECTION 01571
STORMWATER POLLUTION CONTROL
MEASURES FOR CONSTRUCTION ACTIVITIES

1.1 THE REQUIREMENT

A. General

1. The Contractor shall exercise every reasonable precaution to protect channels, storm drains, and bodies of water from pollution.

2. Conduct and schedule operations to minimize or avoid muddying and silting channels, drains, and waters.

3. As required, obtain permits for erosion and water pollution control from the appropriate jurisdictional agency before starting Work. All costs for work required for compliance with this Section shall be included within the Bid Prices.

.

4. Provide any necessary water pollution control devices to prevent, control, and abate water pollution, and implement good housekeeping pollution control measures to reduce the discharge of pollutants from work sites to the maximum extent practicable. These water pollution control devices include drains, gutters, slope protection blankets and retention basins and shall be constructed concurrently with other Work at the earliest practicable time.

5. Exercise care in preserving vegetation and protecting property, to avoid disturbing areas beyond the limits of the Work. Promptly repair any damage caused by Contractor operations.

6. Comply with the specific requirements based on acreage of disturbed soil.

7. Penalties: Failure to comply with this Section may result in significant fines and possible imprisonment. The RWQCB or other prosecuting authority may assess fines of up to $32,500 per day for each violation. Should the City be fined or penalized as a result of the Contractor failing to comply with this Section, the Contractor shall reimburse the City for any and all fines, penalties and related costs.

8. Notification and Report: If pollution occurs in the work area for any reason or when the Contractor becomes aware of any violation of this Section, correct the problem and immediately notify the Inspector. In addition, submit a written report to the Engineer within seven (7) calendar days describing the incident and the corrective actions taken. If either the Inspector or Engineer is first to observe pollution or a violation, the Contractor shall also explain in the written report why the Work was inadequately monitored.

9. The provisions of this Section describe minimum compliance and do not preclude other more stringent stormwater pollution control measures that may be required in the Contract.

10. The CITY, as the Responsible Party, will file the NOI with the RWQCB.

B. Definition

1. Construction Activity: Includes clearing, grading, excavation, stockpiling, and reconstruction of existing facilities involving removal and replacement. Construction activity does not include routine maintenance such as, maintenance of original line and grade, hydraulic capacity, or original purpose of the facility. If construction activity is part of a larger common plan of development, the amount of disturbed soil is the total land area of disturbed soil that results under the common plan.

C. Projects Having Less Than One Acre of Disturbed Soil

Projects with construction activity that will result in less than one acre of disturbed soil, the Contractor shall comply with the following minimum water quality protection requirements:

1. Retain eroded sediments and other pollutants on-site and do not allow transportation from the site by sheet flow, swales, area drains, natural drainage, or wind. Control slope and channel erosion by implementing an effective combination of best management practices (BMPs). Such BMPs include scheduling grading during non-rainy seasons, planting and maintaining vegetation on slopes and covering erosion-susceptible slopes.

2. Protect stockpiles of earth and other construction-related materials from being transported from the site by wind or water.

3. Properly store and handle fuels, oils, solvents, and other toxic materials to not contaminate the soil or surface waters, enter the groundwater, or be placed where they may enter a live stream, channel, drain, or other water conveyance facility. Protect all approved toxic storage containers from weather. Clean spills immediately and properly dispose of cleanup materials. Spills shall not be washed into live streams, channels, drains, or other water conveyance facilities.

4. Do not wash excess or waste concrete into the public way or any drainage system. Retain concrete wastes on-site until they can be appropriately disposed of or recycled.

5. Deposit trash and construction-related solid wastes in covered receptacles to prevent contamination of rainwater and dispersal by wind.

6. Do not allow sediments and other materials to be tracked from the site by vehicle traffic. Stabilize construction entrance roadways to inhibit sediments from being deposited onto public ways. Immediately sweep up accidental depositions. Do not allow depositions to be washed away by rain or by any other means.

7. Contain non-stormwater runoff from equipment or vehicle washing and any other activity at the work site.

8. At completion of the Work, clear the worksite of debris and restore to a condition at least equal to or better than prior to construction.

9. When construction activity with grading is likely to occur during the rainy season (October 15 through April 15), prepare a Wet Weather Erosion Control Plan (WWECP) per LAMC Section 61.02. The WWECP must be submitted to the Engineer for approval within thirty (30) calendar days after Notice to Proceed.

Guidance on preparing the WWECP can be found in "Development Best Management Practices Handbook - Part A, Construction Activities", adopted by the Board and as authorized by LAMC Section 64.72. The handbook can be viewed at or obtained at cost at Bureau of Engineering public counters.

10. When working in live streams, these are additional water pollution control requirements.

11. Erect barriers sufficient to prevent muddying or polluting streams.

12. Prior to removing materials from a flowing stream, use a stream bypass or other equivalent means to keep the flow in the stream free of the mud or silt from the removal operations.

13. Avoid transporting materials across live streams. If not possible, the transportation operation must be designed to prevent materials from falling into the stream and cannot muddy the stream.

14. Equipment may not be operated in a live stream or channel unless the Contractor can demonstrate to the Engineer's satisfaction that no other practical alternatives exist. The equipment must be designed to prevent materials from falling into the stream and cannot muddy the stream.

15. Do not allow fresh portland cement or fresh portland cement concrete to enter the water flowing in streams, channels or drains.

16. Do not allow material derived from the Work to be deposited in a live stream, channel or drain.

D. Projects Having One Acre or More of Disturbed Soil

Projects (including Linear Underground Projects) with construction activity that will result in one acre or more of disturbed soil, or less than one acre but part of a larger common plan of development, the Contractor shall comply with the requirements included in Section 1.1.C above, and the following requirements:

1. The Contractor shall comply with General Permit 2009-0009-DWQ for Discharges of Storm Water Associated with Construction Activities (General Permit). A copy of the General Permit may be downloaded from the California State Water Resources Control Board (SWRCB) website using the following link: http://www.waterboards.ca.gov/waterissues/programs/stormwater/construction.shtml.

2. The Contractor shall provide a Qualified Storm Water Pollution Prevention Plan (SWPPP) Developer (QSD) to prepare all Permit Registration Documents (PRDs), as defined in the General Permit. All PRDs must be uploaded to the SWRCB's General Permit web application called the Storm Water Multiple Application Report Tracking System (SMARTS) prior to commencement of construction activities. The SMARTS website link is: http://smarts.waterboards.ca.gov/smarts/faces/SwSmartsLogin.jsp. The PRDs include the Notice of Intent, Risk Assessment, Post-Construction Calculations, Site Map, SWPPP, and the first annual fee. The annual fee for this project is estimated to be $1,172.00. The Contractor must submit the prepared SWPPP to the City for review and approval prior to uploading it to the SMARTS system. Upon City approval, the SWPPP

shall be uploaded by the Contractor and certified by the City's Legally Responsible Person (LRP). At that time, the actual fee invoice will be provided by the City to the Contractor and the Contractor will submit payment to the State for the first annual fee. The Contractor is also responsible for all subsequent annual fees for this project.

3. This project has been determined to be a Risk Level 2. The Contractor shall comply with all visual monitoring, effluent water quality sampling, reporting, and record keeping requirements associated with this Risk Level, in accordance with the General Permit. For projects with Risk Level 2 or Risk Level 3, the Contractor must prepare and implement a Rain Event Action Plan, as described in the General Permit.

4. The Contractor shall provide a Qualified SWPPP Practitioner (QSP) to implement all SWPPP requirements at the project site and monitor the effectiveness of the SWPPP, in accordance with the General Permit.

5. The Contractor shall prepare the Annual Report required by the General Permit and submit it to the City for review and approval by August 1st of each year. The City's LRP will certify the Annual Report.

6. The Contractor shall provide and submit all reports and data necessary to complete the Notice of Termination at the Completion of the Work, in accordance with the General Permit.

(END OF SECTION)

SECTION 01572
CONSTRUCTION AND DEMOLITION WASTE MANAGEMENT

1.1 The Requirement

A. The Construction and Demolition Waste Management (CMDW) Specification includes procedures for ensuring optimal diversion of construction and demolition waste generated by the project, and documentation procedures for tracking waste generation and diversion.

B. Each construction and/or demolition project shall reuse or recycle a minimum of 75% of the inert debris and 50% of the remaining construction and demolition debris generated by the project.

C. The project shall promote the City's sustainable building efforts by creating a resource-efficient and environmentally sensitive project and maintaining optimum control of the construction and demolition waste generated during the project.

D. The project shall use products with post-consumer recycled content to the greatest extent feasible. Refer to the California Integrated Waste Management Board's website for information about recycled content construction products.

1.2 Abbreviations

A. CalMAX: California Materials Exchange

B. C&D: Construction and Demolition

C. CCR: California Code of Regulations

D. CDRG: Construction and Demolition Recycling Guide

E. CIWMB: California Integrated Waste Management Board

F. LEA: Local Enforcement Agency

G. SWDD: Solid Waste Diversion and Disposal

H. WMP: Waste Management Plan

1.3 Definitions

A. "Certified Mixed Debris Processing Facility": A solid waste processing facility that accepts loads of mixed debris for the purpose of recovering re-usable and recyclable materials and disposing of the non-recyclable residual material. A Certified Mixed Debris Processing Facility has been certified by the City of Los Angeles to have a facility specific recycling rate for C&D waste and/or another facility specific recycling rate for municipal solid waste. See CDRG Section VII G for information on the current list of certified processors.

B. "Class III landfill": A landfill that accepts non-hazardous solid waste such as household, commercial, and industrial solid waste. A Class III landfill must have a CIWMB solid waste facilities permit and is regulated by the LEA.

C. “Construction and Demolition Recycling Guide”: a publication by the Bureau of Sanitation’s Solid Resources Citywide Recycling Division available at https://www.lacitysan.org/san/faces/home/portal/s-lsh-wwd/s-lsh-wwd-s/s-lsh-wwd-s-r/s-lsh-wwd-s-r-cdr?_adf.ctrl-state=1c96z0ucsc_5&_afrLoop=11601439069213214#! or Solid Resources Citywide Recycling Division,1149 S. Broadway, 10th Floor, Los Angeles, CA 90015, (213) 485-2260; FAX (213) 485-3671.

D. “C&D Debris”: Solid waste and recyclable materials that result directly from construction, remodeling, repair, demolition, or deconstruction of buildings and other structures, do not contain hazardous waste (as defined in CCR Title 22, Section 66621.3, *et seq*.), and contain no more than one percent (1%) putrescible wastes by volume, calculated on a monthly basis. C&D debris includes, but is not limited to: asphalt, concrete, Portland cement, brick, lumber, wallboard, roofing material, ceramic tile, pipe, glass, carpet and associated packaging.

E. “Deconstruction”: The process of taking apart a structure with the primary goal of preserving the value of all useful building materials, so that they may be reused or recycled.

F. “Disposal”: Acceptance of solid waste at a legally operating facility for the purpose of landfilling.

G. “Diversion”: Activities that result in reducing the amount of waste disposed at a landfill. This can include source reduction activities, composting, recycling, and reuse.

H. “Inert Backfill Site”: A location, other than inert fill or other disposal facility, to which inert waste is taken for the purpose of filling an excavation, shoring, or another soils engineering operation.

I. “Inert Fill”: A facility that can legally accept inert waste such as asphalt and concrete exclusively for the purpose of disposal.

J. “Inert Debris/Inert Waste”: Solid waste and recyclable materials that are source separated or separated for reuse, do not contain hazardous waste (as defined in CCR, Title 22, section 66261.3 et. seq.) or soluble pollutants at concentrations in excess of applicable water quality objectives, and do not contain significant quantities of decomposable waste. Inert debris may not contain more than 1% putrescible wastes by volume calculated on a monthly basis. Gravel, rock, soil, sand and similar materials, whether processed or not, that have never been used in connection with any structure, development, or other human purpose are not inert debris.

K. “Mixed Debris”: Material that includes commingled recyclable and non-recyclable construction and demolition debris.

L. “Mixed Debris Processing Facility”: A solid waste processing facility that accepts loads of mixed debris for the purpose of recovering re-usable and recyclable materials and disposing of the non-recyclable residual materials. See also Certified Mixed Debris Processing Facility.

M. “Permitted Waste Hauler”: A company that possesses a valid and current permit from the City of Los Angeles to collect and transport solid waste from individuals or businesses in the City of Los Angeles.

N. “Recycling”: The process of sorting, cleaning, treating and reconstituting materials for the purpose of using the altered form in the manufacture of a new product. Recycling does not include burning, incinerating, or thermally destroying solid waste.

1. On-site Recycling Materials that are sorted and processed for use in an altered form in the project, (e.g. concrete is crushed for use as base for a parking lot on the site)

2. Off-site Recycling Source-separated materials hauled to another location and used in an altered form in the manufacture of a new product.

O. “Recycling Facility”: An operation that can legally accept materials for the purpose of processing the materials into an altered form for the manufacture of a new product. Depending on the types of materials accepted and operating procedures, a recycling facility may or may not be required to have a Solid Waste Facilities permit from the CIWMB or be regulated by the LEA.

P. “Reuse”: Materials that are recovered for use in the same form. This includes materials that are reused on-site or off-site.

Q. “Salvage”: Materials recovered for reuse or sale or donation to a third party.

R. “Source Reduction”: Any action causing a net reduction in the generation of solid waste. Source reduction includes, but is not limited to, reducing the use of nonrecyclable materials, replacing disposable materials and products with reusable materials and products, reducing packaging, and reducing the amount of yard waste generated.

S. “Source-Separated Materials (Construction and Demolition Debris)”: Material that is sorted at the site of generation by individual material type for the purpose of reuse or recycling, i.e., loads of concrete that are source-separated for delivery to a base course recycling facility to be crushed into road base material. Note: The Contractor may be able to save money on collection fees for source-separated material. Source-separated material is not subject to the City’s 10% AB939 fee.

T. “Solid Waste”: shall mean waste that the CIWMB has deemed acceptable for disposal at a Class III Landfill and shall not include source-separated material.

U. “Transfer Station”: A facility that can legally accept solid waste for the purpose of temporarily storing the materials for re-loading onto other trucks and transporting them to a landfill for disposal, or recovering some materials for reuse or recycling. Transfer stations must be permitted by the CIWMB and regulated by the LEA.

1.4 DIVERSION REQUIREMENTS

A. The construction and demolition project shall reuse or recycle a minimum of 75% of the inert debris and 50% of the remaining construction and demolition debris generated by the project.

1.5 SUBMITTALS

A. Waste Management Plan (WMP): The Contractor shall conduct a site assessment and estimate the types and quantities of materials, under the project, that are anticipated for on-site or off-site processing, recycling, reuse, or disposal. See CDRG Section VII G, for a partial list of facilities that accept these materials for recycling.

1. After the contract is awarded and prior to the commencement of the project, the City project manager will schedule and attend a meeting with the Contractor to discuss the Contractor's proposed WMP. This plan shall be submitted to allow the City and the Contractor an opportunity to develop a mutual understanding regarding the recycling and reuse requirements and programs.

2. Not more than 20 working days after the meeting, and before the commencement of the project, the Contractor shall prepare and submit to the City project manager a written WMP, Attachment A. The plan shall show a minimum 75% recycling for inert debris expected from the project and 50% recycling for the remaining C&D debris expected from the project. The Contractor shall submit the plan in the format provided herein as Attachment A, Parts I and II. Instructions for filling out the form are in Attachment A, 'Instruction Sheet'. Work shall not begin until the project Engineer approves the WMP for the project.

3. If the Contractor expects a circumstance that the Contractor believes make it infeasible to comply with the Diversion Requirement, the Contractor may submit a written request for an exemption at the time the WMP is submitted. If the exemption request is not approved by the Engineer, the Contractor shall revise and resubmit a WMP.

4. If the City determines that it is infeasible for the Contractor to meet the Diversion Requirement due to unique circumstances, the City shall determine the maximum feasible diversion rate for each material and shall indicate this rate on the WMP submitted by the Contractor. The City shall return a copy of the WMP to the Contractor marked "Approved for Infeasible Exemption". The Contractor will be required to meet the maximum feasible diversion rates as approved by the City. If the Contractor fails to meet the revised rates the Contractor will be subject to the stipulated penalties. Exempt projects are required to keep and submit all documentation for the project. This includes receipts, the WMP, SWDD Reports, and all supporting documentation as required herein.

5. The City's approval of the Contractor's WMP will not otherwise relieve the Contractor of responsibility for adequate and continuing control of pollutants and other environmental protection measures.

B. Solid Waste Diversion and Disposal Report (SWDD Report): With each submittal of the Contractor's application for progress payment, the Contractor shall prepare and submit to the inspector a written SWDD Report quantifying all material generated in the project which was either disposed, or diverted from disposal through reuse or recycling during the time period covered by the SWDD Report and progress payment. Part III of each SWDD Report is a cumulative history of

the diversion and disposal for the project. The Contractor shall submit the report in the format provided herein as shown in Attachment B. Failure to submit the report and the supporting documentation shall render the application for progress payment incomplete and delay payment until the proper documentation is submitted. The supporting documentation includes manifests, weight tickets, receipts, reports, invoices, and other supporting documents specifically identifying the projects, the recyclables and solid waste generated by the project, and where the material was sent. Instructions for filling out the forms are in Attachment B, 'Instruction Sheet'. The final SWDD Report shall cover the complete time period of the project and shall contain, in Part III, a list of the total waste disposed and/or diverted for each reporting period. The final SWDD and supporting documentation must be submitted within 30 days of the end of the project.

C. Substitutions: Should the Contractor desire to use materials, equipment, or products that meet the requirements of these specifications but are more environmentally responsive, the Contractor shall submit these substitutions in accordance with "Substitutions and "Or Equal" Submittals" of the General Requirements.

1.6 PENALTY

A. If the diversion requirement has not been met, a per ton penalty will be applied to the disposed material over that allowed in the approved WMP.

B. The penalty will be calculated as follows: Tons over that allowed in the approved WMP times the per-ton penalty in effect at the time the contract was awarded. The penalty may not exceed the total payment retention for the project.

C. The penalty is $100 per ton.

D. The recommended penalty will be determined by the Bureau of Contract Administration and shall be considered by the Board of Public Works at the time of the project closeout.

E. The Contractor who has been assessed a penalty may submit a written request for a hearing. Upon receipt of the written request the awarding authority shall set the matter for hearing and notify the Contractor.

1.7 REUSE, SALVAGE, AND RECYCLING OPTIONS

A. Construction projects shall make use of as many reuse and salvage options as is feasible. One option is the California Materials Exchange (CalMAX), a free program sponsored by the CIWMB. The most recent issues of CDRG Section VII G, contains contact information for non-profit organizations, salvage facilities and other reuse organizations.

B. Recycling shall include both on-site and off-site recycling of source-separated materials, as well as mixed debris recycling efforts.

C. On-site recycling program shall produce a quality product to meet the specifications identified in the contract documents, subject to approval. The Contractor shall estimate the amount of material to be used in the project and include a program for off-site recycling of any excess material that cannot be

used in the project.

D. The Contractor shall develop and implement a program to include source separation of solid waste, to the greatest extent feasible, of the following types:

1. Asphalt

2. Concrete, concrete block, slump stone (decorative concrete block)

3. Rock

4. Wood (lumber)

5. Green material (i.e. tree trimmings)

6. Other materials, as appropriate, such as red clay brick, building fixtures, architectural details, dry wall, carpet, carpet padding, and corrugated cardboard

E. Mixed Debris Recycling: The Contractor should develop and implement a program to transport loads of commingled construction and demolition materials that cannot be feasibly source separated to a mixed debris recycling facility. A list of these facilities and their recycling rates is in the most recent issue of CDRG Section VII G.

F. Certified Processors: These facilities have facility recycling rates, established by the City of Los Angeles for each mixed debris waste stream. Mixed construction and demolition debris taken to these facilities are considered to have been recycled at the rate of the certified processing facility. For example, 100 tons of material taken to a facility with a recycling rate of 60% gives the project credit for 60 tons of recycling. A list of these facilities and their recycling rates is in the most recent issue of CDRG Section VII G.

G. Recycling, Reuse, Mixed Waste Processing and Salvage Facilities: The CDRG is incorporated herein by reference and contains information about processing, recycling, reuse and salvage facilities.

H. Revenue: Revenue or savings obtained from recycled, reused, or salvaged materials shall accrue to the Contractor unless otherwise noted in the Contract Documents. Note: The Contractor may be able to save money on collection fees for source-separated material. Source-separated material is not subject to the City's 10% AB939 fee. Permitted waste haulers that take mixed C&D debris to certified processors may be eligible for a rebate on part of the AB 939 fee.

I. AB 939 Fee: The AB 939 fee is assessed on all solid waste hauled within the City of Los Angeles in accordance with Section 66.32 of the Los Angeles Municipal Code.

1. All solid waste haulers hauling material from City of Los Angeles locations must be permitted in accordance with Section 66.32 of the Los Angeles Municipal Code.

2. Source-separated material is not assessed this fee.

3. Permitted solid waste haulers may apply for a rebate for the recycled portion of the mixed waste taken to certified mixed debris processing facilities.

1.8 HAULING AND DISPOSAL OPERATIONS

A. Hauling: The Contractor is responsible for arranging the collection and hauling of C&D debris by a waste hauler that is permitted by the City of Los Angeles in accordance with Section 66.32 of the Los Angeles Municipal Code.

B. Recycling And Processing Facilities: The Contractor shall be responsible for transporting C&D debris to recycling or processing facilities. The Contractor shall be familiar with the requirements for acceptance of C&D materials at the recycling and processing facilities before the material is delivered. The most recent issue of CDRG Section VII G, includes a partial list of these facilities. Always call facilities in advance.

C. Disposal Facilities: The Contractor shall be responsible for transporting C&D debris that cannot be delivered to a recycling or processing facility, to a transfer station or disposal facility that can legally accept the materials for the purpose of disposal.

D. Site Disposal: The Contractor may not burn, bury, or otherwise dispose of solid waste on the project job-site.

(END OF SECTION)

(SEE ATTACHMENT)

Attachment A

WASTE MANAGEMENT PLAN (Part I-Inert Materials)

Project Title:	W. O. Number:	Date Submitted:
Name & Title of Responsible Person:	Signature:	

Methods

1) Hand-wrecking to recover salvageable materials to be used on - site
2) Hand-wrecking to recover salvageable materials to be taken off - site
3) Other (please describe)
4) Hauling inerts to an engineered fill
5) On-site concrete and asphalt crushing for use on - site
6) On-site concrete and asphalt crushing for use off - site
7) Source separating materials and hauling to recyclers

Material	Facility and Location	Method	Tons Diverted	Tons Disposed
RECYCLING/REUSE				
Asphalt				
Concrete				
Brick				
Other (Describe)				
Other (Describe)				
DISPOSAL				
Mixed inerts				
Other (Describe)				
Other (Describe)				
Other (Describe)				
CERTIFIED PROCESSING**				
Mixed inerts				
Mixed inerts				
Mixed inerts				
Mixed inerts				
DIVERSION AND DISPOSAL TOTALS =				

$$\text{Percent Recycling} = \frac{\text{Total diversion}}{\text{Total diversion} + \text{Total disposed}} \times 100 =$$

$$\text{Percent Recycling} = \frac{\qquad}{+} \times 100 =$$

**Recycling tonnages for debris taken to a certified processor = total tonnage taken to facility X recycling rate. Remaining tonnage counts as disposal. Example: 200 tons taken to a certified processor with a recycling rate of 0.63 (63%) yields 126 tons of diversion and 74 tons of disposal.

Attachment A

WASTE MANAGEMENT PLAN (Part II-All Other Materials)

W. O. No.:	Index No.:	Date Submitted:

Contractors Name:

Street address:

City, State, Zip:

Phone: Fax: Email:

Methods

1) Hand - wrecking to recover salvageable materials to be used on - site
2) Other (please describe)
3) Hand - wrecking to recover salvageable materials to be taken off - site
4) Source separating materials and hauling to recyclers

Material	Facility and Location	Method	Tons Diverted	Tons Disposed
RECYCLING/REUSE				
Glass				
Wood / Greenwaste				
Metal				
Cardboard				
Other (Describe)				
Other (Describe)				
DISPOSAL				
Mixed Waste				
Other (Describe)				
Other (Describe)				
CERTIFIED PROCESSING**				
Mixed Waste				
Mixed Waste				
Mixed Waste				
Mixed Waste				
DIVERSION AND DISPOSAL TOTALS =				

$$\text{Percent Recycling} = \frac{\text{Total diverted}}{\text{Total diverted} + \text{Total disposed}} \times 100$$

$$\text{Percent Recycling} = \frac{\qquad}{+} \times 100 =$$

**Recycling tonnages for debris taken to a certified processor = total tonnage taken to facility X recycling rate. Remaining tonnage counts as disposal. Example: 200 tons taken to a certified processor with a recycling rate of 0.63 (63%) yields 126 tons of diversion and 74 tons of disposal.

Attachment A - INSTRUCTION SHEET

1. **Please print very clearly or type.**
2. Attachment A includes**:** **Part I-**Inert Materials and **Part II**-Metal, Wood, and Other Material
3. The information required includes but is not limited to, the following:
   a. Contractor and project identification information
   b. Methods to be used for recycling, reusing, salvaging and disposing of materials. The method number should be chosen from the list at the top of Part I and Part II.
   c. Estimated quantities of **all** materials listed, in tons;
4. **Calculating recycling and disposal for mixed material taken to a certified processor: the total tons to be taken to certified processor times the recycling rate = amount to be recycled. Total to be taken to facility minus amount to be recycled = amount for disposal.
5. **Sample**

Project Title: Big St. Overcrossing	W. O. Number: 12341-0230709	Date Submitted: 09/09/99

Contractors Name: Acme Construction
Street address: 33333 Some St.
City, State, Zip: Anytown Ca. 90000
Phone: 213-555-5555 Fax: 213-555-1111 Email:

Methods

1) Hand - wrecking to recover salvageable materials to be used on - site
2) Hand - wrecking to recover salvageable materials to be taken off - site
3) Other (please describe)
4) Source separating materials and hauling to recyclers
5) Hauling inerts to an engineered fill

Material	Facility and Location	Method	Tons Diverted	Tons Disposed
	RECYCLING/REUSE			
Asphalt	BBB Crushing	4	200	
Concrete	BBB Crushing	4	55	
Brick	Joe's Salvage	2	6	
Other(Describe) Clean Gravel	The Best Landscaping	4	600	
	DISPOSAL			
Mixed waste	Joe's Landfill			1000
Other				
	CERTIFIED PROCESSING**			
Mixed Waste	Ben's Processing (Recycling Rate .81 or 81%)		8100	1900
Mixed Waste				
	DIVERSION AND DISPOSAL TOTALS =		8961	2900

$$\text{Percent Recycling} = \frac{\text{Total diverted}}{\text{Total diverted} + \text{Total disposed}} \times 100 =$$

$$\text{Percent Recycling} = \frac{8961}{8961 + 2900} \times 100 = 75.5\%$$

Attachment B

CITY OF LOS ANGELES/DEPARTMENT OF PUBLIC WORKS

SOLID WASTE DIVERSION AND DISPOSAL REPORT
PART I OF III - INERT WASTE MATERIAL

Project Title:	W. O. Number:	Date Submitted:	Progress Payment #
Company Name:		Daytime Phone Number:	
Index Number:		Department:	
Period Covered In This Report: From:		To:	

Material	Facility and Location	Tons diverted	Tons Disposed
RECYCLING/REUSE			
Asphalt			
Concrete			
Brick			
Other (Describe)			
Other (Describe)			
DISPOSAL			
Mixed inerts			
Other (Describe)			
Other (Describe)			
Other (Describe)			
CERTIFIED PROCESSING**			
Mixed inerts			
Mixed inerts			
Mixed inerts			
Mixed inerts			
DIVERSION AND DISPOSAL TOTALS * =			

*Copy the Diversion and Disposal Totals to Part III Cumulative Project Recycling Report. Each Report needs to have the totals from every previous Disposal And Diversion Report listed on it, as well as the totals from this report.

**Recycling tonnages for debris taken to a certified processor = total tonnage taken to facility X recycling rate. Remaining tonnage counts as disposal. Example: 200 tons taken to a certified processor with a recycling rate of 0.63 (63%) yields 126 tons of diversion and 74 tons of disposal.

Attachment B

SOLID WASTE DIVERSION AND DISPOSAL REPORT
PART II OF III - ALL OTHER WASTE MATERIAL

W. O. Number:	Date Submitted:

Material	Facility and Location	Tons Recycled	Tons Disposed
RECYCLING/REUSE			
Metal			
Wood / Lumber			
Greenwaste / Landscaping			
Glass			
Cardboard			
Other (Describe)			
Other (Describe)			
DISPOSAL			
Mixed waste			
Other (Describe)			
Other (Describe)			
Other (Describe)			
CERTIFIED PROCESSING**			
Mixed waste			
Mixed waste			
Mixed waste			
Mixed waste			
DIVERSION AND DISPOSAL TOTALS* =			

*Copy the Diversion and Disposal Totals to Part III Cumulative Project Recycling Report. Each Report needs to have the totals from every previous Disposal And Diversion Report listed on it, as well as the totals from this report.

**Recycling tonnages for debris taken to a certified processor = total tonnage taken to facility X recycling rate. Remaining tonnage counts as disposal. Example: 200 tons taken to a certified processor with a recycling rate of 0.63 (63%) yields 126 tons of diversion and 74 tons of disposal.

Attachment B

INERT SOLID WASTE DIVERSION AND DISPOSAL REPORT
PART III OF III - PROJECT CUMULATIVE TOTAL

W. O. Number:	Date Submitted:

Period Beginning	Period Ending	*Period Disposal	Cumulative Project **D**isposal	*Period Diversion	Cumulative Project Diversion,**R**	Cumulative Waste **G**enerated **D + R**	Cumulative Recycling % (**R**/**G**)100
INERT WASTE MATERIAL CUMULATIVE PROJECT HISTORY							
ALL OTHER WASTE MATERIAL CUMULATIVE PROJECT HISTORY							

Name & title of person responsible for the information in this form:	Signature:

*From appropriate Part I or II during each period.
Each Attachment B Part III Report needs to have the Diversion and Disposal Totals from every previous Disposal And Diversion Report listed in it, as well as the totals from this report.
Attach another Part III form and continue information if more rows are needed

ATTACHMENT B - INSTRUCTION SHEET

Contractor may contact the Solid Resources Citywide Recycling Division of the Bureau of Sanitation at (213) 485-2260 for information about recycling construction and demolition materials.

Reporting Disposal and Diversion of Solid Waste. With each submittal of Contractor's application for progress payment, the Contractor shall prepare and submit to the inspector a written Solid Waste Diversion and Disposal Report quantifying all material generated in the project that was either disposed in landfills or diverted from disposal through recycling or reuse. Submit the report in the format provided as Attachment B. The report contains three sections. All three sections must be submitted each time. As indicated on the Solid Waste Diversion and Disposal Report:

PART I

1. Report disposal, reuse, or recycling in tons. Indicate zero (0) if there is no quantity to report for a type of material.

2. Indicate all locations to which materials are delivered for reuse, recycling, or disposal. These locations can include:

    a. Source Separated Recycling Facilities
    b. Mixed Debris Recycling Facilities
    c. Class III Landfills
    d. Inert Backfill Sites
    e. Salvage yards
    f. Transfer Stations

3. The Solid Waste Diversion and Disposal Report must be accompanied by: legible copies of weigh tickets, receipts, or invoices that specifically identify the project generating the material. Said documents must be from recyclers and/or disposal site operators that can legally accept the materials.

4. Indicate the Project title; City Work Order Number; Progress Payment Number; Item Number, the City Department for which the work in being done; the name of the company completing the ‘Solid Waste Diversion and Disposal Report’ and compiling supporting documentation; the printed name, title signature, and daytime phone number of the person responsible for the information on the form; the beginning and ending dates of the period covered; and the date that the ‘Solid Waste Diversion and Disposal Report’ is completed.

5. If materials are taken to a facility for which weigh tickets, receipts, or invoices are not available, Contractor shall provide documentation *on company letterhead* identifying the address to which materials were taken, name of owner/operator, type of materials, tons disposed, and the specific project generating the materials.

6. If materials are used on site, Contractor shall provide documentation *on company letterhead* identifying the type and tons of materials being reused or recycled on site and the specific project generating the materials.

SECTION 01581
PROJECT SIGNS

1.1 THE REQUIREMENT

A. The names, addresses, and specialties of CONTRACTORS, Subcontractors, architects, or engineers may be displayed on removable signs. The size and location shall be subject to the ENGINEER'S approval. Commercial advertising matter shall not be attached to or painted on the surfaces of buildings, fences, canopies, or barricades.

B. TIME and INFORMATION type construction notice signs (8 each) per Standard Plan S-791-1 are required. The Inspector will determine appropriate location(s). The time for the TIME sign and the telephone number for the INFORMATION sign will be furnished by the ENGINEER at the time of construction.

C. (5 each) TYPE I CREDIT signs per Standard Plan S-791-1 are required. The INSPECTOR will determine the appropriate location(s). The information for the sign will be furnished by the ENGINEER at the time of construction.

D. (C-18) and C-13 ADVANCE CONSTRUCTION NOTICE SIGNS (8 each) per Standard Plan S-791-1 are required. The INSPECTOR will determine the appropriate locations.

E. (5 each) Prop K signs per the attachments to the specifications are required. The information for the sign will be furnished by the ENGINEER at the time of construction.

F. (5 each) Prop 68 signs per the attachments to the specifications are required. The information for the sign will be furnished by the ENGINEER at the time of construction.

(END OF SECTION)

SECTION 01601
BUY CLEAN CALIFORNIA ACT

THE REQUIREMENT

A. For projects that include eligible materials as defined in this section, the CONTRACTOR shall provide current Environmental Product Declarations (EPDs) of eligible materials after project award and meet the State of California maximum limits for Global Warming Potential (GWP) as listed by the State's Department of General Services, if/when made available. Additional information regarding GWP limits may be found at the following website:
https://www.dgs.ca.gov/PD/Resources/Page-Content/Procurement-Division-Resources-List-Folder/Buy-Clean-California-Act

B. Eligible Materials:
   1. Materials/products Requiring Facility-Specific EPDs:
      a. Steel: This includes structural steel (hot-rolled sections, hollow structural sections, and plates) and carbon steel reinforcement used in concrete or masonry.
   2. Materials/products Requiring Industry-Average or Facility-Specific EPDs:
      a. Flat glass
      b. Mineral wool board insulation
      c. Concrete

C. A submitted facility-specific or industry-average Environmental Product Declaration (EPD) must be a current Type III as defined by the International Organization for Standardization (ISO) Standard 14025, and has been 3rd Party verified following applicable Product Category Rules (PCRs). Credentials of 3rd Party showing them to be subject matter experts must be provided by the CONTRACTOR upon request. Minimum stage of coverage for EPDs shall consist of the production life cycle (i.e. product stage) or "cradle to gate". PCR shall be as identified by California Department of General Services for the Buy Clean California Act (BCCA). For concrete, PCR shall be ISO 21930.

D. The required EPDs shall be provided with the submittal of each eligible material used in this contract. See project-specific technical specifications, when applicable, for additional information. Depending on the number of facilities, and product types being proposed by the Contractor, more than one eligible material submittal of the same type may be required. Once approved, the CONTRACTOR must also provide a copy of the approved EPDs with the payment request to the INSPECTOR.

E. Restrictions:
   1. The CONTRACTOR shall not install any eligible materials or incorporate into the work in any way until the associated submittal with the required EPDs have been provided and approved, unless otherwise agreed upon by the ENGINEER. Payment for specific eligible material will be withheld until the EPDs for these materials are approved by the ENGINEER and submitted along with the progress payment requests.

2. The CONTRACTOR may be assessed liquidated damages for failure to complete the project within the time fixed by the terms of the contract resulting from Contractor delays associated with submission and approval of the required EPDs.

(END OF SECTION)

SECTION 01611
GUARANTY / WARRANTY

1.1 THE REQUIREMENT

A. The CONTRACTOR shall and does hereby warrant and guaranty that all work executed under this Contract will be free from defects of materials and workmanship for a period of one (1) year from the date of Final Field Acceptance of the project as evidenced by the issuance of a “Statement of Completion” by the Inspector, except for certain specific items of Work, materials and equipment requiring a guaranty or warranty for a greater period of time as may be required elsewhere in the Contract Documents. In the event, however, that portions of the Work are sufficiently complete to allow use or occupancy by the CITY in the manner and for the purposes intended prior to final completion and acceptance of the project, the guarantee period will commence on the date shown on the “Statement of Partial Completion.”

B. The CONTRACTOR hereby agrees to indemnify and save harmless the CITY, and their officers, agents and employees against and from all claims and liability arising from damage and injury due to said defects. The CONTRACTOR shall repair or replace, at no cost to the CITY, any and all such defective Work and all other Work damaged thereby, which becomes defective during the term of the above-mentioned guaranties and warranties.

C. Within thirty (30) calendar days prior to completion of all Work, the CONTRACTOR shall submit to the CITY original copies of all manufacturers’ product guaranties and warranties covering all supplied and installed equipment and, where applicable, systems.

D. In addition to the requirements of INSURANCE, Contract Bonds, of the GENERAL CONDITIONS, it shall be understood that the Surety for the faithful performance bond, submitted in conformance with the terms of the Contract for this project, is liable on its bond for all obligations of the CONTRACTOR including guaranty provisions. The “Performance Bond” shall remain in effect until the end of the guarantee period.

E. The CONTRACTOR shall, within twenty-four (24) hours of notice from the ENGINEER of any Work not in accordance with the requirements of the Contract, or any defects in the Work, commence and prosecute with due diligence all work necessary to fulfill the terms of this Section and to complete the Work within a period of time as approved by the ENGINEER. The CONTRACTOR shall notify the ENGINEER of the repair schedule before commencing the repairs and notify the ENGINEER to arrange for inspection. The CONTRACTOR shall submit a written report of the defect and methods of correction. In the event of failure by the CONTRACTOR and/or its Surety to respond to the notice or to complete the Work required by this Section within the time specified, the CITY shall proceed to have such Work done at the CONTRACTOR's expense. The CONTRACTOR or its Surety shall promptly reimburse the CITY all direct and indirect cost associated with performing this Work.

F. Repairs, replacements or changes made under the requirements of this Section shall be warranted for the specified guarantee period, but no less than one year, beginning on the date of acceptance of the repairs, replacements or changes.

(END OF SECTION)

SECTION 01630
SUBSTITUTIONS AND "OR EQUAL" SUBMITTAL

1.1 THE REQUIREMENT

A. The CONTRACTOR may supply any of the materials specified or offer an equivalent. The ENGINEER shall determine whether the material offered is equivalent to that specified. The CONTRACTOR shall make all "Or Equal" submittals within thirty (30) calendar days after issuance of Notice to Proceed. Any request or submittal received after the specified period will be considered as NOT EQUAL to that so specified and will be processed as a substitution described hereinafter.

B. Whenever any particular material, process, or equipment is indicated by patent, proprietary or brand name, or by name of manufacturer, such wording is used for the purpose of facilitating its description and shall be deemed to be followed by the words ‘or equal.’ A listing of materials is not intended to be comprehensive, or in order of preference. The CONTRACTOR may offer any material, process, or equipment considered to be equivalent to that indicated. The substantiation of offers shall be submitted as provided in the Contract Documents.

C. The CONTRACTOR shall, at its expense, furnish data concerning items offered by it as equivalent to those specified. The CONTRACTOR shall have the material tested as required by the ENGINEER to determine that the quality, strength, physical, chemical, or other characteristics, including durability, finish, efficiency, dimensions, service, and suitability are such that the items will fulfill its intended function.

D. Test methods shall be subject to the approval of the ENGINEER. Test results shall be reported promptly to the ENGINEER, who will evaluate the results and determine if the substituted items are equivalent. The ENGINEER’S findings shall be final. Installation and use of substituted items shall not be made until approved by the ENGINEER.

E. All manufacturers' data submitted to the ENGINEER for review and acceptance shall clearly identify each proposed substitute with the corresponding Contract Drawing detail and Specification Section. If the ENGINEER decides to accept for use in the Project a material, process or article which is not the equal of that specified, substitution shall be made in the manner described in CHANGES AND EXTRA WORK of the GENERAL CONDITIONS, with a credit to the CITY for the difference in value.

F. The ENGINEER shall determine whether the material offered is equivalent to that specified. Any revision to structures, piping, mechanical, electrical, instrumentation, or any other work made necessary by such substitution must be approved by the ENGINEER, and the entire cost both direct and indirect of these revisions shall be borne by the CONTRACTOR.

G. Any materials, process, or article may be requested as a substitution by the CONTRACTOR, in lieu of that specified, under the following conditions:

1. Requests must be submitted in writing and in the manner described in SHOP DRAWINGS / SUBMITTALS of these GENERAL REQUIREMENTS.

2. Requests must be submitted thirty (30) calendar days prior to starting the work, as established by the ENGINEER, so as not to cause any delay in completion of the Project. No other request will be considered after expiration of the period specified, except that in exceptional cases where it is determined to be in the best interest of the CITY, as approved by the ENGINEER.

3. The CONTRACTOR agrees to pay for all Engineering and design services, if required, to make all changes and adjustments in material and work of all trades directly or indirectly affected by the substitute, to the satisfaction of the ENGINEER, at no cost to the CITY.

4. All requests for substitution shall be made through the CONTRACTOR. Submissions by the CONTRACTOR shall imply the CONTRACTOR'S approval of such substitution.

5. No requests for substitutions will be considered during the bidding period.

6. The CONTRACTOR shall furnish adequate data with each request for approval of a substitute to enable the ENGINEER to evaluate the proposed substitution.

7. If a substitute offered by the CONTRACTOR is not found to be equal to the specified material, then CONTRACTOR shall furnish and install the specified material.

8. The specified Contract completion time shall not be affected by any circumstance developing from the provisions of this Section.

(END OF SECTION)

SECTION 01711
SITE INVESTIGATION

1.1 THE REQUIREMENT

A. CONTRACTOR shall investigate the Jobsite prior to Bid and during construction to ascertain all conditions affecting necessary procedures and sequencing of the Work operations in the execution of the Contracted Work in accordance with the requirements shown in Section 01731 – CUTTING AND PATCHING of the GENERAL REQUIREMENTS, herein and elsewhere.

1. Utilities in Abandoned Streets, Easements, and/or Alleys: CONTRACTOR is responsible for verifying and satisfying himself as to conditions under which work on such utilities will be done, such as what lines will be left in place, removed or rerouted. CONTRACTOR shall verify with Utility Map, Substructure Maps, District Maps & Street Lighting Map, etc., which are available at the Public Works Counter and in the Utility Companies. Should existing inactive utility lines (not shown or noted on the Drawings) be encountered, they shall be left-in-place and properly capped if not in way of new construction or if sufficiently below finish grade; as directed by the CITY ENGINEER. CONTRACTOR shall bear all costs involved in removing, rerouting or capping of such lines. CONTRACTOR shall contact the interested utility agencies as necessary to determine the Work operations involved.

2. CONTRACTOR shall report to the ENGINEER, prior to the Bid, any adverse condition(s), which would affect the proper execution of the Contracted Work and shall not proceed until instructed by the ENGINEER. Except as provided in GENERAL REQUIREMENTS Section 01253 – DIFFERING SITE CONDITION, failure to report any such conditions shall constitute acceptance of all site conditions, and any required removal, repair, or replacement caused by unsuitable conditions shall be performed by the CONTRACTOR at its sole cost and expense.

3. Start of Contracted Work at the Jobsite shall imply CONTRACTOR'S acceptance of job conditions.

B. Work Determination: CONTRACTOR shall satisfy itself regarding job/site conditions, the nature and types of work to be performed and shall be responsible for the determination of all classes of work to be accomplished at the Jobsite or at the manufacturer's plant.

C. Allotted Working Space: CONTRACTOR shall limit work operations to the "working site" or "Jobsite" or "Worksite," and areas immediately adjacent thereto, as shown on the Contract Drawings, specified or authorized by the CITY ENGINEER.

1.2 UTILITY LOCATION

A. Unless specified otherwise, prior to commencing any excavation or other work, it is the CONTRACTOR'S responsibilities to verify and/or determine the location and the depth of underground main distribution conduits, such as, but not limited to, water, gas, sewer, storm water, electric power, oil, telephone or cable

television, in the area which is known, or reasonably should be known, to contain such subsurface installations. CONTRACTOR shall search known substructure records, contact and verify with the utility companies, and pothole existing subsurface installation to determine their locations and elevation, at no additional cost to the CITY as part of the Contracted Work and requirements of the Los Angeles City Ordinance No. 150,478.

1. Where underground main distribution conduits, such as water, gas, sewer, electric power, telephone or cable televisions are shown on the Plans, the CONTRACTOR shall assume that every property parcel will be served by a service connection for each type of utility
2. As provided in Section 4216 of the California Government Code, at least two (2) working days prior to commencing any excavation, the CONTRACTOR shall contact the regional notification center (Underground Service Alert of Southern California) and obtain an inquiry identification number. Refer to PROTECTION OF PERSONS AND PROPERTY AND RESTORATION OF EXISTING IMPROVEMENTS of the GENERAL CONDITIONS.

3. The California Department of Transportation is not required by Section 4216 of the California Government Code to become a member of the regional notification center. The CONTRACTOR shall contact it for location of its subsurface installation.

B. Coordination

1. The CONTRACTOR is advised that the Drawings usually depict the location of substructures as they existed when the project was designed. Present-day information may indicate that new facilities may have been added, or are going to be added, or that some of those substructures are now, or will be, relocated, abandoned, removed, lowered, raised, blanketed, encased, enlarged, protected, or altered in some other way. The CONTRACTOR shall carefully examine the proposed construction site prior to Bid and during construction for any evidence of recent surfacing of excavations, or the possible conflict with surface or aerial installations, and the latest substructure maps, and bid accordingly. If further information or clarification is desired, CONTRACTOR is urged to immediately contact the following:

   a. The appropriate utility companies;

   b. The appropriate District Office of the Bureau of Engineering; and/or

   c. City of Los Angeles, Utility Coordination Section of the Project Award and Control Division
   1149 S. Broadway, Suite 140,
   Los Angeles, CA 90015
   (213) 847-0624.

2. Review and verify with the information indicated on the Contract Drawings, the Summary of First Notice Replies (see Attachment No. 01711-A1) and the information provided in the GENERAL REQUIREMENTS Section 01112 - DESCRIPTION OF WORK.

1.3 UTILITY PROTECTION

A. The CONTRACTOR shall not interrupt the service function or disturb the support of any utility without authority from the owner or order from the CITY. All valves, switches, vaults, and meters shall be maintained readily accessible for emergency shutoff.

B. Where protection is required to ensure support of utilities located as shown on the Plans or in accordance with Subsection 1.2 – Utility Location, above, the CONTRACTOR shall, unless otherwise provided, furnish and place the necessary protection at its expense.

C. Upon learning of the existence and location of any utility omitted from or shown incorrectly on the Plans, the CONTRACTOR shall immediately notify the ENGINEER in writing. When authorized by the ENGINEER, support or protection of the utility will be paid for as provided in SECTION 01254 – CHANGE ORDERS of the GENERAL REQUIREMENTS.

D. The CONTRACTOR shall immediately notify the ENGINEER and the utility owner if any utility is disturbed or damaged. The CONTRACTOR shall bear the costs of repair or replacement of any utility damaged if located as noted above, in Subsection 1.2 – Utility Location.

E. When placing concrete around or contiguous to any non-metallic utility installation, the CONTRACTOR shall, at its expense:

1. Furnish and install a 50mm (2 inch) cushion of expansion joint material or other similar resilient material; or

2. Provide a sleeve or other opening which will result in a 50mm (2 inch) minimum-clear annular space between the concrete and the utility; or

3. Provide other acceptable means to prevent embedment in or bonding to the concrete.

1.4 UTILITY REMOVAL

A. Unless otherwise specified, the CONTRACTOR shall remove all interfering portions of utilities shown on the Plans or indicated in the Bid documents as “abandoned” or “to be abandoned in place”. Before starting removal operations, the CONTRACTOR shall ascertain from the CITY whether the abandonment is complete, and the costs involved in the removal and disposal shall be included in the Bid for the items of work necessitating such removals.

1.5 UTILITY RELOCATION

A. When feasible, the owners responsible for utilities within the area affected by the Work will complete their necessary installations, relocations, repairs, or replacements before commencement of work by the CONTRACTOR. When the Plans or Specifications indicate that a utility installation is to be relocated, altered, or constructed by others, the CITY will conduct all negotiations with the owners and work will be done at no cost to the CONTRACTOR, except as provided in SSPWC Section 301-1.6. Utilities which are relocated in order to avoid

interference shall be protected in their position and the cost of such protection shall be included in the Bid for the items of Work necessitating such relocation.

B. After award of the Contract, portions of utilities which are found to interfere with the Work will be relocated, altered or reconstructed by the owners, or the ENGINEER may order changes to the Work to avoid interference. Such changes will be paid for in accordance with SECTION 01254 – CHANGE ORDERS of the GENERAL REQUIREMENTS. However, for interfering City owned utilities identified on the Plans including but not limited to sewers, storm-drains, traffic signal or streetlight conduits and appurtenances, their restoration, alteration, or reconstruction shall be performed by the CONTRACTOR and the associated cost shall be included in the CONTRACTOR's bid.

C. When the Plans or Specifications provide for the CONTRACTOR to alter, relocate, or reconstruct a utility, all costs for such work shall be included in the Bid for the items of work necessitating such work. Temporary or permanent relocation or alteration of utilities requested by the CONTRACTOR for its convenience shall be its responsibility and it shall make all arrangements and bear all costs.

D. The utility owner will relocate service connections as necessary within the limits of the Work or within temporary construction or slope easements. When directed by the ENGINEER, the CONTRACTOR shall arrange for the relocation of service connections as necessary between the meter and property line, or between a meter and the limits of temporary construction or slope easements. The relocation of such service connections will be paid for in accordance with the provisions of SECTION 01254 – CHANGE ORDERS of the GENERAL REQUIREMENTS. Payment will include the restoration of all existing improvements which may be affected thereby. The CONTRACTOR may agree with the owner of any utility to disconnect and reconnect interfering service connections. The CITY will not be involved in any such agreement.

1.6 UTILITY DELAYS

A. The CONTRACTOR shall notify the ENGINER of its construction schedule insofar as it affects the protection, removal, or relocation of utilities. Said notification shall be included as part of the construction schedule required in SECTION 01321 - CONTRACTOR'S CONSTRUCTION SCHEDULE AND REPORTS OF THE GENERAL REQUIREMENTS. The CONTRACTOR shall notify ENGINEER in writing of any subsequent changes in the construction schedule which will affect the time available for protection, removal, or relocation of utilities.

B. The CONTRACTOR will not be entitled to damages or additional payment for delays attributable to the utility relocations or alterations if correctly located, noted, and completed in accordance with 1.2 Utility Location, above.

C. The CONTRACTOR may be given an extension of time for unforeseen delays attributable to the unreasonably protracted interference by utilities in performing Work correctly shown on the Plans

D. The CITY will assume responsibility for the timely removal, relocation, or protection of existing main or trunkline utility facilities within the area affected by the Work if such utilities are not identified in the Contract Documents. The

CONTRACTOR will not be assessed liquidated damages for any delay caused by failure of CITY to provide for the timely removal, relocation, or protection of such existing facilities.

E. If the CONTRACTOR sustains loss due to delays attributable to interferences, relocations, or alterations not covered by Subsection 1.2 - Utility Location, above, which could not have been avoided by the judicious handling of forces, equipment, or plant, there shall be paid to the CONTRACTOR such amounts as the ENGINEER may find to be fair and reasonable compensation for such part of the CONTRACTOR'S actual loss as was unavoidable and the CONTRACTOR may be granted an extension of time.

F. Payment to the CONTRACTOR for actual loss due to a protracted utility delay shall be calculated based on wage increases, price increases of material and equipment, additional insurance costs and actual direct costs of maintaining the Worksite incurred because of the utility delay.

1.7 UTILITY COOPERATION

A. When necessary, the CONTRACTOR shall so conduct its operations as to permit access to the Worksite and provide time for utility work to be accomplished during the progress of the Work.

(END OF SECTION)

(SEE ATTACHMENT)

ATTACHMENT TO SECTION 01711

Attachment to General Requirements Section 01711 consists of one (1) document, as follows:

ATTACHMENT NUMBER	TITLE OF ATTACHMENT	NUMBER OF PAGES IN THIS ATTACHMENT
01711-A1	Summary of First Notice	2

SUMMARY OF FIRST NOTICE

Date: February 1, 2022

CITY OF LOS ANGELES
DEPARTMENT OF PUBLIC WORKS
BUREAU OF ENGINEERING

SUMMARY OF FIRST NOTICE REPLIES

W.O. No.:	Job ID.:	Project Title:
E700235D	**1462**	**SIXTH STREET VIADUCT - PARK, ARTS, AND RIVER CONNECTIVITY (PARC) IMPROVEMENTS**

Bidders are advised that project plans usually depict the location of substructures as they existed when the project was designed. Present-day information may indicate that new facilities may have been added or are going to be added. Some of those substructures may now be or will be relocated, abandoned, removed, lowered, raised, blanketed, encased, enlarged, protected, or altered in some other way. Bidders are urged to carefully examine the proposed construction site for any evidence of recent surfacing of excavations, or the possible conflict with surface or aerial installations. Contractor should use the latest substructure maps and prepare their bid accordingly. If further information or clarification is desired, bidders are urged to immediately contact the appropriate utility company or the appropriate District Office of the Bureau of Engineering. Contractors may also contact the Utility Coordination Group, 1149 S. Broadway Street, Suite 140, Los Angeles, CA 90015, naajia.jami@lacity.org. The contractor will need to coordinate work with utility companies during construction if necessary.

Based on the confirmation from the following utility companies, they have facilities within the improvement area that will definitely be affected.

LADOT	Max Eftekhari	(213) 972 - 8684
LADWP – POWER	Gibson Phan	(213) 367 – 2715

Based on the confirmation from the following utility companies, they have facilities within the improvement area that may not require relocation but will mark them upon request. Notify Underground Service Alert at 1-800-227-2600 two working days prior to excavation to have facilities marked:

BUREAU OF STREET LIGHTING	Daniel Ordonia	(213) 847 – 1568
TORRANCE LOGISTICS COMPANY LLC	Teri A. Shinde Eleanor Marx	(310) 212 – 1794 (310) 212 – 2914
KINDER MORGAN	Staff/ Nicole Rodriguez	KMEncroachmentsPacific @kindermorgan.com.
CROWN CASTLE	Kelly Klinefelter	Kelly.Klinefelter @crowncastle.com
CHEVRON PIPELINE	Dave Zerler Allen Just	(310) 669 – 4014 (714) 508 – 2677
SOUTHERN CALIFORNIA GAS – DISTRIBUTION	Carlos Portillo	cportillo@socalgas.com
CHARTER COMMUNICATIONS	David Scharrer	(626) 430 – 3522

VERIZON BUSINESS	Amanda De La Cruz Matt Bergine	(949) 527 – 5883 (909) 879 – 2635

Based on the confirmation from the following utility companies, there are no facilities within the improvement area that will be affected:

INFORMATION TECHNOLOGY AGENCY	Frank Gonzalez	(213) 978 – 4032
SOUTHERN CALIFORNIA GAS – TRANSMISSION	Ron Silver	(818) 701 – 4536

The following utility companies have not responded to the First Utility Notice, but they may have facilities within the improvement area.

AT&T CALIFORNIA (SBC)	Cathy Hurtado	(626) 817 – 4263
LADWP – WATER – CENTRAL	Martin Lam	(213) 367 – 1241
SHELL PIPELINE COMPANY LP	Staff	SPLC-Encroachments@shell.com
LA METRO	David Daniels A. D'Jean DeVolle Daniel De La Cruz Mattie Jones Silvia Osorio Jose Santos	(213) 922 – 5190 (213) 922 – 5192 (213) 922 – 5076 (213) 922 – 5023 (213) 922 – 5191 (213) 922 – 5193

Gregg Vandergriff, PE
Division Engineer
Project Award and Control Division
Bureau of Engineering
Department of Public Works

SECTION 01712
SUBSURFACE DATA

1.1 THE REQUIREMENT

A. All soil and test hole data, water table elevation, and soil analyses shown on the Drawings or included in the Specifications / Project Manual apply only at the location of the test holes and to the depth indicated. Test reports for test holes, which have been drilled, are available for inspection at the office of the ENGINEER, or contained in the Geotechnical Report for the project. Any additional subsurface exploration shall be done by the CONTRACTOR at their own expense. The indicated elevation of the water table is that level at the date the test hole data was obtained. It is the CONTRACTOR'S responsibility to determine and allow for the elevation of groundwater at the date of Project construction. A difference in elevation between the ground water shown in soil boring logs and groundwater actually encountered during construction will not be considered as a basis for extra work.

(END OF SECTION)

SECTION 01721
MOBILIZATION

1.1 THE REQUIREMENT

A. General

Whether Mobilization is included as a Contract Bid Item in the Bid Proposal Form or specified as part of the lump sum in the Contract Documents, the cost of labor, equipment, materials and incidentals for doing all the work in mobilization (in advance of construction operations and not directly attributable to any specific bid item) shall be included in the Contract Price Breakdown and progress payment estimate. If there is no mobilization bid item the CONTRACTOR shall submit to the INSPECTOR for approval the Contract Price Breakdown with the amount established for mobilization.

Mobilization shall include, but not be limited to, the following items, all as required for the proper performance and completion of the Work:

1. Obtaining all permits, licenses, insurance, and bonds. Providing copies to the ENGINEER.

2. Moving onto the Jobsite all of CONTRACTOR'S plant and equipment as required.

3. Erecting temporary buildings and other construction facilities.

4. Installing temporary construction power and wiring.

5. Establishing fire protection system for its temporary facilities.

6. Developing construction water supply.

7. Providing field office trailers for the CONTRACTOR, complete with all specified equipment, furnishings and utility services.

8. Providing sanitary facilities or connecting to onsite sanitary facilities as specified.

9. Providing for potable water facilities as specified. This includes a means by which all on site CONTRACTOR, Subcontractor or supplier personnel can wash their hands with soap.

10. Arranging for, and erection of, CONTRACTOR'S work and storage yards and sheds.

11. Submitting all required Subcontractor insurance certificates and bonds.

12. Posting all CAL/OSHA required notices and establishment of safety programs.

13. Having the CONTRACTOR'S representative at the Jobsite full time.

14. Furnishing of Construction Schedule, Contract Price Breakdown and Submittal Schedules.

15. Erecting all temporary fencing including removal and disposal of existing temporary fencing.

16. Erecting CONTRACTOR signs. The names, addresses, and specialties of CONTRACTORS, subcontractors, engineers or architects may be displayed on removable signs. The size and location shall be subject to the ENGINEER'S approval. Commercial advertising matter shall not be attached to or painted on the surfaces of buildings, fences, canopies or barricades.

17. Installing Building Credit signs and Advance Construction Notice signs. The Building Credit sign shall be submitted to the ENGINEER for approval prior to installation. Refer to GR Section 01581 – Project Signs, for additional requirements.

18. Providing an air-conditioned meeting room with a conference table, a minimum of 10 chairs and utilities for construction meetings within the ENGINEER'S field office.

19. Furnishing and set up of separate field office(s) for the ENGINEER and INSPECTOR. If it is necessary to relocate the ENGINEER'S or INSPECTOR'S job office to a new facility or relocation during the Contract provide the required labor and equipment at no additional cost. The new facility shall be properly equipped and conform to the requirements shown in Subsection B.2, Field Offices herein. The CONTRACTOR shall obtain the ENGINEER'S approval of the new location thirty (30) days in advance.

B. Field Offices For The Inspector And The Engineer

1. Unless specified otherwise, the CONTRACTOR shall, at no cost to the CITY, furnish, install, maintain, and remove all temporary light, telephone, power and water (including piping, wiring, lamps and other equipment necessary for the field offices).

2. The CONTRACTOR shall furnish the ENGINEER and the INSPECTOR, for the duration of the contract, and through the STARTUP ASSISTANCE period, at no additional cost to the CITY furnished field offices with janitorial services and maintenance agreements for all equipment provided under this Section. The offices shall have a minimum floor space of 720 square feet, door(s), and windows. All exterior doors and windows shall be provided with screens. All exterior doors shall be provided with door handles with double dead bolt locks and the CONTRACTOR shall provide the INSPECTOR and ENGINEER keys as requested by the INSPECTOR and ENGINEER. Each field office shall be furnished as follows:

   a. ENGINEER and INSPECTOR'S offices: 1 - 12' conference table, 14 - padded folding chairs (10 minimum for conference table), 1 - 6' folding table, 2 - L-shaped office desks with a minimum of 30 square feet of work surface, 2 - office chairs (adjustable height

and armrests, reclining), 1 - plan rack, 1 - plan table (minimum 42"H 34"Wx72"L work surface. Contractor may build onsite. Work surface shall be smooth, 3/4-inch medium density fiberboard (MDF) with finish trim on all edges. Provide storage shelves under plan counter), 2 - 4-drawer filing cabinets suitable to hold letter or legal size hanging file folders, 2 - book shelves with minimum of 4 adjustable shelves, and 3 - 36"x48" minimum white boards (or dry erase wallpaper).

b. ENGINEER'S Equipment: 2 - 27" minimum computer monitors with at least 1 HDMI port, 2 - laptops (15" min display, Windows 10 minimum, Intel processor, 16GB RAM minimum, 1TB HD minimum, WiFi, Bluetooth, HDMI port, USB port, USB-C port, built in webcam & speakers, Internet Security software), 2 - Bluetooth computer mouse, 2 - Bluebeam Revu licenses (latest version), and 1 - Color printer/copier/scanner with WiFi capable of printing and scanning 11x17 documents. Maintenance, paper (letter and tabloid sizes) and ink to be provided throughout the duration of the contract.

c. Heating and air conditioning of sufficient capacity shall be provided at no expense to the CITY to adequately control the temperature at all times.

d. Bottled drinking water shall be provided within the office. Sanitary facilities shall be provided directly adjoining the office for the sole use of the ENGINEER and the INSPECTOR. Sanitary facilities shall include a toilet and wash basin with hot and cold running water.

e. Extended area, non-coin operated telephone service shall be provided within the office area. The installation shall include 1 - individual telephone lines and 1 - cordless telephone for each Section.

f. 12 - Duplex convenience outlets for electrical power a minimum of four per staff person.

g. Outdoor lighting fixtures with 300 Watt bulb to effectively light the area around the office facility.

h. Maintenance and service agreements for all office equipment during the contract period.

i. The CONTRACTOR shall provide janitorial services weekly for the field offices for the duration of the Contract Work.

j. Any computer equipment or software furnished under this section or under an Allowance for City Field Offices shall be the property of the City at the end of the project.

k. The CONTRACTOR shall provide a high speed internet connection for the duration of the Contract and through the start up assistance period.

C. Temporary Construction Utilities

1. Construction Water:

a. Potable water will be made available for the CONTRACTOR'S use from the existing fire hydrant system, as located on the Plans, or as directed by the ENGINEER. The CONTRACTOR shall meter water usage and pay for the cost of water consumption. The CONTRACTOR shall make arrangements with the servicing water utility company. A backflow preventer shall be provided as per the Plumbing Code.

2. Construction Power:

a. The CONTRACTOR shall provide all electrical power required in performance of the Work and shall pay all installation charges and monthly bills in connection therewith. The CONTRACTOR shall provide and maintain all temporary and permanent power. The CONTRACTOR shall pay for all permits. All temporary connections for electricity shall be subject to approval of the ENGINEER and the power company representative, and shall be removed in like manner at the CONTRACTOR'S expense prior to final acceptance of the Work.

3. Telephones:

a. The CONTRACTOR shall provide and maintain at all times during the progress of the Work, at its own expense, not less than three (3) telephones in good working order, at its own field construction office. Each such telephone shall be connected to an established exchange for toll service and with all other telephones utilized by the CONTRACTOR.

4. Temporary Ventilation:

a. The CONTRACTOR shall provide adequate means to furnish temporary ventilation within Work areas at CONTRACTOR'S own expense and conforming to applicable requirements and standards of Federal, State, County and the 2020 Los Angeles CITY Building Codes and Amendments.

D. Contractor's Temporary Storage Facilities

1. The CONTRACTOR shall provide an adequate temporary shed on the site in a location designated by the ENGINEER for the safe storage of material and equipment. The shed shall be weathertight with a wood floor above grade. The shed shall be removed upon completion of the Work, or when so ordered by the ENGINEER.

E. Sanitary Facilities

1. The CONTRACTOR shall provide adequate sanitary conveniences of an approved type for the use of persons employed on the Work, and properly secluded from public observation, shall be provided and maintained by the CONTRACTOR in such a manner and at such points as shall be required or approved by the INSPECTOR. These conveniences shall be maintained at all times without nuisances and their use shall be strictly enforced. Upon completion of the Contracted Work, they shall be removed from the premises, leaving the premises clean and free from a nuisance.

F. Job Bulletin Board

1. The CONTRACTOR shall provide and mount on the CONTRACTOR'S Field Office, where it can be readily seen by the CONTRACTOR'S employees, a substantially built 3-feet high x 4-feet wide bulletin board, with a framed glass door protected on the outside with a 2-inch x 2-inch galvanized mesh and lock.

G. Protection Enclosures

1. Precautions shall be exercised by the CONTRACTOR at all times for the protection of persons and property.

2. CONTRACTOR shall furnish (or cause to be furnished) and maintain for the duration of Contracted Work, all scaffolds, covers, tarpaulins, canopies, warning signs, steps, bridges and other temporary construction and other protective devices as required by the INSPECTOR and the Local and State Rules, Ordinances and/or Regulations necessary for protection of public and private property and public safety.

3. Such enclosures shall be of reasonably good appearance and shall be maintained free of signs, posters, writing, markings and any other thing which would detract from a reasonably good appearance.

H. Temporary Fencing and Gates

1. Provide and maintain for the duration of the Contracted Work temporary chain link fencing of design and type needed to prevent entry onto the Jobsite and exterior Work area by the public.

2. Construction shall conform to the 2020 Los Angeles City Building Codes and Amendments where adjacent to any public way.

3. Chain Link Fence:

a. Where required, conform to the 2020 Los Angeles City Building Codes and Amendments and Standard Specifications for Public Works Construction.

b. Provide an approved six (6) foot high chain link fence with three (3) foot high barbed wire and metal supports above the fence.

All vertical poles and horizontal rails, tension bars, etc. shall be in conformance with the Standard Specifications for Public Works Construction.

4. Chain Link Fence with an Opening Along Property Lines:

   a. Provide an approved 6-foot high chain link fence and gate with metal supports and three (3) foot high barbed wire above the fence along the property lines and/or at openings to prevent access to the Jobsite.

5. Chain Link Fence Outside Of Property Lines:

   a. CONTRACTOR shall obtain all necessary written approvals from the ENGINEER and the local authorities having jurisdiction prior to erecting and temporary chain link fencing. CONTRACTOR shall remove all chain link fencing and repair all sidewalks or existing improvements after completion of Contract.

I. Plan Box

1. CONTRACTOR shall provide a plan box to store a full set of contract drawings and the project manual for the duration of the project. The box shall be of the appropriate size to contain the contract drawings and the project manual, and shall be temporary, weather tight, and include a cover, lock, and proper identification.

J. Construction Sign

1. Design: Refer to Section 01581 – PROJECT SIGNS.

2. Materials:

   a. Posts: 4-inch x 6-inch redwood, C.R.A. Foundation grade.

   b. Frame: Douglas fir solid stock, W.C.L.B., and Better, V.G. Finish.

   c. Metal Panel: No. 22 gauge sheet steel.

   d. CITY Seal: Provided by ENGINEER.

3. Fabrication:

   a. Securely attach frame to posts with adequate fasteners.

   b. Miter and nail frames, conceal fastenings and set nails.

   c. Secure a sheet metal panel to frame with wood stops as indicated on the Contract Documents.

4. Painting:

   a. By sign painters.

b. On all surfaces of posts, panel and frame, 1 coat of primer and 1 coat of finish paint on concealed surfaces not glued; 1 coat of primer and 2 coats of finish paint on exposed surfaces, and anti-graffiti coating.

c. With exterior wood primer and exterior oil paint as specified in Section 09900.

d. White finish on all surfaces; black letters and black frames reveal.

5. Installation:

a. Set posts into natural ground; location as directed by the ENGINEER.

6. Removal:

a. Upon completion of Contracted Work or when directed by the ENGINEER.

7. Modifications:

a. During the course of the Contract, the CONTRACTOR may be required to make changes to lettering, as directed by the ENGINEER, up to forty (40) letters regardless of the letter size, without additional cost to the CITY.

b. Repair and recoat the modified area in a manner that will eliminate the evidence of the changes.

K. Permits

1. The CONTRACTOR shall be responsible for obtaining and paying for all permits, licenses and fees in a timely manner, in accordance with Section 00217 of the General Conditions. The CONTRACTOR shall be aware of the expiration date of all permits, plan checks and/or extensions when the ENGINEER turns over such documents to the CONTRACTOR for construction use. If the CONTRACTOR does not obtain the permits in a timely manner, the CONTRACTOR shall be responsible for the delay, and the additional cost incurred as a result of the delay, in obtaining and paying for the permits or licenses (such as costs to re-plan check, plan modification due to code changes, etc).

2. The CONTRACTOR shall be familiar with all aspects of the Project. For the Project which requires a haul route hearing and haul route bonding as part of the Grading Permit approval process, CONTRACTOR shall prepare and secure the Grading Permit as soon as the construction contract is awarded in order to mitigate any possible delays due to the haul route hearing, The haul route map preparations shall be as required by the Los Angeles CITY Department of Building and Safety,

Grading Division, and Section 02220 – EARTHWORK of the Project Manual.

3. The CONTRACTOR shall obtain and pay for the following:

   a. Permits to Use Street Space and Deposit Building Materials

   b. Sewer Connection Permit

   c. Grading Permit

   d. Plumbing Permit

   e. Demolition Permit

   f. Heating, Ventilating, Air Conditioning

   g. Electrical Permit

   h. Fire Protection Permit for Fire Alarm System

   i. Shoring Permit

   j. Sign Permit

   k. Lead-Based Paint, Contaminated Soil Removal Notification Permit

   l. California General Construction Activity Stormwater Permit and Stormwater Pollution Prevention Plant (SWPPP) for stormwater pollution control measures for construction activities

   m. California Department of Transportation Permits (CITY will submit for plan check and pay for owner's permit. CONTRACTOR shall submit and pay for work permit)

   n. Work adjacent to and parallel to the railroad tracks will require coordination with Metro or appropriate agency. Flag men may be required during grading operations and other work deemed by Metro of having a possibility to foul the tracks. Contractor shall be responsible for all coordination with Metro, including but not limited to obtaining any required permits, paying any required fees, and paying all flagging costs.

L. Utility Services Connections

1. Within five (5) days after the Notice-to-Proceed, notify the serving utilities that the Project is under construction and furnish them dates on which the services will be required. Furnish the ENGINEER a duplicate copy of all service requests.

2. Should any major changes to the Work indicated be necessary to complete the utility installation, notify the ENGINEER in writing at once

and cease all the Work affected until approval for the required modifications has been obtained from the ENGINEER.

3. Water Service Connections: Make all arrangements with the proper authorities for the domestic water service, including the check valve and vault installations. See Civil Utility Sheets for coordination. The CONTRACTOR will pay for all fees and charges. Construction water is to be separately arranged and paid for by the CONTRACTOR. CONTRACTOR shall contact Los Angeles Department of Water and Power at 1-800-499-8840. If the CONTRACTOR uses an existing water supply for construction the billing shall be transferred to the CONTRACTOR prior to the start of construction. A duplicate of the transfer documentation shall be provided to the ENGINEER.

4. Power Service Connections: Make all arrangements with the proper authorities for the new power service connections and testing of electrical equipment and control as part of the contract. See Electrical (E) Sheets for coordination. The CONTRACTOR will pay for all fees and charges. Power for construction and testing equipment to be separately arranged and paid for by the CONTRACTOR. The CONTRACTOR shall contact Los Angeles Department of Water and Power at 1-800-499-8840.

5. Telephone Service Connections: Make all arrangements with the proper authorities for the telephone system connections to nearest telephone service manhole or pole of the serving agency as part of the Contract, see Electrical Sheets for coordination. The CONTRACTOR will pay for all fees and charges. Construction telephones to be separately arranged and paid for by the CONTRACTOR. The CONTRACTOR shall be responsible for all coordination with the local utility provider.

7. After all utility services are completed, all street improvements shall be repaired. CONTRACTOR shall include in the contract and pay for street damage restoration fee as indicated in Section 02510 - YARD WORK AND STREET WORK and attachment shown herein.

8. If the CONTRACTOR is delayed during the inspections by local authorized agencies or work by utility companies, not the fault of the CONTRACTOR and a critical path is impacted, the CONTRACTOR shall be entitled to a non-compensable time extension and shall have no claim for any other compensation for such delay.

(END OF SECTION)

(SEE ATTACHMENT)

ATTACHMENTS TO SECTION 01721

Attachments to General Requirements Section 01721 consists of one (1) document, as follows:

ATTACHMENT NUMBER	TITLE OF ATTACHMENT	NUMBER OF PAGES IN THIS ATTACHMENT
01721-A1	Construction Water Supply Schematic	1
2	Trailer Sample	1

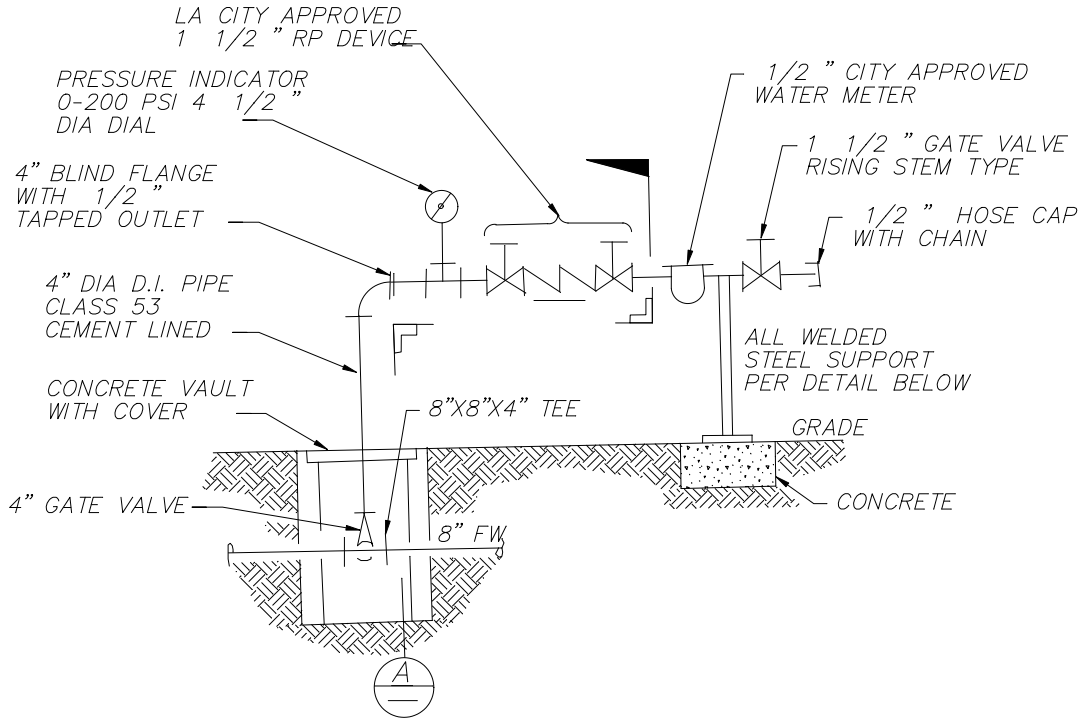

CONSTRUCTION WATER SUPPLY DETAIL

NTS

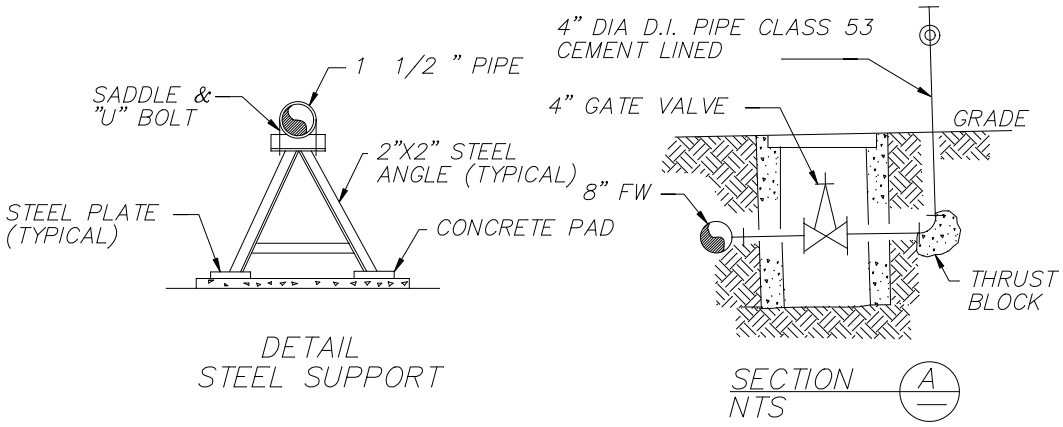

CONSTRUCTION WATER SUPPLY SCHEMATICS

NTS

SAMPLE

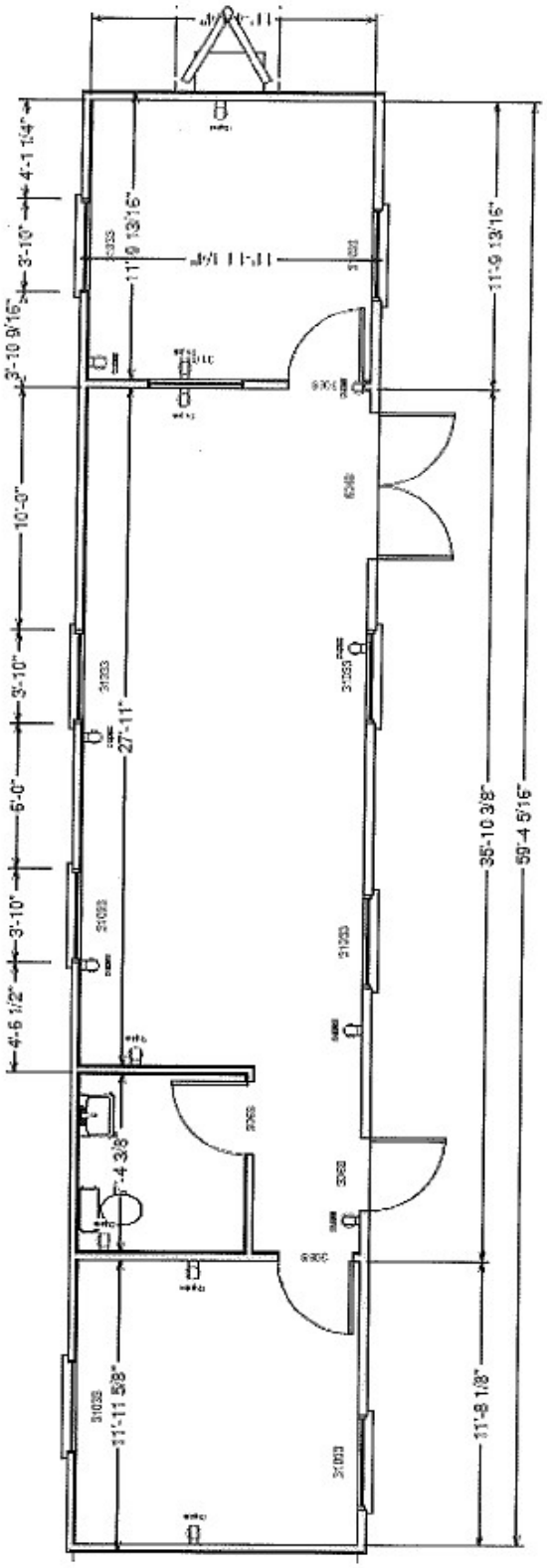
4'-1 1/4"
3'-10"
11'-9 13/16"
3'-10 9/16"
10'-0"
3'-10"
27'-11"
6'-0"
3'-10"
4'-6 1/2"
4'-4 3/8"
11'-11 5/8"
35'-10 3/8"
59'-4 5/16"
11'-8 1/8"

SECTION 01722
SURVEYING

1.1 THE REQUIREMENT

A. Permanent Survey Control Network Markers

The CITY Surveyor will establish horizontal and vertical control by recovering or reestablishing city centerline control monuments and identifying city benchmarks. The CONTRACTOR shall be responsible to protect all preconstruction control network reference points. In the case, where the monuments are to be removed or damaged by the CONTRACTOR, the CONTRACTOR shall notify the ENGINEER / CITY Surveyor in writing seven (7) calendar days before starting the Work. There will be a charge to the CONTRACTOR for replacing monuments and benchmarks that are disturbed by the CONTRACTOR prior to the CITY Surveyor establishing adequate reference points.

The CONTRACTOR shall furnish all additional surveying necessary for the project and shall protect the CITY monuments from damage for the duration of the Project. The CONTRACTOR will be back-charged for any CONTRACTOR damaged or destroyed survey control that has to be replaced by the CITY. For pipeline or street projects there shall be control points with coordinates at a maximum ¼ mile spacing. For all projects, at least two elevation benchmarks shall be provided. For projects greater than ½ mile in length, the elevation benchmarks shall be no more than ½ mile apart.

The CONTRACTOR shall complete a survey request form at least seven (7) full working days in advance by contacting the appropriate District Survey Office in the list below. Additional lead time will facilitate service. The form shall state exactly what and when the services are needed. A copy of the request can be faxed to the appropriate District Survey Office and a copy sent to the Engineer.

West L.A. District Survey Office 1828 Sawtelle Blvd., Room 105 West Los Angeles 90025	310-575-8493 Fax 310-575-8866
San Pedro District Survey Office 638 S. Beacon Street, Room 406 San Pedro 90731	310-732-4661 Fax 310-732-4670
Valley District Survey Office 6262 Van Nuys Blvd., Suite 350 Van Nuys 01401	818-374-4660 Fax 818-374-4669
Central District Survey Office 201 N. Figueroa Street, Suite 1100 Los Angeles 90012	213-482-7100 Fax 213-482-7175

B. Layout of Contracted Work:

1. The CONTRACTOR shall be responsible for all surveys required to layout the Work and for the accuracy of all survey work for construction. The CONTRACTOR shall include the cost of all such survey work in their Bid. The CONTRACTOR shall have all construction surveying performed by a `Licensed Land Surveyor' or a `Civil Engineer' registered by the State of California to perform such work. The ENGINEER reserves the right to verify all survey work done by the CONTRACTOR.

C. Construction Surveying Services

1. Construction Surveys shall conform to Chapter J 600 of the Bureau of Engineering Survey Manual, Part J. This manual may be purchased through the Bureau of Engineering Public Reference Center.

2. The CONTRACTOR shall provide all reference stakes and form checks necessary for construction and inspection of improvements. All construction staking shall be documented in survey field notes. This staking may include but is not limited to: removals, joins, rough grade, slope, utilities, storm drains, sewers, curbs, walks, paving, wall and building stakes; and any other staking necessary for construction and inspection.

D. Reference or Grade Stakes

1. A reference or grade stake shall be set for each grade change or angle point shown on the plan, standard plan, and shop drawing, in addition to the normal staking interval.

E. Form Checks

1. Forms shall be checked when durable points may be disturbed, removed, or are impractical to be used to verify the design location. The measured location shall be recorded in the survey field notes. All variations from the plan location shall be brought to the attention of the ENGINEER.

F. Staking Intervals And Offset Stake Lines

1. All staking intervals shall be in accordance with the Survey Manual, Figures J 615.224A&Am, J 615.225A, and J615.225Am. Stake lines shall be set at an offset distance from the improvement to ensure proper grade, station, and alignment.

G. Utility Stakes

1. The CONTRACTOR shall provide stakes for all utilities, public or private, that require location or relocation, unless otherwise stated.

H. Additional Survey Work

1. The CONTRACTOR may be required to furnish additional survey work, such as profiles, restakes, Change Orders, etc., at the request of the ENGINEER or the INSPECTOR.

I. Accuracy

1. The CONTRACTOR shall use appropriate surveying methods to obtain the following standards: For fixed works (i.e. cast-in-place concrete; asphalt pavement, pipes and drains; and other items determined by the ENGINEER) the following survey standards shall be used. The absolute horizontal accuracy, in relationship to the Engineer's control, shall be such that the semimajor axis of its 95% error ellipse is ±0.015 foot or less. The absolute vertical accuracy, in relationship to the Engineer's control, shall be such that its standard deviation is ±0.015 foot or less. The relative horizontal accuracy of survey points within the Project shall be such that the semimajor axis of its 95% error ellipse is ±0.015 foot or less. The relative vertical accuracy of survey points within the Project shall be such that its standard deviation is ±0.015 foot or less.

2. For excavation purposes, the following survey standards shall be used. The absolute horizontal accuracy, in relationship to the Engineer's control, shall be such that the semimajor axis of its 95% error ellipse is ±0.1 foot or less. The absolute vertical accuracy, in relationship to the Engineer's control, shall be such that its standard deviation is ±0.1 foot or less. The relative horizontal accuracy of survey points within the Project shall be such that semimajor axis of the 95% error ellipse is ±0.1 foot or less. The relative vertical accuracy of survey points within the Project shall be such that its standard deviation is ±0.1 foot or less.

J. Survey/Inspector

1. The CONTRACTOR shall provide to the INSPECTOR those measurements and control points necessary to determine the location and conformance to the plan, line, and grade of the improvements necessary for inspection purposes.

K. Survey/Engineer

1. The CONTRACTOR shall provide to the ENGINEER those measurements necessary for the expedient completion of the Project.

L. Survey Plan of Operations

1. Prior to construction, the CONTRACTOR shall submit to the ENGINEER for approval a survey plan describing methods and instrumentation to be used on the Project. The survey plan must be approved prior to any construction.

M. Survey Notes

1. The CONTRACTOR shall supply and keep notes on CITY standard format note sheets. The ENGINEER may request copies of, and otherwise review, survey notes at any time during the construction phase of the Project. Upon completion of the Project, the original survey notes shall become the property of the CITY and shall be delivered to the ENGINEER.

(END OF SECTION)

SECTION 01723
RIGHT OF WAY

1.1 THE REQUIREMENT

A. The CONTRACTOR shall not allow its employees to use private property for any reason, or to use water or electricity from such property without written permission from the owner. The CONTRACTOR shall provide evidence of such permission, in writing, to the ENGINEER, before entering upon such lands.

(END OF SECTION)

SECTION 1731
CUTTING AND PATCHING

PART ONE - GENERAL

1.1 SUMMARY

A. This Section establishes general requirements pertaining to cutting (including excavating), coring, fitting, and patching of the Contracted Work in existing or new CITY facilities (structures) required to:

1. Make the several parts fit properly;

2. Uncover work to provide for removal, installing, inspecting, or both, of ill-timed work;

3. Remove and replace work not conforming to requirements of the Contract Documents; and

4. Remove and replace defective work.

B. Related Work:

1. Documents affecting Works of this Contract include, but are not necessarily limited to, the GENERAL CONDITIONS, DIVISION 1 - GENERAL REQUIREMENTS and other Sections of the Project Manual.

2. In addition to other specified requirements, the CONTRACTOR shall, upon the Consultant's or ENGINEER'S request, uncover work to provide for inspection by the Consultant or ENGINEER of uncovered work and remove samples of installed materials for testing.

3. Do not cut or alter Work performed under separate Contracts without the Consultant's or ENGINEER'S written permission.

4. Site Demolition in Section 02220.

5. Sheeting, Shoring and Bracing Systems in Section 02240.

6. Cold-Formed Metal Framing (Metal Stud) in Section 05400.

7. Rough Carpentry in Section 06100.

8. Flooring/Paving Sealer Treatment in Section 07182.

9. Building Insulation in Section 07211.

10. Waterproofing in Section 07290.

11. Membrane Roofing in Section 07500.

12. Built Up Roofing in Section 07552.

12. Caulking and Sealants in Section 07920.

13. Lath and Plaster in Section 09200.

14. Gypsum Board Systems in Section 09260.

15. Plumbing in Division 15.

16. Mechanical in Division 15.

17. Electrical in Division 16.

1.2 SUBMITTALS

A. Request For Consultant's or ENGINEER'S Consent:

1. Prior to cutting which effects structural safety, submit written request to the Consultant or ENGINEER for permission to proceed with cutting.

2. Submit, to the ENGINEER, for approval, the method(s) of cutting and patching, and protection plan for each. Submit structural calculation, prepared by a California State licensed Engineer, as directed by the ENGINEER.

3. Submit all Shop Drawings or submittals as required by other Sections of the Project Manual. Submit floor and wall covering samples, and paint color samples for the repaired area to the ENGINEER for approval.

4. Should conditions of the Work or schedule indicate a required change of materials or methods for cutting and patching, so notify the Consultant or ENGINEER and secure written permission prior to proceeding.

1.3 QUALITY ASSURANCE

A. Use adequate numbers of skilled workers who are thoroughly trained and experienced in the necessary crafts, and who are completely familiar with the specified requirements and the methods needed for proper performance of the Work of this Section.

B. The safety provisions of applicable laws, building and construction codes shall be observed.

C. Field Mock Up: As required by the ENGINEER, prepare a representative mock-up area which shall be completely cleaned and finished for review by ENGINEER. ENGINEER'S approval shall be obtained before proceeding with additional cutting and patching work.

D. Requirements for Structural Work: Do not cut and patch structural elements in a manner that would reduce their load-carrying capacity.

1. Obtain approval of the cutting and patching proposal before cutting and patching any structural elements.

E. Operational and Safety Limitations: Do not cut and patch operating elements or safety related components in a manner that would result in reducing their capacity to perform as intended, or result in increased maintenance, or decreased operational life or safety.

1. Obtain approval of the cutting and patching proposal before cutting and patching any operating elements.

F. If no deposition of existing detail of existing improvements or conditions is made on the Drawings or in the Project Manual, it shall be the CONTRACTOR'S responsibilities to provide necessary site investigations including testing, potholes, exposure, etc. to obtain site information at no additional cost to the CITY. CONTRACTOR shall submit site information as part of the submittal. CONTRACTOR shall repair all potholes, exposures, etc. as part of the Contract.

G. Visual Requirements: Do not cut and patch construction exposed on the exterior or in occupied spaces, in a manner that would, in the ENGINEER'S or Consultant's opinion, reduce the building's aesthetic qualities, or result in visual evidence of cutting and patching. Remove and replace work cut and patched in a visually unsatisfactory manner.

PART TWO - PRODUCTS

2.1 MATERIALS

A. General**:** Use materials that are identical to existing materials. If identical materials are not available, or existing materials do not meet codes or cannot be used where exposed surfaces are involved, use materials that match existing adjacent surfaces to the fullest extent possible with regard to visual effect. Use materials whose installed performance will equal or surpass that of existing materials. Submit method of repair including lapping, splicing and joining of new and existing materials.

B. For replacement of items removed, use materials complying with pertinent Sections this Project Manual.

C. All cut concrete shall be provided with steel dowels filled with non-shrink grout prior to patching or placement of new concrete.

PART THREE - EXECUTION

3.1 SURFACE CONDITIONS

A. Inspection:

1. Inspect existing conditions, including elements subject to movement or damage prior to the Bid, during cutting, excavating, patching, and backfilling.

2. Identify all existing utilities, protect and maintain service to occupied areas in accordance with GENERAL REQUIREMENTS Section 01140 –-

CONTRACTOR'S USE OF THE PREMISES, and GENERAL REQUIREMENTS Section 01711 – SITE INVESTIGATION.

3. Obtain required shear tests for existing concrete or brick materials.

4. Obtain required weldability test on existing steel.

5. Unless specified otherwise, inspect and determine location of existing rebars in masonry and/or concrete walls or flooring prior to cutting.

6. After uncovering the work, inspect conditions affecting installation of new work.

B. Discrepancies:

1. If uncovered conditions are not as anticipated, immediately notify in writing the Consultant or the ENGINEER and secure needed directions.

2. Do not proceed until unsatisfactory conditions are corrected.

3.2 PREPARATION PRIOR TO CUTTING

Provide required protection including, but not necessarily limited to, shoring, bracing, and support to maintain structural integrity of the work. Provide duplicate copy of shoring permit and plan to the ENGINEER prior to start of Contracted Work.

3.3 PERFORMANCE

A. Perform required excavating and backfilling as required under other pertinent Sections of the Project Manual.

1. Perform cutting and demolition by methods, which will prevent damage to other portions of the Contracted Work and provide proper surfaces to receive a proper installation of repair and new work.

2. Perform cutting (excavating) in accordance with recommendations described in Soil Investigation Report. Over cutting (excavating) is prohibited.

3. Perform fitting and adjusting of products to provide finished installation complying with the specified tolerances and finishes noted in the Technical Sections of the Project Manual.

B. Cutting: Cut existing construction using methods least likely to damage elements to be retained or adjoining construction. Where possible, review proposed procedures with the original installer. If CONTRACTOR does not concur with the original installer's recommendations, CONTRACTOR shall notify the ENGINEER and request instructions.

1. In general, where cutting is required, use hand or small power tools designed for sawing or grinding, not hammering and chopping. Impact tools are not to be used in the building. Cut holes and slots neatly to size

required with minimum disturbance of adjacent surfaces. Temporarily cover openings when not in use.

2. To avoid marring existing finished surfaces, cut or drill from the exposed or finished side into concealed surfaces, or spaces.

3. Cut through concrete and masonry using a cutting machine such as a carborundum saw or diamond core drill. Use methods or locations that could avoid cutting the rebars. All cut rebars, approved by the ENGINEER, shall be rounded off any sharp edges and dabbed with a coat of protective coating against rusting.

4. Comply with requirements of applicable Sections of DIVISION 2 where cutting and patching requires excavating and backfilling.

5. By-pass utility services such as pipe or conduit, before cutting, where services are shown or required to be removed, relocated or abandoned. Cut-off pipe or conduit in walls, partitions or floor slabs to be removed. Cap, valve or plug and seal the remaining portion of pipe or conduit to prevent entrance of moisture or other foreign matter after bypassing and cutting. No existing service shall be interrupted, in accordance with Section 01140 – CONTRACTOR'S USE OF THE PREMISES of the GENERAL REQUIREMENTS.

6. Unless specified otherwise, all cut floor or roof wooden ledgers and blockings shall be repaired, spliced and installed with approved steel connectors. If necessary, install new double wooden ledgers or blocking without additional cost to the CITY.

7. Unless specified otherwise, all cut ceiling framing members shall be repaired or replaced with new framing members to the satisfaction of the ENGINEER. Re-install all ceiling, mechanical grills, and lighting fixtures affected by the cutting and repairs.

8. Unless specified otherwise, all existing masonry walls shall be removed to the nearest grout joint. All removed masonry units shall be protected, salvaged and reused.

C. Patching: Patch with durable seams that are as invisible as possible. Comply with specified tolerances.

1. Where feasible, inspect and test patched areas to demonstrate integrity of the installation.

2. Restore exposed finishes of patched areas and extend finish restoration into retained adjoining construction in a manner that will eliminate evidence of patching and refinishing.

3. All existing masonry wall shall be repointed and regrouted to the nearest wythe joint to match existing.

4. Restore all building insulation and fireproofing to match existing thickness and conditions.

5. Restore complete caulking, sealer, waterproofing, etc. to achieve maximum performance as required at no additional cost to the CITY.

3.4 CLEANING

Thoroughly clean areas and spaces where cutting and patching is performed or used as access. Remove completely paint, mortar, oils, putty and items of similar nature. Thoroughly clean piping, conduit and similar features before painting or other finishing is applied. Restore damaged pipe covering to its original condition.

3.5 TESTING

Demonstrate by appropriate water testing that repaired roofing, caulking, sealer, waterproofing, etc. are completely water tight and weather tight.

Arrange with local authorized agencies and test all existing utility services, mechanical and plumbing systems, fire and life systems affected by the cutting and patching.

(END OF SECTION)

SECTION 01732
ADDITIONAL POTHOLING

1.1 THE REQUIREMENT

A. The CONTRACTOR shall conduct exploratory excavations by potholing to verify or to discover the actual locations and the size of existing underground utilities and improvements. The CONTRACTOR shall take care not to damage existing facilities during potholing operations. Any utility or existing facility (including those located by Underground Service Alert - USA) within 3 feet of any trench or excavation shall be potholed prior to starting the contract work in the vicinity. Potholing shall be done in each given area where excavation work is to occur at least fourteen (14) calendar days in advance of any excavation or construction in that area, to avoid possible delay in the progress of the Work.

B. Potholing shall consist of excavations at the locations of utilities or other underground facilities indicated on the Drawings, located by USA, or as directed by the ENGINEER. All costs of potholing operations for the utilities indicated on the Drawings shall be included in the CONTRACTOR'S Bid.

C. If an allowance for Additional Potholing has been established and included in the SCHEDULE OF WORK AND PRICES, this allowance shall only be used to reimburse the CONTRACTOR for potholing utilities not shown or otherwise referenced on the drawings, or as directed by the ENGINEER. If the total cost of the Work directed under the Additional Potholing allowance differ from the amount set forth in the SCHEDULE OF WORK AND PRICES, the Contract Price shall be adjusted by a Change Order. The adjustment shall be the difference between the total actual costs and the amount included in the Bid, as an additional amount due to the CONTRACTOR or a credit to the CITY, as appropriate.

D. In addition to the potholes indicated on the Drawings, or directed by the ENGINEER, the CONTRACTOR may opt to do further potholing deemed necessary at no additional cost to the CITY.

E. Potholing operations shall conform to all applicable requirements of INJURY AND ILLNESS PREVENTION - SAFETY MEASURES of the GENERAL CONDITIONS, as to sidewall slopes, sheeting and shoring, and all other excavation and trenching provisions specified herein.

F. Potholing operations shall be conducted in accordance with the requirements of PROTECTION OF PERSONS AND PROPERTY AND RESTORATION OF EXISTING IMPROVEMENTS of the GENERAL CONDITIONS, in order to ensure that the existing facilities will remain in operation with minimum interruptions. Attention is specifically directed to the limitations on street closures, altering of vehicular and pedestrian access in accordance with INTERFACE / COORDINATION REQUIREMENTS of these GENERAL REQUIREMENTS. Potholes shall be identified and protected in accordance with the City of LA Brown Book, the California Manual on Uniform Traffic Control Devices (MUTCD) and Work Area Traffic Control Handbook (WATCH) Standards.

G. The CONTRACTOR'S proposed method of potholing and schedule for potholing shall be submitted to the ENGINEER for approval, at least thirty (30) days prior to

the commencement of operation. Any utilities damaged during potholing shall be immediately reported to the ENGINEER and INSPECTOR and repairs made immediately in accordance with the requirements of PROTECTION OF PERSONS AND PROPERTY AND RESTORATION OF EXISTING IMPROVEMENTS of the GENERAL CONDITIONS.

H. A complete log of all potholes shall be kept by the CONTRACTOR, showing specific locations and dimensions of trenches. The log shall be verified by the INSPECTOR prior to the backfilling of the potholes. The verified log will be submitted to the ENGINEER and the INSPECTOR within two (2) working days after completion of potholing in each area. Payment for potholing utilities not shown or otherwise referenced on the drawings, or as directed by the ENGINEER will not be made unless these potholes are listed on the verified log.

I. The CONTRACTOR shall record the coordinates, elevations and dimensions of all utilities and improvements verified or discovered by potholing. The records shall be submitted to the ENGINEER within two (2) working days after the completion of potholing in each area. The records shall also include dates of the potholing operations and any additional discovered information or pertinent data.

J. Upon completion of potholing in each area, and after verification of the logs by the INSPECTOR, potholes shall be immediately backfilled and compacted in accordance with the specifications, or restored as directed by the ENGINEER.

(END OF SECTION)

SECTION 01740
REMOVAL, CLEANUP, AND DEMOBILIZATION

1.1 THE REQUIREMENT

A. Throughout all phases of construction, including suspension of work, and until the Final Acceptance, the CONTRACTOR shall keep the site clean and free from rubbish and debris. The CONTRACTOR shall also abate dust nuisance by cleaning, sweeping and sprinkling with water, or other means as necessary. The use of water resulting in mud on public streets will not be permitted as a substitute for sweeping or other methods.

B. The road(s) on the construction site shall be paved immediately after the installation of planned utilities and the constructions and underground/final inspection of SS, SD, curbs, and gutters. The exit road on the construction site shall be paved first.

C. Vehicles exiting the construction site shall have all dirt clods and mud removed from their tires.

D. When required by the Plans or Specifications, the CONTRACTOR shall furnish and operate a self-loading motor sweeper with spray nozzles at least once each working day for the purpose of keeping paved areas acceptably clean whenever construction, including restoration, is incomplete.

E. Materials and equipment shall be removed from the site as soon as they are no longer necessary. Before the final inspection, the site shall be cleared of equipment, unused materials and rubbish so as to present a satisfactory clean and neat appearance. All cleanup costs shall be included in the CONTRACTOR'S Bid.

F. Care shall be taken to prevent spillage on haul routes. Any such spillage shall be removed immediately and the area cleaned.

G. Excess excavated material from catch basins or similar structures shall be removed from the site immediately. Sufficient material may remain for use as backfill if permitted by the Specifications. Forms and form lumber shall be removed from the site as soon as practicable after stripping.

H. Failure of the CONTRACTOR to comply with the ENGINEER'S cleanup orders may result in an order to suspend work until the condition is corrected. No additional compensation will be allowed as a result of such suspension.

I. Upon completion of the Contracted Work, the CONTRACTOR shall remove all of its tools, materials and other articles from the property of the CITY. Should the CONTRACTOR fail to take prompt action to this end, the CITY, at its option and without waiver of such other rights as it may have, upon thirty (30) calendar days' notice, may treat such items as abandoned property. The CONTRACTOR shall also sweep all floors broom clean, clean all exterior and interior surfaces and windows and remove all rubbish and debris resulting from the Contracted Work and shall maintain the Jobsite in a clean, orderly and safe condition at all times until completion of the physical Work and written Notice of Partial Acceptance. Failure to comply with this requirement shall be grounds for the CITY to assess clean-up costs in the amount of five percent (5%) of the mobilization cost.

(END OF SECTION)

SECTION 01770
PROJECT CLOSEOUT

PART ONE - GENERAL

1.1 RELATED DOCUMENTS

A. Drawings and General Provisions of Contract, including GENERAL CONDITIONS, DIVISION 1 - GENERAL REQUIREMENTS and other Sections of the Project Manual, applies to this Section.

1. SHOP DRAWINGS / SUBMITTALS in Section 01330.

2. Section 01140 – CONTRACTOR'S USE OF THE PREMISES.

3. Mobilization in Section 01721.

4. REMOVAL, CLEAN-UP AND DEMOBILIZATION in Section 01740.

5. RECORD DRAWINGS AND RECORD PROJECT MANUAL in Section 01783.

1.2 SUMMARY

A. This Section specifies administrative and procedural requirements for a Project Closeout, including but not limited to:

1. Inspection procedures.

2. Project record document submittals.

3. Operation and Maintenance Manual submittal.

4. Submittal of warranties.

5. Final cleaning.

B. Closeout requirements for specific construction activities are included in the appropriate Technical Sections in Divisions 2 through 16 of the Project Manual.

1.3 FINAL INSPECTION

A. Preliminary Procedures: Before requesting final inspection for the Contracted Works, the CONTRACTOR shall complete the following.

1. In the "Request for Payment" that coincides with, or first follows, the date the final inspection is requested, show one-hundred percent (100%) completion for the portion of the Contracted Work claimed as complete. Include supporting documentation for completion as indicated in these Contract Documents and a statement showing an accounting of changes to the Contract Sum.

a. Include a list of incomplete or outstanding works established during a Pre-final walk-thru as required in Section 01452 - INSPECTION OF THE WORK of the GENERAL REQUIREMENTS, and all supporting evidence or documentation for completion.

b. If one-hundred percent (100%) completions cannot be shown, include a list of incomplete items and all correction notices, the value of incomplete construction, and reasons as to why the Work is not complete.

2. Advise CITY of pending insurance changeover requirements.

3. Submit specific warranties, reduced faithful performance bonds for guarantee work, maintenance agreements, final certifications and similar documents.

4. Obtain and submit releases from local authorized agencies enabling the CITY unrestricted use of the Work and access to services and utilities; include the certificate of occupancy, permits or operating certificates and similar releases. Return all Building & Safety's sign-off sheet and Inspection Records to the CITY.

5. Submit Record Drawings and Record Project Manual, maintenance manuals, final Project photographs, damage or settlement survey, property survey, and similar final record information.

6. Deliver tools, spare parts, extra stock, and similar items.

7. Make a final changeover of permanent locks and transmit keys to the ENGINEER. Advise the CITY'S personnel of the changeover in security provisions.

8. Complete start-up testing of systems, and instruction/training of the CITY'S operating and maintenance personnel. Discontinue or change over and remove temporary facilities from the Jobsite, along with construction tools, mockups, and similar elements.

9. Complete all required testing including balancing test, bacteriological analysis, etc. Submit all test reports.

10. Return all original permits and manifests to the ENGINEER.

11. Advise the CITY of pending change over of the utility services upon start-up testing of the systems and completion of final inspection.

12. Complete final clean up requirements, including touch-up painting. Touch-up and otherwise repair and restore marred exposed finishes.

13. Make ready to proceed with landscape establishment period. Submit the maintenance schedules and logs.

B. Inspection Procedures: The INSPECTOR, with cooperation from the Consultant and the ENGINEER, will prepare a Final Inspection Correction list to that effect following inspection, or advise the CONTRACTOR of construction that must be completed or corrected before the construction work can be considered complete**.** The Contract time shall continue to be assessed.

1. The INSPECTOR, Consultant and ENGINEER will repeat the inspection when requested and assured that the Contracted Work has been satisfactorily completed.

2. The INSPECTOR, Consultant and ENGINEER will inspect the Work of the landscape maintenance service upon completion.

3. Results of the completed inspection will form the basis of requirements for Final Acceptance. The Contract time shall stop when all corrections are considered complete by the CITY.

C. Reinspection Fees: Should the Consultant and the CITY'S personnel perform reinspection due to failure of the Work to comply with CONTRACTOR'S claim of completion, the CONTRACTOR will compensate the CITY for such additional services. The CITY will deduct the amount of such compensation from the Final Payment to the CONTRACTOR.

1.4 FINAL ACCEPTANCE

A. Preliminary Procedures: Before requesting Final Acceptance and Final Payment, the CONTRACTOR shall complete the following and list exceptions in the request.

1. Submit the Final Payment request with releases and supporting documentation not previously submitted and accepted. Include certificates of guarantee for products and completed operations where required.

2. Submit an updated final statement, accounting for final additional changes to the Contract Sum.

3. Submit a certified copy of the INSPECTOR'S (combined with Consultant's and ENGINEER'S) final inspection list of items to be completed or corrected, stating that each item has been completed or otherwise resolved for acceptance, and the list has been endorsed and dated by the INSPECTOR, the Consultant or ENGINEER.

4. Submit a certified copy of the INSPECTOR'S, Consultant's and ENGINEER'S final inspection correction list for the maintenance services and items to be completed or corrected.

5. Submit final meter readings for utilities, a measured record of stored fuel, and similar data as of the date of Final Acceptance, or when the CITY took possession of and responsibility for corresponding elements of the Work.

6. Submit consent of surety to Final Payment.

7. Submit a final liquidated damages settlement statement.

8. Submit evidence of final, continuing insurance coverage complying with insurance requirements.

9. Submit all required certified weekly payroll records, ethnic composition of work force reports.

B. Reinspection Procedure: The INSPECTOR**,** Consultant and ENGINEER will reinspect the Contracted Work upon receipt of notice that the Work, including inspection list items from earlier inspections, has been completed, except items whose completion has been delayed because of circumstances acceptable to the INSPECTOR**,** Consultant or ENGINEER.

1. After all correction works are completed and inspected, ENGINEER and INSPECTOR of Bureau of Contract Administration shall establish the construction completion date.

1.5 RECORD DOCUMENTS SUBMITTALS

A. General: Do not use Record Documents for construction purposes; protect from deterioration and loss in a secure, fire-resistive location; provide access to record documents for the Consultant's or ENGINEER'S reference during normal working hours.

B. Record Drawings: Maintain a clean, undamaged set of blue or black line white-prints of Contract Drawings and Shop Drawings. Mark the set to show the actual installation where the installation varies substantially from the Contracted Work as originally shown. Mark whichever drawing is most capable of showing conditions fully and accurately; where Shop Drawings are used, record a cross-reference at the corresponding location on the Contract Drawings. All Record Drawings, Record Project Manual and new markings shall be submitted to the ENGINEER for review prior to the approval of the Progress Payments. Give particular attention to concealed elements that would be difficult to measure and record at a later date. Upon completion of the Work, submit Record Drawings, Record Project Manual etc, to the Consultant or ENGINEER for review and for the CITY'S records.

1. Mark Record Sets with a red erasable pencil; use other colors to distinguish between variations in separate categories of the Work.

2. Mark new information that is important to the CITY, including detail from "Request-for-Information" which was not shown on Contract Drawings or

Shop Drawings, as soon as it is made available**.** Any subsequent revision or changes, to the details from an earlier “Request-for-Information”, shall also be marked immediately on the Record Drawings.

3. Note related finalized or pending "Change Order" numbers where applicable**.**

4. Note all addenda, drawing modification, etc. on Record Drawings.

5. Where Shop Drawings are used for actual performance of the Contract Work and are most capable of showing actual details, conditions, and dimensions fully and accurately, record all the Shop Drawings and place them in good order with the Record Drawings. Properly identified and bound of field, and ready for continued use and reference.

6. Organize Record Drawing sheets into manageable sets, bind with durable paper cover sheets, and print suitable titles, dates and other identification on the cover of each set.

C. Record Project Manual: Maintain one complete copy of the Project Manual, including addenda, and one copy of other written construction documents such as "Change Orders" and modifications issued in printed form during construction. Mark these documents to show the variations in actual Contracted Work performed in comparison with the text of the Project Manual and modifications. Give particular attention to substitutions, selection of options and similar information on elements that are concealed or cannot otherwise be readily discerned later by direct observation. Note related Record Drawing information and Product Data.

1. Upon completion of the Work, submit record Project Manual to the Consultant or ENGINEER for review and for the CITY’S record.

D. Record Schedule: Provide one (1) copy of a computer diskette of the Construction Schedule. Record this document to show the actual schedules and sequences the actual Works were performed in comparison with Baseline Construction Schedule approval in accordance with GENERAL REQUIREMENTS Section 01321 – CONTRACTOR’S CONSTRUCTION SCHEDULE AND REPORTS.

E. Record Product Data: Maintain one (1) copy of each Product Data submittal. Mark these documents to show significant variations in actual Work performed in comparison with information submitted. Include variations in products delivered to the site, and from the manufacturer's installation instructions and recommendations. Give particular attention to concealed products and portions of the Work, which cannot otherwise be readily discerned later by direct observation. Note related Change Orders and markup of Record Drawings and Project Manual.

1. Upon completion of a markup, submit a complete set of Record Product Data to the Consultant or ENGINEER for review and for the CITY’S records.

F. Record Sample Submitted: Immediately prior to the date or dates of Substantial Completion, the CONTRACTOR will meet at the Jobsite with the Consultant or

ENGINEER and the CITY'S personnel to determine which of the submitted Samples that have been maintained during progress of the Work are to be transmitted to the CITY for record purposes. Comply with delivery to the CITY'S Sample storage area.

G. Miscellaneous Record Submittals: Refer to other Sections of the Project Manual for requirements of miscellaneous record-keeping and submittals in connection with actual performance of the Contract Work. Submit to the Consultant or the ENGINEER miscellaneous records for the CITY'S records.

H. Maintenance Manuals: Organize operating and maintenance data into suitable sets of manageable size. Bind properly indexed data in individual heavy-duty 2-inch, 3-ring vinyl-covered binders, with pocket folders for folded sheet information. Mark appropriate identification on front and spine of each binder. Include the following types of information:

1. Emergency instructions.

2. Spare parts list with model/part numbers.

3. Copies of work permits and warranties.

4. Wiring diagrams.

5. Recommended "turn around" cycles.

6. Inspection procedures; Operation and Maintenance Instructions.

7. Shop Drawings and Product Data.

8. Small scale of "Record" Drawings of such operating equipment.

9. Fixture lamping schedules.

PART TWO - PRODUCTS (NOT APPLICABLE)

PART THREE - EXECUTION

3.1 CLOSEOUT PROCEDURES

A. Operation and Maintenance Instructions: Unless specified otherwise, in addition to the maintenance manuals described hereinabove, arrange for each installer of equipment that requires regular maintenance to meet with the CITY'S personnel to provide instruction in proper operation and maintenance. If installers are not experienced in procedures, provide instruction by manufacturer's representatives. Include a detailed review of the following items:

1. Maintenance Manuals.

2. Permit and Record Documents.

3. Spare parts and materials.

4. Tools.

5. Lubricants.

6. Fuels.

7. Identification systems.

8. Control sequences.

9. Hazards.

10. Cleaning.

11. Warranties and bonds.

12. Maintenance agreements and similar continuing commitments.

B. As Part of Instruction for Operating Equipment, Demonstrate the Following Procedures:

1. Start-up.

2. Shutdown.

3. Emergency operations.

4. Noise and vibration adjustments.

5. Safety procedures.

6. Economy and efficiency adjustments.

7. Effective energy utilization.

3.2 FINAL CLEANING

A. General: General cleaning during construction is required by the GENERAL CONDITIONS and GENERAL REQUIREMENTS.

B. Cleaning: Employ experienced workers or professional cleaners for final cleaning. Clean each surface or unit to the condition expected in a normal, commercial building cleaning and maintenance program. Comply with manufacturer's instructions.

1. Complete the following cleaning operations before requesting inspection prior to CITY'S acceptance of Contracted Work.

a. Remove labels that are not permanent labels.

b. Clean transparent materials, including mirrors and glass in doors and windows. Remove glazing compound and other substances that are noticeable vision-obscuring materials. Replace chipped

or broken glass and other damaged transparent materials at no added cost to the CITY.

c. Clean exposed exterior and interior hard-surfaced finishes to a dust-free condition, free of stains, films and similar foreign substances. Restore reflective surfaces to their original reflective condition. Leave concrete floors broom clean. Vacuum carpeted surfaces.

d. Wipe surfaces of mechanical and electrical equipment. Remove excess lubrication and other substances. Clean plumbing fixtures to a sanitary condition. Clean light fixtures and lamps.

e. Clean the site, including landscape development areas of rubbish, litter and other foreign substances. Sweep paved areas broom clean; remove stains, spills and other foreign deposits. Rake grounds that are neither paved nor planted, to a smooth even-textures surface.

f. Remove all temporary detour stripping by the wet sandblasting method.

C. Pest Control: Engage an experienced exterminator to make a final inspection, and rid the Project of rodents, insects and other pests.

D. Removal of Protection: Remove temporary protection and facilities installed for protection of the Contracted Work during construction.

E. Compliance: Comply with regulations of authorities having jurisdiction and safety standards for cleaning. Do not burn waste materials. Do not bury debris or excess materials on the CITY'S property. Do not discharge volatile, harmful or dangerous materials into drainage systems. Remove waste materials from the site and dispose of in a lawful manner.

1. Where extra materials of value remaining after completions of associated Work have become the CITY'S property, arrange for disposition of these materials as directed.

(END OF SECTION)

SECTION 01783
PROJECT RECORD DOCUMENTS

PART 1 – GENERAL

1.1 THE REQUIREMENT

A. The CONTRACTOR shall maintain at the Jobsite a current record copy of all Contract Documents including, but not limited to, Contract Drawings and Project Manual which are marked up during construction to delineate the actual in-place constructed conditions. Project Record Documents including Record Drawings (also known as “As-Built” Plans), Record Project Manual, Record Schedule, Record Product Data, Record Samples, and Miscellaneous Record Submittals shall be provided by the CONTRACTOR for this Project. Requirements for Record Documents, as specified elsewhere, shall supplement the requirements specified herein.

B. Record Documents, particularly the Record Drawings and Record Project Manual, shall include a copy of all changes including those issued as Change Orders, Plan Clarifications, Addenda, Notice to Bidders, responses to Requests for Information (RFI’s), Jobsite Memos, and any additional details needed for the construction of the Project, but not shown on the Contract Drawings or included in the Project Manual.

C. Record Drawings and Record Project Manual shall be marked with red ink on one (1) set of full-size prints to produce a record of the complete installation. Any additional drawings that may be required to indicate record conditions shall be prepared on 24" x 36" paper. All additions to Contract Drawings shall employ and use drafting standards which are consistent with the drafting standards used in the Contract Drawings.

D. The Record Drawings and Record Project Manual, including those of all Subcontractors, shall be kept by the CONTRACTOR in the CONTRACTOR’S Jobsite office, shall be updated during construction, and shall be available for the ENGINEER'S inspection and copying at all times. The ENGINEER will review the Record Drawings and Record Project Manual prior to submittal of all Monthly Payment Requests. If, in the opinion of the ENGINEER, the Record Drawings and/or Record Project Manual are not current, approval of the Monthly Payment may be withheld until the Record Drawings and the Record Project Manual are made current. In addition, the CONTRACTOR shall submit a signed certification with each Monthly Payment Request stating that all Record Drawings and record Project Manual are complete and accurate as of the date of the payment request.

1.2 PROJECT RECORD DOCUMENTS

A. This Section includes administrative and procedural requirements for Project Record Documents, including the following:

1. Record Drawings

2. Record Project Manual

3. Record Schedule

4. Record Product Data

5. Record Samples

6. Miscellaneous Record Submittals

B. Related Sections:

1. Section 01321 – Contractor's Construction Schedule and Reports

2. Section 01330 – Shop Drawings/Submittals

3. Section 01770 – Project Closeout

4. Section 02810 – Irrigation System

5. Section 16430 – Life Safety Fire Alarm Systems

1.3 CLOSEOUT SUBMITTALS

A. Required Documents: GENERAL REQUIREMENTS Section 01770 – PROJECT CLOSEOUT, describes administrative requirements for submission, number and type of copies required for Contract closeout requirements.

PART 2 – PRODUCTS

2.1 RECORD DRAWINGS

A. GENERAL: Maintain one set of marked-up paper copies of the Contract Drawings and Shop Drawings onsite, incorporating new and revised Drawings as modifications are issued. Review Record Drawings and Shop Drawings monthly with the Engineer and/or Inspector, for approval.

1. Preparation: Mark the Record Drawings and Shop Drawings to show the actual installation where installation varies from that shown originally. Require individual or entity who obtained record data, whether individual or entity is Installer, subcontractor, or similar entity, to provide information for preparation of corresponding marked-up Record Drawings.

a. Give particular attention to information on concealed elements that would be difficult to identify or measure and record later.

b. Accurately record information in an acceptable drawing technique.

c. Record data as soon as possible after obtaining it.

d. Record and check the markup before enclosing concealed installations.

2. Content: Types of items requiring marking include, but are not limited to, the following:

a. Dimensional changes to Contract Drawings.

b. Revisions to details shown on Contract Drawings.

c. Depths of foundations below first floor.

d. Locations and depths of underground utilities.

e. Revisions to routing of piping and conduits.

f. Revisions to electrical circuitry.

g. Actual equipment locations.

h. Duct size and routing.

i. Locations of concealed internal utilities.

j. Changes made by Change Order.

k. Details not on the original Contract Drawings.

l. Field records for variable and concealed conditions.

m. Record information on the Work that is shown only schematically.

3. Mark the Record Drawings and Record Shop Drawings completely and accurately. Use personnel proficient at recording graphic information in production of marked-up as-built prints.

4. Mark Record Drawings set using red-colored ink. Use other colors to distinguish between changes for different categories of the Work at same location.

5. Mark important additional information that was either shown schematically or omitted from original Contract Drawings.

6. Note Change Order numbers, and similar identification, where applicable.

2.2 RECORD PROJECT MANUAL

A. Preparation: Mark Specifications to indicate the actual product installation where installation varies from that indicated in the Specifications, Addenda, and Contract modifications.

1. Give particular attention to information on concealed products and installations that cannot be readily identified and recorded later.

2. Mark copy with the proprietary name and model number of products, materials, and equipment furnished, including substitutions and product options selected.

3. Record the name of manufacturer, supplier, Installer, and other information necessary to provide a record of selections made.

4. For each principal product, indicate whether record Product Data has been submitted in operation and maintenance manuals instead of submitted as record Product Data.

5. Note related Change Orders**,** Record Product Data**,** and Record Drawings where applicable.

6. In addition to preparing and submitting a paper set of the Marked Project Record manual, the CONTRACTOR shall produce and submit the Project Record Manual in Microsoft Office Word format (latest version).

2.3 RECORD SCHEDULE

A. Final Schedule: Submit to the Engineer a final schedule update. The “As-Built” Schedule shall reflect the exact manner in which the project was actually constructed including actual start and finish dates, activities, sequences and logic.

1. The Contractor shall certify the final schedule update as being a true reflection of the way the project was actually constructed.

2.4 RECORD PRODUCT DATA

A. Preparation: Mark Product Data to indicate the actual product installation where installation varies substantially from that indicated in Product Data submittal.

1. Give particular attention to information on concealed products and installations that cannot be readily identified and recorded later.

2. Include significant changes in the product delivered to the Project site and changes in manufacturer's written instructions for installation.

3. Note related Change Orders**,** Record Specifications, and Record Drawings, where applicable.

2.5 MISCELLANEOUS RECORD SUBMITTALS

A. Assemble miscellaneous records required by Individual Specification Sections for miscellaneous record keeping and submittal in connection with actual performance of the Work. Bind or file miscellaneous records and identify each, ready for continued use and reference.

B. Format: Submit miscellaneous record submittals.

1. Include miscellaneous record submittals directory organized by specification section number and title, electronically linked to each item of miscellaneous record submittals.

PART 3 – EXECUTION

3.1 RECORDING AND MAINTENANCE

A. Maintain Change Log: Maintain and submit a written change log to the Engineer, monthly for review, indicating items incorporated in the Project Record Documents concurrent with progress of the Work, including modifications, concealed conditions, field changes, product selections, and other notations incorporated.

B. Recording: Maintain one copy of each submittal during the construction period for Project Record Document purposes. Post changes and modifications to the Project Record Documents as they occur; do not wait until the end of the Project.

C. Maintenance of Record Documents and Samples: Store Record Documents and Samples in the field office apart from the Contract Documents used for construction. Project Record Documents are not to be used for construction purposes. Maintain Project Record Documents in good order and in a clean, dry, legible condition, protected from deterioration and loss. Provide access to Project Record Documents for the Engineer's reference during normal working hours during performance of Contract.

(END OF SECTION)

BUREAU OF ENGINEERING

SIXTH STREET PARK, ARTS AND RIVER CONNECTIVITY IMPROVEMENTS (PARC)
WORK ORDER NO. E700235D

TECHNICAL SPECIFICATIONS

BID SUBMITTAL
July 2022

City of Los Angeles
California

Department of Public Works
Bureau of Engineering

ENGINEERING
CITY OF LOS ANGELES

SECTION 2205

HISTORIC RESTORATION PROCEDURES

PART ONE – GENERAL

1.1 DESCRIPTION

A. **General:** This Project includes historic restoration work; the Contractor shall make every effort to comply with the following requirements.

1. Match existing materials, where indicated, to maximum degree possible given present-day material availability and craftsmanship.

2. Take special precautions in executing work to avoid damage to existing historic materials.

3. Avoid unnecessary cutting and patching of existing historic materials. Run ducts, conduit, piping and other services in such a way as to minimize damage to historic material. Review proposed locations of access holes with the Engineer or the Consultant before execution.

B. Existing structures will be made available to those bidding the work which requires matching of historic materials. Carefully examine materials and adjacent systems to assure total compliance.

C. Review other section of the Project Manual for applicable requirements for historic restoration and matching of existing materials.

D. Related Sections:

1. Documents affecting work of this Section include, but are not necessarily limited to the GENERAL CONDITIONS, SUPPLEMENTARY CONDITIONS and other various Sections in DIVISION 1 – GENERAL REQUIREMENTS of the Project Manual.

2. Lead-Based Paint Removal in Section 02225.

3. Concrete Spall and Concrete/Stone Panel Crack Repair in Section 03740.

4. Painting in Section 09900.

5. Electrical Work in Division 16.

1.2 QUALITY ASSURANCE

A. **Qualification:** Employ qualified craftsmen to duplicate historic elements and, where available, employ craftsmen specializing in historic restoration

B. All workmen of all trades must be made aware of the special importance of the structures and the special requirements of this section.

C. Restoration Specialist: Work of this Section must be coordinated, supervised and reviewed by a historic restoration specialist with not less than five years experience performing work of the same scope as specified herein. Submit a list of previous projects as reference. The specialist shall have a minimum of five years of successful experience in the renovation, rehabilitation and restoration works similar in types and extent of works as indicated, on historic structures.

1.3 SUBMITTAL

A. **Historic Preservation Operations Plans:** Prior to the commencement of construction, historic restoration specialist shall prepare detailed plans indicating anticipated historic preservation operations. In order to avoid any delay to other demolition or retrofitting work of the existing structure, plans can be submitted in two phases and shall include the following:

1. Phase I:

    a. Written and photographic description(s), and location of historic materials to be protected in place and proposed method of protection.

    b. Written and photographic description(s), and location of historic materials that must be cut due to construction operations and proposed methods of minimizing damage; proposed source of patching materials and sample of the patching materials.

    c. Written and photographic description(s), and location of historic materials to be removed; proposed methods of removal and disposal, whether demolition or salvage.

2. Phase II:

    a. Written and photographic description(s) and location of historic materials being cleaned, rehabilitated, restored or refinished, and detailed description of proposed materials and methods for this work.

    b. Method of reinstallation of salvaged historic material.

B. In addition to construction photography as required in Section 01322, each historic material with different finish shall be provided with minimum two (2) color photographs in the Historic Preservation Operations Plans in each procedures listed above. One photograph shall have diversified overall view of the historic material and the other photograph shall have the close up view of the historic material.

C. Historic Preservation Operations Plans will be reviewed for general conformance with published standards and guidelines. Final approvals of the Historic Preservation Operations Plans are subject to the reviews and approvals of the mock-up panels and other required finish samples.

D. Mock-Up: Use existing historic material at existing job site, submit 24” x 24” job sample section of the following, but not necessarily limited to, renovation and rehabilitation works for City Engineer’s or Consultant’s approval. It shall show all joint, geometry and color type of material and finish all other hardware and accessories. It shall be protected and shall not be removed until it is authorized by Engineer.

PART TWO – PRODUCTS

2.1 MATERIALS

A. Comply with technical specifications for each product involved.

B. Materials salvaged by the Sixth Street Viaduct Project that will be required to be reinstalled for this project include the following. Contractor shall remove and dispose of all unused material.

1. Sixth Street Viaduct Historic Light Poles (Four Total)
2. Sixth Street Viaduct Historic Steel Arch Piece

PART THREE – EXECUTION

3.1 INSPECTION

A. Contractor shall inspect existing conditions of the Project, including historic materials and elements subject to damage during construction operations.

B. Contractor shall report unsatisfactory conditions in writing. Do not proceed with work until the City Engineer or the Consultant has provided further instruction.

3.2 PREPARATION

A. Provide adequate temporary support as necessary to assure structural value and integrity of historic elements.

B. Provide devices and methods to protect existing and restored historic elements from damage.

3.3 RESTORATION OF SIXTH STREET VIADUCT HISTORIC LIGHT POLES

A. Inspect salvaged light poles located at the Project site to determine the four (4) poles in the best condition for restoration.

B. Contractor shall hire a Structural Engineer registered in the State of California to perform an updated structural inspection of the light poles that are to be reinstalled as part of the project. The Structural Engineer shall provide recommendations for structural rehabilitation. These recommendations shall be implemented by the contractor in addition to the repairs described below.

C. At a minimum, the contractor shall perform crack and spall repair on the selected poles in accordance with Section 03740 – CONCRETE REPAIR. Spalled and loose portions of concrete shall be removed, and the entire pole shall be lightly sandblasted to prepare the surface. Large cracks shall be injected with a two-part concrete repair epoxy, and spalled concrete reconstructed to match the original architectural detailing with the use of concrete repair mortar.

D. Coat the entire surface of each selected pole with two-component high molecular weight methacrylate treatment.

E. Retrofit the base of each pole for connection to the proposed foundation per the Contract Drawings and applicable DIVISION 02 and 03 Sections. Final anchorage design to be a deferred submittal. Contractor shall be responsible for providing structural details and calculations for the proposed connection prepared by a Civil or Structural Engineer registered in the State of California

F. Construct foundation and install pole (including electrical wiring) per Contract Drawings and applicable DIVISION 02, 03, and 16 Sections.

G. Fabricate new luminaire heads to match historic luminaire heads and install per Contract Drawings and applicable DIVISION 02 and 16 Sections. Refer to the as-built plan for the Viaduct light poles that has been included as Attachment No. 8 to the Project Specifications.

3.4 RESTORATION OF SIXTH STREET VIADUCT HISTORIC STEEL ARCH PIECE

A. Perform lead abatement in accordance with Section 02225 – LEAD BASED PAINT REMOVAL.

B. Construct proposed pavement below proposed arch location per Contract Drawings and applicable DIVISION 02 and 03 Sections.

C. Transport salvaged arch piece to proposed final location and mount to foundation per Contract Drawings.

D. Perform modifications to arch piece per Contract Drawings and applicable DIVISION 02 and DIVISION 05 Sections.

E. Prepare and paint arch piece per Contractor Drawings and DIVISION 09 Sections.

END OF SECTION

SECTION 02210
CLEARING, GRUBBING AND STRIPPING

PART ONE - GENERAL

1.1 DESCRIPTION

A. All site clearing and grubbing on the job-site indicated on the Contract Drawings and in the Project Manual.

B. Site clearing shall consist of removing all vegetable growth such as trees, roots, stumps, shrubs, brush, limbs; and stone, boulders, clods, wood and other vegetative growth from the growth surface. Clearing shall also include the removal and disposal of trash piles, rubbish, etc. as well as the erosion and sediment control measures installed by the Sixth Street Viaduct Project.

C. Grubbing shall consist of the removal and disposal of wood roots, stumps, shrubs, brush, stone, boulders, clods, vegetable growth, etc. below the ground or subgrade surface.

D. CONTRACTOR shall furnish all tools, equipment materials and supplies and shall perform all labor to complete the work associated with removal of all natural and artificial objectionable material from the designated areas of work as indicated in the Contract Documents.

E. This work shall also include the protection from injury and preservation of existing improvements, adjacent property, utility vegetation and existing objects designated to remain.

F. Prior to commencing the work, obtain acceptance from the ENGINEER regarding methods to be used and disposal of removed materials.

G. Related Sections:

1. Documents affecting work of this Section included, but are not necessarily limited to the GENERAL CONDITIONS, SUPPLEMENTARY CONDITIONS, DIVISION 1 - GENERAL REQUIREMENTS and other Sections of the Project Manual.

2. Site Demolition in Section 02220.

3. Earthwork in Section 02310.

4. Environmental Mitigation in Section 01562

1.2 QUALITY ASSURANCE

A. Labor: Use adequate numbers of skilled laborers thoroughly trained in site-clearing operations and experienced in the necessary crafts and completely familiar with the specified requirements and methods needed for the proper performance of the work of this Section.

B. Codes and Regulations: Perform all work of this Section in strict accordance with applicable Government Codes and Regulations especially meeting all safety standards and requirements of CAL/OSHA, County and 2020 Los Angeles City Building Code and applicable Amendments. Conform to all storm water pollution control measures as required and provided in Section 02310 - EARTHWORK of the Project Manual. Provide additional measures, added materials and devices as may be needed as directed by the City Engineer

or the Consultant at no added cost to the City.

C. Miscellaneous Requirements:

1. Erection and maintenance of protections

2. Dust Control

3. Repair of Damages

4. Cleaning and Removal of Rubbish

D. Permits and Licenses: Procure all City, County and State Permits and Licenses, including Municipal Business License and pay all charges and fees for the same.

E. Contractor Submittals - Submit schedule of clearing, grubbing, and erosion control measures to be put in place for all work scheduled during the rainy season (October - April).

PART TWO - PRODUCTS

2.1 MATERIALS

A. Soil Sterilant: As specified in Section 02310 - EARTHWORK.

B. Soil Treatment for Termite Control: As specified in Section 02310 - EARTHWORK

C. Provide Materials not specifically described but required for completion of the work of this Section as selected by the Contractor subject to the approval of the City Engineer or the Consultant.

PART THREE - EXECUTION

3.1 SITE CONDITIONS

Examine the job-site and conditions under which work of this Section will be performed. Correct conditions detrimental to timely and proper site-clearing operations, as directed by the City Engineer or the Consultant. Do not proceed until such detrimental conditions have been corrected.

3.2 PROTECTION

A. Protect Existing Structures and Site Improvements indicated to remain from damage by approved methods and/or as authorized by the City Engineer. Removal of all protections shall be when work of this Section is completed or when so authorized by the City Engineer or the Consultant. Apply protections to adjacent properties as required and directed by the City Engineer.

B. Protect Existing Utilities Indicated or made known to remain traversing the job-site and serving existing adjacent facilities.

C. Protect Existing Trees and Shrubs Indicated to remain by providing temporary surrounding fencing so located a sufficient distance away so that trees and shrubs will not be damaged by site-clearing operations.

D. Protection of Persons and Property (existing structures and site improvements).

1. Provide barricades, warning signs at open depressions and holes on adjacent property and public accesses.

2. Provide operating warning lights during hours from dusk to dawn each day or as otherwise required.

3. Protect existing remaining structures, utilities, sidewalks, pavements other facilities from damage as caused by settlement, undermining, washout or other hazards created by site-clearing operations of this Section.

4. Provide and maintain pedestrian and vehicular access in accordance with Work Area Traffic Control Handbook (WATCH), latest edition.

E. Use means necessary to prevent air pollution or dust from becoming a nuisance to the public, to neighbors and to others performing work on or near the job-site. Comply with governing regulations.

F. Maintain access to the job-site, other neighboring property, street and alley at all times.

G. The project site shall be maintained in conformance with Section 7-8 - PROJECT SITE MAINTENANCE of the Standard Specifications for Public Works Construction (SSPWC) and the requirements of this Project Manual.

3.3 SITE CLEARING AND GRUBBING

A. General:

1. For drawing clarity, not all trees, shrubs, brush, grass, weeds, or exact amount of trash or debris are shown on the drawings. Contractor shall carefully study the Contract Drawings, the Soil Investigation Report and the Survey, visit the job site and verify the extent of the work to be done prior to the Bid.

2. Prior to starting job-site clearing operations in the company of the City Engineer or Consultant, Soil Engineer and Inspector; visit the job site and verify the extent of the work.

3. Site clearing and grubbing shall conform to Section 300-1 - CLEARING AND GRUBBING of SSPWC and applicable requirements of the Project Manual.

4. Site clearing and grubbing shall be done in the presence of the Soil Engineer. Contractor shall notify the City Engineer 72 hours prior to clearing operation.

B. Site Clearing and Grubbing Operations

1. Clean out all vegetable growth, roots, stomps, clods and other objective materials in conformance with the SSPWC Section 300-1, except 300-1.4.

2. Remove all concrete and masonry debris. Remove stones, boulders, clods which are one (1) inch or larger. Remove stones, boulders, clods which are one (1) inch or larger from all utility trenches.

3. Remove all existing rubbish and debris or those resulting from work operations of this Section as soon as possible, do not allow to pile up. Do not burn rubbish

and debris on the job-site.

4. Remove all growths including trees and shrubs on the job-site within property lines including trees in tree wells and elsewhere as noted on the Contract Drawings.

5. Where active utility lines need to be capped or plugged, perform such work in accordance with requirements of the Utility Company or government agency having jurisdiction and conform to provisions of Section 01140 - CONTRACTOR'S USE OF THE PREMISES, and Subsection 3.2B of this Section.

3.4 STRIPPING

A. Stripping shall include the removal and disposal of all organic sod, topsoil, grass and grass roots, and other objectionable material remaining after clearing and grubbing from the areas designated to be stripped. The depth of stripping shall be as shown on the Drawings and specified herein.

B. Topsoil from the stripping shall be stockpiled and used for the finished site grading. Excess topsoil will be placed in the waste disposal areas designated by the ENGINEER.

C. Prior to beginning any excavation or fill, strip the topsoil to a depth sufficient to remove all organic material and stockpile for future use. In general, topsoil shall be removed where structures are to be built, trenches dug, and roads, parking lots, walks, and similar improvements constructed within the areas presently covered with topsoil. Topsoil shall be stored clear of the construction area. Take reasonable care to prevent the topsoil from becoming mixed with subsoil.

3.5 TOPSOIL

A. Strip and remove existing sod, and stock pile existing sod if specified for reuse in the Contract Works.

B. After proposed planting area(s) has been cleared of vegetation and grubbed, strip the existing topsoil to a depth specified and to provide at least a 6-inch depth of topsoil in areas shown on the Contract Drawings to be turfed or planted and to fill planters without contamination with subsoils.

C. If on site topsoil is specified for reuse, stock pile topsoil in an area clear of new construction or where directed by the City Engineer or the Consultant.

D. Maintain topsoil stockpiles in a manner which will not obstruct the natural flow of drainage.

1. Maintain the stockpiled topsoil free from debris and trash.

2. Keep the stockpiled topsoil damp to prevent drying out and creating a dusts source.

3. Soil samples shall be obtained and analyzed for agricultural suitability and fertility.

4. Place and compact backfill in the planting area. Add soil amendments to topsoil

in accordance with the recommendation and cultivate.

5. Provide Soil Sterilization in accordance with Section 02310 – EARTHWORK of the Project Manual.

3.6 REMOVAL AND DISPOSAL OF CLEARING AND GRUBBING DEBRIS

A. General: All materials removed shall be disposed of outside of the right-of-way. No accumulation of flammable material shall remain on or adjacent to the right-of-way. The roadway and adjacent areas shall be left with a neat and finished appearance.

B. Bituminous Pavement: Bituminous pavement removal shall be in conformance with SSPWC Section 300-1.3.2.

C. Concrete Pavement: Concrete pavement removal shall be in conformance with SSPWC Section 300-1.3.2.

D. Concrete Curb, Walk, Gutters, Cross Gutters, Driveways, and Alley Intersections: Concrete removal shall be in conformance with SSPWC Section 300-1.3.2.

3.7 STORAGE OF MATERIALS AT THE JOB-SITE

Storage not permitted beyond brief accumulation awaiting pick up by removal trucks. Delays in the removal of site-clearing materials from the job-site shall be subject to the approval of the City Engineer or the Consultant.

(END OF SECTION)

02220
SITE DEMOLITION

PART 1 GENERAL

1.01 DESCRIPTION OF WORK

A. This Section covers all wrecking and demolition, together with the removal and disposal of items.

B. Related Work Specified Elsewhere:
1. Refer to Division 0, GENERAL CONDITIONS and Division 1, GENERAL REQUIREMENTS.
2. Clearing and grubbing is specified in Section 02210, CLEARING AND GRUBBING.
3. Excavating and filling for the site is specified in Section 02310, EARTHWORK, except as herein specified.
4. Refer to Section 01562, ENVIRONMENTAL MITIGATION.

1.02 QUALITY ASSURANCE

A. Requirements of Regulatory Agencies:
1. Traffic:
a. Obstruction. Do not close, obstruct, or store material or equipment in streets, sidewalks, alleys or passageways without a permit in accordance with all local ordinances, regulations and codes.

1.03 JOB CONDITIONS

A. Salvage. Remove equipment, material, or items called for on the plans, and store as directed, the items to remain the property of the Owner. These items are assumed to be in good operating condition at the time the Contract is signed. Properly protect them and remove them complete, including all appurtenances, and deliver in good order to the Owner as directed.

B. Protection:

1. General Requirements. Protect persons and property in accordance with the GENERAL CONDITIONS. Remove all temporary construction upon completion of the Project.

a. Temporary Barricade Fence. On all sides of the property except where existing buildings are on the property line, where a sidewalk shed is specified, or where there is existing temporary fencing, erect an 8 foot (2.44 m) high fence built solid for its entire length and height, except for such openings as doors, necessary for the proper prosecution of the Work.

b. Temporary protective fence. Before beginning any excavation or construction Work at the site, erect a temporary protective fence around the excavation and immediately adjacent to the building. Erect a 4 foot (1.22 m) high fluorescent orange temporary protective fence secured to posts not more than 8 feet (2.44 m) o.c.

2. Existing structures and property. Take precautions to guard against movement or settlement of adjacent buildings or structures. Provide and place bracing or shoring as necessary or proper in connection therewith. Be responsible for safety and support of such buildings and structures. Be liable for any movement or settlement, any damage or injury caused thereby or resulting therefrom. If at any time safety of any adjacent buildings or structures appears to be endangered, cease operation, take precautions to support such buildings or structures and notify the ENGINEER. Resume operations only after permission has been granted. If the ENGINEER considers additional bracing or shoring necessary to safeguard, or prevent movement or settlement, install such bracing or shoring upon ENGINEER'S order. If the Contractor fails to comply promptly with such order, such bracing and shoring may be placed by the Owner at the Contractor's expense.

PART 2 (NOT USED)

PART 3 EXECUTION

3.01 INSPECTION

A. Condition of Premises:

1. Accept the premises as found and clear the site as specified. The Owner assumes no responsibility for condition of buildings on site at time of proposal or continuation of conditions thereafter. Assume risk regarding damage or loss, whether by reason of fire, theft, or other casualty or happening to specified buildings.

3.02 PREPARATION

A. Utilities:

1. Prior to disconnecting, removing, plugging or abandoning existing utilities serving the buildings being removed, notify all utility corporations, companies, individuals or local authorities concerned with the Work.

3.03 INSTALLATION/APPLICATION/PERFORMANCE/ERECTION

A. Performance:

1. Wrecking and Demolition.

a. Other Items. Wreck, demolish, dismantle and completely remove all items and obstructions as shown on the drawings or called out in these specifications. Remove any existing rubbish, trash and junk and leave the site clear of such materials.

(1) Pneumatic Tools. Work with pneumatic or vibratory tools will generally be permitted, however on certain areas the ENGINEER may direct that only hand tools be used.

b. Walks and Drives. Where indicated on the drawings, remove pavement, curbs and sidewalks to full depth, take care to avoid damage to adjacent remaining pavement or sidewalks. Make cuts in such a manner that a clean vertical joint remains.

c. Utilities. Disconnect electrical service and/or cut off and cap gas, water and sewer services at the mains on the property or in the street as required by the responsible utility company, or local authority or relocate as shown on the drawings. Remove and cut off and plug or cap all utilities within the existing building areas, except those designated to remain. The Contractor shall coordinate the removal Work with the relocation and/or new Work being performed by all contractors.

d. Removal. Unless otherwise noted or specified to be relocated or stored, all materials removed become the property of the Contractor and are to be removed completely away from the site by him. Do not store or permit debris to accumulate on the Site. If the Contractor fails to remove excess debris promptly, the Owner reserves the right to cause same to be removed at Contractor's expense.

3.04 FIELD QUALITY CONTROL

A. Workmanship:

1. Demolition Work. Execute in an orderly and careful manner with due consideration for neighbors and the public. Execute the Work to insure adjacent properties and the public against damages incurred by falling debris or other causes.
2. Burning of Materials. Burn no materials or debris on the premises.
3. Dust control. Constantly sprinkle all rubbish and debris to lay down the dust.

B. Traffic:

1. Interference. Conduct operations with minimum interference with roads, streets, driveways, alleys, sidewalks and other facilities.

3.05 ADJUSTMENT AND CLEANING

A. Temporary Structures. Remove all temporary structures when they are no longer required.

B. Repair:

1. Clean up, repair, or replace at no cost to the Owner, all property damaged by reason of required Work, including restoring all disturbed areas, surfaced and unsurfaced, to their original condition on completion of the Work. All patchwork shall match existing and be performed in a neat and workmanlike manner by

craftsmen skilled in the trade involved. Painted surfaces shall be painted to match the adjacent areas. In newly graded areas take every precaution and temporary measures necessary, such as temporary seeding, to prevent damage from erosion of freshly graded areas. Where any settlement or washing may occur prior to acceptance of the work, repair and re-establish grades to the required elevations and slopes at no additional cost to the Owner. This applies to damage to the newly graded areas within the construction limits and damage to adjacent properties by eroded material.

(END OF SECTION)

SECTION 02225
LEAD BASED PAINT REMOVAL

PART 1 -- GENERAL

1.1 THE REQUIREMENT

A. The Lead-Based Paint (LBP) Abatement Contractor (hereinafter referred to as "Contractor") is responsible for and shall furnish all labor, material, equipment, and services necessary or required for the removal of the LBP and LBP-containing surfaces from the salvaged Historic Sixth Street Viaduct Steel Arch Piece, prior to the "Site Renovation" operations specified in another section.

B. Work under this Section shall include initial cleanup, critical barriers and work area(s) preparation, removal of LBP, removal of and LBP-containing surface, final cleanup, and disposal of LBP. With LBP detected on mostly all surfaces of the arch piece, the Contractor shall remove all painted surfaces. The painted surfaces shall include interior and exterior faces of the arch.

C. Contractor shall provide all coordination, equipment, material, medical surveillance, biological monitoring and site monitoring necessary to protect his personnel and area occupants while performing the work.

D. Contractor shall furnish all labor, material, equipment and services necessary or required for the removal of the polychlorinated biphenyl (PCB) containing material.

1.2 RELATED WORK SPECIFIED ELSEWHERE

A. Section 09900 Painting.

1.2 WORK REQUIRED

A. **<u>General</u>:** Removal of LBP and LBP-containing surfaces from the existing steel arch, prior to or during Site Renovation, as specified herein and in another Section.

1. A Hazardous Material Survey Report not been prepared for the arch piece. It is expressly understood that the City will not be responsible for interpretations or conclusions drawn by the Bidder/Contractor as to the nature of or full extent of the existing lead-based paint

2. The Contractor shall remove and dispose of all LBP and LBP-containing surfaces, including areas where access is restricted.

3. The Contractor shall determine the route and method of moving the LBP-containing surfaces and debris and include in the detailed plan submitted for City Engineer's approval

B. Nature of the Work:

1. General: The work required by this Section includes handling, removing, cleanup, transporting, and off-site disposing of removed LBP-containing surfaces and debris. The Contractor shall provide all equipment, material, personnel monitoring; necessary to protect his personnel or area occupants (general public), from contact with airborne LBP-containing debris. The Contractor shall perform this work in accordance with the methods and procedures prescribed by this section and in compliance with all applicable rules and regulations described below, but not necessary limited to:

Code of Federal Regulations (CFR)

a.	29 CFR 1910.134	Respiratory Protection
b.	29 CFR 1910.145	Specifications for Accident Prevention Signs and Tags
c.	29 CFR 1926.62	Lead Exposure in Construction
d.	40 CFR 260	Hazardous Waste Management System: General
e.	40 CFR 261	Identification and Listing of Hazardous Waste
f.	40 CFR 262	Standards Applicable to Generator of Hazardous Waste
g.	40 CFR 263	Standards Applicable to Transporter of Hazardous Waste
h.	40 CFR 264	Standards for Owners and Operators of Hazardous Waste Treatment, Storage and Disposal Facilities
i.	40 CFR 265	Interim Status Standards for Owners and Operators of Hazardous Waste Treatment, Storage and Disposal Facilities
j.	40 CFR 268	Land Disposal Restrictions
k.	49 CFR 178 & 179	United States Department of Transportation
l.	49 CFR 172 & 173	United States Department of Transportation

California Code of Regulations (CCR)

a.	Title 8, 1532.2	Construction Safety Orders – Lead
b.	Title 8, 5216	General Industry Safety Orders – Lead
c.	Title 8, 5194	Hazard Communications
d.	Title 13	Dept. of Calif. Highway Patrol Regulations
e.	Title 22	Hazardous Waste Handling

American National Standards Institute (ANSI) Publications

a. ANSI Z9.2 — 1979 Fundamental Governing the Design and Operation of Local Exhaust Systems

b. ANSI Z88.2 — 1980 Practice for Respiratory Protection

c. ANSI Z86.1 — 1973 Commodity Specifications for Air

Underwriters' Laboratory Inc. (UL) Publication

a. UL 586 — 1990 High Efficiency Particulate Air (HEPA) Filter Units

Any other federal, state, county, and City regulations, codes, and ordinances that are applicable.

2. Controlled Work Area(s): The controlled work area(s) will be the entire specified work area where the LBP containing material shall be removed. The specified work area will be vacated.

3. Title to Construction Debris: Materials and debris resulting from LBP removal work, unless otherwise indicated shall become the property of the Contractor. The LBP shall be disposed of properly, as specified in Section 3.

4. Protection of Existing Work to Remain: The LBP and LBP-containing surfaces removal work shall not damage or contaminate adjacent areas or other ongoing construction work. Areas that are damaged or contaminated by the Contractor shall be restored to original condition by the Contractor.

5. City's Representatives: The City's representatives shall be the responsible party for the required work. The City's representatives shall include, but not be limited to the Project Manager and Construction Manager; the Abatement Consultant for the project, City's Industrial Hygienist and Consultant Architect.

C. **Pre-Bid Meeting (Job-Walk Through)**: A pre-bid meeting and job walk-through will be held for the bidders at times and places directed by the City's representatives and noted in the Bid Documents. The Contract Drawings and Project Manual will be available for reference at this meeting. In addition, the City's representatives will be available to answer all questions by the bidders, submitted in writing.

1.3 QUALITY ASSURANCE

A. **Contractor's Qualifications:** The Contractor or Subcontractor performing the work of this Section shall submit information demonstrating that they posses the following qualifications:

1. A minimum of 10 years specializing in the safe removal of LBP and LBP-containing surfaces, with evidence of having successfully completed projects with requirements similar to this one.

2. Contractor or Subcontractor shall be duly licensed by the State of California with the provisions of Chapter 9, Division 3, Business and Professions Code, as amended.

3. The Contractor shall carry insurance in accordance with the City's requirements.

4. The Contractor shall be registered with the Carcinogen Control Unit, California Occupational Safety and Health Administration (OSHA).

5. The Contractor shall present proof of personnel's training, in regards to LBP abatement work.

6. The Contractor shall present standard operating procedures and employee protection plans with specific reference to their OSHA medical, exposure monitoring and respirator training programs.

7. The Contractor shall present references on previous jobs and work projects, on demand.

8. The Contractor shall present documentation on three successful completions of lead-based paint removal projects within the last 2 years.

B. <u>Air Monitoring and Inspection Firm to be Provided by the Contractor</u> :

1. Qualifications:

   a. The Air Monitoring and Inspection Firm shall be completely independent of, and in no way affiliated with the Contractor. The duties of the Air Monitoring and Inspection Firm will be described in Section 3.

   b. The Air Monitoring and Inspection Firm to be provided by the Contractor shall present at least three references.

2. Entry to the Site: Air Monitoring and Inspection Firm and City's representatives shall have the right of entry to the work areas, at any time, for purposes of inspection and monitoring.

   a. The Contractor shall provide the appropriate protective clothing for inspection and monitoring and to City's representatives.

3. Interpretation: Matters concerning interpretation of standards will be submitted to all City representatives and to appropriate administrative agency for resolution, as necessary. Where requirements of these specifications and referenced documents differ, the more stringent requirements shall apply.

4. Protective Measures: The Air Monitoring and Inspection Firm and the City's representatives reserve the right to require additional protective measures at any time during the course of the LBP and LBP-containing surfaces removal work, to protect workers, City Employees and other users.

1.4 SUBMITTALS

A. Submittals shall meet the requirements set forth in Section 01330 – Shop Drawings/Submittals.

B. **LBP and LBP-Containing Surfaces Removal Plan:**

1. Prior to the start of LBP and LBP-containing surfaces removal work, the Contractor shall submit a detailed plan of work procedures to be used in removal and disposal of materials containing LBP to the City for reviews. Contractor shall incorporate all comments and corrections prior to submitting to Federal and State governing authorities having jurisdiction for approval. The plan shall be approved by governing authorities prior to start of work. The plan shall include the location and layout of decontamination areas; the sequencing of LBP and LBP-containing surfaces removals; the interface of trades involved in the performance of work; work schedule including work shift time, number of employees, date of start and completion including dates of preparation work, removal, and final clearance dates; methods to be used to assure the safety of workers, City employees, and the public; type of wetting agent or encapsulate; disposal plan including location of approved disposal site; and a detailed description of the methods to be employed to control pollution and an emergency evacuation plan. Expand upon the use of portable HEPA-filtered ventilation system, method of removal to prohibit visible emissions in work area, and packaging of removed asbestos debris. Submit evidence of approvals to the City's representatives prior to start of work.

C. 1. Training**:** The Contractor shall submit certificates, signed by each employee, stating that employee has received training in proper handling of materials that contain LBP understands health implications and risks involved, including illnesses possible from exposure to airborne lead particles; and understands the use and limits of respiratory equipment to be used; and understands results of monitoring of airborne quantities of lead-based paint as related to health and respiratory equipment.

2. All employees must have baseline and post abatement blood lead level screenings results provided to City for review.

D. **Local Exhaust Equipment (Differential Pressure Air Machines):** The Contractor shall submit evidence of conforming to ANSI Z9.2 "Fundamentals Governing the Design and Operation of Local Exhaust Systems" for equipment required to contain HEPA filters in differential pressure air machines for personnel monitoring and site air monitoring.

E. **Permits and Notifications:** The Contractor shall secure the necessary permits in conjunction with LBP and LBP-containing surfaces removal, hauling, and disposition and provide timely notification of such actions as may be required by Federal, State, Regional, City and County of Los Angeles Governments.

1. Notify Regional Office of United States Environmental Protection Agency (USEPA) and South Coast Air Quality Management District (SCAQMD) and provide copies of notification to City's Representative and State Environment Regulatory Agency at least 10 working days prior to start of work.

2. Notify the nearest district office of CAL/OSHA, Division of Occupational Safety and Health, at least 3 working days prior to start of work.

3. Notify the air monitoring and inspection firm at least 3 working days prior to start of work.

4. Satisfactory proof to the City that required notifications and/or remediation plans, have been filed and permits have been obtained and are in full force and effective throughout course of work of this Section.

F. **Project Log Book**: The Contractor shall maintain a project log book, which will be kept up-to-date and available at the job-site. Upon completion of the work, a copy shall be submitted to the Air Monitoring and Inspection Firm for approval. After approval, two copies shall be submitted to the City's representatives. The Project Log Book will contain and conform to the following:

1. Documentation of all Notices and Submittals.

2. Permits.

3. Medical Records - Proof of Personnel's Medical Physicals.

4. Emergency Notification Data.

5. Sign-in log book, shall be filled out daily:

    - Name of person visiting the controlled work area;
    - Time entered/exited the controlled work area;
    - Affiliation and purpose;
    - Description of activity performed;
    - Description of daily work performed;
    - Any damages to the structure or furnishings;
    - Any loss of air pressure differential;
    - Any accidents (including minor accidents);
    - Results of any air samples collected by the Contractor;
    - Signature of Project Superintendent and date;

G. **Landfill:** The Contractor shall submit written evidence that the disposal facility is approved for lead disposal by EPA and State or Local Regulatory Agencies, when the LBP waste is characterized as hazardous waste. All disposal or recycling facilities used in this Project shall be located within the State of California.

H. **Monitoring Results:** The Contractor shall submit monitoring results to the City's representatives and the Air Monitoring and Inspection Firm within 3 working days. Complete airborne lead concentration analysis and notify the City's representatives.

I. **Air Pressure Differential Recordings:** The Contractor shall submit air pressure differential recordings for each work to Air Monitoring and Inspection Firm for review, and then submit to the City's representatives within 48 hours from end of each work day. Notify the City's representatives immediately of any variance in pressure differential which could cause exposure of adjacent areas to fiber concentrations in excess of acceptable time-weighted average (TWA).

J. **Hazardous Manifest**: The Contractor shall maintain a log of all manifests (hazardous and non-hazardous). The Contractor shall submit to City Engineer duplicate copies of all logs and generator's copy of the manifest to City Engineer for process. Upon receipt of the completed manifest from the Treatment, Storage or Disposal (TSD) facility where the waste has been sent, the City will make progress payment for the completed abatement work in accordance with Section 3, regardless the LBP waste characterized as hazardous or non-hazardous waste.

1.5 INSURANCE REQUIREMENTS (FOR LEAD-BASED PAINT REMOVAL)

A. Bidder shall furnish within ten days after notification of pending award, properly completed City Special Endorsement forms or binders of insurance with coverage as set forth in the attached Insurance Requirements sheet. Failure to comply will render the bid non-responsive and no award will be made to the firm.

B. Lead-Based Paint Abatement Contractor must provide a certified copy of a General Liability Insurance Policy or other evidence acceptable to the City Attorney showing that the Contractor is insured for work in the Lead-Based Paint, removal and/or encapsulation field. The actual policy declaration must contain wording that the coverage is for a Lead-Based Paint Abatement Contractor and must include coverage for completed operations.

C. Because of the severely limited availability of Lead-Based Paint Abatement Liability insurance, we are modifying the requirements to allow compliance by any of the following alternatives:

Type of Policy	Coverage	Limits/Aggregate
Comp. General Liability- Occurrence basis	Products/Completed operations	$1,000,000 $2,000,000
1986 Comp. General Liability- Occurrence basis	Products/Completed operations	$1,000,000/ $2,000,000
1986 Comp. General Liability- Claims-made basis	Products/Completed operations	$1,000,000/ $2,000,000
Owners and Contractors Protective Liability	Lead-Based Paint [PCB] Removal (City as Named Insured)	$1,000,000
Project Specific General Liability	Products/Completed operations	$1,000,000

D. If the contractor has a claims-made basis policy and changes insurance carriers, it is critical that there be no gap in coverage and that a retroactive policy be provided.

1. The foregoing applies only to the Lead-Based Paint Removal insurance requirements. All other insurance requirements remain unchanged.

E. Refer to Section 00316 - INDEMNIFICATION and Section 00317 - INSURANCE, GENERAL CONDITIONS, for additional information.

PART TWO - PRODUCTS

2.1 EQUIPMENT

A. **Respirators:** The Contractor shall use respirators from those approved by the National Institute of Occupational Safety and Health, Department of Health and Human Services.

1. Powered Air Purifying Respirators (PAPR) shall be the minimum level of respiratory protection employed during work area(s) removal of LBP LBP-containing surfaces and cleanup.

B. **Protective Clothing:** The Contractor shall provide personnel exposed to airborne lead particles with disposable protective whole-body clothing, including head coverings and

foot covering. Make sleeves secured at wrists and make foot coverings secured at ankles. Provide disposable plastic of rubber gloves to protect hands and face shields, vented goggles, or other appropriate protective equipment.

C. **Decontamination Enclosure Facilities:** The Contractor shall provide a decontamination enclosure facility for personnel required to wear whole-body protective clothing and work in the controlled work area. These facilities, and their use, shall comply with the requirements of 29 CFR 1926.62 and CCR Title 8, 1532.1 CCR Title 22.

1. The decontamination enclosure systems shall be constructed, affixed, and connected in such a manner as not to compromise the airtightness of the containment.

2. Build suitable wood or metal stud frame; or use an existing room or enclosure approved by the City's representatives and Air Monitoring and Inspection Firm. Portable, pre-fabricated units may be used if approved by the City's representatives and Air Monitoring and Inspection Firm. Approval will be based upon, but not limited to, the construction, floor plan, dimensions, materials, sizes, thicknesses, plumbing, electrical outlets, etc.

3. In all cases, access between contaminated and uncontaminated rooms or areas shall be through a decontamination enclosure system. In all cases, access between any two rooms within the decontamination enclosure shall be through an air lock with two curtained doorways.

4. Worker and Visitor Decontamination Enclosure: Construct a workers and visitor's decontamination enclosure adjoining the work area(s) consisting of three totally enclosed chambers, an equipment room, a shower room and a clean room.

    a. The equipment room shall be connected to the work area(s) and contain an air lock leading to the shower room. In addition, the equipment room shall contain a marked receptacle for the discarding of contaminated clothing prior to entering the shower room.

    b. The shower room shall be connected to the equipment room and the clean room by an air lock. An additional pan shall be placed below the stall of sufficient size to contain 5 cubic feet of water. The shower(s) shall be equipped with hot and cold or warm water. If necessary, Contractor shall provide portable hot water heater to supply hot water. The shower(s) shall have sufficient soap, shampoo, and disposable towels at all times.

    c. The shower room shall not leak, and the water shall be appropriately filtered and/or properly disposed of.

    d. The clean room shall be connected to the shower room by one air lock, with a curtained doorway leading to any other non-contaminated space within the Worker Decontamination Enclosure.

    e. It shall be large enough to provide storage for the workers street clothes, towels, or any other non-contaminated items.

5. Equipment Decontamination Enclosure: Construct an equipment decontamination enclosure consisting of two totally enclosed chambers, a washroom and a holding area

    a. The washroom constituting an air lock shall be connected to the holding

area by a curtained doorway.

b. The holding area will be connected to any uncontaminated area by a curtained.

c. These spaces shall be for the cleaning and decontamination of bagged wastes. In addition, this is preferred ingress and egress point for equipment. All equipment will be thoroughly decontaminated before leaving the decontamination enclosure facility.

d. Water in this enclosure shall be collected, filtered, and/or properly disposed.

e. The decontamination enclosure facilities shall be maintained to ensure that the barriers, air locks, and plastic linings are effectively sealed and taped.

f. Repairs shall be undertaken immediately upon discovery of a defect.

g. Visually inspect and thoroughly clean the decontamination enclosure system at the beginning and end of each workday.

6. In all cases, project site (interior and exterior) shall be protected from any contamination. No Lead-Based paint, construction or cleaning water shall be directed toward on-site soil, paving or flooring opening, drain system, and etc. No airborne duct shall be caused or directed to adjacent property.

D. **Air Pressure Differential to be Provided by Contractor:** Each controlled work area(s) shall be maintained at a minimum air pressure differential of 0.02" W.G. to adjacent areas by means of differential pressure air machines equipped with HEPA filtration. The Contractor will provide a sufficient number of differential pressure air machines to exchange the air within the controlled work area(s) every 15 minutes. The air pressure differential shall be referenced to ambient pressure within the clean room of the decontamination enclosure facilities to the controlled work area.

F. **Differential Pressure Air Machine**: The Contractor shall verify the efficiency of each differential pressure air machine and the efficiency rating shall be used in the calculations of air exchange within the controlled work area. The differential pressure air machine shall be equipped with three stages of filters, a HEPA-filtered and two pre-filters.

1. Differential pressure air machines will remain in use until a final clearance has been attained. No removal activities will be allowed without proper air pressure differential.

2.2 CAUTION SIGNS AND LABELS

A. **General:** Provide signs at approaches to LBP and LBP-containing surface removal controlled work areas. Locate signs at such distance that personnel may read sign and take necessary protective steps required before entering the controlled work area. Signs shall be bilingual, English and Spanish.

1. Signs and labels shall conform with the requirements of 29 CFR 1926.62, 40 CFR 260, CCR Title 8, 1532.1 and Title 22.

2.3 MATERIALS

A. **Encapsulant:** EPA-approved asbestos encapsulant, tinted with contrasting color to plastic sheeting surfaces, and suitable to be sprayed-applied by airless sprayer, BWE

5000 or equivalent.

B. **Plastic Sheeting:** Fire-retardant, 6-mil polyurethane plastic used to cover the critical barriers; the controlled work area(s), ceiling and floor; and decontamination enclosure facilities.

C. **Runners:** Paper, of sufficient width and length to protect floors of the building entrances to work area(s).

D. **Spray Adhesive**: 3M spray adhesive.

E. **Tape:** Duct tape.

PART THREE - EXECUTION

3.1 GENERAL

A. The painted surfaces anticipated for the LBP removal and LBP-containing surfaces removal shall include interior and exterior faces of the arch piece.

3.2 PREPARATION PROCEDURES OF THE CONTROLLED WORK AREA (S)

A. **General Preparation:** To the controlled work area(s) for the removal of LBP and LBP-containing surfaces

1. Prior to commencing any preparation of the controlled work area(s), the Contractor shall post all required documents, warning signs, and erect any physical barriers in order to secure the work area(s). The previously described project log book shall be kept updated and available for review at all times.
2. The Contractor is responsible for the work area(s) security upon establishing, preparing, and maintaining the controlled work area(s). The responsibility of security extends 24 hours per day. The Contractor may be required to retain a security service. NOTE: Only authorized visitors will be allowed on the work site.
3. The Contractor shall disconnect and lock out existing electric power to the work area(s). Provide temporary electric power and lighting and ensure safe installation of temporary power sources and equipment per applicable electrical code requirements.
4. The Contractor shall erect a sealed containment structure for the work area.
5. Unless otherwise specified, the Contractor shall install differential air pressure machines. The number of the machines required for the controlled work area(s) shall be calculated using the following:
    a. Cubic feet per minute (cfm) flow rate of the machine at a 75 percent efficiency.
    b. Cubic feet (cf) volume of the controlled work area(s) including the above ceiling space.
    c. Four air changes per hour.
6. The Contractor shall exhaust the differential pressure air machines to the exterior of the containment structure.

8. Moveable and loose items located in the work area(s) shall be cleaned using HEPA-filtered vacuum equipment and/or wet cleaning methods as appropriate or shall be removed from the work area(s).

B. **Additional Preparation**: To the controlled work area(s) for the removal of LBP from surfaces and other renovation work over existing LBP.

1. The Contractor shall contain the LBP-containing surface inside a controlled work area by either building containment around the LBP-containing surface or building containment and relocating the surface inside it. The containment shall have the walls, ceilings and floors covered with plastic sheeting. All joints and seams of the plastic sheeting shall be overlapped a minimum of 12 inches, glued, and taped together and to existing walls in a manner to prevent and prohibit water and air movement through the covered areas.

2. All project site (interior and exterior) shall be protected from any contamination in accordance with Subsection 2.1 (c)6.

3. The Contractor shall install the required differential air pressure machine, as previously described, inside the controlled work area(s).

4. If water is used to remove the LBP from surfaces, the Contractor shall construct a water capturing device. The water shall be collected, filtered and/or properly disposed.

5. The Contractor shall establish emergency fire exits in compliance with applicable fire codes/regulations. The emergency fire exits shall not be used for entering or exiting the work area, except in case of emergency. The Contractor shall post the necessary abatement warning signs in each of the fire stairwells for two floors below and one floor above the controlled work area(s), or as required by applicable fire codes/regulations. All exits shall be marked in bold red lettering "Emergency Exit."

6. The Contractor shall install their communication equipment. Equipment should be operating properly and maintained as such during removal and cleanup operations.

3.3 REMOVAL PROCEDURES OF LBP FROM SURFACES

A. Prior to beginning the removal and other renovation work activities, the Air Monitoring and Inspection Firm shall conduct a visual walk-through inspection of the controlled work area, as specified in Subsection 3.8.

B. The Contractor shall use LBP removal procedures, which prevents airborne dust and debris, approved by the City Engineer. The Contractor may elect to use chemical strippers, HEPA-filtered vacuum blasting or sanding, and/or heat blower guns with the approval of the City Engineer.

C. The removed LBP chips, flakes, dust, and debris must be evaluated and characterized as to lead content and concentration, as per CCR Title 22, Chapter 11, Article 3. The LBP chips, flakes, dust and debris must be collected and placed into 55-gallon, heavy duty type "17H" open head, non-leaking, polyurethane-lined steel drums, as per 49 CFR 173, 178, and 179.

3.4 CLEANUP OF CONTROLLED WORK AREA (S) AND DISPOSAL PROCEDURES OF

LBP WASTE

A. **Housekeeping:** Upon removal of LBP and LBP-containing surfaces or other renovation work, the following cleanup procedures, unless otherwise specified in detailed plans, shall commence:

1. Once the LBP chips, flakes, dust, and debris have been collected and placed into the specified steel drums, the Contractor shall HEPA-filtered vacuum and wet wipe all surfaces inside the controlled work area(s).

2. Request visual clearance inspection by Air Monitoring and Inspection Firm. Criteria for visual clearance inspection shall include:

   a. Completion of removal of LBP and LBP-containing surfaces.
   b. Adequate cleanup of the controlled work area.

B. **Hauling and Disposal:** All applicable Federal, State, and Local requirements shall be complied with.

1. The Contractor shall contact the City to obtain all technical information needed to complete all notification, permit and manifest before securing permit to proceeding with any work.

2. The Air Monitoring and Inspection Firm shall verify the number of steel drums and the City's representatives will sign the manifest prior to hauling and disposal of the LBP hazardous or nonhazardous waste. No progress or final payment will be made until all completed manifests have been received and approved by the City.

3. All dump receipts, trip tickets, or other documentation of disposal shall be delivered to the City's representative.

4. All shipping will be in accordance with Title 49, CFR Part 172, 173, 178 and 179.

5. All respiratory requirements specified herein shall be complied with.

3.5 SITE AIR MONITORING AND INSPECTIONS

A. **General:** Air monitoring and inspections shall be performed by the Air Monitoring and Inspection Firm in the controlled work areas as described below:

1. All air samples shall be of sufficient volume to establish a detection limit of micrograms of lead per cubic meter of air (ug/m^3) and provided by the Contractor.

B. **Prior to Removal Procedures of the LBP and LBP-Containing Surfaces and Other Renovation Work:** Air monitoring and inspections shall be performed throughout the course of the controlled work area(s) preparation, to verify that all specifications are met, and to ensure that the preparation activities do not release airborne lead particles. The inspection shall determine if all appropriate procedures, methods, measures and engineering controls have been addressed. The inspection will address:

1. Observation of the work area.

2. Observation of barriers, air locks, curtained doorways and emergency exits.

3. Observation of the decontamination enclosure system.

4. Observation of differential pressure air machines and presence of sufficient air pressure differential.

5. Observation of respirator equipment.

6. Observation to verify that all notices and warnings are posted.

7. Observations to verify the Contractor's workers have proper submittals and the project log book is up-to-date.

8. Any deficient or omissions in the controlled work area(s) preparation procedures noted by routine inspections or the City's representative shall be promptly addressed by the Contractor.

9. Any debris resulting from preparation procedures will be effectively cleaned up by the Contractor immediately.

C. **Final Inspections of the Controlled Work Area(s):** At the conclusion of the controlled work area(s) cleanup, a final inspection shall be performed to verify the removal and cleanup of LBP and LBP-containing surfaces have been completed and that no LBP chips, flakes, dust, or debris is present in the controlled work area.

D. **Clearance Air Monitoring of the Controlled Work Area(s):** After final inspection has been successfully completed, clearance air sampling shall be performed by the Contractor:

1. The clearance air sampling will be conducted using aggressive air sampling techniques, such as leaf blowers, fans, or other air agitation devices.

2. The clearance air sampling will be conducted to analyze the airborne lead particle inside the controlled work area(s). Air sampling clearance results shall indicate airborne lead particle concentrations are equal to or below 3 ug/m^3.

3. Additional cleaning tasks and air clearance sampling shall be provided by the Contractor at no additional cost to the City, as needed to meet the above criterion.

4. Upon receipt of satisfactory clearance of air sampling results, isolation measures may be removed, and the controlled work area(s) released for other construction trades.

3.6 MEASUREMENTS AND PAYMENTS:

A. All work included herein shall be part of the Contract lump sum bid price and be paid for in accordance with Section 01292 – PARTIAL PAYMENT of GENERAL REQUIREMENTS of the Project Manual.

(END OF SECTION)

SECTION 02240
SHEETING, SHORING AND BRACING SYSTEMS

PART 1 -- GENERAL

1.1 SUMMARY

Provide shoring at open excavations and elsewhere where greater than 5-feet in depth. Shoring shall be furnished, placed, maintained and removed by the Contractor, as needed to protect workers, materials, other properties and the public.

1.2 SYSTEM DESCRIPTION

A. General:

1. Shoring systems are not fully detailed on the Drawings, which are diagrammatic and show design intent of finished profiles, shapes and forms

2. Specifications are of the performance type and include the minimum requirements of the excavation support system without limiting the Contractor to methods of achieving such performance.

B. Survey of existing conditions:

.

1. Employ California licensed surveyor or civil engineer to make a survey of existing adjacent structures and improvements

   a. Establish precise elevations at fixed points to act as benchmarks

   b. Clearly identify benchmarks and record existing elevations

2. Photographs conditions encountered to highlight defects in existing construction. Notify the Engineer and registered owners of adjacent properties in writing when the survey is to be made and photographs taken so they may have representatives present.

   a. Have those representatives' present sign the survey and photographs as witnesses.
   b. Upon completion of this work, make a similar examination of the properties originally surveyed, giving similar notice to all interested parties so they may be present during the final examination of the properties. Send a record of the original and final examinations to all concerned parties.

C. <u>Design Requirements</u>:

1. Shoring: Design shoring in accordance with all applicable codes, and in accordance with the specific requirements shown on the Contract Drawings and specified in Soil Investigation Report. All wood components of the shoring system shall be constructed of pressure treated wood in conformance with the code requirement.

2. Loading: Design and construct shoring to withstand all soil and hydrostatic loading that might occur during the various stages of construction and for any surcharging loading caused by equipment loads, loads from material or soil stockpiles, and earthquake-induced loads.

   a. Determine the soil, surcharge, and hydrostatic loading, but in no case shall the loading be less than the earth and minimum equipment surcharge pressures.

   b. Determine the proper load distributions caused by such activities, and assure that those conditions are not exceeded in the field during construction.

   c. Design the shoring for lateral earth and water pressures and surcharge loads that could result from construction methods and dewatering activities.

   d. Consider sequence of excavation and placement as well as their removal of the lateral support elements in design of shoring.

3. Allowable deflection: Maximum deflection of any portion of the shoring system is 0.5 inch. The maximum allowable deflection, where there are no structures, utilities, or other improvements that may be impacted by the movement of shoring elements, may be increased up to one inch with the approval of the Engineer.

4. Existing pipes or structures shall not be used to support any portion of the open excavation unless approved by the Engineer in writing.

5 The design of shoring shall conform to accepted engineering practice in this field. Approval of the Contractor's plans and methods of construction by the Engineer or the authorized agencies does not relieve the Contractor of his responsibility for the adequacy of this support.

D. Performance Criteria

1. The Contractor shall be solely responsible for and bear the sole burden of cost for any and all damages resulting from improper shoring or failure to shore.

2. The safety of workmen, the protection of adjacent structures, property and utilities, and the installation of adequate supports for all excavations shall be the sole responsibility of the Contractor.

3. The design, planning, installation, and removal of all shoring shall be accomplished in such a manner as to maintain stability of the required excavation or trench section and to prevent any movement of soil that may cause damage to adjacent structures and utilities, damage or delay the work, or endanger life and health.

1.3 RELATED WORK SPECIFIED ELSEWHERE

A. Section 01562 Environmental Mitigation.

A. Section 02310 Earthwork.

B. Section 02530 Sanitary Sewer System.

B. Section 02545 Storm Drain System.

C. Section 03300 Cast-in-Place Concrete

D. Section 05120 Structural Steel

E. Division 15 Mechanical

F. Division 16 Electrical

1.4 CONTRACTOR SUBMITTALS

A. Comply with pertinent provisions of Section 01330 - SUBMITTALS of DIVISION 1 - GENERAL REQUIREMENTS.

B. Design and Calculations: The Contractor shall design and prepare shoring drawings and make calculations of materials used structurally in excavations, footings and foundation in accordance with the code requirements.

C. Shop Drawings: After submitting drawings for shoring to the Engineer for review, the Contractor shall incorporate all comments or corrections in the drawings, and submit to the authorized governing agencies for approval, at least three (3) weeks prior to commencement of work. After the approval is obtained, the Contractor shall submit seven (7) duplicated copies of the approved drawings to the Engineer. No excavations shall be started until all the reviews and approval of the shoring design which includes the following minimum items have been obtained from the authorized agencies, and the Engineer:

1. Design assumptions, analysis calculations, and information on Contractor's proposed method of installation and removal of all shoring.

2. The maximum design load to be carried by the various members of the support system.

3. Detailed excavation support drawings, showing all pertinent dimensions, spacing, and relationships among the components of the shoring, as well as construction sequence and scheduling.

4. The method of bracing and preloading, if any.

5. Detailed utility and structure support drawings, where necessary.

6. The full excavation depth and depth(s) below the main excavation to which the support system will be installed.

7. Detailed sequence of construction and loads for various stages of bracing removal.

8. Detailed drawings and descriptions of the method to be used by the Contractor to monitor shoring movements.

9. Types of construction equipment intended to be used in this Project.

10. Method of removing the soil from the trench or shoring.

11. Backfill Materials and Method of Backfill and Compaction.

12. Dewatering Plans.

D. Quality Control Submittals:

1. Design Data: All the design and calculations and shop drawings shall be sealed and signed by a Civil or Structural Engineer licensed in the State of California and experienced in the design of earth retaining structures. The professional engineer shall be obtained and paid for by the Contractor.

E. Permits:

1. Submit in accordance with provisions in Section 01112 – DESCRIPTION OF WORK in DIVISION 1 - GENERAL REQUIREMENTS and other Sections of the Project Manual.

2. The Contractor shall submit shoring drawings and calculations to the Los Angeles City Department of Building and Safety and obtain and pay for the required permit.

3. Obtain permit(s) as required by Title 8, Division 1-DEPT. OF INDUSTRIAL RELATIONS, Chapter 4 –DIVISION OF INDUSTRIAL SAFETY of the California Code Of Regulation, and pursuant to Subsection 7-10.4.1 - SAFETY ORDERS of SSPWC, prior to excavating to the depth of 5-feet or greater. A duplicate copy of the permit shall be submitted to the Engineer for review prior to a start of excavation.

F. Certification Form: Contractor shall completely fill out a Competent Person Trench/Excavation Certification Form provided by Inspector of Bureau of Contract Administration prior to any worker access to trench or excavations and return it to the Inspector. Contractor shall certify by this form; the name of the competent person administering the work, the soil classification, and the type of excavation protective system provided/installed.

G. Shoring Monitoring Data: As Specified herein.

H. Notification: As required by Section 3301.2 of the Los Angeles City Building Code, before commencing the excavation which is not in excess of 12 feet below the grade, the Contractor shall notify in writing the owners of adjoining buildings not less than 10 days before such excavation is to be made and that the adjoining buildings should be protected.

1.5 QUALITY ASSURANCE

A. Use adequate numbers of skilled workers who are thoroughly trained and

experienced in the necessary crafts and who are completely familiar with the specified requirements and the methods needed for proper performance of the work of this Section.

B. Employ a qualified engineer having at least five (5) year experience to design the shoring system and to inspect and report on the quality of its construction.

C. Comply with pertinent requirements of governmental agencies having jurisdiction.

D. Coordinate the shoring design and construction with:

1. Soil Investigation Report prepared for this Work;

2. Existing and proposed site improvements.

3. Utilities established in the site.

E. Regulatory Requirements:

1. Conform to provisions of Section 01410 - REGULATORY REQUIREMENTS in the GENERAL REQUIREMENTS.

2. Comply with applicable requirements, but not necessarily limited to, shown on the contract Drawings; latest adopted version of the Los Angeles City Building Code, Section 1802 – QUALITY AND DESIGN and Section 3301 – EXCAVATION AND FILLS; State of California, Code of Regulations, Title 8 – INDUSTRIAL RELATIONS, Division 1- DEPARTMENT OF INDUSTRIAL RELATIONS, Chapter 4 – DIVISION OF INDUSTRIAL SAFETY, Subchapter 4 – CONSTRUCTION SAFETY ORDERS, Section 1539, 1540 and 1541.

1.6 PROTECTIONS

A. Protect adjacent existing improvements against damage by Contractor's operations. Protect all excavation so that the soil of adjoining property will not cave in or settle. Repair or replace damaged items to the full satisfaction of the City at no extra cost to the City.

B. Shore, crib or lag excavations and earthbanks as necessary to prevent caving in, erosion or gullying of sides.

C. Divert or pump water out of all excavations and trenches until all installation work and backfilling are completed and inspected.

1.7 INSPECTIONS

A. Excavation of existing fills, reworking of natural soils and compaction of all required fills will be inspected and tested by the City of Los Angeles Building and Safety Inspector and the Soils Engineer (who will be responsible to the Engineer and will be paid for by the City).

B. Place all such backfill under the full supervision of the Soils Engineer.

PART 2 – PRODUCTS (NOT USED)

PART 3 -- EXECUTION

3.1 SURFACE CONDITIONS

A. Examine the areas and conditions under which work of this Section will be performed. Correct conditions detrimental to timely and proper completion of the work. Do not proceed until detrimental conditions are corrected.

B. Existing Utilities: Contract Drawings show major utilities, but all utilities may not be shown. The Contractor will obtain all as-built records of existing utilities from local government authorities or Utility Companies and field check locations of utilities with representatives of the Utility Company. Protect and provide utility trench support to any sewer, water, gas, electric or other pipelines or conduits uncovered during work from damage.

1. Excavate by hand or other excavation methods acceptable to the utility owner.

2. If existing utilities interfere with Contractor's proposed method of support, any required modification or relocation shall be performed at no additional cost to the City.

3. Contact Underground Service Alert, (800) 422-4133, and obtain underground service alert inquiry I.D. Number 48 hours prior to digging. Report the I.D. Number to the Bureau of Contract Administration when calling for inspection.

C. Provisions for Contingencies:

1. Provide a contingency plan or alternative procedures to be implemented if unfavorable performance is evidenced from the monitoring program.

a. Keep on hand the necessary materials and equipment to implement the contingency plan.

2. If support elements project beyond the vertical projection of the right-of-way shown on the Contract Drawings onto adjoining property, the Contractor shall obtain permission of the adjoining property owner in writing. The Contractor shall bear cost required to obtain such permission.

3. Subsurface Conditions: Evaluate subsurface conditions as excavation occurs.

4. Differing Conditions: Notify the Engineer of differing conditions that could affect the shoring design assumptions.

5. Acceptance: Proceeding with work means acceptance of existing conditions.

6. Notifications: The Contractor shall make all the necessary notifications to the adjacent properties, as described herein before.

3.2 PREPARATION

A. Protection:

1. Protect or repair utilities damaged by operations of this Section.

2. Protect adjacent structures and property from damage and disfiguration.

B. Dewatering:

1. Where applicable, no excavation shall commence until the Contractor has demonstrated to the satisfaction of the Engineer that the groundwater level has been lowered. Dewatering and that the soils inside the excavation are in the dewatered condition that was assumed in the Contractor's shoring design and submittal.

3.3 INSTALLATION

A. All trench and excavation openings shall be lighted and fenced or barricaded during nights, weekends, and other times as necessary and meet CAL/OSHA safety requirements.

B. All shoring shall be installed to the lines and elevations shown on the Contractor's review working drawings. No component of the shoring shall infringe on the minimum dimensions of any permanent structure shown in the Contract Drawings.

C. The excavation shall be staged as shown in the Construction Drawings or on required work documents and in such a manner as to provide a stable system of support at all times.

D. Should the shoring system utilize steel H-beams, piles, or other similar vertical supports, driving of said vertical supports will not be permitted in proximity of existing structures except for the last 4-feet. The vertical supports shall be placed in holes drilled to a depth of 4-feet above the proposed bottom of pile, except where this procedure is impracticable. The vertical support may then be driven to the required depth, not to exceed 4-feet. During the drilling and driving operations, the Contractor shall take care to avoid damage to utilities.

At locations where the drilling of such holes is impracticable because of the existence of obstructions or rocks, running sand, or other adverse condition, and provided said impracticability is demonstrated to the satisfaction of the Engineer by actual drilling operations by the Contractor, the Engineer may, upon request of the Contractor, approve the use of means other than drilling for the purpose of placing the vertical support. Such other means, however, must be of a nature which will accomplish, as nearly as possible, the purpose of the drilling, namely, the prevention of damage to existing surface or subsurface improvements, both public and private.

3.4 MONITORING

A. Employ a California-licensed surveyor or civil engineer to design, construct and maintain an on-going monitoring system of the horizontal and vertical deflections

of the excavation support systems and the settlement of the adjacent ground and structures.

1. Regularly resurvey benchmarks specified during installation of excavation support systems.

2. Monitor excavation support and protection systems daily during excavation progress and for as long as excavation remains open.

3. Regularly survey adjacent ground and structures to verify that no settlement is occurring or has occurred as a result of the construction activities.

4. Maintain an accurate log of surveyed elevations and positions for comparison with original elevations and positions. Maintain accuracy within 1/100 of a foot and keep records in a readily understandable form, such as a tabular form of both the net and total deflections (both horizontal and vertical) of each solder pile.

B. Submit a copy of all the daily readings to the Engineer at the end of each week. Notify the Inspector or the Engineer immediately for any excessive movements or deflection.

1. If changes in elevations or positions occur or if cracks, sags, or other damage is evident in adjacent construction, promptly notify Engineer and immediately take steps to remedy the situation.

2. Horizontal and lateral deflections into the excavation at any location on the shoring shall be limited to a maximum of 0.5 inch. If at any time this deflection exceeds 0.5 inch, immediate corrective measures shall be taken by the Contractor to prevent any further deflections.

3. The Contractor shall stop the excavation work until corrective measures have been taken and the deflections have been reduced to acceptable limits as specified.

3.5 REMOVAL OF SHORING

A. Shoring shall be designed to be gradually removed as necessary to allow backfill to be placed and compacted. All voids existing behind the shoring which remains in place shall be backfilled with structural concrete as specified in Section 02310 - EARTHWORK.

B. Shoring shall be removed as backfilling progresses. Removal shall be conducted in such a manner so as to avoid any damage to adjacent facilities or to other members of the shoring system. Impact loading in members of the shoring system will not be allowed. All wood forms, loose or casual wood and debris shall be removed. Areas that cannot be accessed or achieve adequate compaction shall be backfilled with structural backfill without additional cost to the City.

C. During backfilling, temporary support elements shall not be removed until alternative support is available, such as substituted struts, backfill, or ability of the support system to act as a cantilever without detrimental deflection.

D. Portions of shoring used to support excavations for installation of sanitary sewer and storm drain facilities shall be removed and the pipe bedding and side support shall be recompacted to the satisfaction of the Engineer.

(END OF SECTION)

SECTION 02310
EARTHWORK

PART ONE - GENERAL

1.1 SUMMARY

A. Provide and execute earthwork as indicated on the Contract Drawings or in the Project Manual including but not limited to the following:

1. General excavating and trenching for various trades.

2. General exterior grading and cutting.

3. General excavating for site improvements.

4. Select base materials for under concrete slab and under paving.

5. Filling and Backfilling.

6. Structure excavation, unclassified fill and borrow excavation defined in Section 300 – EARTHWORK of the "Standard Specifications for Public Works Construction (SSPWC)".

B. RELATED WORK SPECIFIED ELSEWHERE

1. Documents affecting work of this Section include, but are not necessarily limited to the GENERAL CONDITIONS, SUPPLEMENTARY CONDITIONS, DIVISION 1 - GENERAL REQUIREMENTS and other applicable Sections of the Project Manual.

2. Environmental Mitigation in Section 01562.

3. Site Demolition in Section 02220.

4. Clearing, Grubbing and Stripping in Section 02210.

5. Sheeting, Shoring and Bracing systems in Section 02240.

6. Soil Stabilization in Section 02330.

7. Maintenance and Support of Utilities in Section 02501.

8. Water Distribution in Section 02510.

9. Yard and Street Work in Section 02710.

10. Unit Paving in Section 02720.

11. Crushed Stone Surfacing in Section 02730.

12. Sanitary Sewer System in Section 02540.

13. Storm Drain System in Section 02545.

14. Chain Link Fencing in Section 02821.

15. Decorative Metal Fencing and Gates in Section 02822.

16. Site Furnishings in Section 02870.

17. Irrigation and Landscaping Work in Division 2.

18. Concrete Work in Division 3.

19. Disabled Accessibility Parking Signage in Section 10443.

20. Plumbing Work in Division 15.

21. Electrical Work in Division 16.

1.2 QUALITY ASSURANCE

A. Labor: Use adequate numbers of skilled laborers to are thoroughly trained and experienced in the necessary crafts and who are completely familiar with specified requirements and the methods needed for proper performance of the Work of this Section.

B. Equipment: Use equipment adequate in size, capacity, and numbers to accomplish the work of this Section in a timely manner.

C. Codes and Standards: Perform excavation work in compliance with applicable ordinance of governing authorities having jurisdiction including, but not limited to, the 2020 L. A. City Building Code and applicable Amendments; Division 1-DEPARTMENT OF INDUSTRIAL RELATIONS of Title 8 of the California Code of Regulations; Section 300 - EARTHWORK of SSPWC, as amended by Brownbook.

1. In addition to complying with Codes and Standards having jurisdiction, comply with directions of the Soil Engineer.

D. The Contractor shall provide necessary measures for storm water pollution control and water quality protection. The Contractor shall meet the standards of good housekeeping at all times.

E. Testing and Inspection Services: The City will engage a qualified soil testing and inspection service for quality control testing during earthwork operations. Testing shall be performed in accordance with the soil investigation reports and testing standards, the instructions of the Soil Engineer and the applicable Sections of General Conditions.

F. Soil Engineer: The City will retain the services of a Soil Engineer for the purpose of soil investigations and testing, all the necessary inspections and observations, and certifications.

G. Survey: The Contractor shall employ the services of a California licensed surveyor for the purposes of survey control, layout, grade and cross-sections

required to control work. Survey work shall conform to Section 01722-SURVEYING.

1.3 SUBMITTALS

Conform to provisions of Section 01330 of DIVISION 1 - GENERAL REQUIREMENTS.

A. Shop Drawing of the Shoring System in Section 02240.

B. Sources of imported materials.

C. Method of Back-Filling and Compaction.

D. Dewatering Plans.

E. California General Construction Activity Stormwater Permit, Waste Discharge Identification Number, Wet Weather Erosion Control Plan or Stormwater Pollution Prevention Plan.

F. Competent Person Trench/Excavation Certification Form in Section 02240 – SHORING.

G. Test Reports-Excavating: Contractor shall submit the following reports directly to the Los Angeles City Department of Building & Safety, prepared by the Soil Engineer and the testing service, with a copy to the Engineer.

1. Test reports on borrow material.

2. Verification of each footing subgrade.

3. Field density test reports.

4. One optimum moisture-maximum density curve for each type of soil encountered.

5. Other test reports as required by the Soil Engineer and the local cognizant agency.

1.4 PERMITS

A. Required: In addition to the requirements specified herein, and in applicable Section 01112 – DESCRIPTION OF WORK of DIVISION 1 - GENERAL REQUIREMENTS of the Project Manual.

B. The Contractor shall perform all work in accordance with the project permit requirements, including obtaining the grading permit, hauling permit and bond, and making the notification to the adjacent property owners; no additional compensation will be allowed therefore.

C. Contractor shall furnish Engineer with a duplicate copy of OSHA excavation permit, and all other required permits prior to the start of the excavation work.

D. The Contractor shall obtain and pay for the Bureau of Engineering's Shoring (Lateral Support) Permit.

E. The Contractor shall obtain and pay for the California State Regional Water Quality Control Board (LARWQCB) Construction Water Discharge Permit.

F. The Contractor shall obtain and pay for Calif General Construction Activity Stormwater Permit. The Contractor shall obtain Waste Discharge Identification Number after submitting Stormwater Pollution Prevention Plan (SWPPP) pursuant to Section 91.106 of L.A.M.C. to the Los Angeles City Dept. Building and Safety for reviews.

G. The Contractor shall make all necessary notifications, obtain and pay for required permits and file manifests with the South Coast Air Quality Management District (S.C.A.Q.M.D.).

1.5 JOB CONDITIONS

A. Required Work Coordination: The Contractor shall fully coordinate the work operations of this Section with that of other trades involved and with the Engineer to assure proper sequence of work, limitations, methods and time of work so as to minimize or avoid interference with the existing utilities as well as performance of work by the other Contractors. Contractor shall include minimum two weeks in its Construction Schedule to allow the Soil Engineer to prepare final Soil Report to be submitted to the Los Angeles City Department of Building and Safety Grading Division for final approval if the Soil Engineer is obtained by the City. The Contractor shall coordinate and arrange for all the inspections with the local authorized agencies and the Bureau of Contract Administration.

B. Contractor shall be prepared to handle oversized concrete material and be able break material into smaller pieces as necessary to remove and properly dispose of said material off-site at no additional cost to the CITY.

C. Trench Safety: Attention is directed to the provisions of Section 6705 of the Labor Code and Section 02240 – SHEETING, SHORING AND BRACING SYSTEMS of the Project Manual concerning trench excavation safety plans.

D. Air Pollution Control: The Contractor shall comply with all air pollution control rules, regulations, ordinances and statutes which apply to work performed pursuant to the Contract, including any air pollution control rules, regulations, ordinances and statutes, specified in Section 1107 of the Government Code.

E. Use of Pesticides: The Contractor shall comply with all rules and regulations of the Department of Food and Agriculture, the Department of Health, the Department of Industrial Relations and all other agencies which govern the use of pesticides required in the performance of the Work on the Contract.

1. Pesticides shall include, but shall not be limited to herbicides, insecticides, fungicides, rodenticides, germicides, menatocides, bactericides, inhibitors, fumigants, defoliants, soil sterilants, and repellents.

2. Any substance or mixture of substances intended for preventing, repelling, mitigating or destroying weeds, insects, diseases, rodents, or nematodes and any substance of mixture for substances intended for use as a plant regulator, defoliant shall be considered as a pesticide.

F. Sound Control Requirements: The Contractor shall comply with all local sound control and noise level rules, regulations and ordinances which apply to any work performed pursuant to the Contract.

Each combustion engine, used for any purpose on the job or related to the job, shall be equipped with a muffler of a type recommended by the manufacturer. No internal combustion engine shall be operated on the project without said muffler.

G. Use of Explosives: The use of explosives is not permitted.

1.6 PROTECTIONS

A. General: Comply with provisions of Section 00309 - PROTECTION OF PERSONS AND PROPERTY AND RESTORATION OF EXISTING IMPROVEMENTS in GENERAL CONDITIONS. Protect and guard all excavations against damage to life, limb and property as prescribed by Los Angeles City Department of Building and Safety.

B. Protections of Persons and Property: Provide and install signs, lights and barricades at danger points on and off the job-site to guard against accidents, etc.

1. Barricade open excavations occurring as part of this work and post with warning lights.

2. Operate and maintain warning lights as recommended by authorities having jurisdiction.

3. Protect structures, utilities, sidewalks, pavements and other facilities from damage caused by settlement, lateral movement, undermining, washout and other hazards created by earthwork operations.

4. Perform excavation within drip-line of large trees to remain by hand, and protect the root system from drainage or dry out to the greatest extent possible. Maintain moist condition for root system and cover exposed roots with burlap. Paint root cuts of 1" diameter and larger with emulsified asphalt tree paint.

C. Existing Improvements (including trees and shrubs Indicated to Remain): Protect against damage resulting from Contractor's operations. Repair or replace damaged items to the full satisfactions of the City at no added cost to the City.

D. Shoring, Cribbing and Lagging: Required of excavations and earthbanks as necessary to prevent caving in, erosion or gullying of sides. Conform to applicable provisions in Section 02240 – SHORING of the Project Manual.

1. Design and calculations of shoring, etc. shall be in accordance with requirements of with the latest Los Angeles City Building Code, Section 2811 and Safety Orders of State of California, Division of Industrial Safety, Title 8, Subchapter 4, Article 6, Sections 1540 and 1541.

2. Upon completion of project or when no longer needed or otherwise directed by the authority having jurisdiction, remove all such shoring from the job-site.

E. Existing Utilities: Utilities shown on the drawings are shown pursuant to a search of available records and are shown as a matter of information and not as a matter of fact. Conforming with Section 01112 - SUMMARY OF THE WORK, Section 01140 – CONTRACTOR'S USE OF THE PREMISES and other Sections of the Project Manual, the Contractor shall locate existing underground utilities in areas of work. If utilities are to remain in place, provide adequate means of support and protection during earthwork operations.

1. Should uncharted or incorrectly charted piping or other utilities be encountered during excavation, consult City immediately for directions. Cooperate with City and utility companies in keeping respective services and facilities in operation. Repair damaged utilities to satisfaction of utility Company.

2. Do not interrupt existing utilities serving facilities occupied and used by City and others, during occupied hours, except when permitted in writing by the Engineer and then only after acceptable temporary utility services have been provided.

3. Provide a minimum of 48-hour notice to the Engineer, and receive written notice to proceed before interrupting any utility. Obtain clearance and notify all utility companies in the area and call Underground Service Alert by calling (800) 422-4133. Deliver utility clearance ticket number to the Engineer prior to the start of any work.

4. Demolish and completely remove from site existing underground utilities indicated to be removed. Coordinate with utility companies for shut-off of service if lines are active.

1.7 INSPECTION

A. Required: All excavations and trenches shall be inspected by the Inspector, and the Soil Engineer before filling, backfilling and/or other subsequent work is placed therein.

1. Earthwork backfill for structures shall comply with requirements of Section 300-3.5 - STRUCTURAL BACKFILL of SSPWC and/or requirements in the Project Manual.

1.8 SOILS INFORMATION

Draft Geotechnical Site Investigation No. LAC-17-001 by Hushmand Associates, Inc. dated January 2018 and the supplemental update of this geotechnical report by Tetra Tech Inc. (Project No. TET 21-203E) dated August 2021 are a part of Project Manual. Contractor shall comply with all Soils Report recommendations specified and other instruction directed by the City Engineer. In case of conflicts between other parts of the Project Manual and Soils Report, the most restrictive condition shall govern unless otherwise approved by the Soil Engineer. Soil Report is provided in Section 01112 – DESCRIPTION OF WORK of the Project Manual.

1.9 MATERIAL HANDLING

A. Delivery: All materials, tools, equipment, etc. to be delivered to the job-site, in such a manner coordinated with progress of work of this Section.

B. Material Storage: Stockpile satisfactory excavated materials where directed, until required for backfill or dispose of in accordance with Section 300-2.6 - SURPLUS MATERIALS of SSPWC. Place, grade and shape stockpiles for proper drainage.

1. Locate and retain soil materials away from edge of excavations. Do not store within drip line of trees indicated to remain.

2. Dispose of excess soil material and waste materials as herein specified.

PART TWO – PRODUCTS

2.1 SOIL MATERIALS

A. Suitable Excavated Material: Suitable materials from excavations for use in fill and embankments shall be free from shale, sod, large clods or hard lumps of earth, roots, trash or other debris; that has a liquid limit of less than 30 and a plasticity index of less than 9; and is readily compatible to specified density. No rock, cobbles or broken concrete exceeding 3 inches in maximum dimension shall be placed in compacted fill without the specified approval of the Engineer. No rock, cobles or broken concrete exceeding 1 inch in maximum dimension shall be placed in compacted fill of the utility trench. Refer to the Project Geotechnical Investigation Reports for additional requirements.

B. Fill Material: Furnish imported earth material as necessary; if specified in the contract requirements or if the amount of suitable earth materials obtained from the job-site excavations is not sufficient to properly construct the required fill, subject to the approval of the Engineer or the Soil Engineer prior to use.

1. Submit imported fill material samples and testing results for the Engineer’s approval prior to importing to the job site in accordance with Section 300-5 BORROW EXCAVATION of SSPWC.

2. Imported fill material shall be free of foreign materials, vegetable growths, sod, rocks, expansive soils and all debris.

3. Lime for Treatment of Imported Fill Material: As here after specified in accordance with Section 301-5 - LIME-TREATED SOIL of SSPWC.

4. Where fill material exhibits a wide variation in consistency, the Engineer may require blending to stabilize and upgrade the material as directed by the Engineer.

5. In landscape (planting area), fill shall not be saline or contain anything that would prevent normal plant growth: See LANDSCAPING, Section 02900 of the Project Manual for verification of required or approved fill material.

6. Fill material is subject to the approval of the Soil Engineer or City Engineer.

C. Base Material: "Crushed Aggregate Base", 3/4-inch maximum size aggregate, or “Crushed Miscellaneous Base”, 1-1/2-inch maximum size aggregate, as specified in Section 200-2 - UNTREATED BASE MATERIALS of SSPWC. Crushed Miscellaneous Base must meet the requirements of Caltrans Standard Specifications Section 26-1.02B. Caltrans Class 3 permeable base and Class 4 aggregate base per Caltrans Standard Specifications. ASTM C33 washed concrete sand.

D. Pipe Bedding and Trench Backfill Material:

1. Use clean earth materials previously removed from job-site excavations or use imported fill materials as above specified free from clay, rock or gravel larger than 1-inches for utility trench backfill subject to the Soil Engineer’s approval prior to use. All pipe bedding shall conform to SSPWC Section 217 – BEDDING AND BACKFILL MATERIALS.

2. For sanitary sewer pipe, use Case 5 concrete bedding material in accordance with City of Los Angeles Standard Plan S251-1 with the balance of backfill to be approved clean earth materials.

4. For storm drain pipe, use Class 1 material per ASTM D2321 for bedding and pipe zone backfill. Zone shall extend 4 inches below and 12 inches above said pipe. The balance of backfill to be approved clean earth materials. Where shown on contract drawings, use Case 5 concrete bedding material in accordance with City of Los Angeles Standard Plan S251-1 with the balance of backfill to be approved clean earth materials

5. For water pipe or pipe rise**,** use approved washed sand with a sand equivalent value of 30 or more and extend 6 inches below and 12 inches above said pipe, the balance of backfill to be approved clean earth materials.

6. For electrical conduits, construct reinforced concrete duct bank in accordance with the contract drawings, the balance of backfill to be approved clean earth materials. For utility service connection, provide bedding and backfill material in accordance with utility company’s instructions.

7. For the landscape irrigation piping, use approved washed sand with a sand equivalent value of 30 or more and extend 6 inches below and 12 inches above said pipe, the balance of backfill to be an approved clean earth material.

8. Conforming to applicable Sections of the Project Manual for the pipe bedding widths and depths.

E. Soil Cement: Use the soil-cement to form a dense, uniform mass conforming to the lines, grades and cross sections shown on the Contract Drawings. The soil cement shall be mixed, placed and compacted at least 95% of the relative compaction, in accordance with Section 301-3 of SSPWC and the instructions of the Soil Engineer.

F. Structural Backfill: The structural backfill shall have a sand equivalent of not less than 20 in accordance with Section 300-3.5 - STRUCTURAL BACKFILL and

Section 300-4.5 - PLACING MATERIALS FOR FILLS of SSPWC, and placed and compacted to 90% of relative compaction. Refer to the Project Geotechnical Investigation Reports for additional requirements below foundations and slabs on grade.

G. Slurry Backfill: Slurry backfill shall be 60 E 0.7 (Class 100-E-100) and placed in accordance with Section 306-1.3.1 - BACKFILL AND DENSIFICATIONS of SSPWC.

H. Drainage Fill Material: Washed AASHTO NO. 8 stone, Washed AASHTO No. 57 stone, ¾" Crushed Washed Stone, Medium Washed Sand (ASTM F2396), and Washed ¼" Minus Bridging Aggregate (ASTM C33 No. 89) per contract drawings.

2.2 WEED KILLER/SOIL STERILANT

Provide a dry, free-flowing, dust-free chemical compound, soluble in water, capable of inhibiting growth of vegetation, and approved for use on this Work by governmental agencies having jurisdiction.

A. Tinted for visual identification, shall be as follow:

1. United States Borax Corp. "Polyborchlorate" or equal.

2. Pacific Coast Borax Co. "Polyborchlorate".

3. Amspray Corp. "Pavex".

5. Elanco "Spike 801".

2.3 TOPSOIL

A. Where required by and shown on the Landscape Drawings or otherwise required, provide topsoil as described within Section 02900 – LANDSCAPING.

B. Obtain topsoil from sources within the project limits, provide imported topsoil from approved sources outside the project limits, or from both sources.

2.4 OTHER MATERIALS

Provide other materials, not specifically described but required for a complete and proper installation, as selected by the Contractor subject to the approval of the City Engineer or the Consultant.

PART THREE - EXECUTION

3.1 SURFACE CONDITIONS

Examine the areas and conditions under which work of this Section will be performed. Correct conditions detrimental to timely and proper completion of the Work. Do not proceed until detrimental conditions are corrected.

3.2 WATER QUALITY PROTECTION

A. Eroded sediments and other pollutants must be retained on side and may not be transported from the site via sheetflow, swales, area drains, natural drainage, or wind.

B. Stockpiles of earth and other construction-related materials must be protected from being transported from the site by wind or water.

C. Fuels, oils, solvents, and other toxic materials must be stored in accordance with their listing and are not to contaminate the soil ~~n~~or the surface waters. All approved toxic storage containers are to be protected from the weather. Spills must be cleaned up immediately and disposed of in a proper manner. Spills may not be washed into the drainage system.

D. Excess or waste concrete may not be washed into the public way or any drainage system. Provisions shall be made to retain concrete wastes on-site until they can be appropriately disposed of or recycled.

E. Trash and construction-related solid wastes must be deposited into a covered receptacle to prevent contamination of rainwater and dispersal by wind.

F. Sediments and other materials may not be tracked from the site by vehicle traffic. The construction entrance roadways must be stabilized so as to inhibit sediments from being deposited into the public ways. Accidental depositions must be swept up immediately and may not be washed down by rain or by any other means.

G. Comply with requirements shown in the Storm Water Pollution Prevention Plan (SWPPP).

3.3 CONTAMINATED SOIL

A. The following requirements apply to handling and disposing of contaminated soils or debris encountered during site excavations.

1. The Contractor shall be licensed for hazardous materials handling and hauling or have a qualified licensed subcontractor on call to provide a site-specific Health & Safety Plan and supervise sampling and chemical analysis of potentially-contaminated soils or debris. The Plan should specify particular action levels for each contaminant found during exploratory drilling and suspected to occur along the project alignment or within the site and provide guidelines for personal safety and public protection, including monitoring and appropriate personal protective equipment needed on the jobsite during all phases of excavation of the project.

2. The workers exposed to or handling contaminated soils shall have sufficient health and safety training, consistent with OSHA Hazardous Waste Operation Standards (29 CFR 1910.120), and Cal-OSHA “Hazardous Waste Operations & Emergency Response” (8 CCR 5192). The contractor, qualified subcontractor or an industrial hygienist shall prepare a site-specific health and safety plan. The plan shall appoint a site safety officer and establish responses to contaminants, including

methane gas, known to exist in the area based on site knowledge and/or a Phase II Site Assessment Report.

3. Soils which have visible staining or an odor shall be tested in the field by the contractor or qualified environmental subcontractor with an organic vapor analyzer (OVA) for volatile components, which require additional considerations in their handling and disposal. Soil with OVA readings exceeding 50 ppm volatile organic compounds (probe held 3 inches from the excavated soil face), or which is visibly stained or has a detectable petrochemical odor shall be stockpiled by the Contractor separately from non-contaminated soils. If volatile compounds are present at concentrations exceeding 50 ppm, an SCAQMD Rule 1166 permit will be required, which most likely will require control of vapor, such as covering the stockpiles with plastic sheeting or wetting with water or a soap solution. The Contractor shall obtain all permits.

4. The stockpiles shall be barricaded near the excavation area, away from drainage areas or catch basins, on an impermeable plastic liner (6 mil nominal thickness and tested at 100 psi strength). Caution must be taken to separate any contaminated soil from the remainder of the excavated material. If only a small amount of contaminated soil is encountered, it may be drummed in 55-gallon steel drums with sealing lids. Sealed soil bins may be required on larger projects and/or those in residential areas.

5. The stockpiled soil shall be sampled in a random and representative manner. To establish waste classification, samples shall be analyzed for Total Recoverable Petroleum Hydrocarbons (TRPH), volatile organics (VOC), TPH as gasoline or diesel if these fuels are found in the area, Title 22 heavy metals, reactivity (pH), corrosivity and toxicity. The number of samples will depend upon the volume of material removed, one sample for approximately every ton of soil. Storage space available at the site and site occupant sensitivity will determine the amount of soil that can be stockpiled. Suspected contaminated soil samples can be taken to a State-certified environmental laboratory or tested in the field with a mobile lab. Materials with elevated levels of TRPH, metals or other regulated contaminants will require handling by workers who have been adequately trained for health and safety aspects of hazardous material handling.

6. In older areas of the City, unanticipated types of hazardous waste are sometimes encountered, even if not discovered in the site assessment investigations. Should potential biohazards (such as medical waste material or syringes), lead-based paint, mercury-containing lamps or thermostats, PCB-containing transformer ballast, or asbestos-containing materials as “Transite” pipe be suspected, appropriate chemical tests shall be taken to verify the presence and concentrations of these contaminants before they are disturbed. All appropriate U.S. EPA and Cal-OSHA regulations must be followed; generally specialty licensed hazmat remediation and/or air monitoring firms with certified personnel must be employed.

B. Removal and Classification of Excavated Soil

1. Any contaminated material (soil, asphalt, concrete, railroad ballast, trash fill or debris) that is to be hauled off the site is considered a "waste product" and must be classified as hazardous or nonhazardous waste under all criteria by both State and Federal Codes prior to disposal. If the waste soil or other material is determined hazardous, a hazardous waste manifest will be prepared by the Contractor or its qualified representative and the material transported to an appropriate class of facility for recycling or landfill disposal by a registered hazardous material transporter. If the soil is nonhazardous but still exceeds levels that can be returned to the excavation or is not needed on the site, a less costly nonhazardous transporter and soil recycling facility shall be used if no hazardous constituents are present above their respective action levels.

2. Soil with levels of 100 ppm TRPH (crude oil, waste oil and diesel), 10 ppm gasoline, and 1/50/50/50/ ppm benzene, toluene, ethylbenzene and xylenes needs to be moved offsite. Soil contaminated with hydrocarbons at values less than these values may be backfilled, used for fill or paved over. All excavated material moved offsite must be manifested, transported by a registered hauler, and disposed of in the proper class landfill or recycler.

3. The Contractor shall notify Inspector of all contaminated material removals, and provide copies of signed manifests.

C. Contaminated Groundwater

1. Water quality may vary over the project excavation. Contamination with fuel hydrocarbons, heavy metals and high mineral content is possible. Should any dewatering be needed for excavation bottoms, the extent shall be minimized, sufficient to remove interior or nuisance water from structures. Dewatering minimization is required to avoid moving potential contamination plumes nearby and to avoid settlement of nearby structures. Cut-off methods such as using interlocking sheetpiles or slurry/grout walls may be used. Dewatering plans shall be prepared by the Contractor or qualified Geologist and reviewed and approved by the Engineer before dewatering operations begin. Sampling ports should be provided in the dewatering system.

2. The produced water shall be temporarily stored in large Baker-type tanks and analyzed by a State-certified environmental laboratory selected by the contractor. If the groundwater quality falls within guidelines established by the Bureau of Sanitation, Department of Public Works, a permit may be obtained to discharge the water into a nearby sewer. A NPDES permit from the Los Angeles Regional Water Quality Control Board will be required for any discharge into the storm drain system. If hydrocarbon or other water contamination precludes this, the water will have to be treated onsite (such as in an oil-water separator) or hauled off-site in vacuum trucks to a local water treatment facility.

3.4 SITE PREPARATION

A. Remove the existing soil including fill material, debris, roots and foreign materials to a depth sufficient to remove all organic material. Removal shall be done in accordance with Section 02210 – CLEARING, GRUBBING AND STRIPPING of the Project Manual.

B. Topsoil from the strippings shall be stockpiled and may be used for the finished site grading, subject to the approval of the ENGINEER. Excess topsoil will be placed in the waste disposal areas designated by the ENGINEER.

C. Subgrades: Scarify for recompaction to a depth of 12-inches, bring to optimum moisture content per Geotechnical Site Investigation Report and then recompact to at least 90% maximum density (95% below pavement areas) for subgrade as per ASTM D1557 - TESTED METHOD FOR LABORATORY COMPACTION CHARACTERISTICS OF SOIL USING MODIFIED EFFORT (56,000 FT - LBF/FT^3.). Prepare subgrade in accordance with Section 301-1 - SUBGRADE PREPARATION of SSPWC.

D. Holes and trenches existing on the job-site or resulting from Contractor's operations shall be filled with clean existing or imported earth materials (free of large clods and stone).

Unless indicated otherwise, construct fill in accordance with Section 300-4.5 - PLACING MATERIALS FOR FILLS of SSPWC in 8-inch layers and each layer compacted to 90% relative compaction (95% in the upper 12” below pavement areas) and finished to elevations necessary to require cutting by fine grading. Inspection by the Inspector and the Soil Engineer are required prior to filling. Obtain minimum one compaction test for each layer or volume specified by Code.

E. Grading: To elevations of existing adjoining street surfaces, private property and surfaces immediately adjacent to the job-site limits indicated on the Contract Drawings; make all grades in a straight line from any point to any other perimeter point.

F. Dewatering:

1. Remove all water, including rain water, encountered during trench and sub-structure work to an approved location by pumps, drains, and other approved methods.

2. Keep excavations and site construction area free from water.

G. Dust Control: Use means necessary to prevent dust becoming a nuisance to the public, to neighbors, and to other work being performed on or near the job-site.

H. Moisture Control: Where subgrade or layer of soil material must be moisture conditioned before compaction, uniformly apply water to surface of subgrade, or layer of soil material. Apply water in manner to prevent free water appearing on surface during or subsequent to compaction operations.

1. Remove and replace, or scarify and air dry, soil material that is too wet to permit compaction to specified density.

2. Soil material that has been removed because it is too wet to permit compaction may be stockpiled or spread and allowed to dry. Assist drying by discing, harrowing, or pulverizing until moisture content is reduced to a satisfactory value.

I. Rework: Any previously compacted or tested subgrade and fill material, which are affected or disturbed, in the opinion of the Soil Engineer, by the inclemency of the weather such as rains, floods, earthquake or others shall be reworked, retested and re-inspected at no additional cost to the City.

J. Approval of Subgrade**:** By the Soil Engineer and the Inspector prior to placing any fill.

K. Subgrade Preparation Where Extensive Fills Will Occur:

1. Remove disturbed existing soils and stockpile materials approved by the Soil Engineer for use in fills and as backfill materials. Dispose unsuitable materials off the job-site.

2. Subgrade to be approved by the Inspector and the Soil Engineer.

3. Scarify the upper 8 inches of the soil over the entire rough grade site, moisture condition per the Geotechnical Report, and recompact to a minimum relative compaction of 95%.

4. Bring to designated rough grades, using existing on-site as approved by Soil Engineer, regrade by removing and replacing materials in loose lifts and bringing to 2% above optimum moisture content and compacting to 90% (95% in the upper 12” below pavement areas) relative compaction as above specified for exposed soils to receive fills. Use granular material for fills behind retaining walls.

5. Testing of Fills: Test the fill for conformance with code requirements; under continuous control supervision of a qualified representative of the City. The City's representative shall keep a log of the tests performed which will be filed with the Engineer upon completion of the work. Contractor to bear the costs of rework, retesting and re-inspection because of non-conformance.

3.5 GRUBBING AND GRADING

A. Grubbing shall be performed in accordance with SSPWC Section 300-1.

B. Rough: Leave cut and fill sufficiently high to require cutting by fine grading.

C. Fine: To elevations required to ensure proper drainage or finished elevations indicated on drawings; finish elevations for planting areas as specified for top soil fill in Section 02900 – LANDSCAPING.

D. Subgrade Preparation: Required for all areas, other than filled or backfill areas, over which moisture barrier material, slabs, walks or pavement will be placed; in accordance with provision specified herein and Section 301-1 - SUBGRADE PREPARATION of SSPWC.

E. Inspection Required: Prior to placing base material, concrete or other materials.

F. Grading for Demolition Jobs: To specified elevations or elevations of existing sidewalks, adjacent property lines or surfaces immediately adjacent to the sites. Make all grades straight-line from any point to any other perimeter point.

G. Grading for New Paving:

1. Rough: Cut and fill to be left sufficiently high to require cutting by fine grading and preparation of the surface for placement of the required select base material to thickness noted on the Contract Drawings or matching that of adjacent existing select base materials.

2. Fine: To exact elevations necessary for required new paving and paving repairs.

3. Testing and Inspection Required: Prior to placing of select base and paving materials.

3.6 EXCAVATING

A. General:

1. Excavation consists of the removal and disposal of materials necessary to establish required grade elevations and certified compacted fill for new construction pursuant to Section 300-2 UNCLASSIFIED EXCAVATION of SSPWC.

2. Excavated materials suitable for use as fill and/or backfill to be stockpiled where directed by the Engineer.

3. Non-approved and excess excavated materials to be legally removed and disposed of from the job-site.

4. Shoring, Bracing and Bulkheading of Trenches: All to be provided, installed and maintained where required to support trenches, See Subsection 1.6 of this Section. Conform to the requirements prescribed by the Los Angeles City Department of Building and Safety, CAL/OSHA, Section 02240 - SHORING and other Sections of the Project Manual.

5. Access to Trenches: Conform to Section 306-1.1.4 - ACCESS TO TRENCHES of SSPWC. Provide safe and suitable ladders, which project 2 feet above the top of the trench. It shall be provided for all trenches over 4 feet in depth. Minimum one ladder shall be provided for each 50 feet of open trench or fraction thereof, and be so located that the workers in the trench need not move more than 25 feet to a ladder.

6. Encountered Existing Underground Piping or Conduits: Immediately stop the trench operations at the point of encounter, notify the Engineer of such condition and submit support drawings to the Engineer for approval. The support drawings shall be in conformance with the Los Angeles City Bureau of Engineering Standard Plans S-253, SUPPORTS FOR STORM DRAIN AND SEWER PIPES ACROSS TRENCHES, latest edition; CAL/OSHA and the utility company's requirements.

B. For Substructure Concrete:

1. When Earth Banks are Stable: To net sizes of concrete, except as otherwise specified or indicated on the Contract Drawings.

2. When Earth Banks are not Stable: Sufficiently wider than concrete to allow for forms and inspection thereof.

3. Where Rock Occurs: Surface to be leveled to a clean, even hard surface.

4. Depth: As indicated on Contract Drawings.

5. Excessive Width and Depth: Where excavation is made wider and deeper than required, fill with concrete specified in Section 03300 of the Project Manual, at Contractor's expense.

6. Inspection Required: After excavation and before placing concrete and before backfilling, the exposed soil or subgrade will be carefully inspected by the Inspector and the Soil Engineer to verify removal of additional unsuitable soil.

7. Protections and Shorings: See Subsection 1.6 of this Section.

8. Excavation for Grade Beams: Omit forms when sides will stand to a cut face, make such excavation 1-inch wider on each side.

9. When excavating adjacent to existing remaining structures, do so in a sequence as required and approved by the Engineer to avoid displacement or damage to the existing adjacent structure.

C. For Site Improvements:

1. Masonry Yard Walls: As necessary for required footing and setting of forms for concrete work, to depth indicated.

2. For Planter Curbs: To exact curb limit, without excessive removal of adjacent paving or subgrade for new paving.

3. Planter Areas: Remove existing sub-soils to a depth as necessary to receive topsoil fill as specified in Landscape Plans and in Section 02900 - LANDSCAPING.

4. For Bollards, Light Poles, Signs, Fence, and Furnishings: To dimensions and depths noted on the Contract Drawings for concrete foundations.

5. For Concrete, Decomposed Granite, and Asphaltic Site Improvements such as concrete and/or asphalt pavements, decomposed granite pavement, concrete walkways, driveways aprons, concrete curb and gutter: Excavate to exact limits of such work without excessive removal of existing subgrade. Scarify and compact top 12 inches of subgrade , moisture condition, and compact at 95% relative density.

D. For Walls (including wall footings): Width not less than 18-in. from face of wall and sufficient for necessary forms, cribbing, bracing, inspection, and application for watering on walls, where required. Provide subgrade preparation and overexcavation requirements of the contract drawings and Project Geotechnical Report.

E. Conduit and Piping: Conforming to the requirements as specified on the drawings, Los Angeles City Plumbing Code, SSPWC and other sections of the Project Manual. Any piping with 8 feet or less cover or backfill, Case 5 Bedding Installations of Los Angeles City Bureau of Engineering Standard Plan S-251, latest edition, shall be used for all piping laying unless otherwise specified on the drawings or noted.

1. Depth and Width of Trench For Storm Drainage Piping: To depth necessary for installation of piping and construction of catch basin in accordance with requirements of Section 02545 - STORM DRAIN SYSTEM, PLUMBING Section in Division 15 of the Project Manual and as noted on the Contract Drawings. Provide minimum 8 inches side clearance from side of the piping. Make the sides vertical and the bottoms smooth, firm, level or uniformly sloped as required, slope to not exceed a downward slope of two horizontal to one vertical in a manner to prevent formation of water pockets in the pipe. For backfill or earth cover exceeded 8 feet, refer to Los Angeles City Bureau of Engineering Standard Plan S-251, latest edition, for maximum allowable trench width and bedding material. Unless specified otherwise, provide minimum 4 inches bedding below the pipe barrel. Pipe bedding per Section 2.1.

2. Depth and Width of Trench for Plumbing Piping: As necessary for complete installations of the piping, fixtures and controls; provide minimum 6 inches side clearance from side of the piping; make the sides vertical and bottoms smooth, firm, level or slopes, as required by the code for proper drainage. Final elevations shown on Contract Drawings shall mean the invented pipe elevations. Pipe thickness and bedding thickness shall be used in determining trench depths. Conform to the requirements as specified in the Los Angeles City Plumbing Code and in Division 15 of the Project Manual. For backfill or earth cover exceeded 8 feet, refer to Los Angeles City Bureau of Engineering Standard Plan S-251, latest edition, for maximum allowable trench width and bedding material. Unless specified otherwise, provide minimum 4 inches bedding below the pipe barrel.

   If final elevation is not shown on contract drawings, place all piping to a depth no less than 36 inches.

3. Depth and Width of Trench for Electrical Conduit and Pull Box: As necessary for complete installation of the electrical conduits and pull box, unless specified otherwise, provide minimum 7 1/2 inches side clearance from the side of the conduit and pull box and 2 inches sand bedding in accordance with the Contract Drawings and requirements of the Utility Company.

   Conduit shall be placed to a depth of not less than 30 inches and 36 inches under the driveway.

4. Depth and Width of Trench for Landscape Irrigation Piping: As necessary for complete installations of the piping fixtures and controls; provide a minimum of 7 1/2 inches side clearance from the side of the piping and 4 inches washed sand bedding. Depth of piping shall be conformance with Section 02810 – IRRIGATION SYSTEMS of the Project Manual. All trenches for electrical conduit and wiring shall be in accordance with requirements listed hereinbefore.

F. For Underground Vaults and Structures: To necessary depth for proper installation of underground vault or structure as specified in applicable DIVISION and in accordance with requirements of Los Angeles City Municipal Code.

I. Corrections: Required of all unauthorized excavations made below indicated depths, as recommended by the Soil Engineer at no added cost to the City.

3.7 FILLING

A. General: Construct in accordance with Section 300-4- UNCLASSIFIED FILL of SSPWC and place in layers not exceeding 8-inches thickness, compacted to a relative compaction of not less than 90% when tested in accordance with Section 211-2 - COMPACTION TESTS of SSPWC.

B. In Planting Areas and Tree Wells: If flooding method is specified for fill material, place saturated fill (exclusive of topsoil fill) prior to construction of adjacent improvements to minimize settlement as follows:

1. Planting Areas and Holes: Cultivate and soak the specified backfill mix for a minimum of two days using a common lawn soaker.

2. Tree Wells: Excavate a sump approximately 3-feet square by 3-feet deep and flood each sump for about 3 days.

C. Fill all holes on the existing job-site or resulting from site-clearing or demolition operations.

D. Topsoil Fill: Specified in Section 02900 - LANDSCAPING of the Project Manual.

E. Inspection Required: Prior to placement of fill materials. See Subsection 1.7A of this Section.

F. Concrete, Decomposed Granite, and Asphalt Pavements: Compact top 12 inches of existing subgrade to 95% relative density and each 8" layer of backfill or fill material at 90% relative density.

3.8 BACKFILLING

A. Prior to Backfilling: Remove debris, trash and form materials from excavations.

B. Inspection Required: Prior to backfilling operations.

C. Placement of Backfill: In layers not exceeding 8-inches thickness, moisten to optimum moisture content and tamp until required 90% relative compaction is secured and finish to suitable elevations to provide for anticipated settlement and shrinkage.

D. For Below-Grade Vault and Structure Excavation: Backfill not to be placed until vaults or structures have been tested and inspected, and the Inspector has completed their inspections. Backfill to be washed sand under, around sides and ends of structure to an elevation above the top of the structure per manufacturer's recommendations. Use clean earth material for remainder of backfill to required subgrade and compact for yard paving.

E. Pipe Bedding And Backfill Over Underground Piping And Conduit: Place bedding and backfill material in conformance with provisions specified Subsection 2.1 (D) herein and in Section 02545 - STORM DRAIN SYSTEM, Division 15 - PLUMBING and Division 16 – ELECTRICAL of the Project Manual. Do not place backfill materials until the Inspector has inspected and approved the pipe installation. The bedding shall be compacted and shaped to form a firm base for the pipe and conduit. The initial backfill shall be placed in two lifts. The first lift shall be to the spring line of the pipe or conduit. The initial backfill shall be lightly compacted by light tamping or compacted by water densification method. The balance of backfill shall be placed in accordance with Subsection 3.8 (C) herein.

F. For Parking Lot or Demolition Jobs: Use clean material previously removed from excavations or use imported materials as hereinbefore specified subject to approval by the Inspector or Engineer.

G. For Backfill Against Basement Walls: Do not place until such walls have gained sufficient strength to resist backfill loads and backside of such walls have been properly waterproofed without prior approval of the Inspector. Bring backfill up to finish grade or to subgrade for paving as indicated on the drawings.

H. In Planting Areas Holes and Tree Wells: After planting, cultivate and soak the specified backfill mix for a minimum of two days using a common lawn soaker if specified.

I. For Voids Left by the Removal of Sheeting, Piles and Similar Shoring Supports: Immediately backfill with structural backfill of clean sand which shall be jetted into place to ensure a dense and complete filling of the voids.

J. Slurry Backfill: In areas where specified and/or around the utilities, vaults or other structures where the Soil Engineer determines that it is not practical to attain the required compaction by the mechanical methods or water densification, provide a trench slurry backfill 60-E0.7 (Class 100-E-100).

3.9 SELECT BASE

A. Place in accordance with Section 301-2 - UNTREATED BASE of SSPWC and "Soil Report" recommendations.

B. Locations: Place select base beneath concrete, decomposed granite, stone, and asphalt concrete yard paving, beneath concrete driveway aprons and concrete gutters in yard areas, building floor slab on grade and elsewhere to thickness noted on the Contract Drawings.

C. Thickness: At least 4 inches under yard concrete paving, at least 4-inches under yard asphalt concrete paving, and at least 4-inches under all building slabs on grade with 2 inches of sand and vapor barrier or as otherwise indicated on the Contract Drawings.

NOTE: Place to thickness matching that of original thickness of select base under existing removed concrete or asphalt concrete paving and make ready to receive paving repair materials. Aggregate base shall be compacted to 95% relative density in accordance with Section 301-2 - UNTREATED BASE of SSPWC.

3.11 SOIL STERILIZATION

Apply specified soil sterilization material to areas to receive select base materials and all exterior area including concrete and asphalt paving, concrete walkway, concrete curb and gutter, by methods recommended by the manufacturer. Certify in writing that the material has been applied.

3.12 DISPOSAL OF EXCESS AND WASTE MATERIALS

A. Removal from City's Property: Remove waste materials, including unacceptable excavated material, trash and debris, and dispose of it off City's property in a legal manner and to conform with the requirements shown in Section 01572 – CONSTRUCTION AND DEMOLITION WASTE MANAGEMENT of Division 1 - General Requirements.

B. Provide written consent of the owner of the property upon which the surplus material is to be deposited, pursuant to Section 01572 – CONSTRUCTION AND DEMOLITION WASTE MANAGEMENT specified above and Section 300-26 - SURPLUS MATERIAL of SSPWC.

3.13 PAYMENT FOR CONTAMINATED SOIL REMOVAL AND BACKFILLING

Contractor shall submit contract bid price for the removal and disposal of contaminated soil with estimated quantity specified in SCHEDULE OF WORK AND PRICES. The area of removal shall be determined by Soil Engineer or Engineer in the field. Contractor shall include in the contract bid price all incidental costs for complete removal and disposal of contaminated soil including labors and materials for excavation; backfill and compaction; shoring; temporary storage, soil sampling and testing; imported backfill soil; barricade; all necessary permits, notification, manifest and inspections; delays; additional mobilization; field office salary and expenses, profit and overhead cost for all Subcontractors and General Contractor. The total quantity of work shall be determined by the amount of contaminated soil removed and disposed from the job site. An adjustment in payment shall be made based upon the increase or decrease in quantity and the contract bid price submitted, with no additional overhead and profit mark-up; or overhead and profit allowance.

END OF SECTION

SECTION 02330
SOIL STABILIZATION

PART 1 -- GENERAL

1.1 THE REQUIREMENT

A. The CONTRACTOR shall furnish all tools, equipment, materials, and supplies and shall perform all labor required to complete the work as indicated on the Drawings and specified herein.

B. This Section covers soil stabilization utilizing chemical grout. The intent of this Section is to permit open-cut excavation and the application of air-placed concrete to the face of the excavation without shoring, as indicated on the Drawings and specified under other sections.

1.2 RELATED WORK SPECIFIED ELSEWHERE

A. Section 02210 Clearing, Grubbing, and Stripping.

B. Section 02310 Earthwork.

1.3 REFERENCE SPECIFICATIONS, CODES AND STANDARDS

A. Comply with the applicable reference specifications as specified in the GENERAL REQUIREMENTS.

1.4 CONTRACTOR SUBMITTALS

A. Submittals shall be made in accordance with the GENERAL REQUIREMENTS.

B. The CONTRACTOR shall submit, for acceptance by the ENGINEER, detailed sketches of his intended injection techniques and patterns and shall submit, for acceptance by the ENGINEER, necessary data to prove that the chemicals contemplated will meet in all respects the requirements as to properties and qualities required by these specifications. Any test data furnished by the CONTRACTOR substantiating the adequacy of the grout shall be from a CITY certified testing lab.

1.5 QUALITY ASSURANCE (NOT USED)

1.6 QUALIFICATIONS

A. Work required under this Section shall be performed by a contractor having at least 5 years experience in the field of chemical grout soil stabilization and underpinning and having successfully completed at least 5 projects of a similar nature.

B. The CONTRACTOR shall submit satisfactory documentation that project personnel have the appropriate qualifications.

1.7 WORK COORDINATION

A. The CONTRACTOR shall fully coordinate the work operations of this Section with that of other trades involved and with the ENGINEER to ensure proper sequence of work, limitation, methods, and time of work so as to minimize or avoid interferences as well as performance of work by other trades.

PART 2 -- PRODUCTS

2.1 MATERIALS

A. "Chemical Grout", as referred to herein, shall be a relatively nonviscous solution, not a slurry, that may be injected into a permeable soil mass, undergo chemical reactions that lead to metathetical precipitation or polymerization, and result in solidification of that injected soil by binding together the soil grains for the purpose of increasing the load bearing capacity of the soil. The solidified soil shall have an unconfined compressive strength of 50 psi at 28 days.

B. The CONTRACTOR shall be responsible for formulation of the grout. Chemicals used shall be sodium silicate based with catalyst that will provide the required chemical grout. Water used shall be compatible with the chemical system to be used.

C. Considering the chemistry of the gel and the conditions known at the site, the chemical system used shall produce a stable gel. The chemical system used shall stabilize soil to permit open-cut excavation and the application of air-placed concrete to the face of the excavation without use of any shoring, and shall have a proven record of stability.

D. The chemicals used shall be so proportioned and mixed as to produce a chemical grout that contains no solids in suspension, may be pumped without difficulty, will penetrate and fill the voids in the soil mass, and will form a gel of the required strength and stability.

E. Chemicals mixed into primary solutions before final batching may be held only in accordance with the manufacturer's recommendations and must not be injected if limiting factors imposed by the manufacturer are exceeded. Any solutions not to be used for injection shall be immediately disposed of to the satisfaction of the ENGINEER. The chemical system shall not be detrimental to the environment. The injected solution and its components shall be nontoxic.

2.2 SITE PREPARATION

A. The project site consists of about 5 to 20 feet of fill soils consisting of loose to medium dense silty sand to poorly graded sand with silt. The fill is underlain by generally dense to very dense coarse grained materials comprising of sands, silty sands, gravelly sands, sandy gravels, cobbles, and possibly boulders, as indicated in the Geotechnical Site Investigation prepared by Hushmand Associates, Inc.

B. The site clearing, grubbing, and removal shall be in accordance with Section 02210 "Clearing, Grubbing, and Stripping." After site preparation work is complete, the CONTRACTOR shall commence soil stabilization, as indicated on the Drawings and specified under other sections.

2.3 MIXING

A. All materials shall be accurately measured by weight or volume for mixing. If a variable proportioning pump system is used, positive controls shall be incorporated to ensure accurate proportioning. Care shall be taken not to contaminate mixing vessels with reactive chemical by spillage, splash, etc.

B. A fast check reaction shall be made with each new primary chemical batch. A test sample shall be made of every injection batch. The CONTRACTOR shall keep records to establish the point of injection for each sample. This data shall be submitted to the ENGINEER on a daily basis.

C. If any sample fails to show the proper gelation, the potential area of failure shall be reinjected. The CONTRACTOR shall propose method of correction.

PART 3 -- EXECUTION

3.1 APPLICATION

A. The CONTRACTOR shall determine the extent of the soil stabilization required, subject to acceptance by the ENGINEER.

B. Care shall be taken in the placing of injection points to secure accurate injection and the proper overlapping of injection cylinders.

C. Injection rates and pressures shall be closely controlled to prevent blowout, localized "quick" conditions, and to ensure the proper filling of voids to attain the desired stabilized section.

D. Quantities of chemical grout injected at each point shall be governed by calculated volume, back pressure, or a combination of these two factors. If it appears, at any point, that a large void exists, proper steps shall be taken to ensure permeation of the desired soil section as directed by the ENGINEER.

3.2 CLEANUP

A. Upon completion of soil stabilization and work specified herein, the CONTRACTOR shall dispose of all excess materials off the jobsite and the jobsite shall be left in a clean and orderly condition ready for subsequent work operations.

(END OF SECTION)

SECTION 02501

MAINTENANCE AND SUPPORT OF UTILITIES

PART 1 – GENERAL

1.01 DESCRIPTION

A. This section specifies requirements for designing, furnishing, installing, maintaining, and removing temporary diversions and supports for existing functioning utilities indicated to remain in service and protecting and maintaining such utilities and those indicated to be maintained in place.

B. Relocation, protection and maintenance of existing utilities will be performed by the utility owners, except where utility relocation, protection and maintenance is indicated shall be performed by the CONTRACTOR.

C. Relocation and protection of other utilities for the convenience of the CONTRACTOR shall be approved by agencies having jurisdiction, and the CONTRACTOR shall be responsible for the design and construction costs.

1.02 RELATED WORK SPECIFIED ELSEWHERE

A. Special Provisions: Utility Summary

B. Section 01563, Pollution Control - Sewage Spill Prevention and Response Requirements

C. Section 01711, Site Investigation – Utility Summary

D. Section 01732, Potholing

E. Section 02310, Earthwork

1.03 REFERENCE SPECIFICATIONS, CODES, AND STANDARDS

A. General: Standard Specifications for Public Works Construction (SSPWC) as modified by the Brownbook.

B. Gas: The Gas Company Standard Specifications.

C. Telephone: Pacific Bell System Practices, series 622-000-000 through 622-700-200.

D. Los Angeles Department of Water and Power (LADWP) or (DWP) Drawings

E. Los Angeles Department of Transportation (LADOT)

1.04 SUBMITTALS

A. General: Make submittals in accordance with section 01330.

B. Product Data: Certificates of compliance for materials specified in Part 2.

C. Working Drawings and Methods Statements:

1. For utilities to be relocated, protected and maintained by the CONTRACTOR:

a. Means and methods, supplemented by schedule, drawings and calculations for locating, exposing, diverting, abandoning, or protecting and maintaining in place all utilities encountered. Make submittals to the appropriate utility owner for their review and approval with three copies to the ENGINEER.

b. Means and methods for restoring utilities to the required final configuration. Include restoration of curbs, sidewalks and roadway pavement.

c. Means and methods for potholing for locating existing utilities, except when directed by the ENGINEER.

2. For utilities to be relocated, protected and supported by Others: Contact utility owners as listed in the Utility Summary in advance to coordinate the timing and other details of the diversion, maintenance and support of utilities, without impacting other contract work.

D. Quality Control:

1. Qualifications: Retain the services of a licensed civil or structural engineer registered in the State of California to prepare utility relocation, protection, and maintenance plans.

2. Certifications:

a. Provide copies of all required permits for utility work to be performed by the CONTRACTOR.

b. Provide written certification(s) from utility owner(s) that utilities indicated to be abandoned are not in service.

3. Quality Control Plans:

a. Methods for assuring that all utilities to remain in service are protected during construction activities. Include a contingency plan for the detection and repair of damaged utilities.

b. List of utility owners that are not members of Underground Service Alert (USA) of Southern California, along with a contact name, telephone number, and minimum required advance notice to mark utility locations.

4. Notifications:

a. Provide two working days advance notice on the project schedule of work to be performed for utility owners to mark utility locations in the street right-of-way. Notify each owner and the ENGINEER.

b. Immediately notify affected utility owner and ENGINEER of any damage to utilities.

1.05 QUALITY ASSURANCE

A. Retain a licensed civil engineer registered in the State of California with 5 years of experience in the design of utility diversions and support systems to stamp and sign drawings and calculations for work described herein.

B. Perform telecommunications utility work, if necessary, using a contractor on Pacific Bell's or other telecommunications company's list of approved contractors.

1.06 DESIGN CRITERIA

A. Design utility supports and utility diversions in accordance with the utility owner's standards.

1.07 JOB CONDITIONS

A. Existing street light facilities are contained in high voltage cables within conduits that may be corroded.

B. Identify and protect in place any traffic loops located in streets that may be affected by the WORK. In locations where the traffic loops shall be affected, provide temporary signaling and restore traffic loops.

PART 2 – PRODUCTS

2.01 MATERIALS

A. Provide materials conforming to the requirements of the respective utility owners.

PART 3 – EXECUTION

3.01 GENERAL

A. Where indicated, divert or relocate existing utilities, such as water, electrical, CITY communications, gas, traffic signals, telephone, telegraph, cable TV, storm drainage and sanitary sewer facilities by the CONTRACTOR.

B. Maintain continuity of utility service during diversions and maintain protection for the contract duration.

C. Unless otherwise indicated, work required for relocating or otherwise altering utilities and appurtenances that physically interfere with the construction is a part of this Contract. Perform this work at no additional cost to the CITY.

D. Cooperate with utility owners and their designated agents, as specified herein, and provide reasonable access to the worksite to inspect their facilities.

E. Protect rerouted facilities and existing utilities not indicated to be abandoned.

F. Perform excavation and backfilling as specified.

G. Remove and restore pavements, sidewalks, curbs and gutters as specified in applicable standard plans or the SSPWC. The more stringent will govern.

H. Refer to Section 01563 when performing sanitary sewer diversions, maintenance, bypass and support.

3.02 PREPARATION

A. Verify that facilities indicated to be abandoned have been taken out-of-service before starting other work in area.

B. Perform potholing operation to identify existing utilities in accordance with Section 01732.

C. For utility work to be performed by the CONTRACTOR, mark proposed excavations and notify:

1. Underground Service Alert (USA) of Southern California at (800) 422-4133 at least two working days before starting excavation so that USA member organizations existing utility facilities can be marked.

2. Utility owners that are not members of USA sufficiently in advance for representatives to identify and mark utility locations without delaying or impacting other work.

3.03 ABANDONMENT OR REMOVAL FROM SERVICE

A. Remove abandoned facilities as necessary to complete other work. Cut and cap or plug abandoned facilities to remain at work site limits unless otherwise indicated.

B. Telephone lines: Arrange for the utility owner to disconnect service and remove cables before removing conduits and appurtenant structures.

C. Electric facilities: Arrange for the utility owner to disconnect service and remove cables before removing conduits, manholes, and appurtenant structures.

D. Drainage facilities and sanitary sewers: Construct bulkheads of brick masonry or Class 285-C-14 concrete a minimum of one pipe diameter thick at manholes and catch basins and at cut ends.

E. Gas lines: Coordinate with The Gas Company so that The Gas Company can disconnect lines and services and cap lines to remain.

F. Telegraph Facilities: Contact the telegraph company to disconnect and remove lines and services.

G. Other facilities: Coordinate with utility owner prior to beginning work.

3.04 EXECUTION

A. Use hand tools when exposing subsurface structures or excavating within two feet of utility markings as required by state law.

B. Support utility lines and connections to prevent their damage, and impairment or interruption in service, all in accordance with the requirements of the individual utility owner.

C. Enclose and support telephone manholes and ducts not to be relocated in temporary wood enclosures. Allow access in wood enclosures for maintenance and inspection.

D. Except where otherwise specified, notify individual utility owners a minimum of one week in advance of performing utility work, including excavating to expose utilities, installing or removing utility supports, and backfilling. For each utility, secure the inspection and written acceptance from the utility owner prior to backfilling.

E. Drain Facilities and Sanitary Sewers: Refer to the requirements of Section 01563. Notify the Bureau of Sanitation at (323) 342-6006 (213-485-7575 after hours) immediately upon damaging or discovering a damaged utility.

F. Gas Mains and Services: Coordinate installation of gas meters with The Gas Company to minimize service interruptions.

G. Concrete Encasements: Utility relocation or protection work shall include excavation around and/or support of existing concrete encasements previously placed around utility lines.

(END OF SECTION)

SECTION 02510
WATER DISTRIBUTION

PART 1 - GENERAL

1.1 THE REQUIREMENT

A. This Section includes piping and specialties for combined potable and fire protection water service outside the building and complete water distribution system as indicated on the Drawings and/or specified in the Contract Documents.

B. This Section includes tapping of Los Angeles Department of Water and Power Water Main.

C. Drawings and general provisions of the Contract, including General and Supplementary Conditions and Division 1 Specification Sections, apply to this Section.

1.2 RELATED SECTIONS

A. Division 2 Section 02310-Earthwork for trench excavation and backfill.

1.3 SYSTEM PERFORMANCE REQUIREMENTS

A. Minimum Working Pressures: The following are minimum pressure requirements for piping and specialties, unless otherwise indicated:

1. Combined Potable Water and Fire Protection Water Service: 200 psig (1380 kPa).

1.4 SUBMITTALS

A. General: Submit each item according to the GENERAL REQUIREMENTS. Submit layout and shop drawings including detail of field conditions found to be contrary to those shown.

B. Product Data: Submit copies of manufacturer's specifications and installation instructions for each material including certification or other data verifying compliance with required characteristics. Indicate by transmittal form that copy of each has been distributed to the Installer. Submit for the following:

1. Pipe and fittings.
2. Gate Valves
3. Backflow Preventers
4. Backflow Enclosures
5. Pressure Reducing Valves
6. Strainers
7. Hose Boxes.
8. Drinking Fountains Including Sumps
9. Quick Coupler Valves

C. Purging and Disinfecting Reports: As specified in "Cleaning" Article in Part 3.

1.5 QUALITY ASSURANCE

A. Unless otherwise specified, all materials and work shall be in accordance with General Conditions, General Requirements and "The Standard Specifications for Public Works Construction" (the Standard Specifications), latest edition.

B. Ductile iron pipe shall be in accordance with Section 207-9 of the Standard Specifications. Pipe shall be lined and coated per AWWA C 151 or AWWA C 110. Valves and fittings shall be encased per Section 207-9.2.6.

C. Valves: The manufacturer's name and pressure rating shall be marked on valve body.

D. Pipe Laying and trenching shall be per Section 306 of the Standard Specifications and pipe joints shall be per Section 306-1.2.6 of the Standard Specification unless otherwise shown on the plans or specified in these specifications.

E. Trench excavations may be backfilled with onsite soils under the observation of a representative of the City Geotechnical Division (GED). After pipes have been laid and properly bedded, the space around the pipe shall be backfilled with clean sand (having sand equivalent of 30 or greater) or gravel to a depth of 1 foot over the top of the pipe, before the controlled backfill is placed. The controlled backfill shall be moisture conditioned, placed and compacted in accordance with the recommendations presented in Section 8.6 of the "Draft Geotechnical Site Investigation for the Sixth Street Viaduct – PARC Improvements" dated January 2018, prepared by Hushmand Associates, Inc. (File #LAC-17-001) and in the “Update of Draft Geotechnical Report for the Sixth Street Viaduct – PARC Improvements” dated August 2021, prepared by Tetra Tech, Inc. (File # TET 21-203E). Compaction shall be 90% relative compaction, except the upper 12 inches of backfill below pavement sections shall be compacted to at least 95% relative compaction.

F. Water meters and water service connection shall be per City of Los Angeles and Los Angeles Department of Water and Power requirements.

G. On-site potable water mains less than 4-inches in diameter shall be constructed of Type "K" hard copper per AWWA specifications. Lines shall be shall be encased in an 8-mill polyethylene tubing and be electrically insulated (isolated) from above grade metals by means of dielectric fittings in ferrous utilities and/or exposed metal structures breaking grade.

H. Comply with the Los Angeles Department of Water and Power standards for potable water-service piping for testing and disinfection.

I. Comply with NFPA 24, "Installation of Private Fire Service Mains and Their Appurtenances," for materials, installations, tests, flushing, and valve and hydrant supervision.

J. All piping and appurtenances intended to convey or dispense water for human consumption are to comply with the U.S. Safe Drinking Water Act (SDWA), with requirements of the Authority Having Jurisdiction (AHJ), and with NSF 61/NSF 372 or are certified in compliance with NSF 61/NSF 372 by an ANSI-accredited third-party certification body, that the weighted average lead content at wetted surfaces is less than or equal to 0.25 percent

K. Potable-water piping and components shall comply with NSF 14, NSF 61, and NSF 372. Include marking "NSF-pw" on piping.

1.6 DELIVERY, STORAGE, AND HANDLING

A. Preparation for Transport: Prepare valves, including fire hydrants, according to the following:

1. Ensure that valves are dry and internally protected against rust and corrosion.
2. Protect valves against damage to threaded ends and flange faces.
3. Set valves in best position for handling. Set valves closed to prevent rattling.

B. During Storage: Use precautions for valves, including fire hydrants, according to the following:

1. Do not remove end protectors, unless necessary for inspection; then reinstall for storage.
2. Protect from weather. Store indoors and maintain temperature higher than ambient dew-point temperature. Support off the ground or pavement in watertight enclosures when outdoor storage is necessary.

C. Handling: Use sling to handle valves whose size requires handling by crane or lift. Rig valves to avoid damage to exposed valve parts. Do not use handwheels or stems as lifting or rigging points.

D. Deliver piping with factory-applied end-caps. Maintain end-caps through shipping, storage, and handling to prevent pipe-end damage and to prevent entrance of dirt, debris, and moisture.

E. Protect stored piping from moisture and dirt. Elevate above grade. Do not exceed structural capacity of floor when storing inside.

F. Protect flanges, fittings, and specialties from moisture and dirt.

1.7 PROJECT CONDITIONS

A. Verify existing utility locations. Contact utility locating service.

B. Verify that it is possible to install water service piping to comply with original design and referenced standards.

C. Site Information: Reports on subsurface condition investigations made during design of Project are available for informational purposes only; data in reports are not intended as representations or warranties of accuracy or continuity of conditions between soil borings. Owner assumes no responsibility for interpretations or conclusions drawn from this information.

1.8 SEQUENCING AND SCHEDULING

A. Coordinate connection to water main with the Los Angeles Department of Water and Power.

B. Coordinate piping materials, sizes, entry locations, and pressure requirements with building water distribution piping.

C. Coordinate with other utility work.

PART 2 – PRODUCTS

2.1 PIPES AND TUBES

A. General: Applications of the following pipe and tube materials are indicated in Part 3 "Piping Applications" Article.

B. Ductile-Iron, Push-on-Joint Pipe: AWWA C151, with cement-mortar lining and seal coat according to AWWA C104. Include rubber compression gasket according to AWWA C111.

C. Copper Pipe: Type “K” Hard Copper per ASTM B88. Lines shall be encased in an 8-mill polyethylene tubing and be electrically insulated (isolated) from above grade metals by means of dielectric fittings in ferrous utilities and/or exposed metal structures breaking grade.

D. PVC Pipe: ASTM D1785, Schedule 40.

E. Warning Tape with Trace Wire: Magnetic detectable conductor, brightly colored plastic covering, imprinted with "Water Service" in large letters.

2.2 PIPE AND TUBE FITTINGS

A. General: Applications of the following pipe and tube fitting materials are indicated in Part 3 "Piping Applications" Article.

B. Ductile-Iron, Push-on-Joint Fittings: AWWA C110, ductile-iron or cast-iron; or AWWA C153, ductile-iron, compact type. Include cement-mortar lining and seal coat according to AWWA C104 and rubber compression gaskets according to AWWA C111.

C. Ductile-Iron, Flanged Fittings: ASME 16.1, Class 125, cast iron.

D. Wrought-Copper, Solder-Joint Fittings: ASME B16.22, pressure fittings

E. Wrought-Copper Unions: ASME B16.22.

F. PVC Fittings: ASTM D2466

2.3 JOINING MATERIALS

A. General: Applications of the following piping joining materials are indicated in Part 3 "Piping Applications" Article.

B. Ductile-Iron Piping: The following materials apply:
1. Push-on Joints: AWWA C111 rubber gaskets and lubricant
2. Pipe Flange Gasket: ASME B16.21, nonmetallic, flat, asbestos free, 1/8-inch maximum thickness, unless otherwise indicated.
3. Flange Bolts and Nuts: ASME B18.2.1, Type 316 Stainless Steel

C. Solder Filler Metals: ASTM B32, lead-free alloys. Include water-flushable flux according to ASTM B813.

D. PVC Joints: ASTM D2855, solvent weld

2.4 PIPING SPECIALTIES

A. Dielectric Fittings: Assembly or fitting with insulating material isolating joined dissimilar metals to prevent galvanic action and corrosion.

1. Description: Combination of copper alloy and ferrous; threaded, solder, plain, and weld-neck end types and matching piping system materials.

2. Dielectric Unions: Factory-fabricated union assembly, designed for 250-psig (1725-kPa) minimum working pressure at 180 deg F (82 deg C). Include insulating material isolating dissimilar metals and ends with inside threads according to ASME B1.20.1.

3. Dielectric Flanges: Factory-fabricated companion-flange assembly, for 150- or 300-psig (1035- or 2070-kPa) minimum pressure to suit system pressures.

4. Dielectric-Flange Insulation Kits: Field-assembled companion-flange assembly, full-face or ring type. Components include neoprene or phenolic gasket, phenolic or polyethylene bolt sleeves, phenolic washers, and steel backing washers.

a. Provide separate companion flanges and steel bolts and nuts for 150- or 300-psig (1035- or 2070-kPa) minimum working pressure to suit system pressures.

5. Dielectric Couplings: Galvanized-steel couplings with inert and non-corrosive thermoplastic lining, with threaded ends and 300-psig (2070-kPa) minimum working pressure at 225 deg F (107 deg C).

6. Dielectric Nipples: Electroplated steel nipples with inert and non-corrosive thermoplastic lining, with combination of plain, threaded, or grooved end types and 300-psig (2070-kPa) working pressure at 225 deg F (107 deg C).

2.5 PE ENCASEMENT

A. PE Encasement for Ductile-Iron Piping: ASTM A 674 or AWWA C105, PE film, 0.008-inch (0.20-mm) minimum thickness, tube or sheet.

2.6 VALVES

2.6.1 GATE VALVES - UP TO 3 INCHES

a. Nonrising Stem: Class 125, bronze with solid wedge.
b. Standard: MSS SP-80.
c. End Connections: Threaded or solder.
d. Handwheel: Malleable iron.

2.6.2 GATE VALVES - 3 INCHES AND OVER

a. Nonrising Stem, Resilient Seated: Cast- or ductile-iron body and bonnet, with bronze or cast- or ductile-iron gate, resilient seats, bronze stem, and stem nut.
b. Standards: AWWA C509 or AWWA C515. UL listed and FM Global approved.
c. Minimum Pressure Rating: 200 psig.
d. End Connections: Flanged or push on.
e. Interior Coating: Complying with AWWA C550

2.6.3 VALVE BOXES

a. As specified per plans.

2.7 PRESSURE REDUCING VALVES

a. Direct Acting.
b. Zern Model 500XL or approved equal.
c. Standard: ASSE 1003.
d. Pressure Rating: Initial pressure of 150 psig.
e. Size: Per Plan.
f. Design Outlet Pressure Setting: 80 psig unless specified otherwise on plans.
g. Body: Bronze.
h. End Connections: Threaded
i. When installed in vault, include with SC sealed cage option.

2.8 BACKFLOW PREVENTERS

a. Reduced-Pressure Principle.
b. Febco LF825Y and LF860 per plan or approved equal.
c. Standard: ASSE 1013, AWWA C511.
d. Operation: Continuous-pressure applications.
e. Size: Per Plan.
f. Body: Bronze for NPS 2 and smaller; Ductile Iron for NPS 3.
g. End Connections: Threaded for NPS 2 and smaller; Flanged for NPS 3.
h. Configuration: Per Plan.
i. Accessories:
    1. Valves: Ball type with threaded ends on inlet and outlet of NPS 2 and smaller. NRS gate valve type with flanged ends on inlet and outlets of NPS 3.
    2. Backflow Preventer Test Kits: Factory calibrated, with gages, fittings, hoses, and carrying case with test-procedure instructions.
    3. Strainers: Make and model per plan or approved equal.
    4. Pipe supports per plan,

2.9 BACKFLOW PREVENTER PROTECTIVE ENCLOSURES

a. Strong Box Inc. or approved equal
b. Material: Steel.
c. Finish: Powder Coated Dark Green.
d. Size: Of dimensions indicated on plans, but not less than those required for access and service of protected unit.
e. Locking device.
f. Lugs or devices for securing enclosure to base.
g. Enclosure Bases: 6-inch minimum thickness concrete of dimensions required to extend at least 4 inches beyond edges of enclosure housings. Include openings for piping

2.10 IN-GROUND HOSE BOX

a. As specified per plans.

2.11 DRINKING FOUNTAIN

a. As specified per plans.

2.12 THRUST BLOCKS

a. Concrete Mix: 560-C-3250.
b. Cement: ASTM C 150, Type II.
c. Fine Aggregate: ASTM C 33, sand.
d. Coarse Aggregate: ASTM C 33, crushed gravel.
e. Water: Potable.

2.13 QUICK COUPLER VALVE

a. Rain Bird or approved equal.

ACCESSORIES

A. Extension Stems for Valve Operators:

1. Where depth of valve is such that center-line is more than 3 feet below grade, provide operating extension stem to bring operating nut 6 inches below surface of ground and flash or box cover.

2. Construct extension stems of steel, complete with 2 inch square operating nut.

PART 3 - EXECUTION

3.1 EARTHWORK

A. Refer to Division 2 Section 02310 "Earthwork" for excavation, trenching, and backfilling.

B. Refer to Standard Specifications for Public Works Construction – Green Book for cutting and patching of existing paving.

3.2 PIPING APPLICATIONS

A. Transition couplings and special fittings with pressure ratings at least equal to piping pressure rating may be used unless otherwise indicated.

B. Do not use flanges or unions for underground piping unless specifically shown on plans.

C. Flanges, unions, and special fittings may be used, instead of joints indicated, on aboveground piping and piping in vaults.

D. Refer to contract drawings for pipe materials that are to be used.

3.3 VALVE APPLICATIONS

A. Drawings indicate valve types to be used.

3.4 PIPING SYSTEMS - COMMON REQUIREMENTS

A. Provide a continuous bare copper or aluminum tracer wire not less than 0.10 inch in diameter in sufficient length over each separate run of nonmetallic pipe.

3.5 INSTALLATION OF PIPING

A. Water-Main Connection: Coordinate the connections to the water mains with the Los Angeles Department of Water and Power

B. Comply with NFPA 24 for fire-service-main piping materials and installation.

1. Install PE corrosion-protection encasement in accordance with ASTM A674 or AWWA C105/A21.5.

C. Install copper tube and fittings in accordance with CDA's "Copper Tube Handbook."

D. Install ductile-iron, water-service piping in accordance with AWWA C600 and AWWA M41.

1. Install PE corrosion-protection encasement in accordance with ASTM A674 or AWWA C105/A21.5.

E. Install PVC pipe in accordance with ASTM D2774.

F. Bury piping with depth of cover over top at least 36 inches.

G. Extend water-service piping and connect to water-supply source and building water-piping systems at outside face of building wall in locations and pipe sizes indicated.

1. Terminate water-service piping at building wall until building water-piping systems are installed. Terminate piping with caps, plugs, or flanges as required for piping material. Make connections to building water-piping systems when those systems are installed.

H. Install underground piping with restrained joints at horizontal and vertical changes in direction. Use restrained-joint piping, thrust blocks, anchors, tie-rods and clamps, and other supports.

I. Comply with DIVISION 15 for potable-water piping inside the building.

3.6 JOINT CONSTRUCTION

A. Ream ends of pipes and tubes and remove burrs.

B. Remove scale, slag, dirt, and debris from inside and outside of pipe and fittings before assembly.

C. Make pipe joints according to the following:
1. Copper Tubing, Soldered Joints: Apply ASTM B813 water-flushable flux, unless otherwise indicated, to tube end. Construct joints according to ASTM B828 or CDA's "Copper Tube Handbook," using lead-free solder alloy (0.20 percent maximum lead content) complying with ASTM B32.
2. Copper Tubing, Threaded Joints: Thread pipe with tapered pipe threads according to ASME B1.20.1. Cut threads full and clean using sharp dies. Ream threaded pipe ends to remove burrs and restore full ID. Join pipe fittings and valves as follows:
   a. Apply appropriate tape or thread compound to external pipe threads unless dry seal threading is specified.
   b. Damaged Threads: Do not use pipe or pipe fittings with threads that are corroded or damaged. Do not use pipe sections that have cracked or open welds.

3. Flanged Joints: Select appropriate gasket material, size, type, and thickness for service application. Install gasket concentrically positioned. Use suitable lubricants on bolt threads.
4. Ductile-Iron Piping, Gasketed Joints for Water-Service Piping: AWWA C600 and AWWA M41.
5. Ductile-Iron Piping, Gasketed Joints for Fire-Service-Main Piping: UL 194.
6. PVC solvent welded joints: Install in accordance with ASTM D2855 - PRACTICE FOR MAKING - SOLVENT - CEMENTED JOINTS WITH POLY (VINYL CHLORIDE) (PVC) PIPE AND FITTINGS. Use the solvent recommended by the pipe manufacturer.

3.7 INSTALLATION OF ANCHORAGE

A. Anchorage: Install water-distribution piping with restrained joints. Anchorages and restrained-joint types that may be used include the following:

1. Concrete thrust blocks.

2. Soldered Joints

3. Solvent Welded Joints

B. Install anchorages for tees, plugs and caps, bends, crosses, valves, and hydrant branches. Include anchorages for the following piping systems:

1. Gasketed-Joint, Ductile-Iron, Water-Service Piping: In accordance with AWWA C600.
2. Fire-Service-Main Piping: In accordance with NFPA 24.

C. Apply full coat of asphalt or other acceptable corrosion-resistant material to surfaces of installed ferrous anchorage devices.

3.8 INSTALLATION OF VALVES

A. AWWA Gate Valves: Comply with AWWA C600 and AWWA M44. Install each underground valve with stem pointing up and with valve box.

B. AWWA Valves Other Than Gate Valves: Comply with AWWA C600 and AWWA M44.

C. UL-Listed or FM Global-Approved Gate Valves: Comply with NFPA 24.

D. Pressure-Reducing Valves: Install as shown on plans and in accordance with manufacturer recommendations.

3.9 INSTALLATION OF BACKFLOW PREVENTERS

A. Install backflow preventers of type, size, and capacity indicated. Include valves and test cocks. Install in accordance with requirements of plumbing and health department and authorities having jurisdiction.

B. Do not install backflow preventers that have relief drain in vault or in other spaces subject to flooding.

C. Do not install bypass piping around backflow preventers.

3.10 INSTALLATION OF PROTECTIVE ENCLOSURES

A. Install concrete base level and according to the details on the plans as well as manufacturer recommendations.

B. Install protective enclosure over backflow preventer assembly.

C. Anchor protective enclosure to concrete base per manufacturer recommendations.

3.12 IDENTIFICATION INSTALLATION

A. Install continuous plastic underground warning tape during back-filling of trench for underground water-service piping. Locate 6 to 8 inches below finished grade, directly over piping.

3.13 FIELD QUALITY CONTROL

A. Compaction testing will be performed in accordance with ASTM D1557.

B. If tests indicate Work does not meet specified requirements, refer to Section 01452 – Inspection of the Work and Section 01453 – Sampling, Testing and Fabrication Inspection.

C. Provide hydrostatic leak test as indicated in the California Code of Regulations, Title 24 - Building Standards, Part 5, 1998 Basic Plumbing Regulations with State Amendments.

A. Piping Tests: Provide labor and test equipment including test pumps, gauges, instruments and other equipment required. Use test quality pressure gauges with range of approximately twice test pressure. Use calibrated gauges and instruments with current calibration seals or certificates.

Conduct piping tests before joints are covered and after thrust blocks have hardened sufficiently. Fill pipeline 24 hours before testing and apply test pressure to stabilize system. Use only potable water.

a. Remove equipment subject to damage by test pressure from systems during testing. Replace removed equipment after testing. Systems may be tested in sections as work progresses; however, previously tested portion shall become part of later test of composite system. Correct leaks by remaking joints with new material. Test time accrues only while full test pressure is on system. Test before backfilling, concealing, insulating, or making connections to potable water system.

Testing of the newly laid piping or any valved section of piping shall be accomplished after the lines are laid, the joints and accessories installed, and the trench partially backfilled, leaving the joint exposed for examination. The piping shall be subjected for a minimum of two hours to a pressure of one and one-half times the working pressure, but in no case less than 150 pounds per square inch or at a duration and pressure determined by local codes, whichever is more stringent. Examine all exposed pipe, joints, fittings and accessories during the test period. Replace or repair defective portions of the system, and repeat tests until

results are satisfactory

C. Prepare reports for testing activities.

3.19 CLEANING

A. Clean and disinfect water distribution piping as follows:

1. Purge new water distribution piping systems and parts of existing systems that have been altered, extended, or repaired before use.

2. Use purging and disinfecting procedure prescribed by authorities having jurisdiction or, if method is not prescribed by authorities, use procedure described in AWWA C651 or as described below:

a. Comply with NFPA 24 for flushing of piping. Flush piping system with clean, potable water until dirty water does not appear at points of outlet.

1) Fill system or part of system with water/chlorine solution containing at least 50 ppm of chlorine. Isolate system or part thereof and allow to stand for 24 hours.

2) Drain system or part of system of previous solution and refill with water/chlorine solution containing at least 200 ppm of chlorine; isolate and allow to stand for 3 hours.

3) Following allowed standing time, flush system with clean, potable water until chlorine does not remain in water coming from system.

4) Submit water samples in sterile bottles to authorities having jurisdiction. Repeat procedure if biological examination shows evidence of contamination.

B. Prepare reports for purging and disinfecting activities.

END OF SECTION

SECTION 02515
WATER PIPELINE TESTING AND DISINFECTION

PART 1 -- GENERAL

1.1 THE REQUIREMENT

A. The CONTRACTOR shall furnish all tools, equipment, materials, and supplies and shall perform all labor required to complete the work as indicated in the Contract Documents.

B. This Section covers flushing and testing of all pipelines and appurtenant piping and disinfection of all pipelines and appurtenant piping for water, complete, including conveyance of test water from CITY-designated source to point of use and all disposal thereof, in accordance with the requirements of the Contract Documents.

1.2 RELATED WORK SPECIFIED ELSEWHERE

A. Division 15: MECHANICAL

1.3 REFERENCE SPECIFICATIONS, CODES AND STANDARDS

A. Comply with the applicable reference specifications as specified in the GENERAL REQUIREMENTS.

B. Comply with the current provisions of the following Codes and Standards.

ANSI/AWWA B300	Hypochlorites.
ANSI/AWWA B301	Liquid Chlorine.
ANSI/AWWA C651	Disinfecting Water Mains.

C. Comply with the Los Angeles City Plumbing Code.

1.4 CONTRACTOR SUBMITTALS

A. Submittals shall be made in accordance with the GENERAL REQUIREMENTS.

B. The following submittals and specific information shall be provided.

1. A testing schedule, including proposed plans for water conveyance, control, disposal~~,~~ and disinfection, shall be submitted in writing for approval a minimum of 48 hours before testing is to start.

1.5 QUALITY ASSURANCE

A. Comply with the applicable Reference Specifications of the GENERAL REQUIREMENTS.

PART 2 -- PRODUCTS

2.1 MATERIALS REQUIREMENTS

A. All test equipment, chemicals for disinfection, temporary valves, bulkheads, or other water control equipment and materials shall be determined and furnished by the CONTRACTOR subject to the ENGINEER's approval. No materials shall be used which would be injurious to the construction or its future function.

B. Chlorine for disinfection shall be in the form of liquid chlorine, sodium hypochlorite solution, or calcium hypochlorite granules or tablets.

C. Liquid chlorine shall be in accordance with the requirements of ANSI/AWWA B301. Liquid chlorine shall be used only:

1. In combination with appropriate gas flow chlorinators and ejectors;

2. Under the direct supervision of a certified testing laboratory;

3. When appropriate safety practices are observed.

D. Sodium hypochlorite and calcium hypochlorite shall be in accordance with the requirements of ANSI/AWWA B300.

PART 3 -- EXECUTION

3.1 GENERAL

A. Unless otherwise provided herein, water for testing and disinfecting water pipelines will be furnished by the CITY; however, the CONTRACTOR shall make all necessary provisions for conveying the water from the CITY-designated source to the points of use.

B. All pressure pipelines shall be tested. Disinfection shall be accomplished by chlorination. All chlorinating and testing operations shall be performed by a certified laboratory in the presence of the INSPECTOR.

C. Disinfection operations shall be scheduled by the CONTRACTOR as late as possible during the contract time period so as to assure the maximum degree of sterility of the facilities at the time the WORK is accepted by the ENGINEER and the INSPECTOR. Bacteriological testing shall be performed by a certified testing laboratory approved by the ENGINEER and at the expense of the CONTRACTOR. Results of the bacteriological testing shall be satisfactory with the Los Angeles County Department of Health Services or other appropriate regulatory agency.

3.2 HYDROSTATIC TESTING OF PIPELINES

A. Prior to hydrostatic testing, all pipelines shall be flushed or blown out as appropriate. The CONTRACTOR shall test all pipelines either in sections or as a unit. No section of the pipeline shall be tested until all field-placed concrete or mortar has attained an age of 14 days. The test shall be made by closing valves when available, or by placing temporary bulkheads in the pipe and filling the line slowly with water. The CONTRACTOR shall be responsible for ascertaining that all test bulkheads are suitably restrained to resist the thrust of the test pressure without damage to, or movement of, the adjacent pipe. Care shall be taken to see that all air vents are open during filling.

B. The pipeline shall be filled at a rate which will not cause any surges or exceed the rate at which the air can be released through the air valves at a reasonable velocity and all the air within the pipeline

shall be properly purged. After the pipeline or section thereof has been filled, it shall be allowed to stand under a slight pressure for at least 24 hours to allow the concrete or mortar lining, as applicable, to absorb what water it will and to allow the escape of air from any air pockets. During this period, bulkheads, valves, and connections shall be examined for leaks. If leaks are found, corrective measures satisfactory to the ENGINEER shall be taken.

C. The hydrostatic test shall consist of holding the test pressure on the pipeline for a continuous period of 4 hours. The test pressure for pipelines shall be 133 percent of the pipe pressure class shown or specified, measured at the lowest point of the pipeline section being tested. Potable water piping shall be tested at a minimum pressure of 200 psi. The test pressure for yard piping shall be as shown or specified on the Piping Schedule, measured at the lowest point of the pipeline section being tested. No pressure test will be required for a reservoir overflow line. All visible leaks shall be repaired in a manner acceptable to the ENGINEER.

D. The maximum allowable leakage for pipelines shall be **10** U.S. gallons per inch of diameter per mile of pipe per 24 hours for pipe with 40-ft or greater joint lengths and with rubber-gasketed joints, and **20** U.S. gallons per inch of diameter per mile of pipe per 24 hours for pipe with 20-ft or less joint lengths and with rubber-gasketed joints. The maximum leakage for yard piping shall be as shown on the Piping Schedule. Pipe with welded joints shall have no leakage. In the case of pipelines that fail to pass the prescribed leakage test, the CONTRACTOR shall determine the cause of the leakage, shall take corrective measures necessary to repair the leaks, and shall again test the pipelines.

3.3 DISINFECTING PIPELINES

A. General: All water pipelines except those appurtenant to hydraulic structures shall be disinfected in accordance with the requirements of ANSI/AWWA C651 disinfection of water mains using the Continuous-Feed Method as modified herein.

B. Chlorination: A chlorine-water mixture shall be uniformly introduced into the pipeline by means of a solution-feed chlorinating device. The chlorine solution shall be introduced at one end of the pipeline through a tap in such a manner that as the pipeline is filled with water, the dosage applied to the water entering the pipe shall be approximately 50 mg/l. Care shall be taken to prevent the strong chlorine solution in the line being disinfected from flowing back into the line supplying the water.

C. Retention Period: Chlorinated water shall be retained in the pipeline long enough to destroy all non-spore-forming bacteria. This period shall be at least 24 hours. After the chlorine-treated water has been retained for the required time, the free chlorine residual at the pipeline extremities and at other representative points shall be at least 25 mg/l.

D. Chlorinating Valves: During the process of chlorinating the pipelines, all valves and other appurtenances shall be operated while the pipeline is filled with the heavily-chlorinated water.

E. Final Flushing: After the applicable retention period, the heavily chlorinated water shall be flushed from the pipeline until chlorine measurements show that the concentration in the water leaving the pipeline is no higher than that generally prevailing in the system or is acceptable for domestic use. If there is any question that the chlorinated discharge will cause damage to the environment, a reducing agent shall be applied to the water to neutralize thoroughly the chlorine residual remaining in the water.

F. Bacteriological Testing: After final flushing and before the pipeline is placed in service, a sample~~,~~ or samples shall be collected from the end of the line, and shall be tested for bacteriological quality in accordance with the requirements of the Los Angeles County Department of Health Services or other appropriate regulatory agency. For this purpose, the pipe shall be re-filled with fresh potable water and left for a period of 24 hours before any sample is collected. Should the initial disinfection treatment fail to produce satisfactory bacteriological test results, the disinfection procedure shall be repeated until acceptable results are obtained.

3.4 CONNECTIONS TO EXISTING SYSTEM

A. Where connections are to be made to an existing potable water system, the interior surfaces of all pipe and fittings used in making the connections shall be swabbed or sprayed with a one percent hypochlorite solution before they are installed. Thorough flushing shall be started as soon as the connection is completed and shall be continued until discolored water is eliminated.

END OF SECTION

SECTION 02525
SANITARY SEWER SYSTEM TESTING

PART 1 -- GENERAL

1.1 THE REQUIREMENT

A. The CONTRACTOR shall furnish all tools, equipment, materials, and supplies and shall perform all labor required to complete the work as indicated on the Drawings and specified herein.

B. This Section covers the performance of all pipeline flushing and testing, complete, for sanitary sewer system piping as specified herein and in accordance with the requirements of the Contract Documents.

1.2 RELATED WORK SPECIFIED ELSEWHERE

A. Section 02585 Maintenance Hole and Precast Vault Construction.

B. Section 02540 Site Sanitary Sewer Utilities

1.3 REFERENCE SPECIFICATIONS, CODES AND STANDARDS

A. Comply with the applicable reference specifications as specified in the GENERAL REQUIREMENTS.

1.4 CONTRACTOR SUBMITTALS

A. Submittals shall be made in accordance with the GENERAL REQUIREMENTS.

B. The CONTRACTOR shall submit in writing all proposed plans for testing, and for water conveyance, control and disposal. The CONTRACTOR shall also submit written notice 48 hours in advance of the proposed testing schedule for review and concurrence of the ENGINEER.

1.5 QUALITY ASSURANCE (NOT USED)

PART 2 -- PRODUCTS

2.1 GENERAL

A. Temporary valves, plugs, bulkheads, and other air pressure testing and water control equipment and materials shall be provided by the CONTRACTOR subject to the ENGINEER's review. No materials shall be used which will be injurious to pipeline structure and future function. Air test gages shall be laboratory-calibrated annually test gages and shall be recalibrated by a certified laboratory at the CONTRACTOR's expense prior to the leakage test, only if required by the ENGINEER.

PART 3 -- EXECUTION

3.1 GENERAL

A. Unless otherwise specified, water for testing will be furnished by the CITY; however, the CONTRACTOR shall make all necessary provisions for conveying the water from the CITY-designated source to the points of use.

B. Release of water from pipelines, after testing has been completed, shall be performed as reviewed by the ENGINEER.

C. All testing operations shall be performed in the presence of the INSPECTOR.

3.2 TESTING OF PIPELINE

A. General: All gravity sewer pipes and service laterals shall be tested for exfiltration and/or infiltration and deflection, as specified. All maintenance holes shall be tested for leakage, as specified. Maintenance holes shall be tested prior to backfill placement, whereas all pipe shall be backfilled prior to testing. All leakage tests of sanitary sewer systems shall be in conformance with SSPWC Section 306-1.4.1. For pressure sewers (force main) tests, the water pressure shall be measured at the lowest point of the pipeline section being tested.

B. Water Exfiltration Test shall be in conformance with SSPWC Section 306-1.4.2.

C. Water Infiltration Test shall be in conformance with SSPWC Section 306-1.4.3. Unless otherwise specified, infiltration will be measured by the CONTRACTOR using measuring devices approved by the ENGINEER.

D. Air Pressure Test shall be in conformance with SSPWC Section 306-1.4.4.

E. At the CONTRACTOR's option, joints may be air tested individually, joint by joint, with the use of specialized equipment. The CONTRACTOR shall submit its joint testing procedure for the ENGINEER's review and approval prior to testing. Prior to each test, the pipe at the joint shall be wetted with water. The maximum test pressure shall be 3.0 psi. The minimum allowable pressure drop shall be 1.0 psi over a 30-second test period.

F. Water Pressure Test shall be in conformance with SSPWC Section 306-1.4.5.

G. Deflection Test: All flexible and semi-rigid main line pipe shall be tested in accordance with SSPWC Sections 306-1.2.12 and 306-1.2.13 for deflection, joint displacement, or any other obstruction by passing a rigid mandrel through the pipe by hand, not less than 30 days after completion of the trench backfill, but prior to permanent resurfacing. The mandrel shall be a full circle, solid cylinder, or a rigid, non-adjustable, odd-numbered leg (9 leg minimum) steel cylinder, accepted by the ENGINEER as to design and manufacture. The circular cross section of the mandrel shall have a diameter of at least 95 percent of the specified average inside diameter of the pipe and the minimum length of the circular portion of the mandrel shall be equal to the nominal diameter of the pipe. Obstructions encountered by the mandrel shall be corrected by the CONTRACTOR.

3.3 TESTING OF MAINTENANCE HOLES

A. All sewer maintenance holes shall be hydrostatically tested for leakage after installation, but prior to being backfilled. Prior to hydrostatic testing, all maintenance holes shall be visually inspected for leaks. All leaks or cracks shall be repaired by the CONTRACTOR, prior to hydrostatic testing, to

the satisfaction of the ENGINEER and the INSPECTOR. All pipes entering the maintenance hole shall be sealed at a point outside the maintenance hole walls so as to include testing of the pipe/maintenance hole joints. The maintenance hole shall be filled with water to a level 2 inches below the top of the frame. Safety lines shall be secured to all plugs utilized. After a period of at least one hour to allow the water level to stabilize, the maintenance hole shall be refilled and the water level shall be checked. The water level shall again be checked after a period of 4 hours. If the water level is reduced by more than 1/4-inch, the leakage shall be considered excessive, and the CONTRACTOR shall be required to make all necessary repairs and retest the maintenance hole. The exterior of the maintenance hole shall be inspected during this period for visible evidence of leakage. Visible moisture, sweating, or beads of water on the exterior of the maintenance hole shall not be considered leakage, but any water running across the surface will be considered leakage and shall be repaired to the satisfaction of the ENGINEER and the INSPECTOR regardless of the volume of water lost.

END OF SECTION

SECTION 02540
SITE SANITARY SEWER UTILITIES

PART 1 - GENERAL

1.1 SUMMARY

A. Extent of sanitary sewage systems work is indicated on drawings and schedules, and by requirements of this section.

B. Refer to Section 02310 "Earthwork" for excavation and backfill required for sanitary sewage systems; and to applicable portions of section 306 of the Standard Specifications for Public Works Construction.

1.2 RELATED WORK

Drawings and general provisions of Contract, including General and Supplementary Provisions and Division-1 General Requirement Specification sections, apply to work of this section.

1.3 SUBMITTALS:

A. Submittals shall be made in accordance with Section 01330 - SUBMITTALS of DIVISION 1 - GENERAL REQUIREMENTS of the Project Manual.

B. Product Data: Submit manufacturer's catalog data, specifications, and installation procedures for materials. Include technical data for accessories, gaskets, joints and couplings.

C. Shop Drawings: Submit site plan denoting locations of lines, valves, and appurtenances. Include profile of proposed routing.

D. Record Drawings: At project closeout, submit record drawings to City representative of installed sanitary sewage piping and products.

E. Certificates: Certificates attesting that tests set forth in referenced publication have been performed and the results required by design have been met.

1.4 QUALITY ASSURANCE:

A. Bonded Sewer Contractor: For connection to City's Sewer System including any sewer structures, Contractor specializing in the Sewer System connection work of this section shall be preapproved, bonded, and certified by Los Angeles City Bureau of Engineering. Submit certificates verifying Contractor(s) qualifications prior to start of work.

B. Codes and Standards:

1. Plumbing Code Compliance: comply with applicable portions of City of Los Angeles code, pertaining to selection and installation of sanitary sewage system materials and products, together with Standard Specifications for Public Works Construction, local code, and California Administrative Code, Title 22, Section 64630(e)(2).

2. Obtain and comply with applicable portions of local environmental regulations pertaining to sanitary sewer systems.

3. Obtain clearance, permit and comply with Industrial Waste Agency requirements.

1.5 GUARANTY-WARRANTY

A. The Contractor shall and does hereby warrant and guaranty that all work executed under this Contract be free from defects of materials and workmanship for a period of one year from the date of final acceptance of the project by the Board of Public Works, except certain specific items of work, materials and equipment requiring a guaranty or warranty for a greater period of time is specified.

1.6 DELIVERY, STORAGE AND HANDLING

A. Deliver material and products with certified delivery tickets to the job-site where directed by the City Engineer or the Consultant.

B. Store materials on the job located where directed by the City Engineer or the Consultant and not interfering with work operations of this Section.

C. Handle materials safely in a manner avoiding damage prior to and during installation and not damaging work of other trades

1.7 INSPECTION

A. Required:

1. All work shall be inspected by the Inspector.

2. Test pipes shall be selected from the lot and tested in accordance with the requirements specified in SSPWC, but not necessary limited to. At the place of manufacture, the City Engineer or Inspector will indicate tentative acceptance of the pipe for delivery by marking with the Agency stamp. Final acceptance will be made only when the project has been completed.

B. Notification: Contractor shall notify all local governing agencies and arrange for required inspection.

1.8 COORDINATION

A. Required: All on-site sanitary sewer work shall be fully coordinated with other Contracted Work operations as per approved work scheduled.

1.9 PERMITS

A. Required: Obtain Sewer Connection permit for connecting and discharging sewer water into City sewer system as noted on the Contract Drawing and as noted in Sections of GENERAL CONDITIONS and Section 01112 – DESCRIPTION OF THE WORK in GENERAL REQUIREMENTS of the Project Manual or as otherwise directed by the City Engineer or the Consultant. Sewer permit and connection fees shall be arranged and paid by the Contractor.

PART 2 - PRODUCTS

2.1 PIPES AND PIPE FITTINGS:

A. General: Provide pipe of the following material, of weight/class indicated. Provide pipe fittings and accessories of same material and weight/class as pipes, with joining method as indicated.

B. PVC (Polyvinyl Chloride) Sewer Pipe and Fittings: SDR 35 pipe, unless otherwise specified, complying with Section 207-17 of the Standard Specifications for Public Works Construction. ASTM D3034 for elastomeric gasket joints.

1. Gaskets: ASTM 477, elastomeric seal.

C. Couplings: Rubber or elastomeric sleeve and stainless steel band assembly fabricated to match outside diameters of pipes to be joined.

1. Sleeves: ASTM C 564, rubber for cast-iron soil pipe; and ASTM F 477, elastomeric seal for plastic pipe. Sleeves for dissimilar or other pipe materials shall be compatible with pipe materials being joined.

2. Bands: Stainless steel, on at each pipe insert.

2.2 CLEANOUTS:

General: Provide as indicated on the Contract Documents, one-way or two-way as indicated, pipe extension to grade as shown on the plans together with furrule and countersunk cleanout plug. Provide round cast iron access frame over cleanout, with heavy-duty secured scoriated cover with the word “SEWER,” embossed on the cover in one inch high upper case lettering. Brooks No. 3-TL, NDS, EJIW, or equal. Install in accordance with the City of Los Angeles Bureau of Engineering Standard Plan S-164-0.

2.3 CONCRETE MATERIALS

A. Required for Cleanouts: Concrete having a compressive strength of 2000 psi at 28 days as per Section 303 of the SSPWC, Section 03300 - CAST-IN-PLACE CONCRETE of the Project Manual, and City of Los Angeles Bureau of Engineering Standard Plan S-164-0.

2.4 WARNING TAPE

Provide heavy-gauge, plastic tape of 3 inch minimum width for use in trenches containing sanitary sewer lines. Utilize tape made of material resistant to corrosive soil with an integral trace wire. Use tape with printed warning that a sanitary sewer is located below the tape. Install per the Contract Drawings. Blackburn Manufacturing or approved equal.

2.5 MISCELLANEOUS MATERIALS

A. Miscellaneous Metals: See Section 05500 - METAL FABRICATIONS of the Project Manual.

B. Grout: See Section 03300 - CAST-IN-PLACE CONCRETE of the Project Manual.

C. Mortar: Comply with requirements of ASTM C270 - SPECIFICATION FOR MORTAR FOR UNIT MASONRY, Type "M" except the maximum placement time shall be one hour. No mortar shall be used which has begun to set; retempering not permitted.

D. Pipe Bedding and Backfill Materials: See Sub-Section 3.3 hereinafter, Section 02310 - EARTHWORK and other Sections of the Project Manual.

1. Pipe Bedding and Backfill Materials shall conform to Section 306 of the SSPWC and the requirements of City of Los Angeles Standard Plan S-251-1 - Pipe Laying in Trenches.

2. Case 5 concrete bedding shall be used in accordance with the Los Angeles City Bureau of Engineering Standard Plan S-251, latest edition.

PART 3 – EXECUTION

3.1 SURFACE CONDITIONS

Examine the areas and conditions under which work of this Section will be performed. Correct conditions detrimental to timely and proper completions of the Work. Do not proceed until detrimental conditions are corrected as directed by the City Engineer or the Consultant.

3.2 EXCAVATING AND TRENCHING

A. General:

1. Conform to the requirements as specified on the drawings, Los Angeles City Plumbing Code, Standard Specifications for Public Works Construction and other sections of the Project Manual. Case 5 Bedding installation of Los Angeles City Bureau of Engineering Standard Plan S-251, latest edition shall be used for all piping laying. Any piping with 8 feet or more cover or backfill, trench width shall not exceed the maximum allowable trench width as shown in Standard Plan S-251.

2. Excavate trenches to provide for a minimum 4-inch thickness of bedding material below bottom of pipe couplings. There shall be a minimum side clearance of 6 inches on each side.

B. Provide excavation and trenches for sanitary sewer piping systems and maintenance structures indicated on the Contract Drawings in accordance with applicable requirements specified in Section 02310 - EARTHWORK.

3.3 SANITARY SEWER SYSTEM CONSTRUCTION:

A. General: Install piping in accordance with section 306 – OPEN TRENCH CONDUIT CONSTRUCTION of the Standard Specifications for Public Works Construction, except where more stringent requirements are indicated by the governing authorities.

1. Inspect piping before installation to detect apparent defects. Mark defective materials with white paint and promptly remove from site.

2. Lay piping beginning at low point of system, true to grades and alignment indicated, with unbroken continuity of invert. Verify the invert elevation at all points of connection and report any discrepancies in accordance with section 306-1.2.2 of the Standard Specifications for Public Works Construction.

3. Place bell ends or groove ends of piping facing upstream.

4. Install gaskets in accordance with manufacturer's recommendations for use of lubricants, cements, and other special installation requirements, together with section 306-1.2.10 of the Standard Specifications for Public Works Construction.

5. Pipe slope shall not be less than ¼ inch per foot or 2 percent unless pipe inverts are indicated. Where invert elevations are indicated, install pipe at a uniform slope between inverts

B. Polyvinyl Chloride Pipe: In accordance with manufacturers' recommendations.

C. Cleaning Pipe: Clear interior of piping of dirt and other superfluous material as work progresses. Maintain swab or drag in line and pull past each joint as it is completed.

1. In large, accessible piping, brushes and brooms may be used for cleaning.

2. Place plugs in ends of uncompleted conduit at end of day or whenever work stops. Plugs shall conform to section 207.8.3 of the Standard Specifications for Public Works Construction.

3. Flush lines between manholes if required to remove collected debris.

D. Joint Adapters: Make joints between different types of pipe with standard manufactured adapters and fittings intended for that purpose.

E. Closing Abandoned Utilities: Close open ends of abandoned underground utilities which are indicated to remain in place. Provide sufficiently strong closures to withstand hydro-static or earth pressure which may result after ends of abandoned utilities have been closed in accordance with section 306-5 of the Standard Specifications for Public Works Construction.

1. Close open ends of concrete or masonry utilities with not less than 8" thick brick masonry bulkheads.

2. Close open ends of piping with threaded metal caps, plastic plugs, or other acceptable methods for sizes and type material being closed. Wood plugs are not acceptable.

F. Interior Inspection: Inspect piping to determine whether line displacement or other damage has occurred.

1. Make inspections after lines between manholes, or manhole locations, have been installed and approximately 2' of backfill is in place, and again at completion of project.

2. If inspection indicates poor alignment, debris, displaced pipe, infiltration, or other defects, correct such defects, and reinspect at no cost to County.

G. Bedding:

1. Provide for a minimum 4-inch thickness of bedding material (see Section 2.5) below bottom of pipe barrels; any over-excavations may require concrete pipe bedding and to be filled with slurry backfill or structural backfill in accordance with Standard Plan S-251, latest edition, at Contractor's expense; bedding material to be tamped and

compacted and accurately graded and shaped to support bottom quadrant of pipe, with coupling holes dug prior to placement of pipe.

2. Backfill: Provide backfill material (see Section 2.5) to an elevation of 12 inches over the top of the pipe and floor in accordance with Section 207 and 306 of the SSPWC. Use clean earth material for remainder of backfill to required finish grade and compact for yard paving. The controlled backfill shall be moisture conditioned, placed and compacted in accordance with the recommendations presented in the Geotechnical Site Investigation Report Dated January 2018 and prepared by Hushmand Associates, Inc.. Compaction shall be 90% relative compaction.

H. Pipe Juncture with Concrete Structures: Set pipe ends as necessary for casting-in-place or grouting-in-place after construction of such structures.

I. Fill Joints: (Other than wedge-lock type) with mortar troweled smooth on inside of pipe; keep mortar joints damp until backfill is placed.

3.4 TAP CONNECTIONS:

A. Make connections to existing piping and underground structures, so that finished work will conform as nearly as practicable to requirements specified for new work, remodeling or existing sewer shall conform to section 306-6 of the Standard Specifications for Public Works Construction.

B. Use commercially manufactured wyes for branch connections. Field cutting into piping will not be permitted. Spring wyes into existing line and encase entire wye, plus 6" overlap, with not less than 6" of 3,000 psi 28-day compressive strength concrete.

C. Branch connections made from side into existing 4" to 21" piping shall have wye sprung into existing line, and entire wye encased with not less than 6" of 3,000 psi 28-day compressive strength concrete.

D. For branch connections made from side into existing 24" or larger piping or to underground structures, cut opening into unit sufficiently large to allow 3" of concrete to be packed around entering connection. Cut ends of connection passing through pipe or structure wall to conform to shape of, and be flush with, inside wall, unless otherwise indicated. On outside of pipe or structure wall, encase entering connection in 6" of concrete for a minimum length of 12" to provide additional support or collar from connection to undisturbed ground.

1. Provide concrete which will attain minimum 28-day compressive strength of 3,000 psi, unless otherwise indicated.

2. Use epoxy bonding compound as interface between new and existing concrete and piping materials.

E. Take care while making tap connections to prevent concrete or debris from entering existing piping or structure. Remove debris, concrete, or other extraneous material which may accumulate.

3.5 CLEARANCE OF SANITARY SEWERS

A. Buildings or Structures: Two feet.

B. Parallel to Water Line:

1. Building sanitary drain, is not permitted to be installed in a common trench with a potable water line per the State of California's, California Code of Regulations (CCR), Title 22, Section 64572(a).

2. The sanitary sewer and the potable water line shall be separated at least 10 feet horizontally from and one foot vertically, with the waterline being above the sewer line per CCR, Title 22, Section 64572(a).

3. The vertical separation specified above is required only when the horizontal distance between the sewer line and the potable water line is less than ten feet.

4. The minimum separation distances set forth shall be measured from the nearest outside edge of each pipe barrel.

5. With the approval of the State of California's Water Resources Control Board, the newly installed water lines may be exempt from the separation distances from the sewer line, per CCR, Title 22, Section 64572(h).

6. Project site sanitary sewer, receiving more than one building sanitary drain or acid pipeline, shall be separated from a potable water line in accordance with the requirements of the California, Health and Human Services Agency, Department of Public Health.

C. Crossing Water Line:

1. Building sanitary drain shall be installed a minimum of 12 inches below the potable water line and no less than 45-degrees to the water line per CCR, Title 22, Section 64572(d).

2. No connection joints shall be made in the water line within eight horizontal feet of the sewer line per CCR, Title 22, Section 64572(d).

3. Project site sanitary sewer shall be separated from the potable water main in accordance with the requirements of the California Code of Regulations (CCR) This section has been Repealed. Sections 64551.100 & 64572 applies

3.6 BACKFILLING:

A. General: Conduct backfilling operations of open-cut trenches closely following laying, jointing, and bedding of pipe, and after initial inspection and testing are completed in accordance with section 306 of the Standard Specifications for Public Works Construction.

1. To minimize local area traffic interruptions, allow no more than 100' between pipe laying and point of complete backfilling.

2. Mechanically compact backfill pursuant to section 306 of the Standard Specifications for Public Works Construction. No jetting is allowed.

B. As specified in Section 02310 -EARTHWORK and provision herein, including approval, place approved material 12-inches above top of pipe and the balance of backfill shall be approved clean earth material free from rock or large clods larger than 1-inch in size. If excavated material is unsuitable or rejected; Contractor shall provide approved imported materials as necessary to complete the work.

C. No backfill material shall be deposited against the concrete structure until the concrete has developed not less than the specified 28 - day compressive strength.

3.7 CLEANOUTS:

A. Provide cleanout at the upper terminal for each sanitary pipeline, at intervals not exceeding 100 feet in straight run and any fraction thereof and for each aggregate horizontal change in direction exceeding 135 degrees.

B. Install required cleanouts before back filling of horizontal pipelines.

3.8 TESTING:

A. Perform testing of completed piping in accordance with local authorities having jurisdiction, and section 306 of the Standard Specifications for Public Works Construction.

B. Where excessive ground water is encountered test the pipeline for infiltration.

C. When infiltration or exfiltration exceeds allowable amounts as set forth in the Section 306 formula, perform repairs or replacements as necessary to comply with the required limits

3.9 TRENCH RESURFACING:

Where existing improvements have been removed or damaged during construction, the contractor shall replace the improvement in kind to the satisfaction of the owner. All removals shall be sawcut. Permanent resurfacing shall conform to section 306 of the Standard Specifications for Public Works Construction.

END OF SECTION

SECTION 02545
STORM DRAIN SYSTEM

PART ONE - GENERAL

1.1 DESCRIPTION

A. Furnish all labor, materials and equipment necessary to provide "on-site" Storm Drain System as shown on the Contract Drawing and specified herein, including:

1. Catch basins
2. Maintenance Holes
3. Piping, Fittings, and Couplings
4. Connection to storm drain main line or structure
5. Trench Drains
6. Diversion Structures
7. Transition Structures
8. Hydrodynamic Separators
9. Junction Structures
10. Stormwater Storage Tanks, Wet Wells, and Sump Pumps
11. Sump Structures
12. Cleanouts
13. EPIC System
14. Catch Basin Inserts
15. Connector Pipe Screens

B. Repair and construct paving and bases after installation of Storm Drain System.

C. **Related Sections:**

1. Documents affecting work of this Section include, but are not necessarily limited to the GENERAL CONDITIONS, SUPPLEMENTARY CONDITIONS and DIVISION 1 - GENERAL REQUIREMENTS and applicable section of the Project Manual.

2. Site Demolition in Section 02220.

3. Shoring in Section 02240.

4. Earthwork in Section 02310.

5. Yard Work and Street Work in Section 02710.

6. Unit Paving in Section 02720.

7. Irrigation System in Section 02810.

8. Landscaping 02900.

9. Concrete Work in Section 03300.

10. Miscellaneous Metals in Section 05500.

11. Waterproofing in Section 07290.

12. Caulking and Sealants in Section 07920.

13. Plumbing in Division 15.

1.2 QUALITY ASSURANCE

A. **Bonded Contractor:** For connection to City's Storm Drain System including any catch basin or structure, Contractor specializing in the Storm Drain System connection work of this section shall be preapproved, bonded, and certified by Los Angeles City Bureau of Engineering. Submit certificates verifying Contractor's qualifications prior to start of work.

B. **Labor:** Use adequate numbers of skilled laborers who are thoroughly trained and experienced in the necessary crafts and who are completely familiar with the specified requirements and the methods needed for proper performance of the work of this Section.

C. **Codes and Regulations:** Conform to the applicable 2020 Los Angeles City Building Code and Amendments, Los Angeles City Bureau of Engineering Standard Plans, and the Standard Specifications for Public Works Construction (SSPWC), latest edition.

1.3 SUBMITTALS

A. Comply with applicable provisions in the Section 01330 **-** SUBMITTALS of DIVISION 1 - GENERAL REQUIREMENTS of the Project Manual.

B. **Product Data:** Within 35 calendar days after the Contractor has received the City's "Notice to Proceed", submit:

1. Materials list of items proposed to be provided under this Section and other related Sections;

2. Manufacturer's Specifications and other data needed to prove compliance with the specified requirements;

3. Manufacturer's recommended installation procedures which, when approved by the City Engineer or the Consultant, will become the basis for accepting or rejecting actual installation procedures used on the Work.

C. Contractor's proof of qualification.

D. **Shop Drawings:**

1. Shoring Drawings.

2. Traffic Detour Plans.

3. Submit complete shop fabrication drawings of all steel pipe, structures, pipe specials and joint details. Contractor shall also submit a schedule of pipe marks accompanied by a plan showing the field location of each mark.

E. Testing Data and Reports.

F. Delegated Design: Sizing calculations and details for catch basin inserts and connector pipe screens at the locations indicated on the contract drawings.

1.4 DELIVERY, STORAGE AND HANDLING

A. Deliver material and products with certified delivery tickets to the job-site where directed by the City Engineer or the Consultant.

B. Store materials on the job located where directed by the City Engineer or the Consultant and not interfering with work operations of this Section.

C. Handle materials safely in a manner avoiding damage prior to and during installation and not damaging work of other trades.

1.5 PROTECTION

A. Required:

Furnish, erect and maintain barriers, lights and signs as necessary to protect the public, Contractor's and City's personnel and work under this Contract in accordance with Work Area Traffic Control Handbook until such time for backfilling of trenches and subsequent Contracted Site and "Street Work" operations.

1.6 PERMIT

A. Required:

1. Indexed Contract Drawings are the permit. No additional permits are required for connections to City owned storm drain lines.

1.7 INSPECTION

A. Required:

1. All work regarding the storm drain systems shall be inspected by the Inspector of the Bureau of Contract Administration. Contractor shall make necessary arrangement in accordance with the permit requirements.

2. Test pipes shall be selected from the lot and tested in accordance with the requirements specified in SSPWC, but not necessary limited to. At the place of manufacture, the City Engineer or Inspector will indicate tentative acceptance of the pipe for delivery by marking with the Agency stamp. Final acceptance will be made only when the project has been completed.

3. All pipe penetration and required fire stopping shall be inspected prior to any wall closure.

B. Notification: Contractor shall notify all local governing agencies and arrange for required inspection.

1.8 COORDINATION

A. **Required:** All on-site storm drain work shall be fully coordinated with other Contracted Work operations as per approved work scheduled.

PART TWO-PRODUCTS

2.1 PIPE MATERIAL (As applicable)

A. **Reinforced Concrete Pipe:** Cast Pipe wall, Spun Pipe Wall, or Machine Made type, As per Section 207-2 - REINFORCED CONCRETE PIPE of the Standard Specifications for Public Works Construction (SSPWC), sizes as indicated on the Contract Drawings. Water-tight gasketed joints.

B. **Cleanout:** To be located as shown on Contract Drawings with pipe extensions from horizontal runs installed with long turn radius or at an angle of 45 degrees or less.

1. Paved area - Smith Fig. 4020, secure round top, spigot connection, set in concrete flush with paved surface.

2. Unpaved area - Smith Fig. 4240 with extensions to finish grade.

C. **Pipe Sleeve:** Use Schedule 10 Black Steel Pipe in concrete walls and floorings. Use 24 gage galvanized iron or steel in lath and plaster partition.

D. **Fire Seal:** Use approved fire seal in all Fire rated wall on and flooring penetration shown in Section 07840 - FIRE STOPPING of the Project Manual.

E. **Sealant:** Use approved sealant in all other wall and flooring penetration as shown in Section 07920 - CAULKING AND SEALANT of the Project Manual.

F. **High Density Polyethylene Pipe:** As per Section 207-18 – Annular High Density Polyethylene Pipe with Smooth Interior, Corrugated Exterior, with Bell-and-Spigot Joints of the Standard Specifications for Public Works Construction (SSPWC), sizes as indicated on the Contract Drawings. Joints shall be water-tight.

G. **Polyvinyl Chloride (PVC) Pipe:** As per Section 207-17 – PVC Plastic Pipe of the Standard Specifications for Public Works Construction (SSPWC), sizes as indicated on the Contract Drawings. Water-tight gasketed joints and fittings.

H. **Perforated PVC Pipe:** As per Section 207-17 – PVC Plastic Pipe of the Standard Specifications for Public Works Construction (SSPWC), sizes as indicated on the Contract Drawings. All perforations shall point downward. Sets of perforations shall be:

Hole Size:	3/8” min., 1/2” max.
Holes per Set:	4 holes, 2 @ 90º apart and 2 @ 160º +/-3º
Distance between Sets:	5” min., 6” max. between sets of four holes

2.2 CONCRETE MATERIALS

A. Required for Catch Basins, Trench Drains, Maintenance Holes, Junction Structures, Sump Structures, Diversion Structures, Transition Structures, and other concrete stormwater structures shown on the Contract Drawings: Unless otherwise specified, concrete having a minimum compressive strength of 3250 psi at 28 days as per Section 303 of the SSPWC, Section 03300 - CAST-IN-PLACE CONCRETE of the Project Manual, and Section 03400 – PRECAST CONCRETE of the Project Manual. Refer to the individual City of Los Angeles Standard Plans for additional requirements.

2.3 CATCH BASIN GRATE AND FRAME

Alhambra Foundry Ltd., Alhambra California, No. A-2442 (Rectangular Trench Grate with Steel Angle Frame), sizes as indicated on the Construction Drawings, or equal. All grates shall be AASHTO H-20 traffic rated, bicycle-safe, and ADA compliant.

2.4 MISCELLANEOUS MATERIALS (As Applicable)

A. **Miscellaneous Metals:** See Section 05500 - METAL FABRICATIONS of the Project Manual.

B. **Grout:** See Section 03300 - CAST-IN-PLACE CONCRETE of the Project Manual.

C. **Mortar:** Comply with requirements of ASTM C270 - SPECIFICATION FOR MORTAR FOR UNIT MASONRY, Type "M" except the maximum placement time shall be one hour. No mortar shall be used which has begun to set; retempering not permitted.

D. **Pipe Bedding and Backfill Materials:** See Sub-Section 3.3 hereinafter, Section 02310-EARTHWORK of SSPWC and other Sections of the Project Manual. Bedding and Backfill shall comply with pipe or structure manufacturer's recommendations.

1. Where shown on the contract drawings, bedding and initial backfill shall consist of Class 1 material per ASTM D2321 wrapped in a non-woven 180N geotextile (Mirafi of approved equal)

2. Concrete bedding and backfill shall be in accordance with the Los Angeles City Bureau of Engineering Standard Plan S-251, latest edition.

E. **Trench Drains:** See contract drawings.

F. **Precast Grated Catch Basins, Precast Wet Wells, Precast Junction Structures, and Precast Sump Structures:** See contract drawings.

G. **EPIC System Including Structures, Piping, Chambers, Liners, Sand, Aggregate, Geotextiles, Pumps, etc.:** See contract drawings.

H. **Catch Basin Inserts:** See contract drawings.

I. **Connector Pipe Screens:** See contract drawings.

2.5 HYDRODYNAMIC SEPARATORS

A. Jensen Deflective Separator by Jensen Precast, or approved equal. This type of pretreatment structure is typically categorized as a Hydrodynamic Separator (HDS).

B. The pretreatment device shall be a non-mechanical and gravity driven inline system. The device shall come equipped with a stainless-steel expanded metal screen cylinder configured in the separation chamber. This expanded screen shall have openings of 4.7-millimeter. The treatment flow through the separation screen cylinder assembly shall be self-cleaning and non-blocking for all flows diverted to it, even when flows within the storm drain pipeline exceed the treatment flow capacity of the device.

C. The pretreatment device and all of its components shall be self-contained within a concrete structure constructed with a minimum 28-day compressive strength of 5,000 psi, with reinforcing per ASTM A 615, Grade 60, and supports a minimum H-20 loading as indicated by AASHTO. All seams and connection points shall be sealed watertight with non-shrink grout in accordance with manufacturer's recommendations and project specifications. All maintenance hole covers shall be watertight and shall not have any holes. Maintenance hole frame and covers shall withstand AASHTO H-20 loadings and conform to City of Los Angeles Standard Plan S-283-3. Internal Components and Appurtenances shall conform to the following:

    1. Screen and support structure shall be manufactured of Type 316 and 316L stainless steel.
    2. Connection hardware shall be manufactured of Type 316 stainless steel.
    3. Inlet Weir Cylinder shall be manufactured from high density polypropylene (HDPE), marine grade aluminum or stainless steel 304 or 316.

D. Design treatment and bypass flow rates shall be as specified in the Contract Drawings.

E. Removal Efficiencies

    1. The device shall be capable of achieving an 80 percent (%) average annual reduction in the total suspended solids (TSS).

    2. The device shall be capable of capturing and retaining 100% of pollutants greater than or equal to (≥) 4.7-millimeters (mm) regardless of the specific gravity of the pollutant, whether the pollutant is a floatable or neutrally buoyant for flows up to the unit's water quality design treatment flow rate capacity.

    3. There shall be no flow path through the device's listed treatment flow capacity that allows the passage of a 4.7-mm or larger neutrally buoyant object. The unit must have positive, non-blocking screening process.

    4. The device shall be designed to retain all previously captured pollutants even during bypass flow conditions. The unit shall not allow the scouring of previously captured pollutants.

    5. The device shall be capable of achieving greater than 65% removal efficiency (RE%) of particles typically found in roadside sediments.

6. The device shall be capable of capturing and retaining Total Petroleum Hydrocarbons (TPH), also known as oils and greases (O&G). The device shall be capable of achieving the following $RE\%_{TPH}$:

    a. $RE\%_{TPH}$ = 92% when hydraulically loaded at 25% percent of its rated-treatment capacity.
    b. $RE\%_{TPH}$ = 78% when hydraulically loaded at 50% percent of its rated-treatment capacity.
    c. These $RE\%_{TPH}$ shall be based on independent third-party research for influent oil concentrations representative of storm water runoff of 20-mg/L, ±5-mg/L.

7. The device shall be greater than 99% effective in controlling oil spills during dry weather.

F. Treatment Sizing Criteria: The treatment sizing methodology and design criteria for this device shall conform to the following:

1. The specified device shall be a swirl concentrating non-blocking screening HDS designed in accordance with the governing tenants of the continuous deflective separation treatment process for the treatment of the water quality runoff rate at its critical flow depth in the inlet, to achieve a RE% = 80% for TSS. This 80% TSS RE% shall be based on an average particles size of D50=63-microns (µm).

2. The HDS, vortex-type separation system shall be designed so that the surface hydraulic loading rate in the plan view of the separation chamber does not exceed 24-gpm/ft_2 at any time of operation up to the unit's listed treatment flow rate.

G. Solids and Oil Storage Capacity

1. The unit shall be designed with a sump chamber for the storage of captured sediments and other negatively buoyant pollutants in between maintenance cycles.

2. Sump storage capacity shall be at least one cubic yard.

3. The sump chamber shall be hydraulically and physically separate from the treatment process flow path of the device to minimize re-suspension potential of fine particles. Access ways to the sump chamber shall be no smaller in diameter than 18-inches.

4. The device shall have an oil storage capacity for the retention of oil and fuel spills during dry-weather equivalent to the storage volume of the units shown on the contract drawings.

H. Test Performance

1. Independent Third Party Testing: Pretreatment device shall be tested and verified by a nationally recognized testing protocol and meet the following standards:

    a. Full Capture Approval: Pretreatment device shall have full capture certification by the State Water Resources Control Board.

b. Oil and Grease Removal: The device shall be independently tested by a city or government agency to capture a minimum of 90% of all oils and grease along with other emulsified and free-floating hydrocarbons.

c. Vector Control Accessibility: The device shall be approved for vector control accessibility by the Mosquito Vector Control Association of California.

d. Field Testing: The device shall be independently field tested by a city or government agency and demonstrated to remove a minimum of 80% TSS at the design flow rate with a maximum D_{50} particle size of 150 microns.

e. Solids RE% shall be supported by independent third-party research utilizing Particle Size Distributions consistent with the New Jersey Department of Environmental Protection's.

I. Performance Certification

1. Manufacturer shall submit to the Engineer a "Manufacturer's Performance Certificate" certifying the pretreatment device can achieve the specified removal efficiency for suspended solids.

2. Manufacturer shall provide a certification from a Licensed Civil Engineer that the pretreatment device will remove a minimum of 80% of total suspended solids from the design flow rate with a maximum D_{50} particle size of 150 microns.

3. Devices without these performance certifications will not be accepted.

J. Warranty

1. Manufacturer shall guarantee the pretreatment device against all manufacturing defects in materials and workmanship for a period of five (5) years from the date of delivery to the project site.

2. Manufacturer shall be notified of repair or replacement issues in writing within the warranty period.

3. The pretreatment device is limited to the recommended application for which it was designed.

2.6 DIVERSION MANHOLE

A. General

1. Diversion manholes shall be constructed of circular pre-cast concrete slab and riser components.

2. Diversion manholes must be designed with a bypass weir such that flows in excess of the maximum low flow rate are routed to a peak flow bypass line.

3. One City of Los Angeles storm drain message marker or placard shall be placed on each diversion manhole. Consult with the City for specific requirements for placard types and methods of application.

4. Diversion manholes shall be manufactured by Contech Solutions, Stormgate Manhole, or approved equal by the ENGINEER.

B. Materials

1. Slabs and risers shall be Portland Cement Concrete and shall conform to ASTM C 478 with a minimum compressive strength of 4000 psi.

2. Internal weir components shall be constructed of Aluminum.

3. Access manhole shall be constructed of Cast Iron and shall bear the words “Storm Drain”.

C. Performance

1. The diversion manhole must be designed to provide the low flow and peak bypass rates per the Contract Drawings.

2. The combination of installed components shall be designed to withstand AASHTO H-20 loads.

2.7 STORMWATER STORAGE TANK

A. General

1. Storage tanks shall be constructed of steel reinforced polyethylene (SRPE) or approved equal by the ENGINEER and designed for the storage specified on the Contract Drawings.

2. One City of Los Angeles storm drain message marker or placard shall be placed on each storage tank riser. Consult with the City for specific requirements for placard types and methods of application.

3. Storage tanks shall be manufactured by Contech Solutions, DUROMAXX, or approved equal by the ENGINEER.

B. Materials

1. Storage tanks shall be constructed of steel reinforced polyethylene (SRPE) with high density polyethylene pipe (HDPE) risers and bulkheads.

2. Internal components shall be constructed of Stainless Steel and/or Fiberglass.

3. Access manhole shall be constructed of Cast Iron and shall bear the words “Storm Drain”.

C. Performance

1. The storage tanks shall provide the minimum storage volume specified on the Contract Drawings.

2. The combination of installed components shall be designed to withstand AASHTO H-20 loads.

PART THREE - EXECUTION

3.1 SURFACE CONDITIONS

Examine the areas and conditions under which work of this Section will be performed. Correct conditions detrimental to timely and proper completions of the Work. Do not proceed until detrimental conditions are corrected as directed by the City Engineer or the Consultant.

3.2 EXCAVATING AND TRENCHING

A. General:

1. Conform to the requirements as specified on the drawings, Los Angeles City Plumbing Code, Standard Specifications for Public Works Construction and other sections of the Project Manual. Case 5 Bedding installation of Los Angeles City Bureau of Engineering Standard Plan S-251, latest edition shall be used for all piping laying, unless otherwise specified on the plans. Any piping with 8 feet or more cover or backfill, trench width shall not exceed the maximum allowable trench width as shown in Standard Plan S-251.

2. Excavate trenches to provide for a minimum 4-inch thickness of bedding material per Contract Drawings below bottom of pipe couplings. There shall be a minimum side clearance of 6 inches on each side, unless specified otherwise on the contract drawings.

B. Provide excavation and trenches for storm drain piping systems, concrete catch basins, and structures indicated on the Contract Drawings in accordance with applicable requirements specified in Section 02310 - EARTHWORK.

3.3 STORM DRAIN SYSTEM CONSTRUCTION

A. General: In strict accordance with pipe manufacturers recommendations and the Los Angeles City Plumbing Code and the SSPWC.

B. Installation of Pipe: In accordance with Sec. 306-1.2 INSTALLATION OF PIPE of the SSPWS on unyielding bedding foundations with uniform bearing under full length of pipe barrels; walking on or disturbing pipe in any manner after joints have been made, not permitted; at close of each day's work or whenever work is stopped for any reason, protect ends of pipe with temporary tight fitting closures. Slope as per Contract Drawings.

C. Seal all wall and flooring penetrations and sleeves with applicable fire stopping or sealant material. Obtain inspection prior to wall closure or trench backfill.

D. Bedding:

1. Provide for a minimum 4-inch thickness of bedding material per contract drawings below bottom of pipe barrels; any over-excavations may require concrete pipe bedding and to be filled with slurry backfill or structural backfill in accordance with Standard Plan S-251, latest edition, at Contractor's expense; bedding material to be tamped and compacted and accurately graded and shaped to support bottom quadrant of pipe, with coupling holes dug prior to placement of pipe. Use concrete bedding where specified on contract drawings.

2. Backfill: Provide backfill material per contract drawings to an elevation of 12 inches over the top of the pipe and floor in accordance with Section 306-1.3.3 – WATER DENSIFIED BACKFILL. Use clean earth material complying with the Geotechnical Report requirements for remainder of backfill to required finish grade and compact for yard paving.

E. **Pipe Juncture With Concrete Structures:** Set pipe ends as necessary for casting-in-place or grouting-in-place after construction of such structures or as required per the standard plans referenced on the contract drawings.

F. **Fill Joints:** (Other than wedge-lock type) with mortar troweled smooth on inside of pipe; keep mortar joints damp until backfill is placed.

G. **EPIC System:** Install all components per contract drawings. CONTRACTOR shall utilize a subcontractor certified for the installation of EPIC systems.

H. **Catch Basin Inserts and Connector Pipe Screens:** Install at location indicated on contract drawings. Install per manufacturer's recommendations. Manufacturer shall be responsible for the sizing and detailing on the inserts and connector pipe screens as part of a deferred delegated design submittal.

3.4 CONCRETE STRUCTURES

A. **General:** Catch basins, gutters, manholes, hydrodynamic separators, junction structures, diversion structures, treatment structures, etc. as indicated on the Contract Drawings. Installation of all precast structures shall conform to manufacturers' installation instructions and specifications.

B. **Materials:**

1. Concrete: As specified in Sections 03300 CAST-IN-PLACE CONCRETE.

2. Grates, Frames and Covers: As hereinbefore specified.

3. Miscellaneous Metals: As specified in Section 05500 - METAL FABRICATIONS.

C. **Construction:** As indicated on the Drawings and specified in Section 03300 - CAST-IN-PLACE CONCRETE.

D. **Catch Basins:** Section 303-1- CONCRETE STRUCTURE and 303-1.4.4(b) - STANDARD CATCH BASIN of the SSPWC as applicable. Forms to be of 1-inch minimum thick plywood; remove forms minimum 24-hours after concrete pour; top surface of catch basins to conform to drawing details or paving grades and as directed by the City Engineer or the Consultant; steel trowel finish and lightly brushed with bristle brush all exposed surfaces; gratings and frames to be set flush and level with top surface of basin or as otherwise indicated on the Contract Drawings.

E. **Pre-Cast Catch Basins, Maintenance Holes, Hydrodynamic Separators, Diversion Structure, and Junction Structure:** Construct at location and to elevations indicated on the Contract Drawings, in accordance with details and materials noted thereon; set precast concrete segments with full mortar joints troweled smooth on interior of manhole; set cover frames in full mortar bed and accurately to meet paving grades.

3.5 BACKFILL

A. As specified in "Backfill" subsections of Sections 02310 - EARTHWORK and provisions herein, including approval, place approved backfill material 12-inches above top of pipe and the balance of backfill shall be approved clean earth material free from rock or large clods larger than 1-inch in size. Use concrete bedding when specified on contract drawings. If excavated material is unsuitable or rejected; Contractor shall provide approved imported materials as necessary to complete the work.

B. No backfill material shall be deposited against the concrete structure until the concrete has developed not less than the specified 28 - day compressive strength.

3.6 STREET WORK

A. **Required:** All work shall comply with applicable sections of the SSPWC and as directed by the Bureau of Engineering. Complete all such work and obtain required approval prior to start of any concrete paving or sidewalk work.

1. Line and grade verification of drainpipe.

2. Trench backfill and compaction.

B. Repair all street paving and bases in accordance with the scopes indicated on the contract drawings, and in Section 02310 - EARTH WORK and Section 02710 - YARD WORK AND STREET WORK of the Project Manual. Contractor shall pay for all street damage restoration fee as indicated in Section 02710 - YARD WORK AND STREET WORK.

3.7 TESTING (As Applicable)

A. **Required:** Provide personnel and equipment necessary, and perform tests required to demonstrate that the work of this Section has been completed in accordance with the specified requirements.

B. **Hydrostatic Test on Watertight Joints:**

1. Make a hydrostatic test on each watertight joint. Test one sample of each type watertight joint used. If one sample fails because of faulty workmanship, test an additional joint.

2. Demonstrate that joints in reinforced and unreinforced concrete pipe comply with ASTM C443 - SPECIFICATION FOR JOINTS FOR CIRCULAR CONCRETE SEWER AND CULVERT PIPE, USING RUBBER GASKETS.

3. Make tests in concrete pipe at an internal hydrostatic pressure of 10 psi for 24-hours.

4. Replace or repair joints found to be faulty. Repeat the test and repair cycle until joints are demonstrated to meet the specified requirements.

C. Sampling and Testing of Pipe and Pipe Joint Material For Project Consisting of More than 50 Pipes:

1. Reinforced Concrete Pipe: Per ASTM C-76.

(END OF SECTION)

SECTION 02710
YARD WORK AND STREET WORK

PART 1 -- GENERAL

1.1 DESCRIPTION

A. Provide all yard and street work indicated on the Drawings and in other Sections of the Project Manual; including but not limited to:

1. Asphalt concrete paving.

2. Asphalt concrete paving repairs.

3. Portland cement concrete paving, sidewalk and driveways.

4. Concrete wheel bumpers.

5. Joint sealant and caulking.

6. Parking lot striping and disabled symbol marking.

7. Street Work: Curbs, gutters, and paving.

8. Parking Lot Signage and Striping. Roadway signage and striping shall be per applicable CAMUTCD, LADOT, and Caltrans standards and not this section.

9. Concrete Overlays

10. Detectable Warning Surface

11. River Warning System

12. Safety Surfacing

13. Terracing

14. Pole/Post footings (fencing, basketball hoops, sports netting, light poles, bollards, and gates).

B. The Contractor shall include in the Contract and pay for Street Damage Restoration Fee. The cost will be paid from a fixed cash allowance that has been allocated as the bid item Street Damage Restoration Fee in the SCHEDULE OF WORK AND PRICES. No Overhead and Profit shall be added to the cost. If the total cost of street damage restoration differs from the amount set forth in the SCHEDULE OF WORK AND PRICES, the Contract Price shall be adjusted by a Change Order for the difference between the total actual cost and the amount included in the Bid, as an additional amount due to the CONTRACTOR or a credit to the CITY, as appropriate.

C. Related Sections:

1. Documents affecting work of this Section include but are not necessarily limited to the GENERAL CONDITIONS, SUPPLEMENTARY CONDITIONS, DIVISION 1 - GENERAL REQUIREMENTS and other Sections of the Project Manual.

2. Contractor's Use of the Premises in Section 01140.

3. Solid Resource Management in Section 01150.

4. Temporary Facilities and Controls in Section 01500.

5. Demolition and removal of existing sidewalk, curbs, gutters, driveways and existing site improvements in Section 02220 - SITE DEMOLITION.

6. Earthwork including excavating, grading and filling and select base materials in Section 02310.

7. Storm Drain System in Section 02545.

8. Unit Paving in Section 02720

9. Crushed Stone Surfacing in Section 02730

10. Irrigation System in Sections 02810.

11. Chain Link Fencing in Section 02821.

12. Decorative Metal Fences and Gates in Section 02822

13. Site Furnishings in Section 02870

14. Landscaping 02900.

15. Concrete work and concrete paving in Section 03300.

16. Concrete form work in Section 03100.

17. Concrete Reinforcement in Section 03200.

18. Steel pipe posts in Section 05500.

19. Caulking and Sealant in Section 07920.

20. Disabled Accessibility Parking Signage in Section 10443.

21. Lighting Standard in Section Division 16

1.2 QUALITY ASSURANCE

A. Labor: Use adequate number of skilled laborers who are thoroughly trained and experienced in the necessary crafts and who are completely familiar with the specified requirements and the methods needed for proper performance of the work of this Section.

B. Codes and Regulations

1. Conform to the applicable 2020 Los Angeles City Building Code and Amendments, the Standard Specifications for Public Works Construction (SSPWC), State of California Department of Transportation Standard Specifications, Los Angeles City Bureau of Engineering Brown Book, latest edition and provisions hereinafter specified in the Project Manual.

C. Permits: Submit inspection/acceptance certificates required by the governing authorities and pay for all the required permits, plan check, inspections, and fees. Arrange for and make required inspections and tests.

D. Survey: According to Section 01722 - SURVEYING, the Contractor shall furnish all surveying necessarily for the work. All work shall conform to the lines, elevations, and grades shown on the drawings. The Contractor shall submit the grade sheets to the City Engineer for review.

E. Design Intent: Finished walking surface should be accessible by wheelchair: firm, stable, and slip-resistant. It shall not show signs or tracks of pedestrian foot prints or significant vehicle tracks when used. Surface movement of rock should be minimal.

1.3 ALTERATIONS, REPAIRS AND REPLACEMENTS

A. As required for complete construction of a project; materials and construction to match existing adjacent work where occur in quality and appearance and conform to applicable provisions of the Project Manual.

B. Maintain vehicular and pedestrian traffic in accordance with W.A.T.C.H. (Work Area Traffic Control Handbook, latest edition)

1.4 PROTECTION

A. Required: Furnish, erect and maintain fences, barriers, lights and signs as necessary, in order to protect the public, City personnel, Contractor's personnel, existing work and work of this Section under this Contract.

B. All existing structures beneath the pavement shall be protected from any operation. No impact tool shall be allowed in the demolition of the existing pavement which may affect the existing structure. All sewerage and storm drain structures, utility vault, etc. extending two (2) inches or more above the new subgrade shall be removed by the Contractor to the new subgrade before paving. Structures projecting less than 2 inches above the subgrade may be paved over and later adjusted to grade.

1.5 DELIVERY, STORAGE AND HANDLING

A. Delivery: Deliver materials, and products and equipment to the job-site where directed by the City Engineer.

B. Storage: Store materials where located on the job-site not interfering with work operations of this Section as directed by the City Engineer and easily accessible when needed to be installed or used.

C. Handling: Handle materials, etc. safely and avoiding damage to such materials prior to installation.

1.6 SUBMITTALS (As Applicable)

A. General: Comply with provisions of SECTION 01330 - SUBMITTALS of DIVISION 1 - GENERAL REQUIREMENTS of the Project Manual.

B. Concrete:

1. Portland Cement Mill Certificate: Submit to the City Engineer of each load showing conformance with the requirements and applicable Section of the SSPWC or otherwise the Testing Laboratory shall test the cement as per ASTM C150 - SPECIFICATION FOR PORTLAND CEMENT.

2. Design Mix and Curing Methods.

C. Asphaltic Concrete:

1. Submit a mix design for asphaltic concrete prepared by a material laboratory under the direction of a California Registered Engineer.

2. Certificates: Submit certificates signed by the materials producer and the asphalt paving Subcontractor, stating that materials meet or exceed the specified requirements prior to any fabrication. Submit the certified delivery tickets for each truckload of asphaltic material delivered to the job site.

D. Product Data: Submit to the City Engineer the data on all proprietary items, materials, etc. to be used in the work of this Section, as conforming to the specified requirements of this Section.

E. Shop Drawings:

1. Coordinate and submit the complete shop fabrication drawings of all metal guardrails, fencing and gates, and handrail.

2. Submit the joint layouts in concrete pavements.

F. Spreading Schedule: At least five (5) working days prior to commencing work, the Contractor shall submit its spreading schedule to the City Engineer for approval. The schedule shall allow residents on the street to be sealed ample “on street” parking within a reasonable distance from their homes. The Contractor shall notify the residents and businesses of the work and shall post temporary “No Parking” signs.

G. Delegated Design:

1. Tunnel Flood Warning System: Contractor to submit final design and detailing for approval.
2. Safety Surfacing Wear Course and Shock Course: Contractor to submit final design and detailing for approval including the sizing of the section thicknesses to meet fall height requirements. Refer to Contract Drawings for products, colors, patterns, and layouts.

1.7 RECORD DRAWINGS

A. Required: Clearly mark changes, deletions and/or additions to the work of this Section conforming to provisions of Section 30 - RECORD DRAWINGS AND RECORD PROJECT MANUAL of the GENERAL CONDITIONS of the Project Manual.

1.8 REMOVAL AND CLEAN UP

Remove and recycle all surplus materials, debris and rubbish resulting from work of this Section conforming to provisions of Section 01572 - CONSTRUCTION AND DEMOLITION WASTE MANAGEMENT and Section 01740 - REMOVAL, CLEANUP, AND DEMOBILIZATION of DIVISION 1 - GENERAL REQUIREMENTS of the Project Manual.

PART 2 -- PRODUCTS

2.1 CONCRETE MATERIALS

A. Furnish concrete material, form work and reinforcing in accordance with applicable requirements specified in the drawings and Section 03300 - CAST-IN-PLACE CONCRETE, Section 03100 - CONCRETE FORM WORK, Section 03200 - REINFORCEMENT, and Section 03345 - CONCRETE FINISHING, respectively. Vehicular rated concrete paving, raised crosswalk paving, longitudinal gutters, and PVMT Type 2 concrete paving as shown on the Contract drawings shall utilize the vehicular rated 4000 PSI concrete mix. Light poles, sports netting poles, fencing with integral retaining curbs, basketball hoops, bollards, and gate posts shall utilize the light pole/misc. site footing 4000 PSI concrete mix. Terraces and slough walls shall utilize the building elements/terrace 4000 PSI concrete mix. Remaining pedestrian walkways, fence post footings, curbs, and gutters shall utilize the sitework 2500 PSI concrete mix.

B. TUNNEL RESURFACING: KWIKBOND PPC 1121 Polyester Polymer Concrete or Approve Equal.

2.2 ASPHALT CONCRETE MATERIALS

A. In accordance with Section 203-6 - ASPHALT CONCRETE and mix in accordance with Section 203-6.5 - PROPORTIONING of the SSPWC. Unless otherwise specified, reclaimed asphalt pavement (RAP), RAP Bituminous material or mixture shall not be used without City Engineer’s approval and payment adjustment.

B. Asphalt: PG64-10-75 Viscosity grades conforming to State of California Department of Transportations, Standard Specifications Section 92-1.02(B).

C. For 4-Inch Thick or less A.C. Paving: Single coarse application, Class C2 –PG64-10-75 with ½ inch maximum size aggregates.

D. For 4-Inch and Thicker A.C. Paving for "Heavy Equipment" - Two Course A.C. Paving: Class A –PG64-10-75 for first course. Top course (second course) shall be 2" inches thick wearing surface course, Class C2 –PG64-10-75.

E. Paving for basketball courts or other designated court play areas shall be 1” of Type D2-PG 64-10-50 asphalt over 3” of type C2-PG 64-10-50 asphalt with a viscosity of AR 4000. If the 1” overlayment is constructed within 48 hours of the base course and no dirt or organic matter has fallen on the base course, then no tack coat is needed. If the base course is dirty or it has been over 48 hours since laying the base course then it shall be cleaned with a rotary power-operated vacuum sweeper to remove all dirt, water, oil and foreign matter. Prior to laying the overlayment, the base course shall have a tack coat uniformly applied to the base course.

2.3 MISCELLANEOUS MATERIALS

A. Aggregate Base (Select Base): As specified in Section 02310 - EARTHWORK.

B. Soil Sterilant: As specified in Section 02310 - EARTHWORK.

C. Tack Coat/Paint Binder: Grade SS-1h emulsified asphalt at an approximate rate of 0.25 L/m5 to 0.45 L/m5 (0.05 to 0.10-gallon per square yard), conforming to Section 302-5.4 - TACK COAT of the SSPWC.

D. Parking Lot Striping Material: Fuller "Traffic Line Paint" or J. E. Bauer Co. "Zonelac Traffic Paint" or other colors as otherwise noted on drawings.

E. Grout: Non-shrink grout; Embeco by Master Builders, Inc., 8978 Haven Ave. #A, Rancho Cucamonga, CA 91730 (800) 228-3315 or equal.

F. Disabled Accessibility Parking Signage: As specified in Section 10442 - DISABLED ACCESSIBILITY PARKING SIGNAGE.

2.4 CONCRETE WHEEL BUMPERS

A. Units: Precast reinforced concrete bumpers**;** manufactured by Consley and Montigney, El Monte, California, phone (626) 283-2771, or equal. Provide two bumpers of each specified size for testing by the Inspector to verify conformance with the requirements.

B. Size: Four feet long, 5" high x 7" wide with a side chamfered to produce a top side 3" wide as otherwise detailed on the Drawings.

C. Materials:

1. Minimum 3500 psi concrete at 28 days.

2. Two No. 4 Bar Anchor Pins. Length as indicated on the Contract Drawings.

3. Two ½ inch reinforcing bars x length of unit with minimum 1 inch cover.

D. Construction:

1. Forms and Reinforcement: In accordance with requirements of Section 03300 - CAST-IN-PLACE CONCRETE.

2. Reinforcing to run full length of the unit.

3. Finish the units for simulate poured-in-place concrete without rock pockets, broken corners and other defects.

E. Curing: Allow units to cure fully 28 days before installation.

2.5 TUNNEL FLOOD WARNING SYSTEM

General

The TAPCO high water warning system was used as the basis of design. The CONTRACTOR may submit an alternative equal system for review and approval. The CONTRACTOR shall provide components for two 120VAC powered Advance Warning BlinkerSigns mounted facing traffic approach to a section of path that is being monitored by a fiber optic high water sensor in the flood prone area. When high water is detected, the signs are to be triggered wirelessly from the sensor activation cabinet. Components shall include but not be limited to:

Signs, horns, Sign Control Cabinets containing Flash Controllers with integrated Wireless Transceivers and Power Supplies, Wall Mount Water Sensor, Activation Control Cabinet containing Photoelectric Sensor, Flash Controller with Wireless Transceiver and Power Supply. Mounting Hardware, conduit, pull boxes, wiring, cabling, etc.

Active pedestrian warning indications shall be visible in a direct line of sight at distances over 1000 feet during the day, and over 1 mile at night.

General Requirements:

The sign Manufacturer shall have a minimum of ten years of relevant intelligent traffic product manufacturing experience.

System

- Each High-Water Warning System shall consist of the following:
  - Two Warning BlinkerSigns® Assemblies
  - One 120VAC Control Cabinets, each with Power Supply, Flash Controller and integrated Wireless transceiver
  - One Wall mounted High Water Sensor
  - One 120VAC Activation Control Cabinet with Photoelectric Sensor, Power Supply, Flash Controller and integrated Wireless transceiver
- When water reaches a preset level above the ground surface, the High-Water sensor shall trigger the activation controller to, in turn, wirelessly activate the remote Warning BlinkerSigns and horns simultaneously. BlinkerSigns shall flash synchronously and then cease operation after the water has receded.

Activation and BlinkerSign Control Cabinets

- Shall be NEMA 3R Type
- Shall be minimum 15.0” tall x 12.5” wide x 9.9” deep and constructed of minimum 0.080" thick aluminum.
- To promote airflow for internal components, the cabinet shall be vented with screening included on all vents and drains to prevent insects and other foreign matter from entering.
- For security, the cabinet must include at least two tamper-resistant stainless-steel hinges and a replaceable #2 traffic lock with keys.
- To facilitate maintenance or repairs, the cabinet shall include a removable control panel to which all control circuit components either mount or connect.
- For easy installation on a wide range of pole sizes and types, the cabinet shall utilize four 5/16"-18 stainless steel mounting studs that mate to a range of bracket options. To ensure a secure

mount to the supporting post, two banding style brackets that fit poles with a 2-3/8” or larger diameter shall be included as standard equipment. Mounting brackets also available for square pole, wooden post, and wall mount applications.

- To prevent corrosion, all materials used in the construction or mounting of the control cabinet shall be either aluminum or stainless steel. Anti-vandal mounting hardware shall be included.
- A UV resistant label shall be applied to the exterior of the cabinet and include system specific information including model number, serial number, date of manufacture, as well as any applicable regulatory compliance information.

BlinkerSign® Flash Controllers

The BlinkerSign Programmable Flash Controller is housed within the NEMA 3R type Control Cabinet, and shall:

- Include integrated constant-current LED drivers with a minimum of two-channel output for driving one or two BlinkerSign units.
- Flash the BlinkerSign LEDs 50 to 60 flashes per minute.
- Have multiple programmable function options:
    - Run 24 hours per day, 7 days per week
    - Run from dusk to dawn
    - Run for a programmable time period when activated via switch, button contact closure or when triggered from an external sensor such as a wireless transmitter, radar, presence detector or loop detector with a compatible sensor output.
    - Run on a timeclock schedule that is programmed to the controller and determines days of the week and times of the day that the sign flashes.
- Provide multiple levels of BlinkerSign LED brightness through LED drive current control
- Automatically adjust the BlinkerSign LED drive current control to optimize brightness for the ambient lighting conditions.
- Automatically adjust the BlinkerSign LED duty cycle to save battery during nighttime operation.
- Have the BlinkerSign LED drive outputs reach the full output current as programmed within the duration of the 100ms on-time.
- Include an integrated Real Time Clock (RTC) with on-board battery backup.
- Have the capability of RS232 communication for programming with Windows-based software.
- Include a minimum of two General Purpose Inputs and Outputs (GPIO).
- Seamlessly integrate with the 900 MHz FHSS wireless transceiver to form a network of connected devices.
- Be internally housed in its own IP67 type enclosure.
- Be independently replaceable of other control panel components
- Be able to monitor internal temperature.
- Operate between the temperatures of -40° to +176°F (-40° to +80°C).

900 MHz FHSS Wireless Transceiver

- Shall be housed inside the IP67 rated Flash Controller Cabinet
- Shall seamlessly integrate with any of the system controllers to ensure sequential activation of other radio-equipped devices in the system
- Shall include an integrated LCD and two user-interface buttons for setup and troubleshooting, including readouts of flash duration (timeout), battery conditions, and LED testing functionality
- Shall include two LED indicators for status and troubleshooting
- Shall be capable of operating as a Transmitter or Receiver

- Shall be capable of providing site-survey data for verification of signal strength between network devices
- Shall include network-wide modification of sign controller settings and output durations, using programmability from any networked transceiver without the use of additional equipment or software
- Shall synchronize the system components to activate the indications within 120msec of one other and remain synchronized throughout the duration of the flash (timeout) cycle.
- Shall have an antenna connector for easily connecting to multiple antenna options
- Shall operate on the license-free ISM band
- Shall comply with part 15 of FCC rules
- Shall operate from 3.3VDC to 15VDC
- Shall be, in the unlikely event of failure, replaceable independently of other components.

Universal Switching Power Supply
The Universal Switching Power Supply shall:

- Accept a universal AC input, 100-240VAC, 50/60 hz
- Output 12 VDC regulated to +/- 1%
- Have Short Circuit, Overload and Over Voltage protection
- Be convection cooled, DIN rail mount
- Have an LED power on indicator
- Be UL60950-1, TUV EN60950-1, Class I, Div. 2 Group A,B,C,D and Hazardous Locations T4 Approved
- Operate in a relative humidity of 20 to 90% non-condensing
- Operate from -4° to +158°F (-20° to +70°C)

BlinkerSign® LED Signs

- All signs shall conform to 2009 Federal Highway Administration's MUTCD section 2A.07 on retro reflectivity and illumination.
- Each sign shall have eight quantity Day-Viz® Daylight-Visible, high power 1-watt LEDs.
- Each sign blank material shall be a minimum of 0.080" thick aluminum and sized to meet the requirements.
- Each sign face shall consist of 3M™ Diamond Grade™ DG3 reflective fluorescent yellow sheeting, as required.
- Sign sheeting shall be applied to the sign blank with a 3M™ 1160 Premium Protective Overlay film to provide an additional layer of graffiti protection.
- The BlinkerSign legend shall be a MUTCD approved unless specified otherwise.
- The LEDs shall be embedded individually into 1" diameter holes around the perimeter of the sign and shall be ultrasonically welded to the sign assembly to provide maximum strength and rigidity.
- LED color shall be amber.
- Each LED shall be sealed within a 7/8" diameter, heat-dissipating plastic enclosure to provide resistance to weather and vibration.
- LEDs shall be wired in parallel electrically so that remaining LEDs continue to flash in the unlikely event of the failure of any individual LED.
- Wiring between BlinkerSign® LEDs shall be encapsulated inside 1" x 3/8" aluminum extrusions secured to the back of each sign assembly, to provide weather resistance and protection.
- Each sign shall have adequate holes for mounting to a pole or post. Vandal-resistant fasteners to mount the BlinkerSign® LED sign assembly shall be provided.

- UV-resistant label(s) shall be applied to the back of each sign assembly and shall include specific information such as the manufacturer, manufacturer phone number, model number, serial number, date of manufacture and any applicable regulatory compliance information.

Photoelectric Sensor

- Shall utilize visible red LED light transmitted through fiber cable and sense the presence, or absence of water as measured by the retroreflected light.
- Shall operate from 10 to 30VDC at less than 25mA
- Shall have reverse polarity and transient voltage protection
- Shall have dual outputs for external status monitoring
- Shall be in an IP67 rated, reinforced thermoplastic polyester housing, totally encapsulated, with stainless steel enclosure screws
- Shall have sensitivity adjustment settings that are protected by a gasketed, clear acrylic cover
- Shall have a visible LED indicator for measured light signal strength
- Operate in a relative humidity of 90% at +50°C non-condensing
- Operate from -4° to +158°F (-20° to +70°C)

Wall Mounted Water Sensor

- Shall utilize the photoelectric sensor, which is installed in the Activation Control Cabinet, in combination with fiber cable pair that is brought out to the pole or curb housing for safe, isolated detection of high water
- Shall contain the fiber cable pair ends utilized to detect high water utilizing a retroreflective photoelectric sensor installed remotely in the Activation Control Cabinet
- Shall provide a protective means for routing the fiber cable pair to the water sensor housing
- Shall be provided with all necessary pole interface hardware and fiber pair
- The Pole Mounted Water Sensor provides 14” of vertical adjustment capability for tuning the fiber ends to a specific high water depth detection
- The Curb Mounted Sensor provides a fixed means of placing the fiber ends within a curb for detection of high water near the top of the curb level.
- Housing shall be manufactured utilizing stainless steel and aluminum for protection from corrosion

Warranty

The Manufacturer shall offer a three-year unconditional warranty against all defects in material and workmanship.

PART THREE - EXECUTION

3.1 JOB-SITE CONDITIONS

A. Examine the areas and conditions under which work of this Section will be performed.

1. Correct conditions detrimental to timely and proper completion of the work, as directed by the City Engineer.

2. Do not proceed until such detrimental conditions are corrected.

B. Comply with stormwater pollution control measures as indicated in Section 02310 - EARTHWORK of the Project Manual.

3.2 ASPHALT CONCRETE PAVING

A. Materials: As hereinbefore specified.

B. Subgrade Preparation: Prior to placing the selected base materials, moisture condition per the Project Geotechnical Report and compact the upper 12" of subgrade to 95% relative compaction, as per Section 301-1 - SUBGRADE PREPARATION of SSPWC. Suitably roll subgrade to provide a smooth surface to a tolerance of plus or minus 0.04 ft. in accordance with Section 301-1.2 - PREPARATION OF SUBGRADE of the SSPWC.

C. Soil Sterilization: Apply specified soil sterilant to areas to be paved, by method recommended by the manufacturer. Certify in writing that the material has been applied.

D. Select Base: Place the Select Base materials to thickness indicated on the drawings, in accordance with Section 301-2 - UNTREATED BASE of the SSPWC, after the subgrade preparation is completed.

E. Asphalt Paving Thickness and Courses:

1. Thickness as indicated on the Drawings.

2. Course; Construct a pavement in the number of course(s) previously indicated above.

F. Construction:

1. General: In accordance with Section 302-5.5 - DISTRIBUTION AND SPREADING of the SSPWC thereto.

2. Tack Coat: Apply to concrete surfaces abutting new A. C. paving at least 24 hours prior to laying new work; apply to the surface of any course before the succeeding course or all cold pavement joints, curbs, gutters, manholes and the like. All the surfaces shall be free of water, foreign material or duct when the tack cold is applied.

3. Laying and Compaction: In accordance with Section 302-5.5 DISTRIBUTION AND SPREADING and Section 302.5.6 - ROLLING of the SSPWC.

   If the asphalt concrete base course is 6" inches or thicker, the Contractor may at its option, construct the base course in one paving operation, in accordance with the Los Angeles City Standard Plan S-610, latest edition and the SSPWC.

4. Finish asphalt concrete surfaces smooth and even, to indicated elevations without low spots, hollow or irregularities and properly sloped for drainage.

G. Testing:

1. Upon completion, the pavement shall be true to grade and cross section. When a straight edge is laid on the finished surface, the surface shall not vary from the edge of the straightedge no more than ⅛” inches, except at the intersection or at the change of grade.

2. Flood Tests: In the presence of the Inspector or City Engineer and prior to acceptance of the work, water flood tests by water tank truck. All depressions where water ponds shall not exceed a depth of more than ⅛" fill.

3. Any area that is not within this tolerance shall be brought to grade by removing the paving material in the area to be repaired by an approved. Provide a minimum laying depth of 1" inches of the new pavement material at the joint line. Repairs shall not be made to the pavement surface by feather edging at the joints.

I. After the bituminous surfacing has passed the tests, including the flood test, clear and allow to dry, then apply one coat of a seal coat to the surface, in accordance with Subsection 37-4.04 of the California State Department of Transportation Standard Specifications. The seal coat shall not be applied to the newly constructed asphalt concrete surface until thirty (30) days after spreading and compacting the new asphalt concrete. After 30 days, the surface of the newly constructed asphalt concrete shall be washed with a strong detergent such as trisodium phosphate, and rinsed before the application of the seal coat.

3.3 "STREET WORK" ASPHALTIC CONCRETE REPAIRS

A. Required: As necessary to accommodate construction of new storm and sewerage pipings, curbs, gutters and driveways as indicated on drawings; as necessary due to excavation, trenching and utility connections. Provide a minimum laying depth of 1" inches of the new pavement material at the join line. Repairs shall not be made to pavement surfaces by feather-edging at the joints.

B. Application: Upon completion of all work within existing asphalt concrete paved areas, Contractor shall repair the existing asphalt concrete paving conforming to requirements of the SSPWC and the Los Angeles City Bureau of Engineering standards as follow:

1. Properly remove and repair subgrade, sub-base and aggregate base as approved by the City Engineer or Inspector to match existing adjoining work. Identify the mixture or density of existing adjoining work and submit the proposed mix design to the City Engineer for approval.

2. Soil Sterilization: Apply weed killers (soil sterilant) on areas to be paved with asphalt concrete; soil sterilant to be applied as recommended by the manufacturer; The Contractor shall certify in writing that material has been applied.

3. Tack coat surfaces of existing asphalt concrete surfaces as per 302-5.4 - TACK COAT of the SSPWC over which new materials will be laid of edges of existing saw cut asphalt concrete and/or concrete, and other structures against which new asphalt concrete will be placed, terminate tack coats on concrete surfaces at top of asphalt concrete paving.

4. Lay new asphalt concrete paving conforming to Section 302-5.6.2 - DENSITY AND SMOOTHNESS of the SSPWC to match adjoining work using material of a heavier density than the "in-place" adjacent work. Use hot smoothing iron to obtain inconspicuous, straight and flush joint lines. Properly grade to provide the desired drainage as indicated on the Drawings. When a ten-foot straightedge is laid on the finish surface parallel to the centerline of the roadway, the surface shall not vary from the edge of the straightedge more than ⅛” inch, except at intersections or at changes of grade.

3.4 CONCRETE YARD PAVING, CONCRETE SIDEWALK, CURB AND GUTTER

A. General: In accordance with the requirements in the SSPWC, Section 03300 - CAST-IN-PLACE CONCRETE**,** and Section 07920 - CAULKING AND SEALANT.

B. Locations: Where indicated on the Drawings.

C. Materials: As hereinbefore specified.

D. Preparation:

1. Concrete shall be removed and disposed off, in accordance with Section 300-1.3 REMOVAL AND DISPOSAL OF THE MATERIALS of the SSPWC.

2. Compact existing subgrade and base material (thickness per Contract Drawings), in accordance with Section 301-2 - UNTREATED BASE of the SSPWC.

3. Concrete shall be placed on the subbase to the required depth. Concrete finishes shall be constructed as indicated on the Contract Drawings.

4. For concrete pavements, construct the longitudinal and transverse construction joints, transverse expansion joints, and/or longitudinal and transverse weakened-plane joints at the locations indicated on the drawings and/or conforming to the SSPWC.

   Longitudinal construction joints shall be constructed by plain face method, use of tie bars, and/or key ways as designated on the drawings and conform to the Los Angeles City Standard Plan, S-430, latest edition, and Section 302-6.5 - JOINTS of the SSPWC.

   Transverse expansion joints shall be installed at locations shown on the drawings and/or conforming with the SSPWC. Joint filler material shall have a minimum thickness of 2” inch to the depth equal to the thickness of the pavement and shall be composed of materials, as specified in Section 07920 - CAULKING AND SEALANT and conforming to Section 302-6.5 - JOINTS of the SSPWC.

   Weakened plane joints shall be constructed at the locations shown on the drawings and shall be formed by cutting a grove, not exceeding 3” inch, in the pavement with a power driven saw. Transverse joint shall be cut to a minimum depth of 1½” inch or one-fourth of the pavement thickness, whichever is greater.

5. The pavement shall be cured by approved curing method conforming to the requirements of Section 03300 - CAST-IN-PLACE CONCRETE and/or Section 201-4.1 - CONCRETE CURING MATERIALS of the SSPWC.

6. Concrete pavement shall be immediately barricaded and protected upon installation, and no vehicular traffic shall be permitted therein until the expiration of at least seven (7) days.

7. Concrete driveway shall be to case specified on plan, 6" inches thick, and constructed per locations and details, as indicated on the drawings and conform to the Los Angeles City Bureau of Engineering Standard Plan S-440, latest edition.

8. Type A Concrete Curb and Type C Integral Curb and Gutter shall be constructed

per locations and details, as indicated on the drawings and conforms to the Los Angeles City Bureau of Engineering Standard Plan S-410, latest edition.

3.5 INSTALLATION OF CONCRETE WHEEL BUMPERS

A. Locations: Where indicated on the Drawings.

B. On Pavers: Set pavers tight against wheel stop. Paver shall be placed on bedding course layer as shown on Contract Drawings.

C. On Concrete Pavement: Secure in place with steel drift pins. Pins to be ¼" below top of the surface of the bumper unit. Fill hole with non-shrink grout to top of the unit.

3.6 PARKING LOT STRIPING, LETTERS, ARROWS

A. Materials: As hereinbefore specified.

B. Lines: 4" wide or as indicated on the Drawings.

C. Letters: Sizes and strokes as indicated on the Drawings. Minimum dry paint thickness shall be 15 mils.

D. Arrows: 10" stroke with proportionate head.

E. Handicapped Parking Striping: Sizes and colors are in conformance with the State of California, Code of Regulations, Title 24. An International Symbol of Accessibility symbol shall be stenciled at the rear of the parking space. Each accessible parking unloading zone shall be marked.

F. Traffic Striping**:** As indicated on the drawings and in conformance with Section 310-5.6.5 - TRAFFIC STRIPES AND MARKINGS of SSPWC.

G. Preparation: All surfaces to be free of dirt, grease or other foreign materials. Remove existing markings by sandblasting or other approved methods.

H. Application: Apply one heavy undiluted coat with traffic line painting equipment in locations indicated on the Drawings in uniform coverage, free from light spots and with all edges clean-cut and true. Paint by spray can shall not be allowed. Minimum dry paint thickness shall be 15 mils.

3.7 DISABLED ACCESSIBILITY PARKING SIGN

A. Required: where indicated on the Contract Drawings and specified in Section 10443 - DISABLED ACCESSIBILITY PARKING SIGNAGE complying with State of California, Code of Regulation, Title 24.

B. Materials and Fabrications: Constructed of 3M Scotchlite Brand reflective sheeting laminated to 18-gage heavy duty sheet steel and silkscreened in transparent blue with "Disabled Symbol" and/or the appropriate message in white. Sign to have a weather-resistant finish.

C. Size: Not less than 18-inches wide x 27-inches high with lettering not less than 1" inch in height.

D. Installation: Provide a sign in a conspicuous space at each entrance to off-street parking facilities and immediately adjacent to and visible from each stall or space. Install concrete footing and post, in accordance with the detail and requirement as shown on the Contract Drawings, Section 10443 - DISABLED ACCESSIBILITY PARKING SIGNAGE and Section 03300 - CAST-IN-PLACE CONCRETE of the Project Manual. Mount on a post on a fence at height noted on the Contract Drawing in plumb and level position and secured in place. backfill around the concrete footing in accordance with the details shown on the drawings.

(END OF SECTION)

SECTION 02720
UNIT PAVING

PART 1 - GENERAL

1.1 RELATED DOCUMENTS

A. Drawings and general provisions of the Contract, including General and Supplementary Conditions and Division 01 Specification Sections, apply to this Section.

1.2 SUMMARY

A. Section Includes:
   1. Permeable concrete pavers set on aggregate.
   2. Dimensioned stone pavers set on mortar.
   3. Edge restraints.

B. Related Sections:
   1. Section 02310 "Earthwork" for aggregate base under unit pavers.
   2. Section 03300 "Cast-In-Place Concrete" for concrete base under unit pavers and for cast-in-place concrete curb edge restraints.
   3. Section 03290 "Joints in Concrete" for expansion joints.

1.3 REFERENCES

A. American Society of Testing and Materials (ASTM):
   1. C 33, Specification for Concrete Aggregates.
   2. C 67, Standard Test Methods for Sampling and Testing Brick and Structural Clay Tile, Section 8, Freezing and Thawing
   3. C 136, Method for Sieve Analysis for Fine and Coarse Aggregate.
   4. C 140, Standard Test Methods for Sampling and Testing Concrete Masonry Units and Related Units.
   5. C 144, Standard Specification for Aggregate for Masonry Mortar.
   6. C 920, Specification for Elastomeric Joint Sealants.
   7. C 936, Specification for Solid Interlocking Concrete Paving Units.
   8. C 979, Standard Specification for Pigments for Integrally Colored Concrete.

B. Interlocking Concrete Pavement Institute (ICPI):
   1. ICPI Tech Spec Technical Bulletins.

C. American National Standards Institute (ANSI): ICPI Tech Spec Technical Bulletins.

D. Tile Council of America (TCA) Handbook for Ceramic Tile Installation.

E. National Building Granit Quarries Association (NBGQA): Specifications for Architectural Granite.

1.4 ACTION SUBMITTALS

A. Product Data: For materials in Part 2 other than water.

B. Adhesion and Compatibility Test Reports: From latex-additive manufacturer for mortar and grout containing latex additives.

C. Sieve Analyses: For sand setting-bed materials, according to ASTM C 136.

D. Samples for Verification:

1. Full-size units of each type of unit paver, color and finish. Show the full range of color and other visual characteristics expected in completed Work.
2. Joint materials.
3. Edge restraints.

E. Stone Shop Drawings: Include plans, elevations, sections and details;

1. Dimensions of each stone type, size and finish of exposed faces.
2. Stonework layout showing position and identifying number of each stone type & size with calculations verifying that stone and joints will fit within tolerances. Show all unique stone sizes at expansion joints.
3. Cutting & drilling details for any lights, grates, jets, nozzles, recesses, plumbing, steps, corners, rails and the like.
4. Signed and sealed by a Design Engineer Professional licensed in the State that the project is located in.
5. The City Engineer shall be entitled to rely upon the adequacy, accuracy and completeness of the design, certification or approvals performed by such Design Professionals.

1.5 INFORMATIONAL SUBMITTALS

A. Adhesion and Compatibility Test Reports: From latex-additive manufacturer for mortar and grout containing latex additives.

B. Material Certificates: For unit pavers. Include statements of material properties indicating compliance with requirements, including compliance with standards. Provide for each type and size of unit.

C. Qualification Data: For stone fabricator.

D. Material Test Reports:

1. Stone and Concrete Unit Paver Test Reports: For each stone variety proposed for use on Project, by a qualified independent testing agency, indicating compliance with required physical properties, according to ASTM standards. Base reports on testing within previous three years.

1.6 QUALITY ASSURANCE

A. Source Limitations: Obtain each type of unit paver, joint material, and setting material from single source with resources to provide materials and products of consistent quality in appearance and physical properties.

B. Stone Fabricator Qualifications: Shop that employs skilled workers who custom fabricate stone paving.

C. Installer Qualifications: A firm or individual experienced in installing stone paving similar in material, design, and extent to that indicated for this Project, whose work has a record of successful in-service performance. Concrete unit paver qualifications ICPI level II installation certificate for commercial, industrial and institutional settings.

D. Mockups: Build mockups to verify selections made under Sample submittals and to demonstrate aesthetic effects and set quality benchmarks for materials and execution.
   1. Build mockup of each paving type in a panel not less than 96 inches (2400 mm) square.
   2. Include at least one sealant joint over the full length of the panel.
   3. Submit photographs taken outdoors in the sun of the full mockup dry and then wet and with closeups of joints and finishes.
   4. Approval of mockups does not constitute approval of deviations from the Contract Documents contained in mockups unless City Engineer specifically approves such deviations in writing.
   5. Subject to compliance with requirements, approved mockups may become part of the completed Work if undisturbed at time of Substantial Completion.

E. Preinstallation Conference: Conduct conference at Project site.

1.7 PRECONSTRUCTION TESTING

A. Preconstruction Adhesion and Compatibility Testing: Submit to latex-additive manufacturer, for testing as indicated below, Samples of flooring materials that will contact or affect mortar and grout that contain latex additives.

   1. Use manufacturer's standard test methods to determine whether mortar and grout materials will obtain optimal adhesion with, and will be nonstaining to, installed brick and other materials constituting brick flooring installation.

1.8 CLOSEOUT SUBMITTALS

A. Maintenance Data: For stone paving to include in maintenance manuals. Include product data for paver-care products used or recommended by Installer and names, addresses, and telephone numbers of local sources for products.

1.9 WARRANTY

A. Special Warranty: Warrant the following unit paving components, for the warranty period indicated, against defects and/or loss resulting from materials and execution.
   1. Warranty Period for Concrete Unit Pavers: Two year minimum from date of Substantial Completion.

2. Warranty Period for Stone Unit Paving: Five year minimum from date of Substantial Completion.

1.10 SPARES

A. Furnish extra unit pavers that match products installed and that are palletized, packaged with protective covering for storage and identified with labels describing contents.

1. Unit Pavers: No fewer than 1% full-size units for each unit paver type.

1.11 DELIVERY, STORAGE, AND HANDLING

A. Store pavers on elevated platforms in a dry location. If units are not stored in an enclosed location, cover tops and sides of stacks with waterproof sheeting, securely tied.

B. Store and handle stone and related materials to prevent deterioration or damage due to moisture, temperature changes, contaminants, corrosion, breaking, chipping, and other causes.

1. Lift stone carefully; do not use wire rope or ropes that might cause staining. Move stone, if required, using dollies with cushioned wood supports.
2. Store stone on wood A-frames or pallets with nonstaining, waterproof covers. Arrange to distribute weight evenly and to prevent damage to stone. Ventilate under covers to prevent condensation.

C. Mark stone units, on surface that is concealed after installation, with designations used on Shop Drawings to identify individual stone units. Orient markings on vertical panels so that they are right side up when units are installed.

D. Store cementitious materials on elevated platforms, under cover, and in a dry location. Do not use cementitious materials that have become damp.

E. Store aggregates where grading and other required characteristics can be maintained and contamination avoided.

F. Store liquids in tightly closed containers protected from freezing.

G. Store asphalt cement and other bituminous materials in tightly closed containers.

1.12 FIELD CONDITIONS

A. Weather Limitations for Mortar and Grout:
1. Hot-Weather Requirements: Comply with hot-weather construction requirements contained in ACI 530.1/ASCE 6/TMS 602. Provide artificial shade and windbreaks and use cooled materials as required. Do not apply mortar to substrates with temperatures of 100 deg F (38 deg C) and higher.
2. Requirements for Latex Mortars: Maintain temperatures at not less than 50 deg F (10 deg C) during installation and for 7 days after installation, unless higher temperatures are required by referenced installation standards or manufacturer's written instructions.

PART 2 - PRODUCTS

2.1 MANUFACTURERS

A. Source Limitations: Obtain each type of unit paver, joint material, and setting material from single source with resources to provide materials and products of consistent quality in appearance and physical properties.

2.2 CONCRETE PAVERS

A. Concrete Pavers on Grade: Solid paving units, made from normal-weight concrete with pigments complying with ASTM C 936 and ASTM C979 and the following:
   1. Requirements:
      a. Compressive Strength (ASTM C140): 8,000 psi (55 MPa) average, with no individual unit under 7,200 psi (50 MPa).
      b. Absorption (ASTM C140): 5 percent average with no unit greater than 7 percent.
      c. Resistance to Freeze-Thaw (ASTM C1645): No breakage greater than 1.0 percent loss in dry weight of individual unit after 50 cycles.
      d. Face Edges: Eased edges less than 1/16 inch (1.6 mm).
      e. Thickness Tolerance: Plus or minus 1/4 inch (6 mm).
      f. Length & Width Tolerance: Plus or minus 1/16 inch (1.6 mm).
      g. Face Deviation from Rectangular (out of square): Plus or minus 1/16 inch (1.6mm).
      h. Static Coefficient of Friction of Face: Minimum dry value of 0.6 based on testing according to ASTM C1028.
      i. Efflorescence: Less than 2 percent of units impacted.
      j. Finish and Size: As per Material Schedule on the Drawings.
   2. Manufacturer: Subject to compliance with requirements, provide products by one of the manufacturers as per Material Schedule on the Drawings.

2.3 STONE PAVERS

A. Granite Pavers: Rectangular paving slabs made from granite complying with ASTM C 615/C 615M, and the following:
   1. Requirements:
      a. Compressive Strength: 19,000 psi (131 MPa) minimum.
      b. Absorption (ASTM C140): 0.4 percent minimum.
      c. Stone Abrasion Resistance: Minimum value of 25 based on testing according to ASTM C241/C241M or ASTM C1353.
      d. Face Edges: Eased edges less than 1/16 inch (1.6 mm).
      e. Thickness Tolerance: Plus or minus 1/4 inch (6 mm).
      f. Length & Width Tolerance: Plus or minus 1/16 inch (1.6 mm).
      g. Face Deviation from Rectangular (out of square): Plus or minus 1/16 inch (1.6 mm).
      h. Inclusions: Less than 2 percent of units impacted.
      i. Static Coefficient of Friction of Face: Minimum dry value of 0.6 based on testing according to ASTM C1028.
      j. Finish and Size: As per Material Schedule on the Drawings.
   2. Manufacturer: Subject to compliance with requirements, provide products by one of the manufacturers as per Material Schedule on the Drawings.

2.4 EDGE RESTRAINTS

A. Steel Edge Restraints: Manufacturer's galvanized steel edging 16 gauge reversible application suitable for both aggregate and concrete slab bases.

1. Manufacturers: Subject to compliance with requirements, provide products by one of the following:

a. Border Concepts, Inc., Iron Edge.
b. Other approved equivalent.

2.5 AGGREGATE BED AND JOINTS

A. Graded Aggregate for Porous Paving Bed and Joints: Sound crushed stone or gravel complying with ASTM D 448 for Size No. 9.

2.6 MORTAR MIXES

A. General: Do not use admixtures, including pigments, air-entraining agents, accelerators, retarders, water-repellent agents, antifreeze compounds, or other admixtures, unless otherwise indicated.

1. Do not use calcium chloride.
2. Limit cementitious materials in mortar to portland cement and lime.
3. Add cold-weather admixture (if used) at same rate for all mortar that will be exposed to view, regardless of weather conditions, to ensure that mortar color is consistent.

B. Mortar for Stone Masonry: Comply with ASTM C 270, Proportion Specification.

1. Mortar for Setting Stone: Type N.
2. Mortar for Grouting Stone: Type N.

C. Un-Bonded Assembly Latex-Modified Portland Cement Setting Mortar and Bond Coat for Non-Fountain Applications: Flexible polymer-modified Portland cement mortar, complying with ANSI A118.4 and ISO 13007. Proportion and mix portland cement, aggregate, and latex additive to comply with latex-additive manufacturer's written instructions.

1. Manufacturers: Subject to compliance with requirements, provide products by one of the following:

a. Quikrete; Deck Mud with Concrete Acrylic Fortifier under Veneer Stone Mortar-Polymer Modified.
b. Laticrete International Inc; 209 Floor Mud under 254 Platinum bond coat.
c. MAPEI Corp; 4 to 1 Mud Bed Mix with Planicrete AC under Kerabond/Keralastic System.

2.7 GROUT

A. Grout Colors: As selected by City Engineer from manufacturer's full range.

B. Polymer-Modified Cement Grout for Fountain Applications: ANSI A118.6 and ANSI A118.7, sanded.

1. Manufacturers: Subject to compliance with requirements, provide one of the following:
   a. MAPEI Corporation; Ultracolor Plus Sanded Grout with Polymer.

C. Joint Pre-Filler for Stone Thicknesses Greater than 2.5": Furnish dry mix mortar ingredients in the form of a pre-blended mix 3 parts mortar sand 1 part Portland cement. Measure quantities by weight to ensure accurate proportions, and thoroughly blend ingredients.

D. Water: Potable.

2.8 STONE FABRICATION

A. Select stone for intended use to prevent fabricated units from containing cracks, seams, and starts that could impair structural integrity or function.

1. Minor repairs that are characteristic of the varieties specified are acceptable provided they do not impair structural integrity, function or aesthetics.

B. Fabricate stone to comply with requirements indicated and with the following references:

1. For granite, comply with recommendations in NBGQA's "Specifications for Architectural Granite Part 3."

C. Cut stone to produce pieces of thickness, size, and shape indicated. Water jet cut curved stone.

D. Pattern Arrangement: Fabricate and arrange stone units with veining and other natural markings to comply with the following requirements:

1. Cut stone from one block or contiguous, matched blocks in which natural markings occur.
2. Number stone units and note numbers on Shop Drawings to designate installation location of each unit.

E. Carefully inspect finished stone units at fabrication plant for compliance with appearance, material, and fabrication requirements. Replace defective units. Clean sawed backs of stones to remove rust stains and iron particles.

1. Grade and select stone for overall uniform appearance when assembled in place.
2. Natural variations in appearance are acceptable if installed stone units match range of colors and other appearance characteristics represented in approved Samples and mockups.

2.9 STONE FABRICATION TOLERANCES

A. Thickness less than 1 5/8 inch: Plus or minus 1/8 inch (3 mm).

B. Thickness greater than 1 5/8 inch: Plus or minus 1/4 inch (6 mm).

C. Panel face dimension: Plus or minus 1/16 inch (1.5 mm).

D. Panel face variation from rectangular (maximum out of square): Plus or minus 1/16 inch (1.5 mm).

2.10 ACCESSORIES

A. Masonry Adhesives: Water-Cleanable Epoxy Adhesive: ANSI A118.3 or Non-foaming polyurethane.

1. Manufacturers: Subject to compliance with requirements, provide one of the following:

a. Bonstone Materials Corporation; Express II, Fast Set Extreme.
b. Brickstop; Brickstick XS.
c. Pave Tech, Inc; Type 4 UltraWet.
d. or approved equivalent.

B. Spacers and Shims: Resilient plastic, nonstaining, sized to suit joint thickness.

1. Manufacturers: Subject to compliance with requirements, provide one of the following:
a. Endicott Clay Products Co; “Paver Spacers”.
b. Other approved equivalent.

C. Cleavage Membrane: Polyethylene sheeting, ASTM D 4397, 4.0 mils (0.1 mm) thick.

D. Reinforcing Wire: Galvanized, welded, 0.062-inch- (1.57-mm-) diameter wire; 2-by-2-inch (50-by-50-mm) mesh; comply with ASTM A 185/A 185M and ASTM A 82/A 82M except for minimum wire size.

E. Cork Joint Filler: Preformed strips complying with ASTM D 1752, Type II.

F. Compressible Foam Filler: Preformed strips complying with ASTM D 1056, Grade 2A1.

PART 3 - EXECUTION

3.1 EXAMINATION

A. Examine areas indicated to receive paving for compliance with requirements for installation tolerances and other conditions affecting performance.

B. Where pavers are to be installed over aggregate subbases, proof-roll according to requirements in Section 02310 "Earthwork" to identify soft pockets and any areas of excessive yielding.

C. Where pavers are to be installed over a concrete substrate, field verify location of expansion and/or isolation joints in the concrete substrate and modify expansion joint layout as necessary.

D. Where pavers are to be installed over waterproofing, examine waterproofing installation, with waterproofing Installer present, for protection from paving operations, including areas where waterproofing system is turned up or flashed against vertical surfaces.

E. Prepare written report listing conditions detrimental to performance of paving.

F. Proceed with installation only after unsatisfactory conditions have been corrected.

3.2 PREPARATION

A. Concrete substrates: Vacuum and/or air-blast concrete substrates to remove dirt, dust, debris, and loose particles. Remove substances from concrete substrates including curing and sealing compounds, form oil, and laitance and clean concrete substrates to remove dirt, dust, debris, and loose particles.

1. Irrigate concrete slab to locate areas where water ponds deeper than 3/8 inch 15 min after applying water.

2. In ponding areas and/or behind curbs core drill 1 inch diameter holes at 24 inch centers the full depth of the slab. Adhere 6 inch square geotextile fabric centered over each hole.

3.3 INSTALLATION, GENERAL

A. Do not use unit pavers with chips, cracks, voids, discolorations, or other defects that might be visible or cause staining in finished work.

B. Mix pavers from several pallets or cubes, as they are placed, to produce uniform blend of colors and textures.

C. Cut unit pavers with motor-driven masonry diamond blade saw equipment to provide clean, sharp, un-chipped edges. Cut units to provide pattern indicated and to fit adjoining work, light pole bases and utility covers neatly. Use full units without cutting where possible. Hammer cutting is not acceptable.

D. When cutting results in units with any side less than 3 inches long, use a masonry adhesive to bond the cut unit laterally to an abutting full unit with greater than 95% coverage, while maintaining a “dumby” joint.

E. Use masonry adhesive to bond paver inserts to recessed utility covers with greater than 95% coverage.

F. Cut lines straight and true and finish field-cut edges to match shop-cut edges. Scribe and field cut pavers as necessary to fit at obstructions. Produce neat joints of size specified or indicated.

G. Pavers on Mortar Bed Expansion and Control Joints: Install joint filler before setting pavers. Sealant materials and installation are specified in Section 03290 "Joints in Concrete".

1. Provide expansions joints between 10 feet and 12 feet on center and at dissimilar materials and to coincide with paver pattern.

2. For bonded systems, joints shall align through the entire assembly depth including slab substrate.

H. Provide edge restraints as indicated. Install edge restraints before placing unit pavers.

1. Install edge restraints to comply with manufacturer's written instructions.

2. For metal edge restraints with top edge exposed, drive stakes at least 1 inch (25 mm) below top edge.
3. Install job-built concrete edge restraints to comply with requirements in Section 03300 "Cast-in-Place Concrete."
4. Where pavers set in mortar bed are indicated as edge restraints for pavers set in aggregate setting bed, install pavers set in mortar and allow mortar to cure before placing aggregate setting bed and remainder of pavers. Cut off mortar bed at a steep angle so it will not interfere with aggregate setting bed.
5. Where pavers embedded in concrete are indicated as edge restraints for pavers set in aggregate setting bed, install pavers embedded in concrete and allow concrete to cure before placing aggregate setting bed and remainder of pavers. Hold top of concrete below aggregate setting bed.
6. Secure reversible steel edge restraints to concrete with post-installed anchors not less than every 2 feet on curves and 4 feet on straights.

3.4 AGGREGATE SETTING-BED APPLICATIONS

A. Place leveling course and screed to a nominal thickness indicated allowing for compaction and taking care that moisture content remains constant and density is loose and uniform until pavers are set and compacted. Do not use bedding to fill depressions in the base surface.

B. Set pavers with a minimum joint width of 1/8 inch (3 mm) and a maximum of 1/4 inch (6 mm), being careful not to disturb the bed. If pavers have spacer bars, place pavers hand tight against spacer bars. Use string lines to keep straight lines. Fill gaps between units that exceed 3/8 inch (10 mm) with pieces cut to fit from full-size unit pavers and bonded to abutting full sized paver.

C. Vibrate pavers into leveling course with a low-amplitude plate vibrator capable of a 3500- to 5000-lbf (16- to 22-kN) compaction force at 80 to 90 Hz. Use vibrator with neoprene mat on face of plate or other means as needed to prevent cracking and chipping of pavers. Perform at least three passes across paving with vibrator.

1. Compact pavers when there is sufficient surface to accommodate operation of vibrator, leaving at least 36 inches (900 mm) of uncompacted pavers adjacent to temporary edges.
2. Before ending each day's work, compact installed concrete pavers except for 36-inch (900 mm) width of uncompacted pavers adjacent to temporary edges (laying faces).
3. As work progresses to perimeter of installation, compact installed pavers that are adjacent to permanent edges unless they are within 36 inches (90 mm) of laying face.
4. Before ending each day's work and when rain interrupts work, cover pavers that have not been compacted and cover leveling course on which pavers have not been placed with non-staining plastic sheets to protect them from rain.

D. Spread dry joint aggregate and fill joints immediately after vibrating pavers into leveling course. Vibrate pavers and add sand until joints are completely filled, then remove excess material. Leave a slight surplus on the surface for joint filling.

E. Do not allow traffic on installed pavers until sand has been vibrated into joints.

F. Repeat joint-filling process 30 days later in areas where joint sand has consolidated leaving voids.

3.5 MORTAR SETTING-BED APPLICATIONS

A. Where pavers are to be installed over a concrete substrate, ensure concrete has cured for at least 28 days before applying any mortar beds.

B. For unbounded systems, place cleavage membrane or drainage panels over substrates indicated to receive stone, taped at least 4 inches (100 mm) at butt joints. Place reinforcing wire fabric, lapped at least one full mesh at joints and supported so mesh becomes embedded in middle of mortar bed. Hold edges back from vertical surfaces and control and expansion joints about 1/2 inch (13 mm).

C. Apply mortar bed, spread and screed mortar to uniform thickness at subgrade elevations required for accurate setting of pavers to finished grades indicated.

D. Mix and place only that amount of mortar bed that can be covered with pavers before initial set. Before placing pavers, cut back, bevel edge, and remove and discard setting-bed material that has reached initial set.

E. For Fountain applications, apply waterproofing layer over set mortar bed.

F. Moisten pavers before laying if the initial rate of absorption exceeds 30 g/30 sq. in. (30 g/194 sq. cm) per minute when tested according to ASTM C 67. Allow units to absorb water so they are damp but not wet at time of laying.

G. Place pavers before initial set of cement occurs. Immediately before placing pavers on mortar bed, apply uniform 1/16-inch (1.5-mm-) thick bond coat to mortar bed and “butter” to back of each paver.

H. Tamp or beat pavers with a wooden block or rubber mallet to obtain full contact (95% or greater) with setting bed and to bring finished surfaces within indicated tolerances. Set each paver in a single operation before initial set of mortar; do not return to areas already set or disturb pavers for purposes of realigning finished surfaces or adjusting joints.

A. Maintain uniform typical joint width of 1/4 inch (6 mm) minimum and 3/8 inch (10 mm) maximum.

B. Grout joints as soon as possible after beds are set and paving units are firmly fixed.

1. Grout paver joints complying with ANSI A108.10.
2. For pavers thicker than 2 1/2-inch, sweep dry blended mortar mix into joints to fill to 1 inch deep evenly, wet then let dry.
3. Force grout into joints, taking care not to smear grout on adjoining surfaces.
4. Clean pavers as grouting progresses by dry brushing or rubbing with dry burlap to remove smears before tooling joints.
5. Tool exposed joints slightly concave when thumbprint hard, using a jointer larger than joint thickness unless otherwise indicated.
6. If tooling squeezes grout from joints, remove excess grout and smears by dry brushing or rubbing with dry burlap and tool joints again to produce a uniform appearance.

C. Cure grout by maintaining in a damp condition for seven days unless otherwise recommended by grout or liquid-latex manufacturer.

3.6 CONSTRUCTION TOLERANCES

A. Variation in Line: For positions shown in plan for edges of flooring, ramps, steps, changes in color or finish, and continuous joint lines, do not exceed 1/8 inch in 10 feet (3 mm in 3 m), 1/4 inch in 20 feet (6 mm in 6 m), or 3/8 inch (10 mm) maximum.

B. Variation in Stone Unit Typical Joint Thickness: Not less than 1/4 inch (6 mm) at narrowest points or more than 3/8 inch (10 mm) at widest points.

C. Variation in Concrete Unit Typical Joint Thickness: Not less than 1/16 inch (1.5 mm) at narrowest points or more than 1/8 inch (3 mm) at widest points.

D. Variation in Surface Plane: Do not exceed 1/8 inch in 10 feet (3 mm in 3 m), 1/4 inch in 20 feet (6 mm in 6 m), or 3/8 inch (10 mm) maximum from level or slope indicated.

E. Variation in Surface Plane at Drainage Inlets: Plus 1/4-inch (3mm), minus 0.0 inch.

F. Variation in Plane between Adjacent Units (Lipping): Do not exceed 1/8-inch (3mm) difference between planes of adjacent units.

G. Variation in Sand Bed Thickness: Plus 1/2 inch, minus 0.0 inch.

3.7 REPAIRING

A. Remove and replace unit pavers that are loose, chipped or pitted more than 5% of paver face including edges, cracked from edge to edge, scratched more than ½ inch long, stained more than 5% of paver face, or otherwise damaged before and during the Warrantee Period. Provide new units to match adjoining units and install in same manner as original units, with same joint treatment and with no evidence of replacement.

3.8 PROTECTING

A. Prohibit traffic over paving for a minimum of 72 hours. At the end of each day installing, protect newly laid areas with non-staining kraft paper or geotextile. Where areas require construction vehicle access not exceeding design loads, cover unit pavers with a minimum of 3/4-inch (20-mm) untreated plywood over non-staining kraft paper or geotextile.

B. Remove temporary protection for Substantial Completion.

3.9 CLEANING

A. In-Progress Cleaning: Clean paving as work progresses. Remove mortar fins and smears from finish faces progressively.

B. General Cleaning: Wash paving unit finish faces and scrub clean.

1. Use cleaning agents and procedures recommended by paving unit manufactures for application types.
2. Do not allow protective coating to enter drains. Trap, collect, and remove coating material.

3. Remove efflorescence without damaging paving finishes.

C. Cleaning Unit Pavers adjacent and inside Fountains and Pools: Coordinate the cleaning of unit paving with the operation of the fountain and pools. Clean all staining, efflorescence, scale and calcium carbonate deposits on the paving resulting from the commissioning and operation of the fountain and pools. Ensure any runoff from unit paving cleaning does not enter the fountain and pool circulation system.

3.10 REMOVING EXCESS MATERIALS AND WASTE

A. Removal: Remove material off site in excess of spares and remove waste off site and recycle and/or legally dispose of.

END OF SECTION

SECTION 02730

CRUSHED STONE SURFACING

PART 1 - GENERAL

1.1 RELATED DOCUMENTS

A. Drawings and general provisions of the Contract, including General and Supplementary Conditions and Division 01 Specification Sections, apply to this Section.

1.2 SUMMARY

A. Section includes all labor, materials, equipment, incidentals, and services necessary to complete the following scope items as indicated and as specified herein, including but not limited to:

1. Unbound crushed stone and/or decomposed granite surfaces.
2. Bound crushed stone and/or decomposed granite surfaces.
3. Edge restraints.
4. Subbase.

B. Related Sections include the following:
1. Section 02310 "Earthwork" for subgrade, and rough grading.

1.3 REFERENCED STANDARDS

A. Standards Referenced.
1. ASTM C136 Method for Sieve Analysis for Fine and Coarse Aggregates.
2. ASTM D698 Standard Test Methods for Laboratory Compaction Characteristics of Soil Using Standard Effort.
3. ASTM F1951 Standard Specification for Determination of Accessibility of Surface Systems under and around Play Equipment.

A. Latest version of the Project Geotechnical Report.

1.4 ACTION SUBMITTALS

A. Product Data: For the following:
1. Crushed stone and/or decomposed granite including particle size gradation, pH and ASTM F1951 compliance.
2. Binder including manufacturer’s application rates.
3. Edging.

B. Samples for Verification: Submit representative samples for each of the following.
   1. 5 lb (2.2 kg) for each size and color range of stone.

C. Photographs of Mockups: Submit images of each mockup.

D. Field Verification Report: Written confirmation that existing and previous work is complete and conforming.

E. Unsatisfactory Condition Notice: Written notice if unsuitable existing conditions are encountered.

1.5 INFORMATIONAL SUBMITTALS

A. Qualification Data: Submit installer qualifications.

B. Material & Product Certificates: Provide a current material certificate for each material including a statement of compliance with the specification requirements.

C. Material Test Reports: Submit sieve analysis of proposed material to ensure it meets grading requirements and pH test of subbase stone or gravel.

D. Method Statement: Submit a written description of the mixing and application methods and rates endorsed by the Binder manufacturer.

E. Field Quality Control Tests: Submit compaction test results to show conformance.

F. Binder Manufacturer's Field Report: Submit manufacturer's field report of work in progress.

G. Maintenance Data: Recommended products and procedures for cleaning, care and patching to match for maintenance manuals.

1.6 QUALITY ASSURANCE

A. Installer Qualifications: Require at least three years' experience in the installation of similar crushed stone paving in comparable scale projects.

B. Testing Laboratory Qualifications: Require an independent agency qualified to conduct testing.

C. Tests: Test graduation of crushed stone material in accordance with ASTM C136.

D. Preinstallation Conference: Conduct conference at Project site to comply with Project Management and Coordination requirements.

E. Mockups: Build mockups to verify sample selections made, to demonstrate aesthetic effects and set quality standards for materials and execution.

1. Notify City at least 14 days in advance of dates and times when mockups will be ready for review. Schedule mockup reviews with a float time of at least 30 days between the first mockup review and any revised mockup.
2. Build mockup of each surface type:
    a. Three panels not less than 10 feet (3048 mm) square or 100 square feet (9.3 m2) full thickness embedded into the ground. Mockup shall include trials to optimize binder application rate, moisture content and compaction effort using the same equipment proposed in the final works.
3. Assemble mockups in this section with other pavement materials in other sections to enable review as a group by the City.
4. Damage part of an exposed-face surface for each finish, color, and texture, and demonstrate adequacy of repair techniques to match original finish.
5. Submit photographs taken outdoors in the sun of the full mockup dry and then wet and with closeups of joints and finishes.
6. Mockups reviewed by the City with “No Exceptions” or “Make Corrections Noted” may become part of the completed Work if they are protected during the work and conforming at the time of Substantial Completion.

F. Binder Manufacturer’s Inspection: Submit binder manufacturer’s quality control field reports.

G. Field Observation: Give not less than 14 working days’ notice so that field observations may be made of the following:
1. Mockup completion.
2. First area installed.

1.7 DELIVERY STORAGE AND HANDLING

A. Stockpile materials without intermixing. Place, grade, and shape stockpiles to drain surface water. Cover stockpiles to protect from rain and wind.
1. Stockpile away from edge of excavations. Do not store within drip line of protected trees.
2. Protect stone from contamination by foreign materials. Isolate stockpiles to prevent mixing of different aggregate grades. Prevent contamination by organic materials.

B. Follow binder manufacturer’s safe handling recommendations.

1.8 FIELD CONDITIONS

A. Weather Limitations: Install when not less than 40 deg F (4.5 deg C) and for 7 days after installation, unless higher temperatures are required by referenced standards or manufacturer's written instructions.
1. Do not install if subgrade and/or subbase if wet or during rain.

1.9 ADDITIONAL MATERIAL

A. Furnish extra materials that match products and finishes installed and that are clearly labelled and packaged with protective covering for storage. Deliver extra materials to City.
   1. Crushed Stone: No less than 1 cubic yard (0.76 cubic meter) in PP geotextile bag with forklift straps for each stone type.
   2. Binder: No less than 5 gallon (19 liter) in plastic bucket with lid.

PART 2 - PRODUCTS

2.1 GENERAL

A. Manufacturers and Products: Refer to Materials Schedule on Drawings.

B. Source Limitations: Obtain each type of crushed stone from a single source with the resources to provide materials and products of a consistent quality for the duration of the Contract.

2.2 CRUSHED STONE

A. Decomposed granite and/or crushed granite aggregate free from clay lumps, organic matter, and deleterious material that meets the following requirements:
   1. Stone sieve analysis percentage weight passing a square mesh to ASTM C136. When using a binder, the binder manufacturer's gradation range shall take precedence.

Sieve Designations		Percent Passing
3/8"	9.51mm	100%
#4	4.75mm	80 -100%
#8	2.36mm	65 - 90 %
#16	1.18mm	40 - 65 %
#30	0.6mm	25 - 55 %
# 50	0.3mm	15 – 35%
# 100	0.15mm	10 – 20%
# 200	0.075mm	5 – 15%

   2. pH: Between 5.0 and 8.0.
   3. Blends of course sand and rock dust are prohibited.

2.3 BINDER

A. Binder: A non-toxic, colorless, odorless, non-staining, concentrated organic powder that binds soil and stone screenings together, while creating a natural-appearing, firm and stable paving surface.

2.4 SUBBASE

A. Coarse Aggregate Layer: Imported narrowly graded mixture of double-washed crushed stone or crushed or uncrushed gravel; ASTM D 448; coarse aggregate grading #57 (1-inch (25 mm) to No. 4); with 100 percent passing a 1-1/2-inch (37.5 mm) sieve and 0 to 5 percent passing a No. 8 (2.36 mm) sieve. Crushed recycled concrete is prohibited.

B. Medium Aggregate Layer: Imported sound crushed stone or pea gravel double-washed complying with ASTM D 448 for Size # 7 (1/2-inch (13 mm) to No. 4); with 100 percent passing a 3/4-inch (37.5 mm) sieve and 0 to 5 percent passing a No. 8 (2.36 mm) sieve; pH range between 5.0 and 8.0 and electrical conductivity less than 2 dS/m.

2.5 EDGE RESTRAINT

A. Steel Edging: As per the Materials Schedule on the Drawings.

2.6 ACCESSORIES

A. Water: Fresh, clean, potable water.

PART 3 - EXECUTION

3.1 EXAMINING

A. Field Verification: Before starting installation work in this section, examine preceding related and underlying work. Verify that such work is conforming and within specified tolerances.
   1. Examine surfaces indicated to receive surfacing, with installer present, for compliance with requirements for installation tolerances and other conditions affecting performance.
   2. Subbase: Excavate, proof-roll and compact according to the requirements for subgrade in 02310 "Earthwork" to identify soft pockets and any areas of excessive yielding.
   3. Correct any non-conforming work before proceeding with work in this section.

B. Unsuitable Conditions: Submit written notice of any conditions that the Contractor considers unsuitable for work in this section and that may limit the Contractor's warranty. Notices and/or claims of unsuitable conditions to the City after starting installation work in this section shall not be permitted nor limit the Contractor's warranty.

3.2 PREPARING

A. Protect structures, foundations, utilities, sidewalks, pavements, and other facilities from damage caused by settlement, lateral movement, undermining, washout, and other hazards created by operations.

B. Provide erosion-control measures to prevent erosion, displacement of soils, discharge of soil-bearing water runoff or airborne dust to adjacent properties and completed work.

C. Spread and compact the subbase with a minimum of two passes of a plate-type vibratory compactor in lifts not exceeding 4-inches (100 mm) thick.

1. Provide a smooth transition between adjacent existing grades and new grades.
2. Cut out soft spots, fill low spots, and trim high spots to comply with required surface tolerances.
3. Slope grades to direct water away from buildings and to prevent ponding on pavements.
4. Protect subbase from sedimentation with temporary erosion control until surface layer is ready to be installed.

3.3 EDGING INSTALLING

A. Steel Edging: Install steel edging as shown on the drawings and to manufacturer's written recommendations. Drive stakes at required spacing and below the top elevation of edging. Use additional stakes at joints, corners and on curves and as temporary support during spreading and compacting of fill materials that impose lateral loads.

3.4 BINDER BLENDING

A. Pre-blend binder uniformly with stone dry or at binder manufacturer's moisture content prior to placing.

B. The following blending methods are not permitted:
1. Drop spreading, shoveling and raking.
2. Rototilling in place.

C. Binder Application Rate: 15 to 35 lbs. per ton of aggregate as recommended by the binder manufacturer and as successfully demonstrated by the approved mockup.

D. Do not use binder over tree root balls.

3.5 CRUSHED STONE INSTALLING

A. Lifts: Spread the loose stone on the prepared subbase, screed and rake smooth using a steel line rake to desired grade and cross section incorporating cross slopes and/or crowns. Place in lifts not exceeding binder manufacturer's recommended maximums. Overfill to allow for compaction and initial settlement post-compaction.

B. Moisture Content: Maintain moisture content within binder manufacturer's recommended range. Monitor moisture content with "snowball" or "ball" tests.

C. Grading: Uniformly grade areas to a smooth surface, free from irregular surface changes. Comply with compaction requirements and grade to cross sections, lines, and elevations indicated.

1. Provide a smooth transition between adjacent existing grades and new grades.
2. Cut out soft spots, fill low spots, and trim high spots to comply with required surface tolerances.
3. Finish Grading: Slope grades to direct water away from buildings and to prevent ponding of the finished surface.

D. Mechanical Rolling: Use multiple passes of a 1 to 4-ton double drum roller or a 1,000-lb single drum roller to obtain the final desired dense, smooth, uniform texture and compaction of 92 to 95% ASTM D698. Do not use vibratory compaction equipment. Do not use rollers near tree root balls.

E. Manual Tamping: Hand-tamp around benches, signposts, over root balls and under the drip line of trees. Do not cover irrigation heads or subdrain clean outs.

3.6 CRUSHED STONE WITH BINDER FINISHING

A. Finish surface of paving shall be smooth, uniform, and solid with no evidence of chipping or cracking. Dried, compacted material shall be firm all the way through with no soggy or "spongy" areas. Loose material on the surface shall consist of courser particles only and not exceed a thickness of 1/4 inch (6 mm). Tamp or roller marks shall not be present.

B. Smooth out any significant irregularities prior to Substantial Completion. Smooth by light spray with water, and then rolling and/or hand tamping the surface again.

3.7 FIELD QUALITY CONTROL

A. Compaction Testing: Testing agency will test compaction of soils in place according to ASTM D1556, ASTM D2167, ASTM D2937, and ASTM D6938, as applicable. Tests will be performed at the following locations and frequencies:

1. Crushed Stone Surface Areas: At each compacted surfacing layer, at least one test for every 2000 sq. ft. (186 sq. m**)** or less of surfaced area but in no case fewer than three tests.
2. When testing agency reports that subgrades, fills, or backfills have not achieved degree of compaction specified, scarify and moisten or aerate, or remove and replace materials to depth required; recompact and retest until specified compaction is obtained.

B. Binder Manufacturer's Inspection: Binder manufacturer shall attend the preinstallation meeting, inspect the mockup in progress and the first in place construction and submit a field report.

C. Field Inspection: Inspect for loose stone on the surface, or unconsolidated crushed aggregate screenings below the surface, as evidence of improper bonding due to poor mixing or insufficient watering. Test the loose material for adequate stabilization by wetting, then tamping, and allowing it to dry. If the material is still unconsolidated, the binder did not get mixed adequately throughout the crushed stone. If the material is solid, initial watering was insufficient. If cracking or sponginess is evidence of excessive binder in the mix.

3.8 CONSTRUCTION TOLERANCES

A. Edges: Comply with tolerances as follows:
   1. Horizontal Alignment: Plus or minus ½ inch (13 mm).
   2. Vertical Elevation: Plus or minus ¼ inch (6 mm) over 10-foot (3 m) long straightedge.
   3. Horizontal Curvature: Smooth curves plus or minus ½ inch (13 mm) without chords greater than 12-inches (303mm) long and with smooth transitions either side of tangent points.

B. Surfaces: Comply with tolerances as follows:

   1. Elevation: Plus or minus 1/4 inch (6 mm).
   2. Thickness: Plus or minus 1/4 inch (6 mm).
   3. Surface: Gap below 10-foot- (3-m) long straightedge not to exceed 1/4 inch (6 mm) in any direction.
   4. Slope: unless otherwise noted on the Drawings not less than 1% fall.
   5. Settlement: less than 1/4 inch (6 mm) against adjoining pavements.

3.9 PROTECTING

A. Prohibit all traffic over surfacing for a minimum of 4 days after placement and 4 days after rain.

B. Prohibit all skid-steered tracked vehicles, metal or rubber, forklifts, scissors lifts, dumpsters, or roll-off containers from finished surface even if protected.

3.10 REPAIRING AND REPLACING

A. Repairs: Repair if permitted by the City. The City reserves the right to reject repairs that do not comply with requirements.
   1. Mix patching materials and repair so cured patches blend with color, texture, and uniformity of adjacent exposed surfaces and show no apparent line of demarcation between original and repaired work, when viewed in typical daylight illumination from a distance of 20 feet (6 m).

2. Remove and replace damaged work when repairs do not comply with requirements.

A. Substantial Completion Replacements: The Contractor agrees to replace work that fail in materials and/or execution before Substantial Completion. The City shall make the final determination of failure.

B. Substantial Completion Failures: Failures include but are not limited to:
   1. Surfacing:
      a. Any work out of tolerance that can not be repaired and/or when repairs have failed.
      b. Any finishes that do not match the approved mockups.
      c. Loose unbound areas exceeding 1/4 inch (6 mm) thickness.
      d. Eroded, rutted, spongy, settled, chipped and/or cracked areas.
      e. Over compaction from construction operations, weather conditions and/or inadequate protection.
      f. Oil-stains.
      g. Lippage to other segments and/or abutting surfaces exceeding 1/4 inch (6 mm).
      h. Ponding water exceeding 12 inches (304 mm) diameter, 1/4 inch (6 mm), deep 8 hours after rainfall and/or pavement washing.

C. Substantial Completion Replacement Schedule: Within 7 days of notice, order replacements matching the original material, size and finish. Replace work within 30 days of the notice when weather conditions permit. Replacement work shall match and seamlessly abut surrounding work without appearing to be an obvious replacement.
   1. Coordinate Substantial Completion replacements with other corrective actions and/or warranty replacements.

3.11 CLEANING

A. In-Progress Cleaning: Clean daily as work progresses.

B. Final Cleaning: Clean work as follows:
   1. Remove temporary protection materials.
   2. Fine rake surface smooth. Do not hose, plow, sweep or power wash.
   3. Sweep and power wash surrounding pavements.

3.12 REMOVING EXCESS MATERIALS AND WASTE

A. Removal: Remove material off site in excess of spares and remove waste off site and recycle and/or legally dispose of.

B. Spares: Deliver spare materials to the City.

END OF SECTION

SECTION 02795
ALL-WEATHER TURF AND SUB-BASE DRAINAGE

SECTION A: SUB-GRADE FOUNDATION AND DRAINAGE

PART I: GENERAL

A. DEFINITION

1. This section defines requirements for the materials, installation, and operating performance of a sub-grade foundation and drainage system needed for a professional-grade All-weather turf field. Defined are the primary system requirements for insuring vertical and dimensional stability of the soil and adequate storm drainage of the playing surface.

B. STANDARDS

1. All specifications listed are defined per applicable ASTM standard test methods, unless no ASTM standard exists. All other specifications and tolerances listed shall be defined under standard ANSI and/or ISO drawing and specification rules.

Note: This specification requires installation of a continuous foundation-grade concrete curb or walkway around the entire perimeter of the athletic field. A formed top ledge or side-mounted composite header (2' x 4') is required for All-weather turf attachment.

PART II: MATERIALS

A. FIELD SOIL ISOLATION FABRIC

1. A non-permeable membrane is recommended for all soils: Drainage properties of the selected non-permeable fabric shall be 0.010 gallons per minute per square-foot maximum (ASTM D4491). Mirafi 550X fabric or approved equal. All non-permeable membrane must be in rolls that are workable and controlled to have 0 wrinkling underneath pad system. At no-time will large pieces of fabric be acceptable at any time.
2. The installed fabric/liner at no time will any punchers be acceptable. No nailing during fabric/linear installation, stapling or cutting of material is acceptable. This also includes turf and pad installation, at no-time will nails being driven thru the pad, turf and infill system is not allowed at any time.
3. All soil isolation fabric shall be 100% flat to the surface with no wrinkling. Any wrinkling larger than 5mm is not acceptable.
4. Any soil isolation fabric nailed, stapled, damaged in any way will be replaced by contractor.

B. TRENCH SOIL ISOLATION FABRIC

1. The trench soil isolation fabric is a polypropylene-based material with a minimum gage weight of five (5) Oz/yd2. Minimum permeability is 130 gallons/minute/square

foot, Mirafi 180N, or approved equal. A non-permeable membrane may be recommended under specific site conditions – see plans to verify.

C. PERIMETER DRAINAGE COLLECTOR PIPE

1. Drainage piping is a perforated dual wall HDPE pipe, diameter specified on plans.

D. PERIMETER CURB

1. A continuous foundation grade curbing of 3000 psi concrete shall be installed along the entire perimeter of the All-weather field. See plans for curb dimensions. Curbing is not required where there is proposed concrete sidewalk adjacent to the field.

SECTION B: STABILIZED SOIL BASE COURSE

PART I: GENERAL

A. DESCRIPTION OF WORK

1. Extent: It shall be the responsibility of Contractor to provide all labor, materials, equipment and tools necessary for the complete installation of a cement dust stabilized sub-grade in the specified area as shown on the Drawings.

2. After the removal of all organic material having an organic content of more than 25%, the sub-base shall be graded for planarity.
   a. Break-up and or pulverize, similar to lime treatment, existing soil as necessary to re-grade the treated area as shown on the Drawings, minimum depth of 8 inches.
   b. Using cement, treat those areas no deeper than 8”.
   c. Rough grade and compact the mixed material to achieve 95% compaction.
      1) Fine grade to specified tolerance.

B. REQUIRED CONTRACTOR EXPERIENCE

1. The Contractor shall demonstrate experience on at least eight (8) sub-grade stabilization projects of 60,000 square feet or larger.

PART II: MATERIALS

A. Portland Cement Dust

Type-II cement shall conform to the requirements of ASTM C150.

PART III: EXECUTION

A. BASE CONSTRUCTION

1. The Contractor shall approve, in writing, the cross-sectional detail for construction

B. STABILIZATION OF SUB-GRADE

1. Apply 10% or 360 pounds by volume Portland Cement dust to treatment area and mix in with a pulverizing machine. Water as needed to allow setting up of soil cement.
   a. Cement shall be 360 pounds per cubic yard
   b. Material shall be mixed thoroughly into the existing top 6" of soil using one or more of the following:
      1) Bomag pulverization machine
      2) high speed tiller
      3) plowing disc
      4) rototiller

2. All work in a designated portion of the field area shall be completed, including fine grading, within 24 hours. Cure time of the material is 24 to 72 hours without rain. Do not apply if temperature is below 40 degrees F, including cure process time.

3. Rough grade area to +/- 1” tolerance. Compact area with 8-10 ton vibrator double drum roller.

4. Fine grade to a 5mm tolerance within ten feet, maintaining the existing cross slope. Compact with double drum roller. A leveling course of decomposed granite or crusher dust not larger than ¼” and having a fine content (200 sieve) of not less than 18% can be installed at not more than 1” thickness.

5. Contractor to notify City inspection and Third Party inspection prior to starting to ensure proper compaction testing is completed. If the contractor does not notify City inspection or Third Party inspection in timely manner any and all re-testing and corrective work will be completed and cost associated to all parties will be reimbursed by contractor.

C. QUALITY ASSURANCE

1. The permeability of the sub-base stabilized material shall be checked by a registered geotechnical engineer from a sampling of the aggregate sieve prior to placing the liner on the base. The permeability shall not exceed ¼” per hour using a double-ring infiltration testing method (ASTM D3385).

2. Testing shall occur after installation and final rolling of the base installation at 10,000 square feet intervals.

3. The Contractor is responsible to meet this performance specification, **before** proceeding with installation of the stone leveling course, and shall bear the cost of the on-site testing and the cost of any additional work necessary to achieve compliance with the specification.

4. All test results shall be logged and documented by the Owner's Technical Representative or Geotechnical Engineer. If at any time the stabilized stone base does not meet specifications, it shall be the Contractor's responsibility to restore,

at his expense, the processed stone base to the required grade, cross-section and density.

5. After the contractor and the all-weather turf manufacture have independently confirmed compliance with all the above tolerances (planarity and elevation verified by a licensed surveyor and compaction, gradation, & verified by Geotechnical Engineer for compaction), he shall notify the appropriate party and schedule a final inspection for approval. The contractor shall make available an orbital laser system to the Inspection Team for the inspection process.

6. All testing fees shall be paid for by the Contractor.

SECTION C: PERIMETER COLLECTOR DRAINAGE

PART I: GENERAL

This work consists of the perimeter perforated pipe and drain rock installed in the perimeter trench.

PART II: MATERIALS

Rock shall consist of free-flowing ¾" minus diameter coarse drain rock. It shall comply with the following gradation criteria:

Mesh size	% Passing
3/4"	100
5/8	100
1/2"	90-100
3/8"	70-90
#4	25-40
#8	15-30
#30	5-15
#50	0-7
#200	0-3

PART III: QUALITY ASSURANCE

A. The permeability of the non permeable treated base shall be checked by a qualified engineer from a sample of the treated material prior to placing the liner on site. In addition, tests shall be coordinated through the Project Manager to test the treated base in six location. The treated base shall have a permeability rate no more than 4" per hour and shall be per Din 8035 Part 7, ASTM 2434 (constant head), or ASTM F2898 (bucket

test) testing methods which consist of a bucket or pale approximately 5 gallons in size. The bottom of the vessel shall be perforated with thirty (30) hole using a ¾" drill bit. In addition to the lab testing, after installation of any aggregate base cross-section designed to conduct rainfall from the turf to the sub-soils and/or under-drain system shall be tested in situ for infiltration rate, using a (ASTM D-3385-94). The test shall be performed in the presence of the Project Manager. The average infiltration rate of 12 critical areas of the field, as determined by the Project Manager, shall not be more than 4" per hour of vertical water passage per hour, with no one location having a rate more than 6" per hour. The Contractor is responsible to meet this in-situ performance specification, before proceeding with the installation of the All-weather turf, and shall bear the cost of the on-site testing and the cost of any additional work necessary to achieve compliance with the specification. It shall be the Contractor's responsibility to restore at his expense, the processed stone base to the required grade, cross-section and density.

B. All testing fees shall be paid for by the Contractor.

C. The Contractor shall notify the Project Manager and designated City inspector to schedule a final inspection for approval of base and subgrade prior to installing the All-weather turf. The Contractor shall make available an orbital laser system to the inspection team for the inspection process.

D. METHODS

1. UNDERLYING SOIL
   Prior to preparing the site for subgrade foundation and drainage installation, all surface turf and vegetation shall be removed and properly disposed of off-site.

2. SOIL PREPARATION
   The native soil shall be sufficiently irrigated and strafed as required to meet the final conditions set forth below. Field Contour - Overall surface contour after final grading and compaction shall be as indicated in the Construction Documents.

3. SUBGRADE AND BASE COMPACTION
   After final contouring and rolling, the subgrade soil compaction:
   The soil compaction shall be greater than 95% on average, with no measurement less than 95%, in accordance with ASTM D-698, based on eight (8) samples taken at reasonably spaced (pseudo-random locations across the field surface location). The designated City Inspector may modify the exact location in the field depending on field conditions. Installed compaction of base material shall average 95% minimum measured at eight (8) locations reasonable spaced across the field surface with no individual measurement less than 90%. The designated City inspector may modify the exact location in the field.

4. SUBGRADE AND BASE PLANARITY
   a. Local soil contour after final compaction and grading shall not have deviations in surface shape greater than 5mm over a 10' span. Final contour shall be plotted on a table of laser-sighted grade elevations using a rectangular grid size appropriate to the area of All-weather turf. Soil grade elevations are to

be reviewed and approved by the designated City inspector prior to installation of the soil isolation fabric.

b. The finished surface of the compacted and laser-graded base material should be set 3/4” below the top surface of the nailer. A graded surface tolerance of +/-1/8” is required along the nailer.

5. PERIMETER COLLECTOR DRAINAGE PIPE INSTALLATION
   a. Perimeter drainage system shall be coupled with a main drain exit, see Construction Drawings.
   b. The centerline of the perimeter drainage trench is nominally placed 36” inboard of the perimeter curbing with a minimum width of 24” and a minimum depth of 18” (at the “uphill” end of the system).
   c. Surface contour between the drainage trench and perimeter concrete curb should be counter-sloped to the field at a minimum of 1% for surrounding infiltration or as specified in the provided Construction Drawings.
   d. Trenches shall be cleared of all loose debris.
   e. Install perforated dual wall HDPE pipe in the perimeter collector trenches.
   f. The centerline of the pipe shall coincide with the centerline of the trench.
   g. A minimum of 4” of the collector trench drain rock shall be placed in the bottom of the collector trenches, on top of the specified trench soil isolation fabric. The drainage rock shall be compacted per specification. Fill the remainder of the collector trenches with the specified pipe and the specified drainage rock to top of subgrade, compacted per specification.
   h. The trench bottoms shall have a drainage slope of 0.5% minimum with a preferred slope of 0.75% throughout the entire system or as specified in the provided Construction Drawings.

SECTION D: PERIMETER CURBING AND TURF ATTACHMENT

PART I: GENERAL

DESCRIPTION OF WORK:

1. A continuous foundation grade curbing or walkway shall be installed around the entire perimeter of the All-weather field.
2. Curbing or walkway shall be primarily composed of foundation grade concrete, with an additional polymer composite lumber nailer that will serve as the attachment surface for the turf.
3. Polymer composite 2x4 lumber is attached (concrete nailed) directly to the poured concrete curbing or walkway then more securely attached using 1/4" diameter concrete threaded studs (Tapcons, or equivalent) at 3’ maximum spacing. The top surface of the nailer should be located 2 inches below the top surface of the concrete curbing or walkway, or if an additional surface is applied to the concrete curbing, then 2 inches below that finish surface.
4. Curbing can be installed as a “exposed” style with the turf edge adjacent an exposed top section of concrete (or other paved surface) or as a “hidden” style with the turf edge adjacent and level with soil area (infield for example) or other non paved surface. See Construction Documents for exact orientation.
5. Turf is attached directly to the concrete supported polymer composite curbing utilizing galvanized fabric studs placed at 8” intervals.

PART II: QUALITY ASSURANCE / APPROVALS

A. It is required that the subsurface be properly installed, inspected and approved prior to turf installation by the turf company and designated City inspector. Finished All-weather base installation workmanship shall be approved in advance by the turf manufacturer. Approvals to be based on a physical inspection performed at the site prior to installation of any All-weather turf material.

B. Any approvals sought after turf installation will be declined. Any associated repair or replacement costs associated with rework of the All-weather base will be the responsibility of the turf supplier/installer.

PART III: INSTALLATION COMPLETION

Upon completion, the base installer will conduct a thorough inspection and walk-through with the City's Project Manager, Bureau of Construction Administration Inspector and Landscape Architect. See inspection requirement in the General Conditions and General Requirements of the Contract Documents. This inspection is to ensure that the Contractor has complied with the Contract Documents, to identify key features of the installation, and to ensure all details meet specifications and performance requirements.

SECTION E: ALL-WEATHER TURF

PART I: GENERAL

A. DESCRIPTION OF WORK

The work under this section includes but is not limited to the installation of the geotextile membrane, new All-weather grass system, in-fill materials, in-laid markings, perimeter termination and maintenance equipment.

B. SUBMITTALS

1. Installation Qualifications: The All-weather grass sub/contractor shall demonstrate experience on at least five (5) installations of the proposed material in the last year. The All-weather grass manufacturer shall certify the designated supervisory personnel on the project. A letter on the manufacturer's letterhead shall be submitted affirming the sub/contractor as competent in the installation of the material, including seaming methods, in-laid markings, termination and proper installation of the product. The turf manufacture shall also submit on letter head that sub/contractor workmanship (installation of the all-weather turf) is covered for the warranty period as specified herin.

2. All-weather Grass Sample: The Contractor shall submit a 6"X9" sample of the All-weather grass and in-fill system proposed for this contract for approval of colors, in-fill, seaming materials and layout of the system prior to ordering the materials.

3. Warranty: The Contractor shall submit a manufacturer's warranty listing a TEN (10) year guarantee against ultra-violet ray fading, degradation, or defects, such as

excessive wear or defibrillation. The guarantee shall include and cover that the product will not decrease in pile height by more than 15%, decrease in face weight (without in-fill) by more than 20% and not exceed a G-max (force reduction) of 110 G's initially and not exceed 150 G's over the guarantee period. The Contractor is required to perform the necessary testing during a scheduled time at least one time per year during the guarantee period. The results of the testing shall be submitted to the City of Los Angeles project manager within 30 days of each test. Failure to submit the results will serve as notice to perform such testing by the City of Los Angeles to determine the extent of the needs under this guarantee. The Contractor is required under this guarantee to supply and install all in-fill materials and All-weather grass to maintain the performance levels of this guarantee. The Contractor or Manufacture must supply the City with a performance bond or warranty covering workmanship for the installation of the pad and all-weather turf system.

4. Testing and Quality Control: Submit to the Project Manager a copy of the results certified by an independent testing laboratory for the following tests performed on the All-weather grass system.

5. Fiber shall be Parallel Slit Film with nylon monofilament thatch layer.

6. All material shall be constructed using the C-8 resin technology. A letter from the fiber manufacturer shall be submitted to the City before payment.

7.

Pile Yarn Type	62 oz. Polyethylene parallel Slit Film with 33 oz. HD nylon mono filament fiber thatch layer
Yarn Denier	ASTM D-1577
Yarn Breaking Strength	ASTM D-2256
Yarn Melting Point	ASTM D-789
Pile Height	ASTM D-418
Pile Weight	ASTM D-418
Total Weight	ASTM D-418
Backing Perforations	ASTM D-418
Tuft Bind (Without in-fill)	ASTM D-1335
Tuft Bind (With in-fill)	ASTM D-1335
Grab Tear Strength	ASTM D-1682
Impact Attenuation	ASTM D-355
Pill Burn Test	ASTM D-2859

***FTIR Lisport Test: Turf and Pile composition for not less than 100,000 cycles to be performed. The fibers have already been tested. Contractor shall supply this test at the time of submittals

8. Maintenance and Operating Data: Submit to the Project Manager a copy of maintenance and operating data for the All-weather grass system. Provide descriptions of all equipment recommended for the maintenance, repair, citing turf and activities not recommended relative to the warranty. Include maintenance

recommendations including coverings for special events, small repair procedures, minor seam repair, discussion of the precautions to be practiced, general maintenance and uses to avoid to protect the turf system.

9. Site Acceptance: As a part of this contract, this contractor shall be responsible to oversee the installation of the base and drainage and to comment on any problems or conflicts that may be discovered. Upon completion of the base work, submit a letter confirming the site inspection has been performed, noting any discrepancies, problems and/or conflicts. A summary of certification of the acceptance of the base and drainage shall be submitted.

C. STANDARD SPECIFICATIONS FOR LAYOUT AND RULES

All markings shall be performed using selected colors of turf materials.

D. FIELD SLOPE

Each field shall be installed with a SLOPED surface as per the contract drawings. This will be maintained throughout. Any modification to this slope shall be submitted in advance to the Project Manager for final review and approval.

E. DELIVERY, STORAGE AND HANDLING

1. Packing and Shipping: Deliver products in original unopened packaging with legible manufacturers' identification. All materials shall be stored in a dry place out of the direct sunlight.

2. Bulk Materials: Deliver materials in clean, washed and covered trucks to eliminate contamination during transportation. On site stockpiling locations to be coordinated with the City of Los Angeles. Stockpile only in areas free of debris and away from drainage routes. Cover all materials with plastic or geotextile if materials are to be stockpiled more than 48 hours.

F. FIELD SYSTEM HOLD HARMLESS

The contractor shall hold the City of Los Angeles, Project Manager and Field Consultant harmless from infringement of any current or future patent issued for the All-weather grass system, fibers, backings, including shock pad (as required), installation methods and vertical draining characteristics. The successful Proposer will be required to submit a letter for consent from their surety. Surety will indemnify the requirements.

G. FIELD DIMENSIONS AND LAYOUT

The Contractor will be responsible for furnishing, setting and marking all lines, seams and markings for the field. The Contractor shall at all times maintain all necessary benchmarks and control points to locate all events and markings.

H. PROTECTION OF UTILITIES AND STRUCTURES

This Contractor shall take special care to protect all field and stadium structures and utilities.

I. WARRANTY OF ALL-WEATHER GRASS SYSTEM

1. The Warranty/Guarantee shall cover, in general, the usability of the turf system (and pad as required); accessories use characteristics and suitability of the installation. All items covered by the warranty are to be replaced or repaired with new materials, including installation at the sole expense of the warranting contractor or manufacture for a period of TEN (10) years to the City of Los Angeles from the date of substantial completion. The field materials shall be guaranteed for the designated uses as follows:
   a. Marching Band
   b. Football
   c. Soccer
   d. Physical education exercises
   e. Physical education activities
   f. Lacrosse
   g. Field Hockey
   h. Rugby
   i. Pneumatic rubber tired maintenance and service equipment
   j. Pedestrian traffic and other similar uses

2. A principal of the applicable firm, duly authorized to make contracts, shall sign the turf contractor warranty. The term “contractor” contained herein means the firm furnishing the warranty. “Owner” is the City of Los Angeles. If the turf manufacturer of the All-weather grass system is not the same entity as the contractor, the warranty shall be co-signed by the manufacturer and the installation contractor.

J. FORM OF WARRANTY OF THE ALL-WEATHER GRASS SYSTEM

1. Contractor hereby warrants to the City of Los Angeles, subject to the limitations and conditions set forth below, that its All-weather grass system consisting of the All-weather turf described as _____, the shock-absorbing under-pad (if necessary) described as _____, and the adhesives used in the installation, are free from defects in material and workmanship and shall, for a period of Ten (10) years from the date of acceptance by the City of Los Angeles, remain serviceable for the activities as listed above.

2. Contractor warrants to the City of Los Angeles that its All-weather grass materials shall not fade, fail, shrink, wrinkle or reflect excessive wear. Contractor shall, at their sole expense and cost, replace such areas of the All-weather grass system not performing to these standards for the life of the warranty.

3. Definitions:
   a. The term “not fade” in the context of this warranty shall mean that the All-weather grass material remain a uniform shade of green or the other colors installed with no significant loss of color as defined by not greater than 20% loss or shade reduction.
   b. The term “not fail” or “excessive wear” as used in the context of this warranty shall mean that the length and weight of the face yarn or pile material in the All-weather turf surface shall not have been decreased by more than 5% per year according to ASTM D418, nor exceed 20% during the warranty period. In the event that the All-weather turf materials do not retain its fiber

height or shock absorbency and is consequently no longer serviceable during the warranty period, the Contractor shall, at their sole expense, replace such portions of the system that are no longer serviceable.

c. The term “serviceable” in the context of this warranty shall mean that the All-weather turf material shall have a maximum ‘”G” force value according to Procedure A, B, or C of ASTM D355, not exceed 110 G’s at any location upon installation and shall not exceed 150 G’s thereafter throughout the life of the warranty period. This shall be determined by conducting dynamic cushioning tests at the six field locations as required per ASTM D355 procedures. “G” force factor values to be determined at 70 degrees F. Any increase from 110 G’s to allowable 150 G’s maximum shall be at a relatively uniform rate not to exceed 10 G’s in any single year. HIC testing shall not exceed 900 from a 1.2M fall height during the warranty period.

4. Where applicable, the fabric shall adhere firmly and completely to the under pad or seaming tape over the entire warranty period.

5. Contractor warrants to the City of Los Angeles that the permeable All-weather turf system shall drain vertically a minimum of 15 inches precipitation per hour for a maximum of 24 hours continuously, without visible surface ponding.

6. Contractor shall replace with new materials, at their sole expense, any damage to the All-weather grass system, which extends more than one meter beyond the location of foreign combustibles, which may ignite, and fire-damage the All-weather grass system. The Contractor shall not be held responsible for any incidental or consequential damages. These warranties and the Contractor’s obligations here-under are expressly conditioned upon;

   a. The City of Los Angeles making all minor repairs to the All-weather grass system upon the discovery of the need for such repairs.
   b. The City of Los Angeles maintaining and properly caring for the All-weather grass system in accordance with the Contractor’s maintenance manual and instructions.
   c. The City of Los Angeles complying with the dynamic and static load specifications established by the Contractor.

7. The warranty is not to cover any defect, failure, damage or undue wear in or to the All-weather grass system caused by or connected with abuse, neglect, deliberate acts, acts of God, casualty, static or dynamic loads exceeding Contractor’s recommendations.

8. Contractor shall examine the All-weather turf system at least once per year or in regards to any claim that the City of Los Angeles makes to be present at any time, to analyze the results of all tests conducted by the City of Los Angeles or others, and to conduct such tests of their own. Contractor shall not be responsible for any costs or expenses incurred by the City of Los Angeles or others with respect to such tests, except the Contractor shall pay for costs of all tests and analysis conducted or directed by their representative. The annual testing will be at the expense of the Contractor and the results delivered to the City of Los Angeles

within 60 days of the testing.

9. In the event the Contractor does not respond to the City of Los Angeles's written notice within 10 days of receipt of the notice or does not submit, schedule and execute corrective work within 60 days (weather permitting), the City of Los Angeles has the option of having the work performed at the expense of the Contractor.

10. The Contractor will be given 7 days notice in the form of a certified letter notifying the Contractor of the end of the 60 day scheduling period.

11. Sample form of warranty herein set forth is a suggested for use for the work under this section. Manufacturers' standard form of warranty may be used provided conditions specified herein are incorporated. All claims by the City of Los Angeles under this warranty must be made in writing to the Contractor's address.

    Within 30 days after the City of Los Angeles learns of the defect, giving rise to the claim. This warranty shall constitute a contract made in the State of California and shall be governed by the laws of that State.

PART II: MATERIALS

A. GENERAL

1. The field surfacing system shall be a vertically draining permeable All-weather grass system consisting of an All-weather grass like pile that shall be tufted into a double layer All-weather backing. The final coating shall be a polyurethane based material.

3. All material shall arrive "wrinkle free" during roll out and shall remain "wrinkle free" during the installation prior to infill and post infill. Any wrinkling of the material exceeding 3mm can be rejected after review. No additional cutting of the material or field repair will be accepted for "wrinkled materials".

2. The suppliers listed are capable vendors for the specified material. This specification will supersede any references to the vendors' specifications or product literature. The specification is meant to identify the quality and quantity of the specific components and performance results. Any material exceeding the specifications shall be considered as an equal. Any material with variations from the specifications shall be approved by the Owner prior to acceptance under this specification and contract.

   The All-weather Grass Producers:

   A. Challenger Industries, Inc, Dalton, GA
   B. Astroturf, Dalton, GA
   C. Hellas Construction, Austin TX
   D. Controlled Products, Dalton, GA

   Equal Producers approved by the City of Los Angeles only

3. The entire system shall be resistant to weather, insects, rot, mildew, fungus growth and be non-allergenic and non-toxic. The entire system shall be constructed to maximize dimensional stability, to resist damage and normal wear and tear from its designated uses and to minimize the ultra-violet degradation.

4. All adhesives used in bonding the system together shall be resistant to moisture, bacterial and fungus attacks, and resistant to ultra-violet rays at any location upon installation.

5. Include all labor, materials, equipment, transportation and services to install complete All-weather All-weather grass system.

B. Zeolite Infill: as supplied by KMI, Product lead time is 30 days minimum. Contact KMI directly for materials. Mesh size 12 – 20.

- General Chemical Formula — Na6[Al6Si30O72]24H2O
- Clinoptilolite Content — 97%+
- Cation Exchange Capacity (CEC) — 1.6 – 2.0 meg/g
- Form — Granules
- Shape — Angular
- Color — Gray – green
- Pore Diameter — 4.0 – 7.0 angstroms
- Specific Gravity — 1.89
- Bulk Density — 50 - 65 lbs/ft3
- pH (natural) — 7.0
- Alkali Stability — pH of 7 – 10
- Acid Stability — pH of 3 – 7
- Hardness — 4.2 - 4.5 Mohs
- Swelling Index — Nil

C. DYNAMIC CUSHIONING REQUIREMENTS OF THE ALL-WEATHER GRASS SYSTEM

SECTION 1: ORIGIN, QUALITY AND PROPERTIES	
Specification	**Reference Standards**
Product must be made in United States of America.	
Manufacturer must demonstrate successful installations in the United States for at least 5 million square feet of specified product.	
Material must carry a U.S. 25-year non-prorated product and performance warranty. Warranty shall cover removal and replacement of the pad system at no cost to the City.	
Material is to be manufactured in an ISO-9000 certified facility.	ISO 9000

No exceptions allowed.	
Minimum material thickness minimum 23mm - Product material thickness tolerance must be within +/- 2mm from declared value.	
Seams should be mechanically locked into place by hand without use of additional materials, glue, fasteners or secondary processes and equipment.	
Tensile Strength >60 psi	ASTM D3575-08
Tensile Elongation >28%	ASTM D3575-08
Resistance to Acid and Alkaline Liquids < 0.5% tensile strength loss - 100yr model - after 12 days immersion	ISO 12960:1998
Resistance to Oxidation (Accelerated Ageing) < 10% tensile strength loss - 100yr model – after 56 days @ 110°C	ISO 13438:2004
Resistance to bacteria – no growth	ASTM G22-76 / EN 12225
Resistance to fungi – no growth	ASTM G21-96
Thermal Resistance (R Value) - minimum 3.0	ASTM D3575
Coefficient of linear thermal expansion < 0.004 in / ft./ 1° C	ASTM D696-03
Water Absorption <1.5% after 24hrs immersion	DIN 52 438 / ASTM D570

SECTION 2: ENVIRONMENTAL COMPATIBILITY	
Specification	**Reference Standards / Specificaitons**
Product must comply with and be certified for the California Proposition 65 Safe Drinking Water and Toxic Enforcement Act of 1986 - Update effective 06 JUN 2014	EPA 6010B TCLP/SPLP ICP Metal (Aqueous) EPA 7470A TCLP/SPLP Mercury (Aqueous) EPA 7471A Mercury (Solid) EPA 8270C Semi-Volatile Organics (Solid) EPA 8270C TCLP/SPLP Semi-volatile Organics (Aqueous) EPA 8260B Volatile Organics (Solid) EPA 8260B SPLP Volatile Organics (Aqueous)

Product must fulfill requirements for California Code of Regulations, Title 22, Division 4, Chapter 15, Article 16, Secondary Water Standards	EPA 6010B/7471A CAC Title 22 Metals
Manufacturer must provide documentation of material content and approved standard MSDS sheet for submittal package	

SECTION 3: PERFORMANCE & SAFETY REQUIREMENTS	
Specification	**Reference Standards / Specifications**
Vertical drainage >100" / hr	ASTM 1551: Suffix-DIN 18-035, Part 6
Vertical Deformation 5.0mm – 9MM	EN14809
Force Reduction 55% - 60%	EN14808
Provide guarantee of maximum field average G-Max of field of 130 during warranty period of the specified infilled turf.	ASTM F355-A / ASTM F1936-10
Provide maximum field average HIC of <1,000 from a 1.3m drop height of during warranty period of the turf. Testing documentation from 3rd party supplied with turf material having been run at 100,000 lipsport cycles. Turf system must match this specification.	ASTM F355-E / ASTM F1292
Provide minimum interface friction coefficient of >0.6 in wet and dry conditions with specified infilled turf system	

1. Acceptable manufacturers / systems of drain-mat, or approved equal (to be installed over the impermeable liner fabric):
   a. Brock Systems, YSRII PowerBase Series, by Brock USA, Boulder, CO, www.Brockusa.com (877)276-2587. Brock Power Base: 0.95" thick.
   b. Proplay – 23D by Schmitz Foam Products

   ***Note: The contractor and supplier shall hold the city of Los Angeles harmless from any patent or pending patent infringements.

2. The dynamic cushioning of the combined turf and in-fill system (and pad if required) shall not exceed a maximum of 110 G's at 70 degrees F. per ASTM 1936-98, F355, Procedure A at any location within 30 days of the installation. The system shall not exceed 150 G's over the warranty period.

3. Packing and Shipping: Deliver products in original unopened packaging with legible manufacturers' identification. All materials shall be stored in a dry place out of the direct sunlight.

4. The in-fill system shall have not less than 2.5 pounds of Zeolite, 12 – 20 mesh sieve size.
   a. The material shall have a MOHS hardness of 4.2 to 4.8.
   b. The initial infilling shall be at 1.6 pounds per square foot.
   c. The remaining 0.4 pounds per square foot shall be installed after 60 days.

D. PERMEABILITY REQUIREMENTS OF THE ALL-WEATHER GRASS SYSTEM

1. The combined turf, in-fill system and pad shall drain vertically at a minimum of 10 inches of precipitation per hour for 24 hours continuously, without visible surface ponding.

E. ADHESIVE MATERIAL PROPERTIES

1. Adhesive material to adhere the All-weather turf shall be:
   a. Mapai Ultrabond PU 1K(single component) or two compenet, Mapai, Deerfield Beach, FL.

2. The adhesive shall have the same warranty period as the All-weather grass system.

F. ALL-WEATHER TURF PILE SURFACE

1. The pile surface shall provide good traction in all types of weather with the use of conventional "sneaker type shoes" and composition, molded sole athletic shoes. The pile surface shall be suitable for both temporary and permanent line. Markings and permanent markings using a rubber base paint where applicable.

2. The pile height shall be constructed to allow a total of 3/4" of free fiber after the in-fill materials are installed.

G. ALL-WEATHER TURF SYSTEM MATERIAL COMPONENTS

1. Pile fibers shall resemble freshly grown natural grass in appearance, texture and color (except for the color turf for markings).

2. Fibers shall be a combination of 62 oz. of Polyeythlene parallel slit film (1.5mm pattern) having a denier of 8,000 and fiber thickness of 100 micron (before the oven), with 38 oz. HD (30) nylon (650 denier) monofilament as a thatch zone. Total fiber weight shall be not less than 95 ounces per square yard.

3. Pile surface shall be nominally uniform in length not less than 1-3/4".

4. The fibers are tufted through a two layer (one woven and one non-woven) All-weather backing material.

5. The final coating or secondary backing shall be a moisture cure polyurethane. This backing shall be not less than 20 ounces. Latex backing material is acceptable.

The secondary backing or polyurethane coating shall be uniform and monolithic when cured.

6. If sewn, all turf seams shall be constructed of reinforced backing material or sewn with high strength polyester fiber cord. Sewn seams shall be a “double loop stitch” (bagger seams are not acceptable) type seam. Seams shall lay flat after in-fill.

7. All glued seams shall have a 12” wide seaming tape of nylon or Mylar, **fully coated with adhesive**. All seams shall not have any adhesive applied to any exposed fibers. All graphics or markings can be in-laid or cut-in.

8. All turf shall be perforated for drainage after the final backing coating. The perforations shall be not less than 1/4” in diameter and have a uniform spacing of not less than 4” on center. Perforations shall be complete and full diameter for a minimum of 95% of the each roll.

9. On-site perforations are to be inspected prior to installation of the product.

10. Fabric surface shall be constructed and installed in minimum widths of 15 feet with no longitudinal or transverse seams, except for inlaid lines with a finished roll assembly. The seams shall be 15’-0” apart and shall have the white 5-yard line tufted into each panel for the full width of the field. Rolls that do not comply with the proper length or conform to the seaming diagram as submitted prior to the installation, shall be rejected from the site. No fitted pieces will be allowed to true alignment.

H. PERFORMANCE AND TEST REQUIREMENTS

1.	Melting Point	ASTM D789	135 degrees C.
2.	Specific Gravity	ASTM D792	.950 to .960
3.	Breaking Strength	ASTM D5034	Length 283 lbs./ft. Width 208 lbs. /ft.
4.	Coefficient of Friction	ASTM D5034	Dry 1.15 Wet 1.00
5.	Pill Burn Test	ASTM D2859	8 Passed/0 Failed
6.	Tuft Bind (without in-fill)	ASTM D1335	11 lbs./sq.ft.
7.	Tuft Bind (with in-fill)	ASTM D1335	25 lbs./sq.ft.
8.	Pile Height	ASTM D418	1-3/4” minimum
9.	Fiber Face Weight	ASTM D418	95 oz./sq. yard total
10.	Fiber Construction	ASTM D418	Fibers shall be a combination of 62 oz. polyeythlene parallel

			slit film (1.5 mm pattern) having a denier 8,000 and a fiber thickness of 100 micron (before the oven) with 38 oz. HD (30) nylon (650 denier) monofilament as a thatch zone. Total fiber weight shall be not less than 95 ounces per square yard.
11.	Gauge Width	ASTM D418	3/16” min to ¼” max. (Tufted as A-B needles or alternating fibers)
12.	Fiber Denier	ASTM D418	Slit film 8,000 Denier Monofilament PE 1200 HD (30) Nylon Thatch 650 Denier
13	Fiber Thickness	ASTM D418	Parallel Slit film100 microns Nylon 80 microns (minimum thickness) before the oven.
14.	Fibers (Yarn): a. Tencate XP+: Color Shall be determined by Owner b. Bonar Ultra HD: Color shall be determined by Owner c. Any additional yarns must be approved by City prior to bid time.		
15.	Secondary Backing	ASTM D418	22 oz

I. Post Installation Testing Requirements:

After the installation the Contractor shall have the field tested for performance within two weeks of completion. The test shall be the ASTM F-355 Shock Attenuation (Gmax). The testing laboratory will be required to test each field in 20 locations as determined by the City or shown on the drawing. At each location the Gmax level will be recorded in addition to the infill depth measurement.

J. Post Installation Testing Requirements:

1. After 60 days of the installation the Contractor shall have the field tested for performance within two weeks.
2. The testing requirements shall be according to the STC (Synthetic Turf Council).

3. TESTS:

a.	Ball Roll:	6 to 10 meters
b.	Ball Bounce:	60 to 100 centimeters
c.	Force Reduction:	55 to 70
d.	Deformation:	8 to 12 mm
e.	Torque:	25 to 50 kg/
f.	Traction:	120 to 180
i.	Evenness:	9mm within 3m straightedge
j.	Gmax:	110 to120 (initial)
k.	Seams:	All Seams are checked for completeness
l.	Infill Depth:	16 to 18mm (+or- 3mm)

4. Testing Laboratories:
   a. All Testing will be completed by City 3rd Party to ensure compliance to specification performance guidelines.

K. MARKINGS
1. A complete field lining, marking and field boundary system with team areas limits, etc. shall be provided with the initial installation. Layouts shall be accurately surveyed and marked prior to installation.
2. All lines, numbers and field markings except one-yard marks are to be tufted or inlaid with the specific colored turf. All markings shall be uniform in color, providing a sharp contrast with the turf color and shall have sharp and distinct edging. Markings shall be true and shall not vary more than 1/2" from specified width and location.
3. Manufacturer is to guarantee that the synthetic fiber is adaptable to painted lines.
4. Minimum Lining and Markings: All Green Field area with white, red and yellow as indicated on the drawings for soccer markings.

PART 3 – EXECUTION

A. INSTALLATION
1. Perform all work in strict accordance to the drawings, shop drawings and manufacturer's specifications and instructions.
2. Verification: The Contractor is responsible for the inspecting, verifying and completing all installed work of this section.
3. Weather Permitted Conditions: The Contractor shall not perform any work if any of the following conditions exist;
   a. Ambient air temperatures are below 45 degrees F.
   b. Material temperature falls below 45 degrees F.
   c. Rain is forecast or falling
   d. Conditions exist or are pending that will be unsuitable to the installation of the system.
4. No utilization of nailing of the system turf the non-pours linear will be accepted. Any damage caused to the non-pourous liner will result in full removal and replacement of the section damaged.
5. No wrinkling of the material is allowed during installation. Any additional seams added

to the field during installation that are not specifically documented and approved by the Owner or Owner representatives on the approved seam diagram are not permitted. Any additional seams added to the field will be rejected and contractor to replace full panel at no cost or delay to the owner and project.

B. CERTIFICATION OF THE BASE INSTALLATION
   1. The Contractor, Pad supplier and Turf manufacture are responsible for the review and acceptance of the base and drainage.
   2. Upon completion of the base installation, this contractor shall submit the acceptance of the base in written form with signatures from the both Pad and Turf manufacture prior to installation of the material.
   3. The base with the completed system installed shall not deviate 5mm in any direction upon completion of the system installation. Any repairs needed to correct planarity deficiencies may result in full replacement of materials that cover deficient areas. The City does not all allow any additional cutting of the turf material to correct planarity, compaction or drainage deficiencies.

C. DELIVERY AND INSPECTION OF MATERIALS
   Prior to the installation of any materials and immediately upon delivery of the synthetic turf system and components to the project site, the Contractor shall inspect/verify the following:
   1. Damaged or defective items
   3. Appropriate turf pile height and roll lengths
   4. Uniformity of perforations
   5. Arrival of adhesives in sealed dry containers
   6. Arrival of in-fill with a dry, loose condition, and contained in large sacks or bags without tears

D. CITY OF LOS ANGELES TESTING
   1. The City of Los Angeles reserves the right to submit any material, either before or after installation to any testing it deems necessary to satisfy the conditions of this contract.
   2. Any material tested and found not in compliance with the contract will be rejected and replaced with material conforming to the specifications. This will be done at the sole expense of the contractor.
   3. Any testing performed by the City of Los Angeles will be at the City of Los Angeles's expense. The contractor is responsible for the cost of all testing that fails.

E. TURF INSTALLATION
   1. After acceptance of the base materials, any turf material with less than the 20 oz. secondary backing shall have a the 6 oz. non-woven geotextile membrane is installed under each area of the panel, the All-weather turf is staged and unrolled as necessary for a daily installation. No material will be allowed to be unrolled 24 hours prior to installation. If a shock pad is required, the in-situ pad can be installed over the accepted base. Control of the finish grade and contour shall be the responsibility of the contractor.

   2. Seams

a. All panel seams shall be securely sewn using a double stitch bagger seam and/or glued to a backing material of nylon or mylar.
b. All panel seams spacing are to be held to a minimum of 15 feet unless prior approval of seaming diagram indicates a lesser panel.
c. All inlaid areas shall have full fastenings and no loose areas. At no time can pulling on the section separate the material.
d. All seams and inlaid areas shall be brushed thoroughly before infill materials are installed.

3. Turf Edges and Termination

All edges and ends of the turf shall be secured to a termination area. This termination shall be as detailed in the drawings. The contractor shall submit a shop drawing of this termination detail prior to any work on the site.

F. LINES, MARKINGS AND IN-LAID TURF

All lines to be 4" wide. See drawings for locations and colors of lines, in-laid turf, and (if applicable) logos.

G. INSTALLATION OF IN-FILL

1. In-fill material shall consist of 2.5 lbs. per square foot of Zeolite. Zeolite must be approved by the City's third party inspector prior to installation.

2. The in-fill material shall be installed to a depth that results, after finish brushing, in an exposed fiber length of not less than 3/4".

3. The Contractor shall be required to return to the site after not less than 30 days to inspect and add in-fill materials as needed.

4. No in-fill materials shall be installed until the turf system is fully installed with all lines and markings.

5. The entire synthetic turf installation shall be thoroughly brushed with a minimum of 10 passes to remove any wrinkles and defibrillate the slit film prior to the installation of the in-fill material.

6. The in-fill materials shall be installed in layers not to exceed 0.375 pound per square foot per layer.

7. The turf system shall be power-washed at completion of the infill installation.

H. GENERAL CLEANUP

1. The site shall be kept clean and free of debris throughout the installation. Empty barrels, sacks, bags and remnant materials shall be appropriately and legally stored or disposed of daily.

2. After completion of the entire project, all debris remaining that is not a part of the final project shall be removed from the site.

SECTION F: WARRANTY AND GUARANTEE: ALL-WEATHER TURF SYSTEM

A. GENERAL

1. The Contractor shall be required to issue a non-prorated guarantee for 100% of all labor, materials, workmanship and services for the All-weather Surface and Markings for:

2. All-weather Grass System for a period of TEN (10) years. This warranty will be not be subject to pro-rating of the surface for any failure due to installation or materials. The surface wear will be determined by an independent consultant acceptable to all parties.

3. The guarantee for the surface systems shall remain in force for a period of not less than TEN (10) Years specified from the date of written acceptance of the work.

    a. The Owner will notify the contractor in writing of any issues that require remedial work on the field area.
    b. The Contractor shall respond to the notification within 48 hours of receipt and schedule any major defect or repair within 72 hours or as weather permits.
    c. The warranty requires that the contractor shall be required to perform all required repairs in a permanent and suitable manner as deemed necessary to maintain a safe playing condition at all times.
    d. The warranty requires that in case of any major repair or replacement, the contractor is to schedule such work as to not interfere with the Owner's primary use or schedule.
    e. Any replacement or repair area shall match (as close as possible) the appearance of the existing turf.
    f. Any expenses resulting from the failure to honor the requirements of this warranty shall be the responsibility of the contractor.

4. Any defects caused by delamination, peeling, normal abrasion or raveling that is not in original conformance with the testing specifications shall be repaired or replaced at no cost to the City of Los Angeles Department of Recreation and Parks during this guarantee period.

    In addition to the Contractor's warranty, the contractor shall be required to submit the following documents in regard to the guarantee:

    a. Provide a TEN (10) year warranty from the manufacturer for the turf product for all work performed under this contract.
    b. Provide an TEN (10) year warranty for the fibers from the fiber manufacturer for all work performed under this contract.
    c. Provide a TEN (10) year surfacing manufacturer and installer written guarantee for the All-weather grass.
    d. Provide an EIGHT (8) year third party insured warranty issued by a company licensed to do business in the State of California. This company shall have a Best rating of A- or more. The limits of the policy shall not be less than $5,000,000.00 per year with a single limit of not less than $500,000.00 per field (not site).
    e. The City of Los Angeles shall be listed as additionally insured.

f. Policy is non-prorated with no allowances for deductibles.
g. Documents shall be submitted to the City of Los Angeles Department of Recreation and Parks prior to final payment.

5. The Contractor will be responsible for all tests that fail the specification. The City of Los Angeles reserves the right to submit the surface to the above tests at any time during the length of the guarantee. Consideration will be given to the time and use of the surface.

6. This warranty does not cover excessive wear of the surface caused by misuse. The City of Los Angeles will be given an instructions and caretaking procedures before final acceptance in order to comply with the maintenance guidelines as specified by the surfacing manufacturer.

SECTION G: POST INSTALLATION MATERIALS AND EUIPMENT

Upon completion of the project and before final payments are made, this contractor shall supply the following items to the City of Los Angeles, Department of Recreation and Parks.

1. SW48-A Sweep-N-Clean grooming unit with motorized brush unit.

2. One piece of turf (of the material installed) 15 feet x 100 feet. Delivered to the City of Los Angeles, Department of Recreation and Parks storage area as directed.

3. One super sack (2500 lbs.) of the infill material used for this project.

END OF SECTION

SECTION 02810
IRRIGATION SYSTEM

PART ONE - GENERAL

1.1 DESCRIPTION

A. Work Included:

1. All labor, materials, equipment, appliances, fixtures and tests necessary for complete installation of a new operating irrigation system as indicated on the Contract Drawings or specified in the Project Manual.

2. Repair all street pavements and bases. Contractor shall include in the contract and pay for street damage restoration fee as indicated in Section 01112 - SUMMARY OF WORK and Section 02710 - YARD WORK AND STREET WORK.

B. Related Work:

1. Documents affecting work of this Section include, but are not necessarily limited to the GENERAL CONDITIONS, SUPPLEMENTARY CONDITIONS in DIVISION 1 - GENERAL REQUIREMENTS and other Sections of the Project Manual.

2. Site Demolition in Section 02220.

3. Site Clearing and Grubbing in Section 02210.

4. Earthwork in Section 02310.

5. Landscaping 02900.

6. Waterproofing in Section 07290.

7. Electrical conduit and 120-volt conductors to automatic controller in Division 16.

8. Water meter and electrical service in Section 01112 – DESCRIPTION OF WORK of DIVISION 1 - GENERAL REQUIREMENTS.

1.2 SUBMITTALS

A. Comply with pertinent provisions of DIVISION 1 – GENERAL REQUIREMENTS of the Project Manual.

B. Make all submittal within 30 calendar days from the issuance of the Notice-to-Proceed.

C. Submit complete lists of irrigation materials and equipment, including manufacturer's name and address, specific trade names, catalog numbers complete with illustrations, manufacturer's recommendation or printed installation instructions, and/or necessary descriptive literature and clearly mark or underline proposed items.

D. **Shop Drawings**: Required for any irrigation structure as may be specified hereinafter in accordance with provisions of DIVISION 1 – GENERAL REQUIREMENTS.

E. **Disapprovals**: Contractor is responsible to promptly resubmit, for approval, necessary data concerning a substitution for a previously disapproved item or piece of equipment that may be requested by the City Engineer in accordance with the provisions of DIVISION 1 – GENERAL REQUIREMENTS.

F. **Procurement List**: Use the approved list of irrigation materials and equipment for procurement without deviation unless otherwise authorized in writing in accordance with the provisions of DIVISION 1 – GENERAL REQUIREMENTS.

G. Manufacturer's recommended installation procedures.

H. Manufacturer's specifications and other data needed to provide compliance with the specified requirements.

1.3 QUALITY ASSURANCE

A. **Workers**: Use adequate numbers of skilled workers who are thoroughly trained and experienced in the necessary crafts and who are completely familiar with the specified requirements and the methods needed for proper performance of the Work of this Section.

B. **Codes and Regulations**: All materials and workmanship in this Section shall comply with all applicable City, County and State Plumbing Ordinances, Codes and Regulations. Conform to City of Los Angeles Department of Recreation and Parks Details as shown in the Bureau of Engineering Architectural Design Manual.

C. **Permit**: Obtain and pay for all required Plumbing and Street Repair A permits. Deliver all permits and certifications of inspection to the City Engineer.

1.4 GENERAL REQUIREMENTS

A. **Approvals by the City Engineer**:

1. All approvals on required submittals hereinafter specified.
2. Approval of all resubmittals requested by the City Engineer.
3. Contractor shall make a detailed staked layout on the work site of the proposed trenching locations for all mainline, control wire conduit, and valve manifolds for approval by City Engineer prior to trenching.
4. Contractor shall make a detailed staked layout on the work site of the proposed head locations for approval by City Engineer prior to lateral line trenching.

B. **Inspection**: Notify the City Inspector at least 72 hours prior to time of required inspection.

1. IRRIGATION MAINLINE PRESSURE TEST: The pressure test shall take place under the direction of the BCA Inspector.
2. IRRIGATION COVERAGE TEST: After installation of heads and lateral lines etc., entire irrigation system shall be tested for coverage. Contractor shall notify the BCA Inspector, Project Manager, Landscape Architect and designated Recreation and Parks Regional maintenance staff three (3) days before the scheduled test.

C. **Existing Utilities and Plant Materials**: Protect utilities and/or plant materials not designated for removal or modification in place against damage resulting from work of this Contract. Perform any removal and/or modifications only on approval or instruction from the City Engineer or in accordance with applicable provisions noted or specified. Replace damaged existing plant material with like type and size material. Determine the cost of unreplaceable plant material according to the "square inch" method as described by the Council of Tree and Landscape Appraisers "Manual for Plant Appraisers" Handbook current edition and "Guide for Establishing Values of Trees and Other Plants".

D. **Verification of Dimensions and Quantities**: Verify site conditions, contract drawings, all dimensions, and quantities prior to the bid. Furnish the quantities as may be necessary to do the specific work. Notify the City Engineer of any discrepancies between the Contract Drawings and the Project Manual and/or execution of the irrigation work prior to the bid. Do not work in areas where such discrepancies occur until further instruction by the City Engineer.

E. **Record Drawings**: Comply with provisions of DIVISION 1 – PROJECT RECORD DOCUMENTS of the General Requirements. Accurately dimension location including depths of all piping, valves, and control equipment as installed. Indicate with suitable ink on one set of prints of the Contract Drawings to produce a record of complete installations; to be kept on the job and up-to-date during construction. At the completion of the work and prior to final inspection, the Contractor shall copy his record "as installed" data, using red ink, onto a set of blueline prints. The Contractor shall certify to the completeness and accuracy of the "as installed" information indicated on the blueline prints with his signature. Deliver the signed blueline prints to the City Engineer for review prior to start of the plant establishment period.

Dimension from two permanent points of reference, building corners, sidewalk, or road intersections, the location of the following items:

1. Connection to existing water lines.
2. Connection to existing electrical power.
3. Gate valves.
4. Routing of sprinkler pressure lines. Indicate dimensional location at 100' intervals max.
5. Sprinkler control valves.
6. Routing of control wiring.
7. Quick coupling valves.
8. Controller.
9. Other related equipment as directed by the Architect.
10. Sleeve locations.

F. **Modification of Contract Drawings**: In each case where proposed substitute materials or equipment will require, for proper installation, changes to the design of the project as indicated on the Contract Drawings, appropriate proposed Revision Drawings prepared by a licensed Landscape Architect or Engineer shall be furnished by the Contractor for proper installation of the proposed substitute materials or equipment and for construction by all interested trades of the proposed revisions to the project. The cost of the Drawings and of the proposed revised construction shall be borne by the Contractor. Drawings shall be submitted for the City Engineer's review within 30 days after the issuance of Notice-to-Proceed.

G. **Water and Power Services**: Upon award of contract, the Contractor shall contact the Department of Water and Power to arrange and pay for required installation of water and electrical meters and services. Service connections shall be as shown on the Contract Drawings or designated by the utility company. Upon final acceptance of the project, the Contractor is to transfer billing to the City of Los Angeles, Department of General Services or Department of Recreation and Parks as directed by the City.

H. **Guarantee**: General, in accordance with provisions of Section 28 in GENERAL CONDITIONS. Guarantee the entire irrigation system against defects in materials and workmanship for a period of one year from the date of final acceptance of the Project.

1. Should any deficiencies develop within the specified guarantee period due to inferior or faulty material and workmanship, correct such deficiencies to the satisfaction of the City Engineer without added expense to the City. Further, the contractor shall be required to make any necessary repairs within 24 hours of notification. If the contractor or his agent fail to make such repairs within the stipulated time, the City shall make such repairs or have repairs made by a third party and bill the Contractor for all expenses that accrue from making such repairs.

2. The City reserves the right to make temporary repairs as necessary to keep the irrigation system equipment in operating condition. The exercise of this right by the City will not relieve the Contractor of his responsibilities under the terms of the guarantee.

3. Repair any settlement of backfilled trenches which may occur during a one year period after final acceptance by the City Engineer, to the City Engineer's satisfaction, without expense to the City, including the complete restoration of all damaged planting, paving, or other improvements of any kind.

1.5 DELIVERY, STORAGE AND HANDLING

A. **Delivery**: Deliver products to the job-site in their manufacturer's original containers, with labels intact and legible.

B. **Storage**: Store piping, materials, fitting, etc. at the job-site where directed by the City Engineer until such time for installation.

C. **Handling**: Promptly remove damaged materials and unsuitable items from the job-site and promptly replace with materials meeting the specified requirements, at no added cost to the City.

PART TWO - PRODUCTS

2.1 MATERIALS

A. **General**: Provide recently manufactured materials of the best grade of each respective kind.

B. **Pipe and Fittings**: The type of pipe material and fittings designated on the Contract Drawings, or as hereinafter specified.

1. Steel Pipe: Galvanized standard weight Schedule 40 steel water pipe complying with ASTM A53 - SPECIFICATION FOR PIPE, STEEL, BLACK AND HOT-DIPPED, ZINCH-COATED, WELDED AND SEAMLESS; jointed with galvanized, threaded, standard weight malleable iron fittings, and/or couplings. (Kaiser, U.S. Steel, Kelly Pipe, or equal.)

2. Plastic Pipe: High impact rigid polyvinyl chloride PVC 1220 (Type I, Grade 2), conforming to ASTM D1785 - SPECIFICATION FOR POLY (VINYL CHLORIDE) (PVC) PLASTIC PIPE, SCHEDULES 40, 80 120, AND 200, the minimum pressure rating to be not less than the working pressures indicated therein for the schedule and size listed. (PVC pipe marked with product standard PS-21-70 conforms to the ASTM requirements.)

3. All Pipes: To be homogeneous throughout and free from cracks, holes, foreign materials, blisters, deleterious wrinkles, and dents.

4. Use Schedule 40 PVC plastic pipe for pipe sizes up to and including 2 ½ inch for installation on the supply and discharge sides of control valves unless otherwise indicated.

5. Use Schedule 80 PVC plastic pipe only, when threaded joints are specified, or otherwise permitted by the City Engineer.

6. Continuously and permanently mark all pipes with the following: Manufacturer's name or trademark, size, schedule, and type of pipe, working pressure at 73 degrees F. and National Sanitation Foundation (N.S.F.) approval.

7. Fittings and Couplings for Plastic Pipe: Threaded or slip-fitting tapered socket solvent weld type. Provide threaded adapters with socket pipe for connections to threaded pipe. Plastic pipe fittings and couplings shall be PVC I or PVC I/II material supplied in the same schedule size specified for the pipe. Indicate the type of plastic material and schedule size on each fitting or coupling. Fittings and couplings shall comply with the following specifications (Lasco Pipe, or equal.).

Socket Fittings	Threaded Fittings
Schedule 40 ASTM D-2466 - SPECIFICATION FOR POLY (VINYL CHLORIDE) (PVC) PLASTIC PIPE FITTINGS, SCHEDULE 40	Schedule 80 ASTM D-2464 - SPECIFICATION FOR THREADED POLY (CHLORIDE)(PVC)PLASTIC PIPE FITTINGS, SCHEDULE 80
Schedule 80 ASTM D-2467 - SPECIFICATION FOR POLY (VINYL CHLORIDE) (PVC) PLASTIC PIPE FITTINGS, SCHEDULE 80;	

ASTM D-1785 - SPECIFICATION
FOR POLY (VINYL CHLORIDE)
(PVC) PLASTIC PIPE,
SCHEDULES 40, 80 AND 120

8. All Other Metal Pipe and Fitting: All metal pipings, pipe fittings and nipples consisting of brass, copper, bronze, etc. shall comply with appropriate ASTM testing standards including mercurous nitrate test. Ductile iron fittings for restrained plastic pipe shall be manufactured of ductile iron, Grade 65-45-12 in accordance with ASTM A536. Fittings shall have deep bell push-on joints with gaskets meeting ASTM F477. Gasket lubricant for push on fittings shall be non-toxic, odorless, tasteless and shall not support bacteria. Use 'Seal Lube", SK#87710 by IPS Weldon Corp. or equal. Valve to pipe restraint shall consist of ductile iron (ASTM A536) grip rings with machined serrations and ductile iron restraint rods. The ring that grips the pipe shall meet the requirements of UNI-B-13-94. The restraint rods nuts shall be made from low alloy steel to AWWA/ANSI C111/A21.11 or ductile iron to ASTM A536. Fitting to pipe restraint shall the full rating of the pipe on which it is used. Grip rings and restraint structures shall be made of ductile iron to ASTM A536. Grip ring serrations shall be fully machined or cast. Clamp bolts and nuts shall meet or exceed ASTM A307. Pipe to pipe restraint shall the full rating of the pipe on which it is used.

C. <u>Valves and Valve Boxes</u>:

1. General: Provide valves of the type and capacity designated on the Contract Drawings and with the requirements specified herein. All valves shall be capable of satisfactory performance at a working pressure of 200 psi. Valve design shall permit disassembly for replacement of seals without removal of the valve body from the pipeline.

2. Gate Valves and Mainline Isolation Valves: In sizes 2.5-inch and smaller shall be bronze type, non-rising stem, solid wedge gate valve; Nibco T-113-LF or approved equal.

3. Automatic Control Valves: Electrically operated, of brass or bronze with accurately machined valve seat surface, equipped with flow control adjustment, with capability for manual operation and readily disassembled for servicing; slow opening and closing and self-cleaning. (Rainbird "EFB-CP Series" ; or approved equal)

4. Hose Bibbs: Brass **or** Bronze except for the handle, replaceable compression disc and be 3/4-inch straight-nosed, loose key operated, vacuum breaker and pressure rated for operation at 150 psi.

5. Quick-Coupling Valves and Assemblies: Two (2) piece brass or bronze self-closing valves with built-in flow control and supplied in 1-inch, unless otherwise required. Quick-coupler assembly shall include the valve, quick-coupler connection, and hose swivel. (Rainbird 44LRC; or approved equal.)

6. Valve Boxes and Covers: Valve boxes shall be of Portland Cement concrete with a cast iron frame and hinged double toggle locking cover. The inside dimensions of the box shall be 10-1/2 inches by 17-1/4 inches, Model 363 1/2 HFL by Eisel Enterprises Inc., or approved equal. The cast iron cover shall be permanently embossed as follows (paint is not acceptable):

Shut-Off Valve	SOV
Remote Control Valve	RCV
Quick Coupler Valve	QC
Manual Control Valve	MCV
Electrical Pull Box	ELEC

8. Pressure Reducing Valve: All metal construction, self-cleaning serviceable type without removing valve body from system and adjustable pressure setting. (Wilkins, Griswold, Clayton, or equal.)

9. Wye-Strainer: Bronze construction fitted with a 20 mesh screen of monel or stainless steel. For sizes over 1" a blow-off cock is required.

D. Backflow Preventer Assembly:

1. The Reduced Pressure Zone Assembly shall consist of two independently operating, spring loaded, “Y” pattern check valves and one hydraulically dependent differential relief valve. Mainline valve body and caps including relief valve body and cover shall be lead-free cast copper silicon alloy. Check valve and relief valve components shall be constructed so they may be serviced without removing the valve body from the line. Shutoff valves and test cocks shall be full ported ball valves.

   The assembly shall be rated to 175psi working pressure and water temperature range from 32°F to 140°F. The lead-free* Reduced Pressure Zone Assemblies shall comply with state codes and standards, where applicable, requiring reduced lead content. The assembly shall meet the requirements of AWWA Standard Code C511; and approved by the Foundation for Cross-Connection Control and Hydraulic Hydraulic Research at the University of Southern California. The Reduced Pressure Zone Assembly shall be Febco LF825Y, or approved equal.

2. Wye-Strainer: The main body shall be low lead bronze (ASTM B 584), the access cover shall be low lead yellow brass (ASTM B 16) or cast bronze (ASTM B 584), the strainer screen shall be 300 series stainless steel #100 mesh. Screens shall be accessible for cleaning without removing the device from the line. The “Y” type strainer shall be a ZURN WILKINS Model YBXL-100, or approved equal.

3. Backflow enclosure: shall be of a vandal resistant nature manufactured of formed cold rolled steel tubing and rod, coated with a performance polymer alloy. All locking and mounting hardware shall be manufactured entirely of stainless steel. Each enclosure shall have a mounting pad which shall be used as installation frame. Enclosure hardware on the mounting frame shall be stainless steel. The backflow cage enclosure shall remain bolted to frame in open and closed positions. Enclosure and door shall close with concealed locking tab with hole to accept padlock. Enclosure shall be powder-coated dark green. By Strongbox, SBBC-CR series or approved equal. https://strongbox.com

E. Sprinkler Equipment:

1. Pop-up spray head: bodies shall have a 4”, 6” or 12” pop-up stroke. The body of the spray head shall be constructed of corrosion and UV-resistant, heavy-duty A.B.S. The spray head body shall have a factory-installed drain check valve capable of checking up to 10 feet in elevation change. The spray head body shall have a standard pressure-regulating device as an integral part of the pop-up riser maintaining a constant nozzle outlet pressure of 30 or 45 PSI with inlet pressures

of up to 100 PSI. Nozzles shall be matched precipitation rate, fixed spray or multiple-stream, rotating type or other as noted on Contract Drawings. As manufactured by Rainbird Corporation, or approved equal, models # 1804, 1806, 1812, or 1845.

2. Pop-up Gear Driven Rotor Head: The body of the rotor head shall be constructed of corrosion and UV-resistant, heavy-duty A.B.S. The rotor head body shall have a factory-installed drain check valve capable of checking up to 10 feet in elevation change. The full or part-circle rotor head shall be a single stream, water lubricated, gear drive type capable of both full circle and/or part circle operation in the same unit as noted on Contract Drawings. The rotor head shall have a screen attached to the drive housing to filter inlet water, protect the drive from clogging and simplify its removal for cleaning and flushing of the system. The rotor head body shall have a 1” (26/34) female (NPT or BSP) bottom inlet. The rotor head shall have a standard rubber cover which designates each adjustment opening from the top. Pop-up height as measured from the top of the cover to the centerline of the nozzle orifice shall be at least 5 inches. The rotor shall have a stainless steel covered nozzle turret and riser stem. As manufactured by Rainbird Corporation or approved equal.

3. Root Watering System: The RWS assembly shall consist of a perforated polyethylene rigid mesh cylinder 18” long x 4” diameter or 10” long x 2” diameter with an integrated pressure compensating bubbler and optional check valve. The assembly shall be preconfigured with swing joint assembly or spiral barbed fittings to enable the RWS to be directly connected to PVC or polyethylene lateral drip lines, and shall have a plastic locking grate cover. Manufactured by Rainbird Corporation, or approved equal.

4. SA Swing Joint Assemblies: The Swing Assemblies shall be used as a flexible swing joint assembly for 1/2” inlet sprinklers. The pipe shall be flexible black tubing constructed of linear low density polyethylene material with a wall thickness of 0.090”and an inside diameter of 0.490”.The fittings shall be constructed of UV-resistant, thermoplastic material. The Swing Assembly shall have an operating pressure rating of 80 psi at 110° F. As manufactured by Rain Bird Corporation, Glendora, California or approved equal.

5. TSJ (PRS) Swing Joint Assemblies: The swing joints shall be used as a height adjustable connector between lateral lines and 3⁄4" or 1" sprinklers or quick coupler valves.The swing joint shall be molded from rigid PVC, Type 1, cell classification 12454-B, conforming to ASTM D1784, with a pressure rating of 315 psi at 73° F when tested in accordance with ASTM D3139, including 60 minutes at 790 psi, and short term exposure of 1000 psi without leakage. All NPT threads, sockets, and spigots shall be Schedule 80 per ASTM D2464 and D2467. All components shall be factory preassembled, available with 3⁄4” or 1" inlet/outlet and in lengths of 12” and 18". All rotating joints shall be modified stub ACME threads. All rotating joints shall have two EPDM rubber O-rings for positive sealing and thread protection.

   The pressure regulating system (PRS) shall consist of the outlet elbow of a Rain Bird Turf Swing Joint (TSJ). The TSJ-PRS shall allow pressure to increase uniformly within the rotor up to the preset regulation pressure before regulation occurs. Pressure regulation shall be provided to rotors with 3⁄4" and 1" inlets by means of a spring-loaded diaphragm attached to a flow tube. The regulator housing shall be constructed of high strength PVC. All metal components shall be made of stainless steel. The diaphragm shall be a fabric reinforced elastomer.

F. **Automatic Controller Unit**: The Controller shall be of a type that combines fully automatic or manual operation with an interface to a two-wire path for decoder- based irrigation control. The controller shall provide flow sensing capability and management and a 50 station capacity expandable to 200 stations. The controller shall allow up to 8 valves to operate simultaneously per program and total for the controller including the master valves. The controller shall incorporate a FloManager feature providing real-time flow, power, and station management. FloManager shall manage the number of stations operating at any point in time based on water source capacity, station flow rate, number of valves per station, and shall incorporate the ability to provide station priorities to determine the order in which stations shall operate. The Flow Smart Module shall accept sensor decoder input from 1 - 5 flow sensors with no flow scaling device required. Controller shall include a FloWatch Learn Flow Utility which learns the normal flow rate of each station and compares the current real-time flow rate to the learned rate and takes user-defined actions if high flow, low flow, or no flow is detected. FloWatch shall automatically determine the location of the flow problem and isolate the problem turning off the affected station(s) or master valve(s). FloWatch shall be compatible with both normally closed and open master valves. A Manual Master Valve Water Window shall be provided to coordinate daytime manual watering with the flow sensing. This Water Window shall offer programmable days of the week and manual watering additional flow rate. The controller shall have features and modular options that include: ET Manager Smart Cartridge, NCC Network Communication Cartridges, and the PBC-LXD Programming Backup Cartridge. ESP-LXD, manufactured by Rain Bird Corporation or approved equal.

1. The automatic controller shall be enclosed in a Heavy Duty Stainless Steel Top Entry Enclosure model SB-22SS by Strongbox or approved equal.

2. Valve decoders: shall be Rainbird FD-TURF Series 2-Wire Decoders for ESP-LXD Two-Wire Decoder Systems with Support for 1, 2, 4, or 6 Decoder Addresses, models FD-101TURF, FD-102TURF, FD-401TURF and FD-601TURF as indicated in the Contract Drawings. Sensor decoder shall be Rainbird SD210TURF sensor decoder. Install and connect to 2-wire path per manufacturer's instructions and as indicated in the Contract Drawings. All decoders must be manufactured by SAME manufacturer and compatible with the 2-wire controller system.

G. **Control Wire**:

1. Connection between the automatic controller and the valve decoders shall be made with polyethylene double-jacketed or UF-B UL PVC double-jacketed two-conductor solid core wire designed for direct burial with insulation 3/16 inch (.060") thick, high density, sunlight resistant incased in an outer jacket of Polyethylene or PVC conforming to ICEA S-GL-402 or NEMA WC5, having a minimum wall thickness of .045 inches. Two-wire Polyethylene 'twisted' cable and single strand 14 gauge PVC coated irrigation wire are not acceptable.

2. 2-WIRE Conductor SIZING**:** Standard wire lengths for straight line installation i.e. wire distance to the furthest device without any loop:

Wire Size(gauge)	#14	#12
Total loop Length	10,000'	14,800'
Distance to furthest valve	5,000'	7,400'

3. All 2-wire conductors shall be installed in a 1-1/4" diameter sch. 80 PVC conduit per details. Distance between pull boxes shall not exceed 200'.

4. Low voltage control wire conductors between the 2-wire decoders and the valves shall be U.L. approved direct burial Type U.F., 600 volt, No. 14 AWG solid copper. Use a different color wire for each valve in the manifold grouping.

H. **Wire Connectors**: Control wire connections shall be made with 3-M brand of DBY or DBR Direct Burial Splice kits, or approved equal. The splice kit shall consist of a one-piece malleable plastic bulb body with internal locking fingers, filled with re-enterable gel sealant and a Scotchlok Electrical Spring Connector. Materials shall be as follows:

1. Connector shall be a flame retardant PVC insulator with a steel spring and shell within. Connector shall be a non-crimping system
2. Tube material shall be clear see-through polypropylene.
3. Gel material shall be hixotropic calcium organic complex.
4. Wire sizes and numbers of wires per connector shall be as follows:

Connector:	Color:	No. and Size of Wires:
3M Model DBY	Yellow	Max. 4-12 gage UF wires
3M Model DBR	Red	Max. 3-14 gage UF wires

I. **Concrete Thrust Blocks and Anchoring Rods**: Provide concrete thrust blocks and anchoring rod where applicable for plastic pipes with 3" inch diameter or larger, and all backflow preventer assembly. The Portland cement concrete used for concrete thrust blocks shall be 470-B-2000 concrete, and the anchoring rod shall be galvanized steel with a minimum of 2” diameter (wrapped around the pipe).

L. Crushed Rock Sump: Install one (1) inch crushed rock sump, 12" deep in all control or pressure regulator valve boxes and electrical pull boxes. Crush rock shall conform with Section 200-1.2-CRUSHED ROCK AND ROCK DUST of the Standard Specifications for Public Works Construction. 1 cubic foot minimum.

M. **Accessories:** Provide two each special head wrenches for installing, removing and adjusting each type and make of sprinkler equipment. Provide two keys each for quick coupler valve, and controller units.

PART THREE - EXECUTION

3.1 SURFACE CONDITIONS

Examine the areas and conditions under which work of this Section will be performed. Correct conditions detrimental to timely and proper completion of the work. Do not proceed until detrimental conditions are corrected.

3.2 IRRIGATION SYSTEM INSTALLATION:

A. **General**:

1. Perform all work on the irrigation system, including hydrostatic and coverage tests, preliminary operational test of the automatic control system, and the backfill and compaction of trenches and other excavations after topsoil work and before planting.

2. Specimen plants (24-inch or larger size box) will be planted before installing the irrigation system; reroute irrigation lines conflicting with specimen plant locations to clear the root ball, if possible by twenty-four (24) inches.

3. With the City Engineer's direction, make adjustments where necessary to conform to actual field conditions unless otherwise noted. Irrigation system layouts shown on the Contract Drawings shall be considered schematic.

4. Make the irrigation system operational with uniform and adequate coverage of the areas to be irrigated, prior to planting.

5. All piping on the Contract Drawings shown in paved areas but running parallel and adjacent to planted areas, are intended for design clarification only and are to be installed in the planted area whenever possible.

6. Make water and utility connections as shown on the Contract Drawings or as designated by the utility company. Replace all sidewalks, curbs or paving removed by the installation of the water and electrical meters and service to the satisfaction of the City Engineer.

B. **Trench Excavating and Backfilling**: Size trenches and other excavations to accommodate the irrigation system components, conduits, pipe bedding material and other required facilities. Provide additional space to assure proper installation and access for inspections. Minimum 8 inches side clearance on each side of the pipe or conduit shall be provided in all trenches unless otherwise specified.

1. Unless otherwise specified, the minimum depth of cover over pipelines and conduits shall be as follows:

   a. Control Wire - 24-inches (36-inches under roadways and parking lots).

   b. Other Control Wiring - Depth of waterline or sprinkler line, or a minimum of 24-inches cover if without any waterline or sprinkler line.

   c. Waterlines continuously pressurized - 24-inches for mainlines 3" and smaller; 30- inches for mainlines 4" and larger

   d. Lateral sprinkler lines - 12-inches.

2. Make the bottom of trenches true to grade and free of protruding stones, roots, or other matter which would prevent proper bedding of pipe or other facilities.

3. Trench Backfill - All trench backfill shall be performed in accordance with approved soils report. Pipe bedding shall be clean site soil, free of all rocks, debris, etc. over 1/2" diameter. Bed pipe in at least 4-inches of finely divided material to provide a firm, uniform bearing. Surround the pipe with additional finely divided material to at least 6-inches over the top of the pipe. Bedding shall be placed in 6-inch maximum lifts. Backfill shall be site soil placed above the bedding to finish grade. There shall be no rocks over 2" in greatest dimension or organic matter in the backfill. All bedding and backfill shall be properly moisture conditioned and compacted at each lift. All trenches shall have a minimum relative compaction of 90%. Compaction MAY be tested by the City at locations to be determined by the Geotechnical Engineer.

Finished trenches shall be flush with adjacent finish grades. The Contractor shall be responsible for maintaining the trenches flush and smooth with adjacent surface grade until final acceptance of the project.

4. No irrigation trenching shall pass closer than eight feet of the base of any tree. No tree root larger than 2” diameter shall be cut without approval of the Project Manager.

C. **Irrigation Pipeline Installation - General**: Execute trench excavating and backfilling, including the depth of cover over the pipeline, in accordance with requirements of Subsection 3.2(B) and SSPWC Section 306-1.2.13, whichever is more stringent.

1. Pipe layout as shown on irrigation plan is diagrammatic. Contractor shall route piping in planted areas in the most expedient manner consistent with the requirements set forth herein, including avoidance of tree roots.

2. When two or more pipelines are installed in the same trench, separate the pipelines by a minimum horizontal clear distance of 12-inches. Install piping such that each pipe, valve, or other component may be serviced or replaced without disturbing the others.

2. During installation of pipe, fittings, valves, and other components, prevent soil or foreign matter from entering the system. Temporarily cap or plug all open ends at completion of installation operations.

3. All changes in pipe size shall be made with reducer fittings. No close nipples or bushings shall be used.

4. Where irrigation piping crosses a vehicular roadway or other paving, sleeve all pipe and conduit inside a Schedule 40 PVC sleeve of a minimum of two pipe sizes larger than the piping to pass through it under the paving at the depth of the mainline or 30 inches minimum. All sleeves shall extend a minimum of 3 feet beyond the edges of paving.

5. Pipe or irrigation components of dissimilar metals shall be separated by an approved "Dielectric" coupling.

6. Pipe shall be schedule 40 P.V.C. and shall be colored at the time of manufacture in a purple color (Pantone 512) and marked “CAUTION: RECLAIMED WATER – DO NOT DRINK” at 5 feet on center (for future reclaimed water use).

7. Parallel construction: A minimum of 10 feet separation shall be maintained between the domestic and reclaimed water lines.

8. Cross-over construction:

   Cross-over construction: keep pipes as close to 90 degrees as possible, with one foot separation from the outside edges of the pipes, with potable pipe above reclaimed wherever possible. Center full pipe length over the crossing.

   Alternate cross-over construction: Either the potable or reclaimed water lines may be sleeved with the same class pipe for one full pipe length, (Minimum 10 feet) centered over the cross-over.

9. Potable and reclaimed water lines may not be laid in a common trench.

D. Steel Pipe:

1. Square cut and ream pipe ends to full size with a long taper reamer.

2. Cut threads with clean sharp dies.
3. Make joints with a non-toxic, non-hardening joint compound applied to the male threads only.

4. Wrap steel pipe embedded in the ground with seamless 10 mil F.D.S. Safe-T-clad tape.

   a. Spiral wrap pipe with uniform laps. Apply the second layer of wrap in the reverse direction of the first layer of wrap.

5. Joints and any remaining unwrapped portion of the pipeline shall be similarly wrapped after pressure testing.

E. Plastic Pipeline:

1. Join plastic pipe with socket type solvent welded fittings, threaded fittings, rubber ring fittings or by other means specified. Install steel pipe first when plastic pipe is joined to steel pipe.

2. Cut square, externally chamfer approximately 10-15 degrees and remove all burrs and fins.

3. Make solvent welded joints in accordance with ASTM D2855 - PRACTICE FOR MAKING - SOLVENT - CEMENTED JOINTS WITH POLY (VINYL CHLORIDE) (PVC) PIPE AND FITTINGS. Use the solvent recommended by the pipe manufacturer.

4. Install plastic pipe in accordance with ASTM D2774 - PRACTICE FOR UNDERGROUND INSTALLATION OF THERMOPLASTIC PRESSURE PIPING and the requirements herein.

5. Exercise care in assembling a pipeline with solvent welded joints so that stress on previously made joints is avoided. Handling of the pipe following jointing, such as lowering the assembled pipeline into the trench, shall not occur prior to the set times specified by the manufacturer.

6. Apply solvent to pipe ends in such a manner that no material is deposited on the interior surface of the pipe or extruded into the interior of the pipe during jointing. Wipe off excess cement on the exterior of the joint immediately after assembly.

7. Make threaded pipe joints using Teflon tape or other approved jointing material. Do not use solvent with threaded joints.

8. Protect pipe from tool damage during assembly. Use vises with padded jaws and strap wrenches for installation of fittings and nipples.

9. Remove and replace plastic pipe which has been nicked, scarred, or otherwise damaged.

10. Snake plastic pipe from side to side in the trench to allow 1-foot of expansion and contraction per 100 feet of straight run.

11. Do not expose the pipeline to water for 24 hours after the last solvent welded joint is made.

F. Installation of Valves, Valve Boxes, and Special Equipment:

1. General: Install all valves and other equipment in strict accordance with the details, and make readily accessible for manual operation, maintenance or replacement.

2. Install isolation or gate valves of the same size as the pipeline in which they are installed, unless otherwise indicated.

3. Install all valves below ground housed in a covered valve box with a securable lid that will permit access for field servicing. Boxes shall be set flush with existing grade, including sloped areas, and all soil within 12 inches of the perimeter of the box shall be compacted per the trench repair section of this specification. Boxes are to be positioned per details.

4. Set valve boxes per applicable details and set valves at sufficient depth to provide clearance between the cover and valve handle or key when the valve is in the fully open position. Do not cover valve with pea gravel.

5. Install backflow preventers per applicable details with pipe supports and the accessories necessary to properly secure the assembly where required. Install backflow preventers per prevailing codes. All Backflow devices shall be certified by a licensed inspector as required by the County Health Department Test Instructions, Water Pollution Control Section after installation at the Contractor's expense.

6. No equipment shall be installed closer than 12 inches to any paved surface, unless separated from the paved surface by a wall, fence, curb, or similar barrier, or installed underground.

7. When more than four (4) valve boxes are installed within the same area, attempt to break into multiple 4-valve box sets while providing a minimum 6 foot separation between sets.

G. Irrigation Head Installation and Adjustment:

1. General: In accordance with the requirements of Subsection 3.2 of this Section, flush and pressure test all mains and flush lateral lines before installing irrigation heads.

2. Irrigation Head Placement and Spacing:

   a. Irrigation plans are designed, as a minimum standard, for head-to-head coverage on all spray heads. Head locations shall be determined by referencing the irrigation plan and using the head spacing listed in the irrigation head legend. Accuracy of final installation shall be within plus or minus 12 inches for all rotary heads having a throw of 30 feet or greater; within plus or minus 4 inches for all head types with a throw of under 30 feet. Do not exceed the maximum irrigation head spacing shown on the

Contract Drawings.

b. Prior to head installation, Contractor shall mark the proposed locations of all irrigation heads in the field for review and approval by the Engineer. Contractor shall make any adjustments to head locations requested by the Engineer at that time at no additional expense to the City. Contractor shall provide minimum 48 hours notice prior to the requested time of inspection.

3. Head Installation:

a. Do not exceed the maximum irrigation head spacing shown on the Contract Drawings.

b. Install all irrigation heads 3-inches clear of adjacent walks, curbs, paving, headers, and similar improvements. Adjust all heads to flush with the final finish grade - adjusting for depth of sod in turf areas if needed.

c. All soil within 12 inches of the perimeter of the head shall be compacted as indicated in applicable details.

d. All irrigation heads shall be installed on swing joint assemblies as shown on details.

4. Irrigation Head Adjustment:

a. When all irrigation heads are installed and the irrigation system is operating, adjust and balance each section or unit with all section control valves fully open to obtain uniform 100% head to head coverage.

b. Adjust irrigation heads having adjustable pin nozzles, screws or orifices to provide optimum distribution of water over the coverage pattern. Without additional cost to the City, Contractor shall substitute larger or smaller nozzles in irrigation heads and/or add or omit sprinkler heads as necessary to obtain uniform coverage to meet MWELO requirements. Any requested modification shall not alter the total GPM to a degree to require a major revision of pipe sizing.

c. At no time is the irrigation system to cause excessive overspray on adjacent paved areas, or cause any erosion to the site.

d. Low Head Drainage: The Contractor shall install in-line drainage swing check valves where necessary to prevent low head drainage or as indicated on contract drawings.

H. Automatic Control System Installation:

1. General: Install a complete automatic irrigation 2-wire control system, including the automatic controller, automatic control valves, decoders and wiring, and all necessary accessories and utility service connections.

2. Install the automatic controller outside of the coverage pattern of the irrigation system at the location designated on the Contract Drawings. Verify location with City Engineer prior to installation.

3. Install a separate disconnect switch between the source of power and the

controller inside the controller enclosure per details. Provide grounding per details and manufacturer's instructions.

4. Install all electrical service wiring per Electrical Code in galvanized steel electrical conduit from the service point to the controller. The minimum service wire shall be No. 12 AWG copper 600 volt, Type THW or THWN or larger, as required by the controller manufacturer. Locate splices only in specified pull boxes and make splices with a waterproof packaged kit approved for underground use. Set pull boxes to finish grade on a 12-inch deep layer of one (1) inch crushed rock.

5. All 2-wire control wire shall be installed in 1-1/4" SCH 80 PVC conduit per details, with a maximum run of 200' between pull boxes. Install conduit in the same trench as irrigation mainline per trenching detail where possible. Low voltage control wire conductors between the 2-wire decoders and the valves shall be installed in 1/2" SCH 80 PVC conduit per details.

6. Wire connectors shall be DBY or DBR as manufactured by 3M Corp. Control wires shall be stripped of 1/2 inch of insulation USING A WIRE-STRIPPING TOOL SPECIFICALLY MADE FOR THAT PURPOSE, inserted into the electrical spring connector, and the connector twisted in a clockwise direction until the wires are tight. Insert the completed splice into the gel-filled tube, and check visually to confirm that the wire nut has been pushed past the fingers and is seated in the bottom of the tube. Position wires in wire channels and close insulator cover. Make splices in control wire in accordance with the requirements for service wire. Leave at least 2-feet of coiled slack at each splice and point of connection inside of valve boxes.

7. Testing Electrical Components: Field tests shall be performed by the Contractor on all irrigation system conductors in accordance with the requirements specified herein prior to performing the functional tests. Where conductors are installed by trenching and backfilling, such tests shall be performed after at least six (6) inches of backfill material has been placed over the conductors and backfill material has been compacted.

    a. Prior to the start of the functional testing, the Contractor shall perform the following tests on all irrigation system electrical conductors in the presence of the BCA Inspector.

    b. Each circuit shall be tested for continuity and open circuits.

    c. Each circuit shall be tested for grounds.

    d. An insulation resistance test at 500-volts DC shall be made on each circuit between the circuit and the ground. The insulation resistance shall not be less than 10-megohms on all circuits.

    e. The functional test for all the electric automatic irrigation system(s) shall consists of a minimum of fifteen (15) working days of operation during which time the controller shall complete at least three (3) complete cycles automatically for each station. The lengths and frequencies of the cycles will be determined by the City's representative. If unsatisfactory performance of the system develops, the condition shall be corrected and the test repeated until fifteen (15) working days of continuous, satisfactory operation is obtained.

f. The functional test shall be satisfactorily completed prior to the start of the plant establishment period.

g. Repair to the irrigation system wiring shall be made within five (5) working days of a malfunction or damage to any portion of the system.

8. Contractor shall leave the control system in operating condition with an operational chart mounted within the controller cabinet upon completion of the work

3.3 FLUSHING AND TESTING

A. **Flushing**: After completion, and prior to the installation of any terminal fittings, thoroughly flush the entire pipeline system to remove dirt, scale, or other material. After flushing, conduct the following tests in the sequence listed below. Provide all equipment, materials, and labor necessary to perform the tests. Conduct all tests in the presence of the City Inspector.

1. Pipeline Pressure Test: Perform a water pressure test on all pressure mains before any couplings, fittings, valves, and the likes are concealed. Cap all open ends after the water is turned into the line in such a manner that all air will be expelled. Test pressure mains with all control valves to lateral lines closed. The constant test pressure and the duration of the test are as follows:

   a. Mains: 24 hours at 125 psi.

2. Sprinkler Coverage Test: After installation of heads and lateral lines etc., entire irrigation system shall be tested for coverage. The BCA Inspector, Project Manager, Contractor and Recreation and Parks Regional maintenance staff shall be notified three (3) days before the scheduled test. Perform the coverage test for each zone after irrigation heads have been installed and demonstrated that each section or unit in the irrigation system is balanced to provide uniform and adequate coverage of the areas serviced. Correct deficiencies in the system in accordance with the requirements of Subsection 3.2(G)4.

3. Operational Test: Evaluate the performance of all components of the automatic control system for manual and automatic operation. During the maintenance period, and at least 15 days prior to final inspection, set the controller on automatic operation so that the system will operate satisfactorily during such period. Make all necessary repairs, replacements, and adjustments until all equipment, electrical work, controls, and instrumentation are functioning in accordance with the Contract Documents.

3.4 OPERATING MANUALS AND EQUIPMENT

A. Furnish the City with four bound copies of operating and maintenance manuals for all irrigation system equipment such as automatic controller.

B. Explain in detail all irrigation equipment operations, watering schedule and maintenance procedures to the City personnel directed by the Inspector and City Engineer before completion of the project.

C. Provide the City with a reduced legible copy of the "As-Installed" Irrigation Plan hermetically sealed in a plastic cover to be affixed inside the controller cover.

3.4 RECORD DRAWINGS

Irrigation record drawings shall include the following: Dimension the following locations from two permanent points of reference (building corners, sidewalks, road intersections, etc.):

a. Connection to existing water lines
b. Connection to existing electrical power
c. Gate valves
d. Mainline routing and/or directional turns (dimension maximum 100 feet along routing).
e. Remote control valves
f. Air and pressure relief valves
g. Master valves/flow sensors
h. Control wire routing
i. Quick coupling valves
j. Lightning protection (rod, plate, etc.)
k. Pull boxes
l. Irrigation controllers
m. Backflow prevention units

(END OF SECTION)

SECTION 02821
CHAIN LINK FENCING AND GATES

PART ONE - GENERAL

1.1 SUMMARY

A. All permanent chain link fencing and gates indicated on the Contract Drawings, as specified herein and as needed for complete and proper installation.

B. **Related Work Sections:**

1. Documents affecting work of this Section include, but are not necessarily limited to the GENERAL CONDITIONS, SUPPLEMENTARY CONDITIONS, GENERAL REQUIREMENTS in Division 1 and other Sections of the Project Manual.

2. Earthwork in Section 02310.

3. Concrete Work in Section 03300.

1.2 QUALITY ASSURANCE

A. **Labor:** Use adequate number laborer's who are thoroughly trained and skilled in the fencing trade and who are completely familiar with the specified requirements and methods needed for the proper executions of the work of this Section.

B. **Codes and Regulations:** Perform all work in strict accordance with applicable Government Codes and Regulations, meeting all "Safety Standards" of CAL/OSHA, County and the 2017 Los Angeles City-Building Code and applicable Amendments.

C. **Qualification of Fabricators**: Provide adequate number of fabricators who are thoroughly familiar with the specified requirements regarding fabrication of fencing fabrics, posts and gates.

D. **Quality of All Materials and Accessories**: As recommended by the manufacturer, subject to the acceptance by the City Engineer. All materials and accessories shall conform with the requirements of the Standard Specifications for Public Works Construction (SSPWC) and specified herein.

1.3 SUBMITTALS

A. **General:** Comply with applicable provisions of Section 01340 – SUBMITTALS in DIVISION 1 - GENERAL REQUIREMENTS and other Sections of the Project Manual.

B. **Product Data:**

1. Manufacturer's list of items proposed to be provided under this Section.

2. Manufacturer's Specifications and other data needed to prove compliance with the specified requirements.

3. Shop drawings in sufficient detail to show layout of fence and gate, elevation

details, fabrication, assembly, hardware, installation, anchorages and interface of work of this Section with work of adjacent trades.

4. Manufacturer's recommended installation procedures which when reviewed by the City Engineer or Consultant, will become the basis for accepting or rejecting actual installation procedures used on the Work.

5. Manufacturer's certification of compliance for chain link fabric posts and rails.

1.4 PRODUCT HANDLING

A. **Protection**: Protect fencing fabric, posts and gate assemblies before, during and after installation. Properly package and identify and note location of unassembled items (hardware, etc.) for protection against damage.

B. **Delivery**: Deliver all items to be built into concrete or masonry work in time, so as not to delay construction and installation operations.

C. **Storage**: Store all fencing and gate assemblies where directed by the City Engineer until time for installation.

PART TWO - PRODUCTS AND FABRICATION

2.1 MATERIALS

A. **General:** All materials for fencing, posts and gates and fasteners to be new and hot-dipped galvanized.

B. **Galvanizing:** Comply with requirements of Section 210-3 - GALVANIZING of SSPWC, except as modified herein.

C. 1. Fabric: As per ASTM A392 - SPECIFICATION FOR ZINC COATED STEEL CHAIN LINK FENCE FABRIC and A817 - SPECIFICATION FOR METALLIC - COAT STEEL WIRE FOR CHAIN LINK FENCE FABRIC, 2-inch mesh chain link of 9-gage steel wire (minimum 75,000 psi tensile strength) galvanized 1.2 oz/ft^2 zinc in single fabric width for entire height and with top and bottom selvedges twisted and barbed.

2. Fabric Tie: 11 gage galvanized steel used to fasten the fabric to posts, rails and gate frame.

D. **Posts:**

1. Schedule 40 Standard weight pipe conforming to ASTM F-1083 - SPECIFICATION FOR PIPE, STEEL, HOT-DIPPED ZINC - COATED (GALVANIZED) WELDED, FOR FENCE STRUCTURES.

2. Line Posts: 2 3/8-inch O.D. complete with malleable iron eye-top of suitable design to provide moisture-proof cap.

3. Terminal (End) and/or Corner Posts: 2 7/8-inch O.D. with malleable iron moisture-proof

cap.

4. Gate Posts: 4-inch O.D. complete with malleable iron moisture-proof cap.

E. **Top and Bottom Rails:** 1-5/8-inch O.D. standard weight steel pipe complete with end caps and end clamps for attachment to posts.

F. **Horizontal and Diagonal Bracing:**

1. Horizontal Rails with Diagonal Bracing to allend Sections: Intermediate horizontal rail, 1-5/8-inch O.D. standard weight steel pipe complete with end caps and clamps for attachment to posts.

2. Diagonal: 3/8-inch diameter steel truss rods complete with turn buckles and attachments to post.

G. **Tension Wire:** No. 7-gage galvanized coiled spring steel wire for fabric lighter than 9-gage; for fabric of 9-gage and heavier use 6-gage galvanized coiled spring steel wire.

H. **Galvanizing Repair Material:** Hot repair compound conforming to Federal Specification O-G-93, "Galvalloy" by Metalloy Products Co., Los Angeles, California or "Re-Galv" by Galvweld applied as recommended by the manufacturer.

I. **Galvanized Steel Brace Bands, Tension Bands or Bars and Tension Rods**: Brace bands shall be galvanized, minimum of 3/16 inch x 3/4-inch wide; tension bands or bars shall be 3/16 inch x 3/4-inch wide and tension rods shall be 3/8 inch diameter galvanized steel rod with galvanized turnbuckles or other suitable tightener or tightening devices.

J. **Non-Shrink Grout:** An approved non-shrinking premixed material; Embecco, manufactured by Master Builders Inc., 8978 Haven Ave., # A, Rancho Cucamonga, CA 91730, (800) 228-3318, or equal.

2.2 GATE HARDWARE

A. **Swinging Gate:**

1. Hinges: Heavy-duty ball and socket, industrial service, offset type, minimum 3 inch in width.

2. Latch for Single Swing Gate: Heavy malleable iron, fork type with provisions for padlocking.

3. Latch for Double Swing Gate: Heavy center drop rod latch assembly with provisions for padlocking. For hold-back sleeves provide steel pipe of diameter greater than of drop rod diameter and of length indicated on the Drawing.

2.3 GATE CONSTRUCTION

A. Swinging Gate Frame Construction:

1. All welded, fabricated of 1 7/8-inch O.D., galvanized steel pipe; all welded joints ground smooth and coated with a galvanizing repair material; all in accordance with reviewed Shop Drawings.

2. Frame Bracing: Use galvanized steel truss rods with galvanized turn buckles as hereinbefore specified.

3. Fabric: Same as hereinbefore specified for fencing, placed on exterior side of gate frame, as indicated, in same manner as specified for fencing.

PART THREE - EXECUTION

3.1 SURFACE CONDITIONS

Examine the areas and conditions under which work of this Section will be performed. Correct conditions detrimental to timely and proper completion of the work. Do not proceed until detrimental conditions are corrected.

3.2 CHAIN LINK FENCE INSTALLATION

A. General: By manufacturer, or his authorized representative, in accordance with manufacturer's specifications and best practice.

B. Post Setting: In concrete foundations; minimum 36 inches depth and 12 inch diameter foundation as indicated for gate post; minimum 30 inches depth and 12 inches diameter foundation as indicated for line posts;, respectively; set plumb, at proper height and spacing in straight alignment for uniform installation as indicated on the Drawings.

1. Excavating and Backfilling: Neatly and accurately excavate foundation holes for posts as indicated. Compact subgrade or any loose material. Solidly and firmly backfill around completed concrete foundations with excavated earth materials to finish grade or to proper elevation, as necessary for required paving as applicable.

2. Concrete Foundation: Standard 2500 psi concrete conforming to the 2017 Los Angeles City Building Code and applicable Amendments; finish top of foundation smooth and even, sloped to shed water and with edges at finish grade of adjoining ground or paved surfaces. Allow concrete to attain at least 75% of its 28-day strength before installation of fencing components.

3. Secure line and end/corner posts set in specified diameter preformed hole with minimum one (1) inch of an approved non-shrink type grout cover all around. Top of grout shall be □ inch above the wall surface and shaped or sloped to drain water away from the post.

C. Top Rail: Extend through post eye-top caps and attach ends to corner, gate, and/or terminal (end) posts.

D. Horizontal and Diagonal Bracing:

1. Horizontal Rail: Locate mid-height in fencing panels adjacent to gates, corner, and terminal (end) posts.

2. Diagonal Bracing: Extend from the joint of horizontal brace (with adjacent post) diagonally to the base of gate, corner, or terminal post.

E. Fabric:

1. Install tension wire at bottom fabric before stretching fabric or attach to each post with ties. The fabric shall be installed so that the top edge projects over the top rail of the fence and the bottom tension wire or bottom rail by 3 inches. The bottom of the fabric shall extend to within 2 inches of the natural ground or final grade. High points of ground shall be excavated to clear the bottom of the fabric and depression shall be filled and compacted to within 2 inches of the bottom of fabric. Secure fabric to tension wire with galvanized clip rings or wire ties spaced not more than 18 inches apart.

2. Tightly stretch and secure to line posts, with adequate tie wires, space maximum 18-inches apart or as recommended by manufacturer.

3. Secure fabric to top rail, terminal (end) and gate posts by means of heavy, galvanized steel bands bolted to 1/4-inch x 3/4-inch tension bars passing vertically through full height of fabric 16 inches interval.

3.3 SWINGING GATE INSTALLATION

Properly hang or set gate(s) in plumb and level position for full opening without interference and adjust the hardware for smooth and trouble-free operation; complete with heavy center drop and cane bolt, hold-back sleeves properly located and concreted in place as indicated on the drawings. Concrete foundation for sleeve shall be domed or sloped at top to shed water and with edges at finish grade or adjoining ground or paved surfaces.

3.4 MISCELLANEOUS

A. Use U-shaped tie wires, conforming to diameter of pipe to which attached, clasping pipe and fabric firmly with ends twisted at least two full turns.

B. Bend ends of wire to minimize hazards to persons and clothing.

C. Fasteners:

1. Install galvanized nuts for tension band and hardware bolts on side of fence opposite fabric side.

2. Peen the ends of bolts to prevent removal of the nuts.

D. Repairs: Repair fencing coatings damaged in the shop or during field erection using a hot-applied repair compound applied in accordance with repair compound manufacturer's recommendations as approved by the City Engineer; at no added cost to the City.

E. Cleanup: Comply with provisions of Section 01710 - CLEANING of the GENERAL REQUIREMENTS regarding removal from the job-site; rubbish, all equipment, unused

materials, temporary structures and/or facilities no longer required.

END OF SECTION

SECTION 02822
DECORATIVE METAL FENCES AND GATES

PART 1 - GENERAL

1.1 RELATED DOCUMENTS

A. Drawings and general provisions of the Contract, including General and Supplementary Conditions and Division 01 Specification Sections, apply to this Section.

1.2 SUMMARY

A. Section Includes:

1. Decorative metal fences.
2. Swing gates.

B. Related Requirements:

1. Section 03300 "Cast-in-Place Concrete" for concrete bases for gates and post concrete fill.

1.3 DELEGATED DESIGN

A. Delegated Design: Design metal fabrications and attachments including a structural engineering analysis by a Design Engineer Professional licensed in Project's State, using the following performance requirements and design criteria.

1. Design Intent: General size, layout, functionality and materials "look and feel" as conveyed by the Architect's drawings.

B. Thermal Movements: Allow for thermal movements from ambient and surface temperature changes between 120 deg F (67 deg C), ambient; 180 deg F (100 deg C), acting on exterior metal fabrications by preventing buckling, opening of joints, overstressing of components, failure of connections, and other detrimental effects.

C. Control of Corrosion: Prevent galvanic action and other forms of corrosion by insulating metals and other materials from direct contact with incompatible materials.

D. Fence Structural Performance: Provide metal members and connections capable of withstanding the following design loads within limits and under conditions indicated:

1. Design Intent: General size, layout, jointing, finishes, functionality and "look and feel" as per the Drawings.

2. Dead Loads: Gravity.
3. Live Loads: Allow for the following:
    a. Uniform distributed live load of 100 psf applied in any direction.
    b. Concentrated load of 300 lbf applied horizontally on an area of 1 sq. ft.
    c. Uniform and concentrated loads need not be assumed to act concurrently.
    d. Deflection maximum of ¼ inch in 5 feet.
4. Wind Loads: As required by applicable building code or ASCE/SEI 7.
5. Tolerances: Allow for fabrication and construction tolerances, to accommodate live-load deflection, shrinkage and creep of primary building or substrate structure, and other building movements as follows:
    a. Upward and downward movement of 1/2 inch (13 mm).
6. Thermal Movements: Provide for in-plane thermal movements resulting from annual ambient temperature changes of 120 deg F (67 deg C) to prevent buckling, opening of joints, overstressing of components, failure of connections, and other detrimental effects.
7. Attachments: Hidden, non-staining and non-corrosive. Prevent galvanic reaction and other forms of corrosion by insulating and/or isolating incompatible materials.
8. Lightning-Protection System: Maximum grounding-resistance value of 25 ohms under normal dry conditions.

1.4 PREINSTALLATION MEETINGS

A. Preinstallation Conference: Conduct conference at Project site.

1.5 ACTION SUBMITTALS

A. Product Data: For each type of product.

B. Shop Drawings: For fencing and gates.

1. Include plans, elevations, sections, gates, post spacing, and mounting attachment details, and grounding details.

C. Samples: For each fence material and for each color specified.

1. Provide Samples 12 inches (300 mm) in length for linear materials.
2. Provide Samples 12 inches (300 mm) square for bar grating and sheet or plate materials.

1.6 INFORMATIONAL SUBMITTALS

A. Field quality-control reports.

B. Product Test Reports: For decorative metallic-coated-steel tubular picket fences, including finish, indicating compliance with referenced standard.

1.7 CLOSEOUT SUBMITTALS

A. Maintenance Data: For gate operators to include in maintenance manuals.

1.8 QUALITY ASSURANCE

A. Installer Qualifications: Fabricator of products.

B. Mockups: Build mockups to verify selections made under Sample submittals, to demonstrate aesthetic effects, and to set quality standards for fabrication and installation.

1. Include 10-foot (3-m) length of each type of fence and one (1) gate complying with requirements.
2. Subject to compliance with requirements, approved mockups may become part of the completed Work if undisturbed at time of Substantial Completion.

PART 2 - PRODUCTS

2.1 METALLIC-COATED-STEEL, WELDED-WIRE FENCES

A. Metallic-Coated-Steel, Welded Wire fences: Refer to Materials Schedule and Details on drawings.

2.2 DECORATIVE STEEL FENCES

A. Decorative Steel Fences: Fences made from steel tubing and hot-dip galvanized. Refer to Materials Schedule and Details on drawings.

B. Posts: Square steel tubing.

C. Post Caps: Formed from steel sheet and hot-dip galvanized after forming.

D. Fasteners: Stainless-steel carriage bolts and nuts.

E. Fabrication: Assemble fences into sections by welding pickets to rail.

1. Fabricate sections with clips welded to rails for field fastening to posts.
2. Drill posts and clips for fasteners before finishing to maximum extent possible.

F. Finish exposed welds to comply with NOMMA Guideline 1, Finish #4 - good-quality, uniform undressed weld with minimal splatter.

G. Galvanizing: For items other than hardware that are indicated to be galvanized, hot-dip galvanize to comply with ASTM A 123/A 123M. For hardware items, hot-dip galvanize to comply with ASTM A 153/A 153M.

2.3 SWING GATES

A. Galvanized-Steel Frames and Bracing: Fabricate members from square tubes formed from 0.108-inch (2.74-mm) nominal-thickness, metallic-coated steel sheet or formed from 0.105-inch (2.66-mm) nominal-thickness steel sheet and hot-dip galvanized after fabrication.

B. Frame Corner Construction: Assembled with corner fittings with adjustable truss rods for panels.

C. Infill: Match adjacent fence.

D. Hardware: Latches permitting operation from both sides of gate, hinges, and keepers for each gate leaf more than 5 feet (1.52 m) wide. Provide center gate stops and cane bolts for pairs of gates. Fabricate latches with integral eye openings for padlocking.

E. Spring Hinges: BHMA A156.17, Grade 1, suitable for exterior use.

1. Function: 320 - Gate spring pivot hinge. Adjustable tension.
2. Material: Malleable iron; galvanized.

F. Hinges: BHMA A156.1, Grade 1, suitable for exterior use.

1. Function: 39 - Full surface, triple weight, antifriction bearing.
2. Material: Wrought steel, forged steel, cast steel, or malleable iron; galvanized.

G. Cane Bolts: Provide for inactive leaf of pairs of gates. Fabricated from 1/2-inch- (12.7-mm-) diameter, round steel bars, hot-dip galvanized after fabrication. Finish to match gates. Provide galvanized-steel pipe strikes to receive cane bolts in both open and closed positions.

H. Finish exposed welds to comply with NOMMA Guideline 1, Finish #2 - completely sanded joint, some undercutting and pinholes okay.

I. Galvanizing: For items other than hardware that are indicated to be galvanized, hot-dip galvanize to comply with ASTM A 123/A 123M. For hardware items, hot-dip galvanize to comply with ASTM A 153/A 153M.

J. Metallic-Coated-Steel Finish: High-performance coating.

2.4 STEEL AND IRON

A. Metallic-Coated-Steel Wire: Welded-wire fence fabric, hot-dip galvanized after fabrication. Weight of zinc coating shall be not less than 1.0 oz./sq. ft. (305 g/sq. m).

B. Plates, Shapes, and Bars: ASTM A 36/A 36M.

C. Bars (Pickets): Hot-rolled, carbon steel complying with ASTM A 29/A 29M, Grade 1010.

D. Tubing: ASTM A 500/A 500M, cold-formed steel tubing.

E. Bar Grating: NAAMM MBG 531.

1. Bars: Hot-rolled steel strip, ASTM A 1011/A 1011M, Commercial Steel, Type B.
2. Wire Rods: ASTM A 510/A 510M.

2.5 MISCELLANEOUS MATERIALS

A. Concrete: Normal-weight, air-entrained, ready-mix concrete complying with requirements in Section 03300 "Cast-in-Place Concrete" with a minimum 28-day compressive strength of 3000 psi (20 MPa), 3-inch (75-mm) slump, and 1-inch (25-mm) maximum aggregate size.

B. Nonshrink Grout: Factory-packaged, nonstaining, noncorrosive, nongaseous grout complying with ASTM C 1107/C 1107M and specifically recommended by manufacturer for exterior applications.

2.6 STEEL FINISHES

A. Surface Preparation: Clean surfaces according to SSPC-SP 6/NACE No. 3, "Commercial Blast Cleaning." After cleaning, apply a conversion coating compatible with the organic coating to be applied over it.

B. High-Performance Coating: Apply intermediate and polyurethane topcoats to prime-coated surfaces. Comply with coating manufacturer's written instructions and with requirements in SSPC-PA 1, "Paint Application Specification No. 1: Shop, Field, and Maintenance Painting of Steel," for shop painting. Apply at spreading rates recommended by coating manufacturer.

1. Match approved Samples for color, texture, and coverage. Remove and refinish, or recoat work that does not comply with specified requirements.

2.7 METALLIC-COATED-STEEL FINISHES

A. Galvanized Finish: Clean welds, mechanical connections, and abraded areas and repair galvanizing to comply with ASTM A 780/A 780M.

B. Surface Preparation: Clean surfaces of oil and other contaminants. Use cleaning methods that do not leave residue. After cleaning, apply a zinc-phosphate conversion coating compatible with the organic coating to be applied over it. Clean welds, mechanical connections, and abraded areas and apply galvanizing repair paint, complying with SSPC-Paint 20, to comply with ASTM A 780/A 780M.

C. Powder Coating: Immediately after cleaning and pretreating, apply manufacturer's standard TGIC polyester powder-coat finish to a minimum dry film thickness of 2 mils (0.05 mm).

1. Color and Gloss: [As indicated by manufacturer's designations] [Match City Engineer's sample] [As selected by City Engineer from manufacturer's full range] <Insert color and gloss>.

D. Powder Coating: Immediately after cleaning and pretreating, apply manufacturer's standard two-coat finish consisting of zinc-rich epoxy prime coat and TGIC polyester topcoat to a minimum dry film thickness of 2 mils (0.05 mm). Comply with coating manufacturer's written instructions to achieve a minimum total dry film thickness of 4 mils (0.10 mm).

1. Color and Gloss: As selected by City Engineer from manufacturer's full range.
2. Comply with surface finish testing requirements in ASTM F 2408 except change corrosion-resistance requirement to 3000 hours without failure.

E. High-Performance Coating: Apply epoxy primer, polyurethane intermediate coat, and polyurethane topcoat to prepared surfaces. Comply with coating manufacturer's written instructions and with requirements in SSPC-PA 1, "Paint Application Specification No. 1: Shop, Field, and Maintenance Painting of Steel," for shop painting. Apply at spreading rates recommended by coating manufacturer.

1. Match approved Samples for color, texture, and coverage. Remove and refinish, or recoat work that does not comply with specified requirements.

PART 3 - EXECUTION

3.1 EXAMINATION

A. Examine areas and conditions, with Installer present, for compliance with requirements for site clearing, earthwork, pavement work, construction layout, and other conditions affecting performance of the Work.

B. Do not begin installation before final grading is completed unless otherwise permitted by City Engineer.

C. Proceed with installation only after unsatisfactory conditions have been corrected.

3.2 PREPARATION

A. Stake locations of fence lines, gates, and terminal posts. Do not exceed intervals of 500 feet (152.5 m) or line of sight between stakes. Indicate locations of utilities, lawn sprinkler system, underground structures, benchmarks, and property monuments.

1. Construction layout and field engineering are specified in Section 01700 "Execution."

3.3 DECORATIVE FENCE INSTALLATION

A. Install fences according to manufacturer's written instructions.

B. Install fences by setting posts as indicated.

C. Excavation: Drill or hand-excavate holes for posts in firm, undisturbed soil. Excavate holes to a diameter of not less than 4 times post size and a depth of not less than 24 inches (600 mm) plus 3 inches (75 mm) for each foot (300 mm) or fraction of a foot (300 mm) that fence height exceeds 4 feet (1.2 m).

D. Post Setting: Set posts at indicated spacing.

1. Verify that posts are set plumb, aligned, and at correct height and spacing, and hold in position during setting with concrete or mechanical devices.
2. Concrete Fill: Place concrete around [posts] [and] [sleeves] and vibrate or tamp for consolidation. Protect aboveground portion of posts from concrete splatter.
    a. Concealed Concrete: Top 2 inches (51 mm) below grade to allow covering with surface material. Slope top surface of concrete to drain water away from post.

3. Posts Set in Concrete: Extend post to within 6 inches (150 mm) of specified excavation depth, but not closer than 3 inches (75 mm) to bottom of concrete.
4. Posts Set into Concrete in Sleeves: Use galvanized-steel pipe sleeves with inside diameter at least 3/4 inch (20 mm) larger than outside diagonal dimension of post, preset and anchored into concrete for installing posts.

    a. Extend posts at least 5 inches (125 mm) into sleeve.
    b. After posts have been inserted in sleeves, fill annular space between post and sleeve with nonshrink grout, mixed and placed to comply with grout manufacturer's written instructions; shape and smooth to shed water. Finish and slope top surface of grout to drain water away from post.

5. Posts Set into Voids in Concrete: Form or core drill holes not less than 3/4 inch (20 mm) larger than outside diagonal dimension of post.

    a. Extend posts at least 5 inches (125 mm) into concrete.
    b. Clean holes of loose material, insert posts, and fill annular space between post and concrete with nonshrink grout, mixed and placed to comply with grout manufacturer's written instructions. Finish and slope top surface of grout to drain water away from post.

3.4 GATE INSTALLATION

A. Install gates according to manufacturer's written instructions, level, plumb, and secure for full opening without interference. Attach hardware using tamper-resistant or concealed means. Install ground-set items in concrete for anchorage. Adjust hardware for smooth and quiet operation. Lubricate where necessary.

3.5 GROUNDING AND BONDING

A. Comply with Section 266170 "Grounding and Bonding for Electrical Systems."

B. Fence Grounding: Install at maximum intervals of 1500 feet (450 m) except as follows:

1. Fences within 100 Feet (30 m) of Buildings, Structures, Walkways, and Roadways: Ground at maximum intervals of 750 feet (225 m).

a. Gates and Other Fence Openings: Ground fence on each side of opening.

1) Bond metal gates to gate posts.
2) Bond across openings, with and without gates, except at openings indicated as intentional fence discontinuities. Use No. 2 AWG wire and bury it at least 18 inches (460 mm) below finished grade.

C. Protection at Crossings of Overhead Electrical Power Lines: Ground fence at location of crossing and at a maximum distance of 150 feet (45 m) on each side of crossing.

D. Fences Enclosing Electrical Power Distribution Equipment: Ground as required by IEEE C2 unless otherwise indicated.

E. Grounding Method: At each grounding location, drive a grounding rod vertically until the top is 6 inches (150 mm) below finished grade. Connect rod to fence with No. 6 AWG conductor. Connect conductor to each fence component at grounding location.

F. Bonding Method for Gates: Connect bonding jumper between gate post and gate frame.

G. Connections: Make connections so possibility of galvanic action or electrolysis is minimized. Select connectors, connection hardware, conductors, and connection methods so metals in direct contact are galvanically compatible.

1. Use electroplated or hot-tin-coated materials to ensure high conductivity and to make contact points closer in order of galvanic series.
2. Make connections with clean, bare metal at points of contact.
3. Make aluminum-to-steel connections with stainless-steel separators and mechanical clamps.
4. Make aluminum-to-galvanized-steel connections with tin-plated copper jumpers and mechanical clamps.
5. Coat and seal connections having dissimilar metals with inert material to prevent future penetration of moisture to contact surfaces.

3.6 FIELD QUALITY CONTROL

A. Testing Agency: Engage a qualified testing agency to perform tests and inspections.

1. Grounding-Resistance Tests: Subject completed grounding system to a megger test at each grounding location. Measure grounding resistance not less than two full days after last trace of precipitation, without soil having been moistened by any means other than natural drainage or seepage and without chemical treatment or other artificial means of reducing natural grounding resistance. Perform tests by two-point method according to IEEE 81.
2. Excessive Grounding Resistance: If resistance to grounding exceeds specified value, notify City Engineer promptly. Include recommendations for reducing grounding resistance and a proposal to accomplish recommended work.
3. Report: Prepare test reports of grounding resistance at each test location certified by a testing agency. Include observations of weather and other phenomena that may affect test results.

3.7 ADJUSTING

A. Gates: Adjust gates to operate smoothly, easily, and quietly, free of binding, warp, excessive deflection, distortion, nonalignment, misplacement, disruption, or malfunction, throughout entire operational range. Confirm that latches and locks engage accurately and securely without forcing or binding.

B. Lubricate hardware and other moving parts.

END OF SECTION

SECTION 02823

STAINLESS STEEL RAILINGS

PART 1 - GENERAL

1.1 RELATED DOCUMENTS

A. Drawings and general provisions of the Contract, including General and Supplementary Conditions and Division 01 Specification Sections, apply to this Section.

1.2 SUMMARY

A. Section includes all labor, materials, equipment, incidentals, and services necessary to complete the following scope items as indicated and as specified herein, including but not limited to:
   1. Proprietary “off-the-shelf” metal railings.
   2. Modified proprietary “off-the-shelf” metal railings.

B. Related Sections:

   1. Section 03300 "Cast-in-Place Concrete" for concrete bases for gates and post concrete fill.

1.3 PERFORMANCE REQUIREMENT

A. Delegated Design: Engage a qualified professional engineer licensed in the Project’s State to design necessary structural members, fixing, anchoring and/or attachment systems.

A. Frame Structural Performance: Provide metal members and connections capable of withstanding the following design loads within limits and under conditions indicated:

   1. Design Intent: General size, layout, jointing, finishes, functionality and “look and feel” as per the Drawings.
   2. Dead Loads: Gravity.
   3. Live Loads: Allow for the following:
      a. Uniform distributed live load of 100 psf applied in any direction.
      b. Concentrated load of 300 lbf applied horizontally on an area of 1 sq. ft.
      c. Uniform and concentrated loads need not be assumed to act concurrently.
      d. Deflection maximum of ¼ inch in 5 feet.
   4. Tolerances: Allow for fabrication and construction tolerances, to accommodate live-load deflection, shrinkage and creep of primary building or substrate structure, and other building movements as follows:
      a. Upward and downward movement of 1/2 inch (13 mm).

5. Thermal Movements: Provide for in-plane thermal movements resulting from annual ambient temperature changes of 120 deg F (67 deg C) to prevent buckling, opening of joints, overstressing of components, failure of connections, and other detrimental effects.
6. Attachments: Hidden, non-staining and non-corrosive. Prevent galvanic reaction and other forms of corrosion by insulating and/or isolating incompatible materials.

B. Railing Structural Performance: Railings shall withstand the effects of gravity loads and the following loads and stresses within limits and under conditions indicated:

1. In engineering railings to withstand structural loads indicated, determine allowable design working stresses of railing materials based on the following:

   a. Steel: 72 percent of minimum yield strength.
   b. Aluminum: The lesser of minimum yield strength divided by 1.65 or minimum ultimate tensile strength divided by 1.95.
   c. Stainless Steel: 60 percent of minimum yield strength.

2. Handrails and Top Rails of Guards:

   a. Uniform load of 50 lbf/ft. (0.73 kN/m) applied in any direction.
   b. Concentrated load of 200 lbf (0.89 kN) applied in any direction.
   c. Uniform and concentrated loads need not be assumed to act concurrently.

3. Infill of Guards:

   a. Concentrated load of 50 lbf (0.22 kN) applied horizontally on an area of 1 sq. ft. (0.093 sq. m).
   b. Infill load and other loads need not be assumed to act concurrently.
   c. Wind Loads: As required by applicable building code or ASCE/SEI 7.

1.4 REFERENCES

A. The current editions of the following standards are referred to in this section:
1. American Society of Testing and Materials (ASTM):
   a. ASTM C 33 Specification for Concrete Aggregates.
2. Aluminum Association (AA)
   a. American Architectural Manufacturers Association (AAMA)
   b. AAMA 605.1 Specification for High Performance Organic Coatings on Architectural Extrusions and Panels.
   c. AAMA 606.1 Voluntary Guide Specifications and Inspection Methods of Integral Color Anodic Finishes for Architectural Aluminum.
   d. AAMA 607.1 Voluntary Guide Specifications and Inspection Methods for Clear Anodic Finishes for Architectural Aluminum.
   e. AAMA 608.1 Voluntary Guide Specifications and Inspection Methods for Electrolytically Deposited Color Anodic Finishes for Architectural Aluminum.
3. American Institute of Steel Construction (AISC)
   a. Manual of Steel Construction

4. American Iron and Steel Institute (AISI)
    a. Steel Products Manual; Stainless and Heat Resisting Steel.
    b. Code of Standard Practice
5. Society for Testing and Materials (ASTM)
    a. A 167 Specification for Stainless and Heat Resisting Chromium-Nickel Steel Plate, Sheet, and Strip.
    b. A 269 Specification for Seamless and Welded Austenitic Stainless Steel Tubing for General Service.
    c. A 312 Specification for Seamless and Welded Austenitic Stainless Steel Pipe.
    d. A1264-1 Safety Requirements for Workplace Floor and Wall Openings, Stairs and Railing Systems
    e. C 595 Specification for Blended Hydraulic Cements.
    f. E 84 Test Method for Surface Burning Characteristics of Building Materials.
    g. E 894 Standard Test Methods for Anchorage of Permanent Metal Railing Systems and Rails for Buildings.
    h. E 935 Standard Test Methods for Performance of Permanent Metal Railing Systems and Rails for Buildings.
    i. E 985 Specification for Permanent Metal Railing Systems and Rails for Buildings.
6. American Welding Society (AWS)
    a. Specifications for Welding Rods and Bare Electrodes.
7. Iron and Steel Society (ISS)
    a. Steel Products Manual
    b. Stainless and Heat Resisting Steels
8. National Association of Architectural Metal Manufacturers (NAAMM) and National Ornamental and Miscellaneous Metals Association (NOMMA)
    a. Metal Finishes Manual

1.5 ACTION SUBMITTALS

A. Product Data: For the following:
    1. Metal railing cable and LED light housing.

B. Samples for Verification: Submit representative samples for each of the following.
    1. For each type of exposed finish, not less than 12-inch (304-mm) long linear components and 12-inch (304-mm) square sheet components. Include representative welds, expansion joints and connection hardware.

C. Delegated Design: Include plans, elevations, sections and calculations showing:

    1. Dimensions of each fabrication type, size and finish of exposed faces.
    2. Reinforcement, fixing and fastening details showing the method of attachment, support and restraint with calculations to verify the structural adequacy of the design proposals.
    3. Signed and sealed by a Design Engineer Professional licensed in the State that the project is located in.

4. The City shall be entitled to rely upon the adequacy, accuracy and completeness of the design, certification or approvals performed by such Design Professionals.

D. Shop Drawings: Include plans, elevations, sections and details showing:

1. Dimensions of each fabrication type, size and finish of exposed faces.
2. Cutting & drilling details for any inserts, recesses, joints, attachments and the like.
3. Fixing and fastening details showing the method of attachment, support and restraint.
4. Manufacturer's written installation instructions.

E. Photographs of Mockups: Submit images of each mockup.

F. Field Verification Report: Written confirmation that existing and previous work is complete and conforming.

G. Unsatisfactory Condition Notice: Written notice if unsuitable existing conditions are encountered.

1.6 INFORMATIONAL SUBMITTALS

A. Qualification Data: For fabricator.

B. Material & Product Certificates: Provide a current material certificate for each material including a statement of compliance with the specification requirements.

C. Welding Certificates.

D. Maintenance Data: Recommended products and procedures for cleaning, care and patching to match for maintenance manuals.

1.7 QUALITY ASSURANCE

A. Fabricator Qualifications: A firm that assumes responsibility for structural engineering of modified standard and/or customized signage to comply with performance requirements. This responsibility includes preparation of Shop Drawings and comprehensive engineering analysis by a qualified professional engineer.

B. Welding Qualifications: Qualify procedures and personnel according to AWS D1.1/D1.1M.

C. Preinstallation Conference: Conduct conference at Project site to comply with Project Management and Coordination requirements.

D. Mockups: Fabricate mockups to verify sample selections made, to demonstrate aesthetic effects and set quality standards for materials and execution.

1. Notify the City at least 14 days in advance of dates and times when mockups will be ready for review. Schedule mockup reviews with a float time of at least 30 days between the first mockup review and any revised mockup.
2. Fabricate mockups for each type of metal fabrication:
    a. 10-foot (3-m) length for each form and finish of railing consisting of at least two posts, top rail, infill area, and anchorage system components that are full height and LED light inserts.
3. Chip part of an exposed-face surface for each finish, color, and texture, and demonstrate adequacy of repair techniques to match original finish.
4. Submit photographs taken outdoors in the sun of the full mockup dry and then wet and with closeups of attachments, welds, joints, seams and finishes.
5. Mockups reviewed by the City with “No Exceptions” or “Make Corrections Noted” may become part of the completed Work if they are protected during the work and conforming at the time of Substantial Completion.

E. Field Observation: Give not less than 14 working days’ notice so that field observations may be made of the following:
1. Mockup completion.
2. First units installed prior to final fixing.

1.8 PROJECT CONDITIONS

A. Field Measurements: Verify actual locations of critical construction components contiguous with metal fabrications by field measurements before fabrication. Give notice if field measurements differ from shop drawing dimensions. Coordinate fabrication schedule with construction progress to avoid delaying the Work.

1.9 DELIVERY, STORAGE, AND HANDLING

A. Deliver all components in protective packaging and store without direct contact with the ground.

1.10 COORDINATION

A. Coordinate installation of anchorages and any items requiring casting into concrete. Furnish setting drawings, templates, and directions for installing anchorages, including sleeves, concrete inserts, anchor bolts, and items with integral anchors, that are to be embedded in concrete or masonry. Deliver such items to Project site in time for installation.

B. Schedule installation so wall attachments are made only to completed walls. Do not support railings temporarily by any means that do not satisfy structural performance requirements.

1.11 WARRANTY

A. Special Warranty: Fabricator and Installer agree to repair or replace custom metal work that fail in materials and/or workmanship within specified warranty period.

1. Failures include, but are not limited to, the following:

a. Fading, staining and/or deterioration of finishes beyond normal weathering.
b. Corrosion.
c. Separation or delamination of materials and components.

2. Failures exclude the following:
a. Normal wear and tear, damage, operator error, improper maintenance contrary to manufacturer's submitted recommendations, vandalism, and theft.

3. Warranty Period: From date of Substantial Completion as follows:
a. Metal Work Materials: Five years.
b. Metal Work Install: Two years.

4. Benefit: The special warranty shall be to the City's sole benefit and does not limit the Contractor's obligations under the Contractor's General Warranty and Correction Period.

1.12 ADDITIONAL MATERIALS

A. Furnish extra materials that match products and finishes installed and that are clearly labelled and packaged with protective covering for storage. Deliver extra materials to Owner.
1. Touch-up Paint: One 1 quart (946 ml) can of paint for each painted finish color.
2. Hardware Kit: 10 spare fastenings for each type and one special fastening tool for each type used.

PART 2 - PRODUCTS

2.1 MANUFACTURERS

A. Source Limitations: Fabricate each type of metal component from a single source with the resources to provide materials and products of a consistent quality for the duration of the Contract.

B. Manufacturers and Products: Refer to Materials Schedule on Drawings.

2.2 METALS, GENERAL

A. Metal Surfaces, General: Provide materials with smooth, flat surfaces unless otherwise indicated. For metal fabrications exposed to view in the completed Work, provide materials without seam marks, roller marks, rolled trade names, or blemishes.

2.3 FERROUS METALS

A. Recycled Content of Steel Products: Postconsumer recycled content plus one-half of preconsumer recycled content not less than 25 percent.

B. Steel Plates, Shapes, and Bars: ASTM A 36/A 36M.

C. Stainless-Steel Sheet, Strip, and Plate: ASTM A 240/A 240M or ASTM A 666, Type 316L.

D. Stainless-Steel Bars and Shapes: ASTM A 276, Type 316L.

E. Stainless Steel Wire Rope: Wire rope manufactured from stainless steel wire complying with ASTM A492, Type 316.

1. Wire Rope Fittings: Stainless steel connectors, Type 316, with capability to sustain, without failure, a load equal to minimum breaking strength of wire rope with which they are used.

F. General: Provide the following:
1. Stainless-Steel Railings: Type 304 stainless-steel fasteners.

G. Fasteners: Select fasteners of type, grade, and class required to produce connections suitable for anchoring railings to other types of construction indicated and capable of withstanding design loads and capable of sustaining, without failure, a load equal to four times the load imposed when installed in concrete, as determined by testing according to ASTM E 488, conducted by a qualified independent testing agency.

H. Fasteners for Interconnecting Railing Components:

1. Provide concealed fasteners for interconnecting railing components and for attaching them to other work, unless otherwise indicated.
2. Provide tamper-resistant or hex socket flat-head machine screws for exposed fasteners unless otherwise indicated.

I. Stainless-Steel Bolts and Nuts: Regular hexagon-head annealed stainless-steel bolts, ASTM F 593 (ASTM F 738M); with hex nuts, ASTM F 594 (ASTM F 836M); and, where indicated, flat washers; Alloy Group **1 (A1)**.

J. Lock Washers: Helical, spring type, ASME B18.21.1 (ASME B18.21.2M).

K. Cast-in-Place Anchors in Concrete: Either threaded type or wedge type unless otherwise indicated; galvanized ferrous castings, either ASTM A 47/A 47M malleable

iron or ASTM A 27/A 27M cast steel. Provide bolts, washers, and shims as needed, all hot-dip galvanized per ASTM F 2329.

L. Post-Installed Anchors: Torque-controlled expansion anchors or chemical anchors.
   1. Material for Exterior Locations and Where Stainless Steel is Indicated: Alloy Group **1 (A1)** stainless-steel bolts, ASTM F 593 (ASTM F 738M), and nuts, ASTM F 594 (ASTM F 836M).

2.4 MISCELLANEOUS MATERIALS

A. Welding Rods and Bare Electrodes: Select according to AWS specifications for metal alloy welded.

B. Nonshrink, Nonmetallic Grout: Factory-packaged, nonstaining, noncorrosive, nongaseous grout complying with ASTM C 1107. Provide grout specifically recommended by manufacturer for exterior applications.

C. Concrete: Comply with requirements in Section 03300 "Cast-in-Place Concrete" for normal-weight, air-entrained, concrete with a minimum 28-day compressive strength of 3000 psi (20 MPa).

2.5 FABRICATION, GENERAL

A. Shop Assembly: Fabricate work to comply with requirements indicated for design, dimensions, member sizes and spacing, details, finish, and anchorage**,** but not less than that required to support structural loads. Preassemble items in the shop to greatest extent possible. Disassemble units only as necessary for shipping and handling limitations. Use connections that maintain structural value of joined pieces. Clearly mark units for reassembly and coordinated installation.

B. Cut, drill, and punch metals cleanly and accurately. Remove burrs and ease edges to a radius of approximately 1/32 inch (1 mm) unless otherwise indicated. Remove sharp or rough areas on exposed surfaces.

C. Form bent-metal corners to smallest radius possible without causing grain separation or otherwise impairing work.

D. Form exposed work with accurate angles and surfaces and straight edges.

E. Welded Connections: Weld corners and seams continuously to comply with the following:

   1. Use materials and methods that minimize distortion and develop strength and corrosion resistance of base metals.
   2. Obtain fusion without undercut or overlap.
   3. Remove welding flux immediately.

4. At exposed connections, finish exposed welds and surfaces smooth and blended so no roughness shows after finishing and contour of welded surface matches that of adjacent surface.

F. Non-welded Connections: Connect members with concealed mechanical fasteners and fittings. Fabricate members and fittings to produce flush, smooth, rigid, hairline joints.

G. If bending is required, bend members in jigs to produce uniform curvature for each configuration required; maintain cross section of member throughout entire bend without buckling, twisting, cracking, or otherwise deforming exposed surfaces of components.

H. Form exposed connections with hairline joints, flush and smooth, using concealed fasteners or welds where possible. Locate joints where least conspicuous.

I. Fabricate seams and other connections that will be exposed to weather in a manner to exclude water. Provide weep holes where water may accumulate.

J. Cut, reinforce, drill, and tap metal fabrications as indicated to receive finish hardware, screws, and similar items.

K. Provide for anchorage of type indicated; coordinate with supporting structure. Space anchoring devices to secure metal fabrications rigidly in place and to support indicated loads.

2.6 METAL RAILINGS

A. Manufacturer: Subject to compliance with requirements, provide products by one of the manufacturers as per Material Schedule on the Drawings

B. Close exposed ends of railing members with prefabricated end fittings.

C. Provide wall returns at ends of wall-mounted handrails unless otherwise indicated. Close ends of returns unless clearance between end of rail and wall is 1/4 inch (6 mm) or less.

D. Brackets, Flanges, Fittings, and Anchors: Provide wall brackets, flanges, miscellaneous fittings, and anchors to interconnect railing members to other work unless otherwise indicated to transfer loads through wall finishes to structural supports and prevent bracket or fitting rotation and crushing of substrate.

E. Provide inserts and other anchorage devices for connecting railings to concrete or masonry work. Fabricate anchorage devices capable of withstanding loads imposed by railings. Coordinate anchorage devices with supporting structure.

F. For railing posts set in concrete, provide sleeves not less than 6 inches (150 mm) long with inside dimensions not less than 1/2 inch (13 mm) greater than outside dimensions of post, with metal plate forming bottom closure.

G. For removable railing posts, fabricate slip-fit sockets from tube or pipe whose ID is sized for a close fit with posts; limit movement of post without lateral load, measured at top, to

not more than one-fortieth of post height. Provide socket covers designed and fabricated to resist being dislodged.

1. Provide chain with eye, snap hook, and staple across gaps formed by removable railing sections at locations indicated. Fabricate from same metal as railings.

2.7 FINISHES, GENERAL

A. Finishes: Refer to Materials Schedule on Drawings.

B. Comply with NAAMM's "Metal Finishes Manual for Architectural and Metal Products" for recommendations for applying and designating finishes.

C. Finish metal fabrications after assembly.

D. Finish exposed surfaces to remove tool and die marks and stretch lines, and to blend into surrounding surface.

E. All edges shall be de-burred and free of sharp protrusions.

F. Protect mechanical finishes on exposed surfaces from damage by applying a strippable, temporary protective covering before shipping.

2.8 STAINLESS-STEEL FINISHES

A. Surface Preparation: Remove tool, roller and die marks and stretch lines, or blend into finish.

B. Polished Finishes: Grind and polish surfaces to produce uniform finish, free of cross scratches.
   1. Directional Satin Finish: No 4 - Run directional finishes with long dimension of each piece.
   2. Polished and Buffed Finish: Oil-ground, 180-grit finish followed by buffing.
   3. Dull Satin Finish: No. 6.

C. When polishing is completed, passivate and rinse surfaces. Remove embedded foreign matter and leave surfaces chemically clean.

D. Cleaning Solution: Products as recommended by manufacturer but if no products are recommended use Johnson Screens “Steel Brite” and “Passivator Rinse”.

E. Baked-Enamel, Powder-Coat Finish: Manufacturer's polyester, powder-coat finish complying with finish manufacturer's written instructions for surface preparation, including pretreatment, application, baking, and minimum dry film thickness.

PART 3 - EXECUTION

3.1 EXAMINING

A. Field Verification: Before starting installation work in this section, examine preceding related and underlying work. Verify that such work is conforming and within specified tolerances.
   1. Examine surfaces indicated to receive components, with installer present, for compliance with requirements for installation tolerances and other conditions affecting performance.
   2. Correct any non-conforming work before proceeding with work in this section.

B. Unsuitable Conditions: Submit written notice of any conditions that the Contractor considers unsuitable for work in this section and that may limit the Contractor's warranty. Notices and/or claims of unsuitable conditions to the Owner after starting installation work in this section shall not be permitted nor limit the Contractor's warranty.

3.2 PREPARING

A. Protect structures, foundations, utilities, sidewalks, pavements, and other facilities from damage caused by settlement, lateral movement, undermining, washout, and other hazards created by operations in this Section.

3.3 INSTALLATION, GENERAL

A. Cutting, Fitting, and Placement: Perform cutting, drilling, and fitting required for installing metal fabrications. Set metal fabrications accurately in location, alignment, and elevation; with edges and surfaces level, plumb, true, and free of rack; and measured from established lines and levels.

B. Fit exposed connections accurately together to form hairline joints. Weld connections that are not to be left as exposed joints but cannot be shop welded because of shipping size limitations. Do not weld, cut, or abrade surfaces of exterior units that have been hot-dip galvanized after fabrication and are for bolted or screwed field connections.

C. Field Welding: Comply with the following requirements:

   1. Use materials and methods that minimize distortion and develop strength and corrosion resistance of base metals.
   2. Obtain fusion without undercut or overlap.
   3. Remove welding flux immediately.
   4. At exposed connections, finish exposed welds and surfaces smooth and blended so no roughness shows after finishing and contour of welded surface matches that of adjacent surface.
   5. All welds shall be continuous fillet welds.

D. Fastening to In-Place Construction: Provide anchorage devices and fasteners where metal fabrications are required to be fastened to in-place construction. Provide threaded fasteners for use with concrete and masonry inserts, toggle bolts, through bolts, lag screws, wood screws, and other connectors.

E. Provide temporary bracing or anchors in formwork for items that are to be built into concrete, masonry, or similar construction.

F. Corrosion Protection: Coat concealed surfaces of metal for corrosion protection:
   1. Stainless steel in contact with soil and/or dissimilar metals: Neoprene grommets and pads.

G. Powder Coating: Comply with finish manufacturer's written instructions for surface preparation, including pretreatment, application, baking, and minimum dry film thickness.

3.4 INSTALLING METAL RAILINGS

A. Non-welded Connections: Use mechanical or adhesive joints for permanently connecting railing components. Seal recessed holes of exposed locking screws using plastic cement filler colored to match finish of railings.

B. Welded Connections: Use fully welded joints for permanently connecting railing components. Comply with requirements for welded connections in "Fabrication" Article whether welding is performed in the shop or in the field.

C. Expansion Joints: Install expansion joints at locations indicated but not farther apart than required to accommodate thermal movement. Provide slip-joint internal sleeve extending 2 inches (50 mm) beyond joint on either side, fasten internal sleeve securely to one side, and locate joint within 6 inches (150 mm) of post.

D. Form or core-drill holes not less than 5 inches (125 mm) deep and 3/4 inch (20 mm) larger than OD of post for installing posts in concrete. Clean holes of loose material, insert posts, and fill annular space between post and concrete with nonshrink, nonmetallic grout mixed and placed to comply with anchoring material manufacturer's written instructions.

E. Anchor posts to metal surfaces with oval flanges, angle type, or floor type as required by conditions, connected to posts and to metal supporting members as follows:

   1. For aluminum pipe railings, attach posts using fittings designed and engineered for this purpose.
   2. For stainless-steel pipe railings, weld flanges to post and bolt to supporting surfaces.
   3. For steel pipe railings, weld flanges to post and bolt to metal supporting surfaces.

F. Secure wall brackets and railing end flanges to building construction as follows:

   1. For concrete and solid masonry anchorage, use drilled-in expansion shields and hanger or lag bolts.

2. For hollow masonry anchorage, use toggle bolts.
3. For wood stud partitions, use hanger or lag bolts set into studs or wood backing between studs. Coordinate with carpentry work to locate backing members.

3.5 CONSTRUCTION TOLERANCES

A. Variation in Vertical: Plus or minus 1/8 inch (3 mm) from plumb over 3 feet straight edge.

B. Maximum Jog in Alignment of Matching Edges & Faces: 1/4 inch (6 mm).

C. Maximum Differential Bowing or Camber, as Erected, between Adjacent Members of Same Design: 1/4 inch (6 mm).

3.6 PROTECTING

A. Protect completed work with a non-staining cover until final cleaning.

3.7 REPAIRING

A. Repairs: Repair units if permitted by the City. The City reserves the right to reject repaired units that do not comply with the requirements.
1. Repair units to match original color, texture, and uniformity and show no apparent line of demarcation between original and repaired work, when viewed in typical daylight illumination from a distance of 10 feet (3 m).
2. Remove and replace damaged items when repairs do not comply with requirements.
3. Remove and replace any finishes that do not match the approved mockups.

3.8 CLEANING

A. In-Progress Cleaning: Clean as work progresses daily.

B. Final Cleaning: Clean work as follows:
1. Remove temporary protection materials.
2. Protect adjacent surfaces from contact with cleaner by covering them with liquid strippable masking agent, polyethylene film, and/or waterproof masking tape.
3. Follow written recommendations from manufacturer / supplier.
4. Test cleaning methods on an out-of-the-way area first. Obtain City's approval of cleaned area before proceeding with remainder.
5. Clean stainless steel by spraying cleaner, power washing thoroughly and spraying passivator rinse as per manufacturer’s instructions.

3.9 REMOVING EXCESS MATERIALS AND WASTE

A. Removal: Remove excess material, packaging and waste off site to reuse, recycle and/or legally dispose of.

B. Additional Materials: Deliver spare materials to the City.

END OF SECTION

SECTION 02824

FOG MISTER SYSTEM

PART 1 - GENERAL

1.1 RELATED DOCUMENTS

A. Drawings and general provisions of the Contract, including General and Supplementary Conditions and Division 01 Specification Sections, apply to this Section.

1.2 SUMMARY

A. Section includes all labor, materials, equipment, incidentals, and services necessary to complete the following scope items as indicated and as specified herein, including but not limited to:
   1. The design and installation of “turnkey” proprietary Fog Misting System.

B. Related Sections include the following:
   1. Section 02310 "Earthwork" for trench excavating and backfilling.

1.3 REFERENCES

A. Work and materials shall be in conformance with latest editions of:
   1. National Fire Protection Association National Electric Code.
   2. Uniform Plumbing Code.
   3. American Society for Testing and Materials applicable standards.
   4. American Society of Mechanical Engineers applicable standards.
   5. American Society of Sanitary Engineering applicable standards including ASSE 1060 Performance Requirements for Outdoor Enclosures for backflow Prevention.
   6. American Water Works Association applicable standards.
   7. National Electrical Manufacturers Association applicable standards.
   8. Plumbing and Drainage Institute applicable standards.

1.4 DEFINITIONS

A. Drain Piping: Downstream from circuit-piping drain valves. Piping is not under pressure.

B. Pressure Piping: Downstream from point of connection to water distribution piping to and including control valves. Piping is under water distribution system pressure.

C. The following are industry abbreviations for plastic materials:

1. ABS: Acrylonitrile-butadiene-styrene plastic.
2. NP: Nylon plastic.
3. PE: Polyethylene plastic.
4. PP: Polypropylene plastic.
5. PTFE: Polytetrafluoroethylene plastic.
6. PVC: Polyvinyl chloride plastic.

1.5 SYSTEM DESCRIPTION

A. Delegated Design Requirement: Design, calculate, test, develop water effect systems to suit locally serviced manufactured systems, project site conditions, and the City's review. Water effect design includes but is not limited to selecting materials and compatible components, calculating friction losses, sizing of pumps, pipes and fittings, electrical service, backflow prevention, documentation of system components and authorities having jurisdiction.

1.6 PERFORMANCE REQUIREMENT

A. Delegated Design: Engage a qualified professional engineer licensed in the Project's State to design necessary mechanical, electrical and plumbing (MEP) system sizes, controls, attachments, fastening and footing systems.

B. Design Standards: Comply with requirements of utility supplying water and authorities having jurisdiction for preventing backflow, back siphonage and user health.

A. MEP Performance: Provide metal members and connections capable of withstanding the following design loads within limits and under conditions indicated:

1. Design Intent: General size, layout, jointing, finishes, functionality and "look and feel" as per the Drawings.
2. Dead Loads: Gravity.
3. Live Loads: Allow for the following:
   a. Uniform distributed live load of 100 psf applied in any direction.
   b. Concentrated load of 300 lbf applied horizontally on an area of 1 sq. ft.
   c. Uniform and concentrated loads need not be assumed to act concurrently.
   d. Deflection maximum of ¼ inch in 5 feet.
4. Wind Loads: As required by applicable building code or ASCE/SEI 7.
5. Tolerances: Allow for fabrication and construction tolerances, to accommodate live-load deflection, shrinkage and creep of primary building or substrate structure.
6. Thermal Movements: Provide for in-plane thermal movements resulting from annual ambient temperature changes of 120 deg F (67 deg C) to prevent buckling, opening of joints, overstressing of components, failure of connections, and other detrimental effects.

7. Attachments: Hidden, non-staining and non-corrosive. Prevent galvanic reaction and other forms of corrosion by insulating and/or isolating incompatible materials.
8. Other: As per Part 2 of this specification.

1.7 ACTION SUBMITTALS

A. Product Data: Include pressure rating, rated capacity, settings, and electrical data of selected components.

B. Design & Shop Drawings: Submit drawings prior to work on site showing plan layout and locations, types, sizes, capacities, and flow characteristics of each point of connection, water meter, each valve, each sleeve, piping, each jet/nozzle/emitter, accessories, controls, and wiring. Within 14 days receiving the City's review, revise and re-submit as necessary.

C. Coordination Drawings: Show piping and major system components. Indicate interface and spatial relationship between connection points to city water, pressure piping, adjacent utilities, road & pavement crossings, wall and structure penetrations.

D. Photographs of Mockups: Submit images of each mockup.

E. Field Verification Report: Written confirmation that existing and previous work is complete and conforming.

F. Unsatisfactory Condition Notice: Written notice if unsuitable existing conditions are encountered.

1.8 INFORMATIONAL SUBMITTALS

A. Qualifications: Manufacturer and Installer.

B. Materials List: Submit list of all proposed system components showing sizes, ratings, materials and manufacturers.

C. Certification: Submit certification that design meets performance requirements and applicable codes and standards.

D. Test Reports: As specified in "Field Quality Control" Article in Part 3.

E. Close Out Record Drawings: Submit within 14 days of Substantial Completion record drawings showing the systems as installed. Indicate all changes in location of items or type of installations from that shown on the shop drawings. Number valves in the field and on the record drawings.

F. Operating Data: Prepare and mount on the inside surface of the cover of each automatic controller, a non-fading chart, reduced as necessary and legible in all details, showing the valves and jet/nozzle/emitter serviced by that particular controller. This chart shall be a plot plan, entire or partial, showing building, walks, roads, walls, station

number, valve size and type of operation schedule. Show only those areas controlled by that Controller. Contractor shall include its name, address and phone number. Hermetically seal chart in clear plastic.

G. Sample Warranty: For special warranties.

H. Maintenance Data: Recommended products and procedures for cleaning, care and patching to match for maintenance manuals.

1.9 QUALITY ASSURANCE

A. Manufacturer & Installer Qualifications: Submit qualifications outlining 3 projects of similar quality, schedule requirements and construction detailing over the last 5 years. Include the names of all similar projects, year completed, location, description of the scope of work and the name, address and telephone number of the City or the City's Representative.

B. Preinstallation Conference: Conduct conference at Project site to comply with Project Management and Coordination requirements.

C. Mockups: Fabricate mockups to verify sample selections made, to demonstrate aesthetic effects and set quality standards for materials and execution.
   1. Notify the City at least 14 days in advance of dates and times when mockups will be ready for review. Schedule mockup reviews with a float time of at least 30 days between the first mockup review and any revised mockup.
   2. Fabricate mockups for each type of water effect:
      a. 10-foot (3-m) length of Fog Misting System tubing including all attachments, junctions, emitters, and finishes.
   3. Submit photographs taken outdoors in the sun of the full mockup dry and then wet and with closeups of attachments, welds, joints, seams and finishes.
   4. Mockups reviewed by the City with "No Exceptions" or "Make Corrections Noted" may become part of the completed Work if they are protected during the work and conforming at the time of Substantial Completion.

D. Field Observation: Give not less than 14 working days notice so that field observations may be made of the following:
   1. Layout.
   2. Trenching.
   3. Pressure Testing.
   4. Commissioning.
   5. Demonstration.

1.10 DELIVERY, STORAGE, AND HANDLING

A. Deliver piping with factory-applied end caps. Maintain end caps through shipping, storage, and handling to prevent pipe-end damage and to prevent entrance of dirt, debris, and moisture.

B. Protect stored piping from moisture and dirt. Elevate above grade. Do not exceed structural capacity of floor when storing inside.

C. Protect valves, flanges, fittings, and specialties from moisture and dirt.

D. Store plastic piping protected from direct sunlight. Support to prevent sagging and bending.

1.11 PROJECT CONDITIONS

A. Perform site survey, research public utility records, and verify existing utility locations.

B. Investigate and determine available water supply water pressure and flow characteristics.

1.12 SEVEN DAY TROUBLE-FREE OPERATION PERIOD

A. No later than seven-days after the date of Substantial Completion, the Contractor shall demonstrate a consecutive seven-day, fully automated, uninterrupted daily operation of not less than six hours nor more than ten hours for all systems provided under this Section. Warranties in this section shall commence upon the successful completion of a seven-day trouble-free period.

B. The Contractor shall supervise the operation of the system and be responsible for the proper programming, operation and maintenance thereof and make no claim against the City for any damage to the system during such operation. The Contractor shall make any changes, adjustments, and/or replacements of system components to ensure conformance with the Contract Documents and until a consecutive seven-day period is trouble-free.

C. If the trouble-free seven-day period begins after Substantial Completion, the cost of electricity, water and normal operational supplies during the seven-day operation shall be paid by the City. The Contractor shall pay for all operating costs resulting from any system deficiencies and restarting the seven-day period.

D. Coordinate the seven-day trouble-free operation period with other trades related to the system, and the City's Operator.

1.13 WARRANTY

A. Special Warranty: Manufacturer and Installer agree to repair or replace water effect components that fail in materials and/or workmanship within specified warranty period.

1. Failures include, but are not limited to, the following:
    a. Structural, mechanical and/or electrical failure.
    b. Excessive wear of moving parts.
    c. Corrosion.

d. Broken and/or leaking pipes, nozzles, jets, valves, gaskets and fittings.
e. Fading and/or deterioration of finishes beyond normal weathering and use.
f. Separation or delamination of materials and components.
g. Adhesive failure.

2. Failures exclude the following:
   a. Normal wear and tear, damage, operator error, improper maintenance contrary to manufacturer's submitted recommendations, vandalism, and theft.

3. Warranty Period: From date of Substantial Completion as follows:
   a. Water Effect Materials: Five years from the end of the seven-day trouble free period or Substantial Completion whichever is later.
   b. Water Effect Install: Two years from the end of the seven-day trouble free period or Substantial Completion whichever is later.

4. Benefit: The special warranty shall be to the City's sole benefit and does not limit the Contractor's obligations under the Contractor's General Warranty and Correction Period. The City and/or Operator having to effect emergency repairs shall not diminish or void any warranty.

1.14 ADDITIONAL MATERIALS

A. Furnish extra materials described below that match products installed and that are packaged with protective covering for storage and identified with labels describing contents. Deliver extra materials to City.
   1. Fog Misting System: Furnish 10% more emitter heads as spares.

PART 2 - PRODUCTS

2.1 MANUFACTURERS

A. Manufacturers: Subject to compliance with requirements, minimize the number of manufactures to ensure efficient maintenance and replacements. Ensure compatibility of materials from different manufactures and validity of warrantees.

B. Maximum number of different manufactures if products are compatible:

   1. Manufacturer 1
      a. Fog Misting System.

2.2 PERFORMANCE REQUIREMENTS

A. Refer to the Drawings together with the following minimum requirements for the design and installation of the Fog Misting System.

Water Source	City Water flow through system (no treatment or recirculation)
Working Pressures	Pressure Piping.
Flow Rates	See drawings.
Sequencing	All fog misters on or all off.
Equipment & Controls	Locate pump and controller in free standing enclosure. Pump operation shall not be audible from 5 feet away.
Drainage	System can be winterized easily including air blow-out connection.
Pump	Pump with low feed water pressure lock out with manual reset. Adjustable system pressure. Anti-vibration pads.
Filtration	Inline filter with dual changeable cartridges to inhibit calcium carbonate scale.
Emitters & pipe	Stainless Steel type 316 line, anti-drip nozzles.
Control & operation	Adjustable automatic timeclock, unattended operation with rain shut-off and battery backup. NEMA 4 and UL listed control panel.
Durability	Vandal resistant in accessible areas.
Ease of use	Self-explanatory operation.
Utility covers	Coordinated in alignment and level with adjacent surface patterns and joints, covers to suit loading requirement of surface finish.

2.3 MATERIAL SELECTION, GENERALLY

A. Select most appropriate materials to meet the performance requirements unless otherwise noted.

B. Aboveground, Pressure Piping: Use Stainless Steel pipe, threaded fittings, and threaded joints.

C. Underground, Pressure Piping: Use PVC pressure-rated pipe, PVC socket fittings, and solvent-cemented joints.

D. Sleeves: Use PVC pipe, PVC socket fittings, and solvent-cemented joints.

E. Valve Boxes: Cast iron with top section and cover with lettering "WATER," bottom section with base to fit over valve, 5-inch (127-mm) diameter barrel, and adjustable cast-iron extension of length required for depth of bury of valve. Include steel tee-handle, shutoff rod with one pointed end, stem of length to operate valve, and end fitting valve operating nut.

F. Control-Valve Boxes: Polymer concrete box and cover, with open bottom, openings for piping, and designed for installing flush with grade.

G. Exterior Pump Control & Backflow Enclosures: ASSE 1060 and NEMA 250, Type 4 weatherproof enclosure with locking cover and two matching keys; and include provision for grounding.

1. Material: Stainless steel.
2. Mounting: Freestanding type for concrete-base mounting.

PART 3 - EXECUTION

3.1 PREPARING

A. Protect utilities, structures, foundations, sidewalks, pavements, other facilities, lawns and plants from damage caused by operations or as a result of operations.
1. Utilities: After locating and marking, verify the status of utilities. Protect or temporarily divert existing utilities to remain active. Rectify immediately any obstruction or damage to utilities to remain active and provide and pay for temporary utilities whilst repairs are carried out to the satisfaction of the utility owner.
2. Property: Do not interfere with or damage property that is to remain on or adjacent to the site, including adjoining property to the site, and trees. Rectify immediately any interference or damage to such property. Protect finishes from staining.
3. Trees: If the trees are damaged or placed under unnecessary and avoidable stress by the Contractor, the City’s Representative shall deduct damages from the Contractor’s progress claim.
4. Irrigation: Install a temporary diversion main, control cable and valves to isolate contract area and to maintain service to areas outside of the contract area.

3.2 TRENCHING AND BACKFILLING

A. Excavate trenches as specified in 02310 "Earthwork".

B. Install piping and wiring in sleeves under sidewalks, roads, parking lots, and railroads.
   1. Install piping sleeves by boring or jacking under existing paving if necessary.
   2. Extend sleeves at least 12 inches (300 mm) beyond pavements and curb edges.

C. Provide minimum cover over top of underground piping according to the following:
   1. Pressure Piping: Greater depth of minimum of 36 inches (914 mm) below finished grade, or not less than average local frost depth.
   2. Drain Piping: 12 inches (300 mm).
   3. Sleeves: 24 inches (600 mm).

D. Install warning tape directly above pressure piping, 12 inches (300 mm) below finished grades, except 6 inches (150 mm) below subgrade under pavement and slabs.

E. Backfill trenches and field test compaction as specified in Section 312000 “Earth Moving”.

F. Ensure that profile of backfilled soils in trench is identical to adjacent soils. Repair any differential settlement between trenches and adjacent surrounds.

3.3 PIPE INSTALLING

A. Install piping at uniform slope of 0.5 percent minimum, down toward drain valves.

B. Install piping with sags and bends to allow for expansion and contraction.

C. Install groups of pipes parallel to each other, spaced to permit valve servicing.

D. Install fittings for changes in direction and branch connections.

E. Install dielectric fittings to connect piping of dissimilar metals.

F. Lay piping on solid subbase, uniformly sloped without humps or depressions.

G. Install PVC piping in dry weather when temperature is above 40 deg F (4.4 deg C). Allow joints to cure at least 24 hours at temperature above 40 deg F (4.4 deg C) before testing, unless otherwise recommended by manufacturer.

H. Water Hammer Arresters: Install between connection to building main and circuit valves in valve box.

3.4 VALVE INSTALLING

A. Valves: Install in valve box with top flush with grade.

B. Box Grouping: Install valves in valve boxes and group together where practical. Place no closer than 12" to walk edges, buildings, and walls. Valve boxes shall be flush with

finish grade. Where 2 or more valves are installed adjacent to each other, provide at least 6" separation, and align all boxes in a row with equal spacing between boxes.

3.5 EMITTER/NOZZLE/JET INSTALLING

A. Flush circuit piping with full head of water and install emitter/nozzle/jets after hydrostatic test is completed.

3.6 AUTOMATIC CONTROL SYSTEM INSTALLING

A. Install controllers according to manufacturer's written instructions and as indicated.

B. Install freestanding controllers on precast concrete bases not less than 36 by 24 by 4 inches (914 by 610 by 100 mm) thick, and not less than 6 inches (150 mm) greater in each direction than overall dimensions of controller.

C. Install control wiring in same trench with piping.

3.7 CONNECTING

A. Connect piping to valves, emitters, and specialties.

B. Connect water supplies to systems with backflow preventers at connections to potable-water supplies.

C. Install water meter, pressure reducing valves and backflow preventer assemblies as required by local water district and local Codes.

D. Ground electric-powered controllers, valves, and devices.

E. Arrange for electric-power connections to controllers, control valves, and devices that require power.

3.8 FIELD QUALITY CONTROL

A. Pressure Tests: Hydrostatically test piping and valves before backfilling trenches. Piping may be tested in sections.

1. Cap and test piping with static water pressure without exceeding pressure rating of piping system materials. Isolate test source and allow to stand for four hours.
2. Repair leaks and defects with new materials and retest system or portion thereof until conforming.

B. Backfill Compaction Tests: as specified in 02310 "Earthwork".

C. Operational Tests: Activate each remote-control valve in sequence from controllers. Replace, adjust components to correct operational deficiencies.

D. Coverage Tests: Measure and record water flow rate and area coverage/throw of each jet/nozzle/emitter for completeness and uniformity.

3.9 COMMISSIONING

A. Starting Procedures: Follow manufacturer's written procedures. If no procedures are prescribed by manufacturers, proceed as follows:

1. Verify that specialty valves and their accessories are installed and operate correctly.
2. Verify that specified tests of piping are complete.
3. Verify that jets/nozzles/emitters are correct type.
4. Verify that damaged jets/nozzles/emitters are replaced with new materials.
5. Verify that potable-water supply connections have backflow preventers.
6. Energize circuits to electrical equipment and devices.
7. Adjust operating controls.

B. Programing: Field test default programs and adjust automatic control valves to provide flow rate of rated operating pressure required for each effect. Revise default programs to suit.

C. Winterization: Winterize the systems in the Fall. Repair any damage caused by improper winterization at no cost to the City.

3.10 PROTECTING

A. Protect completed work with a non-staining cover until final cleaning.

3.11 CLEANING

A. In-Progress Cleaning: Clean as work progresses daily.
1. Flush dirt and debris from piping before installing jets/nozzles/emitters.

B. Final Cleaning: Clean work as follows:
1. Remove temporary protection materials.
2. Protect adjacent surfaces from contact with cleaner by covering them with liquid strippable masking agent, polyethylene film, and/or waterproof masking tape.
3. Follow written recommendations from manufacturer / supplier.
4. Test cleaning methods on an out-of-the-way area first. Obtain City’s approval of cleaned area before proceeding with remainder.
5. Sweep and power wash surrounding pavements.

3.12 DEMONSTRATING

A. Not before 14 days of submitting completed maintenance data, demonstrate to City's maintenance personnel the operation of the systems.

3.13 REMOVING EXCESS MATERIALS AND WASTE

A. Removal: Remove excess material and waste off site to reuse, recycle and/or legally dispose of.

B. Additional Materials: Deliver spare materials to the City.

END OF SECTION

SECTION 02870
SITE FURNISHINGS

PART 1 - GENERAL

1.1 RELATED DOCUMENTS

A. Drawings and general provisions of the Contract, including General and Supplementary Conditions and Division 01 Specification Sections, apply to this Section.

1.2 SUMMARY

A. Section Includes:

1. Proprietary “off-the-shelf” and customized “off-the-shelf” site furniture.

2. Proprietary skateboarding deterrents.

B. Related Requirements:
1. Section 03300 "Cast-in-Place Concrete" for installing pipe sleeves cast, installing anchor bolts cast and formed voids in concrete footings.

1.3 ACTION SUBMITTALS

A. Product Data: For each type of product.

B. Samples for Verification: For each type of exposed finish, not less than 6-inch- (152-mm-) long linear components and 4-inch- (102-mm-) square for surficial components.

1.4 INFORMATIONAL SUBMITTALS

A. Material Certificates: For site furnishings.

1.5 QUALITY ASSURANCE

A. Welding Qualifications: Qualify procedures and personnel according to AWS D1.1/D1.1M.

B. Fabricator Qualifications: A firm that assumes responsibility for structural engineering of modified standard and/or customized site furniture to comply with performance requirements. This responsibility includes preparation of Shop Drawings and comprehensive engineering analysis by a qualified professional engineer.

1.6 CLOSEOUT SUBMITTALS

A. Maintenance Data: For site furnishings to include in maintenance manuals.

1.7 SPARES

A. Furnish extra materials that match products installed and that are packaged with protective covering for storage and identified with labels describing contents.

1. Anchors: No fewer than four anchors for each anchor type.

PART 2 - PRODUCTS

2.1 PROPRIETARY SITE FURNITURE

A. Products: Subject to compliance with requirements, provide products indicated on Drawings or approved equivalents.

2.2 MATERIALS

A. Precast Concrete:
1. Portland Cement: ASTM C 150C/C 150M, Type I or Type III, white cement.
2. Normal-Weight Aggregates: Except as modified by PCI MNL 117, ASTM C33/C 33M.
3. Coloring Admixture: ASTM C 979/C 979M.
4. Air-Entraining Admixture: ASTM C 260, certified by manufacturer to be compatible with other admixtures.
5. Reinforcing and Mix Design: To meet performance requirements.

B. Steel and Iron: Free of surface blemishes and complying with the following:

1. Plates, Shapes, and Bars: ASTM A 36/A 36M.
2. Steel Pipe: Standard-weight steel pipe complying with ASTM A 53/A 53M, or electric-resistance-welded pipe complying with ASTM A 135/A 135M.
3. Tubing: Cold-formed steel tubing complying with ASTM A 500/A 500M.
4. Mechanical Tubing: Cold-rolled, electric-resistance-welded carbon or alloy steel tubing complying with ASTM A 513, or steel tubing fabricated from steel complying with ASTM A 1011/A 1011M and complying with dimensional tolerances in ASTM A 500/A 500M; zinc coated internally and externally.
5. Sheet: Commercial steel sheet complying with ASTM A 1011/A 1011M.
6. Expanded Metal: Carbon-steel sheets, deburred after expansion, and complying with ASTM F 1267.
7. Malleable-Iron Castings: ASTM A 47/A 47M, grade as recommended by fabricator for type of use intended.
8. Gray-Iron Castings: ASTM A 48/A 48M, Class 200.

C. Stainless Steel: Type 304, free of surface blemishes and complying with the following:

1. Sheet, Strip, Plate, and Flat Bars: ASTM A 666.
2. Pipe: Schedule 40 steel pipe complying with ASTM A 312/A 312M.
3. Tubing: ASTM A 554.

D. Anchors, Fasteners, Fittings, and Hardware: 304 Stainless steel, commercial quality, tamperproof, vandal and theft resistant, concealed or recessed.

1. Anchors: Inconspicuous bolts to attach legs of site furnishings to substrate.

2. Select fasteners of type, grade, and class required to produce connections suitable for anchoring railings to other types of construction indicated and capable of withstanding design loads and capable of sustaining, without failure, a load equal to four times the load imposed when installed in concrete, as determined by testing according to ASTM E 488, conducted by a qualified independent testing agency.

E. Non-shrink, Nonmetallic Grout: Premixed, factory-packaged, nonstaining, noncorrosive, nongaseous grout complying with ASTM C 1107/C 1107M; recommended in writing by manufacturer, for exterior applications.

F. Erosion-Resistant Anchoring Cement: Factory-packaged, non-shrink, nonstaining, hydraulic-controlled expansion cement formulation for mixing with potable water at Project site to create pourable anchoring, patching, and grouting compound; resistant to erosion from water exposure without needing protection by a sealer or waterproof coating; recommended in writing by manufacturer, for exterior applications.

G. Galvanizing: Where indicated for steel and iron components, provide the following protective zinc coating applied to components after fabrication:

1. Zinc-Coated Tubing: External, zinc with organic overcoat, consisting of a minimum of 0.9 oz./sq. ft. (0.27 kg/sq. m) of zinc after welding, a chromate conversion coating, and a clear, polymer film. Internal, same as external or consisting of 81 percent zinc pigmented coating, not less than 0.3 mil (0.0076 mm) thick.
2. Hot-Dip Galvanizing: According to ASTM A 123/A 123M, ASTM A 153/A 153M, or ASTM A 924/A 924M.

2.3 FABRICATION

A. Metal Components: Form to required shapes and sizes with true, consistent curves, lines, and angles. Separate metals from dissimilar materials to prevent electrolytic action.

B. Welded Connections: Weld connections continuously. Weld solid members with full-length, full-penetration welds and hollow members with full-circumference welds. At exposed connections, finish surfaces smooth and blended so no roughness or unevenness shows after finishing and welded surface matches contours of adjoining surfaces.

C. Pipes and Tubes: Form simple and compound curves by bending members in jigs to produce uniform curvature for each repetitive configuration required; maintain cylindrical cross section of member throughout entire bend without buckling, twisting, cracking, or otherwise deforming exposed surfaces.

D. Exposed Surfaces: Polished, sanded, or otherwise finished; all surfaces smooth, free of burrs, barbs, splinters, and sharpness; all edges and ends rolled, rounded, or capped.

E. Factory Assembly: Assemble components in the factory to greatest extent possible to minimize field assembly. Clearly mark units for assembly in the field.

2.4 GENERAL FINISH REQUIREMENTS

A. Appearance of Finished Work: Noticeable variations in same piece are not acceptable. Variations in appearance of adjoining components are acceptable if they are within the range of approved Samples and are assembled or installed to minimize contrast.

2.5 STEEL AND GALVANIZED-STEEL FINISHES

A. Baked-Enamel, Powder-Coat Finish: Manufacturer's standard, baked, polyester, powder-coat finish complying with finish manufacturer's written instructions for surface preparation, including pretreatment, application, baking, and minimum dry film thickness.

B. PVC Finish: Manufacturer's standard, UV-light stabilized, mold-resistant, slip-resistant, matte-textured, dipped or sprayed-on, PVC-plastisol finish, with flame retardant added; complying with coating manufacturer's written instructions for pretreatment, application, and minimum dry film thickness.

C. Finishes: Refer to Materials Schedule on Drawings.

2.6 STAINLESS-STEEL FINISHES

A. Surface Preparation: Remove tool and die marks and stretch lines, or blend into finish.

B. Polished Finishes: Grind and polish surfaces to produce uniform finish, free of cross scratches.

1. Run directional finishes with long dimension of each piece.
2. Directional Satin Finish: No 4.
3. Dull Satin Finish: No. 6.

C. Finishes: Refer to Materials Schedule on Drawings.

PART 3 - EXECUTION

3.1 EXAMINATION

A. Examine areas and conditions, with Installer present, for compliance with requirements for correct and level finished grade, mounting surfaces, installation tolerances, and other conditions affecting performance of the Work.

B. Proceed with installation only after unsatisfactory conditions have been corrected.

3.2 INSTALLATION, GENERAL

A. Comply with manufacturer's written installation instructions unless more stringent requirements are indicated. Complete field assembly of site furnishings where required.

B. Unless otherwise indicated, install site furnishings after landscaping and paving have been completed.

C. Install site furnishings level, plumb, true, and securely anchored at locations indicated on Drawings.

D. Post Setting: Set cast-in support posts in concrete footing with smooth top, shaped to shed water. Protect portion of posts above footing from concrete splatter. Verify that posts are set plumb or at correct angle and are aligned and at correct height and spacing. Hold posts in position during placement and finishing operations until concrete is sufficiently cured.

E. Posts Set into Voids in Concrete: Form or core-drill holes for installing posts in concrete to depth recommended in writing by manufacturer of site furnishings and at least 3/4 inch (19 mm) larger than the outside diameter of the post. Clean holes of loose material, insert posts, and fill annular space between post and concrete with non-shrink, nonmetallic grout or anchoring cement, mixed and placed to comply with anchoring material manufacturer's written instructions, with top smoothed and shaped to shed water. Grout or anchoring cement shall match surrounding paving color.

F. Control of Corrosion: Prevent galvanic action and other forms of corrosion by insulating anchor materials from dissimilar furniture materials.

3.3 INSTALLATION TOLERANCES

A. Variation in Level of Longitudinal Sitting Surface: Do not exceed 2% gradient.

B. Variation in Vertical: +/- 1/8 inch (3 mm) from plumb over 3 feet straight edge.

C. Maximum Jog in Alignment of Matching Edges & Faces: 1/4 inch (6 mm).

D. Maximum Differential Bowing or Camber, as Erected, between Adjacent Members of Same Design: 1/4 inch (6 mm).

3.4 CLEANING AND TOUCH-UP

A. After completing installation, inspect components for damage.

B. Repair damaged finishes matching original finish or if matching is not possible, replace non-conforming component and/or unit with new.

C. Protect site furniture from damage during construction period with temporary protective coverings. Remove protective coverings for Substantial Completion and clean to Manufacturer’s recommendation.

END OF SECTION

SECTION 02871

STONE BOULDERS

PART 1 - GENERAL

1.1 RELATED DOCUMENTS

A. Drawings and general provisions of the Contract, including General and Supplementary Conditions and Division 01 Specification Sections, apply to this Section.

1.2 SUMMARY

A. Section includes all labor, materials, equipment, incidentals, and services necessary to complete the following scope items as indicated and as specified herein, including but not limited to:
   1. Monolithic Stone Boulders.

1.3 ACTION SUBMITTALS

A. Product Data: For each type of product below, submit data before ordering.
   1. For each stone variety include estimate of the range of gross weight, height, width and length of each boulder.
   2. For each stone variety include digital high-resolution images of the range of boulder shapes and finishes. Include rule or tape measure in views.

B. Samples for Verification: Submit representative samples for each of the following:
   1. For each stone type include at least three samples of approximately 4-inch (100 mm) fragments showing the full range of finishes representative of the completed Work. Photographs shall be taken outdoors in the sun dry and then wet.

C. Stone Shop Drawings: Include:
   1. Plans showing dimensions of each stone type, size, position and identifying number of each stone.

D. Photographs of Mockups: Submit images of each mockup.

E. Field Verification Report: Written confirmation that existing and previous work is complete and conforming.

F. Unsatisfactory Condition Notice: Written notice if unsuitable existing conditions are encountered.

1.4 INFORMATIONAL SUBMITTALS

A. Qualification Data: For stone boulder installer.

1.5 QUALITY ASSURANCE

A. Installer Qualifications: Use a qualified installer who employs workers with at least 5 years of experience in landscape boulder placement work used in similar applications.

B. Preinstallation Conference: Conduct conference at Project site to comply with Project Management and Coordination requirements.

C. Mockups: Build mockups to verify sample selections made, to demonstrate aesthetic effects and set quality standards for materials and execution.
   1. Notify the City at least 14 days in advance of dates and times when mockups will be ready for review. Schedule mockup reviews with a float time of at least 30 days between the first mockup review and any revised mockup.
   2. Build mockups for each type of stone boulder grouping:
      a. Include a joint filling at least 16 inches (400 mm) long in mockup.
   3. Chip part of an exposed-face surface for each finish, color, and texture, and demonstrate adequacy of repair techniques to match original finish.
   4. Submit photographs taken outdoors in the sun of the full mockup dry and then wet and with closeups of joints and finishes.
   5. Mockups reviewed by the City with “No Exceptions” or “Make Corrections Noted” may become part of the completed Work if they are protected during the work and conforming at the time of Substantial Completion.

D. Field Observation: Give not less than 14 working days’ notice so that field observations may be made of the following:
   1. Mockup completion.
   2. First stone boulder group completion prior to joint filling.

1.6 DELIVERY, STORAGE, AND HANDLING

A. Individual boulders shall be selected and tagged at the source quarries/suppliers.

B. Transport boulders in compliance with relevant authority’s hauling limitations.

C. Pack, load and unload boulders for shipment using non-damaging and non-staining materials and lifting methods. Do not lift, topple or flip boulders with mechanical dragline or clamshell buckets. Protect weathered faces.

D. Upon receipt at the site or storage yard, set each boulder individually on a clean aggregate sub-base material and/or wooden pallets. Do not stack boulders. Leave enough space around each boulder to view it from all sides.

E. Cover each boulder with burlap. Immediately remove mortar, soil or other debris to prevent them from staining the face of stone.

1.7 FIELD CONDITIONS

A. Wet Weather Protection: Do not build on wet subgrade..

1.8 COORDINATION

A. Notify and coordinate with installers of related work about specific requirements for placement of earth moving, utilities, subdrainage, and other dependencies.

PART 2 - PRODUCTS

2.1 SUPPLIERS

A. Source Limitations: Obtain each type of stone from a single source with the resources to provide materials and products of a consistent quality for the duration of the Contract.

2.2 STONE BOULDERS

A. Boulders: Boulders shall be naturally formed, and naturally weathered.
   1. The stone shall be durable, sound, free from detrimental cracks, seams, chart, high argillaceous content, oil, grease, thin bedding or diagenetic features and other defects which tend to increase deterioration from natural causes or cause breakage during handling or placing. The stone shall be highly resistant to weathering and disintegration under freezing and thawing and wetting and drying conditions. Inclusion of objectionable quantities of dirt, sand, clay, chart and rock fines, bituminous material, or other deleterious material shall not be permitted.

B. Granite: Select weathered field stone made of granite, and the following:
   1. Requirements:
      a. minus 1/16 inch (1.6 mm).
      b. Inclusions: Less than 10 percent of units impacted.
      c. Finish and Size: As per Material Schedule on the Drawings.
   2. Supplier: Subject to compliance with requirements, provide products by one of the suppliers as per Material Schedule on the Drawings.

2.3 PEDESTALS

A. Coarse Drainage Aggregate Pedestals: Imported narrowly graded mixture of double-washed crushed stone or crushed or uncrushed gravel; ASTM D 448; coarse aggregate grading #57 (1-inch (25 mm) to No. 4); with 100 percent passing a 1-1/2-inch (37.5 mm) sieve and 0 to 5 percent passing a No. 8 (2.36 mm) sieve. Crushed recycled concrete is not permitted.

PART 3 - EXECUTION

3.1 EXAMINING

A. Field Verification: Before starting installation work in this section, examine preceding related and underlying work. Verify that such work is conforming and within specified tolerances.
   1. Examine substrates to receive boulders, with installer present, for compliance with requirements for installation tolerances and other conditions affecting performance.
   2. Substrate: Field verify location, elevation and compaction of supporting substrates.
   3. Correct any non-conforming work before proceeding with work in this section.

B. Unsuitable Conditions: Submit written notice of any conditions that the Contractor considers unsuitable for work in this section and that may limit the Contractor's warranty. Notices and/or claims of unsuitable conditions to the City after starting installation work in this section shall not be permitted nor limit the Contractor's warranty.

3.2 PREPARING

A. Protection of Adjacent Work: Protect adjacent and abutting work from boulder installation damage.

B. Protection of Boulders: During construction work, cover boulders with burlap at the end of each day and when complete until other adjacent work is also complete.

3.3 SETTING OF STONE BOULDERS, GENERALLY

A. Alignment and Placement: Evaluate each boulder in the field to assess position, orientation and alignment to ensure a favorable composition. Each boulder location may be modified by the City prior to final placement.

B. Handling: Handle boulders using non-damaging and non-staining materials and lifting methods. Do not lift, topple or flip boulders with mechanical dragline or clamshell buckets. Use care during the placing of boulders adjacent to any structures to avoid cracking or damage to surrounding footings, walls, paving, waterproof membranes, concrete plinths etc. Any damage to surrounding surfaces, features, including plant material installed prior to boulders, shall be repaired and/or replaced immediately prior to continuing with installation.

C. Field Cutting: Only if directed by the City, field cut stone if the cut faces are below finished surface in their final position. Dress cut faces with an acid wash.

3.4 INSTALLING BOULDERS ON PEDESTALS

A. Excavation: Excavate holes for boulders as indicated in firm, undisturbed or compacted subgrade between 92% to 95% ASTM D698.

A. Pedestal: Form pedestal wider than boulders and to allow for the angle of repose of the pedestal material. Place and compact drainage layer with plate compactor or “jumping jack” equipment. Set pedestal height taking into consideration the boulder depth and allow for initial consolidation from weight and settlement of each boulder.

B. Placing: Ensure boulders are aligned and level and that no rocking or movement occurs following placement and fixing in place. Re-set as necessary to achieve a stable, secure and level repose. Inject and/or force pedestal material to completely fill voids between boulders.

C. Backfilling Soil: Place Landscape Soil around base and sides of each boulder in 6-inch (152 mm) lifts. Lightly tamp each lift using hand tools to settle backfill, support the boulder and eliminate voids. Do not over compact the backfill or use mechanical or pneumatic tamping equipment.

3.5 CONSTRUCTION TOLERANCES

A. Variation in Elevation: Plus or minus 1 inch (25 mm).

3.6 PROTECTING

A. Protect completed work with burlap cover until final cleaning.

3.7 REPAIRING AND REPLACING

A. Repairs: Repair boulders if permitted by the City. The City reserves the right to reject repaired boulders that do not comply with requirements.
   1. Mix patching materials and repair so cured patches blend with color, texture, and uniformity of adjacent exposed surfaces and show no apparent line of demarcation between original and repaired work, when viewed in typical daylight illumination from a distance of 20 feet (6 m).
   2. Remove and replace damaged work when repairs do not comply with requirements.

B. Substantial Completion Replacements: The Contractor agrees to replace work that fail in materials and/or execution before Substantial Completion. The City shall make the final determination of failure.

C. Substantial Completion Failures: Failures include but are not limited to:
   1. Boulders:
      a. Any work out of tolerance that can not be repaired and/or when repairs have failed.

b. Any finishes that do not match the approved mockups.
c. Loose and/or rocking boulders.
d. Full-depth cracks and edge to edge cracks.
e. Chipped, pitted and/or spalled greater than 5 percent of unit face.
f. Scratches longer than 1/2 inch (13 mm) and deeper than 1/4 inch (6 mm).
g. Oil-stained boulders.

2. Joints:
   a. Loose, eroded and/or settled joints longer than 1inch (25mm) and deeper than 1/4 inch (6 mm) and not exceeding 5 percent of total joint length.
   b. Efflorescence streaks exceeding 4 inches (100 mm) and covering more than 5 percent of total joint length.
   c. Oil-stained joints longer than 1inch (25mm).

D. Substantial Completion Replacements Schedule: Within 7 days of notice, order replacements matching the original material, size and finish. Replace work within 30 days of the notice when weather conditions permit. Replacement work shall match and seamlessly abut surrounding work without appearing to be an obvious replacement.
   1. Coordination: Coordinate Substantial Completion replacements with other corrective actions and/or warranty replacements.

3.8 CLEANING

A. In-Progress Cleaning: Clean as work progresses daily.
   1. Remove mortar fins and smears before tooling joints.

B. Final Cleaning: After mortar and pointing is thoroughly set and cured, clean stone boulders as follows:
   1. Remove temporary protection materials.
   2. Protect adjacent surfaces from contact with cleaner by covering them with liquid strippable masking agent, polyethylene film, and/or waterproof masking tape.
   3. Follow written recommendations from supplier.
   4. Test cleaning methods on an out-of-the-way area first. Obtain City's approval of cleaned area before proceeding with remainder.
   5. Sweep and power wash surrounding pavements.

3.9 REMOVING EXCESS MATERIALS AND WASTE

A. Removal: Remove excess material and waste off site to reuse, recycle and/or legally dispose of.

END OF SECTION

SECTION 02900
LANDSCAPING

PART ONE - GENERAL

1.1 DESCRIPTION

A. Work Included:

1. All labor, materials, equipment, and appliances necessary to provide demolition; planting of new trees, plants, shrubs, vines, and ground cover; tree pruning, and lawn all required testing and inspections; maintenance of new trees, plants and ground cover as indicated on the Contract Drawings, specified herein and as needed for complete and proper installation and maintenance.

B. Related Sections:

1. Documents affecting work of this Section include, but are not necessarily limited to the GENERAL CONDITIONS, SUPPLEMENTARY CONDITIONS, in DIVISION 1 - GENERAL REQUIREMENTS and other Sections of the Project Manual.
2. Site Demolition in Section 02220.
3. Site Clearing and Grubbing in Section 02210.
4. Rough Grading in Section 02310.
5. Irrigation System in Section 02810.
6. Cast-in-Place Concrete in Section 03300.
7. Existing Tree Protection in Section 02939.

1.2 SUBMITTALS

A. Comply with provisions of Section 11 - SHOP DRAWINGS AND MANUFACTURER'S DATA of the General Conditions and Section 01330 - SUBMITTALS of DIVISION 1 - GENERAL REQUIREMENTS of the Project Manual.

B. Make all submittals within 90 calendar days after the Notice-To-Proceed.

C. Submit the following:

1. Complete lists of landscape materials and equipment including nursery's and manufacturer's names and address, specific trade names, catalog numbers and estimate quantity; complete with illustrations and/or photographs and descriptive literature and clearly mark or underline proposed items; list sources of landscape soils, and provide an agronomic soil tests on any imported soil.

2. Copy of soil analysis from certified soil laboratory as outlined under Section 01330 - SUBMITTALS.

3. Quantity and type of commercial and organic fertilizers.

4. Quantity and type of all specified soil amendments.

5. Quantity and type of planting tablets/tree stakes/root barriers.

6. Quantity and type of herbicides and pesticides and their application program and registered labels.

7. Submit Herbicide/Pesticide Application Program.

8. Shop Drawings for Load-bearing Modules Support System for pavement over tree root zones.

D. **Shop Drawings**: Required for any landscape structure as may be specified hereinafter in accordance with provisions of Section 11 - SHOP DRAWINGS AND MANUFACTURER'S DATA and Section 01330 - SUBMITTAL in DIVISION 1 - GENERAL REQUIREMENTS.

E. **Disapprovals**: Promptly resubmit for approval necessary data concerning a substitution for a disapproved item.

F. **Procurement List**: Use the approved list of landscape materials and equipment for procurement without deviation unless otherwise authorized in writing by the City Engineer. Substitution requests for species shall be only considered by the City within 90 calendar days after the Notice-To-Proceed.

G. **Work Certification And Project Closure**: Prior to job acceptance, written certifications accompanied with material invoices and following submittals, shall be submitted to the City Engineer. Each invoice shall list on the original, the job name and delivery address. The following submittals, but not necessarily limited to, shall be made:

1. Record Drawings and Record Project Manual for the irrigation and planting works.
2. Modified Watering Schedules.
3. Maintenance Log and Maintenance Schedules.

1.3 QUALITY ASSURANCE

A. **Workers**: Use adequate number of skilled workers who are thoroughly trained and experienced in the necessary crafts and who are completely familiar with the specified requirements and the methods needed for proper performance of the Work of this Section.

B. **Codes and Regulations**: All materials and workmanship in this Section shall comply with the 2017 City of Los Angeles Building Code and Amendments, County, Federal and State Codes and Regulations. Contractor shall also comply with all referenced sections of the latest edition of the Standard Specifications for Public Works Construction (SSPWC) modified by Los Angeles City Bureau of Engineering Standard Plan S-610, and all applicable Standard Plans. All SSPWC and Los Angeles City Bureau of Engineering Standard Plans are published by and available through Building News (BNI) and online. Contractor to obtain and pay for all required permits. Deliver all permits and submit certifications of compliance to the City Engineer.

C. **Quality and Size**: Comply with current edition of the "Horticultural Standards" for number one nursery stock as adopted by the "American Standard for Nursery Stock (ANSI Z60.1)"

D. **All Plants**:

1. Shall be true to name, size and growing specifications with the names, standards

and practices in the “American Standard for Nursery Stock (ANSI Z60.1)”.

2. In all cases, botanical names take precedence over common names.

1.4 GENERAL REQUIREMENTS

A. Approvals by the City Engineer:

1. All required agricultural suitability and fertility analysis or testing, and weed/pest control prior to placing top soil or soil amendments.

2. All work on irrigation system prior to start of landscaping work.

3. All reviews on required submittals hereinafter specified.

4. All resubmittals requested by the City Engineer.

B. Inspection: All work and materials are subject to inspection and approval by the Bureau of Contract Administration (BCA) Inspector and the PROJECT MANAGER. Any work done without proper inspection will be subject to rejection per Section 2-11 of the Standard Specifications for Public Works Construction. The CONTRACTOR shall notify the Bureau of Contract Administration (BCA) Inspector and PROJECT MANAGER three (3) days prior to requested inspection of the following for approvals:

1. For all finish grades in planting areas following all weed/pest control, soil fertilizing and conditioning, prior to landscape container planting, and after rolling in turf areas.

2. Inspection of all plant materials under 24" box size shall be at the time of delivery to the job site. This inspection will be for compliance with the caliper, height and spread requirements if given on the plant legend and for the general health, structure and appearance of plants. The CONTRACTOR shall also stake all tree planting locations at this time for review and approval by the ENGINEER.

3. Tagging of 24" box or larger trees at the grower with Recreation and Parks tags. This inspection will be for compliance with the caliper, height and spread requirements if given on the plant legend and general health, structure and appearance of plants. All trees shall be tagged by the ENGINEER or authorized representative.

4. All completed landscape planting and irrigation work for approval to begin the plant maintenance and plant establishment period.

C. Existing Utilities and Plant Materials: Protect utilities and/or plant materials, not designated for removal or modification, in place against damage resulting from work of this Contract. Perform any removal and/or modifications only on approval or instructions from the City Engineer or in accordance with applicable provisions noted or specified on the Contract Drawings or in other sections of the Project Manual Replace damaged existing plant material with like type and size material. Determine the cost of irreplaceable plant material according to the "square inch" method as described by the Council of Tree and Landscape Appraisers, GUIDE FOR PLANT APPRAISAL, current edition.

G. Verification of Dimensions and Quantities: Verify all dimensions and quantities prior to start of work. Furnish the quantities as may be necessary to do the specific work.

Promptly notify the City Engineer of any discrepancies between the Drawings and the Project Manual and/or actual job-site conditions which would affect the proper execution of the landscaping work. Do not work in areas where such discrepancies occur until further instructed by the City Engineer.

1.5 DELIVERY, STORAGE AND HANDLING

A. Delivery:

1. Notify the City Engineer of the delivery a minimum of 48 hours in advance so the plant materials may be inspected upon arrival at the job-site. All plant material judged by the City Engineer as unacceptable shall be removed immediately from the job-site by the Contractor. All trees not accompanied with the tags signed by the City Engineer or the authorized representative, or plant not correspondent with contract requirements shall be rejected and immediately removed from the job site.

2. Protect plants during delivery against damage to root balls or desiccation of leaves. Protect trees during transport by tying in the branches and covering all exposed branches.

3. Deliver fertilizer to the job-site in the original and unopened containers bearing manufacturer's guarantee chemical analysis, name, trade mark or trade name in conformance with Federal and Local law. In lieu of containers, fertilizer may be furnished in bulk and a certificate indicating the above information shall accompany each delivery.

4. During delivery, protect sod from drying out and from contaminants.

5. Hydroseed Delivery: The contractor shall supply a delivery receipt to the City Engineer or authorized representative certifying conformance with the specified hydroseed mix and indicating that the slurry has not been mixed for longer than two (2) hours. Slurry which has been mixed longer than two (2) hours shall be recharged with 50 percent more of the specified seed mix, at the Contractor's expense. Delivery tickets shall be forwarded to the City Engineer.

B. Storage:

1. Store plants, trees, etc. at the job-site where approved by the City Engineer.

2. Keep fertilizer in dry storage away from contaminants. Loose fertilizers and soil amendments shall be kept covered with a tarp.

3. Store plants not installed on the day of arrival at the job-site as follows:

   a. Outside storage to be protected from wind.

   b. Keep plants in containers in a moist condition until planted by watering with fine mist spray.

4. Sprinkle sod with water and cover with moist burlap, straw or other covering acceptable by the City Engineer. Protect sod from exposure to wind and direct sunlight. All covering shall permit air circulation and alleviate any heat development. All sod shall be installed within 24 hours of delivery to the site.

C. **Handling**: Transport and handle plants with care to ensure protection against injury.

PART TWO - PRODUCTS

2.1 MATERIALS

A. **General:** All landscaping materials for soil conditioning, weed or pest control, or planting shall be first grade, commercial quality and shall have certificates.

B. **Topsoil**: The City Engineer or authorized representative shall determine the suitability of topsoil prior to use. Transport topsoil from the source to its final position unless stockpiling is specified or approved by the PROJECT MANAGER.

1. Topsoil: From a source outside the limits of the project selected by the Contractor and in compliance with Inspection requirements specified in General Conditions. Within 90 days after Notice-To-Proceed submit the proposed source of topsoils to the City Engineer for approval. After the City Engineer or authorized representative makes an initial inspection at the site of the proposed imported material, the Contractor shall perform the required tests as deemed necessary to determine that the material meets the requirements with the accompany of City Engineer or Authorized representative. The Contractor shall submit to the City Engineer a written Soils Report of a soil testing laboratory registered by the State of California for agricultural soil evaluation which states that the proposed source complies with this Section, and proposed soil amendments. After the testing report and proposed soil amendments are reviewed by the City Engineer, the Contractor shall comply with all the recommendations of the soil testing laboratory and add any additional soil amendments necessary to support a healthy plant growth, at no additional cost to the City.

   Topsoil shall be of a uniform composition and structure, fertile and friable sandy loam garden soil, and be free of roots, clods and stones larger than1-inch in greatest dimension, pockets of coarse sand, noxious weeds, sticks, brush and other litter and not be infested with nematodes or other undesirable insects and plant disease organisms.

   For each discrete Landscape Soil type use only a single supply source for the entire quantity required.

   Topsoil shall meet the following additional requirements for each type.

LANDSCAPE SOILS TYPE 1: LAWNS (LAWNS IN EPIC SYSTEM), TREES IN PAVEMENT & TREES IN CRUSHED STONE

Landscape Soil Characteristics: Placed Landscape Soil shall conform to the following characteristics no later than Substantial Completion.

Property	Unit	Method	Type 1 topsoil
Physical			
Texture – lab with particle size distribution analysis graph	USDA	ASTM F1632 (sand base)	coarse sand mix to ASTM F2396
Texture - field	USDA	USDA test kit	coarse sand
Bulk density - lab	lb/ft3 (Mg/m3)	ASTM F1815 (sand base)	100 -110 (1.6-1.75)
Bulk density - field compared to mock-up	resistance	Handreck & Black	94 - 98
Organic content - lab	%mass	ASTM F1647 method A	1 - 2
Solid materials size - field	inch(mm)	measure	< 1 (25)
Saturated hydraulic conductivity at 85% Proctor - lab	inch/hr	ASTM F1815 (sand base)	>6
Infiltration - field	inch/hr	ASTM D3385	5 to 8
Depth of profile - lab	inch	measure core	per documents
Chemical			
pH	$CaCl_2$	ASTM D4972	5.5-7.0
EC	dS/m	SSSA	< 2
Ca / Mg	ratio	SSSA	3 to 6
CEC cation exch. Capacity	meq%	SSSA	5 to 20
ESP exch. Sodium	%	SSSA	< 5
SAR	ratio	SSSA	< 6
N nitrogen as ammonium	ppm	SSSA	6 to 24
N nitrogen as nitrate	ppm	SSSA	30 to 100
P phosphorus	ppm	SSSA	3 to 18
K potassium	ppm	SSSA	25 to 110
Zn zinc	ppm	SSSA	0.3 to 10
Fe iron	ppm	SSSA	3 to 20
Odour			no strong odor
Human health contaminants	ppm	USEPA	< USEPA RSL's
Biological			
Viable weeds	shoots	AOSA warm germination or TMECC 5.09	<5 weed shoots/10 days or < 3 per 4L
Weeds	plants	visual	< 2 SF per cluster < 5% cumulative area

Landscape Soil component proportions by volume:

For Landscape Topsoil Type 1;

85% Imported Coarse Sand to ASTM F2396.
10% maximum Imported Loam Topsoil screened.
5% maximum Composted Organic Matter.

Other amendments as identified in the CONTRACTOR'S Soils Report.
Reinforcing products if noted on Drawings.

Refer to Drawings for thicknesses of horizons.

LANDSCAPE SOILS TYPE 2: PLANTING AREAS ON GRADE

Landscape Soil Characteristics: Placed Landscape Soil shall conform to the following characteristics no later than Substantial Completion.

Property	Unit	Method	Type 2 topsoil
Physical			
Texture – lab with particle size distribution analysis graph	USDA	ASTM F1632 (sand base)	loamy sand
Texture - field	USDA	USDA test kit	loamy sand
Bulk density - lab	lb/ft3 (Mg/m3)	ASTM F1815 (sand base)	76 -88 (1.2-1.4)
Bulk density - field compared to mock-up	resistance	Handreck & Black	pencil pushed in 6" with palm of hand
Organic content - lab	%mass	ASTM F1647 method A (sand base)	6 - 9
Solid materials size - field	inch(mm)	measure	< 2 (50)
Saturated hydraulic conductivity at 85% Proctor - lab	inch/hr	ASTM F1815 (sand base)	>4
Infiltration - field	inch/hr	ASTM D3385	2 to 3
Depth of profile - lab	inch	measure core	per documents
Chemical			
pH	$CaCl_2$	ASTM D4972	5.5-7.0
EC	dS/m	SSSA	< 2
Ca / Mg	ratio	SSSA	3 to 6
CEC cation exch. Capacity	meq%	SSSA	5 to 20
ESP exch. Sodium	%	SSSA	< 5
SAR	ratio	SSSA	< 6
N nitrogen as ammonium	ppm	SSSA	6 to 24
N nitrogen as nitrate	ppm	SSSA	30 to 100
P phosphorus	ppm	SSSA	3 to 18
K potassium	ppm	SSSA	25 to 110
Zn zinc	ppm	SSSA	0.3 to 10
Fe iron	ppm	SSSA	3 to 20
Odour			no strong odor
Human health contaminants	ppm	USEPA	< USEPA RSL's
Biological			
Viable weeds	shoots	AOSA warm germination or TMECC 5.09	<5 weed shoots/10 days or < 3 per 4L
Weeds	plants	visual	< 2 SF per cluster < 5% cumulative area

Landscape Soil component proportions by volume:

For Landscape Topsoil Type 2;

60% minimum Imported Coarse Sand to ASTM C33.
25 - 30% maximum Imported Clay Loam or Silt Loam Topsoil un-screened.
10 - 15% Composted Organic Matter.
Other amendments as identified in the CONTRACTOR'S Soils Report.

Refer to Drawings for thicknesses of horizons.

C. **Fertilizers and Conditioning Materials**: Comply with the applicable requirements of the State Agricultural Code. All fertilizing materials shall be packaged, first grade, commercial quality products identified as to source, type of material, weight and manufacturer's guaranteed analysis. Fertilizing material shall not contain toxic ingredients or fillers in quantities harmful to human, animal, or plant life.

The Contractor shall submit a certificate of compliance stating that the material substantially complies with the Project Manual, in accordance with provisions of Subsection 1.2(b) hereinbefore specified.

1. Bone Meal: Commercial raw bone meal shall be finely ground, steamed dry material with a minimum analysis of 2.5 percent nitrogen and 22 percent phosphoric acid.

2. Agricultural Gypsum: Hydrated calcium sulfate product containing 23 percent calcium and 18 percent sulfur with a guaranteed analysis of 84 percent calcium sulfate.

3. Soil Sulfur: Guarantee analysis of 99 percent sulfur.

4. Superphosphates: First-grade finely ground phosphate rock used for agricultural purpose, containing minimum 18 percent phosphoric acid by volume.

5. General Purpose Fertilizer: Gro-Power Plus fertilizer, having a minimum analysis of 5-3-1 (N-P-K) derived from ammonium phosphate, urea, sulfate of potash, compost and sulfides and oxides of iron, manganese and zinc, with 1.00% Alkyl Naphthalene Sodium Sulfonate soil penetrant as manufactured by Gro-Power Inc., 5065 Telephone Avenue, Chino, CA 91710 (909) 393-3744, or an approved equal. https://www.gropower.com.

6. Fertilizer Tablets: Tri-C Myco Tabs 1.7 gram 17-9-5 (n-P-K) by Tric-C Enterprises, or an approved equal. https://www.tri-corganics.com

7. Organic Soil Amendment: Organic Soil Amendment shall be selected products as described herein.

    a. Type 1 Organic Soil Amendment shall be a relatively dry and friable fine-textured organic composite that is well-composted and nitrogen stabilized, derived from composted greenwaste or processed wood products, and free of foreign matter including animal waste and any viable plant, tree or weed seed. 99% of material shall pass through a 1/2" screen. CONTRACTOR shall submit a sample of the organic soil amendment to the PROJECT MANAGER for approval prior to installation.

    b. Top Dress Mulch shall be well-seasoned composted tree chip mulch, free of all foreign matter including weed and tree seeds. Mulch chip size

shall be a minimum one (1) inch in diameter and not more than four (4) inches in diameter. Contractor shall submit sample to the PROJECT MANAGER for approval prior to application.

All Organic Soil Amendment shall conform with the following criteria:

a. The pH of the material shall be between 6 to 7.5.

b. The salt content shall be less than 2.5 millisiemens per centimeter.

c. Boron content of the saturated extract shall be less than 1.0 parts per million.

d. Calcium carbonate shall not be present if to be applied on alkaline soils.

e. Carbon: Nitrogen ratio is less than 25:1.

f. All compost shall be aerobic without malodorous presence of decomposition products.

g. Maximum total permissible pollutant concentrations in amendment in parts per million on a dry weight basis:

Arsenic	20	Copper	150	Selenium	50
Cadmium	15	Lead	200	Silver	10
Chromium	300	Mercury	10	Vanadium	50
Cobalt	50	Molybdenum	60	Zinc	300
Nickel	100				

D. <u>Plant Materials</u>

1. **General**: The plant names shown or listed on the Contract Drawings shall conform to the "Sunset, Western Garden Book", latest edition; grown in the State of California, unless otherwise specified.

a. Type and Size: Plant materials shall be as listed on the Contract Drawings**.**,

b. Tag one plant of each variety for identifying purposes.

c. All plants shall be inspected and approved prior to planting as per provisions of Subsection 1.4(B) hereinbefore specified.

d. Substitutions: When plants of a specified kind or size are not available, substitution may be made upon approval by the City Engineer, in accordance with Section 12 - REFERENCE TO TRADE NAMES of the General Conditions and Section 01330 - SUBMITTAL. Contractor shall provide information regarding his attempts to locate such material.

e. All plants shall have a growth habit normal to the species in accordance with the “American Standard for Nursery Stock (ANSI Z60.1)”, latest editions; shall be sound, healthy, vigorous and free from insect pests, plant disease, sun scalds, fresh bark abrasions,

excessive abrasions or other objectionable disfigurements. Tree trunks shall have normal well-developed branch systems, and vigorous and fibrous root system, not root bound and shall be free of kinked or girding roots.

f. Other than normal side pruning during the growth period, no pruning shall be done prior to inspection at the nursery.

2. Plant Material:

a. Trees: All trees shall conform to types, sizes and heights noted on the Contract Drawings. All trees shall be measured for height from the root crown to the last division of the terminal leader and measured for the diameter 3-feet above the root crown. Trees shall stand erect without support.

b. Container Plants: Specified type and size selected from high quality well-shaped nursery stock.

c. Flatted Plants: Grown and remain in the flat until transplanted at the job-site. The soil and spacing of the plants in the flat shall insure the minimum disturbance of the root system at time of transplanting. Maximum plants per flat are to be between 64 to 100 plants.

d. Shrubs: Specified type and size selected from high quality well-shaped nursery stock.

e. Sod (Turf Grass): Mixture of specified proportions of well established lawn grass, vigorous well rooted healthy turf, free from disease, insect pests, weeds, other grasses, stones and any other harmful or deleterious matter. Sod shall be machine cut to between 3/8” and 5/8” thick, not including top growth or thatch. Type shall be as specified on the Contract Drawings.

E. Construction Materials:

1. Lumber: "Construction Heart-Rough Redwood" of sizes specified or noted on the Contract Drawings**.**

2. Steel Pipe: Galvanized steel, Standard Weight (Schedule 40) complying with ASTM A53 - SPECIFICATION FOR PIPE, STEEL, BLACK AND HOT-DIPPED, ZINC-COATED, WELDED AND SEAMLESS.

3. Nails, Fasteners, Etc.: Hot-dipped galvanized and commercial quality materials.

4. Fabricated Metal Items: Steel conforming to ASTM A36 - SPECIFICATION FOR CARBON STRUCTURAL STEEL.

7. Concrete Items: As provided in Section 03300 - CAST-IN-PLACE of the Project Manual.

6. Provide other materials, not specifically described but required for a complete and proper installation, as selected by the Contractor subject to the approval of

the City Engineer.

F. **Mow Strip:**

1. Concrete Mow Strip: 8" inches square x 6" inches in depth, complete with tooled control joint 10 feet apart; at the beginning and end of curve, and at changes of direction; and where header abuts an existing or new structures and improvements, or as indicated on the Contract Drawings.

G. **Tree Stakes**:

1. Tree Staking:

   Wood tree stakes 2-inches in diameter by 8-feet long, lodgepole grade, pressure treated, capable of standing in the ground at least two years.

H. **Tree Ties**: Contractor shall use “Cinch-Tie” type or tire cord tie. No hose and wire ties will be accepted:

1. Cinch-Tie: Flexible vinyl with adjustable interlocking capability or approved equal.

2. ¾ inch wide x 1 foot long tire cord band with #18 ties wires wrapped around stake 2 times. Ends shall be twisted together and secured to stake with 6d nail.

I. **Root Ball Anchors**:

Proprietary at or below-grade galvanized-steel cable, zinc-coated soil anchor, ratchet and polypropylene and galvanized protective mat to secure trees by root ball; sized per manufacturer's written recommendations.

1. Manufacturers: Subject to compliance with requirements, provide products by one of the following:
   Platipus Anchors: “Anchoring Kit with Plati-Mat”.
   Berkshire Products Inc.: “Earthwings Root Ball Anchors”.
   Duckbill Anchors: “Root ball Fixing System”.

J. **Slope Stabilization and Erosion Control Material:** Jute Mesh material shall be light weight, brown color, fire retardant, open weave construction and shall have a minimum 4 year longevity. Material shall handle maximum water flow of 8 feet per second. Other commercial items available for stabilizing or controlling erosion, such as Wire Mesh, Aquatain, Verdyol Complex Bemis or Soil Seal are not permissible without the approval by the City Engineer.

K. **Pesticides/Herbicides**:

1. Pre-Emergent Herbicides: Selected from the broad spectrum of commercial brands available subject to approval by the City Engineer and not in conflict with the fertilizing and conditioning materials and any regulations governing its use. (Balan Granular, or equal.)

3. Post-Emergent Herbicides: Comply to all governing regulations and subject to approval by the RAP Forestry Sup. Contractor shall identify the location of

each proposed usage of Post-Emergent Herbicide. Post-Emergent Herbicide shall be type recommended or suitable for each plant material. Roundup, or approved equal shall be used for non-selective weed control.

4. Unless prohibited by the County Agricultural Commissioner, pesticides may be used for planting work. Usage of pesticides and herbicides shall conform to the requirements of the California Food and Agricultural Code and requirements. Weed oil and granular or pellet forms of pesticides shall not be used.

5. The contractor shall abide by all laws and codes governing weed abatement operations including but not limited to CAL-OSHA requirements and the Sate of California Healthly Schools Act of 2000 (AB2260), herein called “Schools Act.” The areas governed by the Schools Act include but are not limited to locations adjacent to school age children.

PART THREE - EXECUTION

3.1 GENERAL

A. The Landscape work shall not be performed at any time when it may be subject to damage by climatic conditions.

B. The Contractor shall verify all dimensions shown on the Contract Documents and at the site.

C. In case of conflict between the plant schedule totals and total plant count of the contract documents, the Contractor shall provide the higher number of plants.

D. Delivery of material shall begin only when it is ready for the work and after the inspections are made and the required samples and tests have been reviewed by the City Engineer. All materials furnished for the work shall be not less than the reviewed sample.

E. The Contractor shall provide temporary fencing, barricades, covering, or other protection to preserve existing landscaping items indicated to remain and to protect the adjacent properties and other structures from damages by the landscape and other contract work.

F. The Contractor shall remove and/or relocate landscape items such as trees, shrubs, grass, other vegetation, improvements, and obstructions as shown on Drawings or specified otherwise. Plant material to be removed shall be disposed of off the site in a legal and proper manner.

3.2 SURFACE CONDITIONS

Examine the areas and conditions under which work of this Section will be performed. Correct conditions detrimental to timely and proper completion of the work. Do not proceed until detrimental conditions are corrected.

3.3 AGRICULTURAL SUITABILITY AND FERTILITY ANALYSIS TESTS

A. General: Except noted otherwise Contractor shall submit the proposed Imported/Class

A Topsoil for Agricultural Suitability and Fertility Analysis. Contractor shall after completion of all rough grading operations sample all remaining on-site subgrade soil proposed to be used for subsoil. The Contractor shall obtain the number of soil samples as specified and submit them to a certified soil laboratory for required soil analysis. The location of the soil sample and intent of the soil analysis are to provide the following:

1. Accurate soil amendment and fertilizer recommendations with regards to type, quantity and procedure to create planting soil for plant material which includes trees, shrubs, ground covers and turf.

2. Identify any potential problems in the relationship between specified of plant materials and existing soil conditions that may ultimately affect plant growth.

B. Recommendations for appropriate location, quantity, and method of obtaining samples shall be submitted by a certified technician and reviewed by the City Engineer*.*

1. Sample Taken For On-Site Soil after Completion of Grading or Clearing Operations: For on-site subsoil, use a soil probe or soil anger to remove core samples beginning at 4 inches below top of grade. Otherwise use a shovel to dig a hole to the desired depth. Sample the soil from the side of the hole by scraping it with a trowel. The tools need to be clean and not rusty. Avoid sampling when the soil is to wet.

C. Contractor shall provide the City Engineer with a copy of the completed report on laboratory letterhead for review, in accordance with Section 11 - SHOP DRAWINGS AND MANUFACTURER'S DATA of the General Conditions prior to planting commencement.

D. Submitted recommendations shall include soil amendments and fertilization for initial planting, as well as any measures to be taken during the plant establishment period. Submittal shall include a narrative explaining the criteria employed to determine the soil sampling sites.

E. Agricultural Suitability and Fertility Analysis: The subgrade shall be amended to meet the following requirements for each type of application.

AMENDED SUBGRADE TYPE 1: LAWN & PLANTING ON GRADE (Excluding under EPIC System)

Amended Subgrade Characteristics: Amended Subgrade shall conform to the following characteristics no later than Substantial Completion.

Property	**Unit**	**Method**	**Type 1 amended subgrade**
Physical			
Texture - field	USDA	USDA test kit	amended earthwork
Compaction - field calib.to lab	%	ASTM D6938 ASTM D 698	78 - 85
Solid materials size - field	inch(mm)	measure	< 4 (100)

Infiltration - field	inch/hr	ASTM D3385	0.5 min.
Depth of amended profile - field	inch	measure core	per documents
Chemical			
pH	$CaCl_2$	USDA test kit calibrated to 1 ASTM D4972 test	5-7
EC	dS/m	USDA test kit calibrated to 1 SSSA test	< 2
Phytotoxins	seedlings	EBPI germination kit	>90% germination

A. Amended Subgrade includes but is not limited to:
   1. For Amended Subgrade:
      a. Removing organic matter and/or construction waste,
      b. Removing and/or mitigating Horticulturally Unsuitable Soils,
      c. Scarifying excavation sides for tree holes and trenches,
      d. Mechanical fracturing, ripping and/or tilling to depths shown,
      e. Raking and disposal of solid material larger than specified size,
      f. Other amendments as identified in the Soils Report.

AMENDED SUBGRADE TYPE 2: TREES IN PAVING

Amended Subgrade Characteristics: Amended Subgrade shall conform to the following characteristics no later than Substantial Completion.

Property	**Unit**	**Method**	**Type 2 amended subgrade**
Physical			
Texture - field	USDA	USDA test kit	amended earthwork
Compaction - field calib.to lab	%	ASTM D6938 ASTM D 698	95 - 100
Solid materials size - field	inch(mm)	measure	< 4 (100)
Infiltration - field	inch/hr	ASTM D3385	0.5 min.
Depth of amended profile - field	inch	measure core	per documents
Chemical			
pH	$CaCl_2$	USDA test kit calibrated to 1 ASTM D4972 test	5-7
EC	dS/m	USDA test kit calibrated to 1 SSSA test	< 2
Phytotoxins	seedlings	EBPI germination kit	>90% germination

B. Amended Subgrade includes but is not limited to:
   1. For Amended Subgrade:
      a. Removing organic matter and/or construction waste,
      b. Removing and/or mitigating Horticulturally Unsuitable Soils,
      c. Scarifying excavation sides for tree holes and trenches,
      d. Raking and disposal of solid material larger than specified size,
      e. Other amendments as identified in the Soils Report.

3.4 GRADING AND SITE PREPARATION:

A. Rough Grading:

1. Unless specified otherwise, remove existing soil, debris, weeds, roots and foreign material under the landscape area; perform clearing and grubbing in accordance with Subsection 3.4 of Section 02310 – EARTHWORK.

2. Scarify and compact the existing subgrade to a depth as specified in the Contract Drawingsprior to backfilling with topsoil and soil conditioning. Remove during grading operation all stones over 1-inch in greatest dimension and excess soil.

3. Earthwork and Topsoil Placement: Shall include excavation and backfilling for the irrigation system and the preparation for the spreading, densification, cultivation and raking of topsoil, including fertilization and conditioning.

B. Topsoil Preparation and Conditioning:

1. Type and Thickness: Place approved Imported/Class A topsoil over the entire rough graded site, in accordance with Subsection 2.1(A), to an approximate depth, as recommended by the City Engineer or as indicated on the Contract Drawings.

2. Do not work topsoil when it is so wet as to cause excessive compaction or forming of hard clods, or so dry as to cause dust.

3. Add additional topsoil where required to achieve finish grades.

C. Fertilizing and Conditioning: Bring planting areas to finish grade including construction of landscape contour/ mounds before the spreading of specified fertilizer or soil conditioning materials and planting.

1. After approximate finished grades have been established, the upper 6 inches of top soil shall be conditioned and fertilized by means of mechanical tiller to the rate as specified on the drawings and the recommendations of the agricultural suitability and fertility analysis.

   Final report shall provide amendment and fertilization recommendations for the specific plant materials list as shown on the contract drawings and reviewed the City Engineer. The Contractor shall comply with the reviewed recommendations without additional cost to the City.

2. The quantities of such materials required for planting areas shall be at the job-site. Furnish the City Inspector with delivery tickets before spreading to verify the source, kind and quantities delivered. Furnish City Engineer duplicate copies of the material invoices as required in Subsection 1.2 (G).

3. After spreading of fertilizer and/or soil conditioning materials, uniformly cultivate such materials into the upper 6 inches of top soil using suitable equipment operated in at least two directions approximately at the right angles. Make the resulting soil friable.

E. Finish Grading:

1. Contractor shall verify with all Contract Drawings all areas receiving mulching. Contractor shall verify the amount of fertilizer and soil conditioning, and specified thickness of mulching to determine the finish grade. Make finish grade smooth, uniform and free of abrupt grade changes and depressions to insure proper surface drainage.

2. Finish grade below adjacent paving, curbs or headers shall be 1-inch in shrub or ground cover areas and 1-inch in lawn areas.

3. Water soil after spreading of fertilizer and/or soil conditioning materials, and allow it to settle to provide a stable surface. After the soil has dried out to a workable condition, regrade, rake and smooth to the required grades and contours. Finished surfaces to be clean and suitable for planting.

4. Finish grading shall insure proper drainage of site. Surface drainage shall be away from all building foundations at a minimum of 2% or in accordance grades shown on Contract Drawings.

5. Eliminate all erosion scars.

F. **Excavation and Trenching**: When site is completed with soil conditioning and finish grading operations, all completed new planting pits and trenches shall be backfilled and reconditioned to the specified topsoil thickness.

G. **Slope Stabilization and Erosion Control:**

a. Required: All slopes greater than 3:1 slope ratio shall be protected with an approved erosion control netting. Install erosion control netting per manufacturer's recommendation. Submit the manufacturer's printed installation specifications to the City Engineer for review prior to start of work.

Unless otherwise specified, installation of jute netting shall conform with the following:

1. Attach jute mesh with wooden (deadman) stakes, minimum 18 inches in length (2x4 cut at an angle), or metal pins.

2. Position stakes approximately 3 feet apart (3 per square yard of fabric), domino pattern.

3. Drive stakes until all but 1 inch of crown is in the ground.

4. Overlap the fabric at least 18 inches in water flow direction.

5. Overlap edges minimum 8 inches, staking both edges securely.

6. Check slots with fabric buried at least 6 inches deep, shall be used every 25 feet in waterways or ditches.

7. The fabric shall be buried in anchor trenches of minimum 10 inches deep at the top and bottom ends of an installation to prevent undercutting of the fabric.

b. Topsoil Grading and Conditioning shall be in accordance with Subsection 3.4 - GRADING AND SITE PREPARATION herein, unless otherwise indicated.**]**

H. HEADER BOARD INSTALLATION:

1. Wood Header Board:

a. Install at the location and grades shown on the Contract Drawing, prior to planting.

b. Locate stakes at spliced corners and at intervals not to exceed 4-feet and drive slightly below the top of the header.

c. Nail 1”x2”x24” long heart redwood splice plates centered on joints with four 10d box nails to secure butt joints.

d. Provide a stake at a maximum of 2 feet at each side of splice.

e. Nail headers to stakes with two 16d (3 ½” ‘ long x 8 gauge) cement coated common nails at each stake. Stagger nails and clench protruding ends down.

3.5 WEED/PEST CONTROL

A. Unless specified otherwise, weed abatement shall apply to all planting areas. The abatement operation shall commence before planting but only after removals, grading, hardscape construction, installation of irrigation system, soil preparation, and fine grading of planting areas have been completed.

B. All herbicides for weed control shall be applied with a photosensitive dye which will produce a contrasting color when sprayed upon the ground. The dye shall be applied in a manner so as not to leave any stain upon surfaces.

C. Pesticides, as required, shall be applied by a licensed pest control applicator in accordance with the requirements of the California Food and Agricultural Code and specified herein. Within90days after the Notice-To-Proceed, a copy of the proposed application program shall be submitted to the City Engineer for review. The submittal shall include, but not be limited to the pesticides to be used, rates of application, methods of application, and areas to which pesticides are to be applied. Prior to commencement of application, the licensed pest control adviser must receive the City Engineer's approval of the program. The Contractor shall abide by all laws and codes governing weed abatement operations including but not limited to CAL-OSHA requirements and the State of California Healthly Schools Act of 2000 (AB2260).

C. Contractor shall notify the City Engineer a minimum of 72 hours prior to each application of pesticide/herbicide and shall indicate the hours during which the application will occur. No applications shall be made on Saturdays, Sundays, or legal holidays, unless otherwise prior approval by the City Engineer in writing.

D. Contractor responsibility during weed abatement operation and herbicide application shall include but not be limited to the following:

1. 72 hour written notice to the recreation director-in-charge, park and childcare patrons.
2. Submittal of a “Pest Control Recommendation Form” to the City Engineer.

3. A completed and accurate MSDS (Material Safety Data Sheet) shall be posted on the site of application, and the area of application shall be posted as such.
4. The application area shall be barricaded for public safety and appropriate signage, labels and warnings posted,
5. For sites over ½ acre in area, the contractor shall utilize a City Engineer approved plan of phasing the application. The plan shall be pre-approved by the City Engineer.

E. Any Contractor who is obligated under contract with the Department of Recreation and Parks for the construction or refurbishment of a park facility that involves the intended use of herbicides or other pesticides, must first notify the Pest Management Supervisor of the Forestry Division prior to any approved pesticide applications at any recreation/child care center. All pest control work performed at any facility shall fall within the guidelines of the Departments of Recreation and Parks IPM programs. In addition, each individual project will require a written recommendation by a licensed Pest Control Advisor for any pesticide applications.

Any questions regarding pesticide application and procedures at Recreation and Parks facilities shall be directed to the City Engineer and the RAP Forestry Group, Vegetative Management (213) 485-4826.

F. The following precautions shall be observed in handling and applying herbicides:

1. Before applying, the Contractor shall read and understand all instructions provided by the manufacturer.
2. Herbicidal product shall not be used when winds are gusty or in excess of 8 miles per hour, or when any other conditions exist which would result in drift.
3. Avoid combinations of pressure and nozzle type or adjustment that result in mist.
4. Do not apply during rain, or if rain is forecast within twelve hours. If rain occurs within a twelve-hour period, material must be reapplied after plant growth has dried out.
5. Contractor shall observe extreme care not to allow spray to contact desirable plant material. Use cardboard, plywood, or other appropriate material to shield plant materials outside of the treatment area from overspray.
6. Do not apply to bare ground.
7. Do not add other products to any herbicide mix, including spreader, stickers, or surfactants, unless required by the label directions and pre-approved by the Department of Recreation & Parks Pest Control Advisor (PCA)

G. The Contractor shall adhere to the following “Grow and Kill” methods:

Step 1. Clear site of all dead or living vegetative growth by hand or mechanical means.
Step 2. Thoroughly water all turf and planting areas daily to keep soil evenly moist for a period of at least two weeks.
Step 3. At the conclusion of the growth period, treat all plants within the treatment area with Roundup at an application rate of four (4) quarts of Roundup mixed in 50 gallons of clean water per acre applied by spraying. Thoroughly moisten all plant material with herbicide. If nutsedge (nutgrass) is present in any of the planting areas, “Manage” is recommended for control at a rate of 0.9. per gallon of water. Furthermore, the use of “Manage” requires the addition of 2 teaspoons (1/3 fluid ounce) of nonionic surfactant (No Foam A) to the mix.
Step 4. Do not water or otherwise disturb treated areas for a period of two (2)

weeks.

Step 5. After the two-week kill period, remove all dead plants. If any living plants are observed, the entire plant, including roots, shall be removed by hand. Minimize physical disturbance of the soil.

H. New and/or existing plants which in the opinion of the City Engineer have been damaged by the application of pesticide/herbicide shall be replaced by the Contractor at their expense.

I. At the end of each work week, a written report of that week's applications of all pesticides/herbicides shall be submitted to the City Engineer.

3.6 PLANTING

A. **General**: All plant materials, including plants previously approved at the nursery, shall be inspected prior to planting. The Contractor shall be responsible for the condition of all plants, planted or otherwise, until final acceptance by the City and termination of maintenance period. Contractor shall be obligated to honor all requirements of warranty as indicated herein.

1. Perform planting with materials and equipment according to procedures favorable to the optimum growth of the plant. Do not plant during windy conditions.

2. Except as noted for specimen planting, start all planting operations immediately following the completion and approval of the irrigation system.

B. **Protection and Storage**:

1. Keep all plant materials delivered to the job-site in a healthy condition for planting.

2. Do not allow plants to dry out.

3. Separate bare root stock and “heal in” in moist earth or other suitable material.

4. Cover the root ball of balled and burlapped plants with moist saw dust, wood chips, or other approved material.

C. **Layout and Plant Locations**:

1. Plant locations indicated on the Contract Drawings are approximate.

2. Plants may be re-spotted prior to planting as directed by the City Landscape Architect, without additional compensation to the Contractor.

3. Make a detailed layout of plants, etc., in the planting areas and obtain approval of the City Engineer prior to actual planting operations.

4. Locate the first row of plants in areas designated for on center spacing at one-half the designated spacing from the edge of the area.

5. Do not stretch the maximum specified spacing for each species shown on the plans.

6. Unless otherwise specified, all planting areas except lawn shall receive a three (3) inch deep layer of top dress mulch. Mulch shall be spread evenly throughout planting beds and tree watering basins. Do not bury ground cover.

D. Container Plants Backfill Mix:

1. Unless specified otherwise or required by the agricultural suitability and fertility analysis, container plants shall be backfilled with:

   a. Topsoil Type 1 or 2 depending on location.

   b. Fertilizer tablets with the following application rates:

   Container Size
   1 gallon = 1 tablet
   5 gallon = 2 tablets
   15 gallon = 6 tablets
   Larger than 15 gallon size – 2 tablets per half inch of trunk caliper.

2. All plants which settle deeper than specified above shall be raised to the correct level. After the plant has been placed, additional backfill shall be added to the hole to cover approximately one-half the height of the rootball. At this stage, water shall be added to the top of the partly filled hole to thoroughly saturate the rootball and adjacent soil.

3. The remainder of the hole shall be backfilled.

4. If planting tablets are used, they shall be set with each plant on the top of the rootball while plants are still in their containers so the required number of tablets to be used in each hole can be verified. After verification insert tablets 3” below the surface into the backfill mix spaced evenly around the plant.

5. Unless otherwise specified planting tablets shall not be used with California Native species.

D. Specimen Planting: When in close proximity to irrigation lines, plants in boxes (24-inches or larger) shall be planted before installation of lateral irrigation lines. Re-route irrigation lines in conflict with specimen plant locations to clear the root ball.

E. Tree and Shrub Planting:

1. Make planting holes approximately square with vertical sides the depth of the plant container and twice the width of the plant container or root ball and larger if necessary to permit handling and planting without injury to the root system. Install the root barrier and/or Modular Support System for Pavement over Roots where indicated on the Contract Drawings in accordance with the details and/or the manufacturer’s recommendations.

2. Do not plant plants with a broken or cracked root ball.

3. Open and remove plant containers in such a manner that the plant root is not injured.

4. Scarify native soil at the bottom of planting holes.

5. After "water settling" the bottom half of the planting hole, set the plant approximately in the center of the planting hole and adjust the root crown flush to finish grade.

6. Backfill balance of the planting hole with the specific backfill mix and fertilizer and "water settle".

7. Prune or remove any broken or damaged minor limbs. Any major damage to plant material shall be brought to the attention the City Engineer or authorized representative for evaluation.

8. Form a circular watering basin slightly larger than the planting hole; 6-inches high for trees and 3-inches high for shrubs. Make the bottom of the basin at surrounding finish grade. Water basin berms located in lawn areas shall be removed prior to the placement of mulch.

10. Restore the area around the plants to finish grade and dispose of excess soil.

11. After planting, plants shall be plumb with the root crown at its natural depth with respect to finish grade.

12. Tree Edging: Where trees are planted in lawn area, a minimum 3-foot diameter circle around each tree shall be maintained free of lawn area to avoid the growth-reducing effects of lawn area on trees. Mulch shall be used in the circle. This circle shall be kept clear of lawn area by the Contractor for the duration of the maintenance period.

H. **Lawn Planting**: Complete site preparation; apply weed and pest control and the fine grading before planting the lawn.

1. Sod Planting: The type of sod and the area to be sodded shall be in accordance with the Contract Drawings. Sod shall be machine cut to between 3/8” and 5/8” thick, not including top growth or thatch.

   Site shall be laser-graded to the specified thickness of the sod below finish grades. Soil conditioning and incorporation of reinforcement fibers shall be completed before sodding. No heavy equipment shall operate over the site after grading is completed.

   The site shall be moist but not wet when sod is laid. Sod shall be laid with closely fitted joints, and the ends of the strips shall be staggered forming a running bond pattern. Openings shall be plugged with sod or topsoil. Within 2 hours after installing sod and before rolling, the sod shall be lightly irrigated. All seams and joints shall then be rolled with a minimum 300 lb. water ballast roller until the sod is well bonded to the subgrade.

   The areas shall then be watered thoroughly to penetrate the subsoil at least 8 inches. Watering shall be repeated as necessary to keep the sod moist until rooted into the subgrade. Sodded areas shall be protected against foot traffic until the sod is well established.

3.7 PLANT STAKING AND ANCHORING

A. **Tree Staking**: Stake trees with galvanized steel pipeor wood lodgepole materials as indicated on the Drawings.

1. Install stakes vertically on the windward side of the tree. Position the stake at least 6-inch from the trunk at ground level and 30-inches into the soil in a manner to avoid injury to the roots or breaking the root ball.

2. Secure plant trunk to the stake with two ties; one just below the head of the tree and one halfway between finish grade and the top tie.

3. Make tie loop 1-inch greater in diameter than the trunk.

4. Attach tie to wooden stake with one furring nail at the tie locations described above. Attach tie to metal stakes through ¼-inch hole drilled at tie locations.

5. Secure wire ties by twisting the ends.

6. In parkways, locate the stake on the side away from the roadway.

B. **Tree Anchoring**: Anchor all trees larger than 2.5-inches (63 mm) caliper in lawn and/or paved areas. Install system sized and positioned as recommended by manufacturer and according to manufacturer's written instructions.

3.8 MAINTENANCE AND PLANT ESTABLISHMENT

A. **General Maintenance**: Maintain all areas on a continuous basis as they are completed during the progress of the work and during the establishment period. Continue to maintain the area of work until final acceptance of the Contract by the City. Maintenance shall include continuous operations of picking up trash and emptying trash cans daily, watering, weeding (including all broad leaf weeds in lawn areas), trimming, mowing, rolling, edging, cultivation, fertilization, spraying, control of pests, insects and rodents, reseeding, plant replacement (irrespective of cause) or any other operations necessary to assure normal plant growth. Any malfunctions of, or damage to the irrigation system caused by the Contractor in the execution of his work shall be repaired within 24 hours. The Contractor is responsible for keeping all plant material sufficiently watered during any irrigation failures.

B. **Plant Establishment**:

1. Request a final inspection to begin the plant establishment and maintenance period after all planting and related work have been completed in accordance with the Contract Documents.

2. After planting is completed and approved, a field notification will be issued to the Contractor to establish the effective beginning date of the plant establishment period.

3. The City Engineer may extend the plant establishment period if the planted areas are improperly maintained, or if appreciable plant replacement is required, or other corrective work becomes necessary.

   The plant establishment period for all plants shall be for the duration of 120 calendar days**.**

4. Plant Establishment is considered as part of the contract works and paid for in accordance with Section 37 - PAYMENTS of the General Conditions. The Plant Establishment consists of:

   a. Maintenance of planting, including watering, plant replacement, weed and pest control, pruning/edging, fertilization and any other conservation tasks to assure the standard rate of healthy growth and project aesthetics.

   b. Maintenance and scheduling of irrigation systems.

   c. Daily Site clean-up which includes, but is not limited to trash pick-up, clearing of catch basins, and sweeping of walks.

   d. Maintain safe conditions.

   f. Perform other work as determined necessary by the City Engineer as specified in these Specifications.

   g. Keep the rootzone of all vegetation moist during the establishment period. If irrigation system is not available provide whatever watering systems is necessary to provide adequate watering during the establishment period without causing erosion detrimental to the planting area. Water all plants immediately after planting.

5. Contractor shall submit the form entitled MONTHLY MAINTENANCE SCHEDULE. They shall provide unit cost for all tasks proposed. Form shall be standard type used in the industry and completed to meet the intent of the plant establishment. This form establishes a reasonable minimum of services for plant establishment, and it shall remain the responsibility of the Contractor to provide the necessary services beyond that minimum for situations due to his performance or lack thereof, to establish the plant materials in situations prior to acceptance of the Contract by the City Engineer.

6. If approved by the City Engineer, the Contractor, at their expense, may use plants of a larger container size than those originally specified for replacement plants during the first sixty (60) working days of the plant establishment period. All replacement plants are subject to the same inspection requirements set forth in these specification for original plant installation.

7. After 120 calendar days of the plant establishment period have been completed, replacement of plants, except for ground cover plants shall be:

1-gallon	for seeded, pot, and liner-size plants
5-gallon	for 1-gallon size plants
15-gallon	for 5-gallon size plants
24-inch box	for 15-gallon size plants

1. Not more than twenty (20) working days prior to completion of the plant establishment period, the Contractor shall apply one application of herbicide conforming to the provisions under “Weed/Pest Control” of this Section or elsewhere in the Project Manual.

2. During the plant establishment period, damage caused by erosion shall be repaired.

3. Reconditioning: At thirty (30) day intervals after planting, apply and rates of commercial fertilizer as per recommendations of the Agricultural Sustainability and Fertility Analysis. Thoroughly water the area after applying fertilizer. All fertilizer applications shall be done under the inspection of the City Engineer or authorized representative. Reconditioning shall be applied to trees, shrubs, vines, and ground cover areas as specified within the Project Manual. The Contractor shall notify the City Engineer at least five (5) days prior to applying each application of commercial fertilizer. At five (5) weeks after lawn seeding the Contractor shall apply a slow release 38-0-0 granular fertilizer at a rate of 15 pounds per 1000 sq. ft. to all lawn areas.

4. Keep all planted areas free of weeds.

5. Trees and shrubs shall be healthy and vigorous at the completion of the maintenance period. Broken or vandalized tree stakes shall be repaired to a condition as initially installed within seven (7) days.

6. Plants shall be kept watered and unsuitable plants shall be replaced within 7 days of notification.

7. During the plant establishment period, the automatic irrigation system shall be operated in the automatic mode, unless otherwise permitted by the City Engineer. When any automatic irrigation component is operated manually on a working day, that day will not be credited as a plant establishment working day unless the manual operation has been permitted in writing by the City Engineer.

17. Prior to the beginning of the plant establishment period, the Contractor shall submit for approval of the City Engineer, a proposed watering schedule program for each irrigation during and after the plant establishment period. The schedules shall be based upon an annual cycle and precipitation indicated below and the watering schedule. Contractor shall follow the watering schedule closely and shall not deviate from the schedule without the approval from the City Engineer. The submitted schedule shall provide the watering times for each valve or station for different time periods.

18. Upon completion of the plant establishment, Contractor shall submit the Final Watering schedule encased in hermetically sealed plastic. It shall be permanently attached by a short chain to the inside of the controller.

19. A Contractors representative who is competent in operating the irrigation controller(s) shall be present at the job-site when watering is in progress.

20. As part of the plant establishment period, thirty (30) days prior to a completion of the plant establishment period, written instruction shall be submitted to the City Engineer by a qualified person from the Contractor's personnel on the use and adjustment of the irrigation controller installed.

21. The approved written instructions by the City Engineer on the use and adjustment of the installed automatic controllers shall be performed and the approved watering schedule program shall be implemented within the last ten (10) working days of the plant establishment period. Such programming shall not relieve the Contractor of his responsibility to apply sufficient water as conditions may require to keep the soil and plant roots moist.

22. Weeds in all areas of the plants shall be controlled as specified herein or as directed by the City Engineer.

23. Surplus earth, papers, trash, and debris, within planting areas shall be removed and disposed of off-site. Such disposal shall conform to governmental regulations of all agencies having jurisdiction at the disposal site.

24. During the plant establishment period, any plant material shall be pruned by the Contractor at his expense, when directed to do so by the City Engineer.

C. Lawn Maintenance:

1. Perform the first mowing of lawn areas when the grass is 2-1/2 inches high and repeat as often as is necessary to maintain the lawn at a height of 1-1/2" inches. In no case shall the lawn be cut lower than 1-1/2 inches in height or allowed to grow higher than 3" unless indicated otherwise. The lawn shall be mowed a minimum of 2 times during the maintenance period.

2. After each cutting, the edge of the grass shall be trimmed to a neat and uniform line. Where trees occur in lawn areas, the grass shall be removed and neatly edged 18 inches away from the trees.

3. All grass clippings shall be collected and removed from the job site and the entire project shall be so cared for that a neat and clear condition will be presented at all times.

4. All lawn areas shall have 95 percent coverage with bare areas not exceeding three square inches.

5. Keep all lawn areas free of weeds.

E. Pruning: The City Engineer will designate any required pruning of plants at the start of the plant establishment period. Perform the pruning as part of the plant establishment work.

F. Damage:

1. Replace as soon as possible plants that show signs of failure to grow at any time during the Contract period or those plants so injured or damaged so as to render them unsuitable for the purpose intended, at no additional cost to the City.

   Provide replacement plants of the same type and size to match adjacent plants. New plants shall be inspected at the source, prior to the delivery. Furnish plant and fertilizer as specified. New plantings shall be subject to a new 90 days establishment period and guarantee specified herein.

2. Damage to planting areas shall be repaired immediately.

   Depressions caused by vehicles or foot traffic shall be filled with topsoil and leveled.

G. Final Inspection/Final Acceptance:

1. Upon completion of the plant establishment period, a final inspection for

acceptance will be performed by the City Inspector and City Engineer or authorized representative. The Contractor shall request for inspection at least three (3) working days prior to the anticipated date. For this inspection, the site must be thoroughly cleared of all debris and excess material removed. If work fails to pass final inspection, any subsequent inspection must be rescheduled as per above, and will be charged to the Contractor.

2. If the plant establishment period is satisfactorily completed ahead of other work included in the Contract, the plants establishment shall be extended and shall be the responsibility of the Contractor until all other work has been completed and accepted by the City.

3.9 GUARANTEE

A. **General**: Guarantee the performance of maintenance and the life of all trees for a period of one year from the date of acceptance of the contract. Guarantee all other container plants for the duration of the Plant Establishment Period.

B. **Deficiencies**: Should any deficiencies develop within the specified guarantee period, correct such deficiencies to the full satisfaction of the City Engineer without added expense to the City. All replacement plants shall be subject to a new guarantee for a period as described herein above.

C. Prior to project acceptance and the release of final payment and project retention can be made, Contractor shall provide guaranty faithful performance bonds to guarantee the performance of maintenance service specified herein and to conform with the guarantee provisions herein and in Section 28 – GUARANTY-WARRANTY. The amounts of bonds required shall be 1/2 % of the Total Contract Price or $10,000 whichever is greater for a period of one year. This amount shall continue in full force and effect for the duration of the plant establishment period and the duration of the guaranty and warranty period.

3.10 FINAL CLEAN-UP

A. **Required**: Comply with provisions of Section 01740 – REMOVAL, CLEANUP AND DEMOBILIZATION of the GENERAL REQUIREMENTS. Upon completion of all landscape work and before final acceptance, remove all tools, surplus materials, apparatus, debris, weeds and exterminate rodents from the job-site. Leave the job-site in a neat, clean condition, acceptable to the City Inspector. Wash, clean and leave all paved areas without stains.

END OF SECTION

SECTION 03100
CONCRETE FORMWORK

PART 1 -- GENERAL

1.1 THE REQUIREMENT

A. The CONTRACTOR shall furnish all materials for concrete formwork, bracing, shoring, and supports and shall design and construct all falsework and scaffolding, all in accordance with the provisions of the Contract Documents.

B. DEFINITIONS

1. Exposed Concrete: All concrete that is visible in the finished work, including concrete to be painted.

2. Unexposed Concrete: All other concrete that is concealed in the finished work, including plastered surfaces and attic and utility spaces.

1.2 RELATED WORK SPECIFIED ELSEWHERE

A. Section 02220 Earthwork.

B. Section 03200 Reinforcement Steel.

C. Section 03290 Joints in Concrete.

D. Section 03300 Cast-in-Place Concrete.

E. Section 03315 Grout.

F. Section 03370 Concrete Curing.

G. Section 05300 Metal Decking and Open-Web Steel Joists.

H. Section 07900 Joint Sealants.

1.3 REFERENCE SPECIFICATIONS, CODES, AND STANDARDS

A. Comply with the reference standards and Standard Specifications as specified in the GENERAL REQUIREMENTS.

B. Comply with the current provisions of the following Codes and Standards, as applicable:

1. Government Standards:

PS 1	U.S. Product Standard for Concrete Forms, Class I
PS 20	American Lumber Softwood Standard
CSS	Caltrans Standard Specifications

2. Commercial Standards:

ACI 347	Recommended Practice for Concrete Formwork

1.4 CONTRACTOR SUBMITTALS

A. Submittals shall be made in accordance with the GENERAL REQUIREMENTS.

B. The following submittals and specific information shall be provided.

1. Falsework Calculations and Drawings: The CONTRACTOR shall comply with all the latest applicable Sections of the Division of Industrial Safety, Construction Safety Orders. For all falsework or vertical shoring installations where the height of the falsework or vertical shoring, as measured from the top of the sills to the soffit of the superstructure, exceeds 14 feet, or where individual horizontal span lengths exceed 16 feet, or where provision for vehicular, pedestrian, or railroad traffic through falsework or vertical shoring is made, Plans and Calculations shall be prepared and signed by a Civil Engineer, registered in the State of California. A copy of the falsework plan or shoring layout shall be available on the job site at all times. The Engineer who designed the falsework or vertical shoring shall personally inspect such work and provide a written certification that the work conforms to the design.

Scaffolding Calculations and Drawings: Scaffolding shall be defined in accordance with and shall conform to the Construction Safety Orders of the Division of Industrial Safety. If scaffolding is constructed for this project over or adjacent to traffic, or suspended from the traveled way, the Contractor shall submit to the Engineer working drawings for scaffolding systems. The scaffolding manufacturer's name, address, and phone number shall be shown on the working drawings. The working drawings, details and calculations for the scaffolding shall be stamped and signed by an engineer who is registered as a Civil Engineer in the State of California. In addition, prior to submitting the working drawings to the Engineer, the working drawings shall be stamped and signed by an independent reviewer who is registered as a Civil Engineer in the State of California. The independent reviewer shall not be employed by the same entity preparing the working drawings.

2. The CONTRACTOR shall, in accordance with the requirements in GENERAL REQUIREMENTS file with the City detailed plans of the falsework and scaffolding proposed to be used. Such plans and calculations shall be in sufficient detail to indicate the general layout, pattern layout, dimensioned to precisely locate grooves, form panel jointing, and similar features. The submittal shall also include sizes of members, anticipated stresses, grade of materials to be used, and typical soil conditions.

a. Form Release Compound

b. Form Ties and Spreaders

c. Installation Instructions

1.5 QUALITY ASSURANCE

A. Tolerances: The variation from established grade or lines shall not exceed 1/4-inch in 10 feet and there shall be no offsets or visible waviness in the finished surface. All other tolerances shall be within the tolerances specified in ACI 117, unless noted otherwise.

B. Laborers: Use adequate number of skilled laborers who are thoroughly trained and experienced in the necessary crafts and who are completely familiar with the specified requirements and the methods needed for proper performance of the work of this Section.

C. Prior to construction of formwork for concrete beams and slabs above grade, Contractor shall conduct a meeting at the site to determine and define all cambers required for the project. ENGINEER, Contractor and Contractor's formwork installer shall be in attendance at this meeting.

D. Engage a licensed surveyor to verify that work is within specified tolerances. Surveyor shall report in writing to the ENGINEER, with copy to Contractor, certifying work as acceptable or indicating deviations from allowable tolerances.

1.6 DELIVERY, STORAGE, AND HANDLING

A. Deliver materials for forms in timely manner to ensure uninterrupted progress.

B. Store materials by methods that prevent damage and permit ready access for inspection and identification.

PART 2 -- PRODUCTS

2.1 GENERAL

A. Except as otherwise expressly accepted by the ENGINEER, all lumber brought on the job site for use as forms, shoring, or bracing shall be new material. All forms shall be smooth surface forms and shall be of the following materials:

Walls	-	Steel or plywood panel
Columns	-	Steel, plywood or fiber glass
Roof, floor, deck and soffit	-	Plywood, Steel Panels
All other work	-	Steel panels, plywood or tongue and groove lumber

2.2 FORM AND FALSEWORK MATERIALS

A. Materials for concrete forms, formwork, and falsework shall conform to the following requirements:

1. Lumber shall be Douglas Fir or Southern Pine, construction grade or better, in conformance with U.S. Product Standard PS20.

2. Plywood for concrete formwork shall be new, waterproof, synthetic resin bonded, exterior type Douglas Fir or Southern Pine plywood manufactured especially for concrete formwork and shall conform to the requirements of PS 1 for Concrete Forms, Class I, and shall be edge sealed.

3. Form materials shall be metal, wood, plywood, or other material approved by the ENGINEER that will not adversely affect the concrete and will facilitate placement of concrete to the shape, form, line, and grade shown. Metal forms shall be an approved type that will accomplish such results.

   Forms for exposed exterior concrete surfaces shall be American Plywood Association (APA) High Density Overlay (HDO) Plyform Class I Ext. 48" X 96" X 3/4" minimum thickness.

   Forms for other concrete surfaces shall be American Plywood Association (APA) Douglas Fir B-B Plyform Class I Exterior PS 1, 3/4-inch minimum thickness.

4. Coated Form Plywood: For exposed painted concrete, plastic overlaid plywood of grade

specified above, factory coated with a form coating and release agent equal to “Noxcrete”.

5. Tube forms: Sonoco “Seamless Sonotubes”, Alton Building Products “Sleek Seamless Standard Wall”, or equal, type leaving no marks in concrete, 1-piece lengths for full required height.

B. Unless otherwise shown, exterior corners in exposed concrete members shall be provided with 3/4-inch chamfers. Re-entrant corners in concrete members shall not have fillets unless otherwise shown.

C. Forms and falsework to support the roof and elevated floor slabs shall be designed for the total dead load, and a minimum construction live load of 30 psf.

D. Forms proposed for use at bridges shall comply with Caltrans Standard Specification Section 51.

2.3 FORM TIES

A. Form ties with integral waterstops shall be provided with a plastic cone or other suitable means for forming a conical hole to insure that the form tie may be broken off back of the face of the concrete. The maximum diameter of removable cones for rod ties, or of other removable form-tie fasteners having a circular cross-section, shall not exceed 1-1/2-inches; and all such fasteners shall be such as to leave holes of regular shape for reaming.

B. Form ties for water-retaining structures shall have integral waterstops. Removable taper ties may be used except for water bearing structures, when approved by the ENGINEER. A preformed neoprene or polyurethane tapered plug sized to seat at the center of the wall shall be inserted in the hole left by the removal of the taper tie.

2.4. FORM RELEASE COMPOUND

A. Form release compound shall be non-staining clear coating free from oil, silicone, wax, and not grain-raising, Use “Nox-crete Form coating” by Nox Crete, “Formshield” by Euclid Chemical Company, “Burke Bio Release” by Edoco, or “Cast-Off” by Sonneborn, or an approved equal. Where form liners are used, provide form compound recommended by form liner manufacturer. However, regardless of product use, provide form compound that is VOC compliant for the area used.

2.5 EARTH FORMS

Unless otherwise indicated or required, concrete for footings and pile caps may be placed directly against vertical excavated surfaces, provided the material will stand without caving, that minimum reinforcing steel clearances are maintained, and suitable provisions are taken to prevent raveling of top edges or sloughing of loose material from walls of excavation. Sides of excavation shall be made with a neat cut and the width made as indicated. Concrete which is exposed to view on exterior shall be formed to maintained depth of 6 inches below finished grade.

PART 3 -- EXECUTION

3.1 GENERAL

A. Forms to confine the concrete and shape it to the required lines shall be used wherever necessary. The CONTRACTOR shall assume full responsibility for the adequate design of all forms, and any forms which are unsafe or inadequate in any respect shall promptly be removed from the WORK

and replaced at the CONTRACTOR's expense. A sufficient number of forms of each kind shall be provided to permit the required rate of progress to be maintained. The design and inspection of concrete forms, falsework, and shoring shall comply with applicable local, state and Federal regulations. Plumb and string lines shall be properly installed before concrete placement and shall be maintained during placement. Such lines shall be used by CONTRACTOR's personnel and by the INSPECTOR and shall be in sufficient number and properly installed. During concrete placement, the CONTRACTOR shall continually monitor plumb and string line form positions and immediately correct deficiencies.

B. Concrete forms shall conform to the shape, lines, and dimensions of members as called for on the Drawings, and shall be substantial, free from surface defects, and sufficiently tight to prevent leakage. Forms shall be properly braced or tied together to maintain their position and shape under a load of freshly-placed concrete. If adequate foundation for shores cannot be secured, trussed supports shall be provided.

C. Camber: Place suitable jacks, wedges, or similar means to induce camber and to correct settlement in forms before and during concrete placing. Camber shall be as determined in pre-installation meeting specified above. In general, formwork shall be capable of accommodating camber of 1/8" per 10' of span plus 1/4".

3.2 FORM DESIGN

A. All forms shall be true in every respect to the required shape and size, shall conform to the established alignment and grade, and shall be of sufficient strength and rigidity to maintain their position and shape under the loads and operations incident to placing and vibrating the concrete. Suitable and effective means shall be provided on all forms for holding adjacent edges and ends of panels and sections tightly together and in accurate alignment so as to prevent the formation of ridges, fins, offsets, or similar surface defects in the finished concrete. Plywood, 3/4-inch and greater in thickness, may be fastened directly to studding if the studs are spaced close enough to prevent visible deflection marks in the concrete. The forms shall be tight so as to prevent the loss of water, cement and fines during placing and vibrating of the concrete. Specifically, the bottom of wall forms that rest on concrete footings or slabs shall be provided with a gasket to prevent loss of fines and paste during placement and vibration of concrete. Such gasket may be a 1- to 1-1/2-inch diameter polyethylene rod held in position to the underside of the wall form. Adequate clean-out holes shall be provided at the bottom of each lift of forms. The size, number, and location of such clean-outs shall be as acceptable to the INSPECTOR.

B. Actual form design shall conform to ACI 347.

C. For concrete mixes characterized as self-consolidating concrete, high performance concrete, or known to contain components that can potentially extend the plastic state of the concrete, the forms shall be designed to sustain the resulting hydrostatic pressure for the total pour height or pressure head for that day of pour, whichever is more. For such mixes, appropriate set-time tests shall be conducted in preparation of the mix design and this information made available to the form designer.

D. Forms proposed for use at bridges shall comply with Caltrans Standard Specification Section 51-1.

3.3 CONSTRUCTION

A. Vertical Surfaces: All vertical surfaces of concrete members shall be formed, except where placement of the concrete against the ground is shown. Not less than 1-inch of concrete shall be added to the thickness of the concrete member as shown where concrete is permitted to be placed against trimmed ground in lieu of forms. Such permission will be granted only for members of comparatively limited height and where the character of the ground is such that it can be trimmed

to the required lines and will stand securely without caving or sloughing until the concrete has been placed.

B. Construction Joints: Concrete construction joints will not be permitted at locations other than those shown or specified, except as may be acceptable to the ENGINEER. When a second lift is placed on hardened concrete, special precautions shall be taken in the way of the number, location, and tightening of ties at the top of the old lift and bottom of the new to prevent any unsatisfactory effect whatsoever on the concrete. Pipe stubs and anchor bolts shall be set in the forms where required.

C. Provide for openings, offsets, keyways, recesses, moldings, reglets, chamfers, blocking, screeds, bulkheads, anchorages, inserts and other features as required. Fill form joints to produce smooth surfaces, intersections, and arrises. Use polymer foam or equivalent fillers at joints and where forms abut or overlap existing concrete to prevent leakage of mortar.

D. Set embedded piping and rough hardware in forms to be embedded in concrete in a manner so that the required strength of the structure will not be reduced.

E. Apply form release compound on formwork in accordance with manufacturer's instructions prior to placing of reinforcing steel, anchorages, and embedded items.

F. Construct forms suitable for removal without hammering or prying against and damaging the concrete.

G. Openings in Forms: Provide as required to facilitate cleaning and inspection. Close such openings immediately after cleaning and before placement of concrete. Provide air relief holes in formed top surfaces of concrete elements as required.

H. Form Ties:

1. Embedded Ties: Holes left by the removal of form tie cones shall be clean and rough before being filled with mortar as specified for "Finish of Concrete Surfaces" in Section 03300, "Cast-in-Place Concrete". Wire ties for holding forms will not be permitted. No form-tying device or part thereof, other than metal, shall be left embedded in the concrete. Ties shall not be removed in such manner as to leave a hole extending through the interior of the concrete members. The use of snap-ties which cause spalling of the concrete upon form stripping or tie removal will not be permitted. If steel panel forms are used, rubber grommets shall be provided where the ties pass through the form in order to prevent loss of cement paste. Where metal rods extending through the concrete are used to support or to strengthen forms, the rods shall remain embedded and shall terminate not less than 1-inch back from the formed face or faces of the concrete.

2. Removable Ties: Where taper ties are approved for use in non water bearing structures, the larger end of the taper tie shall be on the wet side of walls in water retaining structures. After the taper tie is removed, the hole shall be thoroughly cleaned and roughened for bond. A precast neoprene or polyurethane tapered plug shall be located at the wall centerline. The hole shall be completely filled with non-shrink grout for water bearing and below-grade walls. The hole shall be completely filled with non-shrink or regular cement grout for above-grade walls which are dry on both sides. Exposed faces of walls shall have the outer 2-inches of the exposed face filled with a cement grout which shall match the color and texture of the surrounding wall surface.

I. Coordination:

1. Provide slots, openings, chases, recesses, grounds, nailers and screeds required by other trades and subsequent work.

2. Ensure that conduit, pipes, sleeves, anchors, hangers and ties are secured in forms before concrete is placed.

3.4 REUSE OF FORMS

Forms may be reused only if in good condition and only if acceptable to the INSPECTOR. Light sanding between uses will be required wherever necessary to obtain uniform surface texture on all exposed concrete surfaces. Exposed concrete surfaces are defined as surfaces which are permanently exposed to view. In the case of forms for the inside wall surfaces of water retaining structures, unused tie rod holes in forms shall be covered with metal caps or shall be filled by other methods acceptable to the INSPECTOR.

3.5 REMOVAL OF FORMS

Careful procedures for the removal of forms shall be strictly followed, and this work shall be done with care so as to avoid damage the concrete. No heavy loading on green concrete will be permitted. The period of time for formwork removal shall be in accordance with ACI 318, Chapter 6 and Section 303-1.4 of Standard Specifications and as follows:

1. Do not remove formwork until concrete has attained sufficient strength to support its own weight and all superimposed loads including construction loads and to permit form and falsework removal with complete safety.

2. In the case of concrete members subject to bending stresses, where the member relies upon forms for vertical support, forms shall remain in place until test cylinders attain a minimum comprehensive strength of 75 percent of the 28-day strength specified in Section 03300, "Cast in-Place Concrete", provided, that no forms shall be disturbed or removed under individual panel or unit before the concrete in the adjacent panel or unit has attained 75 percent of the specified 28-day strength and has been in place for a minimum of 7 days.

3. Forms for roofs and elevated slabs shall remain in place a minimum of 10 days after concrete has been placed.

4. Forms for all vertical walls and columns shall remain in place at least 3 days after the concrete has been placed.

5. Formwork removal shall also be subject to the curing requirements of Section 03370 of these Specifications and as authorized by the ENGINEER.

6. Reshore structural members as specified below because of design requirements or construction conditions to permit successive construction.

The time required to establish said strength shall be determined by the ENGINEER based on test cylinders made for this purpose from the concrete placed and in accordance with ACI 318 and the curing requirements of Section 03370. If the time so determined is more than the minimum time specified above, then that time shall be used as the minimum length of time. Forms for all parts of the WORK not specifically mentioned herein shall remain in place for periods of time as determined by the ENGINEER.

3.6 FORMWORK TOLERANCES

A. Deflection: Limit deflection of forming surfaces from concrete pressure to L/240.

B. Finish Lines: Position formwork to maintain hardened concrete finish lines within following permissible deviations.

1. Variation from Plumb:

In 10'-0"	1/4” max.
In any story or 20'-0"	3/8” max.
In 40'-0" or more	3/4” max.

2. Variation from Level or Grades Indicated

In 10'-0"	1/4” max.
In any bay or 20'-0" maximum	3/8”
In 40'-0" or more	3/4” max.

C. Building Lines: Variation of linear building lines from established position in plan and related position of columns, walls and partitions:

1. In any bay or 10'-0" maximum	1/2”
2. In 40'-0" or more	1”

D. Slab Openings: Variations in size and location of sleeves and slab openings shall not exceed 1/4”.

3.7 MAINTENANCE OF FORMS

Forms shall be maintained at all times in good condition, particularly as to size, shape, strength, rigidity, tightness, and smoothness of surface. Forms, when in place, shall conform to the established alignment and grades. Before concrete is placed, the forms shall be thoroughly cleaned. The form surfaces shall be treated with a nonstaining mineral oil or other lubricant acceptable to the ENGINEER. Any excess lubricant shall be satisfactorily removed before placing the concrete. Where field oiling of forms is required, the CONTRACTOR shall perform the oiling at least two weeks in advance of their use. Care shall be exercised to keep oil off the surfaces of steel reinforcement and other metal items to be embedded in concrete.

3.8 FALSEWORK

A. The CONTRACTOR shall be responsible for the design, engineering, construction, maintenance, and safety of all falsework, including staging, walkways, forms, ladders, and similar appurtenances, which shall equal or exceed the applicable requirements of the provisions of the OSHA Safety and Health Standards for Construction, the requirements of the Construction Safety Orders of the California Division of Industrial Safety, and the requirements specified herein.

B. All falsework shall be designed and constructed to provide the necessary rigidity and to support the loads. Falsework for the support of a superstructure shall be designed to support the loads that would be imposed if the entire superstructure were placed at one time.

C. Falsework shall be placed upon a solid footing, safe against undermining, and protected from softening. When the falsework is supported on timber piles, the maximum calculated pile loading shall not exceed 20 tons. When falsework is supported on any portion of the structure which is already constructed, the load imposed by the falsework shall be spread, distributed, and braced in such a way as to avoid any possibility of damage to the structure.

D. Reshoring:

1. Minimum reshoring with falsework shall consist of not less than half the full required falsework added under the last placed floor over which full falsework is to be placed for the next floor above. Leave reshoring in place for at least 10 days after the floor above is placed, but in no case remove falsework until the next concrete placing has attained a compressive strength equal to 75% of that required for the 28 days age as determined by controlled test cylinders.

2. Maintain a form and falsework removal record.

E. Falsework proposed for use at bridges shall comply with Caltrans Standard Specification Section 51.

(END OF SECTION)

SECTION 03200
REINFORCEMENT STEEL

PART 1 -- GENERAL

1.1 THE REQUIREMENT

A. The CONTRACTOR shall furnish, fabricate, and place all concrete reinforcement steel, welded wire fabric, couplers, and concrete inserts for use in reinforced concrete and masonry construction and shall perform all appurtenant work, including all the wires, clips, supports, chairs, spacers, and other accessories, all in accordance with the Contract Documents.

1.2 RELATED WORK SPECIFIED ELSEWHERE

A. Section 03100 Concrete Formwork.

B. Section [03290] Joints in Concrete.

C. Section [03300] [03310] Cast-in-Place Concrete.

D. Section [03313] Lightweight Structural Concrete.

1.3 REFERENCE SPECIFICATIONS, CODES, AND STANDARDS

A. Comply with the reference standards of the GENERAL REQUIREMENTS.

B. Comply with the current provisions of the following Codes and Standards, as applicable:

Commercial Standards:

ACI 315	Details and Detailing of Concrete Reinforcement.
ACI 318	Building Code Requirements for Reinforced Concrete.
ACI 350	Code Requirements for Environmental Engineering Concrete Structures.
ACI 530	Building Code Requirements & Specifications for Masonry Structures
WRI	Manual of Standard Practice for Welded Wire Fabric
AWS D1.4	Structural Welding Code - Reinforcing Steel
ASTM A185	Specification for Welded Steel Wire Fabric For Concrete Reinforcement.
ASTM A497	Welded Deformed Steel Wire Fabric for Concrete Reinforcement.
ASTM A615	Specification for Deformed and Plain Billet-Steel Bars for Concrete Reinforcement.
ASTM A706	Low-alloy Deformed Steel Bars for Concrete Reinforcement
ASTM A775	Specification for Epoxy-Coated Steel Reinforcing Bars

ASTM A884	Specification for Epoxy-Coated Steel Wire Reinforcement
CRSI	Manual of Standard Practice
CRSI	Recommended Practice for Placing Bar Supports, Specifications and Nomenclature
CRSI	Recommended Practice for Placing Reinforcing Bars

2. Government Standards:

CSS	Caltrans Standard Specifications
GWP	Global Warming Potential (maximum acceptable carbon emission limits, established by the California Department of General Services)

1.4 CONTRACTOR SUBMITTALS

A. General Requirements

1. Submittal shall be made in accordance with the GENERAL REQUIREMENTS (GR).

2. Buy Clean California Act.

a. For project specifications that include GR Section 1601, Buy Clean California Act, bidders shall submit current Environmental Product Declarations (EPDs) for each type of reinforcing steel material (A615, A706) from the originating mill used in the project as well as corresponding mill certifications. When material comes from different mills, an EPD and mill certification will be required for each mill from which the material has been obtained.

b. An EPD must conform to the following:
   1) Shall be facility-specific manufacturer/mill EPD.
   2) Be independently verified in accordance with ISO 14025 (Type III).
   3) Be developed according to the guidelines of the applicable Product Category Rule (PCR), as identified by the Department of General Services, State of California.
   4) Have a valid date that has not expired.
   5) Shall not exceed the Global Warming Potential (GWP) limit as required by GR Section 1601.

c. EPD shall be submitted concurrently with the product's submittal for review and approval.

d. Specified epoxy-coated or other specified coated reinforcing steel are exempt from having an associated EPD.

B. The following submittals and specific information shall be provided.

1. The CONTRACTOR shall furnish Bill of Materials for rebar, including separate total weights in pounds for plain and epoxy coated reinforcing steel, as well as shop bending diagrams, placing lists, splice lengths and location, and drawings of all reinforcement steel prior to fabrication in accordance with GENERAL REQUIREMENTS, **[**only if the reinforcing details differ from that shown on the plans**]**.

2. Details of the concrete reinforcement steel and concrete inserts shall be submitted by the CONTRACTOR at the earliest possible date after receipt by the CONTRACTOR of the Notice

to Proceed. Said details of reinforcement steel for fabrication and erection shall conform to ACI 315 and the requirements specified and shown. The shop bending diagrams shall show the actual lengths of bars, to the nearest inch measured to the intersection of the extensions (tangents for bars of circular cross section) of the outside surface. The shop drawings shall include bar placement diagrams which clearly indicate the dimensions of each bar splice.

3. Where mechanical couplers are required or permitted to splice reinforcement steel, the CONTRACTOR shall submit Los Angeles City Department of Building and Safety (LADBS) Research Report approval and manufacturer's literature which contains instructions and recommendations for installation for each type of coupler used; certified test reports which verify the load capacity of each type and size of coupler used; and shop drawings which show the location of each coupler with details of how it is to be installed in the formwork.

4. If reinforcement steel is required or permitted to be spliced by welding at any location, the CONTRACTOR shall submit mill test reports which shall contain the information necessary for the determination of the carbon equivalent as specified in AWS D1.4. The CONTRACTOR shall submit a written welding procedure for each type of weld for each size of bar which is to be spliced by welding; merely a statement that AWS procedures will be followed is not acceptable.

1.5 QUALITY ASSURANCE

A. All reinforcing steel fabrication shall be performed in a LADBS licensed fabricator shop for rebar.

B. The CONTRACTOR shall make provisions for sampling reinforcing steel delivered to the job site. Two sampling bars, cut from different bars and 3 feet in length for bar sizes # 3 through # 5 and 5 feet in length for bars sizes # 6 and larger, shall be taken from each **[**10**]** tons or fraction thereof, of each size and heat number delivered to the job site. When the name of the manufacturer, heat identification number, or chemical analysis is not known, the sampling interval shall be each 2.5 tons or fraction thereof, of each bar size and heat number. Tests shall consist of 2 bent tests and 2 tensile tests. Costs of initial tests will be paid by the CITY. Additional tests due to material failing initial tests shall be paid by the CONTRACTOR.

C. If reinforcement steel is welded at any location, the CONTRACTOR shall submit certifications of procedure qualifications for each welding procedure used and certification of welder qualifications, for each welding procedure, and for each welder performing the work. Such certification and qualifications shall be as required by the Los Angeles Department of Building and Safety.

D. The CONTRACTOR shall provide samples of each type of weld used in the work in a quantity and of dimensions adequate for testing. At the discretion of the INSPECTOR, radiographic testing of direct butt welds will be performed. The CONTRACTOR shall provide assistance necessary to facilitate testing. The CONTRACTOR shall repair any weld which fails to meet the requirements of AWS D1.4. The costs of testing will be paid by the CITY; except, the costs of all tests which fail to meet specified requirements shall be paid by the CONTRACTOR.

E. The CONTRACTOR shall provide to the INSPECTOR written identification of reinforcement steel by manufacturer's heat number and mil certification, and the fabricator's release number and type from the point of fabrication to the place of final incorporation of the rebar into the work.

1.6 MARKING AND SHIPPING

A. Tag bundled bars with identification, and transport and store so as not to damage any material. Use metal tags indicating size, length and other marking shown on placement drawings. Maintain tags after bundles are broken.

PART 2 -- PRODUCTS

2.1 REINFORCEMENT STEEL

A. All reinforcement steel for all cast-in-place reinforced concrete construction shall conform to the following requirements:

1. Bar reinforcement shall conform to the requirements of ASTM A615, Grade 60 Billet Steel Reinforcement with supplementary requirement S-1, and ASTM A706 for rebars subject to welding, or as otherwise shown.

2. Bar reinforcement for wall boundary elements, special moment frames, or when subject to welding, shall conform to ASTM A706, unless noted otherwise.

3. Welded wire fabric reinforcement shall conform to the requirements of ASTM A185 , or ASTM A497 and the details shown; provided, that welded wire fabric with longitudinal wire of W9.5 size wire shall be either furnished in flat sheets or in rolls with a core diameter of not less than 10 inches; and provided further, that welded wire fabric with longitudinal wires larger than W9.5 size shall be furnished in flat sheets only.

4. Spiral reinforcement may be cold-drawn steel wire conforming to the requirements of ASTM A82, when approved by the ENGINEER.

5. All reinforcements shall be shop fabricated. Bending of reinforcing in the field will not be allowed.

6. Epoxy coated reinforcing steel shall conform to the requirements of ASTM A775 and A884, and shall be used where indicated on the drawing.

7. Reinforcement with any of the following defects will not be acceptable and be immediately removed from the site:

   a. Bar lengths, depths, and/or bends exceeding the specified fabrication tolerances.

   b. Bends or kinks not shown on the Drawings

   c. Bars with reduced cross-section due to excessive rusting or other cause.

B. Accessories:

1. Accessories shall include all necessary chairs, slab bolsters, concrete blocks, tie wires, dips, supports, spacers, and other devices to position reinforcement during concrete placement. Slab bolsters shall have gray plastic-coated legs.

2. Concrete blocks (dobies), used to support and position reinforcement steel, shall have the same or higher compressive strength as specified for the concrete in which it is located. Where the concrete blocks are used on concrete surfaces exposed to view, the color and texture of the concrete blocks shall match that required for the finished surface. Wire ties shall be embedded in concrete block bar supports.

3. Use bar supports complying with CRSI recommendations, unless otherwise shown on the Contract Drawings.

4. Do not use wood, brick, or other non-complying material.

5. For slabs on grade, use supports with sand plates or horizontal runners where base material will not support chair legs.

6. For exposed-to-view completed concrete surfaces, where legs of supports are in contact with forms, provide supports with either hot-dip galvanized or plastic-protected legs. CONTRACTOR's selection subject to the ENGINEER's approval.

2.2 MECHANICAL COUPLERS

A. Mechanical couplers shall comply with the applicable Department of Building and Safety's Research Report. Location of the Mechanical Couplers shall be approved by the ENGINEER. The couplers shall develop a tensile strength which exceeds 125 percent of the yield strength of the reinforcement bars being spliced at each splice. CONTRACTOR to provide the required number of couplers and bars for testing in accordance with the Report

B. Where the type of coupler used is composed of more than one component, all components required for a complete splice shall be supplied. This shall apply to all mechanical splices, including those splices intended for future connections.

C. The reinforcement steel and coupler used shall be compatible for obtaining the required strength of the connection. Clearance and coverage requirements shall be maintained at all times.

D. Couplers which are located at a joint face shall be a type which can be set either flush or recessed from the face as shown. The couplers shall be sealed during concrete placement to completely eliminate concrete or cement paste from entering. After the concrete is placed, couplers intended for future connections shall be plugged and sealed to prevent any contact with water or other corrosive materials. Threaded couplers shall be plugged with plastic plugs which have an O-ring seal.

Hot-forged sleeve-type couplers shall not be used.

2.3 WELDED SPLICES

A. Welded splices shall be provided where shown and where approved by the ENGINEER. All welded splices of reinforcement steel shall develop a tensile strength which exceeds 125 percent of the yield strength of the reinforcement bars which are connected. Provide two samples of each bar size for testing. When welding is to be done in the field, provide field prepared samples. Preparation shall be made by welder actually preparing the production run.

B. All materials required to conform the welded splices to the requirements of AWS D1.4 shall be provided.

C. All welding shall be performed by City of Los Angeles certified welders. All shop welding shall be performed at shops of a City of Los Angeles approved fabricator.

PART 3 -- EXECUTION

3.1 GENERAL

A. All reinforcement steel, welded wire fabric, couplers, and accessories shall be fabricated, and

placed in accordance with the requirements of the City of Los Angeles Building Code, CRSI Recommended Practices and Manual, and WRI, and the supplementary requirements specified herein.

3.2 FABRICATION

A. General: Reinforcement steel shall be accurately formed to the dimensions and shapes shown, and the fabricating details shall be prepared in accordance with ACI 315 and ACI 318 or ACI 350 (as applicable), except as modified by the Drawings. Bars shall be bent cold.

B. The CONTRACTOR shall fabricate reinforcement bars for structures in accordance with bending diagrams, placing lists, and placing drawings. Said drawings, diagrams, and lists shall be prepared by the CONTRACTOR as specified under GENERAL REQUIREMENTS.

C. Fabricating Tolerances: Bars used for concrete reinforcement shall meet the following requirements for fabricating tolerances:

1. Sheared length: ± 1 inch

2. Depth of truss bars: + 0, - 1/2 inch

3. Stirrups, ties, and spirals: ± 1/2 inch

4. All other bends: ± 1 inch

3.3 PLACING

A. Placing: Reinforcement steel shall be accurately positioned as shown, and shall be supported and wired together to prevent displacement, using annealed iron wire ties or suitable clips at intersections. All reinforcement steel shall be supported using approved accessories and chairs which are strong and rigid enough to prevent any displacement of the reinforcement steel and shall comply with the applicable Department of Building and Safety's Research Report. Where concrete is to be placed on the ground, supporting concrete blocks (or dobies) shall be used, in sufficient numbers to support the bars without settlement, but in no case shall such support be continuous. All concrete blocks used to support reinforcement steel shall be tied to the steel with wire ties which are embedded in the blocks. Use care not to damage vapor barriers where they occur.

B. The portions of all accessories in contact with the formwork shall be made of concrete, plastic, or steel coated with a 1/8-inch minimum thickness of plastic which extends at least 1/2-inch from the concrete surface. Plastic shall be gray in color.

C. Tie wires shall be bent away from the forms in order to provide the specified concrete coverage.

D. Bars additional to those shown which may be found necessary or desirable by the CONTRACTOR for the purpose of securing reinforcement in position shall be provided by the CONTRACTOR at its own expense.

E. Placing Tolerances: Unless otherwise specified, reinforcement placing tolerances shall be within the limits specified in Section 7.5 of ACI 318 except where in conflict with the requirements of the City of Los Angeles Building Code.

F. Bars may be moved as necessary to avoid interference with other reinforcement steel, conduits, or embedded items. If bars are moved more than one bar diameter, or enough to exceed the above tolerances, the resulting arrangement of bars shall be reviewed and accepted by the ENGINEER.

G. Welded wire fabric reinforcement placed over horizontal forms shall be supported on slab bolsters having gray, plastic-coated standard type legs as specified in Paragraph B herein. Slab bolsters shall be spaced not less than 30 inches on centers, shall extend continuously across the entire width of the reinforcement mat, and shall support the reinforcement mat in the plane shown.

H. Welded wire fabric placed over the ground shall be supported on wired concrete blocks (dobies) spaced not more than 3 feet on centers in any direction. The construction practice of placing welded wire fabric on the ground and hooking into place in the freshly placed concrete shall not be used.

3.4 SPACING OF BARS

A. Spacing of reinforcement shall comply with ACI 318 requirements.

B. Spacing of bars on bridge structures shall conform to the requirements in CSS Section 52-1.

3.5 SPLICING

A. General: Reinforcement bar splices shall only be used at locations shown. When it is necessary to splice reinforcement at points other than where shown, the character of the splice and location shall be as acceptable to the ENGINEER.

B. Splices of Reinforcement: The length of lap for reinforcement bars, unless otherwise shown shall be in accordance with ACI 318, Section 12.15.1 for a class B splice. Stagger splices in horizontal wall bars at least 48” longitudinal in alternate bars and opposite faces.

C. Laps of welded wire fabric shall be in accordance with the ACI 318. Adjoining sheets shall be securely tied together with No. 14 tie wire, one tie for each 2 running feet. Wires shall be staggered and tied in such a manner that they cannot slip.

D. Splices in column spiral reinforcement, when necessary, shall be made by welding or by a lap of 1-1/2 turns.

E. Field welding of bars: In accordance with the approved submittal. Continuous inspection required.

F. Mechanical couplers: Install in accordance with the approved submittal.

G. Bending or Straightening: Reinforcement shall not be straightened or rebent in a manner which will injure the material. Bars with kinks or bends not shown shall not be used. All bars shall be bent cold, unless otherwise permitted by the ENGINEER. No bars partially embedded in concrete shall be field-bent except as shown or specifically permitted by the ENGINEER.

H. Splicing of reinforcement on bridge structures shall conform to CSS Section 52-1.

3.6 CLEANING AND PROTECTION

The surfaces of all reinforcement steel and other metalwork to be in contact with concrete shall be thoroughly cleaned of all dirt, grease, loose scale and rust, grout, mortar and other foreign substances immediately before the concrete is placed. Where there is delay in depositing concrete, reinforcement shall be reinspected and, if necessary recleaned. Bars with reduced cross-section due to excessive rusting or other cause will not be acceptable for use and shall be replaced by the CONTRACTOR at no additional cost to the CITY.

3.7 FIELD QUALITY CONTROL

A. Inspection: Secure inspection and acceptance from INSPECTOR before concrete is placed. Make arrangements in advance for geotechnical inspection of foundations, continuous inspection as

required, and/or structural observation by the designated registered design professional prior to concrete placement.

* * * * * *

SECTION 03250
CONCRETE ACCESSORIES

PART 1 -- GENERAL

1.1 THE REQUIREMENT

A. The CONTRACTOR shall furnish all tools, equipment, materials, and supplies to install all concrete accessories to complete the Work including cast-in-place anchor bolts (also known as anchor rods), epoxy grouted anchor bolts or dowels and, expansion or adhesive anchors, in accordance with the requirements of the Contract Documents.

1.2 RELATED WORK SPECIFIED ELSEWHERE

A. Section 03300 Cast-in-Place Concrete.

B. Section 03315 Grout.

1.3 REFERENCE SPECIFICATIONS, CODES, AND STANDARDS

A. Comply with the reference standards and Standard Specifications of the GENERAL REQUIREMENTS.

B. Comply with the current provisions of the following Codes and Standards, as applicable.

1. Commercial Standards:

AISC Code of Standard Practice for Steel Buildings and Bridges

AISC Specifications for the Design, Fabrication and Erection of Structural Steel for Buildings

ASTM A 36	Specifications for Carbon Structural Steel
ASTM A 153	Specifications for Zinc Coating (Hot Dip) on Iron and Steel Hardware
ASTM A 193	Specifications for Alloy-Steel and Stainless Steel Bolting Materials for High-Temperature Service
ASTM A 194	Specifications for Carbon and Alloy Steel Nuts for Bolts for High-Pressure and High-Temperature Service
ASTM A 307	Specifications for Carbon Steel Bolts and Studs, 60,000 PSI Tensile Strength
ASTM A 449	Specifications for Quenched and Tempered Steel Bolts and Studs
ASTM A 615	Specifications for Deformed and Plain Billet-Steel Bars for Concrete Reinforcement
ASTM B 633	Specifications for Electrodeposited Coatings of Zinc on Iron and Steel

ASTM B 695	Specifications for Coatings of Zinc Mechanically Deposited on Iron and Steel
ASTM F 436	Specifications for Hardened Steel Washers
ASTM F 1554	Standard Specification for Anchor Bolts, Steel, 36, 55, and 105-ksi Yield Strength

1.4 CONTRACTOR SUBMITTALS

A. Submittals shall be made in accordance with the GENERAL REQUIREMENTS.

B. The following submittals and specific information shall be provided.

1. High Strength Anchor Bolts: The CONTRACTOR shall provide mill certificates and certified compliance with ASTM F 1554; A 449 with F 436.

2. The CONTRACTOR shall submit shop drawings for all welded or fabricated items for use as anchors.

3. The CONTRACTOR shall submit catalog cuts and manufacturer's recommendations, with applicable City of Los Angeles Research Reports, for all expansion and adhesive anchors, and anti-seize thread lubricants.

PART 2 -- PRODUCTS

2.1 GENERAL

A. Anchor Size: Anchor size shall be as specified or shown on plans.

B. Anchor Material:

1. Water-containment or sanitary structures, immersion service, or exposed exterior locations: Stainless steel.

2. Other locations: Galvanized steel as permitted by the corresponding ASTM except as listed in the contract drawings.

C. Anchor Length: Sufficient to extend through the nut(s) and not more than 1/4 inch beyond the nut when exposed while meeting the required embedment as indicated on the contract drawings or as required by the associated Los Angeles Department of Building and Safety's Research Report.

2.2 ANCHOR GRADES

A. Anchor Bolts and Nuts:

1. High Strength: ASTM F 1554 Grade 105; A 449, galvanized. Provide with corresponding galvanized hardened washers.

2. Stainless steel: ASTM A 193 and A 194, Type 316N, Grade 8MN.

3. Unspecified: ASTM F 1554 Grade 36; A 36 or A 307, galvanized.

4. Galvanizing: Hot dipped as required per ASTM F 1554; 1.25 ounces per square foot per ASTM A 153 or B 633; When protected from the atmosphere, moisture and sewage gases, ASTM B 695 is also acceptable.

5. Other Coatings: None; As specified in the contract drawings.

B. Flat Washers: Same material and finish as nut and bolt. For high strength bolts, use ASTM F 1554; F 436.

C. Anti-Seize Thread Lubricant for use with stainless steel anchors:

1. Jet-Lube "Nikal"
2. Never-Seez "Pure Nickel Special"
3. Permatex "Nickel Anti-Seize"
4. Or an approved equal.

D. Reinforcing Steel Dowels: ASTM A 615, Grade 60. Same diameter as spliced rebar, or #4 minimum.

E. Expansion and Adhesive Anchors: Use only anchor types and styles with Research Report approval by the Los Angeles Department of Building and Safety.

1. Simpson Strong-tie “Wedge All”
2. Hilti "Kwik-Bolt II"
3. Phillips "Red Head"
4. Or an approved equal.

PART 3 -- EXECUTION

3.1 PROJECT CONDITIONS

A. Examine the areas and conditions under which the work will be performed. Correct conditions detrimental to timely and proper completion of the Work. Do not proceed until detrimental conditions are corrected.

3.2 CAST-IN-PLACE ANCHOR BOLTS

A. Provide templates or other means to ensure accurate placement. Provide sufficient threads to allow for a nut to be placed on the concrete side of the template.

B. Anchor bolts shall be clean and free of all coatings which may impair bonding with concrete.

C. Provide two nuts and a washer with each anchor bolt. Provide an additional locknut when indicated on the Drawings.

D. High Strength Bolts: Install such that ASTM Grade markings are visible after casting into concrete.

3.3 EPOXY-GROUTED ANCHOR BOLTS OR DOWELS

A. Provide templates or other means to ensure accurate placement.

B. Anchor bolts or dowels shall be clean and free of all coatings which may impair bonding with epoxy.

C. Provide two nuts and a washer with each anchor bolt. Provide an additional locknut when indicated on the Drawings.

D. High Strength Bolts: Install such that ASTM Grade markings are visible after casting into concrete.

E. Do not disturb bolt or dowel until epoxy grout has cured and reached full strength.

3.4 EXPANSION AND ADHESIVE ANCHORS: Install per Los Angeles Department of Building and Safety Approved Research Report and manufacturer's recommendations, whichever is more restrictive. Provide nuts and washers of same material and finish as anchor body.

3.5 STAINLESS STEEL ANCHORS. After installation of stainless steel anchor bolts or expansion anchors, lubricate threads before fastening.

(END OF SECTION)

SECTION 03290
JOINTS IN CONCRETE

PART 1 -- GENERAL

1.1 THE REQUIREMENT

A. The CONTRACTOR shall construct all joints and bearing pads in concrete at the locations shown. Joints required in concrete structures are of various types and will be permitted only where shown, unless specifically accepted by the ENGINEER.

1.2 RELATED WORK SPECIFIED ELSEWHERE

A. Section 03100 Concrete Formwork.

B. Section 03200 Reinforcement Steel.

C. Section 03300 Cast-in-Place Concrete.

1.3 REFERENCE SPECIFICATIONS, CODES, AND STANDARDS

A. Comply with the reference standards of the GENERAL REQUIREMENTS.

B. Comply with the current provisions of the following Codes and Standards, as applicable:

1. Federal Specifications:

TT-S-0227E(3)	Sealing Compound, elastomeric type, Multi-component for Caulking, Sealing, and Glazing Buildings and Other Structures).

2. U.S. Army Corps of Engineers Specifications:

CRD-C572	Specifications for Polyvinylchloride Waterstop.

3. Other Government Standards:

CSS	Caltrans Standard Specifications.

4. Commercial Standards:

ASTM C 920	Specification for Elastomeric Joint Sealants.
ASTM D 624	Test Method for Rubber Property -- Tear Resistance.
ASTM D 638	Test Method for Tensile Properties of Plastics.
ASTM D 746	Test Method for Brittleness Temperature of Plastics and Elastomers by Impact.
ASTM D 747	Test Method for Apparent Bending Modulus of Plastics by Means of a Cantilever Beam.

ASTM D 1751	Premolded Joint Filler
ASTM D 1752	Specification for Preformed Sponge Rubber and Cork Expansion Joint Fillers for Concrete Paving and Structural Construction.
ASTM D 2240	Test Method for Rubber Property -- Durometer Hardness.

1.4 TYPES OF JOINTS

A. Construction Joints: When fresh concrete is placed against a hardened concrete surface, the joint between the two pours is called a construction joint. Unless otherwise specified, all joints in water bearing members shall be provided with a waterstop and sealant groove of the shape specified and as shown on the plans.

B. Contraction Joints: Contraction joints are similar to construction joints except that the fresh concrete shall not bond to the hardened surface of the first pour, which shall be coated with a bond breaker. The slab reinforcement shall be stopped 4-1/2 inches from the joint, unless noted otherwise; which is provided with a sleeve-type dowel, to allow shrinkage of the concrete of the second pour. Waterstop and sealant groove shall also be provided.

C. Expansion Joints: To allow the concrete to expand freely, a space is provided between the two pours, the joint shall be formed as shown on the plans. This space is obtained by placing a filler joint material against the first pour, which acts as a form for the second pour. Unless otherwise specified, all expansion joints in water bearing members shall be provided with an approved type waterstop.

Premolded expansion joint material shall be installed with the edge at the indicated distance below or back from finished concrete surface, and shall have a slightly tapered, dressed, and oiled wood strip secured to or placed at the edge thereof during concrete placement, which shall later be removed to form space for sealing material. The space so formed shall be filled with a joint sealant material as specified in the Paragraph in Part 2 entitled "Joint Sealant." In order to keep the two elements in line the joint shall be provided with a sleeve-type dowel as shown.

D. Control Joints (Weakened Plane): The function of the control joint is to provide a weaker plane in the concrete, where shrinkage cracks will probably occur. A groove, of the shape and dimensions as shown on the plans, is formed or saw-cut in the concrete and shall be filled with a joint sealant material as specified in the Paragraph in Part 2 entitled "Joint Sealant."

E. All other Joints, bearing devices, and elastomeric bearing pads for bridge structures shall comply with CSS Section 51.

1.4 CONTRACTOR SUBMITTALS

A. Submittals shall be made in accordance with GENERAL REQUIREMENTS.

B. The following submittals and specific information shall be provided.

1. Waterstops: Prior to use of the material required under this contract, qualification samples shall be submitted. Such samples shall consist of extruded or molded sections of each size or shape to be used. The material sample shall be representative of the material to be furnished under this contract. The balance of the material to be used under this contract shall not be produced until after the ENGINEER has reviewed and approved the qualification samples.

2. Joint Sealant: Prior to ordering the sealant material, the CONTRACTOR shall submit to the ENGINEER for review and approval, data to show compliance with the requirements of the Contract Documents. Certified test reports from the sealant manufacturer on the actual batch

of material being supplied indicating compliance with the above requirements shall be furnished the ENGINEER before the sealant is used on the job.

3. Shipping Certification: The CONTRACTOR shall provide written certification from the manufacturer as an integral part of the shipping form, to show that all of the material shipped to this project meets or exceeds the physical property requirements of the Contract Documents. Supplier certificates are not acceptable.

4. The CONTRACTOR shall submit placement shop drawings showing the location and type of all joints for each structure.

1.5 QUALITY ASSURANCE

A. Waterstop manufacturer shall demonstrate five years (minimum) continuous, successful experience in production of waterstops.

B. Waterstop Inspection: It is required that all waterstop field joints shall be subject to inspection, and no such work shall be scheduled or started without having made prior arrangements with the INSPECTOR to provide for the required inspections. Not less than 24 hours notice shall be provided to the INSPECTOR for scheduling such inspections.

C. All field joints in waterstops shall be free of misalignment, bubbles, inadequate bond, porosity, cracks, offsets, and other defects which would reduce the potential resistance of the material to water pressure at any point. All defective joints shall be replaced with material which shall pass said inspection, and all faulty material shall be removed from the site and disposed of by the CONTRACTOR at its own expense.

D. The following waterstop defects represent a partial list of defects which shall be grounds for rejection:

1. Offsets at joints greater than 1/16-inch or 15 percent of material thickness, at any point, whichever is less.

2. Exterior crack at joint, due to incomplete bond, which is deeper than 1/16-inch or 15 percent of material thickness, at any point, whichever is less.

3. Any combination of offset or exterior crack which will result in a net reduction in the cross section of the waterstop in excess of 1/16-inch or 15 percent of material thickness at any point, whichever is less.

4. Misalignment of joint which result in misalignment of the waterstop in excess of 1/2-inch in 10 feet.

5. Porosity in the welded joint as evidenced by visual inspection.

6. Bubbles or inadequate bonding.

E. Waterstop Samples: Prior to use of the waterstop material in the field, a sample of a fabricated metered cross and a tee constructed of each size or shape of material to be used shall be submitted to the ENGINEER for approval. These samples shall be fabricated so that the material and workmanship represent in all respects the fittings to be furnished under this contract. Field samples of fabricated fittings (crosses, tees, etc.) will be selected at random by the INSPECTOR for testing. When tested, they shall have a tensile strength across the joints equal to at least 600 psi.

F. Construction Joint Sealant: The CONTRACTOR shall prepare adhesion and cohesion test specimens as specified herein, at intervals of 5 working days while sealants are being installed.

G. The sealant material shall show no signs of adhesive or cohesive failure when tested in accordance with the following procedure in laboratory and field tests:

1. Sealant specimen shall be prepared between 2 concrete blocks (1-inch by 2-inch by 3-inch). Spacing between the blocks shall be 1/2-inch. Coated spacers (2-inch by 1-1/2-inch by 1/2-inch) shall be used to insure sealant cross-sections of 1/2-inch by 2 inches with a width of 1/2-inch.

2. Sealant shall be cast and cured according to manufacturer's recommendations except that curing period shall not exceed 24 hours.

3. Following curing period, the gap between blocks shall be widened to one inch. Spacers shall be used to maintain this gap for 24 hours prior to inspection for failure.

H. Store waterstops under tarps to protect from oil, dirt, and sunlight.

1.6 GUARANTEE

A. The CONTRACTOR shall provide a 5-year written guarantee of the entire sealant installation against faulty and/or incompatible materials and workmanship, together with a statement that it agrees to repair or replace, to the satisfaction of the CITY, at no additional cost to the CITY, any such defective areas which become evident within said 5-year guarantee period.

PART 2 -- PRODUCTS

2.1 PVC WATERSTOPS

A. General: Waterstops shall be extruded from an elastomeric polyvinyl chloride compound containing the plasticizers, resins, stabilizers, and other materials necessary to meet the requirements of these Specifications. No reclaimed or scrap material shall be used. The CONTRACTOR shall obtain from the waterstop manufacturer and shall furnish to the ENGINEER for review, current test reports and a written certification of the manufacturer that the material to be shipped to the job meets the physical requirements as outlined in the U.S. Army Corps of Engineers Specification CRD-C572 and those listed herein.

B. Flatstrip and Center-Bulb Waterstops: Flatstrip and center-bulb waterstops shall be as detailed and as manufactured by: Kirkhill Rubber Co., Brea, California; Greenstreak, St. Louis, MO, Water Seals, Inc., Chicago, Illinois; Progress Unlimited, Inc., New York, New York; or an approved equal; provided, that at no place shall the thickness of flat strip waterstops, including the center bulb type, be less than 3/8-inch.

C. Multi-Rib Waterstops: Multi-rib waterstops, where required, shall be as detailed and as manufactured by Water Seals, Inc., Chicago, Illinois; Progress Unlimited, Inc., New York, New York; Greenstreak, St. Louis, MO, or an approved equal. Prefabricated joint fittings shall be used at all intersections of the ribbed-type waterstops.

D. Other Types of Waterstops: When other types of waterstops, not listed above are required and shown, they shall be subjected to the same requirements as those listed herein.

E. Waterstop Testing Requirements: When tested in accordance with the specified test standards, the waterstop material shall meet or exceed the following requirements:

Physical Property, Sheet Material	Value	ASTM Std.
Tensile Strength-min (psi)	1750	D 638, Type IV

Ultimate Elongation-min (percent)	350	D 638, Type IV
Low Temp Brittleness-max (degrees F)	-35	D 746
Stiffness in Flexure-min (psi)	400	D 747
Accelerated Extraction (CRD-C572)		
Tensile Strength-min (psi)	1500	D 638, Type IV
Ultimate Elongation-min (percent)	300	D 638, Type IV
Effect of Alkalies (CRD-C572)		
Change in Weight (percent)	+0.25/-0.10	------
Change in Durometer, Shore A	+5	D 2240
Finish Waterstop		
Tensile Strength-min (psi)	1400	D 638, Type IV
Ultimate Elongation-min (percent)	280	D 638, Type IV

F. Accessories

1. Provide factory made waterstop fabrications for all changes of direction, intersections, and transitions leaving only straight butt joint splices for the field.

2. Provide hog rings or grommets spaced at 12 inches on center along length of waterstop.

3. Provide Teflon coated thermostatically controlled waterstop splicing irons for field butt splices.

2.2 RUBBER WATERSTOPS

For bridge structures, neoprene waterstop requirements shall conform to CSS Section 51-1.

2.3 JOINT SEALANT

A. Joint sealant shall be polyurethane polymer designed for bonding to concrete which is continuously submerged in water.

B. Joint sealant material shall meet the following requirements:

Work Life	45 - 90 minutes
Time to Reach 20 Shore "A" Hardness (at 77 degrees F, 200 gr quantity)	24 hours, maximum
Ultimate Hardness	30 - 40 Shore "A"
Tensile Strength	250 psi, minimum
Ultimate Elongation	400 percent, minimum
Tear Resistance (Die C ASTM D 624)	75 pounds per inch of thickness, minimum
Color	Light Gray

For bridge structures, additional requirements of CSS Section 51 shall also apply.

C. All polyurethane sealants for waterstop joints in concrete shall conform to the following requirements:

1. Sealant shall be 2-part polyurethane with the physical properties of the cured sealant conforming to or exceeding the requirements of ASTM C 920 or Federal Specification TT-S-00227 E(3) for 2-part material, as applicable.

2. For vertical joints and overhead horizontal joints, only "non-sag" compounds shall be used; all such compounds shall conform to the requirements of ASTM C 920 Class B, or Federal Specification TT-S-0027 E(3), Type II.

3. For plane horizontal joints, the self-leveling compounds which meet the requirements of ASTM C 920 Class A, or Federal Specification TT-S-0027 E(3), Type I shall be used. For joints subject to either pedestrian or vehicular traffic, a compound providing non-tracking characteristics, and having a Shore "A" hardness range of 25 to 35, shall be used.

4. Primer materials, if recommended by the sealant manufacturer, shall conform to the printed recommendations of the sealant manufacturer.

D. All sealants, wherever shown, or required hereunder shall be Rubbercalk 2101-I or 270 as manufactured by Products Research Company; GS 102 or GS 1102 as manufactured by General Sealants Corp; or an approved equal. For sanitary structures mastic/sealant material shall be Ram Nek Sealant by Henry Co.; Sika Flex 1A, Sikadur 51 NS by Sika Corp.

E. Mastic joint sealer shall be a material that does not contain evaporating solvents; that will tenaciously adhere to concrete surfaces; that will remain permanently resilient and pliable; that will not be affected by continuous presence of water and will not in any way contaminate potable water; and that will effectively seal the joints against moisture infiltration even when the joints are subject to movement due to expansion and contraction. The sealer shall be composed of special asphalts or similar materials blended with lubricating and plasticizing agents to form a tough, durable mastic substance containing no volatile oils or lubricants and shall be capable of meeting the test requirements set forth hereinafter, if testing is required by the ENGINEER.

2.4 PREFORMED JOINT FILLER

A. Preformed joint filler material shall be of the preformed non-extruding type joint filler constructed of cellular neoprene sponge rubber or polyurethane of firm texture. Bituminous fiber type will not be permitted. All non-extruding and resilient-type preformed expansion joint fillers shall conform to the requirements and tests set forth in ASTM D 1752 for Type I, except as otherwise specified herein.

B. Unless otherwise noted, preformed joint filler shall be a non-extruding, resilient, bituminous type conforming to the requirements of ASTM D 1751.

2.5 BACKING ROD

A. Backing rod shall be an extruded closed-cell, polyethylene foam rod. The material shall be compatible with the joint sealant material used and shall have a tensile strength of not less than 40 psi and a compression deflection of approximately 25 percent at 8 psi. The rod shall be 1/8-inch larger in diameter than the joint width except that a one-inch diameter rod shall be used for a 3/4-inch wide joint.

2.6 BOND BREAKER

A. Bond breaker shall be Super Bond Breaker as manufactured by Burke Company, San Mateo, California; Hunt Process 225-TU as manufactured by Hunt Process Co., Santa Fe Springs, California; Select Cure CRB as manufactured by Select Products Co., Upland, California; or an approved equal. It shall contain a fugitive dye so that areas of application will be readily distinguishable.

0.7 BEARING DEVICES AND ELASTOMERIC BEARING PADS

Bearing devices and elastomeric bearing pads shall comply with CSS Section 51.

PART 3 -- EXECUTION

3.1 GENERAL

A. Unless otherwise shown, waterstops of the type specified herein shall be embedded in the concrete across joints as shown. All waterstops shall be fully continuous for the extent of the joint. Splices necessary to provide such continuity shall be accomplished in conformance to printed instructions of manufacturer of the waterstops. The CONTRACTOR shall take suitable precautions and means to support and protect the waterstops during the progress of the work and shall repair or replace at its own expense any waterstops damaged during the progress of the work. All waterstops shall be stored so as to permit free circulation of air around the waterstop material.

B. When any waterstop is installed in the concrete on one side of a joint, while the other half or portion of the waterstop remains exposed to the atmosphere for more than 2 days, suitable precautions shall be taken to shade and protect the exposed waterstop from direct rays of the sun during the entire exposure and until the exposed portion of the waterstop is embedded in concrete.

3.2 SPLICES IN WATERSTOPS

A. Splices in waterstops shall be performed by heat sealing the adjacent waterstop sections in accordance with the manufacturer's printed recommendations and the following requirements:.

1. The material not be damaged by heat sealing.

2. The splices have a tensile strength of not less than 60 percent of the unspliced materials tensile strength.

3. The continuity of the waterstop ribs and of its tubular center axis be maintained.

B. Butt joints of the ends of two identical waterstop sections may be made while the material is in the forms.

C. All joints with waterstops involving more than 2 ends to be jointed together, and all joints which involve an angle cut, alignment change, or the joining of 2 dissimilar waterstop sections shall be prefabricated by the CONTRACTOR prior to placement in the forms, allowing not less than 24-inch long strips of waterstop material beyond the joint. Upon being inspected and approved, such prefabricated waterstop joint assemblies shall be installed in the forms and the ends of the 24-inch strips shall be butt welded to the straight run portions of waterstop in place in the forms.

3.3 JOINT CONSTRUCTION

A. Setting Waterstops:

1. In order to eliminate faulty installation that may result in joint leakage, particular care shall be taken of the correct positioning of the waterstops during installation. Adequate provisions must be made to support the waterstops during the progress of the WORK and to insure the proper embedment in the concrete. The symmetrical halves of the waterstops shall be equally divided between the concrete pours at the joints. The center axis of the waterstops shall be coincident with the joint openings. Maximum density and imperviousness of the concrete shall be insured by thoroughly working it in the vicinity of all joints

2. In placing flat-strip waterstops in the forms, means shall be provided to prevent them from being folded over by the concrete as it is placed. Unless otherwise shown, all waterstops shall be held in place with light wire ties on 12-inch centers which shall be passed through the edge of the waterstop and tied to the curtain of reinforcing steel. Horizontal waterstops, with their flat face in a vertical plane, shall be held in place with continuous supports to which the top edge of the waterstop shall be tacked. In placing concrete around horizontal waterstops, with their flat face in a horizontal plane, concrete shall be worked under the waterstops by hand so as to avoid the formation of air and rock pockets.

3. Adequate means shall be provided for anchoring the waterstop in concrete. Waterstops shall be positioned so that they are equally embedded in the concrete on each side of the joint.

4. For bridge structures, waterstops shall conform to CSS Section 51-1.

B. Joint Location:

Construction joints, and other types of joints, shall be provided where shown. When not shown, construction joints shall be provided at 25-foot maximum spacing for all concrete construction, subject to the approval of the ENGINEER, unless noted otherwise. Where joints are shown spaced greater than 25 feet apart, additional joints shall be provided to maintain the 25-foot maximum spacing. The location of all joints, of any type, shall be submitted for acceptance by the ENGINEER.

C. Joint Preparation:

Special care shall be used in preparing concrete surfaces at joints where bonding between two sections of concrete is required. Unless otherwise shown, such bonding will be required at all horizontal joints in walls. Surfaces shall be prepared in accordance with the requirements of Section 03300, "Cast-in-Place Concrete." Except on horizontal wall construction joints, wall to slab joints or where otherwise shown or specified, at all joints where waterstops are required, the joint face of the first pour shall be coated with a bond breaker as specified herein.

D. Construction Joint Sealant:

1. Construction joints in water-bearing floor slabs, and elsewhere as shown, shall be provided with tapered grooves which will be filled with construction joint sealant. The material used for forming the tapered grooves shall be left in the grooves until just before the grooves are cleaned and filled with joint sealant. After removing the forms from the grooves, all laitance and fins shall be removed, and the grooves shall be sand-blasted. The grooves shall be allowed to become thoroughly dry, after which they shall be blown out; immediately thereafter, they shall be primed and filled with the construction joint sealant. The primer used shall be supplied by the same manufacturer supplying the sealant. No sealant will be permitted to be used without a primer. Care shall be used to completely fill the sealant grooves. Areas designated to receive a sealant filler shall be thoroughly cleaned, as outlined for the tapered grooves, prior to application of the sealant.

2. Sealant application shall be in accordance with the manufacturer's printed instructions. The surfaces of the groove for the sealant shall not be coated. Concrete next to waterstops shall be placed in accordance with the requirements of Section 03300, Cast-in-Place Concrete.

3. The primer and sealant shall be placed strictly in accordance with the printed recommendations of the manufacturer, taking special care to properly mix the sealant prior to application. All sealant shall cure at least 7 days before the structure is filled with water.

4. All sealant shall be installed by a competent waterproofing specialty contractor who has a successful record of performance in similar installations. Before work is commenced, the crew doing the WORK shall be instructed as to the proper method of application by a representative of the sealant manufacturer.

5. Thorough, uniform mixing of 2-part, catalyst-cured materials is essential; special care shall be taken to properly mix the sealer before its application. Before any sealer is placed, the CONTRACTOR shall arrange to have the crew doing the WORK carefully instructed as to the proper method of mixing and application by a representative of the sealant manufacturer.

5. Any joint sealant which after the manufacturer's recommended curing time for the job conditions of the WORK hereunder, fails to fully and properly cure shall be completely removed; the groove shall be thoroughly sandblasted to remove all traces of the uncured or partially cured sealant and primer, and shall be re-sealed with the specified joint sealant. All costs of such removal, joint treatment, re-sealing, and appurtenant work shall be at the expense of the CONTRACTOR.

3.4 BEARING DEVICES AND ELASTOMERIC BEARING PADS

Bearing devices and elastomeric bearing pads shall comply with CSS Section 51.

(END OF SECTION)

SECTION 03300
CAST-IN-PLACE CONCRETE

PART 1 -- GENERAL

1.1 THE REQUIREMENT

A. The CONTRACTOR shall furnish all materials for concrete in accordance with the provisions of this Section and shall form, mix, place, cure, repair, finish, and do all other work as required to produce finished concrete, in accordance with the requirements of the Contract Documents.

B. The following types of concrete shall be covered in this Section:

1. Structural Concrete: Concrete to be used in all cases except where noted otherwise in the Contract Documents.

2. Sitework Concrete: Concrete to be used for curbs, gutters, sidewalks, pavements, fence and guard post embedment, and underground duct bank encasement unless otherwise shown.

3. Lean Concrete: Concrete to be used for thrust blocks, pipe trench cut-off blocks and cradles, where the preceding items are detailed on the Drawings as unreinforced. Concrete to be used as protective cover for dowels intended for future connection.

1.2 RELATED WORK SPECIFIED ELSEWHERE

A. Section 03100 Concrete Formwork

B. Section 03200 Reinforcement Steel

C. Section 03250 Concrete Accessories

D. Section 03290 Joints in Concrete

E. Section 03315 Grout

F. Section 03370 Concrete Curing

G. Section 03520 Lightweight Insulating Concrete Deck

H. Section 07900 Joint Sealants

1.3 REFERENCE SPECIFICATIONS, CODES, AND STANDARDS

A. Comply with the reference standards and the Standard Specifications of the GENERAL REQUIREMENTS.

B. Comply with the current provisions of the following Codes and Standards, as applicable.

1. Commercial Standards:

ACI 117	Specification for Tolerances for Concrete Construction and Materials

ACI 301	Specifications for Structural Concrete
ACI 305.1	Specification for Hot Weather Concreting
ACI 306.1	Standard Specification for Cold Weather Concreting
ACI 318	Building Code Requirements for Structural Concrete
ACI 347R	Guide to Formwork for Concrete
ACI 350	Code Requirements for Environmental Engineering Concrete Structures
ASTM C 31	Standard Practice for Making and Curing Concrete Test Specimens in the Field
ASTM C 33	Standard Specification for Concrete Aggregates
ASTM C 39	Standard Test Method for Compressive Strength of Cylindrical Concrete Specimens
ASTM C 40	Standard Test Method for Organic Impurities in Fine Aggregates for Concrete
ASTM C 42	Standard Test Method for Obtaining and Testing Drilled Cores and Sawed Beams of Concrete
ASTM C 88	Standard Test Method for Soundness of Aggregates by Use of Sodium Sulfate or Magnesium Sulfate
ASTM C 94	Standard Specification for Ready-Mixed Concrete
ASTM C 109	Standard Test Method for Compressive Strength of Hydraulic Cement Mortars (Using 2-in Cube Specimens)
ASTM C 117	Standard Test Method for Materials Finer than No. 200 Sieve in Mineral Aggregates by Washing
ASTM C 131	Standard Test Method for Resistance to Degradation of Small-Sized Coarse Aggregate by Abrasion and Impact in the Los Angeles Machine
ASTM C 136	Standard Test Method for Sieve Analysis of Fine and Coarse Aggregates
ASTM C 143	Standard Test Method for Slump of Hydraulic-Cement Concrete
ASTM C 150	Standard Specification for Portland Cement
ASTM C 157	Standard Test Method for Length Change of Hardened Hydraulic-Cement Mortar and Concrete
ASTM C 192	Standard Practice for Making and Curing Concrete Test Specimens in the Laboratory

ASTM C 260	Standard Specification for Air-Entraining Admixtures for Concrete
ASTM C 289	Standard Test Method for Potential Alkali-Silica Reactivity of Aggregates (Chemical Method)
ASTM C 311	Standard Test Methods for Sampling and Testing Fly Ash or Natural Pozzolans for Use in Portland-Cement Concrete
ASTM C 494	Standard Specification for Chemical Admixtures for Concrete
ASTM C 595	Standard Specification for Blended Hydraulic Cements
ASTM C 618	Standard Specification for Coal Fly Ash and Raw or Calcined Natural Pozzolan for Use in Concrete
ASTM C 989	Standard Specification for Slag Cement for Use in Concrete and Mortars
ASTM C 1116	Standard Specification for Fiber-Reinforced Concrete
ASTM C 1157	Standard Performance Specification for Hydraulic Cement
ASTM C 1240	Standard Specification for Silica Fume Used in Cementitious Mixtures
ASTM C 1550	Standard Test Method for Flexural Toughness of Fiber Reinforced Concrete (Using Centrally Loaded Round Panel)
ASTM C 1579	Standard Test Method for Evaluating Plastic Shrinkage Cracking of Restrained Fiber Reinforced Concrete (Using a Steel Form Insert)
ASTM C 1602	Standard Specification for Mixing Water Used in the Production of Hydraulic Cement Concrete
ASTM C 1603	Standard Test Method for Measurement of Solids in Water-Suggest you add as it relates to ASTM C1602
ASTM C 1609	Standard Test Method for Flexural Performance of Fiber-Reinforced Concrete (Using Beam With Third-Point Loading)
ASTM D 2419	Standard Test Method for Sand Equivalent Value of Soils and Fine Aggregate

2. Government Standards:

CSS	Caltrans Standard Specifications
GWP	Global Warming Potential (maximum acceptable carbon emission limits, established by the California Department of General Services)

1.4 CONTRACTOR SUBMITTALS

A. Submittals shall be made in accordance with GENERAL REQUIREMENTS.

B. The following submittals and specific information shall be provided.

1. Mix Designs: Prior to beginning the WORK, the CONTRACTOR shall submit to the ENGINEER, for review, and acceptance, preliminary concrete mix designs for each class and type of concrete specified herein. The mix designs shall be designed by an independent testing laboratory acceptable to the ENGINEER. All costs related to such mix design shall be borne by the CONTRACTOR.

Each concrete mix submittal shall contain the following information, as applicable:

a. Location and purpose of the mix.
b. Slump on which the design is based.
c. Total gallons of water per cubic yard, and the water/cementitious materials ratio (w/cm).
d. Brand, type, composition and quantity of cement.
e. Brand type, composition and quantity of fly ash, slag cement, silica fume.
f. Specific Gravity, source and gradation of each aggregate.
g. Ratio of fine to total aggregate per cubic yard.
h. Weight (surface dry) of each aggregate per cubic yard.
i. Brand, type, and ASTM designation, active chemical ingredients and quantity of each admixture.
j. Copy of the Building and Safety Research Report Approval for each concrete admixture.
k. Air content.
l. Compressive strength based on 7-day and 28-day compression tests, including standard deviation calculations, corroborative data (if applicable), and required average comprehensive strength per ACI 318.
m. Time of initial and final set.
n. Certification stamp and signature by a Civil or Structural engineer registered in the State of California, experienced in concrete mix design.
o. Certificate of Compliance for Cement.
p. Concrete pour sequence.
q. Buy Clean California Act
   1.) For project specifications that include GR Section 1601, Buy Clean California Act, bidders shall submit current Environmental Product Declarations (EPDs) for each concrete mix design.

   2.) An EPD must conform to the following:
      a) Shall be facility-specific manufacturer/plant EPD for the particular mix, If a particular batch/mix may originate from more than one plant, a compliant EPD for each plan must be provided. Industry-average EPDs for a particular mix may also be permitted when indicated as such per 01601.
      b) Be independently verified in accordance with ISO 14025 (Type III).
      c) Be developed according to the guidelines of the applicable Product Category Rule (PCR), as identified by the Department of General Services, State of California.
      d) Have a valid date that has not expired.
      e) Shall not exceed the Global Warming Potential (GWP) as required by GR Section 1601.

   3.) EPD shall be submitted concurrently with each mix submittal for review and approval.

2. Certified Delivery Tickets: Where ready-mix concrete is used, the CONTRACTOR shall provide certified weighmaster delivery tickets at the time of delivery of each load of concrete. Each certificate shall show the public weighmaster's signature, and the total quantities, by weight of cement, sand, each class of aggregate, admixtures, and the amounts of water in the aggregate and added at the batching plant as well as the amount of water allowed to be added at the site for the specific design mix. Each certificate shall, in addition, state the mix number, total yield in cubic yards, and the time of day, to the nearest minute, corresponding to when the batch was dispatched, when it left the plant, when it arrived at the job, the time that unloading began, and the time that unloading was finished.

3. When a water reducing admixture is to be used, the CONTRACTOR shall furnish mix designs for concrete both with and without the admixture.

4. The CONTRACTOR shall furnish a Certificate of Compliance signed by the supplier identifying the type of fly ash and stating that the fly ash complies with ASTM C 618 and these Specifications, together with all supporting test data prior to the use of the fly ash the sample represents. The supporting data shall also contain test results confirming that the fly ash in combination with the cement and water to be used meets all strength requirements and is compatible with air-entraining agents and other admixtures.

5. The CONTRACTOR shall submit to the ENGINEER for review the design mix for fly ash concrete together with the design mix for Portland cement (non-fly ash) concrete as specified in this Section.

1.5 QUALITY ASSURANCE

A. Laborers: Use adequate number of skilled laborers who are thoroughly trained and experienced in the necessary crafts and completely familiar with the specified requirements and the methods needed for proper performance of the Work of this Section.

B. Compliance with Regulations: All materials shall comply with the current rules and regulations of the local air quality management district, with the rules regarding volatile organic compounds, and with FDA rules and regulations for dangerous substances in construction products.

C. Concrete Manufacturer: Furnish concrete from licensed commercial ready-mix concrete plants conforming to ASTM C94 and approved by City of Los Angeles Department of Building and Safety. Requirements herein govern when exceeding ASTM C94.

D. Continuous Inspection: Construct structural concrete exceeding 2,500 psi compressive strength under continuous inspection of DEPUTY INSPECTOR. Obtain inspection and approval of forms and reinforcing by CONTRACTOR’s Independent Testing/Inspection Laboratory three (3) working days before placing structural concrete in order to be verified by ENGINEER.

E. Tests on component materials and for compressive strength and shrinkage of concrete will be performed as specified herein. Test for determining slump will be in accordance with the requirements of ASTM C 143.

F. The cost of all laboratory tests on cement, aggregates, and concrete compressive strength, will be borne by the CITY. However, the CONTRACTOR shall be responsible for all other required tests, and shall be charged for the cost of any additional tests and investigation on work performed which does not meet the specifications.

G. Concrete for testing shall be supplied by the CONTRACTOR at no cost to the CITY, and the CONTRACTOR shall provide assistance and facilities to the INSPECTOR in obtaining samples,

and disposal and cleanup of excess material. If necessary, the CONTRACTOR shall provide the test cylinders, as described in item 1.5.H, to the INSPECTOR for the required testing.

H. Field Compression Tests:

1. Compression test specimens will be taken during construction from the first placement of each concrete mix used and at intervals thereafter as selected by the INSPECTOR to insure continued compliance with these specifications. Each set of test specimens will be a minimum of 4 cylinders.

2. Compression test specimens for concrete shall be made in accordance with ASTM C 31. Specimens shall be 6-inch diameter by 12-inch high cylinders.

3. Compression tests shall be performed in accordance with ASTM C 39. Two 6”x12” test cylinders will be tested at 7 days as necessary and two at 28 days. Any remaining cylinders will be held to verify test results, if needed.

I. Evaluation and acceptance of Compressive Strength Concrete shall be based on the following criteria:

1. Concrete shall be sampled and tested in accordance with the ASTM standards stated in Subsection 1.3.B.1.

2. Acceptance of concrete placed shall be based on 28-day compressive strength test results. A 28-day compressive strength test shall consist of the average compressive strength of two 6”x12” concrete test cylinders fabricated from a single load of fresh concrete except that, if a cylinder should show evidence of improper handling, molding, or testing, said cylinder shall be discarded and the compressive strength test shall then consist of the remaining cylinder.

3. Concrete compressive strength tests representing concrete poured-in-place, shall attain the 28-day compressive strength specified in the specifications or as shown on the plans.

4. In-place concrete represented by a compressive cylinder strength test failing to meet the specified 28-day compressive strength shall be removed from the work at no cost to the CITY. Also, the CONTRACTOR shall at its own expense make any corrective changes in the mix deemed necessary by the ENGINEER. The changes in the mix proportions or placement procedures shall be approved by the ENGINEER prior to the placement of any additional concrete subsequent to a failing compressive strength test.

5. As an alternative to the removal of concrete represented by a failed cylinder compressive strength test and subject to the approval of the ENGINEER, the concrete represented by the failed compressive strength cylinder test or tests may be cored in place. The corings shall be completed no later than 10 days from notification of failure by the ENGINEER. The cores shall be taken by the CONTRACTOR in the presence of the INSPECTOR and tested at the CONTRACTOR's expense in accordance with ASTM C 42 by a certified laboratory acceptable to the INSPECTOR. The cores shall be 4 inch diameter (min.) unless otherwise directed by the ENGINEER. At least three cores shall be taken in each area represented by a failed 28-day concrete compressive strength cylinder test. Unless otherwise directed by the ENGINEER, the cores shall be tested wet following a 40-hour submergence. If each core tests at least 85 percent of the specified 28-day compressive strength or greater, the concrete represented may be accepted provided the CONTRACTOR accepts the payment provisions stated below. Concrete represented by failing core tests shall not be paid for and shall be removed by the CONTRACTOR from the work at no cost to the CITY.

6. Payment to the CONTRACTOR for concrete accepted by the ENGINEER based on core test results but represented by failing compressive cylinder test results shall be reduced as follows:

   a. When the result of a single compressive cylinder strength test is less than the specified 28-day compressive strength but 95 percent or more of the 28-day compressive strength, the CONTRACTOR shall pay the CITY **[$15]** per cubic yard for each in-place cubic yard of concrete represented by the deficient compressive strength cylinder test as determined by the actual sampling interval; and.

   b. When the result of a single compressive strength cylinder test is less than 95 percent of the specified 28-day compressive strength but is acceptable based on core test results taken in accordance with Subsection 1.5.I.5, the CONTRACTOR shall pay the CITY **[$20]** per cubic yard for each in-place cubic yard of concrete represented by the deficient compressive strength cylinder test as determined by the actual sampling interval.

J. Shrinkage Tests:

1. Drying shrinkage tests shall be provided by the CONTRACTOR for the trial batch specified in the Paragraph in Part 2 entitled "Trial Batch and Laboratory Tests," and during construction to insure continued compliance with these Specifications.

2. Drying shrinkage specimens shall be 4-inch by 4-inch by 11-inch prisms with an effective gage length of 10 inches, fabricated, cured, dried and measured in accordance with ASTM C 157 modified as follows: specimens shall be removed from molds at an age of 23 ±1 hours after trial batching, shall be placed immediately in water at 70 degrees F ±3 degrees F for at least 30 minutes, and shall be measured within 30 minutes thereafter to determine original length and then submerged in saturated lime water at 73 degrees F ±3 degrees F. Measurement to determine expansion expressed as a percentage of original length shall be made at age 7 days. This length at age 7 days shall be the base length for drying shrinkage calculations ("0" days drying age). Specimens then shall be stored immediately in a humidity control room maintained at 73 degrees F ±3 degrees F and 50 percent ±4 percent relative humidity for the remainder of the test. Measurements to determine shrinkage expressed as percentage of base length shall be made and reported separately for 7, 14, 21, and 28 days of drying after 7 days of moist curing.

3. The drying shrinkage deformation of each specimen shall be computed as the difference between the base length (at "0" days drying age) and the length after drying at each test age. The average drying shrinkage deformation of the specimens shall be computed to the nearest 0.0001 at each test age. If the drying shrinkage of any specimen departs from the average of that test age by more than 0.0004-inch, the results obtained from that specimen shall be disregarded. Results of the shrinkage test shall be reported to the nearest 0.001 percent of shrinkage. Compression test specimens shall be taken in each case from the same concrete used for preparing drying shrinkage specimens. These tests shall be considered a part of the normal compression tests for the project. Allowable shrinkage limitations shall be as specified in Part 2, herein.

K. Construction Tolerances: The CONTRACTOR shall set and maintain concrete forms and perform finishing operations so as to ensure that the completed work is within the tolerances specified in Section [03100] “Concrete Formwork”. Surface defects and irregularities are defined as finishes and are to be distinguished from tolerances.

L. For each class of fly ash, all testing and sampling procedures shall conform with these Specifications and ASTM C 311, including the restriction that one sample weighing 4 pounds shall be taken from at least each 200 tons of fly ash supplied.

M. Separate storage facilities shall be provided for fly ash and other supplementary cementitious materials (SCM). All SCM shall be stored in such a manner as to permit ready access for the purpose of inspection and sampling and suitably protected against contamination or moisture. Should any SCM show evidence of contamination or moisture or be otherwise unsuitable, the INSPECTOR may reject it and require that it be removed from the site. Each SCM used in concrete for this project shall be from the same source.

PART 2 -- PRODUCTS

2.1 CONCRETE MATERIALS

A. Materials shall be delivered, stored, and handled so as to prevent damage by water or breakage. Only one brand of cement shall be used. Cement reclaimed from cleaning bags or leaking containers shall not be used. All cement shall be used in the sequence of receipt of shipments.

B. All materials furnished for the work shall comply with the requirements of ACI 301, as applicable. For bridge structures, materials for concrete shall conform to Section 90-2 to 90-4 of CSS.

C. Storage of materials shall conform to the requirements of ACI 301.

D. Materials for concrete shall conform to the Standard Specifications and the following requirements.

1. Concurrent with strength design criteria, concrete shall also be proportioned to provide the requisite durability to satisfy the exposure conditions imposed by either environment and/or service. Durability, in this context, refers to the ability of the concrete to resist deterioration from the environment or service in which it is placed. Concrete proportioned in accordance with ACI 318, or ACI 350 for sanitary structures, chapter 4, Durability Requirements, will meet this criteria.

2. Cementitious Materials:

   a. Portland Cement shall conform to ASTM C 150, Type V*. (*Per Section 6.7 of the Geotechnical Site Investigation Sixth Street Viaduct - PARC Improvements Los Angeles, California by HAI dated January 2018, the general contractor shall retain a corrosion engineer to evaluate the corrosion potential of the on-site soils and any impact on the proposed structures. Additional corrosion tests will be performed during construction to verify cement type by the general contractor.)

   b. Supplementary Cementitious Materials:
      i. Fly ash shall conform to ASTM C 618, Class F or C.
      ii. Slag cement shall conform to ASTM C 989, Grade 100 or 120.
      iii. Silica fume shall conform to ASTM C 1240, and shall be BASF Corporation's MasterLife SF100, GCP Applied Technologies (formerly W. R. Grace) F10KD, or approved equal.
      iv. Metakaolin shall conform to ASTM C 618, Class N, and shall be BASF Kaolin's (part of BASF Corporation) MetaMax, GCP Applied Technologies (formerly W. R. Grace) HRMK 100, or approved equal.

3. Aggregates shall be obtained from pits acceptable to the INSPECTOR, shall be non-reactive, and shall conform to ASTM C 33. Lightweight sand for fine aggregate will not be permitted.

   a. When tested in accordance with ASTM C 289, the ratio of silica released to reduction in alkalinity shall not exceed 1.0.

b. When tested in accordance with ASTM C 40, the fine aggregate shall produce a color in the supernatant liquid no darker than the reference standard color solution.

c. When tested in accordance with ASTM C 131, the coarse aggregate shall show a loss not exceeding 42 percent after 500 revolutions, or 10.5 percent after 100 revolutions.

d. When tested in accordance with ASTM C 88, the loss resulting after five cycles shall not exceed 10 percent for fine or coarse aggregate when using sodium sulfate.

e. When tested in accordance with ASTM C 117, materials finer than No. 200 sieve shall not exceed 1% for gravel, and 1.5% for crushed aggregate.

f. When tested in accordance with ASTM D 2419, the California sand equivalent values operating range shall not be below 71%.

4. Ready-mixed concrete shall conform to the requirements of ASTM C 94.

a. Water for mixing shall conform to ASTM C 1602 and be clean and free from objectionable quantities of silty organic matter, alkali, salts, and other impurities. The use of qualifying recycled water is encouraged**.** Mixing water that contains non-potable water should comply with ASTM C1602 Section 4 and Section 5 including Table 1 and Table 2**.**

5. Water for mixing shall conform to the SSPWC, Section 201-1.2.3, “Water”. The use of qualifying recycled water is encouraged.

6. Admixtures: The ENGINEER may require the use of admixtures or the CONTRACTOR may propose to use admixtures to control the set, effect water reduction, increase workability or enhance durability. In either case, the addition of an admixture shall be at the CONTRACTOR's expense. The use and continued use of an admixture shall be approved by the ENGINEER. Admixtures specified herein, other than calcium chloride, shall conform to the requirements of ASTM C 494 or other standards specified in this Section. The required quantity of cement shall be used in the mix regardless of whether or not an admixture is used. Admixtures shall contain no free chloride ions, be non-toxic after 30 days, and shall be compatible with and made by the same manufacturer as the air entraining admixture.

These admixtures shall not be used in greater doses than those recommended by the manufacturer or permitted by the ENGINEER. The permitted dosage of the admixture shall not exceed that which will result in an increase in the drying shrinkage of the concrete in excess of 20 percent when used in precast or prestressed concrete, or 10 percent when used in any other structural concrete. The strength of concrete containing the admixture in the amount proposed shall, at the age of 48 hours and longer be not less than that of similar concrete without the admixture. The admixture shall not adversely affect the specified air content, unless permitted by the ENGINEER.

a. Set controlling admixture shall be either with or without water-reducing properties. Where the air temperature at the time of placement is expected to be consistently over 80 degrees F, a set retarding admixture conforming to ASTM C 494, Type B or D, such as Sika Corporation's Plastiment, BASF Corporation’s MasterSet R Series or MasterSet DELVO Series, GCP applied Technologies (formerly W. R. Grace), Recover or Daratard 17 or an approved equal shall be used. Where the air temperature at the time of placement is expected to be consistently under 40 degrees F, a set accelerating admixture conforming to ASTM C 494 Type C or E, such as Sika Corporation's

Plastocrete 161FL, BASF Corporation's MasterSet AC 534 or MasterSet FP 20, GCP applied Technologies (formerly W. R. Grace), Daraset 400 or Polarset or an approved equal shall be used.

b. Normal and mid-range water reducing admixtures shall conform to ASTM C 494, Type A, and shall be BASF Corporation's MasterPozzolith Series, MasterPolyheed series, GCP applied Technologies (formerly W. R. Grace), ADVA series, Zyla series, WRDA series or approved equal. The quantity of admixture used and the method of mixing shall be in accordance with the manufacturer's instructions and recommendations.

c. High range water reducer shall conform to ASTM C 494, Type F or G.

If the high range water reducing admixture is added to the concrete at the batch plant, it shall be, ADVA series ADVA 190, ADVA 198, ADVA 140M as manufactured by GCP Applied Technologies (formerly W. R. Grace) MasterRheobuild 1000, MasterGlenium Series, or PS 1466 as manufactured by BASF Corporation**;** or an approved equal**.** High range water reducer shall be added to the concrete after all other ingredients have been mixed and initial slump has been verified.

If the high range water reducer is added to the concrete at the job site, it shall be used in conjunction with a normal water reducer and shall be MasterPozzolith 700 or MasterPozzolith 322 and MasterGlenium 7500 or MasterGlenium 3030, as manufactured by BASF Corporation; ADVA series ADVA 190, ADVA 198, ADVA 140M and Zyla Series, Zyla 625 or WRDA series, WRDA 64 as manufactured by GCP Applied technologies (formerly W. R. Grace); or an approved equal. Concrete shall have a slump of 3-inches ± 1/2-inch prior to adding the high range water reducing admixture at the job site. Slump shall not exceed 9 inches for concrete after addition of high-range water-reducing admixture. The high range water reducing admixture shall be accurately measured and pressure injected into the mixer as a single dose by an experienced technician. A standby system shall be provided and tested prior to each day's operation of the job site system.

Concrete shall be mixed at mixing speed for a minimum of 30 mixer revolutions after the addition of the high range water reducer.

d. Air-entraining admixture meeting the requirements of ASTM C 260, such as **BASF Corporation's MasterAir Series** or, **GCP Applied Technologies (formerly W. R. Grace Daravair or Darex series,** approved equal, shall be used. Sufficient air-entraining agent shall be used to provide a total air content of 3 to 4 percent; provided that, when the mean daily temperature in the vicinity of the worksite falls below 40 degrees F for more than one day, the total air content provided shall be 5 to 6 percent. The CITY reserves the right, at any time, to sample and test the air-entraining agent received on the job by the CONTRACTOR. The air-entraining agent shall be added to the batch in a portion of the mixing water. The solution shall be batched by means of a mechanical batcher capable of accurate measurement.

e. Workability-retaining admixture shall conform to ASTM C 494, Type S, shall retain concrete workability without affecting time of setting or early age strength development, and shall be BASF Corporation's MasterSure Z60, GCP Applied Technologies (formerly W. R. Grace) ADVA XT2, or approved equal.

f. Corrosion-inhibiting admixture shall be a nominal 30 percent solution of calcium nitrite or an amine/ester-based organic corrosion-inhibiting admixture, and shall be BASF Corporation's MasterLife CI 30, MasterLife CI 222, GCP Applied Technologies (formerly W. R. Grace) DCI series**,** or approved equal.

g. Shrinkage-reducing admixture shall conform to ASTM C 494, Type S, and shall be BASF
Corporation's MasterLife SRA 20, MasterLife CRA 007, GCP Applied Technologies (formerly W. R. Grace) Eclipse series, or approved equal.

h. Alkali-silica reaction inhibiting admixture shall conform to ASTM C 494, Type S, shall contain a nominal lithium nitrate content of 30 percent, and shall be BASF Corporation's
MasterLife ASR 30, GCP Applied Technologies (formerly W. R. Grace) RASIR, or approved equal.

j. Calcium Chloride: Except as otherwise provided herein, calcium chloride will not be permitted to be used in concrete.

2.2 CURING MATERIALS

A. Materials for curing concrete shall conform to Section [03370] "Curing Concrete", Part 2.

2.3 NON-WATERSTOP JOINT MATERIALS

A. Materials for non-waterstop joints in concrete shall conform to Section [03290] "Joints In Concrete", Part 2.

2.4 MISCELLANEOUS MATERIALS

A. Floor sealer/hardener shall be a colorless, aqueous solution of zinc and/or magnesium fluorosilicate or of sodium silicate, and shall be as manufactured by BASF Corporation, W.R. Grace Co., or an approved equal. The solution shall be delivered ready for use in the manufacturer's original sealed containers. Each gallon of the fluorosilicate solution shall contain not less than 2 pounds of crystals.

B. Dampproofing agent shall be an asphalt emulsion, such as MasterSeal 610, MasterSeal 614 or MasterSeal 615 (formerly Hydrocide 600, Hydrocide 700 & Hydrocide 700B) by BASF Corporation, GCP Applied Technologies (formerly W. R. Grace) Darapel, Flintkote C-13-E Foundation Coating, or an approved equal.

C. Epoxy adhesives shall be per the following products for the applications specified:

2c For bonding freshly-mixed, plastic concrete to hardened concrete, Sikadur Hi-Mod Epoxy Adhesive, as manufactured by Sika Corporation; MasterEmaco ADH 326 (formerly Concresive Liquid LPL) as manufactured by BASF Corporation; or an approved equal.

3c For bonding hardened concrete or masonry to steel, MasterEmaco ADH 327RS (formerly Concresive Paste SPL), Colma-Dur Gel, Sikadur Hi-Mod Gel, or an approved equal.

D. Drypack: Field mixture of 1 part Portland cement to 2 parts fine aggregate mixed to a damp consistency such that a ball molded in the hands will stick together and hold its shape. At CONTRACTOR's option, the specified admixture may be added for increased workability at lower water/cement ratio. In lieu of field mixing, CONTRACTOR may use factory mixed drypack material, such as BASF Corporation "MasterFlow 100" or Euclid "Euco Dry Pack Grout", or an approved equal.

E. Expansion Joint Filler: Asphalt impregnated fiber or non-extruding foam type, conforming to ASTM D994 and D1751, or D1752.

F. Construction Joint Materials: “Key-Kold”, “Kwik-Joint” of profiles indicated, or an approved equal.

G. Bonding Agent: “Weld-Crete”, manufactured by Larsen Products Co. or ”MasterEmaco ADH” Series (formerly Concresive Series), as manufactured by BASF Corporation, or an approved equal.

H. For bridge structures, prestressing concrete materials shall comply with CSS Section 50.

I. For bridge structures, epoxy adhesives shall comply with CSS Section 95-2.

2.5 CONCRETE DESIGN REQUIREMENTS

A. General: Concrete shall be composed of cement, SCM, admixtures, aggregates and water. These materials shall be of the qualities specified. The exact proportions in which these materials are to be used for different parts of the work will be determined during the trial batch. In general, the mix shall be designed to produce a concrete capable of being deposited so as to obtain maximum density and minimum shrinkage and, where deposited in forms, to have good consolidation properties and maximum smoothness of surface. Mix designs with more than 41 percent of sand of the total weight of fine and coarse aggregate shall not be used. The aggregate gradations shall be formulated to provide fresh concrete that will not promote rock pockets around reinforcing steel or embedded items. The proportions shall be changed whenever necessary or desirable to meet the required results at no additional cost to the CITY. All changes shall be subject to review by the ENGINEER.

B. W/cm and Compressive Strength: The minimum compressive strength and cement content of concrete shall be not less than that specified in the following tabulation.

Type of Work	Min. 28-Day Compressive Strength (psi)	Aggregate Gradation	Cement per cu yd (sacks)	Max w/cm (by weight)
Structural Concrete **				
a. Retaining/Tunnel Structures:	5,000	C	8.0	0.40
b. Building Elements/Terraces :	4,000	C	7.0	0.45
c. Light Pole/Misc. Site Footings:	4,000	C	7.0	0.45
d. Other Structures:	3,250	C	6.0	0.54
Vehicular Rated Concrete***:	4,000	C	7.0	0.42
Sitework concrete:	2,500	C	5.5	0.50
Lean concrete:	2,000	C	4.8	0.71

Note: One sack of cement equals 94 lb.
* Unless otherwise noted on plans.
** Use “B” Aggregate gradation when placing conditions permit.
*** Concrete shall conform to Table 622.1 of the Caltrans Highway Design Manual.

C Adjustments to Mix Design: The mixes used shall be changed whenever such change is necessary or desirable to secure the required strength, density, workability, and surface finish and the CONTRACTOR shall be entitled to no additional compensation because of such changes.

D. Fly ash/pozzolan may be used per requirements of the Standard Specifications, when approved by the ENGINEER as a partial cement replacement in concrete as follows:

4c Fly ash shall replace not more than 20 percent by weight of the Portland cement in the design mix. The design mix shall contain a minimum of 7 sacks of cement per cubic yard before the replacement is made.

5c Fly ash for hydraulic/liquid containing structures shall be Class F fly ash only. Fly ash for all other structures shall be Class C or F fly ash.

2.6 CONSISTENCY

The quantity of water entering into a batch of concrete shall be just sufficient, with a normal mixing period, to produce a concrete which can be worked properly into place without segregation, and which can be compacted by the vibratory methods herein specified to give the desired density, impermeability and smoothness of surface. Subject to the w/c ratio requirements of section 2.5, the quantity of water shall be changed as necessary, with variations in the nature or moisture content of the aggregates, to maintain uniform production of a desired consistency. The consistency of the concrete in successive batches shall be determined by slump tests in accordance with ASTM C 143. The slumps shall be as follows:

Part of Work	Slump (in)
With high range water reducer added	9-inches max
Other work	per Standard Specifications

2.7 TRIAL BATCH AND LABORATORY TESTS

A. Before placing any concrete, a Department of Building and Safety certified testing laboratory approved by the ENGINEER shall prepare, within 30 calendar days after the date of the Notice to Proceed, a trial batch of each concrete mix, based on the preliminary concrete mixes submitted by the CONTRACTOR. During the trial batch the aggregate proportions may be adjusted by the testing laboratory using the two coarse aggregate size ranges to obtain the required properties. If one size range produces an acceptable mix, a second size range need not be used. Such adjustments shall be considered refinements to the mix design and shall not be the basis for extra compensation to the CONTRACTOR. All concrete shall conform to the requirements of this Section, whether the aggregate proportions are from the CONTRACTOR's preliminary mix design, or whether the proportions have been adjusted during the trial batch process. The trial batch shall be prepared using the aggregates, cement and admixture proposed for the project. The trial batch materials shall be of a quantity such that the testing laboratory can obtain 3 drying shrinkage, and 10 compression test specimens from each batch. The cost of not more than 3 laboratory trial batch tests for each specified concrete strength shall be borne by the CONTRACTOR. Any additional trial batch testing required shall be performed at the expense of the CONTRACTOR.

The trial batch procedure may be waived when test data of prior performance of the proposed mix design, performed by a Department of Building and Safety certified testing laboratory, is presented by the CONTRACTOR and approved by the ENGINEER.

The requirements of this section may be waived for concrete mixes specified by the Class per the Standard Specifications.

B. The determination of compressive strength will be made by testing 6-inch diameter by 12-inch high cylinders; made, cured and tested in accordance with ASTM C 192 and ASTM C 39. Five compression test cylinders shall be tested at 7 days and 5 at 28 days. The average compressive strength for the 5 cylinders tested at 28 days for any given trial batch shall not be less than the appropriate sections of ACI 318 of the specified compressive strength.

C. A sieve analysis of the combined aggregate for each trial batch shall be performed according to the requirements of ASTM C 136. Values shall be given for percent passing each sieve.

2.8 SHRINKAGE LIMITATION

A. The maximum concrete shrinkage for specimens cast in the laboratory from the trial batch, as measured at 21-day drying age or at 28-day drying age shall be 0.036 percent or 0.042 percent, respectively. The CONTRACTOR shall only use a mix design for construction that has first met the trial batch shrinkage requirements. Testing for shrinkage but be performed as one of the first items of work.

B. The maximum concrete shrinkage for specimens cast in the field shall not exceed the trial batch maximum shrinkage requirement by more than 25 percent. The CONTRACTOR may conduct additional C157 testing of the mix design identified in 2.8.A using field prepared samples, following the instructions of ASTM C172 and establish a shrinkage correlation between field and laboratory casted samples. However, such testing must be performed soon after a mix design has been accepted by the ENGINEER. Number of samples, preparation, storage, and testing to be approved by the ENGINEER.

C. If the required shrinkage limitation is not met during construction, the CONTRACTOR shall take any or all of the following actions, at no additional cost to the CITY, for securing the specified shrinkage requirements. These actions may include changing the source or aggregates, cement and/or admixtures; reducing water content; washing of aggregate to reduce fines; increasing the number of construction joints; modifying the curing requirements; or other actions designed to minimize shrinkage or the effects of shrinkage.

2.9 MEASUREMENT OF CEMENT AND AGGREGATE

The amount of cement and of each separate size of aggregate entering into each batch of concrete shall be determined by direct weighing equipment furnished by the CONTRACTOR and acceptable to the ENGINEER; provided that, where batches are so proportioned as to contain an integral number of conventional sacks of cement, and the cement is delivered at the mixer in the original unbroken sacks, the weight of the cement contained in each sack may be taken without weighing as 94 pounds.

2.10 MEASUREMENT OF WATER

The quantity of water entering the mixer shall be measured by a suitable water meter or other measuring device of a type acceptable to the ENGINEER and capable of measuring the water in variable amounts within a tolerance of one percent. The water feed control mechanism shall be capable of being locked in position so as to deliver constantly any specified amount of water to each batch of concrete, and the meter shall include a set-back register with a readily visible vertical face and double hands indicating in cubic feet and decimals thereof. A positive quick-acting valve shall be used for a cut-off in the water line to the mixer. The operating mechanism must be such that leakage will not occur when the valves are closed

2.11 READY-MIXED CONCRETE

A. At the CONTRACTOR's option, ready-mixed concrete may be used meeting the requirements as to materials, batching, mixing, transporting, and placing as specified herein and in accordance with ASTM C 94, including the following supplementary requirements.

B. Ready-mixed concrete shall be delivered to the site of the work, and discharge shall be completed within 90 minutes after the addition of the cement to the aggregates or before the drum has been revolved 250 revolutions, whichever is first. In hot weather, or under conditions contributing to quick stiffening of the concrete, the ready-mixed concrete shall be discharged before the temperature of the concrete exceeds 90 degrees F.

C. Truck mixers shall be equipped with electrically-actuated counters by which the number of revolutions of the drum or blades may be readily verified. The counter shall be of the re-settable, recording type, and shall be mounted in the driver's cab. The counters shall be actuated at the time of starting mixers at mixing speeds.

D. Each batch of concrete shall be mixed in a truck mixer for not less than 70 revolutions of the drum or blades at the rate of rotation designated by the manufacturer of equipment. Additional mixing, if any, shall be at the speed designated by the manufacturer of the equipment as agitating speed. All materials including mixing water shall be in the mixer drum before actuating the revolution counter for determining the number of revolution of mixing.

E. Truck mixers and their operation shall be such that the concrete throughout the mixed batch as discharged is within acceptable limits of uniformity with respect to consistency, mix, and grading. If slump tests taken at approximately the 1/4 and 3/4 points of the load during discharge give slumps differing by more than 2-inches when the specified slump is more than 3-inches, the mixer shall not be used on the work unless the causing condition is corrected and satisfactory performance is verified by additional slump tests. All mechanical details of the mixer, such as water measuring and discharge apparatus, condition of the blades, speed of rotation, general mechanical condition of the unit, and clearance of the drum, shall be checked before a further attempt to use the unit will be permitted.

F. Each batch of ready-mixed concrete delivered at the job site shall be accompanied by a certified weighmaster delivery ticket furnished to the INSPECTOR in accordance with the Paragraph in Part 1 entitled "Certified Delivery Tickets".

G. The use of non-agitating equipment for transporting ready-mixed concrete will not be permitted. Combination truck and trailer equipment for transporting ready-mixed concrete will not be permitted. The quality and quantity of materials used in ready-mixed concrete and in batch aggregates shall be subject to continuous inspection at the batching plant by the INSPECTOR.

H Mixing and Transporting of concrete for bridge structures shall comply with Section 90-6 of CSS.

2.12 PRESTRESSING CONCRETE

Prestressing of concrete for bridge structures shall comply with Section 50 of CSS.

2.13 CONCRETE BARRIER

Concrete barrier materials shall comply with Section 83-2.02 of CSS.

PART 3 -- EXECUTION

3.1 PROPORTIONING AND MIXING

A. Proportioning: Proportioning of the concrete mix shall conform to the requirements of Chapter 3 "Proportioning" of ACI 301; provided that the maximum slump for any concrete shall not exceed 4-

inches except when the use of high range water reducer is permitted which increases the maximum slump to 8-inches. Proportioning for bridge structures shall comply with Section 90-5 of the CSS.

B. Mixing: Mixing of concrete shall conform to the requirements of Chapter 7 of said ACI 301 Specifications and SSPWC. Whichever is most stringent shall apply.

C. Slump: Maximum slumps shall be as specified herein in Section 2.6.

D. Retempering: Retempering of concrete or mortar which has partially hardened will not be permitted.

3.2 PREPARATION OF SURFACES FOR CONCRETING

A. General: Wet wood forms sufficiently to tighten up cracks. Wet other materials sufficiently to reduce adsorption and to help maintain concrete workability. Earth surfaces shall be thoroughly wetted by sprinkling, 24 hours prior to the placing of any concrete, and these surfaces shall be kept moist by frequent sprinkling up to the time of placing concrete thereon. The surface shall be free from standing water, mud, and debris at the time of placing concrete.

B. Vapor Barrier: Install under interior floor slabs on grade. Lap joints 6" in the direction of concrete spreading and tape seal. Seal the joints at walls and around penetrations with tape. Cover barrier with 2" layer of clean damp sand.

C. Screeds: Set screeds at walls and maximum 8’ centers between. Set to provide level floor. Check with an instrument level, transit, or laser during placing operation to maintain level floor.

D. Screeds Over Vapor Barrier: Use weighted pad or cradle type screeds and do not drive stakes through the vapor barrier. Check with an instrument level, transit, or laser.

E. Metal Floor Decking: Verify that decking joints are sealed and there are no openings or voids that will permit concrete leakage.

F. Expansion Joint Filler: Install where slabs abut buildings and elsewhere as indicated. Install full depth of concrete with top level with finished surface of concrete.

G. Joints in Concrete: Concrete surfaces upon or against which concrete is to be placed, where the placement of the old concrete has been stopped or interrupted so that, as determined by the ENGINEER, the new concrete cannot be incorporated integrally with that previously placed, are defined as construction joints. The surfaces of horizontal joints shall be given a compacted, roughened surface for good bond. Except where the Drawings call for joint surfaces to be coated, the joint surfaces shall be cleaned of all laitance, loose or defective concrete, and foreign material. Such cleaning shall be accomplished by sandblasting followed by thorough washing. All pools of water shall be removed from the surface of construction joints before the new concrete is placed.

H. After the surfaces have been prepared all approximately horizontal construction joints shall be covered with a layer of mortar approximately two-inch thick, or as shown on the plans. The mortar shall have the same proportions of cement and sand as the regular concrete mixture. The water-cement ratio of the mortar in place shall not exceed that of the concrete to be placed upon it, and the consistency of the mortar shall be suitable for placing and working in the manner hereinafter specified. The mortar shall be spread uniformly and shall be worked thoroughly into all irregularities of the surface. Wire brooms shall be used where possible to scrub the mortar into the surface. Concrete shall be placed immediately upon the fresh mortar. When casting deep walls (more than 6 feet high) over slabs or footings, in lieu of the two-inch thick mortar, a 6-inch lift of a rich pea gravel mix with the same water-cement ratio as the wall concrete shall be placed and spread

uniformly. Wall concrete shall follow immediately and shall be placed upon the fresh pea gravel mix.

I. Embedded Items: No concrete shall be placed until all formwork, installation of parts to be embedded, reinforcement steel, and preparation of surfaces involved in the placing have been completed and ACCEPTED by the INSPECTOR at least 24 hours before placement of concrete. All surfaces of forms and embedded items that have become encrusted with dried grout from concrete previously placed shall be cleaned of all such grout before the surrounding or adjacent concrete is placed.

J. Conduits and Sleeves:

1. Locate so as not to reduce the strength of construction. Do not place pipes, except conduits in a slab of less than 3-1/2" thickness.

2. In supported concrete slabs, do not bury conduit having any outside diameter greater than 33% of the thickness of the slab. Increase slab thickness locally to meet this requirement.

3. Do not place conduit between the bottom of reinforcing steel and the bottom of supported slab.

4. In placing conduits at slabs on earth, place below the reinforcement, and encase in concrete by increasing thickness of the slab locally to at least 3" of concrete around the conduit on all sides.

K. All inserts or other embedded items shall conform to the requirements herein.

L. All reinforcement, anchor bolts, sleeves, inserts, and similar items shall be set and secured in the forms where shown or by shop drawings and shall be acceptable to the INSPECTOR before any concrete is placed. Accuracy of placement is the responsibility of the CONTRACTOR.

M. Where concrete is to be cast against old concrete, (greater than 60 days of age), the surface of the old concrete shall be thoroughly cleaned and roughened by sand-blasting, exposing the aggregate. In concrete shear-walls, suspended slabs and roof slabs, the interface surface at construction joints shall be roughened to a full amplitude of one quarter inch. The hardened surface shall be cleaned of all latent foreign material and washed clean, prior to the application of an epoxy bonding agent.

N. Concrete shall not be placed in any structure until all water entering the space to be filled with concrete has been properly cut off or has been diverted by pipes, or other means, and carried out of the forms, clear of the work. Concrete shall not be deposited underwater nor shall the CONTRACTOR allow still water to rise on any concrete until the concrete has attained its initial set. Water shall not be permitted to flow over the surface of any concrete in such manner and at such velocity as will injure the surface finish of the concrete. Pumping or other necessary dewatering operations for removing ground water, if required, will be subject to the review of the ENGINEER.

O. Corrosion Protection: Pipe, conduit, dowels, and other ferrous items required to be embedded in concrete construction shall be so positioned and supported prior to placement of concrete that there will be a minimum of 2-inches clearance between said items and any part of the concrete reinforcement. Securing such items in position by wiring or welding them to the reinforcement will not be permitted.

P. Openings for pipes, inserts for pipe hangers and brackets, and the setting of anchors shall, where practicable, be provided for during the placing of concrete.

Q. Anchor bolts shall be accurately set, and shall be maintained in position by templates while being embedded in concrete.

R. Cleaning: The surfaces of all metalwork to be in contact with concrete shall be thoroughly cleaned of all dirt, grease, loose scale and rust, grout, mortar, and other foreign substances immediately before the concrete is placed.

3.3 HANDLING, TRANSPORTING, AND PLACING

A. General: Do not place concrete during rain or adverse weather conditions without means to prevent all damage. Conform to requirements specified hereinafter whenever concrete placement is required during cold or hot weather. Placing of concrete shall conform to the applicable requirements of ACI 301 and the requirements of this Section.

B. Non-Conforming Work or Materials: Concrete which upon or before placing is found not to conform to the requirements specified herein shall be rejected and immediately removed from the work. Concrete which is not placed in accordance with these Specifications, or which is of inferior quality, shall be removed and replaced by and at the expense of the CONTRACTOR.

C. Concrete shall not be placed except in the presence of duly authorized representative of the INSPECTOR. The CONTRACTOR shall notify the INSPECTOR in writing at least 48 hours in advance of placement of any concrete.

D. Placement in Wall Forms: Concrete shall not be dropped through reinforcement steel or into any deep form, whether reinforcement is present or not, causing separation of the coarse aggregate from the mortar on account of repeatedly hitting rods or the sides of the form as it falls, nor shall concrete be placed in any form in such a manner as to leave accumulation of mortar on the form surfaces above the placed concrete. In such cases, some means such as the use of hoppers and, if necessary, vertical ducts of canvas, rubber, or metal shall be used for placing concrete in the forms in a manner that it may reach the place of final deposit without separation. In no case shall the free fall of concrete exceed 4 feet below the ends of ducts, chutes, or buggies. Concrete shall be uniformly distributed during the process of depositing and in no case after depositing shall any portion be displaced in the forms more than 6 feet in horizontal direction. Concrete in forms shall be deposited in uniform horizontal layers not deeper than 2 feet; and care shall be taken to avoid inclined layers or inclined construction joints except where such are required for sloping members. Each layer shall be placed while the previous layer is still soft. The rate of placing concrete in forms shall not exceed 5 feet of vertical rise per hour.

E. Casting New Concrete Against Old: An approved epoxy adhesive bonding agent shall be applied to the old surfaces according to the manufacturer's written recommendations. This provision shall not apply to joints where waterstop is installed, see Section [03290], "Joints in Concrete".

F. Conveyor Belts and Chutes: All ends of chutes, hopper gates, and all other points of concrete discharge throughout the CONTRACTOR'S conveying, hoisting and placing system shall be so designed and arranged that concrete passing from them will not fall separated into whatever receptacle immediately receives it. Conveyor belts, if used, shall be of a type acceptable to the ENGINEER. Chutes longer than 50 feet will not be permitted. Minimum slopes of chutes shall be such that concrete of the specified consistency will readily flow in them. If a conveyor belt is used, it shall be wiped clean by a device operated in such a manner that none of the mortar adhering to the belt will be wasted. All conveyor belts and chutes shall be covered. Sufficient illumination shall be provided in the interior of all forms so that the concrete at the places of deposit is visible from the deck or runway.

G. Placement in Slabs: Concrete placed in sloping slabs shall proceed uniformly from the bottom of the slab to the top, for the full width of the pour. As the work progresses, the concrete shall be vibrated and carefully worked around the slab reinforcement, and the surface of the slab shall be screeded in an up-slope direction.

H. Temperature of Concrete: The temperature of concrete when it is being placed shall be not more than 90 degrees F nor less than 40 degrees F in moderate weather, and not less than 50 degrees F in weather during which the mean daily temperature drops below 40 degrees F. Concrete ingredients shall not be heated to a temperature higher than that necessary to keep the temperature of the mixed concrete, as placed, from falling below the specified minimum temperature. If concrete is placed when the weather is such that the temperature of the concrete would exceed 90 degrees F, the CONTRACTOR shall employ effective means, such as precooling of aggregates and mixing water using ice or placing at night, as necessary to maintain the temperature of the concrete, as it is placed, below 90 degrees F. The CONTRACTOR shall be entitled to no additional compensation on account of the foregoing requirements.

I. Cold Weather Placement:

1. Earth foundations shall be free from frost or ice when concrete is placed upon or against them. Fly ash concrete shall not be placed when the air temperature falls below 50 degrees F.

2. Normal Concrete: When the temperature is below 40 degrees F, the temperature of the concrete placed in the forms shall be at least 60 degrees F. When the temperature is below 30 degrees F, the temperature of the concrete as mixed shall be 65°F. In all cases, when the daily average temperature is below 40 degrees F, the concrete shall be kept at 55 degrees F for the 72 hours, and then allowed to drop uniformly to the air temperature over the next 24 hours. Concrete temperature shall be measured by placing a thermometer 2" below the top of the concrete being placed.

3. Air-entrained concrete shall be kept at the above temperature for 27 hours and above freezing for an additional 72 hours.

4. No calcium chloride shall be used to accelerate hardening of concrete. CONTRACTOR to certify that any additive used does not contain calcium chloride.

5. If low temperature accelerating admixture is proposed, adjust concrete mix as required and obtain approval of the ENGINEER.

6. All concrete materials, reinforcement, forming materials and ground with which concrete is to come in contact shall be free of frost.

7. The covering or other protection used in connection with the curing shall remain in place and intact for at least 24 hours.

8. The work shall be protected from the elements, flowing water, and defacements of any nature during the construction operations.

9. Conform to the provisions of ACI 306.1, except as modified herein.

J. Hot Weather Placement:

Conform to ACI 305.1 and the following requirements:

1. Take extra care to reduce the temperature of the concrete being placed, and to prevent rapid drying of newly placed concrete. When the outdoor ambient temperature is more than 90 degrees F, shade the fresh concrete as soon as possible after placing, use an evaporation reducer or fogging to minimize rapid drying. and start curing as soon as the surface of the fresh concrete is sufficiently hard to permit it without damage.

2. Concrete placement temperatures shall be controlled by the CONTRACTOR and shall not be limited to:

   a. Shading and cooling the aggregate;

   b. Avoiding use of hot cement;

   c. Cooling mixing water by additions of ice;

   d. Insulating water supply lines and tanks; and

   e. Insulating mixer drums or cooling them with sprays or wet burlap.

K. Cast-in-place concrete shall be homogeneous throughout the structural element. The methods used to place shall prevent segregation. Placement of concrete for bridge structures shall conform to Section 51-1 of the CSS.

3.4 PUMPING OF CONCRETE

A. General: If the pumped concrete does not produce satisfactory end results, the CONTRACTOR shall discontinue the pumping operation and proceed with the placing of concrete using conventional methods.

B. Pumping Equipment: The pumping equipment must have 2 cylinders and be designed to operate with one cylinder only in case the other one is not functioning. In lieu of this requirement, the CONTRACTOR may have a standby pump on the site during pumping.

C. The minimum diameter of the hose (conduits) shall be 4-inches.

D. Pumping equipment and hoses (conduits) that are not functioning properly, shall be replaced.

E. Aluminum conduits for conveying the concrete will not be permitted.

F. Gradation of coarse aggregates shall conform to ASTM C 33 and shall be as close to the middle range as possible.

G. Gradation of fine aggregate shall conform to ASTM C 33, with 15 to 30 percent passing the number 50 screen and 5 to 10 percent passing the number 100 screen. The fineness modulus of sand used shall not be over 3.00.

H. Field Control: Concrete samples for slump per ASTM C 143 and test cylinders per ASTM C 31 and C 39.

3.5 ORDER OF PLACING CONCRETE

A. The order of placing concrete in all parts of the work shall be acceptable to the ENGINEER. In order to minimize the effects of shrinkage, the concrete shall be placed in units as bounded by construction joints shown. The placing of units shall be done by placing alternate units in a manner such that each unit placed shall have cured at least 7 days before the contiguous unit or units are placed, except that the corner sections of vertical walls shall not be placed until the 2 adjacent wall panels have cured at least 14 days.

B. The surface of the concrete shall be level whenever a run of concrete is stopped. To insure a level, straight joint on the exposed surface of walls, a wood strip at least 3/4-inch thick shall be tacked to the forms on these surfaces. The concrete shall be carried about 1/2-inch above the underside of

the strip. About one hour after the concrete is placed, the strip shall be removed and any irregularities in the edge formed by the strip shall be leveled with a trowel and all laitance shall be removed.

3.6 TAMPING AND VIBRATING

A. As concrete is placed in the forms or in excavations, it shall be thoroughly settled and compacted, throughout the entire depth of the layer which is being consolidated, into a dense, homogeneous mass, filling all corners and angles, thoroughly embedding the reinforcement, eliminating rock pockets, and bringing only a slight excess of water to the exposed surface of concrete during placement. Vibrators shall be high speed power vibrators (8,000 to 10,000 rpm) of an immersion type in sufficient number and with (at least one) standby units as required.

B. Operation of Vibrators: Do not horizontally transport concrete in forms with vibrators nor allow vibrators to contact forms or reinforcing. Push vibrators vertically into the preceding layers that are still plastic and slowly withdraw, producing maximum obtainable density in concrete without creating voids or segregation. In no case disturb concrete that has partially set. Vibrate at intervals not exceeding two-thirds the effective visible vibration diameter of the submerged vibrator. Avoid excessive vibration that causes segregation. Use and type of vibrators shall conform to ACI 309 "Recommended Practice for Consolidation of Concrete".

C. Correction of Segregation: Before placing next layer of concrete, and at the top of last placement for vertical elements, remove concrete containing excess water or fine aggregate or showing deficiency of coarse aggregate and fill the space with compacted concrete of correct proportions.

D. Care shall be used in placing concrete around waterstops. The concrete shall be carefully worked by rodding and vibrating to make sure that all air and rock pockets have been eliminated. Where flat-strip type waterstops are placed horizontally, the concrete shall be worked under the waterstops by hand, making sure that all air and rock pockets have been eliminated. Concrete surrounding the waterstops shall be given additional vibration, over and above that used for adjacent concrete placement to assure complete embedment of the waterstops in the concrete.

E. Concrete in walls shall be internally vibrated and at the same time rammed, stirred, or worked with suitable appliances, tamping bars, shovels, or forked tools until it completely fills the forms or excavations and closes snugly against all surfaces. Subsequent layers of concrete shall not be placed until the layers previously placed have been worked thoroughly as specified. Vibrators shall be provided in sufficient numbers, with standby units as required, to accomplish the results herein specified within 15 minutes after concrete of the prescribed consistency is placed in the forms. The vibrating head shall be kept from contact with the surfaces of the forms. Care shall be taken not to vibrate concrete excessively or to work it in any manner that causes segregation of its constituents.

3.7 FINISHING CONCRETE SURFACES

A. General: Surfaces shall be free from fins, bulges, ridges, offsets, honeycombing, or roughness of any kind, and shall present a finished, smooth, continuous hard surface. Allowable deviations from plumb or level and from the alignment, profiles, and dimensions shown are defined as tolerances and are specified in Part 1, herein. These tolerances are to be distinguished from irregularities in finish as described herein. Aluminum finishing tools shall not be used.

B. Formed Surfaces: Formed surfaces for all structures other than building structures and bridge decks, shall be finished per Section 303-1.9 of Standard Specifications. Concrete for bridge decks shall be finished per CSS Section 51-1.17. Concrete for building and retaining wall structures shall be finished per architectural finish as specified hereon, or as shown on Drawings.

C. Finishing of Formed Surfaces (As Applicable):

1. General: After removal of forms, give the concrete surfaces one or more of the finishes specified below where so indicated on the Contract Drawings. Revise the finishes as needed to secure the approval of the ENGINEER.

2. As-Cast Finish:

a. Rough Form Finish:

1.) Leave surfaces with the texture imparted by forms, except patch tie holes and defects.

2.) Remove fins exceeding 3-inch in height.

b. Smooth Form Finish:

1.) Coordinate as necessary to secure form construction using smooth, hard, uniform surfaces, with number of seams kept to a practical minimum and in a uniform and orderly pattern.

2.) Patch tie holes and defects.

3.) Remove fins completely.

3. Rubbed Finishes:

a. Provide these finishes only where specifically called for, and then only on a "Smooth Form Finish" base as described above.

b. Smooth Rubbed Finish:

1.) Produce on newly hardened concrete no later than the day following form removal.

2.) Wet the surfaces, and rub with carborundum brick or other abrasive until uniform color and texture are produced.

3.) Do not use a cement grout other than the cement paste drawn from the concrete itself by the rubbing process.

c. Smooth Steel-Trowel Finish: To be applied to all interior floor slabs that will receive resilient floor covering or carpeting. To produce a smooth surface free from defects and blemishes, employ at least two separate troweling operations in which long-handle Fresno Trowels will not be permitted; use of mechanical trowels of approved type permissible only in first troweling; hand-troweling required after initial operation; no dry cement or cement-sand mixtures to be sprinkled on surfaces to absorb moisture or stiffen the concrete; no water to be used in troweling operations.

d. Grout Cleaned Finish:

1.) Do not start cleaning operations until all contiguous surfaces to be cleaned are completed and accessible.

2.) Do not permit cleaning as the work progresses.

3.) Mix one (1) part Portland cement and one-half (1/2) part fine sand with sufficient

water to produce a grout having the consistency of thick paint.

4.) Substitute white Portland cement for part of the gray portland cement as required to produce a color matching the color of surrounding concrete, as determined by a trial patch.

5.) Wet the surface of the concrete sufficiently to prevent absorption of water from the grout, and apply the grout uniformly with brushes or spray gun.

6.) Immediately after applying the grout, scrub the surface vigorously with a cork float or stone to coat the surface and fill all air bubbles and holes.

7.) While the grout is still plastic, remove all excess grout by working the surface with a rubber float, sack, or other means.

8.) After the surface whites from drying (about 30 minutes at normal temperatures), rub vigorously with clean burlap.

9.) Keep the surface damp for at least 36 hours after final rubbing.

e. Cork Floated Finish:

1.) Remove forms at an early stage, and no later than three days after placement of concrete.

2.) Remove ties.

3.) Remove burrs and fins.

4.) Mix one (1) part Portland cement and one (1) part fine sand with sufficient water to produce a stiff mortar.

5.) Dampen the wall surface.

6.) Apply mortar with a firm rubber float or with a trowel, filling all surface voids.

7.) Compress mortar into voids using a slow-speed grinder or stone.

8.) If the mortar surface dries too rapidly to permit proper compacting and finishing, apply a small amount of water with a fog sprayer.

9.) Produce the final texture with a cork float using a swirling motion.

4. Unspecified Finish: If the finish or formed surfaces is not specifically called out elsewhere in the Contract Documents, provide the following finishes as applicable.

a. Rough Form Finish: For all concrete surfaces not exposed to public view.

b. Smooth Form Finish: For all concrete surfaces exposed to public view.

D. Finishing unformed top surfaces of slabs, floors, walls, and curbs (As Applicable):

1. Definition of Finishing Tolerances:

a. "Class A": True plane within 1/8" in ten feet as determined by a ten-foot straightedge

placed anywhere on the slab in any direction.

b. "Class B": True plane within 3" in ten feet as determined by a ten-foot straightedge placed any where on the slab in any direction.

c. "Class C": True plane within 3" in two feet as determined by a two-foot straightedge placed anywhere on the slab in any direction.

2. Scratched Finish: After the concrete has been placed, consolidated, struck off, and leveled to a "Class C" tolerance, roughen the surface with stiff brushes or rakes before the final set.

3. Floated Finish:

a. After the concrete has been placed, consolidated, struck off, and leveled, do not work the concrete further until ready for floating.

b. Begin floating when the water sheen has disappeared and when the surface has stiffened sufficiently to permit the floating operation.

c. During or after the first floating operation, check the planeness of the surface with a ten-foot straightedge applied at not less than two different angles.

d. Cut down high spots and fill low spots, and produce a surface with a Class B tolerance throughout.

e. Refloat the slab immediately to produce a uniform sandy texture.

4. Troweled Finish:

a. Provide a floated finish as described above, followed by a power troweling and then a hand troweling.

1.) Produce initial surface relatively free from defects, but which still may show some trowel marks.

2.) Provide hand troweling when a ringing sound is produced as the trowel is moved over the surface.

3.) Thoroughly consolidate surface by hand troweling.

b. Provide a finished surface essentially free from trowel marks, uniform in texture and appearance, and in a plane of Class A tolerance.

1.) For concrete on metal deck, "Class B" true plane tolerance is acceptable.

2.) On surfaces intended to support floor coverings, use grinding or other means as necessary to remove all defects of such magnitude as would show through the floor covering.

5. Broom Finish:

a. Provide a floated finish as described above.

b. While the surface is still plastic, provide a textured finish by drawing a fiber bristle broom uniformly over the surface.

c. Unless otherwise directed by the ENGINEER, provide the texturing in one direction only.

d. Provide "light", "medium", or "coarse" texturing as directed by the ENGINEER or otherwise called for on the Contract Drawings.

6. Exposed Aggregate Finish:

a. Provide a floated finish as described above.

b. While the surface is still plastic, embed an approved aggregate uniformly into the surface by light tamping.

c. Provide complete coverage to the depth of a single stone.

d. Float the surface until the embedded stone is fully coated with mortar and the surface has been brought to a true plane with "Class B" tolerance.

e. After the matrix has hardened sufficiently to prevent dislodgement of aggregate, begin exposure.

1.) Allow copious quantities of water, without force, to flow over the surface of the concrete while the matrix encasing the aggregate is removed by brushing with a fine bristle brush.

2.) Continue this operation until the aggregate is uniformly exposed, but not dislodged.

f. An approved chemical retarder may be used and sprayed onto the freshly floated surface to extend the working time for exposure of aggregate.

7. Unspecified Finish: If the finish of slab surfaces is not specifically called for elsewhere in the Contract Documents, provide the following finishes as applicable:

a. Scratched Finish: For surfaces scheduled to receive bond-applied cementitious applications.

b. Floated Finish: For surfaces intended to receive roofing.

c. Troweled Finish:

1.) For floors intended as walking surfaces.

2.) Floors scheduled to receive floor coverings or waterproof membrane.

3.) Parking areas.

d. Broom Finish: Garage Ramps.

e. Non-Slip Finish:

1.) Exterior platforms, steps and landings and slabs over underground fuel storage tanks.

2.) Interior and exterior pedestrian ramps.

f. Light Sand Blast Finish: For exterior walking surfaces.

E. Slab Surfaces-Testing: Test with a 10-foot straight-edge to detect high and low spots; maximum 3-inch in 10-feet permitted; deviations to be eliminated, surfaces to be approved by the ENGINEER; make any necessary corrections as directed by the ENGINEER.

F. Soda and Acid Wash:

1. Concrete surfaces to receive plaster, paint or other finish and which have been formed by oil-coated forms, scrub with a solution of one and one-half (1-1/2) lbs. caustic soda to one gallon of water.

2. On surfaces where smooth wood or waste molds have been used, scrub with a solution of 20% muriatic acid or hydrochloric acid.

3. After the surfaces have been scrubbed, wash with clean water as soon as possible.

G. Surface finish for bridge structures, other than bridge decks, shall comply with Section 51-1.18 of CSS.

3.8 CURING AND DAMPPROOFING

Curing and Dampproofing shall conform to Section [03370] “Curing Concrete”, Part 3.

3.9 PROTECTION

The CONTRACTOR shall protect all concrete against injury until final acceptance by the CITY. Fresh concrete shall be protected from damage due to rain, hail, sleet, or snow. The CONTRACTOR shall provide such protection while the concrete is still plastic and whenever such precipitation is imminent or occurring. Immediately following the first frost in the fall, the CONTRACTOR shall be prepared to protect all concrete against freezing. After the first frost, and until the mean daily temperature in the vicinity of the worksite falls below 40 degrees F for more than one day, the concrete shall be maintained at a temperature not lower than 50 degrees F for at least 72 hours after it is placed.

The CONTRACTOR shall protect all concrete against injury or damage from excessive heat, lack of moisture, overstress, or any other cause until final acceptance by the CITY. Particular care shall be taken to prevent the drying of concrete and to avoid roughening or otherwise damaging the surface. Any concrete found to be damaged, or which may have been originally defective, or which becomes defective at any time prior to the final acceptance of the completed work, or which departs from the established line or grade, or which, for any other reason, does not conform to the requirements of the Contract Documents, shall be satisfactorily repaired or removed and replaced with acceptable concrete at the CONTRACTOR'S expense.

3.8 TREATMENT OF SURFACE DEFECTS

A. As soon as forms are removed, all exposed surfaces shall be carefully examined and any irregularities shall be immediately rubbed or ground in a satisfactory manner in order to secure a smooth, uniform, and continuous surface. Plastering or coating of surfaces to be smoothed will not be permitted. No repairs shall be made until after inspection by the ENGINEER. In no case will extensive patching of honeycombed concrete be permitted. Concrete containing minor voids, holes, honeycombing, or similar depression defects shall be repaired as specified herein. Concrete containing extensive voids, holes, honeycombing, or similar depression defects, shall be completely removed and replaced. All repairs and replacements herein specified shall be promptly executed by the CONTRACTOR at its own expense.

B. Defective surfaces to be repaired shall be cut back from true line a minimum depth of 1/2-inch over the entire area. Feathered edges will not be permitted. Where chipping or cutting tools are not required in order to deepen the area properly, the surface shall be prepared for bonding by the removal of all laitance or soft material, and not less than 1/32-inch depth of the surface film from all hard portions, by means of an efficient sandblast. After cutting and sandblasting, the surface shall be wetted sufficiently in advance of shooting with shotcrete or with cement mortar so that while the repair material is being applied, the surfaces under repair will remain moist, but not so wet as to overcome the suction upon which a good bond depends. The material used for repair purposes shall consist of a mixture of one sack of cement to 3 cubic feet of sand. For exposed walls, the cement shall contain such a proportion of Atlas white Portland cement as is required to make the color of the patch match the color of the surrounding concrete.

C. Holes left by tie-rod cones shall be reamed so as to leave the surfaces of the holes clean and rough. These holes then shall be repaired in an approved manner with non-shrink grout. Holes left by form-tying devices having a rectangular cross-section, and other imperfections having a depth greater than their least surface dimension, shall not be reamed but shall be repaired in an approved manner with non-shrink grout.

D. All repairs shall be built up and shaped in such a manner that the completed work will conform to the requirements of this Section, as applicable, using approved methods which will not disturb the bond, cause sagging, or cause horizontal fractures. Surfaces of said repairs shall receive the same kind and amount of curing treatment as required for the concrete in the repaired section.

E. Prior to filling any structure with water, all cracks that may have developed shall be repaired to the satisfaction of the ENGINEER. This repair method shall be done on the water bearing face of members. Prior to backfilling, faces of members in contact with fill, which are not covered with a waterproofing membrane, shall also have cracks repaired as specified herein.

3.11 PRESTRESSING CONCRETE

Prestressing concrete for bridge structures shall comply with CSS Section 50.

3.12 CONCRETE BARRIER

Concrete barrier construction shall comply with Section 83-2.02 of CSS.

* * * * * *

SECTION 03302
UNDER SLAB VAPOR BARRIER / RETARDER

PART 1 - GENERAL

1.1 RELATED DOCUMENTS

A. Drawings and general provisions of the Contract, including General and Supplementary Conditions and Division 1 Specification Sections, apply to this Section.

1.2 SUMMARY

A. This Section includes under slab vapor barrier/retarder for installation under concrete slabs on grade within enclosed spaces, whether indicated on Drawings or not.

B. Related Sections include the following:

1. Division 2 Section "Earthwork" for drainage fill under slabs-on-grade.

2. Division 3 Section "Cast-in-Place Concrete" for general applications of finished formed concrete.

1.3 SUBMITTALS

A. Product Data: For each type of product indicated.

B. Samples: For vapor retarder.

C. Qualification Data: For Installer and manufacturer.

D. Material Certificates: For vapor retarders, signed by manufacturers:

E. Field quality-control test and inspection reports.

F. Minutes of preinstallation conference.

1.4 QUALITY ASSURANCE

A. Installer Qualifications: A qualified installer who employs on Project personnel qualified to install vapor barrier/retarder.

B. Source Limitations: Obtain vapor barrier/retarder materials of the same brand from the same manufacturer's plant.

C. ACI Publications: Comply with the following unless modified by requirements in the Contract Documents: ACI 301, "Specification for Structural Concrete," Sections 1 through 5.

PART 2 - PRODUCTS

2.1 MANUFACTURERS

A. In other Part 2 articles where titles below introduce lists, the following requirements apply to product selection: Available Products: Subject to compliance with requirements, products that may be incorporated into the Work include, but are not limited to, products specified.

2.2 VAPOR RETARDERS

A. Plastic Vapor Retarder: ASTM E 1745, Class A. Include manufacturer's recommended adhesive or pressure-sensitive tape. Available Products:

1. Fortifiber Corporation; Moistop Ultra A.
2. Meadows, W.R., Inc.; Vapor Mat 15.
3. Stego Industries, LLC.; Stego Wrap 15-mil Class A.
4. Raven Industries Inc.; Vapor Block 15.
5. An approved equal.

B. Granular Fill: Clean mixture of crushed stone or crushed or uncrushed gravel; ASTM D 448, Size 57, with 100 percent passing a 1-1/2-inch sieve and 0 to 5 percent passing a No. 8 sieve.

C. Fine-Graded Granular Material: Clean mixture of crushed stone, crushed gravel, and manufactured or natural sand; ASTM D 448, Size 10, with 100 percent passing a 3/8-inch sieve, 10 to 30 percent passing a No. 100 sieve, and at least 5 percent passing No. 200 sieve; complying with deleterious substance limits of ASTM C 33 for fine aggregates.

PART 3 - EXECUTION

3.1 VAPOR RETARDERS

A. Plastic Vapor Retarders: Place, protect, and repair vapor retarders according to ASTM E 1643 and manufacturer's written instructions. Lap joints 6 inches and seal with manufacturer's recommended tape.

B. Granular Course: Cover vapor retarder with granular fill, moisten, and compact with mechanical equipment to elevation tolerances of plus 0 inch or minus 3/4 inch. Place and compact a 1/2-inch- thick layer of fine-graded granular material over granular fill.

3.2 FIELD QUALITY CONTROL

A. Testing and Inspecting: Contractor will engage a qualified testing and inspecting agency to perform field tests and inspections and prepare test reports.

B. Inspections: Installation of vapor barrier/retarder including sealing of joints and penetrations.

(END OF SECTION)

SECTION 03314
SURFACE CLEANING AND PREPARATION

PART 1 – GENERAL

1.01 DESCRIPTION

A. This section specifies the requirements for surface cleaning and preparation of concrete prior to installation of the cast-in-place concrete lining system.

B. Related Work Specified Elsewhere
1. Section 03316, Cast-In-Place Concrete Liner System.

1.02 REFERENCE STANDARDS

A. American Association for Testing and Materials (ASTM):
1. D4258 – Standard Practice for Surface Cleaning Concrete for Coating.

2. D4259 – Standard Practice for Abrading Concrete

3. D4262 – Standard Test Method for pH of Chemically Cleaned or Etched Concrete Surface.

4. C805 – Standard Test Method for Rebound Number of Hardened Concrete.

B. ACI 546R – Concrete Repair Guide

C. SSPC-SP13/NACE 6 - Surface Preparation of Concrete

D. Standard Specifications for Public Works Construction (SSPWC), and as modified by the City of Los Angeles – “Brown Book”, latest edition.

1.03 DEFINITIONS

A. Medium - Degree of hydroblasting and/or abrasive blasting surface retarded finish sufficient to generally expose coarse aggregate with slight reveal; maximum aggregate exposure is ¼ inches.

B. Coarse – Degree of hydroblasting and/or abrasive blasting surface retarded finish sufficient to generally expose and reveal the coarse aggregate to a maximum projection of 1/3 of the diameter with general aggregate exposure of ¼ to ½ inches; the surface is rugged and uneven.

1.04 DESCRIPTION

The CONTRACTOR shall clean and prepare the interior surface of the sewer, and access structure walls specified for rehabilitation to the degree specified herein.

Since a proper sewer assessment cannot be performed prior to completion of cleaning activities, the CONTRACTOR shall conduct these activities with the appropriate safety and technical personnel overseeing the operation as well as proper safety equipment

immediately available. This shall include the use of a movable overhead protection system for use by both the CONTRACTOR and City personnel.

The CONTRACTOR shall thoroughly clean, scrape, roughen, abrade, scale, hydroblast, abrasive blast, etc., all the surfaces to be lined to remove clay tile, loose material, grease, dirt, organic matter, grout, mortar, gypsum, unsound concrete, laitance, corroded metal clips, wood strips, rust colored and/or stained concrete, and other foreign deposits. The CONTRACTOR shall not install any liner until the prepared surfaces have been accepted by the ENGINEER.

If reinforced sections of the sewer are discovered where reinforcing steel is visible or its presence clearly evident, notify the ENGINEER immediately. The CONTRACTOR shall clean the reinforcing steel and schedule for inspection by the ENGINEER. Damaged reinforcement shall be removed one (1) inch into sound concrete beyond its exposed portion by the CONTRACTOR. When directed by the ENGINEER, replace or supplement reinforcement.

All clay tiles, debris, mortar, grit, existing shoring, and other materials generated by preparation and cleaning of the surfaces shall be trapped, collected and removed from the sewer, and properly disposed. The CONTRACTOR is advised that considerable effort, including localized chipping may be required to remove the clay tiles. Conversely, some tiles, tile lugs, or mortar and concrete along the upper portion of the sewer can be considerably loose and may pose an overhead hazard. This material shall be removed and considered part of the overall surface cleaning. In addition, removal of rust colored and/or stained concrete will require multiple passes using hydroblasting/abrasive blasting equipment to achieve the required surface cleanliness and preparation. The CONTRACTOR shall account for these efforts in the bid.

1.05 SUBMITTALS

A. General: Make in accordance with Section 01330 and the Contract Drawings.

B. Product Data:

1. Manufacturer’s Product Data Sheets indicating:
   a. Personal safety equipment and first aid measures.

   b. Handling and storage requirements.

2. Type, model number, and manufacturer specifications for all proposed cleaning equipment (including operating pressures limits) to be used in the work.

3. Type, model number, and manufacturer specifications for all proposed chemical application equipment (including operating pressures limits) to be used in the work.

4. Calibration procedures and certifications for gauges and meters to be used in cleaning operations, including for chemical application equipment.

5. Type, model, and manufacturer specifications for all proposed testing and measuring equipment to be used in the work, including distancemeter, impact rebound hammer, and pH indicator.

C. Working Drawings and Method Statements:

1. Description and details for staging, sequencing, and performing the cleaning operation. Include start location and direction of cleaning progression, correlation with debris collection and removal, test section location(s), neutralizing chemical application coordination, and pressure verification tests.

2. Procedure for:
   a. Measuring water pressure.

   b. Maintaining constant water pressure, or pressure in general, when at great distance from primary source of water or otherwise.

   c. Maintaining water pressure below specified limits while still performing the work in accordance with the approved project schedule.

   d. Uniform and consistent chemical application within a tunnel with limited access.

   e. Coordinating work with debris collection, tunnel survey, and condition assessment measurement activities.

   f. Ensuring confined space communication requirements, restricted travel through tunnel and adequate lighting is maintained during cleaning operations.

   g. Controlling noise, above ground, for any auxiliary equipment.

D. Quality Control

1. Qualifications:
   a. CONTRACTOR: High pressure water/grit cleaning experience in one or more projects of similar work, including application within a confined space / tunnel environment.

   b. Chemical Applicator CONTRACTOR: Two to Five years experience in the use and application of the required chemicals and agents in wastewater systems.

   c. Test laboratory proposed for calibrating and testing accuracy of gauges, meters, and field testing equipment.

2. Certifications:
   a. Calibration certificates for gauges, meters, and field testing equipment to be used in cleaning and surface preparation activities.
   b. Chemical Supplier approved/licensed Specialty Applicator CONTRACTOR.

3. Quality Control Plan:
   a. Method for assuring uninterrupted spraying at pressures that do not exceed the maximum limit specified or otherwise approved, nor falls below the minimum required.

b. Method for preventing gouging, pitting, cavitations, or removal of existing sound concrete beyond the removal of stained/rustic colored concrete.

c. Method of chemical application in a controlled and safe manner while ensuring the required film thickness is applied.

4. Records:
   a. Daily report of total lineal footage of existing pipe cleaned and prepared, with start and end stations listed that match the project alignment coordinate system.

   b. Daily report of quantity of debris collected and disposed, including associated documentation. This should be listed separate from the bulk muck removed from tunnel invert.

   c. Daily written summary of magnesium hydroxide coating activities to include, but not limited to the following: segment of sewer treated (stations and length), target application rate (gallons/lineal feet), volume of chemical used for each segment, actual application rate, whether re-application was required and why, comments.

5. Notifications:
   a. One (1) week prior to conducting a cleaning test section of the existing sewer, the CONTRACTOR shall notify the ENGINEER and INSPECTOR to arrange for their presence during the cleaning of this test section. Submit in writing and include location and proposed length. Failure to meet the acceptable cleaning standards as called out herein shall not be grounds for delay claims.

   b. Notify the ENGINEER and/or INSPECTOR within 24 hours of completing each 500 feet of sewer cleaning and preparation work.

6. Tests:
   a. Results of tests, including pH test and rebound hammer test, specified in Part 3.

1.06 QUALITY ASSURANCE

A. At least one case history demonstrating the successful use of the proposed cleaning equipment for similar use. Acceptable case history will be required prior to performing qualification tests.

B. Specialty Applicator Contractor to provide evidence of engagement in similar work within the last 12 months

1.07 SITE CONDITIONS

A. Unless otherwise approved by the ENGINEER in writing, delivery of water, abrading material, chemicals, etc, and associated piping from ground surface through maintenance holes to inside the sewer is prohibited .

PART 2 – PRODUCTS

2.01 MATERIALS

A. Water: Water for mixing shall conform to the SSPWC, Section 201-1.2.3, “Water”. The use of recycled water is strongly encouraged.

B. Sand/grit: Use high performance, uniform density, low dust, hardness of 6-7 Mohs, less than 1% free silica, abrasive material, with minimum 20-40 grit, 20-50 grit, or approved equal, necessary to perform the work in a uniform and expeditious manner.

C. Neutralizing Chemical: 50%-55% concentration of magnesium hydroxide slurry, trade name Thioguard or approved equal.

2.02 EQUIPMENT

A. The CONTRACTOR shall use all equipment in accordance with the manufacturer’s instructions.

B. Hydroblasting: Equipment shall be capable of cleaning and preparing the surface as required herein at a rate and volume necessary to maintain well ahead of the lining phase of the project. Minimum pressure capacity, when measured at the nozzle, shall be 10,000 psi. or can be set to sustain that pressure continuously. Maximum pressure capacity shall not be less than 20,000 psi when measured at the nozzle and shall be capable of easily sustaining these elevated pressures continuously.

C. Abrasive blasting: Compressed air used for blasting shall be free of oil and moisture.

D. Distancemeter: Spectra Precision Laser HD150, Disco Classic5, Stanley FatMax True Laser 300 Series, or equal.

2.03 FABRICATION (NOT USED)

2.04 SOURCE QUALITY CONTROL

A. Qualification Testing:

1. Prior to production use, perform the following tests demonstrating the adequacy and effectiveness of the proposed surface cleaning and preparation method and equipment:

a. 20 feet Trial Cleaning Section Test: Clean 20 lineal feet of the sewer alignment. The CONTRACTOR shall use the same efforts and equipment as is planned to be used during the actual production cleaning in general conformance with ASTM D4259 and SSPC-SP13/NACE 6.

(1) Location of test cleaning section shall be a mutually agreed location between the CONTRACTOR and the

ENGINEER but at mid distance between any two access points of the sewer along the Lower Reach.

(2) Take and record three (3) sets of survey measurements, at the beginning, middle, and end of the test section, in the presence of the INSPECTOR. Measure five (5) points for each set, using a laser distancemeter while using the axis of rotation of the top arc as the reference point. Measure at 9:00, 10:30, 12:00, 1:30, and 3:00 o'clock. Where a row of tile is present near spring line, measure just above the tile and make a note of such deviation.

(3) Clean and prepare the surface as required by the contract document, to the complete satisfaction of the INSPECTOR.

(4) Record the following information during this test - water pressure at nozzle, distance from nozzle to the cleaning surface, and rate of advance for the cleaning operation, measured in lineal foot per minute. Any significantly change of these parameters while conducting this test shall require the CONTRACTOR to re-do the test.

(5) Collect and remove debris resulting from cleaning the test section.

(6) Resurvey the test section again taking three sets of measurements as prior to cleaning.

(7) Submit measurement data to the ENGINEER in writing.

b. Impact rebound hammer: Test the surface of the cleaned concrete for soundness by the use of an impact rebound testing devise (Schmidt hammer) indicating a compressive strength of at least 3000 psi with a measurement accuracy of plus or minus 250 psi in accordance with ASTM C805.

(1) Take two core samples from each side of the test section as directed by the ENGINEER for the purpose of calibrating the hammer. It must be at least 3 inches in diameter with a min solid depth of 6 inches. Take several readings of each core using the hammer devise and submit the cores to the City for compressive strength testing and reporting.

(2) Perform hammer tests in the presence of the INSPECTOR on the recently cleaned surfaces and record results.

(3) Conduct test at a minimum of ten random locations as directed by the INSPECTOR, at least 3 feet apart. However, two shall be at the sides (invert to 10 O'clock), two shall be at the top (10 to 2 o'clock), and two shall be at the opposite side (2 o'clock to invert).

(4) Submit both raw values as well as values adjusted based on results from compressive strength test of cores. Submit as soon as data becomes available.

c. pH testing: Test the pH of the prepared concrete surface using an approved test method for an acceptable pH range from 7 to 9.

(1) Perform the test in the presence of the INSPECTOR

(2) Conduct test at a minimum of ten (10) random locations as directed by the INSPECTOR, at least 3 feet apart. However, two shall be at the sides (invert to 10 O'clock), two shall be at the top (10 to 2 o'clock), and two shall be at the opposite side (2 o'clock to invert).

(3) Use the pH indicator in accordance with the manufacturer's recommendations.

d. Neutralizing Chemical Application: If the alternate cleaning approach shall be selected by the CONTRACTOR, the Specialty Applicator Contractor shall apply the chemical on the cleaned and prepared surface of the test section to demonstrate the equipment, personnel, and application rate meets the coating thickness requirement and the surface is coated uniformly.

2. For Test Section not successfully passing all three tests and/or failing to clean and prepare the surface as required, the CONTRACTOR shall increase and/or modify its approach, including increasing the cleaning and preparation efforts or using alternate cleaning equipment and procedures. If alternate cleaning equipment and method are required to satisfy the tests, another section of the sewer shall be selected to serve as the Test Section.

3. Once all cleaning, surface preparation, and tests requirements have been satisfied, the cleaning and surface preparation method implemented by the CONTRACTOR shall be assumed adequate for the rest of the tunnel alignment provided all field quality control measures at satisfied. Actual cleaning and surface preparation efforts required for any section of tunnel will vary, depending on level of corrosion, built-up, etc.

4. Modify/replace the equipment and method when it is evident that current system is generating a negative impact to other portions of the work.

5. The CONTRACTOR shall take care not to damage existing structure(s) such as maintenance holes, vaults, invert, shafts, transition structures, gates, gate guides, etc. Protect as necessary to the satisfaction of the INSPECTOR.

B. Resubmission

1. The CONTRACTOR's cleaning and surface preparation method and equipment shall be modified/replaced and then resubmitted for review and acceptance when any of the following conditions occur:

a. A change in lead personnel conducting cleaning

b. A change/modification in the equipment and/or method.

c. Noticeable decrease in effectiveness of method, equipment, or personnel.

PART 3 – EXECUTION

3.01 GENERAL

A. Implement and ready an overhead protection system and any and all safety measures and equipment.

B. Tile & Brick lining: Dislodge and remove all clay tiles and brick remaining attached to the surface of the concrete sewer, including tile/brick mortar. The CONTRACTOR is not required to chip and remove the lugs of the clay tile liners if the lugs are embedded in sound concrete. Acceptable embedment of the tile lugs will be determined by the INSPECTOR. No loose tile lugs will be allowed to remain.

C. Thoroughly clean and prepare the surface to be lined in phases. First, scrape, roughen, abrade, scratch, and scale the surfaces to remove all remaining tile mortar, gypsum, white calcium sulfate build-up, weakened and/or loose concrete/material, organic matter, concrete laminates, and large debris.

D. Second, commence high pressure hydroblast of surface to remove smaller particulates, finer muck build up, general fines, dirt, grease, deleterious material, laitance, unsound concrete, and partial removal of stained or colored (rust colored) concrete.

E. Complete cleaning and preparation of existing concrete surfaces by removing all deteriorated/weakened concrete, and remaining stained/rustic colored concrete and concrete layer with a pH less than 8. Use high-pressure hydroblasting (hydrodemolition) as the primary means of removal, followed by abrasive blasting as required.

F. Concrete surface shall be cleaned and prepared to a depth where all the deteriorated, damaged, and stained concrete is removed such that the final cleaned and prepared surface remaining consists of only uniform hard grey

concrete with a compressive strength of 3,000 psi and a surface pH of 7.0 or greater.

G. In lieu of achieving the required final cleaned and prepared surface per Section 3.01.F, the CONTRACTOR may limit the requirement to only 50% of any 4 square foot area meeting the requirement, provided the following conditions are met:

1. Surface not in complete conformance to Section 3.01.F shall only have stained/rustic colored concrete remaining on it. All other surface cleaning and preparation requirements shall be satisfied.
2. Depth of stained/rust colored concrete layer shall not exceed 1/8 inch thick.
3. Secure the services of a Specialty Applicator CONTRACTOR to coat the entire cleaned and prepared surfaces with 150mils ± 50mils of approved magnesium hydroxide slurry.
4. If the rate of application falls below 7 gallons per 100 square feet of treated surface for any segment, the Specialty Applicator CONTRACTOR shall immediately retreat to that segment such that the total applied material (including both treatments) is not less than 10 gallons per 100 square feet.
5. Wash off neutralizing agent using low water pressure washing equipment with water pressure at the nozzle ranging from 1,000psi to 3,000psi. Washing off may begin after 72 hours of installation. Wash off sufficiently long until neutralizing agent is no longer visible and until no residue is left on the surface.

H. Operating pressure of hydroblasting shall not exceed 15,000 psi. If these requirements are not met using an operating pressure of 15,000 psi, or if pressure results in damage of the structure, then the CONTRACTOR shall use abrasive blasting (either sandblasting or high-pressure water blasting with abrasives) or a combination of hydroblasting and abrasive blasting to meet the surface preparation requirements. Regardless of method(s) used, the CONTRACTOR shall take care not to damage the existing structure beyond the medium-coarse surface abrading and roughening of sound concrete that may result in the course of cleaning the sewer. Hydroblasting operating pressures greater than 15,000 psi may be allowed by the ENGINEER if the CONTRACTOR demonstrates that it can be done safely without damaging the sound concrete of the surface to be lined.

I. Once the surface has been prepared, thoroughly clean the surface using a vacuum and low pressure water to remove all fines, dust, residue, or spend media such as abrasion material.

J. Any surfaces that are recontaminated prior to lining shall be re-cleaned to the satisfaction of the ENGINEER and/or INSPECTOR. Also, any surface where an applied neutralizing chemical has been accidentally washed off or removed shall be recoated. Re-cleaning operations shall be halted if shoring requirement limits at any one location, as indicated in the structural drawings, are reached. Notify the ENGINEER, skip this immediate location, and continue with the re-cleaning.

K. Any localized water infiltration through cracks shall be sealed and stopped once the cleaning is complete using an approved hydrophilic sealant specifically formulated to seal leaks. Use injection means to introduce the sealant and prepare the crack in accordance to the manufacturer's recommendations. Any "non-leaking" cracks shall be repaired in accordance with the requirements of the Structural Drawings.

L. The CONTRACTOR shall be cautioned that significant effort is necessary to achieve the requirements herein and that high pressure water blasting alone may not be sufficient to achieve hard grey concrete, particularly in heavily corroded areas. The CONTRACTOR shall plan for the use of both hydroblasting and abrasive blasting as well as the use of hand held chipping tools and reflected in the bid.

3.02 MAINTENANCE

A. Maintain all equipment, hoses, hookup, etc in good working conditions.

B. Perform debris removal of material being generated as part of the cleaning.

3.03 REPAIR/REPLACE

A. Repair any damaged concrete surface accidentally damaged during cleaning and surface preparation. Submit repair method for review and acceptance.

B. Existing Ribs and Lagging as (Temporary Shoring)

1. If existing steel ribs and lagging are encountered, the CONTRACTOR shall evaluate the section of sewer using exploratory drilling requirements as indicated on the structural drawings to assess the sewer's condition. Scrape and remove any loose/weak concrete & mortar at the proposed drilling location prior to drilling. Drill at 10:30, 12:00, and 1:30 O'clock positions, between every other rib or a maximum spacing of 8 feet.

2. Where the section of sewer is found deficient and/or the exploratory drilling limits are exceeded, the CONTRACTOR shall replace the ribs and lagging in kind immediately, in a systematic and safe manner to allow for surface cleaning and preparation, including sequential installation of intermediate ribs prior to removing damaged ribs.

3. At no time shall existing ribs and lagging be reused. They shall be removed from the sewer and discarded in accordance with the contract requirements.

4. Regardless of condition of sewer, at least four ribs and associated lagging shall be replaced at all unrehabilitated clay and brick maintenance holes and access shafts.

5. See contract drawings for additional information regarding the temporary shoring, including removal.

3.04 FIELD QUALITY CONTROL

A. Field Testing

1. pH test – Perform test on cleaned surfaces every 100 feet, at five (5) equally spaced radial locations of a section to ensure a pH range of 7 or better is being achieved. Submit results to the ENGINEER at least every 1000 feet. For sections not satisfying these requirements, notify the INSPECTOR and perform random tests on at least 25 feet before section and 25 feet after the section to determine extent of unacceptable cleaning levels. Re-clean & prep surfaces, and retest.

2. Rebound hammer test – Perform test on clean & abraded concrete surfaces every 100 feet, at five (5) equally spaced radial locations of a section. Submit results to the ENGINEER at least every 1000 feet. For sections not satisfying these requirements, notify the INSPECTOR and perform random tests on at least 25 feet before section and 25 feet after the section to determine extent of unacceptable cleaning levels. Re-clean & prep surfaces, and retest.

3. Coring/Chipping – Perform three of 1 inch diameter cores at every 500 feet, or as directed by the INSPECTOR, to confirm the limiting thickness of the stained/rust colored concrete has been met when applying a neutralizing chemical. The CONTRACTOR may use hand held chipping equipment to perform this work if it can be done to the satisfaction of the INSPECTOR and does not damage the surface beyond a localized void. Patch all voids and cores when done using an approved non-shrink grout.

4. Equipment Performance – Periodically demonstrate to the INSPECTOR the equipment is able to maintain the pressures, at the nozzle, within a reasonable range as during the qualification test, regardless of distance of nozzle from actual pump or cleaning agent source.

(END OF SECTION)

SECTION 03315
GROUT

PART 1 -- GENERAL

1.1 THE REQUIREMENT

A. The CONTRACTOR shall furnish all materials for grout in accordance with the provisions of this Section and shall form, mix, place, cure, repair, finish, and do all other work as required to produce finished grout, in accordance with the requirements of the Contract Documents.

B. All grouts shall be City of Los Angeles approved product. The CONTRACTOR shall submit a copy of the Los Angeles Research Report with submittals.

C. The following types of grout shall be covered in this Section:

1. Non-Shrink Grout: This type of grout is to be used wherever grout is shown in the Contract Documents, unless another type is specifically referenced.

2. Cement Grout

3. Epoxy Grout

1.2 RELATED WORK SPECIFIED ELSEWHERE

A. Section 03250 Concrete Accessories.

B. Section 03300 Cast-in-Place Concrete.

C. Section 03400 Precast Concrete.

D. Section 03740 Concrete Repair.

1.3 REFERENCE SPECIFICATIONS, CODES, AND STANDARDS

A. Comply with the reference standards of the GENERAL REQUIREMENTS.

B. Comply with the current provisions of the following Codes and Standards, as applicable.

1. Commercial Standards:

CRD-C 621	Corps of Engineers Specification for Non-shrink Grout
ASTM C 109	Test Method for Compressive Strength of Hydraulic Cement Mortars (Using 2-in or 50-mm Cube Specimens)
ASTM C 531	Test Method for Linear Shrinkage and Coefficient of Thermal Expansion of Chemical- Resistant Mortars, Grouts, and Monolithic Surfacings
ASTM C 579	Test Methods for Compressive Strength of Chemical-Resistant Mortars and Monolithic Surfacings
ASTM C 827	Test Method for Early Volume Change of Cementitious Mixtures

ASTM C 1107	Standard Specification for Packaged dry hydraulic cement grout (non-shrink)
ASTM D 696	Test Method for Coefficient of Linear Thermal Expansion of Plastics

2. Other Government Standards:

CSS	Caltrans Standard Specifications.

1.4 CONTRACTOR SUBMITTALS

A. Submittals shall be made in accordance with GENERAL REQUIREMENTS.

B. The following submittals and specific information shall be provided.

1. The CONTRACTOR shall submit certified test results verifying the compressive strength, shrinkage, and expansion requirements specified herein; and manufacturer's literature containing instructions and recommendations on the mixing, handling, placement and appropriate uses for each type of non-shrink and epoxy grout used in the work.

1.5 QUALITY ASSURANCE

A. Field Tests:

1. Compression test specimens will be taken during construction from the first placement of each type of grout, and at intervals thereafter as selected by the ENGINEER to insure continued compliance with these specifications. The specimens will be made by the INSPECTOR

2. Compression tests and fabrication of specimens for cement grout and non-shrink grout will be performed as specified in ASTM C 109 at intervals during construction as selected by the ENGINEER. A set of three specimens will be made for testing at 7 days, 28 days, and each additional time period as appropriate.

3. Compression tests and fabrication of specimens for epoxy grout will be performed as specified in ASTM C 579, Method B, at intervals during construction as selected by the ENGINEER. A set of three specimens will be made for testing at 7 days, and each earlier time period as appropriate.

4. All grout, already placed, which fails to meet the requirements of these specifications, is subject to removal and replacement at the cost of the CONTRACTOR.

5. The cost of all laboratory tests on grout will be borne by the CITY, but the CONTRACTOR shall assist the INSPECTOR in obtaining specimens for testing. However, the CONTRACTOR shall be charged for the cost of any additional tests and investigation on work performed which does not meet the specifications. The CONTRACTOR shall supply all materials necessary for fabricating and containing the test specimens.

B. Construction Tolerances: Construction tolerances shall be as specified in the Section 03300 "Cast-in-Place Concrete," except as modified herein and elsewhere in the Contract Documents.

C. The grout used in post-tensioned prestressing systems of bridge structures, shall comply with CSS Section 50-1.09.

PART 2 -- PRODUCTS

2.1 CEMENT GROUT

A. Cement Grout: Cement grout shall be composed of one part cement, three parts sand, and the minimum amount of water necessary for the mixture to flow under its own weight. Where needed to match the color of adjacent concrete, white Portland cement shall be blended with regular cement as needed. In addition, where needed, an approved admixture may be added to increase workability at a low water/cement ratio. The minimum compressive strength at 28 days shall be 4000 psi.

B. Cement grout materials shall be as specified in Section 03300 "Cast-in-Place Concrete".

2.2 PREPACKAGED GROUTS

A. Non-Shrink Grout:

1. Non-shrink grout shall be a prepackaged, inorganic, non-gas-liberating when tested in accordance with C1107, non-metallic, cement-based grout requiring only the addition of water. Manufacturer's instructions shall be printed on each bag or other container in which the materials are packaged. The specific formulation for each class of non-shrink grout specified herein shall be that recommended by the manufacturer for the particular application.

2. Class A non-shrink grouts shall have a minimum 28 day compressive strength of 5,000 psi; shall have no shrinkage (0.0 percent) and a maximum 4.0 percent expansion in the plastic state when tested in accordance with ASTM C 827; and shall have no shrinkage (0.0 percent) and a maximum of 0.2 percent expansion in the hardened state when tested in accordance with CRD C 621.

3. Class B non-shrink grouts shall have a minimum 28 day compressive strength of 5,000 psi and shall meet the requirements of CRD C 621.

4. Application:

a. Class A non-shrink grout shall be used for the repair of all holes and defects in concrete members which are water bearing or in contact with soil or other fill material, grouting under all equipment base plates, and at all locations where grout is specified in the contract documents; except, for those applications for Class B non-shrink grout and epoxy grout specified herein. Class A non-shrink grout may be used in place of Class B non-shrink grout for all applications.

b. Class B non-shrink grout shall be used for the repair of all holes and defects in concrete members which are not water-bearing and not in contact with soil or other fill material, grouting under all base plates for structural steel members, and grouting railing posts in place.

B. Epoxy Grout:

1. Epoxy grout shall be a pourable, non-shrink, 100 percent solids system. The epoxy grout system shall have three components: resin, hardener, and specially blended aggregate, all premeasured and prepackaged. The resin component shall not contain any non-reactive diluents. Resins containing butyl glycidyl ether (BGE) or other highly volatile and hazardous reactive diluents are not acceptable. Variation of component ratios is not permitted unless specifically recommended by the manufacturer. Manufacturer's instructions shall be printed on each container in which the materials are packaged.

2. The chemical formulation of the epoxy grout shall be that recommended by the manufacturer for the particular application.

3. The mixed epoxy grout system shall have a minimum working life of 45 minutes at 75 degrees F.

4. The epoxy grout shall develop a compressive strength of 5,000 psi in 24 hours and 10,000 psi in seven days when tested in accordance with ASTM C 579, Method B. There shall be no shrinkage (0.0 percent) and a maximum 4.0 percent expansion when tested in accordance with ASTM C 827.

5. The epoxy grout shall exhibit a minimum effective bearing area of 95 percent. This shall be determined by a test consisting of filling a 2-inch diameter by 4-inch high metal cylinder mold covered with a glass plate coated with a release agent. A weight shall be placed on the glass plate. At 24 hours after casting, the weight and plate shall be removed and the area in plan of all voids measured. The surface of the grout shall be probed with a sharp instrument to locate all voids.

6. The peak exotherm of a 2-inch diameter by 4-inch high cylinder shall not exceed 95 degrees F when tested with 75 degree F material at laboratory temperature. The epoxy grout shall exhibit a maximum thermal coefficient of 30 x 10^{-6} inches/inch/degree F when tested according to ASTM C 531 or ASTM D 696.

7. The CONTRACTOR shall demonstrate the ability of the epoxy grout system to completely fill the size and depth of the intended hole, blockout, or area before the system is submitted for consideration by the ENGINEER.

8. Application: Epoxy grout shall be used to embed all anchor bolts and reinforcing steel required to be set in grout, and for all other applications required in the Contract Documents.

2.3 CURING MATERIALS

Curing materials shall be as specified in Section 03300 "Cast-in-Place Concrete" for cement grout and as recommended by the manufacturer of prepackaged grouts.

2.4 CONSISTENCY

The consistency of grouts shall be that necessary to completely fill the space to be grouted for the particular application. Dry pack consistency is such that the grout is plastic and moldable but will not flow. Where "dry pack" is called for in the Contract Documents, it shall mean a grout of that consistency; the type of grout to be used shall be as specified herein for the particular application.

2.5 MEASUREMENT OF INGREDIENTS

A. Measurements for cement grout shall be made accurately by volume using containers. Shovel measurement shall not be allowed.

B. Prepackaged grouts shall have ingredients measured by means recommended by the manufacturer.

C. Measurement of ingredients for grout used in prestressing systems of bridge structures shall conform to Section 50-1.09 of the CSS.

PART 3 -- EXECUTION

3.1 GENERAL

A. All surface preparation, curing, and protection of cement grout shall be as specified in Section 03300 "Cast-in-Place Concrete". The finish of the grout surface shall match that of the adjacent concrete.

B. The manufacturer of Class A non-shrink grout and epoxy grout shall provide on-site technical assistance upon request. All costs related to this requirement shall be borne by the CONTRACTOR.

C. All mixing, surface preparation, handling, placing, consolidation, and other means of execution for prepackaged grouts shall be done according to the instructions and recommendations of the manufacturer.

D. Application of grout used in prestressing systems of bridge structures shall conform to Section 50-1.09 of the CSS.

3.2 CONSOLIDATION

Grout shall be placed in such a manner, for the consistency necessary for each application, so as to assure that the space to be grouted is completely filled.

(END OF SECTION)

SECTION 03370
CONCRETE CURING

PART 1 -- GENERAL

1.1 THE REQUIREMENT

A. The Contractor shall furnish all tools, equipment, materials, and supplies and shall perform all labor required to complete the work as indicated on the Drawings and specified herein.

B. This section covers the work necessary for the concrete curing requirements.

1.2 RELATED WORK SPECIFIED ELSEWHERE

A. Section 03100 Concrete Formwork.

B. Section 03300 Cast-In-Place Concrete.

C. Section 03400 Precast Concrete.

1.3 REFERENCE SPECIFICATIONS, CODES AND STANDARDS

A. Comply with the reference standards and Standard Specifications of the GENERAL REQUIREMENTS.

B. Comply with the current provisions of the following Codes and Standards, as applicable.

1. Federal Specifications:

   UU-B-790A (Int.Amd. 1) Building Paper, Vegetable Fiber (Kraft, Waterproofed, Waterproofed, water Repellant and Fire Resistant)

2. Commercial Standards:

ACI 308	Standard Practice for Curing Concrete
ASTM C 156	Test Method for Water Retention by Concrete Curing Materials
ASTM C 171	Specifications for Sheet Materials for Concrete Curing
ASTM C 309	Specifications for Liquid Membrane-Forming Compounds for Curing Concrete

3. Government Standards:

CSS	Caltrans Standard Specifications

1.4 CONTRACTOR SUBMITTALS

A. Submittals shall be made in accordance with the GENERAL REQUIREMENTS.

1.5 QUALITY ASSURANCE

A. Quality Control Data:

1. Curing Compound: Manufacturer's Certification of Compliance, to include statement that product meets ASTM C 309**,** additional permeability requirement, and coverage.

2. Retardant For Exposed Aggregate Finish on Formed Surface: Manufacturer's Certification of Compliance including statement that product is suitable for and will meet job requirements.

3. Curing method, procedures and method of application to be used shall be in compliance with the requirements as specified herein.

PART 2 -- PRODUCTS

2.1 CURING MATERIALS

A. Materials for curing concrete as specified herein shall conform to the Standard Specifications and the following requirements:

1. Polyethylene sheet for use as concrete curing blanket shall be white and conform to ASTM C 171. The loss of moisture when determined in accordance with the requirements of ASTM C 156 shall not exceed 0.055 grams per square centimeter of surface.

2. Polyethylene-coated waterproof paper sheeting for use as concrete curing blanket shall consist of white polyethylene sheeting free of visible defects, uniform in appearance, having a nominal thickness of 2 mils and permanently bonded to waterproof paper conforming to the requirements of Federal Specification UU-B-790A (Int. Amd. 1). The loss of moisture, when determined in accordance with the requirements of ASTM C 156, shall not exceed 0.055 gram per square centimeter of surface.

3. Polyethylene-coated burlap for use as concrete curing blanket shall conform to ASTM C 171. The loss of moisture, when determined in accordance with the requirements of ASTM C 156, shall not exceed 0.055 grams per square centimeter of surface.

4. Curing mats for use in Curing Method 6 as specified herein, shall be heavy shag rugs or carpets or cotton mats quilted at 4-inches on center. Curing mats shall weigh a minimum of 12 ounces per square yard when dry.

5. Evaporation retardant shall be a material such as Confilm as manufactured by Masterbuilders, Cleveland, OH; or an approved equal**.**

B. Curing Compound:

1. Curing compound shall consist of a liquid which, when applied to fresh concrete by means of a spray gun, will form an impervious membrane over the exposed surfaces of the concrete.

2. The membrane may be either asphaltic or paraffin derivatives to which other waterproofing materials may have been added. Concrete curing compounds shall be designated by type as follows:

   Type 1 – Clear or translucent without dye

   Type 1-D - Clear or translucent with red fugitive dye

   Type 2 - White pigmented

   Type 3 - Light gray pigmented

   Type 4 - Black pigmented

3. Provide curing compound meeting requirements of ASTM C 309, with additional requirement that permeability not exceed 0.039 gm/square cm/72 hours, when tested in accordance with ASTM C 156 standards.

4. Provide evaporation retardant where required to prevent rapid evaporation of water from fresh exposed concrete.

5. When pigmented curing compounds are used, at the time of use, the compound shall be thoroughly mixed, with the pigment uniformly dispensed throughout the mixture.

6. Unless otherwise specified, Type 1-D curing compound shall be used, except that Type 2 shall be used for the top surface of bridge decks.

2.2 FLOOR HARDENER (SURFACE-APPLIED)

A. Floor hardener shall be a colorless, aqueous solution of zinc and/or magnesium fluosilicate.

B. Each gallon of fluosilicate solution shall contain minimum of 2 pounds of crystals.

C. All hardeners shall be furnished by the CONTRACTOR and shall be delivered ready mixed in sealed original containers bearing the manufacturer's name and product identification.

PART 3 -- EXECUTION

3.1 CURING OF CONCRETE

The top surface of highway bridge decks shall be cured by both the curing compound method, and by the water method except that the curing compound shall be either Pigmented Curing Compound-Chlorinated Rubber Base Type (State Specification 8030-71D-04), or Pigmented Curing Compound Chlorinated Rubber Base white or Tinted (State Specification 8030-71D-05), or as directed by the Engineer.

3.2 CURING AND DAMPPROOFING METHODS

General: All concrete shall be cured for not less than 10 days after placing, in accordance with the methods specified herein for the different parts of the work, and described in detail in the following paragraphs. Curing concrete for bridge structures shall comply with Section 90-7 of the CSS.

Surface to be Cured or Dampproofed (except bridge structures)	Method

Unstripped forms	1
Wall sections with forms removed	6
Construction joints between footings and walls, and between floor slab and columns	2
Encasement concrete and thrust blocks	3
All concrete surfaces not specifically provided for elsewhere in this Paragraph	4
Floor slabs on grade	5
Roof and slabs not on grade	6
Floor slabs to be covered with resilient flooring	8
Exterior buried surfaces of roof slabs and basement walls	7
All liquid and water retaining structures	2

Method 1: Wooden forms shall be wetted immediately after concrete has been placed and shall be kept wet with water until removed. If steel forms are used the exposed concrete surfaces shall be kept continuously wet until the forms are removed. If forms are removed within 10 days of placing the concrete, curing shall be continued in accordance with Method 6, herein.

Method 2: The surface shall be covered with burlap mats which shall be kept wet with water for the duration of the curing period, until the concrete in the walls has been placed. No curing compound shall be applied to surfaces cured under Method 2.

Method 3: The surface shall be covered with moist earth not less than 4 hours, nor more than 24 hours, after the concrete is placed. Earthwork operations that may damage the concrete shall not begin until at least 7 days after placement of concrete.

Method 4: The surface shall be sprayed with a liquid curing compound.

1 Curing compound shall be applied in 2 coats according to the manufacturer's printed instructions. The direction of application of the second coat shall be perpendicular to the first. The second coat shall be applied when the first coat is dry to touch, but not to exceed 4 hours. Each coat shall be applied at a rate not more than 200 square feet per gallon and in such a manner as to cover the surface with a uniform film which will seal thoroughly.

2 Where the curing compound method is used, care shall be exercised to avoid damage to the seal during the curing period. The CONTRACTOR shall maintain and monitor the curing compound membrane for a minimum of 10 days. Should the seal be damaged or broken before the expiration of this curing period, the break shall be repaired immediately by the application of additional curing compound over the damaged portion.

3 Wherever curing compound may have been applied by mistake to surfaces against which concrete subsequently is to be placed and to which it is to adhere, said compound shall be entirely removed by wet sandblasting just prior to the placing of new concrete.

4 Application of the curing compound to the concrete shall commence as soon as the finished surface of the concrete reaches a uniformly damp appearance with no free water on the surface. Curing compound shall also be applied no later than 2 hours after removal of forms from contact with formed surfaces or after the placement of concrete on the subgrade. At any point, the application rate shall be within 50 square feet per gallon of the nominal rate and the average application rate shall be within 25 square feet per gallon of the nominal rate specified when tested in accordance with California Test 535.

5 Repairs required to be made to formed surfaces shall be made within the said 2-hour period; provided, however, that any such repairs which cannot be made within the said 2-hour period shall be delayed until after the curing compound has been applied. When repairs are to be made to an area on which curing compound has been applied, the area involved shall first be wet-sandblasted to remove the curing compound, following which repairs shall be made as specified herein.

6 At the time of use, pigmented curing compounds shall be maintained in a thoroughly mixed condition. Containers of curing compound shall remain air-tight when not in use.

7 The CONTRACTOR shall apply curing compound in the presence of the INSPECTOR. Curing compound shall be applied to form a continuous and uniform membrane.

Method 5: Immediately after the concrete has been screeded, it shall be treated with a liquid evaporation retardant. The retardant shall be used again after each work operation as necessary to prevent drying shrinkage cracks.

1. Immediately after each square foot of the concrete has been finished, it shall be given a coat of curing compound in accordance with Method 4, herein. Not less than one hour nor more than 4 hours after the coat of curing compound has been applied, the surface shall be wetted with water delivered through a fog nozzle, and concrete-curing blankets shall be placed on the slabs. The curing blankets shall be polyethylene sheet, polyethylene-coated waterproof paper sheeting or polyethylene-coated burlap. The blankets shall be laid with the edges butted together and with the joints between strips sealed with 2-inch wide strips of sealing tape or with edges lapped not less than 3-inches and fastened together with a waterproof cement to form a continuous watertight joint.

2. The curing blankets shall be left in place during the 10-day curing period and shall not be removed until after concrete for adjacent work has been placed. Should the curing blankets become torn or otherwise ineffective, the CONTRACTOR shall replace damaged sections. During the first 3 days of the curing period, no traffic of any nature and no depositing, temporary or otherwise, of any materials shall be permitted on the curing blankets. During the remainder of the curing period, foot traffic and temporary depositing of materials that impose light pressure will be permitted only on top of plywood sheets 5/8-inch minimum thickness, laid over the curing blanket. The CONTRACTOR shall add water under the curing blanket as often as necessary to maintain damp concrete surfaces at all times.

Method 6: Concrete slabs shall be treated with an evaporation retardant as specified in Method 5. The concrete shall be kept continuously wet by the application of water for a minimum period of at least 10 consecutive days beginning immediately after the concrete has been placed or forms removed. Heavy curing mats shall be used as a curing medium to retain the moisture during the curing period. The curing medium shall be weighted or otherwise held in place to prevent being dislodged by wind or any other causes. Until the concrete surface is covered with the curing medium the entire surface shall be kept damp by applying water using nozzles that atomize the flow so that the surface is not marred or washed. The curing blankets and concrete shall be kept continuously wet by the use of sprinklers or other means both during and after normal working hours. Immediately after the

application of water has terminated at the end of the curing period, the curing medium shall be removed and curing compound immediately applied in accordance with Method 4, herein. The CONTRACTOR shall dispose of excess water from the curing operation to avoid damage to the work.

Method 7:

1. Method 6 shall be used for curing.

2. Immediately after completion of curing the surface shall be sprayed with a dampproofing agent consisting of an asphalt emulsion. Application shall be in 2 coats. The first coat shall be diluted to 1/2 strength by the addition of water and shall be sprayed on so as to provide a maximum coverage rate of 100 square feet per gallon of dilute solution. The second coat shall consist of an application of the specified material, undiluted, and shall be sprayed on so as to provide a maximum coverage rate of 100 square feet per gallon. Dampproofing material shall be as specified herein.

3. As soon as the asphalt emulsion, applied as specified herein, has taken an initial set, the entire area thus coated shall be coated with whitewash. Any formula for mixing the whitewash may be used which produces a uniformly coated white surface and which so remains until placing of the backfill. Should the whitewash fail to remain on the surface until the backfill is placed, the CONTRACTOR shall apply additional whitewash.

Method 8: Floor slabs to be covered with resilient flooring shall be coated with an asphaltic membrane curing compound such as Hunt's Process Black, or an approved equal.

3.3 EVAPORATION RETARDANT APPLICATION PROTECTION

A. Spray onto surface of fresh concrete immediately after screeding to react with surface moisture.

B. Reapply after smoothing surface with a bull float to ensure continuous, compacted monomolecular layer until final finishing is completed.

C. After finishing, apply water curing as specified.

3.4 CURING AND PROTECTION IN COLD WEATHER

A. Concrete shall not be placed during cold weather where conditions would require procedures as specified in ACI 306.

B. The Engineer, at his option, may allow cold weather placement of concrete if an extended period of cold weather is anticipated.

C. Water curing of concrete may be reduced to 6 days during periods when the mean daily temperature in the vicinity of the worksite is less than 40 degrees F; provided that, during the prescribed period of water curing, when temperatures are such that concrete surfaces may freeze, water curing shall be temporarily discontinued.

D. Concrete cured by an application of curing compound will require no additional protection from freezing if the protection at 50 degrees F for 72 hours is obtained by means of approved insulation in contact with the forms or concrete surfaces; otherwise, the concrete shall be protected against freezing temperatures for 72 hours immediately following 72 hours protection at 50 degrees F. Concrete cured by water curing shall be protected against freezing temperatures for 3 days immediately following the 72 hours of protection at 50 degrees F.

E. Discontinuance of protection against freezing temperatures shall be such that the drop in temperature of any portion of the concrete will be gradual and will not exceed 40 degrees F in 24 hours. In the spring, when the mean daily temperature rises above 40 degrees F for more than 3 successive days, the specified 72-hour protection at a temperature not lower than 50 degrees F may be discontinued for as long as the mean daily temperature remains above 40 degrees F; provided, that the concrete shall be protected against freezing temperatures for not less than 48 hours after placement.

F. Where artificial heat is employed, special care shall be taken to prevent the concrete from drying. Use of unvented heaters will be permitted only when unformed surfaces of concrete adjacent to the heaters are protected for the first 24 hours from an excessive carbon dioxide atmosphere by application of curing compound; provided, that the use of curing compound for such surfaces is otherwise permitted by these Specifications.

3.5 CLEAR HARDENER APPLICATION (SURFACE APPLIED)

A. Before application, thoroughly cure floors to receive hardener for minimum 28 days, keep clean, unpainted, free from membrane curing compounds, and dry with all work above them completed.

B. Do not use curing compounds where floor hardeners are specified. Use water curing only.

C. Apply hardener evenly, using three coats, allowing 24 hours between coats as follows:

1. First Coat: 1/3 strength, second coat 1/2 strength, and third coat 2/3 strength, mix with water.

2. Apply each coat so as to remain wet on surface for 15 minutes.

3. Apply approved hardeners in accordance with manufacturer's instructions.

4. After final coat is completed and dry, remove surplus hardener from surface by scrubbing and mopping with water.

(END OF SECTION)

SECTION 03400
PRECAST CONCRETE

PART 1 -- GENERAL

1.1 THE REQUIREMENT

A. The CONTRACTOR shall furnish all tools, equipment, materials, and supplies and shall perform all labor required to complete the precast concrete work in accordance with the Contract Documents.

B. This Section covers the design, fabrication, delivery and installation of all plant precast concrete units, including connections, complete, in place, as shown and specified.

1.2 RELATED WORK SPECIFIED ELSEWHERE

A. Section 03315 Grout.

B. Section 03290 Joint in Concrete.

1.3 REFERENCE SPECIFICATIONS, CODES AND STANDARDS

A. Comply with reference standards of the GENERAL REQUIREMENTS.

B. Comply with the current provisions of the following Codes and Standards, ~~or~~ as applicable:

1. Commercial Standards:

ACI 301	Specifications for Structural Concrete
ACI 304	Guide for Measuring, Mixing, Transporting and Placing Concrete
ACI 311	Guide for Concrete Plant Inspection and Testing of Ready-Mixed Concrete
ACI 315	Details and Detailing of Concrete Reinforcement
ACI 318	Building Code Requirements for Reinforced Concrete
ACI 347	Guide to Formwork for Concrete
AWS A5.4	Welding Rods and Electrodes
AWS D1.1	Welding and Cutting
AWS D1.4	Structural Welding Code – Reinforcing Steel
ASTM A 184	Specification for Fabricated Deformed Steel Bar Mats for Concrete Reinforcement
ASTM A 185	Specification for Steel Welded Wire, Fabric, Plain, for Concrete Reinforcement

ASTM A 193	Specification for Alloy-Steel and Stainless Steel Bolting Materials for High-Temperature Service
ASTM A 194	Specification for Carbon and Alloy Steel Nuts for Bolts for High-Pressure and High-Temperature Service
ASTM A 351	Specification for Steel Castings, Austenitic, for High-Temperature Service
ASTM A 497	Specification for Welded Deformed Steel Wire Fabric for Concrete Reinforcement
ASTM A 580	Specification for Stainless and Heat-Resisting Steel Wire
ASTM A 615	Specification for Deformed and Plain Billet-Steel Bars for Concrete Reinforcement
ASTM A 666	Specification for Austenitic Stainless Steel, Sheet, Strip, Plate, and Flat Bar for Structural Applications
ASTM A 775	Specifications for Epoxy-Coated Reinforcing Steel Bars
ASTM C 33	Specification for Concrete Aggregates
ASTM C 67	Method for Sampling and Testing Brick and Structural Clay Tile
ASTM C 127	Test Method for Specific Gravity and Absorption of Coarse Aggregate
ASTM C 128	Test Method for Specific Gravity and Absorption of Fine Aggregate
ASTM C 150	Specification for Portland Cement
ASTM C 173	Test Method for Air Content of Freshly Mixed Concrete by the Volumetric Method
ASTM C 204	Test Method for Fineness of Portland Cement by Air Permeability Apparatus
ASTM C 231	Test Method for Air Content of Freshly Mixed Concrete by the Pressure Method
ASTM C 260	Specification for Air-Entraining Admixtures for Concrete
ASTM C 311	Method for Sampling and Testing Fly Ash or Natural Pozzolans for Use as a Mineral Admixture in Portland Cement Concrete
ASTM C 494	Test Method for Shear Fatigue of Sandwich Core Materials

ASTM D 2240	Test Method for Rubber Property -- Durometer Hardness
AWS B2.1	Specification for Welding Procedure and Performance Qualification
AWS D1.4	Structural Welding Code - Reinforced Steel
PCI MNL-116	Manual for Quality Control for Plants and Production of Structural Precast Concrete Products
PCI MNL-117	Manual for Quality Control for Plants and Production of Architectural Precast Concrete Products
PCI MNL-121	Manual for Structural Design of Architectural Precast Concrete

2. Government Standards:

CSS	Caltrans Standard Specifications.

1.4 CONTRACTOR SUBMITTALS

A. Submittals shall be made in accordance with the GENERAL REQUIREMENTS.

B. Shop Drawings:

1. Shop drawings shall provide details in accordance with ACI 315 and ACI 318 including installation details.

2. Shop drawings, including design computations, shall be stamped and signed by a civil or structural engineer registered in the State of California and shall be approved by the ENGINEER.

3. Shop drawings shall indicate precast unit identification marks, location of units in the WORK, elevations, fabrication details, welding details, reinforcement, connections, dimensions, interface with adjacent members, and special handling instructions in sufficient detail to cover manufacture, handling, and erection. Shop drawings shall include erection drawings. Shop drawings shall also include design computations for above mentioned drawings.

4. Shop drawings shall be divided into complete separate submittals for each structure. Each complete submittal shall consist of a panel schedule and shop drawings.

a. Panel Schedule: Showing all exterior elevations of the structure, including all precast concrete enclosure faces exposed to view, in its associated shop drawing submittal. Elevations at a minimum scale of 1/8" = 1'-0" shall be drawn, identifying the type and location of each panel by a number which corresponds to the panel number appearing on an associated shop drawing; this same number shall be permanently marked on the back of each panel as they are fabricated.

b. Shop Drawings: Showing all elevations, dimensions, horizontal and vertical sections, openings, inserts, reinforcing, anchorage devices, pick-up points, details, design computations, and other requirements for each different type of

panel to be incorporated into the portion of the project covered by the submittal. Drawings shall be 24 inches x 36 inches maximum.

c. For bridge structures, shop drawings for precast concrete piles shall conform to Section 49-3 of the CSS.

C. Small Samples:

1. Unless otherwise specified on the contract documents, two 72-inch by 72-inch samples of precast concrete unit finish shall be submitted, as required for the project. Each sample shall show matrix color, surface color, surface texture, and panel back finish.

2. When so requested by the ENGINEER, submit samples of cast-in gaskets, anchorages and other attachments and accessories.

3. The face of each sample shall contain at least two areas of approved size and shape which have been chipped out and then patched and repaired and one form joint; the color, texture and appearance of patched areas and form joint shall match that of adjacent surface.

4. Samples will be inspected for color and texture match to the samples selected by the ENGINEER, uniformity of color and texture throughout the panel and acceptability of patching and joint treatment. Exposed face of samples shall be tested for efflorescence in accordance with ASTM C 67; rating shall not be more than "slightly effloresced."

5. If the ENGINEER rules a sample, or samples, to be unacceptable, the CONTRACTOR shall fabricate and resubmit additional samples at no additional cost to the CITY.

6. When approved, one sample will be kept at the ENGINEER's field office and the other shall be picked up by the CONTRACTOR and returned to the manufacturing plant. These sample panels will be used as a comparison to judge acceptability of the full-size panel samples and, where necessary, the production precast units.

D. Full-Size Panel Samples at Manufacturing Plant:

1. After the small samples and shop drawings have been approved, and prior to fabricating panels for the project, a full-size panel of specified color and each finish shall be produced and erected at the manufacturing plant for inspection and approval by the ENGINEER.

2. The full-size panels shall be fabricated utilizing tools, forms, materials and techniques proposed and the dimensions, profile cross section, color and texture required for the project. Panels will be inspected for color and texture to match approved samples, uniformity of color and texture throughout the panel, accuracy and sharpness of shape, acceptability of patched and repaired areas, and form joint treatment.

3. If the ENGINEER rules a sample to be unacceptable, the CONTRACTOR shall fabricate additional revised panel(s) at no additional cost to the CITY. When approved, panels shall be preserved, remain at the plant, and become the job standard against which all panels will be compared as they come off the production line.

E. Full-Size Panel Samples at Project Site: From the first loads of acceptable panels for the Project, the ENGINEER will select one panel of each texture which is scheduled to be erected in a prominent location. If the ENGINEER chooses, panels may be selected from a later load. The selected panel(s) together with the Small Sample from Section 1.4.C kept at the ENGINEER's field office, will become the jobsite standard against which all panels will be compared.

F. Mix Proportions: Prior to commencing operations, including fabrications of the precast concrete for any mock-up, a statement shall be submitted giving the nominal maximum aggregate size and proportions of all ingredients that will be used in the manufacture of concrete. The statement shall include test results from an approved testing laboratory, with certification stamp and signature by a Civil or Structural Engineer registered in the State of California. No substitutions shall be made in materials used in the concrete mix without approval and additional tests to verify that the concrete properties are satisfactory. A copy shall be submitted of concrete mix with each set of samples.

G. Test Reports: Tests for compressive strength of concrete shall be performed by an approved independent commercial testing laboratory at no cost to the CITY. Copies of test reports including all test data and all test results shall be submitted for review and approval of the ENGINEER.

H. Certificates of Compliance: Certificates of compliance shall be submitted attesting that materials and products meet or exceed specified requirements.

I. Manufacturer's Qualifications: Prior to commencing operations, a statement shall be submitted giving the qualifications of the precast concrete Manufacturer, and evidence that the Manufacturer and plant are PCI certified.

1.5 QUALITY ASSURANCE

A. General Requirements: Design precast members under direct supervision of a professional structural engineer experienced in design of precast concrete units, registered in the State and conforming to requirements of PCI MNL-121 and to ACI 318.

1. Precast Manufacturer and erectors shall be qualified in accordance with PCI MNL-117 and MNL-116.

2. Welding shall be in accordance with AWS D1.1, AWS D12.1, AWS B2.1, and AWS A5.4.

3. Manufacture, Transportation and Installation: The Manufacturer shall specialize in providing precast products and services normally associated with precast concrete construction with high quality architectural finishes similar to that indicated on drawings, using procedures complying with PCI MNL-116 and MNL-117, and PCI plant certified for at least 5 years.

4. Use adequate number of skilled workers who are thoroughly trained and experienced in the necessary crafts and who are completely familiar with the specified requirements and methods needed for proper performance of the work of this Section.

B. Sample:

1. Prebid samples representing the color, surface, texture and panel back finish specified and required for this project can be viewed at the ENGINEER's office, by bidders and precast concrete Manufacturers prior to submitting bids.

2. It shall be the CONTRACTOR's responsibility to assure that all precast architectural concrete conforms to specified requirements for quality and appearance. The only appearance criterion is that all precast architectural finishes provided for this project conform in appearance, when viewed from a distance of 20 feet, to the design, color, and texture as represented by the prebid sample except that closeup inspection shall

not exhibit any evidence of "bugholes" on exposed surfaces exceeding 1/8-inch and in quantity not more than 2 average per square foot.

1.6 DESIGN REQUIREMENTS

A. General: The precast concrete panel and connection designs shown hereon represent minimum precast construction requirements. The Manufacturer shall verify the panel and connection designs for all handling, erection, and service conditions, and shall provide any additional materials necessary to meet the design conditions.

B. Standards and Loads (Building structures only): The precast panel and connection design and construction shall conform to all applicable codes and AISC Specification for the Design, Fabrication and Erection of Structural Steel for Buildings. The precast or prefabricated, nonbearing, nonshear wall panels and connections which are attached to or enclose the exterior, shall resist, in addition to initial handling and erection loads and dead loads, the following forces:

1. Wind pressure and load combinations relative to panel design in accordance with the latest edition of LABC.

2. Seismic loads relative to panel design in accordance with the latest edition of Los Angeles Building Code.

3. The design shall be based on a differential temperature of 50 degrees F between interior and exterior faces of the units and an 80 degrees (40 degrees from erected temperature) average panel temperature differential.

4. Stresses due to restrained volume changes caused by shrinkage and temperature differentials shall be accounted for.

C. Connections (Building structures only): Prior to submitting shop drawings, the CONTRACTOR shall verify the precast connection designs shown against the aforementioned and following design criteria and provide any additional materials necessary to meet the design conditions.

1. The panel joints shall be designed to accommodate an in-plane movement between stories of 0.005 times the story height in inches but not less than 3/4-inch.

2. Panel connections shall accommodate building movement and permit panels to move freely so as not to resist in plane deformation of the main frame structural system. Adjustment shall be provided to accommodate misalignment of structure without permanent distortion, damage to components, racking of joint connection, breakage of seals, or moisture penetration.

D. Concrete Mix: The concrete mix shall be designed by the Manufacturer, with certification stamp and signature by a Civil or Structural Engineer registered in the State of California, and approved by the ENGINEER, using the materials and quantities specified to meet all of the requirements of this specification.

1. Proportioning of Concrete Mixes: Mixes shall be proportioned by weight except water and admixtures may be batched by volume if desired. Trial mixes and testing to meet requirements of the strengths of concrete specified is the CONTRACTOR's responsibility. Design mix shall contain similar materials as those proposed for use in the WORK.

2. Admixtures: Concrete shall contain an air entraining admixture in proportion so as to provide 4 percent plus or minus 1 percent total air in the concrete as determined by

ASTM C 173 or C 231. Set retarding admixtures may be used provided cement content is not reduced. Water reducing admixtures may be used provided they are used in the mix design studies. High-range water reducers (superplasticizers) shall be used only where specifically called for in this Section, otherwise superplasticizers shall not be used without written approval from the ENGINEER. No admixture may contain chlorides, bromides, or fluorides.

3. Water: Clean, potable water. The CONTRACTOR shall provide tests to assure that no more than 200 parts per million total aggregated content of chlorides, bromides, and fluorides are present.

4. If a variance from the Local Authority is required for the precast concrete mix design, the CONTRACTOR shall be responsible for submitting and obtaining the 5,000 psi precast concrete mix variance. The admixtures used in the mix design shall be used in approved combinations and proportions in accordance with the local requirements.

E. Formwork: Formwork shall be designed to withstand high-frequency vibration and to ensure finished units.

F. Pickup Points and Boxouts: Pickup points, boxouts, and inserts on panel faces and surfaces to be exposed are prohibited except as approved by the ENGINEER.

1.7 DELIVERY, STORAGE AND HANDLING

A. General: Deliver precast concrete units to the job-site in such quantities and at such times as to assure the continuity of construction. Precast members shall be handled to position consistent with their shape and design; they shall be lifted and supported from design incorporated support points and provided with strong backs and other devices as required. Lifting or handling equipment shall be capable of maintaining units during manufacture, storage, transportation, erection, and in position for fastening.

B. Blocking and supports, lateral restraints and protective materials during transport and storage shall be clean, nonstaining, without causing harm to exposed surfaces, including temporary support to prevent bowing and warping. Lateral restraints shall be provided to prevent undesirable horizontal movement. Edges and exposed faces of members shall be protected to prevent straining, chipping, or spalling of concrete.

C. Units shall be marked with date of production and final position in structure in location not visible after erection.

D. Precast units shall be stored off the ground in a manner to keep markings visible, and to prevent cracking, distortion, warping, staining or other physical damage, and they shall be protected from weather, marring, and overload.

E. Stainless Steel Hardware: Stainless steel hardware shall be transported, handled, stored, and protected in wood crates.

PART 2 -- PRODUCTS

2.1 CONCRETE MATERIALS

A. Cement: ASTM C 150, Type II, "low alkali," white color. "Low alkali" requirement may be waived if not reactive as defined in Appendix to ASTM C 33. Submit laboratory test reports.

B. Aggregate: ASTM C 33, 1/2-inch maximum coarse aggregate size fine aggregate ratio to total aggregate volume = 0.35 min, 0.55 max.

1. Water Absorption, Coarse Aggregate: ASTM C 127.

2. Water Absorption, Fine Aggregate: ASTM C 128.

C. Reinforcing Steel: ASTM A 615, Grade 60, deformed epoxy coated in accordance with ASTM A 775.

D. Welded Wire Fabric:

1. Plain: ASTM A 185, epoxy coated.

2. Deformed Steel: ASTM A 497, epoxy coated.

3. Fabricated Steel Bar or Rod Mats: ASTM A 184, epoxy coated.

E. Tie Wire: ASTM A 580, Type 316L, cold finished annealed, Huntington Alloy Co. "Monel"; "Inconel"; or an approved equal.

F. Air Entrainment Admixture: ASTM C 260.

G. Water Reducing or Retarding Admixtures: ASTM C 494, Type C, D, or F/G, with no chloride, bromide, and fluoride ingredients. Use Pozzolith 300-R manufactured by Master Builders; Plastiment manufactured by Sika Chemical Corp.; or an approved equal.

H. Silica Fume Slurry Admixture: 45 to 50 percent silica fume, water, and superplasticizer as dispersant. Silica Fume: 85 percent amorphous silicon dioxide in accordance with ASTM C 311; loss on ignition shall not exceed 6 percent and moisture shall not exceed 3 percent in accordance with ASTM C 311. Surface area not less than 10,000 square meters per kilogram at bed porosity of 0.50 in accordance with ASTM C 204.

Reduce water in mix by 5.6 to 9.5 lbs for each gallon of slurry added to mix, as recommended by slurry Manufacturer used.

Add Los Angeles City approved slurry to concrete mix to achieve 7.5 percent dry silica fume by weight of cement. Mixing procedures as recommended by silica fume slurry manufacturer. Sika "Sikacrete 950"; W.R. Grace "Force 10,000"; or approved equal. Submit applicable Los Angeles Research Report with shop drawing submittal.

I. Pigment: Pure mineral type, color-resistant to alkalis, nonfading. Color as required to produce finished concrete matching color and appearance of prebid sample and the 72-inch by 72-inch sample at the ENGINEER's field office.

2.2 SUPPORT DEVICES

Unless otherwise specified on the project plans, the following requirements shall apply:

A. Connecting and support devices, bolts, nuts, washers, inserts, and anchorage devices exposed to view, moisture, or weather shall be hot-dipped galvanized steel.

B. Anchorage devices shall be fabricated from ASTM A 36, and shall be hot-dip galvanized in accordance with ASTM A 123.

2.3 ACCESSORIES

Unless otherwise specified on the project plans, the following requirements shall apply:

A. Plates, Angles, Anchors, studs, and other metal accessories exposed to view, moisture, or weather shall be hot-dipped galvanized steel.

B. Reglets: Plastic, shaped and flanged to remain in place once cast; tape closed to prevent concrete intrusion.

C. Bearing Pads: Neoprene, molded to size or cut from molded sheet, 70-80 Type A durometer, ASTM D 2240.

D. Sealant: Specified in Section 03290 "Joint in Concrete."

E. Gaskets: ASTM C 509, preformed, firm, cellular, neoprene, sized to be under constant compression at the joints, and manufactured in lengths to minimize field splices.

F. For bridge structures, expansion and fixed joints and bearings shall conform with CSS Section 51-1.12.

2.4 FORMS AND MOLDS

A. Forms: Manufacturer's standard with smooth, hard, dense, and rigid casting surface; without bow, warpage, oil canning, or other imperfections. Comply with PCI MNL 117, Division V, Section 2, Article 5.2.1.

B. Form Release Agent: Manufacturer's standard, nonstaining, nonpetroleum based; compatible with concrete surface sealer.

C. Surface Sealer: Clear, flat, penetrating, nonyellowing, nonclouding solution; high concentration of organosilane in an aqueous alcoholic vehicle which is designed to provide water repellent concrete surfaces from which graffiti can be easily removed. Oil-type silicones, paraffins, waxes, vinyls, modified urethanes, or acrylics shall not be used. Sealant shall be tested by Manufacturer and proved compatible with surface sealer.

D. Molds: Fabricate using steel, concrete, fiberglass, reinforced plastic or wood.

a. Selection of materials for molds shall be at manufacturer's option, except that wood shall not be use without specific prior approval of the ENGINEER.

b. Cast elements in molds of rigid construction, accurate in detail with precise corners and arises, and designed to provide close control of dimensions, radii, and details as indicated on the Contract Drawings.

c. Prior to casting of precast elements, molds shall have surface joints, radii, and corners filled, ground, filed, straightened, or otherwise removed to provide finished concrete surface that is smooth and dense, free of honeycombing, air pockets, offsets, sinkages, or other irregularities.

d. Mold Release Agents: Synthetic resin or organic compound containing no wax, oil, silicates, or varnish, and compatible with specified coatings, sealants, fresh concrete, curing process, and adhesives.

e. Cast molds with release agents to facilitate removal of elements from molds.

2.5 MIX

Silica Fume Concrete: Minimum 5,000 psi (unless noted otherwise on the project plans), 28-day compressive strength; aggregate 3/8-inch max; water - 305 lbs per cu yd; cement - 750 lbs per cu yd; w/c ratio 0.40 max; slump range 3 inches to 5 inches with silica fume slurry; air entrainment 4 percent plus or minus 1 percent; 7.5 percent dry silica fume by weight of cement, provided through specified silica fume slurry; add superplasticizer to achieve desired working slump for precast concrete as may be required by silica fume slurry Manufacturer. Add colorant as required to achieve match with ENGINEER's sample. Moist cure by spray mist.

2.6 FABRICATION

A. General: Precast concrete units shall be fabricated by a licensed shop in accordance with ACI 318, PCI MNL-116 (structural features), PCI MNL-117 (nonstructural features, surface treatments, patching, and tolerances). Plant records and quality control program shall be maintained during production of precast units. Records and access to plant shall be available to the ENGINEER upon request.

Rigid molds shall be used, constructed to maintain precast unit uniform in shape, size, and finish, free from castings and dents, gouges, oil canning, or other irregularities that will adversely affect appearance or strength of units. Consistent quality shall be maintained during manufacture.

Equipment for handling epoxy-coated reinforcing bars shall have protected contact areas. Bundles of coated bars shall be lifted at multiple pickup points to prevent bar-to-bar abrasion from sags in the bundles. Coated bars or bundles of coated bars shall not be dropped or dragged. Coated bars shall be stored on protective cribbing. The maximum amount of damage shall not exceed 2 percent of the surface area of each bar.

Reinforcing steel, anchors, inserts, plates, angles, and other cast-in-place items shall be embedded as indicated on shop drawings. Reinforcement shall be fabricated and placed in conformance with ACI 318. No tack welding of or to reinforcement permitted. Welding when allowed shall conform to AWS D1.4 requirements. No carbon steel chairs, spacers, nails or tie wire shall be used in positioning reinforcing and embedments.

Adequate reinforcing steel shall be provided to control cracking. Maximum permissible crack width:

Surfaces exposed to weather:	0.005 inch.
Surfaces exposed to view but not weather:	0.01 inch

Connecting devices, plates, angles, items fit to steel framing members, inserts, bolts, and accessories shall be fabricated to permit initial placement and final attachment.

Anchors, inserts, lifting devices, and other accessories shall be placed and embedded in accordance with approved shop drawings, accurately positioned in their designed location

and anchored to prevent dislocation during panel construction. Do not use powder actuated fasteners for surface attachment of accessory items except as specifically approved by the ENGINEER and specifically accepted by the precast unit manufacturer. Flashing reglets shall be placed and embedded continuous and straight, with lifting devices to permit removal after erection.

Units shall be moist cured with water mist to develop concrete quality and to minimize surface drying and appearance blemishes such as nonuniformity, staining, or surface cracking.

Precast units shall be removed from formwork using procedures conforming to PCI MNL-117. Minor patching in plant acceptable, providing structural adequacy and appearance of units are not impaired. Each precast unit shall be identified with corresponding code on erection drawings, in location not visible to finished work.

Repair of damaged epoxy coating, when required, shall be made with patching material conforming to ASTM A 775. Repair shall be in accordance with the material Manufacturer's recommendations.

B. Fabrication and Tooling of Stainless Steel Connections and Embedments: All tools used during fabrication shall be made of stainless steel. Use of carbon steel tools is prohibited.

Welding of stainless steel shall conform to AWS A5.4, AWS B2.1 and AWS D1.1, using tungsten inert gas procedures and 316L filler metal for stainless steel to stainless steel and 309 filler metal for stainless steel to carbon steel. Surfaces shall be sanded smooth (do not grind), and oxidized discoloration removed (blue heat tint). Threaded parts of stainless steel bolts shall be lubricated with graphite suspended in alcohol (Neo-Lube) every time that nut is run on or off the threads. No other lubricant is acceptable.

Erection slings, cables, blocking, hardware and restraints shall be nonmetallic or stainless steel. Cribbing or crating shall be wood.

2.7 FINISH OF PRECAST UNITS

A. Backs and Sides (Unexposed Edges): Smooth, dense, uniform surface free from blemishes. Defects in backs and sides (unexposed edges) shall be repaired as approved.

B. Faces: Appearance, color, and texture finish of all panels shall match appearance, color and texture of the approved sample panels constructed by the CONTRACTOR. Panels that do not match shall be rejected. Repairs will be acceptable only if structural adequacy and appearance of product are not impaired and the repair and surrounding area match the approved sample panels at the ENGINEER's field office.

Mechanical finishing of panels at precast plant shall be at essentially the same age (or strength) of concrete to assure finished appearance is uniform from panel to panel.

To reduce possibility of stains occurring during transportation and erection, sealer shall be applied at the plant as recommended by Manufacturer and the precaster and shall be guaranteed in writing that sealer will not alter or yellow the original precast concrete color in any way and that it is compatible with the joint sealants to be used on the project. Seal finish surfaces of precast units to be exposed in completed work as follows: apply a uniform coat of surface sealer in accordance with Manufacturer's written instructions. Apply sealer by method and in quantity required to provide coverage specified by sealer Manufacturer. Forty-eight hours after application of sealer, apply water to face of each panel in sufficient quantity to determine if full sealer coverage was achieved. Panels not fully sealed shall be resealed and retested. A second coat shall be applied at the jobsite after erection and cleanup in accordance with the Manufacturer's instructions.

2.8. PRECAST PRESTRESSED CONCRETE SLAB BRIDGES

Precast prestressed concrete slab bridges shall conform to the provisions in Section 51, “Concrete Structures," of the CSS and these specifications.

Forms for providing the circular voids in the slabs shall be watertight and shall be constructed of an approved material that will resist breakage or deformation during the placement of the concrete and will not materially increase the dead load of the span. The forms shall be properly supported and tied and shall remain in correct position at all times during the placement of the concrete.

Except where otherwise shown on the plans, the top surface of the slab shall be given a coarse texture by brooming with a stiff bristled broom or by other suitable devices which will result in uniform transverse scoring, in advance of curing operations. The requirements of the seventh paragraph of Section 51-1.17, "Finishing Bridge Decks," of the CSS shall not apply.

When slab spans with concrete deck are shown on the plans, the top surfaces shall be cleaned as specified for construction joints in Section 51-1.13, "Bonding," of the CSS. 5. Delete to suit project. When slab spans with an asphalt concrete overlay are shown on the plans, the removal of laitance and curing compound from the top surfaces will not be required.

After the concrete slabs are in final position, the anchor dowel holes shall be filled with mortar.

2.9 PRECAST PRESTRESSED CONCRETE BRIDGE MEMBERS

Precast reinforced concrete girders shall conform to the provisions in Section 51, Concrete Structures," of the CSS.

The top surface of the member shall be given a coarse texture by brooming with a stiff bristled broom or by other suitable devices that will result in uniform transverse scoring, in advance of curing operations. That portion of the top surface of box girders that is to be covered by expanded polystyrene shall be given a wood float finish. Remaining portions of the surface of the girders shall be given the coarse textured finish. The requirements of the seventh paragraph of Section 51-1.17, "Finishing Bridge Decks," of the CSS shall not apply.

When box girders with a concrete deck are shown on the plans, surfaces noted to be given a coarse broom finish shall be cleaned of surface laitance and curing compound before placing deck concrete. Exposure of clean aggregate will not be required.

When Double T girders with concrete deck are shown on the plans, surfaces noted to be given a coarse broom finish shall be cleaned of surface laitance and curing compound before placing deck concrete. Exposure of clean aggregate will not be required.

PART 3 -- EXECUTION

3.1 INSTALLATION

A. Examination: The CONTRACTOR shall verify that the structure, anchors, devices, and openings are ready to receive work of this Section. Beginning of installation means acceptance of existing condition.

B. Preparation: The CONTRACTOR shall provide for erection procedures and induced loads, during erection, maintain temporary bracing in place until final support is provided, provide necessary hoisting equipment and safety and protective devices.

C. Erection: The units shall be erected in accordance with approved shop/erection drawings without damage to shape or finish or adjacent work. Damaged panels shall be replaced or repaired. Unless otherwise shown, members shall be erected level and plumb within allowable tolerances.

The CONTRACTOR shall align and maintain uniform horizontal and vertical joints as erection progresses, provide approved shims and wedges as required, and when members required adjustment beyond design or tolerance criteria, discontinue affected work. Units shall be secured in place and field welds, scratches and otherwise damaged steel surfaces shall be touched up.

Field fabrication and erection of stainless steel shall conform to the procedures outlined in the paragraph entitled "Fabrication and Tooling of Stainless Steel Connectors and Embedments."

The vertical units shall be set dry, without grout, attaining joint dimension with lead or plastic shims and spacers.

Pickup points, boxouts, inserts, bearing surfaces, and open spaces at connections and joints shown shall be grouted with non-shrink grout system(s) recommended by the manufacturer of the precast units, in accordance with Section 03315 "Grout". The color and texture of concrete surfaces of adjacent areas shall be finished to match in the same plane. Provide forms or other acceptable method to retain the grout in place until it is sufficiently hard to support itself. Pack spaces with stiff grout material, tamping voids completely full. Place the grout in a manner to finish smooth, plumb, and level with adjacent concrete surfaces. Keep grouted surfaces damp for not less than 24-hours after grout has taken its initial set. Promptly remove grout material from exposed surfaces before its hardens.

D. Tolerances: In accordance with requirements of PCI MNL-117 unless otherwise indicated.

1. Variation from Plane of Location: 1/4-inch in 10 feet and 3/8-inch in 100 feet maximum, compensating not cumulative.

2. Offset from True Alignment between Two Connecting Members: 1/4-inch maximum.

3. Out of Square: 1/8-inch in 10 feet maximum, noncumulative.

4. Variation in Dimensions Indicated in Shop Drawings: Plus or minus 1/8-inch.

5. Misalignment of Anchors, Inserts, Openings: 1/8-inch, maximum.

6. Bowing or Warpage of Units: 1/700 of panel dimension.

7. Exposed Joint Dimension: 3/4-inch plus or minus 1/8-inch.

8. Location of Reglets: 1/4-inch from true position.

E. Joint Sealing: Specified in Section 03290 “Joints in Concrete.”

3.2 CLEANING

A. Not sooner than 72 hours after joints are sealed, faces and other exposed surfaces of precast units shall be cleaned using a cleaning detergent recommended by the sealer manufacturer and water applied with a soft bristle brush, and thoroughly rinsed using clean water or other approved procedures.

B. Units shall be cleaned when temperature and humidity conditions are such that surfaces dry rapidly (e.g., 70 degrees F and rising, 50 percent Relative Humidity or less).

C. Discolorations which cannot be removed by these procedures shall be considered defective work, and repaired or replaced as directed by ENGINEER.

D. Just before final acceptance by the ENGINEER, clean precast units to remove dirt and stains.

3.3 PROTECTION

Adjacent surfaces shall be protected from damage during sealing and cleaning operations and against damage, disfiguration or discoloration from subsequent operations. Noncombustible shielding shall be used during welding operations.

3.4 PRECAST PRESTRESSED CONCRETE SLAB BRIDGES

Transverse connections for precast deck units shall conform to the following requirements:

A. After the deck units are in final position, the anchor bars shall be mortared in and the mortar between the ends and in the keyways between the members shall be placed.

B. No equipment or other loads shall be allowed on spans that have mortar between the deck units or in the anchor bar holes that has been in place less than 72 hours.

C. Deck shear connector rods, shown as tie rods on the plans, shall conform to the following:

1. Bolts, rods, nuts, and plate or beveled washers shall be structural steel; lock washers shall be ANSI heavy duty spring washers; and all metal shall be hot-dip galvanized after fabrication in conformance with the provisions in Section 75-1.05, "Galvanizing," of the CSS.

2. Openings for transverse connections shall be accurately placed and shall conform to the details shown on the plans.

3. Nuts shall be tightened to a snug fit after the deck units are positioned and prior to placing mortar in the keyways.

4. Nuts shall be tightened after the mortar in the keyways between the units has been in place at least 24 hours. Threads at the ends of bolts or rods shall be burred to prevent loosening of the nut.

5. Where the ends of transverse rods will be exposed, the nuts and ends of rods shall be recessed so that all metal will be at least 1” inside the surface of the member. After the nuts have been tightened, the recess shall be filled with mortar.

3.5 PRECAST PRESTRESSED CONCRETE BRIDGE MEMBERS

Temporary lateral bracing shall be provided for precast girders. The bracing shall be installed at each end of each girder, except notched ends, prior to the release of the erection equipment from the girder and shall remain in place until 2 days after the concrete diaphragms have been placed. The bracing shall be adequate to prevent overturning of the girders prior to completion of the work and as a minimum shall be capable of resisting a lateral force of 15 psf of girder side area applied laterally in either direction to the top of the girder. Girder erection shall not be started until the temporary lateral bracing proposed for use by the Contractor has been approved by the Engineer.

Keyways shall be filled with Class 1 concrete, conforming with CSS Section 90-1, produced from aggregate with a 1”, maximum grading. The penetration of the concrete shall be near the lower limit of the specified nominal penetration. Keyways shall be mortar-tight before placing concrete. The concrete shall be thoroughly consolidated.

No equipment or other loads will be allowed on spans until at least 72 hours after the last mortar has been placed in the anchor dowel holes or the last concrete has been placed in the keyways.

Deck shear connector rods, shown as tie rods on the plans, shall conform to the following:

A. Bolts, rods, nuts and plate or beveled washers shall be structural steel; lock washers shall be ANSI heavy duty spring washers; and all metal shall be hot-dip galvanized after fabrication in conformance with the provisions in Section 75-1.05, "Galvanizing," of the CSS.

B. Openings for transverse connections shall be accurately placed and shall conform to the details shown on the plans.

C. Nuts shall be tightened to a snug fit after the deck units are positioned and prior to placing mortar in keyways.

D. Nuts shall be tightened after the mortar in the keyways between the units has been in place at least 24 hours. Threads at the ends of bolts or rods shall be burred to prevent loosening of the nut.

E. Where the ends of transverse rods will be exposed, the nuts and ends of rods shall be recessed so that all metal will be at least 1” inside the surface of the member. After the nuts have been tightened, the recess shall be filled with mortar.

The anticipated deflection and method of accommodation of deflection of precast prestressed concrete girders, prior to the time the deck concrete is placed, shall be shown on the working drawings in conformance with the provisions in GENERAL REQUIREMENTS. The deflection shall include the following:

i. Anticipated upward deflection caused by the prestressing forces.

ii. Downward deflection caused by the dead load of the girder.

iii. Deflection caused by the creep and shrinkage of the concrete for the time interval between the stressing of the girders and the planned placement of the deck.

Such deflection shall be substantiated by calculations that consider the ages of the girder concrete at the time of stressing and the Contractor's planned placement of the deck. All deflection calculations shall be based on the concrete producer's estimate of the modulus of elasticity at the applicable concrete age.

Adjustments to accommodate girder deflections, which occur prior to the time the deck concrete is placed, may include revisions in bearing seat elevations, but any such adjustments shall be limited by the following conditions:

a. The minimum permanent vertical clearance under the structure as shown on the plans shall not be reduced.

2. The profile grade and cross slope of the deck shall not be changed.

3. A minimum of 1” of deck slab concrete between the top of the precast girders and the deck slab reinforcement shall be maintained.

4. A minimum of 1” of deck slab concrete between the top of the expanded polystyrene in the area between the girder webs and the deck slab reinforcement shall be maintained.

Girders with unanticipated girder deflection and which cannot comply with conditions A, B, and C will be rejected in conformance with the provisions in GENERAL REQUIREMENTS.

Adjustments to accommodate girder deflections will not be considered a change in dimensions. Full compensation for increases in the cost of construction, including increases in the quantity of deck or bearing seat concrete, resulting from adjustments to accommodate girder deflections shall be considered as included in the contract price paid for the various items of work involved and no additional compensation will be allowed therefor.

(END OF SECTION)

SECTION 03740
CONCRETE REPAIR

PART 1 -- GENERAL

1.1 THE REQUIREMENT

This section covers the work, including materials, testing, and workmanship necessary to structurally repair cracks and damaged surface areas (or spalls) in the existing concrete of the structures stated herein. Cracks shall be repaired by the injection of an epoxy resin adhesive. Spalls shall be repaired using an epoxy mortar as specified. Cracks and spalls requiring repair will be field located and identified by the ENGINEER prior to the start of the work in that area. Some cracks regardless of size may not be designated by the ENGINEER for repair.

1.2 RELATED WORK SPECIFIED ELSEWHERE

A. Section 03310 Cast-In-Place Concrete.

B. Section 03315 Grout.

1.3 REFERENCE SPECIFICATIONS, CODES AND STANDARDS

A. Comply with the reference standards of the GENERAL REQUIREMENTS.

B. Comply with the current provisions of the following Codes and Standards.

1. Commercial Standards:

ASTM C 579	Standard Test Methods for Compressive Strength of Chemical-Resistant Mortars, Grouts, Monolithic Surfacings and Polymer Concretes
ASTM D 482	Standard Test Method for Ash from Petroleum Products
ASTM D 638	Standard Test Method for Tensile Properties of Plastics
ASTM D 648	Standard Test Method for Deflection Temperature of Plastics Under Flexural Load in the Edgewise Position
ASTM D 664	Test Method for Acid Number of Petroleum Products by Potentiometric Titration
ASTM D 695	Standard Test Method for Compressive Properties of Rigid Plastics
ASTM D 790	Standard Test Methods for Flexural Properties of Unreinforced and Reinforced Plastics and Electrical Insulating Materials
ASTM C 881	Standard Specification for Epoxy-Resin-Base Bonding Systems for Concrete
ASTM C 882	Standard Test Method for Bond Strength of Epoxy-Resin Systems Used With Concrete By Slant Shear

ASTM D 1652	Standard Test Methods for Epoxy Content of Epoxy Resins
AASHTO T 237	Testing Epoxy Resin Adhesive

2. Government Standards:

CSS	Caltrans Standard Specifications.

1.4 CONTRACTOR SUBMITTALS

A. Submittals shall be made in accordance with the GENERAL REQUIREMENTS.

B. The CONTRACTOR shall submit certified test results verifying the compressive strength, shrinkage, and expansion requirements specified herein; and manufacturer's literature containing instructions and recommendations on the mixing, handling, placement and appropriate uses for each type of non-shrink and epoxy grout used in the work.

C. The CONTRACTOR shall submit detailed written description of the epoxy injection procedures, including desired injection pressures, the proposed procedures when a crack appears to be taking no epoxy or the epoxy does not exude from the adjacent port, and the proposed procedures if the desired injection pressures cannot be attained or the crack appears to be taking an excessive amount of epoxy.

D. The CONTRACTOR shall prepare mock-ups at locations in the job site where directed by the ENGINEER. The approved mock- ups will be used as data for comparison of works installed under this Section and for acceptance or rejection of same work. The mock-ups shall remain on site during the construction

1.5 QUALITY ASSURANCE

A. The following quality control test and certificate is required under this Specification:

1. Test Requirements: Compression tests and fabrication of specimens for epoxy grout will be performed as specified in ASTM C 579, Method B, at intervals during construction as selected by the ENGINEER but no less than after every 200 sq.ft. of applied grout. A set of three specimens will be made for testing at 7 days, and each earlier time period as appropriate. Tests shall be conducted by a qualified testing laboratory approved by the City of Los Angeles and acceptable to the ENGINEER at the CONTRACTOR’s expense.

2. Certification and Test Report: Manufacturer shall certify that every batch of material supplied meets the Specifications and shall furnish copies of actual test reports on each batch.

B. Labor: Use adequate number of skilled works who are thoroughly trained and experienced in the necessary crafts and who are completely familiar with the specified requirements and methods needed for the proper performance of the work of this Section.

C. Epoxy injection work shall be performed by “qualified applicators” approved by the Los Angeles City Department of Building and Safety. The qualified applicators shall be certified by the epoxy manufacturer. CONTRACTOR shall arrange for certification meeting with Los Angeles City Department of Building and Safety Inspector, work demonstration, pre-construction meeting and shall comply with all other requirements.

D. Tests: Execute tests as required by Chapter 17, Chapter 21 (Section 2103), and Chapter 35

of the Los Angeles City Building Code and whenever the INSPECTOR or ENGINEER detects evidence of materials or work failing to meet the contract requirements. Perform all such tests as instructed by the INSPECTOR or ENGINEER at CONTRACTOR's expense.

E. Samples: Take samples and make tests of materials as required by INSPECTOR prior to and during construction operations.

F. Continuous (Deputy) Inspections: As noted on the Drawings to be provided in the field by the CITY. CONTRACTOR shall include in the construction schedule and notify the INSPECTOR and request for inspections 14 days in advance.

1.6 PACKAGING, LABELING, STORAGE

A. Packaging: The adhesive material shall be packaged in new, sealed containers. Each container will be clearly labeled.

B. Label Information: The label shall include, in a clear and distinct manner, the following information:

1. Manufacturer name.

2. Product name and lot number.

3. ANSI Hazard Classification and appropriate recommended ANSI precautions for handling.

4. Mix ratio by volume.

C. Storage: The adhesive shall be stored at ambient temperatures between 32 and 120 degrees F. If stored at temperatures outside these limits, the adhesive material shall be tested at the CONTRACTOR's expense prior to use to determine if the adhesive material meets the requirements of this Specification.

PART 2 -- PRODUCTS

2.1 GENERAL

A. The use of a manufacturer's name and model or catalog number is for the purpose of establishing the standard of quality and general configuration desired only. Products of other manufacturers will be considered in accordance with the GENERAL REQUIREMENTS.

B. Like items of materials provided hereunder shall be the end products of one manufacturer in order to achieve structural compatibility, singular responsibility, and standardization for appearance, maintenance, and replacement.

C. Epoxy products shall be as manufactured by Sika Corp., Lyndhurst, NJ; or an approved equal, meeting the requirements specified hereinafter.

2.2 CRACK WIDTH

Large cracks are defined as being wider than 0.015 inch. Small cracks are defined as cracks with width equal to 0.015 inch or less.

2.3 ADHESIVE FOR INJECTION

A. Unless otherwise specified hereon, the epoxy adhesive used for injection for concrete structures shall comply with the following material specification. For non-sanitary structures, in lieu of the requirements of this section, the CONTRACTOR may submit Los Angeles Department of Building and Safety approved Research Reports on products intended for use, subject to review and approval by the ENGINEER.

1. This Specification defines a two-component structural epoxy adhesive to be processed through continuous positive displacement in-line metering and in-line mixing equipment for injection into cracks or other voids in concrete structures for bonding or grouting. Batch mix pumps shall not be allowed.

2. Properties of the two-component epoxy adhesive:

a. Part A shall be a blend of modified epoxy resins:

		Specification Requirements	
	Test Method	Large Cracks	Small Cracks**
Color	Visual	Clear Amber Liquid	Light Amber Liquid
Viscosity @ 40 ± 3 deg F, cps	Brookfield RVT Spindle No. 4 @ 20 rpm	6,000-8,000	
Viscosity @ 77 ± 3 deg F, cps	Brookfield RVT Spindle No. 4 @ 20 rpm	400-700	375 cps max. @ 50 rpm
Epoxide Equivalent Weight	ASTM D 1652* See Appendix C	160-176	
Ash Content, %	ASTM D 482	1 max.	

* Method modified to use perchloric acid in acetic acid.
** The specified requirements for the epoxy blend for small cracks shall meet the requirements for large cracks except as shown.

b. Part B shall be a modified amine curing agent:

		Specification Requirements	
	Test Method	Large Cracks	Small Cracks**
Color	Visual	Black Liquid	Dark Amber Liquid
Viscosity @ 40, ± 3 deg F, cps	Brookfield RVT Spindle No. 4 @ 20 rpm	700-1,400	
Viscosity @ 77, ± 3 deg F, cps	Brookfield RVT Spindle No. 2 @ 20 rpm	105-240	150 cps max. Using Spindle No. 1 @ 50 rpm
Amine Value, mg KOH/g	ASTM D 664*	490-560	
Ash Content, %	ASTM D 482	1 max.	

* Method modified to use perchloric acid in acetic acid.
** The specified requirements for the epoxy blend for small cracks shall meet the requirements for large cracks except as shown.

3. Properties of the Uncured Adhesive: When mixed in the mix ratio specified on the label on the adhesive, containers shall be:

		Specification Requirements	
	Test Method	Large Cracks	Small Cracks**
Pot Life (60-gram mass) @ 77 ± 4 deg F	(As hereinafter specified)	13-25 minutes minimum	15-30 minutes minimum
Pot Life (60-gram mass) @100 ± 3 deg F	(As hereinafter specified)	5 minutes minimum	N/A
Viscosity @ 40, ± 3 deg F	Brookfield RVT Spindle No. 4 @ 20 rpm	4,400 cps	600 cps
Viscosity @ 75-77 deg F	Brookfield RVT Spindle No. 2 @ 20 rpm	375-350 cps	175-140 cps

4. Properties of the Adhesive: When cured for 7 days at 77 ∀ 3 degrees F and conditioned at test temperature 12 hours prior to test, unless otherwise specified, shall be:

		Specification Requirements	
	Test Method	Large Cracks	Small Cracks**
Ultimate Tensile Strength, psi	ASTM D 638	8,000 min.	5,000 min.
Tensile Elongation @ Break, %	ASTM D 638	4.2 max.	3.0 max.
Flexural Strength, psi	ASTM D 790	10,000 min.	10,000 min.
Flexural Modulus, psi	ASTM D 790	$5.5x10^5$ min.	$4.5x10^5$ min.
Compressive Yield Strength, psi	ASTM D 695*	15,000 min.	12,000 min.
Compressive Modulus psi	ASTM D 695*	$4.0x10^5$ min.	$2x10^5$ min.
Heat Deflection Temperature	ASTM D 648*	127 deg F min.	140 deg F min.
Slant Shear Strength (5,000 psi Compressive Strength Conc.)	AASHTO T 237**		
Cured 3 days @ 40 40 deg F – Wet Conc.		3,500 psi min.	
Cured 1 day @ 77 deg F - Dry Conc.		5,000 psi min.	
Cured 3 days @ 77		5,000 psi min.	

deg ± 3 deg F

* Test specimens must be cured in a manner such that the peak exothermic temperature of the adhesive does not exceed 100 degrees F.

** See referenced specifications for method of preparation of test specimens.

B. Epoxy for injection shall conform to ASTM C 881, and shall be Los Angeles City Department of Building and Safety approved epoxy. The epoxy shall be Sikadur 35 Hi-Mod LV or Sikadur 52, manufactured by Sika Corporation; or an approved equal.

C. The epoxy adhesive used for injection of bridge concrete structures shall comply with CSS Section 95.

2.4 POT LIFE TEST

Pot life test for components A and B, as described in Section 2.3, shall conform to the following:

A. Condition both A and B Components (as defined in Section 2.3) to required temperature.

B. Measure components in ratio of Component B as stated on the manufacturer's label into a 2 ounce (fluid) paper cup.

C. Start stopwatch immediately and mix the components for 60 seconds using a wooden tongue depressor and taking care to scrape the sides and bottom of cup periodically.

D. Probe the mixture once with the tongue depressor every 30 seconds, starting 2 minutes prior to the minimum specified pot life.

E. The time at which a soft stringy mass forms in the center of the cup is the pot life.

2.5 FABRICATION OF SLANT SHEAR SPECIMENS

Fabrication of slant shear specimens for testing bond of injectable adhesives to wet concrete at 40 degrees F, as required by Section 2.3, shall conform to the following:

A. Scope: This method of test is intended for the preparation of diagonal concrete mortar blocks used in determining the slant shear strength of low viscosity injectable adhesives according to AASHTO T 237 when the concrete is wet.

B. Materials:

1. Diagonal concrete mortar blocks prepared in accordance with AASHTO Test Method T 237 and cured to produce a mortar with compressive strength of 5,000 psi or greater.

2. Paraffin wax.

3. Masking Tape: 3/4-inch wide.

4. Suitable 20-mil thick shim stock.

C. Preparation:

1. Place a 20-mil shim between the diagonal faces of two blocks and align them so that the ends and sides are square. Bind the block in this position with masking tape covering the gap between the blocks. Leave only enough of the gap between the blocks on one face

uncovered for the removal of the shim and the application of the adhesive. Paint melted paraffin wax over the masking tape. A shallow dam may be built up around the opening using paraffin wax or modeling clay to help retain the adhesive.

2. Apply a suitable capping compound to each end of the specimen to produce smooth surfaces perpendicular to the longitudinal axis of the block.

3. Remove the shim stock from the gap opening. Soak the specimen in water at 40 degrees, ∀3 degrees F for at least 24 hours.

4. After soaking, remove the specimen and shake the water from the surface and out of the crack.

5. Prepare the liquid adhesive. Within 5 minutes after removing specimen from water, start to flow adhesive into the crack so that no air bubbles are entrapped. Place specimen in 40 ∀ 3 degrees F ambient for curing within 15 minutes after it has been removed from water for bonding. At no time during the 15 minutes should the specimen be exposed to an environment above 77 degrees F.

6. Cure the specimen for 72 ∀4 hours at 40 ∀ 3 degrees F.

2.6 SURFACE SEAL

A. Physical Properties: The material used as a surface seal must have adequate strength and adhesion to confine the injection adhesive in the crack being repaired until the injected adhesive has cured. The surface seal material shall have adequate strength to hold the injection fittings firmly in place and to resist injection pressures adequately to prevent leakage during injection.

B. Appearance: After the injection adhesive has cured, the surface seal must be capable of being removed.

C. Epoxy paste sealer for caulking cracks and installing injection port devices. The epoxy paste sealer shall be Sikadur 33, manufactured by Sika Corporation; or an approved equal.

2.7 EQUIPMENT FOR METERING, MIXING, AND INJECTING

A. Type: The equipment used to meter and mix the two injection adhesive components and to inject the mixed adhesive into the crack shall be portable, positive displacement type pumps with in-line metering. The equipment used shall be manufactured by the epoxy manufacturer and/or approved in writing by the epoxy manufacturer. Pumps shall have interlocks to provide positive ratio control of exact proportions of the two components at the nozzle. The pumps shall be electric or air powered.

B. Discharge Pressure: The injection equipment shall have automatic pressure controls and the capability of discharging the mixed adhesive at pressures up to 200 psi, +5 percent, and maintaining that pressure.

C. Automatic Shutoff Control:

6. The injection equipment shall be equipped with sensors on both the Component A and B reservoirs that will automatically stop the machine when only one component is being pumped to the mixing head.

7. CONTRACTOR shall provide a standby injection pump of the same ratio, setting forth each primary injection pump used on the project. Each material of different mix ratio shall have its own primary injection pump as well as standby backup pump.

8. All pumps of dual resin system epoxy resins shall be manufactured by the epoxy resin suppliers or shall be approved in writing by the epoxy resin manufacturer so as to immediately compensate for any changes in resins.

D. Pressure Check Test:

1. Method: The mixing head of the injection equipment shall be disconnected and the two adhesive component delivery lines shall be attached to the pressure check device. The pressure check device shall consist of two independent valved nozzles capable of controlling flow rate and pressure by opening or closing the valve. There shall be a pressure gauge capable of sensing the pressure buildup behind each valve. The valves on the pressure check device shall be closed and the equipment operated until the gauge pressure on each line reads 160 psi. The pumps shall be stopped and the gauge pressure shall not drop below 150 psi within 3 minutes.

2. Frequency of Pressure Check Test: The pressure check test shall be run for each injection equipment unit, as a minimum, at the beginning and at the end of every day that the unit is used in the work of crack repair to verify. A pressure test shall also be run at the start of any injection work when the equipment has been out of use for more than 45 minutes at any time during the day.

2.8 EPOXY MORTAR REPAIR

A. The manufacturer shall certify, in writing, its applicability in bonding to damp concrete surfaces and to the uses intended in this project. Submit applicable City of Los Angeles Department of Building and Safety Research Report for ENGINEER's review and approval.

B. The mixed two-component epoxy binder shall be gray in color. Epoxy bonding agent shall conform to ASTM C 882 and shall be Los Angeles City Department of Building and Safety approved epoxy. The epoxy shall be Sika Armatic 110 EpoCem manufactured by Sika Corporation; or an approved equal. The cure temperature, pot life, and workability shall be compatible for intended use. The minimum density of the mortar shall be 130 pounds per cubic foot.

C. The mortar mix design shall be Concresive 1470 mortar, Adhesive Ownering Co., San Carlos, CA; Sika Top, 123 Plus, for hand-applied method, manufactured by Sika Corporation; Sika Top 111 Plus, for form and pour method, manufactured by Sika Corporation; or an approved equal. The actual mix design shall be submitted by the manufacturer using the specified resin, Sand #1 and Sand #2, or a pre-engineered sand blended especially for stated products by the manufacturer.

D. The aggregate used shall be the following; or an approved equal:

Sand	Designation	Source
#1E-I	#16	(Martin Marietta, Emmett, Idaho Plant)
#2 Clayton Q	#720	(Martin Marietta, Clayton Plant, Garnavillo, Iowa)

E. Anti-Corrosion Coating for reinforcement shall conform to ASTM C 882 and shall be Los Angeles City Department of Building and Safety approved. The coating shall be Sika Armatic 110 EpoCem, manufactured by Sika Corporation; or an approved equal.

F. The finished repair shall have a color which matches the surrounding concrete's color as best as possible.

G. Submit technical data (physical and chemical properties) available on the repair agent for review. Also submit data (client name, location, and description of work) on at least two similar jobs that the applicator has used the surface repair agent in the last 2 years.

2.9 EPOXY FOR BRIDGE STRUCTURES

Epoxy used for bridge structures shall conform to Section 95 of the CSS.

PART 3 -- EXECUTION

3.1 QUALIFICATIONS OF ADHESIVE APPLICATORS

A. All adhesive injection shall be performed by an applicator who has demonstrated the capability to inject concrete cracks, repairing them to the quality specified.

B. All applicators shall submit evidence of experience in injecting concrete cracks with epoxy resin.

C. Evidence of experience shall include a complete list of adhesive injection work accomplished in the last 3 years for at least 10,000 lineal feet of crack injection experience including the following information:

1. Name of Owner.
2. Name of person to contact and telephone number.
3. Address of completed work.
4. Lineal footage of crack injection repair.
5. Type of structure.
6. Description of work including materials and equipment used.

D. Epoxy injection shall be performed by a licensed certified applicator of the manufacturer of the epoxy meeting these Specifications and the applicator shall be approved by the epoxy manufacturer.

E. The applicator shall submit to the ENGINEER a statement in addition to applicator's previous experience in performing comparable work, business and technical organization and plant available to be used in performing work; along with proposed technique, material, and equipment for review prior to startup.

3.2 WORKMAN'S QUALIFICATION

A. The applicator's foreman engaged in the epoxy injection process shall have satisfactorily completed a program of instruction in the methods of restoring concrete structures utilizing the specific epoxy injection process indicated. The curriculum shall include theory on the nature and causes of cracking in concrete, methods for permanently repairing damaged concrete structures, the technical aspects of correct material selection and use, and the operation, maintenance, and troubleshooting of equipment. Foreman must prove certification and approval of the manufacturer.

B. Superintendent shall have at least 3 years' experience in injection work consisting of a minimum of 5,000 LF of crack injection in the last 3 years.

C. Any technician operating the injection pump shall have at least 1 year's experience consisting of a minimum of 3,000 LF of crack injection.

D. Equipment, material, and training must originate from same source.

E. Qualification of an applicator may be denied, and will be based upon the aforementioned evidence of experience along with any additional investigational information acquired by the ENGINEER.

3.3 PROPORTIONING THE ADHESIVE COMPONENTS

A. Ratio Tolerance: The equipment shall have the capability of maintaining the mix ratio for the injection adhesive prescribed by the manufacturer of the adhesive within a tolerance of ±5 percent by volume at any discharge pressure up to 160 psi.

B. Tests for Proper Ratio:

1. Method:

a. The mixing head of the injection equipment shall be disconnected and the two adhesive components shall be pumped simultaneously through the ratio check device. The ratio check device shall consist of two independent valved nozzles capable of controlling flow rate and back pressure by opening or closing the valve to restrict material flow. There shall be a pressure gauge capable of sensing the back pressure behind each valve. The discharge pressure shall be adjusted to 160 psi for both adhesive components. Both adhesive components shall be simultaneously discharged into separate calibrated containers. The amounts discharged into the calibrated containers simultaneously during the same time period shall be compared to determine the mix ratio.

b. After the test has been completed at a 160 psi discharge pressure, the procedure shall be repeated for 0 psi discharge pressure.

2. Frequency of Test for Proper Ratio: The ratio test shall be run for each injection unit at the beginning of every day, and at the beginning of every work period wherever an hour break has occurred, and at the end of every day that unit is used in the work of crack repair.

3.4 PROOF OF RATIO AND PRESSURE CHECK

A. At all times during the course of the work, the CONTRACTOR must keep complete and accurate records available to the ENGINEER of the ratio check tests.

B. In addition, the ENGINEER at any time without prior notification of the CONTRACTOR, may request the CONTRACTOR to conduct the tests described in the presence of the ENGINEER or the INSPECTOR.

3.5 CRACK REPAIR PROCEDURE

A. Initial Condition (for Sanitary Structures): Each water-holding structure to be repaired will be drained by the plant staff on a schedule to allow the work to proceed in that one structure and at the same time to keep the remainder of the plant in operation. All cleaning and the amount of cleaning shall be the responsibility of the CONTRACTOR.

B. Repair Procedures: Cracks 0.005 inch or wider that are designated by the CITY to be injected shall be cleaned and pressure injected with epoxy as specified. All spalled areas or areas with damaged surface, after being designated by the ENGINEER to be repaired, shall be repaired with epoxy grout as specified herein. Some cracks and damaged areas may be excluded from repair by the ENGINEER. Repair only those specifically identified by the ENGINEER.

C. Crack Preparation:

1. The licensed applicator shall be responsible for crack preparation. Remove all plaster coatings and paint systems from all concrete surfaces. All cracks must be free from loose matter such as dirt or laitance and free from oil, grease, salt, or any other contaminants.

Cracks shall be cleaned in accordance with the instructions of the injection adhesive manufacturer. The manufacturer's written instructions shall govern.

2. Examine the areas and conditions at the job site under which work of the Section will be performed. Correct conditions detrimental to timely and proper completion of the work. Do not proceed until detrimental conditions are corrected. Coordinate with other trades as required to assure proper and adequate provisions in the work of those trades for interface with the work of this section.

3. Surfaces adjacent to cracks or other areas of application shall be cleaned of dirt, dust, grease, oil, efflorescence, or other foreign matter detrimental to bond of epoxy injection surface seal system. Acids and corrosives shall not be permitted for cleaning, unless neutralized. If necessary, cracks shall receive three-step acid flushing technique.

D. Crack Sealing: A surface seal adhesive as specified shall be applied to the face of the crack to be repaired prior to adhesive injection. The surface seal shall seal the crack and not allow injection adhesive to escape. The seal shall be applied in accordance with the instructions of the surface seal manufacturer.

E. Backfilled Walls: At locations where walls have backfill on one side and where it will not be possible to excavate and seal both crack surfaces, and where cracks extend entirely through the wall, entry ports as specified below shall be spaced closer together in addition to adjusting injecting pressure so that only a minimum amount of injection adhesive is lost to the soil.

F. Entry Ports: Openings in the surface seal shall be established along the crack for the purpose of adhesive entry. The distance between entry ports shall be determined by the adhesive applicator and, in general, shall be spaced approximately equal to the thickness of the concrete member. The spacing of ports may be increased or decreased as required to insure maximum penetration of the injection epoxy. For through cracks, CONTRACTOR shall seal both sides of cracked member. The repair work for each through crack shall be paid for as a single crack. Special consideration to entry port location must be given when cracks occur in a backfilled wall to ensure minimum adhesive is lost to the soil.

G. Injection: The injection of the adhesive into each crack shall begin at the entry port at the lowest port along a radial crack and at the end of a circumferential or horizontal crack. Injection shall continue at the first port until the injection adhesive begins to flow out of the port at the next highest elevation. The first port shall be plugged and injection started at the second port until the adhesive flows from the next port. The entire crack shall be injected with the same sequence. It is required that a manufacturer’s representative or factory trained qualified applicators with past experience be present on the job at all times.

Injection at the last port shall continue for approximately one minute after the rise in gauge pressure. Once injection has been started on a crack, it shall be continued and uninterrupted until the crack has been completely injected.

H. Finishing:

1. After the injection adhesive has cured, the surface seal shall be removed. The face of the crack shall be finished flush with the adjacent concrete. There shall be no indentations or protrusions caused by placement of entry ports.

2. When cracks are completely filled, epoxy adhesive shall be cured for sufficient time to allow removal of surface seal without any draining or runback of epoxy material from cracks.

3. Surface seal material and injection adhesive runs or spills shall be removed from concrete surfaces.

4. Finish Coating: Provide new plastic/paint system over concrete surface to match existing adjacent surface and to conform with requirements as specified.

3.6 TESTING OF INJECTION REPAIR

A. Initial Cores: The CONTRACTOR shall obtain three 4-inch diameter initial core samples in the first 100 lineal feet of crack repaired and one core for each 500 lineal feet thereafter. The cores shall be for full crack depth and taken from locations as selected by the ENGINEER. If any reinforcing steel is contacted during the core drilling, the CONTRACTOR shall cease drilling and relocate the core drill to clear the reinforcing steel. Additionally, the CONTRACTOR shall provide, at no additional expense to the CITY the following labor, materials, and services required for core sampling and testing as directed by the ENGINEER including, but not limited to:

1 Preparation, handling, storage, and transportation of epoxy injection concrete core test specimens as directed by the ENGINEER.

2 Providing suitable containers for the storage, curing, and transportation of test specimens.

3 Providing suitable storage for supply of test equipment and other items required for sampling and testing.

B. Initial cores will be tested to determine degree of epoxy penetration and bond strength.

C. Testing of initial core samples will be performed by the ENGINEER at the CITY's expense.

D. Additional cores, called verification cores, required as indicated in G. Evaluation and Acceptance of Tests, specified hereinafter, will be tested by the CITY.

E. Methods of Testing Initial and Verifying Cores:

1 Penetration: Visual examination.

2 Bond Strength/Compression Test: Concrete failure prior to adhesive failure.

F. Test Requirements:

1 Penetration: A minimum of 90 percent of the crack shall be full of epoxy adhesive.

2 Bond Strength: Concrete failure before adhesive failure, or 6,500 psi with no failure of either concrete or adhesive.

G. Evaluation and Acceptance of Tests:

1 If the initial cores pass tests as specified above, epoxy adhesive injection work at the area represented by the cores will be accepted.

2 If initial cores fail either by lack of penetration or bond strength, the work shall not proceed further until the area represented by the cores are reinjected and retested for acceptance.

3 After rework of areas represented by failed initial cores is complete, the CONTRACTOR shall obtain verifying cores, the number and location to be determined by the ENGINEER. Verifying cores shall be tested in accordance with Paragraphs E and F for compliance.

H. Correction of Work As Result of Testing: Upon notification from the ENGINEER, refill initial and verifying core holes in accordance with requirements specified hereinafter.

I. Repair of Core Holes: The CONTRACTOR shall fill the core holes with an epoxy grout tamped and

rodded in place to form a dense fill, and finish the surface to blend with the adjacent concrete. The epoxy grout and placement techniques shall be accepted by the ENGINEER and as specified herein.

3.7 CONCRETE SPALL REPAIR

A. The following types of areas are known to require repair:

1. Spalled wall surfaces designated by the ENGINEER.

2. Spalled slab surfaces designated by the ENGINEER.

3. Other specific areas shown on contract drawings.

B. Surface Preparation: The CONTRACTOR shall be responsible for preparing the surfaces of damaged concrete in accordance with the repair adhesive manufacturer's recommendations. The area shall be chipped to remove all loose materials and materials that would prevent bond. The edges shall be left sharp and square with the adjacent concrete surfaces.

C. Application: All concrete spall repair adhesive shall be applied in strict conformance with manufacturer's instructions.

D. Avoid having a joint between new material and old materials right at the planes of the reinforcing steel. Expose the steel completely or at least ¾ inch all around and encase them fully in a new concrete patch.

E. After chipping of the existing concrete has been completed, all reinforcing bars shall be completely exposed or at lease ¾ inch all around, thoroughly cleaned of rust or other deleterious substances by power wire brushing, sandblasting, or other approved means. All remaining fines or dust shall be removed from the chipped surfaces by air jet or vacuum. If an air jet is used, care shall be taken to insure that no oil is in the air system. A suitable oil trap shall be in service during the air cleaning

F. Before applying the concrete patch/repair mortar; all cracks, exposed damaged or rusted reinforcing steel within the spalled areas shall be cleaned and repaired. All damaged reinforcing steel shall be removed and welded with new. When corrosion has occurred due to presence of chlorides, the reinforcing steel should be high-pressure washed with clean water after mechanical cleaning. Prime all reinforcing steel by using approved anti-corrosion coating per Subsection 2.8.E herein.

G. The existing concrete surface to be patched must be clean and dry before applying the epoxy bonding agent. The epoxy to be used for bonding the concrete patches shall conform to Subsection 2.8.B herein.

Evaluate moisture content for concrete by determining if moisture will collect at bond lines between existing concrete surface and epoxy bonding agent before epoxy had cured, this may be accomplished by taping a 4’x4’ polyethylene sheet to concrete surface. If moisture collects on underside of polyethylene sheet before epoxy would cure, then allow concrete to dry sufficiently to prevent the possibility of moisture between old concrete and new epoxy.

H. A uniform coat of the epoxy bonding agent and anti-corrosion coating shall be applied to entire chipped areas of the existing concrete and all exposed surfaces of both existing and new reinforcing steel. When the epoxy becomes dry before the concrete patch/repair mortar has been applied, the epoxy shall be completely removed and re-applied.

After the concrete patches/repair mortars have cured for a minimum time of 3 days, the CONTRACTOR shall remove the forms, any irregularities or departures from a plane surface by grinding, rubbing with a carborundum stone or other means approved by the ENGINEER.

I. Color and Finish: The finished surface repair shall have a color that matches best as possible the surrounding concrete. Repaired surface finish shall be roughened to a degree to match surrounding concrete.

3.8 PAYMENTS

A. Crack Repairs:

1. CONTRACTOR shall submit contract bid price for crack repair with estimated quantity specified in the SCHEDULE OF WORK AND PRICES of the Bid Proposal. During the course of construction or selective demolition, additional cracks in the concrete surface or beneath concrete spall may be encountered/observed and require proper repair. All repair locations shall be determined in the field by the ENGINEER. All crack repairs shall be measured in length.

2. Item Payment: CONTRACTOR shall include all incidental costs, for complete crack repairs including the removal and repair of plaster coating/paint, cleaning, scaffolding, material and equipment, additional mobilization, delays, field office salaries and expenses, profit and overhead costs for all SUBCONTRACTORS and CONTRACTOR. An adjustment in payment shall be made based upon the increase and decrease in quantity and the contract bid unit price submitted, with no additional overhead and profit allowance.

B. Spall Repairs:

1. CONTRACTOR shall submit contract bid price for the spall repair with estimated quantity specified, in the SCHEDULE OF WORK AND PRICES of the Bid Proposal. During the course of construction or selective demolition, additional spalled concrete may be encountered/observed and required proper repair. All repair locations shall be determined in the field by the ENGINEER. All spalled concrete repair shall be measured in square footage and considered as separate payment from the surface or internal cracks repair.

2. Item Payment: CONTRACTOR shall include all incidental cost for complete spall repair including the demolition, cleaning, replaster/repainting, rebar repairs, scaffolding, material and equipment, additional mobilization, delays, field office salary and expenses, profit and overhead, profit and overhead costs for all SUBCONTRACTORS and CONTRACTOR. An adjustment in payment shall be made based upon the increase and decrease in quantity and the Contract Bid Unit Price submitted, with no addition overhead and profit mark-up or overhead and profit allowance.

C. Inspection Hole - Concrete Core Test:

1. Contractor shall submit contract bid price for concrete core test with estimated quantity specified in the SCHEDULE OF WORK AND PRICES of the bid proposal. All concrete core test locations shall be determined in the field by ENGINEER or the INSPECTOR after completion of concrete crack repair. The concrete core test shall be performed in accordance with these Specifications and the direction of the ENGINEER.

2. Item Payment: CONTRACTOR shall include all incidental costs, for complete core sampling, drypacking, extra set up and repair when reinforcing steel in encountered, cleaning, scaffolding, material and equipment, additional mobilization, delays, field office salary and expenses, profit and overhead cost for all SUBCONTRACTORS and CONTRACTORS. An adjustment in payment will be made based upon the increase or decrease in quantity and the contract bid unit price submitted, with no additional overhead and profit mark-up or overhead and profit allowance.

(END OF SECTION)

SECTION 04210
BRICK MASONRY

PART 1 -- GENERAL

1.1 THE REQUIREMENT

A. The CONTRACTOR shall furnish all tools, equipment, materials, and supplies and shall perform all labor required to complete the work as indicated on the Drawings and specified herein.

B. This Section covers all brick masonry work where shown on the drawings and as specified herein, including all labor and materials necessary for a complete installation.

1.2 RELATED WORK SPECIFIED ELSEWHERE

A. Section 03200 Reinforcement Steel

B. Section 03300 Cast-in-Place Concrete

C. Section 07181 Above Grade Waterproofing Sealer Treatment

D. Section 09860 Anti-Graffiti Coating

1.3 REFERENCE SPECIFICATIONS, CODES AND STANDARDS

A. Comply with the applicable reference specifications as specified in the GENERAL REQUIREMENTS.

B. Comply with the current provisions of the following Codes and Standards:

1. Commercial Standards:

ASTM C 62	Standard Specification for Building Brick (Solid Masonry Units Made From Clay or Shale)
ASTM C 144	Standard Specification for Aggregate for Masonry Mortar
ASTM C 150	Standard Specification for Portland Cement
ASTM C 207	Standard Specification for Hydrated Lime for Masonry Purposes
ASTM C 404	Standard Specification for Aggregates for Masonry Grout
ASTM A 615	Standard Specification for Deformed and Plain Billet-Steel Bars for Concrete Reinforcement

1.4 CONTRACTOR SUBMITTALS

A. Submittals shall be made in accordance with the GENERAL REQUIREMENTS.

B. The following submittals and specific information shall be provided to the ENGINEER for approval, prior to start of contracted Masonry Work.

1. Complete materials list of all items proposed to be furnished and installed.

2. Samples of brick units and accessories proposed to be furnished and installed.

a. Submit two full size pieces of each size brick proposed for use.

b. Submit three (3) full size samples per set, each set containing a range of colors specified (one medium and one dark).

3. Manufacturer's specifications and other data required to identify the quality of all proposed accessory and setting materials.

4. Shop drawings showing proposed arrangement and dimensions of all combination panels, methods of anchoring, proposed treatment of joints, locations, layout and details of expansion joints, composition and colors of sealant, and such similar data as is necessary to judge the suitability of the proposed installation and to properly coordinate the preparation and construction of the support system. Shop drawings for grout mix, anchor, tie and reinforcement details for brick work shall be prepared by a California licensed civil engineer with structural calculations.

1.5 QUALITY ASSURANCE

A. Quality of accessories shall be as recommended by the manufacturer subject to acceptance by the ENGINEER.

B. Qualifications of Installers: Throughout the progress of the work of this Section, provide at least one person who shall be thoroughly familiar with the specified requirements, completely trained and experienced in the necessary skills, and who shall be present at the site and shall direct all work performed under this Section.

In actual installation of the work of this Section, use adequate numbers of skilled workmen to ensure installation in strict accordance with the design and the reviewed recommendations of the materials suppliers.

Check as-built dimensions of the supporting structure at the site by accurate field measurements before final submittal of shop and layout drawings. Coordinate schedule with construction progress to avoid delay of work.

C. Sample Panels:

Brick Sample Panel: Construct 3-ft. high x 3-ft. long to specification requirements, located on the job site where designated by the ENGINEER prior to start of brick work and ready to receive specified waterproofing Sealer Treatment specified in Section 07181. Completed brick work shall match approved sample panel. Sample panel to be removed from the job-site upon completion of Contracted Brick Work or when so directed by the ENGINEER prior to acceptance of work of this Section.

The ENGINEER reserves the right to take additional samples and make tests of materials prior to and during construction operations, without expense to the CONTRACTOR.

D. Tests:

Execute tests as required by the latest City of Los Angeles Building Code, whenever the INSPECTOR or ENGINEER detects evidence of materials or work failing to meet specification requirements. Perform all such tests as instructed by the INSPECTOR at CONTRACTOR's expense.

E. Inspections:

Continuous Inspections to be provided as required and noted on the Drawings, to be paid for by the CITY.

F. Defective Materials:

Before placing, defective materials shall be removed from the job-site. Defective material encountered after placing shall be removed and replaced in a manner acceptable to the ENGINEER at no added cost to the CITY.

1.6 PRODUCT HANDLING

A. Protection: Protect materials before, during, and after installation. Protect the work and materials of all other trades.

B. Replacements: In the event of damage, immediately make all repairs and replacements necessary for the acceptance of the ENGINEER and at no additional cost to the CITY.

C. Delivery and Storage:

1. Brick units and auxiliary materials shall be delivered and stored in original, unopened packages bearing manufacturers' labels indicating brand names, and kept off the ground on platforms or palettes that will allow air to circulate under brick units. Store all mortar and grout materials under cover in a cool, dry location in strict accordance with the manufacturer's instructions.

2. Handle brick units in a manner to protect units against wetting and damage. Damaged or stained units will be rejected.

PART 2 -- PRODUCTS

2.1 BRICK MASONRY

A. Acceptable Manufacturer's:

1. Higgins Brick Company, Redondo Beach, California.

2. Equal manufacturers when approved in advance by the ENGINEER.

B. Building Brick:

1. Building brick shall conform to ASTM C62, Grade MW or SW, unit to be free from warp, cracks and spalls in size and quantity detrimental but quality brick work. Minimum average compressive strength at 28 days shall be not less than 3,000 psi.

2. Sizes, Color and Texture: Higgins 3-1/4" x 3-1/4" x 10" overall size, ruffle face, with true faces and sharp straight edges free of cracks and spalls greater than normal in 1st grade common brick, selected for uniform color, or an approved equal.

2.2 PORTLAND CEMENT

Portland Cement shall comply with ASTM C150, Type I or II low alkali, with total amount of sodium or potassium oxide in the cement not to exceed 0.6% when the aggregates contain opalescent silica or is reactive to alkalies. Comply with the latest City of Los Angeles Building Code requirements. "Masonry" cement will not be acceptable. Portland Cement for integrally colored mortar shall be "Riverside White"; "Trinity White"; or an approved equal.

2.3 AGGREGATE

A. Sand for mortar shall be as per ASTM C144, except that not less than 5 percent shall pass the No. 100 sieve.

B. Aggregate for grout shall comply with ASTM C404.

2.4 LIME AND LIME PUTTY

A. Hydrated lime for masonry purposes shall conform to the requirements of the latest City of Los Angeles Building Code.

B. Lime putty shall be made from Type S hydrated lime and shall conform to ASTM C207. Putty made from Type S shall have a plasticity figure of not less than 200 when tested commencing within 30 minutes after mixing with water.

C. The CONTRACTOR shall furnish Manufacturer=s Certification identifying the lime and stating that the lime complies with these requirements.

2.5 WATER

Water shall be from a source used for domestic purposes free from injurious amounts of acids, alkalis, oil and organic matter.

2.6 MORTAR

A. Mortar shall conform to the latest City of Los Angeles Building Code.

B. Mortar shall consist of a mixture of cementitious materials and aggregate to which sufficient water and approved additives, if any, have been added to achieve a workable, plastic consistency.

C. Mortar shall be proportioned in accordance with the latest City of Los Angeles Building Code. Mortar shall attain a minimum compressive strength of 1,500 psi in 28 days.

D. Mix mortar by placing one-half of water and aggregate in a power operated mixer, then add cement, lime, admixture (when approved), and the remainder of aggregate and water. Mix mortar mechanically for not less than three minutes after all ingredients have been placed in the mixer.

E. All mortar incorporated in this project shall be tested in accordance with the latest City of Los Angeles Building Code.

F. Mortar Color shall be made with pure metallic pigments (ground) as manufactured by Frank D. Davis Co., non-fading, alkali proof and of colors to match brick color or as selected by the ENGINEER from samples of colors submitted by the manufacturer, or approved equal.

G. When approved for use, mortar admixture shall be Hydrophobe 31, manufactured by W.R. Grace and Company; Sika Red Label, manufactured by Sika Chemical Corporation; Omicron Mortar proofing, Master Builders Corporation; or an approved equal. Quantity of admixture per mortar batch shall be in accordance with manufacturer's recommendations and as approved by the ENGINEER.

2.7 GROUT

A. Grout shall conform to the latest City of Los Angeles Building Code.

B. Grout shall consist of a mixture of cementitious materials and aggregate to which water has been added such that the mixture will flow without segregation of its constituents. Use pea gravel in grout spaces where least cell or wythe dimension is 4-inches or more.

C. Grout shall have a minimum compressive strength of 2,000 pounds per square inch.

D. Water content of grout shall be adjusted to provide proper workability and to enable the proposed placement under existing field conditions, without segregation. Slump to range between 8 and 10 inches. Field adjustment of water content shall be approved by the INSPECTOR.

E. Grout mixture shall be proportioned in accordance with the latest City of Los Angeles Building Code and approved by the ENGINEER.

F. Mix grout by placing one-half of water and aggregate in a power operated mixer, then add cement, lime, admixture, and the remainder of aggregate and water. Mix grout mechanically for not less than three minutes after all ingredients have been placed in the mixer.

G. Grout admixture shall be Sika Grout Aid, Type II, manufactured by Sika Chemical Corporation; Grout Aid GA-II, manufactured by concrete Emulsions; or an approved equal. Antifreeze liquid, chloride salts or other such substances shall not be used in the grout. Air-entraining substances shall not be used in grout unless tests are conducted to determine compliance with the latest City of Los Angeles Building Code.

2.8 BONDING AGENT

Bonding agent shall be Larson Products Corp. "Plasterweld" as distributed by Pioneer Builder's Supplies Inc., Los Angeles, California; or an approved equal.

2.9 REINFORCEMENT

Reinforcement shall be billet steel conforming to ASTM A615, Grade 60, per sizes and spacings shown on Drawings. Provide galvanized steel pipe sleeves for use at expansion joints where indicated on the Drawings.

2.10 WATERPROOFING ADDITIVE

Waterproofing additive shall be "Red Label Suconem" manufactured by Super Concrete Emulsions;

or an approved equal.

PART 3 -- EXECUTION

3.1 SURFACE CONDITIONS

Examine the areas and conditions under which work of this Section will be performed. Correct conditions detrimental to timely and proper completion of the Work. Do not proceed until unsatisfactory conditions are corrected.

3.2 FOUNDATION PREPARATION

Before start of laying brick units, concrete foundations are to be clean, rough and level:

1. Correct foundation conditions detrimental to timely and proper completion of brick laying.

2. Do not proceed until if necessary the ENGINEER directs sandblasting foundation tops to remove laitance and foreign material.

3. Verify if foundation level is such that the bed joint thickness will be between 1/4" and 3/4" and surface is true to line with masonry not projecting over edge more than 1/4 inch.

4. Verify that projecting dowels are in proper locations and are clean, free from loose scale, dirt, concrete, etc. which would inhibit bond.

3.3 INSTALLATION

A. Wetting of Bricks:

1. Moisten brick units to provide brick suction sufficient to hold mortar and to absorb water from mortar and grout.

2. Provide sufficiently damp bricks so that mortar will remain plastic enough to permit brick to be leveled and plumbed immediately after being laid without destroying the bond.

B. Brick Laying:

1. Conform to the latest City of Los Angeles Building Code for general requirements.

2. Unless otherwise indicated on the Drawings, make the brickwork plumb, level, and true to line with square angles and corners.

3. Use line blocks whenever possible. When it is absolutely necessary to use a line pin, fill the hole immediately after the pin is withdrawn.

4. Use only bricks that are clean and free from dust and other foreign matter.

5. Lay in running bond as required for standard brick units, or 2 Bond as required for oversize or modular brick units, unless otherwise shown on the Drawings.

6. Do not use bonding headers on grouted masonry unless specifically so directed by the

ENGINEER.

7. Bed Joints:

   a. Bed joints to be not smaller than 2-inch to provide 4-inch vertical modules of courses (brick unit plus joint).

   b. Bevel all bed joints, sloping toward the center of the wall in such a manner that the bed joints will be filled when the brick is finally brought to line.

   c. Do not furrow the bed joints.

   d. Avoid fins of bed joints protruding into grout space.

      (1) If they occur, leave in place if not projecting more than the bed joint thickness.

      (2) Do not, in any case, cut off and drop into the grout space.

8. Head Joints: Not smaller than 2-inch. For head joints 5/8-inch or more provide mortar dams to retain the grout. Regardless of thickness, completely fill with mortar or grout.

9. Lay both wythes of the wall to a line.

10. Where bricks are moved or shifted, remove and lay again in fresh mortar.

11. Except at the finishing course, stop grout approximately 1" below the top of the last course.

12. At the finishing course, bring the last grout pour flush with the top of the brick.

13. Grouting:

   a. Completely fill all grout spaces, immediately puddle with rod to cause it to flow into all joints and voids and bond with mortar and completely encase all reinforcing and other metal inserts etc. Whenever possible do grouting from the inside face of the wall.

   b. Take extreme care to prevent grout or mortar staining the face of masonry to be left exposed or unpainted.

   c. Protect sills, ledges, offsets, door jambs, corners, and similar points from damage and from collecting mortar or grout.

14. Immediately remove mortar and grout from areas where they are not scheduled to be placed.

C. Tooling Mortar Joints: Tool joints when enough water has left the mortar and the mortar is "Thumb Print" hard and when such tooling will not bring excessive paste to the surface. Compress and compact the mortar using 3/4-inch diameter round tool for making joints 2-inch slightly concave for both horizontal and vertical joints without waves or dips.

   1. Exterior Joints: Make slightly concave, at corners make joints flush or cut flush to receive plaster.

   2. Interior Joints: Make slightly concave where exposed; cut flush where masonry surfaces are to receive other work.

   3. Where new work adjoins existing masonry work interior and exterior joints to match and be in

alignment.

4. Reveal Joints: Rake 3/4-inch deep for 2-inch joints or as otherwise detailed on the Drawings.

5. On back sides of parapet walls strike joints flush and make ready to receive other materials.

D. Cutting and Trimming Brick: To be done where necessary and as approved by the INSPECTOR or ENGINEER, for use on narrow wall widths, pilasters, returns, reveals and/or other architectural features. No brick unit to be cut to 2 of its size or length. All cuts shall be done by machine, to achieve neat, true and even surfaces.

E. Brick Anchorages: Use anchors, ties, bolts, piping, sleeves, rough hardware and other inserts specified in other Specification Sections; set items into the brick work as the brick units are being placed.

F. Exterior Exposed Brick: Exposed textured face to match existing adjacent construction where occur.

G. Interior Exposed Brick: Lay with wire-cut texture exposed.

H. Coring: Make holes in brick walls for passage of pipe or conduit with a coring machine.

I. Tiering: Carry outer tier not more than three (3) courses with the outer tier one course higher than the inner tier for grouting. If work is interrupted for more than 1 hour, bring all tiers to the same level and pour grout to within 3/4 inch of the top.

J. Termination of a Horizontal Run: Rack back one-half brick length in each course and stop the grout 2-inches back of the rack.

K. Delays in Work Progress: Before resuming work, roughen the grout surfaces with a moist non-metallic brush.

L. Reinforcement:

1. Accurately placed and set in accordance with drawing details and notes.

2. Where necessary; hold vertical steel firmly in place by means of frames or other suitable methods.

3. Place horizontal reinforcing as work progresses with laps properly wired in place and spliced and wired to vertical steel prior to placing of brick units.

4. In spaces containing reinforcement, the clear distance between brick and reinforcement to be minimum 2-inch at all points.

M. Embedded Items: Install reglets, anchors, nailing strips, bolts and other items (specified in other Specification Sections) in masonry walls as indicated on the Drawings or as required for the work of other trades.

N. Curing of Completed Brick Work: Avoid wetting of masonry surfaces after completion of construction. If weather is extremely hot and/or windy, fog spray the complete work sufficient only to dampen the surface but not of such quantity to cause water to flow on the face of the brick or flow into the joints.

O. Parapet Walls: Install wire fabric as required and form cement cap as indicated on the Drawings.

3.4 CLEANING AND PROTECTION

A. Cleaning During Construction: As work progresses immediately remove all mortar and grout droppings and other foreign matter from installed work using a (non-metallic) fiber brush and water to prevent adhesion of mortar and grout to brick surfaces and to leave surfaces clean. Use minimum amount of water to prevent added efflorescence from forming on the surfaces.

B. Protection: Adequately protect each four-foot lift or completed masonry work with visqueen or other approved material to maintain completed work, clean as work progresses above previous lift.

C. All exposed masonry surfaces shall receive clean Above Grade Waterproofing Sealer Treatment specified in Section 07181, and to receive Anti-Graffiti Coating specified in Section 09860.

(END OF SECTION)

SECTION 04230
REINFORCED HOLLOW UNIT MASONRY

PART 1 -- GENERAL

1.1 THE REQUIREMENT

A. The CONTRACTOR shall furnish all tools, equipment, materials, and supplies and shall perform all labor required to complete the reinforced hollow unit masonry work as indicated on the Drawings and specified herein.

B. The CONTRACTOR alone shall be fully responsible for the design, strength, safety and adequacy of all shoring, bracing and all methods of construction, and for the strength, consistency, finish and general quality of masonry.

1.2 RELATED WORK SPECIFIED ELSEWHERE

A. Section 03200 Reinforcement Steel

B. Section 03300 Cast-in-Place Concrete

C. Section 09905 Architectural Paint Finishes

1.3 REFERENCE SPECIFICATIONS, CODES AND STANDARDS

A. Comply with the applicable reference specifications as specified in the GENERAL REQUIREMENTS.

B. Comply with the current provisions of the following Codes and Standards:

1. Commercial Standards:

MSJC Code	Masonry Standards Joint Committee's Building Code Requirements and Specifications for Masonry Structures
ASTM C 33	Standard Specification for Concrete Aggregates
ASTM C 67	Standard Test Methods for Sampling and Testing Brick and Structural Clay Tile
ASTM C 90	Standard Specification for Loadbearing Concrete Masonry Units
ASTM C 140	Standard Test Methods for Sampling and Testing Concrete Masonry Units and Related Units
ASTM C 144	Standard Specification for Aggregate for Masonry Mortar
ASTM C 150	Standard Specification for Portland Cement
ASTM C 207	Standard Specification for Hydrated Lime for Masonry Purposes
ASTM C 331	Standard Specification for Lightweight Aggregates for Concrete Masonry Units

ASTM C 404	Standard Specification for Aggregates for Masonry Grout
ASTM C 476	Standard Specification for Grout for Masonry
ASTM C 652	Specification for Hollow Brick (Hollow Masonry Unit Made from Clay or Shale)
ASTM C 744	Standard Specification for Prefaced Concrete and Calcium Silicate Masonry Units
ASTM C 1314	Standard Test Method for Compressive Strength of Masonry Prisms

1.4 CONTRACTOR SUBMITTALS

A. Submittals shall be made in accordance with the GENERAL REQUIREMENTS.

B. The following submittals and specific information shall be provided.

1. Manufacturer's Literature: Submit information illustrating the horizontal joint reinforcement and preformed control joint materials proposed for use.

2. Sample Panel: Lay up a sample panel for each type of masonry at the site to show the approved bond and method of finishing joints. Sample panels shall be at least 4-feet high and at least 4-feet long, and shall remain intact after approval until acceptance of the permanent masonry work and then shall be removed by the CONTRACTOR. The accepted sample panels shall serve as a basis of color, texture, and workmanship for acceptance of the permanent construction.

3. Bar Reinforcement Submittal shall include placing plans, wall elevations, bending diagrams, cutting lists, and other information so as to completely and unambiguously define and establish the location, spacing, size, length, bending, shape, splicing, and all other pertinent information as required. Drawings shall show grades of reinforcing steel. Wall reinforcing shall be detailed on wall elevations, each Shop Drawing shall show splice length for every size and type of bar used.

4. Manufacturer's Certificate: Provide manufacturer's certificate(s) for the masonry units specified herein, before delivering concrete block units to the jobsite.

1.5 QUALITY ASSURANCE

A. Tolerances for concrete block masonry:

1. Walls shall be plumb and straight and in level courses. Walls that are not plumb and straight shall be removed and reconstructed. The maximum permissible variation from plumb of the wall and corner, or of a line of joints in the wall shall be 1/16-inch per foot of height, 1/4" in 10'; 3/8" in any story or 20' maximum; or 1/2" in 40'.

2. Maximum variation from level or indicated elevations: 1/4" in any bay or 20'; 1/2" in 40'.

3. The maximum permissible variation from a horizontal line along the base of the wall or for lines of horizontal joints shall be 1/16-inch per block, 1/4-inch per 50-feet of wall with proportionately greater tolerance for longer walls up to 2-inch in the total length of wall.

Interior surfaces shall be maintained in the plane described above and the dimension tolerances of the units shall be taken up on exterior surfaces.

1.6 HANDLING

A. Ship, handle and store concrete blocks to avoid chipping, cracking or damaging them. Concrete block with spalled corners may be used provided the damaged corners are concealed in the finished work. Do not use damaged concrete block at exposed locations.

B. Store concrete blocks in a dry, well ventilated space, under cover and off the ground, to prevent their getting wet.

PART 2 -- PRODUCTS

2.1 MASONRY UNITS

A. General:

1. At the time of delivery to the work site the units shall conform to the physical requirements specified herein. Units shall be of size shown on Drawings. Provide or cut special shapes for corners, jambs, lintels, and other areas shown or required. Special units shall match color and texture of standard units. Where masonry units are placed so that the end of a unit is exposed, such as at a corner or intersection, the end of that block shall have the surface to match the color or texture of the sides of the other units.

2. All units shall match color and texture of standard unit samples. Units shall be sound, dry, clean, free of cracks, and shall have reached the specified moisture content and compressive strength prior to placing in the structure.

3. Where units are to be used in exposed wall construction, the face or faces that are to be exposed shall be free of chips, cracks, discoloration, or other defects when viewed from 10 feet, except that not more than 5 percent of the units may have slight cracks or small chips not larger than 1 inch in any dimension. Vertical cells to be grouted in all units covered under this Specification shall have vertical alignment sufficient to maintain a clear, unobstructed continuous vertical cell measuring not less than 2-inch by 3-inch.

4. The color of the units shall be **uniformly grey** and the surface shall be **fine-textured** on all exposed surfaces.

B. Hollow Concrete Masonry Units (CMU):

1. Hollow concrete masonry units shall be normal weight, ASTM C90, Type I, in accordance with the latest City of Los Angeles Building Code.

2. The manufacturer shall certify that the masonry units meet all requirements of the latest City of Los Angeles Building Code, including the moisture content and linear shrinkage requirements for intermediate conditions.

C. Glazed Concrete Masonry Units (GCMU):

1. All glazed concrete masonry units shall meet the same requirements as hollow concrete units.

2. Glazed masonry units shall be medium weight, plane face type, smooth satin-gloss finish, externally heat-polymerized, cast-on facing conforming to ASTM C744, with no telegraphing of texture or color. Unit sizes to be as indicated on Drawings. Color shall be as scheduled on Drawings. The GCMU shall be Astra-Glaze-SW+, as manufactured by Trenwyth Industries, Inc., Phoenix, AZ; or an approved equal.

3. Edges of glaze at exposed face to be 1/16-inch thick with lip returned about 1/4-inch into joint at perimeter. Glazed facing to be 1/8-inch thick.

4. Mortar: Manufacturer's standard matching color, pigmented mortar with water-repellant additive.

2.2 CEMENT

A. Portland Cement: All cement to be used or furnished shall be ASTM C150 Type II low alkali portland cement conforming to the latest City of Los Angeles Building Code.

B. Masonry Cement: The use of masonry cement is not permitted.

C. Mortar Cement: All mortar cement to be used or furnished shall conform to the latest City of Los Angeles Building Code.

D. The CONTRACTOR shall furnish a Certificate of Compliance signed by the manufacturer identifying the cement and stating that the cement complies with these requirements. Supporting test data shall be furnished when requested by the ENGINEER or the INSPECTOR.

E. Cement shall be delivered in original unopened bags that shall be plainly marked with the manufacturer’s name or brand, cement type, weight, and ASTM Designation.

F. All cement delivered to the job site shall be stored in a manner to protect against contamination or moisture. Should any cement become contaminated or otherwise become unsuitable for use, the INSPECTOR may reject it and require that it be immediately removed from the site.

G. Unidentifiable bags shall be immediately removed from the site and shall not be incorporated into the work.

H. All cement used on this project for any individual structure shall be of the same brand and type unless otherwise accepted in writing by the ENGINEER. Cement shall be stored in such a manner as to permit ready access for the purpose of inspection and sampling, and suitably protected against contamination or moisture. Should any cement delivered show evidence of contamination or be otherwise unsuitable, the INSPECTOR may reject it and require that it be removed from the site.

2.3 LIME

A. Hydrated lime for masonry purposes shall conform to the requirements of the latest City of Los Angeles Building Code.

B. Lime putty shall be made from Type S hydrated lime and shall conform to ASTM C207. Putty made from Type S shall have a plasticity figure of not less than 200 when tested commencing within 30 minutes after mixing with water.

C. The CONTRACTOR shall furnish Manufacturer’s Certification identifying the lime and stating that the lime complies with these requirements.

2.4 AGGREGATES

A. Hollow Concrete Units: Aggregates for hollow concrete units shall conform to ASTM C33 and ASTM C331 or shall be blended from aggregates conforming to these Specifications. Use the same type or types of aggregate throughout the project unless otherwise indicated or written permission is received from the ENGINEER. Aggregates used for the project shall produce concrete with a dry density of 125 pounds per cubic foot or more.

B. Mortar: Aggregate for mortar shall conform to ASTM C144.

C. Grout: Aggregate for grout shall conform to ASTM C404.

2.5 WATER

A. Water shall not contain deleterious substances. Water shall not contain an amount of impurities that will cause a change in the time of setting of portland cement of more than 25 percent nor a reduction in relative mortar strength at 7 and 28 days of more than 10 percent compared to results obtained with distilled water.

B. Water shall not contain more than 1,000 ppm of chlorides calculated as Cl, nor more than 1,000 ppm of sulfates calculated as SO_4.

2.6 MORTAR

A. Mortar shall conform to the latest City of Los Angeles Building Code.

B. Mortar shall be “Type M” and consist of a mixture of cementitious materials and aggregate to which sufficient water and approved additives, if any, have been added to achieve a workable, plastic consistency.

C. Mortar shall be proportioned in accordance with the latest City of Los Angeles Building Code. Mortar shall attain a minimum compressive strength of 2,500 psi in 28 days.

D. Mix mortar by placing one-half of water and aggregate in a power operated mixer, then add cement, lime, admixture (when approved), and the remainder of aggregate and water. Mix mortar mechanically for not less than three minutes after all ingredients have been placed in the mixer.

E. All mortar incorporated in this project shall be tested in accordance with the latest City of Los Angeles Building Code.

2.7 MORTAR ADMIXTURE

A. Additives and admixtures to mortar shall not be used unless approved in writing by the ENGINEER.

B. When approved for use, mortar admixture shall be Hydrophobe 31, manufactured by W.R. Grace and Company; or an approved equal.

C. Quantity of admixture per mortar batch shall be in accordance with manufacturer's recommendations and as approved by the ENGINEER.

D. Coloring pigments are to be only in quantities approved by the ENGINEER. Color shall be as selected by the ENGINEER.

2.8 GROUT

A. Grout shall conform to the latest City of Los Angeles Building Code.

B. Grout shall consist of a mixture of cementitious materials and aggregate to which water has been added such that the mixture will flow without segregation of its constituents. Use pea gravel in grout spaces where least cell or wythe dimension is 4-inches or more.

C. Grout shall have a minimum compressive strength of 2,000 pounds per square inch.

D. Water content of grout shall be adjusted to provide proper workability and to enable the proposed placement under existing field conditions, without segregation. Slump to range between 8 and 10 inches. Field adjustment of water content shall be approved by the INSPECTOR.

E. Grout mixture shall be proportioned in accordance with the latest City of Los Angeles Building Code and approved by the ENGINEER.

F. Mix grout by placing one-half of water and aggregate in a power operated mixer, then add cement, lime, admixture, and the remainder of aggregate and water. Mix grout mechanically for not less than three minutes after all ingredients have been placed in the mixer.

2.9 GROUT ADMIXTURE

A. Grout admixture shall be Sika Grout Aid, Type II, manufactured by Sika Chemical Corporation; Grout Aid GA-II, manufactured by concrete Emulsions; or an approved equal.

B. Antifreeze liquid, chloride salts or other such substances shall not be used in mortar or grout.

C. Air-entraining substances shall not be used in grout unless tests are conducted to determine compliance with the latest City of Los Angeles Building Code.

D. For coloring grout, only pure mineral oxide, carbon black or synthetic colors may be used as approved by the ENGINEER. Carbon black shall be limited to a maximum of 3 percent of the weight of the cement.

2.10 JOINT REINFORCEMENT

A. Prefabricated joint reinforcement for masonry wall shall have at least one cross wire of at least No. 9 gage steel for each 2 square feet of wall area. The vertical spacing of the joint reinforcement shall not exceed 16 inches. The longitudinal wires shall be thoroughly embedded in the bed joint mortar. The joint reinforcement shall engage all wythes.

B. Wire joint reinforcement used as principal reinforcement in hollow unit construction shall be continuous between supports unless splices are made by lapping in accordance with the latest City of Los Angeles Building Code.

C. Side wires shall be deformed and shall conform to the latest City of Los Angeles Building Code.

2.11 PREFORMED CONTROL JOINT

A. Joint material shall be a solid rubber extrusion such as regular Rapid Control Joint, manufactured

by Dur-O-Wall National Company, Cedar Rapids, IA; Sonneborn Control Joint, manufactured by Sonneborn-Contech Company, Oakland, CA; or an approved equal.

2.12 CLEANING AGENT:

Concrete block cleaner shall be "Sure Klean No. 600 Detergent" by PROSOCO, Inc., "Doex Chemical Cleaner" by National Chemsearch Corp., or an approved equal.

PART 3 -- EXECUTION

3.1 GENERAL

A. Masonry shall be constructed according to the provisions of this section.

B. Masonry materials shall be stored so that at the time of use the materials are clean and structurally suitable for the intended use. Materials shall be stored in a manner such that deterioration or intrusion of foreign materials is prevented and that the material will be capable of meeting applicable requirements at the time of mixing.

C. All metal reinforcement shall be free from loose rust and other coatings that would inhibit reinforcing bond, unless otherwise indicated.

D. Concrete masonry units shall not be wetted unless otherwise approved in writing by the ENGINEER.

E. Where no bond pattern is shown, the wall shall be laid up in straight uniform course with regular running bond with alternate header joints in vertical alignment.

F. Mortar or grout mixed at the jobsite shall be mixed in a mechanical mixer. Hand mixing of small amounts of mortar is permitted with approval of the INSPECTOR. Dry mixes for mortar and grout which are blended in the factory and mixed at the jobsite shall be mixed in mechanical mixers until workable, but not to exceed 10 minutes.

G. Where stack bond is indicated on the Plans, approved metal ties shall be provided horizontally at 16 inches on centers (maximum)

H. Mortar may not be retempered. Mortar or grout which has hardened or stiffened due to hydration of the cement shall not be used.

I. In no case shall mortar be used more than two and one-half hours after water has been added to the dry ingredients at the job site.

J. In no case shall grout be used more than one and one-half hours after water has been added to the dry ingredients at the job site.

K. All concrete masonry block shall be laid in running bond.

L. All concrete masonry block shall be reinforced and anchored in the manner indicated on the contract drawings and as herein specified.

M. Hollow unit masonry shall cure for a minimum of 24 hours prior to grouting.

N. Saw cut concrete block neatly and accurately as necessary to provide openings for the work of other trades, with diamond or abrasive saws to produce straight, sharp edges without spalling or other defects, and of sizes required to maintain uniform joint widths.

O. If it is necessary to move a concrete block after it has been once set in place, remove the unit, clean it and set it in fresh mortar.

3.2 WEATHER CONDITIONS

A. Protect the tops of walls at all times. Cover the tops of walls with waterproof paper when rain is imminent and work is discontinued.

B. Protect masonry construction from loss of moisture during the curing period when ambient air temperature of 90 degrees F (37 degrees C) or greater exists and when relative humidity is less than 50 percent. Use light fog spray nozzles to cure the mortar when these conditions exist. Provide a demonstration of the fog spray nozzles prior to starting the work.

3.3 LAYING REINFORCED MASONRY UNITS

A. General:

1. Masonry construction shall conform to the latest City of Los Angeles Building Code as supplemented by these Specifications.

2. All masonry shall be laid to a line.

3. All exposed edges of masonry shall be free of broken corners, chips edges, chipped faces, discoloration, or other defects.

B. Wall Units:

1. Masonry units shall be cut or clipped as necessary to provide openings and to accommodate embedded items.

2. Wall anchors shall be securely embedded in mortar and fully grouted.

3. Glazed Concrete Masonry Units: Single-faced units may be installed through the wall where walls or partitions are indicated to have glazed masonry unit finish on one side only. The facing shall be used for dimensional and plane reference in the installation. Where glazed masonry unit finish is indicated on both sides of a wall or partition, coved bases shall be of two-unit construction or two-faced units installed through the wall. Except as otherwise specified, coved bases shall be flush with finished surfaces above.

4. Door and window frames shall be maintained plumb and true.

5. Masonry shall be built tightly against interior door frames.

6. Care shall be taken at corners and jambs to maintain uniformity of appearance and to insure that only whole, undamaged units are used.

7. All masonry walls shall be laid in running bond.

8. Stack bond shall not be permitted unless indicated on the contract drawings.

9. In running bond, care shall be taken to lay out the work so that vertical joints in alternate courses lie in the same vertical lines midway between the vertical joints in adjacent courses to provide a regular and uniform joint pattern.

10. Lintels shall be provided over all openings of width greater than the length of the masonry unit.

11. Lintels shall be of the type and size indicated on the contract drawings or required for the span and approved by the ENGINEER.

12. Lintels shall bear on grout filled cells of hollow units.

13. Bullnose units shall be provided at all corners, around recessed door openings and where otherwise indicated on the drawings.

14. Square corners shall be provided at flush door and window openings.

15. Toothing of masonry units is not permitted

16. A 1" wide isolation joint shall be provided at all locations where masonry walls abut concrete walls or columns.

17. Isolation joints shall be filled with approved compressible joint filler and caulked on each face.

18. The minimum embedment depth of anchor bolts shall be in accordance with the latest City of Los Angeles Building Code unless otherwise indicated on the contract drawings.

3.4 BUILT-IN ITEMS

1. Door frames; window frames; HVAC connectors, registers, vents and sleeves; flashing; conduit and pipe sleeves; anchors; ties; bolts; hangers; or any other item to be placed in or through the wall shall be accurately set and securely held in the masonry work as indicated on the contract drawings or as accepted by the INSPECTOR.

2. Core drilling and/or saw curing of completed masonry walls is prohibited unless each location is approved in writing by the ENGINEER prior to cutting.

3. Core drilling and/or saw cutting required by changes to the contract shall be approved in writing by the ENGINEER prior to commencing the work.

4. All items passing through masonry walls shall be sleeved. Sleeves shall be accurately set and securely held in a manner acceptable to the INSPECTOR.

5. Sleeves provided for piping passing through masonry walls shall be placed no closer than three pipe diameters apart center to center.

3.5 EMBEDDED CONDUITS

A. Electrical or instrumentation conduits shall not be placed in any cell containing reinforcement unless approved in writing by the ENGINEER.

B. Placing of water piping in any cell containing reinforcement is prohibited.

3.6 MORTAR PREPARATION

A. The method of measurement of all mortar ingredients shall be accurate and shall insure definite and uniform proportions. The method of field measurement of ingredients shall be as approved by the INSPECTOR.

B. Mortar shall be machine mixed for a minimum of five (5) minutes and shall be used within 90 minutes of mixing.

C. No remixing of mortar more than 90 minutes old with additional water, cement, or other materials is permitted.

D. Retempering of mortar is not permitted.

3.7 MORTAR JOINTS

A. The initial bed joint thickness shall not be less than 1/4" or more than 1".

B. Subsequent bed joints shall not be less than 1/4" or more than 5/8" thick.

C. All head and bed joints shall be filled solidly with mortar for a distance in from the face of the unit not less than the thickness of the shell.

D. Tooling of joints shall be regulated so that the mortar for each wall space is of uniform size and appearance.

E. Head joints of open-end units with beveled ends that are to be fully grouted need not be mortared. The beveled ends shall form a grout key which permits grout within 5/8" of the face of the Unit. The units shall be tightly butted to prevent leakage of grout.

F. All solid masonry units and hollow units with horizontal cells shall be laid on a full bed of mortar.

G. All collar joints in multi-wythe masonry shall be completely filled.

H. All exposed mortar joints, except joints which are to be raked, shall be tooled to a smooth uniform surface and finished free of voids using a rounded tool.

I. Mortar joints specified or indicated to be caulked shall be raked to a depth of 1/2".

J. For Glazed Concrete Masonry units, rake mortar from all joints to a depth of 1/2", fill all joints flush with the glazed surface using an approved silicone sealant and tool the joints slightly concave. Color of sealant shall be as approved by the ENGINEER in writing prior to commencement of work.

3.8 REINFORCING

A. General:

1. All concrete block masonry shall be bonded and reinforced by continuous joint reinforcement spaced not more than 16 inches apart vertically. The joint reinforcement shall have one longitudinal rod at each face shell of the masonry unit.

2. All walls shall be reinforced with both vertical and horizontal reinforcement.

3. Reinforcement shall be placed as indicated on the Drawings and per approved placement drawings.

4. All reinforcing bars, except joint reinforcement, shall be completely embedded in mortar or grout and have a minimum cover, including the masonry unit, of at least 2". The minimum grout space between reinforcing steel and masonry shall be ½”.

5. Unless noted otherwise on Drawings, all splices of reinforcement and wall dowels shall be lapped a minimum of 48 bar diameters. Separate spliced bars by one bar diameter or wire them together.

6. All wall dowels shall be placed and securely fastened prior to placement of concrete for the foundation.

7. The size, number, and location of the wall dowels shall match the vertical wall reinforcing as shown on the contract drawings.

8. All dowels for wall reinforcement shall be cast into in the foundation slab. Drilling and grouting of wall dowels shall not be permitted unless approved in writing by the ENGINEER.

9. Any variation from the reinforcement shown on the contract drawings shall be approved in writing by the ENGINEER prior to commencement of work.

10. When a dowel does not line up with a vertical core, do not slope more than one horizontal in six vertical. Grout dowels in a core in vertical alignment, even though it is a cell adjacent to the vertical wall reinforcing.

B. JOINT REINFORCEMENT

1. Sections of joint reinforcement shall have ends lapped a minimum of 8" and wired together at cross wires.

2. Joint reinforcement shall be lapped full width and wired together at corners and intersections, or prefabricated corners and tees shall be used.

3. Widths of joint reinforcement (side rod to side rod) shall be approximately 2 inches less than the nominal overall thickness of the wall in which it is placed. All joint reinforcement, when placed, shall be fully embedded in mortar.

4. Except where bond beams are specified or otherwise indicated on the contract drawings, the top three courses of all masonry walls, including backup, shall have continuous joint reinforcement placed in each joint (8 inches center to center).

5. Joint reinforcement shall be terminated at expansion joints and control joints.

6. Openings in all masonry walls shall have joint reinforcement placed in the two courses immediately above lintels.

C. WALL REINFORCEMENT

1. All walls shall be reinforced with both vertical and horizontal reinforcement.

2. Vertical wall reinforcement shall be provided continuously from support to support at each corner, at each side of any opening, and at the ends of walls.

3. Horizontal wall reinforcement shall be provided at the bottom and top of wall openings and shall extend not less that 24 inches or 48 bar diameters (whichever is greater) past the opening.

4. Horizontal reinforcement shall be provided continuously at structurally connected roof and floor levels, at the tops of walls, at the bottom of walls or in the top of foundations when doweled in walls, and at a maximum spacing of 4 feet, unless otherwise indicated on the contract drawings.

5. Reinforcement shall be of the size and number indicated on the contract drawings.

6. Reinforcement shall be secured against displacement prior to grouting by wire positioners or other approved devices at intervals not to exceed 200 bar diameters.

7. Approved dovetail anchors shall be used at the joint between abutting masonry walls and concrete columns or walls. Dovetail anchors shall be 16 inches long and be spaced no more than 16 inches on center the height of the wall.

8. Dovetail anchors shall also be placed in each bond beam and in the courses above and below the bond beam.

D. COLUMN AND PILASTER REINFORCEMENT

1. The minimum spacing of column ties shall be 4 inches on center for the full column height, unless otherwise indicated on the contract drawings.

2. Column ties shall terminate with a minimum 135 degree bend and with a six-bar diameter extension, but not less than 4 inch extension that engages the longitudinal column reinforcement and projects into the interior of the column.

3.9 GROUTING

A. Proportioning of grout shall be in accordance with the latest City of Los Angeles Building Code.

B. General:

1. Grout masonry shall be constructed in such a manner that all elements of the masonry act together as a structural element.

2. Prior to grouting, the grout space shall be clean so that all spaces to be filled with grout do not contain mortar projections greater than 1/2 inch, mortar droppings, or other foreign material. Keep vertical cells free of mortar droppings and in vertical alignment to maintain continuous, unobstructed cells not less than 4" x 4" when coarse grout is used, and 2" x 3" for all other conditions.

3. Grout shall be placed so that all spaces designated to be grouted shall be filled with grout and the grout is confined to those specified spaces.

4. Grout materials and water content shall be controlled to provide fluidity for placement without segregation of the materials and shall be mixed thoroughly.

5. The grouting of any section of wall shall be completed in one day with no interruptions greater than one hour.

6. Between group pours, a horizontal construction joint shall be formed by stopping at the same elevation and with the grout stopping a minimum of 1-1/2 inches below a mortar joint, except at the top of the wall. Where bond beams occur, the grout pour shall be stopped a minimum of 2 inch below the top of the masonry.

7. Cleanouts shall be provided for all grout pours over five feet in height. There shall be no exceptions.

8. Cleanouts shall be provided in the bottom course at every vertical bar but shall not be spaced more than 32 inches on center for solidly grouted masonry.

9. Cleanouts shall be sealed and approved by the INSPECTOR after inspection and before grouting.

10. Units may be laid to the full height of the grout pour and grout shall be placed in a continuous pour in grout lifts not exceeding 4 feet.

11. Any placement of grout in lifts exceeding 4 feet must be approved in writing by the ENGINEER.

12. All cells and spaces containing reinforcement shall be filled with grout.

13. Walls which are to be solid grouted shall have vertical grout barriers spaced not more than 30 feet apart extending the full height of the wall.

14. Grouting of beams over openings shall be done in one continuous operation.

15. All bolts, anchors, etc. inserted in the wall shall be solidly grouted in place, so that there is a minimum of 1" of grout between the bolts and the side of the concrete block masonry cell wall.

16. Spaces around metal door frames, windows, and other build-in items shall be filled solidly with grout.

17. Grout shall not be handled nor pumped utilizing aluminum equipment.

18. Grout shall be consolidated at time of pouring by use of a vibrator. Puddling is not permitted.

C. Low-lift Grouting Requirements:

1. Unless otherwise accepted by the ENGINEER prior to the start of the masonry work, all grouting shall be low-lift grouting.

2. When grouting is stopped for 1 hour or longer, horizontal construction joints shall be formed by stopping the pour of grout 2-inch below the top of the uppermost unit. Horizontal steel shall be fully embedded by grout in an uninterrupted pour.

3. Grout pour shall be limited to a maximum height of 4-feet. The wall shall not be constructed more than one course above the top of the grout pour prior to placing the grout.

4. The grout shall be thoroughly consolidated with an internal "pencil" type vibrator to consolidate and reduce the amount of air voids. After waiting sufficient time to permit the grout to become plastic, but before it has taken any set, the grout shall be reconsolidated. The waiting period will vary depending upon weather conditions and block absorption rates, but under "normal" weather conditions with average masonry units, the waiting period should be between 30 to 60 minutes.

D. High-Lift Grouting Requirements:

1. Permission to high-lift grout shall be at the discretion of the ENGINEER and shall be approved by the ENGINEER in writing prior to commencement of construction. The CONTRACTOR is responsible to pay for all necessary extra inspection costs required by the latest City of Los Angeles Building Code.

2. For walls that are grouted solid, the first course shall be an inverted bond beam unit to allow for cleaning.

3. Approved grout pours shall be limited to 12 foot heights with lifts not exceeding 4 feet.

4. Each lift of grout shall be consolidated with an internal vibrator. Puddling is not permitted.

3.10 JOINTS AND BONDING

A. Clean concrete bearing surfaces and remove all laitance by steel brushing or sandblasting to expose the coarse aggregates before laying the first course of concrete block masonry.

B. Lay concrete block masonry in straight and uniform courses in a running bond pattern. Lay the starting joint on concrete bearing surfaces with full mortar coverage, except that area where grout occurs shall be free from mortar so that grout will contact the bearing surface.

C. Mortar joints shall be straight, clean and of a uniform width (approximately 3/8"). Strike joints flush where concrete block masonry will have an elastomeric coating applied on it; tool all other joints with a rounded jointing tool to produce concave joints well bonded to the block.

D. Tool joints with a rounded bar when the mortar has partially set but still sufficiently plastic to bond. Rake out joints which are not tight at the time of tooling, point and then retool.

E. Horizontal joints shall have full mortar coverage on face shells.

F. Butter head joints well for the full width of the face shell and shove these joints tightly so that the mortar bonds well to both concrete block.

G. Provide vertical contraction joints at a spacing not to exceed 30 feet on center in all block masonry walls.

3.11 CLEANING

A. Thoroughly clean all surfaces or excess mortar, grout spillage, dirt, and other foreign substances immediately upon their discovery.

B. After completion of construction, all wall surfaces shall be cleaned using a stone and sealed unless the walls are to be painted. Clean exposed concrete block surfaces with one of the specified cleaners used in strict accordance with the manufacturer's printed instructions. Take all necessary precautions to avoid staining the concrete block and adjacent surfaces. Cover sills and top course of unfinished work with waterproof coverings and tie securely in place to prevent its accidental displacement. Prepare walls for sealing and painting in accordance with Section 09905 “Architectural Paint Finishes”.

C. Where necessary to maintain a consistent finish, damaged or discolored face shells shall be replaced after grout has been placed and cured and before cleaning. Face shell replacement shall be done under inspection and approval of the INSPECTOR.

3.12 PROTECTION

A. At the end of each day's work, tops of walls shall be covered with building paper or by other means that will protect the walls from becoming excessively wet.

B. Dampen (but don't saturate) the surface of the concrete block masonry with a light fog spray when the atmosphere is excessively dry and keep it damp for approximately three days to permit the

mortar to thoroughly cure.

3.13 TEMPORARY BRACING

A. Provide all shores and bracing required for this work. Construct shoring and bracing to required shapes and sizes, capable of supporting and sustaining the loads to which they will be subjected without failure or deflection. Leave shores and bracing in place until concrete block masonry can safely carry all required live and dead loads.

B. Brace concrete block masonry walls adequately to withstand all forces they will be subjected to during construction. Walls are not designed to be self supporting for lateral loads, including wind, until attached to floor and roof elements.

3.14 TESTING AND INSPECTION

A. Inspect adjacent construction and make sure that all conditions detrimental to the proper and timely execution of this work have been corrected before proceeding.

B. Shear Walls and Bearing Walls: Inspection required during preparation of masonry wall prisms, sampling and placing of all masonry units, placement of reinforcement, inspection of grout space, immediately prior to closing of cleanouts, and during all grouting operations.

C. The INSPECTOR will gather masonry unit samples for testing and make all mortar, grout, and prism samples for testing. The CONTRACTOR shall provide assistance as required in gathering materials and making, protecting and transporting samples.

D. All sampling and testing will be as authorized by the INSPECTOR.

E. All masonry units will be tested in accordance with ASTM C140 (Sampling and Testing Concrete Masonry Units) from samples collected from units delivered to the jobsite.

F. Reinforcement will be sampled and tested by the INSPECTOR in accordance with the latest City of Los Angeles Building Code.

G. Joint reinforcement will be sampled and tested by the Inspector in accordance with the latest City of Los Angeles Building Code.

H. All brick delivered to the jobsite will be sampled and tested by the INSPECTOR in accordance with ASTM C67 (Sampling and Testing Brick).

I. Mortar samples will be prepared by the INSPECTOR and tested in accordance with the latest City of Los Angeles Building Code. Each grout test specimen shall exhibit a minimum ultimate compressive strength of 2,000 pounds per square inch at 28 days.

J. Masonry Prism tests shall be conducted for all concrete masonry construction.

1. Masonry prisms shall be constructed and tested in accordance with ASTM C1314.

2. Compressive strength of prisms shall be based on tests at 28 days.

3. The calculated compressive strength of masonry prisms per ASTM C1314, shall equal or exceed specified value listed on Drawings.

4. The CONTRACTOR shall construct masonry prisms when requested by the INSPECTOR in

accordance with the following schedule:

a. One set of five prisms shall be built and tested prior to start of construction.

b. During construction, one set of three prisms shall be built and tested for each 5,000 square feet of wall area, but not less than one set of three prisms for the project.

5. Masonry prisms shall be built of the same material as to be used in the structure.

6. The moisture content of the units at the time of laying, consistency of mortar and workmanship shall be the same as will be used in the structure.

(END OF SECTION)

SECTION 05035
ANODIC FINISH COATINGS

PART 1 -- GENERAL

1.1 THE REQUIREMENT

A. The CONTRACTOR shall furnish all tools, equipment, materials, and supplies and shall perform all labor required to complete the work as indicated on the Drawings and specified herein.

1.2 RELATED WORK SPECIFIED ELSEWHERE

A. Division 5 as applicable, Metals.

1.3 REFERENCE SPECIFICATIONS, CODES AND STANDARDS

A. Comply with the reference standards of the GENERAL REQUIREMENTS.

B. The anodic finish coatings specified herein are identified by the Aluminum Association Designation System for Aluminum Finishes which utilizes designation numbers preceded by the letters "AA." All cleaning, preparing, anodizing and sealing of aluminum items shall conform to the requirements of the Aluminum Association Standards for Anodized Architectural Aluminum, Class I Anodic Coating, and these Specifications.

C. Comply with current provisions of the following Commercial Standards.

ASTM B 136	Standard Method for Measurement of Stain Resistance of Anodic Coatings on Aluminum
ASTM B 137	Standard Test Method for Measurement of Coating Mass Per Unit Area on Anodically Coated Aluminum
ASTM B 244	Standard Test Method for Measurement of Thickness of Anodic Coatings on Aluminum and of other NonConductive Coatings on NonMagnetic Basic Metals with Eddy-Current Instruments

1.4 CONTRACTOR SUBMITTALS

A. Submittals shall be made in accordance with the GENERAL REQUIREMENTS.

B. The following submittals and specific information shall be provided.

1. The CONTRACTOR shall submit three color range samples of the specified finish to the ENGINEER for approval according to the following requirements:

   a. Samples shall be submitted a minimum of three weeks prior to production finishing.

   b. Samples shall consist of actual production components large enough to be used as process control samples for visual comparison of color.

   c. All samples shall be individually and indelibly labeled indicating all specified physical characteristics.

   d. Two of the three samples shall be used for process control during production finishing and for final approval of work. One sample shall be designated as the lightest and the other as the darkest shade acceptable.

e. All samples shall become the property of the CITY.

PART 2 -- PRODUCTS

2.1 GENERAL

C. Aluminum components shall not be anodized until all forming and fabricating operations, including welding, have been completed.

D. The interior of tubular sections need not be anodized.

E. The CONTRACTOR shall protect the anodized finish on the aluminum components from any damage through all erection operations to the final acceptance of the work.

F. Upon completion of installation, all protective coverings shall be removed from the anodized aluminum components and all exposed surfaces shall be thoroughly cleaned and left free from scratches, water stains or any other blemish.

G. Prior to final acceptance of the work, the CONTRACTOR shall remove and replace all anodized aluminum components that have become damaged by any cause or that do not conform to the limitations of the process control color samples. Replacement components acceptable to the ENGINEER shall be provided by the CONTRACTOR at no extra cost to the CITY.

2.2 COATING REQUIREMENTS

A. Type I finish shall be Aluminum Association designation AA-C21-A41 clear color (0.7 mils).

B. Type II finish shall be Aluminum Association designation AA-C22-A42 black color (0.7 mils).

C. The minimum coating thickness shall be 0.7 mils measured according to ASTM B 244.

D. The minimum coating weight shall be 32 mg/sq in. measured according to ASTM B 137.

E. The coating seal shall be tested according to ASTM B 136 (Dye Stain Test).

F. Color variations of anodized aluminum components shall be limited to the range established by the approved process control samples. Components shall be subject to visual comparison during production finishing and at the time of final acceptance of the work. Each component shall be marked for field installation so as to minimize color variation of adjacent components in the same plane.

G. One sample from each rack of production lots of finished components shall be tested for thickness and seal. One sample from each production shift shall be tested for weight.

PART 3 -- EXECUTION

3.1 FINISH SCHEDULE

A. Type I finish shall be applied to aluminum handrails and handrail brackets.

B. Type II finish shall be applied to all exterior windows, storefront framing and doors.

(END OF SECTION)

SECTION 05120
STRUCTURAL STEEL

PART 1 -- GENERAL

1.1 THE REQUIREMENT

A. The CONTRACTOR shall provide all labor, tools, material, and equipment necessary so as to furnish, fabricate, and install, the structural steel framing and all appurtenant metal parts required for permanent connection of the structural steel, complete, all in accordance with the requirements of the Contract Documents. The CONTRACTOR shall also design all temporary construction braces and sequences of erection.

1.2 RELATED WORK SPECIFIED ELSEWHERE

A. The WORK of the following Sections or Divisions applies to the WORK of this Section. Other Sections of the Specifications, not referenced below, shall also apply to the extent required for proper performance of this WORK.

1. Section **[**03250**]** Concrete Accessories
2. Section **[**03315**]** Grout
5. Section [05300] Metal Deck
6. Section [05400] Cold Formed Light Metal Framing
7. Section **[**05500**]** Miscellaneous Metalwork
8. Section [05510] Metal Stairs
10. Section [07250] Sprayed-on Fireproofing
11. Section [07830] Roof Hatch
12. Section **[**09800**]** Protective Coating
13. Section [09900] Painting

B. Associated products furnished but installed under other sections:

1. Anchors for casting into concrete
2. Anchors for embedding into masonry
3. Loose bearing plates to receive Structural Steel

1.3 REFERENCE SPECIFICATIONS, CODES AND STANDARDS

A. Comply with reference standards and Standard Specifications of the GENERAL REQUIREMENTS.

B. Comply with the following American Institute of Steel Construction (AISC) references, as applicable:

1. AISC 303-**10**, "Code of Standard Practice for Steel Buildings and Bridges."

2. AISC "Steel Construction Manual", Fifteenth Edition

3. ANSI/AISC 360-16, "Specification for Structural Steel Buildings"

4. ANSI/AISC 341-16 "Seismic Provisions For Steel Buildings" and including the "Commentary"

5. ANSI/AISC 358-16 "Prequalified Connections for Special and Intermediate Steel Moment Frames for Seismic Applications"

C. Comply with the current provisions of the following American Welding Society (AWS) Codes and Specifications, as applicable:

1.	AWS B2.1	Specification for Welding Procedure and Performance Qualification
2.	AWS D1.1	Structural Welding Code – Steel
3.	AWS D1.8	Structural Welding Code – Seismic Supplement

D. Comply with the current references of the American Society for Nondestructive Testing, Inc.

1.	SNT TC-1A	Recommended Practice – Personnel Qualification and Certification in Nondestructive Testing.
2.	ANSI/ASNT CP-189	Standard for the Qualification and Certification of Nondestructive Testing Personnel.

E. Comply with the Research Council on Structural Connections (RCSC) "Specification for Structural Joints Using ASTM A325 or A490 Bolts", as applicable.

F. Comply with the current provisions of the following Codes and Standards, as applicable:

1. American Society of Testing & Materials (ASTM)

ASTM A36	Standard Specification for Carbon Structural Steel
ASTM A53	Standard Specification for Pipe, Steel, Black and Hot-Dipped, Zinc-Coated, Welded and Seamless
ASTM A108	Standard Specification for Steel Bar, Carbon and Alloy, Cold Finished
ASTM A123	Standard Specification for Zinc (Hot-Dip Galvanized) Coatings on Iron and Steel Products
ASTM A153	Standard Specification for Zinc Coating (Hot-Dip) on Iron and Steel Hardware
ASTM A167	Standard Specification for Stainless and Heat-Resisting Chromium-Nickel Steel Plate, Sheet, and Strip
ASTM A193	Standard Specification for Alloy-Steel and Stainless Steel Bolting Materials for High Temperature or High Pressure Service and Other Special Purpose Applications
ASTM A194	Standard Specification for Carbon and Alloy Steel Nuts for Bolts for High

Pressure and High Temperature Service

ASTM A307 Standard Specification for Carbon Steel Bolts and Studs, 60 000 PSI Tensile Strength

ASTM A325 Standard Specification for Structural Bolts, Steel, Heat Treated, 120/105 ksi Minimum Tensile Strength

ASTM A354 Standard Specification for Quenched and Tempered Alloy Steel Bolts, Studs, and Other Externally Threaded Fasteners.

ASTM A370 Standard Test Methods and Definitions for Mechanical Testing of Steel Products.

ASTM A490 Standard Specification for Structural Bolts, Alloy Steel, Heat Treated, 150 ksi Minimum Tensile Strength. **[**"Conform to -08a or later revisions when Zinc coating is required"**]**

ASTM A496 Standard Specification for Steel Wire, Deformed, for Concrete Reinforcement

ASTM A500 Standard Specification for Cold-Formed Welded and Seamless Carbon Steel Structural Tubing in Rounds and Shapes

ASTM A563 Standard Specification for Carbon and Alloy Steel Nuts

ASTM A572 Standard Specification for High Strength Low-Alloy Columbium-Vanadium Steels of Structural Quality.

ASTM A992 Standard Specification Steel for Structural Shapes For Use in Building Framing

ASTM E709 Standard Guide For Magnetic Particle Testing

ASTM F436 Standard Specification for Hardened Steel Washers

ASTM F959 Standard Specification for Compressible-Washer-Type Direct Tension Indicators for Use with Structural Fasteners

ASTM F1554 Standard Specification for Anchor Bolts, Steel, 36, 55, and 105-ksi Yield Strength

ASTM F1852 Standard Specification for "Twist Off" Type Tension Control Structural Bolt/Nut/Washer Assemblies, Steel, Heat Treated, 120/105 ksi Minimum Tensile Strength

ASTM F2280 Standard Specification for "Twist Off" Type Tension Control Structural Bolt/Nut/Washer Assemblies, Steel, Heat Treated, 150 ksi Minimum Tensile Strength

2. Government Standards:

City of Los Angeles, Department of Building and Safety (LADBS) applicable Information Bulletins

City of Los Angeles, Department of Building and Safety, "Standard Quality Assurance Plan for Steel Moment Frames"

CSS Caltrans Standard Specifications

GWP Global Warming Potential (maximum acceptable carbon emission limits, established by the California Department of General Services)

3. Trade Standards and References:

SP-1 "Solvent Cleaning", by the Steel Structures Painting Council, SSPC (also known as The Society of Protective Coatings).

SP-2 "Hand Tool Cleaning" by the Steel Structures Painting Council, SSPC.

SP-3 "Power Tool Cleaning", by the Steel Structures Painting Council, SSPC.

1.4 CONTRACTOR SUBMITTALS

A. General Requirements

1. Submittals shall be made in accordance with the GENERAL REQUIREMENTS (GR), and include the items indicated herein, and prepared in advance of fabrication, erection, and before incorporated into the work, for review and acceptance by the ENGINEER.

2. Buy Clean California Act.

a. For project specifications that include GR Section 1601, Buy Clean California Act, bidders shall submit current Environmental Product Declarations (EPDs) for each of the following structural steel: hot-rolled sections, hollow structural sections, and plates, from the originating mill used in the project as well as the corresponding mill certifications. When material comes from different mills, an EPD and mill certification will be required for each mill from which the material has been obtained.

b. An EPD must conform to the following:
   1) Shall be facility-specific manufacturer/mill EPD.
   2) Be independently verified in accordance with ISO 14025 (Type III).
   3) Be developed according to the guidelines of the applicable Product Category Rule (PCR), as identified by the Department of General Services, State of California.
   4) Have a valid date that has not expired.
   5) Shall not exceed the Global Warming Potential (GWP) limit as required by GR Section 1601.

c. EPD shall be submitted concurrently with the product's submittal for review and approval.

B. Certifications and Proof of Qualifications from the following:

1. Fabricator and erector: All structural steel fabrication shall be performed in a Los Angeles Department of Building and Safety (LADBS) licensed fabricator shop for structural steel

2. Shop and field welders: All welding shall be performed by welders certified by LADBS for structural steel.

3. Testing laboratory and technician conducting any of the required tests

4. Non-destructive testing (NDT) technician

5. Shear connector manufacturer authorization for each Installer/Operator

C. Product Data:

1. Submit fabricator's or manufacturer's certification, specifications, recommended installation instructions, laboratory test reports, and all other data required to prove compliance with these specification requirements for the following items.

   a. Structural steel, including certified copies of mill test reports covering chemical and physical properties.

   b. High strength bolts, including nuts and washers, and RCSC related specification.

   c. Unfinished bolts and nuts

   d. Shear connectors and corresponding welding equipment approval by LADBS

   e. Structural steel primer paints and finish coatings

2. Shop drawings shall include Bill of Material with total weight of all fabricated steel, all shop and erection details showing all members and their connections, shear connectors, anchor bolt layouts, schedules for fabrication procedures, and diagrams showing the sequence of erection. In addition, the following requirements shall be met:

   a. Members and connections for any portion of the structure not shown on the contract drawings shall be detailed by the fabricator and indicated on the shop drawings.

   b. Include details of cuts, connections, camber, holes, and other pertinent data, as well as items needed for other work; list types of paints and finish coatings, which are compatible.

   c. All welds shall be indicated by standard welding symbols of the AWS. Show location, size, type, and length of welds. Clearly distinguish between shop and field welds.

   d. All bolts and corresponding holes shall be called out. Show location, size, type, and identify pretensioned and slip-critical high strength bolted connections including the amount of tensioning required.

   e. For connections containing a combination of bolts and welds, indicate sequence of installation between the two connector types.

   f. Shop drawings shall show reference marks and cross references to drawings.

   g. Fabricator shall be responsible for correct interpretation of the contract drawings and shall call to the ENGINEER's attention any discrepancies found.

   h. No deviation shall be made from the contract drawings without prior approval of the ENGINEER in writing.

   i. Provide setting drawings, templates and directions for installing anchor bolts and other required anchors.

   j. Identify locations of welded and/or bolted connections which require necessary testing.

   k. All framing shop drawings shall include final flooring, roofing, parapet and any other relevant elevations.

D. The CONTRACTOR shall submit an erection plan for the structural steel framing that includes drawings and procedures. This erection plan shall conform to the requirements of the AISC “Code of Standard Practice for Steel Building and Bridges”. The erection plan shall include shoring and bracing drawings and describe all necessary temporary supports, including the sequence of installation and removal. Submittal shall be prepared and signed by a California licensed civil or structural engineer and be in accordance with Cal OSHA regulations.

E. Test Reports: Submit reports of tests conducted on shop and field welds and bolted connections, including data on type of tests conducted and test results.

F. Welding procedure specifications and welding procedure qualification tests, including those for weld repair, shall be submitted to and approved by the ENGINEER, in triplicate.

G. Documentation and information required in relevant AISC references, including Appendix Q and W of “Seismic Provisions for Steel Buildings.

1.5 QUALITY ASSURANCE

A. Qualifications

1. Fabricator: Company specializing in the fabrication of the work in this Section shall have a minimum 5-year documented experience. Fabricator shall be a City of Los Angeles Department of Building & Safety (LADBS) licensed/certified Fabricator Shop. When work involves high strength steel, fabricator shall also show proof of compliance with LADBS Information Bulletin P/BC 2008-032 or latest revisions.

2. All welders, including, shop welders, shall be City of Los Angeles Department of Building & Safety (LADBS) certified welders, in the classification of the work being performed.

3. Erector: Company specializing in the installation of the work of this Section shall have a minimum 5-years documented experience.

4. Technicians performing non-destructive testing (NDT) shall be Certified Level II Technicians in accordance with the American Society for Non-destructive Testing (ASNT)’s references. Certification shall be for the particular NDT being performed.

B. Inspection:

1. Quality Control is the responsibility of the CONTRACTOR for its forces and those of its Subcontractors. Inspection will be provided by the City in accordance with “INSPECTION OF THE WORK” of the GENERAL REQUIREMENTS.

2. Schedule and coordinate with the INSPECTOR all necessary tests, special inspection, and overall general quality assurance inspection.

3. Inspection by Others: Schedule and coordinate all necessary tests, inspections, and quality control services with the authorities having jurisdiction, including the Department of Building and Safety and notify the INSPECTOR that such activity is taking place.

4. If, after fabrication and inspection, the work of this Section is found to be defective and to require re-inspection, cost of such re-inspection will be paid by the CONTRACTOR.

5. Provide labor, equipment, and facilities needed to move and handle the materials to be inspected.

6. Provide access for the testing agencies and inspectors to locations where structural steel

work is being fabricated or produced, so that required testing and inspection may be accomplished.

C. Shop Inspection, Fabrication and Tests.

1. Quality Control is the responsibility of the CONTRACTOR for its forces and those of its Fabricators/Subcontractors. As a minimum, conform to Section 8 of AISC's Code of Standard Practice, and when high strength steel is required in the work, conform to LADBS Information Bulletin P/BC 2008-032 or latest revision.

2. Shop Inspection shall be in accordance with "SAMPLING, TESTING AND FABRICATION INSPECTION" of the GENERAL REQUIREMENTS. The CONTRACTOR shall furnish all facilities for the inspection of materials and workmanship in the shop and the INSPECTOR shall be allowed free access to the necessary parts of the work. The INSPECTOR shall have the authority to reject any materials or work not meeting the requirements of these Specifications. Approval of the work by the INSPECTOR, however, shall not relieve the CONTRACTOR of the responsibility of providing a fabricated structure that is in accordance with the drawings and specifications.

3. High-strength bolts shall be installed and verified using the procedure(s) indicated in the Contract Documents, as set forth in the current "Specification for Structural Joints Using ASTM A325 or A490 Bolts".

4. Structural Steel Material Testing:

a. Except where specified otherwise, the City's selected testing laboratory will pick up specimens and make required tests in accordance with the GENERAL REQUIREMENTS and this Section. This is in addition to any and all requirements performed by the Mill/Fabricator to prepare the material's mill certification.

b. Test specimens shall be furnished by the steel fabricator at no additional cost, and shall be selected by the INSPECTOR from the heat of material being supplied.

c. Each specimen shall be machined by the CONTRACTOR to dimensions required by ASTM A370.

d. Cost of procuring, making, preparing and machining test specimens shall be considered to be included in CONTRACTOR'S bid.

e. If structural steel can be identified by heat or melt number, and if accompanied by mill analysis and test reports, not less than one tension and one bent test will be made for each ten tons or fractional part thereof.

f. If structural steel cannot be identified, it shall not be permitted on the project. Structural steel shall not be erected without any test results and their acceptance by the ENGINEER.

g. If steel pipe can be identified by heat or melt numbers, or manufacturer's name, not less than one tension test and one bent test will be made for each ten tons or fractional part thereof.

h. If a test specimen fails to comply with the specified requirements, not less than two (2) tension and two (2) bent test will be made for each five tons or fractional part thereof of that heat of material.

i. Additional tests may be required when deemed necessary by the ENGINEER.

5. Fabrication of high strength steel shall conform to LADBS requirements as stipulated in Information Bulletin P/BC 2008-032 or latest revision, except field welding is permitted when specifically shown on the Contract Drawings.

6. Welding Inspection:

   a. Except where specified otherwise, the City shall provide Deputy Inspector's visual inspection of welded work. However, where third-party inspection is required, the CONTRACTOR shall perform welding and obtain welding inspection by a qualified inspector from a testing laboratory approved by the INSPECTOR and the Los Angeles City Department of Building and Safety.

   b. Inspect every layer of weld for quality, penetration, and conformity with the design requirements.

   c. When the CONTRACTOR retains the services of a qualified welding inspector, that inspector shall submit a signed report to the ENGINEER and the INSPECTOR, verifying that:
      i. The welding is adequate and was performed in conformity with design requirements.
      ii. Adequate testing methods have been used to determine the quality of the welding.

   d. Welded connections shall be inspected for conformance with the requirements of AWS D1.1 and these specifications.

   e. CONTRACTOR shall provide all equipment for tests specified at no cost to the City.

   f. Welded headed anchors / shear connectors shall be visually inspected by qualified personnel as per AWS D1.1. See LADBS Information Bulletin P/BC 2008-046, "Composite Steel Concrete Construction" for additional requirements, including bend test of shear connectors.

7. Non-destructive testing of shop welds shall include, but not be limited to, the following:

   a. 100 percent of full penetration welds shall be ultrasonically or radiographically tested by a qualified NDT technician per AWS D1.1 and as noted herein. However, when approved by the ENGINEER, the non-destructive testing rate for an individual welder or welding operator may be reduced to 10 percent, provided the reject rate is demonstrated to be 5 percent or less of the welds tested for the welds or welding operator. Perform all tests in the presence of the INSPECTOR.
      i. Exception: For elements/connections that are part of the seismic load resisting system, the CONTRACTOR shall conform to more stringent requirements and increased percentage of testing as noted in the referenced documents including LADBS, "Standard Quality Assurance Plan for Steel Moment Frames" and AISC "Seismic Provisions For Steel Buildings" at no additional cost to the City.

   b. 100 percent of partial penetration, fillet, plug, and slot welds, shall be tested using magnetic particle method by qualified NDT technicians per AWS D1.1. Magnetic particle testing shall be in accordance with ASTM E709. If more than twenty percent of the tested welds fail the test, additional welds as determined by the ENGINEER, shall be tested. Perform in the presence of the INSPECTOR.
      i. Exception: For elements/connections that are part of the seismic load resisting

system, the CONTRACTOR shall conform to more stringent requirements and increased percentage of testing as noted in the referenced documents including LADBS, “Standard Quality Assurance Plan for Steel Moment Frames” and AISC “Seismic Provisions For Steel Buildings” at no additional cost to the City.

c. The CONTRACTOR shall notify the ENGINEER of any non-destructive testing failure result in writing prior to repair. Repair method to be approved by the ENGINEER prior to undertaking the repair.

d. The costs of all tests, with the exception of the ultrasonic testing conducted by the City, specified herein shall be borne by the CONTRACTOR.

8. Welds that are required by the INSPECTOR to be corrected or redone shall be retested as directed, at the CONTRACTOR’s expense, and to the satisfaction of the ENGINEER and the INSPECTOR.

9. Fabrication of structural steel for bridge structures shall conform to the appropriate subsections of Section 55-3 of the CSS.

D. Field Inspection, Installation, and Tests

1. Quality Control is the responsibility of the CONTRACTOR for its forces and those of its Subcontractors. The ENGINEER and the INSPECTOR reserve the right to inspect the work at all times. The CONTRACTOR shall provide temporary ladders, steps, scaffolding, planking, etc., necessary for safe access to the work to be inspected.

2. The Contractor shall arrange and pay for such additional tests and inspections of field work as are required by the Building Code and governing authorities and will prepare test reports for the ENGINEER’s review and acceptance.

3. The testing agency will conduct and interpret the tests, and will state in each report whether the inspected work complies with requirements, specifically stating all deviations that exist.

4. Field inspection may include, but not be limited to, the following:

a. Inspection of erection steel work for conformance with this specification and the drawings.

b. Inspection of high strength bolted connections in accordance with “Specification for Structural Joints Using ASTM A325 or A490 Bolts”, including pre-installation verification (Section 7), installation (Section 8), and Inspection (Section 9).

c. Verification of welding procedures specification, welding procedures, and qualifications of welding operators, welders and tackers in accordance with AWS D1.1.

d. Visual inspection of field welds and field welded headed anchors\shear connectors in accordance with AWS D1.1 and LADBS, including the bend test.

5. Non-destructive testing of field welds shall include, but not be limited to, the following:

a. 100 percent of full penetration welds shall be fully ultrasonically or radiographically tested by qualified NDT personnel as per AWS D1.1. If more than ten percent of the tested welds fail the test, additional welds as determined by the ENGINEER, shall be tested.
   i. Exception: For elements/connections that are part of the seismic load resisting

system, the CONTRACTOR shall conform to more stringent requirements and increased percentage of testing as noted in the referenced documents including LADBS, “Standard Quality Assurance Plan for Steel Moment Frames” and AISC “Seismic Provisions For Steel Buildings” at no additional cost to the City.

b. 100 percent of partial penetration, fillet, plug, and slot welds, shall be tested using magnetic particle method by qualified NDT personnel as per AWS D1.1. Magnetic particle testing shall be in accordance with ASTM E709. If more than twenty percent of the tested welds fail the test, additional welds as determined by the ENGINEER, shall be tested.
   i. Exception: For elements/connections that are part of the seismic load resisting system, the CONTRACTOR shall conform to more stringent requirements and increased percentage of testing as noted in the referenced documents including LADBS, “Standard Quality Assurance Plan for Steel Moment Frames” and AISC “Seismic Provisions For Steel Buildings” at no additional cost to the City.

c. The CONTRACTOR shall notify the ENGINEER of any non-destructive testing failure result in writing prior to repair. Repair method to be approved by the ENGINEER prior to undertaking the repair.

6. The testing agency will conduct and interpret the tests, and will state in each report whether the inspected work complies with requirements, specifically stating all deviations there from.

7. The costs of all tests, with the exception of the ultrasonic testing conducted by the City, specified herein shall be borne by the CONTRACTOR.

8. Welds that are required by the INSPECTOR to be corrected or redone shall be retested as directed, at the CONTRACTOR’s expense, and to the satisfaction of the ENGINEER and the INSPECTOR.

E. Structural Observation: The Engineer of Record or its designee shall perform the structural observation as stipulated in the Contract Documents and as required by LADBS. Upon completion of the observation of each designated stage of construction or element, the observer shall prepare, sign, and seal the necessary report and submit it to the building official. A copy shall also be provided to the ENGINEER and INSPECTOR. The CONTRACTOR shall submit a written request to the ENGINEER indicating the need for structural observation at least 48 hours before the observation is needed.

PART 2 -- PRODUCTS

2.1 MATERIALS

A. General: New tested and fabricated stock complying with applicable grades and standards hereinafter referenced. Unless noted otherwise, the material specification noted hereon shall apply. No dual rated steel shall be allowed in this project.

B. Plates and Bars: Per ASTM A36 and ASTM A572 Grade 50

C. Channels and Angles: Per ASTM A36

D. W-Shapes: Per ASTM A992

E. Hollow Structural Sections (HSS): Per ASTM A500, Grade B, structural tubing.

F. Steel Pipe: Per ASTM A53, Type E or S, Grade B

1. Weight Class: As indicated
2. Finish: Black, except where indicated to be galvanized.

G. Stainless steel shapes and plates: Per ASTM A167, Type 316L

H. E70 - T4 weld metal shall not be used for any welds. All welds indicated in members and connections of the seismic load resisting system shall be made with filler metal with a Charpy V-Notch toughness of 20 ft-pounds minimum at zero degrees Fahrenheit. See AISC Seismic Provisions and Contract Drawings for additional requirements.

I. Structural steel shall be cleaned and coated with a shop paint primer; except, that primer shall be omitted for members to be covered with galvanized coating or fire proofed with no further coating.

J. All structural members shall be furnished full length without splices unless otherwise noted or approved by the ENGINEER.

K. Primer: Approved primer indicated in Section [09800], “Protective Coating”

L. Paint: Approved paint indicated in Section [09900], “Painting”

M. Teflon Base Plates: Reinforced Teflon, pre-bonded to steel plates and combined with neoprene bearing pad and having a static friction coefficient of maximum 6 percent, as manufactured by Fluorocarbon Company of Anaheim or equal.

N. Non-Shrink Grout: Approved non-shrink grout in accordance with Section [03315], “Grout”. Minimum compressive strength shall be 3,000 psi in 7 days.

O. Galvanizing: Per A123 or A153 and in accordance with Section [05500], “Miscellaneous Metal Works”.

P. Galvanizing Repair Material: Per Section [05500], “Miscellaneous Metal Works”

2.2 BOLTS, CONNECTORS, AND ANCHORS

A. High-strength Bolts, Nuts, and Washers: Per ASTM A325, Type 1, heavy hex steel structural bolts; ASTM A563 heavy hex carbon steel nuts; and ASTM F436 hardened carbon steel washer.

1. Finish: Plain, except where indicated otherwise
2. Direct-Tension Indicators: Per ASTM F959, Type 325, compressible-washer-type.

B. Tension-Control, High-Strength Bolt-Nut-Washer Assembly: ASTM F1852, Type1, heavy hex head steel structural bolts with splined ends; ASTM A563 heavy hex carbon-steel nuts; and ASTM F436 hardened carbon-steel washers. Only manufacturer applied lubricant is permitted..

1. Location: As substitutes where A325, Type 1, plain bolts are specified, when approved by the ENGINEER.
2. Finish: Plain, unless noted otherwise.
3. Quality Assurance: Meet pre-installation verification, installation, and inspection requirements of RCSC specifications.

C. High-Strength Bolts, Nuts, and Washers: Per ASTM A490, Type 1, heavy hex steel structural bolts; ASTM A563 heavy hex carbon-steel nuts; and ASTM F436 hardened carbon-steel washers, plain.

Locations as indicated on Drawings.

1. Direct-Tension Indicators: Per ASTM F959, Type 490, compressible-washer-type, plain

D. Tension-Control, High-Strength Bolt-Nut-Washer Assembly: ASTM F2280, Type 1, heavy hex head steel structural bolts with splined ends; ASTM A563 heavy hex carbon-steel nuts; and ASTM F436 hardened carbon-steel washers. Only manufacturer applied lubricant is permitted.

1. Location: As substitutes where A490, Type 1, plain bolts are specified, when approved by the ENGINEER.
2. Finish: Plain
3. Quality Assurance: Meet pre-installation verification, installation, and inspection requirements of RCSC specifications.

E. Machine bolts with nuts and washers: Per ASTM A307; hot dip galvanize per A153 not less than 1.25 oz per square foot; use self locking nuts or lock washers with plain nuts. Locations as indicated on Drawings.

F. Bolts and washers to connect dissimilar metals: Per ASTM A193 and A194, Type 316 stainless steel

G. Shear Connectors: ASTM A108, Grade 1015 through 1020, headed-stud type, threaded type, cold-finished carbon steel; ASTM A496, deformed bar anchor; conform to AWS D1.1, Type B.

1. Location of each type: As indicated on the Contract Drawings

H. Unheaded Anchor Rods: ASTM F1554, Grade 36 (Unless Noted Otherwise on the Plans).

1. See Specification 03250 for related information.
2. Configuration: Hooked, unless noted otherwise.
3. Nuts: ASTM A563 hex carbon steel
4. Plate washers: ASTM A36 carbon steel
5. Washers: ASTM F436 hardened carbon steel
6. Finish: Plain

I. Headed Anchor Rods: ASTM F1554, Grade 36 (Unless Noted Otherwise on the Plans), straight, unless noted otherwise.

1. Nuts: ASTM A563 hex carbon steel.
2. Plate Washers: ASTM A36 carbon steel
3. Washers: ASTM F436 hardened carbon steel
4. Finish: Plain.

J. Threaded Rods: ASTM A36 (Unless Noted Otherwise on the Plans)

1. Nuts: ASTM A563 hex carbon steel.
2. Washers: ASTM F436 hardened carbon steel
3. Finish: Plain.

K. Adhesive concrete anchors and/or anchor rods shall use stainless steel anchor rods/assemblies conforming to the requirements of Section **[**03250**]** and associated current City of Los Angeles Research Report.

L. Eye Bolts and Nuts: ASTM A108, Grade 1030, cold-finished carbon steel

M. Sleeve Nuts: ASTM A108, Grade 1018, cold-finished carbon steel.

PART 3 -- EXECUTION

3.1 GENERAL

A. Surface Conditions: The CONTRACTOR shall examine the areas and conditions under which work of this Section will be performed. Correct conditions detrimental to timely and proper completion of the Work. Do not proceed until detrimental conditions are corrected.

B. Measurement: The CONTRACTOR shall verify all dimensions, grades, elevations, job conditions, and shall make any field measurements necessary and shall be fully responsible for accuracy and layout of work. The CONTRACTOR shall review the Drawings and any discrepancies shall be reported to the ENGINEER for clarification prior to starting fabrication and erection.

C. Pre-Fabrication And Pre-Erection Conference: Coordinate and arrange for pre-fabrication and pre-erection conferences with the fabricator or manufacturer, INSPECTOR and ENGINEER as required by the Code Requirements and LADBS. Do not proceed with any work prior to the conferences taking place.

3.2 FABRICATION

A. General:

1. Workmanship: In accordance with AISC Specification, Code of Standard Practice, applicable AISC references, with modifications and additional requirements specified here in, as indicated on the Drawings, and as indicated on the shop drawings.

2. Safety Precautions: Conform to latest edition of ANSI/AWS Z49.1, “Safety in Welding and Cutting and Allied Processes”. The Contractor shall determine the applicability of any regulatory limitation prior to use.

B. Shop Fabrication and Assembly of Structural Steel:

1. Fabricate items of structural steel in accordance with AISC specifications, and as indicated on the approved Shop Drawings. Fabrication and assembly shall be done in the shop to the greatest extent possible.

2. Properly mark and match-mark materials for field assembly and for identification as to location for which intended.

3. Fabricate for delivery sequence which will expedite erection and minimize field handling of materials.

4. Where finishing is required, complete the assembly, including welding of units, before start of finishing operations.

5. Provide finish surfaces of members exposed in the final structure free from markings, burrs, and other defects.

6. Joints and intersections to be accurately made, tightly fitted, true to plane and accurately fastened.

7. Camber structural steel where indicated.

8. Care shall be taken so over grinding does not occur. The maximum reduction of the base metal thickness, as delivered, shall not be more than 1/32-in or 5% of the element/member thickness, whichever is less. Welds shall not be over ground so as to reduce their effective throat size below what is called for on the drawings.

C. Architecturally Exposed Structural Steel (AESS)

1. Comply with fabrication requirements, including tolerance limits, of AISC's "Code of Standard Practice for Steel Buildings and Bridges" for steel identified as AESS.

2. Fabricate with exposed surfaces smooth, square, and free of surface blemishes including pitting, rust, scale, and roughness.

3. Remove blemishes by filling or grinding and sanding or by welding and grinding and sanding, before cleaning, treating, and shop priming.

4. Fabrication to be performed at LADBS approved fabrication facility.

5. Remove backing bars or runoff tabs, back gouge, and grind and sand steel smooth.

6. Verify that weld sizes, fabrication sequence, and equipment used for AESS will limit distortions to allowable tolerance. Prevent weld show-through on exposed steel surfaces.

a. Grind butt welds flush.

b. Grind or fill exposed fillet welds to smooth profile. Dress exposed welds

D. Thermal Cutting: When permitted, perform thermal cutting by machine to the greatest extent possible.

E. Bolt Holes: Cut, drill, or punch standard bolt holes perpendicular to metal surfaces.

F. Finishing: Accurately finish ends of columns and other members transmitting bearing loads.

G. Cleaning: Clean and prepare steel surfaces that are to remain unpainted according to SSPC-SP 1, "Solvent Cleaning".

H. Shear Connectors: Prepare steel surfaces as recommended by manufacturer of shear connectors. Use automatic end welding of headed-stud shear connectors per AWS D1.1 and the manufacturer's written instructions.

I. Bases and Bearing Plates: Shop weld to columns and to members which are attached to concrete.

3.3 CONNECTIONS

1. Method: Bolted or welded as indicated on the Drawings.

2. Provide bolts and washers of types and sized required for completion of shop fabrication or field erection.

3. Unless otherwise indicated on the drawings, minimum beam framing connections shall be in accordance with AISC "Steel Construction Manual", have a minimum of two ¾-inch diameter high strength bolts, and be able to develop full strength of members joined.

4. Unless otherwise indicated on the drawings, double-angle members shall be connected together in accordance with AISC Specifications, with a ¾-in diameter, high-strength bolt and a filler plate or welded filler plate.

5. Column ends shall be square and milled to have full bearing at splices and at end plates.

6. The CONTRACTOR shall notify the INSPECTOR to make arrangements to inspect high strength bolted connections and welded connections and to perform testing and prepare test reports. This inspection shall be in addition to the inspection specified in subsections 1.5 of this specification.

7. High Strength Bolted Construction:

   a. Install high strength threaded fasteners in accordance with RCSC Specifications.

   b. Use ASTM A325 bolts, with slip critical connections and Type A surface, unless noted otherwise, except for handrails, ladders, and girt connections.

   c. CONTRACTOR shall provide all equipment for testing of bolted connections as required by Code or Contract Documents at no additional cost to the City.

3.4 WELDED CONSTRUCTION:

A. Comply with all AWS Referenced Documents and this Contract for procedures, appearance, and quality of welds and welders, methods used in correcting welding work, and the following:

   1. Shop welding to be done by a fabricator licensed by LADBS.

   2. All shop and field welders shall be LADBS certified.

   3. Repair welds only after a repair is deemed an acceptable remedy by the ENGINEER using methods also approved by the ENGINEER prior to performing the repair. Cost of repairs to be borne by the CONTRACTOR.

   4. Assemble and weld built-up sections by methods which will produce true alignment of axes without warp.

   5. Furnish templates and other devices as necessary for presetting bolts and other anchors to accurate locations. CONTRACTOR shall furnish shop drawing prepared by a California Licensed Civil or Structural Engineer.

B. Stainless steel welding shall conform to the details and standards of workmanship of this specification and AWS D1.1, except that the prequalified welds for carbon steel are not applicable to stainless steel. Welders and weld procedures for stainless steel shall be specifically qualified per AWS B2.1 for the type of stainless steel to be welded and LADBS. Welders and weld procedures for welding of stainless steel to carbon steel shall be qualified per AWS B2.1 and LADBS.

C. Unless otherwise shown, all butt and bevel welds shall be complete penetration.

3.5 HOLES FOR OTHER WORK

A. Provide holes required for securing other work to structural steel framing, and for passage of other work through steel framing members, as shown on the Shop Drawings.

B. Provide threaded nuts welded to framing, and other specialty items as shown, to receive other work

C. Cut, drill, or punch bolt holes perpendicular to metal surfaces.

D. Do not thermally cut holes or enlarge holes by burning.

E. Drill holes in bearing plates.

3.6 SHOP PAINT PRIMER

A. General:

1. Apply shop paint primer to structural steel work in accordance with Section [09800], “Protective Coating”.

2. Shop prime steel surfaces except for the following:

a. Surfaces embedded in concrete or mortar. However, extend priming of partially embedded members to a depth of 2-inches.

b. Surfaces to be welded and high-strength bolted with slip-critical connections. Such areas shall be primed and finish coated after connection is made and inspected. See Figure C-3.1 of RSCS Specification for illustration of bolted connection requirements.

c. Surfaces to receive sprayed-on-fireproofing.

d. Galvanized surfaces.

3. Apply one coat of primer and two coats of paint to surfaces which are inaccessible after assembly or erection. Change color of the second coat to distinguish it from the first.

B. Surface Preparation:

1. After inspection and before shipping, clean steel work to be painted.

2. Remove loose rust, loose mill scale, and spatter, slag, and flux deposits.

3. Clean and prepare the steel in accordance with the following specifications and standards:

a. SSPC – SP2: “Hand Tool Cleaning”
b. SSPC – SP3: “Power Tool Cleaning,” where needed.

C. Priming:

1. Immediately after surface preparation, apply structural steel primer paint in accordance with the manufacturer’s written instruction and at a rate to provide a uniform dry film thickness of not less than 3.0 mils.

2. Use painting methods which will result in full coverage of joints, corners, edges, and exposed surfaces.

D. Galvanizing:

1. Hot-Dip Galvanizing: Galvanize structural steel members conforming to ASTM A123.

Provide minimum 2.0 oz/sq.ft. of galvanized coating.

2. Fill vent holes and grind smooth after galvanizing.

3. Exposed structural and miscellaneous steel not otherwise protected shall be galvanized.

3.7 PRODUCT DELIVERY, STORAGE, AND HANDLING

C. Load structural members in such a manner that they may be transported and unloaded without being excessively stressed, deformed, or otherwise damaged. This includes protection of coating from chipping and scratches.

D. Protect structural steel members and packaged materials from corrosion and deterioration. Material shall be stored in a dry area and shall not be placed in direct contact with the ground. Do not place materials on the structure in a manner that might cause distortion or damage to the members or the supporting structures. Repair or replace damaged materials or structures as directed.

3.8 ERECTION

A. The CONTRACTOR shall comply with the AISC Specifications and Code of Standard Practice, and with specified requirements.

B. High-strength bolts shall be installed per the Specification for Structural Joints using ASTM A325 or ASTM A490 and this section.

C. Anchor Bolts:

1. Provide as indicated on the Contract Drawings; anchor bolts and other connectors required for securing structural steel to foundation and other in-place work

2. Provide templates and other devices necessary for presetting bolts and other anchors to accurate locations in concrete or masonry construction.

3. Contractor shall arrange and pay for all testing for anchor bolts or dowels as required by the Codes and Standards.

4. For dynamically loaded structures or where vibrations are being induced into the structure/anchor bolts, provide structurally conforming lock nuts, structural nuts with lock washers, or a chemical thread seizing compound, such as "Loctite" or equal, as approved b the ENGINEER.

D. Splices:

1. Splice members only where indicated, and with the approval of the ENGINEER.

2. For splices not indicated, submit structural calculations prepared and signed by a California registered Civil or Structural Engineer.

E. Surveys:

1. Establish permanent benchmarks necessary for accurate erection of structural steel.

2. Check elevations of concrete surfaces, and locations of anchor bolts and similar items, before erection proceeds.

F. Temporary Shoring:

1. Provide temporary shoring and bracing members with connections of sufficient strength to bear imposed loads.

2. Provide temporary guy lines to achieve proper alignments of the structure as erection proceeds.

3. Remove temporary connections and members when permanent members are in place and the final connections have been made.

G. Not Used

3.9 SETTING BASES AND BEARING PLATES

A. Prior to the placement of non-shrink grout beneath base and bearing plates, the bottom surface of the plates shall be cleaned of all bond-reducing materials, and concrete and masonry bearing surfaces shall also be cleaned of all bond-reducing materials and roughened to improve bonding.

B. Set loose and attached base plates and bearing plates for structural members on wedges, leveling nuts, or other adjustable devices.

C. Tighten the anchor bolts after the supported members have been positioned and plumbed.

D. Do not remove wedges or shims but, if they are protruding, cut off flush with the edge of the base or bearing plates to assure that no voids remain.

E. Grouting of base plates shall be done with non-shrink grout, of flowable consistency, as specified in Section [03315] "Grout". Grouting shall be completed prior to placing loads on the structure.

F. Finish exposed surfaces, protect installed materials, and allow grout to cure in strict compliance with the manufacturers' recommendations and acceptance requirements by the ENGINEER.

3.10 FIELD ASSEMBLY

A. Set structural frames accurately to the lines and elevations indicated. Align and adjust the various members to form a part of a complete frame or structure before permanently fastening. Clean the bearing surfaces and other surfaces which will be in permanent contact before assembly. Perform necessary adjustments to compensate for discrepancies in elevations and alignment.

B. Level and plumb individual members of the structure within specified AISC tolerances. CONTRACTOR shall provide and install all temporary bracing necessary to carry construction loads until the structure has been completed.

C. Establish required leveling and plumbing measurements at the main operating temperature of the structure, making allowances for the difference between temperature at time of erection and the mean temperature at which the structure will be when completed and in service.

D. Comply with AISC Specifications and Code of Standard Practice for bearing, adequacy of temporary connections, alignment, and the removal of paint on surfaces adjacent to welds.

E. No driven nail or fastener, coreholes or other attachments shall be made or allowed on any steel members without the written approval by the ENGINEER.

3.11 TESTING AND INSPECTION

.

A. Quality Control is the responsibility of the CONTRACTOR for its forces and those of its Subcontractors. Schedule and coordinate with the INSPECTOR all necessary tests, special inspection, and overall general quality assurance inspection both in the shop and in the field.

B. Inspection by Others: Schedule and coordinate all necessary tests, inspections, and quality control services with the authorities having jurisdiction, including the Department of Building and Safety and notify the INSPECTOR that such inspections are taking place.

3.12 MISFITS AT BOLTED CONNECTIONS

A. Where misfits in erection bolting are encountered, the CONTRACTOR shall immediately notify the ENGINEER. The CONTRACTOR shall submit a method to remedy the misfit for review by the ENGINEER. The ENGINEER will determine whether the remedy is acceptable or if the members must be refabricated. Methods of remedy for consideration by the ENGINEER may include, but are not limited to, the following:

1. Ream holes that must be enlarged to admit bolts and use oversized bolts.

2. Plug-weld misaligned holes and redrill holes to admit standard size bolts.

3. Drill additional holes in the connection, conforming with AISC Standards for bolt spacing and end and edge distances, and add additional bolts.

4. Reject the improperly fabricated member and fabricate a new member to ensure proper fit.

B. Mis-sized or misaligned holes in members shall not be enlarged by burning or by the use of drift pins.

3.13 MISFITS AT ANCHOR BOLTS

A. Where misalignment between anchor bolts and bolt holes in steel members are encountered, the ENGINEER shall be immediately notified. The CONTRACTOR shall submit a method to remedy the misalignment for review by the ENGINEER.

3.14 GAS CUTTING

A. Do not use gas cutting torches in the field for correcting fabrication errors in the structural framing, except on secondary members which are not under stress and will be concealed in the finished structure and when approved by the ENGINEER. Finish gas-cut sections equal to a sheared appearance.

3.15 TOUCHUP PAINTING

A. Immediately after erection, clean field welds, bolted connections, and abraded areas of the shop paint primer. Apply touchup paint primer by brush or spray which is the same thickness and material as that used for the shop paint. Galvanized surfaces which have been field welded or damaged shall be repaired in accordance with Section [05500] "Miscellaneous Metalwork."

3.16 FIELD PAINTING

A. General:

1. Prepare surfaces in a manner appropriate to the condition, and as approved by the ENGINEER.

2. Clean spots and surfaces where primer coats have been removed, damaged, or burned off, and clean field bolts and other field connections not concealed in the finished work.

3. Remove dirt, oil, and grease.

4. Apply a spot coat of the approved primer.

5. Do not apply paint to wet, damp, oily, or improperly prepared surfaces.

B. Notify the ENGINEER when the work of this Section is ready to receive field painting. Lapse time between surface areas if necessary at no additional cost to the City.

C. Schedule for inspection and secure approval from the ENGINEER prior to field painting.

D. Using spray or brush, as recommended by the manufacturer of the approved paint material, fill all joints and corners and cover the surfaces with a smooth unbroken film of at least 1.5 dry mils thickness.

E. Apply two coats to all surfaces of steel which will be in accessible for painting, after fabrication and erection.

* * * *

SECTION 05300
METAL DECK

PART 1 -- GENERAL

1.1 THE REQUIREMENT

A. The CONTRACTOR shall furnish all tools, equipment, materials, and supplies and shall perform all labor required to complete the work as indicated on the Drawings and specified herein.

B. This section covers the work necessary to fabricate, deliver and install, complete, the steel deck over steel floor/roof framing system.

1.2 RELATED WORK SPECIFIED ELSEWHERE

A. Section 05120 Structural Steel
B. Section 07250 Sprayed-On Fireproofing
C. Section 09800 Protective Coating
D. Section 09905 Architectural Paint Finishes

1.3 REFERENCE SPECIFICATIONS, CODES AND STANDARDS

A. Comply with the reference specifications of the GENERAL REQUIREMENTS.

B. Comply with the current provisions of the following Codes and Standards.

1. Material Specifications:

ASTM A653	Standard Specification for Steel Sheet, Zinc-Coated (Galvanized) or Zinc-Iron Alloy-Coated (Galvannealed) by the Hot-Dip Process
ASTM A1008	Standard Specification for Steel, Sheet, Cold-Rolled, Carbon, Structural, High-Strength Low-Alloy, High-Strength Low-Alloy with Improved Formability, Solution Hardened, and Bake Hardenable

2. Reference Codes and Standards:

AISI	North American Specification for the Design of Cold-Formed Steel Structural Members
AWS D1.1	Structural Welding Code - Steel
AWS D1.3	Structural Welding Code - Sheet Steel
SDI	Manual of Construction with Steel Deck – Second Edition
SSPC	SSPC - Paint 15

1.4 CONTRACTOR SUBMITTALS

A. Submittals shall be made in accordance with the GENERAL REQUIREMENTS.

B. The following submittals and specific information shall be provided, as applicable.

1. Product research reports in compliance with the Los Angeles Department of Building and Safety requirements, erection drawings, and shop drawings signed and stamped by a Civil or Structural Engineer registered in the State of California.

2 Shop and erection drawings shall include, but not be limited to, the following:

a. Plan view layout and section of deck and supporting members, with overall dimensions, and all opening sizes and locations.

b. Flashing, closure plates, and other accessory materials.

c.. Fabrication and erection details, indicating the construction loads and type of shoring.

d. Size and location of all mechanical and electrical equipment supported by the roof system which may affect the design or fabrication.

1.5 QUALITY ASSURANCE

A. The CONTRACTOR shall use skilled workers who are thoroughly trained and experienced in the necessary crafts and completely familiar with the specified requirements and methods needed for the proper performance of the Work of this Section.

1. Fabricator must be a licensed fabricator by the Los Angeles City Department of Building and Safety.

2. All welders must be certified by the Los Angeles City Department of Building and Safety.

B. Fire-Resistive Construction: When the materials of this Section are used as part of an assembly in which fire-resistive construction ratings are required, provide the required approvals by the Los Angeles City Department of Building and Safety for the fire-proofing product to be used.

1.6 INSPECTIONS

A. Shop: Required for all shop-fabricated items.

B. Field:

1. Perform all floor and roof deck welding under periodic inspection of Registered Deputy Inspector at the CITY's cost, except for instances of re-work, re-testing, and re-inspection, the costs of which shall be borne by the CONTRACTOR. CONTRACTOR shall provide testing equipment for all testing required by Code or Contract at no cost to the CITY.

1.7 HANDLING AND STORING MATERIALS

A. Storage and Handling: Take every precaution to avoid damage and to keep surfaces clean and free from dirt and stains. Provide materials with adequate protection, as required, to prevent corrosion, deformation and other damage during shipment and handling at job-site.

B. Place deck bundles on the building frame near a main supporting beam at a column or wall. Do

not place bundles on unbolted or partially welded frames, or unattached or unbridged joists.

C. Do not use steel deck as a working platform and do not store or place other material or equipment on deck until the deck is permanently attached in position and/or the concrete fill is placed and has reached the required strength. Care must be taken before and during placing operations not to allow heavy concentrated loads on the steel deck. When buggies are used to deliver the concrete, the runways shall be planked to avoid damaging the deck. Replace all damaged deck with new material.

1.6 VARIATION OF DIMENSIONS

A. Uncoated thickness of steel deck shall not be less than 95% of the design thickness.

B. Deck panel length shall be within plus or minus ½ inch of specified length.

PART 2 -- MATERIAL

2.1 STEEL DECK

A. Deliver materials to the job site in original packages with the manufacturer's labels attached.

B. The deck type, profile and thickness (gauge) shall be as shown on the Drawings.

C. Steel deck shall conform with the American Iron and Steel Institute (AISI) “North American Specification for the Design of Cold-Formed Steel Structural Members”, with appropriate steel fiber stress limitations and appropriate dead and/or live load deflection limitations.

D. Galvanized steel deck shall be formed from steel sheets conforming to ASTM A 653. The steel shall have received, before being formed, a metal protective coating of zinc conforming to ASTM A 653 light commercial coating, G90.

E. All materials shall be new and free from defects impairing strength, durability, and appearance.

G. Flashings and Closures: Provide for various locations at penetrations and perimeters using galvanized steel and gasketing as recommended by the manufacturer and shown on Drawings and reviewed Shop/Erection Drawings. Galvanized steel flashings and closures shall be 16 gage thick.

H. General Accessories:

1. Provide accessories specifically designed to be used with the steel deck units supplied to the work, and as normal to uses shown on the Drawings.

2. Provide other materials, not specifically described but required for a complete and proper installation, as selected by the CONTRACTOR subject to the approval of the ENGINEER.

3. Provide ridge, valley plates, flat plates at change of deck direction and sump pans as shown on Drawings to provide a finished surface for the application of roof insulation and roof covering.

4. Provide closures as necessary to support roofing insulation where ribs of deck are parallel to edges of insulation at roof perimeters.

PART 3 -- EXECUTION

3.1 MEASUREMENTS

A. The CONTRACTOR shall verify all dimensions given on the Drawings and shall make such field measurements as are necessary to properly lay out the work.

B. The CONTRACTOR shall be fully responsible for accuracy of all measurements and layout of the work.

3.2 INSTALLATION OF STEEL DECK

A. The steel deck shall be installed at right angles to the supporting members unless shown otherwise, and shall be installed according to the manufacturer's recommendations, the details shown, and the approved shop drawings.

B. Steel deck shall be cut and fitted around openings shown on Drawings. No holes shall be punched through the steel deck during installation. Sheets shall extend over a minimum of three spans where possible. End laps shall be a minimum of 2 inches and shall be staggered. Deck ends over supports shall be installed with a minimum end bearing of 1-1/2 inches. The CONTRACTOR shall furnish and install all closure plates and accessories.

C. The finished steel deck shall be free from buckles and irregularities. All welding and other connections necessary to provide a complete and satisfactory installation shall be detailed on the shop drawings.

D. Steel deck shall be securely fastened to the steel supporting members by arc spot puddle welds, fillet welds of equal strength, or mechanical fasteners, as shown on the Drawings. Prior to laying the decking over the supporting members, CONTRACTOR shall verify all deck support member elevations with those shown on Drawings. Report deviations of supporting members elevations from required elevations to the INSPECTOR before deck is fastened to the supporting structure.

1. Mechanical fasteners, either powder actuated, pneumatically driven or screws, shall be permitted in lieu of welding to fasten deck to supporting framing if fasteners meet all project service requirements and if approved by the Engineer of Record. When the fasteners are powder actuated or pneumatically driven, the load value per fastener used to determine the maximum fastener spacing shall be based on a minimum structural support thickness of not less than 1/8 inch and on the fastener providing a minimum 5/16 inch diameter bearing surface (fastener head size). When the structural support thickness is less than 1/8 inch, powder actuated or pneumatically driven fasteners shall not be used, but screws are acceptable.

2. For deck units with spans greater than five feet, side laps and perimeter edges of units between span supports shall be fastened at intervals not exceeding 36 inches on center, using one of the following methods (Unless Noted Otherwise on the Plans)

    a. #10 self drilling screws.
    b. Crimp or button punch.
    c. Arc puddle welds with minimum 5/8-inch visible outer diameter, or minimum 1-inch long fillet weld.

E. The CONTRACTOR shall qualify all welders and welding procedures in accordance with the latest edition of AWS D1.3, Structural Welding Code - Sheet Steel. Notify the INSPECTOR in advance of welder and welding procedure qualification so that INSPECTOR may witness qualification. Submit to the INSPECTOR, for review and approval, all welding procedures and welder qualification records using forms provided in the appendix to AWS D1.3 welding code prior to any production welding.

F. All welds are to be slagged.

3.3 ERECTION REQUIREMENTS

A. Handling and Erection: Handling and erection shall be in accordance with the latest edition of Steel Deck Institute's "SDI Manual of Construction with Steel Deck" and the following:

1. Care shall be exercised at all times to avoid damage through careless handling during unloading, storing, and erecting.

2. Place the steel deck on the supporting framework and adjust to final position before being permanently fastened. Bring each unit to proper bearing on the supporting beams. Place the steel deck units in straight alignment for the entire length of run and with minimum of space between ends of abutting units. Fasten the units to the steel framework at ends of units and at intermediate supports by welds not less than 3/4-inch width of the steel deck unit. Where two units abut, fasten each unit to the steel framing. Make welds free of sharp points or edges. Welded metal shall penetrate all layers of deck material at end laps and side joints and have good fusion to the support members. Fastening at supports shall be at all edge ribs, plus a sufficient number of interior ribs to limit the maximum spacing between adjacent points of attachments to 18 inches, side laps of individual sheets must be fastened together between supports for spans greater than 5 feet, the fastener spacing shall not exceed 3 feet.

3. Field welding shall not damage the joists and the steel deck. The total length of weld at any one point on cold-formed members whose yield strength has been attained by cold working and whose as-formed strength is used in the design shall not exceed 50 percent of the overall developed width of the cold-formed section.

4. Except due to inclement weather, once installation of a section of steel deck has been started, it shall be continued and uninterrupted until the entire section has been permanently attached in position.

5. Inspect the deck for tears, dents, or other damage that may prevent the deck from acting as a tight and substantial form or that would impair structural capability. Repair tears, dents or other damage with the directions of the ENGINEER.

6. Clean off any deterioration or material in accordance with manufacturer's recommendations prior to concrete topping or sprayed-on fire proofing operations.

B. Completion: All units shall be in place, properly and completely anchored and approved before any finishes are applied. Any damaged units (steel joists and/or steel deck) for which in the opinion of the ENGINEER, suitable and adequate repairs cannot be made, will be rejected, whether or not delivered or erected; and whole, approved replacement units shall be provided, by the CONTRACTOR, at no additional cost to the CITY.

3.4 TREATMENT OF DAMGAGED COATINGS

A. Paint/Fireproofing – Submit for approval materials and methods to be utilized for the re-application of coating to areas that were damaged during final construction. Re-apply coatings in an approved manner.

B. Galvanized Coating – For the metal decking and appurtenances thereto, areas of galvanized membrane that are damaged during normal installation process (such as by cutting, drilling and/or welding), need not be repaired, unless otherwise noted.

Where the damage to the galvanized membrane is not normal to the field installation or is specified to be repaired, submit for approval materials and methods to be utilized for the repairs. Damage caused by CONTRACTOR's negligence will typically require repair by the "hot stick" or other metalizing method.

3.5 FINISH PAINTING

A. Finish painting of all exposed steel deck and steel joists shall be as indicated on the Finish Schedule on the Drawings and as specified in Section 09905, "Architectural Paint Finish".

(END OF SECTION)

SECTION 05400
COLD-FORMED METAL FRAMING (METAL STUD)

PART ONE - GENERAL

1.1 SUMMARY

A. Contractor shall construct all interior and exterior wall framing as indicated on the Contract Drawings and herein specified as needed for a complete and proper installation, including but not limited to the following:

1. Metal studs
2. Stud backing
3. Wall and Ceiling Furring channels.
4. Shaft wall assembly.
5. Floor joists.
6. Roof framing.
7. Curved wall/partition.
8. Curtain wall.

B. **Related Sections:**

1. Documents affecting work of this Section include, but are not necessarily limited to the GENERAL CONDITIONS, SUPPLEMENTARY CONDITIONS DIVISION 1 - GENERAL REQUIREMENTS and other Sections of the Project Manual.
2. Concrete Work in Division 3.
3. Masonry Work in Division 4.
4. Structural Steel in Section 05120.
5. Metal Decking in Section 05300.
6. Miscellaneous Metal Work in Section 05500.
7. Custom Casework in Section 06410.
8. Insulation in Section 07211.
9. Fire Stopping in Section 07840.
10. Metal Doors and Frame in Section 08810.
11. Access Panel and Door in Section 08305.
12. Steel Windows in Section 08510.

13. Lath and Plaster in Section 09200.

14. Gypsum Board System in Section 09260.

15. Plumbing and Mechanical in Division 15.

16. Electrical in Division 16.

1.2 QUALITY ASSURANCE

A. **Component Design**: Calculate structural properties of studs and furring channels, etc. in accordance with American Iron and Steel Institute (AISI) "Specifications for Design of Cold-Formed Steel Structural Members@; Sections 1611.5, 2219A and 2504 of the Los Angeles City Building Code and applicable amendments.

B. **Material**: All metal framing, floor or ceiling attachment fastener shall be preapproved by Los Angeles City Department of Building and Safety and shall have a current Los Angeles City Department and Safety Research Report Number.

C. **Welding:** Use qualified welders and comply with American Welding Society (AWS) D1.3 "Structural Welding Code - Sheet Steel".

D. **Qualifications of Personnel:** Use adequate number of skilled Contractor's employees thoroughly trained and experienced in the necessary crafts and completely familiar with the specified requirements and the methods needed for the proper execution of the Work of this Section.

E. **Codes and Regulations**:

1. Comply with, but not necessarily limited to, AISI, AWS, ASTM and the Los Angeles City Building Codes and applicable Amendments. If conflicts exist between these requirements and standards, the most stringent requirements shall prevail.

2. Applicable ASTM Standards:

   a. ASTM A570 - SPECIFICATION FOR STEEL SHEET AND STRIP, CARBON, HOT-ROLLED STRUCTURAL QUALITY.

   b. ASTM A611 - SPECIFICATION FOR STEEL, SHEET, CARBON, COLD-ROLLED, STRUCTURAL QUALITY.

   c. ASTM A653 - SPECIFICATION FOR STEEL SHEET, ZINC-COATED (GALVAZINED) OR ZINC-IRON ALLOY-COATED (GALVANNEALED) BY THE HOT-DIP PROCESS.

   d. ASTM C645 - SPECIFICATION FOR NONSTRUCTURAL STEEL FRAMING MEMBERS.

   e. ASTM C754 - SPECIFICATION FOR INSTALLATION OF STEEL FRAMING MEMBERS TO RECEIVE SCREW ATTACHED GYPSUM PANEL PRODUCTS.

f. ASTM C954 - SPECIFICATION FOR STEEL DRILL SCREWS FOR THE APPLICATION OF GYPSUM PANEL PRODUCTS OR METAL PLASTER BASES TO STEEL STUDS FROM 0.033 INCH (0.84 MM) TO 0.112 INCH (2.84 MM) IN THICKNESS.

g. ASTM C955 - SPECIFICATION FOR LOAD BEARING (TRANSVERSE AND AXIAL) STEEL STUDS, RUNNERS (TRACKS), AND BRACING OR BRIDGING FOR SCREW APPLICATION OF GYPSUM PANEL PRODUCTS AND METAL PLASTER BASES.

h. ASTM C1002 - SPECIFICATION FOR STEEL SCREWS FOR THE APPLICATION OF GYPSUM PANEL PRODUCTS OR METAL PLASTER BASES.

i. ASTM E514 – TEST METHOD FOR WATER PENETRATION AND LEAKAGE THROUGH MASONRY.

F. **Inspection:** Perform field welding under continuous inspection of registered Deputy Inspector at the City's cost, except for instances of rework, retesting and reinspection, the costs of which shall by borne by the Contractor.

1.3 SUBMITTALS

A. **General**: Submit the following, complying with Provisions in the SECTION 01340 - SUBMITTALS in DIVISION 1 - GENERAL REQUIREMENTS of the Project Manual.

1. Product data and manufacturer's recommended installation procedures for each of the framing components and accessories, including structural calculations.

2. Coordinate and submit horizontal and vertical Fastener Schedule of gypsum wallboard on the framing members for each wall type.

3. Shop drawings from framing members indicating stud sizes and gages, locations and spacings, fire ratings, top and bottom tracks, track to stud connection; exterior, interior and curtain walls and structural supports such as concrete and metal deck, steel beams; horizontal stiffener, bridging details, details of bracing installation, backing or support for other attachments required for proper installation, roof framing and support, roof or ceiling opening and support, etc. Indicate welds by AWS symbols, show size, type and length of welds. Provide setting drawing templates and directions for installing fasteners and other required anchors. Identify details by references to applicable Drawing Sheet and Detail Number on the Contract Drawings.

   Unless specified otherwise, after City Engineer's review Contractor shall incorporate all comments and correction prior to submitting to the governing agencies for approvals. The Contractor shall deliver 7 copies of the approved plans and permit to City Engineer for record and distribution.

4. Manufacturer's Mill Certificate certifying that products meet or exceed specified requirements.

5. Welder's Certificate: Submit manufacturer's certificates certifying welders employed on the work verifying AWS qualifications within the previous 12 months.

1.4 COORDINATION

Contractor shall coordinate work of this Section with work of other trades so as not to delay completion of the Contracted work.

1.5 PRODUCT HANDLING

A. **Delivery:** Deliver materials and cold-framing components and accessories to the job-site properly marked to identify location(s) for which they are to be installed. Markings shall correspond to markings shown on the reviewed Shop Drawings. Deliver anchor bolts and anchorage devices which are to be embedded in cast-in-place concrete in ample time so as not to delay work.

B. **Storage:** Store materials in a manner to permit easy access for inspections and identification and to prevent damage, distortion, erosion and deterioration. Store framing components and accessories where directed by the City Engineer and keep steel members off the ground using approved platforms or other supports.

PART TWO - PRODUCTS

2.1 MANUFACTURERS

A. **Manufacturers:** Subject to compliance with requirements, manufacturers offering framing products that may be incorporated in the work include, but are not limited to the following:

1. Dietrich Industries, Inc. (500 Grant Street, Suite 2226, Pittsburgh, PA 15219; (412) 281-2805; www.dietrichindustries.com); Los Angeles City Department of Building And Safety Research Report No. 25821, expired September 1, 2012.

2. United States Gypsum Company (125 S. Franklin Street, Chicago, Illinois, 60606; (312) 606-4000 or (800) 874-4968); Los Angeles City Department of Building And Safety Research Report No. 25163, expired April 1, 2019.

3. Superior Steel Studs, Inc. (4122 Burgundy Way, Flowery Branch, GA 30542; (770) 967-6639); Los Angeles City Department of Building And Safety Research Report No. 26130, expired April 1, 2019.

2.2 METAL FRAMING

A. **System Components**: Manufacturer's standard non-bearing steel studs, joists and furring channels of types, sizes, shape and gages as noted or indicated on the Contract Drawings; see notes on delegated design on architectural and structural drawings. Wall Framing System shall be designed for deflection and equipped with deflection clip**,** deflection (deep leg) track system**,** or as indicated on the drawings. Complete with manufacturer's standard lintels, clip angles, shoes, reinforcements, fasteners and accessories needed for a complete metal framing system.

1. Non-Bearing studs shall be Type Channel, Size as indicated on drawings; see notes

on delegated design on architectural and structural drawings. Gage 20 minimum except where manufacturer data requires heavier gage for heights and conditions of use, Grade 33 minimum, and tracks shall be Type T, Size 1 in. deep minimum by width to receive studs, Gage same or heavier as studs in same wall, Grade 33 minimum, Space studs 16 inches on center except where otherwise indicated on the Contract Drawings.

2. Ceiling joists shall be as indicated on the drawings; see notes on delegated design on architectural and structural drawings. Type Channel, Size as indicated on drawings, Gage 20 minimum, Grade 33 minimum, and perimeter tracks shall be Type T, Size 1 in. deep minimum by width to receive studs, Gage same or heavier as studs in same wall, Grade 33 minimum. Space joists 16 inches on center except where otherwise indicated on the Contract Drawings. Provide bridging members as required per manufacturer's instructions.

3. Ceiling steel stud shall be Type channel, Size as indicated on drawings; see notes on delegated design on architectural and structural drawings. Gage 20 minimum, Grade 33 minimum, 16 inches on center except where otherwise indicated on the Contract Drawings. Cross bracing shall be as required to support design loads per manufacturer's recommendations, 4'-0" on center unless noted otherwise on drawings. .

4. Studs to Receive Waterproof Backing (behind lath) and Ceramic Tile in Wet Areas such as Exterior Surface, Shower Rooms and Stalls, and Drying Rooms: Studs shall be Type channel, Size as indicated on drawings; see notes on delegated design on architectural and structural drawings. Gage 20 minimum, Grade 33 minimum, and horizontal supports shall be Type as required per manufacturer's recommendations.

5. Wall or Soffit Furring channels shall be as indicated on drawings; see notes on delegated design on architectural and structural drawings; with protective coating of rust inhibitive paint. Space channels 16 inches on center except where otherwise indicated on the Contract Drawings.

B. <u>Material and Finishes Standards</u>: (As Applicable)

1. For load bearing stud and runner track, of 16 and heavier gages, fabricate galvanized metal framing components of structural quality steel sheet with a minimum yield point of 50,000 psi in accordance with ASTM A653, A570, A611 and C955.

2. For non-load bearing steel stud, track and furring channel, fabricate galvanized metal framing components of structural quality steel sheet with minimum yield point of 33,000 psi in accordance with ASTM A653, A570, A611, and C955.

3. Provide galvanized finish G60 to metal framing components complying with ASTM A653.

4. Fasteners: Provide nuts, bolts, washers, screws; fasteners with corrosion-resistant plated finish shall be used for attaching all sheathing, metal lath, brick ties and other exterior materials. Screws shall be designed specifically for the attachment of metal to metal or gypsum to metal with self topping point and rust inhibiting coating, and shall comply with ASTM C646. Powder driven/actuated fastener is not acceptable and shall not be used without City Engineer or Consultant Architect's permission.

5. Electrodes for Welding: Comply with AWS Code Publication using AWS A5.1 or A5.5 E70XX electrodes and as recommended by the metal framing manufacturer.

6. Galvanizing Repair Material: "Dri-Galv" or "Galvicon" or equal approved 90% zinc rich cold process repair material.

7. Ceiling Hanger Wires: Cold drawn galvanized steel wire, No. 8 gage.

8. Ceiling Suspension Studs: Studs and tracks as indicated on drawings; see notes on delegated design on architectural and structural drawings. Screw attached to ceiling steel stud and fastened to structure in accordance with details indicated on drawings.

8. Ceiling Mesh, Paper Backet Welded Wire Fabric, Wall Corner Beads, Metal Trim and Screeds: As indicated in Section 09200 - LATH AND PLASTER of the Project Manual.

9. Fire Stopping: As indicated in Contract Drawings.

10. Access Panels: As indicated in Contract Drawings and Section 09200 - LATH AND PLASTER Section 07830 – ROOF HATCHES of the Project Manual.

11. Other Materials: Provided slide clip, clip angle, web stiffener, bridging angle, etc. as needed for proper installation of metal framing components and accessories.

2.3 FABRICATION

A. **General:** Framing components may be preassembled into panels prior to erection conforming to A.I.S.I. Code of Standard Practice and best trade practices, Contract Drawings and reviewed Shop Drawings with components attached in a manner to prevent racking. Fabricate components and/or panels plumb, square, true to line and braced against racking with welded joints. Perform lifting of framing components and/or panels in a manner to prevent damage or distortion.

B. **Fastenings:** Attach similar framing components by screw fastening. Attach dissimilar components by screw fastening, as standard by the metal framing manufacturer. Powder actuated fasteners shall not be used without the permission of the City Engineer.

C. **Wire Tying of Framing:** Not permitted.

D. **Fabrication Tolerances:** Fabricate units or components to a maximum allowable tolerance variations from plumb, level and true to line of 1/8-inch in 10-feet. Any unit or component that fails to meet the requirements shall be rejected and removed from job site immediately.

PART THREE - EXECUTION

3.1 COORDINATION AND SITE PREPARATION

A. **General:** Prior to installation, inspect work of other trades. Verify that all such work is completed and accurate to the point where installation of metal framing may properly commence as hereinafter specified.

B. Ceiling and floor decking receiving the tracks, bracing or other attachments shall be sound, level and clean of all deteriorated material to provide and maintain level bearing surface for the metal framing. Contractor shall repair or patch all surfaces prior to installing metal framing.

3.2 INSTALLATION: (As Applicable, but not necessarily limited to)

A. 1. **General:** Install metal framing systems as indicated on the Contract Drawings and in accordance with manufacturer's printed or written instructions and recommendations and as per reviewed Shop Drawings and as per applicable requirements of the Governing Codes.

2. Locate access panel where indicated on the Contract Drawing and secure to the support framing.

3. No wall stud or track shall be attached to suspended ceiling or soffit. Toggle bolts or hollow, wall anchors are not permitted. All wall stud and track shall be attached to structural elements or support above suspended ceiling or soffit.

B. **Runner Tracks:** Install continuous tracks sized to match studs. Align tracks accurately to layout at base and tops of studs. Secure tracks with approved steel fasteners and spaced not to exceed 16-inches. Provide fasteners at corners and at ends of tracks.

C. **Installation of Wall Studs:** Secure studs to bottom runner tracks by screw fastening at both inside and outside flanges. Secure studs to top runner tracks by using deflection clip.

1. Set studs straight and plumb, except as needed for diagonal bracing or required for non-plumb walls or warped surfaces and similar requirements.

2. Where stud system abuts structural columns or walls, anchor ends of stiffeners to the supporting structure.

3. Install supplementary framing, blocking and bracing in metal framing system wherever walls or partitions are indicated to support fixtures, equipment, services, casework, heavy trim and furnishings, and similar work requiring attachment to the wall or partition. Where type of supplementary support if not otherwise indicated, comply with stud manufacturer's recommendations and industry standards in each case, considering weight or loading resulting from item supported. Contractor shall obtain all necessary inspection for all blocking, backing and support locations prior to covering the metal framing system.

4. Frame wall openings larger than 2-feet square with double stud at each of header and jamb of frame except where more than two are indicated in manufacturer's instructions. Install runner tracks and jack or cripple studs above and below wall openings. Anchor tracks to jamb studs with stud shoes and space jack studs same as full-height studs of wall. Secure stud system wall opening frame in a manner indicated.

5. Install horizontal stiffeners in stud system, spaced (vertical distance) at not more than 48-inches O.C. Bolt at each intersection.

6. When two piece studs are used, splice by lapping not less than 8 inches with minimum 2 fasteners in each stud flange. Splices in axially loaded studs shall not be permitted.

D. Installation of curved wall or partition:

1. Cut top and bottom runner tracks through leg and web at 2 inches intervals for arc length. Allow 12 inches uncut straight track runner at each end of arc. Bend runner tracks to uniform curve of specified radius. Clinch a 1 inch x 20 ga. steel strip to inside of cut leg using metal lock fasteners. Attach steel track at floor and ceiling to structural elements with approved fasteners located 2 inches from each end and spaced 24 inches on center unless noted otherwise on drawings or in manufacturer's recommendations.

2. Position studs vertically, with open side facing in same direction and engaging floor and ceiling runner track. Begin and end each arc with a stud and space intermediate studs equally along outside of arc. Secure studs to runner tracks with 3/8 pan head framing screws. On tangents, place studs 6 inches on center leaving last stud free standing. Install balance of stud system in normal manner according to the Project Manual.

E. Installation of Joists: Install level, straight, and plumb, complete with per manufacturer's recommendations. Provided not less than 1-1/2-inch end bearing.

1. Reinforce ends with end clips, steel hangers, steel angle clips, steel stud section, or as otherwise recommended by joist manufacturer.

2. Where required, reinforce joists at interior supports with single short length of joist section located directly over interior support or other method recommended by joist manufacturer.

3. Secure joists to interior support systems to prevent lateral movement of bottom flange.

4. Reinforce joists with diagonal supports at locations as indicated on Contract Drawing, which exceeded the allowable or maximum unbraced spars recommended by the manufacturer.

F. Installation of Wall Furring:

1. Required for fire protection piping, concealment of ducts, pipes, conduit, structural steel reinforcing, and other mechanical work and for forming architectural features as indicated on the Contract Drawings. Except as otherwise indicated on the Contract Drawings, vertical wall furring to be 3/4 inch channels at 16 inches on center. Vertical wall channels installed in deflection tract channels anchored to concrete with 3/16-inch x 1/4 inch drive bolts at track ends at interval of 2'-0" feet; attached to ceiling by wiring upper ends to continuous horizontal channel attached to ceiling. Vertical furring to be braced with continuous horizontal 3/4 inch channels spaced at 3'-0" inches intervals. Each horizontal brace to be tied to each vertical channel and at end to be attached to abutting construction.

2. Attach screwable resilient furring channels to metal decking with self-tapping sheet metal screws at 4 inches on center. Space channels as noted on the Contract Drawing or per manufacturer's recommendations.

G. Installation of Ceiling

1. **Installation of Ceiling Furring Channels:** Secure 3/4 inch channel to carrying channels with double wrap and twist or tie wire at each intersection. Spacings of furring channels not to exceed 16 inches on center. Make level or slope as indicated on the Contract Drawings.

2. **Carrying Channel for Suspended Ceiling:** Support on hanger wires suspended metal stud fastened to structure above by hanging from welded metal clips or metal fastener. Properly attach to hanger wires or suspended metal studs. Each end of each carrying channel to be attached to abutting construction as indicated on the Contract Drawings or per the manufacturer's recommendations.

3. At any openings that interrupt the ceiling, install additional cross reinforcing to maintain structural integrity of framing.

4. Light fixtures, air vents, equipments and other heavy concentrated loads shall be independently supported or separately supported from ceiling framing.

H. Installation of Air Duct or Shaft: Install air duct or shaft in stud system with designed slopes as indicated on drawings. Furnish access door to air duct or shaft at locations required by code or as indicated.

I. Control Joints:

1. Control joints in drywall surface: Frame both sides of control joints with separate studs in accordance with the detail indicated on Contract Drawing or recommended by manufacturer. Wall and ceiling surfaces should be isolated with Control joints where:

   a. Partition, furring or column fire proofing abuts a structural element (except floor) or dissimilar wall or ceiling.

   b. Ceiling or soffit abuts a structural element, dissimilar wall or partition or other vertical penetration.

   c. Construction changes within plane of partition or ceiling.

   d. Partition or furring run exceeds 30 feet.

   e. Ceiling dimensions exceed 30 feet in either direction without relief.

   f. Exterior soffits exceed 30 feet in either directions.

   g. Wings of AL@, AU@ and AT@ - shaped ceiling areas are joined.

   h. Expansion or control joints occur in the exterior wall.

2. Control joints in Curtain Wall Surface: Frame both sides of joint with separate studs in accordance with the details indicated on Contract Drawings or recommended by manufacturer. Curtain wall surfaces should be isolated with control joints where:

a. Curtain wall abuts a structural element (except floor) or dissimilar wall or ceiling.

b. Construction changes within the plane of the wall.

c. Stucco surfaces exceed 10 feet in either direction.

d. The area within stucco sections exceeds 100 sq. ft.

e. As required for brick-veneer construction; below ledger angle supports.

f. Basic construction contains a control joint.

g. Interior partition run exceeds 30 feet.

h. Exterior soffits exceed 30 feet in either direction.

3. Framing at control joints that extent through the wall should have minimum 1 2 inches cold rolled channel alignment stabilizers spaced maximum 5 feet vertically. The channels should be placed through holes in the stud web and be securely attached to the first stud either side of control joint.

4. Apply approved sealant to fill gap and attach control joint to face layer with approved fastener.

J. **Erection Tolerances**: Bolt weld wall and ceiling panels (at both horizontal and vertical junctures) in accordance with approved Fasteners Schedules to produce flush, even, true-to-line joints.

1. Maximum variation in plane and true position between prefabricated assemblies shall not exceed 1/16-inch.

2. Install wall panels to elevation as indicated on contract drawings. Do not exceed drywall or wall panel elevations without permission from the City Engineer.

3. Contractor shall correct any imperfect work before proceeding with gypsum wall or lathing work or whenever discovered.

4. Finished surfaces of wall and ceiling to be uniform in true planes with door and window, panel and fixtures outlet boxes and other features as indicated.

L. **Field Painting**: Touch-up damaged shop-applied protective coatings. Use compatible primer for prime-coated surfaces; use galvanizing repair system for galvanized surfaces by methods provided in Article 410 of the AWS Specifications. Costs of repairs to be borne by the Contractor.

(END OF SECTION)

SECTION 05500
METAL FABRICATIONS

PART ONE - GENERAL

1.1 DESCRIPTION

A. **Work Included:** Provide and install all miscellaneous metal and metal fabrications in place, as indicated on the Contract Drawings and hereafter specified or needed for complete and proper installation, includes but not limited to the following:

1. Pipe brackets
2. Pipe bumper posts
3. All formed and bent plate-14 gauge and heavier
4. Bolts, rods, dowels, nuts, washers, anchors, brackets and other miscellaneous iron.
5. Metal ladders
6. Steel guard rails
7. Angle thresholds
8. Downspouts
9. Frames and gates for trench drains.
10. Structural support for ceiling hung toilet partitions.

B. **Related Work Sections:**

1. Documents affecting work of this Section include, but are not necessarily limited to the GENERAL CONDITIONS, SUPPLEMENTARY CONDITIONS and Sections in GENERAL REQUIREMENTS of DIVISION 1 of these Specifications.
2. Concrete Work in Division 3.
3. Masonry Work in Division 4.
4. Structural Steel in Section 05120.
5. Metal Doors and Frames in Section 08110.
6. Painting in Section 09900.
7. Devices for support of mechanical and electrical materials in Divisions 15 and 16.
8. Metal Stairs in Section 05510.
9. Caulking and Sealants in Section 07920.

10. Toilet Partitions in Section 10155.

11. Steel Rolling Doors in Section 08331.

1.2 QUALITY ASSURANCE

A. **Qualifications of Personnel:** Use only adequate number of skilled workers who are thoroughly trained and experienced in the necessary crafts and are completely familiar with the necessary crafts and with the specified requirements and methods needed for proper performance of the work of this Section.

B. **Welder's Qualifications:** Currently qualified according to AWS D1-1.

C. **Design:** Fabricate and erect work in accordance with A.I.S.C.

D. **Welding Operations:** Perform shop and/or field welding required in connection with work of this Section in strict accordance with pertinent recommendations of the American Welding Society (AWS).

E. **Project Conditions:** Do not fabricate components which require fitting to structural elements or into finished spaces until dimensions are verified at the job-site.

F. **Regulations**: Comply with acceptable Uniform Building Code with the Los Angeles City 1992 Amendments.

G. **Shop Inspections**: Required

H. **Fabricator Qualifications**: Firm experienced in successfully producing metal fabrications similar to that indicated for this project with sufficient production capacity to produce work units without causing delay in the Contracted Work.

1.3 SUBMITTALS

A. **General:** Comply with pertinent provisions in the SUBMITTALS SECTION 01340 in DIVISION 1 - GENERAL REQUIREMENTS of these Specifications.

B. **Materials List:** Submit list of proposed items to be provided under this Section.

C. **Shop Drawings:** Submit for all items proposed to be fabricated and installed under this Section. Identify each proposed item with corresponding Contract Drawing detail and Specification references.

D. **Samples:** Submit physical samples of specified materials for color or texture selection by the Consultant, when so requested.

E. **Templates:** Provide for anchor and bolt installation by other trades.

F. **Manufacturers Specifications and Other Data:** Provide as-needed to prove compliance with the specified requirements.

G. **Manufacturer's Recommended Installation Procedures:** When approved by the Consultant, will become the basis for accepting or rejecting actual installation procedures used on the Work.

H. **Certificates:** Submit certification that specified surface preparation and primer or galvanized coatings as specified have been applied to steel items and are in accordance with the Specifications.

I. Welder's certificates signed by the Contractor certifying that welders comply with requirements specified under "Quality Assurance" article.

1.4 PRODUCT HANDLING

A. **General:**

1. Fabricated metal items shall not be fabricated or delivered to the job-site before required review of the Shop Drawings by the City Engineer or the Consultant and returned to the Contractor.

2. Store fabricated metal items above ground on platforms, skids or other approved supports in a weathertight and dry location until ready for installation.

B. **Protection:** Use all means necessary to protect the materials and manufactured items of this Section before, during and after installation and to protect the work and materials of all other trades.

C. **Replacements:** In the event of damage to work of this Section, immediately make all repairs and replacements necessary to the approval of the City Engineer or the Consultant and at no added cost to the City.

D. **Materials to be Installed by Others:**

1. Deliver anchor bolts and other anchorage devices to be embedded in concrete to the job-site in time before start of concrete work operations.

2. Provide setting drawings, templates and other directions necessary for installation of anchor bolts and devices.

PART TWO - PRODUCTS

2.1 MATERIALS AND COMPONENTS

A. **General:**

1. All material shall conform with the following requirements and shall be of new stock of the highest grade available, free from defects and imperfections, of recent manufacture and unused. Where two or more identical articles or pieces of equipment are required, they shall be of the same manufacture.

2. All metal surfaces shall be free from any defects which would impair the strength, durability, appearance, and shall be of the best commercial quality, for the purposes intended and adequate to withstand the strains and stresses to which they will be subject. Metals shall be protected from injury at the job, in transit, and until erected in place, inspected, and approved.

B. **Miscellaneous Metals: (As Applicable)**

1. Iron and Steel (General): Uniform Building Code with the Los Angeles City 1992 Amendments, Section 27.

2. Structural Steel: ASTM A36.

3. Steel Plates, Shapes and Bars: Mild or structural grade conforming to applicable ASTM A36 Specifications.

4. Steel Plates (Bent or Cold Formed): ASTM A283 Grade "C".

5. Gray Cast Iron: ASTM A48, Class 10 or as specified.

6. Malleable Iron Castings: ASTM A47.

7. Steel Tubing: AISI MT1010, electric welded, minimum 14-gage, shapes and size as indicated on the Contract Drawings.

8. Steel Pipe: ASTM A53, Grade A, Schedule 40 black finish or ASTM A120, galvanized when used on building exterior.

9. Steel Bars and Bar-size Shapes: ASTM A306 Grade 65 or ASTM A36.

10. Cold Finished Steel Bars: ASTM A108.

11. Galvanized Carbon Steel Sheets: ASTM A526 with G90 zinc coating in accordance with ASTM A525.

12. Aluminum Castings: 214 aluminum alloy.

13. Aluminum Extrusions: 6053 aluminum alloy temper to suit.

14. Stainless Steel: 18-8 alloy, type 302, No. 4 finish except as otherwise specified.

15. Diamond or checker Pattern Plate: U.S. multigrip floor plate; U.S. Steel Corp. or equal.

C. <u>Miscellaneous Related Materials</u>: (As Applicable)

1. Welding Electrodes: Conform to AISC and ASTM A233 and the Code for Arc and Gas Welding in Building Construction, A.W.S. Publication D1.1 use E-70XX Series Electrodes.

2. Paint Primer (for uncoated ferrious metal): Rust-Oleum Corp. "X-60 Bare Metal Red Primer".

3. Hot-Dip Galvanizing: ASTM A-123 or as applicable after fabrication. See Section 210-3 of the "Standard Specifications".

4. Galvanizing Repair Material: "Galvalloy" by Metalloy Products Co., 1341 Sussex Lane, Newport Beach, California or equal 90% zinc rich cold process repair material.

5. Non-Shrink Grout: "Por-Rok" by Hallemite Mfg. Co. Cleveland, Ohio (Los Angeles, Phone (213) 583-4184).

6. Fasteners: Same material and finish of work to be fastened together; screws to be countersunk oval head type, unless otherwise indicated on the Drawings.

7. Mechanical Anchors: For securing miscellaneous metal items to concrete to be self-drilling concrete anchors, not less than 3/8-inch size, Phillips Redhead, or as otherwise indicated on the Drawings.

8. Bolts and Nuts: Low-carbon hexagon-head type, ASTM A-307, Grade "A" or "B" (Unless Otherwise Indicated on the Plans). Lag bolts shall be square-head Type FS FF-B-561 (Unless Otherwise Indicated on the Plans).

9. Miscellaneous: All items of miscellaneous metal indicated on drawings, including clip angles, ties, straps, anchors, bolts, angles, rods, and other appurtenances required by details or necessary for proper installations.

10. Dry Pack: A cement-sand mix of 1 part Portland cement to 2-1/2 parts sand by volume with necessary water added to provide for solid compaction.

11. Chains: 3/16-inch size, galvanized proof chain complete with suitable size harness snaps and two eyebolts, length to suit job conditions.

12. Gasket Material: Soft compressible neoprene rubber strip, thickness and width as indicated on the drawings.

13. Filler Material for Welding Aluminum: Type 53.

14. Concrete inserts:

    a. Threaded or wedge type galvanized ferrous castings of malleable iron complying with ASTM A27;

    b. Provide required bolts, shims, and washers, hot-dip galvanized in accordance with ASTM A153.

15. Brackets, Flanges and Anchors: Cast or formed metal of the same type material and finish as supported rails, unless otherwise indicated.

16. Welding Rods and Bare Electrodes: Select in accordance with AWS Specifications for the metal alloy to be welded.

2.2 OTHER MATERIALS

Provide other materials, not specifically described but required for a complete and proper installation, as selected by the Contractor subject to the approval of the Consultant.

2.3 SHOP PAINT

A. **Primer:** Use "10-99 Tnemec Primer" or "Rustoleum Number 5769 Primer.

B. **For Repair of Galvanizing:** Use a high zinc-dust content paint complying with MIL-P-21035.

2.4 FABRICATION

A. **Field Measurements:** Secure all field measurements required for proper and adequate fabrication and installation of all work of this Section. Exact measurements are the

responsibility of the Contractor.

B. Workmanship: (As Applicable)

1. Except as otherwise shown on the Contract Drawings or the approved Shop Drawings use materials of size, thickness, and type required to produce reasonable strength and durability in the work of this Section.

2. Fabricate with accurate angles and surfaces which are true to the required lines and levels, grinding exposed welds smooth and flush, forming exposed connections with hairline joints, and using concealed fasteners wherever possible. Do not fabricate components which require fitting to structural elements or into finished spaces until dimensions are verified at the job-site.

3. Prior to shop painting or priming, properly clean metal surfaces as required for the applied finish and for the proposed use of the item.

4. On surfaces inaccessible after assembly or erection, apply two coats of the specified primer. Change color of second coat to distinguish it from the first.

5. Work to dimensions shown or accepted on the Shop Drawings, using proven details of fabrication and support.

6. Conform to applicable provisions of the Uniform Building Code with the Los Angeles City 1992 Amendments, Chapter 27.

7. Form exposed work true to line and level, with accurate angles and surfaces and with straight sharp edges.

8. Ease the exposed edges to a radius of approximately 1/32-inch unless otherwise shown.

9. Form bent-metal corners to smallest radius possible without impairing the work.

10. Welding: Electric arc welding, Uniform Building Code with the Los Angeles City 1992 Amendments, Chapter 27.

11. Bolting: Bolts to be drawn tight and threads set to secure nuts.

12. Assembly: Assemble all items with parts in true alignment and accurately fitted, joints well made, adequately fastened with butts and sharp edges ground smooth.

13. Conceal all fastenings where practicable and make exposed joints hairline.

14. Nonferrous metal items shall comply with best practice of the trade. Form all sections true to detail and free from defects impairing appearance, strength, and durability.

15. Cut, reinforce, drill and tap miscellaneous metal work as indicated to receive finish hardware and similar items.

16. On surfaces inaccessible after assembly or erection, apply two (2) coats of the specified primer. Change color of second coat to distinguish it from the first coat.

C. Galvanizing: Provide a zinc coating for those items shown or specified to be galvanized as follows and as applicable:

1. ASTM A153 for galvanized iron or steel hardware.

2. ASTM A123 for galvanized rolled, pressed or forged steel shapes, plates, bars and strip 1/8-inch thick and heavier.

D. Field Galvanizing:

1. Required: For repair of protective coating of damaged galvanized surfaces resulting from welding or other construction operations in the shop or at the job-site at no added cost to the City.

2. Method: By "galvalloy" methods, in accordance with manufacturer's directions.

E. Shop Painting:

1. Required: On all uncoated ferrous metals; galvanized ferrous metal not to be shop coated.

2. Paint: Specified paint primer.

3. Painting: Full prime coating, completely covering the metal surfaces; at least 1 coat on all surfaces which will be accessible after fabrication and erection; at least 2 coats on all surfaces which will be inaccessible after fabrication and erection.

4. Remove scale, rust and other deleterious materials before application of Shop Coating.

5. Clean off heavy rust and loose mill scale in accordance with SSPC-SP-2 or SSPC-SP-3 before coating.

6. Remove oil, grease and similar contaminants in accordance with SSPC-SP-1.

F. Carpenter's Iron Work: Furnish all bent or otherwise fabricated bolts, plates, anchors, hangers and other miscellaneous steel items not readily obtainable "OFF-THE-SHELF" and required for anchoring work to concrete, masonry and interior partitions. Fasteners shall be of the same material as the item being fastened. Items to be built into masonry or cast into concrete shall be delivered to the job-site in time to avoid any delay of other trade operations. Anchor, for mechanical anchoring of items to concrete shall be self-drilling type and minimum 3/8-inch size.

G. Rough Hardware:

1. Furnish bent or otherwise custom fabricated bolts, plates, anchors, hangers, dowels, and other miscellaneous steel and iron shapes as required for framing and supporting woodwork, and for anchoring or securing woodwork to concrete or other structures. Straight bolts and other stock rough hardware items are specified in Division 6 sections.

2. Fabricate items to sizes, shapes, and dimensions required. Furnish malleable-iron washers for heads and nuts which bear on wood structural connections; elsewhere, furnish steel washers.

PART THREE - EXECUTION

3.1 SURFACE CONDITIONS

Examine the areas and conditions under which work of this Section will be performed. Correct conditions detrimental to timely and proper completion of the work. Do not proceed until such detrimental conditions are corrected.

3.2 COORDINATION

Coordinate work of this Section as required with other trades to assure proper and adequate provisions in the work of those trades for interface with the work of this Section.

3.3 INSTALLATION

A. General: (As Applicable)

1. Set work accurately into position, plumb, level, true, and free from rack.

2. Anchor firmly into position.

3. Where field welding is required, comply with AWS recommended procedures of manual-shielded metal-arc welding for appearance and quality of weld and for methods to be used in correcting welding work.

4. Grind exposed welds smooth, and touchup shop prime coats.

5. Do not cut, weld, or abrade surfaces which have been hot-dip galvanized after fabrication and which are intended for bolted or screwed field connections.

6. Dissimilar Materials: Where metals are in contact with plaster, concrete or other type metals, paint contact faces of the metal before installation, with a heavy bituminous coating:

B. Immediately After Erection: Clean the field welds, bolted connections, and abraded areas of shop priming. Paint the exposed areas with same material used for shop priming.

3.4 PIPE BUMPER POSTS (BOLLARDS)

A. Required: At locations indicated on the Contract Drawings.

B. Materials: Galvanized steel pipe, size and length as indicated on the Drawings.

C. Installation: Set plumb in concrete footings of size indicated on the Drawings, to indicated height; pipe post to be filled with concrete to top and top to be tooled to shed water. Top of exposed portion of footing to be tooled to shed water.

3.5 METAL LADDER

A. Materials: Steel bar stringers, steel angle clips, steel plate frame, steel bar rungs, steel pipe enclosure with anchor plates and anchor bolts.

B. Fabrication:

1. In accordance with drawing details, weld rungs and supports to stringers.

2. Grind smooth all sharp edges and welds.

3. Hot-dip galvanized exterior ladder and the enclosure after fabrication.

4. Top surface of each ladder ring shall be made non-slip, subject to approval of the City Engineer.

C. **Installation:** As indicated on the Contract Drawings, securely bolt in accurate location, plumb, square and true.

3.6 STEEL GUARD RAILING

A. **Fabrication:** From galvanized steel pipe in accord with approved Shop Drawings, pipe sizes as noted on the Drawings. Form all bends, where required, smoothly and with no reduction in cross section. Grind all welds smooth. Definitions in ASTM E985 for railing related terms apply.

B. **Installation:** True to line, plumb and level, with base plates secured to floor as indicated on the Drawings.

3.7 DOWNSPOUTS

A. Steel tube 16-gage of size indicated on the Contract Drawings.

B. Hanger straps shall be as indicated on the Contract Drawings.

C. Downspouts shall spill onto concrete splash blocks as indicated. Bottom section for spilling indicated on vertical runs shall be made by cutting tube neatly and welding joints with full welds.

D. Grind smooth all exposed welds.

E. All downspouts, hangers, straps and fittings shall be hot-dip galvanized after fabrication.

F. **Installation**: Locate at each roof overflow and scupper drain outlet. Secure in vertical and plumb position with strap anchors and bolts to masonry/or concrete wall with downspout clearing the wall by 2-inches ready to receive sheet metal leader head and discharge onto exterior concrete splash block as indicated on the Contract Drawings.

3.8 FRAMES AND GRATES FOR TRENCH DRAINS

A. **Type**: Heavy traffic grate and frame, Alhambra Foundry Co. Ltd. No. A-2422, grate section sizes as indicated on the Contract Drawing. Overall length of each drain as indicated on the Contract Drawings.

B. Coat with asphalt paint.

C. **Installation**: Set frames in concrete at time of placing concrete so that when grate is installed within the frame, the grate will be flush with the surface of the concrete floor as indicated on the Contract Drawings.

3.9 STRUCTURAL SUPPORTS FOR CEILING HUNG TOILET PARTITIONS

A. **Materials:** Standard steel angles, channels or as otherwise indicated.

B. **Installation:** As indicated on the Contract Drawings and securely anchored to the structure above.

3.10 CLEAN-UP AND ADJUSTMENT

A. **Clean-up:**

1. During the progress of the work, conform to provisions of Section 01710 of the GENERAL REQUIREMENTS, keep the premises free from debris and waste resulting from work of this Section. Upon completion of this Section remove all surplus materials and debris from the job-site.

2. Immediately after erection, clean the field welds, bolted connections and abraded areas of shop priming. Paint the exposed areas with the same material used for the shop priming.

B. **Adjustments:** Adjust all operating parts and/or assemblies as may be required to provide the necessary function and smooth operation.

(END OF SECTION)

SECTION 05510
METAL STAIRS

PART ONE - GENERAL

1.1 SUMMARY

A. **Description**: Provide all metal (steel) stairs, including railings and handrails (see Section 05520) where shown on the Contract Drawings, as specified hereinafter and as needed for a complete and proper installation.

B. **Related Work**:

1. Documents affecting work of this Section include, but are not necessarily limited to the GENERAL CONDITIONS, SUPPLEMENTARY CONDITIONS and Sections in DIVISION 1 - GENERAL REQUIREMENTS of these Specifications.

2. Cast-In-Place Concrete in Section 03300.

3. Field Finish Painting in Section 09900.

4. Steel railings and handrails other than at steel stairs in Section 05500 - METAL FABRICATIONS.

1.2 SUBMITTALS

A. Comply with pertinent provisions of Section 01330 - SUBMITTALS in DIVISION 1 - GENERAL REQUIREMENTS.

B. **Product Data:** Within 35 calendar days after the Contractor has received the City's "Notice to Proceed", submit the following:

1. Materials list of items proposed to be provided under this Section;
2. Manufacturers' specifications and other data needed to provide compliance with the specified requirements;

3. Shop Drawings in sufficient detail to show fabrication, installation, anchorage, and interface of the work of this Section with the work of adjacent trades.

    a. Shop drawings shall be stamped and signed by a Civil or Structural Engineer registered in the State of California.

4. Manufacturer's recommended installation procedures which, when approved by the Consultant or City Engineer will become the basis for accepting or rejecting actual field assembled installation procedures used on the Work.

1.3 QUALITY ASSURANCE

A. **Workers**: Use adequate number of skilled workers who are thoroughly trained and experienced in the necessary crafts and who are completely familiar with the specified

requirements and methods needed for proper performance of the work of this Section.

B. **Welders**: Use properly Los Angeles City Building and Safety certified welders and fabricators for the type of work involved in compliance with applicable code requirements of the Uniform Building Code with the Los Angeles City 1992 Amendments.

C. **Reference Specifications and Standards:**

1. AISI, Specifications for the Design of Cold-Formed Steel Structural Members.

2. AISC, Steel Construction Manual and Code of Standard Practice.

3. AWS D1.1, Structural Welding Code - Steel.

C. **Inspection:** Required in accordance with provisions of Section 31 of the GENERAL CONDITIONS.

PART TWO - PRODUCTS

2.1 MATERIALS

A. **Structural Steel:** ASTM A36.

B. **Metal Pan - Risers and Subtreads:** Hot rolled steel, ASTM A366.

C. **Sheet Steel:** ASTM A526, commercial quality galvanized sheet steel, ASTM A525, G90 coating. Landing: Hot rolled steel, ASTM A569, 10 gage unless otherwise shown.

D. **Steel Plate:** ASTM A36, except for plates to be bent or cold-formed. Steel plates to be bent or cold-formed: ASTM A283, Grade C.

E. **Steel Tube:** ASTM A500, Grade B, Fy 46 ksi.

F. **Steel Pipe:** ASTM A53, Type E or S, Grade B or comply with ASTM A120, Schedule 40.

G. **Steel Bars and Bar-Size Shapes:** ASTM A306, Grade 65, or ASTM A36.

H. **Machine Bolts, Nuts and Washers:** ASTM A307, Grade A.

I. **Arc-Welding Electrodes:** AWS A5.1, E60XX, E70XX Series, as required for intended use.

J. **Shop Paint Primer:** Tnemec #1009 Gray or Rust-Oleum #7086 Gray.

K. **Handrail Brackets:** Cast malleable iron or steel, standard product units of type shown, complete with mounting plates and fasteners or proper anchoring devices.

L. **Mesh Reinforcement:** ASTM A185. Welded wire fabric 2" x 2" - 12 gage/12 gage wire, galvanized. Tack weld to inside of steel pan treads.

M. **Other Materials**: Provide other materials, not specifically described but required for a complete and proper installation, as selected by the Contractor subject to the approval of the Consultant or City Engineer.

2.2 FABRICATION

A. Shop prefabricate metal stairs in as large section as practicable and in accordance with the approved Shop Drawings and pertinent requirements of the Uniform Building Code with the Los Angeles City 1992 Amendments and other governmental agencies having jurisdiction.

B. **Steel Pan Stairs:** Fabricate from steel channels, tubes, hanger rods, steel pan treads and landings, risers, steel bars, plates, clip angles, and closure plates, with bolted and welded connections to form stairs as shown and in accordance with reviewed Shop Drawings.

C. **Railing and Handrailing:** Fabricate from steel pipes to shapes and dimensions shown. Insure that runs of horizontal pipes on opposite sides of posts are in the same plane, both vertically and horizontally. Make joints flush. Accurately cut, miter, weld and grind smooth to flush surfaces. Make bends to preserve the contour of the member. Install as shown and as follows:

1. To Hollow Walls: Provide cast steel brackets providing minimum of 2" clearance between railing and wall. Return handrail ends to 1/8" of wall. Secure to wall with machine bolts and steel back-up plates attached to studs.

2. Steel Stair Railings: Weld to stringers and as shown.

D. **Shop Paint:** Minimum Cleaning Requirements - in accordance with SSPC-SP-3-63. After surfaces are properly cleaned, apply specified shop paint to attain a minimum dry film thickness of two mils.

PART THREE - EXECUTION

3.1 SURFACE CONDITIONS

Examine the areas and verify dimensions and conditions under which work of this Section will be performed. Correct conditions detrimental to timely and proper completion of the work. Do not proceed until detrimental conditions are corrected.

3.2 INSTALLATION

A. Coordinate as required with other trades to assure proper and adequate provision in the work of those trades for interface with the work of this Section.

B. Install the work of this Section in strict accordance with the original design, the approved Shop Drawings, pertinent requirements of governmental agencies having jurisdiction, and the manufacturer's recommended installation procedures as approved by the Consultant or City Engineer, anchoring all components firmly into position for long life under hard use.

C. **Pipe Railings and Handrails:** Unless otherwise indicated or approved by the Consultant or City Engineer and shall conform to the disabled requirements (ADA).

1. At Hollow Walls:

   a. Provide cast brackets having 1-1/2" clearance between railing and wall;

   b. Return handrail ends to within 1/8" of wall.

c. Secure to wall with approved fasteners.

d. Where on stud construction, provide backup plate within the studs and covering not less than three studs.

2. At Steel Stairs:

a. Weld or bolt railings and newels to stringers.

b. At top of stairs, continue railings to walls.

3. Welding shall meet the AWS requirements. Any welding requiring Gramma Ray or Ultransonic testing shall be arranged and paid for by the Contractor.

D. Upon completion of installation, touchup field welds and abraded surfaces, using primer specified for shop use.

(END OF SECTION)

SECTION 05520
HANDRAILS AND RAILINGS

PART 1 -- GENERAL

1.1 THE REQUIREMENT

Provide all metal railings and handrails where shown on the Contract Drawings, as specified hereinafter and as needed for a complete and proper installation.

A. The CONTRACTOR shall furnish all tools, equipment, materials, and supplies and shall perform all labor required to complete the work as indicated on the Drawings and specified herein.

B. This section covers the work necessary to furnish and install handrails and railings, complete.

1.2. ELATED WORK SPECIFIED ELSEWHERE

A. Section 03300 Cast-in-Place Concrete

B. Section 05500 Miscellaneous Metalwork

C. Section 09800 Protective Coating

1.3 REFERENCE SPECIFICATIONS, CODES AND STANDARDS

A. Comply with the reference specifications of the GENERAL REQUIREMENTS.

B. Comply with the current provisions of the following Codes and Standards.

1. Government Standards:

California: OSHA California Occupational Safety and Health Standards.

2. Trade Standards:

Aluminum Association (AA) publications, as referenced herein.

3. Manufacturer's Standards: In addition to the standards listed above, the railings and their installation shall be in accordance with the manufacturer's published recommendations and specifications.

1.4 CONTRACTOR SUBMITTALS

A. Submittals shall be made in accordance with the GENERAL REQUIREMENTS.

B. The following submittals and specific information shall be provided:

1. Shop Drawings: Railing supplier's shop drawings on the railing system.

2. Calculations: Engineering calculations shall be submitted for review. Engineering calculations shall include (but not be limited to) railings, handrail brackets, brackets, support flanges, and fasteners or anchors.

1.5 QUALITY ASSURANCE (Not Used)

1.6 PRODUCT DELIVERY, STORAGE AND HANDLING

A. Delivery of Materials: Manufactured materials shall be delivered in original, unbroken packages, containers, or bundles bearing the label of the manufacturer.

B. Storage: All materials shall be carefully stored in a manner that will prevent damage and in an area that is protected from the elements.

PART 2 -- PRODUCTS

2.1 ALUMINUM HANDRAIL SYSTEMS

A. General: Aluminum handrail systems or components shall be fabricated as shown or shall be an ENGINEER-accepted prefabricated/pre-engineered system or component by one fabricator/manufacturer that meet the submittal requirements as stated in SUBMITTALS of the General Requirements. Manufacturers who may meet these specified requirements are: Alumaguard, a division of Bettinger West, Inc., Denver, CO; or Thompson Fabricating Co., Birmingham, AL; or approved equal. These systems shall meet the allowable load and deflection criteria.

B. Pipe:

1. All rails, posts, and formed elbows shall be fabricated from extruded Alloy 6105-T5 with a minimum tensile strength of 38,000 psi and a minimum yield strength of 35,000 psi, and with special close tolerance for tight fit and excellent appearance. All other aluminum parts shall be fabricated from 6063-T6 or 6061-T6 extruded aluminum of adequate strength for all loads.

2. Round tube and round picket railings shall be side mounted unless otherwise shown. Posts shall be not less than 1-1/2-inch diameter, Schedule 40 pipe or 1-1/2-inch x 2-inches oval section. The posts shall be evenly spaced at not less than 4-feet nor more than 6-feet on centers. Field conditions may require some adjustment of spacing. Pickets shall be not less than 5/8-inch OD pickets, spaced at 4-1/2-inches on center; or 3/4-inch OD pickets, spaced at 6 inches on centers. Top rails and railings shall be not less than 1-1/2-inch OD pipe or 2-inch oval section. Rails may be type with bottom enclosures. Bottom rails shall be not less than 1-1/2-inch OD pipe or 1-7/8-inch diameter extrusion with bottom enclosures. The top railings shall be as long as possible and the post shall not project through the top rails. Toeboard of picket rails shall be a specially extruded, snap-in bottom rail enclosure with toeboard or special extruded centered toeboard that is screw applied to bottom of the bottom rail.

C. Fittings:

1. All fittings shall be as shown or shall be one of the following types: A one-piece aluminum extrusion machined to final shape and attached to the handrail post with either concealed welds or a stainless steel fastener. A one-piece connector of aluminum or stainless steel, either welded or attached to the handrail post with stainless steel fasteners and designed to be completely covered when the handrail is connected. All fitting surfaces designed to be exposed to view after installation is complete will match the handrail metal alloy, surface, shape, and anodized finish and shall be the continuous diameter type for smooth appearance and to permit continuous sliding of the hands.

2. The handrail post bolted baseplate connector shall be fabricated as shown on the Drawings or equivalent molded or extruded meeting all of the appearance and strength requirements. The baseplate shown shall conform to ASTM A 167, Type 304 stainless steel with a minimum yield strength of 30,000 psi. The insert shown shall be fabricated from stainless steel pipe with a minimum wall thickness of 0.145-inch and with a minimum yield strength of 50,000 psi.

The insert dimensions shall meet the required tolerances shown on the Drawings. Furnish test data to show that the yield strength of the material in the as-delivered pipe equals or exceeds 50,000 psi. Inserts using stainless steel with minimum yield strengths less than 50,000 psi shall have thicker walls to develop equal strength.

3. The handrail wall brackets, aluminum, round top, similar to R & B Wagner No. 1767; Julius Blum No. 384A; or equal; clear anodized and meeting all the dimensional wall/railing clearance requirements of national, state, and local standards, regulations, and codes, including OSHA.

D. Additional Specific Fabrications:

1. The handrail gate shall meet all the safety requirements of the national, state, and local standards, regulations, and code requirements that specifically apply to this project, including OSHA. The gate shall be fabricated using 6063-T6 extruded aluminum, and as otherwise shown on the Drawings. Gate hardware shall meet all specified requirements. Manufacturers who may provide hardware meeting these Specifications are: Craneveyor Corp., South El Monte, CA; Julius Blum & Co., Inc. Carlstadt, NJ; Thompson Fabricating Co., Birmingham, AL; or approved equal. Provide test reports to show that all gate hardware meets minimum safety strength requirements for handrails and guard rails.

2. The handrail picket panels and clamps shall be fabricated using solid bar 6063, 6105, or 6061 extruded aluminum as shown on the Drawings with finishes specified. All fasteners shall be stainless steel.

3. Toeboards and accessories shall be fabricated as shown on the Drawings, or shall be molded or extruded by a handrail manufacturer providing equivalent appearance, strength, and safety properties to that shown, using 6063 or 6061 aluminum with finishes as specified, meeting all applicable state, federal, and Los Angeles Building Code requirements. All fasteners shall be stainless steel. Provide expansion and contraction connections between each post as shown or equivalent.

E. Embedded Items: All metal anchorages to be embedded in concrete shall be furnished and installed under this section and shall be as shown on the Drawings or as specified herein.

F. Finishes:

1. All exposed aluminum shall be clear anodized in accordance with the Aluminum Association AA-M32-C22-A41. All exposed prefabricated handrail and toeboard handrail, picket panel, and toeboard components, except stainless steel fasteners, shall be anodized after fabrication.

2. All complete rails, modules, and components shall be cushion wrapped to prevent them from being scratched and dented during shipment, storage, and installation. Wrapping shall be left intact, insofar as possible, until the railing is completely installed.

2.2 GALVANIZED STEEL HANDRAILS

A. General: Galvanized steel handrails shall be fabricated by one fabricator.

B. Steel railings materials shall be in conformance with the SSPWC Section 206-5.1.

C. Piping: 2-inch NPS with a 2.375-inch outside diameter and a 0.154-inch wall thickness minimum for all rails and posts.

D. Fittings:

1. All handrail fitting components; flanges, wall brackets, anchor plates, and similar accessories shall be hot-dip galvanized after fabrication. All anchor bolts and fasteners shall be stainless steel.

2. The handrail post bolted baseplate connector shall be fabricated from carbon steel meeting the minimum requirements herein specified and as shown on the Drawings. The insert shall be fabricated from pipe with a minimum wall thickness of 0.20-inch or from solid rod. Hot-dip galvanize assembly after fabrication, and provide surface preparation on insert for proper fit into post.

3. The handrail wall brackets shall be malleable iron, round top, similar to R & B Wagner No. 1765; Julius Blum No. 1382; or equal; galvanized, meeting all the dimensional wall/railing clearance requirements of national, state, and local standards, regulations, and codes, including OSHA.

E. Additional Specific Fabrications:

1. The handrail gate shall meet all the safety requirements of the national, state, and local standards, regulations, and code requirements that specifically apply to this project, including OSHA. The gate shall be fabricated using steel as specified hereinbefore for piping and as otherwise shown on the Drawings. Hot-dip galvanize after fabrication. Gate hardware shall be manufactured of Type 304 stainless steel. The hardware shall be similar in function and operation to Craneveyor Corp., South El Monte, CA, gate hinges with spring No. C4370b, gate latch No. C4369, and gate stop No. C4368; Julius Blum & Co., Inc., Carlstadt, NJ, Connectorail System, gate hinges with spring No. 782/3 with gate latch and stop No. 784; or approved equal.

2. The handrail picket panels and clamps shall be fabricated using solid bar steel meeting the minimum requirements herein specified and as shown on the Drawings. Hot-dip galvanize after fabrication. All fasteners shall be stainless steel.

3. Toeboards and accessories shall be fabricated as shown on the Drawings, using A 36 steel. Hot-dip galvanize after fabrication. All fasteners shall be stainless steel.

F. Embedded Items: All metal anchorages to be embedded in concrete shall be furnished and installed under Section [05500], "Miscellaneous Metalwork".

G. Galvanizing:

1. General: Zinc used for galvanizing shall be grade Prime Western conforming to ASTM B 6. Except as otherwise specified, materials shall be galvanized by the hot-dip, mechanical or electro-depositing process.

2. Requirements of Coating: The minimum weight of coating and other requirements shall be 2.0 ounces per square foot of surface area. The weight of coating shall be determined in accordance with ASTM A90, modified to determine the coating of each surface separately. All surfaces, when tested separately, shall meet the minimum requirement.

3. Galvanize in accordance with ASTM A 123 and A 386 after fabrication. The workmanship of zinc coating shall be in conformance with the SSPWC Section 210-3.3.

4. Test Coupon: Test coupons for determining the quantity and quality of the galvanizing shall be in conformance with the SSPWC Section 210-3.4.

2.3 ANCHOR BOLTS, FASTENERS, CONCRETE ANCHORS

A. Miscellaneous Fasteners:

1. Type 316 stainless steel elastic locknuts; Type 316 stainless steel flat washers; molded nylon flat washers; round head machine screws ((RHMS); Type 316 stainless steel, all as supplied by McMaster-Carr Supply Company, Los Angeles, CA; or equal.

2. Stainless steel bolts and nuts for bolting handrail to metal beams, unless otherwise shown, shall be ASTM A 193 and A 194, Type 316 with a minimum yield strength for bolts of 95,000 psi.

3. Anchor bolts, Type 316 stainless steel anchor bolt with a minimum yield strength of 30,000 psi, 5/8-inch minimum diameter with hex nuts, or size as shown.

4. Wedge anchors for exterior use and for interior use shall be 304 or 316 stainless steel, 3/4-inch diameter by 5-inch HILTI Kwik-Bolt, stud type, manufactured by HILTI, Inc., Stamford, CT; Wej-It, stainless steel bolts, 3/4-inch by 5-inch, completely assembled, manufactured by Wej-It Corporation, Broomfield, CO; or equal.

5. Wedge anchors have been limited to 5-inch lengths for use in 6-inch slab and wall thicknesses. Where anchors are to be used in thicker section, larger anchor lengths may be used. Load values for tension pullout with special inspection shall be 3,900 pounds minimum. Special inspection is required.

6. Concrete anchors in other sizes and quantity when used shall be based upon approved test reports with special inspection where required. Submit calculations and test data for review prior to use. Satisfy all applicable codes.

PART 3 -- EXECUTION

3.1 FABRICATION OF ALUMINUM HANDRAIL SYSTEMS

A. The work shall be performed according to approved shop drawings by workmen experienced in the fabrication and erection of aluminum railing systems of the type and quality specified. See the Drawings for other requirements.

B. Handrail post to be bolted to metal or concrete shall be furnished longer than needed and field cut to exact dimensions required to satisfy any vertical variations on the actual structure, or in lieu of field cutting provide an approved fitting containing provisions for vertical adjustment. The Detail Drawings require field fit-up. Shims or grout under baseplates shall not be used. Misfits shall be rejected.

C. The aluminum handrail system shall be completely free of all burrs, nicks, and sharp edges when the installation is complete. Welding shall not be permitted.

D. Coat ends of aluminum posts to be set in grout or concrete as specified in Section [09800], "Protective Coating".

E. The railing shall be erected in the field without cutting, drilling, welding, or tapping unless specifically approved by the ENGINEER.

F. No exposed welds, rivets, or screws shall be permitted unless specifically detailed on the plans.

G. Field welding of aluminum connections shall not be permitted. Welded connections shall be permitted only where indicated on the Contract drawing and on the approved shop drawings.

H. Welding shall conform to the SSPWC Section 304-2.1.2.

I. Railing panels shall be in conformance with SSPWC Section 304-2.1.2

J. For structures on curves, either horizontal or vertical, the railing shall conform to the SSPWC Section 304-2.1.2.

K. Completed aluminum railing units shall be anodized after fabrication and in conformance with the SSPWC Section 304-2.1.2.

3.2 FABRICATION OF GALVANIZED STEEL HANDRAIL SYSTEMS

A. Handrail post to be bolted to metal or concrete shall be furnished longer than needed and field cut to exact dimensions required to satisfy any vertical variations on the actual structure. The Detail Drawings require field fit-up. Shims or grout under baseplates shall not be used.

B. Cut pipe square within 2 degrees and to lengths within 1/8-inch.

C. Remove burrs from cut edges.

D. Form elbow bends and wall returns to uniform radius, free from buckles and twists, with finished surfaces smooth.

E. Close exposed ends of steel pipe by welding 3/16-inch thick steel plate in place or use prefabricated fittings.

F. Welding:

1. Miter and cope intersections of posts and rails within 2 degrees, fit to within 0.02-inch (0.5 mm) and weld all around.

2. Thoroughly fuse without undercutting or overlap.

3. Remove splatter, grind exposed welds to blend, and contour surfaces to match those adjacent.

G. Provide explosion prevention holes at closed ends of pipes.

H. Form and assemble joints which will be exposed to the weather so as to exclude water.

I. Repair of Defective Work: Remove defective work and replace with material that meets Specification requirements.

J. Repair of Damaged Zinc Coating: Zinc coating which has been field or shop cut, burned by welding, abraded, or otherwise damaged to such extent as to expose the base metal, shall be repaired and recoated by one of the following methods:

1. Hot-Dip Process: The damaged areas shall be thoroughly stripped and cleaned and a coating of zinc shall be applied by the hot-dip process.

2. Metalizing Process: The damaged area shall be thoroughly cleaned by blasting with sharp sand or steel grit. The blasted area shall lap the undamaged zinc coating at least 1/2-inch. Zinc wire containing not less than 99.98 percent zinc shall be used in the metalizing operation. A zinc coating shall be applied to the damaged area with a metalizing gun to a thickness of not less than 0.005-inch on the damaged area, and shall taper to zero thickness at the edge

of the blasted undamaged section.

3. Zinc Oxide-Zinc Dust Paint: The damaged area shall be thoroughly cleaned by wire brushing and all traces of welding flux and loose or cracked zinc coating removed prior to painting. The cleaned area shall be painted with two coats of zinc oxide-zinc dust paint conforming to the requirements of Military Specifications MIL-P-15145. The paint shall be properly compounded with a suitable vehicle in the ratio of one part oxide to four parts zinc dust by weight.

4. Proprietary Materials: Proprietary materials used to repair small areas shall be in conformance with the SSPWC Section 210-3.5.4.

3.3 INSTALLATION

A. Assembly/installation of handrail system shall be performed in strict accordance with manufacturer's written recommendations for installation and the details shown.

B. The railing shall be erected in conformance with the SSPWC Section 304-2.1.3.

C. The railing installation shall be in conformance with the SSPWC Section 304-2.1.3.

D. After erecting the railing, any abrasions or exposed steel shall be repaired as specified.

E. Protection from Entrapped Water: All exterior installations and interior installations subject to high humidity shall have provisions made to drain water from the railing system. When posts are mounted in concrete or when bends or elbows occur at low points, weep holes of 1/4-inch diameter shall be drilled at the lowest possible elevations, one hole per post or rail. Hole shall be drilled in the plane of the rail.

F. Expansion Joints:

1. Provide at intervals of not more than 24-feet on centers and at structural joints as hereinafter specified.

2. Provide slip joint with internal sleeve extending 2-inches beyond each side of joint. Provide slip joint gap of 0.2-inch to allow for expansion.

3. Fasten to one side using either adhesive or two blind rivets, set at 120 degrees and 240 degrees interval from top of pipe.

4. Locate joints within 12-inches of posts. Locate expansion joints in rails to also coincide with expansion joints in the structural walls and floors that support the railings.

G. Setting Posts:

1. Embedded:

a. Clean dust and foreign matter from sleeves or blockouts.

b. Moisten interior of hole and surrounding surface with clean water. Install Category II-B non-metallic grout as specified in Section 03315, "Grout".

c. Brace railing until grout sets.

2. Surface Mounted:

a. The post bolted baseplate connectors shall sit solidly on concrete, stair stringer, or

other material as shown on the Drawings. The use of shims, wedges, grout, etc. for handrail post alignment or any other reason will not be permitted.

b. The handrail posts shall be furnished longer than needed and then accurately measured in the field for correct length, cut and secured to the post baseplate connector as shown on the Drawings.

H. Posts and Rails:

1. Set posts plumb and aligned to within 1/8-inch in 12-feet.

2. Set rails horizontal or parallel to rake of steps to within 1/8-inch in 12-feet.

3. Posts and rails shall be all in the same plane. There shall be no projections or irregularities to present a hazard or prevent a user from sliding his hand continuously along the top rail.

I. Handrail Wall Brackets: Support wall rails on brackets, spaced not more than 6-feet on centers. Provide in-wall anchor backplates on solid blocking on stud walls.

J. Toeboard: Toeboards shall be accurately measured in the field for correct length (after handrail post installation), cut and secured to posts as shown on the Drawings. Provide toeboards at all handrails except where concrete curbs are furnished.

K. Handrail Gate: The handrail gate shall be installed to meet safety requirements.

L. Cleaning:

1. Wash thoroughly using clean water and soap. Rinse with clean water.

2. Do not use acid solution, steel wool, or other harsh abrasive.

3. If stain remains after washing, restore in accordance with recommendations of manufacturer, or replace handrails with an acceptable finish.

3.4 CLEANUP

A. Upon completion of installing the handrails and railings, clean up all waste materials and debris resulting from this operation and dispose of such waste materials and debris off the site.

(END OF SECTION)

SECTION 05530
FABRICATED GRATING

PART 1 -- GENERAL

1.1 THE REQUIREMENT

A. The CONTRACTOR shall furnish all tools, equipment, materials, and supplies and shall perform all labor required to complete the work necessary to furnish and install fabricated grating, grating supports, and stair treads as indicated on the Drawings and specified herein.

1.2 RELATED WORK SPECIFIED ELSEWHERE

A. Section 05300 Metal Decking and Open-Web Steel Joist

B. Section 05500 Miscellaneous Metalwork

C. Section 09800 Protective Coating

1.3 REFERENCE SPECIFICATION, CODES AND STANDARDS

A. Comply with the reference specifications of the GENERAL REQUIREMENTS.

1.4 CONTRACTOR SUBMITTALS

A. Submittals shall be made in accordance with the GENERAL REQUIREMENTS.

B. The following submittals and specific information shall be provided.

1. Product Data:

a. Catalog information and catalog cuts.

b. Manufacturer's specifications, to include coatings.

c. Special handling and storage requirements.

2. Installation instructions.

3. Shop Drawings:

a. Grating: Show dimensions, weight, and size, and location of connections to adjacent grating, supports, and other work.

b. Grating Anchorage: Show structural calculations and details of anchorage to supports to prevent displacement caused by traffic impact.

c. Grating Supports: Show dimensions, weight, size, location, and anchorage to supporting structure.

4. Quality Control Submittals:

a. Factory test reports.

b. Manufacturer's certification of compliance for specified products.

c. Fire Retardant: Independent laboratory test report of testing conducted on exact type of grating proposed and dated within 2 years of submittal date (not a resin test report).

d. Manufacturer's report that swaged cross bars, if used on grating, meet the requirements of these Specifications.

1.5 QUALITY ASSURANCE

A. Fabrication, installation, standard clearances, banding and tolerances shall be as follows:

1. Metal Bar Type Grating: In accordance with general recommendations of Metal Bar Grating Manual and Heavy-duty Metal Bar Grating Manual as published by National Association of Architectural Metal Manufacturers (NAAMM).

2. Fiberglass Grating: In accordance with the catalog data and referenced standards included in the catalog for the manufacturers specifically listed in this Specification section.

3. Aluminum: In accordance with the Aluminum Association Standards.

4. Metal Plank Type Grating: In accordance with the catalog data and referenced standards included in the catalog for the manufacturers specifically listed in this Specification section.

1.6 DELIVERY, STORAGE, AND HANDLING

A. Preparation for Shipment:

1. Insofar as is practical, factory assemble items provided hereunder.

2. Package and clearly tag parts and assemblies that are shipped unassembled in a manner that will protect the materials from damage, and facilitate identification and final assembly in the field.

B. Storage and Handling: In accordance with manufacturer's recommendations.

PART 2 -- PRODUCTS

2.1 GENERAL

A. Like Items of Materials: Provide end products of one manufacturer in order to achieve standardization for appearance, maintenance, and replacement.

B. Materials: Meet the following ASTM Specifications:

1. Bolts and Nuts:

a. Stainless Steel: Type 316.

b. Carbon Steel: A 307 or A 36.

c. Galvanized Steel: A 153, zinc coating for A 307 or A 36.

2. Bars and Shapes:

a. Stainless Steel: A 276, Type 316.

b. Steel: A 36, Galvanized or coated as specified.

c. Fiberglass

3. Plate, Sheet, Strip: stainless steel, A 167, Type 316 or fiberglass.

4. Flat Washers (Unhardened): F 844, use A 153 for zinc coating.

C. Design and Fabrication:

1. Meet dimensional requirements as shown or as specified.

2. Field measure areas to receive grating, verify dimensions of new fabricated supports, and fabricate to dimension required for specified clearances.

3. Section Length: Sufficient to prevent its falling down through clear opening when oriented in the span direction when one end is touching either the concrete or the vertical leg of grating support.

4. Depth of Grating: As shown.

5. Bearing of main bars on each support and end clearance of installed grating sections: as specified in the manuals, standards, and catalogue data referred to under Article 1.5, "Quality Assurance", hereinbefore.

6. Metal Cross Bar Spacing: 2-inch maximum, unless otherwise shown or specified.

7. Fiberglass Cross Bar Spacing: 1-inch maximum unless otherwise shown or specified.

8. Cross Bars: Flush with top of main bar and extend downward a minimum of 50 percent of the main bar depth.

9. Swaged Cross Bars:

a. Within 1/4-inch of top of grating with 1/2-inch minimum vertical dimension after swaging, and minimum before swaging dimension of 5/16-inch square.

b. Cross Bar Dimension After Swaging: Minimum 1/8-inch wider than the opening at minimum of two corners at each side of each square opening in main bar.

c. Tightly fit main bars and cross bars allowing no differential movement.

10. Do not use weld type cross bars.

11. Banding:

a. Same material as grating.

b. Band grating edges and openings in grating as specified in the manuals, standards, and catalogue data referred to under Article 1.5 "Quality Assurance", herein.

12. Metals for Embedment, or Seat Angles for Partial Embedment in Concrete: Type 316 stainless steel, unless otherwise shown or specified.

D. Grating Supports:

1. Seat angles and beams as shown.

2. Stainless steel Type 316, except hot-dip galvanized steel for galvanized steel grating specified herein, unless otherwise specified or shown.

3. Coordinate dimensions and fabrication with grating to be supported.

E. Grating Accessories: Anchor bolts, bolts, inserts, threaded anchor studs, wedge anchors, expansion anchors, adhesive anchors and as necessary for anchorage of grating to supports:

1. Stainless steel Type 316, except hot-dip galvanized steel after fabrication for galvanized steel grating specified herein; or as otherwise specified under grating type.

2. Fastener Capability: Firmly secure grating section to supports.

3. Use fastener clips and bolts in accordance with grating manufacturer's recommendations. Secure grating with at least four fasteners per grating section. Grating above access areas should be removable.

4. Provide stainless steel Type 316 threaded anchor studs, as fasteners for grating attachment to metal supports either not embedded or partially embedded in concrete, as manufactured by Nelson Studs Welding Co., Lorain, OH, Omark Industries, KSM Fastenings Systems Div., Seattle, WA, or Portland, OR., or equal.

5. Fastener For Grating Attachment To Fiberglass Supports:

a. Locate to coordinate with fiberglass supports and grating, and to fit between grating bars.

b. Same fiberglass resin as grating and supports, and bonded thereto in accordance with manufacturer's recommendations.

c. Fastener, Clip, and Anchor Assembly: Same fiberglass resin as grating, capable of securing grating section to fiberglass support.

F. Slip-Resistant Surface:

1. Bar Grating Steel or Aluminum: Uniform disbursement of aluminum oxide grit particles encapsulated in a metal matrix and metal bonded to substrate by electric arc spray process utilizing high purity aluminum as manufactured by IKG/Borden, Clark, NJ Aluminum Mebac. or equal.

2. Fiberglass Grating: As hereinafter specified.

3. Plank Grating Steel or Aluminum: As hereinafter specified.

2.2 FOOT TRAFFIC GRATING

A. Uniform Service Load: 100 psf minimum, unless otherwise shown.

B. Maximum Deflection: 1/4-inch, unless otherwise shown.

C. Banding: 3/16-inch minimum.

D. Aluminum Bar Type Grating:

1. Press-locked rectangular design, as manufactured by IKG/Borden, Clark, NJ, IKG/Borden Type F; or equal.

2. Swage locked grating, rectangular bar type, as manufactured by IKG/Borden, Clark, NJ, IKG/Borden Type FS, Seidelhuber Metal Products Inc., San Carlos CA; or equal.

E. Galvanized Steel Bar Type Grating: Press-locked, deep rectangular cross bar design, as manufactured by IKG/Borden, Clark, NJ; or equal.

F. Fiberglass Bar Type Grating:

1. Fiberglass grating shall be molded or pultruded with polyester resin.

2. Molded Grating:

a. Skid-Resistant Surface: Grit adhesively bonded, manufacturer's standard.

b. Load bars in both directions with equal stiffness.

c. Square mesh.

3. Pultruded Grating:

a. Main bars joined by cross bars secured in holes drilled in main bars.

b. Cross Bars: Mechanically lock main bars in position, preventing movement.

c. Intersections: Bond using adhesive as corrosive resistant as pultrusion resin.

d. Support every main bar end a bearing length of at least 1-1/2-inches.

e. Skid-Resistant Surface: Grit adhesively bonded, manufacturer's standard.

4. Fire Retardance:

a. Flame spread less than 25 as measured by ASTM E 84.

b. Include combinations of aluminum trihydrate, halogen, and antimony trioxide in the resin system.

5. Color: Manufacturer's standard for resin system used; disperse pigment in the resin system.

6. Fasteners:

a. Provide as required for type of grating furnished.

b. Stainless steel Type 316 or Monel as recommended by manufacturer for corrosive environment use.

7. Cut Edges: Seal using same resin system used in grating.

8. Exterior Grating Exposed to Sunlight shall contain an integral inhibitor to screen out ultraviolet light.

9. Grating Support: as hereinbefore specified.

10. Manufacturers:

    a. Fibergrate Corp., Dallas, TX.

    b. IKG/Borden, Clark, NJ.

    c. Or equal.

G. Galvanized Steel Plank Style Safety Grating Walkway:

1. Hot rolled, pickled and oiled black steel, ASTM A 569 hot-dip galvanized after fabrication with serrated openings.

2. Manufacturers:

    a. USG Industries, Metal Products Div., Chicago, IL, Grip-Strut.

    b. IKG/Borden, Clark, NJ, IKG/Deck Span.

    c. Morton Manufacturing, Libertyville, IL, Open-Grip.

    d. Or equal.

H. Aluminum Plank Style Safety Grating Walkway:

1. Heavy-duty, with serrated openings.

2. Manufacturers:

    a. USG Industries, Metal Products Div., Chicago, IL, Grip-Strut.

    b. IKG/Borden, Clark, NJ, IKG/Deck Span.

    c. Morton Manufacturing Co., Libertyville, IL, Open-Grip.

    d. Or equal.

I. Stair Treads:

1. Material and Type: Same as grating material and grating type as provided for connecting walkway or work surface.

2. Nosings: Nonslip, abrasive on each tread along one long edge.

3. Carrier Plate or Angle: Provide at each end for connection to stair stringers.

4. Dimensions:

    a. Length: As shown.

    b. Width: As shown or manufacturer's standard as close as possible to width as shown.

5. Manufacturers: Same as for grating.

2.3 LIGHT VEHICULAR TRAFFIC GRATING

A. Design for vehicles with maximum load of 2,000 pounds per wheel, minimum wheel base and axle width of 4-foot 0-inch and as shown.

B. Space main bars at 1-3/16-inch center-to-center.

C. Banding: 1/4-inch.

D. Aluminum Bar Type Grating:

1. Press-locked deep rectangular cross bar design.

2. Manufacturers: IKG/Borden, Clark, NJ, IKG/Borden Type F; or equal.

E. Galvanized Steel Bar Type Grating:

1. Hot-dip galvanized after fabrication.

2. Cross Bar Size and Shape: As shown.

3. Manufacturers: IKG/Borden, Clark, NJ, IKG/Borden heavy-weld Type HWF or press-locked, rectangular cross bar, Type PJF; or equal.

2.4 HEAVY VEHICULAR TRAFFIC GRATING

A. Design for AASHTO HS 20-44 loading.

B. Banding: 1/4-inch.

C. Galvanized Steel Bar Type:

1. Heavy-duty, main bars spaced at 1-7/8-inch maximum center-to-center, suitable for AASHTO HS 20-44 loading.

2. Hot-dip galvanized after fabrication.

3. Size and shape as shown.

4. Manufacturer:

a. IKG/Borden, Clark, NJ, IKG/Borden heavy-weld Type HWF or press-locked, rectangular cross bar, Type PJF; or equal.

2.5 FABRICATION

A. General:

1. Exposed Surfaces: Smooth finish and sharp, well-defined lines.

2. Provide necessary rabbets, lugs, and brackets so work can be assembled in a neat, substantial manner.

3. Conceal fastenings where practical.

4. Drill metalwork and countersink holes as required for attaching hardware or other materials.

5. Weld Connections: Not permitted on grating except at banding bars.

B. Aluminum:

1. Fabricate as shown and in accordance with manufacturer's recommendations as accepted by the ENGINEER.

2. Grind smooth sheared edges exposed in the finished work.

3. Swage cross bars, if used, with equipment strong enough to deform cross bars as specified herein.

4. Eliminate any loose cross bar intersections on swaged grating.

C. Galvanizing and Repair: Hot-dip galvanized after fabrication as specified in Section 05500 "Miscellaneous Metalwork".

D. Foot Traffic Grating: Any single grating section, individual plank, or plank assembly shall not be less than 1.5 feet or greater than 3 feet in width or weigh more than 150 pounds, unless otherwise shown on approved shop drawings.

E. Light Vehicular Traffic Grating: Any single grating section, individual plank, or plank assembly shall not be less than 1.5 feet or greater than 3 feet in width (except 3/8-inch thick bearing bar grating), or weigh more than 150 pounds, unless otherwise shown on approved shop drawings.

F. Heavy Vehicular Traffic Grating:

1. Minimum Width of Grating Sections: 2 feet, regardless of length and weight.

PART 3 -- EXECUTION

3.1 PREPARATION

A. Electrolytic Protection:

1. Where aluminum will be in contact with dissimilar metals, other than stainless steel, or is to be embedded in masonry or concrete, protect surfaces as specified in Section 09800, "Protective Coating".

2. Allow paint to dry before installation of the material.

3. Protect painted surfaces during installation.

4. Should coating become marred, prepare and touch up surface per paint manufacturer's instructions.

3.2 INSTALLATION

A. Provide equipment for lifting and placing as necessary.

B. Install in accordance with accepted shop drawings, and as shown and as specified.

C. Install plumb or level as applicable in locations as shown.

D. Anchor grating securely to supports to prevent displacement from traffic impact.

E. Completed Installation: Rigid and neat in appearance.

F. Commercially Manufactured Products:

1. Install in accordance with manufacturer's recommendations as accepted by the ENGINEER.

2. Secure grating to support members with fasteners.

3. Welding is not permitted.

4. Fasteners: Field locate and install, except for fiberglass supports.

5. Permit each grating section or plank style grating assembly to be easily removed and replaced.

G. Clearance between ends of grating sections and vertical surfaces of supports or concrete walls are not to exceed those specified.

H. Replace grating sections not meeting specified or detailed dimensional requirements.

3.3 CLEANUP

A. Upon completion of installing the fabricated grating, clean up all waste materials and debris resulting from this operation and dispose of such waste materials and debris off the site.

(END OF SECTION)

SECTION 05700
PREFORMED METAL PANELS

PART 1 -- GENERAL

1.1 THE REQUIREMENT

A. The CONTRACTOR shall furnish all tools, equipment, materials, and supplies and shall perform all labor required to complete the work as indicated on the Drawings and specified herein.

B. This section covers the design, furnishing, fabrication, and installation of a prefinished metal panel system with supplemental metal framing, complete with matching preformed trim accessories and closures to form a complete, weathertight system.

1.2 RELATED WORK SPECIFIED ELSEWHERE

A. Section 05400 Cold Formed Metal Framing (Metal Stud).

B. Section 05500 Miscellaneous Metalwork.

1.3 REFERENCE SPECIFICATIONS, CODES AND STANDARDS

A. Comply with the reference specifications of the GENERAL REQUIREMENTS.

B. Comply with the current provisions of the following Codes and Standards.

1. Codes:

LABC City of Los Angeles Building Code

California Administrative Code, Title 24

2. Commercial Standards:

Applicable ASTM Standards

AISC Specification for the Design, Fabrication and Erection of Structural Steel for Buildings.

1.4 CONTRACTOR SUBMITTALS

A. Submittals shall be made in accordance with the GENERAL REQUIREMENTS.

B. The following submittals and specific information shall be provided.

1. Detailed design drawings signed and stamped by a civil or structural ENGINEER licensed in the State of California.

2. Erection drawings, including accessories and method of installation, including reinforcement.

3. Locations, dimensions, material thickness, finishes, profiles, fastener types, accessories, and details of construction.

4. Samples of finishes and colors for selection.

5. Manufacturer's installation instructions.

6. Research Reports to meet Los Angeles Building Department Requirement.

1.5 QUALITY ASSURANCE

A. The manufacturer shall be regularly engaged in the production of preformed prefinished metal panels.

B. The erector shall have a minimum of three years experience in the erection of preformed metal panels for projects of similar size and difficulty.

C. The metal panel system, including supplemental framing and connections indicated on the Drawings, represents the minimum construction requirements. The manufacturer shall verify the panel system design, including supplemental framing and connections, meets the requirements of the contract documents and applicable codes, and shall provide any additional labor and materials necessary to meet the design conditions.

D. The metal panel system, including supplemental framing and connections, shall comply with the CITY of Los Angeles Building Code (LABC); California Administrative Code Title 24; and AISC Specification for the Design, Fabrication and Erection of Structural Steel for Buildings. The metal panel system, including supplemental framing and connections, shall resist, in addition to initial handling and erection loads and dead loads, the following forces:

1. Wind pressure and load combinations relative to panel system design in accordance with the LABC.

2. Seismic loads relative to panel system design shall be in accordance with the LABC.

E. Provide panel system connections to accommodate building movement. Provide adjustment to accommodate misalignment of structure without permanent distortion, damage to components, racking of joint connections, breakage of seals, or moisture penetration.

1.6 PRODUCT HANDLING

A. Inspect preformed prefinished metal panels upon delivery to site. Unload and store in careful manner. Protect corners and edges of panels. Reject and replace damaged panels.

PART 2 -- PRODUCTS

2.1 MATERIALS

A. Panel System: Provide preformed metal panel system as fabricated by Conspec Systems Inc., (Tech Wall), Paller/Goldstein, E.G. Smith Construction Products, HH Robertson, Inc. Products, Inc., AlumaTech, or equal, specifically designed for structural integrity and concealed attachment.

B. Panel Material: Per Plan.

C. Trim and Accessories: Match panel system.

1. Provide concealed clip type fasteners as recommended by panel manufacturer.

2. Provide gaskets and silicone-type sealants as recommended by panel manufacturer.

3. Factory form and fabricate curved trim and flashing assemblies with continuous snap lock seam to avoid exposed fasteners.

D. Finish: Finish metal surfaces of panels and accessories per plan. Color and finish as selected by ENGINEER.

E. Supplementary Framing: Provide in accordance with requirements of Section 05500, "Miscellaneous Metalwork".

F. Protection: Isolate aluminum from alkaline materials (i.e., concrete) per the requirements of Section 09800, "Protective Coating". Protect aluminum against galvanic attack by dissimilar metals by preventing contact with such surfaces with a heavy coat of bituminous paint (complete coverage of contact area) or by separating the contact surfaces with a preformed synthetic pressure-sensitive chloroprene tape. Protect surface finishes from damage during fabrication, storage, erection, and after completion of work.

2.2 FABRICATION

A. Panels: Field measure before completion of panel fabrication. Custom fabricate panels in width, length, and radii to conform to intent of Drawings. Buckstays (stiffeners) may be applied to backside of panels to maintain flatness. Provide for concealed fasteners.

B. Panel Joints: Provide nominal 3/8-inch wide joints at end of long panel direction. Determine joint width at end of short panel direction by panel size and fastening system. Design joints to allow for individual panel removal and replacement without damaging surrounding panels.

C. Supplemental Framing: Provide supplemental framing as indicated on drawings and as required to comply with the Design Requirements.

D. Tolerances: Comply with **"Aluminum Standards and Data.".**

2.3 EXAMINATION

A. Existing Conditions: Before beginning installation, examine supporting members for correct layout. Beginning of work means acceptance of existing conditions by installer.

PART 3 -- EXECUTION

3.1 GENERAL

A. Installation: Systematically install preformed prefinished metal panels and accessories in accordance with manufacturer's recommendations and approved Shop Drawings. Carefully fit and fasten to adjoining construction and adjoining panels. Avoid field cutting.

B. Provide supplemental metal framing and supports indicated on drawings, as required to comply with Design Requirements, and in accordance with manufacturer's recommendations.

3.2 PROTECTION OF COMPLETED WORK

A. Protect installed panels from damage. Replace damaged panels.

3.3 CLEANUP

A. Upon completion of the installation of the preformed metal panels, cleanup all waste materials and debris resulting from this operation and dispose of such waste materials and debris off the site.

(END OF SECTION)

SECTION 06100
ROUGH CARPENTRY

PART ONE - GENERAL

1.1 DESCRIPTION

A. All rough carpentry work indicated on the Contract Drawings and as hereinafter specified, including:

1. Blocking and nailers and framing anchors.

2. Miscellaneous wood, nails, screws and other rough hardware indicated on the Drawings and required for complete and proper installation.

B. **Related Sections:**

1. Documents affecting work of this Section include, but are not necessarily limited to the GENERAL CONDITIONS, SUPPLEMENTARY CONDITIONS and Sections in DIVISION 1 - GENERAL REQUIREMENTS of these Specifications.

2. Concrete Formwork in Section 03100.

3. Finish Carpentry in Section 06200.

4. Architectural Woodwork in Section 06400.

5. Custom Casework in Section 06410.

1.2 QUALITY ASSURANCE

A. Use adequate numbers of skilled workers who are thoroughly trained and experienced in the necessary crafts and who are completely familiar with the specified requirements and the methods needed for the proper performance of the work of this Section.

B. **Codes and Standards:**

1. In addition to complying with the pertinent codes and regulations of the Uniform Building Code with the City of Los Angeles 1992 Amendments, comply with the following:

a. "Product Use Manual" of the Western Wood Products Association for selection and use of products included in that manual;

b. "Plywood Specification and Grade Guide" of the American Plywood Association;

c. "Standard Specifications for Grades of California Redwood Lumber" of the Redwood Inspection Bureau for Redwood, when used.

1.3 GENERAL REQUIREMENTS

A. **Verification of Job Conditions:** Required and take field measurements as may be required. Report to the City Engineer or Consultant any discrepancies between the Drawings and job-site conditions, for further instructions.

B. **Coordination and Cooperation:** Do work of this Section in a fully coordinated and cooperative manner with work of other trades to provide complete and proper installation and to expedite the job without delays.

C. **Defective Work:** All work of this Section that is not set true to line, plane and elevation or is damaged or marred or is not in a condition to receive other trade work will not be accepted. Remedy remove or replace defective work to a first class condition as approved by the City Engineer or Consultant, at no added cost to the City.

D. **Clean-Up:** During the progress of the work of this Section, conform to provisions of Section 01710 in GENERAL REQUIREMENTS, keep the premises free of debris and waste resulting from the work of this Section. Upon completion, all surplus materials and debris shall be removed from the job-site.

1.4 SUBMITTALS

A. Comply with pertinent provisions of Section 01340 - SUBMITTAL in DIVISION 1 - GENERAL REQUIREMENTS.

B. Contractor shall submit Shop Drawings indicating location of backing, furring, nailers, blocking, etc. to the City Engineer for approval prior to start of Contracted Work. Contractor shall coordinate work of this Section with work of other trades if necessary.

1.5 PRODUCT HANDLING

A. **Delivery:** Deliver the rough carpentry materials to the job-site and store in a safe area, out of way of traffic and shored up off the ground surface, where directed by the City Engineer.

1. Identify framing lumber as to grades and store each grade separately from other grades.

2. Protect metal items with adequate waterproof outer wrapping and properly identify or label such items.

3. Use extreme care in off loading of lumber to prevent damage, splitting and breaking of materials.

B. **Protection:** Stack lumber to prevent warping and keep dry.

PART TWO - PRODUCTS

2.1 GRADE STAMPS

A. Identify framing lumber by the grade stamp of the West Coast Lumber Inspection Bureau, or such other grade stamp as is approved in advance by the City Engineer or Consultant.

B. Identify plywood as to species, grade, and glue type by the stamp of the American Plywood Association.

C. Identify other materials of this Section by the appropriate stamp of the agency approved in advance by the City Engineer or Consultant.

D. Conform to the Uniform Building Code with the Los Angeles City 1992 Amendment, Section 2505.

2.2 MATERIALS (As Applicable)

A. Provide materials in the quantities needed for the work shown on the Drawings and meeting or exceeding the following standards of quality at the time of delivery:

1. Furnish lumber manufactured to comply with PS20 "American

Softwood Lumber Standards" and with applicable grading rules of Inspection Agencies certified by the American Lumber Standards Committee (ALSC) Board of Review.

B. Seasoning:

1. Rough lumber to be air dried and well seasoned to have average moisture content not to exceed 19 percent.

2. Finish lumber to be kiln dried as closely as practicable to have an average moisture content not exceeding 12 percent.

2.3 PRODUCTS

A. Blocking and Nailers: Douglas Fir, "Construction" grade, pressure treat with chromate zinc chloride.

B. Plywood: Conform to U.S. Product Standard P.S. 1-83 and U.B.C. Standard 25-9. Plywood shall be grade-marked by the American Plywood Association (APA), Pittsburgh Testing Laboratories (PTL) or Timber Engineering Company (TECO). Plywood shall be exterior grade, structural.

C. Nails, Screws, and Lag Screws: Commercial Standard.

D. Bolts and Washers: American Standard and U.B.C. Standard 25-17.

E. Treated Lumber: Cut surfaces in treated lumber shall be given a brush coat of approved type preservative.

F. Fire Retardant: All wood shall be treated with Baxter "Pyresote", Barnard "Bar Flame" or equal.

G. Building Paper: Kraft paper complying with Fed. Spec. UU-B-7902.

H. Joist Hangers: Simpson, Teco or equal as approved by the City Engineer or Architect.

I. Exterior Gypsum Sheathing: Butt edge, 2-inch thick, complying with ASTM C630.

J. Load Bearing Studs: 2-inch x 4-inch, Douglas Fir W.C.L.I.B. No. 1 grade.

K. Beams and Stringers: 5-inch and thicker, width more than 2-inch greater than thickness, Douglas Fire W.C.L.I.B. No. 1 structural beams and stringers.

L. Wall Sills: Treated Douglas Fir of W.C.L.I.B. grade for wall framing or Redwood C.R.A. Foundation grade as market or branded by an approved

agency of the Los Angeles City Department of Building and Safety.

2.4 MINIMUM SURFACING: (As Applicable)

A. **General:** All faces required to be left exposed; where specifically indicated on the Drawings or specified; where necessary to achieve proper connections to other members.

B. **S1E:** Blocking, studs, joists, rafters, purlins, bridging and other members in which uniform width must be maintained.

C. **S1S1E:** Plates, sills and other members in which uniform width and thickness must be maintained.

D. **S4S:** Exposed wood except where noted to have "Resawn" finish.

2.5 OTHER MATERIALS

A. Provide other materials not specifically described but required for a complete and proper installation, as selected by the Contractor subject to the approval of the City Engineer or Architect.

1. Glue: As suitable for required joining; water-resistant where subject to moisture conditions.

2. Stock Framing Connectors and Brackets: "Simpson", "Teco" or "Trimfast", galvanized metal of types and sizes indicated or required. Use nails furnished by the connector manufacturer.

PART THREE - EXECUTION

3.1 SURFACE CONDITIONS

Examine the areas and conditions under which work of this Section will be performed. Correct conditions detrimental to timely and proper completion of the Work. Do not proceed until detrimental conditions are corrected.

3.2 COMPLIANCE

A. Do not permit materials not complying with the provisions of this Section to be brought onto or to be stored at the job-site.

B. Promptly remove non-complying materials from the job-site and replace with materials meeting the requirements of this Section.

3.3 WORKMANSHIP

A. **Produce joints** which are tight, true and well nailed, with members assembled in accordance with the Contract Drawings and with pertinent Codes and Regulations.

B. **Selection of Lumber Pieces:**

1. Carefully select the members.

2. Select individual pieces to that knots and obvious defects will not interfere with placing bolts or proper nailing, and will allow making of proper connections.

3. Cut out and discard defects which render a piece unable to serve its intended function.

4. Lumber may be rejected by the City Engineer or Consultant, whether or not it has been installed, for excessive warp, twist, bow, crook, mildew, fungus or mold, as well as for improper cutting and fitting.

3.4 GENERAL FRAMING

A. **General:** Execute rough carpentry in accordance with the Uniform Building Code wit the Los Angeles City 1992 Amendments, Divisions 25 and 48 as applicable.

1. In addition to framing operations normal to the fabrication and erection indicated on the Drawings, install wood blocking and backing required for the work of other trades.

2. Set horizontal and sloped members with crown up.

3. Do not notch, cut, or bore members for pipes, ducts, or conduits, or for other reasons except as shown on the Drawings or as specifically approved in advance by the Consultant or City Engineer.

4. Make proper allowances for shrinkage where possible.

5. Splicing between bearings not permitted.

6. The contact surfaces of any member coming in contact with an exterior concrete floor slab or footing or masonry wall regardless of height above ground shall be treated wood or shall be painted with two coats of an approved preservative.

B. Bearings:

1. Make bearings full unless otherwise indicated on the Drawings.

2. Finish bearing surfaces on which structural members are to rest as to give sure and even support.

3. Where framing members slope, cut or notch the ends as required to give uniform bearing surface.

C. Wall Sills and/or Ledgers:

1. Set level and in straight alignment.

2. All sills on uneven concrete bases to be set in beds of dry pack mortar as specified in Cast-In-Place Concrete in Section 03300.

3. Anchor to concrete as indicated on the Drawings.

D. Stud Framing: (As Applicable)

1. Space studs 16-inches on center except where closer spacing is indicated or noted on the Drawings or is necessary at wall corners and openings. Space studs 12-inches on center behind ceramic tile wall surfacing.

2. Double studs at openings with inside studs cut to take headers.

3. Double top plate with joints lapped, at least 4-feet.

4. Place double headers on edge.

5. Lintels to be one piece full thickness of studs.

6. Strap studs together with substantial metal straps where sills or plates are cut to accommodate piping.

7. End studs of partitions adjoining masonry walls to be suitably bolted to masonry, as approved by the City Engineer or the Consultant.

E. Rafters and Ceiling Joists:

1. Space as indicated on the Drawings.

2. Splice only as indicated on the Drawings.

3. Tightly nail joints as indicated or as necessary.

4. Accurately set in place and nail securely to wall framing, beams and to hangers.

5. Level or slope bottom ceiling joists carefully.

6. Properly frame all openings in roof sheathing as indicated on the Drawings.

F. Wood Grounds:

1. Required: Continuous wood grounds for casings, base and other finish and as necessary for attachment of wood finish and millwork specified in Finish Carpentry and Custom Casework Sections.

2. Material: Douglas Fir, S4S.

3. Size: Not less than 1-1/4-inches wide, unless otherwise indicated on the Drawings of proper thickness for exact finish of plaster.

4. Install plumb, level, true to line and grade. Solidly wedged in positions to assure true planes of finished work. Securely nail to framing or to nailers set in masonry, as approved by the City Engineer.

G. Furring and/or Stripping (Where Occur):

1. Material: Douglas Fir Boards, S4S, sizes as noted on the Drawings.

2. Application:

   a. Accurate spacing and straight alignment.

   b. At right angles to framing or as otherwise indicated on the Drawings.

   c. Securely nail to framing at every bearing with suitable box nails to masonry or concrete as indicated on Drawings or other fastening as approved by the City Engineer.

H. Parapet Walls: Construct to uniform height as indicated, make rigid, plumb and straight-line complete with block as necessary to receive sloping framing for eaves. Top surface of top plate shall slope towards flat roof area for

drainage and make ready to receive subsequent work.

I. <u>Eave Framing</u>:

1. Size and spacing of joists shall be as indicated on the Drawings.

2. Joists shall be set in place with bottom surfaces carefully leveled and shall be securely anchored to exterior wall framing and to tile roof framing and make ready for lathing and plastering as indicated on the Drawings.

J. <u>Roof Crickets and Saddles</u>:

1. Materials: Douglas Fir Boards S4S for framing; softwood plywood Structural I C-C Exterior DFPA, 2-inch thick for sheathing.

2. Installation: As indicated on the Drawings to the established lines and grades or elevations to assure proper roof drainage. See Roof Plan and "Roof Sheathing" as hereinafter specified.

K. <u>Roof Sheathing</u>:

1. Material: Softwood plywood, Structural I C-C Exterior DFPA, size and of thickness indicated on the Contract Drawings.

2. Installation:

   a. As indicated on the Contract Drawings.

   b. Nail panels securely to supports in accordance with Nailing Schedule on the Drawings.

   c. End Joints: Over and parallel to supports; stagger as indicated on the Drawings.

   d. Nailing: As indicated in Nailing Schedule on Drawings. Nail plywood sheets tight and drive nails flush.

   e. Cracks and Holes: Cover with sheet metal as necessary for application of roofing and waterproofing.

L. <u>Roof Platforms for Mechanical and/or Electrical Equipment</u>: Construct as indicated on the Drawings on top of the roof sheathing; make top plywood surface level and ready to receive waterproofing felts, sheet metal covering and mechanical and/or other equipment.

M. <u>Wood Curbs</u>: Construct as detailed on the Drawings; make top of curb

level, unless otherwise detailed.

N. First or Second Floor Sheathing: (As Applicable)

1. Material: Softwood plywood Structural I C-D, Interior DFPA (exterior glue).

2. Installation: Securely nail to supports in accordance with nailing schedule indicated on the Drawings. Drive nails tight and flush. Securely butt plywood edges to allow for proper installation of moisture barrier material and lightweight concrete fill.

O. Hose Tower Sheathing (Ladder Rest): (on Fire Department Projects)

1. Material: Softwood plywood, Structural I C-C Exterior DFPA, 3/4-inch thickness.

2. Installation: As indicated on the Drawings.

P. Wood Nailers:

1. Required: For cap of building masonry walls and elsewhere as noted on the Drawings.

2. Materials: Pressure treated lumber, sizes, and shapes as indicated on the Drawings.

3. Installation: In level position, tightly bolt in place with nuts or heads countersunk and make ready for receiving sheet metal copings; as indicated on the Drawings.

Q. Support Beams:

1. Required: As necessary and as indicated for support of steel and other items.

2. Material: Douglas Fir beams, sizes as indicated on the Drawings.

3. Fabrication and Installation: As indicated on the Drawings, securely anchor in place to floor or ceiling framing, and make ready to receive and support steel items.

R. Plywood Backing:

1. Required: For supports for Mechanical and/or Electrical equipment on walls.

2. Material: 3/4-inch plywood "B-D" grade; sizes as noted or indicated on the Drawings.

3. Installation: At location indicated on the Drawings; bolt to structural framing so as to bear weight of equipment; countersink all fasteners.

S. Wall Diaphragm Sheathing:

1. Required on inside surfaces of exterior wall framing and on interior partition framing where indicated on the Structural Drawings for lateral stability of walls.

2. Material: Plywood panels of size and thickness as noted on the Structural Drawings and specified in Paragraph 2.03 of this Section.

3. Installation: Panels shall be applied directly to stud framing with long dimension of panels horizontal and with all edges bearing against wood studs and blocking extending from floor up height as indicated. Panels shall be staggered. Nailing shall be as noted. Where panels contact intermediate studs nail panels thereto with nails at 10" O.C. or as otherwise directed by the City Engineer.

T. Attic Partitions:

1. Shall conform to the Uniform Building Code with the Los Angeles City 1992 Amendments, Section 3201.

2. Frame Partitions with 2-inch x 4-inch studs spaced not over 24-inches on center.

3. Solidly sheath partition, extending from ceiling below to underside of roof sheathing with 2-inch thick plasterboard or plywood, 24-inches on center securely nailed in place, or as otherwise detailed on the Drawings.

4. Each partition to have a self-closing door of the same construction as the partition, top hinged and latched at bottom with a screen door catch. Locate door at center of partition or as otherwise located on the Drawings.

5. Provide continuous catwalks along full length of attic spaces; shall be two (2) 2-inch x 12-inch boards and secure to ceiling framing.

3.5 BLOCKING AND BRIDGING

A. Install blocking as required to support items of finish and to cut off concealed draft openings, both vertical and horizontal, between ceiling and floor areas.

B. **Bridging:**

1. Install wood cross bridging (not less than 2" x 3" nominal), metal cross bridging of equal strength, or solid blocking between joists where the span exceeds 8'-0".

2. Provide maximum distance of 8"-0" between a line of bridging and a bearing.
3. Cross bridging may be omitted for roof and ceiling joists where the omission is permitted by code, except where otherwise indicated on the Drawings.

4. Install solid blocking between joists at points of support and wherever sheathing is discontinuous. Blocking may be omitted where joists are supported on metal hangers.

3.6 ALIGNMENT

On framing members to receive a finished surface, align the finish subsurface to vary not more than 1/8" from the plane of surfaces of adjacent furring and framing members.

3.7 INSTALLATION OF PLYWOOD SHEATHING

A. **Placement:**

1. Place plywood with face grain perpendicular to supports and continuously over at least two supports, except where otherwise shown on the Drawings.

2. Center joints accurately over supports, unless otherwise shown on the Drawings.

B. **Protect Plywood** from moisture by use of waterproof coverings until the plywood in turn has been covered with the next succeeding component or finish.

3.8 FASTENING

A. General: Comply with provisions of the Uniform Building Code with the Los Angeles City 1992 Amendments, Table 25-Q in Division 25 and Table 48-C in Division 48 as applicable to Rough Carpentry.

B. Nailing:

1. Use only common wire nails or spikes of the dimension shown on the Nailing Schedule, except where otherwise specifically noted on the Drawings. Replacement or sinker nail is not allowed.

2. For conditions not covered in the Nailing Schedule, provide penetration into the piece receiving the point of not less than 2 the length of the nail or spike, provided, however, that 16d nails may be used to connect two pieces of 2" (nominal) thickness.

3. Nail without splitting wood.

4. Prebore as required.

5. Remove split members and replace with members complying with the specified requirements.

C. Bolting:

1. Drill holes 1/16" larger in diameter than the bolts being used.

2. Drill straight and true from one side only.

3. Do not bear bolt threads on wood, but use washers under head and nut where both bear on wood, and use washers under all nuts.

D. Screws:

1. For lag screws and wood screws, prebore holes same diameter as root of threads, enlarging holes to shank diameter for length of shank.

(END OF SECTION)

SECTION 06400
CUSTOM CASEWORK

PART ONE - GENERAL:

1.1 DESCRIPTION

A. Provide wood, plywood, nails, screws, and other items as needed, and perform necessary fabrication and installation of work **[**as shown on the contract Drawings**]** and as specified herein, including but not limited to the following:

1. Casework, cabinet, cabinet shelving, cabinet drawers, counter top.

2. Laminated plastic covered finish and/or conventional finish.

3. Filler panel, splash, trim and mountings associated with casework installation.

B. **Related Sections:**

1. Documents affecting work of this Section include, but are not necessarily limited to the GENERAL CONDITIONS, SUPPLEMENTARY CONDITIONS and Sections in DIVISION 1 of the Project Manual.

2. Cold-Formed Metal Framing in Section 05400.

3. Rough Carpentry in Section 06100.

4. Finish Carpentry and Architectural Woodwork in Section 06200.

5. Painting in Section 09900.

6. Mechanical and Electrical Work to be incorporated into the Casework in Divisions 15 and 16 respectively.

1.2 QUALITY ASSURANCE

A. **Workmanship:** All casework, shelving and countertops to be manufactured and installed by skilled craftpersons in compliance with W.I.C. (Woodwork Institute of California) construction types and grades hereinafter specified and detailed on the Drawings and on the reviewed Shop Drawings. All such work to be accurately fabricated, fitted, joined and expertly finished in accordance with measurements taken on the job-site.

1. Manufacturer must provide evidence demonstrating that they are a member of WIC and they can issue WIC certified compliance certificate or they have arranged for inspection by a WIC Inspector. Contractor shall submit proof of qualification in accordance with the General Conditions. Contractor shall not start any work including shop drawing until the manufacturer is approved.

B. **Defective Work:** All work, not true to line, not in satisfactory operating condition, improperly installed, damaged or marred will not be accepted. Remedy, remove or replace defective work as directed by the City Engineer subject to his approval at no cost to the City.

C. **Standards:** All applicable Sections of the "Manual of Millwork" and current supplements published by the Woodwork Institute of California (W.I.C.) for the construction types and grades hereinafter specified. All modifications to such standards shown on the Contract Drawings and reviewed Shop Drawings or specified shall govern.

D. **Qualification of Manufacturer and Installers:** Product shall be produced by manufacturers regularly engaged in the manufacture of similar items and with a history of successful production acceptable to the City. Use adequate numbers of skilled workers who are thoroughly trained and experienced in the necessary crafts and completely familiar with the specified requirements and methods needed for proper performance of the work of this Section.

F. **Certification:** Before delivery to the job-site, Manufacturer shall issue a W.I.C. "Certified Compliance Certificate" indicating that casework to be furnished for this project will fully meet all specified requirements of W.I.C. grades.

1. All work shall bear the W.I.C. Certified Compliance Label.

1.3 GENERAL REQUIREMENTS

A. **Verifications of Job Conditions:** Required prior to fabrication, take

necessary field measurements and report to the City Engineer any discrepancies between Contract Drawings and Project Manual and/or job conditions and await for further instructions. Coordinate with other trades for locations of the backings and supports. Inspect all backings and supports with the Inspector prior to covering the walls. Show all recorded measurements on the final shop drawings and record drawings.

B. **Coordination and Cooperation:** Required of work operations of this Section with other trades, including mechanical and electrical work to be integrated into the casework and installation without delaying work progress.

C. **Shop Inspection:** The City Engineer reserves the right to inspect the work in progress of manufacture or prior to delivery to assure quality of work.

D. **Clean-Up:** Required upon completion of casework and countertop installation, as a condition of final acceptance.

1. Visually inspect each installed casework unit and countertop and thoroughly clean all surfaces using the cleaning material recommended by the manufacturer of the finish being cleaned and carefully adjust all operating components for optimum operation.

2. Remove all rubbish, debris, tools and equipment and leave the immediate work areas and casework units and countertops in a clean and acceptable condition.

1.4 SUBMITTALS

A. **General:** Conform to the provisions in Section 01340 - SUBMITTALS in DIVISION 1 - GENERAL REQUIREMENTS of the Project Manual.

B. **Samples:**

1. Submit to the City Engineer 4 samples of each type of wood finish, complete data or manufacturer's full range of colors, patterns and textures. Each sample chip shall bear the manufacturer's name, color, pattern or texture designations.

2. Submit one completely assembled base cabinet and countertop, with doors, shelves and hardware showing construction finish and bearing W.I.C. Grade Stamp verifying compliance with reviewed shop drawings. Assembled base cabinet and top may be incorporated into the building at location indicated on the Contract Drawing.

C. **Shop Drawings:** Conform to provisions of Section 01340 - SUBMITTALS of the GENERAL REQUIREMENTS, showing list of materials, sizes, sections, elevations, construction details, assembly and installation in locations indicated on the Drawings, hardware, noting all modifications to the specified W.I.C. construction types and grades; as may be detailed or hereinafter specified.

1. Indicate grounds, backing, blocking, steel supports, utility penetration, mechanical items, electrical work including under counter light fixture and other items required for casework installations. Coordinate with other trades and submit any information pertinent to the woodwork. City Engineer may withhold the review of the submittal until such information is received by the City Engineer.

2. Affix to Shop Drawings W.I.C. Certified Compliance Grade Stamp indicating casework will be constructed in accordance with specified W.I.C. construction types and grades; include also a statement certifying that laminated plastic covered casework complies with the structural requirements of Title 24, State of California Code of Regulation.

3. Finish Schedules: Identify all finishes and their locations.

D. Proof of Qualification as specified herein.

E. **Manufacturer's Recommended Installation Procedures:** Such submitted procedures reviewed by the City Engineer will become the basis for City Engineer's in review and acceptance or rejection of actual installation procedures used on the work of this Section.

1.5 PRODUCT HANDLING

A. **Protection:**

1. Protect casework from moisture and damage in transit to the job-site.

2. Unload and store manufactured casework units and countertops in place where they would be protected from direct sunlight, excessive heat, rain and moisture and damage before installation.

3. Store flat on level surface in clean, dry, well ventilated area protected from sunlight.

4. Use all means necessary to protect custom casework of this Section

before, during and after installation and protect the installed work and materials of other trades.

B. **Identification:** All casework units and countertops delivered to the job-site for installation shall be properly identified as to where they are to be located in the structure.

C. **Replacements:** In the event of damage to work of this Section, immediately make all necessary repairs and replacements to the satisfaction of the City Engineer at no added cost to the City.

PART TWO - PRODUCTS

2.1 MATERIALS

A. **General:** In compliance with Sections of the W.I.C. Manual applicable to the Grade, Type, Style of casework construction as specified and noted on the Contract Drawings.

B. Total applied load (or weight) uniformly dispersed on an individual shelf shall not exceed 200 lbs. on any one shelf. Load capacity, 50 lbs. per square foot for school, hospital and library or book shelving, shall be applied.

C. **Core Material:** Veneer core plywood. Face grade C, back grade 1-2.

D. **Solid Lumber:**

1. Concealed Portions: Any species of sound dry and solid stock.

2. Semi-Exposed Portions: Solid Stock hardboard with specific gravity in excess of .37.

E. **Hardboard:** Factory finished, pressure sealed hardboard conforming to requirements of PS 58-74.

F. **Total Thickness of Casework and Countertop Components:** Countertop, 1 1/4 inch thick. Casework as detailed on the drawings and as noted in the W.I.C. Manual of Millwork.

G. **Laminated Plastic Covered Casework, Shelves, Doors and Countertops:** High pressure thermo setting plastic laminate conforming to N.E.M.A., LD 3 - Latest Edition and Section 15 of the W.I.C. Manual of Millwork.

1. Colors and Patterns: Color and pattern palette shall be as selected by the Architect from manufacturers standard colors, as noted on the Finish-Schedule on the Drawings.

2. Laminate Thicknesses: For surfaces other than countertops minimum .028-inch; for casework liners minimum thickness as noted in W.I.C. Manual; for shelves, countertops and splashes minimum .050-inch.

3. Glue: Type II Adhesive, water-resistant, rigid type of caseinalkaline or ureaformaldehyde formula conforming to PS 51-71.

4. Edge Banding: "T" type extruded tenite-butyrate, 1/16" minimum thickness with serrated leg 3/8" length.

H. Cabinet Finish Hardware:

1. Hardware shall be furnished and installed as required to provide a complete casework installation.

2. Exposed hardware shall be US-26 D Finish unless specified otherwise.

3. Locks shall be installed where shown on the drawings and keyed in accordance with keying schedules as directed by City Engineer.

4. All cabinets, unless otherwise specified, shall have the following finish hardware. Hardware manufacturers shall be as listed below, or shall be equivalent products by Stanley, Corbin, or equal.

	Condition	Hardware
a.	Wire Drawer & Door Pulls	4 inch center to center, clear anodized aluminum, Acceptable Manufacturers: 1. Stanley Hardware New Britain CT, 2. Engineered Products Company, Flint MI, 3. Triangle Brass Manufacturing Company Los Angeles

b.	Door Hinges (Concealed)	Blum "Module 90", 120° opening, half-overlay, free-swinging.**]**
c.	Drawer Slide:	
i.	All Drawer except file And pencil drawers (3/4 partial extension, 75 lbs. capacity rated.)	Knape & Vogt KV #1300, KV #1330
ii.	File Drawer Slide (Full extension, 100 lbs. capacity rated.)	Knape & Vogt KV 1460
iii.	Pencil Center Drawer (3/4 partial extension, 75 lbs. capacity rated.)	Knape & Vogt KV #8200
d.	Magnetic Catches	Stanley Epco #592
e.	Adjustable Shelf Standards And Brackets	Knape & Vogt KV #255 zinc/steel; or Stanley No. 798 Steel Zinc Plated
f.	Door Locks	National Lock Pin Tumbler Dead Bolt; #C8123
g.	Drawer Locks	National Lock Pin Tumbler Dead Bolt; #C8138
h.	Sliding Door Lock	National #8140
i.	Gang Lock	National #8090
j.	Sliding Glass Door Hardware	
i.	Door Track	Knape & Vogt KV #1092
ii.	Door Lock	Knape & Vogt KV #963

5. Miscellaneous hardware including, but not limited to the following: spikes, bolts, screws, lags, shields, straps, angles, cleats and other related items for fabrication and installation.

I. Keying System

1. Cylinder locks shall be keyed to key system and keying schedules as

directed by City Engineer or the Consultant. Cylinders shall be pinned and keys shall be cut at the lock company factory where records shall be established.

2. Key Material: Provide keys of nickel silver only, stamp Keys ADO NOT DUPLICATE.

3. Furnish three (3) change keys for each cylinder lock, a maximum of ten (10) change keys for keyed alike groups. Furnish five (5) master keys for each master group.

4. Contractor and Hardware Supplier shall meet with the City Engineer and the Consultant to finalize keying requirements and obtain final instructions prior to starting work. Upon completion of the work, Contractor shall properly identify all keys as to the project name and locations and deliver all keys along with a duplicate copy of key listing to City Engineer.

2.2 CUSTOM CASEWORK FABRICATION

A. Size: See floor plans and details on Contract Drawings.

B. Layout: See floor plans and details on Contract Drawings.

C. Accessories: As detailed on the Contract Drawings and reviewed Shop Drawings.

D. Materials:

1. Lumber: All exposed wood used in the manufacture of this furniture shall be selected from Northern grown hardwoods, properly air dried and then kiln dried to a final 5 to 6 percent moisture content. This lumber shall then be cooled and allowed to condition at least 30 days before machining. The lumber shall be kiln dried in a manner in which the maintaining of the desired moisture content is insured. The moisture content shall be controlled throughout manufacture so that the equipment arrives on the job-site at its end use moisture content.

2. Wood Species: All exposed wood shall be Douglas Fir Larch, free from all detrimental defects and selected for uniform grain and color. Hardwood finish grain on all casework shall match.

3. Plywood Construction: Plywood shall be constructed with an odd number of plies. All interior plies, except that the core or center ply

shall occur in pairs. The species, thickness and grain direction and be placed on opposite sides of the core. Exterior plies shall consist of a face ply and a back ply. The face ply and back ply shall be of a specie and thickness to provide a stress free balanced construction. The grain direction of each ply shall be at right angles (90 degrees) to the grain of the adjacent plies and the ends of the panel. All plies shall be manufactured free from blisters, wrinkles, laps and other defects.

4. High Pressure Laminate: The high pressure laminate shall consist of 0.050-inch thick sheet for horizontal surfaces and a 0.028-inch thick sheet for vertical surfaces having layers of fibrous sheet material, such as paper, impregnated with a thermosetting condensation resin and consolidated under heat and pressure. The resultant product shall have an attractive exposed surface that is desirable and resistant to damage from abrasion and mild alkalies, acids and solvents. Color and patterns of laminate as selected by City Engineer or Consultant from manufacturer's standard colors.

5. Cabinet Section: The side panels, back panels, sub-tops, shelves and drawer fronts shall be constructed of 3/4-inch core. No exposed edges.

   Framing construction shall be a combination of joining methods such as full mortising, gluing, rabbeting, glue blocks and screwing. The sub-tops shall be blind rabbeted to the side and the front panels. The front panel shall be rabbeted to the side panels. Stationary shelves shall be dadoed and glued to the side panels.

6. Full Suspension Drawers: Drawer sections shall be constructed of solid hardwood sides, back and front and hardwood veneer bottom. The sides, back and inside front shall be joined by means of half-lock joints. The bottom shall be routed into the inside front, sides and back and glued blocked. The drawer front shall be screwed to the drawer from the inside. Full extension slides with nylon rollers on teflon coated bearings shall be attached to drawer, support and casewall by means of wood screws.

7. Foot Rest: All adjustable bracket mounted foot rests shall be secured to the side panels and covered with a 1/8" min. thickness rubber padding.

8. Pilasters: Shelf adjustment shall be obtained by means of flush mounted pilasters with adjustment every half inch. The shelves shall be supported by means of shelf clips.

10. Tops: Top shall be 1-1/4-inch thick with a 0.050-inch high pressure plastic laminate face, plywood core. The finished edges of the top will be banded with high pressure laminate and in profile as indicated on Contract Drawings.

11. Back Splash shall be Square Butt Joint with a square self-edge, 4 inches high off the deck surface.

12. Ends: End panel assemblies shall be 1-3/16-inch thick, plywood core with all four edges of the panel banded with high pressure laminate.

13. Finish: High pressure laminate shall be submitted and approved by City Engineer or Consultant.

PART THREE - EXECUTION

3.1 GENERAL FABRICATION

A. General:

1. Work of this Section shall be fabricated in strict accordance with WIC Custom Grade, Type A, Frameless Casework Construction and details indicated on the Contract Drawings and reviewed Shop Drawings.

2. Shop fabricate casework units and countertops as complete sections of adequate size to permit easy handling, access to installation areas for assembly or required for setting in place and installing of closing pieces or components.

3. Make holes and/or cutouts necessary for mechanical and/or electrical work to be incorporated into the casework units and countertops as detailed or specified.

4. Exposed or filled fasteners through exposed plastic laminate surfaces is not allowed.

5. A color matched waterproof caulk shall be used at all square butt joints including splashes and return ends.

6. Caulking shall not exceed 1/16 inch.

7. Sink cut outs must be sealed with a water resistant sealer before sink rim is installed.

B. <u>HPDL Cabinets</u>:

1. Shop fabricate as complete units of adequate size to permit easy handling, access to installation areas for assembly or required setting in place and installing of countertops and closing pieces.

2. Cover casework interior with liner material; color to be provided by architect.

3. Shelves to be covered with HPDL on both sides and exposed edges plastic on both sides and exposed edges HPDL edgebanded.

4. Casework hardware hereinbefore specified in Subsection 2.1(I) to be installed by the casework manufacturer in accordance with reviewed Shop Drawings.

C. <u>Laminated Plastic Covered Countertops</u>:

1. Fabricate to type and sizes indicated on the Contract Drawings with 4-inch high back and side splashes and no drip leading edge. Rolled edges shall rise 1/8-inch above the counter surface.

2. Core material for counters and back splash shall be 3/4-inch, Veneer core plywood.

3. Make holes and/or cutouts as necessary for mechanical and/or electrical work to be incorporated into the countertop as detailed or specified.

4. Make joints with screw clip fasteners on not less than 8" centers. A water resisting mastic or glue shall be applied in the joints. Joints shall not occur at sink cutouts.

5. Metal sink mouldings shall be stainless steel Hudee, Kintrim T-Type Chromedge Sink-Lok complete with bolts and lugs or as otherwise detailed on the Drawings.

6. Cover countertop and splashes with “white” colored laminated plastic of the manufacturer.

7. Application of plastic laminate shall be in accordance with published specifications and recommended practices of the plastic laminate

manufacturer.

D. **Conventional Wood finish :** All exposed hardwood components shall be finished with one coat of lacquer sealer and two coats of finish lacquer. All unexposed materials such as backs, webs, back of tops and the like shall be sealed with one oil base prime coat. All semi-exposed wood surfaces such as drawer interiors shall be finished with one coat of sanding sealer and one coat of clear gloss lacquer.

3.2 INSTALLATION

A. **General:** All in accordance with reviewed Shop Drawings and Contract Drawings, to be installed by casework manufacturer or by an experienced person under the casework manufacturer's supervision.

B. **Preparation Work:** All grounds, backing, blocking, furring and other anchorages required for casework installation which become an integral part of a floor, wall, partitions shall be in place ready to receive the casework and countertops. Notify Inspector for inspection prior to wall closure and casework installation.

C. **Site Condition:** Casework and countertop manufacturer or installer shall examine the areas and conditions under which work of this Section will be installed.

1. Correct conditions detrimental to timely and proper installation of casework and countertops.

2. Do not proceed until detrimental conditions have been corrected at no added cost to the City.

3. Start of casework and countertop installation shall imply Contractor's acceptance of job conditions.

D. **Casework Installation:**

1. All casework units delivered to the job-site shall bear W.I.C. grade stamp verifying compliance with specified W.I.C. Construction types and grades.

2. Assembly: Joint, glue, nail or screw together casework in accordance with best practice of casework. Anchor casework to wood framing, blocking, masonry and/or concrete as detailed. Countersink and plug screw anchors as detailed. All fasteners to be concealed.

3. Install casework units in rooms noted on the Contract Drawings, in plumb, square and in aligned position with walls.

[E. <u>Laminated Plastic Countertop Installation</u>:

1. Secure countertop to base cabinets in level and aligned position with minimum four No. 10 x 1-1/4- inch round head wood screws per base cabinet. Provide additional screws at the front and back of each cabinet on both sides of countertop joints.

2. Countertop Joints: Make flush and hairline by cutting back each joint edge to 85 degrees and secure together using adequate number of "trite joint" fasteners or approved equal at 3-inch centers. All joints must be water tight.

3. Join countertop surfaces to adjacent vertical wall or other surfaces and fabricate edges to conform to manufacturer's recommendations or as otherwise detailed.

4. Where no back or side splashes are on countertops accurately scribe countertop edges to wall surfaces and caulk.

F. All base cabinet shall be fastened to wood or metal stud walls with minimum 4 - #14x3", phillip truss head, type 17 hard, zinc plated, self taping, full thread screws and to concrete or masonry walls with minimum 4-1/4"x3", slotted hex washer head, masonry/concrete screw head.

G. <u>Cleaning and Adjustment</u>: See Subsection 1.3D hereinbefore specified in this Section.

3.3 INSTALLATION OF CABINET HARDWARE:

A. Fit hardware according to the manufacturer's instructions.

B. Install hinges and drawer guides according to the recommendations of the manufacturer. Drawer pulls shall be centered on the drawers unless otherwise indicated.

C. Installer of finish hardware shall advise Contractor of final protection and maintain conditions necessary to ensure that work will be without damage or deterioration at time of acceptance.

3.4 COMPLIANCE

A. **Performance of Work:** The City reserves the right to request and pay for an inspection by a W.I.C. representative to determine that work of this Section has been performed in accordance with the specified standards.

B. **Non-Conforming Work:** If the W.I.C. representative determines that work of this Section does not comply, Contractor shall immediately remove non-conforming items and replace the with complying items at no added cost to the City and reimburse the City for the cost of the inspection.

(END OF SECTION)

SECTION 07110
MEMBRANE WATERPROOFING

PART ONE - GENERAL

1.1 SUMMARY

A. **Scope**: Furnish materials and perform all labor required to execute membrane waterproofing where shown on the Contract Drawings, as specified hereinafter and as necessary to complete the Contract, including, but not limited to these major items.

1. Waterproof of building walls and property lines below grade.

2. Waterproofing elevator pits, etc.

B. **Related Work**:

1. Documents affecting work of this Section include, but are not necessarily limited to, GENERAL CONDITIONS, SUPPLEMENTARY CONDITIONS, and Sections in DIVISION 1 - GENERAL REQUIREMENTS of these Specifications.

2. Fire Stopping in Section 07270.

3. Built-Up Roofing in Section 07552.

1.2 SUBMITTALS

A. Comply with pertinent provisions of Section 01340 - SUBMITTALS of DIVISION 1 - GENERAL REQUIREMENTS.

B. **Product Data**: Within 35 calendar days after the Contractor has received the City's "Notice to Proceed", submit:

1. Materials list of items proposed to be provided under this Section;

2. Manufacturer's specifications and other data needed to prove compliance with the specified requirements;

3. Manufacturer's recommended installation procedures which, when approved by the Consultant or City Engineer will become the basis for accepting or rejecting actual installation procedures used on the Work.

1.3 QUALITY ASSURANCE

A. Use adequate numbers of skilled workers who are thoroughly trained and experienced in the necessary crafts and who are completely familiar with the specified requirements and the methods needed for proper performance of the work of this Section.

B. Use a subcontractor currently approved in writing by the manufacturer of the approved waterproofing.

C. Cooperate as required in performance of the specified testing and inspecting.

D. **Approved Manufacturers and Type**: Specifications are for materials and application methods for Flintkote Spec. EMW-1, and establish the quality standard required. Fully equivalent systems by Bird, Celotex, Manville Corp. or U.S.G. are acceptable. Submit detailed material specifications and summary of quantities for comparison.

1.4 PRODUCT HANDLING

A. **Membrane Waterproofing Materials**: Deliver to the job-site in their unopened sealed and original containers bearing the manufacturer's name, brand name and batch number of the manufacturer, with seal intact until time for application. Dilution of waterproofing material not permitted. Paint thinner may be stored at the job-site only for cleaning and dry area where directed by the City Engineer and shall keep such areas in a safe and orderly condition free from oily rags, waste and empty containers. Contractor shall handle and store materials in a manner to prevent damage or contamination.

B. **Protection**: Use all means necessary to protect the materials of this Section before, during and after installation and to protect the work and materials of all other trades.

C. **Replacements**: In the event of damage, immediately make all repairs and replacements necessary to the approval of the Consultant or City Engineer at

no additional cost to the City.

PART TWO - PRODUCTS

2.1 MEMBRANE WATERPROOFING

A. Where indicated on the Drawings, and where otherwise required for proper waterproofing, provide "Bituthene 3000" or "4000" manufactured by W. R. Grace Co., or provide an equal system approved in advance by the Consultant or City Engineer.

B. For protection of the installed membrane waterproofing, provide "Bituthene Protection System" consisting of Bituthene protection board PB-4000 adhered with Bituthene protection board adhesive PBA-4000 applied at a rate of 250 to 350 sq. ft. per gallon.

or

A. **Asphalt Primer**: ASTM D41.

B. **Asphalt Emulsion**: ASTM D1187, Flintkote C-13-E.

C. **Glass Cloth**: ASTM D1668, Flintkote "Yellow Jacket".

D. **Protection Course**: FS HH-I-526C, Flintkote "Flintglas", or 3/8" thick gypsum board, or FS LLL-I-535A asphalt treated fiberboard.

E. **Summary of Materials per 100 Square Feet**:

Asphalt emulsion primer (1-1/2 gallons)	15 lbs.
First course C-13-E (3 gallons)	30 lbs.
Second course glass fabric	1 lb.
Third course C-13-E (3 gallons)	30 lbs.
Fourth course C-13-E (3 gallons)	30 lbs.
Approximate Total Weight (wet)	106 lbs.

2.2 OTHER MATERIALS

Provide other materials, not specifically described, but required for a complete and proper installation, as selected by the Contractor subject to the approval of the Consultant or City Engineer.

PART THREE - EXECUTION

3.1 SURFACE CONDITIONS

Examine the areas and conditions under which work of this Section will be performed. Correct conditions detrimental to timely and proper completion of the Work. Do not proceed until detrimental conditions are corrected.

3.2 INSTALLATION

A. Prepare surfaces and apply membrane waterproofing to the interior of planters (adjacent to structures) and the exterior of all building walls, property line walls and elevator pit walls below grade in accordance with the membrane waterproofing manufacturer's recommended installation procedures.

B. Support protection course until backfill is in place.

(END OF SECTION)

SECTION 07182
FLOORING/PAVING SEALER TREATMENT

PART ONE - GENERAL

1.1 SUMMARY

A. 1. All materials, tools, accessories and equipment and all labor required to apply "Sealer Treatment" to interior and exterior concrete and/or masonry floorings/pavings to protect against the penetration of water, sodium chloride salt and other environmental conditions [as indicated] or noted on the Contract Drawing and Specified hereinafter.

B. Related Sections:

1. Documents affecting work of this Section include, but are not necessarily limited to the GENERAL CONDITIONS, SUPPLEMENTARY CONDITIONS and Sections in DIVISION 1 - GENERAL REQUIREMENTS of these Specifications.

2. Concrete Work in DIVISION 3.

3. Masonry Work in DIVISION 4.

4. Above Grade Waterproofing Sealer Treatment in Section 07181.

9. Caulking and Sealants in Section 07920.

10. Lath and plaster in Section 09200.

12. Anti-Grafitti Coating Work in Section 9860.

13. Painting in Section 09900.

1.2 REFERENCE

A. American Association Of State Highway And Transportation Officials (AASHTO)

1. AASHTO T259 - Resistance Of Concrete To Chloride Ion Penetration.

2. AASHTO T260 - Sampling And Testing For Chloride Ion In Concrete And Concrete Raw Materials.

B. American Society For Testing And Materials (ASTM)

1. ASTM C 67 - Standard Test Methods Of Sampling And Testing Brick And Structural Clay Tile.

2. ASTM C 140 - Standard Methods Of Sampling And Testing Concrete Masonry Units.

3. ASTM C 642 - Standard Test Method For Specific Gravity, Absorption, And Voids In Hardened Concrete.

4. ASTM C 672 - Standard Test Method For Scaling Resistance Of Concrete Surfaces Exposed To Deicing Chemicals.

5. ASTM D 1353 - Standard Test Method For Nonvolatile Matter In Volatile Solvents, For Use In Paint, Varnish, Lacquer And Related Products.

6. ASTM D 1653 - Standard Test Methods For Water Vapor Transmission Of Organic Coating Films.

7. ASTM D 2047 – Static Coefficient Of Friction Of Polish-Coated Floor Surface As Measured By James Machine.

8. ASTM D 2369 - Standard Test Method For Volatile Content of Coatings.

9. ASTM D 3278 - Standard Test Methods For Flash Point Of Liquids By Small Scale Closed-Cup Apparatus.

10. ASTM D 3359 - Standard Test Methods For Measuring Adhesion By Tape Test.

11. ASTM D 4258 – Standard Practice For Surface Cleaning Concrete For Coating.

12. ASTM D 4262 – Standard Test Method For pH Of Chemically Cleaned Concrete Or Etched Concrete Surfaces.

13. ASTM D 4259 – Standard Practice For Abrading Concrete.

14. ASTM E 96 - Standard Test Methods For Water Vapor Transmission

Of Materials.

15. ASTM E 514 (or ASTM C 1389) - Standard Test Method For Water Penetration And Leakage Through Masonry.

16. ASTM G 23 - Standard Practice For Operating Light Exposure Apparatus (Carbon-Arc Type) With Or Without Water For Exposure Of Nonmetallic Materials.

17. ASTM G 26 - Standard Practice For Operating Light-Exposure Apparatus (Xenon-Arc Type) With And Without Water For Exposure Of Nonmetallic Materials.

18. ASTM G 53 - Operating Light- And Water- Exposure Apparatus (Fluorescent UV-Condensation Type) For Exposure Of Nonmetallic Materials.

19. ASTM G 155 - Standard Practice For Operating Xenon Arc Light Apparatus For Exposure Of Nonmetallic Materials.

C. Rilem Test Method No. 11.4 (also known as Rilem/Karstens Tube Field Test)– Measurement Of Water Absorption Under Low Pressure.

1.3 QUALITY ASSURANCE

A. **Definition**: The terms "waterproofing sealer or water sealer" shall mean any colorless, non-film forming, penetrating liquid that penetrates into treated material and provides resistance to penetration of moisture or water from the interior or the driving rain under normal weather conditions. Any waterproofing sealer, water sealer or material that may be considered as water repellent which provides only the protective film or coating on the surface of the treated material is not considered as penetrating sealer. The waterproofing sealer shall not be used in areas subject to hydrostatic pressure.

B. **Field Conditions**: Verify drawing dimensions with actual field conditions prior to bid opening and before start of work. Inspect related work and adjacent surfaces. Report to the City Engineer or Consultant any condition which would prevent proper execution of this work and await for further instructions. Start of Work of this Section shall imply Contractor's acceptance of surface condition as satisfactory.

C. **Pre-Installation Meeting:**

1. The Contractor shall coordinate a pre-installation meeting with the Manufacturer, Applicator, City Engineer, Consultant Architect and the Inspector prior to the shop drawing submittal and the beginning of any related concrete or masonry flooring or paving construction.

2. Review the proposal of sample panel locations, site preparation details, sealer installation details, application rates, testing procedures and all necessary coordination required between the waterproofing sealer treatment work and the work of other trades which could affect work to be performed under this section.

3. Convene additional pre-installation meetings when necessary for additional coordination.

D. <u>Preliminary Testing:</u>

1. Mock-up panels shall serve as the standards of quality for the waterproofing sealer works and to verify the application rates, the number of required coating for each sealer location as specified in the Contract Requirements and Contractor's submittals. Contractor shall demonstrate the waterproofing sealers will provide full protection without darken, mottle or discolor the surfaces.

2. Contractor shall not proceed with any demonstration until all necessary submittals have been submitted and reviewed, and each of the mock-up panels has been completed by the Contractor and approved by the City.

3. All demonstration shall be done in the presence of the Contractor, City Engineer, Consultant Architect, Manufacturer's Representative and the Inspector.

4. Unless specified otherwise, provide a mock-up panel for each of the flooring materials as specified in the Contract Document. The mock-up panels shall be 5 feet x 5 feet at locations as directed by the City Engineer.

5. Test, treat and clean all surface areas. Apply waterproofing sealer and allow to cure in conformance with the details approved in the submittals. Protect all surface areas until they are dry for at least 7 days.

6. Twenty (20) days after the completion of waterproofing sealer application, and the mock-up panels are totally dry, evaluate the final appearances. There shall be no change to substrate color or texture;,

no gloss, haziness or film created. Test the mock-up panels with Rilem Test Method No. 11.4 with pressure of 20 lbs./sq/ ft. which is equivalent to wind speed of 88 mph for a period of one hour. If any water is lost in the test, it shall mean there is water penetration and the waterproofing is inadequate. Contractor shall make necessary changes on the application rates, numbers of coatings and any installation details as needed, and resubmit them on the submittals for review. Retest all affected mock-up panel locations for water penetration and leakage resistance.

7. The approvals of mock-up panels and penetration tests do not relieve the Contractor of its responsibilities from any contract requirements or for any failure to perform the requirements of the Contract Documents.

8. Contractor shall perform additional tests for water penetration and leakage resistance, as part of work inspection as required in Part 3 of this Section, after the waterproofing sealer treatments have been completed on all structures.

9. Retain and protect all mock-up panels until the project is completed and accepted by the City.

E. **Applicator Qualifications**: Applicator to be skilled, and approved by the material manufacturer in writing to the City Engineer or the Consultant.

F. **Approved Manufacturer And Manufacturer Certification**: Manufacturer shall be able to show evidence that the firm has been engaged in producing such material for at least 5 years and that their product has satisfactory performance records of at least 5 years. Prior to the bid and start of installation of the work of this Section, and during progress of that work, secure visit to the job-site as often as necessary by an authorized representative of the manufacturer of the sealer material, who shall inspect and shall certify:

1. That proposed submittals and application rates are reviewed and conformance with the site conditions and contract requirements;

2. That the surfaces to which waterproofing sealers were applied were in a condition suitable for that application;

3. That the materials applied conform to the specified requirements;

4. That the materials were applied in complete accordance with the manufacturer’s current recommendations;

5. That the materials are compatible with all other materials required by the Contract including surface repair material, paint, sealant, and etc.

1.4 SUBMITTALS

A. **General**: Comply with provisions in Section 01340- SUBMITTALS in DIVISION 1 - GENERAL REQUIREMENTS of these Specifications.

B. **Certification**: Certificates shall be submitted in sequences, prior to the installation of the work of this Section and as a condition of its acceptance. Deliver to the City Engineer the certifications required under paragraph 1.3.F above.

C. **Shop Drawing, Samples and Product Data**: In addition to the provisions in Section 01340 – SUBMITTALS in DIVISION 1 - GENERAL REQUIREMENTS of these Specifications, the following shall apply:

1. Within 15 days after the Notice to Proceed, Contractor shall submit samples of waterproofing sealer materials along with manufacturer's data, application schedules and instructions to the City Engineer. The schedules shall include all surface types, their locations, the materials required for the surface preparation including all installation and cleaning details, recommended coverage rates for the waterproofing sealers, the numbers of coatings, and the drying time prior to application. The proposed coverage rates shall be supported by estimated absorption values from the Rilem/Karstens Tube Field Tests. All cleaning material and methods shall be supported by alkalinity and/or pH tests, and all submittals and testing data must be certified by the manufacturer. Contractor shall submit the field testing procedures, protection plans and all other safety measures.

2. Contractor shall also submit the material specifications including all material technical and safety data sheets, approvals from all local air pollution control jurisdictions, and shall note the percentages of solids contained in the proposed sealer materials.

3. Submit a list of accessories or equipment including spray equipment proposed for this work.

4. Preliminary Test Reports and Revised Shop Drawings - Contractor shall submit all testing data showing all mock-up panels are completely free of water penetration. In the event the Contractor is to revise the number of coatings and/or application rates to meet the Contract Requirement, Contractor shall resubmit Shop Drawings with revised information to City Engineer for review.

5. Final Testing Report - Contractor shall submit all testing data of locations as directed by City Engineer and Inspector.

1.5 SUPERVISION

Sealer applicator shall be approved in writing by the waterproofing sealer manufacturer; the Contractor shall deliver a copy of written approval to the City Engineer or the Consultant**]**. Start of sealer application shall be under the supervision of the sealer manufacturer. Contractor shall notify the manufacturer at least 48 hours in advance of starting application. The applicator shall use appropriated spray equipment as prescribed in approved submittals and meeting the approval of the material manufacturer.

1.6 EXTEND GUARANTEE

Contractor shall guarantee that treated surfaces will remain water and moisture tight for a guarantee period of two (2) years and agrees to furnish sufficient labor, materials and equipment to remove, repair or correct any waterproofing deficiencies resulting during the guarantee period Contractor shall make other necessary repairs including [the removal and reinstallation of furnitures and equipment] and [painting] at no added cost to the City. Leaks caused by structural cracks or movement or vandalism or Acts of God after the final acceptance are the exceptions to the guarantee. Material manufacturer shall further guarantee the waterproofing sealer material to satisfactorily perform for a period of two (2) years after final acceptance and agrees to furnish sufficient material to reseal the areas where failure occurs within the guarantee period without additional cost to the City. Guarantees shall be prepared by both the material manufacturer and the applicator and shall be approved by the City Engineer or the Consultant prior to final acceptance of the project.

1.7 PRODUCT HANDLING

A. **Sealer Materials**: Deliver to the job-site in their unopened, sealed and original containers bearing manufacturer's name, brand name and batch number of the manufacturer, with seal intact until time for application. Dilution of the waterproofing sealer material will not be permitted. Paint thinner may be stored at the job-site only for cleaning of tools. Contractor shall store materials in a safe, clean, well ventilated, dry and off the floor area away from heat and ignition sources, where the temperature will not be less than 50 degree F nor more than 85 degrees F, as approved by the City or the Consultant. Contractor shall keep such areas in a safe and orderly condition free from oily rags, waste and empty containers. Contractor shall handle and store materials in a manner to prevent damage or contamination.

B. **Protection**: Use all means necessary to protect the materials of this Section before, during and after installation and to protect the work and materials of all other trades. Protect all workers, passersby and building occupants from any contact with the product, mists, vapors or fumes.

C. **Replacements**: In the event of damage, immediately make all repairs and replacements necessary to the approval of the City Engineer at no additional cost to the City.

PART TWO - PRODUCTS

2.1 GENERAL

A. **Type**:

1. Waterproofing sealer shall be a ready-to-use (water or solvent based), breathable, non-yellowing, deep-penetrating, paintable with latex or oil based paints and stains, and volatile organic compounds (VOC) compliant solution. All concentrated waterproofing sealer must be factory diluted in manufacturing plant and delivered in a sealed container. Any concentrated waterproofing sealer to be diluted in applicator's plant or at the site is not acceptable. Material shall not stain, discolor and chemically react with neutral pH substrate. Waterproofing sealers shall produce a mechanical and chemical interlocking bond with the substrate to the specified depth of penetration. All waterproofing sealers shall comply with VOC limits of 250 grams per liter or VOC limits as shown below, whichever is more stringent. After applications as water or solvent evaporates, the waterproofing sealer shall penetrate in the pore surface and form a barrier to block any moisture penetration.

2. The waterproofing sealer shall be resistant to and shall be unaffected by sodium chloride salts either from the air or ocean spray and shall not break down from exposure to ultra-violet light.

3. The waterproofing sealer shall have coefficient of friction not less than 0.6 in conformance with ASTM D 2047 or meet the slip resistant requirements of the local governing authorities, whichever is more stringent.

B. Approved Material

1. Waterproofing sealer shall be oligomeric alkylakoxysiloxane, mixture of silane/siloxane, or acrylic based product with minimum active solid content of 20 percent by weight.

    a. Appearance: Clear liquid or White, milky liquid when wet.

    b. Average Depth Of Penetration: 1/2 - 3/8 inch minimum, for porous surfaces, 1/4 inch minimum for dense surfaces.

    c. VOC Content: Less than 250 grams per liter.

    d. Flash Point, ASTM D 3278: None for waterbased waterproofing sealers, not less than 160 degrees F for others.

    e. Density: 8.0 to 9.0 pounds per gallon.

    f. Performance Criteria

        (1) Water Penetration And Leakage Through Masonry, ASTM E 514 Percentage Reduction Of Leakage: 98 percent minimum.

        (2) Water Absorption (Repellency) Test, Percentage Reduction Of Absorption: ASTM 67, 97 percent minimum for brick, ASTM C 140, 90 percent minimum for concrete masonry; ASTM C 642, 90 percent minimum for hardened concrete.

        (3) Moisture Vapor Transmission: ASTM E 96 or ASTM D 1653, 90 percent minimum compared to untreated surfaces.

        (4) Resistance To Chloride Ion Penetration, AASHTO T259 and AASHTO T260, 90 percent minimum reduction.

        (5) Scaling Resistance, ASTM C 672, non-air-entrained concrete: Zero rating, no scaling, 100 cycles treated concrete.

        (6) Resistance To Accelerated Weathering, ASTM G 23 or ASTM G 53, testing 2,500 hours minimum: No loss in repellency.

(7) Drying Time Under Normal Conditions: One – two hours per 75 degrees F.

(8) Surface Appearance: No change to natural substrate color and surface texture, no gloss or haziness created and no film forming.

g. Approved Manufacturer

(1) Monochem Aquaseal Silane 20 manufactured by Monopole Inc., 466 Alger Street, Los Angeles, CA 90039, Tel: (818) 500-8585, www.monopoleinc.com.

(2) Or equal.

2. Repair, clean, and prepare surfaces in conformance with the manufacturer's application instructions and the requirements of this Section.

PART THREE - EXECUTION

3.1 INSPECTION

Examine the areas and conditions under which work of this Section will be applied. Correct conditions detrimental to timely and proper completion of the work. Do not proceed until unsatisfactory conditions have been corrected.

3.2 ENVIRONMENTAL CONDITIONS

A. **Weather And Substrate Conditions** – Determine moisture content of substrate meeting manufacturer's requirements. Do not proceed with application of waterproofing sealer under any of the following conditions, except with the written recommendations of manufacturer.

1. Ambient temperature is less than 10 degrees C (50 degrees F).

2. Substrate faces have cured less than one month or time period as specified in this Section.

3. Rain or temperature below 10 degrees C (50 degrees F) are predicted for a period of 24 hours before or after treatment.

4. Earlier than three days after surfaces are wet.

5. Substrate is frozen or surface temperature is less than 10 degrees C (50 degrees F) and falling.

3.3 EXAMINATION

A. Examine concrete and masonry surfaces to be treated to ensure that:

1. All visible cracks, voids or holes have been repaired and fully primed with materials as approved in Shop Drawing.

2. All mortar joints in masonry are tight and sound, have not been re-set or misaligned and show no cracks or spalling.

3. All surfaces including concrete shall be cleaned and free of any form-release agents, curing compounds, old paints, sealers or stains, and other matters that would prevent full penetration of the waterproofing sealer material by using the appropriate and approved pre-wash agents, cleaners and/or removers. All surfaces must be thoroughly rinsed with clean water and squeegeed until damp.

4. Moisture contents of flooring or paving do not exceed 15 percent when measured on a probe type electronic moisture register, calibrated for the appropriate substrate. A minimum of one reading shall be taken for each 200 square feet of each type of substrate.

3.4 SURFACE PREPARATION

A. **<u>Preparation</u>**:

1. Surfaces shall be properly sloped to drain, clean and free of dust, dirt, sand, stain, paint, sealer, epoxy, adhesive, sealant, detergent, heavy carbon, efflorescence, acid, alkaline, soil, oil, solvent, curing compound, form releasing agent, mold, mildew, dirt, bacteria, fungi, moss or any foreign matter that may interfere with proper adhesion of the waterproofing sealer. Surfaces shall be dry and cured to a degree satisfactory to allow enough pores to be opened to receive the specified waterproofing sealer in accordance with requirements specified herein.

2. Masonry Surfaces - Do not start waterproofing sealer until all joint tooling, pointing and masonry cleaning operations have been completed. Allow masonry to cure for at least 60 days to full designed strength under normal weather conditions before applying waterproofing sealer.

3. Concrete Surfaces - Do not start waterproofing sealer until all patching, pointing and cleaning operations have been completed and concrete has been cured a minimum of 60 days to full designed strength and dry under normal weather conditions.

4. Sealants - Do not apply waterproofing sealer until the sealants for joints adjacent to surfaces receiving waterproofing sealer treatment have been installed and cured.

    a. Waterproofing sealer work may precede the sealant application only if sealant adhesion and compatibility have been tested and verified by using substrates, waterproofing sealers, and sealant materials identical to those used in the work.

    b. Mask surfaces indicated to receive joint sealers, which would be adversely affected by the waterproofing sealer treatment where the treatment must be applied prior to the application of joint sealer.

B. <u>Protection</u>:

1. Contractor shall conform to the printed recommendations of the material manufacturer and shall not allow waterproofing sealer or any cleaning material to contact and damage existing and/or future planting area soils, plants, other concrete paving and building surfaces. Unless specified otherwise, provide masking or protective covers to protect all surfaces from overspray and damages during applications.

2. All freshly applied waterproofing sealers shall be protected by an approved protective system from inclement weather until fully dry.

3. Keep traffic from treated surfaces until all contract works have been completed.

3.5 APPLICATION

A. General:

1. Waterproofing Sealer shall be applied by skilled mechanics using methods and equipment approved by the Waterproofing Sealer Manufacturer.

2. Waterproofing Sealer Material shall not be applied to exterior surfaces if there is a chance of rain or the temperature is expected to fall below the specified temperature during the 24-hour period following application of the waterproofing sealer material.

3. Do not dilute or mix waterproofing sealer with any water, thinner, paint or other agent without the approval of the City Engineer.

B. Application Rate:

Applicator (Contractor) shall apply waterproofing sealers in accordance with the manufacturer's printed applications or instructions approved by the City Engineer; quantity of sealer and coverage rate as determined by the preliminary tests on the mock-up panels. The application rates set in below are for project cost estimating uses. The actual application rates shall not be less than the rates set in below. Contractor shall include all contingencies in the bid. Any increased application rates shall be done at no additional cost to the City.

1. Horizontal Surfaces (Porous Substrates) – Single coat. All factory mixed waterproofing sealer shall not exceed 1:10 dilution ratio (one gallon of concentrate to 5 gallons of water).

	Application Rates (sq. ft./gallon)
Concrete	
Lightweight	40-70

2. Horizontal Surfaces (Dense Substrates) – single coat. All factory mixed water sealer shall not exceed 1:14 dilution ratio (one gallon of concentrate to 5 gallons of water).

	Application Rates (sq. ft./gallon)

Concrete	
Precast Concrete	60-100
Poured Concrete	60-100
Concrete Brick	60-100
Fired Clay Brick	60-100

C. Application Method:

1. Spray Application: Each coat of waterproofing sealer shall be applied by commercial airless spray equipment using a nominal 20 psi nozzle pressure to obtain complete coverage. Hudson type sprayers shall not be used.

2. Comply with manufacturer's application instructions for applying sealers.

3. a. In porous surfaces, apply a light fog coat to break surface tension followed by a flood coat. The surface should remain wet for a few minutes and damp for over one hour. Remove pools or puddles that do not completely penetrate with a roller.

   b. In dense surfaces, apply enough waterproofing sealer in a single application to completely wet the surface without creating drips or puddles.

4. Avoid overlapping , adjoining work or dry areas, keep a wet edge. If a white deposit occurs during overlapping, wipe off with a damp cloth. Delay in removing deposit may result in the necessity of using mechanical cleaning methods.

5. Applicator shall indicate to City Engineer the areas covered when work is stopped. Contractor shall prevent damage to adjoining work and other property, and not do spraying during windy, wet, or excessively hot or dry weather conditions. Contractor shall provide drying time as specified between coats.

D. Water Test:

1. At a time not less than 20 days after completion of the waterproofing sealer treatment and before any installation of floor mounted items, installation of equipment, installation of furniture, painting, painting of traffic striping, the Contractor shall subject a representative

designated portion of each surface area to a Rilem Test Method No. 114 with a pressure of 20 lbs./sq. ft. which is equivalent to wind speed of 88 mph for a period of one hour.

2. Any loss of water during the test shall be as indication of water penetration. The Contractor shall apply additional coat of waterproofing sealer at no added cost to the City until no water is lost during the test. Testing of the application of the additional coats of waterproofing sealer shall be done at no added cost to the City. Contractor shall properly remove collect and dispose of all mastic adhesive and other testing materials in accordance with methods submitted and approved by City Engineer.

E. Reseal all surfaces that are affected by other installation.

3.4 CLEAN-UP

Keep the premises free from accumulation of waste materials or rubbish resulting from this work. Remove any overspray of waterproofing sealer material from other surfaces (not designated to be sealed) by approved methods avoiding damage to such surfaces. Remove any protective masking of adjoining work surface upon completion of Work of this Section. Remove and dispose of all mock-up panels after the project is completed and accepted by the City.

(END OF SECTION)

SECTION 07211
BUILDING INSULATION

PART ONE - GENERAL

1.1 SUMMARY

A. Provide thermal and sound insulation work located within the building framing and on inside of exterior masonry walls, in partitions, etc. at the job-site as indicated or noted on the Contract Drawings and in these Specifications.

B. **Related Sections:**

1. Documents affecting work of this Section include, but are not necessarily limited to the GENERAL CONDITIONS, SUPPLEMENTARY CONDITIONS and Sections in DIVISION 1- GENERAL REQUIREMENTS of these Specifications.

2. Lightweight Insulating Concrete Over Steel Roof Decking in Section 03520.

3. Metal Framing in Division 5.

4. Rough Carpentry in Section 06100.

5. Firestopping in Section 07270.

6. Rigid roof insulation on top of roof decks in Section 07552 - BUILT-UP ROOFING.

7. Gypsum Board Systems in Section 09260.

8. Acoustical Ceilings in Section 09510.

1.2 QUALITY ASSURANCE

A. **Labor:** Use adequate numbers of skilled workers who are thoroughly trained and experienced in the necessary crafts and who are completely familiar with the specified requirements and the methods needed for proper performance of the work of this Section.

B. **Certificate of Compliance:** Upon completion of this portion of the Work, complete and post a certificate of insulation compliance in accordance with pertinent requirements of governmental agencies having jurisdiction.

C. **Manufacturer:** Manufacturer shall mark insulation with the manufacturer's name or trademark; thermal resistance "R" value, insulation only and the thickness to obtain this "R" value. Markings shall be at no more than 8-foot intervals.

D. **Requirements of Regulatory Agencies:**

1. Identify each package with UL listing.

2. Foil facing shall be flame resistant and shall comply with ICBO requirements for condition of use. Flame spread rating shall be 25 or less.

3. Uniform Building Code with the Los Angeles City 1992 Amendments.

1.3 SUBMITTALS

A. **Product Data:** Submit the following to the City Engineer after award of Contract in accordance with provisions in SUBMITTALS SECTION 01340 in DIVISION 1 - GENERAL REQUIREMENTS of these Specifications.

B. **Certification:** Submit to the City Engineer "Certification" that materials and installation comply with the Project Specifications; also Energy Insulation Certification.

1.4 PRODUCT HANDLING

A. **Delivery:** Insulation materials to be delivered to the job-site in their original and properly marked and unbroken packages.

B. **Storage:** Store all materials at the job-site undercover, protected from weather, moisture and damage from any cause, with all labels intact and legible at time of installation.

1.5 INSPECTION

A. **Required:** By the City Inspector prior to closing-in of walls, lathing and other construction.

1.6 CLEAN-UP

A. **Required:** In addition to the provisions of Section 01710 - CLEANING in the GENERAL REQUIREMENTS of DIVISION 1, remove all surplus materials upon completion of work of this Section.

PART TWO - PRODUCTS

2.1 MATERIALS - General

A. **"R" Values: (As Applicable)**

1. For exterior wall construction plus insulation shall be equal to 11 or more.

2. For interior partition construction plus insulation shall be equal to 11 or more.

3. For under roof deck construction plus insulation shall be equal to 19 or more.

4. For inside surface of exterior and interior masonry wall construction plus insulation shall be equal to 11 or more.

B. **Thermal Insulation Materials:**

1. Batts and Blankets: Owens-Corning, Certainteed or equal, Fiberglass building insulation blankets or batts in 15-inch and 23-inch widths with foil facing vapor barrier on one side and extending to form stapling

flanges on both sides.

2. Batts and Blankets shall have a class "A" fire hazard classification, a flame spread rating not exceeding 20, a fuel contributed factor of 20, a smoke development factor of 0, when tested as per ASTM E84.

3. Batts and Blankets shall meet Fed. Spec. HH-1-521F, Type 3 and requirements of the Los Angeles City Department of Building and Safety and have a thermal conductivity "K" factor not exceeding 0.27 Btu.

C. **Thermal Insulation Board:** 1-7/16 inches thick solid rigid polyurethane foam board of 3 ft. x 4 ft. size having an "R" value of 11, shall be "U-thane 200" by the Upjohn Co., Torrance, California or equal.

D. **Building Insulation:** Owens-Corning, Certainteed or equal, Fiberglass 3 inch thick blankets or Batts with vapor seal Kraft paper on one face extending to form stapling flanges on both edges; width to fit between studs.

E. **Sound Insulation Materials:**

1. Batts and Blankets: Mineral wool fiber or fibrous glass with vapor seal backing paper, full thickness not less than 3-inches conforming to Federal Specification HH-I-521F, having a Class "A" classification, a flame spread factor not exceeding 25, a fuel contributed factor of 20, a smoke development factor of 0 when tested in accordance with ASTM E84.

    a. When in wood framing, vapor seal backing paper shall be Kraft paper with edges extending to provide stapling flanges, width of batt, or blanket to suit stud spacing.

    b. When in metal framing, batt or blanket shall be unfaced type and of width to suit stud spacing for friction fit in place.

2. Wood Fiber Sound Deadening Boards: 2-inch thick conforming to ASTM C208 Class "A" manufactured by U.S. Gypsum Co. or equal for use above suspended ceiling framing.

3. Sound Attenuation Blankets: U.S. Gypsum Co. "thermafiber" sound attenuation blankets, 24-inches wide, 2 inches thick x 48-inches long and having a 2 2 lb/cubic foot density, semi-rigid, paperless, spun mineral fiber blanket.

    a. Adhesive: Durabond 200 or 400 adhesive or equal as recommended by the insulation material manufacturer.

F. Thermal Insulation on Underside of Roof Structure:

1. Three (3) inch thick insulating mineral wool fiber batts or blankets with a vapor-seal backing paper, Fed. Spec., HH-1-521E as approved by the City Engineer and having a thermal conductivity "K" factor not exceeding 0.27 Btu.

2. Two (2) inch thick rigid preformed cellular urethane insulation board conforming to ASTM C591, Type I or II having a density of 1.7 lbs/cubic foot, grade 2 and self-extinguishing or Flintkote "ES-Foil Faced Urethane Insulation".

PART THREE - EXECUTION

3.1 SURFACE CONDITIONS

A. Required: Examine the areas and conditions under which work of this Section will be performed. Correct conditions detrimental to timely and proper completion of the work. Do not proceed until such detrimental conditions are corrected.

B. Remove or protect against, projections in the construction framing which may damage or prevent proper installation of the insulation.

3.2 INSTALLATION

A. **General:** Install work of this Section in strict accordance with the original design, requirements of governmental agencies having jurisdiction. (The Uniform Building Code with the City of Los Angeles 1992 Amendments) and the manufacturer's recommended installation procedures as approved by the City Engineer or the Consultant, anchoring all components firmly into position where indicated on the Contract Drawings.

B. **Locations: (As Applicable)**

1. Within wood studs in partitions separating all toilet rooms from other occupied rooms or areas and elsewhere indicated on the Contract Drawings.

2. Between wood joists and underside of roof framing.

3. On underside of roof construction when using insulation board materials specified above.

3.3 INSTALLATION OF BATTS AND BLANKETS

A. **Locations:** As noted in Subsection 3.2B above.

B. **Application (As Applicable)**

1. Completely fill spaces between framing members; snugly butt adjacent batts together; to provide continuous insulation between framing members.

2. Face vapor barrier or foil facing flanges of insulation material inward.

3. Secure thermal insulation foil facing flanges by stapling to framing members in a manner to provide adequate clearance between insulation and the finished construction, at intervals not exceeding 6-inches on center along such flanges.

4. Cut neatly to fit angles, irregular spaces, for proper fastening and tight insulation.

5. Split and wrapped around conduit, pipe, or other obstructions, as required to maintain continuity of installation.

6. Repair or replace any break or tear of the insulation as recommended by the insulation manufacturer.

7. Cut blankets to required length to extend from top of wall or partition to floor level, fasten to each stud secured in place by weaving horizontal galvanized light gage wire at 12-inch spacings or by stitch stapling the flanges together through web openings not to exceed 8-inches O.C.

8. Underside of roof framing: Restrain insulation to maintain a uniform plane and prevent sagging, using one of the following methods:

   a. 10 gauge galvanized wire with pointed ends spaced 6-inch O.C. between end supports.

   b. 18 gauge wire diagonal lacing stapled to framing members. Space not over 24-inches, stagger spacing on opposite member.

   c. Mesh (poultry wire) staple to framing members at 12-inches O.C.

9. Maintain clearances at heat producing devices such as recessed lighting fixtures, ballasts and HVAC equipment in accord with ANSI C1, National Electrical Code recommendations.

3.4 INSTALLATION OF THERMAL INSULATION BOARD

A. **Location:** Locate on the inside face of exterior masonry walls where indicated on the Contract Drawings.

B. **Materials:** Insulation board 1 7/16-inch or 2-inch thick and adhesives as hereinbefore specified.

C. **Preparation:** Masonry wall surfaces shall be dry and free from loose surface particles, grease, paint or other materials detrimental to adhesive installation of boards to wall surfaces. All wood furring strips shall be plumb properly spaced and tightly secured to wall surfaces as indicated with aluminum foil facing inward.

1. Report to the City Engineer or the Consultant any condition not satisfactory to receive insulation board and requiring correction by others.

2. Start of installation of insulation boards shall imply Contractor's acceptance of job conditions.

D. **Installation:** In accordance with manufacturer's printed instructions, except that wood furring strips and the gypsum plastering will be done by others.

1. Accurately cut boards to fit within wood furring strips (screeds).

2. Adhesively bond boards to masonry surfaces.

3. Set boards plumb, level, tightly against wall surface and flash with wood furring strips (screeds) and make ready for subsequent work.

3.5 INSTALLATION OF SOUND ATTENUATION BLANKETS

Attach blankets to wallboard backing with specified adhesive applied to wallboard and two beads of the adhesive to the blanket material located 1-inch from each end of the blanket or apply to wallboard surface in evenly distributed spots. Blanket to be firmly pressed in place against adhesive, between metal studs and shall fill all voids.

3.6 COMPLETION OF WORK

A. **Certificate of Compliance:** Upon completion of work of this Section, the Contractor and the Insulation Contractor shall execute "The Certificate of Compliance", certifying that the insulation has been installed in compliance with Article 5, Subchapter 1 of Title 25 of the California State Energy Code. Such "Certificate" shall be prominently posted in a conspicuous location within the building or on the job-site. Certificate shall be signed by both the Contractor and Insulation Contractor.

NOTE: Fill out the attached.
"Energy Insulation Certification"

B. **Protection and Clean-Up**: Protect insulation from damage until final acceptance by the City. Clean-up and remove all scraps and unused materials upon completion of the Work of this Section, as hereinbefore referenced in Subsection 1.6.

(END OF SECTION)

CITY OF LOS ANGELES, DEPARTMENT OF BUILDING AND SAFETY

ENERGY INSULATION CERTIFICATION

This is to certify that insulation has been installed in conformance with the current energy regulations, California Administrative Code, Title 25, State of California, in the building located at:

Number Street City

INSULATION SPECIFICATIONS

Ext. Walls: Thickness _____ R. Value

Ceilings: Batts: Thickness _____ R. Value
Blown: Thickness _____ R. Value

Floors: Thickness _____ R. Value

General Contractor: _____ License No.

By: _____ Title_____ Date

Insulation Contractor: _____ License No.

By: _____ Title _____ Date

DO NOT REMOVE
"Certificate of Compliance"

SECTION 07290
WATERPROOFING

PART ONE - GENERAL

1.1 SUMMARY

A. Provide all waterproofing where indicated or noted on the Contract Drawings and specified hereinafter, not limited to the following:

- Waterproofing exterior building walls below grade (hydrostatic pressure of 6-foot head).
- Waterproofing site retaining walls.
- Waterproofing shower and drying room floors over slab on grade.
- Waterproofing membrane under all toilet rooms, shower stalls and drying rooms, and under mop drain troughs.
- Waterproofing membrane over wood subfloors of drying and toilet rooms (except shower stalls).

B. Related Sections:

1. Documents affecting work of this Section include, but are not necessarily limited to the GENERAL CONDITIONS, SUPPLEMENTARY CONDITIONS and Sections of GENERAL REQUIREMENTS in DIVISION 1 of these Specifications.
2. Moisture Barrier Over Wood Subfloor to Receive Lightweight Concrete Fill in DIVISION 3.
3. Preparation of Concrete Surfaces to Receive Work of this Section in Section 03300.
4. Wood Nailers in Section 06100.
5. Built-up Roofing in DIVISION 7.

6. Above grade Waterproofing Sealer Treatment of Masonry Walls in Section 07210.

7. Sheet Metal Work in Section 07600.

8. Caulking and Sealants in Section 07920.

1.2 QUALITY ASSURANCE

A. Use adequate numbers of skilled applicators who are thoroughly trained and experienced in the necessary crafts and who are completely familiar with the specified requirements and the methods needed for proper performance of the work of this Section.

B. Use an applicator currently approved in writing by the manufacturer of the waterproofing system.

C. **Technical Services:** Contractor shall notify the manufacturer at least 72 hours prior to start of work to provide required technical services. Equipment used to apply the waterproofing material to be as prescribed by or meeting approval of the material manufacturer.

D. **Manufacturer's Certification:** Prior to start of waterproofing operations of this Section and during work progress, the manufacturer of the waterproofing material shall visit the job-site to inspect and shall certify the following:

1. That the surfaces to which the material was applied were in a condition suitable to receive the waterproofing materials.

2. That materials applied conform to the specified requirements.

3. That materials were applied in accordance with manufacturer's current recommendations.

1.3 SUBMITTALS

A. **General:** Comply with provisions in SUBMITTALS SECTION 01340 in DIVISION 1 - GENERAL REQUIREMENTS of these Specifications.

B. **Certification:** Upon completion of the work of this Section and as a condition of its acceptance, deliver to the City Engineer the certification required under the above paragraph 1.2D.

C. **Applicator:** Submit letter to the City Engineer or Consultant stating that the applicator is approved by the material manufacturer and that the work has been installed or applied in accordance with manufacturer's instructions, as shown or noted on the Contract Drawings and as hereinafter specified.

D. **Manufacturer's Recommended Installation Procedures:** When approved by the City Engineer, will become the basis for accepting or rejecting actual installation procedures used on the work.

E. **Manufacturer's Specifications** and other data needed to prove compliance with specified requirements.

F. **Materials List** of items to be provided under this Section.

1.4 EXTENDED GUARANTEES

A. **Guarantee Period:** Specified in Section 28 in GENERAL CONDITIONS shall be extended to two (2) years. Obtain written guarantees from each of the several applicators and file five (5) copies of same with the City Engineer or the Consultant as a prerequisite for final acceptance of the work.

1. Guarantee to be prepared by both the material manufacturer and the applicator.

2. Manufacturer shall further guarantee the material to perform as specified and in case of failure to perform within the guarantee period shall agree to furnish sufficient material to correct the failure without added cost to the City.

1.5 INSPECTION

A. Each applicator hereunder, in the company of the City Engineer's representative, before starting work, shall inspect and verify surfaces that are to receive waterproofing materials are in the following condition to receive work of this Section:

1. Concrete to be dry, smooth, free from loose material, rough spots, sharp projections and lumpy places, and that all pits, holes or cracks in concrete surfaces are filled with cement mortar to provide solid surface.

2. Should any deficiency appear, the City Engineer representative shall

file a written report of same to the Contractor for correction before such waterproofing work commences.

1.6 PRODUCT HANDLING

A. **Delivery and Storage:**

1. Deliver waterproofing materials to the job-site in their unopened, sealed and original containers with all labels intact and legible at time of use, with manufacturer's name, brand name and batch number.

2. Store material where directed by the City Engineer in a safe, clean and dry and orderly area free from oily rags, waste and empty containers. Such materials shall be handled and stored in a manner to prevent damage or contamination.

B. **Protection:** Use all means necessary to protect the materials of this Section before, during and after installation and to protect the work and materials of all other trades.

C. **Replacements:** In the event of damage or contamination, immediately make all repairs and replacements necessary to the City Engineer's approval, at no added cost to the City.

1.7 CLEANING AND CLEAN-UP

A. Contractor shall not permit applicators to allow waste or debris to accumulate and shall have same removed from the job-site at frequent intervals. Comply with provisions of Section 01710 - CLEANING of the GENERAL REQUIREMENTS in DIVISION 1 of these Specifications.

B. Upon completion of work of this Section, thoroughly clean all non-related surfaces of any material splashed onto adjacent surfaces during work operations of this Section. Use cleaning materials and methods recommended by the waterproofing or damproofing material manufacturer. Remove all waste, debris, surplus materials, equipment, and tools co-incident with the specified work. Leave the premises and the job-site in a clean and orderly condition.

PART TWO - PRODUCTS

2.1 GENERAL

A. Types (As applicable)

- Primer: Fed Spec. SS-A-710B, ASTM D41-73 Genstar Roofing Products Co. (Flintkote) No. 810-01 asphalt primer.

- Waterproofing Asphalt: Fed. Spec. SS-A-666 Class A, temperature range 165 degree Fahrenheit to 175 degree Fahrenheit.

- Protection Board: Fed. Spec. LLL-I-535A, minimum 2-inch thick, integrally asphalt treated cane fiber board as recommended by the waterproofing material manufacturer.

- Reinforcement Felts: Fed. Spec. HH-R-595B, Type 15A, Style A, plain, asphalt saturated, 15-lb. weight, Genstar Roofing Products Co. "Saturated Felt".

- Elastomeric Sheeting: 40 mil thick chlorinated polyethylene (CPE), "Chloraloy 240" manufactured by the Noble Co., Grand Haven, Michigan (local representatives phone (213) 981-8660).

- Bonding Liquid (for Elastomeric Sheeting): Chlorinated polyethylene (CPE) solvent bonding liquid or Xylen.

- Reinforcing Fabric: Fed. Spec. HH-C-466B, glass fabric.

- Waterproofing Asphalt: ASTM D449.

- Asphalt Emulsion: ASTM D1187-66, marine type asphalt-clay fibered emulsion, Genstar Roofing Products Co. (Flintkote) No. C-113-E.

- Protective Sheet: 70-lb. similar and equal to Genstar Roofing Products Co. (Flintkote) "New Method Protective Sheet".

- Reinforcing Paper: Sisalkraft building paper by Sisalkraft Building Paper Co., Chicago, Illinois.

- Protection Panels: Maximum 2-inch X 4-foot X 8-foot panels of a ductile air blown asphalt fortified with inorganic mineral fibers heat pressure molded to specified thickness manufactured by Asphalt Products Oil Corp. (A.P.O.C.), Long Beach, California.

1. Primer (A.P.O.C.) hot applied water repelling asphalt.

2. Asphalt (A.P.O.C.) hot applied water repelling asphalt.

- Nails: 12-gage galvanized steel with 5/8-inch diameter head, length sufficient to penetrate wood minimum 3/4-inch.

2.2 SUMMARIES OF WATERPROOFING ASSEMBLIES

A. Waterproofing site retaining walls:

1. Asphalt emulsion primer (1-1/2-gallons).....15 lbs./100 sq. ft.

2. Course of emulsion .....40 lbs./100 sq. ft.
   TOTAL: 55 lbs./100 sq. ft.

B. Waterproofing Building Exterior Walls and Yard Walls Below Grade (Hydrostatic Pressure of 6-Foot Head):

Cold Applied Method:

1. Asphalt Emulsion (2 strength) as primer .....15 lbs./100 sq. ft.

2. First course of asphalt emulsion (3 gallons).....30 lbs./100 sq. ft.

3. Layer of reinforcement fabric .....1 lbs./100 sq. ft.

4. Second course of asphalt emulsion (3 gallons).....30 lbs./100 sq. ft.

5. Layer of reinforcement fabric ..... 1 lb./100 sq. ft.

6. Third course of asphalt emulsion (3 gallons)..... 30 lbs./100 sq. ft.
   TOTAL: 107 lbs./100 sq. ft.

Or

Hot Applied Method

1. 1 coat of primer (1-1/2 gal.).....15 lbs./100 sq. ft.

2. First course of waterproofing (3 gallons).....30 lbs./100 sq. ft.

3. Layer of reinforcement fabric ..... 1 lb./100 sq. ft.

4. Second course of waterproofing (3 gallons).....30 lbs./100 sq. ft.

5. Second Course of Reinforcement Fabric ..... 1 lb./ sq. ft.

6. Third Course of waterproofing (3 gallons)..... 30 lbs./100 sq. ft.
TOTAL: 107 lbs./100 sq. ft.

C. Waterproofing Membrane Under Toilet Rooms Shower Stalls, Drying Rooms and Under Mop Drain Troughs:

1. One layer of 15-lbs. asphalt saturated felt.

2. Layer of elastomeric sheeting (CPE)

NOTE: Use cold applied method in tight spaces as may be governed by CAL/OSHA.

PART THREE - EXECUTION

3.1 SURFACE CONDITIONS

A. Examinations Required: All surfaces to receive waterproofing materials by the material applicator, to be clean, free of dirt, foreign materials and surface defects which would impair the proper application of materials. Comply with provisions hereinbefore specified in Subsection 1.5 - INSPECTION of this Section.

B. Preparation of Surfaces: Perform or arrange for all remedial work to be executed prior to start of work of this Section. Start of work of this Section shall imply Contractor's acceptance of surface conditions as meeting requirements for the specified work.

3.2 COORDINATION

A. Required: Work of this Section shall be coordinated with other trades to assure proper and adequate provisions in the work of those trades for interface with work of this Section.

3.3 PROTECTION

A. **Required:** Below grade waterproof concrete and/or masonry wall surfaces prior to backfilling operations.

B. **Material:** Install specified protection board against such vertical wall surfaces.

3.4 WATERPROOFING SITE RETAINING WALLS

A. **Required:** Where noted on the Contract Drawings.

B. **Materials:** As hereinbefore specified.

C. **Application:**

1. Primer: Brush or spray apply asphalt emulsion primer at rate of 1-1/2 gallons per 100 square foot, thinned with not more than 20 percent cool, clean water, and allow to thoroughly dry.

2. Emulsion course: Brush or spray apply emulsion at rate of four gallons per 100 square foot in uniform manner and allow to dry thoroughly before backfill is placed.

3. All applied in accordance with material manufacturer's printed directions.

3.5 WATERPROOFING MEMBRANE UNDER TOILET ROOM, SHOWER STALLS, DRYING ROOMS AND UNDER MOP DRAIN TROUGHS

NOTE: This can be used for janitor slop sink construction.

A. **Required:** Where noted on the Drawings.

B. **Materials:** Felt, Elastomeric Sheeting and Bonding Liquids as hereinbefore specified.

C. **Application:** By an applicator authorized by the material manufacturer, in accordance with the manufacturer's specifications.

1. Apply a single layer of 15-lbs. asphalt-saturated felt, shingle method

with 4-inch side and end laps, and turn up felt 9-inches on vertical surfaces.

2. Install the CPE sheet liner over the felt and turn the sheet 9-inches up on all side walls. Use folded corner on all interior corners and prefab corner on all exterior corners. Secure the liner to the side walls with nails or staples 2-inch from the top edge.

3. Where necessary to nail the elastomeric sheet liner below the water line or in any critical area, cut a 2-inch x 2-inch piece of elastomeric sheeting and weld it to the elastomeric sheeting over the nail head as hereinafter specified for the welding of the seams of the elastomeric sheeting material.

4. Bond lapped joints of elastomeric sheeting material with application of specified liquid bonding material on both surfaces to be joined and press together while bonding material is still moist, lap joints in direction of watershed towards floor drain(s). End and side laps shall be minimum 2-inches.4

5. Fit the floor drain clamping ring in place by pressing on top of the elastomeric sheeting material to indicate the outline of the drain opening. Cut an opening in the membrane materials to expose the drain opening. Bolt the drain opening clamping ring in place firmly over the membrane material to make a waterproof seal.

D. **Test:** Test the completed waterproofing membrane by plugging the drains and filling the shower stall or mop drain trough with water to height of finish floor, shower stall curb, or drain trough curb or finish floor level. There shall be no evidence of leakage during a four hour period with waterproofed areas remaining full of water.

E. **Protection:** Upon completion of the waterproofing membrane, completion of testing temporarily protect such surfaces with a covering of 15-lb. asphalt saturated felt loosely laid in place until such time subsequent tile work is applied.

NOTE: Specified, waterproofing membrane not required for toilet rooms over slabs on grade.

(END OF SECTION)

SECTION 07500
MEMBRANE ROOFING

PART ONE - GENERAL

1.1 SUMMARY

A. **Scope of Work**: Provide all materials, tools, equipment, supplies, accessories and labor to provide membrane roofing on the the job-site where indicated on the Contract Drawings, as specified hereinafter as needed for complete and proper installation, not necessarily limited to the following:

1. Membrane roofing.
2. Base flashing
3. Cant strips
4. Roofing expansion joints
5. Parapet wall flashing
6. Supervision of installation of sheet metal items in connection with membrane roofing.

B. **Related Work**:

1. Documents affecting work of this Section include, but are not necessarily limited to, GENERAL CONDITIONS, SUPPLEMENTARY CONDITIONS, and Sections in DIVISION 1 - GENERAL REQUIREMENTS of these Specifications.
2. Sheet Metal in Section 07600.

3. Flashings for pipes, ducts, conduit, etc., penetrating the roof, refer to Divisions 15 and 16.

1.2 QUALITY ASSURANCE

A. **Qualification of Personnel**: Use adequate number of skilled workers who are thoroughly trained and experienced in the necessary crafts and completely familiar with the specified requirements and methods needed for proper performance of the work of this Section.

B. Cooperate with the City Engineer, or the Consultant in the performance of the specified inspection of surfaces before application of the specified roofing.

C. **Qualifications of Manufacturer**: Products used in the work of this Section shall be produced by manufacturer's regularly engaged in the manufacture of similar items and with a history of successful production acceptable to the City Engineer or the Consultant.

D. **Qualification of Subcontractor**: The Subcontractor and workers shall be currently approved by the manufacturer of the approved products as qualified to install the materials of this Section.

E. **Roofing Inspections**: Make all required notifications and secure all required inspections by the manufacturer of the approved materials to facilitate issuance of the specified roof guarantee.

1.3 SUBMITTALS

A. **Product Data**: Submit the following to the City Engineer or the Consultant after award of Contract in accordance with provisions of the SUBMITTALS Section 01340 in DIVISION 1 - GENERAL REQUIREMENTS of these Specifications.

1. Complete materials list of items proposed to be furnished and installed under this Section.

B. **Shop Drawings**: Indicate size of roof area, location and type of interconnection with existing adjacent roofing; layout and installation instructions that have been accepted and approved by an authorized manufacturer's representative.

C. **Manufacturer's Data**: Specifications and recommended installation instructions and other data needed to prove compliance with the specified requirements when approved by the City Engineer or the Consultant, such data will become the basis for accepting or rejecting actual installation procedures used on the work.

D. **Applicator**: Submit letter to the City Engineer or the Consultant stating that each material complies with the Specifications.

E. **Manufacturer's Certification**: Submit manufacturer's letter of certification that roof assembly specified herein is acceptable for application over substrate and qualifies for Manville "No Dollar Limit" or GS "Full Value" guarantee as listed in manufacturer's specifications.

1.4 PRODUCT HANDLING

A. Comply with pertinent provisions of DIVISION 1 - GENERAL REQUIREMENTS.

B. **Delivery**: Deliver roofing materials and accessories in manufacturer's unopened protective containers with all labels intact and legible.

C. **Labels**: All seals and U.L. labels shall be intact with manufacturer's name, brand name, type of material and manufacturer's instructions and methods of handling.

D. **Storage**: Store all materials in an enclosed, dry and clean space on raised platforms protected against damage by weather and direct sun rays recommended by the manufacturer or where directed by the City Engineer or the Consultant.

1. Stand all roll goods on end and store on clean raised platforms to keep ends of rolls free from foreign matter.

2. Store all cements, coatings and adhesives with container lids tightly closed, in a cool and dry space at temperatures between 40 degrees F. and 80 degrees F.

1.5 WARRANTY

A. Comply with conditions of Section 28 in the GENERAL CONDITIONS of these Specifications upon completion of the installation of the specified membrane roofing, furnish the City Engineer or the Consultant with a Ten Year Full Value Roof Membrane Warranty with unlimited sum by the roofing

material manufacturer. Specified membrane roofing to be installed in accordance with roofing material manufacturer's requirements. Cost of the warranty to be included in cost of the work.

B. Contractor to deliver the Warranty to the City Engineer or the Consultant as a condition precedent to the City's acceptance of the work.

1.6 GUARANTEE

A. Comply with conditions of Section 28 in the GENERAL CONDITIONS of these Specifications. Furnish written guarantee signed by the Contractor and the Roofing Installer that roofing membranes, flashings, counterflashings, reglets, casings and other elements essential to watertightness of roof will continue to be watertight for a period of 2 years following acceptance of the work by the Consultant or City Engineer.

B. **Installer**: Approved by materials manufacturer.

C. Provide rider or binder on job performance bond stipulating that bond will cover roof and flashing repair for two-year period.

D. Provide a written inspection report supplied by manufacturers.

1. Prior to application of roofing material.

2. Upon completion of roofing work and before acceptance by the Consultant.

3. Immediately prior to expiration of 2-year guarantee period.

D. Provide GS "Full Value" guarantee and provide inspection on roofing assembly upon receipt of fee when published conditions are met. Prior to commencing work, submit necessary application form for approval to manufacturer. Notify manufacturer 72 hours prior to commencing work to arrange for inspection of roofing application.

1.7 REQUIREMENTS

A. Perform work only in dry weather. Provide dry deck surfaces before application of roofing.

B. Provide smooth, dry and clean surfaces free from dust, debris or other loose materials.

C. Examine roof deck and other construction adjoining or affecting the work of this Section before work is started, and notify Consultant or City Engineer in writing of defects detrimental to roofing work. Application of roofing materials to roof deck surfaces is considered as acceptance of roof surfaces by Contractor.

D. Work in this Section includes supervision of installation of sheet metal in connection with roofing work and which are specified to be furnished and installed under "Sheet Metal" section. Include guarantee for connections between sheet metal work and roofing work.

E. Drainage fittings, connections, metal aprons, metal edgings, flashings and counterflashing, collars and sleeves for pipes passing through the roof and metal overflows must be properly set, or be on the job if they are to be built into roofing assembly.

1.8 TESTS AND INSPECTIONS

A. Work is to be performed under continuous observation of Roofing Inspection Service, selected by the City Engineer or the Consultant. Give 72 hours prior notice to consulting service before starting application and must notify Consultant each time work is to be performed. Lack of notification of work schedule changes will result in a penalty for Consultant's lost time and expenses. Take test cuts at option of Consultant. Repair areas from which test cuts have been taken in the manner directed by the City Engineer or the Consultant as part of the work of the Contractor.

B. Immediately after roofing felts are in place and before applying cap sheet surfacing, notify the City Engineer or the Consultant who will decide whether to have test cuts taken. No more than one cut per 500 square feet will be taken.

1. Cuts: 12" x 12" or 4" x 36" (at right angles) samples of roof membrane plies for inspection and weighing.

2. Patching In Cut: Fill in cut with base and plies mopped. Then mop in patch with one base sheet and two glass sheets applied over each patch. Plies to extend 6", 8" and 10" beyond patch.

C. City will pay costs of testing unless tests show roofing has not been installed in conformance with the Specifications. In this event, Contractor will pay these fees and add layers of roofing required to conform to Specifications.

1.9 PROTECTION OF COMPLETED MEMBRANE ROOFING

Properly protect completed roofing from damage during conservation period as a responsibility of the Contractor during other contracted work operations. Storage of materials, tools and equipment by other trades on the completed roof area not permitted (except for the installation of Mechanical equipment thereon).

PART TWO - PRODUCTS

2.1 GENERAL

Where two or more identical articles or pieces of equipment are required, provide products of same manufacturer. If specified models are discontinued, furnish updated model at no additional cost.

2.2 MATERIALS

A. **Built-Up Roofing**: Glass base sheet, two glass sheets with a mineral surface cap sheet and U.L. Class "A" rating, Manville (U.L. Listing No. 10167) or GS (U.L. Listing No. 11656) as specified herein or equal.

1. Manville Specification No. 4GNC:

2. GS Specification No. A-4-M-3:

B. **Required Nails and Fasteners**: Type, length and finish as required by manufacturer of roofing system. Use Mark III Fasteners by Es-Products, Insuldeck Loc-Nail by E. G. Building Fasteners Corp., Tube-Loc by Simpson Nail & Manufacturing Corp., or equal for fastening base sheet to lightweight insulating concrete.

C. **Roofing Expansion Joints**: Continuous, flexible bellows type, closure, B.F. Goodrich "Lexsuco LP Roof Expansion Joint", Manville "Expand-O-Flash" or equal. Provide factory-fabricated standard and custom transitions as necessary.

D. **Cants**: 4" fiber.

E. **Gravel**: Clean and dry. Color as selected by the City Engineer or the Consultant. 1/4" to 2" in size; no more than 10% fines passing a No. 4 screen and 2% to pass a No. 8 screen.

F. **Asphalt**: Roofing Asphalt, Federal Specification SS-A-666D Type 4, except have a melt point 185 degrees F. to 195 degrees F. or 205 degrees F. to 225 degrees F.

G. **Asphalt Primer**: Federal Specifications SS-A-701B Pioneer Flintkote No. 810-01, Black color or equal.

PART THREE - EXECUTION

3.1 SURFACE CONDITIONS

A. Examine the areas and conditions under which work of this Section will be performed.

1. Surfaces to which roofing will be applied to be cleaned of dirt and other foreign and shall be dry, smooth and free of sharp projects and properly graded to roof drain outlets and that all metal fittings are in place.

2. Correct conditions detrimental to timely and proper completion of the Work at no added cost to the City.

3. Start of roofing work shall imply Contractor's acceptance of surface condition as meeting requirement for such work.

3.2 COORDINATION

Roofing Contractor shall fully cooperate with other trades involved with work in the roof area involved so as not to delay work operations.

3.3 GENERAL INSTALLATION

A. In conformance with manufacturer's applicable specifications and the following:

1. Apply asphalt at a temperature between 375 degrees F. and 490

degrees F. Do not heat to temperature higher than 490 degrees F.

2. Prime sheet metal work (flashings) with asphalt primer and allow to dry before applying roofing materials.

B. **Expansion Joints**: Provide in the following locations:

1. Where roof deck materials change or change in direction (i.e., steel deck changing direction or interfacing with dissimilar materials).

2. Where roof structures change in direction, such as "T", "H", "L", and "U" shape buildings.

3. At each construction or expansion joint in roof structure.

4. At points not over 200 feet apart in areas of continuous roof.

5. Where addition is made to existing structure.

6. Where seismic movement is anticipated between dissimilar structures.

7. Where recommended by Roofing Inspection Service.

8. Where recommended by manufacturer, on top of cants or curbs after roofing plies are installed, then "strip-in" with base flashing.

3.4 INSTALLATION (As Applicable)

A. **Metal Appurtenances**: To be built into the roofing in accordance with details and specifications of the roofing manufacturer; set the metal flanges on top of the bottom layer of felt.

B. **Treatment of Parapet Walls**:

1. General: As indicated on the Contract Drawings and in accordance with details and specifications of the roofing manufacturer.

2. Roofing Felt: Turn up on walls and over tops of parapets and reinforce at angles.

3. Cant Strips: Install where indicated on the Contract Drawings at juncture of roof with vertical surfaces at curbs and walls and embed in hot asphalt (on both roof deck and vertical surfaces).

C. **Outlets**: Set base sheet at drains in flashing compound 9" wide around ring and flange. Install all roofing plies, so that all plies end under clamping ring. Install lead or copper flashing as specified in Section 07600 over completed membrane. Strip-in flashing with two collars of base sheet extending 4" and 6" beyond outside edge of flashing set in asphalt, and while hot, install clamp ring and tighten.

D. **Valleys**: Reinforce valleys with additional ply of base sheet 36" wide, extending 12" up inclines. Apply in direction of slope of valley, lapping 4" on ends. Solid mop to base ply.

E. **Penetration Flashing**:

1. Install flange of one-piece sheet metal or lead collar and pan flashings for small single pipes, conduit, etc., as specified in Section 07600 over base sheet. Set in roofing cement and seal flange with a 6" strip glass fabric, set in asphalt. After remaining roofing plies are applied form cant of plastic cement around base of vent.

2. Install larger single pipes, ducts, groups of piping, conduit, etc., and irregular shapes in base flashings as specified hereinafter.

F. **Splash Pans**: Installed as specified in Section 07600 - SHEET METAL. Wood sleepers, blocks, etc., that support conduit, piping and similar items on roof - pads of walkway material cemented to bottom and adhered in roofing with bitumen.

G. **Roofing Membrane**: Cut plies in lengths not to exceed 18' and allow to flatten. Longer lengths may be used when rolled or machined and broomed into place. Apply base ply lapping 2" on sides. Attach base ply at side laps 9" o.c. and 18" o.c. staggered in rows 12" from each edge with approved fasteners. Solid mop base ply with asphalt and embed three additional plies, shingle method, lapping 24-2/3" on sides, mopping between plies. Provide 4" end laps not less than 3' apart, diagonally staggered. Stagger and offset side and end laps of each ply from preceding plies. Install roofing system in continuous application.

H. **Base Flashings**: Over completed membrane at vertical surfaces, install base flashings consisting of one ply of Flintlastic, applied in asphalt. Nail top edge 9" o.c. through tin discs. Apply three-course flashing system to concrete or masonry walls.

I. **Cap Sheet**: Solid mop ply sheets with asphalt and while hot, embed one ply of mineral surface cap sheet with 2" side laps. End laps must be 6" and not less than 3' apart, diagonally staggered. (Side and end laps of each ply must be staggered and offset from preceding plies).

J. In areas of standing water or valleys with slopes of 1/4" per ft. or less, apply hot asphalt at a rate of 50 lbs. per 100 sq. ft. and embed gravel surfacing at rate of 300 lbs. per sq. ft.

3.5 CLEANING AND CLEAN-UP

A. Comply with applicable provisions of Section 01710 - CLEANING in DIVISION 1 - GENERAL REQUIREMENTS.

B. Contractor shall not permit his applicators to allow waste or debris to accumulate; and shall have same removed from the site at frequent intervals.

C. Upon completion of the work under this Section, thoroughly clean all non-related surfaces of any materials that may have been splashed on adjacent surfaces during the work of the several procedures hereunder, using cleaning materials and methods that are recommended by the manufacturers of the moisture's protection materials. Remove all waste, debris, surplus materials, equipment and tools coincident with the work and leave the premises and the site in a clean and orderly condition.

(END OF SECTION)

SECTION 07552
BUILT-UP ROOFING

PART ONE - GENERAL

1.1 SUMMARY

A. Provide all materials, tools, supplies, equipment, accessories and labor required to install built-up roofing as indicated on the Contract Drawings.

B. **Related Sections:**

1. Documents affecting Work of this Section include, but are not necessarily limited to the GENERAL CONDITIONS, SUPPLEMENTARY CONDITIONS and Sections in DIVISION 1 - GENERAL REQUIREMENTS of these Specifications.

2. Concrete Work in DIVISION 3.

3. Wood Nailers in Section 06100.

4. Waterproofing in Section 07290.

5. Sheet Metal Work in Section 07600.

6. Caulking and Sealants in Section 07920.

7. Roof Drains in Section 15400-PLUMBING.

1.2 QUALITY ASSURANCE

A. **Standards:** Comply with standards hereinafter specified in this Section.

B. **Qualifications of Manufacturer:** Products used in the work of this Section shall be produced by manufacturers regularly engaged in manufacture of similar items and with a history of successful production acceptable to the City Engineer or the Consultant.

C. **Qualifications of Subcontractor:** The subcontractor and personnel shall be currently approved by the manufacturer of the approved products as qualified to install the materials of this Section.

D. **Qualifications of Installers:** Use adequate numbers of skilled workers who are thoroughly trained and experienced in the necessary crafts and who are completely familiar with the specified requirements and the methods needed for proper performance of the Work of this Section.

E. **Roofing Inspections:** Make all required notifications and secure all required inspections by the manufacturer of the approved materials to facilitate issuance of the specified roof guarantee.

1.3 SUBMITTALS

A. **Product Data:** Submit the following to the City Engineer or the Consultant after award of Contract in accordance with provisions in SUBMITTALS Section 01340 in DIVISION 1 - GENERAL REQUIREMENTS of these Specifications.

1. Complete materials list of all items proposed to be furnished and installed under this Section.

2. Manufacturer's Specifications and other data required to demonstrate compliance with specified requirements.

3. Manufacturer's recommended method of installation.

   NOTE: When approved by the City Engineer, will become the basis for inspecting and accepting or rejecting actual installation procedures used on the Work.

4. Verification that roofing and insulation shall be capable with one another of having a Class "A" U.L. rating.

B. **Shop Drawings:**

1. Required: Comply with provisions in SUBMITTALS Section 01340 in the DIVISION 1 - GENERAL REQUIREMENTS of these Specifications.

2. Indicate roof sizes, location and type of penetrations, perimeter and penetration details, roof insulation make-up, layout and installation instructions that have been accepted or approved by an authorized manufacturer's representative.

C. **Samples:** Submit three (3) complete 2 2" x 4" size samples of the proposed built-up roofing system.

D. **Certification:** Materials manufacturer shall submit letter of certification to the

City Engineer or the Consultant that each material complies with the Specifications.

E. **Applicator's Certification:** Submit letter to the City Engineer or the Consultant stating that each material complies with the Specifications.

1.4 PRODUCT HANDLING

A. **Delivery, Storage and Handling:**

1. Deliver all packaged materials (roofing, insulation and accessories) to the job-site in their original unopened protective containers with all labels intact and legible at time of inspection. All seals and U.L. labels shall bear the manufacturer's name, brand name, U.L. rating, type of material, manufacturer's instructions and methods of handling.

2. Store all materials in an approved manner, in an enclosed, dry and clean place on raised platforms protected against damage by weather and direct sun rays as recommended by the manufacturer or as directed by the City Engineer. Store all cements, coatings and adhesives with all container lids tightly closed, in a cool and dry place at temperatures between 40 degrees F. and 80 degrees F.

3. Handling: Stand all roll roofing goods on end and store on clean raised platforms to keep ends of rolls free from foreign matter.

B. **Related Work:** Roof drains, all sheet metal work, lead collars and sleeves for vents pipes, stanchions, etc. shall be in place and ready for application of the built-up roofing system.

C. **Deficiencies:** Should there by any deficiencies of materials, and related work, the Inspector will file a written report with the Contractor for correction before any roofing work commences.

D. **Replacements:** In the event of damage to the completed built-up roofing immediately make all repairs an replacement necessary to the approval of the City Engineer or the Consultant at no added cost to the City.

1.5 GUARANTEE

The guarantee period specified in Section 28 in the GENERAL CONDITIONS of these Specifications shall be ten (10) years and guarantee that the built-up roofing systems (with insulation) shall be free of blistering, buckling, poor workmanship and will not leak during the guarantee period and that any leaks that develop during

the guarantee period will be repaired at no added cost to the City and approved by the City Engineer or the Consultant.

1.6 WARRANTY

A. Upon completion of the built-up roofing system and flashing furnish the City Engineer or Consultant with a ten (10) year Full Value Warranty with unlimited sum by roofing material manufacturer conforming to conditions in the GENERAL REQUIREMENTS of these Specifications. The specified built-up roofing to be installed in accordance with roofing and insulation manufacturer's requirements, the cost of the warranty to be included in the cost of the Work of this Section.

B. Deliver the Warranty to the City Engineer or Consultant as a condition precedent to the City's acceptance of the Work of this Section.

PART TWO - PRODUCTS

2.1 GENERAL

For the purpose of establishing quality and quantity of required materials, the Specifications of the Manville Roofing Systems Divisions have been cited hereinafter, except as modified. In no way shall this be construed as limiting competition. Products of other manufacturer's may be proposed in accordance with conditions in Section 12 of GENERAL CONDITIONS of these Specifications.

2.2 MATERIALS (As applicable)

A. **Roofing Membrane:** Gray, 60 mil thick EPDM elastomeric roof sheeting, manufactured by Manville Roofing Systems or equal.

B. **Flashings:** Gray, 22 gauge thick uncured EPDM sheet flashing for use on perimeter walls and around projections through roof.

or

B. **Flashing:** 6-lb. lead with base extending 6-inches minimum in all directions.

C. **Fasteners**: All fasteners shall be galvanized or stainless steel.

D. **Flashing Compound:** Solvent type plastic asphalt with cellulose fibers, black color; or equal.

E. **Flashing Fabric:** Resin coated woven glass fabric reinforcement, "Yellow Jacket" as manufactured by Flintkote, Federal Specification HH-C-466C; or equal.

F. **Caulking:** W.R. Grace & Co., "Hornflex Standard Gun Grade", or "Thiokol" approved polysulfide sealant.

G. **Asphalt:** Roofing Asphalt, Fed. Spec. SS-A-6660, Type 4, ASTM D312, Type III and have a melt point of 205 degrees F. to 225 degrees F.

H. **Base Sheet:** Organic fiber or glass fiber base type Fed. Spec. SS-R-6208B, Type II.

I. **Cap Sheet:** Organic fiber or glass fiber minimum 75-lbs.

J. **Felt:** Flintglas Ply Sheet, 28 lbs., ASTM D2178-76, Type IV; or equal.

K. **Cap Sheet:** Flintglas Mineral Surface Cap Sheet, 80 lbs., ASTM D3909. Type G2; or equal.

L. **Roofing Nails:** Minimum 12-gage galvanized steel with 1" diameter head and of length sufficient to penetrate wood sheathing in minimum 3/4-inch (Simplex or equal).

M. **Cants:** Fiber Cant Strip with a minimum 4" face.

N. **Pre-Wash Solvent Cleaner:** Xylene pre-wash solvent and cleaner as recommended by the roofing manufacturer.

O. **Cement:** For use with roofing system components as recommended by the roofing manufacturer.

P. **Roof Insulation**: Phenolic Plus foam roof board insulation composed of fiber glass facers laminated to both sides of a phenolic foam core. Board size is 4'-0" x 8'-0" x 1" thick; "C" factor equals 0.12 and "R" factor of 8.3 and must be installed in accordance with Section 172, Foam Plastic Insulation of the 1985 UBC Code.

Q. **Tapered Insulation:** "Fesco Board" tapered roof insulation, 2-foot x 4-foot size and thickness from 2-inch, manufactured by Manville Roofing Systems or equal. Board formed of expanded perlite particles blended with selected binders and fibers.

R. **Roof Insulation:** Fiber insulation board, Fed. Spec. LLL-F-535A, Class "C", thickness as indicated on the Drawings. Board size 24-inch x 48-inch or 23-inch x 47-inch x 15/16-inch, C=27 and R=3.70.

S. **Anchors:** Hex head 1/4" x 1 1/4" high strength steel anchors for fastening the SPM anchor bar to concrete surface.

T. **Anchor Bar:** Pre-punched aluminum bar as manufactured by Manville Roofing Systems or equal.

U. **Gravel:** Clean, Kiln-dried, opaque, free from disintegrated or crushed rock; 1/4-inch to 2-inch size; not more than 10% of fines passing a No. 4 screen and 2% passing a No. 8 screen.

V. **Roof Tape:** Fiberglass roof tape, 6-inch width.

W. **Adhesive:** Factory Mutual listed, manufactured by LEXSCUCO or equal.

X. **Asphalt Primer:** Fed. Spec. SS-A-701B, No. 810-01, black color, Manville Concrete Primer ASTM D-41.

Y. **Bituminous Plastic Cement:** Fed. Spec SS-C-153 Type I, ASTM D2822, Manville Industrial Roof Cement.

Z. **Pourable Sealer:** One part pourable, moist curing polyurethane sealant, as recommended by the roofing manufacturer.

Z1. **Divorsing Sheet:** Manville 28-lb. Glass Base Felt.

Z2. **Equipment Walkway Panels:** 2-inch thick asphalt walkway panels "J"-Walk by Manville or equal, 3-foot x 4-foot size.

Z3. **Fibrated Aluminum Wall Covering Materials:**

1. Primer and Asphalt Emulsion: Flintkote C-13-C4.

2. Aluminum Coating: Asphalt based aluminum with 1.95 lb. or aluminum metal per gallon, Fed. Spec. TT-P-320C, Type II, Class 3.

3. Glass Fabric: Black glass cloth, 36-inches wide x 450 sq. ft. roll, Fed. Spec. HH-C-466b.

2.3 SUMMARY OF ROOFING ASSEMBLIES

A. **Mineral Surfaced Roofing With Insulation Over Steel Deck:**

1.	1 coat of asphalt primer	8 lbs. per 100 sq. ft.
2.	1 mopping of asphalt for insulation	30 lbs.

3.	1 layer of 1-inch insulation	130 lbs.
4.	1 mopping of asphalt over insulation	30 lbs.
5.	3 layers of 15 lb. felt	45 lbs.
6.	3 moppings of asphalt	75 lbs.
7.	1 layer of 90 lb. cap sheet	87 lbs.
		405 lbs. per 100 sq. ft.

B. Mineral Surfacing Over Plywood Deck:

1.	1 sprinkle mopping of asphalt	15 lbs. per 100 sq. ft.
2.	3 layers of 15-lb. felt	45 lbs.
3.	3 moppings of asphalt	75 lbs.
4.	1 layer of 90-lb. cap sheet	90 lbs.
		225 lbs. per 100 sq. ft.

C. Mineral Surfaced Roofing With Insulation Over a Plywood Deck; Class "A"

1.	1 layer of base sheet nailed dry	28 lbs. per 100 sq. ft.
2.	1 mopping of asphalt for insulation	30 lbs.
3.	1 layer of 1-inch insulation	90 lbs.
4.	1 mopping of asphalt over insulation	30 lbs.
5.	3 layers of felts	36 lbs.
6.	3 moppings of asphalt between felts	75 lbs.
7.	One layer of cap sheet	72 lbs.
		361 lbs. per 100 sq. ft.

D. Mineral Surfaced Roofing Over Wood Deck:

1.	1 layer of sheathing paper	7 lbs. per 100 sq. ft.
2.	3 layers of 15 lb. felt	45 lbs.
3.	1 layer of 90 lb. cap sheet	90 lbs.
4.	3 moppings of asphalt between felts	75 lbs.
		217 lbs. per 100 sq. ft.

E. Mineral Surfaced Roofing Over Lightweight Concrete Deck:

1.	1 coat of asphalt primer	10 lbs. per 100 sq. ft.
2.	1 spot mop layer of asphalt	10 lbs.
3.	3 layers of 15 lb. felt	45 lbs.
4.	1 layer of 90 lb. cap sheet	90 lbs.
5.	3 moppings of asphalt between felts	75 lbs.
		230 lbs. per 100 sq. ft.

F. Mineral Surfaced Roofing With Insulation Over Steel Deck:

1.	1 coat of asphalt primer	8 lbs. per 100 sq. ft.
2.	1 mopping of asphalt for insulation	30 lbs.
3.	1 layer of 1-inch insulation	130 lbs.
4.	1 mopping of asphalt over the insulation	30 lbs.
5.	3 layers of 15 lb. felt	45 lbs.
6.	3 moppings of asphalt between felt layers	75 lbs.
7.	1 layer of 90 lb. cap sheet	90 lbs.
		408 lbs. per 100 sq. ft.

PART THREE - EXECUTION

3.1 INSPECTION

A. General: Contractor shall inspect the roof areas and conditions under which work of this Section will be installed. Correct conditions detrimental to the proper and timely completion of the Work, do not proceed until such detrimental conditions have been corrected.

1. Roof surfaces to be dry, smooth, properly sloped to roof drains, free from loose materials and all rough spots, sharp edges and projections and lumpy places have been removed.

2. Roof drains, sheet metal work and fittings, lead collars and sleeves for vent pipes, stantions, etc. shall be in place prior to start of installation of insulation and built-up roofing.

3. Inspect roof drains and outlets to insure proper elevation to permit free flow of water into drain and prevent water dams at rim.

3.2 COORDINATION:

Roofing Contractor shall fully cooperate with other trades involved with work in the roof area involved so as not to delay work.

3.3 INSTALLATION (General)

A. Metal Appurtenances: Build into roofing in accordance with details and specifications of the roofing manufacturer, set the metal flanges on top of the bottom layer of felt.

B. Roofing Application Guidelines:

1. Never use wet or damaged materials.

2. Never apply insulation and roofing materials during rain or wet weather conditions.

3. Review the roofing manufacturer's guidelines for application of insulation, roofing materials, coatings and accessories.

C. Treatment at Walls:

1. General: As indicated on the Drawings and in accordance with details and specifications of the roofing manufacturer; set metal appurtenances as specified above in 3.2A.

2. Roofing felts to be turned up on walls and over tops of parapet walls and reinforced at angles.

3. Cant Strips: Install where indicated at juncture of roof with vertical surfaces at curbs, and walls and embed in hot asphalt (on both roof deck and vertical surfaces).

4. Fibrated aluminum wall coating: As hereinafter specified.

D. Heating and Applying Asphalt:

1. Apply asphalt at a temperature between 375 degrees F. and 490 degrees F. Do not heat to a temperature higher than 490 degrees F.

2. Hot mop 25 lbs. of asphalt per 100 sq. ft. for all solid moppings.

3. All moppings shall be full covering except for sprinkle moppings.

4. Prime sheet metal work (flashings) with asphalt primer and allow to dry before applying roofing materials.

E. Application of Insulation: Conform to the manufacturer's specifications:

1. On concrete roof decks secure as indicated on the contract drawings in solid moppings of hot asphalt, laid in parallel courses with transverse joints staggered and with edges set in moderate contact but not forced in place. Cover vertical edges of boards at vertical surfaces with 12-inch. strips of 15-lb. roofing felts. Extend felts over and under insulation edges and cement to roof deck with asphalt.

2. On steel decking secure insulation in solid mopping of hot asphalt and treat edges as specified above.

3. Water cut-offs in insulation application:

   a. Required at 1st insulation board joint from and parallel to all parapet walls and other vertical surfaces and at intervals of not more than 30 feet in each direction of the entire roof area, for division of roof areas into isolated insulation areas.

   b. Methods: Hot mop strip of 15-lb. felt, 8-inches to 12-inches wide to the felt base sheet, carry up and over insulation edge and mop to top surface of insulation in accordance with insulation manufacturer's directions.

F. **Base Flashing:** Bend existing metal coping or flashing up carefully. Prior to flood coating of built-up roofing felts install Base Flashing of one ply of Modified Bitumen Cap Sheet applied in asphalt. Nail top edge of Cap Sheet at 12-inches on center through tin discs into concrete parapet or wood curb nailers. Extend Cap Sheet from top edge of parapet or curb, over the cant and minimum 6" beyond over built-up roofing membrane. Bend existing metal coping or flashing over the installed Cap Sheet. Replace with new metal coping or flashing if the existing material is damaged.

G. **Edge Flashing:** Install 12" wide strip of Base Sheet at perimeter edges. Slip Base Sheet under existing metal edging. Seal edge of metal with a 6" wide strip of Flashing Fabric set in asphalt. Over this apply new roofing.

H. **Application of Gravel Surfacing:** After installation of insulation, built-up roofing felts and base flashing, apply a uniform coating of 60 lbs. of asphalt per 100 square feet of roof surface over the entire surfaces of the roofing membrane and while asphalt is hot embed therein 400 lbs. of gravel per 100 square feet of roof surface. Roof surface shall be graveled or glazed with asphalt before work is stopped each day.

I. **Installation of Walkway Panels:** Apply walkway panels directly to the capsheet surface. Bond panels to the roof surface by first back mopping panels and then setting panels in a flood coat of hot roofing bitumen, in straight alignment as indicated on the Drawings, with the ends of panels spaces 2-inches apart to allow for roof drainage. Prohibit traffic until adhesive is thoroughly dry.

J. **Cants:** Install at the juncture of roof with vertical surfaces at curbs, parapets, walls and embed in hot asphalt over insulation. In angles of roof deck and vertical surface, furnish and install a fiber cant strip with a minimum 3" face.

K. **Felts:** Lay Base Sheet over plywood or steel deck by spot mopping of hot

asphalt. Lay insulation in solid mopping of hot asphalt. Lay succeeding layers of felt in solid mopping of hot asphalt. All layers of felt to be rolled and broomed in place not less than 4-feet behind mop.

L. Valleys: Where occur, reinforce valleys with an extra layer of base sheet not less than 36-inches wide, extending 12-inches up inclines. Apply in direction of slope of valley, lapping 4-inches on ends. Spot mop to base ply. Valleys without positive drainage shall receive a flood coat of asphalt and gravel after installation of cap sheet.

M. Application of Fibrated Aluminum Wall Coverings:

1. Required: On inside face of all parapet walls as detailed.

2. All surfaces to be primed and primer allowed to dry.

3. Apply 1st coat of asphalt emulsion at rate of 3 gallons per 100 sq. ft. over the primed areas and embed one layer of black glass cloth, then allow coating to tack dry.

4. Apply one-course of asphalt emulsion at rate of 3 gallons pr 100 sq. ft., then allow coating to dry thoroughly.

5. Apply one coat of aluminum coating over the entire surface at rate of 3 gallons per 100 sq. ft. in accordance with manufacturer's directions.

6. Seal joints at reglet and coping with flashing compound.

3.4 CLEAN-UP AND PROTECTION

A. General Clean-up:

1. Comply with provisions of Section 01710 - CLEANING in GENERAL REQUIREMENTS. Do not permit applicators to allow waste or debris to accumulate. Same shall be removed from the job-site at frequent intervals.

2. Remove from adjacent surfaces any drippage or spills of coatings, sealant, mastic or primers. Restore surfaces to original condition at no added cost to the City.

3. Upon completion of the work of this Section thoroughly clean all non-related surfaces of materials that may have splashed thereon, during work procedure using cleaning materials and methods recommended by the roofing material manufacturer.

B. Protection of Completed Roofing Work:

1. Traffic on completed roofing will be restricted.

2. Properly protect completed roofing from damage during conservation period as a responsibility of the Contractor.

3. Provide appropriate protection for work continuing on the roofs as directed by the City Engineer or the Consultant.

4. Storage of materials, tools or equipment by other trades on completed roofing not permitted.

(END OF SECTION)

SECTION 07600
FLASHING AND SHEET METAL

PART ONE - GENERAL

1.1 DESCRIPTION

A. Provide and install all flashings and sheet metal work indicated on the Contract Drawing and hereinafter specified, not specifically described in other Sections these Specifications, but required to prevent penetration of water through the exterior shell of the building.

B. Related Sections:

1. Documents affecting work of this Section include, but are not necessarily limited to the GENERAL CONDITIONS, SUPPLEMENTARY CONDITIONS and Sections in DIVISION 1 - GENERAL REQUIREMENTS of these Specifications.

2. Miscellaneous Metal Fabrications in Section 05500.

3. Waterproofing in Section 07290.

4. Single-ply Roofing in Section 07551.

5. Caulking and Sealing in Section 07920.

6. Louvers for Metal Doors in Section 08110.

7. Louvers for Wood Doors in Section 08210.

8. Field Painting in Section 09900.

9. Sheet Metal Work for Plumbing in DIVISION 15.

10. Sheet Metal Work for Heating, Ventilating and Air Conditioning in DIVISION 15.

11. Sheet Metal Work for Electrical Work in DIVISION 16.

1.2 QUALITY ASSURANCE

A. **Standards:** In accordance with best trade practice, Architectural Sheet Metal Manual, latest edition by the Sheet Metal and Air Conditioning Contractors National Association, Inc. (SMACNA).

B. **Manufacturer's Qualifications:** Products used in the work of this Section shall be produced by manufacturers regularly engaged in the manufacture of similar items and with a history of successful production acceptable to the City Engineer or the Consultant.

C. **Installer Qualifications:** Use adequate numbers of skilled installers who are thoroughly trained and experienced in the necessary crafts and who are completely familiar with the specified requirements and the methods needed for proper performance of the work of this Section.

D. Standard commercial items may be used for flashing, trim, reglets, and similar purposed provided such items meet or exceed the quality standards specified.

E. Current recommendations of the National Roofing Contractor's Association (NRCA) Roofing and Waterproofing Manual latest edition.

1.3 SUBMITTALS

A. **General:** Comply with applicable provisions in SUBMITTALS SECTION 01340 in DIVISION 1-GENERAL REQUIREMENTS of these Specifications for review, approval or verification.

B. **Manufacturer's Data:**

1. Complete materials list of all items proposed to be furnished and installed under this Contract.

2. Manufacturer's specifications and other data required to demonstrate compliance with the specified requirements.

3. Shop Drawings in sufficient detail to show fabrications, installation,

anchorage, and interface of the work of this Section with the work of adjacent trades:

4. Manufacturer's recommended installation procedures when approved by the City Engineer or the Consultant will become the basis for inspecting and acceptance or rejection of actual installation procedures used on the Work.

C. **Samples:** To be provided when requested by the City Engineer or Consultant for approval of surface finish or texture.

1.4 COORDINATION

Coordinate work of this Section with that of roofing and waterproofing and dampproofing trades so that all sheet metal work and related items will provide waterproof connections.

1.5 SHOP INSPECTION

A. **Required:** On all shop fabricated items if called for on the reviewed shop drawings, at no cost to the Contractor or his Subcontractor.

1.6 SHOP PAINTING

A. **Required:** On all uncoated ferrous metal. Galvanized work or stainless steel need not be shop painted.

1. Full prime coating completely covering the metal surfaces using specified paint primer.

2. On all surfaces accessible after fabrication and erection apply at least one coat.

3. Apply at least two coats on all surfaces inaccessible after fabrication and erection.

1.7 PROTECTION (PRODUCT HANDLING)

Adequately guard against damaging sheet metal work by walking on or placing of other materials thereon during construction operations. After completion of work of this Section, replace damaged work and remove stains and debris. Replace or repair work of other trades damaged during this Section's work operations to the full

satisfaction of the Inspector at no added cost to the City. Patched or defective work will not be accepted.

1.8 WARRANTY

A. Provide two year warranty covering materials and installation of sheet metal and that the system shall be watertight and weatherproof in accordance with provisions of Section 28 in the GENERAL CONDITIONS of these Specifications.

B. Manufacturer's recommended installation procedures which, when approved by the City Engineer or the Consultant, will become the basis for accepting or rejecting actual installation procedures used on the Work.

PART TWO - PRODUCTS

2.1 MATERIALS AND GAGES

Where sheet metal is required, and no material or gage is indicated on the Contract Drawings, provide the highest quality and gage commensurate with the referenced standards.

2.2 GALVANIZED IRON

A. Provide sheet metal or sheet iron of a standard brand of open-hearth copper-bearing steel, copper-molybdenum iron, or pure iron sheets.

B. Zinc Coating:

1. Where galvanizing is required, provide zinc coating by hot-dip galvanize on all surfaces.
2. Weight:

    a. Provide not less than 1-1/4 oz. per sq. ft., not more than 1 2 oz. per sq. ft. to surface required to be galvanized.

3. Comply with ASTM A526-90, G90 Commercial hot-dip galvanizing.

C. Gages: As indicated on the Contract Drawings and in these Specifications, understood to be U.S. Standard Gage, minimum No. 20 unless otherwise indicated or noted.

2.3 STAINLESS STEEL

18-8 alloy Type 302 or 304 (where required to be welded) with No. 4 finish, except for wallcoverings to have No. 26 finish.

2.4 LEAD

Pure sheet lead weighing 4 pounds per square foot. Federal Specification QQ-L-201, Grade B or ASTM 749, Type 51121.

2.5 ALUMINUM

ASTM B209, Alloy 3003-414, unless otherwise noted on the Contract Drawings or specified herein, gages as indicated or noted on the Drawings.

2.6 RELATED MATERIALS

A. **Solder:** Where solder is required, comply with ASTM B32, composed of not less than 40% block tin, with manufacturer's name, class and grade thereon. Federal Specification QQ-S-571.

B. **Flux:** Muriatic acid killed with zinc or an approved brand of soldering paste. After soldering, was off remaining acid flux with a solution of soap and 5 to 10 percent washing soda. Use a special flux for stainless steel.

C. **Tin:** Best grade, pure and new block tin for tinning irons, seams and other items.

D. **Flashing Cement:** Neoprene, ASTM D412, trowel grade having 500 pound psi tensile strength and 250 percent elongation.

E. **Fastenings:** Bolt, screws and/or nails as required for best workmanship.

2.7 NAILS, RIVETS, AND FASTENERS

A. Use only soft iron rivets having rust-resistive coating, galvanized nails, and cadmium plated screws and washers in connection with galvanized iron and steel.

B. Use same metal fasteners as metal being installed.

C. Use annular type nails for securing sheet metal to wood.

D. Secure stainless steel items with stainless steel fasteners.

E. Use soft iron rivets with rust-resistive coating with ferrous metals.

F. Use aluminum, galvanized or cadmium plated fasteners for best appearance and holding power capacity for securing aluminum items.

2.8 OTHER MATERIALS

A. Provide other materials, not specifically described but required for a complete and proper installation, as selected by the Contractor subject to the approval of the City Engineer or the Consultant.

B. **Paint Primer:** (for uncoated ferrous metals) Rust-Oleum Corp. "X-60 Base Metal Red Primer" or equal.

C. **Roofer's Cement:** Federal Specification SS-C-153, Type I, black. ASTM D-2822, Asphaltic.

D. **Adhesive:** As recommended by the manufacturer.

PART THREE - EXECUTION

3.1 SURFACE CONDITIONS

A. **General:** Examine the areas and conditions under which work of this Section will be performed. Surfaces to receive sheet metal shall be smooth, sound, clean and dry. Correct conditions detrimental to timely and proper completion of the work. Do not proceed until detrimental conditions are corrected.

3.2 WORKMANSHIP

A. **General:**

1. Form sheet metal accurately and to the dimensions and shapes required, finishing molded and broken surfaces with true, sharp, and straight lines and angles and, where intercepting other members, coping to an accurate fit and soldering securely.

2. Coordinate work of this Section with work of other Sections. Verify placement of wood blocking, nailers, inserts, nailing strips, cants, etc.

B. **Fabrication:** Form, fabricate, and install sheet metal so as to adequately provide for expansion and contraction in the finished work.

1. Accurately form items to required shape and size. Molded or braked members to have true, straight, and sharp lines and angles. Cope members to accurately fit and be securely soldered at intersections.

2. Turn back all exposed edges 2-inch unless otherwise noted on the drawings or specifically permitted by the City Engineer or the Consultant.

3. Adequately provide for expansion and contraction in the completed work.

4. Take care of preserve coatings; avoid scaring or breaking of coating.

5. Accurately install work as hereinafter specified and as indicated on the Contract Drawings.

C. **Weatherproofing:**

1. Finish watertight and weathertight where so required.

2. Make lock seam work flat and true to line, sweating full of solder.

3. Make lock seams and lap seams, when soldered, at least 2" wide.

4. Where lap seams are not soldered, lap according to pitch, but in no case less than 3".

5. Make flat and lap seams in the direction of water flow.

D. Joints:

1. Join parts with rivets or sheet metal screws where necessary for strength and stiffness.

2. Provide suitable watertight expansion joints for runs of more than 40'-0", except where closer spacing is indicated on the Drawings or required for proper installation.

E. Nailing:

1. Whenever possible, secure metal by means of clips or cleats, without nailing through the exterior metal.

2. In general, space nails, rivets, and screws not more than 8" apart and, where exposed to the weather, use lead washers.

3. For nailing into wood, use barbed roofing nails 1-1/4" long by 11 gage.

4. For nailing into concrete, use drilled plugholdes and plugs.

3.3 EMBEDMENT

Embed metal in connection with roofs in a solid bed of sealant, using materials and methods described in Section 07920 Caulking and Sealing of these Specifications or other materials and methods approved in advance by the City Engineer or the Consultant.

3.4 SOLDERING

A. General:

1. Thoroughly clean and tin the joint materials prior to soldering.

2. Perform soldering slowly, with a well heated copper, in order to heat the seams thoroughly and to completely fill them with solder.

3. Perform soldering with a heavy soldering copper of blunt design, properly tinned for use.

4. Make exposed soldering on finished surfaces neat, full flowing, and smooth.

5. After soldering operations, thoroughly acid flux with a soda solution.

3.5 TESTS

Upon request of the City Engineer or the Consultant, demonstrate by hose or standing water that the flashing and sheet metal are completely watertight.

3.6 DISSIMILAR MATERIALS PROTECTION

Separate aluminum or copper from contact with cementitious materials and other metals (except stainless steel and/or zinc) with a heavy coat of bituminous paint, liquid neoprene, or chromate gasketing or priming.

3.7 REPAIR OF DAMAGED GALVANIZED SURFACES

A. Clean and pretreat with a phosperic or vinyl resin primer.

1. Metal Surfaces to be Painted. Apply coat of zinc dust-zinc oxide primer, Federal Specification TT-P-641d.

2. Metal Surfaces to be Left Unpainted: Coat with a 90 percent zinc content paint; PRC cold galvanizing process, "Galvicon" or "Drygalv".

3.8 ROOFING SHEET METAL WORK (As applicable)

A. **General:** All surfaces to which sheet metal is applied or attached to be free from defects of any kind and brushed clean; set flush or remove any projections, nails, fins, etc., as required for neat, secure, and waterproof installation.

B. **Reglets and Counterflashings:**

1. Materials: 24-gage galvanized sheet iron or steel of gage noted on the Contract Drawings.

2. Products: Metal spring-lock flashings by Metco Metal Products Co., Los Angeles, California, or Lane-Aire Permanent Flashings by Lane-Aire Mfg. Co., Los Angeles, California, or "Spring Lock" Reglet and Counterflashing System by Fry Reglet Corp., Los Angeles, California.

3. Installation: As per manufacturer's approved shop drawings and printed instructions.

4. Shop Drawings: Required.

C. Flashings for Overflow Drains Passing Through Roof:

1. Material: 20-gage galvanized sheet steel.

2. Fabrication and Installation: Overflow drain to extend 2 inches above roof surface. Flashings to be sized to properly fit around overflow drain pipe and be sealed watertight. Flashing flange to extend at least 6-inches in all directions and be embedded in roofing bitumen over the roof insulation under the roofing felts.

D. Counterflashing at Roof Hatch:

1. Material: 24-gage galvanized sheet metal.

2. Fabrication: Shape flashing as indicated to cover top edge of the roof hatch curb and to cover fiberboard insulations and top edge of roofing and be secured in place by welding to curb or otherwise directed by the City Engineer or the Consultant. Counterflashing installation shall not interfere with the operation of the hatch cover.

E. Copings:

1. Materials: 20-gage galvanized sheet steel.

2. Fabrication: To indicate size and profile. Provide shop fabricated corner units. Make sectional joints standing seam at least 5/8-inch high.

3. Installation: Secure in place, level straight and aligned. Use 18-gage galvanized sheet steel clip anchors for concealed fastenings wherever possible. Where exposed fastenings are necessary, use screws with

lead washers.

F. Overflow Scupper:

1. Material: 20-gage galvanized sheet iron.

2. Fabrication and Installation: As indicated on the drawings, install from backside, of parapet wall, with interior flanges not less than 4 inches wide. Extend bottom flange to interleave with roofing felts and embed in asphalt. Turn top flange back against wall. Seal all exposed flanges at wall with specified caulking.

G. Flashings for Electrical Conduit and Antenna Passing Through Roof:

1. Materials: 20-gage galvanized sheet metal.

2. Fabrication and Installation: Extend sleeve minimum 6-inches above roof surface of size to properly fit the conduit or antenna and sealed watertight. Extend 4-inch roof flanges in all directions and embed in roofing bitumen.

H. Equipment Platform Covers:

1. Material: Minimum 20-gage galvanized sheet steel, except as otherwise noted on the drawings.

2. Fabrication and Installation: Single sheet to cover platform, with turned down aprons (with drip edges) secured in place with concealed clip anchors, with corners mitered and soldered and made watertight, and with smooth top surfaces without defects. Painting specified in Section 09900.

3.9 METAL WALL LOUVERS

A. Required: Within exterior masonry wall openings as shown and detailed on the Contract Drawings.

B. Referenced Standards:

1. ASTM A526 - Steel sheet, zinc-coated (galvanized) by Hot-Dip Process, Commercial Quality.

2. AMCA 500 (Air Movement Control Association) Test method for louvers.

C. **Performance Requirements**: Louvers to withstand the effects of wind and normal thermal movement without damaging louver components, fasteners and anchors.

D. **Submittals, Quality Assurance and Product Handling**: Conform to provisions hereinbefore specified in this Section.

E. **Field Measurements**: Verify actual sizes of masonry wall openings prior to fabrication and indicate measurements on the Shop Drawings.

F. **Coordination**: Required so as not to delay Contracted Work operations.

G. **Materials**:

1. Galvanized Steel Sheet

2. Fasteners: Same basic metal and alloy of the louvers required for exterior installation.

3. Insect Screens: 2-inch No. 23 gage galvanized steel wire screen cloth.

H. **Fabrication**:

1. Conform to the design, size and materials indicated on the Contract Drawings.

2. Factory assemble louvers to minimize assembly at the job-site.

3. Louver blades to be equally spaced and at 45 degrees angle.

4. Fabricate frames to tightly fit within wall openings.

5. Provide sill extensions of same material as louvers where indicated for providing drainage to exterior and prevent water penetration to interior.

6. Secure screens to the interior side of louver assembly with stainless steel machine screws at each corner and at intermediate locations as may be located on the approved Shop Drawings.

7. Provide manufacturer=s standard AFluorocarbon 2-coat thermal cored system finish, composed of specially formulated inhibitive primer and a fluorocarbon color top-coat containing not less than 70% polyvinyldene resin by weight. Color and gloss as selected by the City Engineer.

I. Installation:

1. Located and install louver units within wall openings in plumb, level and in proper alignment with adjacent work.

2. Conceal anchorages and make connections weathertight.

3. Protect louver assemblies from damage of any kind during construction operations of the building as devised by the louver manufacturer and remove such protections at time of substantial completion of Contracted Work.

4. Restoration required for louvers damaged during installation operations and other Contracted Work as approved by the City Engineer at no added cost to the City.

3.10 TESTS

A. Upon Request of the City Engineer or the Consultant: Demonstrate by hose or standing water that flashings and sheet metal work are completely watertight and weathertight.

3.11 CLEANING AND PROTECTION

A. Clean exposed metal surfaces, removing substances that might cause corrosion of metal or deterioration of finishes.

B. Protection: Advise Contractor of required procedures for surveillance and protection of flashings and sheet metal work during construction to ensure that work will be without damage or deterioration other than natural weathering at time of Substantial Completion.

(END OF SECTION)

SECTION 07830
ROOF HATCHES

PART ONE - GENERAL

1.1 SUMMARY

A. **Scope**: Furnish materials, and perform all labor to provide roof hatch system where shown the Contract Drawings, as specified hereinafter and as necessary for a complete and proper installation(s).

B. **Related Work**:

1. Documents affecting work of this Section include, but are not necessarily limited to, GENERAL CONDITIONS, SUPPLEMENTARY CONDITIONS, and Sections in DIVISION 1 - GENERAL REQUIREMENTS of these Specifications.

2. Rough Carpentry in Section 06100.

3. Roofing in Division 7.

4. Flashings and Sheet Metal in Section 07600.

5. Security Alarm in Division 16 - ELECTRICAL.

1.2 SUBMITTALS

A. Comply with pertinent provisions of SUBMITTALS Section 01340 of DIVISION 1 - GENERAL REQUIREMENTS.

B. **Product Data**: Within 60 calendar days after the Contractor has received the City's "Notice to Proceed", submit:

1. Manufacturer's data, catalog cuts, dimensioned drawings, and other data needed to prove compliance with the specified requirements and to enable proper preparation of the roof opening.

2. Shop Drawings: Required.

1.3 QUALITY ASSURANCE

Use adequate number of skilled workers who are thoroughly trained and experienced in the necessary crafts and completely familiar with the specified requirements and methods needed for proper performance of the work of this Section.

1.4 DELIVERY, STORAGE AND HANDLING

A. **Delivery**: Deliver all roof hatch components, all properly packaged and identified with the manufacturer's name and product name to the job-site.

B. **Storage**: Store all components at the job-site in a location where directed by the Consultant or City Engineer where they will be safe from damage until installation.

C. **Handling**: All roof hatch components shall be handled prior to and during installation in a manner to prevent damage to all the components and adjacent construction.

PART TWO - PRODUCTS

2.1 CONSTRUCTION OF ROOF HATCHES

A. Cover of 14-gage galvanized steel, with 3" beaded flange, 1" thick glass fiber insulation, fully covered and protected by 22-gage galvanized steel liner. Provide curb, 12" in height, of 14-gage galvanized steel, with full welded corners, equipped with an integral metal capflashing of 14-gage galvanized steel. Provide 1" thick rigid fiberboard insulation on the exterior of curb. Deliver roof hatch completely assembled, with heavy pintle hinges, compression spring operators enclosed in telescopic tubes, positive snap latch with turn handles and padlock hasps inside and outside, with neoprene draft seal. Provide all hardware, zinc plated in accordance with manufacturer's standards. Equip cover with an automatic hold-open arm, complete with red vinyl grip handles, to permit one hand release. Provide for padlock accessible from ship's ladder.

B. Provide galvanized sheet metal roof hatches, factory prime-coated for finish painting at the job-site.

C. **Approved Manufacturers**:

1. Bilco Company, New Haven, Connecticut
2. Babcock-Davis Associates, Inc., Boston, Massachusetts
3. Red Plastic Co., Inc., Los Angeles, California

PART THREE - EXECUTION

3.1 SURFACE CONDITIONS

Examine the areas and conditions under which work of this Section will be performed. Correct conditions detrimental to timely and proper completion of the Work. Do not proceed until detrimental conditions are corrected.

3.2 INSTALLATION

A. Coordinate as necessary with other trades to assure proper and adequate provisions in the work of those trades for interface with the work of this Section.

B. Install a prepared curb in strict accordance with manufacturer's instructions as approved by the Consultant or City Engineer, anchoring all components into position for long life under hard use.

C. Refer to Electrical Drawings for security alarms.

D. Put operating components through at least five complete operating cycles, adjusting as required and achieving optimum ease of operation.

(END OF SECTION)

SECTION 07900
JOINT SEALANTS

PART I. -- GENERAL

1.THE REQUIREMENT

A.The CONTRACTOR shall furnish all tools, equipment, materials, and supplies and shall perform all labor required to complete the work as indicated on the Drawings and specified herein.

B.This section covers all joint sealant as specified herein and shown on Drawings.

2.RELATED WORK SPECIFIED ELSEWHERE

A.Section [03290] Joints in Concrete

B.Section [08800] Glass and Glazing

3.REFERENCE SPECIFICATIONS, CODES AND STANDARDS

A.Comply with the reference specifications of the GENERAL REQUIREMENTS.

B.Federal Specifications:

TT-S-001543ASealing Compound, Silicone Rubber Base, (Calking,Sealing and Glazing in Buildingfs and Other Structures).

TT-S-00230C(2)Sealing Compound, Elastomeric Type, Single Component, (For Calking, Sealing, and Glazing in Buildings and Other Structures).

4.CONTRACTOR SUBMITTALS

A.Submittals shall be made in accordance with the GENERAL REQUIREMENTS.

B.The following submittals and specific information shall be provided.

a.Product Data: Surface preparation and installation instructions.

b.Samples: Material proposed for use showing color range available, and marked with the manufacturer's name and product identification.

c.Quality Control Submittals:

(1)Applicator Qualification: Documentation showing minimum of 5 years experience installing sealants in projects of similar scope.

(2)Certificates of Compliance: Proposed materials meet Specification requirements.

d.Contract Closeout Submittals: Guarantee.

5.QUALITY ASSURANCE (NOT USED)

6.PRODUCT HANDLING

A.Deliver sealants to the jobsite in sealed containers, each bearing manufacturer's name and product designation.

B.Store and protect sealant products from damage, deterioration, and contamination in accordance with manufacturer's written recommendations.

7.ENVIRONMENTAL CONDITIONS

A.Ambient Temperature: Between 40 and 80 degrees F (4 and 27 degrees C) when sealant is applied.

8.GUARANTEE

A.Sealed Joints: Against adhesive and cohesive failure of sealant and for watertightness of sealed joints for a period of **[5 years]** after date of final completion of sealants.

PART II. -- PRODUCTS

1.MATERIALS

A.Like Items of Materials: End products of one manufacturer to achieve standardization for appearance, maintenance, and replacement.

B.CONTRACTOR Option: Immersible sealant may be substituted for nonimmersible sealant of the same material.

C.Characteristics:

a.Uniform, homogeneous.

b.Free from lumps, skins, and coarse particles when mixed.

c.Nonstaining, nonbleeding.

d.Hardness of 15 minimum and 50 maximum, measured by Method ASTM C 661.

2.SEALANT MATERIALS

A.Type 1 - Silicone, Nonsag, Not Immersible:

a.Silicone base, single-component, chemical curing; ASTM C 920, Type S, Grade NS, Class 25; Federal Specification TT-S-001543, nonsag type, Class A;

b.Capable of withstanding movement up to 50 percent of joint width.

c.Manufacturer: Dow Corning Corp. No. 790; General Electric Silpruf; Sonneborn Sonolastic Omniseal; or equal.

B.Type 2 - Multi-Part Polyurethane, Self-Leveling, Immersible:

a.Polyurethane base, multi-component, chemical curing; ASTM C 920, Type M, Grade P, Class 25 and Federal Specification TT-S-00227, self-leveling Type I, Class A.

b.Capable of being continuously immersed in water.

c.Manufacturer: Sonneborn Sonolastic Paving Joint Sealant; Pecora Corp. Urexspan NR-200; H. S. Peterson Co. Iso-Flex 880GB; Mameco International Vulkem 245; or equal.

C.Type 3 - Multi-Part Polyurethane, Nonsag, Immersible:

a.Polyurethane base, multi-component, chemical curing; ASTM C 920, Type M, Grade NS, Class 25 and Federal Specification TT-S-00227, nonsag Type II, Class A.

b.Capable of being continuously immersed in water.

c.Manufacturer: H. S. Peterson Co. Iso-Flex 881; Mameco International Vulkem 922; Product Research Corp. PRC 270; Sonneborn Sonolastic NP-II; or equal.

D.Type 4 - Multi-Part Polyurethane, Nonsag, Not Immersible:

a.Polyurethane base, multi-component, chemical curing; ASTM C 920, Type M, Grade NS, Class 25 and Federal Specification TT-S-00227, nonsag Type II, Class A.

b.Manufacturer: Sonneborn Sonolastic NP-II; Pecora Corp. Dynatrol II; Tremco Dymeric; H. S. Peterson Co. Isoflex 2000; Mameco International Vulkem 227; or equal.

E.Type 5 - One-Part Polyurethane, Immersible:

a.Polyurethane base, single-component, chemical curing; Federal Specification TT-S-00230, Type I or II, Class A.

b.Capable of being continuously immersed in water, withstand movement of up to 25 percent of joint width.

c.Manufacturer for Nonsag: Sonneborn Sonolastic NP-I; Sika Chemical Corp., Sikaflex-1a No. 430; Mameco International Vulkem 116; or equal.

d.Manufacturer for Self-Leveling: Sonneborn Sonolastic SL-1; Mameco International Vulkem 45; Sika Chemical Corp. Sikaflex 12SL; or equal.

F.Type 6 - One-Part Polyurethane, Not Immersible:

a.Polyurethane base, single-component, chemical curing; ASTM C 920, Type S, Grade NS, Class 25 and Federal Specification TT-S-00230, nonsag Type II, Class A.

b.Manufacturer: Pecora Corp. Dynatrol I; Tremco Dymonic; Sonneborn Sonolastic NP-I; or equal.

G.Type 7 - Multi-Part Polysulfide, Immersible:

a.Polysulfide base, two-component, chemical curing; ASTM C 920, Type M, Grade P or NS, Class 25 and Federal Specification TT-S-00227, Type I self-leveling, Type II nonsagging, Class A, uniform, homogeneous and free from lumps, skins, and coarse particles when mixed.

b.Capable of being continuously immersed in water.

c.Manufacturer: W. R. Meadows CM-60, two-part; Sonneborn Sonolastic Two; or equal.

H.Type 8 - One-Part Polysulfide, Nonsag, Not Immersible:

a.Polysulfide base, single-component, chemical curing; ASTM C 920, Type S, Grade NS, Class 12 1/2; Federal Specification TT-S-00230, Type II nonsag, Class A;

b.Capable of withstanding movement up to 20 percent of joint width.

c.Manufacturer: W. R. Meadows CM-60, one-part; Sika Chemical Corp. Sikaflex 440; Product Research Corp. PRC 7000; or equal.

I.Type 9 - One-Part Acrylic Terpolymer, Nonsag, Not Immersible:

a.Acrylic base, single-component, solvent curing; Federal Specification TT-S-00230, Type I nonsag, Class B.

b.Capable of withstanding movement up to 7.5 percent of joint width; Shore "A" hardness of 55 maximum.

c.Manufacturer: Pecora Chemical Corp. 60 + Unicrylic; Tremco Mono; or equal.

3.BACKUP MATERIAL

A.Nongassing, extruded, closed-cell round polyethylene foam rod, compatible with sealant used, and as recommended by sealant manufacturer.

B.Size: As shown or as recommended by sealant material manufacturer. Provide for joints greater than 3/16-inch wide.

C.Manufacturer: Haveg Industries Minicel; Dow Corning Ethafoam SB; Sonneborn Sonofoam; Hercules, Inc., HBR; or equal.

4.BOND BREAKER

A.Pressure Sensitive Tape: Recommended by sealant manufacturer to suit application.

5.JOINT CLEANER

A.Noncorrosive and nonstaining type, recommended by sealant manufacturer; compatible with joint forming materials.

6.PRIMER

A.Nonstaining type recommended by sealant manufacturer to suit application.

7.SEALANT COLOR

A.Unless specifically noted, match the color of the principal wall material adjoining the area of application.

8.TAPE SEALANT

A.Closed cell polyvinyl chloride (PVC) foam coated on both sides with a modified acrylic pressure-sensitive adhesive.

B.Color: Black.

C.Size: 3/4-inch width by length as required by thickness as recommended by manufacturer, for particular application.

D.Properties:

a.Tensile Strength (ASTM D 412, Die C): 80 psi.

b.Elongation (ASTM D 412, Die C): 125 percent.

c.Compression Set (ASTM D 1056): 30 percent max.

d.Compression Deflection (ASTM D 1056) at 25 Percent Deflection: 2.5 psi.

e.Low Temperature Flexibility, 5 Hours at -40 Degrees F: No cracking.

f.Heat Rsistance/Maximum Shrinkage, 70 Hours at 212 Degrees F: 1.5 percent.

g.Staining (ASTM D 925) on Most Substrates: None.

h.Water Absorption by Weight at 30 Percent Compression: 24 percent.

i.Density per Cubic Foot (ASTM D 3574): 10 pounds.

j.Thermal Conductivity (k factor): 0.24.

9.PREFORMED SEALS

A.Preformed Compressible Joint Seals:

a.Widths Up to 5-Inches: Acme Highway Products Corp., Buffalo, NY, Acmaseal J-Series; Watson-Bowman Associates, Inc., Buffalo, NY, WA-Series; H. S. Peterson Co. Isoflex Neoprene Seal, LS-Series, Pontiac, MI; or equal.

b.Other Widths: Series or model recommended by seal manufacturer.

PART III. -- EXECUTION

1.GENERAL

A.Use of more than one material for the same joint is not allowed unless approved by the sealant manufacturer.

B.Install joint sealants in accordance with ASTM C 962.

C.Horizontal and Sloping Joints of 1 Percent Maximum Slope: Use self-leveling (Grade P) joint sealant.

D.Steeper Sloped Joints, Vertical Joints, and Overhead Joints: Use nonsag (Grade NS) joint sealant.

E.Use joint sealant as required for the appropriate application and as follows:

Joint Size	Sealant Type
Less than 1-inch	1,2,3,4,5,6,7,8, or 9
Less than 2-inch	1,2,3,4, or 7
Over 2-inch	As per manufacturer's recommendation

2.PREPARATION

A.Verify that joint dimensions and physical and environmental conditions are acceptable to receive sealant.

B.All surfaces to be sealed shall be dry, sound, and free of dust, loose mortar, and other foreign materials.

a.Mask adjacent surfaces where necessary to maintain neat edge.

b.Starting of work will be construed as acceptance of all subsurfaces.

C.Verify that joint shaping materials and release tapes are compatible with sealant.

D.Examine joint dimensions and size materials to achieve required width/depth ratios.

3.INSTALLATION

A.Use joint filler to achieve required joint depths, to allow sealants to perform intended function.

a.Install backup material as recommended by sealant manufacturer.

b.Where possible, provide full length sections without splices; minimize number of splices.

B.Use bond breaker where recommended by sealant manufacturer.

C.Apply sealant within environmental conditions stated above.

a.Consult manufacturer when sealant cannot be applied within these temperature ranges.

D.Seal all joints around window, door and louver frames, expansion joints, and elsewhere as indicated.

E.Joint Sealant Materials: Follow manufacturer's recommendation and instructions, filling joint completely from bottom to top, without voids.

F.Joints: Tool slightly concave after sealant is installed.

a.When tooling white or light color sealant, use a water wet tool.

b.Finish joints free of air pockets, foreign embedded matter, ridges, and sags.

G.Tape Sealant: Locate where indicated and install in accordance with manufacturer's instructions.

4.PREFORMED SEALS

A.Prepare joint surfaces clean and dry, free from oil, rust, laitance, and other foreign material.

B.Construct joints straight and parallel to each other and at the proper width and depth.

C.Install within environmental conditions stated above.

D.Apply joint sealant manufacturer's approved primer and adhesive in accordance with manufacturer's instructions.

E.Install seal in accordance with manufacturer's instructions.

5.CLEANING

A.Clean surfaces next to the sealed joints of smears or other soiling resultant of sealing application.
B.Replace any damaged surfaces resulting from joint sealing or cleaning activities.

C.Clean up and dispose of all waste materials and debris resulting from this operation off the site.

6.JOINT SEALANT SCHEDULE

A.This schedule lists the sealant types acceptable for each joint location. Use as few different sealant types as possible to meet the requirements of this project.

Joint Location	Sealant Type(s)
1. Expansion/Contraction and control Joints at:	
Concrete Walls	1,3,4,5,6,7
Concrete Floor Slabs	2,5
Masonry Walls	1,3,4,5,6,7
2. Material Joints At:	
Metal Door & Louver Frames (Exterior)	1,5,6,8
Metal Door & Louver Frames (Interior)	1,5,6,8,9
Wall Penetrations (Exterior)	1,5,6,8
Wall Penetrations (Interior)	1,5,6,8
Floor Penetrations	5,6,7
Ceiling/Roof Penetrations	1,3,4,5,6,7
Sheet Metal Flashings	1,3,5,7
3. Other Joints:	
Threshold Sealant Bed	5
Immersed Concrete (Vertical and Sloped)	3,5
Immersed Concrete (Horizontal)	2,5
Openings Around Pipes, Conduits, and Ducts Through Fire-Rated Construction	11
Concrete Form Snap-Tie Holes	1,4,6

* * * * * *

SECTION 07920
CAULKING AND SEALANTS

PART ONE - GENERAL

1.1 SUMMARY

A. Throughout the Contracted Work furnish all tools, equipment, materials, and supplies and perform all labor to provide a positive barrier against passage of air or moisture from the exterior.

1. Caulk and Seal around entire exposed perimeters of all penetrations and openings through walls and for slabs on grade where any item is installed in the opening or through the penetrations.

2. Caulk and seal the sheet metal flashings and other items penetrating through the roof.

B. **Related Sections:**

1. Documents affecting work of this Section include, but are not necessarily limited to the GENERAL CONDITIONS, SUPPLEMENTARY CONDITIONS and Sections in DIVISION 1 - GENERAL REQUIREMENTS of these Specifications.

2. Masonry Work in Division 4.

3. Waterstops and expansion joint fillers for structural joints in Sections of Division 7 - THERMAL AND MOISTURE PROTECTION.

4. Above Grade Waterproofing Sealer Treatment in Section 07210.

5. Flashing and Sheet Metal Work in Section 07600.

6. Mosaic Tile, Ceramic Tile and Quarry Tile in Section 09300.
7. Metal Doors and Frames in Section 08100.

8. Aluminum Windows in Sections 08520.

9. Steel Windows in Section 08510.

10. Firestopping in Section 07270.

11. Waterproofing in Section 07290.

1.2 QUALITY ASSURANCE

A. <u>Reference Standards</u>:

1. All materials specified herein shall conform to the requirements of the publications hereinafter listed, to the extent that the requirements therein specified are not in conflict with the provisions of this Section.

2. References to "ANSI Standards" shall mean the American National Standards Institute Publication A116.1-1967 "Two Component Elastomeric Sealing Components for the Building Trade".

B. <u>Qualifications of Manufacturers</u>: Products used in the work of this Section shall be produced by manufacturers regularly engaged in the manufacture of similar items and with a history of successful production acceptable to the City Engineer or the Consultant. Manufacturer shall have been on business of manufacturing the specified types of Sealants for not less than 10 years.

C. <u>Qualification of Installers</u>:

1. Installers shall be thoroughly trained and experienced in the necessary skills and be thoroughly familiar with the specified requirements and shall have a minimum of 5 years experience installing caulking and sealants.

2. Installers shall be completely familiar with the joint details shown on the Contract Drawings and installation requirement hereinafter specified in this Section.

1.3 SUBMITTALS

A. **Manufacturer's Data:** Comply with provisions in the SUBMITTALS SECTION 01340 in DIVISION 1-GENERAL REQUIREMENTS of these Specifications.

1. Submit within 45 days after execution of the Contract:

   a. A complete materials list showing all items specified to be furnished and installed under this Section.

   b. Sufficient data to demonstrate that all materials meet or exceed the specified requirements.

   c. Specification, installation instructions and general recommendations from manufacturer showing procedures under which it is proposed that materials will be installed.

   d. Upon approval by the City Engineer or the Consultant, the proposed installation procedures will become the basis for inspection and acceptance or rejection of actual installation procedures used on the work.

B. **Samples**: Submit separate samples for each type of caulking or sealant material, together with manufacturer's data, all as necessary to fully demonstrate functional and service ability characteristics that comply with the specified requirements. Obtain approval prior to delivery of materials to the job-site for material substitutions. Samples of the sealant in concrete construction expansion joints shall be applied between 1-inch thick concrete blocks to the full size and shape of sealant in the joints indicated. Conform to the provisions of MATERIALS, SAMPLING AND TESTING of Section 31 in the GENERAL CONDITIONS of these Specifications.

1.4 GUARANTEE

A. **Guarantee:** The guarantee period specified in Section 28 of the GENERAL CONDITIONS of these Specifications shall hereby be extended to two (2) years. Contractor shall provide the City Engineer with a written guarantee against any inherent or developed defects in material or in installation and file five (5) copies of same with the City Engineer or the Consultant as a prerequisite for final acceptance of the work.

B. Warranty shall further state that installed sealants are warranted against the following:

1. Water leakage through sealed joints.

2. Adhesive or co-adhesive failure of sealant.

3. Staining of adjacent surfaces caused by migration of sealant or primer.

4. Chalking or visible color changes of the cured sealant.

1.5 DEFECTIVE WORK

A. Work will be adjudged defective by the City Engineer or the Consultant if leakage results from failure of sealant or caulking to bond to adjacent work or if it hardens, cracks, shrinks, or runs or stains adjacent work.

B. Remove defective work, clean joints and install new caulking and/or sealant materials as approved by the City Engineer or the Consultant at no added cost to the City.

1.6 PRODUCT HANDLING

A. **Delivery and Storage:** Deliver all materials of this Section to the job-site in their original unopened or unbroken containers with all labels intact and legible at time of use. Store only under conditions recommended by the manufacturer concerning shelf life, temperature humidity, ensuring the fitness of the material when installed. Do not retain on the job-site any material which has exceeded the manufacturer's recommended shelf life.

B. **Protection:** Use all means necessary to protect the materials of this Section before, during and after installation and to protect work and materials of other trades.

C. **Replacements:** In the event of damage, immediately make all repairs and replacements necessary to the approval of the City Engineer or the Consultant, at no added cost to the City.

PART TWO - PRODUCTS

2.1 GENERAL

Materials shall conform to the referenced standards specified hereinafter, to the extent that they do not conflict with requirements of this Section.

2.2 SEALANTS

A. Type of Sealants:

1. Asphalt Sealant shall conform to Federal Specifications SS-S-1614 (1), EDOCO Technical Product No. 3060 or Burke's No. 400 Sealing Compound.

2. Elastomeric Joint Sealant: Federal Specification TT-S-00227E (3) for 2-part rubber base sealant or Federal Specification TT-S-230A for 1-part synthetic rubber base sealant.

    a. Use "Class A" sealant for non-traffic bearing horizontal surfaces.

    b. Use "Class B" sealant for vertical surfaces.

B. Sealant Colors:

1. Colors for each sealant installation will be selected by the City Engineer or the Consultant from standards colors normally available from the manufacturer. Should such standard color is not available from the approved manufacturer except at additional charge, provide all such colors at no additional cost to the City.

2. In concealed installations and in partially or full exposed installations, where so approved by the City Engineer or the Consultant, use standard gray or black sealant.

2.3 CAULKING MATERIALS

A. Caulking Compound: W.R. Grace & Co. "Hornflex Standard Gun Grade" or "Thiokol" approved polysulfide sealant for all other joints including miscellaneous vertical joints, exterior door, window and louver frames, etc.

B. Caulking Stop: Polyurethane for open joints of size 1-1/2 times the joint

width opening and depth no more than 3/8 inch for sealant bite.

C. **Oakum:** Untarred, picked (loose), fine hemp fibers.

2.4 BACKUP MATERIALS FOR SEALANTS

A. **Primers and Bond Breakers:** As recommended by the sealant manufacturer in their published instructions.

B. **Backer Rods and Other Backing Materials:** Type as recommended by the Sealant manufacturer.

1. Closed-cell resilient urethane or polyvinyl chloride foam;
2. Closed-cell polyethylene foam;
3. Closed-cell sponge of vinyl or rubber;
4. Polychoroprene tubes or beads;
5. Polyisobuthlene extrusion;
6. Oil-less dry jute.

C. **Filler for Use with Asphalt Sealant:** Asphalt impregnated, as per ASTM D 1715.

D. **Filler of Use with Elastomeric Sealer:** Plain type as per ASTM D 1752 Type II or Type III.

E. **Surface Covers:** (Where Simple bond-prevention is necessary).

1. Polyethelene Tape, pressure-sensitive adhesive, required only to hold tape to the construction material.
2. Aluminum foil conforming to MIL-SPEC-MIL-A-148E
3. Heavy wax paper conforming to Fed. Spec. UU-P-270

F. **Other Materials:** All other materials, not specifically described but required for complete and proper caulking and installation of sealants, shall be first quality of their respective kinds as selected by the Contractor subject to the approval of the City Engineer or the Consultant.

PART THREE - EXECUTION

3.1 INSPECTION AND INSTRUCTIONS

A. **Manufacturer's Inspection:** Just prior to start of application of each type sealant, provide initial instructions at start of work in order to verify if physical conditions are proper in order to properly instruct applicators and that supervision provided is by qualified personnel handling such materials.

B. Examine the areas and conditions under which work of this Section will be performed. Correct conditions detrimental to the proper and timely completion of the work. Do not proceed until detrimental conditions have been corrected.

C. Contractor to notify the manufacturer at least 72 hours prior to time inspection is required.

D. Failure or refusal of manufacturer to provide inspection and supervision shall constitute grounds for non-acceptability of materials manufactured, even though specified hereinafter in this Section.

E. Applicator shall report to the Contractor any detrimental conditions impairing the proper installation of such materials. Contractor shall correct all such detrimental conditions to the full satisfaction of the City Engineer or the Consultant or the Inspector at no added cost to the City.

3.2 WORKMANSHIP

A. **Application:** In strict accordance with ASTM C-962 and ASTM C-1193 and manufacturer's instructions and supervised by the manufacturer's approved applicator. Manufacturer to provide field assistance to insure proper mixing of sealants, cleaning of surfaces, and application of materials.

B. **Cleaning:** Immediately remove caulking and/or sealant materials from adjacent surfaces not specified to receive sealant, and/or caulking materials. Leave work in a condition satisfactory to the City Engineer or the Consultant.

C. **Protection:** Carefully protect adjoining surfaces from staining. Carefully provide necessary strippable masking where required to limit extent of caulking and sealant material application.

3.3 PREPARATION (As Applicable)

A. **Joint Cleaning:** Joints shall be free of foreign materials full depth of joint. Joint surfaces to be clean, dry and free from grease, oil, wax or other foreign matter, which would tend to destroy or impair adhesion. Clean surfaces in accordance with manufacturer's instructions.

B. **Priming:** Joint surfaces to be primed in accordance with sealant manufacturer's instructions.

C. **Steel Surfaces:**

1. Steel surfaces in contact with sealant shall be sandblasted or scraped or wire-brushed to remove mill scale.

2. Use solvent to remove oil and grease, wiping the surfaces with clean rags.

3. Remove protective coatings on steel by sandblasting or by a solvent that leaves no residue.

D. **Aluminum Surfaces:**

1. Surfaces in contact with sealant shall be cleaned of temporary protective coatings, dirt, oil and grease.

2. When masking tape is used as a protective cover, remove tape just prior to application of sealant.

3. Use only such solvents to remove protective coatings as recommended for that purpose by the aluminum manufacturer, and which are non-staining.

E. **Concrete and Ceramic Tile Surfaces:**

1. All contact surfaces shall be dry, sound, well brushed and wiped free from dust.

2. Use solvent to remove oil and grease, wiping the surfaces with clean

rags.

3. Treated surfaces shall have the surface treatment removed by sandblasting or wire brushing.

4. Remove all laitance and mortar from the joint cavity.

5. Where backstop is required, insert an approved backup material into the joint cavity to required depth.

3.4 INSTALLATION OF BACKUP MATERIAL

Use only the backup materials recommended by the Sealant manufacturer and approved by the City Engineer or the Consultant for the particular installation, compressing the backup material 25% to 50% to secure a positive and secure fit. When using backup of tube or rod stock, avoid lengthwise stretching of material. Do not twist or braid hose or rod backup stock.

1. Sealant bite 1/8" to 2" but never more than 2 to 1/4 of joint width.

2. Use foam backup rod or bond breaker tape to minimize joint configuration.

3.5 PRIMING

Use only the primer recommended by the Sealant Manufacturer and approved by the City Engineer or the Consultant for the particular installation. Apply primer in strict accordance with manufacturer's recommendations as approved by the City Engineer or the Consultant.

3.6 SCHEDULE

A. **Elastomeric Caulking Joint Compound:** Use in expansion and contraction joints where limited movement is anticipated and areas where general caulking is required.

B. **Multi-Part Sealant:** Use in expansion and construction joints and all joints in all concrete walking surfaces where indicated or noted on the Contract Drawings and/or specified in the Specifications.

3.7 INSTALLATION SEALANTS

A. **General:** Prior to start of installation in each joint, verify the joint type according to Contract Drawing Details and that the required proportion of width to depth of joint has been secured.

B. **Equipment:** Apply sealants under pressure with hand or power actuated gun or other appropriate means. Guns shall have nozzle of proper size and shall provide sufficient pressure to completely fill joints as designed.

* **C.** **Application:**

1. Caulking performed under other Sections of these Specifications shall comply with all of the following requirements unless specific changes are specified in those other Specification Sections.

2. Fill all joints where no backing exists partially with filler material (that is compatible with specified caulking or sealant material).

    a. Metal to Metal Joints: Minimum joint width of 1/4-inch.

    b. All Other Joints: Maximum 3/4-inch, unless otherwise detailed.

    c. Minimum joint depth shall be 1/4-inch, for metal joints; 2-inch for concrete, masonry, and plaster work joints.

3. Apply sealants under sufficient pressure to completely fill all voids.

4. Apply non-sagging type sealants in vertical joints.

5. Apply self-leveling type sealants in horizontal joints.
6. Apply non-tracking sealants, having a shore hardness range of 40 to 55, to concrete, masonry or tile expansion joints, subject to foot or vehicular traffic.

7. Finish all exposed joints smooth, flush with surfaces, or recessed as shown.

8. Provide strippable masking for factory applied sealing materials to prevent dirt contamination until parts are assembled.

9. Tool all joints to the profile shown on the Contract Drawing Details.

10. Caulk and seal open joints left between openings and both sides of frames on the exterior of building and all other joints between building units or materials where Contract Drawings call for caulking and/or sealants, interior and exterior or where necessary to completely seal off joints against passage of water, air or dust.

D. Cleaning Up:

1. Remove masking tape immediately after joints have been tooled.

2. Clean adjacent surfaces free from sealants as the installation progresses. Use solvent or cleaning agent as recommended by the sealant manufacturer.

3. Remove excess caulking and sealants from adjacent surfaces of joints, leaving the work in a neat and clean condition.

E. Concrete Expansion and/or Contraction Joints: Construct such joints as indicated on the Contract Drawings and specified in DIVISION 3 - CONCRETE.

(END OF SECTION)

SECTION 08110
METAL DOORS AND FRAMES

PART ONE - GENERAL

1.1 SUMMARY

A. All materials, tools, equipment, supplies and all labor required to fabricate and install metal doors and frames indicated on the Contract Drawings and in these Specifications.

B. **Related Sections:**

1. Documents affecting work of this Section include, but are not necessarily limited to the GENERAL CONDITIONS, SUPPLEMENTARY CONDITIONS and Sections in DIVISION 1 - GENERAL REQUIREMENTS of these Specifications.

2. Concrete Work in Sections of Division 3.

3. Finish Hardware in Section 08710.

4. Glass and Glazing in Section 08800.

5. Access doors in Plaster Walls and Ceiling in Section 09200.

6. Painting in Section 09900.

7. Metal Louvers in Section 10200.

8. Access doors related to plumbing work in DIVISION 15.

1.2 QUALITY ASSURANCE

A. **Qualifications of Manufacturer:** Products used in the work of this Section shall be produced by manufacturers regularly engaged in manufacture of similar items and with a history of successful production acceptable to the City Engineer or the Consultant and a Los Angeles City Building and Safety licensed fabricator.

B. **Qualifications of Installer:** Use adequate numbers of skilled installers who are thoroughly trained and experienced in the necessary crafts and who are completely familiar with the specified requirements and the methods needed for proper performance of the work of this Section.

C. **Single Source:** All work of this Section shall be produced by a single manufacturer unless otherwise approved by the Consultant or City Engineer.

D. **Shop Inspection:** ***Required in accordance with General Conditions.***

1.3 SUBMITTAL

A. **Manufacturer's Data:** Submit to the City Engineer after execution of Contract, in accordance with provisions in the SUBMITTALS SECTION 01340 in DIVISION 1-GENERAL REQUIREMENTS of these Specifications, the following:

1. Complete materials list of all items proposed to be furnished and installed under this Section.

2. Manufacturers' specifications and other data required to demonstrate compliance with the specified requirements.

3. Shop Drawings minimum 1/4-inch scale showing details of each frame type, elevations of each door design type, details of all openings, and all details of construction, installation, and anchorage.

4. Manufacturer's recommended installation procedures.

NOTE: The manufacturer's recommended installation procedures, when approved by the City Engineer or the Consultant, will become the basis for inspecting and accepting or rejecting actual installation procedures used on the Work.

1.4 PRODUCT HANDLING

A. **Delivery:** Deliver, store and handle metal doors and frames in a manner to prevent damage or deterioration.

B. **Packaging:** Carefully package metal doors and frames in shipping containers to prevent damage to doors or marring the finish during shipping and handling. Identify shipping containers relative to door number and location.

C. **Storage:** Store Doors in an upright position inside the building outside of weather exposure until installed, where directed by the City Engineer at least 1-inch or more off the floor or ground and at least 1/4-inch between individual doors.

D. **Protection:** Use all means necessary to protect materials of this Section before, during and after installation and to protect installed work and materials of other trades.

E. **Clean Up and Touch Up:** Abraded, scarred or rusty areas of doors and/or frames shall be cleaned up and touched up with specified coating system immediately upon detection, subject to the approval of the City Engineer or the Consultant.

F. **Replacements:** In the event of damage, immediately make all replacements and/or repairs necessary to the approval of the City Engineer or the Consultant, at no added cost to the City.

1.5 GENERAL REQUIREMENTS

A. **Labeled Doors and Frames:** Construction and necessary built-in hardware shall conform to NFPA Standards and Uniform Building Code with the Los Angeles City 1992 Amendments. Both doors and frames shall bear Underwriters, Inc. label for the rating indicated on the "Door Schedule" on the Contract Drawings.

B. **Applicable Regulations:** All exterior metal doors must comply with air infiltration standards as per California Energy Conservation Standards, Title 24, Part 6, Division T-20, Chapter 2, Subchapter 4 of the California Administrative Code.

C. **Field Measurements:** Verify all opening dimensions and field conditions at the job-site prior to submittal of Shop Drawings and fabrication.

D. **Clean Up:** In addition to provisions in Section 01710 - CLEANING of

Division 1 - GENERAL REQUIREMENTS upon completion of work of this Section, remove all tools, equipment and rubbish resulting from this work from the premises and leave the work areas in a safe and clean condition.

E. **Exterior Door Astragals**: To be provided to prevent unauthorized entry from the outside. Materials and installation specified in Section 08710 - FINISH HARDWARE.

PART TWO - PRODUCTS

2.1 MATERIALS

A. **Basic Materials for Doors and Transom Panels:**

1. Cold rolled steel sheets of stretcher-leveled flatness, commercial quality conforming to ASTM A366 and A568 and Commercial Standards, CS 242-62 except where more stringent construction is required to satisfy U.L. labeling requirements.

2. Exterior doors shall be fabricated of sheet steel having a zinc coating of 1.25 ounces per square foot on each side before assembly.

3. Filler for labeled doors shall be material as approved by Underwriters Laboratories for fire rated doors. Other metal doors shall be filled with manufacturer's standard sound deadening material.

4. Paint: Rust-inhibitive primer, Federal Specification TT-P-645 which shall be baked on applied after assembly.

B. **Basic Materials for Frames:**

1. Door Frames: 14-gage (0.0747-inch thick) cold-rolled sheet steel of stretcher-leveled flatness conforming to ASTM A366-72.

2. Paint: Rust-inhibited zinc chromate primer, Federal Specifications TT-P-645 which shall be applied after assembly.

C. **Inserts, Bolts and Fasteners:** Manufacturer's standard units, except hot-dipped galvanized items to be built into exterior wall, comply with ASTM A-153, Class C or D as applicable.

2.2 FABRICATION

A. Construction Standards for Doors and Frames: Conform to Commercial Standards, CS242-62 except where more stringent construction is required to satisfy U.L. labeling requirements.

B. General Construction:

1. Construct metal doors and pressed metal frames in accordance with Contract Drawing details and reviewed Shop Drawings. Provide U.L. label on doors at time of delivery to the job-site. U.L. label shall be as noted on the "Door Schedule" on the Contract Drawings.

2. Fabricated steel door and frame units to be rigid, neat in appearance, free from defects, warp or buckles and metal accurately formed to required sizes and profiles.

3. Wherever practicable, fit and assemble units in the manufacturer's plant. Clearly identify work that cannot be permanently factory-assembled before shipment, to assure proper assembly at the job-site.

C. Door Fabrication:

1. Type: Flush, hollow steel doors, security type with suitable filler and U.L. Label.

2. General: In accordance with details on the Contract Drawings and reviewed Shop Drawings.

3. Metal Covering: Two formed sheets on each side of door not thinner than 12 gage steel, rigidly connected and reinforced with 18-gage steel vertical stiffeners running full length of door, approximately 6-inches on center.

4. Door Top and Bottom: Closed and reinforced with channel member running full width of door. Provide top edges of doors with channels welded in with web flush with upper edges of doors with no depression to eliminate accumulation of water and provide protection against weather and penetration of water to interior of the door.

5. Light Panels: Manufacturer's standard design; removal stops secured with rust-resistant oval-head countersunk screws; sizes as indicated in Door Schedule on the Contract Drawings; build into door neatly, plumb and square, and accurately off-centered.

6. Door Edges and Hardware Reinforcements: Join and reinforce edges with 9-gage minimum steel strip, offset at hinge locations. Drill and tap to receive mortise hinges. Located bottom of bottom hinge 10-inches above door bottom and top of top hinge 5-inches below top of door, and center hinge midway between top and bottom hinges. Reinforce at locksets, panic bars, closers, and remainder of specified hardware; use specified minimum thickness material.

7. Cutouts: Make neatly to indicated size to receive louvers and lights with integral stops and/or applied stops on the exterior securely welded in place. Conceal all welds. Make interior removal stops, of at least 18 gage steel, sized to commensurate glass or louver thickness. Secure in place with countersunk oval head Phillips head sheet metal screws at maximum 10-inches on centers, except as otherwise indicated on the Contract Drawings.

8. Interior Door Louvers: Inverted "V" type as indicated on the Contract Drawings.

9. Fire-Rated Door Louvers: Controllair "FLDL" fusible link door louvers by Anemostat Controllair Co., Los Angeles, California, or equal; U.L. approved with movable 16-gage cold rolled "Z" shaped steel blades and frame with stainless steel pivots an U.L. approved 135 degree F fusible link and with baked-on epon enamel prime finish.

10. Exterior Door Louvers: Straight blades formed of 18-gage steel extended storm proof "Z" Section. Securely weld to flush permiter frames formed of the same gage and material as the blades, welded or riveted at corners. Provide on back side of louver a 1/4 inch mesh galvanized screen in a removable U-shaped galvanized frame.

11. Transoms: Material, thickness and construction shall match doors in the same opening.

D. <u>Door Frame Fabrication</u>:

1. Type: Pressed metal steel door frames of unit-type design.

2. Fabrication:

   a. Accurately form to required shape, size and profile, as indicated on the Contract Drawings.

   b. Weld corners full length of joint and grind welds smooth.

   c. Jamb anchors on frame to be 12-gage steel for attachment to masonry or wood or concrete; 12-gage steel clip angle at bottom of each jamb fastening to floor; adjustable anchors as required by wall conditions. Provide spreader at the bottom of frame to be removed after frame is set and anchored. Provide minimum two anchors at head section and in jambs and one anchor for each 2-1/2 feet of door height or fraction thereof.

   d. Provide manufacturer's gauge label for each item.

E. <u>Preparation for Finish Hardware</u>:

1. Prepare hollow metal door units to receive mortised and concealed finish hardware, including cutouts, reinforcing, drilling and tapping in accordance with final Finish Hardware Schedule and templates provided by the hardware suppliers. Comply with applicable requirements of ANSI-A115, CAC Title 24, NFPA, BHMA and NAAMM.

2. Accurately reinforce door and frame, drill and tap for hardware. For exterior door and frame, all reinforcing plates shall be zinc coated to match door and frame material:

   a. Provide one internal 7 gage steel plate 10-inches long for each of three mortise hinges. Locate top of top hinge 5-inches below top of door. Locate bottom of bottom hinge 10-inches above bottom of door. Locate immediate hinge midway between top and bottom hinges. Weld plates to the door frame.

   b. Reinforce frames with 12-gage steel plates for door closers.

   c. Weld 10 gage auxiliary reinforcement to the standard hinge reinforcement after the hinge reinforcement has been projection welded to the door and frame. The auxiliary reinforcement shall be formed to match the contour of the frame and door to insure tight fit.

d. The cylindrical lock and deadlock reinforcements shall be 16 gage steel and projection welded to the edge to the door. The special formed reinforcements shall provide adequate threads for the face plates screws and include tabs that support the lock latch bolt vertical and horizontally to insure the lock remains in the center of the door thickness during installation and operation.

e. Auxiliary Flush Mounted Bolts for Door with Astragal: The astragal shall be cutout, offset and reinforced with 14 gage steel, and tapped for the attachement screws.

e. Auxiliary Flush Mounted bolts for Door without Astragal: The edge of the door shall be cutout and reinforced with 16 gage steel angle projection welded to the door edge, the reinforcement is drilled and tapped for the attachment screws.

f. Auxiliary Surface Mounted Bolts for Inactive leaf of a pair of door: Reinforcements shall be 14 gage, 4 inches wide by 6 inches long steel channels, welded to the top and bottom channel of metal door.

g. Mortise Exit Devises: Reinforcement used for the lock shall be 14 gage steel and projection welded to the door edge. The lock reinforcement includes stabilizing tabs to insure the lock remains in the center of the door thickness during the installation and operation. The additional reinforcements shall be 14 gage steel channels and welded or bonded to the inside of the door panels.

h. Rim Exit Devises: The reinforcements used on the lock and hinge side of the door for the Rim Exit Devices shall be 14 gage steel channels welded or bonded to the inside of the door panels. The reinforcements shall be 4 1/8 inches wide x 20 inches long.

3. Provide a cutout for the lockset strike at center of knob or lever 3'-2" above bottom of frame.

4. Obtain templates for hinges and lockset strike and other finish hardware from hardware supplier for the required reinforcement cutting and drilling of the frame.

F. **<u>Astragal on Exterior Doors</u>:** Specified in the FINISH HARDWARE Section 08710.

G. **Shop Finish:** Doors and frames to receive two (2) coats of a baked-on-rust inhibitive metal primer over bonderized surfaces and make ready for field painting at the job site specified in Section 09900 - PAINTING.

H. **Factory Baked-On Enamel Finish:**

1. Required on all hollow metal doors and pressed metal frames.

2. Colors: Color shall be selected by the City Engineer or the Consultant from manufacturer's standard colors submitted to the City Engineer or the Consultant and shall be formulated to match color chip furnished by the City Engineer or the Consultant or as noted on the Contract Drawings.

3. Application: To properly clean and phosphate treat galvanized surfaces, manufacturer shall apply a coat of zinc chromate primer (Federal Specification TT-P-636) which shall be at least 1.25 combined oz. per square foot of surface on both sides and then shall apply two (2) coats of an acrylic baking enamel having 20 + 5 gloss conforming to test method 6101 of Federal Standard 141, each coat shall be minimum 1-mil thick and shall be baked under controlled conditions at proper time and temperature for the particular color desired to provide a hard and durable finish.

4. Tests: Baked-on enamel finish shall be capable of withstanding a minimum 1000 hour salt spray test conforming to Federal Standard test method No. 141 without appreciable undercutting and 1000 hours on Atlas Fadeometer without showing appreciable fading.

5. Protection: Doors and frames with baked-on enamel finish shall be wrapped in plastic film to protect against damage during transportation, handling and storage until time of installation. Plastic film wrapping shall be removed just prior to installation of frames and doors.

PART THREE - EXECUTION

3.1 INSPECTION

Examine the areas and conditions under which work of this Section will be

performed. Correct conditions detrimental to the proper and timely completion of the work. Do not proceed until detrimental conditions have been corrected.

3.2 INSTALLATION

A. **General:** Install hollow metal units and accessories in accordance with manufacturer's data and as hereinafter specified.

B. **Installation of Door Frames:** Frames shall be set into position and in, accurate alignment, plumb, straight and true to plane and shall be rigidly and securely anchored to the adjacent concrete or masonry construction and filled with grout. Bottom anchor to wall shall be installed approximately 24 inches above the floor. Upon completion of door frame installation, the bottom spreader shall then be removed and the frame shall be made ready to receive hardware and the door. Protect frames against damage after erection.

C. **Installation of Doors:** Doors shall be accurately fitted, leaving 1/8 inch (plus or minus 1/32-inch) clearance at sides and top. Doors shall be hung plumb and square, in accurate alignment, true to plane on specified hardware and shall operate freely but not loosely without binding. Installation of astragals specified in Section 08710 - FINISH HARDWARE.

D. **Final Adjustments:**

1. Check and readjust operating finish hardware items in hollow metal work just prior to final inspection.

2. Leave work in complete and proper operating condition.

3. Remove defective work and replace with work complying with the specified requirements.

E. **Final Cleaning:** Immediately after erection, sand smooth all rusted and damaged areas of prime coat and apply touch-up of compatible air-drying primes prior to painting on the job-site specified in Section 09900 - PAINTING.

F. **Protection:** Provide protection for doors and frames against damage resulting from other construction operations until acceptance by the City. Contractor shall repair any damage to baked-on-enamel finish as directed by the Manufacturer at no added cost to the City.

G. **Maintenance Materials:** Furnish the City with a full, labeled and sealed 1-

gallon can of touch-up material of each color and instructions for repair of doors and frames.

H. **Testing**: Upon completion of installation, Contractor shall test installed doors against moisture and air penetration through door, frame and sill joints as directed under the presence of the City Engineer and/or Architect. Contractor shall comply with corrections as directed by the City Engineer or Architect at no added cost to the City.

(END OF SECTION)

SECTION 08305
ACCESS PANELS

PART ONE - GENERAL

1.1 SUMMARY

A. All materials, tools, equipment, supplies and all labor required to fabricate and install access panels and frames indicated on the Contract Drawings and in these Specifications.

B. **Related Work**:

1. Documents affecting work of this Section include, but are not necessarily limited to the GENERAL CONDITIONS, SUPPLEMENTARY CONDITIONS, and Sections in DIVISION 1 - GENERAL REQUIREMENTS of these Specifications.

2. Rough Carpentry in Section 06100.

3. Gypsum Drywall in Section 09260.

4. Acoustic Ceiling in Section 09510.

5. Painting in Section 09900.

6. Access panels related to plumbing work in Division 15.

1.2 QUALITY ASSURANCE

A. **Qualifications of Manufacturer:** Products used in the Work of this Section shall be produced by manufacturers, pre-approved by L. A. City Building and Safety, regularly engaged in manufacture of similar items and with a history of successful production acceptable to the City Engineer or the Consultant.

B. **Qualifications of Installer**: Use adequate numbers of skilled installers who are thoroughly trained and experienced in the necessary crafts and who are completely familiar with the specified requirements and the methods needed for proper performance of the Work of this Section.

C. **Single Source**: All Work of this Section shall be produced by a single

manufacturer unless otherwise approved by the City Engineer or the Consultant.

D. **Fire-Resistance Ratings**: Wherever a fire-resistance classification is indicated, provide access panel assembly with panel door, frame, hinge, and latch from manufacturer listed in Underwriters Laboratories, Inc.'s "Building Materials Directory" for rating indicated on the Contract Drawings.

Provide UL label on each fire-rated access panel.

E. **Coordination**: Furnish inserts and anchoring devices that must be built into other work for installation of access panels. Coordinate delivery with other work to avoid delay.

1.3 SUBMITTAL

A. **General**: Submit to the City Engineer after award of Contract, in accordance with provisions in the SUBMITTALS Section 01340 in DIVISION 1 - GENERAL REQUIREMENTS of these Specifications, the following:

1. Product data in form of manufacturer's technical data and installation instructions for each type of access panel assembly, including setting drawings, templates, instructions, and directions for installation of anchorage, devices.

2. Shop drawings showing fabrication and installation of customized access panels and frames, including details of each frame type, elevations of panel design types, anchorage and accessory items.

3. Complete list of access panels required for the project showing locations, sizes, surface on which to be installed and type of panel for wall application.

PART TWO - PRODUCTS

2.1 MANUFACTURERS

A. **Manufacturers**: Subject to compliance with specified requirements, provide access panels by one of the following:

1. Cesco Products
2. Karp Associates, Inc.

3. Milcor, Inc.
4. Nystrom, Inc.

B. **Standard**: The design was based on Nystrom Fire-Rated Access Panels, or equal, to establish a standard of quality. Equal products of the aforementioned manufacturers will also be acceptable. Provide the following Nystrom models, or equal:

1. Fire-Rated Wall Access Panel:

   a. Model: APFR-WP
   b. Size: 36 x 36 Nominal Dimensions

2. Fire-Rated Ceiling Access Panel:

   a. Model: APFR-WP
   b. Size: 24 x 24 Nominal Dimensions

3. Non-Rated Ceiling Access Panel:

   a. Model: APWB-RD
   b. Size: 24 x 24 Nominal Dimensions

C. **Construction**:

1. High quality commercial grade cold-rolled steel with 16 gauge frame and 20 gauge panel.

2. Finish shall be phosphate dipped with a factory applied baked-on rust inhibitive gray prime finish. Field finish paint to match adjacent surfaces. (See Section 09900)

3. Finish Beading: Standard 22 gauge galvanized steel drywall bead.
4. Hinge: Concealed Pin Hinge.

5. Provide continuous spring closer.

6. Latch/Lock: Ball bearing cylinder lock operated by a recessed turn ring or flush key which allows surface covering to be applied over face of panel without obstruction. All panels shall have an interior latch release mechanism allowing panels to be unlocked from the inside.

PART THREE - EXECUTION

3.1 SURFACE CONDITIONS

Examine the areas and conditions under which Work of this Section will be performed and report to the City Engineer or the Consultant any adverse conditions affecting installation of access panels and await for further instructions. Start of installation operations shall imply acceptance of job conditions.

3.2 INSTALLATION

A. Install access panels (where indicated on the Contract Drawings), and in accordance with manufacturer's installation recommendations and all applicable building codes.

B. Set frames accurately in position and securely attach to supports with face panels aligned, plumb or level in relation to adjacent finish surfaces.

3.3 ADJUST AND CLEAN

A. Comply with applicable provisions of Section 01710 - CLEANING of DIVISION 1 - GENERAL REQUIREMENTS of these Specifications.

B. Adjust hardware and panels after installation for proper operation.

C. Remove and replace panels or frames that are warped, bowed, or otherwise damaged.

(END OF SECTION)

SECTION 08331
STEEL ROLLING DOORS

PART ONE - GENERAL

1.1 SUMMARY

A. Provide and install manual and motor operated rolling (overhead coiling) steel door assemblies, where shown on the Contract Drawings and in these Specifications and as needed for a complete and proper installation.

B. **Related Sections:**

1. Documents affecting work of this Section include, but are not necessarily limited to the GENERAL CONDITIONS, SUPPLEMENTARY CONDITIONS and Sections in DIVISION 1 - GENERAL REQUIREMENTS of these Specifications.

2. Steel Channels, Door Jambs and Heads in Section 05500 - METAL FABRICATIONS.

3. Lock Cylinder or Padlocks, furnished in Section 08710 - FINISH HARDWARE, installed under this Section.

4. Finish Painting in Section 09900.

5. Electrical Conduit, Disconnect Switches, Wiring and Connecting Equipment in Section 16400 - ELECTRICAL.

1.2 QUALITY ASSURANCE

A. **Workers:** Use adequate numbers of Contractor's skilled employees who are thoroughly trained and experienced in the necessary crafts and who are completely familiar with the specified requirements and the methods needed for proper performance of the Work of this Section.

1.3 SUBMITTALS

A. Comply with applicable provisions in SUBMITTALS Section 01340 in

DIVISION 1 - GENERAL REQUIREMENTS of these Specifications.

B. **Materials List:** Items proposed to be provided under this Section including lists of spare parts for maintenance purposes.

C. **Shop-Erection Drawings:** Furnish prior to fabrication and delivery prepared complete Shop and Erection Drawings to the City Engineer or the Consultant for review and approval. Drawings shall show, at reasonable large scale details of work, methods of anchoring and fastening of metals, sections and profiles.

D. **Manufacturer's Recommended Installations Procedures:** When approved by the City Engineer or the Consultant, will become the basis for accepting or rejecting actual installation procedures used on the work.

E. **Manufacturer's Specifications and Data:** Required to prove compliance with the specified requirements.

F. Complete wiring and control diagrams.

G. **O and M Instructions**: Upon completion of installation, Contractor shall deliver to the City Engineer complete operation and maintenance instructions for the overhead door assemblies.

1.4 PRODUCT HANDLING

A. **Delivery and Storage:** Protect all materials and components during shipping, handling and storage at the job-site as directed by the City Engineer or the Consultant. Protected from the elements, all work showing defects or damage of any kind will not be accepted.

B. **Dissimilar Materials Protection:** Separate aluminum surfaces in contact with other metals or cementatious materials by means of impregnated tape, heavy coat of bituminous paint or other approved method.

1.5 FIELD MEASUREMENTS

A. **Required:** Verify all opening measurements and field conditions at the job-site prior to submittal of Shop/Erection Drawings and fabrication.

1. Report to the City Engineer or Consultant all conditions detrimental to the proper installation of the specified work requiring remedial work.

2. Start of specified work shall imply Contractor's acceptance of job

conditions.

PART TWO - PRODUCTS

2.1 MANUFACTURER AND TYPES

A. **Manufacturers:** Types hereinafter specified for purposes of defining type and quality shall be by the Cookson Company, Burbank, California, (213) 849-2297-8 in accordance with manufacturer's current specifications. Approved equivalent units manufactured by Lawrence, Kinnear and Wilson are acceptable, provided they meet specification requirements.

B. **Types:**

1. Manual Operated Doors, Type FC-CHAIN

2. Power Operated Doors, type FCM-MOTOR, locations indicated on contract drawings. Manufacturer's standard electric motor operator with three (3) position push button operations, in capacity recommended by the manufacturer.

C. **Sizes:** As indicated on the "Door Schedule" on the Contract Drawings and as detailed on the approved Shop Drawings.

2.2 CONSTRUCTION - GENERAL (Applicable to all doors)

A. **Design Wind Load:** Exterior door curtain to withstand a 20-lb. per square-foot wind pressure.

B. **Curtain:** Interlocking slats fabricated from 22 gage strip steel with a hot-dip galvanized coating of 1.25 oz. per square foot in accordance with ASTM A123-84, and of Type 5 slat design.

1. Endlocks: Provide alternate slats, with heavy malleable iron endlocks, as necessary to retain slats in place, to protect slats against rubbing in guides and to maintain curtain in alignment.

2. Bottom of Curtain: Reinforced bottom slat with two (2) steel angles back-to-back, not less than 1/8-inch thick. Provide bottom of curtain with door manufacturer's all weather astragal. Provide bottom of power operated door curtain with manufacturer's safety device to

activate the motor operator should the curtain contact an object while traveling in a downward direction which would automatically stop or reverse the curtain travel. Where finish floor slopes make provisions in the curtain bottom to fully contact the slope of finish floor full width of the curtain.

3. Attach top slat of curtain directly to barrel using stainless steel or galvanized machine screws of 3/8-inch minimum diameter spaced maximum 36-inches apart and maximum 8-inches from each end of barrel. Drill and tap barrel to receive the machine screws. The curtain, when in closed position, shall encircle the barrel not less than 75 percent of the barrel circumference, or not less than overall circumference of the barrels if bands are used to increase the barrel diameter to 6-inches.

4. Insulation of Exterior Power Operated Doors: 3/16-inch solid polyurethane providing a "U" factor of 0.159 and an "R" valve of 6.29.

C. **Guides:** Cookson No. 2- Guide or equal. Fabricated of three steel angles fastened to form a groove for curtain. Make wall angle continuous. Flare top of each guide for curtain entry and provide with cast iron stops. Secure to frame or building construction with fasteners spaced no greater than 36-inches on center. Minimum clearance between bottom of guide and sill to be 3/16-inch.

D. **Brackets:** Fabricate of not less than 5/16-inches thick high tensile steel plate and secure to building construction with 2-inch bolts and provide ball bearings.

E. **Operating Mechanism:**

1. Gears: Cast iron with teeth cast from machine cut patterns. Design gear ratio for maximum 30 pound manual effort, and pinion gears shall be not less than 3-inch pitch diameter.

2. Barrel: Not less than 4-inch diameter steel tubing with design limit of .03-inch maximum deflection per lineal foot. Equip torsion oil tempered springs capable of counter-balancing curtain weight, and adjustable by means of external wheel device.

3. Chain Operation: By means of reduction gears with extra strong machine moulded teeth and easily handled galvanized continuous looped hand chain with chain guard on sprocket wheel to prevent chain from leaving the sprocket wheel. Provide for padlocking to be furnished by the City and located on the inside of the building. Bottom

of loop to extend to a point approximately 24-inches above the floor.

4. Motor Operation: As hereinafter specified.

F. Finish:

1. Galvanizing: Conform to ASTM A526 providing total 1.25 ounces per square foot of surface on both sides.

2. Shop Finish: Manufacturer's phosphate coating, bonderizing on galvanized surfaces, or manufacturer's acrylic prime coat after fabrication.

3. Finish painting after installation will be provided under Section 09900 - PAINTING of these Specifications.

G. Hood: Fabricate from 22 U.S.S. gage galvanized sheet steel to fit curvature of the brackets and house equipment and be attached thereto and be finished with shop applied approved rust-inhibitive primer to all exposed surfaces.

H. Locking Provisions: Provide cylinder locking provisions to receive master-keyed cylinder furnished by finish hardware supplier and devised to operate with ease the pair of lockable jamb latches. Also, equip with suitable and approved non-projecting manual lifting provisions at outside face of unit.

2.3 OTHER MATERIALS

Provide other materials, not specifically described but required for a complete and proper installation, as selected by the Contractor subject to the approval of the City Engineer or the Consultant.

2.4 ADDITIONAL REQUIREMENTS

A. For Motor Operated Roll-Up Doors:

1. Motor Operations: By means of integral power unit with push button control, as hereinafter specified.

2. Manual Operation: To be provided to operate the door in case of power or motor failure; to be equipped with suitable clutch; must be separately geared from motor operator. Gears and chain operation as hereinbefore specified in Article 2.2(E) 1 and 3.

3. Safety Edge: Provide "Detectedge" device on bottom edge of door curtain to activate motor operator should curtain contact an object while curtain is in downward travel which would automatically stop or reverse the curtain travel. Use the safety edge in lieu of all-weather astragal.

B. **Weatherproofing of Curtain:** Provide wool pile weather strips and attach to the guides to give positive contact with curtain at all times. Bottom of curtain to receive continuous compressible weatherstripping as noted on the Contract Drawings.

2.5 MOTOR OPERATOR

A. **General:** Operator, motor and other electrical components shall be Underwriters' Laboratories, Inc., listed; shall conform to NEMA Standards and meet requirements of the Uniform Building Code with the City of Los Angeles 1992 Amendments.

B. **Operator Unit:** For wall mounting inside the doorway opening shall be totally enclosed in a weatherproof and vandalproof housing; operator shall consist of a motor connected to a speed reducer, to a disc or solenoid clutch brake and to limit switches, similar to Cookson Model 5-Power Operator, or equal.

1. Operator enclosure shall be watertight.

2. Floor mounted enclosure shall be on a concrete pad.

C. **Electrical Characteristics:** 480 volt, 3-phase, 60 cycle AC for motor operator and 24 volt low voltage circuit for Key Station Control.

D. **Motor:** Heavy hoist duty, high starting torque with thermal protective device, Class A insulated, of approximately 1-1/2 hp having a large overload factor.

1. Motor and brake shall be completely removable without affecting manual operator or the limit switches.

E. **Motor Starter:** Equip motor with a separately mounted combination magnetic reversing starter, NEMA I enclosure, nonfuseable disconnect switch type, NEMA size "O" with 480-24V control transformer, 3 melting alloy overload relays, Square "D" Class 8738, Type SBG-11, or equal.

F. **Drive:** Noiseless roller chain drive to a speed reducing form gear assembly

in an oil bath independent of the manual operator; bearings shall be self-aligning permanently lubricated type precision ball bearings.

G. **Key Push Button Control Station:** Shall be provided with an open and close position. Cylinder for key to be keyed to keying system for the project. Contractor to provide five keys for the operation of the Control Station.

H. **Limit Switches:** Required to limit "UP" and "DOWN" curtain travel. Timing of curtain travel shall not be affected when operation changes from power to manual operation or when motor is removed.

I. **Emergency Manual Operations:** Cookson "Positive Position" power operator vertically mounted with chain operation and electro-magnetic clutch, when power is off the doors shall be automatically positioned for operation.

PART THREE - EXECUTION

3.1 INSTALLATION (As Applicable)

A. **Coordination:** Required with other trades to assure proper and adequate provisions in the work of those trades for interface with Work of this Section.

B. By manufacturer or an authorized representative of the manufacturer in accordance with reviewed Shop Drawings and manufacturer's instructions, as reviewed by the City Engineer or the Consultant.

C. **Mounting:** Locate brackets, coil and hood above opening where indicated with guide edges set plumb and flush with finish surface of jamb opening and full height of curtain travel.

D. **Setting:** Plumb, square and symmetrical at opening, with guides plumb and securely fastened as indicated on the Contract Drawings.

E. **Attachments:** Suitable bolts and other anchoring devices necessary for securing to building construction, as indicated on the reviewed Shop Drawings.

F. **Motor Operator Unit:** Install on inside of door opening at location indicated on the reviewed Shop/Erection Drawings. Starter and station controls to be located as indicated. All connections between source of power and electrical components of the operator unit shall comply with all applicable requirements of the Uniform Building Code with the Los Angeles City Building 1992 Amendments and Electrical Codes.

G. **Chain Operator:** Continuous galvanized hand chain operating on a

sprocketed or toothed wheel with reduction gears and chain guard to prevent chain from leaving the wheel. Size the chain for easy operation. Locate chain within five (5) feet from the floor and not more than 12-inches out from the wall for curtain operation up and down.

H. **Adjustments:** Properly adjust all necessary parts for complete installation and smooth operation, as approved by the City Engineer or Consultant.

I. **Test Operation:** Contractor shall demonstrate the operation upon completion of the installation of both power and manual operated doors in the presence of the City Engineer or the Consultant. Door shall operate smoothly in either direction and at prescribed speedy subject to the approval of the City Engineer or Consultant. Make all corrections to assure that components are in optimum operating condition at no additional cost to the City.

3.2 CLEAN-UP

In addition to provisions of Section 01710 of the GENERAL REQUIREMENTS of these Specifications, upon completion of Work of this Section, remove all tools, equipment and rubbish resulting from Work of this Section from the premises and leave the work area in a safe and clean condition.

(END OF SECTION)

SECTION 08416
ALUMINUM ENTRANCES AND STOREFRONTS

PART ONE - GENERAL

1.1 SUMMARY

A. Provide and install all storefront framing, including aluminum glass entrance doors and windows, indicated on the Contract Drawings and in these Specifications and as needed for a complete and proper installations.

B. **Related Sections:**

1. Documents affecting work of this Section include, but are not necessarily limited to the GENERAL CONDITIONS, SUPPLEMENTARY CONDITIONS and Sections in DIVISION 1 - GENERAL REQUIREMENTS of these Specifications.

2. Selective Demolition work in Section 02070.

3. Concrete work in Section 03300.

4. Masonry work in Division 4.

5. Metal Fabrications, etc. in Section 05500.

6. Carpentry Work in Section 06100.

7. Caulking and Sealants in Section 07920.

8. Glass and Glazing in Section 08800.

9. Cylinders, etc. in Section 08710 - FINISH HARDWARE.

10. Lathing and Plastering in Section 09200.

11. Acoustical Work in Section 09510.

1.2 QUALITY ASSURANCE

A. **Employees:** Use adequate number of Contractor's skilled employees who are thoroughly trained and experienced in the necessary crafts and completely familiar with the specified requirements and methods needed for proper performance of the Work of this Section.

B. **Referenced Specifications and Standards (As Applicable):**

1. ASTM - American Society Testing and Materials.

2. AAMA - Architectural Aluminum Mfgr's. Association.

3. PE1 - Porcelain Enamel Institute.

4. AMA - Aluminum Manufacturer's Association.

C. **Applicable Regulations:** All exterior door transoms and sidelights and windows must comply with air infiltration standards as per California Energy Conservation Standards "Title 24" Division 4T20-1495 of the California Administrative Code. Comply also to the following:

1. American National Standard Institute (ANSI) A117/1 1986

2. Americans With Disabilities Act (ADA)

1.3 SUBMITTALS

A. Comply with provisions of the SUBMITTALS Section 01340 in DIVISION 1 - GENERAL REQUIREMENTS of these Specifications.

B. **Shop-Erection Drawings:** Prior to fabrication and delivery furnish the City Engineer with structural calculations, Shop-Erection Drawings in sufficient detail to show fabrication, installation, anchorages, glass and glazing and hardware interface with work of adjacent trades for review and approval by the City Engineer or Consultant.

C. **Manufacturer's Specifications and Data:** Required to prove compliance with specified requirements. Manufacture shall be a Los Angeles City Building and Safety licensed fabricator.

D. **Materials List:** Items proposed to be provided under this Section.

E. **Manufacturer's Recommended Installation Procedures:** When approved

by the City Engineer or Consultant, will become the basis for accepting or rejecting actual installation procedures used on the work.

F. **Samples:** Prior to fabrication and delivery, submit finish samples of frames and other components complete with stops, windows and hardware to the City Engineer or the Consultant for approval, if requested by the City. Approved samples may be incorporated into the project.

G. **Certificates:** If requested by the City, Contractor shall deliver to the City Engineer or Consultant a certificate signed by the finisher and the Contractor stating that the anodized finishes provided conform to the Specifications, with the certificate deliver the finishes test reports of tests made on random production samples, each test report shall be certified.

1.4 PRODUCT HANDLING

A. **Shipment Preparation:** Prior to shipment, manufacturer shall adequately provide protection for all exposed aluminum framing and trim components against damage to components and to anodized finish during shipping, handling and erection operations. All work showing defects or damage of any kind will not be accepted.

B. **Shipping and Delivery:** Door and/or window assemblies to be shipped to the job-site in manufacturer's original unbroken cartons properly marked for location in building. Stack framing components in a manner that will prevent binding and avoid significant or permanent damage.

1.5 VERIFICATION OF JOB CONDITIONS AND FIELD MEASUREMENTS

A. Prior to starting work or processing Shop/Erection Drawings and fabrication, verify all framing dimensions and installation conditions at the job-site, including heights, widths, and specific locations.

B. Report to the City Engineer or Consultant all conditions adversely affecting the proper installation of the specified work and would require remedial work.

C. Start of specified work shall imply Contractor's acceptance of job conditions.

D. Contractor shall be entirely responsible for the correctness conformity, accuracy, and proper execution of the specified storefront framing work.

1.6 DISSIMILAR MATERIALS PROTECTION

Separate aluminum surfaces in contact with or in proximity of ferrous metals and cementatious materials by means of nonabsorbent tape or heavy coat of alkali-resistant bituminous paint or zinc-chromate primer.

1.7 CLEAN-UP

In addition to the provisions of Section 01710 in the GENERAL REQUIREMENTS upon completion of the Work of this Section, remove all tools, equipment and rubbish resulting from work of this Section and leave the work area in a safe and clean condition.

1.8 WARRANTY

A. Comply with provisions of Section 28 in the GENERAL CONDITIONS of these Specifications.

B. **Failure** due to defective materials or workmanship is deemed to include, but not to be limited to:

1. Failures in operation of operating component or components;

2. Leakage or air infiltration in excess of the specified standard;
3. Deterioration of finish to an extent visible to the unaided eye;

4. Defects which contribute to unsightly appearance, potential safety hazard, or potential untimely failure of the Work of this Section or the Work as a whole.

PART TWO - PRODUCTS

2.1 MANUFACTURER

A. All materials hereinafter specified shall be products of the United States Aluminum Corporation, Los Angeles, California, phone (213) 263-9101, Kawneer Co. Inc. (404) 449-5555 or equal. Provide Los Angeles City Building and Safety Research Report number and expiration date.

B. **Storefront Framing and Windows**: Thermo-set system, perimeter

combinations with a nylon clip that prevents the transfer of heat and cold through the metals using 2-thick laminated acoustical glass.

C. **Swinging Aluminum-Glass Door**: No. 250 narrow stile door with a bottom rail of 10-inches conforming to Handicapped Regulations (CAL/ABL and ADA), 1-3/4-inch thick size of door as indicated on the Contract Drawings.

2.2 STOREFRONT AND ENTRANCE FRAMING

A. **Materials:** Aluminum extrusions, 6063-T5 alloy and temper, corrosion resistant, having an ultimate tensile strength of not less than 22,000 psi; shapes and sizes as indicated on the Contract Drawings and approved Shop/Erection Drawings.

1. Framing Members: Not less than 0.125-inch wall thickness; subject to commercial tolerances of plus or minus 10 percent; Component No. TG-418 and Face Component No. TP-138.

2. Trim Members: Not less than 0.062-inch wall thickness.

3. Fasteners: Where required to secure framing to adjoining structure to be aluminum, stainless steel, or other non-corrosive metal guaranteed to be compatible with aluminum extrusions.

4. Glazing: Flush type aluminum snap-in shapes and manufacturer's standards non-stretch, highshore vinyl pull-in, or roll-in type glazing beads (color compatible with anodic color coating of aluminum framing and trim).

5. Finish: All storefront and swinging door framing and trim shall have manufacturer's standard dark bronze anodized finish.

6. Weatherstripping: Manufacturer's standard for exterior door.

7. Aluminum Sill Cover, color to match the aluminum frame and trim, No. SC-200 or SC-100, size as required to make a watertight installation.

8. Aluminum Filler Plates, (2) two OSI aluminum plates with vinyl spacers, approximately 2-inch thickness, color of filler plates to match framing and trim.

B. **Door Frame:** Aluminum Frame No. TJ450 with continuous vinyl thermo-break No. VT450; delete fixed stop and install filler piece plus the soundproof doorstop specified under hardware section; finish of door frame shall match

adjacent framing and trim.

2.3 DOOR HARDWARE

See FINISH HARDWARE - Section 08710.

2.4 GLASS

Furnished and installed under Section 08800 - GLASS AND GLAZING. See Subsection 3.4A3 of the Section for further data.

2.5 FIXED OR OPERATING ALUMINUM WINDOWS

A. **Type:** United States Aluminum Corporation of Los Angeles standard 1-3/4-inch. x 5-inch. or equal.

B. **Construction:** Aluminum of 6063-T5 alloy and temper; equipped vinyl glazing (black color) channel to accommodate designated glass thickness.

C. **Hardware and Locks:** The bottom rail of the sliding panel shall house a recessed flush self-latching, spring loaded mechanisms. The lock shall clamp on sill track to prevent lift-out.

D. **Finish:** Finish shall be uniform and shall match appearance and equality of that specified for storefront framing and entrance doors.

2.6 FABRICATION

A. Fabricate in strict accordance with the manufacturers' specifications and Shop Erection Drawings as approved by the City Engineer or Consultant, prefabricating in the Manufacturer's shop to the maximum extent practicable.

B. Provide hairline fit at joints, make watertight with smooth continuity of line and accurate relation of planes and angles. Securely fasten.

PART THREE – EXECUTION

3.1 SURFACE CONDITIONS

Examine the areas and conditions under which work of this Section will be

performed. Correct conditions detrimental to timely and proper completion of the Work. Do not proceed until detrimental conditions are corrected.

3.2 COORDINATION

A. Coordinate fabrication schedule with construction progress as required with other trades to assure proper and adequate provision in the work of those trades for interface with the Work of this Section to avoid delay of the Work.

B. Make measurements as required in the field to assure proper fit of doors and framing assemblies with adjacent work prior to fabrication.

3.3 WORKMANSHIP

A. Install the Work of this Section in strict accordance with the original design, the approved Shop Drawings, pertinent requirements of governmental agencies having jurisdiction, and the manufacturer's recommended installation procedures as approved by the City Engineer, anchoring all components firmly into position for long life.

B. **General:** All work shall be done by workers skilled in the fabrication and installation of this type of work. Where assemblies require field connections, temporarily assemble work in the shop and test for accuracy of fit.

C. **Specifics: (As Applicable)**

1. Complete all cutting, fitting, forming, drilling, and grinding of all metal work prior to cleaning, finishing, treatment, and application of anodic color coating.
2. Where field cutting of framing and/or trim components is required, exercise extreme care not to damage or mar specified finish.
3. Cut, drill, tap, and reinforce door frames at the factory as necessary to receive door hardware, except do not drill and tap for surface applied hardware until time of installation at the job-site. Comply with hardware manufacturer's instructions and template requirements. Where fasteners have to be exposed, they shall have countersunk heads and be finished to match adjoining work; otherwise, all fasteners shall be concealed. Use concealed fasteners to the maximum extent practicable.
4. Glazing stops shall be removable from the inside when swinging doors are locked, also for storefront glazing as detailed.

5. Provide door and storefront framing with internal stiffeners where strengthening is necessary and/or where indicated.

3.4 INSTALLATION

A. **General:** Install storefront framing, swinging, door and door frame and windows in accordance with manufacturer's recommendations, approved Shop Drawings, and as specified.

1. Set framing components plumb, level, and true to line; properly secure to structure.

2. Accurately hang and adjust doors to function smoothly and quietly without binding complete with all specified hardware.

3. See Section 08800 - GLASS AND GLAZING for installation of glass.

   Note: Where glazing is performed under this Section provide the types of glass required and glaze in accordance with pertinent provisions of Section 08800 of these specifications.

4. Filler Plates: Accurately install within storefront framing, plumb, level and in line, and on approved bearing blocks as per approved Shop Drawings.

B. **Adjustment:** Properly adjust all operating parts and hardware prior to glazing and re-adjust after glazing and painting operations are completed. Leave swinging door ready for use.

C. **Cleaning, Polishing and Repairing:**

1. Thoroughly clean all aluminum and porcelain enamel surfaces before acceptance of the building; remove all protective coatings. Use plain water or a petroleum product, such as white gasoline, kerosene or distillate. No abrasive cleaning agents or other material shall be used which would damage anodic color coating on aluminum surfaces.

2. Clean glass surfaces after installation, complying with requirements contained in the "Glass and Glazing" Section for cleaning and maintenance. Remove excess glazing and sealant compounds, dirt and other substances from aluminum surfaces.

3. Provide watertight testing for leakage before final inspection.

4. Remove and replace any framing or trim component damaged in any manner with specified materials and workmanship at no extra cost to the City and to the full satisfaction of the City Engineer or the Consultant.

5. Leave all aluminum framing, trim and doors, and windows in a neat and clean and operable condition upon completion of the Work of this Section.

D. **Protection**: Institute protective measures required throughout the remainder of the construction period to ensure that aluminum entrances and storefronts will be without damage or deterioration, other than normal weathering, at time of acceptance.

(END OF SECTION)

SECTION 08520
ALUMINUM WINDOWS

PART ONE - GENERAL

1.1 SUMMARY

A. Furnish all tools, equipment, materials and supplies and perform all necessary labor to furnish, fabricate and install aluminum windows as detailed on the Contract Drawings and hereinafter specified.

B. **Related Sections:**

1. Documents affecting work of this Section include, but are not necessarily limited to the GENERAL CONDITIONS, SUPPLEMENTARY CONDITIONS and Sections in DIVISION 1 - GENERAL REQUIREMENTS of these Specifications.

2. Removal Work in Division 2.

3. Concrete Work in Division 3.

4. Carpentry Work in Division 6.

5. Sheet Metal Work in Section 07600.

6. Caulking and Sealants in Section 07920.

7. Glass and Glazing in Section 08800.

1.2 QUALITY ASSURANCE

A. **Applicable Regulations:** All exterior aluminum windows must comply with Title 24 AT20-1495 of the California Administrative Code concerning air infiltration and energy conservation and the Uniform Building Code with the Los Angeles City 1992 Amendments.

B. **Other Regulations**: Comply with pertinent regulations of governmental agencies having jurisdiction.

1. ANSI A134.1 (AAMA 302.9) for designations specified.

2. Provide on each window unit an AAMA sponsored label certifying compliance with the specified requirements.

C. **Laborer's:** Use adequate numbers of skilled laborer's who are thoroughly trained and experienced in the necessary crafts and who are completely familiar with the specified requirements and the methods needed for proper performance of the Work of this Section.

D. **Reference Specifications and Standards: (As Applicable)**

1. American Society Testing and Materials (ASTM).

2. Architectural Aluminum Manufacturer's Association (AAMA).

3. Aluminum Manufacturer's Association (AMA).

E. **Testing and Performance**:

1. All windows must meet or exceed the minimum requirements of performance Class HC40 for the design load specified in accordance with ANSI/AAMA 101-85 "Voluntary Specifications for Aluminum Prime Windows and Sliding Glass Doors".

2. Design load shall be 40 PSF air infiltration shall not exceed .06 CFM/ft. for fixed lites. Water resistance shall be tested at a static air pressure difference of 8 PSF minimum or 20% design. Uniform load structural test shall be conducted at a static air pressure difference of ± 150% PSF design.

1.3 VERIFICATION OF JOB CONDITIONS AND FIELD MEASUREMENTS

A. **Verification of Job Conditions:**

1. Prior to starting work or processing Shop/Erection Drawings and window fabrication, verify all window opening sizes and conditions.

2. Report to the City Engineer or the Consultant all conditions detrimental to the proper installation of windows in order that remedial work be done at no added cost to the City.

3. Start of window installation shall imply Contractors acceptance of job conditions.

B. **Field Measurements:** Contractor shall verify all window(s) opening

dimensions in concrete walls, noting widths, heights and wall opening thickness and specific locations prior to submittal of Shop Drawings, installation instructions and the fabrication of the window units.

1.4 SUBMITTALS

A. **General:** Comply with provisions of SUBMITTALS Section 01340 in DIVISION 1 - GENERAL REQUIREMENTS of these Specifications.

B. **Shop/Erection Drawings:** Indicate in detail the layout and fabrication of all window units, finish and relationship with adjacent construction.

1. Indicate materials, finish, sizes, profiles, dimensioned locations, method of anchoring to wall opening, assembly, erection, isolation and sealant.

2. Manufacturer's literature to clearly identify products proposed for use on this Project.

3. Provide structural calculations for loading noted in Subsection 1.2E.

C. **Manufacturer's Recommended Installation Instructions:** When approved by the City Engineer or the Consultant such instructions will become the basis for accepting or rejecting actual installation procedures used on the work.

D. **Manufacturer's Certification**: Certificate shall state that aluminum anodized finish provided meet or exceed to the specified requirements.

E. **Sample**: Aluminum extruded section with specified finish or coating. Include samples of operating hardware.

1.5 DELIVERY, STORAGE, AND HANDLING

A. **Shipment Preparations:** Windows shall be delivered with required fire-rating/label, prior to shipment provide adequate protections for window framing and trim components to guard against damage to components and finish during shipping, handling and erection operations. Replace products which become damaged during transportation, storage or installation at no added cost to the City.

B. **Protection of Aluminum Surface Finish (Anodic Color Coating)**: Shop-apply a protective coating. Upon completion of installation prior to

acceptance of the building by the City, remove the protective coating. Do not use adhesive papers or sprayed coatings which bond when exposed to sunlight or weather.

PART TWO - PRODUCTS

2.1 ALUMINUM WINDOWS

A. Provide aluminum windows of the types and dimensions shown on the Contract Drawings, complete with anchors of the types needed for the installation, and complying with the following standards as defined in ANSI A134.1:

1.	Double Hung:	DH-A2-HP60
2.	Casement:	C-A2-HP60
3.	Projected:	P-A2-HP60
4.	Awning:	A-A2-HP60
5.	Horizontal Sliding:	HS-A2-HP60

B. Fabrication: (As Applicable)

1. Framing System shall provide for flush glazing on all sides with no projecting stops.

2. Vertical and horizontal members including intermediate mullions shall have a nominal face dimension of 1-inch (25.4) and an overall depth of 4-1/2 inches (114.3).

3. Do not use scratched, gouged, twisted, dented or otherwise defective materials.

4. Joints and connections shall be accurately coped and jointed to connecting members to a hairline fit. Except at required offsets, construct exposed surfaces with flush watertight joints.

5. Finish:
   a. Aluminum moldings shall be given a caustic etch followed by an anodic oxide treatment to obtain an Architectural Class I anodic coating conforming to Aluminum Association Standard AA-M12, C22 A42/44. Color shall be an integral white color, based on samples to be provided by the architect.

      NOTE: Provide on all window members and on the frame members of all screens.

C. Factory glaze with channel type vinyl gaskets and clear glass, capable of withstanding a design pressure of 22.3 psf, and in accord with ANSI A134.1.

D. Provide the manufacturer's standard screen at all vents.

E. **Hardware-Manufacturer's Standard: (As Applicable)**

1. For Sliding Windows: Flush pull button and self-latching lock with lustron finish.

2. For Top Hinged-In-Swing Windows: Nickel bronze alloy locking key assembly. Provide two assemblies for each sash. Sill keeper not required. Provide City with minimum of two No. 28-128 Keys (1/4-inch hex).

3. For Bottom Hinged-In-Swing Windows: Nickel bronze alloy locking assembly with keepers. Provide two locking assemblies with handles for each sash over 3-feet, 6-inches wide. Provide City with minimum of two No. 28-128 Keys (1/4-inch hex).

4. For Project-Out Windows:

    a. Provide each top hinged ventilator (within 5-1/2 feet from floor) with a worm gear motor operator, center mounted, with finish to match that of windows.

    b. Provide each top hinged ventilator (over 5-1/2 feet from floor) with cam handle with ring and strike at bottom of vent and a pole ring at top of vent.

    c. Provide a suitable 4-foot long anodized aluminum sash pole and sash pole hanger for each room having operable sash handles (located 5-1/2 feet above floor).

    d. Hinges For Top Hinged Ventilators: Standard, concealed when in closed position.

F. **Sealants and Backing Materials**: As specified in Section 07920.

PART THREE - EXECUTION

3.1 SURFACE CONDITIONS

Examine the areas and conditions under which Work of this Section will be performed. Correct conditions detrimental to timely and proper completion of the Work. Do not proceed until detrimental conditions are corrected.

3.2 INSTALLATION

A. **General**: All work shall be done by laborers skilled in the fabrication and installation of this type of work. When assemblies required field connections, temporarily assemble the windows in the shop and test for accuracy of fit.

1. All windows shall be accurately installed in accordance with manufacturer's submitted and approved Shop Drawings and "Installation Instructions".

2. All windows shall be installed square, plumb and in true alignment and in accord with Shop Drawing details, free from dents, buckles, dimples or other defects. Make ready to receive work of other trades.

3. Anchor window frames to concrete wall construction rigidly and in accord with code required safety factors.

4. Aluminum projecting windows to have screens located at window vents on the inside or exterior side of window and attached thereto.

5. Adjust sliding sash members to operate smoothly.

6. Make non-sliding sash members inoperative as approved by the City Engineer or Consultant.

7. Locate flush pull bottom and self-latching lock on the room side of the partition or wall.

8. Coordinate attachment and seal of perimeter air and vapor barrier materials.

B. **Adjustments:** Properly adjust all operating parts and hardware for smooth operation prior to glazing and readjust after glazing is completed. Leave windows ready for use. Manufacturer or installer shall in the presence of the City Engineer, water test windows for leakage prior to acceptance of the completed installation by the City.

C. **Dissimilar Materials**:

1. Where aluminum surfaces come in contact with metals other than stainless steel, zinc, or white bronze of small area, isolate the aluminum by one of the following methods:

    a. Paint the dissimilar metal with a prime coat of zinc-chromate primer, followed by two coats of aluminum metal-and-masonry paint.

    b. Paint the dissimilar metal with a coating of heavy-bodied bituminous paint.

    c. Apply a good quality sealant material between the aluminum and the dissimilar metal.

    d. Isolate the dissimilar metals with non-absorptive tape or gaskets.

2. Aluminum in contact with plaster or concrete shall be separated with self-adhering plastic or synthetic rubber tape, 5-mil minimum thickness.

3.4 CLEANING

A. **Labels**:

1. Leave all labels in place, intact and legible, until reviewed and approved by the City Engineer or Consultant.

2. Do not at any time remove required AAMA labels.

B. Prior to completion of the work; water test for leakage and thoroughly clean all exposed surfaces of windows and screens conforming to provisions of Section 01710 - CLEANING of the GENERAL REQUIREMENTS.

1. Use only the cleaning materials and techniques recommended by the manufacturer of the material being cleaned.

2. Do not scratch or otherwise damage the glass, screen, or aluminum finish.

(END OF SECTION)

SECTION 08710
FINISH HARDWARE

PART ONE - GENERAL

1.1 DESCRIPTION

A. Provide finish hardware throughout the work, indicated and specified hereinafter and as needed for a complete and proper installation. As needed hardware shall be of the type and quality suitable to the service required and comparable to other hardware, as specified.

B. Related Sections:

1. Documents affecting work of this Section include, but are not necessarily limited to, the GENERAL CONDITIONS, SUPPLEMENTARY CONDITIONS, DIVISION 1 - GENERAL REQUIREMENTS and applicable section of the Project Manual.

2. Metal Doors and Frames in Section 08110.

C. The following hardware is omitted from this Section, and is specified or indicated elsewhere, Contractor shall verify prior to the bid and provide necessary coordination and complete the installation.

1. Swinging Sliding Gate in Section 02830.
2. Chain Link Fence Gate in Section 02831.
3. Casework in Section 06400.
4. Fire Extinguisher Cabinets in Section 10520.
5. Metal Locker in Section 10700.
6. Wood Locker in Section 10710.
7. Toilet Room Accessories in Section 10800.
8. Access Panel or Cabinet Door in Div. 15 and Div. 16.

1.2 QUALITY ASSURANCE

A. Regulatory Requirements:

1. Conform to the Los Angeles City Building Code and applicable

Amendments and to the State of California, Title 24, California Building Code, Latest Edition and California State, Architectural Barriers Law (CAL/ABL) and Americans With Disabilities Act (ADA).

2. Conform to the U.L. Standards of the Underwriter's Laboratories, Inc.

3. Conform to the American National Standards Institute (A.N.S.I.), A115-IG (Installation Guide for Doors and Hardware).

4. Conform to Steel Door Institute (SDI).

B. **Substitutions:** Requests shall be in accordance with requirements of the GENERAL CONDITIONS of the Project Manual. Finish hardware substitutions will not be accepted without written approval of the City Engineer or the Consultant. Substituted hardware without City approval shall be removed and replaced with specified hardware, at no added cost to the City.

C. **Manufacture:** Unless specified otherwise each type of finish hardware used throughout the work shall be of the same make or manufacture although several may be indicated as equal product complying with requirements.

D. **Hardware Supplier:** Supplier must be a recognized builder hardware supplier who has been furnishing hardware in the projects vicinity for a period of not less than two years. Supplier must be or employ an experienced Hardware Consultant who is available, at reasonable times during the course of the work, for consultation about the projects hardware requirements to the City Engineer or Consultant at no additional cost to the City.

E. **Pre Scheduled Conferences:** Prior to final approval of the submittals and installation of the cylinders and keys, the Contractor and Hardware Supplier shall meet in the field with the City Engineer, its authorized representative and the Consultant to finalize all finish hardware information, the keying schedules and keying requirements, and obtain final instructions in writing.

1.3 SUBMITTALS

A. Comply with pertinent provisions of Section 01340 - SUBMITTALS of DIVISION 1 - GENERAL REQUIREMENTS of the Project Manual.

B. **Product Data:**

1. Finish Hardware Schedule: Submit 7 copies, include Door and Hardware numbers, the manufacturer's name and product number,

quantity, materials, inside and outside finish code, function, hand of door, door thickness, any non-standard latch or strike, fire rating, locations cross-referenced to floor plans and door schedule with an index of doors designating every item needed for each opening; all security and fire alarm interface and etc. Include manufacturer's installation instructions, all hardware elevations and backing support details. Coordinate and provide a list of hardware to be installed by door and door frame manufacturers.
Consultant or City Engineer will return and will not review any submittal requiring coordination with others submittals until such other submits or required information are received by the Consultant or City Engineer.

2. Finish Hardware Floor Plans: Submit 7 copies of the floor plans which shall identify all opening and door locations, door type and door index, location of fire rated wall, thickness of wall and door frame, locations of door jamb and hinges, directions of door swing, keying schedule, door sign details, etc.

3. Product Data: Submit 7 copies of catalog cuts, descriptions and numbers marked for each item to be furnished. Submit with hardware schedule.

C. Templates: Mortise hardware shall be made to a template. Submit a complete template list showing references and data for each template. Furnish templates to other trades in a timely manner to assure orderly progress of the Work.

D. Samples: Submit for review, to the City Engineer, physical sample of any finished hardware item proposed for use. Such items shall not be used in the work until review is completed.

E. **Product Certification and Guarantee:** Submit products certification signed by the manufactured certifying that the products to be furnished complying with the extended guaranty requirements. Upon completion manufacturer shall provide the City Engineer the written guarantee for the extended guarantee specified.

F. When deemed necessary for product evaluation, City Engineer may require submittal of full size standard production units for review.

1.4 TEMPORARY CYLINDERS

A. During construction period of Contract, Contractor shall employ temporary construction cylinders with temporary construction keys on door locks in the project to maintain necessary building security. Temporary construction keys shall be furnished in construction master key system.

B. Contractor and Hardware Supplier shall meet in prescheduled conference with the City Engineer and its authorized representative to finalize the Keying Schedules and requirements, and obtain final instructions in writing. On completion of the project, the Contractor shall collect all the construction keys and remove the construction cores from the lock cylinders and turn over the temporary construction keys and cores to the City Engineer and/or its authorized representable. The Contractor shall install cylinder locks and keys in accordance with Final Keying Schedule approved by the City Engineer.

1.5 COORDINATION

A. Deliver templates or physical samples of finish hardware to manufacturers of interfacing items such as doors and frames in a timely manner to insure orderly progress of the work.

B. The Contractor shall install the lock cylinders and key. Contractor shall provide necessary coordination and cooperation for the installation in accordance with Section 27 - COOPERATION AND COLLATERAL WORK. The Contractor shall deliver all lock cylinders and keys to [the City or its authorized representative in accordance with Finish Hardware Schedule and approved submittal in a prescheduled conference without delay to the installation work.

1.6 PRODUCT HANDLING

A. **Packaging:** Individually package each hardware item complete with proper fastenings and appurtenances, clearly marked on outside of package with item identity and its specific location in the work.

B. **Checking:**

1. Check door thicknesses, details of trim; clearances for hinges, strikes, closers, fasteners and fire rating requirements before preparing "Hardware List".

2. Check kinds and quantities of delivered hardware to verify conditions, completeness and conformance to ~~specifications~~ ***contract provisions*** and arrange for replacements or corrections of shortages and errors.

C. **Storage at the Job-site:** Contractor shall store hardware in a safe approved place at the job-site where directed by the City Engineer or the Consultant to prevent loss or damage until installation.

1.7 GUARANTEES

A. All hardware shall be guaranteed for a period specified below from date of acceptance of the work, conforming to provisions of Section 28 **-** GUARANTY-WARRANTY of the GENERAL CONDITIONS. Correct defects in materials and workmanship and operation occurring during the guarantee period to the complete satisfaction of the City at no added cost to the City. Submit guaranty certification for review prior to start of work.

B.
1. Door Closer: 5 years except electronic closers, two years
2. Exit Devices: 3 years
3. Hinges: 10 years
4. All other Hardware: Two years.

1.8 CLEAN-UP

A. In addition to the requirements noted in Section 01710 ***- CLEANING*** in the GENERAL REQUIREMENTS, Contractor upon completion of the work of this Section shall remove all oil, grease or other soiling from exposed surfaces of finish hardware and shall remove all cartons, wrapping and other debris resulting from work herein and shall leave the building in a neat, clean and acceptable condition to the approval of the City Engineer or the Consultant.

PART TWO - PRODUCTS

NOTE: 1. DOOR AND DOOR FRAMES ARE NORMALLY RATED AT THREE QUARTERS OF THE RATING OF THE WALLS.

2.1 A. General: Furnish items of hardware required for complete door installation. All doors shall be in full operational conditions prior to Final Inspections. Furnish items of hardware inadvertently omitted from the Contract Drawings or Project Manual. Items of hardware shall be of equal quality and type for similar door.

B. Where the exact types of hardware specified are not adoptable to the finished shape or size of the members requiring hardware, furnish suitable types having the same operation and quality as the types specified, subject to City Engineer's approval.

C. The hardware items/components of a required Fire Door Assembly shall also be require to be labeled with the appropriate fire label. The required minimum hardware items/components for a fire door assembly are not necessarily be limited to, as follows:

1. Listed latch or locking device.
2. Approved hinge(s).
3. Listed closing device.

2.2 ACCEPTABLE PRODUCTS

A. Furnish acceptable finish hardware in accordance with all conditions and requirements listed in the Contract Drawings and Project Manual.

Specified Hdwe. Items	Specified Manufacturer	Other Approved Manufacturers
1. Hinges	Ives 5BB	Hager BB, McKinney TA/T4A
2. Continuous Hinges	Ives	Select, Stanley
3. Locks	Falcon T	Dorma CL800, Sargent 10
4. Privacy Locks Cylinders	Falcon W	Best 73KC, Sargent 6500
5. Closers	Falcon SC60A	Norton 8000, Sargent 1331
6. Kick Plates	Ives	Burns, Rockwood
7. Thresholds	Zero Intl.	Reese, National Guard
8. Door Stops (Floor)	Ives	Burns, Rockwood
9. Door Stops (Wall)	Ives	Burns, Rockwood

10. Silencer	Ives		Burns,Rockwood
11. Astragal (Lock Protector)	Zero Intl.		National Guard, Reese
12. Push Plates	Ives		Burns, Rockwood
13. Push/Pull Bars	Ives		Burns, Rockwood
14. Push and Pull Combination	Ives		Burns,Rockwood
15. Exit Device	Falcon 24/25	Sargent19-43-GL-80, Precision	
16. Weather Seal			
a. Door	Zero		National Guard, Reese
b. Head and Jamb	Zero		National Guard, Reese
c. Astragal	Zero		National Guard, Reese
d. Threshold	Zero		National Guard, Reese

2.3 FINISHES

A. The designations used in the Finish Hardware Schedule and elsewhere to indicate hardware finishes are those listed in ANSI A156.18 Materials & Finish Standard and Builders Hardware Manufactures Association (BHMA). Hardware shall have the following standard finishes:

BHMA 626/652 (US26D); except:

1. Hinges at Exterior Doors: BHMA 630 (US32D)
2. Continuous Hinges: BHMA 630 (US32D)
3. Continuous Hinges: BHMA 628 (US28)
4. Push Plates, Pulls, and Push Bars: BHMA 630 (US32D)
5. Protection Plates: BHMA 630 (US32D)
6. Overhead Stops and Holders: BHMA 630 (US32D)
7. Door Closers: Powder Coat to Match
8. Wall Stops: BHMA 630 (US32D)
9. Latch Protectors: BHMA 630 (US32D)
10. Weatherstripping: Clear Anodized Aluminum
11. Thresholds: Mill Finish Aluminum

B.H.M.A. Finishes	U.S. Standard Finishes	Description
626	US26D	Dull /Satin Chromium Plated, No lacquer
628	US28	Clear Anodized Aluminum
630	US32D	Dull/Satin Stainless Steel, No Lacquer
652	US26D	Satin, Chromium Finish on Steel

B. Finish shall be as listed on the "Finish Hardware Schedule".

C. For exposed surfaces of surface type door closers, spray paint to match hardware finish on remainder of door.

D. Metal door edges, including factory painted units, spray paint to match door frame or door hardware finish, as selected by the City Engineer or the Consultant.

2.4 MATERIAL

A. **Fasteners**: Secure suitable fasteners of the same material and finish as the finish hardware being installed.

1. Screws for strikes, face plates and similar items shall be Phillips Head, flat head, countersunk type; machine screws for metal and standard wood screws for wood.

2. Screws for butt hinges shall be Phillips Head, flat head, countersunk, full-thread type.

3. Fastening of closer bases or closer shoes, door holder, panic hardware, or exit device metal or wood to doors shall be by means of thru bolts, spray painted to match closer. When hardware is to attached to an metal surface without reinforcement, use to prevent door compression thru bolts and machine screws for installation.

4. Provide lead expansion shields or similar type anchors for attaching hardware items to concrete or masonry.

B. **Butt Hinges:** Provide three butt hinges for each leaf of the doors, between

4'-10" and 7'-6" in height. Add one additional hinge for each additional 30 inches in height or fraction thereof.

1. Furnish NRP (non-removable pins), non-ferrous hinges at exterior outswinging doors.

2. Where doors are required to swing frame 110 degrees to, 180 degrees furnish butts of sufficient throw to clear the trim.

C. **Floor Mounted Pivot:** Forced Bronze Construction, to hang heavy ~~with~~ wood and metal doors, mount top pivot ~~4~~ to head frame and anchored bottom pivot to floor. On heavier or extra wide doors, add additional intermediate pivots as specified.

D. **Locks:** Provide locks and latchsets, Falcon T & W Series. All locksets, deadbolts and latchsets shall have 2 3/4 inches backset. Lip length on strike plate shall be of the proper length for given door thickness and jamb conditions. All strike plates shall be box type. Provide lever design for use by the handicapped in lieu of knob control.

1. Latch bolts: Minimum 3/4 inch throw.

2. Dead bolts: Minimum 1 inch throw.

E. **Thumbturns:** Accessible design, does not requiring a pinching or twisting motion to operate.

F. **Door Closers:** To be fully adjustable for spring setting, with separate valve controls for latch, sweep, backcheck, and backcheck positioning. The Parallel Arm Closer shall have double level arm with Hold-Open function. Exterior Doors with 2 thru 6 spring power while interior door with 1 thru 4-1/2 spring power. Final adjustment after installation to meet handicapped requirements. All closers shall be capable to swing 180 degrees, clear trim of adjacent structure and have hold open provisions. Closers shall be Parallel Arm (Push Side) mounting and placed inside building, stairs and rooms. Door closer shall be manufacturer: Falcon SC80A Series.

G. **Kickplates:** Except as indicated otherwise, provide 16 ga.stainless steel kick plates, 0.050 inches minimum thickness, 10" high and 1 inches less than door width and with edges beveled four (4) sides. Machine or wood screws of stainless steel to match other hardware. Kickplate shall be manufacturer: Ives.

H. **Thresholds:** Mill finish Aluminum unless otherwise noted and conforming to provisions of CAL/ABL and ADA. Thresholds shall be manufacturer: Zero International

I. **Door Stops *(Floor)*:** at locations to engage to the doors. Provide stops to protect all walls, casework or other hardware. Door Stops shall be manufacturer: Ives.

J. **Silencers:** Provide for all metal door frames, three for single doors, four for pairs of doors to reduce noise of door closing and door rattle. Omit where sound or light seal occurs, or for fire resistive rated door assemblies. Silencers shall be manufacturer: Ives.

L . **Sign:** As required by the Los Angeles City Building Code and applicable Amendments, such as "Doors shall remain unlocked during business hours", etc. See Section 10400 - IDENTIFYING DEVICES for ***additional*** data. Verify "Door Schedule" under remarks on the Contract Drawings, as to what doors should have such signs.

M. **Lock Protector:** Stainless steel material**,** 9-3/8" x 1-1/2" overall size and designed to prevent tampering with latchbolt or deadbolt or mortise locks on inswinging and outswinging exterior doors and shall be attached to outside of doors with "thru bolts".

N. **Door Push and Pull Plates***:* Stainless Steel, 6 inch x 16 inch, 1/4-inch thick, beveled two (2) sides. Cut plates where required for cylinders and thumb turns. Door Push and Pull Plates shall be Ives, Series 820032D616.

O. **Door Pull and Plate**: Stainless Steel, 4 inch x 16 inch, 1/4 inch thick, beveled two (2) sides, with 8 inch pull. Door Pull and Plate shall be Ives, Series 8302832D416.

P*.* **Door Push/Pull Combination for Glass Door:** Ives 8190-0S 10”.

Q. **Door Pulls *or* Push Bars:** Stainless Steel, 4 inch x 16 inch, 1/4 inch thick, beveled two (2) sides, with 8 inch pull. Door Pull and Plate shall be Ives, Series 8302832D416***.***

R. **Weatherstrips:** anodized aluminum.

S. **Weather Seals:** Solid neoprene, MIL-R-6855 Class II, Grade 40, Sponge neoprene**,** MIL-R-6130 Type II, Group C.

1. Seal shall be applied with fire label on all rated door.

2. Furnish manufacturers certification that all extrusions meet or exceed thickness of material specified.

T. **Exit Devices:** Furnish Mortise exit devices at doors over 14 ga. reinforcement steel for exit devices.

1. Level handle trim design: Match locksets.

2. Touch base type device: Quiet return, deadlocking latchbolt, stainless steel touchpads, non-handed.

Device push bar must release with 32 lbs. maximum pressure when 250 lbs. of pull is applied against the pull side of door. Exit Devices shall be Falcon, 24/25 Series.

U. **Flush Bolt,** Coordinator and Astragal for Metal Paired Doors with One Inactive Door:

1. Paired Doors with one inactive door shall have door coordinators which will prevent the active door from closing before the inactive door, by means of a level and trigger mechanism. Coordinator channel shall be 1 5/8 inches wide by 5/8 inch high aluminum. Coordinator shall have a safety mechanism which allow the active door to close first if under extreme pressure. Coordinator shall be manufacturer: Ives.

2. Install inactive doors one pair (top and bottom) of automatic flush bolts, for metal doors. Flush Bolt shall be manufacturer: Ives.
3. Install 20 ga. astragal to the full height of the inactive door. The width of the inactive door shall be reduced by 3/32 inch for the installation of the astragal.

B. LOCK CYLINDERS AND KEYING

1. All cylinder locks shall be construction keyed and grandmaster keyed to an grandmaster key system with department master keys and individual change keys as directed by the City Engineer or the Consultant. The cylinder shall be pinned and the keys shall be cut at the factory of lock manufacturer where permanent records are maintained. Locks and cylinders shall be of the same manufacturer.

2. **Lock System:** Schlage 6-pin interchangeable core cylinders. Construct lock cylinder parts from stainless steel.

3. **Key Material:** Provide keys of nickel silver only. Stamp all keys "DO NOT DUPLICATE".

4. **Permanent Keys:**

   a. Change Key: Furnish three (3) change keys for each cylinder with a maximum of ten (10) keys per keyed alike group. Furnish balance due as blanks.

   b. Master Keys: Furnish six (6) for each master group.

   c. Grand Master keys: Furnish six (6) for each master grand.

   d. Extractor Keys: Two for each group.

5. **Construction Keys:** Furnish temporary keys alike core for use during construction in accordance with Subsection 1.4. Furnish 15 construction keys during construction. Retain construction keys and inserts and turn them along with the permanent keys over to the City Engineer and/or its authorized representative upon completion of the Project.

6. **Key Control System:** Provide a key control system including envelopes, labels, tags with self-locking key clips, receipt forms, 3-way visible card index, temporary markers, permanent markers and etc.

7. **Metal Cabinet:** Provide a standard metal cabinet, dimensions as recommended by the hardware manufacturer with capacity for 150% of the number of locks required for the project. Install at location as specified or directed by City Engineer.

PART THREE - EXECUTION

3.1 SITE PREPARATION

A. Prior to installation of hardware, structural backing and solid blocking supporting door stop or holder within the wall section shall be installed and inspected before wall closure.

B. All reinforcing steel plate or internal stiffener as specified on Contract

Drawings and Section 08110 – METAL DOORS AND FRAMES Project Manual shall be installed inside door or door frames prior to installation of door hardware.

C. Contractors shall employ temporary construction lock cylinders with temporary construction keys during the course of construction. The Contractors shall coordinate and remove the temporary construction lock cylinders for the installation of the permanent lock cylinders and keys to be performed by the Contractor.

3.2 SETTING FINISH HARDWARE

A. **General:** Install each hardware item in compliance with manufacturer's instructions and recommendations, using only fasteners provided by manufacturer.

B. **Prior to Painting Work:** Hardware to be accurately fitted, installed, removed, repackaged and identified for reinstallation.

C. **After Painting is Completed:** Permanently reinstall hardware.

D. **Placement of Hardware:** Secure finish hardware with suitable fasteners of the same material and finish as the item being installed.

E. **Typical Hardware Locations:**

1. Butt Hinges: 5 inches from head of opening to top of top butt. 10 inches from floor to bottom of butt. Intermediate butt equidistant between top and bottom butts.

2. Lockset: 38 inches above floor to centerline of lever or knob.

3. Push Plate: 42 inches from bottom of door to center of plate.

4. Pull Plate: 42 inches from bottom of door to center of plate.

5. Door Closers: Attach to door and door frame in accordance with locations and dimensions as recommended by the manufacturer. to mound & rims soffits of doorway heads by means of suitable soffit plates and spacers furnished with the door closers at no additional cost to the City. Closer shall be installed to allow 180^0 door swing as shown on plans and reviewed shop drawings.

6. Fastenings: Furnish hardware with bolts, screws or other fitting,

including soffit plates for door closers where necessary for secure and proper attachment.

7. Hardware for Hollow Metal Doors and Frames: Deliver hardware to the door manufacturer for installation by them as specified in Section 08110 - METAL DOORS AND FRAMES.

8. Lock Astragal: Through bolt to edge of out-swinging hollow metal doors on exterior to completely cover the latch area between the door and frame in accordance with the manufacturer's directions.

F. Attachments:

1. In accordance with best practice and manufacturer's directions and in best manner.

2. Set Screws and Bolts perpendicular to face of member and over the hardware reinforcement plate.

3. Secure hardware tightly to adequate framing or blocking.

G. Operations:

1. Set strikes to preclude rattling or movement of closed latched doors.

2. All hardware to operate smoothly, easily and properly without bind and/or rattle.

H. Functional Check: Prior to completion of construction and after final installation of hardware, demonstrate to the City Engineer that hardware items function properly, that doors swing smoothly and that keys lock and unlock their respective doors.

I. Protection:

1. Cover and protect exposed surfaces of hardware and adjacent finishes during installation and until project acceptance.

2. Fit, dismantle and reinstall hardware as required for finish painting work.

3. Protect and prevent staining of hardware during construction in accordance with manufacturer’s recommendation.

4. Remove protective measures on permanent lock cylinders installed prior to final cleaning.

5. Replace damaged hardware, or items with scratched or damaged finishes.

I. <u>Adjustments</u>:

1. Adjust and check each operating item of hardware and each door to ensure proper operation or function of every unit. Replace units which cannot be adjusted to operate freely and smoothly as intended for the application.

2. Adjust door control devices to compensate for final operation of heating and ventilating equipment and to insure that accessibility code maximum opening forces are maintained.

3. Final Inspection: Contractor shall visit the job site with the Inspector and representatives of the manufacturers of the hardware and accomplish the following:

    a. Readjust all hardware.

    b. Instruct City personnel in the proper adjustment and maintenance of hardware and hardware finishes, during the final adjustment of hardware.

    c. Identify items that have deteriorated or failed and submit a written report identifying problems and correction methods.

    d. Submit guarantee certification.

3.2 FINISH HARDWARE SCHEDULE

HW SET: 01 - A/G EXT (SINGLE STOREFRONT DOOR)

201-1 201-2

Provide each SGL door(s) with the following:

QTY		DESCRIPTION	CATALOG NUMBER		FINISH	MFR
1	EA	CONT. HINGE	112HD EPT		628	IVE
1	EA	LOCK & MORTSE CYLINDER	MS1850S		626	FAL
1	EA	90 DEG OFFSET PULL	8190EZHD 12" STD		630-316	IVE
1	EA	SURFACE CLOSER	SC81A SS PROVIDE MTG BRKT, SPCR & PLATE AS REQ'D		689	FAL
1		SEALS	BY DOOR MANUFACTURER			B/O
1	EA	DOOR SWEEP	39A		A	ZER
1	EA	THRESHOLD	545A OR AS DETAILED		A	ZER

HW SET: 02 - HM EXT (SINGLE EXTERIOR DOOR, STOP-ARM CLOSER, WEATHER SEALS)

121-1 121-2 123-1 125-1

Provide each SGL door(s) with the following:

QTY		DESCRIPTION	CATALOG NUMBER		FINISH	MFR
3	EA	HINGE	5BB1 4.5 X 4.5 NRP		630	IVE
1	EA	ENTRY LOCK	T511 LON		626	FAL
1	EA	SURFACE CLOSER	SC81A SS		689	FAL
1	EA	GASKETING	188SBK PSA		BK	ZER
1	EA	DOOR SWEEP	39A		A	ZER
1	EA	THRESHOLD	545A OR AS DETAILED		A	ZER

HW SET: 03 - HM INT PRIVACY (SINGLE INTERIOR DOOR, PRIVACY SET & CLOSER)

121-3 125-2

Provide each SGL door(s) with the following:

QTY		DESCRIPTION	CATALOG NUMBER		FINISH	MFR
3	EA	HINGE	5BB1 4.5 X 4.5		652	IVE
1	EA	PRIVACY LOCK	W301S LON		626	FAL
1	EA	SURFACE CLOSER	SC81A REG OR PA AS REQ		689	FAL
1	EA	WALL STOP	WS406/407CCV		626	IVE
3	EA	SILENCER	SR64/SR65		GRY	IVE

HW SET: 04 - HM EXT PRIVACY (SINGLE EXTERIOR DOOR, PRIVACY SET & CLOSER)

101-1	102-1	103-1	104-1	105-1	106-1
107-1	108-1	301-1	302-1	303-1	

Provide each SGL door(s) with the following:

QTY		DESCRIPTION	CATALOG NUMBER		FINISH	MFR
3	EA	HINGE	5BB1 4.5 X 4.5		652	IVE
1	EA	CORRIDOR LOCK	T571 LON		626	FAL
1	EA	SURFACE CLOSER	SC81A REG OR PA AS REQ		689	FAL
1	EA	WALL STOP	WS406/407CCV		626	IVE
3	EA	SILENCER	SR64/SR65		GRY	IVE

HW SET: 05 - HM STOREROOM (SINGLE EXTERIOR DOOR, STOREROOM LOCK & STOP-ARM CLOSER)

109-2

Provide each SGL door(s) with the following:

QTY		DESCRIPTION	CATALOG NUMBER		FINISH	MFR
3	EA	HINGE	5BB1 4.5 X 4.5		652	IVE
1	EA	STOREROOM LOCK	T581CP6 LON 23981152 7/8" LIP LENGTH		626	FAL
1	EA	SURFACE CLOSER	SC81A REG OR PA AS REQ		689	FAL
1	EA	FLOOR STOP	FS13		626	IVE

HW SET: 06 – HM - EXT PR STOREROOM OUTSWING (DOUBLE EXTERIOR DOOR, STOREROOM LOCK & STOP-ARM CLOSER)

110-1

Provide each PR door(s) with the following:

QTY		DESCRIPTION	CATALOG NUMBER		FINISH	MFR
6	EA	HINGE	5BB1 4.5 X 4.5 NRP		652	IVE
1	SET	CONST LATCHING BOLT	FB51P		630	IVE
1	EA	STOREROOM LOCK	T581CP6 LON 23981152 7/8" LIP LENGTH		626	FAL
1	EA	SURFACE CLOSER	SC81A SS		689	FAL
1	EA	GASKETING	188SBK PSA		BK	ZER
1	EA		ASTRAGAL BY DOOR MFG.			B/O

HW SET: 07 - HM - INT PR STOREROOM (DOUBLE INTERIOR DOOR, STOREROOM LOCK & STOP-ARM CLOSER)

121-4

Provide each PR door(s) with the following:

QTY		DESCRIPTION	CATALOG NUMBER		FINISH	MFR
6	EA	HINGE	5BB1 4.5 X 4.5 NRP		630	IVE
1	SET	CONST LATCHING BOLT	FB51P		630	IVE
1	EA	STOREROOM LOCK	T581CP6 LON 23981152 7/8" LIP LENGTH		626	FAL
1	EA	GASKETING	188SBK PSA		BK	ZER

(END OF SECTION)

SECTION 08800
GLASS AND GLAZING

PART ONE - GENERAL

1.1 SUMMARY

A. Provide all glass and glazing materials including all tools, equipment, supplies, accessories and all labor necessary for complete fabrication and installation of glass and glazing as shown on the Contract Drawing and herein specified.

B. Related Sections:

1. Documents affecting work of this Section include, but are not necessarily limited to the GENERAL CONDITIONS, SUPPLEMENTARY CONDITIONS and Sections in DIVISION 1 - GENERAL REQUIREMENTS of these Specifications.

2. Caulking and Sealants in Section 07920.

3. Metal Doors and Frames in Section 08110.

4. Wood Doors in Section 08210.

5. Aluminum Storefront and Entrance Framing in Section 08416.

6. Aluminum Windows in Section 08520.

7. Framed Mirror in Section 10800 - TOILET ROOM ACCESSORIES.

1.2 QUALITY ASSURANCE

A. Reference Specifications and Standards:

1. ASTM C-1036-85 for flat glass

2. ASTM C-1048 for tempered glass

3. Glazing Manual for Flat Glass Marketing Association for flat glass DD-G-451

a. Glazing Sealing Systems Manual
b. Glazing Manual

4. Underwriters' Laboratory Inc. (UL)

B. **Qualification of Installers:** Use adequate numbers of skilled laborers who are thoroughly trained and experienced in the necessary crafts and who are completely familiar with the specified requirements and methods needed for the proper performance of work of this Section.

C. **Codes and Regulations:** Perform work of this Section in accordance with all applicable Federal, State, County and the Uniform Building Code with the City of Los Angeles 1992 Amendments.

1. Comply with Federal Standard 16 CFR 1201, Federal Safety Standard for Architectural Glazing Materials.

2. Comply with pertinent recommendations of the Flat Glass Marketing Association (FGMA).

1.3 SUBMITTALS

A. **General:** Comply with the provisions of SUBMITTALS SECTION 01340 of DIVISION 1 - GENERAL REQUIREMENTS of these Specifications.

B. **Material List:** Submit a listing of each glazing material including type of caulking and sealant material and fire rating proposed for use and location in Project to the City Engineer or the Consultant for review prior to installation.

C. **Manufacturer's Data:** Submit to the City Engineer or the Consultant the manufacturer's specifications and printed data for all material proposed for use.

D. **Samples:** Submit to the City Engineer or the Consultant, when so requested 4-inch x 4-inch samples of the various types of glass, noting name of manufacturer, grade, quality and thickness, coloration and setting materials for review and approval prior to installation.

E. **Labeling:** Required on each lite showing quality, thickness and type and manufacturer's name, which shall remain on glass until final cleaning and acceptance.

F. Manufacturer's recommended installation procedures and special precautions which when approved by the City Engineer or the Consultant, will

become the basis for accepting or rejecting actual installation procedures used on the Work.

1.4 PRODUCT HANDLING AND STORAGE

A. **Protection:** Protect all glass against damage and store glass of this Section before, during and after installation and protect the work and materials of all other trades as per glass manufacturer's instructions or recommendations. During storage and handling of glass provide cushions at edges of glass to prevent impact damage.

B. **Upon Completions of Construction Operations:** Leave installed glass unbroken and in perfect condition and maintain so until City's acceptance of the building.

C. **Replacements:** In the event of damage, immediately make all repairs and replacements necessary to the approval of the City Engineer or the Consultant, at no added cost to the City.

D. **Guarantee:** Guarantee all materials installed for a period one (1) year against defects and workmanship after acceptance by the City in accordance with provisions of Section 28 of the GENERAL CONDITIONS.

PART TWO - PRODUCTS

2.1 GLASS

A. **General:** Glass is called for by "type" as noted on the Contract Drawings details and on "Window and Door Schedule".

1. For all glass, provide the type and thickness shown on the Contract Drawings or specified herein.

B. **Quality:** As per ASTM C-1036-85 for flat glass and ASTM C-1048-85 and Z97.1-84 Safety Performance Specifications and Methods of Test for tempered or heat strengthened glass as manufactured by Pittsburgh Plate Glass Industries (P.P.G.), Libby-Owens-Ford (L.O.F.) or Hordis Brothers, Inc. or equal.

C. **Glass Material:**

1. 1/4-inch thick Pittsburgh bronze tinted tempered safety glass, free

from tong marks, or equal.

a. Manufactured in accord with ANSI-297.1 and Standard 16 CFR 1201.

b. Permanently label each light by etching, sand blasting, or fired-on ceramic. Identify labelers, thickness and material type.

c. Locate label in lower corner, position to be legible and visible after installation.

d. Visible tong marks in installed glass will not be acceptable.

e. Sandblast as noted on the Contract Drawings.

2. Clear 1/4-inch Wire Glass, Mississippi "Polished Misco" or equal U.L. listed with diamond pattern wire mesh not smaller than 25 AWS gauge.

3. Laminated Safety Glass; clear and/or tinted as noted on the Contract Drawings, consisting of an inner face and outer face of float glass laminated under heat and pressure to a clear plastic core.

a. Use 1/4-inch thickness for maximum size of 60" x 120".
b. Use 3/8-inch thickness for larger sizes.

4. Heat-Strengthened Glass

a. Comply with Federal Spec. DD-G-1403.

b. Strengthened by the manufacturer's standard heat-treating process, increasing flexural strength to not less than twice the strength before treatment.

c. Permit minimum warpage practicable.

5. Obscure Glass: Mississippi "Smooth Rough" pattern glass 1/8-inch thick, having a light transmission factor of 87.5 percent, as manufactured by Combustion Engineering Company.

6. Mirrors: 1/4-inch thick, "Mirror Select Quality", with two coats of silver, one coat of copper and one coat of protection paint, with exposed edges beveled sizes noted on the Contract Drawings.

7. Spandrel Glass: Pittsburgh Plate Glass Co. "Spandrelite" No. EG5216 double ceramic coated on inside of 1/4-inch thick clear

tempered float glass, color as noted on the Contract Drawings.

8. Transparent Mirror: 1/8 or 1/4-inch thick plate glass coated by the vaporized chrome bath process to produce a chromium deposit of minimum .0000004-inch thickness to allow transmission of the total incident light not less than 6% and not more than 10 percent.

2.2 GLAZING MATERIALS

A. **Setting Blocks:** Neoprene, Shore A durometer hardness of 80-90. Each block not less than 3-inches long or thickness as required, locate in bottom frame member to assure glass penetrates frame maximum 3/8-inch.

B. **Spacer and/or Shins:** Neoprene, Shore A durometer hardness of 80-90 with self adhesives on one face. Each spacer not less than 3-inches long or thickness as required.

C. **Glazing Compound:** Use Silicone rubber for all sealing.

D. **Wood or Metal Sash Putty:** Standard brands, light colored, permanently elastic, non-staining, equal to best grades manufactured by H.R. Hunt Putty Mfg. Co., Los Angeles, California, delivered in manufacturer's original unopened labeled containers.

2.3 OTHER MATERIALS

Provide other materials, not specifically described but required for a complete and proper installation, as selected by the Contractor subject to the approval of the City Engineer or the Consultant.

PART THREE - EXECUTION

3.1 GENERAL

A. **Workmanship:** Best standard practice as per recommendations of the Flat Glass Jobbers Association "Glazing Manual".

B. **Inspection:** Examine the areas and conditions under which work of this Section will be installed. Verify that openings for glazing are correctly sized and within tolerances and are clean and free from obstructions and ready to

receive glazing. Correct conditions detrimental to the proper and timely installation of the work of this Section. Do not proceed until the detrimental conditions have been corrected.

C. Preparation:

1. Compute actual glass size for each opening by field measurements. Allow for edge clearance and required grip.

2. Clean glass and glazing surfaces prior to installing in framing; remove dust, oil and contaminants and wipe dry making free from obstructions and deleterious substances which might impair the work.

3. Comply with manufacturer's instructions for final wiping of surfaces immediately prior to application of primer and glazing compounds or tapes.

4. Prime surfaces to receive glazing compounds in accordance with manufacturer's recommendations.

3.2 INSTALLATION

A. Inspection: Inspect each piece of glass immediately prior to start of installation.

1. Do not install items which are improperly sized, have damaged edges or are scratched, abraded or damaged in any other manner.

2. Do not remove labels from glass until so directed by the City Engineer or the Consultant.

3. Install glass so distortion waves, if present, run in the horizontal direction.

B. General Glass Setting: (As Applicable)

1. Tight and True, with equal bearing along the edges in a manner which produces the greatest possible degree uniformity in appearance.

2. With metal stops or glazing beads where indicated on the Contract Drawings; stops and beads neatly mitered at corners and secured with oval-head screws or bolts as suitable.

3. Do not use two different glazing materials in the same joint system unless the joint used is approved in advance by the City Engineer or

the Consultant.

4. Mask or otherwise protect surfaces adjacent to installation of sealants.

5. Secure in stationary glass window openings with vinyl gaskets, resilient clips, snap-on beads, and other glazing devices; in accordance with the directions of the glass manufacturer.

6. Immediately after glazing, a white 'x' shall be painted on glass or each light.

7. Check glass surfaces and edges for damage before glazing; do not install glass having broken or chipped edges; never slide one light over another.

8. There shall be no metal to glass contact, except as otherwise detailed.

9. Set exterior glass on neoprene glazing blocks; maintain proper clearances.

10. Begin glazing in concrete openings only after any surface treatments such as grouting, and waterproofing have been completed.

11. Bed glass in wood doors, not otherwise specified or detailed in putty and secure with wood stops with tamperproof screws as indicated on the Contract Drawings.

12. For Tempered Float Glass: Locate tong marks concealed as much as possible at top and bottom rails of doors or windows.

13. For Heavy Plate Glass: Support bottom edges on lead blocks at quarter points and side and top edges with neoprene or plastic setting blocks at quarter points.

14. Glass Replacement: Prior to replacing glass panes in existing exterior wood or metal windows, properly clean all glazing rebates of old glazing materials and make ready to receive new application of glazing points or sprigs spaced not more than 24-inches on center around the perimeter of the frame. Where light edge is 12-inches or less, provide one point or sprig centered.

15. Miter-cut and seal the joints of glazing gaskets in accordance with the manufacturer's recommendations, to provide watertight and airtight seal at corners and other locations when joints are required.

16. Set glass mirrors with adhesive or clips in accordance with manufacturer's instructions.

C. Cleaning, Polishing and Repairing:

1. Provisions of Section 01710 - CLEANING of the GENERAL REQUIREMENTS in DIVISION 1 applicable.

2. Remove excess glazing compound from all surfaces. Remove labels from glass surfaces.

3. Wash and polish all glass upon completion of the Project. Clean glass with methods and materials as recommended by the glass manufacturer.

4. Remove and replace, scratched, chipped, or otherwise defective glass and replace with proven materials and workmanship, at no added cost to the City.

5. Trim putty to required straight, true lines; trimmings removed.

D. Protection: Protect glass from breakage after installation by promptly installing streamers or ribbons suitably attached to the framing and held free from glass. Do not apply warning markings, streamers, ribbons or other items directly to the glass except as specifically directed by the City Engineer or the Consultant. Upon completion of construction operations, leave the glass unbroken and in perfect condition and maintain so until acceptance of the Contracted Work. Provide water test for leakage.

Buy Clean California Act

1. For project specifications that include GR Section 1601, Buy Clean California Act, bidders shall submit current Environmental Product Declarations (EPDs) for “Flat Glass” from the originating producer. When products are being secured from different producers, an EPD will be required for each specific product from each producer.
2. An EPD must conform to the following:
   a. Shall be facility-specific manufacturer/mill EPD. However, industry-average EPDs may also be permitted when indicated as such per GR Section 1601.
   b. Be independently verified in accordance with ISO 14025 (Type III).
   c. Be developed according to the guidelines of the applicable Product Category Rule (PCR), as identified by the Department of General Services, State of California.
   d. Have a valid date that has not expired.
   e. Shall not exceed the maximum Global Warming Potential (GWP) limit as required by GR Section 1601.
3. EPD shall be submitted concurrently with the product’s submittal for review and approval.

(END OF SECTION)

SECTION 09200
LATH AND PLASTER

PART ONE - GENERAL

1.1 SUMMARY

A. Provide lath and plaster where indicated on the Contract Drawings and specified herein, as needed for a complete and proper installation, including but not limited to the following:

1. Plaster Scratch Coat for ceramic tile.

2. Metal studding, furring and lathing.

3. Patching of plaster, new walls and metal suspension system.

4. Exterior Portland cement plaster.

B. **Related Sections:**

1. Documents affecting work of this Section include, but are not necessarily limited to the GENERAL CONDITIONS, SUPPLEMENTARY CONDITIONS and Sections in DIVISION 1 - GENERAL REQUIREMENTS of these Specifications.

2. Concrete Work in Division 3.

3. Carpentry in Section 06100.

4. Metal Doors and Frames in Section 08110.

5. Wood Doors in Section 08210.

6. Gypsum Board (Drywall) Systems in Section 09260.

7. Ceramic Tile in Section 09300.

8. Suspended Acoustic Ceiling in Section 09511.

9. Manufactured Casework in Section 06410.

10. Painting in Section 09900.

11. Toilet Room Accessories in Section 10800.

12. Mechanical work access doors in DIVISION 15, electrical work access doors in DIVISION 16.

1.2 QUALITY ASSURANCE

A. Referenced Standards:

1. Metal Lath Association "Specifications for Metal Lathing and Furring", 1984 Edition.

2. ASTM C926-86-Application of Portland Cement Based Plaster.

3. ASTM C-1063-86-Installation of Lathing and Furring for Portland Cement Based Plaster.

B. Allowable Tolerances: Finish plaster surfaces to be true and even planes within tolerances of 1/8 inch in 5 feet without waver, cracks or imperfections measured by a straight edge placed at any locations on the plaster surfaces.

C. Qualifications of Personnel: Use adequate number of skilled contractor's employees thoroughly trained and experienced in the necessary crafts and completely familiar with the specified requirements and the methods needed for the proper execution of the Work of this Section.

D. Codes and Regulations: Comply with the Uniform Building Code with the Los Angeles City 1992 Amendments, except those requirements specified herein govern where they exceed those of the City Building Code 1992 Amendments.

1.3 SUBMITTALS

A. **General:** Comply with provisions of SUBMITTALS Section 01340 in DIVISION 1 - GENERAL REQUIREMENTS of these Specifications.

B. **Product Data:** Submit the following within 45 calendar days after award of Contract:

1. Complete materials list of all items proposed to be furnished and installed under this Section. Provide mix proportion and coating sequence.

2. Sufficient data to demonstrate compliance with the specified requirements.

3. Provide 24" x 24" job sample panel of each type of plaster finish for City Engineer's or Consultant's approval prior to application on building.

    a. Prepare samples mounted on plywood, finish coats shall be as specified for various areas and required plaster types, identified with project name, plaster type, each layer type and intended location in the building.

4. Samples of the proposed accessories.

5. Metal Studs:

    a. Location of backing, furring, and blocking provided in Metal Steel Studs for other trade of work, coordinate if necessary.

    b. Splice and fire protection.

6. Metal furring.

7. Suspended ceiling.

1.4 PRODUCT HANDLING

A. **Delivery:** Deliver materials to the job-site in their original unbroken packages bearing the manufacturer's label and indicating brand and quality of the material.

B. **Storage of Materials:** Store materials under cover at the job-site and

maintain in a dry condition until ready for use. Store materials so as to permit inspections and identifications of each shipment. Store each kind of sand separately to prevent the inclusion of foreign matter. Stock sufficient materials on the job-site to prevent interrupting work progress.

1. Immediately remove from the job-site, all materials which have been delivered broken, damaged or in unlabeled conditions.

C. **Protection:** Use all means necessary to protect the work and materials of this Section before, during and after installation and to protect the work and materials of all other trades.

D. **Replacements:** In the event of damage, immediately make all repairs and replacements necessary to the approval of the City Engineer and at no additional cost to the City.

1.5 INSPECTION

Notify the City Engineer or Consultant prior to installation of lath and after lath is installed, to allow for inspection of framing and lathing and between each coat of plaster.

PART TWO - PRODUCTS

2.1 METAL PRODUCTS (As Applicable)

A. **Furring Channels:** 3/4-inch hot-rolled or cold-rolled channels weighing not less than 300 pounds per 1,000 lineal feet. 1 ½-inch hot-rolled steel channels weighing not less than 475 pounds per 1,000 lineal feet; with protective coating of rust-inhibitive paint.

B. **Hanger Wires:** Cold drawn galvanized steel wire, No. 8-gage.
NOTE: Check Drawings to verify gages indicated.

C. **Load Bearing Steel Studs:** As manufactured by Penmetal Corporation, or equal, galvanized, sizes and gages as indicated on the drawings, in accordance with A.I.S.I. Specifications for the "Design of Light Gage Cold Formed Steel Structural Members." Provide L. A. City Building and Safety Research Report No. and date.

D. **Non-Bearing Steel Studs (Except Load Bearing Studs):** Channels

fabricated from 18-gage strip steel, with punched openings along entire length of web between flanges; with protective coating of rust-inhibitive paint; similar and equal to Penmetal steel studs; sizes as indicated on the Contract Drawings; with necessary shoes, tracks and accessories.

1. Studs to Receive Waterproof Racking (Behind Lath) and Ceramic Tile in Shower Rooms and Stalls and Drying Rooms: Atlas screw-on studs, floor and ceiling track, sizes as indicated on drawings, roll formed from .022-inch full galvanized coil steel.

E. **Metal Lath:** 3.4 pound per square yard diamond mesh expanded, copper-alloy steel galvanized for interior cement plaster and for scratch coat plaster behind tile. Use galvanized or protective paint coated lath elsewhere. Use flat rib or rib lath where lath spans more than 16-inches.

F. **Tie Wires:** As per Los Angeles City Building Code 1992 Amendments to the U.B.C.

G. **Ceiling Mesh:** 1-inch No. 20 gage hexagonal galvanized steel wire mesh.

H. **Gypsum Lath:** Minimum 3/8-inch thick plain or perforated ASTM C37 conforming to the Los Angeles City Building Code 1992 Amendments to the U.B.C.

I. **Waterproof Backing:** K-Lath Corporation "Pyro-K-Lath," or "Agura-K-Lath," or equal. Self-furred type with 16-gage galvanized vertical front wires at 1 2-inches on center and 16-gage horizontal back wires at 2-inches on center with perforated Kraft Paper between front and back wires furred with 1/4-inch furring crimps at 6-inches on center and with a sheet of Class "B" (Fed. Spec. UU-P-147b) waterproof paper laminated to back of back wires.

J. **Fire Retardant Gypsum Lath:** 5/8-inch thick, ASTM C37, Type "X" conforming to Los Angeles City Building Code 1992 Amendments to the U.B.C.

K. **Paper Backing:** Asphalt saturated felt weighing not less than 14-pounds per 108 square feet.

L. **Self-Furring Paper-Backed Wire Fabric:** Required for exterior vertical surfaces and/or behind ceramic tile where backing is solid. Fabric shall be 1 ½ -inch x 2-inch mesh, 16 x 16 gage galvanized wire crimped 1/4-inch at 6-inches on center and with slotted perforated absorbent paper separation between front and back wires with Type I, Grade B waterproof paper (Fed. Spec. UV-B-790) laminated to back side of separator paper.

M. **Flat or Non-Furring Paper-Backed Wire Fabric:** Required for horizontal exterior surfaces and for vertical surfaces over wood or metal framing without solid backing. Wire fabric shall be 1-1/2-inch x 2-inch mesh, 16 gage galvanized wire with 11 gage horizontal stiffener wires at 6-inch centers and with slotted perforated absorbent paper between front and back wires. Fabric shall be "Gun-Lath" manufactured by K-Lath Corporation as approved by the City Engineer or the Consultant.

2.2 LATHING ACCESSORIES (As Applicable)

A. **Corner Beads:** Milcor No. 1 small nose or bull nose type of 26-ga. material with expanded flanges or equal.

B. **Internal Corner Reinforcements:** Angle-shaped Cornerite, 2-inch wing or equal.

C. **Plaster Molding:** JPM-75 or equal.

D. **Reinforcing Strips:** Striplath or Stripite; 1.75 expanded metal lath or minimum 19-gage welded or woven galvanized wire minimum 3-inches wide.

E. **Metal Base Screed:** Shape as shown on the Contract Drawings or a standard type suitable for juncture of plaster and cement base, fabricated from 26 ga. galvanized expanded metal wings, with flange same depth as plaster thickness.

F. **Access Panels:** 24 inch x 24 inch Inryco Milcor Style "K" for flush installation or Style "M" for location in masonry walls.

G. **Metal Access Panel Doors:** Style "AT" or "AP" to receive acoustical tile or plaster on the door panel, Inland Steel Products Co. (Milcor) or equal.

H. **Expansion Joints (Control Joints):** No. 75 U.S. Gypsum Control Joint of roll-formed zinc with slot protected with plastic tape. Milcor No. 15, 20-gage zinc metal.

I. **Metal Trim Screed:** Superior No. 21 (for 3/4-inch plaster) or No. 22 (for 7/8-inch plaster) Metal Casing, National Cornice Works, Los Angeles, California, as necessary for required work.

J. **Pencil Rods:** Crimped 1/4-inch round, mild steel; minimum 1 1/4-inch crimp 16-inches on center.

K. **Ventilation Expansion Screed:** Superior Metal Trim Products, manufactured by H. K. Porter Co., Los Angeles, California; #222 modified as indicated on the Drawings; made from .027-inch thickness Titanaloy manufactured by Matthiessen & Hegeler Zinc Co., La Salle, Illinois. Provide in ten-foot (10'-0") and eight-inch (8") lengths, using short piece as back behind butt joints of full length pieces. Fasteners for holding butted pieces to backer, round head, stainless steel sheet metal screws; not less than four (4) screws at each side of butted joints.

L. **Aluminum Plaster Moldings, Screeds and Trim:** Products of Fry Reglet Corporation, Alhambra, California; .050-inch extruded aluminum with clear white plastic coating, except as otherwise noted; modify as noted on the Drawings, not a complete listing.

1. Drip Screed
2. Molding "WARM-75"
3. Plaster Reveal Molding "PCS-75-250"
4. Plaster Channel Screed PCS-300 vented plot
5. Fry "T" Reveal Molding "TRM-75"
6. Plaster Expan-O-Screed "PES-250"
7. Plaster Channel Screed "PCS-150" tough, flexible, non-combustible polyvinyl chloride, white color.
8. Plaster Molding "JPM-75"
9. Plaster Molding No. 1313
10. Vented Drip Screed "VDS-875-200".
11. Fry "F" plaster molding "FPM-75".

M. **Resilient Furring Channels: (For Support of Lath and Plaster Ceilings Under Steel Decking):** U.S. Gypsum Co. 26 ga. galvanized No. RC-1 or equal.

N. **Paper Backing:** Asphalt saturated felt weighing not less than 14-pounds/108 square feet.

O. Resilient clips (for gypsum-lath or wood studs) U.S. Gypsum Co. R-1 and R-2 or equal or Penn-Metal Co., Inc. No. 400A with 1/4-inch Round Pencil Rod "Hugh Clip" System.

P. **Acrylic Primer**: A “toyo” product handled by Artech Concepts Co., 4616 Lei Street, Fair Oaks, CA 95628, phone (916) 965-0538, or equal.

2.3 PLASTERING MATERIALS

A. **Portland Cement:** ASTM C150 Type I. Use plastic or waterproof cement only upon written approval of the City Engineer or the Consultant. Use white cement (Riverside, Medusa of Trinity) for all exterior cement plaster finish coats.

B. **Gypsum Neat Plaster:** ASTM C28, fibered for scratch coat on metal lath.

C. **Gaging Plaster:** Calcined gypsum ASTM C28.

D. **Keenes Cement:** ASTM C61.

E. **Lime and Lime Putty:** Los Angeles City Building Code 1992 Amendments to the U.B.C., Section 91.4702.

F. **Sand:** ASTM C35. Sand for sand-float finish to pass a No. 20 sieve. Use Del Monte White Silica Sand for all exterior cement plaster finish coats.

G. **Water:** From a supply distributed for domestic purposes.

H. **Finish Surface of Locker & Toilet Room:** A factory mixed cement plaster; "Shower Finish" by a Highland Stucco and Lime Products Inc., Van Nuys, California (Telephone (213) 785-3131) or equal.

I. **Bonding Agent:** "Plasterweld" by Larson Products Corp. (distributed by Pioneer Builders Supplies, Inc., Los Angeles, California).

J. **Vermiculite:** ASTM C35 and provisions of Los Angeles City Building Code 1992 Amendments to the U.B.C., Division 47.

K. **Acoustical Sound Insulating Plaster:** "Hi-Sorb" white color by Highland Stucco and Lime Products Inc., Van Nuys, Calif. (phone (213) 785-3131) or equal.

L. **Exterior Stucco:** A factory mixed integrally colored Portland Cement base material designed for hand or machine application meeting ASTM standards and government specifications. Exterior stucco shall be a product of Highland Stucco and Lime Products Co., Van Nuys, California, or a field mixed Portland Cement with addition of pure mineral oxides guaranteed by the manufacturer to be lime proof and show minimum loss of color value due to weather conditions. Color as indicated on the Drawings.

M. **Pneumatically Applied Fireproofing Plaster:** Fire resistive materials designed for direct pneumatic application to structural steel; "Monokote" Mk-4 by California Zonolite Company, Los Angeles, California; as approved by the Los Angeles City Department of Building and Safety.

N. **Skim Coat Plaster:** "Thoroseal Plaster Mix" by Thoro Systems Products (distributed by L.M. Scofield Co. (213) 723-5285 or equal.

2.4 PLASTER MIXES AND PROPORTIONS

A. **General:** Mix all ingredients in calibrated boxes or containers designed to permit accurate checking at any time. Use batch-type mixer unless otherwise authorized. Mix materials thoroughly and use within 30 minutes after leaving the mixer. Keep all tools and implements clean.

B. **Gypsum Plaster:**

1. First coat on metal lath for three coat work: 1 part gypsum neat plaster to 2 parts sand by weight.

2. Second coat on metal lath for three coat work: 1 part gypsum neat plaster to 3 parts sand, by weight.

3. Keene's Cement Finish: 100 pounds Keene's cement to 75 pounds dry hydrated lime with addition of well graded, fine, clean, white sand passing a No. 30 sieve, in a quantity not exceeding 25 pounds.

4. Unsanded wood-fibered gypsum plaster: A standard brand conforming to Los Angeles City Building Code Section 91.4706 for 3-coat work on metal lath.

5. Base coat on gypsum lath or Type X gypsum lath (when required to be fire resistive): 1 part gypsum neat plaster to 2-1/2 parts sand, by weight.

6. Exercise Room: Base Coat; 2 cubic ft. of sand to 100 pounds Structo-

Base gypsum plaster. Finish Coat; 1 part Structo-Gauge gauging plaster to 1 part lime putty.

7. Base coat on masonry or concrete for two-coat work: 1 part gymsum neat plaster to 3 parts sand by weight.

C. Portland Cement Plaster:

1. First coat on metal lath for scratch coat behind tile or for 3-coat work: 1 part Portland cement to 4 parts sand, by volume, with addition of hydrated lime in quantity not exceeding 1/10 the weight of the cement.

2. Second coat on metal lath behind mortar setting bed for ceramic tile and for 3-coat work: 1 part Portland Cement to 5 parts sand, by volume, with addition of hydrated lime in a quantity not exceeding 1/10 of the weight of the cement.

3. Exterior Stucco: As hereinbefore specified in Subsection 2.3L. Mixed as prescribed by the stucco manufacturer and under his supervision.

4. Base Coat on Masonry or Concrete for Two-Coat Work: 1 part Portland Cement to 4 parts sand, by volume, with addition of hydrated lime in quantity not exceeding 1/10 the weight of the cement in 25 percent of the volume of the amount of cement.

5. Finish Coat: 1 part Portland Cement to 3 parts sand with addition of hydrated lime in quantity not exceeding 1/10 the weight of the cement.

6. Gauging-Lime Smooth Finish (Putty Coat): 1 part gauging plaster and not more than 3 parts lime putty by volume.

PART THREE - EXECUTION

3.1 PREPARATION WORK

A. Approvals: Required for work of other trades prior to being concealed. Uncovering work of other trades not approved and recover as directed by the City Engineer or Consultant at no added cost to the City.

B. Surfaces: To be cleaned for application of plaster. Exterior plaster surfaces to receive textured coating shall consist of properly applied and cured scratch coat, boron coat and skim coat.

C. **Temperature and Ventilation:** Maintain temperature not lower than 55 degrees F during plastering operations and until plaster is dry. Properly regulate adequate ventilation at all times.

1. Use screens to prevent uneven heat if necessary.

2. Avoid plastering during fraying or hot dry winds.

D. **Concrete and/or Masonry Surfaces:** To be free of efflorescence, paint, oil and other foreign matter or scaly substances.

1. Roughen concrete surfaces by approved heavy sandblasting methods to ensure proper bond.

2. Dampen concrete surfaces evenly with clean water prior to application of plaster.

3. Cover monolithic concrete surfaces with a dash coat of Portland Cement Grout Composed of one part Portland Cement to 1 ½ parts fine sand mixed to a mushy consistency and forcibly dashed onto the surface by a whipping motion of a stiff fiber brush, then keep moist for not less than 48 hours, then allow to dry thoroughly as per Los Angeles City Building Code, Division 47 and 1992 Amendments to the U.B.C.

4. Concrete surfaces to receive "Skim Coat Plaster" to be smooth, free from marks and all surface defects to be properly repaired as directed by the Inspector and subject to his approval.

5. On masonry surfaces: Apply specified bonding agent as recommended by the manufacturer.

3.2 WORKMANSHIP

A. **General:** In accordance with best trade practices.

B. **All Finish Plaster Surfaces:** Subject to a 5-foot long straight-edge test for trueness of plane and plumbness; an 1/8-inch in 10-foot tolerance will be allowed. Squareness of internal and external corners shall be within 1/8-inch in 5-foot tolerance. Conduct such tests in the presence of the City Engineer. Remove and replace any work not meeting such tolerance tests rejected by the City Engineer or Consultant at no added cost to the City.

C. **Walls:** Make straight and plumb, or sloped as indicated on the Contract Drawings.

D. **Ceilings and Soffets:** Make level, or slope as indicated on the Contract Drawings.

E. **Corners and Angeles:** Make Straight, true, and square.

F. **Finished Surfaces:** To be uniform in true planes, flush with grounds, accessories, outlet boxes, and other features as indicated. Surfaces to be free from laps, cracks, checks, sand spalls, catfaces, slobbers, trowel marks and other imperfections.

3.3 METAL STUD PARTITIONS (As Applicable)

A. **General:** Installation plumb or sloping and rigid in accordance with manufacturer's recommendations.

B. **Prefabricated Metal Studs:**

1. Materials: As hereinbefore specified in Subsection 2.1 of this Section.

2. Installation: Space studs 16-inches on center except where otherwise indicated on the Contract Drawing and where ceramic tile occurs. Weld studs to tracks or secure with wire-on shoes to tracks. Double studs at joints and heads of openings and weld together.

C. **Bridging:** Use 3/4-inch furring channels and insert through stud opening located 12 inches from top and bottom of stud and intermediate points maximum 3-feet on center and wire tie to each stud.

3.4 LATHING AND FURRING

A. **General:** In accordance to Los Angeles City Building Code, Division 47 with 1992 Amendments to the U.B.C., and as indicated on the Contract Drawings.

1. Apply lath with long dimension at right angles to support framing.

2. Stagger end joints at supports and not on opposite sides of same stud when partition is lathed both sides.

3. Joints at walls not to align with joints in ceilings.

4. Bring edges to moderate close contact.

5. Closely fit lath at angles, corners, outlet boxes and at other openings.

6. All lath to have firm bearing for proper fastening.

B. **Gypsum Lath:** Required for all interior lathing except where Portland Cement plaster scratch coat is required behind ceramic tile and elsewhere indicated on the Contract Drawings. Apply face out. Nail gypsum board in place with 1-1/8-inch blued plaster board nails spaced not more than 5-inches on center.

C. **Metal Lath:** Use galvanized lath for all exterior plastering and for scratch coats behind ceramic tile. Secure lath in place at intervals not greater than 6-inches. Make side laps at lease ½ -inch and wire tie between supports at maximum 8-inch intervals and secure to every support. Make end laps at least 1-inch located at supports and staggered. Attach lath in accordance with Los Angeles City Building Code Sections 91.4703 and 91.4711, 1992 Amendments to the U.B.C.

1. Attach lath over waterproof backing in shower and drying room areas to screw-on studs with stainless steel self-tapping screws fitted with galvanized steel washers.

2. Attach lath to screwable or resilient furring channels using wide shouldered self-tapping screws at 6-inches on center.

3. On exterior metal framing, lath shall be attached over waterproof backing to nailable or screw-on studs with stainless steel fasteners and washers. Exercise care not to puncture or damage the waterproof backing wallboard (on sloping surfaces).

D. **Waterproofing Backing: (As applicable)**

1. Required: Behind metal lath applied to metal studs behind ceramic tile where indicated.

2. Material: As hereinbefore specified in Subsection 2.1I of this Section.

3. Application: Shingle fashion with 3-inch interior laps and 4-inch end laps, lap top edge tile floor waterproofing 4-inches. Make laps over solid backing or supports only. Fasten to studs with galvanized or stainless steel nails, with 1-inch washers cut from scrap sheeting, at 12-inches on center. Backing to be free from tears or breaks when plaster is applied.

E. Metal Furring: (As applicable)

1. Required: For fire protection, concealment of ducts, pipes, conduit, and other mechanical work and for forming architectural features; as indicated on Drawings.

2. Vertical Furring: Except as otherwise indicated on the Drawings, vertical furring to be 3/4-inch channels at 16-inch centers; vertical channels installed in track channels anchored to concrete with 3/16-inch x 1/4-inch drive bolts at track ends and at intervals of 2-feet-0 inches; attached to ceilings by wiring upper ends to continuous horizontal channel attached to ceiling. Vertical furring to be braced with continuous horizontal 3/4-inch channels spaced at 3-feet-0-inches intervals. Each horizontal brace to be tied to each vertical channel and at each end to be attached to abutting construction; as approved by the City Engineer or the Consultant.

3. Attach screwable resilient furring channels to metal decking with self-tapping sheet metal screws at 4-inches on center. Space channels as noted on the Contract Drawings.

4. Attach screwable furring channels to masonry with power driven anchors at 2-foot centers alternating from side to side and with two at or near each end. Space channels as noted on the Contract Drawings.

5. Furring around fireproof steel columns shall be framed as indicated secured to the structural steel column to the floor and to the structure above and make ready to receive fireproofing plaster or 5/8" gypsum board.

F. Carrying Channels for Suspended Ceilings: Support on hanger wires fastened to structure above by hanging from welded metal clips. Properly attach to hanger wires. Each end of each carrying channel to be attached to abutting construction, as approved by the City Engineer or Consultant.

G. Ceiling Mesh: Secure to ceiling carrying channels with approved fasteners at maximum 6-inch centers.

H. Paper Backed Welded Wire Fabric: Apply shingle fashion with long dimension at right angles to supports. Stagger end joints to avoid continuous joints on the same support. Secure fabric to supports at maximum 6-inch centers.

I. **Furring Channels for Suspended Ceilings:** Secure 3/4-inch channels to carrying channels with double wrap and twist or tie wire at each intersection. Spacings of furring channels not to exceed ___ inches on center.

NOTE: Verify size and spacing of furring channels on the Contract Drawings.

3.5 INSTALLATION OF ACCESSORIES (As applicable)

A. **General:** Install metal accessories plumb, level, straight and true to line, and shimmed as necessary. Accurately miter and tightly fit at corners. Install full height and longest practicable lengths. Hold splices to a minimum. Securely fasten accessories to supports by approved methods. Provide prefabricated corner units where ever possible.

B. **External Corner Beads:** Required at all external corners of interior plastered surfaces. Fasten in place nailed to concrete or wired to studs.

C. **Internal Corner Reinforcements:** Required at all internal corners of interior plastered surfaces, fasten to lath only sufficient to retain its position during plastering operations.

D. **Reinforcing Strips:** Locate at junction of different materials where cracking of plaster may occur, except as otherwise indicated on the Contract Drawings or specified.

E. **Metal Trim Screeds:** Locate where indicated on the Contract Drawings. Securely fasten in place. Erect plumb, level straight and true to level.

F. **Metal Base Screeds:** Locate where plaster joins cement on bases.

G. **Expansion Screeds:** Locate where indicated on the Contract Drawings. Secure in place with both flanges nailed with galvanized nails at 6-inches on center. Cut the metal lath at the screed centerline and cut back and place on each side of the screed. Upon completion of plastering operations, remove the "Zip" strip.

H. **Access Panels:** Located where indicated on the Contract Drawings and secure to support framing.

I. **Control Joints:** Locate in soffits or horizontal cement plaster areas and space maximum 20 feet apart or as otherwise indicated on the Contract Drawings.

J. **Resilient Clips and Pencil Rods:** Install a soundproof partition framing as indicated on the Contract Drawings.

K. **Reveal Molding:** As indicated on the Contract Drawings, properly secure to structure, suitably marked, and protected as necessary to protect anodized finish during plastering and curing operations; such protections to be removed upon completion of plastering operations and cleaned without marring the surfaces.

3.6 APPLICATION OF PLASTER

A. General:

1. In 3 coats for all plastering on metal lath, except backing for ceramic tile mortar setting bed. In 2 coats for all plastering on concrete and/or masonry. In 2 coats for backing for ceramic tile.

2. Make finish coats reasonably uniform, thickness not less than 1/16-inch at any point; except not less than 1/8-inch at any point for Portland Cement plaster.

3. Apply finish gypsum plaster coats over plaster base coats.

4. Apply finish Portland Cement plaster coat over Portland Cement plaster base coats.

5. Extend wall plaster down to floor to provide solid backing behind base, except where cement base is indicated on the Contract Drawings.

6. Use of machines for applying plaster is permissible at the option of the printed "Reference Specifications for Machine Applied Plaster" of the Plastering Industries Technical Research Committee. Use of machines for applying and troweling finish plaster coats is not permissible. Plaster screeds will be required on wall and ceiling areas whenever permanent grounds are too far apart to serve as guides for rodding. Apply plaster screeds in conformance with the printed "Reference Specifications Lathing, furring and Plastering in California" of the California Lathing and Plastering Contractors Association, Inc. Locate plaster screeds as directed by the City Engineer or Consultant.

7. Two coats for all plastering on masonry.

B. Minimum Thickness of Plaster (Including Finish Coat)

1. Gypsum Plaster on Gypsum Lath: ½ -inch measured from face of the lath.
2. Portland Cement Plaster on Metal Lath: 7/8-inch, measured from back plane of lath.

3. Portland Cement Plaster Backing for Tile: Scratch coat 3/8-inch, measured from face of lath; second coat as necessary for required level plane to receive mortar settling bed for tile.

4. Gypsum Plaster or Cement Plaster on masonry or on concrete: ½ -inch measured from face of concrete or masonry.

5. Gypsum Plaster on Metal Lath: 5/8-inch, measured from face of lath; 3/4-inch from back plane lath.

C. <u>Gypsum Plaster</u>: (In All Rooms <u>Except</u> Locker and Toilet Rooms)

1. General: Apply sufficient material and pressure to secure good bond. Bring out to grounds or screeds for proper uniform thickness to provide straight, true and plumb surfaces. Finish base coats slightly below the grounds and leave rough to receive finish coat.

2. Base Coat on Gypsum Lath for Two-Coat Work: Apply with sufficient material and pressure to secure good bond with gypsum lath.

3. Keene's Cement Finish: Apply over a base coat which has set and which is nearly but not quite dry; scratch in thoroughly, lay on well, double back, and fill out to a true even surface flush with grounds; allow surface to dry for a few minutes and then well steel-trowel with four water trowelings to a smooth finish, free from blemishes.

4. First Coat on Metal Lath for Three-Coat Work: Apply directly to metal lath, encase the lath and cover with plaster to 1/8-inch thickness, rake the surface to produce scratches 1/8" deep by 1/8" wide x ½" to 3/4" apart and then cross rake to provide bond of the second coat.

5. Second Coat on Metal Lath for Three-Coat Work: Apply after first coat has set firm and hard. Straighten with rod and darby and leave rough to receive finish coat.

D. <u>Portland Cement Plaster</u>: (In Locker and Toilet Rooms Only)

1. General: Apply sufficient material and pressure to secure good bond

to lath and other surfaces to encase metal lath of fabric. Bring out to grounds or screeds for proper thickness to provide straight, true, and plumb surfaces. Finish base coats slightly below grounds and leave rough to receive finish coat. Leave all finish coats free of rough areas, trowel marks, checks, and other surface imperfections, such as cracks, blisters and discolor.

2. First Coat on Metal Lath or Paper Backed Welded Wire Fabric for Three-Coat Work: Apply to thickness not less than ½ -inch measured from back plane of the lath or not less than 3/8-inch from face of the lath for scratch-coat backing behind interior ceramic tile. Scratch surfaces to provide proper bond of finish coats.

3. Second Coat on Metal Lath for Behind Interior Ceramic Tile and for Three-Coat Work: Apply not less than 7 days after application of the first coat, dampen surface of first coat evenly with a fog spray just prior to applying second coat, thickness to be not less than 1/4-inch, rod and darby to produce true and even surface and wood float receive finish coat of plaster or to receive mortar setting bed for ceramic tile.

4. Base Coat on Concrete for Two-Coat Work: Apply directly, on properly prepared or dampened dash coated concrete surfaces. Bring to even and true surface with road and darby and roughen surface with wood float to received finish coat.

5. Smooth Finish: Required for interior Portland Cement plaster in Locker and Toilet Room as per specifications by Highland Stucco for "Shower Finish" cement plaster.

E. **Acoustical Plaster:** Not less than 48 hours prior to starting application, arrange for manufacturer's representative to be present when work starts to fully explain procedure. Pneumatically apply acoustical insulating plaster to gypsum plaster base coat which shall be left rough and partially dry in accordance with manufacturer's directions.

F. **Exterior Portland Cement Plaster on Metal Lath:** Scratch coat shall be 3/8-inch as measured from face of the lath. The brown coat (second coat) as necessary to produce a level plane to receive final "stucco" finish to produce a total thickness of 1-inch.

3.7 CURING AND PROTECTIONS

A. **Required:** All plaster work to be cured and protected from excessively rapid

or slow drying because of weather or lack of air circulation; heat, as required to control drying.

B. **Gypsum Plastering:** Protect each coat from irregular or excessive drying; moisten, scratch, and brown coats with fine spray as required.

C. **Portland Cement Plaster:**

1. Keep each coat damp for 48 hours after application.

2. Interior Plaster: Keep scratch coat plaster moist minimum 24 hours, then apply brown coat and keep moist for minimum 24 hours, then apply finish coat and keep moist for minimum 24 hours. Fog spray as necessary to maintain moisture during curing periods.

3. Keep exterior plaster moist cured by application of "Fog Spray" during the curing period.

4. Keep exterior stucco moist by covering with 7 ounce burlap maintained in a thoroughly wet condition for at least 48 hours after application. Allow burlap to hang in as long as possible, lengths and tied together at joints; temporary battens, securely anchored in place, to maintain wet burlap in direct contact with cement plaster, or stucco surfaces during the curing period.

D. **Reveal Moldings:** Suitably mask and protect such moldings and trim, including flanges, flush with finish plastering against damage to finish during plastering and curing operations. Remove protections upon completion of plastering and curing operations.

3.8 PATCHING AND CLEANING

A. **Patching:** Neatly patch or replace damaged plaster surfaces after the various other trades have left the work.

1. Cut-out broken or damaged plaster on straight lines with clean and sharp edges. Cut-out cracks to a minimum width of 1-inch. Patch with same materials and methods as original work. Match adjoining work in plane, finish and texture without perceptible joints.

B. Cleaning:

1. At completion of work, remove excess plaster from beads, screeds, base, trim and adjoining work and leave the work clean.

2. In addition to provisions of Section 01710 of the GENERAL REQUIREMENTS as rapidly as plastering is completed in each space, clean-up rubbish, utensils and surplus material and scaffolding. Clean adjacent surfaces splattered with plaster. Sweep floors and leave area in neat condition for work of other trades.

(END OF SECTION)

SECTION 09260
GYPSUM BOARD SYSTEMS

PART ONE - GENERAL

1.1 SUMMARY

A. All labor, materials and equipment necessary for gypsum board systems (Drywall Construction) as indicated on the Contract Drawings and in these Specifications, including:

1. Taping, spackling and sanding of wallboard surfaces.

2. Texture finish where surface to be painted.

3. Metal framing for wallboard ceilings and ceiling access panel furnished under DIVISIONS 15 and 16.

B. **Related Sections:**

1. Documents affecting work of this Section include, but are not necessarily limited to the GENERAL CONDITIONS, SUPPLEMENTARY CONDITIONS and Sections of GENERAL REQUIREMENTS in DIVISION 1 of these Specifications.

2. Carpentry in DIVISION 6.

3. Building Insulation in DIVISION 7.

4. Sealants in Section 07920.

5. Metal Doors and Frames in Section 08110.

6. Metal Framing in Lath and Plaster in Section 09200.

7. Acoustical Ceiling in Section 09570.

C. **Regulatory Agency:** Los Angeles City Building Code, DIVISION 47 and 1992 Amendments to the U.B.C.

D. **References Standards:**

1. GA216-85 Recommended Specifications for the Application and Finishing of Gypsum Board.

2. ASTM C-630, Water-Resistant Gypsum Board.

1.2 SUBMITTALS

A. Conform to conditions of Section 01340 - SUBMITTALS of DIVISION 1-GENERAL REQUIREMENTS of these Specifications.

B. **Samples:** Submit 12-inch x 12-inch sample of texture with metal furring for acceptance, when requested by the City Engineer or the Consultant.

C. **Product Data**:

1. Materials list of items proposed to be provided under this Section.

2. Manufacturer's specifications noting fastener detail and spacing and other data needed to prove compliance with specified requirements.

3. Covering or painting preparation procedure.

4. Manufacturer's recommended installation procedures, when approved by the City Engineer, will become the basis of accepting or rejecting actual installation procedures used on the work.

1.3 QUALITY ASSURANCE

A. **Labor:** Use adequate number of skilled laborers who are thoroughly trained and experienced in the necessary crafts and completely familiar with the specified requirements and methods needed for proper performance of the work of this Section.

1.4 PROJECT CONDITIONS

A. **Environmental Requirements:** During work operations of this Section maintain temperatures within the building within the range of 55 to 70 degrees F. For 24-hours before, during and after gypsum board and joint treatment application. Provide adequate ventilation in the work areas to carry off excess moisture.

1.5 GENERAL REQUIREMENTS

A. Product Handling:

1. To be arranged for delivery and storage of adequate supplies of drywall materials to the job-site to permit uninterrupted progress of the work.

2. Deliver materials and accessories to the job-site in their original containers or bundles properly identified with manufacturer's name and brand name. Store as directed by the City Engineer or the Consultant and protect against damage during the extent of the Contract.

3. Store drywall finish materials in flat area, protected from moisture, on flat and solid supports off the floor surface.

B. Scaffolding: In accordance with Federal, State, County, and City of Los Angeles Safety Rules and Regulations and CAL/OSHA. Avoid interference with work of other trades.

C. Protection:

1. Adequately protect all existing and/or new work in place against damage.

2. Keep floor surfaces covered to prevent staining by spackling materials.

PART TWO - PRODUCTS

2.1 MANUFACTURERS

A. Drywall and Accessories:

1. United States Gypsum (USG)

2. Glenstar Gypsum Products (Flintkote)

3. Georgia-Pacific Co.

4. National Gypsum Co. (Gold Bond)

5. Celolex Company

6. Louisiana - Pacific

7. Acceptable substitutes shall conform to conditions in GENERAL CONDITIONS of these Specifications.

2.2 GYPSUM WALLBOARD

A. General:

1. Wallboard shall conform to Fed. Spec. SS-L-30D, in 48" widths by lengths as will minimize cross joints.

2. Regular wallboard, type III grade R, Class I, 5/8" thick except as otherwise noted on the Drawings.

3. Fire-retardant wallboard, type III, grade X, class 1, 5/8" thick and shall bear label (U.L.) for 1-hour fire rating and conforming to ASTM E119 or equal.

4. Exterior water-resistant wallboard shall conform to ASTM C-630, type "X" or "W" conforming to L.A. City Building Code with 1992 Amendments to the U.B.C. and 5/8" thick except as otherwise noted on the Contract Drawings.

5. Shaft walls wallboard designed for encasing shafts of required fire-resistivity, conform to Fed. Spec. SS-L-30D, type IV, grade "R" or "X", class 1, in dimensions shown on the Contract Drawings.

6. Sheathing: where indicated or noted on the Drawings, board shall comply with Fed. Spec. SS-L-30D, type II, class 2, grade W.

B. Screws: Type "W" bugle head drywall screws, conforming to ASTM C664, 1 1/4-inch long, except where longer length is required by Code. Provide type “G” fasteners for gypsum board applications.

C. Tape: U.S. Gypsum "Perf-A-Tape" or equal.

D. Taping Compound: As recommended by the wallboard manufacturer.

E. **Texture:** Level 4 finish. Prepare samples for the City Engineer's or the Consultant's selection.

2.3 ACCESSORIES

A. **Metal Trim:** Form from zinc-coated steel not lighter than 26 gage, conforming to Fed. Spec. QQ-S-775, type I, class "d" or "e".

B. **Furring Channels ("Hat" Section):** Roll formed of .022-inch galvanized steel, 7/8-inch deep with 1-3/8-inch face width, as manufactured by U.S. Gypsum, or equal.

C. **Casings** (for all free edges of exposed gypsum wallboard): U.S. Gypsum No. 200-4 metal trim, U-shaped and of 2-inch size.

D. **Corner Reinforcement:** "Perf-A-Bead", a metal corner reinforcement of formed galvanized steel with 1-3/16-inch wide "Perf-A-Tape" wings to receive joint compound, as manufactured by U.S. Gypsum, or equal.

E. **All other accessories,** etc., as necessary for a complete drywall installation.

F. **Access Panels:** Moonlight Molds Inc., Glass Fiber Reinforced Gypsum access panel, round corner model; 24-inch x 24-inch. Flush hinges and screwdriver operated cam latch.

G. **Sound Deadening Board:** Fiber or gypsum sound deadening board 2-inch thick as supplied by Georgia-Pacific Corporation, or equal.

H. **Edge Beads at Perimeter of Ceilings:** Angle shapes with wings not less than 3/4" wide, with concealed wing perforated for nailing and exposed wing edge folded flat and factory finished white.

2.4 JOINTING SYSTEM

A. **Materials:** Reinforcing tape and compound, designed to be used together as recommended by the wallboard manufacturer.

B. Jointing compound may be used for finishing if so recommended by its manufacturer.

2.5 ACCESS DOORS

A. **In Partitions and Ceilings:** Provide for access to mechanical and/or electrical installations.

B. **Types:**

1. 24" x 24" metal access doors with concealed hinges to metal frame and with Allen key lock.

2. Where to be located in fire-rated partitions, access doors to have the same fire-rating.

3. For tile surfaces and toilet room access doors and frames to be stainless steel with satin finish.

4. Other access doors of steel, prime coated to be finish painted as specified in Section 09900-PAINTING of these Specifications.

PART THREE - EXECUTION

3.1 PREPARATION

A. **Project Conditions:** Examine all parts of the work for any conditions which would affect the soundness or correctness of drywall work. Verify all corrective work to be done before proceeding with drywall construction operations.

B. **Cooperation:** Required, with all other trades involved in the work of placing of work, building-in, and embedding into drywall construction of all fixtures, anchors, backing, sleeves, inserts; providing of openings, chases to the extent necessary for proper and secure installation, attachments, and passing of other work.

C. **All piping, conduit, and fixtures** to be concealed by wallboard or to penetrate drywall finish to be in place, tested, and approved before start of application of wallboard.

D. **Install sound deadening board** at locations indicated on the Drawings. Secure to framing with drywall screws as specified for wallboard in Subsections 2.2B of this Section.

3.2 INSTALLATION OF GYPSUM BOARD

A. General:

1. In accordance with Contract Drawings and with the separate boards in moderate contact but not forced in place.

2. At internal and external corners, conceal the cut edges by overlapping covered edges of abutting boards.

3. Stagger the boards so that corners of any four boards will not meet at a common point except in vertical corners.

B. Cutting: By scoring and breaking, or by sawing. Do all cutting from the face side. Sandpaper cut edges for neat jointing in finished work. Cutouts for pipes, fixtures, or other small openings to be scored before knocking out or cut out with saw. Openings are not to be punched out. Scribe gypsum wallboard finish to intersecting or abutting surfaces.

C. Ceilings: Secure boards along perimeters of ceilings, around edges of openings to all furring channels. Place boards with long dimensions perpendicular to supports, screw in place at 12-inches on center in the field and 8-inches on center along board edges. Locate screws not less than 1/8-inch from board edges.

D. Walls and/or Vertical Planes: Place wallboard horizontally or vertically in accordance with manufacturer's recommendations for the particular situation for minimum taping. Secure wallboard to structural supports with drywall screws spaced 12-inches on center in the field and 8-inches on center staggered along each board edge. Use 1-1/4-inch long screws for fastening single layer of wallboards.

E. Fasteners: Firmly fasten boards to supporting framing member with fasteners not cutting surface paper or fracturing the gypsum core. Where a fastener has cut surface paper, provide another screw fastener approximately 1-1/2-inches from the defective fastener and remove the defective fastener. Butt join vertical joints of wallboard at supports and stagger on opposite faces of partitions.

F. Casings or Trim: Provide at all exposed edges and/or ends of wallboard and where intersecting with other materials. At exterior corners of wallboard joints secure in place specified corner reinforcements ready for taping compound.

G. Sealants: Where indicated on the Contract Drawings, provide a bead of

sealant where trim or casings abutt adjacent construction.

H. Access Doors:

1. By careful coordination with the Drawings and with the trades involved, install the specified access doors where required.

2. Anchor firmly into position, and align properly to achieve an installation flush with the finished surface.

3.3 JOINT TREATMENT AND FINISHING

A. General:

1. Inspect areas to be joint treated, verifying that the gypsum wallboard fits snugly against supporting framework.

2. In areas where joint treatment and compound finishing will be performed, maintain a temperature of not less than 55 degrees for 24 hours prior to commencing the treatment, and until joint and finishing compounds have dried.

3. Apply the joint treatment and finishing compound by machine or hand tool.

4. Provide a minimum drying time of 24 hours between coats, with additional drying time in poorly ventilated areas.

B. Embedding compounds:

1. Apply to gypsum wallboard joints and depressed fastener heads in a thin uniform layer.

2. Spread the compound not less than 3" wide at joints, center the reinforcing tape in the joint, and embed the tape in the compound. Then spread a thin layer of compound over the tape.

3. After this treatment has dried, apply a second coat of embedding compound to joints and fastener heads, spreading in a thin uniform coat to not less than 6" wide at joints, and feather edged.

4. Sandpaper between coats as required.

5. When thoroughly dry, sandpaper to eliminate ridges and high points.

C. Finishing Compounds:

1. After embedding compound is thoroughly dry and has been completely sanded, apply a coat of finishing compound to joints and depressed fastener heads.

2. Feather the finishing compound to not less than 12" wide.

3. When thoroughly dry, sandpaper to obtain a uniformly smooth surface, taking care to not scuff the paper surface of the wallboard.

D. Screw Heads: To be depressed slightly and to have at least 3 coats of spackle, each coat applied at same time as the spackling of joint and to be thoroughly dry before application of succeeding coats.

E. Where Gypsum Board to Receive Vinyl or Other Coverings: Leave all surfaces clean and in acceptable conditions to receive subsequent finish work of other trades.

F. Gypsum Wallboard to be Painted: Apply a smooth finish as herein before specified in Subsection 2.2E of this Section.

3.4 CORNER TREATMENT

A. Internal Corners: Treat as specified for joints, except fold the reinforcing tape lengthwise through the middle and fit neatly into the corner.

B. External Corners:

1. Install the specified corner bead, fitting neatly over the corner and securing with the same type fasteners used for installing the wallboard.

2. Space the fasteners approximately 6" on centers, and drive through the wallboard into the framing or furring member.
3. After the corner bead has been secured into position, treat the corner with joint compound and reinforcing tape as specified for joints, feathering the joint compound out from 8" to 10" on each side of the corner.

3.5 OTHER METAL TRIM

A. General:

1. The Drawings do not purport to show all locations and requirements for metal trim.

2. Carefully study the Drawings and the installation, and provide all metal trim normally recommended by the manufacturer of the gypsum wallboard approved for use in this work.

3.6 CLEANING UP

A. In addition to other requirements for cleaning, use necessary care to prevent scattering gypsum wallboard scraps and dust, and to prevent tracking gypsum and joint finishing compound onto floor surfaces.

B. At completion of each segment of installation in a room or space, promptly pick up and remove from the working area all scrap, debris, and surplus material of this Section conforming to provisions of Section 01710 of the GENERAL REQUIREMENTS.

(END OF SECTION)

SECTION 09900

PAINTING

PART ONE - GENERAL

1.1 SUMMARY

A. Furnish all tools, equipment, materials, supplies and perform all labor required to paint the work indicated or noted on the Contract Drawings and hereinafter specified.

B. "Paint" as herein specified, means coating systems, materials including primers, emulsions, epoxies, enamels, sealers, fillers and other liquid materials which, when spread in a thin layer, solidifies into a film that obscures the surface on which it is applied. These materials can be used for surface preparation and as prime, intermediate or finish coats. The painting application shall also include all necessary operations including proper surface cleaning and preparation, removal of existing substrates and/or paint material, protection of non-painted surfaces, scaffolding and proper clean-up during and after painting. Other painting work may be included or specified in other parts of the Specifications or Contract Documents.

C. The painting works include, but are not necessarily limited to, the following:

1. Ferrous metal surfaces including the pipings that are not galvanized or primed.
2. Galvanized metal surfaces, and sheet metal including roof drains, roof gutters, downspouts, scupper, etc.
3. Interior and exterior plastered walls and ceiling surfaces.
4. Interior gypsum board wall and ceiling surfaces.
5. All wall surfaces and back surfaces of all wall-mounted items or free-standing equipment (e.g. bookcases, chalk and tack boards, counters, cabinets, drinking fountains, refrigerators, lockers), unless specified otherwise.
6. Wall reveals and trims.

7. All surfaces of wood doors, including top, bottom and side edges which are not specified for stain or transparent finishes.

8. All surfaces of wood items including plywood service panels for telephone and electrical equipment. Back prime and paint all wood surfaces before installation.

9. All surfaces of metal door and door frames.

10. All surfaces of wood windows and frames which are not specified for stain or transparent finishes, window putty, screen and security bars.

11. All surfaces of metal windows, window putty, louvers and all window framing and trim.

12. Complete painting of interior or partially concealed surfaces and exterior surfaces of casework and shelving, which are not specified for stain or transparent finishes.

13. Interior masonry surfaces.

14. All metal flashing, counter flashing, coping, and jack.

15. All exterior wood trelllis, fences, posts, and other interior or exterior wood work that are not covered by Section 06400 – FINISH CARPENTRY AND ARCHITECTURAL WOODWORK and all non-pressure treated wood surfaces that set against concrete, masonry or plaster.

16. All contact surfaces of dissimilar metal materials.

17. Sign painting.

18. Exposed and concealed structural steel.

19. All exhaust pipes or smoke stacks, canvas-covered or insulated pipes to match the adjacent painted wall surfaces.

20. Mechanical, security and/or electrical equipment, electrical light standards, transformer, and conduits without complete factory finish, or specified to be painted over in the field.

21. Duct and equipment supports, and interior surfaces of ducts visible through grilles and registers.

22. All exposed factory-primed piping and vehicle service equipment requiring field-applied finishes.

23. Fire sprinkler piping.

24. Fire/Life Safety alarm cabinet and fixtures.

25. All caulking, sealant and firestopping that are exposed to view.

E. All factory-applied primers and factory-applied or factory baked on enamel must conform to the requirements shown in this Section.

F. The following painting and coating works are specified or indicated elsewhere. Contractor shall verify prior to the bid and provide necessary coordination and complete the painting and coating works.

1. The stain and transparent coating systems that are specified for the glue laminated beams, finish carpentry and architectural woodworks, custom caseworks, wood door, wood sash, and wood frames, wood flooring, unit kitchens and other similar works in Division 6 – WOOD AND PLASTICS, Division 8 – DOORS AND WINDOWS, other sections of Division 9 – FINISHES, Division 10 – SPECIALTIES, Division 11 – EQUIPMENT of the Specifications. All finishes shall conform to specified trades including Section 5 – FACTORY FINISH of the Manual of Millwork of Woodwork Institute of California **(**WIC**)**, and the requirements of the respective Sections.

2. Flooring/Paving Sealer Treatment in Section 07182.

3. Anti-Graffiti Coating in Section 09860.

4. Finish Hardware in Section 08710.

G. <u>Work Not To Be Primed Or Painted Unless Specified Otherwise</u>:

1. Steel members to embedded in concrete or mortar, steel surfaces within ½ inch of the toe of the welds, or to receive spray-on-fireproofing, or designed as part of composite steel concrete section in Divisions 5,7,8 and other applicable Division.

2. Metal surfaces with factory applied or baked-on enamel finish, or specified not to be painted over.

3. Toilet room accessories.

4. Solid plastic toilet and shower compartments.

5. Plumbing fixtures.

6. Interior zinc-coated, aluminum, copper, or other ferrous metal surfaces under insulation.

7. Interior aluminum jackets on piping.

H. Related Sections:

1. Documents affecting Work of this Section include, but are not necessarily limited to the GENERAL CONDITIONS, SUPPLEMENTARY CONDITIONS, and Sections in GENERAL REQUIREMENTS in DIVISION 1 of these Specifications.

2. Construction Sign in Section 01500.

3. Concrete work in Division 3.

4. Structural Steel in Section 05120.

5. Metal Decking in Section 05300.

6. Metal Fabrications in Section 05500.

7. Finish Carpentry and Architectural Woodwork in Section 06400.

8. Custom Casework in Section 06410.

9. Flashing and Sheet Metal in Section 07600.

10. Roof Hatches in Section 07830.

11. Caulking and Sealants in Section 07920.

12. Metal Doors and Frames in Section 08110.

13. Access Panels or Doors in Section 08305.

14. Overhead Coiling Doors in Section 08330.

15. Steel Rolling Doors in Section 08331.

16. Lath and Plaster in Section 09200.

17. Gypsum Board Systems in Section 09260.

18. All mechanical ducts, equipment, plumbing piping and supports and access openings in Division 15.

19. All fire/life safety alarm, security and electrical equipment and conduits in Division 16.

1.2 QUALITY ASSURANCE

A. **Paint Applicator**: Use adequate number of skilled employees who are thoroughly trained and experienced in the necessary crafts and completely familiar with the specified work, all applicable codes, regulation and safety requirements and methods needed for proper execution of work of this Section.

1. For any painting work to be performed at the manufacturing plant and in compliance with all provisions of the applicable rules and regulations, the fabricator/applicator must provide all necessary emission plans approved by the local governing agencies and equipment including an approved air pollution control system consisting of collection and control devices which reduce the VOC emissions from the applications of the specified paint materials by an equivalent or greater amount than the VOC limits specified in the applicable rules and regulation.

2. The employees and the applicator shall be certified Protective Coating Specialist and Certified Contractor, respectively, by the Society For Protective Coatings**(**SSPC**)**.

3. Contractor shall deliver copies of written certifications and approved emission plans to the City Engineer for approval.

B. **Paint Coordination:**

1. Prior to Bid and during the course of construction, review other Sections of the Project Manual to verify the sealers, primers and finishes and other coating to be used and assuring compatibility of the total coating system for the various substrates. Contractor shall contact the manufacturers and applicators so as to become familiar with the painting systems and application procedures. Prior to the approval of submittals and beginning of the painting application, conduct a pre-installation meeting and additional meeting when

necessary, at the site attended by the City Engineer, Contractor, Applicator and Manufacturers and the Coating Inspector certified by National Association of Corrosion Engineers **(**NACE**)** to discuss the proposed materials, surface preparations and application processes to establish all necessary coordination and operation procedures.

2. Provide finish coats that are compatible with the prime coats actually used. Area where required protective coatings or waterproofing sealers, use only paint systems compatible with the protective coatings or waterproofing sealers.

3. Furnish data on the characteristics of the specific finish materials to assure that compatible prime coats are used.

4. Provide compatible primers. Remove the non-compatible primers and reprime as required.

5. Notify the City Engineer or Consultant in writing of anticipated problems in using the specified coating systems over priming or sealer coats supplied under other Specification Sections.

5. Schedule the painting operations to prevent any disruption of and by other trades.

7. Schedule the painting operations in occupied facilities to prevent disruption to occupants in and about the building. Painting shall be done after facility working hours**,** during normal working hours**,** on weekend**,** in accordance with the Contract Requirements. Obtain written authorization from the City Engineer for changes in painting operation or work schedule.

8. The areas of removal, repair, surface preparation, new finish or coating as indicated on the Contract Documents are for reference only. The areas of work may increase upon completion of the removal, repair and surface preparation. Contractor shall review the site condition carefully prior to the bid and include in the Contract bid price all incidental costs including all contingencies for the complete painting and coating work. No additional adjustment in payment shall be allowed for any increase of painting or coating work due to the removal, repair and surface preparation.

C. <u>References, Standards, Codes and Regulations</u>:

1. Work, equipment and materials must conform to following, but not necessarily limited to, References, Standards, Federal, State and local laws and regulations including the Los Angeles City Building

Code and applicable Amendments. Current manufacturer's materials safety data sheets for all materials must be on the job-site at all times.

2. Where those requirements conflict with this Section, comply with the more stringent provision.

   a. All material formulation and their application shall comply with the current applicable regulations of the State of California Department of Public Health, California Air Resources Board **(**CARB**)**, Southern Calif Air Quality Management District **(**SCAQMD**)**, and the Environmental Protection Agency **(**EPA**)** for the airborne or solvent emissions and industrial waste disposal. All paint containers to be properly labeled. Provide the City Engineer with "Certificate of Compliance" if requested.

   b. Comply with requirements of OSHA, Safety And Health Standards for Construction **(**29CFR1926**)** requirements specified in this Section and elsewhere in the Project Manual. Protect all workers of other trades, occupants, or passersby from any airborne or solvent emission.

   c. Regulatory changes may affect the formulation, availability, or use of specified coatings. Confirm availability of the specified paint materials and other coatings to be used or available under the emission averaging provision or other exemption rules prior to job going out to bid and before start of painting work.

   d. Los Angeles Department Of Building And Safety **(**LADBS**)** Research Report.

   e. The Society For Protective Coating **(**SSPC**)**, formerly Steel Structures Painting Council, 40 24th Street, 6th floor, Pittsburg, PA 15222, **(**412**)** 281-2331, **(**877**)** 281-7772, www.sspc.org.

   f. Standard Specifications For Public Works Construction **(**SSPWC**)**.

   g. American Society Of Testing And Materials **(**ASTM**)**.

   h. Secretary of the Interiors Standards for Historic Preservation Projects as indicated in Section 02000 – Historic Restoration Procedures.

D. **<u>Shop Inspection</u>**: Required for all items to be fabricated, factory-primed or factory- applied finish offsite.

E. **Inspection Devices**: Contractor shall furnish, until final acceptance of the painting work, inspection devices in good working condition for the measurement of wet film thickness and dry film thickness of the paint. Wet film thickness and dry film thickness gauges shall be made available for the City Engineer's use at all times while painting is being done, until final acceptance of the Project. If it deems necessary, provide a calibrated magnetic film thickness gauge and trained personnel to measure the dry film thickness of the paint in place at the locations as instructed by the City Engineer at no additional cost to the City.

1.3 SUBMITTALS

A. **General:** Comply with applicable provisions in SECTION 01330 – SHOP DRAWINGS/SUBMITTALS in DIVISION 1 - GENERAL REQUIREMENTS of the Project Manual. Contractor shall coordinate with other trades and obtain information required for the Submittal. City Engineer or Consultant will return and will not review any submittal requiring coordination with other submittals until such other submittals or required information are received by the City Engineer or the Consultant.

B. **Product Data and Shop Drawings:**

1. Submit manufacturer's printed product data and material specifications needed to prove compliance with the specified requirements. The Contractor must identify on separate submittal of all material manufactured outside the State of California.

2. Submit materials list of all items proposed to be provided under this Section including all cleaning agents and materials for surface preparation; Paint Finish and Color Schedules including respective locations and thicknesses, application rates and amounts of required stock material. All items must be provided with catalog names and numbers of the paint types. Paint Finish Schedules shall also identify works to be factory-primed and to be re-primed in the field. Identify materials that are available under the emission averaging provisions or other exemption rules, and also to be applied In the manufacturing plant by using an air pollution control system to reduce the VOC emissions. Provide painting locations, which will receive waterproofing sealer treatment, anti-graffiti and other protective coatings.

3. Submit Manufacturer's recommended methods of surface testing **(**including the alkalinity test**)**, demolition, material mixing, surface preparation and cleaning for painting works to be provided under this Section and their prospective locations.

a. For existing paint or coating systems specified to be remained, repaired and/or recoated; expose and test each of existing paint or coating systems and establish the existing paint composition for compatibility reviews. Use ASTM D5043 – STANDARD TEST METHOD FOR FIELD IDENTIFICATION OF COATINGS, ASTM D2621 – INFRARED IDENTIFICATION OF VEHICLE SOLIDS FROM SOLVENT-REDUCIBLE PAINTS.

4. Submit list of equipment, operation procedures and pressures proposed to be used under this Section. Coordinate and submit all protection plans or safety controls against any airborne emission or exposure during the demolition, surface preparation and painting works.

5. Submit methods of testing of total film thickness.

6. Submit manufacturer and Coating Inspector prepared certifications of substrate materials as suitable to receive sealers or primers and paints, and succeeding anti-graffiti coatings.

6. Scaffolding Plans: All scaffolding shall be designed by a California State Licensed Engineer retained by the Contractor and/or conform to applicable safety and code requirements.

C. Samples:

1. Color Samples: Required for each type of paint material and color, four 8 1/2-inch x 11-inch swatches, to be submitted to the City Engineer or the Consultant for approval not less than 14 days prior to start of painting.

2. For stain or natural finish on wood, samples shall be submitted on each type and quality of wood used on the project as approved by the City Engineer or the Consultant.

3. Provide paint samples on actual surfaces or on mock-up panels at the job site; and by methods comparable with the work requirements representing true quality of the proposed work, to be prepared by the Contractor during work process, as requested by the City Engineer or the Consultant.

4. Revise and resubmit each sample as requested by the City Engineer or the Consultant until approval is achieved. Approved samples will become standards of color and finish for accepting or rejecting the work of this Section.

5. Actual painting or other finish coating shall not commence until samples and mock-ups are approved and are on file at the job-site.

6. Mock-up: Prior to application to the structures or intended surfaces, coordinate and apply each paint system and anti-graffiti coating to a 16 sq. ft. area of the building, as selected by the City Engineer or Consultant to show effect on appearance. Demonstrate in the presence of the City Engineer and the Architect Consultant the proposed methods of surface cleaning and preparation. Do not apply the paint system to structures or intended surfaces until the mock-up is approved by City Engineer. When it deems necessary, coordinate and apply preceding waterproofing sealer treatment as required by the Contract, to the mock-up panels prior to painting**.** Apply succeeding anti-graffiti coating as required by the Contract to the mock-up panels after the painting.

1.4 PRODUCT HANDLING

A. Delivery: Deliver materials to the job-site in factory sealed and properly labeled containers bearing manufacturer's name, type of paint and instructions for mixing and/or reducing.

B. **Storage**: Store paint materials in suitable dry, clean and well ventilated locations. Precautions shall be taken for the prevention of fire. Do not store outdoors or deliver paint material to site more than 15 days before the painting work.

C. **Inspection**: Required for approval before containers are opened. Non-approved materials shall be removed from the job-site.

D. **Protection**: Required of all paint materials from exposure to weather or from damage as caused by other construction operations. Protect all surfaces not be painted. Mask-off where necessary and the over spray is prohibited.

E. Factory-primed, factory-applied or factory baked-on enamel finished metal or equipment shall be protected during shipment and handling by suitable padding, blocking and the use of canvas or dunnage. Do not expose any metal or equipment to weather prior to painting or installation. Do not wrap hook or chain around the steel during any lifting operation. Do not use nylon string that can cause abrasion to the metal coating.

1.5 JOB CONDITIONS

A. Do not apply paint material when surface temperatures and the surrounding air temperatures are below 50 degrees F. Do not apply paint material on damp or wet surfaces, unless otherwise permitted by the manufacturer's printed instructions as approved by the City Engineer or the Consultant.

B. Perform no painting when the relative humidity is above 85 percent or when the dew point is less than 5 degrees F variance between the air/surface temperature.

[C. Do not apply primer or sealer or paint material unless moisture contents are below the following limits. Any to be painted or stained wood items with moisture contents exceeding the limits indicated below at the time of delivery to the job site shall be rejected and immediately removed from the job site:

1.	Plaster and gypsum:	8 percent
2.	Concrete and masonry:	12 percent
3.	Wood:	12 percent

Contractor shall measure moisture content of surfaces using a probe type electronic moisture meter approved by the City Engineer.

D. Do not apply materials during fog, rain or mist or when inclement weather is expected within a period of 24 hours, or the dry time specified by the manufacturer following a rainfall.

E. Insure proper ventilation to outside during all interior painting operations. Forced air ventilation shall be provided to reduce the concentration of air contaminant to a safe limit. Air circulation and exhausting of solvent vapors shall be continued until the coatings have fully cured.

F. Provide adequate permanent or temporary lighting during all painting operations.

1.6 EXTRA STOCK (MAINTENANCE MATERIALS)

A. **Required**:

1. Provide five-gallon bucket of sealed and properly labeled container of each paint color and type of paint used in the project for maintenance use.

2. The stock material shall have at least one-year shelf life at the time of the delivery.

B. **Delivery**: Upon completion of work of this Section, deliver the required paint maintenance materials and store on the job-site or at an offsite location at no additional cost to the City where directed by the City Engineer as a condition precedent to the City's acceptance of the work of this Section.

1.7 SAFETY REQUIREMENTS

A. Comply with all safety and health requirements of the "Federal Labor Standards" and in applicable Section in the GENERAL CONDITIONS of Project Manual. It is the responsibility of the Contractor to establish appropriate safety and health practices. Contractor shall provide in accordance with the reviewed safety plans, all temporary partitions or enclosures, respiratory protection, equipment, materials, personnel monitoring and other means necessary to protect their personnel and building occupants or area occupants, and passers-by from contact with airborne emission from the demolition or other preparatory work on or over **[**gypsum board wall, existing paint, existing lead-based paint**]** before and during the painting work.

B. All persons engaged in sanding, scraping or removing old paint; spraying operations or handling flammable or toxic materials shall wear protective apparel including eye and face protection devices, air purifying halfmasks or mouth piece respirators with appropriate filter. Old sealers or paint coatings may contain lead, zinc or other contaminates and other surfaces may contain asbestos material.

C. Any empty container or cloth like waste materials which might constitute a fire or health hazard shall be placed in a closed metal container, removed or destroyed by an approved method at end of each day's operations. Paint thinner or solvent shall not be stored in a room scheduled to receive resilient flooring or other sensitive materials, or near source of flame or heat.

D. Paints, stains, wood preservative finishes and related materials may be considered as hazardous and shall be handled and disposed of in accordance with code requirements.

1.8 GUARANTEE

A. The Contractor shall conform to provision of Section 01611 – GUARANTY/WARRANTY of the General Requirements and furnish the City with written guarantee, during the submittal process and at completion of the work, which guarantees for a period of 2 years from the date of acceptance of the project against any defect, peeling, chipping or crack and that Contractor will without additional cost to the City, promptly make any repairs required as a result of defect or ordinary wear and tear.

B. As directed by the City and prior to any repair, submit written reports describing the testing data, the causes of the failures or defects or the non-conforming works, and the corrective actions to be taken. The written reports shall be prepared and certified by the Contractor, Paint Manufacturer and the Coating Inspector. The Coating Inspector shall be Level 2 certified by the National Association of Corrosion Engineer **(**NACE**)** obtained and paid for by the Contractor at no additional cost to the City.

1.9 SUPPLEMENTAL INFORMATION:

A. Color Boards or Color Charts for this project prepared by the Consultant Architect are made available for inspection prior to bid and during the course of construction.

PART TWO - PRODUCTS

2.1 MATERIALS

A. **General**: All painting products shall be first line premium material, unless specified otherwise, commercial line or product line materials shall be deemed unacceptable. Only the approved products specified herein shall be used in this project. All paints shall be factory-mixed. Paint by aerosol or spray can is not acceptable. No substitution or “As Equal” shall be considered.

1. Paint pigments shall be fully ground, maintaining soft paste consistency, capable of being readily and uniformly dispersed to complete homogeneous mixture. Paints shall have good flowing and brushing properties and be capable of drying or curing free of streaks and sags. Provide paints with the colors specified on Contract Documents selected by the Consultant Architect from the color chip samples submitted by the Contractor.

2. High temperature paints shall be used for protection of metal surfaces of furnaces, heat exchangers, boilers, exhaust mufflers and piping as well as other surfaces continuously or intermittently exposed to high temperatures. The high temperature paint shall withstand minimum high temperatures of 1,000 F.

3. In fire resistive or non-combustible construction, the paint materials shall conform with UBC Chapter 8 – INTERIOR FINISHES and ASTM E84 – STANDARD TEST METHOD FOR SURFACE BURNING CHARACTERISTICS OF BUILDING MATERIALS and shall have Class 1 Flame Spread Classification, flame spread index less than 25 and smoke density less than 5.

4. Except the locations specified otherwise, all surfaces of the metal gratings, metal ship ladder, metal flashing and necessary bolts and other fastenings that are subject to pedestrian traffic shall be applied with paint materials that provide slip and abrasion resistance and protection from severe environment.

5. All paint products shall be in compliance with the Volatile Organic Compound **(**VOC**)** limits specified in the rules and regulations of the local governing agencies including the South Coast Air Quality Management District **(**SCAQMD**)**. No person shall manufacture, supply, sell or apply any paint products which exceeded the VOC contents allowed by the regulations.

   All factory-applied primers or other paint materials on wood products shall be in compliance with the VOC limits and rules specified in SCAQMD's Rule 1136 – WOOD PRODUCTS COATING of the Regulation No XI – SOURCE SPECIFIC STANDARDS.

6. All factory-applied primers or factory baked-on enamels or other paint materials on metal shall be in compliance with the VOC limits and rules specified in SCAQMD's Rule 1107 – COATING OF METAL PARTS AND PRODUCTS of the Regulation No. XI – SOURCE SPECIFIC STANDARDS. All factory-applied primers, factory baked-on enamels and all other field-applied finish coats or spot prime paint

materials shall be the products of the same manufacturer. The primers, intermediate and finish coats in each painting system of any location shall be compatible.

7. All field applied paint products shall meet or not to exceed the applicable VOC Limits of SCAQMD's Rule 1113 – ARCHITECTURAL COATINGS of the Regulation No. XI – SOURCE SPECIFIC STANDARDS, latest edition:

Products	VOC Limits (g/liter)
Clear Wood Finishes	
Varnish	275
Sanding Sealers	275
Sprayed Lacquer	275
Clear Brushing Lacquer	275
Pigmented Lacquer	275
Specialty Primers	100
Shellac	
Clear	730
Pigmented	550
Stains	100
Stains, Interior	250
Waterproofing Sealers	100
Waterproofing Concrete/Masonry Sealers	100
Wood Preservatives	
Below-Ground	350
Other	350
Rust Preventative Coatings	100
Industrial Maintenance (IM) Coating	250
High Temperature IM Coating	420
Zinc Rich IM Primers	100
Pre-Treatment Washer Primers	420
Primers, Sealers and Under-Coaters	100
Quick-Dry Primers, Sealers and Under-Coaters	100

Quick-Dry Enamels	50
Flat Coatings	50
Non-Flat Coatings	50
Multi-Color Coating	250
Fire-Retardant Coatings Clear Pigmented	 650 350
Bond Breakers	350
Concrete Curing Compounds	100
Dry Fog Coatings	50
Fire-Proofing Exterior Coatings	150
Floor Coatings	50
Graphic Arts **(**Sign**)** Coating	200
Japans/Faux Finishing Coatings	350
Magnesite Cement Coatings	450
Mastic Coatings	100
Metallic Pigmented Coating	150
Recycled Coatings	150
Roof Coatings	50
Roofing Coating, Aluminum	100
Roof Primer, Bituminous	350
Swimming Pool Coatings Repair Other	 340 340
Traffic Coatings	100

B. **Approved Manufacturers**: Including, but not limited to:

1. Ameron International, 13010 Morris Road, Suite 400, Alpharetta, GA 30004, (678) 393-0653, (800) 926-3766, (800) 826-9048, www.ameroncoatings.com, distributed by Frazee Paint & Wallcovering.

2. Benjamin Moore & Co., 51 Chestnut Ridge Road, Montvale, NJ 07645, (201) 573-9600, (800) 344-0400, www.benjaminmoore.com.

3. Carboline Company, 350 Hanley Industrial Court, St. Louis, MO 63144-1599, **(**314**)** 644-1000, (800) 848-4645, www.carboline.com.

4. The Flecto Company, Inc., 1000 45th Street, Oakland, CA 94608, (510) 655-2470, (800) 635-3286.

5. Dunn-Edwards Paints, 4885 E. 52nd Place, Los Angeles, CA 90040, (888) 337-2468, (800) 488-5722, www.dunnedwards.com.

6. Frazee Paint & Wallcovering, 181 South Rosemead Blvd., #A, Pasadena, CA 91107, (800) 826-9048, www.frazeepaint.com.

7. Jasco Chemical Corporation, 1102 E. Washington Ave., P.O. Box 715, Santa Ana, CA 92701, (888) 345-2726, www.jasco-help.com.

8. McCloskey Paints, Division of Valspar Corp., 1191 S. Wheeling Road, Wheeling, IL 60090, (847) 541-9000, (800) 345-4530, www.valspar.com.

9. Okon, Inc., 6000 W. 13th Ave., Lakewood, CO 80214, (303) 232-3571, (800) 237-0565, distributed by Dunn-Edwards Paints, www.okoninc.com.

10. Tnemec Coating, Inc., 6800 Corporate Drive, Kansas City, MO, 64120-1372, (800) 863-6321, www.tnemec.com.

11. Valspar Corp., Architectural Customer Services, 1191 S. Wheeling Road, Wheeling, IL 60090, (800) 845-9061, www.valspar.com.

C. Requisite Properties For Interior Surfaces:

1. Colors: "DEW 380 Warm White" manufactured by Dunn Edwards.
2. Sheens: Provide the following unless otherwise indicated.
   a. Ceilings: Not more than Gloss Level 3 (Eggshell).
   b. Trim: At least Gloss Level 6 (Gloss).
   c. Bathroom Walls: At least Gloss Level 5 (Semi-Gloss).
   d. Other Walls: At least Gloss Level 3 (Eggshell).

D. Approved Materials For Interior Surfaces: Unless specified otherwise, apply the painting systems with the following approved products. Refer to other materials required for the surface preparation and cleaning specified elsewhere in the Project Manual.

1.

Ferrous Metals with Primer Only		Frazee	Dunn-Edwards	Optional Products
	Prime Coat 1st Coat	661F774 Metal Primer	Bloc-Rust (43-4)	Tnemec Primer V10-99 (Red)
	Primer Coat (2nd Coat if required)	661F774 Metal Primer	Bloc-Rust (43-4)	Tnemec Primer V10-1009 (Gray)

2.

Non-Ferrous Metal with Primer Only		Frazee	Dunn-Edwards	Optional Products
	Prime Coat 1st Coat	661F774 Metal Primer	Galv-Alum (43-7)	Tnemec Primer V10-99 (Red)
	Prime Coat (2nd Coat if required)	661F774 Metal Primer	Galv-Alum (43-7)	Tnemec Primer V10-1099 (Gray)

3.

Non-Ferrous Metal **(**Galvanized Metal and Aluminum**)** with Primer Only		Frazee	Dunn-Edwards	Optional Products
	Pre-Treatment	Use Optional Products	Galva-Etch (GE123)	Jasco Chemical Corp. Jasco Prep & Prime
	Prime Coat 1st Coat	661F774 Metal Primer	Galv-Alum (43-7)	Tnemec Primer V10-99 (Red)
	Prime Coat (2nd Coat if required)	661F774 Metal Primer	Galv-Alum (43-7)	Tnemec Primer V10-1099 (Gray)

4.

Ferrous Metal: Flat, 100% Acrylic or Acrylic Copolymer		Frazee	Dunn-Edwards	Optional Products
	1st Coat	661F774 Metal Primer	Bloc-Rust (43-4)	Tnemec Primer V10-99
	2nd Coat	011 Velvin II	Decovel Velvet Flat (W401)	
	3rd Coat	011 Velvin II	Decovel Velvet Flat (W401)	

5.

Ferrous Metal: Eggshell, 100% Acrylic		Frazee	Dunn-Edwards	Optional Products
	1st Coat	661F774 Metal Primer	Bloc-Rust (43-4)	Tnemec Primer V10-99
	2nd Coat	126 Mirro Glide LS	Permashell (W940)	
	3rd Coat	126 Mirro Glide LS	Permashell (W940)	

6.

Ferrous Metal: Semi-Gloss, 100% Acrylic		Frazee	Dunn-Edwards	Optional Products
	1st Coat	661F774 Metal Primer	Bloc-Rust (43-4)	Tnemec Primer V10-99
	2nd Coat	124 Mirro Glide SG	Decoglo (W450V)	
	3rd Coat	124 Mirro Glide SG	Decoglo (W450V)	

7.

Ferrous Metal: Gloss, 100% Acrylic		Frazee	Dunn-Edwards	Optional Products
	1st Coat	661F774 Metal Primer	Bloc-Rust (43-4)	Tnemec Primer V10-99
	2nd Coat	143 Mirro Glide Gloss	Permagloss (W960)	
	3rd Coat	143 Mirro Glide Gloss	Permagloss (W960)	

8.

Ferrous Metal: Semi-Gloss, Alkyd		Frazee	Dunn-Edwards	Optional Products
	1st Coat	661F774 Metal Primer	Bloc-Rust (43-4)	Tnemec Primer V10-99
	2nd Coat	628 Aro-Plate II SG	Syn-Lustro (9)	
	3rd Coat	628 Aro-Plate II SG	Syn-Lustro (9)	

9.

Ferrous Metal: Gloss, Alkyd		Frazee	Dunn-Edwards	Optional Products
	1st Coat	661F774 Metal Primer	Bloc-Rust (43-4)	Tnemec Primer V10-99
	2nd Coat	648 Aro-Plate II Gloss	Syn-Lustro (10)	
	3rd Coat	648 Aro-Plate II Gloss	Syn-Lustro (10)	

10.

Galvanized Metal: Flat, 100% Acrylic or Acrylic Copolymer		Frazee	Dunn-Edwards	Optional Products
	Pre-Treatment	Use Optional Products	Galva-Etch (GE123)	Jasco Chemical Corp., Jasco Prep & Prime
	1st Coat	661F774 Metal Primer	Ultra Grip (W715)	Tnemec Primer V10-99
	2nd Coat	011 Velvin II	Decovel Velvet Flat (W401)	
	3rd Coat	011 Velvin II	Decovel Velvet Flat (W401)	

11.

Galvanized Metal: Eggshell, 100% Acrylic		Frazee	Dunn-Edwards	Optional Products
	Pre-Treatment	Use Optional Products	Galva-Etch (GE123)	Jasco Chemical Corp. Jasco Prep & Prime
	1st Coat	661F774 Metal Primer	Ultra Grip (W715)	Tnemec Primer V10-99
	2nd Coat	126 Mirro Glide LS	Permashell (W940)	
	3rd Coat	126 Mirro Glide LS	Permashell (W940)	

12.

Galvanized Metal: Semi-Gloss, 100% Acrylic		Frazee	Dunn-Edwards	Optional Products
	Pre-Treatment	Use Optional Products	Galva-Etch (GE123)	Jasco Chemical Corp. Jasco Prep & Prime
	1st Coat	661F774 Metal Primer	Ultra Grip (W715)	Tnemec Primer V10-99
	2nd Coat	124 Mirro Glide SG	Decoglo (W450V)	
	3rd Coat	124 Mirro Glide SG	Decoglo (W450V)	

13.

Galvanized Metal: Gloss, 100% Acrylic		Frazee	Dunn-Edwards	Optional Products
	Pre-Treatment	Use Optional Products	Galva-Etch (GE123)	Jasco Chemical Corp. Jasco Prep & Prime
	1st Coat	661F774 Metal Primer	Ultra Grip (W715)	Tnemec Primer V10-99
	2nd Coat	143 Mirro Glide Gloss	Permagloss (W960)	
	3rd Coat	143 Mirro Glide Gloss	Permagloss (W960)	

14.

Galvanized Metal: Semi-Gloss, Alkyd		Frazee	Dunn-Edwards	Optional Products
	Pre-Treatment	Use Optional Products	Galva-Etch (GE123)	Jasco Chemical Corp. Jasco Prep & Prime
	1st Coat	661F774 Metal Primer	Ultra Grip (W715)	Tnemec Primer V10-99
	2nd Coat	628 Aro-Plate Semi-Gloss	Syn-Lustro (9)	
	3rd Coat	628 Aro-Plate Semi-Gloss	Syn-Lustro (9)	

15.

Galvanized Metal: Gloss, Alkyd		Frazee	Dunn-Edwards	Optional Products
	Pre-Treatment	Use Optional Products	Galva-Etch (GE123)	Jasco Chemical Corp. Jasco Prep & Prime
	1st Coat	661F774 Metal Primer	Ultra Grip (W715)	Tnemec Primer V10-99
	2nd Coat	648 Aro-Plate II Gloss	Syn-Lustro (10)	
	3rd Coat	648 Aro-Plate II Gloss	Syn-Lustro (10)	

16.

Aluminum: Flat, Acrylic or Acrylic Copolymer		Frazee	Dunn-Edwards	Optional Products
	Pre-Treatment	Use Optional Products	Galva-Etch (GE123)	Jasco Chemical Corp. Jasco Prep & Prime
	1st Coat	661F774 Metal Primer	Ultra Grip (W715)	Tnemec Primer V10-99
	2nd Coat	011 Velvin II	Decovel Velvet Flat (W401)	
	3rd Coat	011 Velvin II	Decovel Velvet Flat (W401)	

17.

Aluminum: Eggshell, 100% Acrylic		Frazee	Dunn-Edwards	Optional Products
	Pre-Treatment	Use Optional Products	Galva-Etch (GE123)	Jasco Chemical Corp. Jasco Prep & Prime
	1st Coat	661F774 Metal Primer	Ultra Grip (W715)	Tnemec Primer V10-99
	2nd Coat	126 Mirro Glide LS	Permashell (W940)	
	3rd Coat	126 Mirro Glide LS	Permashell (W940)	

18.

Aluminum: Semi-Gloss, 100% Acrylic		Frazee	Dunn-Edwards	Optional Products
	Pre-Treatment	Use Optional Products	Galva-Etch (GE123)	Jasco Chemical Corp. Jasco Prep & Prime
	1st Coat	661F774 Metal Primer	Ultra Grip (W715)	Tnemec Primer V10-99
	2nd Coat	124 Mirro Glide SG	Decoglo (W450V)	
	3rd Coat	124 Mirro Glide SG	Decoglo (W450V)	

19.

Aluminum: Gloss, 100% Acrylic		Frazee	Dunn-Edwards	Optional Products
	Pre-Treatment	Use Optional Products	Galva-Etch (GE123)	Jasco Chemical Corp. Jasco Prep & Prime
	1st Coat	661F774 Metal Primer	Ultra Grip (W715)	Tnemec Primer V10-99
	2nd Coat	143 Mirro Glide Gloss	Permagloss (W960)	
	3rd Coat	143 Mirro Glide Gloss	Permagloss (W960)	

20.

Aluminum: Semi-Gloss, Alkyd		Frazee	Dunn-Edwards	Optional Products
	Pre-Treatment	Use Optional Products	Galva-Etch (GE123)	Jasco Chemical Corp. Jasco Prep & Prime
	1st Coat	661F774 Metal Primer	Ultra Grip (W715)	Tnemec Primer V10-99
	2nd Coat	628 Aro-Plate II SG	Syn-Lustro (9)	
	3rd Coat	628 Aro-Plate II SG	Syn-Lustro (9)	

21.

Aluminum: Gloss, Alkyd		Frazee	Dunn-Edwards	Optional Products
	Pre-Treatment	Use Optional Products	Galva-Etch (GE123)	Jasco Chemical Corp., Jasco Prep & Prime
	1st Coat	661F774 Metal Primer	Ultra Grip (W715)	Tnemec Primer V10-99
	2nd Coat	648 Aro-Plate II Gloss	Syn-Lustro (10)	
	3rd Coat	648 Aro-Plate II Gloss	Syn-Lustro (10)	

22.

Stainless Steel, Copper, Brass: Flat, 100% Acrylic or Acrylic Copolymer		Frazee	Dunn-Edwards	Optional Products
	1st Coat	661F774 Metal Primer	Ultra Grip (W715)	Tnemec Primer V10-99
	2nd Coat	011 Velvin II	Decovel Velvet Flat (W401)	
	3rd Coat	011 Velvin II	Decovel Velvet Flat (W401)	

23.

Stainless Steel, Copper, Brass: Eggshell, 100% Acrylic		Frazee	Dunn-Edwards	Optional Products
	1st Coat	661F774 Metal Primer	Ultra Grip (W715)	Tnemec Primer V10-99
	2nd Coat	126 Mirro Glide LS	Permashell (W940)	
	3rd Coat	126 Mirro Glide LS	Permashell (W940)	

24.

Stainless Steel, Copper, Brass: Semi-Gloss, 100% Acrylic		Frazee	Dunn-Edwards	Optional Products
	1st Coat	661F774 Metal Primer	Ultra Grip (W715)	Tnemec Primer V10-99
	2nd Coat	124 Mirro Glide SG	Decoglo (W450V)	
	3rd Coat	124 Mirro Glide SG	Decoglo (W450V)	

25.

Stainless Steel, Copper, Brass: Gloss, 100% Acrylic		Frazee	Dunn-Edwards	Optional Products
	1st Coat	661F774 Metal Primer	Ultra Grip (W715)	Tnemec Primer V10-99
	2nd Coat	143 Mirro Glide Gloss	Permagloss (W960)	
	3rd Coat	143 Mirro Glide Gloss	Permagloss (W960)	

26.

Stainless Steel, Copper, Brass: Semi-Gloss, Alkyd		Frazee	Dunn-Edwards	Optional Products
	1st Coat	661F774 Metal Primer	Ultra Grip (W715)	Tnemec Primer V10-99
	2nd Coat	628 Aro-Plate II SG	Syn-Lustro (9)	
	3rd Coat	628 Aro-Plate II SG	Syn-Lustro (9)	

27.

Stainless Steel, Copper, Brass: Gloss, Alkyd		Frazee	Dunn-Edwards	Optional Products
	1st Coat	661F774 Metal Primer	Ultra Grip (W715)	Tnemec Primer V10-99
	2nd Coat	648 Aro-Plate II Gloss	Syn-Lustro (10)	
	3rd Coat	648 Aro-Plate II Gloss	Syn-Lustro (10)	

28.

Wood: Flat, 100% Acrylic or Acrylic Polymer		Frazee	Dunn-Edwards	Optional Products
	1st Coat	168 Prime + Plus	Ultra Grip (W715)	
	2nd Coat	011 Velvin II	Decovel Velvet Flat (W401)	
	3rd Coat	011 Velvin II	Decovel Velvet Flat (W401)	

29.

Wood: Eggshell, 100% Acrylic		Frazee	Dunn-Edwards	Optional Products
	1st Coat	168 Prime + Plus	Ultra Grip (W715)	Tnemec Primer V10-99
	2nd Coat	126 Mirro Glide LS	Permashell (W940)	
	3rd Coat	126 Mirro Glide LS	Permashell (W940)	

30.

Wood: Semi-Gloss, 100% Acrylic		Frazee	Dunn-Edwards	Optional Products
	1st Coat	168 Prime + Plus	Ultra Grip (W715)	
	2nd Coat	124 Mirro Glide SG	Decoglo (W450V)	
	3rd Coat	124 Mirro Glide SG	Decoglo (W450V)	

31.

Wood: Gloss,100% Acrylic		Frazee	Dunn-Edwards	Optional Products
	1st Coat	168 Prime + Plus	Ultra Grip (W715)	
	2nd Coat	143 Mirro Glide Gloss	Permagloss (W960)	
	3rd Coat	143 Mirro Glide Gloss	Permagloss (W960)	

32.

Wood: Stain with Clear Eggshell Varnish Finish, Alkyd or Modified Urethane		Frazee	Dunn-Edwards	Optional Products
	1st Coat	685 Wood Stain	Stainseal II (V109)	
	2nd Coat	Use Optional Products	Use Optional Products	McCloskey Heirloom Varnish Flat (MC80-0007)
	3rd Coat	Use Optional Products	Use Optional Products	McCloskey Heirloom Varnish Flat (MC80-0007)

33.

Wood: Stain with Clear Semi-Gloss Varnish Finish, Alkyd or Modified Urethane		Frazee	Dunn-Edwards	Optional Products
	1st Coat	685 Wood Stain	Stainseal II (V109)	
	2nd Coat	Use Optional Products	Use Optional Products	2002 Flecto Varathane
	3rd Coat	Use Optional Products	Use Optional Products	2002 Flecto Varathane

34.

Wood: Stain with Clear Gloss Varnish Finish, Alkyd or Modified Urethane		Frazee	Dunn-Edwards	Optional Products
	1st Coat	685 Wood Stain	Stainseal (V109)	
	2nd Coat	Use Optional Products	Use Optional Products	2002 Flecto Varathane
	3rd Coat	Use Optional Products	Use Optional Products	2002 Flecto Varathane

35.

Wood: Stain with Clear Flat Lacquer, Nitrocellulose		Frazee	Dunn-Edwards	Optional Products
	1st Coat	685 Wood Stain	Decolac II Lacquer Stain (LQ122)	
	2nd Coat	WW550HSS Clear HS Lacquer Sanding Sealer	550 Decolac HS Lacquer Sanding Sealer (LQ140-0)	
	3rd Coat	WW55010 Clear Dull Rub Lacquer	550 Decolac HS Flat Lacquer (LQ141-0)	
	4th Coat	WW55010 Clear Dull Rub Lacquer	550 Decolac HS Flat Lacquer (LQ141-0)	

OR

Wood: White or Light Stain with Clear Flat Lacquer, Nitrocellulose		Frazee	Dunn-Edwards	Optional Products
	1st Coat	685 Wood Stain	Decolac II Lacquer Stain (LQ122)	
	2nd Coat	NY5500SS Clear Non-Yellowing Sanding Sealer	550 Crystal-Clear or Water White Lacquer Sanding Sealer (LQ150-0)	
	3rd Coat	NY550020 Clear Satin Lacquer	550 Crystal-Clear or Water White Lacquer Sanding Sealer (LQ150-0)	

	4th Coat	NY550020 Clear Satin Lacquer	550 Crystal-Clear or Water White Lacquer Sanding Sealer (LQ150-0)**]**	

36.

Wood: Stain with Clear Semi-Gloss Lacquer, Nitrocellulose		Frazee	Dunn-Edwards	Optional Products
	1st Coat	685 Wood Stain	Decolac II Lacquer Stain (LQ122)	
	2nd Coat	WW550HSS Clear HS Lacquer Sanding Sealer	550 Decolac HS Lacquer Sanding Sealer (LQ140-0)	
	3rd Coat	WW55040 Clear Semi-Gloss Lacquer	550 Decolac HS Semi-Gloss Lacquer (LQ142-0)	
	4th Coat	WW55040 Clear Semi-Gloss Lacquer	550 Decolac HS Semi-Gloss Lacquer (LQ142-0)	

OR

Wood: White or Light Stain with Clear Semi-Gloss Lacquer, Nitrocellulose		Frazee	Dunn-Edwards	Optional Products
	1st Coat	685 Wood Stain	Decolac II Lacquer Stain (LQ122)	
	2nd Coat	NY5500SS Clear Non-Yellowing Sanding Seale	550 Crystal-Clear Water White Lacquer Sanding Sealer (LQ150-0)	
	3rd Coat	NY55040 Clear Non-Yellowing Semi-Gloss Lacquer	550 Crystal-Clear Water White Lacquer (LQ152-0)	
	4th Coat	NY55040 Clear Non-Yellowing Semi-Gloss Lacquer	550 Crystal-Clear Water White Lacquer (LQ152-0)	

37.

Wood: Stain with Clear Gloss Lacquer, Nitrocellulose		Frazee	Dunn-Edwards	Optional Products
	1st Coat	685 Wood Stain	Decolac II Lacquer Stain (LQ122)	
	2nd Coat	WW550HSS Clear HS Lacquer Sanding Sealer	550 Decolac HS Lacquer Sanding Sealer (LQ140-0)	
	3rd Coat	WW55090 Clear Gloss Lacquer	550 Decolac HS Gloss Lacquer (LQ143-0)	
	4th Coat	WW55090 Clear Gloss Lacquer	550 Decolac HS Gloss Lacquer (LQ143-0)	

OR

Wood: White or Light Stain with Clear Gloss Lacquer		Frazee	Dunn-Edwards	Optional Products
	1st Coat	685 Wood Stain	Decolac II Lacquer Stain (LQ122)	
	2nd Coat	NY 5500SS Clear Non-Yellowing Sanding Sealer	550 Crystal-Clear Water White Lacquer Sanding Sealer (LQ150-0)	
	3rd Coat	NY55090 Clear Non-Yellowing Gloss Lacquer	550 Crystal-Clear Water White Gloss Lacquer (LQ153-0)	
	4th Coat	NY55090 Clear Non-Yellowing Gloss Lacquer	550 Crystal-Clear Water White Gloss Lacquer (LQ153-0)	

38.

Concrete, Masonry: Flat, 100% Acrylic or Acrylic Copolymer		Frazee	Dunn-Edwards	Optional Products
	1st Coat	065 Acry-Prime	Eff-Stop (W709)	
	2nd Coat	011 Velvin II	Decovel Velvet Flat (W401)	
	3rd Coat	011 Velvin II	Decovel Velvet Flat (W401)	

OR

Skim-Coated Concrete, Masonry: Flat, 100% Acrylic or Acrylic Copolymer		Frazee	Dunn-Edwards	Optional Products
	1st Coat	266 Epotilt	Eff-Stop (W709)	
	2nd Coat	011 Velvin II	Decovel Velvet Flat (W401)	
	3rd Coat	011 Velvin II	Decovel Velvet Flat (W401)	

39.

Concrete, Masonry: Eggshell, 100% Acrylic		Frazee	Dunn-Edwards	Optional Products
	1st Coat	065 Acry-Prime	Eff-Stop (W709)	
	2nd Coat	126 MirroGlide LS	Permashell (W940)	
	3rd Coat	126 MirroGlide LS	Permashell (W940)	

OR

Skim-Coated Concrete, Masonry: Eggshell, 100% Acrylic		Frazee	Dunn-Edwards	Optional Products
	1st Coat	266 Epotilt	Eff-Stop (W709)	
	2nd Coat	126 MirroGlide LS	Permashell (W940)	
	3rd Coat	126 MirroGlide LS	Permashell (W940)	

40.

Concrete, Masonry: Semi-Gloss, 100% Acrylic		Frazee	Dunn-Edwards	Optional Products
	1st Coat	065 Acry-Prime	Eff-Stop (W709)	
	2nd Coat	124 Mirro Glide SG	Decoglo (W450V)	
	3rd Coat	124 Mirro Glide SG	Decoglo (W450V)	

OR

Skim-Coated Concrete, Masonry: Semi-Gloss, 100% Acrylic		Frazee	Dunn-Edwards	Optional Products
	1st Coat	266 Epotilt	Eff-Stop (W709)	
	2nd Coat	124 Mirro Glide	Decoglo (W450V)	
	3rd Coat	124 Mirro Glide SG	Decoglo (W450V)	

41.

Concrete, Masonry: Gloss, 100% Acrylic		Frazee	Dunn-Edwards	Optional Products
	1st Coat	065 Acry-Prime	Eff-Stop (W709)	
	2nd Coat	143 Mirro Glide Gloss	Permagloss (W960)	
	3rd Coat	143 Mirro Glide Gloss	Permagloss (W960)	

OR

Skim-Coated Concrete, Masonry: Gloss, 100% Acrylic		Frazee	Dunn-Edwards	Optional Products
	1st Coat	266 Epotilt	Eff-Stop (W709)	
	2nd Coat	143 Mirro Glide Gloss	Permagloss (W960)	
	3rd Coat	143 Mirro Glide Gloss	Permagloss (W960)	

42.

Concrete Masonry Unit **(**CMU**)**: Flat, 100% Acrylic or Acrylic Copolymer		Frazee	Dunn-Edwards	Optional Products
	1st Coat	262 Acrylic Block Filler	Blocfil Smooth (W305)	
	2nd Coat	011 Velvin II	Decovel Velvet Flat (W401)	
	3rd Coat	011 Velvin II	Decovel Velvet Flat (W401)	

43.

Concrete, Masonry Unit **(**CMU**)**: Eggshell, 100% Acrylic		Frazee	Dunn-Edwards	Optional Products
	1st Coat	262 Acrylic Block Filler	Blocfil Smooth (W305)	
	2nd Coat	126 Mirro Glide LS	Permashell (W940)	
	3rd Coat	126 Mirro Glide LS	Permashell (W940)	

44.

Concrete Masonry Unit (CMU): Semi-Gloss, 100% Acrylic		Frazee	Dunn-Edwards	Optional Products
	1st Coat	262 Acrylic Block Filler	Blocfil Smooth (W305)	
	2nd Coat	124 Mirro-Glide LS	Decoglo (W450V)	
	3rd Coat	124 Mirro-Glide LS	Decoglo (W450V)	

45.

Concrete Masonry Unit (CMU): Gloss, 100% Acrylic		Frazee	Dunn-Edwards	Optional Products
	1st Coat	262 Acrylic Block Filler	Blocfil Smooth (W305)	
	2nd Coat	143 Mirro Glide Gloss	Permagloss (W960)	
	3rd Coat	143 Mirro Glide Gloss	Permagloss (W960)	

46.

Gypsum, Drywall: Flat, 100% Acrylic or Acrylic Copolymer		Frazee	Dunn-Edwards	Optional Products
	1st Coat	061 Aquaseal	Vinylastic (W101)	
	2nd Coat	011 Velvin II	Decovel Velvet Flat (W401)	
	3rd Coat	011 Velvin II	Decovel Velvet Flat (W401)	

OR

Skim-Coated Gypsum, Drywall: Flat, 100% Acrylic or Acrylic Copolymer		Frazee	Dunn-Edwards	Optional Products
	1st Coat	061 AquaSeal	Walltone (W420)	

	2nd Coat	011 Velvin II	Decovel Velvet Flat (W401)	
	3rd Coat	011 Velvin II	Decovel Velvet Flat (W401)	

47.

Gypsum, Drywall: Eggshell, 100% Acrylic		Frazee	Dunn-Edwards	Optional Products
	1st Coat	061 Aquaseal	Vinylastic (W101)	
	2nd Coat	126 Mirro Glide LS	Permashell (W940)	
	3rd Coat	126 Mirro Glide LS	Permashell (W940)	

OR

Skim-Coated Gypsum, Drywall: Eggshell, 100% Acrylic		Frazee	Dunn-Edwards	Optional Products
	1st Coat	061 AquaSeal	Walltone (W420)	
	2nd Coat	126 Mirro Glide LS	Permashell (W940)	
	3rd Coat	126 Mirro Glide LS	Permashell (W940)	

48.

Gypsum, Drywall: Semi-Gloss, 100% Acrylic		Frazee	Dunn-Edwards	Optional Products
	1st Coat	061 Aquaseal	Vinylastic (W101)	
	2nd Coat	124 Mirro Glide SG	Decoglo (W450V)	
	3rd Coat	124 Mirro Glide SG	Decoglo (W450V)	

OR

Skim-Coated Gypsum, Drywall: Semi-Gloss, 100% Acrylic		Frazee	Dunn-Edwards	Optional Products
	1st Coat	061 AquaSeal	Walltone (W420)	
	2nd Coat	124 Mirro Glide SG	Decoglo (W450V)	
	3rd Coat	124 Mirro Glide SG	Decoglo (W450V)	

49.

Gypsum, Drywall: Gloss, 100% Acrylic		Frazee	Dunn-Edwards	Optional Products
	1st Coat	061 Aquaseal	Vinylastic (W101)	
	2nd Coat	143 Mirro Glide Gloss	Permagloss (W960)	
	3rd Coat	143 Mirro Glide Gloss	Permagloss (W960)	

OR

Skim-Coated Gypsum, Drywall: Gloss, 100% Acrylic		Frazee	Dunn-Edwards	Optional Products
	1st Coat	061 AquaSeal	Walltone (W420)	
	2nd Coat	143 Mirro Glide Gloss	Permagloss (W960)	
	3rd Coat	143 Mirro Glide Gloss	Permagloss (W960)	

50.

Plaster: Flat, 100% Acrylic or Acrylic Copolymer		Frazee	Dunn-Edwards	Optional Products
	1st Coat	168 Prime+Plus	Vinylastic (W101)	
	2nd Coat	011 Velvin II	Decovel Velvet Flat (W401)	
	3rd Coat	011 Velvin II	Decovel Velvet Flat (W401)	

51.

Plaster: Eggshell, 100% Acrylic		Frazee	Dunn-Edwards	Optional Products
	1st Coat	168 Prime+Plus	Vinylastic (W101)	
	2nd Coat	126 MirroGlide LS	Permashell (W940)	
	3rd Coat	126 MirroGlide LS	Permashell (W940)	

52.

Plaster: Semi-Gloss, 100% Acrylic		Frazee	Dunn-Edwards	Optional Products
	1st Coat	168 Prime+Plus	Vinylastic (W101)	
	2nd Coat	124 Mirro Glide SG	Decoglo (W450V)	
	3rd Coat	124 Mirro Glide SG	Decoglo (W450V)	

53.

Plaster: Gloss, 100% Acrylic		Frazee	Dunn-Edwards	Optional Products
	1st Coat	168 Prime+Plus	Vinylastic (W101)	
	2nd Coat	143 Mirro Glide Gloss	Permagloss (W960)	
	3rd Coat	143 Mirro Glide Gloss	Permagloss (W960)	

54.

Locations with Fire Rated Requirements: Flat, Acrylic or Acrylic Copolymer		Frazee	Dunn-Edwards	Optional Products
	Pre-Treatment for Non-Ferrous Metal	Use Optional Products	Galva-Etch (GE123)	Jasco Chemical Corp., Jasco Prep & Prime
	1st Coat			
	Ferrous Metal	661F774 Metal Primer	Bloc-Rust (43-4)	
	Non-Ferrous Metal	661F774 Metal Primer	Ultra Grip (W715)	
	Non-Ferrous Metal **(**Galvanized Metal and Aluminum**)**	661F774 Metal Primer	Galv-Alum (43-7)	
	Wood	168 Prime + Plus	Ultra Grip (W715), Super U-365 (E22-1)	
	Concrete, Masonry	065 Acry-Prime	Eff-Stop (W709)	
	Concrete, Masonry with Skimmed Coat	266 EpoTilt	Eff-Stop (W709)	
	Concrete Masonry Unit (CMU)	262 Acrylic Block Filler	Blocfil Smooth (W305)	

	Gypsum, Drywall	061 Aquaseal	Vinylastic (W101)	
	Gypsum, Drywall with Skimmed Coat	061 Aquaseal	WallTone (W420)	
	Plaster	168 Prime+Plus	Vinylastic (W101)	
	2nd Coat	011 Velvet II	Decovel Velvet Flat (W401)	
	3rd Coat	011 Velvet II	Decovel Velvet Flat (W401)	

55.

Locations with Fire Rated Requirements: Semi-Gloss and Gloss, Alkyd		Frazee	Dunn-Edwards	Optional Products
	Pre-Treatment for Non-Ferrous Metal	Use Optional Products	Galva-Etch (GE123)	Jasco Chemical Corp., Jasco Prep & Prime
	1st Coat			
	Ferrous Metal	661F774 Metal Primer	Bloc-Rust (43-4)	
	Non-Ferrous Metal	661F774 Metal Primer	Ultra Grip (W715)	

	Non-Ferrous Metal (Galvanized Metal and Aluminum)	661F774 Metal Primer	Galv-Alum (43-7)	
	2nd Coat & 3rd Coat - Semi-Gloss			
	Ferrous Metal, Non-	648 Aro-Plate II	Syn-Lustro (9)	

	Ferrous Metal	Gloss**}]**		
	2nd Coat & 3rd Coat - Gloss			
	Ferrous Metal, Non-Ferrous Metal	648 Aro-Plate II Gloss	Syn-Lustro (10)	

56.

High Temperature Coatings for Interior Feerous Metal Surfaces: Modified Zinc Silicon		Ameron Inter-national	Carboline	Optional Products
	1st Coat	Amercoat 872	Carbozinc 11HS	
	2nd Coat	Amercoat 873	Thermaline 4700 VOC	

57.

Interior Ferrous Metal and Non-Ferrous Metal Coating Subject To Pedestrian Traffic: Zinc Rich, Epoxy, Urethane or Aliphatic Polyurethane		Tnemec	Ameron International	Optional Products
	Pre-Treatment for Non-Ferrous Metal	Use Optional Products	Use Optional Products	Jasco Chemical Corp., Jasco Prep & Prime; Dunn Edwards Galva Etch (GE123)
	1st Coat			
	Ferrous Metal	Tnemec Zinc 90-97	Amercoat 68 HS	
	Non-Ferrous Metal	High-Build Epoxoline II V69	Amerlock2	
	2nd Coat			
	Ferrous Metal	High-Build Epoxoline II V69	Amershield VOC	
	Non-Ferrous Metal	Endura-Shield II 1075	Amershield VOC	
	3rd Coat			
	Ferrous Metal	Endura-Shield II 1075	Amershield VOC	

E. Requisite Properties For Exterior Surfaces:

1. Colors: Match "Pantone 107 C" or "DE5404 Highlighter" manufactured by Dunn Edwards.
2. Exterior paint finish for Concrete and Portland Cement Plaster substrates:
   - 1st Coat: Concrete or Portland Cement Plaster substrate, alkali-resistant primer and sealer. Kilz Klear Clear Sealer & Bonding Primer (L2201)
   - 2nd Coat: Exterior, acrylic, semigloss enamel. Behr Exterior Marquee Semi-Gloss Enamel (5450) applied at 6.4 mils WFT: 2.4 mils DFT @ 250 sq. ft/gallon.
3. Exterior graffiti-resistant paint finish for Concrete and Portland Cement Plaster substrates:
   - 1st Coat: Concrete or Portland Cement Plaster substrate, alkali-resistant primer and sealer. Kilz Klear Clear Sealer & Bonding Primer (L2201)
   - 2nd Coat: Exterior, acrylic, semigloss enamel. Behr Exterior Marquee Semi-Gloss Enamel (5450) applied at 6.4 mils WFT: 2.4 mils DFT @ 250 sq. ft/gallon.
   - 3rd Coat: Water-Based, clear matte, anti-graffiti coating. Monochem Permashield Premium Clear, Matte (5600)
   - 4th Coat: Water-Based, clear matte, anti-graffiti coating. Monochem Permashield Premium Clear, Matte (5600) Applied at manufacturer's written directions.

F. Approved Materials for Exterior Surfaces: Unless specified otherwise, apply the painting systems with the following approved products. Refer to other materials required for the surface preparation and cleaning specified elsewhere in the Project Manual.

1.

Exterior Unpainted Metal with Anti-Graffiti Coating, If Required				
	Anti-Graffiti Coating, if required	Conform to Section 09860 – Anti-Graffiti Coating		

2.

Exterior Ferrous Metal with or without Anti-Graffiti Coating: Flat, 100% Acrylic		Frazee	Dunn-Edwards	Optional Products
	1st Coat	661F774 Metal Prime	Bloc-Rust (43-4)	Tnemec Primer V10-99
	2nd Coat	203 Duratec II	Evershield (W701)	
	3rd Coat	203 Duratec II	Evershield (W701)	
	Anti-Graffiti Coating, if required	Conform to Section 09860 – Anti-Graffiti Coating		

3.

Exterior Ferrous Metal with or without Anti-Graffiti Coating: Eggshell, 100% Acrylic		Frazee	Dunn-Edwards	Optional Products
	1st Coat	661F774 Metal Prime	Bloc-Rust (43-4)	Tnemec Primer V10-99
	2nd Coat	126 Mirro Glide LS	Permashell (W940)	
	3rd Coat	126 Mirro Glide LS	Permashell (W940)	
	Anti-Graffiti Coating, if required	Conform to Section 09860 – Anti-Graffiti Coating		

4.

Exterior Ferrous Metal with or without Anti-Graffiti Coating: Semi-Gloss, 100% Acrylic		Frazee	Dunn-Edwards	Optional Products
	1st Coat	661F774 Metal Prime	Bloc-Rust (43-4)	Tnemec Primer V10-99
	2nd Coat	124 Mirro Glide SG	Permasheen (W901)	
	3rd Coat	124 Mirro Glide SG	Permasheen (W901)	

	Anti-Graffiti Coating, if required	Conform to Section 09860 – Anti-Graffiti Coating

5.

Exterior Ferrous Metal with or without Anti-Graffiti Coating: Gloss, 100% Acrylic		Frazee	Dunn-Edwards	Optional Products
	1st Coat	661F774 Metal Prime	Bloc-Rust (43-4)	Tnemec Primer V10-99
	2nd Coat	143 Mirro Glide Gloss	Permagloss (W960)	
	3rd Coat	143 Mirro Glide Gloss	Permagloss (W960)	
	Anti-Graffiti Coating, if required	Conform to Section 09860 – Anti-Graffiti Coating		

6.

Exterior Ferrous Metal with no Anti-Graffiti Coating: Semi-Gloss, Alkyd		Frazee	Dunn-Edwards	Optional Products
	1st Coat	661F774 Metal Prime	Bloc-Rust (43-4)	Tnemec Primer V10-99
	2nd Coat	628 Aro-Plate II SG	Syn-Lustro (9)	
	3rd Coat	628 Aro-Plate II SG	Syn-Lustro (9)	

7.

Exterior Ferrous Metal with no Anti-Graffiti Coating: Gloss, Alkyd		Frazee	Dunn-Edwards	Optional Products
	1st Coat	661F774 Metal Prime	Bloc-Rust (43-4)	Tnemec Primer V10-99
	2nd Coat	648 Aro-Plate II Gloss	Syn-Lustro (10)	
	3rd Coat	648 Aro-Plate II Gloss	Syn-Lustro (10)	

8.

Exterior Unpainted Non-Ferrous Metal with Anti-Graffiti Coating, if required		Frazee	Dunn-Edwards	Optional Products
	Pre-Treatment	Use Optional Products	Galva-Etch (GE 123)	Jasco Chemical Corp., Jasco Prep & Prime
	Anti-Graffiti Coating, if required	Conform toSection 09860 – Anti-Graffiti Coating		

9.

Galvanized Metal with or without Anti-Graffiti Coating: Flat, 100% Acrylic		Frazee	Dunn-Edwards	Optional Products
	Pre-Treatment	Use Optional Products	Galva-Etch (GE 123)	Jasco Chemical Corp., Jasco Prep & Prime
	1st Coat	661F774 Metal Prime	Galv-Alum (43-7)	Tnemec Primer V10-99
	2nd Coat	203 Duratec II	Evershield (W701)	
	3rd Coat	203 Duratec II	Evershield (W701)	
	Anti-Graffiti Coating, if required	Conform to Section 09860 – Anti-Graffiti Coating		

10.

Galvanized Metal with or without Anti-Graffiti Coating: Eggshell, 100% Acrylic		Frazee	Dunn-Edwards	Optional Products
	Pre-Treatment	Use Optional Products	Galva-Etch (GE 123)	Jasco Chemical Corp., Jasco Prep & Prime

	1st Coat	661F774 Metal Prime	Galv-Alum (43-7)	Tnemec Primer V10-99
	2nd Coat	126 Mirro Glide LS	Permashell (W940)	
	3rd Coat	126 Mirro Glide LS	Permashell (W940)	
	Anti-Graffiti Coating, if required	Conform to Section 09860 – Anti-Graffiti Coating		

11.

Exterior Galvanized Metal with or without Clear Anti-Graffiti Coating: Semi-Gloss, 100% Acrylic		Frazee	Dunn-Edwards	Optional Products
	Pre-Treatment	Use Optional Products	Galva-Etch (GE 123)	Jasco Chemical Corp., Jasco Prep & Prime
	1st Coat	661F774 Metal Prime	Galv-Alum (43-7)	Tnemec Primer V10-99
	2nd Coat	124 Mirro Glide SG	Permasheen (W901)	
	3rd Coat	124 Mirro Glide SG	Permasheen (W901)	
	Anti-Graffiti Coating, if required	Conform to Section 09860 – Anti-Graffiti Coating		

12.

Exterior Galvanized Metal with or without Clear Anti-Graffiti Coating: Gloss, 100% Acrylic		Frazee	Dunn-Edwards	Optional Products
	Pre-Treatment	Use Optional Products	Galva-Etch (GE 123)	Jasco Chemical Corp., Jasco Prep & Prime
	1st Coat	661F774 Metal Prime	Galv-Alum (43-7)	Tnemec Primer

				V10-99
	2nd Coat	143 Mirro Glide Gloss	Permagloss (W960)	
	3rd Coat	143 Mirro Glide Gloss	Permagloss (W960)	
	Anti-Graffiti Coating, if required	Conform to Section 09860 – Anti-Graffiti Coating		

13.

Exterior Galvanized Metal with no Anti-Graffiti Coating: Semi-Gloss, Alkyd		Frazee	Dunn-Edwards	Optional Products
	Pre-Treatment	Use Optional Products	Galva-Etch (GE 123)	Jasco Chemical Corp., Jasco Prep & Prime
	1st Coat	661F774 Metal Prime	Galv-Alum (43-7)	Tnemec Primer V10-99
	2nd Coat	628 Aro-Plate II SG	Syn-Lustro (9)	
	3rd Coat	628 Aro-Plate II SG	Syn-Lustro (9)	

14.

Exterior Galvanized Metal with no Anti-Graffiti Coating: Gloss, Alkyd		Frazee	Dunn-Edwards	Optional Products
	Pre-Treatment	Use Optional Products	Galva-Etch (GE 123)	Jasco Chemical Corp., Jasco Prep & Prime
	1st Coat	661F774 Metal Prime	Galv-Alum (43-7)	Tnemec Primer V10-99
	2nd Coat	648 Aro-Plate II Gloss	Syn-Lustro (10)	
	3rd Coat	648 Aro-Plate II Gloss	Syn-Lustro (10)	

15.

Exterior Unpainted Aluminum with or without Anti-Graffiti Coating		Frazee	Dunn-Edwards	Optional Products
	Pre-Treatment	Use Optional Products	Galva-Etch (GE 123)	Jasco Chemical Corp., Jasco Prep & Prime
	Anti-Graffiti Coating, if required	Conform to Section 09860 – Anti-Graffiti Coating		

16.

Exterior Aluminum with or without Anti-Graffiti Coating: Flat, Acrylic		Frazee	Dunn-Edwards	Optional Products
	Pre-Treatment	Use Optional Products	Galva-Etch (GE 123)	Jasco Chemical Corp., Jasco Prep & Prime
	1st Coat	661F774 Metal Prime	Galv-Alum (43-7)	Tnemec Primer V10-99
	2nd Coat	203 Duratec II	Evershield (W701)	
	3rd Coat	203 Duratec II	Evershield (W701)	
	Anti-Graffiti Coating, if required	Conform to Section 09860 – Anti-Graffiti Coating		

17.

Exterior Aluminum with or without Anti-Graffiti Coating: Eggshell, 100% Acrylic		Frazee	Dunn-Edwards	Optional Products
	Pre-Treatment	Use Optional Products	Galva-Etch (GE 123)	Jasco Chemical Corp., Jasco Prep & Prime

	1st Coat	661F774 Metal Prime	Galv-Alum (43-7)	Tnemec Primer V10-99
	2nd Coat	126 Mirro Glide LS	Permashell (W940)	
	3rd Coat	126 Mirro Glide LS	Permashell (W940)	
	Anti-Graffiti Coating, if required	Conform toSection 09860 – Anti-Graffiti Coating**]**		

18.

Exterior Aluminum with or without Clear Anti-Graffiti Coating: Semi-Gloss, 100% Acrylic		Frazee	Dunn-Edwards	Optional Products
	Pre-Treatment	Use Optional Products	Galva-Etch (GE 123)	Jasco Chemical Corp., Jasco Prep & Prime
	1st Coat	661F774 Metal Prime	Galv-Alum (43-7)	Tnemec Primer V10-99
	2nd Coat	124 Mirro Glide SG	Permasheen (W901)	
	3rd Coat	124 Mirro Glide SG	Permasheen (W901)	
	Anti-Graffiti Coating, if required	Conform to **[**Section 09860 – Anti-Graffiti Coating**]**		

19.

Exterior Aluminum with or without Anti-Graffiti Coating: Gloss, 100% Acrylic		Frazee	Dunn-Edwards	Optional Products
	Pre-Treatment	Use Optional Products	Galva-Etch (GE 123)	Jasco Chemical Corp., Jasco Prep & Prime
	1st Coat	661F774 Metal Prime	Galv-Alum (43-7)	Tnemec Primer V10-99
	2nd Coat	143 Mirro	Permagloss	

		Glide Gloss	(W960)	
	3rd Coat	143 Mirro Glide Gloss	Permagloss (W960)	
	Anti-Graffiti Coating, if required	Conform to Section 09860 – Anti-Graffiti Coating		

20.

Exterior Aluminum with no Anti-Graffiti Coating: Semi-Gloss, Alkyd		Frazee	Dunn-Edwards	Optional Products
	Pre-Treatment	Use Optional Products	Galva-Etch (GE 123)	Jasco Chemical Corp., Jasco Prep & Prime
	1st Coat	661F774 Metal Prime	Galv-Alum (43-7)	Tnemec Primer V10-99
	2nd Coat	628 Aro-Plate II SG	Syn-Lustro (9)	
	3rd Coat	628 Aro-Plate II SG	Syn-Lustro (9)	

21.

Exterior Aluminum with no Anti-Graffiti Coating: Gloss, Alkyd		Frazee	Dunn-Edwards	Optional Products
	Pre-Treatment	Use Optional Products	Galva-Etch (GE 123)	Jasco Chemical Corp., Jasco Prep & Prime
	1st Coat	661F774 Metal Prime	Galv-Alum (43-7)	Tnemec Primer V10-99
	2nd Coat	648 Aro-Plate II Gloss	Syn-Lustro (10)	
	3rd Coat	648 Aro-Plate II Gloss	Syn-Lustro (10)	

22.

Exterior Unpainted Stainless Steel, Copper, Brass with Anti-Graffiti Coating, if required				
	Anti-Graffiti Coating, if required	Conform to Section 09860 – Anti-Graffiti Coating		

23.

Exterior Stainless Steel, Copper, Brass with or without Anti-Graffiti Coating: Flat, 100% Acrylic		Frazee	Dunn-Edwards	Optional Products
	1st Coat	661F774 Metal Prime	Galv-Alum (43-7)	Tnemec Primer V10-99
	2nd Coat	203 Duratec II	Evershield (W701)	
	3rd Coat	203 Duratec II	Evershield (W701)	
	Anti-Graffiti Coating, if required	Conform to Section 09860 – Anti-Graffiti Coating		

24.

Exterior Stainless Steel, Copper, Brass with or without Anti-Graffiti Coating: Eggshell, 100 % Acrylic		Frazee	Dunn-Edwards	Optional Products
	1st Coat	661F774 Metal Prime	Galv-Alum (43-7)	Tnemec Primer V10-99
	2nd Coat	126 Mirro Glide LS	Permashell (W940)	
	3rd Coat	126 Mirro Glide LS	Permashell (W940)	
	Anti-Graffiti Coating, if required	Conform to Section 09860 – Anti-Graffiti Coating		

25.

Exterior Stainless Steel, Copper, Brass with or without Anti-Graffiti Coating: Semi-Gloss, 100% Acrylic		Frazee	Dunn-Edwards	Optional Products
	1st Coat	661F774 Metal Prime	Galv-Alum (43-7)	Tnemec Primer V10-99
	2nd Coat	124 Mirro Glide SG	Permasheen (W901)	
	3rd Coat	124 Mirro Glide SG	Permasheen (W901)	
	Anti-Graffiti Coating, if required	Conform to Section 09860 – Anti-Graffiti Coating		

26.

Exterior Stainless Steel, Copper, Brass with or without Clear Anti-Graffiti Coating: Gloss, 100% Acrylic		Frazee	Dunn-Edwards	Optional Products
	1st Coat	661F774 Metal Prime	Galv-Alum (43-7)	Tnemec Primer V10-99
	2nd Coat	143 Mirro Glide Gloss	Permagloss (W960)	
	3rd Coat	143 Mirro Glide Gloss	Permagloss (W960)	
	Anti-Graffiti Coating, if required	Conform to Section 09860 – Anti-Graffiti Coating		

27.

Exterior Stainless Steel, Copper, Brass with no Anti-Graffiti Coating: Semi-Gloss, Alkyd		Frazee	Dunn-Edwards	Optional Products
	1st Coat	661F774 Metal Prime	Galv-Alum (43-7)	Tnemec Primer V10-99
	2nd Coat	628 Aro-Plate II SG	Syn-Lustro (9)	
	3rd Coat	628 Aro-Plate II SG	Syn-Lustro (9)	

28.

Exterior Stainless Steel, Copper, Brass with no Anti-Graffiti Coating: Gloss, Alkyd		Frazee	Dunn-Edwards	Optional Products
	1st Coat	661F774 Metal Prime	Galv-Alum (43-7)	Tnemec Primer V10-99
	2nd Coat	648 Aro-Plate II Gloss	Syn-Lustro (10)	
	3rd Coat	648 Aro-Plate II Gloss	Syn-Lustro (10)	

29.

Exterior Wood with no Waterproofing Sealer or Anti-Graffiti Coating: Flat, 100% Acrylic		Frazee	Dunn-Edwards	Optional Products
	1st Coat	168 Prime + Plus	E-Z Prime (W708)	
	2nd Coat	203 Duratec II	Evershield (W701)	
	3rd Coat	203 Duratec II	Evershield (W701)	

30.

Exterior Wood with no Waterproofing Sealer or Anti-Graffiti Coating: Eggshell, 100% Acrylic		Frazee	Dunn-Edwards	Optional Products
	1st Coat	168 Prime + Plus	E-Z Prime (W708)	
	2nd Coat	126 Mirro Glide LS	Permashell (W940)	
	3rd Coat	126 Mirro Glide LS	Permashell (W940)	

31.

Exterior Wood with no Waterproofing Sealer or Anti-Graffiti Coating: Semi-Gloss, 100% Acrylic		Frazee	Dunn-Edwards	Optional Products
	1st Coat	168 Prime + Plus	E-Z Prime (W708)	
	2nd Coat	124 Mirro Glide SG	Permasheen (W901)	
	3rd Coat	124 Mirro Glide SG	Permasheen (W901)	

32.

Exterior Wood with no waterproofing sealer or Anti-Graffiti Coating: Gloss, 100% Acrylic		Frazee	Dunn-Edwards	Optional Products
	1st Coat	168 Prime + Plus	E-Z Prime (W708)	
	2nd Coat	143 Mirro Glide Gloss	Permagloss (W960)	
	3rd Coat	143 Mirro Glide Gloss	Permagloss (W960)	

33.

Exterior Wood with Combined Stain and Waterproofing Sealer and no Anti-Graffiti Coating: 100% Acrylic or Modified Acrylic Emulsion		Benjamin Moore	Dunn-Edwards	Optional Products
	1st Coat	Moorwood Deck & Siding Stain 098	Use Optional Products	Okon, Inc., Natural Choice
	2nd Coat	Moorwood Deck & Siding Stain 098	Use Optional Products	Okon, Inc., Natural Choice

34.

Exterior Unpainted Concrete, Masonry, Stucco with Clear Waterproofing Sealer, with or without Anti-Graffiti Coating				
	Water-Proofing Sealer	Conform to Section 07181 – Above Grade Waterproofing Sealer Treatment and other applicable Sections		
	Anti-Graffiti Coating, if required	Conform to Section 09860 – Anti-Graffiti Coating		

OR

Exterior Unpainted Skim-Coated Concrete, Masonry, Stucco with Clear Waterproofing Sealer, with or without Anti-Graffiti Coating				
	Water-Proofing Sealer	Conform to Section 07181 – Above Grade Waterproofing Sealer Treatment and other applicable Sections		
	Anti-Graffiti Coating, if required	Conform to Section 09860 – Anti-Graffiti Coating		

35.

Exterior Unpainted Concrete, Masonry, Stucco with no Waterproofing Sealer, with Clear Anti-Graffiti Coating		Frazee	Dunn-Edwards	Optional Products
	1st Coat	Conform to Section 09860 – Anti-Graffiti Coating		
	Anti-Graffiti Coating	Conform to Section 09860 – Anti-Graffiti Coating		

OR

Exterior Unpainted Skim-Coated Concrete, Masonry, Stucco with no Waterproofing Sealer, with Clear Anti-Graffiti Coating		Frazee	Dunn-Edwards	Optional Products
	1st Coat	Conform to Section 09860 – Anti-Graffiti Coating		
	Anti-Graffiti Coating	Conform to Section 09860 – Anti-Graffiti Coating		

OR

Exterior Unpainted Concrete, Masonry, Stucco with no Waterproofing Sealer, with Pigmented Anti-Graffiti Coating		Frazee	Dunn-Edwards	Optional Products
	1st Coat	266 Epotilt	Eff-Stop (W709)	
	Anti-Graffiti Coating	Conform to Section 09860 – Anti-Graffiti Coating		

36.

Exterior Concrete, Masonry, Stucco with no Waterproofing Sealer, with or without Clear Anti-Graffiti Coating: Flat, 100% Acrylic		Frazee	Dunn-Edwards	Optional Products
	1st Coat	266 Epotilt	Eff-stop (W709)	
	2nd Coat	203 Duratec II	Evershield (W701)	
	3rd Coat	203 Duratec II	Evershield (W701)	
	Anti-Graffiti Coating, if required	Conform to Section 09860 – Anti-Graffiti Coating		

OR

Exterior Skim-Coated Concrete, Masonry, Stucco with no Waterproofing Sealer, with or without Clear Anti-Graffiti Coating: Flat, 100% Acrylic		Frazee	Dunn-Edwards	Optional Products
	1st Coat	266 Epotilt	Eff-stop (W709)	
	2nd Coat	203 Duratec II	Evershield (W701)	
	3rd Coat	203 Duratec II	Evershield (W701)	
	Anti-Graffiti Coating, if required	Conform to Section 09860 – Anti-Graffiti Coating		

37.

Exterior Concrete, Masonry, Stucco with no Waterproofing Sealer, with or without Clear Anti-Graffiti Coating: Eggshell, 100% Acrylic		Frazee	Dunn-Edwards	Optional Products
	1st Coat	266 Epotilt	Eff-stop (W709)	
	2nd Coat	126 Mirro Glide LS	Permashell (W940)	
	3rd Coat	126 Mirro Glide LS	Permashell (W940)	
	Anti-Graffiti Coating, if required	Conform to Section 09860 – Anti-Graffiti Coating		

OR

Exterior Skim-Coated Concrete, Masonry, Stucco with no Waterproofing Sealer, with or without Clear Anti-Graffiti Coating: Eggshell, 100% Acrylic		Frazee	Dunn-Edwards	Optional Products
	1st Coat	266 Epotilt	Eff-stop (W709)	
	2nd Coat	126 Mirro Glide LS	Permashell (W940)	
	3rd Coat	126 Mirro Glide LS	Permashell (W940)	
	Anti-Graffiti Coating, if required	Conform to Section 09860 – Anti-Graffiti Coating		

38.

Exterior Concrete, Masonry, Stucco with no Waterproofing Sealer, with or without Clear Anti-Graffiti Coating: Semi-Gloss, 100% Acrylic		Frazee	Dunn-Edwards	Optional Products
	1st Coat	266 Epotilt	Eff-stop (W709)	
	2nd Coat	124 Mirro Glide SG	Permasheen (W901)	
	3rd Coat	124 Mirro Glide SG	Permasheen (W901)	
	Anti-Graffiti Coating, if required	Conform to Section 09860 – Anti-Graffiti Coating		

OR

Exterior Skim-Coated Concrete, Masonry, Stucco with no Waterproofing Sealer, with or without Clear Anti-Graffiti Coating: Semi-Gloss, 100% Acrylic		Frazee	Dunn-Edwards	Optional Products
	1st Coat	266 Epotilt	Eff-stop (W709)	
	2nd Coat	124 Mirro Glide SG	Permasheen (W901)	
	3rd Coat	124 Mirro Glide SG	Permasheen (W901)	
	Anti-Graffiti Coating, if required	Conform to Section 09860 – Anti-Graffiti Coating		

39.

Exterior Concrete, Masonry, Stucco with no Waterproofing Sealer, with or without Clear Anti-Graffiti Coating: Gloss, 100% Acrylic		Frazee	Dunn-Edwards	Optional Products
	1st Coat	266 Epotilt	Eff-stop (W709)	
	2nd Coat	143 Mirro Glide Gloss	Permagloss (W960)	
	3rd Coat	143 Mirro Glide Gloss	Permagloss (W960)	
	Anti-Graffiti Coating, if required	Conform to Section 09860 – Anti-Graffiti Coating		

OR

Exterior Skim-Coated Concrete, Masonry, Stucco with no Waterproofing Sealer, with or without Clear Anti-Graffiti Coating: Gloss, 100% Acrylic		Frazee	Dunn-Edwards	Optional Products
	1st Coat	266 Epotilt	Eff-stop (W709)	
	2nd Coat	143 Mirro Glide Gloss	Permagloss (W960)	
	3rd Coat	143 Mirro Glide Gloss	Permagloss (W960)	
	Anti-Graffiti Coating, if required	Conform to Section 09860 – Anti-Graffiti Coating		

40.

Exterior Concrete, Masonry, Stucco with Clear Waterproofing Sealer, with or without Clear Anti-Graffiti Coating: Flat, 100% Acrylic		Frazee	Dunn-Edwards	Optional Products
	Water-Proofing Sealer	Conform to Section 07181 – Above Grade Waterproofing Sealer Treatment and other applicable Sections		
	1st Coat	203 Duratec II	Evershield (W701)	
	2nd Coat	203 Duratec II	Evershield (W701)	
	Anti-Graffiti Coating, if required	Conform toSection 09860 – Anti-Graffiti Coating		

OR

Exterior Skim-Coated Concrete, Masonry, Stucco with Clear Waterproofing Sealer, with or without Clear Anti-Graffiti Coating: Flat, 100% Acrylic		Frazee	Dunn-Edwards	Optional Products
	Water-Proofing Sealer	Conform to Section 07181 – Above Grade Waterproofing Sealer Treatment and other applicable Sections		
	1st Coat	203 Duratec II	Evershield (W701)	
	2nd Coat	203 Duratec II	Evershield (W701)	
	Anti-Graffiti Coating, if required	Conform to Section 09860 – Anti-Graffiti Coating		

41.

Exterior Concrete, Masonry, Stucco with Clear Waterproofing Sealer, with or without Clear Anti-Graffiti Coating: Eggshell, 100% Acrylic		Frazee	Dunn-Edwards	Optional Products
	Water-Proofing Sealer	Conform to Section 07181 – Above Grade Waterproofing Sealer Treatment and other applicable Sections		
	1st Coat	126 Mirro Glide LS	Permashell (W940)	
	2nd Coat	126 Mirro Glide LS	Permashell (W940)	
	Anti-Graffiti Coating, if required	Conform to Section 09860 – Anti-Graffiti Coating		

OR

Exterior Skim-Coated Concrete, Masonry, Stucco with Clear Waterproofing Sealer, with or without Clear Anti-Graffiti Coating: Eggshell, 100% Acrylic		Frazee	Dunn-Edwards	Optional Products
	Water-Proofing Sealer	Conform to Section 07181 – Above Grade Waterproofing Sealer Treatment and other applicable Sections		
	1st Coat	126 Mirro Glide LS	Permashell (W940)	
	2nd Coat	126 Mirro Glide LS	Permashell (W940)	
	Anti-Graffiti Coating, if required	Conform to Section 09860 – Anti-Graffiti Coating		

42.

Exterior Concrete, Masonry, Stucco with Clear Waterproofing Sealer, with or without Clear Anti-Graffiti Coating: Semi-Gloss, 100% Acrylic		Frazee	Dunn-Edwards	Optional Products
	Water-Proofing Sealer	Conform to Section 07181 – Above Grade Waterproofing Sealer Treatment and other applicable Sections		
	1st Coat	124 Mirro Glide SG	Permasheen (W901)	
	2nd Coat	124 Mirro Glide SG	Permasheen (W901)	
	Anti-Graffiti Coating, if required	Conform to Section 09860 – Anti-Graffiti Coating		

OR

Exterior Concrete, Masonry, Stucco with Clear Waterproofing Sealer, with or without Clear Anti-Graffiti Coating: Semi-Gloss, 100% Acrylic		Frazee	Dunn-Edwards	Optional Products
	Water-Proofing Sealer	Conform to Section 07181 – Above Grade Waterproofing Sealer Treatment and other applicable Sections		
	1st Coat	124 Mirro Glide SG	Permasheen (W901)	
	2nd Coat	124 Mirro Glide SG	Permasheen (W901)	
	Anti-Graffiti Coating, if required	Conform to Section 09860 – Anti-Graffiti Coating		

43.

Exterior Concrete, Masonry, Stucco with Clear Waterproofing Sealer, with or without Clear Anti-Graffiti Coating: Gloss, 100% Acrylic		Frazee	Dunn-Edwards	Optional Products
	Water-Proofing Sealer	Conform to Section 07181 – Above Grade Waterproofing Sealer Treatment and other applicable Sections		
	1st Coat	143 Mirro Glide Gloss	Permagloss (W960)	
	2nd Coat	143 Mirro Glide Gloss	Permagloss (W960)	
	Anti-Graffiti Coating, if required	Conform to Section 09860 – Anti-Graffiti Coating		

OR

Exterior Skim-Coated Concrete, Masonry, Stucco with Clear Waterproofing Sealer, with or without Clear Anti-Graffiti Coating: Gloss, 100% Acrylic		Frazee	Dunn-Edwards	Optional Products
	Water-Proofing Sealer	Conform to Section 07181 – Above Grade Waterproofing Sealer Treatment and other applicable Sections		
	1st Coat	143 Mirro Glide Gloss	Permagloss (W960)	
	2nd Coat	143 Mirro Glide Gloss	Permagloss (W960)	
	Anti-Graffiti Coating, if required	Conform to Section 09860 – Anti-Graffiti Coating		

44.

Exterior Unpainted Concrete Masonry Unit (CMU), with Clear Waterproofing Sealer, without Anti-Graffiti Coating		Frazee	Dunn-Edwards	Optional Products
	Water-Proofing Sealer	Conform to Section 07181 – Above Grade Waterproofing Sealer Treatment and other applicable Sections		

45.

Exterior Unpainted Concrete Masonry Unit (CMU), with no Waterproofing Sealer, with Clear Anti-Graffiti Coating		Frazee	Dunn-Edwards	Optional Products
	1st Coat	Conform to Section 09860 – Anti-Graffiti Coating		
	Anti-Graffiti Coating	Conform to Section 09860 – Anti-Graffiti Coating		

OR

Exterior Unpainted Concrete Masonry Unit (CMU), with no Waterproofing Sealer, with Pigmented Anti-Graffiti Coating		Frazee	Dunn-Edwards	Optional Products
	1st Coat	262 Acrylic Block Filler	Blocfil Smooth (W305)	
	Anti-Graffiti Coating	Conform to Section 09860 – Anti-Graffiti Coating		

46.

Exterior Concrete Masonry Unit (CMU), with no Waterproofing Sealer, with or without Clear Anti-Graffiti Coating: Flat, 100% Acrylic		Frazee	Dunn-Edwards	Optional Products
	1st Coat	262 Acrylic Block Filler	Blocfil Smooth (W305)	
	2nd Coat	203 Duratec II	Evershield (W701)	
	3rd Coat	203 Duratec II	Evershield (W701)	
	Anti-Graffiti Coating, if required	Conform to Section 09860 – Anti-Graffiti Coating		

47.

Exterior Concrete Masonry Unit (CMU), with no Waterproofing Sealer, with or without Clear Anti-Graffiti Coating: Eggshell, 100% Acrylic		Frazee	Dunn-Edwards	Optional Products
	1st Coat	262 Acrylic Block Filler	Blocfil Smooth (W305)	
	2nd Coat	126 Mirro Glide LS	Permashell (W940)	
	3rd Coat	126 Mirro Glide LS	Permashell (W940)	
	Anti-Graffiti Coating, if required	Conform to Section 09860 – Anti-Graffiti Coating		

48.

Exterior Concrete Masonry Unit (CMU), with no Waterproofing Sealer, with or without Clear Anti-Graffiti Coating: Semi-Gloss, 100% Acrylic		Frazee	Dunn-Edwards	Optional Products
	1st Coat	262 Acrylic Block Filler	Blocfil Smooth (W305)	
	2nd Coat	124 Mirro Glide SG	Permasheen (W901)	
	3rd Coat	124 Mirro Glide SG	Permasheen (W901)	
	Anti-Graffiti Coating, if required	Conform to Section 09860 – Anti-Graffiti Coating		

49.

Exterior Concrete Masonry Unit (CMU), with no Waterproofing Sealer, with or without Clear Anti-Graffiti Coating: Gloss, 100% Acrylic		Frazee	Dunn-Edwards	Optional Products
	1st Coat	262 Acrylic Block Filler	Blocfil Smooth (W305)	
	2nd Coat	143 Mirro Glide Gloss	Permagloss (W960)	
	3rd Coat	143 Mirro Glide Gloss	Permagloss (W960)	
	Anti-Graffiti Coating, if required	Conform to Section 09860 – Anti-Graffiti Coating		

50.

Exterior Concrete Masonry Unit **(**CMU), with Clear Waterproofing Sealer, with or without Clear Anti-Graffiti Coating: Flat, 100% Acrylic		Frazee	Dunn-Edwards	Optional Products
	Water-Proofing Sealer	Conform to Section 07181 – Above Grade Waterproofing Sealer Treatment and other applicable Sections		
	1st Coat	203 Duratec II	Evershield (W701)	
	2nd Coat	203 Duratec II	Evershield (W701)	
	Anti-Graffiti Coating, if required	Conform to Section 09860 – Anti-Graffiti Coating		

51.

Exterior Concrete, Masonry Unit (CMU), with Clear Waterproofing Sealer, with or without Clear Anti-Graffiti Coating: Eggshell, 100% Acrylic		Frazee	Dunn-Edwards	Optional Products
	Water-Proofing Sealer	Conform to Section 07181 – Above Grade Waterproofing Sealer Treatment and other applicable Sections		
	1st Coat	126 Mirro Glide LS	Permashell (W940)	
	2nd Coat	126 Mirro Glide LS	Permashell (W940)	
	Anti-Graffiti Coating, if required	Conform to Section 09860 – Anti-Graffiti Coating		

52.

Exterior Concrete Masonry Unit (CMU), with Clear Waterproofing Sealer, with or without Clear Anti-Graffiti Coating: Semi-Gloss, 100% Acrylic		Frazee	Dunn-Edwards	Optional Products
	Water-Proofing Sealer	Conform to **[**Section 07181 – Above Grade Waterproofing Sealer Treatment**]** and other applicable Sections		
	1st Coat	124 Mirro Glide SG	Permasheen (W901)	
	2nd Coat	124 Mirro Glide SG	Permasheen (W901)	
	Anti-Graffiti Coating, if required	Conform to Section 09860 – Anti-Graffiti Coating		

53.

Exterior Concrete Masonry Unit (CMU), with Clear Waterproofing Sealer, with or without Clear Anti-Graffiti Coating: Gloss, 100% Acrylic		Frazee	Dunn-Edwards	Optional Products
	Water-Proofing Sealer	Conform to Section 07181 – Above Grade Waterproofing Sealer Treatment and other applicable Sections		
	1st Coat	143 Mirro Glide Gloss	Permagloss (W960)	
	2nd Coat	143 Mirro Glide Gloss	Permagloss (W960)	
	Anti-Graffiti Coating, if required	Conform to Section 09860 – Anti-Graffiti Coating		

54.

Exterior Unpainted Plaster with Clear Waterproofing Sealer, with or without Anti-Graffiti Coating		Frazee	Dunn-Edwards	Optional Products
	Water-Proofing Sealer	Conform to Section 07181 – Above Grade Waterproofing Sealer Treatment and other applicable Sections		
	Anti-Graffiti Coating, if required	Conform to Section 09860 – Anti-Graffiti Coating		

55.

Exterior Unpainted Plaster with no Waterproofing Sealer, with Clear Anti-Graffiti Coating		Frazee	Dunn-Edwards	Optional Products
	1st Coat	Conform to Section 09860 – Anti-Graffiti Coating		
	Anti-Graffiti Coating	Conform to Section 09860 – Anti-Graffiti Coating		

OR

Exterior Unpainted Plaster with no Waterproofing Sealer, with Pigmented Anti-Graffiti Coating		Frazee	Dunn-Edwards	Optional Products
	1st Coat	266 Epotilt	Eff-Stop (W709)	
	Anti-Graffiti Coating	Conform to Section 09860 – Anti-Graffiti Coating		

56.

Exterior Plaster with no Waterproofing Seale, with or without Clear Anti-Graffiti Coating: Flat, 100% Acrylic		Frazee	Dunn-Edwards	Optional Products
	1st Coat	266 Epotilt	Eff-Stop (W709)	
	2nd Coat	203 Duratec II	Evershield (W701)	
	3rd Coat	203 Duratec II	Evershield (W701)	
	Anti-Graffiti Coating, if required	Conform to Section 09860 – Anti-Graffiti Coating		

57.

Exterior Plaster with no Waterproofing Sealer, with or without Clear Anti-Graffiti Coating: Eggshell, 100% Acrylic		Frazee	Dunn-Edwards	Optional Products
	1st Coat	266 Epotilt	Eff-Stop (W709)	
	2nd Coat	126 Mirro Glide LS	Permashell (W940)	
	3rd Coat	126 Mirro Glide LS	Permashell (W940)	
	Anti-Graffiti Coating, if required	Conform to Section 09860 – Anti-Graffiti Coating		

58.

Exterior Plaster with no Waterproofing Sealer, with or without Clear Anti-Graffiti Coating: Semi-Gloss, 100% Acrylic		Frazee	Dunn-Edwards	Optional Products
	1st Coat	266 Epotilt	Eff-Stop (W709)	
	2nd Coat	124 Mirro Glide SG	Permasheen (W901)	
	3rd Coat	124 Mirro Glide SG	Permasheen (W901)	
	Anti-Graffiti Coating, if required	Conform to Section 09860 – Anti-Graffiti Coating		

59.

Exterior Plaster with no Waterproofing Sealer, with or without Clear Anti-Graffiti Coating: Gloss, 100% Acrylic		Frazee	Dunn-Edwards	Optional Products
	1st Coat	266 Epotilt	Eff-Stop (W709)	
	2nd Coat	143 Mirro Glide Gloss	Permagloss (W960)	
	3rd Coat	143 Mirro Glide Gloss	Permagloss (W960)	
	Anti-Graffiti Coating, if required	Conform to Section 09860 – Anti-Graffiti Coating		

60.

Exterior Plaster with Clear Waterproofing Sealer, with or without Clear Anti-Graffiti Coating: Flat, 100% Acrylic		Frazee	Dunn-Edwards	Optional Products
	Water-Proofing Sealer	Conform to Section 07181 – Above Grade Waterproofing Sealer Treatment and other applicable Sections		
	1st Coat	203 Duratec II	Evershield (W701)	
	2nd Coat	203 Duratec II	Evershield (W701)	
	Anti-Graffiti Coating, if required	Conform to Section 09860 – Anti-Graffiti Coating		

61.

Exterior Plaster with Clear Waterproofing Sealer, with or without Clear Anti-Graffiti Coating: Eggshell, 100% Acrylic		Frazee	Dunn-Edwards	Optional Products
	Water-Proofing Sealer	Conform to Section 07181 – Above Grade Waterproofing Sealer Treatment and other applicable Sections		
	1st Coat	126 Mirro Glide LS	Permashell (W940)	
	2nd Coat	126 Mirro Glide LS	Permashell (W940)	
	Anti-Graffiti Coating, if required	Conform to Section 09860 – Anti-Graffiti Coating		

62.

Exterior Plaster with Clear Waterproofing Sealer, with or without Clear Anti-Graffiti Coating: Semi-Gloss, 100% Acrylic		Frazee	Dunn-Edwards	Optional Products
	Water-Proofing Sealer	Conform to Section 07181 – Above Grade Waterproofing Sealer Treatment and other applicable Sections		
	1st Coat	124 Mirro Glide SG	Permasheen (W901)	
	2nd Coat	124 Mirro Glide SG	Permasheen (W901)	
	Anti-Graffiti Coating, if required	Conform to Section 09860 – Anti-Graffiti Coating		

63.

Exterior Plaster with Clear Waterproofing Sealer, with or without Clear Anti-Graffiti Coating: Gloss, 100% Acrylic		Frazee	Dunn-Edwards	Optional Products
	Water-Proofing Sealer	Conform to Section 07181 – Above Grade Waterproofing Sealer Treatment and other applicable Sections		
	1st Coat	143 Mirro Glide Gloss	Permagloss (W960)	
	2nd Coat	143 Mirro Glide Gloss	Permagloss (W960)	
	Anti-Graffiti Coating, if required	Conform to Section 09860 – Anti-Graffiti Coating		

64.

High Temperature Coatings for Exterior Ferrous Metal Surfaces: Modified Zinc Silicone		Ameron Inter-national	Carboline	Optional Products
	1st Coat	Amercoat 872	Carbozinc 11HS	
	2nd Coat	Amercoat 873	Thermaline 4700 VOC	

65.

Exterior Ferrous Metal and Non-Ferrous Metal Coating Subject To Pedestrian Traffic: Zinc Rich, Epoxy, Urethane or Aliphatic Polyurethane		Tnemec	Ameron International	Optional Products
	Pre-Treatment for Non-Ferrous Metal	Use Optional Products	Use Optional Products	Jasco Chemical Corp., Jasco Prep & Prime; Dunn Edwards Galva Etch (GE123)
	1st Coat			
	Ferrous Metal	Tnemec-Zinc 90-97	Amercoat 68 HS	
	Non-Ferrous Metal	High-Build Epoxoline II V69	Amerlock2	
	2nd Coat			
	Ferrous Metal	High-Build Epoxoline II V69	Amershield VOC	
	Non-Ferrous Metal	Endura-Shield II 1075	Amershield VOC	
	3rd Coat			
	Ferrous Metal	Endura-Shield II 1075	Amershield VOC	

G. Approved Materials For Existing Unsealed Or Unpainted Substrates And Previously Sealed Or Painted Surfaces:

1. Colors: Match "Pantone 107 C" or "DE5404 Highlighter" manufactured by Dunn Edwards.
2. Exterior paint finish for Concrete and Portland Cement Plaster substrates:
   - 1st Coat: Concrete or Portland Cement Plaster substrate, alkali-resistant primer and sealer. Kilz Klear Clear Sealer & Bonding Primer (L2201)
   - 2nd Coat: Exterior, acrylic, semigloss enamel. Behr Exterior Marquee Semi-Gloss Enamel (5450) applied at 6.4 mils WFT: 2.4 mils DFT @ 250 sq. ft/gallon.
3. Exterior graffiti-resistant paint finish for Concrete and Portland Cement Plaster substrates:
   - 1st Coat: Concrete or Portland Cement Plaster substrate, alkali-resistant primer and sealer. Kilz Klear Clear Sealer & Bonding Primer (L2201)
   - 2nd Coat: Exterior, acrylic, semigloss enamel. Behr Exterior Marquee Semi-Gloss Enamel (5450) applied at 6.4 mils WFT: 2.4 mils DFT @ 250 sq. ft/gallon.
   - 3rd Coat: Water-Based, clear matte, anti-graffiti coating. Monochem Permashield Premium Clear, Matte (5600)
   - 4th Coat: Water-Based, clear matte, anti-graffiti coating. Monochem Permashield Premium Clear, Matte (5600) Applied at manufacturer's written directions.

H. Miscellaneous Materials: Provide cleaning agents, neutralizer and other materials as may be required for the cleaning and preparation of surfaces to be painted or stained as recommended by the manufacturer and as approved by the City Engineer or the Consultant. Do not use thinner to thin, mix or prepare paint materials.

1. Thinner: As recommended by the Paint Manufacturer for tool cleaning.

2. Paste Wood Filler: Fed. Spec. TT-F-336

3. Spackle: Interior and exterior, regular weight spackle surface compound, manufactured by The Muralo Company or approved equal. The Muralo Company, 148 E. 5th Street, Bayonne, NJ 07002, (800) 631-3440, www.muralo.com.

4. Rust Remover: Manganese Phosphate No. 7 by Armett Assoc.

5. Cleaner, Degreaser, Neutralizer: Provide as part of Contract of types as suitable and will not cause any harm or damage to the substrate or texture or any adhesion problem.

6. Paint Removal Materials: Chemical types, as suitable and approved by the City Engineer or Consultant.

7. Graffiti Remover: Use hot and high pressure water or power wash and approved graffiti remover where required.

8. Wood Consolidants: [Abatron, Inc. “Liquid Wood” and “Wood Epox”. Other suitable materials shall be approved by the City Engineer or the Consultant. Wood Consolidants shall be of the resin types, either Epoxies or Polyesters, and shall be delivered to the job site in the original sealed containers.

9. Wood Restorants and Moisturizers: Boiled linseed oil and pure gum turpentine. Mix 1 part boiled linseed oil and 2 parts pure gum turpentine. Materials shall be delivered to the job-site in the original sealed containers.

10. Coating Between Dissimilar Materials:

    a. For dissimilar metals, use non-sag polysulfide or polyurethane caulking conforming to Federal Specification TTS-230 Type II TT-P-664 to prevent galvanic or corrosive action.

    b. For aluminum in contact with concrete, mortar, masonry or absorptive materials subject to wetting, use heavy bituminous or asphalt-base emulsion coating conforming to ASTM D1187 – STANDARD SPECIFICATION FOR ASPHALT-BASE EMULSIONS FOR USE AS PROTECTIVE COATING FOR METAL.

11. Concrete, Masonry, Stucco, Plaster Repair Materials: Conform to the applicable Sections of the Specifications and approved submittals.

12. Existing Fungus and Mold: Solution composed of 3 ounces trisodium phosphate, one ounce household detergent, 1 quart 5% hypochlorite sodium solution and 3 quarts of warm water. Rinse thoroughly with fresh water.

13. Other Materials: Linseed oil, solvents and other materials not specified but required to achieve required finishes shall be of high quality, and approved by the City Engineer or the Consultant prior to starting work.

2.2 APPLICATION EQUIPMENT

A. For application of the approved paint, use only such equipment as is recommended for application of the particular paint by the manufacturer and as approved by the City Engineer or the Consultant.

B. Prior to use of application equipment, verify that the proposed equipment is actually compatible with the material to be applied, and that integrity of the finish will not be jeopardized by use of the proposed equipment.

C. Spraying equipment for paint finish shall be airless spraying machine with water trap and tip size of 0.017. Inspect spray tip each day for wear and replace worn tip.

D. Brush shall have a good quality natural or synthetic bristle. Roller shall have a good quality natural or synthetic cover. Brush and rollers shall conform with approved manufacturer's recommendation and Section 310-1.2 - APPLICATION of SSPWC.

E. For specified clear brushing lacquers, brushing application shall be used and any use of spray equipment shall be prohibited.

PART THREE - EXECUTION

3.1 SURFACE CONDITIONS

A. Prior to the submittal processes and the painting works, examine the areas and conditions under which work of this Section will be performed. Provide minimum one test for every 5,000 square feet of each of the concrete, masonry, gypsum, stucco and plaster surfaces for alkali with phenolphthalein and the composition of existing paint or coating systems specified to remain. Provide removal and cleaning procedures, and neutralizing methods and correct any condition detrimental to timely and proper completion of the work. Do not proceed until all detrimental conditions are corrected.

B. Remove fungus and mold from surfaces with a solution with composition indicated hereinbefore to the satisfaction of the City Engineer. Rinse thoroughly with fresh water.

C. Remove all ridges, high spots and weld spatter; repair unsound substrates and, correct surface defects which may adversely affect the work of this Section without additional cost to the City. Retest surface areas for alkali after cleaning or neutralizing. Final pH level shall be below 10.

D. Verify that all flashing and caulking materials have been installed properly.

E. All dry, loose, cracked and defected putty or glazing compound shall be removed and provided with new.

F. Any waterproofing sealers that have been applied to protect structures from moisture penetration with exceeded lapse time for the succeeding paints shall be re-tested and re-coated as directed by the City Engineer with no additional cost to the City.

3.3 PROTECTION

A. Contractor shall mask off all adjacent surfaces not to be painted and shall repair or replace damaged area with new work subject to the approval of the City Engineer at no added cost to the City.

B. Furnish sufficient drop cloths, shields and protective equipment to prevent spray or splatter from fouling surfaces not be painted.

C. Protect all surfaces, equipment and fixtures from damage resulting from use of fixed, movable and hanging scaffolding planking and staging. Repair damage resulting from inadequate protection at no added cost to the City.

3.4 MATERIALS PREPARATION

A. General:

1. Mix and prepare paint materials in strict accordance with procedures submitted and approved by the City Engineer or the Consultant. Mix paint materials in whole unit sizes and do not attempt to mix a partial unit of paint material.

2. When materials are not in use, store in tightly covered containers as supplied.

3. Maintain containers used in storage, mixing and application of paint in a clean condition, free from foreign materials and residue.

B. Stirring:

1. Stir materials with mechanical mixers or power agitator before application, producing a mixture of uniform density.

2. Do not stir into the material any film which may form on the surface, but remove the film and, if necessary, strain the material before using.

3.5 SURFACE PREPARATION OF PAINT AND SEALER

A. General:

1. Perform surface preparation and cleaning in strict accordance with the procedures approved by the City Engineer or the Consultant. Any use of abrasive blasting, air blasting, water blasting, detergent washing, and scrubbing, acid etch or abrasion with power cleaning tools shall be submitted and obtain the approval of the City Engineer in advance. Remove all splashes, ridges, high spots and clean of all dirt, dust, debris, mill glaze, grease, rust, soot, oil, stain, efflorescence and other foreign materials in accordance with the requirements specified herein and elsewhere.

2. Patch nail holes, voids and cracks or other defects permissible under this Contract with appropriate repair compound. All repairs shall be sanded to feather edges and textures to match adjacent area. All surface smoothness and final textures must be obtained and all repaired areas shall be primed with appropriate primer before painting.

3. All new and existing wood surfaces shall be removed of any paint, sealer or stain; sanded and treated until sound surfaces are obtained prior to staining.

4. Crevices, joints, seams and connections of exterior hollow metals, pipes, tubes and posts shall be capped, welded, sealed and watertight in accordance with Contract Documents.

5. Clean and rinse each surface to be painted prior to applying surface treatment or paint as specified herein. All curing agents, bond breaker or form release agents must be removed and surface cleaned before any paint system is applied.

6. Remove oil, grease passivator or stabilizers from all metal surfaces with clean cloths and approved cleaning solvent or detergent of low toxicity and flash point in excess of 200 degrees F, prior to start of mechanical cleaning and surface treatment.

7. Provide surface treatments where required. Spot prime repaired surfaces with the primers as specified herein.

8. All surfaces must be completely dry and dust free and protected from corrosion and oxidation before priming and painting. Do not exceed the lapse time recommended between the surface preparation and painting work.

9. Dissimilar Materials: Apply protective coatings specified hereinbefore. The protective coatings shall be not be visible to the public view.

10. Provide excavation and surface preparation and paint all exterior walls or structures from minimum six inches below the final grades. Backfill and compact trenches upon completion.

11. Semi-transparent film applied to pipes, tubing and conduits at the mill is not to be considered a shop-applied prime coat. For pipes, tubing and conduits to be painted, remove and clean off semi-transparent film, and apply specified primer prior to application of subsequent coat.

12. Schedule the cleaning and painting so that dust and other contaminants from the cleaning process will not fall onto wet newly painted surfaces.

13. Contractor shall be responsible for unsatisfactory work due to improper surface conditions.

B. <u>Preparation of Wood Surfaces</u>

1. All non-galvanized steel nails shall be countersink and filled with a patching compound. Smooth finish all wood surfaces except those not exposed to view, by using the proper sandpaper. Where so required, use varying degrees of coarseness of sandpaper to produce a uniformly smooth and unmarred wood surface.

2. Unless specifically approved by the City Engineer or the Consultant, do not proceed with painting of wood surfaces until the moisture content of the wood is less than the moisture content specified in Article 1.5 of this Section as measured by a moisture meter approved by the City Engineer or the Consultant.

3. Fill open-grain wood with paste wood filler before application of varnish, lacquer or paint.

4. Prime top, bottom and side edges of doors immediately after fitting of doors.

5. Fill pits, knots and cracks and other imperfections of wood surfaces, that are permissible under this Contract with spackle or other suitable filler. Apply filler with putty knife and sand smooth when set.

C. <u>Preparation of Metal Surfaces</u>:

1. Completely strip all defected paints and remove all graffiti from the existing surfaces. For ferrous metals**,** thoroughly abrasive blast clean surfaces to minimum Commercial Grade **(**SSPC-SP-6**)** or as recommended by the manufacturer, whichever is more stringent, until free from dirt, mill scale or rust, mildew**,** oil, grease and other foreign matters and recommended surfaces profiles are obtained.

2. On aluminum and galvanized surfaces specified to be painted, use solvent for the initial cleaning and then mechanically clean to recommended surface profiles. Retreat the surface thoroughly with etching type solution as specified.

   For galvanized surfaces, remove rust by approved method without damaging or removing the galvanizing. Repair all damaged galvanized coating where required prior to cleaning. Clean and rinse off all cleaning solution completely before proceeding with surface treatment and painting. Conform to the requirements of Subsection 310-3 - SURFACE PREPARATION FOR PAINTING GALVANIZED SURFACES of the Standard Specifications for Public Works Construction(SSPWC). Allow to dry thoroughly before application of paint.

3. Unless specified otherwise all interior structural steel installed between roof decks and ceilings that are concealed from public view or embedded inside masonry walls shall require only one coat of shop or factory-applied primer and no painting.

4. All surfaces of structural steel and their components such as end clips, splice or gusset plates, back-to-back angles, joints and edges that will be inaccessible for finish coats after fabrication or erection shall be completely covered with two coats of primers of different colors.

5. Except those exposed to high temperatures or to be provided with safety color codes; all interior non-structural metal pipes, conduits and metal utility supports located between the roof decks and the ceilings, in crawl spaces, or inside the furred walls or partitions, or in mechanical rooms concealed from public review shall not be primed or painted. All other interior and exterior non-structural metal pipes, conduits and metal utility supports shall be primed and painted prior to any installation or insulation.

6. On Shop-Primed or Factory-Coated Metal:

a. Maintain prime coat during the delivery, storage and installation. Protect metal from corrosion or oxidation at all time. Cleaned of dust, dirt and other foreign matter.

b. Spot coat field connections, welds, soldered joints and burned and abraded areas with same material used for shop priming prior to final paint.

8. Copper Pipe: Rub with steel wool to remove the polish and mill coating and clean with solvent.

D. <u>Preparation of Gypsum Plaster and/or Drywall Surfaces</u>:

1. Strip all sealers and paints and remove all graffiti from walls, partitions, and ceiling assemblies. Fill cracks, holes or other imperfections with suitable joint compound and finish flush with adjoining surfaces. Joint compound shall not be over-thinned and shall be sanded even.

2. To be cleaned of dust dirt**,** and other surface contamination and be thoroughly dry.

E. <u>Preparation of Portland Cement Plaster Surfaces</u>:

1. Strip all sealers and paints and remove all graffiti from walls, partitions, and ceiling assemblies**.** Fill cracks, holes and other imperfections with suitable patching plaster, finish flush and match adjacent surfaces.

2. To be treated as recommended by the manufacturer of paint to be applied.

3. To be cleaned of dust, dirt, efflorescence, encrustations and be thoroughly cured and dry.

F. <u>Concrete, Masonry, CMU and Stucco</u>:

1. All concrete, masonry, and stucco surfaces shall be cured at least 60 days before any sealer or paint coat**.** Remove dust, dirt, grease**,** bond breaker or other foreign matter by approved methods.

2. Repair minor holes and cracks permissible under this Contract and neutralize all alkalis. Remove all efflorescence. .

3. All existing unsound, hollow or defective masonry joints shall be raked

out to depth of ½ inch with pointed mortar. All cracks which exceeds 1/64 inch wide shall be repaired with mortar or approved epoxy grout.

4. Repair concrete voids or pockets permissible under this Contract with approved structural grouts and/or epoxy.

5. All stucco cracks permissible under this contract shall be repaired with approved caulking or surface sealer.

6. All plaster cracks permissible under this Contract shall be repaired by raking out the cracks and repaired with a self-adhering mesh and joint compound. Apply and feather joint compound over the embedded mesh 4 to 5 inches on either side of crack. Allow the compound to dry thoroughly, then sand smooth.

3.6 APPLICATION AND WORKMANSHIP OF PAINT SYSTEM

A. General:

1. Unless specified otherwise all application shall be executed by first class trade painters in accordance with Section 310 – PAINTING of the SSPWC, and the Contract provisions set forth in this Contract**,** and in accordance with the approved methods by using application equipment and techniques best suited for substrate and type of material being applied.

2. Adequately ventilate freshly painted interior areas to allow entrance of fresh air circulation for at least 24 hours after application of paint.

3. Paints shall not be applied when temperature is below 50 F or when environmental conditions are unfavorable to application or drying of paint materials.

4. All wood and metal work to be hand brushed to produce an even film surface. All large surfaces may be rolled. All exposed ceiling structures and other surfaces where hand brushed work would be inferior may be sprayed as approved by the City Engineer or the Consultant.

5. Thoroughly back paint all surfaces of items that will be concealed or inaccessible after installation.

6. Use approved clean up solvent for tool or equipment cleaning at prescribed intervals during the application process and at the end of

the work day.

B. Workmanship:

1. Each coat shall be even, with uniform color and texture.

2. Finish painted surfaces shall be free from sags, brush marks, dirt, cloudy or mottled surfaces, scratches, cracks or other blemishes and thin coating on arises.

3. Mixing of paint materials: Thoroughly stir, strain and keep at a uniform consistency during application in accordance with manufacturer's directions. Do not mix together materials of different manufacturers.

C. Coats:

1. The number of coats and total film thickness specified herein are the minimum that shall be applied to produce the specified workmanship.

2. Apply additional coats when the undercoats or other conditions show through the finish coat, or if required to obtain complete and uniform coverage and approved results.

3. Each coat in full coverage shall be measured for the wet film thickness and obtain the required approvals of the City Engineer before each succeeding coat is applied.

4. Undercoats to be dry and hard before application of succeeding coat and to be tinted to approximate color of finish coat.

5. Suitably sand as necessary for proper finish.

6. Prime and succeeding coats for each finish to be products of the same manufacturer unless otherwise specified, indicated or authorized by the City Engineer or the Consultant.

7. Unless specified otherwise, the total film thickness or application rate or coverage for each paint system shall be submitted for review during the submittal process. The actual total film thickness of each coat shall not be less that the minimum film thickness specified below or recommended by the manufacturer, whichever is greater. If application rate or coverage is specified, each application shall not be greater than the rate or coverage specified herein or recommended by the manufacturer, whichever is lesser. Contractor shall include all

contingencies in the bid and any increased paint thickness or materials for satisfactory results shall be done at no additional cost to the City.

a. Primer, Sealer and Undercoat: Minimum wet film thickness of 4.0 mils for each coat.

b. Concrete Filler: Minimum wet film thickness of 16.0 mils for each coat.

c. Intermediate and Top **(**Finish**)** Coats: Minimum wet film thickness of 3.5 mils for each coat.

d. Lacquer**,** Varnish**,** Sanding Sealer: Minimum wet film thickness of 3.5 mils for each coat.

e. Combined Stain and Sealer**,** Stain: 100 sq. ft. per gallon.

f. High Temperature Primer and Top Coat: Wet film thickness of 4.75 mils for each coat. Do not exceed specified wet film thickness. Remove excess coating thickness by abrading, otherwise cracking may occur.

g. Coating subject to Pedestrian Traffic: Wet film thickness of 4.0 mils for each coat.

8. Excessively thick coats of paint will not be permitted.

9. All repaired area of existing painted surfaces shall be sealed and painted with total film thickness to match adjacent area to ensure total surface smoothness. Any additional or new finish coat shall be in accordance with the total film thickness or application rate as specified hereinbefore.

D. <u>Colors</u>:

1. As noted on the “Finish Schedule” on the Contract Drawings and in the approved Color Schedule and Sample submittals.

2. Each coat shall provide a proper ground coat for the succeeding coat and differing appreciably in tint from the preceding coat.

3. Finish coats to match approved samples.

E. <u>Touch-Up Painting</u>: Required, all areas or items scratched, marred or

defaced in any manner by Contractor's operations as directed by the City Engineer or the Consultant, at no added cost to the City.

1. If shop or factory-applied finish on any equipment furnished by the Contractor is damaged in shipment or during construction operations, equipment shall be refinished by the Contractor to the satisfaction of the City Engineer or the Consultant, at no added cost to the City.

2. One can of touch-up paint shall be provided for each different color of factory-applied finish, which is to be the final finish surface of the product.

3.7 PROTECTION AND CLEAN-UP

A. Following completion of painting in each space or area, reinstall the removed items or new works with care by using employees skilled in the necessary trades. Protect all surfaces from dust, damages or human contact prior to final acceptance. For surfaces requiring other succeeding coating or treatment, protect surfaces from dust, dirt or other contamination.

B. **At End of Each Day's Work:** Return materials and equipment to the storage area. Remove paint or oil-saturated cloths from the job-site daily or hang out flat and singly to dry.

C. **Final Clean-Up:** Restore surfaces, not to be painted to original condition if soiled; remove over-spray, coating spots, oil or stain on adjacent surfaces; repair all damage to adjacent surfaces or facilities resulting from the work to the satisfaction of the City Engineer at no additional cost to the City; remove from the job-site all tools, equipment, rubbish and debris; leave the premises in a broom clean condition. Conform to applicable provisions of Section 01740 – REMOVAL, CLEANUP AND DEMOBILIZATION in GENERAL REQUIREMENTS.

(END OF SECTION)

SECTION 10441
IDENTIFYING DEVICES

PART ONE - GENERAL

1.1 SUMMARY

A. **General**: Furnish all tools, equipment, materials, supplies and perform all labor necessary to fabricate and install signs or identifying devices where shown on the Contract Drawings, as needed for a complete and proper installation, including, but not necessarily limited to:

1. Building Identification
2. Door Signs
3. Exit Signs
4. Room Name Signs
5. Site Entry Sign
6. Plaques

B. **Related Work:**

1. Documents affecting work of this Section include, but are not necessarily limited to the GENERAL CONDITIONS, SUPPLEMENTARY CONDITIONS and Sections in DIVISION 1 - GENERAL REQUIREMENTS of these Specifications.

1.2 SUBMITTALS

A. Comply with pertinent provisions of Section 01340 - SUBMITTALS in DIVISION 1 - GENERAL REQUIREMENTS of these Specifications.

B. **Product Data:** Within 60 calendar days after the Contractor has received the City's "Notice to Proceed", submit:

1. Materials list of items proposed to be provided under this Section;

2. Manufacturer's specifications, fabrication and erection drawings and other data needed to prove compliance with the specified requirements;

3. Details of installation and anchorage sufficient to enable proper

interface of the work of this Section with the work of other trades; and

4. Manufacturer's recommended installation procedures which, when approved by the City Engineer or the Consultant, will become the basis for accepting or rejecting actual installation procedures used on the Work.

C. **Samples**: Contractor shall submit five (5) samples of acrylic signs (identifying devices) material for approval of color and finish for each type of sign or identifying device and after the Consultant or City Engineer's review will receive back two (2) samples for each type of sign or identifying device.

D. Contractor shall submit a full size reproduction drawing of a typical layout for each copy height for approval of the type reproduction and spacing.

1.3 QUALITY ASSURANCE

A. Use adequate numbers of skilled laborers who are thoroughly trained and experienced in the necessary crafts and who are completely familiar with the specified requirements and the methods needed for proper performance of the work of this Section.

B. **Codes and Regulations**: All sign or identifying devices shall comply with applicable Uniform Building Code with the Los Angeles City 1992 Amendments, State of California Architectural Barriers Laws (CAL/ABL), “Americans with Disabilities Act (ADA)” and applicable provisions of Section 01060 - REGULATORY REQUIREMENTS of DIVISION 1 - GENERAL REQUIREMENTS of these Specifications.

1.4 DELIVERY, STORAGE, AND HANDLING

A. Comply with pertinent provisions of Section 01640 - PRODUCT HANDLING of DIVISION 1 - GENERAL REQUIREMENTS of these Specifications.

B. Signs or identifying devices shall not be fabricated and delivered to the job-site before the Consultant or City Engineer has reviewed the Shop Drawings and returned to the Contractor.

1.5 WARRANTY

Furnish a written guarantee on all materials and work in conformance to provisions of Section 28 of the GENERAL CONDITIONS and shall be guaranteed for a period of one year and any repairs or replacements shall be made at no cost to the City.

PART TWO - PRODUCTS

2.1 APPROVED MANUFACTURERS

A. Design is based on use of standard products manufactured by Architectural Signing, Inc., 4082 Glencoe Avenue, Marina Del Rey, CA 90261 and ASI Sign Systems, 5849 Uplander Way, Culver City, CA 90230 or equal and trade names of that manufacturer are used herein.

B. Provide the products upon which design is based, or provide equal products of another manufacturer approved in advance by the Consultant or City Engineer.

C. Except as otherwise approved by the Consultant or City Engineer, provide all products of this Section from a single manufacturer.

2.2 MATERIALS AND FABRICATION

A. **Materials**: Except as otherwise specified, all materials shall conform to the requirements of the following sign types for interior and exterior locations.

1. Character Proportion: Letters and numbers on signs shall have a width-height ratio between 3:5 and 1:1 and a stroke width to height ratio between 1:5 and 1:1.

2. Character Height: Characters and numbers on signs shall be size according to the viewing distance from which they are to be read. The minimum height in measured using an upper case “X”. Lower case characters are permitted. For signs suspended or projected 80-inches or more above the finish floor, the minimum character height shall be 3-inches.

3. Raised or Brailled Characters and Pictorial Symbol Signs: Letters and numerals shall be raised 1/32-inch, upper case, “SANS SERIF” and shall be accompanied with Grade 2 Braille. Raised characters or symbols shall be minimum 5/8-inch high. Pictorial Symbol Signs (PICTOGRAMS) shall be accompanied by the equivalent verbal designation placed directly below the pictogram. The border dimension of the pictogram shall be a minimum of 6-inches in height.

B. **Single-Faced Signs:** Signs shall be constructed with 1/16-inch thick acrylic plastic face laminated to a 1/8-inch thick acrylic plastic base. Plastic faces shall have a satin matte finish.

1. For Surface mounting on vinyl covered or irregular surfaces, provide a silastic adhesive on the back side.

2. For Surface mounting on other surfaces used on the backside, a double-coated 1/32-inch thick black-scotch mount type tape.

3. Signs and/or Identifying Devices shall be accurately fabricated to sizes and shapes indicated on the Contract Drawings.

C. **Double-Faced Signs**:

1. Signs shall be constructed with two-face plates of 1/16" thick acrylic plastic laminated to both sides of a 1/8" thick acrylic plastic base. Both face plates shall have a satin matte finish.

2. Mounting Brackets for Double-Faced Signs shall be of extruded aluminum of 3 component design 2-1/8" x 1-1/8" size by length to suit size of the sign as indicated on the Contract Drawings. Brackets shall have anodized finish of color as noted on the Contract Drawings. Acrylic Signs shall be secured to the brackets with silicone adhesive or other adhesive approved by the City Engineer or the Consultant and with minimum two aluminum screws. Provide brackets with three 1/8" x 1-1/4" size toggle bolts for attachment to plaster or with expansion shield connectors for attachment to concrete.

D. **Individual Building Name Letters (Type F-4):** Letters shall be fabricated of an approved acrylic or buty-rate solid color and weatherproof material accurately pre-cut or by injection molded process, size, color and graphic as noted on the Contract Drawings and hereinafter specified. On the backside of each individual letter shall be applied, an approved type weatherproof adhesive which will allow the letter to be removed from the glass without damaging the glass.

E. **Individual Building Numbers**: Provide one set of adhesive cut vinyl street address number with the following attributes:

1. 4" high.

2. Use "Helvetica Medium" style.

NOTE: Provide the manufacturer's standard mounting system as appropriate for the surfaces shown on the Contract Drawings.

G. Disabled Parking Sign:

1. Disabled parking sign shall be provided. Design type and location shall be as shown on the Drawings.

H. Exterior Bronze Plaque - Sign Etch Z:

1. Size: Maximum 24" x 24" x 3/16" thick. Final size to be determined by City Engineer.

2. Quantity: 1

3. Material: Etched Bronze

4. Finish: Urethane topcoat containing ultraviolet inhibitors and anti-oxidants to provide maximum wet resistance.

5. Text/Type/Style: To be provided by City Engineer.

6. Installation: Brass screws in exterior masonry.

I. Room ID Signs - ADA "Asintouch":

1. Size: 6" x 6" x 1/4"

2. Quantity: 22

3. Material: Sign face to be Polyamid Resin, carrier to be polyester, .011" thick and laminating base to be .125 thick acrylic.

4. Finish: MX Standard #55.

5. Text Type: Sign copy to be relieved 1/32" min. From plaque first surface by manufacturer's photomechanical stratification processes.

6. Text Finish: MX Standard #06

7. Text Height: 5/8" minimum

8. Type Style: Helvetica Medium

9. Installation: .030" thick double-face tape, wall mounted.

K. **General Fabrication**:

1. Signs shall not be fabricated or delivered to the job-site before the Shop Drawings have been reviewed by the Consultant or City Engineer and returned to the Contractor.

2. Graphics for the "Handicapped" or “Disabled” shall conform to the CAL/ABL and ADA requirements and shall consist of a white pictograph of a male or female on a dark blue background of size and shape indicated on the Contract Drawings.

L. **Workmanship**: Sign materials, design, sizes and finishes shall be as specified in this Section and as noted on the Contract Drawings. Methods of fabrication, assembly and installation, unless otherwise specifically stated, shall be at the discretion of the Contractor, whose responsibility is to guarantee satisfactory results subject to the approval of the Consultant or City Engineer.

PART THREE - EXECUTION

3.1 SURFACE CONDITIONS

Examine the areas and conditions under which work of this Section will be performed. Correct conditions detrimental to the proper and timely completion of the work. Do not proceed until detrimental conditions or unsuitable areas have been corrected.

3.2 GENERAL

A. The Contract Drawings show reasonably accurate locations and positions of the signs or identifying devices, however, the Consultant or City Engineer is responsible for pinpointing the location and position of each sign or individual letter or numbers in the field together with the Contractor.

B. All work shall be installed by skilled workers as hereinbefore specified in Subsection 1.3A.

3.3 INSTALLATION

A. Install work of this Section in strict accordance with the manufacturer's recommendations as approved by the Consultant or the City Engineer, using only the approved mounting or attachment materials and locating all components firmly into position, level and plumb. All locations to be verified with the City Engineer.

B. Where permanent identification is provided for rooms and spaces, signs shall be installed on the wall adjacent to the latch side of the door. Where there is no wall space to the latch side of the door, including at double-leaf door, signs shall be placed on the nearest adjacent wall. Mounting height shall be 60-inches above the finish floor to the centerline of the signs. Mounting locations for such signage shall be so that a person may approach within 3-inches of signage without encountering protruding objects or standing within the swing of the door.

3.4 CLEANING

A. Conform to applicable provisions of Section 01710 - CLEANING of DIVISION 1 - GENERAL REQUIREMENTS of these Specifications and in accordance with manufacturer’s written cleaning instructions.

B. All protective coverings on the signs or identifying devices shall be removed. All signs and/or identifying devices and supporting structures shall be completely cleaned.

C. Contractor shall remove all soil and fingerprints on any surface resulting from work of this Section.

D. **Disposal**: Contractor shall remove and legally dispose of all rubbish and debris resulting from work of this Section, away from the job-site.

(END OF SECTION)

SECTION 10443

DISABLED ACCESSIBILITY PARKING SIGNAGE

PART ONE - GENERAL

1.1 DESCRIPTION

A. Furnish and install disabled accessibility signage as indicated on the drawings and specified herein.

B. Related Work Sections:

1. Documents affecting work of this Section include, but are not necessarily limited to the GENERAL CONDITIONS, SUPPLEMENTARY CONDITIONS, GENERAL REQUIREMENTS in Division 1 and other Section of the Project Manual.

2. Earthwork in Section 02310.

3. Yard Work and Street Work in Section 02710.

4. Unit Paving in Section 02720.

5. Concrete Work in Section 03300.

1.2 QUALITY ASSURANCE

A. **Labor:** Use adequate number laborer's who are thoroughly trained and experienced in the necessary crafts and who are completely familiar with the specified requirements and the methods needed for the proper performance of the work of this section.

B. **Codes and Regulations:** In accordance with the following documents:

1. American National Standards Institute (ANSI), ANSI A117.1, latest edition - Providing Accessibility and Usability for Physically Disabled People.

2. State of California, Code of Regulations, Title 24, Chapter 11B – Accessibility to Public Buildings, Public Accommodations, Commercial Buildings and Publicly Funded Housing, Section 1129B.5 – Identification of Parking Spaces for Off-Street Parking Facilities.

3. Los Angeles City Building Code and Amendment.

1.3 SUBMITTALS

A. Comply with pertinent provisions of Section 01330 – SUBMITTALS of Division 1 GENERAL REQUIREMENTS of the Project Manual.

B. **Product Data:** Within 35 calendar days after the Contractor has received the City's Notice-To-Proceed, submit list of material, product data of items proposed to be provided under this Section.

C. **Shop Drawings:** Submit drawings including elevations of each type of sign; dimensions, details, and methods of mounting; shape and thickness of materials; and details of construction.

1.4 PRODUCT HANDLING

A. **Protection:** Protect the concrete footing, the posts and signs before, during and after installation. Protect from the paving operations.

B. **Delivery:** Deliver all items to be built into concrete footing in time so as not to delay construction and installation operations.

C. **Storage:** Properly store all material until time for installation.

PART TWO - PRODUCTS

2.1 STANDARD PRODUCTS

A. Signs shall be as manufactured by Western Highway Products Inc., Stanton, CA. (714-761-4811) or equal.

B. Signs shall be complete with lettering, framing, and related components for a complete installation. Materials and equipment shall be the standard product of a manufacturer regularly engaged in the manufacture of the products. Items of equipment shall essentially duplicate equipment that has been in satisfactory use at least 2 years prior to bid opening.

2.2 MATERIAL AND FABRICATION

A. **Posts:** Provide two-piece, 2 inches x 2 inches x 1/9 inch thick galvanized steel tabular post and sleeve. Height per plan. Post shall be designed to accept panel framing system and shall be designed to permit attachment of panel framing system without exposed fasteners. Caps shall be provided for each post.

B. **Panel Framing System:** Panel framing consisting of galvanized steel sections and interlocking track components shall be designed to interlock with posts with concealed fasteners. Top and bottom framing members shall be removable to permit panel removal.

C. **Panels:** Modular message panels shall be provided in sizes, as shown on contract drawings. Constructed of reflective sheeting laminated to 18-gage heavy duty sheet steel and silk screened in transparent blue with "Disabled Symbol" and the appropriate message in white. Panels shall be designed to be interchangeable. Panels with metal return sheeting shall have welded corners, ground smooth.

2.3 FINISHES

A. Post finish shall be semi-gloss baked enamel or two-component acrylic polyurethane.

B. Metal panel framing system finish shall be baked enamel or two-component acrylic polyurethane, as standard with the sign manufacturer.

2.4 GRAPHICS

A. Graphics and message shall be applied to panel using the silkscreen process. Silkscreened images shall be executed with photo screens prepared from original art. No handcut screens will be accepted. Original art shall be defined as artwork that is a first generation stencil of the original specified art. Edges and corners shall be clean. Rounded corners, cut or ragged edges, edge buildup, bleeding or surfaces pinholes will not be accepted.

At least one parking sign with "Disabled Symbol" plus the message "Van Accessible" shall be provided. Other accessible parking signs shall be provided with "Disabled Symbol".

An additional sign shall also be posted in a conspicuous place at the entrance and it shall state the following:

"Unauthorized vehicles parked in designated accessible spaces not displaying distinguishing placards or special license plates issued for persons with disabilities will be towed away at owner's expense. Towed vehicles may be claimed at (address) or by telephoning (number)".

The blank spaces are to be filled in with appropriate information as a permanent part of the sign by the Contractor.

B. Graphics, message, and colors shall be in accordance with ANSI A117.1. The type face shall be Helvetica medium. All lettering shall not less than one (1) inch in height.

PART THREE - EXECUTION

3.1 INSTALLATION

A. Signs shall be installed at locations shown on the drawings, plumb and true. Bottom of the sign shall be 80 inches above the finish grade of the parking lot or floor.

B. Permanent mounting shall be provided by fastening to post sleeve embedded in a concrete footing as shown on the contract drawings. The top of the foundation shall be shaped/sloped to drain water away from the post. Concrete shall have a minimum compressive strength of 2500 psi at 28 days. All subgrade, base course and paving shall be compacted and placed around the footing.

3.2 PROTECTION AND CLEANING

A. The work shall be protected against damage during construction. Keep the signage clean until final acceptance of the work.

(END OF SECTION)

SECTION 10520
FIRE PROTECTION SPECIALTIES

PART I. -- GENERAL

1.THE REQUIREMENT

A.The CONTRACTOR shall furnish and install all the fire protection equipment and appurtenant work, complete, in accordance with the requirements of the Contract Documents.

2.RELATED WORK SPECIFIED ELSEWHERE

A.Section 05400 Cold Formed (Light) Metal Framing.

B.Section 06100 Rough Carpentry.

3.REFERENCE SPECIFICATIONS, CODES, AND STANDARDS

A.Comply with the reference specifications of the GENERAL REQUIREMENTS.

B.Trade Standards:

a.Uniform Fire Code (UFC) as published by the Western Fire Chiefs Association Inc. and the International Conference of Building Officials.

b.National Fire Protection Association publications (NFPA), as referenced herein.

C.Manufacturer's Standards: In addition to the standards listed above, the fire protection products and their installation shall be in accordance with the manufacturer's published recommendations and specifications.

4.CONTRACTOR SUBMITTALS

A.Submittals shall be made in accordance with the GENERAL REQUIREMENTS.

B.Literature: Manufacturer's literature, installation instructions, and details shall be submitted.

5.QUALITY ASSURANCE (NOT USED)

6.PRODUCT DELIVERY, STORAGE, AND HANDLING

A.Delivery of Materials: Manufactured materials shall be delivered in original unbroken packages, or containers, bearing the manufacturer's label with manufacturer's name, product description, and rating.

B.Storage: All materials shall be carefully stored in an area which is protected from the elements as recommended by the material manufacturer. Storage shall be in a manner that will prevent damage to the material and its finish.

PART II. -- PRODUCTS

1.GENERAL

A.All fire prevention equipment shall be from the same manufacturer unless otherwise specified and shall meet the requirements of NFPA "Pamphlet No 10."

B.Manufacturers, or Equal:

a.General Fire Extinguisher Corp.

b.J.L. Industries

c.Potter-Roemer

d.Standard Fire Equipment (Division of Zurn Co.)

e.Walter Kidde and Co.

2.MATERIAL

A.Fire Extinguisher - Type A: Type A extinguisher shall be 20 lb minimum capacity, A.B.C. dry chemical type with minimum UL rating of 10A:60 BC.

B.Fire Extinguisher - Type B: Type B extinguisher shall be 10 lb minimum capacity, A.B.C. dry chemical type with minimum UL rating of 4A:60 BC.

C.Fire Extinguisher - Type C: Type C extinguisher shall be 17 lb minimum capacity, Halon gas type with minimum UL rating of 2A:60 BC.

D.Fire Extinguisher - Type D: Type D extinguisher shall be 5 lb minimum capacity, Halon gas type with minimum UL rating of 10:BC.

E.Fire Extinguisher Cabinet (FEC): Fire extinguisher cabinet shall be semi-recessed steel cabinet with clear, anodized aluminum door and door frame, and projecting, convex, butyrate plastic, canopy type viewing door cover (panel). The size shall be as necessary to hold fire extinguisher specified or shown at cabinet location.

F.Bracket: Mounting brackets shall be specially designed for extinguisher.

G.Other Materials: All other materials, not specifically described, but required for a complete and proper installation of fire fighting devices shall be as selected by the CONTRACTOR, subject to the review of the ENGINEER.

PART III. -- EXECUTION

1.INSTALLATION

A.Brackets: All fire extinguishers shall be provided with and installed on brackets or brackets within cabinets. The CONTRACTOR shall block and reinforce wall to support the fire extinguishers.

B.Locations: Fire prevention equipment locations shall be verified with the ENGINEER and Fire Marshall before installation and shall be installed where directed per NFPA Pamphlet No. 10.

END OF SECTION

SECTION 10800
TOILET ROOM ACCESSORIES

PART ONE - GENERAL

1.1 SUMMARY

A. Provide toilet and shower room accessories where indicated on the Contract Drawings, as specified herein, and as needed for complete and proper installation.

B. **Related Sections:**

1. Documents affecting work of this Section include, but are not necessarily limited to the GENERAL CONDITIONS, SUPPLEMENTARY CONDITIONS and Sections in DIVISION 1 - GENERAL REQUIREMENTS of these Specifications.

2. Installation of furnishing concealed support devices for the work of this Section, specified in other pertinent Sections of these Specifications.

1.2 QUALITY ASSURANCE

A. **Qualifications of Manufacturers:** Products shall be produced by manufacturers regularly engaged in the manufacture of toilet room accessories and with a history of successful production acceptable to the City Engineer or the Consultant.

B. **Acceptable Manufacturers:** Except as otherwise specified, provide products manufactured by Bobrick Washroom Equipment, Charles Parker Co. or Bradley Corp. (Washroom Accessories Division).

1.3 SUBMITTALS

A. **Product Data:** Submit for approval manufacturer's data for each item specified in this Section complying with provisions of SUBMITTALS Section 01340 of DIVISION 1 - GENERAL REQUIREMENTS of these Specifications.

1. Complete material listing of all items proposed to be furnished and

installed under this Section.

2. Manufacturer's specification and other data required to demonstrate compliance with specified requirements.

3. Manufacturer's recommended methods of installation.

4. Complete descriptive data on fasteners proposed for each type of wall or partition construction, recommended mounting locations and mounting instructions.

B. **Shop Drawings:** Submit for approval for each item specified under this Section. Indicate location of backing required to attach to wall or ceiling-support items.

C. **Samples:** If requested by the City Engineer or the Consultant, submit one full size sample of each specified item. After approval samples may be installed if they are identified and their locations are noted.

D. **Non-Stock Items:** When so specified submit complete Shop Drawings to the City Engineer or Consultant for approval.

1.4 PRODUCT HANDLING

A. **Delivery:** Deliver all specified items to the job-site in manufacturer's unbroken containers properly identified with manufacturer's name, product name and model number and safely store where directed by the City Engineer or Consultant until time for installation.

B. **Protection:** Use all means necessary to protect materials and/or items of this Section before and after installation and the work and materials of all other trades.

C. **Replacements:** In the event of damage to specified items immediately make all repairs and replacements necessary to the approval of the City Engineer or Consultant at no added cost to the City.

1.5 REFERENCES

A. ANSI A117 - 1986 Specifications for making buildings and facilities accessible to and useable by physically-handicapped people.

B. U.B.C. Chapters 5 and 33 Regulations for the handicapped.

C. Title 24, California Code of Regulations, Parts 2, 3 and 5.

D. ADA, Accessibilities Guidelines for Buildings and Facilities Federal Register Volume 56, Number 144, Rules and Regulations.

E. Fair Housing Amendments Act of 1988, Accessibilities Guidelines, Federal Register Volume 56, Number 44.

PART TWO - PRODUCTS

2.1 GENERAL

A. **Anchors and Fasteners:** Provide anchors and fasteners capable of developing a retaining force commensurate with the strength of the accessory to be mounted or installed and well suited for use with supporting construction. Where exposed fasteners are permitted, provide vandal proof type fasteners with finish matching the accessory item.

B. **Finish:** All accessory items shall have stainless steel satin finish.

2.2 TOILET ROOM ACCESSORIES (As Applicable)

A. **General:** Toilet room accessories shall be as indicated on the Contract Drawings, or if not so indicated, toilet room accessories shall be as specified hereinafter.

B. **Grab Bars:** Straight stainless steel bars with peened non-slip gripping surface and with two attachments.

1. On Wall Behind Toilet: Bobrick No. B-5507.

2. On Side Wall Adjacent to Toilet: Bobrick No. B-2606.

3. On Shower Wall: Bobrick No. B-62616.

C. **Combination Seat Cover Dispenser And Toilet Tissue Dispenser:** Bobrick No. B-3474, recessed unit dispenses 1000 seat covers and two rolls of toilet tissues.

D. **Framed Mirror:** Bobrick No. B-292-2430 with stainless steel frame and with

shelf to project out 5-inches and have 3/4-inch return edges or sizes indicated on the Contract Drawings.

E. **Soap Dish in Shower:** Bobrick No. B-665 recessed dish and bar, stainless steel with polished finish.

F. **Paper Towel Dispenser:** Bobrick No. B-263 surface mounted, type stainless steel with satin finish.

G. **Folding Shower Stall Seat:** Bobrick No. 5171 slotted phenolic right or left hand seat, color as selected from manufacturer's standard selections, stainless steel frame and mounting bracket with self locking mechanism and with slotted phenolic seat 32-inches wide projecting 23 inches out from wall when in level position and 18-inches from the floor.

H. **Shower Curtain Rod:** Bobrick No. B-207 Stainless Steel Rod with concealed mounting, 20 gauge rod, type 304 stainless steel with satin finish, 1-inch diameter with 1 5/8 inch diameter chrome plated polished brass flanges, rod length inches. Flanges attached to concealed wall brackets.

I. **Shower Curtain:** Bobrick No. 204-2, opaque matt white vinyl, of width to suit shower stall opening x 72 inches high, with heat sealed grommets along top edge of curtain at 6-inches on center and with side and bottom edges hemmed and fitted with 7 or more type 304 stainless steel hooks Bobrick No. 204-1 for 1-inch O.D. shower curtain rod.

J. **Soap Dispenser:** Bobrick No. B-88, surface mounted, stainless steel hood and translucent shatterproof liquid soap container.

K. **Waste Receptacle:** To be furnished and installed by the City.

L. **Sanitary Napkin-Tampon Vendor:** Bobrick No. B-2802, stainless steel construction, surface mounted type, 25-cent operation, holds 15 napkins and 21 tampons.

M. **Combination Seat Cover Dispenser, Napkin Disposal and Toilet Tissue Dispenser:** Bobrick No. B-3574, recessed type to fit within 4-inch deep x 16-inch wide x 29 2-inch wall opening, dispenses 1000 seat covers, 2 rolls of toilet tissues, constructed of 22 gauge type 304 stainless steel with satin finish, or Bobrick No. B-3579, same as specified above, surface mounted type.

N. **Towel Bar:** Bobrick No. B-674, 3/4-inch diameter bright polished stainless steel x 18-inch length for location on partition outside shower stall.

O. **Medicine Cabinet:**

1. Type: Hall-Mack No. P-1626 steel cabinet with hinged mirror (with chrome-plated trim) and three (3) glass shelves.

2. Finish: Vitreous porcelain enamel finish fused to the cabinet body.

2.3 OTHER MATERIALS

Provide other materials, not specifically described but required for a complete and proper installation, as selected by the Contractor subject to the City Engineer's or Consultant's approval.

PART THREE - EXECUTION

3.1 INSPECTION

Examine the areas and conditions under which Work of this Section will be installed. Correct detrimental conditions to the proper and timely completion of the work. Do not proceed until detrimental conditions have been corrected.

3.2 COORDINATION

Throughout construction of substrate surfaces, use all means necessary to ensure proper and adequate provisions for concealed support devices and for finished openings to receive Work of this Section.

3.3 INSTALLATION

A. General:

1. Locate accessories as indicated on the Contract Drawings or as otherwise directed by the City Engineer or the Consultant.

2. Securely attach accessories to adequate supports with concealed approved vandal - proof fasteners.

3. Install accessory items as per manufacturer's recommendations, mount flush and plumb with adjacent wall surfaces.

4. Installation and locations shall comply with State of California (CAL/ABL) California Architectural Barriers Laws and the ADA

(Americans with Disabilities Act).

5. Install each item in its proper location, firmly anchored into position, level and plumb, and in accordance with the manufacturer's recommendations.

B. **Adjustment:** Before final inspection, inspect each accessory item installation for rigid and secure installation. Take necessary adjustment action for rigid and secure installations.

(END OF SECTION)

SECTION 15015
BUILDING VALVES, GENERAL

PART 1 - GENERAL

1.1 RELATED DOCUMENTS

A. Drawings and general provisions of Contract, including General and Supplementary Conditions and Division 1 Specification sections, apply to this section.

B. Requirements of the following Division 15 Sections apply to this section:

1. "Basic Mechanical Requirements."

2. "Basic Mechanical Materials and Methods."

1.2 SUMMARY

A. This Section includes general duty valves common to most mechanical piping systems.

1. Special purpose valves are specified in individual piping system specifications.

B. Valve tags and charts are specified in Division 15 Section "MECHANICAL IDENTIFICATION."

1.3 SUBMITTALS

A. General: Submit the following in accordance with Conditions of Contract and Division 1 Specification Sections.

B. Product data, including body material, valve design, pressure and temperature classification, end connection details, seating materials, trim material and arrangement, dimensions and required clearances, and installation instructions.

1.4 QUALITY ASSURANCE

A. Single Source Responsibility: Comply with the requirements specified in Division 1 Section "MATERIALS AND EQUIPMENT," under "Source Limitations."

B. American Society of Mechanical Engineers (ASME) Compliance: Comply with ASME B31.9 for building services piping and ASME B31.1 for power piping.

C. Manufacturers Standardization Society of the Valve and Fittings Industry (MSS) Compliance: Comply with the various MSS Standard Practices referenced.

1.5 DELIVERY, STORAGE, AND HANDLING

A. Preparation For Transport: Prepare valves for shipping as follows:

1. Ensure valves are dry and internally protected against rust and corrosion.
2. Protect valve ends against damage to threads, flange faces, and weld-end preps.
3. Set valves in best position for handling. Set globe and gate valves closed to prevent rattling; set ball and plug valves open to minimize exposure of functional surfaces; set

butterfly valves closed or slightly open; and block swing check valves in either closed or open position.

B. Storage: Use the following precautions during storage:

1. Do not remove valve end protectors unless necessary for inspection; then reinstall for storage.
2. Protect valves from weather. Store valves indoors. Maintain valve temperature higher than the ambient dew point temperature. If outdoor storage is necessary, support valves off the ground or pavement in watertight enclosures.

C. Handling: Use a sling to handle valves whose size requires handling by crane or lift. Rig valves to avoid damage to exposed valve parts. Do not use handwheels and stems as lifting or rigging points.

PART 2 - PRODUCTS

2.1 MANUFACTURERS

A. Available Manufacturers: Subject to compliance with requirements, manufacturers offering products which may be incorporated in the work include, but are not limited to, those listed in valve schedule.

B. Manufacturer: Subject to compliance with requirements, provide products from one of the manufacturers listed in valve schedule.

2.2 VALVE FEATURES, GENERAL

A. Valve Design: Rising stem or rising outside screw and yoke stems.

1. Nonrising stem valves may be used where headroom prevents full extension of rising stems.

B. Pressure and Temperature Ratings: As scheduled and required to suit system pressures and temperatures.

C. Sizes: Same size as upstream pipe, unless otherwise indicated.

D. Operators: Provide the following special operator features:

1. Handwheels, fastened to valve stem, for valves other than quarter turn.

2. Lever handles, on quarter-turn valves 6-inch and smaller, except for plug valves. Provide plug valves with square heads; provide one wrench for every 10 plug valves.

E. Extended Stems: Where insulation is indicated or specified, provide extended stems arranged to receive insulation.

F. Bypass and Drain Connections: Comply with MSS SP-45 bypass and drain connections.

G. End Connections: As indicated in the valve specifications.

1. Threads: Comply with ANSI B1.20.1.

2. Flanges: Comply with ANSI B16.1 for cast iron, ANSI B16.5 for steel, and ANSI B16.24 for bronze valves.

3. Solder-Joint: Comply with ANSI B16.18.

a. Caution: Where soldered end connections are used, use solder having a melting point below 840 deg F for gate, globe, and check valves; below 421 deg F for ball valves.

2.3 GATE VALVES

A. Gate Valves, 2-Inch and Smaller: MSS SP-80; Class 150, body and bonnet of ASTM B 62 cast bronze; with threaded or solder ends, solid disc, copper-silicon alloy stem, brass packing gland, "Teflon" impregnated packing, and malleable iron handwheel. Provide Class 200 valves meeting the above where system pressure requires.

B. Gate Valves, 2-1/2-Inch and Larger: MSS SP-70; Class 200 iron body, bronze mounted, with body and bonnet conforming to ASTM A 126 Class B; with flanged ends, "Teflon" impregnated packing, and two-piece backing gland assembly.

C. Gate Valves - 2 Inch and Smaller:

MANUFACTURER	THREADED NRS	THREADED RS	SOLDER NRS	SOLDER RS
Crane	438	428	1701S	1700S
Grinnell	3000	3010	3000SJ	3010SJ
Nibco	T113	T111	S113	S111

D. Gate Valves - 2-1/2 Inch and Larger:

MANUFACTURER	OS&Y RS	NRS
Crane	465-1/2	461
Grinnell	6020A	6060A
Nibco	617-O	F-619

2.4 BALL VALVES

A. Ball Valves, 1 Inch and Smaller: Rated for 150 psi saturated steam pressure, 400 psi WOG pressure; two-piece construction; with bronze body conforming to ASTM B 62, standard (or regular) port, chrome-plated brass ball, replaceable "Teflon" or "TFE" seats and seals, blowout-proof stem, and vinyl-covered steel handle. Provide solder ends for condenser water, chilled water, and domestic hot and cold water service; threaded ends for heating hot water and low-pressure steam.

B. Ball Valves, 1-1/4-Inch to 2-Inch: Rated for 150 psi saturated steam pressure, 400 psi WOG pressure; 3-piece construction; with bronze body conforming to ASTM B 62, conventional port, chrome-plated brass ball, replaceable "Teflon" or "TFE" seats and seals, blowout proof stem, and vinyl-covered steel handle. Provide solder ends for condenser water, chilled water, and domestic hot and cold water service; threaded ends for heating hot water and low-pressure steam.

C. Ball Valves - 1 Inch and Smaller:

MANUFACTURER	THREADED ENDS	SOLDER ENDS

Crane	9302	9322
Grinnell	3500	3500SJ
Nibco	T-580	S-580

D. Ball Valves - 1-1/4 Inch to 2 Inch:

MANUFACTURER	THREADED ENDS	SOLDER ENDS
Conbraco (Apollo)	82-100	82-200
Grinnell	3810	3810SJ
Nibco	T-590-Y	S-590-Y

2.5 PLUG VALVES

A. Plug Valves, 2-Inch and Smaller: Rated at 150 psi WOG; bronze body, with straightaway pattern, square head, and threaded ends.

B. Plug Valves, 2-1/2-Inch and Larger: MSS SP-78; rated at 175 psi WOG; lubricated plug type, with semisteel body, single gland, wrench operated, and flanged ends.

C. Plug Valves – 2 Inch and Smaller:

1. Lunkenheimer: 454.

D. Plug Valves – 2-1/2 Inch and Larger:

1. Powell: 2201.

2.6 GLOBE VALVES

A. Globe Valves, 2-Inch and Smaller: MSS SP-80; Class 150; body and screwed bonnet of ASTM B 62 cast bronze; with threaded or solder ends, brass or replaceable composition disc, copper-silicon alloy stem, brass packing gland, "Teflon" impregnated packing, and malleable iron handwheel. Provide Class 200 valves meeting the above where system pressure requires.

B. Globe Valves, 2-1/2-Inch and Larger: MSS SP-85; Class 150 iron body and bolted bonnet conforming to ASTM A 126, Class B; with outside screw and yoke, bronze mounted, flanged ends, and "Teflon" impregnated packing, and two-piece backing gland assembly.

C. Globe Valves - 2 Inch and Smaller:

MANUFACTURER	CLASS 150 THREADED	CLASS 150 SOLDER	CLASS 150 THREADED
Crane	1	1310	17TF
Grinnell	3210	3210SJ	3240
Nibco	T-211-B	S-211-B	T-235-Y
	T-211-Y	S-211-Y	x

D. Globe Valves - 2-1/2 Inch and Larger:

MANUFACTURER	STRAIGHT BODY	ANGLE BODY
Crane	351	353
Grinnell	6200A	x
Nibco	F-718-B	F-818-B

Stockham	G-512	G-515

x means not available.

2.7 BUTTERFLY VALVES

A. Butterfly Valves, 2-1/2-Inch and Larger: MSS SP-67; rated at 200 psi; cast-iron body conforming to ASTM A 126, Class B. Provide valves with field replaceable EPDM sleeve, nickel-plated ductile iron disc (except aluminum bronze disc for valves installed in condenser water piping), stainless steel stem, and EPDM O-ring stem seals. Provide lever operators with locks for sizes 2 through 6 inches and gear operators with position indicator for sizes 8 through 24 inches. Provide lug or wafer type as indicated. Drill and tap valves on dead-end service or requiring additional body strength.

B. Butterfly Valves - 2-1/2 Inch and Larger:

1. The following are model numbers for wafer-type, with nickel-plated ductile-iron disc:

MANUFACTURER	LEVER	GEAR
Crane	12	12
Grinnell	WC-8209-7	WC-8202-7
Nibco	WD-20103	WD-20105

2.8 CHECK VALVES

A. Swing Check Valves, 2-Inch and Smaller: MSS SP-80; Class 150, cast-bronze body and cap conforming to ASTM B 62; with horizontal swing, Y-pattern, and bronze disc; and having threaded or solder ends. Provide valves capable of being reground while the valve remains in the line. Provide Class 200 valves meeting the above specifications, with threaded end connections, where system pressure requires or where Class 150 valves are not available.

B. Swing Check Valves, 2-1/2-Inch and Larger: MSS SP-71; Class 150 (Class 175 FM approved for fire protection piping systems), cast iron body and bolted cap conforming to ASTM A 126, Class B; horizontal swing, and bronze disc or cast-iron disc with bronze disc ring; and flanged ends. Provide valves capable of being refitted while the valve remains in the line.

C. Wafer Check Valves: Class 250, cast-iron body; with replaceable bronze seat, and non-slam design lapped and balanced twin bronze flappers and stainless steel trim and torsion spring. Provide valves designed to open and close at approximately one foot differential pressure.

D. Lift Check Valves, 2-Inch and Smaller: Class 150; cast-bronze body and cap conforming to ASTM B 62; horizontal or angle pattern, lift-type valve, with stainless steel spring, bronze disc holder with renewable "Teflon" disc, and threaded ends. Provide valves capable of being refitted and ground while the valve remains in the line.

E. Swing Check Valves - 2 Inch and Smaller:

MANUFACTURER	CLASS 150 THREADED ENDS	CLASS 200 SOLDER ENDS	THREADED ENDS
Crane	37	1342	137
Grinnell	3300	3300SJ	3320
Nibco	T-413	S-413	T-433

1. For grooved connections, use Victaulic Series 712.

F. Swing Check Valves - 2-1/2 Inch and Larger:

MANUFACTURER	CLASS 150	CLASS 175 OR 200
Crane	373	x
Grinnell	6300A	x
Jenkins	x	729
Kennedy	x	Fig. 126
Stockham	G-931	G-940

1. For grooved connections, use Victaulic Series 712.
2. x means not available.

G. Wafer Check Valves:

1. Center Line: CLC.
2. Stockham: WG970.
3. Victaulic: Series 710/711.

H. Lift Check Valves 2 Inch and Smaller:

MANUFACTURER	HORIZONTAL	ANGLE
Hammond	x	IB954
Jenkins	655-A	x
Lunkenheimer	233	x

x means not available.

I. Balance Valve: 1 inch and smaller.

1. Bell & Gossett pre-set control valve.

   a. Model # CB-3/4" set at 1.5 GPM.
   b. Model # CB-1" set at 3.0 GPM.

2. Flow Design Inc. approved equal.

3. Griswold Control MFG. approved equal.

PART 3 - EXECUTION

3.1 EXAMINATION

A. Examine valve interior through the end ports for cleanliness, freedom from foreign matter, and corrosion. Remove special packing materials, such as blocks used to prevent disc movement during shipping and handling.

B. Actuate valve through an open-close and close-open cycle. Examine functionally significant features, such as guides and seats made accessible by such actuation. Following examination, return the valve closure member to the shipping position.

C. Examine threads on both the valve and the mating pipe for form (i.e., out-of-round or local indentation) and cleanliness.

D. Examine mating flange faces for conditions that might cause leakage. Check bolting for proper size, length, and material. Check gasket material for proper size, material composition suitable for service, and freedom from defects and damage.

E. Prior to valve installation, examine the piping for cleanliness, freedom from foreign materials, and proper alignment.

F. Replace defective valves with new valves.

3.2 VALVE ENDS SELECTION

A. Select valves with the following ends or types of pipe/tube connections:

1. Copper Tube Size, 2-Inch and Smaller: Solder ends, except provide threaded ends for heating hot water service.

2. Steel Pipe Sizes, 2-Inch and Smaller: threaded or grooved end.
3. Steel Pipe Sizes 2-1/2 Inch and Larger: flanged.

3.3 VALVE INSTALLATIONS

A. General Application: Use gate, ball, and butterfly valves for shut-off duty; globe, ball, and butterfly for throttling duty. Refer to piping system specification sections for specific valve applications and arrangements.

B. Locate valves for easy access and provide separate support where necessary.

C. Install valves and unions for each fixture and item of equipment arranged to allow equipment removal without system shutdown. Unions are not required on flanged devices.

D. Install valves in horizontal piping with stem at or above the center of the pipe.

E. Install valves in a position to allow full stem movement.

F. Installation of Check Valves: Install for proper direction of flow as follows:

1. Swing Check Valves: Horizontal position with hinge pin level.
2. Lift Check Valve: With stem upright and plumb.

3.4 SOLDER CONNECTIONS

A. Cut tube square and to exact lengths.

B. Clean end of tube to depth of valve socket with steel wool, sand cloth, or a steel wire brush to a bright finish. Clean valve socket in same manner.

C. Apply proper soldering flux in an even coat to inside of valve socket and outside of tube.

D. Open gate and globe valves to full open position.

E. Remove the cap and disc holder of swing check valves having composition discs.

F. Insert tube into valve socket, making sure the end rests against the shoulder inside valve. Rotate tube or valve slightly to ensure even distribution of the flux.

G. Apply heat evenly to outside of valve around joint until solder will melt upon contact. Feed solder until it completely fills the joint around tube. Avoid hot spots or overheating valve. Once the solder starts cooling, remove excess amounts around the joint with a cloth or brush.

3.5 THREADED CONNECTIONS

A. Note the internal length of threads in valve ends, and proximity of valve internal seat or wall, to determine how far pipe should be threaded into valve.

B. Align threads at point of assembly.

C. Apply appropriate tape or thread compound to the external pipe threads (except where dry seal threading is specified).

D. Assemble joint, wrench tight. Wrench on valve shall be on the valve end into which the pipe is being threaded.

3.6 FLANGED CONNECTIONS

A. Align flange surfaces parallel.

B. Assemble joints by sequencing bolt tightening to make initial contact of flanges and gaskets as flat and parallel as possible. Use suitable lubricants on bolt threads. Tighten bolts gradually and uniformly with a torque wrench.

C. For dead-end service, butterfly valves require flanges both upstream and downstream for proper shutoff and retention.

3.7 FIELD QUALITY CONTROL

A. Tests: After piping systems have been tested and put into service, but before final adjusting and balancing, inspect valves for leaks. Adjust or replace packing to stop leaks; replace valves if leak persists.

3.8 ADJUSTING AND CLEANING

A. Cleaning: Clean mill scale, grease, and protective coatings from exterior of valves and prepare valves to receive finish painting or insulation.

END OF SECTION

SECTION 15020
NOISE, VIBRATION AND SEISMIC CONTROL

PART 1 -- GENERAL

1.1 THE REQUIREMENT

A. This section includes the minimum control requirements for noise, vibration and seismic forces for piping, ductwork, and equipment.

1.2 RELATED WORK SPECIFIED ELSEWHERE

A. The WORK of the following Sections applies to the WORK of this Section. Other Sections of the Specifications, not referenced below, shall also apply to the extent required for proper performance of this WORK.

1. Section 11000 Equipment General Provisions.

2. Section 15340 Hangers and Supports.

1.3 REFERENCED PUBLICATIONS

A. The following publications form a part of this specification to the extent indicated by the references thereto:

1. Acoustical Society of America publication ASA 47, Sound Level Meters.

2. American Society of Mechanical Engineers publication PTC 36, Measurement of Industrial Sound.

3. ANSI S1.2, Physical measurement of Sound.

1.4 SUBMITTALS

A. Submittals shall conform to Section 01330, Shop Drawings/Submittals; Section 11000, Equipment General Provisions; and shall also contain the following:

1. Complete itemized listing of the ductwork, piping and equipment to be isolated, the isolator type, manufacturer and model numbers selected, isolator loading and deflection, wire diameter and number of coils in springs and a reference to the specific drawings indicating items to be isolated and isolator details.

2. Shop drawings of each type of isolation detail required, including catalog cuts and data sheets for each type of isolator and isolation material.

3. Torsional and lateral vibration analysis shall be provided for each item of the following listed equipment. The analysis shall be performed, stamped, and signed by a mechanical engineer registered in the state of California and experienced in this type of work. The submittal shall be approved by the ENGINEER prior to fabrication of equipment.

a. Blowers and compressors with drives of 100 horsepower and over.

b. Steam turbine generator units.

c. Vertical pumps with universal joints and extended shafts.

d. Other equipment where specified.

4. The torsional natural frequency of the drive train must be avoided by 25 percent by any exciting frequency of the equipment, throughout the entire operating range. Provide documentation to support this requirement. Such documentation shall be based on calculations or shop tests.

5. Detailed description of equipment vibration field test procedures and equipment.

6. CONTRACTOR's certification of compliance to noise requirements for each item of equipment to be furnished on the project except equipment for which a factory noise test is performed.

7. Certified copies of factory noise tests on the Equipment Noise Data Sheets attached hereto.

8. Certified test reports for field noise tests and field vibration tests including detailed procedures and equipment used, test results, and required corrective action.

1.5 PROJECT REQUIREMENTS

A. Noise Restrictions and Control

1. Unless otherwise specified, the maximum permissible noise level for a complete piece of equipment located either within or outside a structure shall not exceed 85 dBA at 3 feet at any point. A complete piece of equipment includes the driver, driven equipment and all other attachments that may produce noise.

2. The CONTRACTOR shall certify that all equipment furnished under this contract shall not exceed 85 dBA at 3 feet under the conditions specified herein.

3. An “Equipment Noise Data Sheet“ (see Appendix “B” attached to this Section) shall be submitted to the ENGINEER for all equipment.

4. Certain items of equipment determined to be critical for noise control shall meet more stringent noise levels as specified in the individual equipment specification and shall be subject to factory and field tests as specified herein. These critical items of equipment include the following:

a. Fans/Blowers

b. Compressors

c. Other equipment where specified

B. Mechanical Vibration: Mechanical equipment, unless otherwise specified, shall operate at, or below, a peak amplitude vibration level of 0.0392 inches per second, defined as "GOOD" or better on the “General Machinery Vibration Severity Chart”, Appendix “A” of this Section. In no case shall peak amplitude vibration exceed the maximum allowable level recommended by the manufacturer and approved by the ENGINEER.

C. Seismic Control:

1. Equipment Supports

Except where otherwise specified, all equipment supports, anchors and restrainers shall be suitable for a minimum seismic force of 0.3 of gravity in addition to static and dynamic loads and shall conform to UBC Seismic Zone 4 requirements.

2. Piping Supports

Where the piping system is subject to shock loads, such as seismic disturbances or thrusts imposed by the actuation of safety valves, hanger design shall include hydraulic shock suppressors, Grinnell Fig. 200, Basic Engineers Model BE4-10, or equal.

1.6 EQUIPMENT NOISE TESTS

A. Equipment Noise Levels: Noise level measurements shall be taken on complete pieces of equipment including the driver, driven equipment and all other attachments that may produce noise. The manufacturer's noise report shall clearly indicate the test conditions including equipment technical data and acoustic measurement procedures while conducting the test. These conditions shall also be the same when the equipment is installed at the jobsite. The A-weighted and octave band spectrum levels shall be required in these measurements. The measurements shall be performed at a 3 foot distance on an imaginary bounding surface around the equipment. The dimensions of these bounding surfaces and measurement locations must be clearly identified. Sufficient measurements shall be taken on all points around the equipment such that all directional radiation characteristics are identified. The tests shall be performed in an open space, or if not possible, then the test environment shall be clearly described.

B. Factory Test and Shipment of Equipment:

1. A noise test shall be performed at the factory on the items of equipment identified as critical for noise control. Where identical items of equipment are being furnished, one test will be satisfactory unless otherwise specified. The ENGINEER may be present to witness the test. The CONTRACTOR shall inform the ENGINEER at least two weeks in advance of the date and time of the noise test. The equipment shall not be shipped until the noise test is performed and the equipment meets the specified noise levels. If the tests show that the equipment exceeds the specified maximum permissible noise limits, the CONTRACTOR shall modify the equipment at no additional cost to the CITY until noise limits are met. The modifications to the equipment shall not interfere with routine operations and maintenance and shall be acceptable to the ENGINEER. Additional tests shall be performed at the CONTRACTOR's expense until the specified noise levels are met.

2. The CITY shall be reimbursed by the CONTRACTOR for all costs of any required additional visits by the ENGINEER to witness subsequent tests.

C. Field Noise Test: A field noise test, as specified herein, shall be performed by the CONTRACTOR for all equipment furnished under this contract, or equipment furnished by the CITY for installation under this contract. After delivery and installation of the equipment, the CONTRACTOR, at his own expense, shall perform a field noise test in the presence of the ENGINEER, to demonstrate that the equipment meets the specified noise levels in the plant environment, including equipment furnished by the CITY. If the equipment furnished by the CONTRACTOR fails to meet the specified noise limits, the CONTRACTOR shall take the necessary steps to reduce the noise to the specified levels. All mitigation methods, design and procedures shall be acceptable to the ENGINEER. All costs of required mitigation for critical equipment will be paid by the CITY provided the equipment met the specified noise levels during the factory test. For noncritical equipment, where factory tests were not required, the costs of required mitigation to meet the specified noise levels shall be the responsibility of the CONTRACTOR.

D. Reporting of Equipment Noise Level Factory Tests:

1. All noise measurements shall be made in relation to a reference pressure level of 0.0002 microbar. The measurements shall be made with a Type I sound level meter per ASA 47.

2. All noise levels shall be reported on a copy of the “Equipment Noise Data Sheet” attached as Appendix “B” to this section. If the data sheet is not complete, including the manufacturer's guarantee clause, or if the noise level reported exceeds the maximum allowable noise level specified, it will be cause for rejection of the equipment.

PART 2 -- PRODUCTS

2.1 ISOLATORS FOR FLOOR MOUNTED EQUIPMENT

A. Type A: Double deflection neoprene mountings shall have a minimum static deflection of 0.35 inches. All metal surfaces shall be neoprene covered to avoid corrosion and have friction pads on both top and bottoms, so they need not be bolted to the floor. Mountings shall be Type ND or rails Type DNR.

B. Type B: Spring type isolators shall be free standing and laterally stable without any housing and include 1/4-inch neoprene acoustical friction pads between the baseplate and the support. All mountings shall have valves leveling bolts rigidly bolted to the equipment. Spring diameters shall be not less than 80 percent of spring height at rated load. Springs shall have a minimum additional travel to solid equal to 50 percent of the rated deflection. Mounting shall be Type SLF.

C. Type C: Equipment with operating weight different from the installed weight shall be mounted on spring mountings with a housing that includes vertical limit stops to prevent spring extension when weight is removed. A minimum clearance of 1/2-inch shall be maintained around restraining bolts and between the housing and the spring so as not to interfere with the spring action. Limit stops shall be out of contact during normal operations. Mountings shall be Type SLR.

D. Type Y: Curb mounted rooftop equipment shall be mounted on vibration isolation bases that fit over the roof curb and under the isolated equipment. The aluminum top member shall overlap the bottom member a minimum of 2" inches to provide water runoff independent of the seal. The aluminum members shall house cadmium plated springs having a one-inch minimum deflection. Springs shall have a minimum additional travel to solid equal to 50 percent of deflection. Spring diameters shall be no less than 0.8 of the spring heights at rated load. Wind resistance shall be provided by means of resilient snubbers in the corners with a minimum clearance of 1/4-inch. Bases shall consist of continuous closed cell sponge materials both above and below the base and a waterproof flexible neoprene connection joining the outside perimeter of the aluminum members.

E. Type Z: Requirements shall be similar to Type Y with the additional requirement that 80 percent of the weight of the equipment shall be taken by 4 springs having a minimum deflection of 3-1/2 inches that are sealed on steel bridging members passing over the top of the unit. These springs shall be cadmium plated. Springs shall be attached by means of one-inch threaded rods with clevises.

2.2 ISOLATORS FOR SUSPENDED EQUIPMENT

A. Type D: Vibration hangers shall contain a steel spring and a 0.3-inch deflection neoprene element in series. The neoprene element shall be molded with a rod isolation bushing that passes through the hanger box. Spring diameters and hanger box lower hole sizes shall be large enough to permit the hanger rod to swing through a 30-degree arc before contacting the hole. Hangers shall be Type 30N. Springs shall have a minimum additional travel equal to 50 percent of the rated deflection.

B. Type E: Vibration hangers shall be similar to Type D but shall be pre-compressed to the rated deflection and be designed with a release mechanism to free the spring. Hangers shall be Type PC30N.

C. Type F: Hangers shall be similar to Type D except that the steel spring shall be located in a neoprene cup manufactured with a grommet and having a steel washer which will evenly distribute the load on the neoprene. Hangers shall be Type W30.

2.3 THRUST RESTRAINTS

A. Type X: Thrust restraints shall be provided for air handling equipment as specified. Each restraint shall include a spring element in series with a neoprene pad. The spring element shall allow for maximum 1/4-inch movement at start and stop. Horizontal restraints shall be symmetrical on either side of the equipment and shall be Type WB.

B. For earthquake protection, the spring mounts shall be furnished with rubber snubbers, or all restraints shall be designed based on the acceleration levels of 0.5g in any horizontal direction and 0.4g in any vertical direction as applied at the center of gravity and shall conform to UBC Seismic Zone 4 requirements.

PART 3 -- EXECUTION

3.1 PENETRATION ISOLATION

A. For piping and ductwork isolation, penetration points shall be sleeved or otherwise formed to allow passage of piping or ductwork and maintain a minimum of 3/4-inch and maximum of 1-1/4-inch clearance around the outside surfaces. This clearance space shall be tightly packed with glass fiber, and caulked airtight. All penetrations through fire rated walls, soffits, or floors shall be fitted with an approved firestop assembly.

3.2 INSTALLATION OF ISOLATORS AND APPURTENANCES

A. Isolators and appurtenances shall be installed in accordance with the approved shop drawings and the manufacturer's recommended installation instructions.

3.3 EQUIPMENT VIBRATION TESTS

A. Field vibration tests shall be conducted at no additional cost to the CITY on specified items of equipment, or for which a torsional and lateral vibration analysis are required. Field vibration tests shall be performed under the direction of the ENGINEER who prepared the torsional and lateral vibration analysis. Tests should conform to the approved procedures based on applicable ANSI, ASA and ASME standards. If the vibration exceeds the specified requirements, corrective measures and retesting shall be provided at no additional cost to the CITY until the specified requirements are achieved.

B. The ENGINEER may direct vibration tests on certain items of equipment in addition to those specified above. Such tests shall be performed by the CONTRACTOR at the CITY's expense unless the equipment fails to meet the specified requirements, in which case the costs for said test and any retests shall be borne by the CONTRACTOR.

(END OF SECTION)

SECTION 15050
BASIC MECHANICAL MATERIALS AND METHODS

PART 1 - GENERAL

1.1 RELATED DOCUMENTS

A. Drawings and general provisions of Contract, including General and Supplementary Conditions and Division 1 Specification Sections, apply to this Section.

1.2 SUMMARY

A. This Section includes the following basic mechanical materials and methods to complement other Division 15 Sections.

1. Piping materials and installation instructions common to most piping systems.

2. Concrete equipment base construction requirements.

3. Equipment nameplate data requirements.

4. Labeling and identifying mechanical systems and equipment is specified in Division 15, Section 15390 "Building Mechanical Identification."

5. Field-fabricated metal and wood equipment supports.

6. Installation requirements common to equipment specification sections.

7. Cutting and patching.

8. Touch-up painting and finishing.

B. Pipe and pipe fitting materials are specified in piping system Sections.

1.3 DEFINITIONS

A. Pipe, pipe fittings, and piping include tube, tube fittings, and tubing.

B. Finished Spaces: Spaces other than mechanical and electrical equipment rooms, furred spaces, pipe and duct shafts, unheated spaces immediately below the roof, spaces above ceilings, unexcavated spaces, crawl spaces, and tunnels.

C. Exposed Interior Installations: Exposed to view indoors. Examples include finished occupied spaces and mechanical equipment rooms.

D. Exposed Exterior Installations: Exposed to view outdoors, or subject to outdoor ambient temperatures and weather conditions. Examples include rooftop locations.

E. Concealed Interior Installations: Concealed from view and protected from physical contact by building occupants. Examples include above ceilings and in duct shafts.

F. Concealed Exterior Installations: Concealed from view and protected from weather conditions and physical contact by building occupants, but subject to outdoor ambient temperatures. Examples include installations within unheated shelters.

1.4 SUBMITTALS

A. General: Submit the following in accordance with Conditions of Contract and Division 1 Specifications Sections.

B. Product data for following piping specialties:

1. Mechanical sleeve seals.

2. Identification materials and devices.

C. Samples of color, lettering style, and other graphic representation required for each identification material and device.

D. Shop drawings detailing fabrication and installation for metal and wood supports and anchorage for mechanical materials and equipment.

E. Coordination drawings for access panel and door locations.

F. Prepare coordination drawings according to Division 1, Section 01330 “Shop Drawings/Submittals" to a 1/4 inch equals 1 foot scale or larger. Detail major elements, components, and systems of mechanical equipment and materials in relationship with other systems, installations, and building components. Show space requirements for installation and access. Show where sequence and coordination of installations are important to the efficient flow of the Work. Include the following:

1. Proposed locations of piping, ductwork, equipment, and materials. Include the following:

a. Planned piping layout, including valve and specialty locations and valve stem movement.
b. Planned duct systems layout, including elbows radius and duct accessories.
c. Clearances for installing and maintaining insulation.
d. Clearances for servicing and maintaining equipment, including space for equipment disassembly required for periodic maintenance.
e. Equipment service connections and support details.
f. Exterior wall and foundation penetrations.
g. Fire-rated wall and floor penetrations.
h. Sizes and location of required concrete pads and bases.

2. Scheduling, sequencing, movement, and positioning of large equipment into the building during construction.

3. Floor plans, elevations, and details to indicate penetrations in floors, walls, and ceilings and their relationship to other penetrations and installations.

4. Reflected ceiling plans to coordinate and integrate installations, air outlets and inlets, light fixtures, communication systems components, sprinklers, and other ceiling-mounted items.

G. Welder certificates signed by Contractor certifying that welders comply with requirements specified under "Quality Assurance" Article of this Section.

1.5 QUALITY ASSURANCE

A. Qualify welding processes and operators for piping according to ASME "Boiler and Pressure Vessel Code," Section IX, "Welding and Brazing Qualifications."

1. Comply with provisions of ASME B31 Series "Code for Pressure Piping."

2. Certify that each welder has passed AWS qualification tests for the welding processes involved and that certification is current.

B. ASME A13.1 for lettering size, length of color field, colors, and viewing angles of identification devices.

C. Equipment Selection: Equipment of greater or larger power, dimensions, capacities, and ratings may be furnished provided such proposed equipment is approved in writing and connecting mechanical and electrical services, circuit breakers, conduit, motors, bases, and equipment spaces are increased. No additional costs will be approved for these increases, if larger equipment is approved. If minimum energy ratings or efficiencies of the equipment are specified, the equipment must meet the design requirements and commissioning requirements.

1.6 DELIVERY, STORAGE, AND HANDLING

A. Deliver pipes and tubes with factory-applied end-caps. Maintain end-caps through shipping, storage, and handling to prevent pipe-end damage and prevent entrance of dirt, debris, and moisture.

B. Protect stored pipes and tubes from moisture and dirt. Elevate above grade. When stored inside, do not exceed structural capacity of the floor.

C. Protect flanges, fittings, and piping specialties from moisture and dirt.

1.7 SEQUENCING AND SCHEDULING

A. Coordinate mechanical equipment installation with other building components.

B. Arrange for chases, slots, and openings in building structure during progress of construction, to allow for mechanical installations.

C. Coordinate the installation of required supporting devices and set sleeves in poured-in-place concrete and other structural components, as they are constructed.

D. Sequence, coordinate, and integrate installations of mechanical materials and equipment for efficient flow of the Work. Coordinate installation of large equipment requiring positioning prior to closing in the building.

E. Coordinate connection of mechanical systems with exterior underground and overhead utilities and services. Comply with requirements of governing regulations, franchised service companies, and controlling agencies.

F. Coordinate requirements for access panels and doors where mechanical items requiring access are concealed behind finished surfaces.

G. Coordinate installation of identifying devices after completion of covering and painting, where devices are applied to surfaces. Install identifying devices prior to installation of acoustical ceilings and similar concealment.

PART 2 - PRODUCTS

2.1 PIPE AND PIPE FITTINGS

A. Refer to individual piping system specification Sections for pipe and fitting materials and joining methods.

B. Pipe Threads: ASME B1.20.1 for factory-threaded pipe and pipe fittings.

2.2 JOINING MATERIALS

A. Refer to individual piping system specification Sections in Division 15 for special joining materials not listed below.

B. Pipe Flange Gasket Materials: Suitable for the chemical and thermal conditions of the piping system contents.

1. ASME B16.21, nonmetallic, flat, asbestos-free, 1/8-inch maximum thickness, except where thickness or specific material is indicated.

a. Full-Face Type: For flat-face, Class 125 cast-iron and cast-bronze flanges.

b. Narrow-Face Type: For raised-face, Class 250 cast-iron and steel flanges.

2. ASME B16.20 for grooved, ring-joint, steel flanges.

3. AWWA C110, rubber, flat face, 1/8-inch thick, except where other thickness is indicated; and full-face or ring type, except where type is indicated.

C. Flange Bolts and Nuts: ASME B18.2.1, carbon steel, except where other material is indicated.

D. Solder Filler Metal: ASTM B 32.

E. Flanged, Ductile-Iron Pipe Gasket, Bolts, and Nuts: AWWA C110, rubber gasket, carbon steel bolts and nuts.

F. Couplings: Iron body sleeve assembly, fabricated to match outside diameters of plain-end, pressure pipes.

1. Sleeve: ASTM A 126, Class B, gray iron.

2. Followers: ASTM A 47, Grade 32510 or ASTM A 536 ductile iron.

3. Gaskets: Rubber.

4. Bolts and Nuts: AWWA C111.

5. Finish: Enamel paint.

G. Copper tubing:

1. Joining for copper pipes 4 - inch and smaller; no lead, City of Los Angeles (approved type) for all copper pipe above ground under.

2. Sil-Fos silver alloy for pipe underground and for piping above ground having a continuous street main pressure of 100-lbs or more.

3. Wire solder only; paste mixed solder not permitted.

H. Flux: As recommended by manufacturer of solder.

2.3 PIPING SPECIALTIES

A. Escutcheons: Manufactured wall, ceiling, and floor plates; deep-pattern type, where required to conceal protruding fittings and sleeves.

1. Inside Diameter: Closely fit around pipe, tube, and insulation of insulated piping.

2. Outside Diameter: Completely cover opening.

3. Cast Brass: One-piece, with set-screw.

a. Finish: Rough brass.
b. Finish: Polished chrome plate.

4. Cast Brass: Split casting, with concealed hinge and set-screw.

a. Finish: Rough brass.
b. Finish: Polished chrome plate.

B. Dielectric Fittings: Assembly or fitting having insulating material isolating joined dissimilar metals, to prevent galvanic action and stop corrosion.

1. Description: Combination of copper alloy and ferrous; threaded, solder, plain, and weld neck end types and matching piping system materials.

2. Insulating Material: Suitable for system fluid, pressure, and temperature.

3. Dielectric Unions: Factory-fabricated, union assembly, for 250 psig minimum working pressure at 180 deg F temperature.

4. Dielectric Flanges: Factory-fabricated, companion-flange assembly, for 150 or 300 psig minimum pressure to suit system pressures.

5. Dielectric-Flange Insulation Kits: Field-assembled, companion-flange assembly, full-face or ring type. Components include neoprene or phenolic gasket, phenolic or polyethylene bolt sleeves, phenolic washers, and steel backing washers.

a. Provide separate companion flanges and steel bolts and nuts for 150- or 300-psig minimum working pressure to suit system pressures.

6. Dielectric Couplings: Galvanized-steel coupling, having inert and non-corrosive, thermoplastic lining, with threaded ends and 300 psig minimum working pressure at 225 deg F temperature.

7. Dielectric Nipples: Electroplated steel nipple, having inert and non-corrosive, thermoplastic lining, with combination of plain, threaded, or grooved end types and 300 psig working pressure at 225 deg F temperature.

C. Mechanical Sleeve Seals: Modular, watertight, mechanical type. Components include interlocking synthetic rubber links shaped to continuously fill annular space between pipe and sleeve. Connecting bolts and pressure plates cause rubber sealing elements to expand when tightened.

D. Sleeves: The following materials are for wall, floor, slab, and roof penetrations:

1. Steel Sheet-Metal: 24 gage or heavier, galvanized sheet metal, round tube closed with welded longitudinal joint.

2. Steel Pipe: ASTM A 53, Type E, Grade A, Schedule 40, galvanized, plain ends.

3. Cast-Iron: Cast or fabricated "wall pipe" equivalent to ductile-iron pressure pipe, having plain ends and integral water stop, except where other features are specified.

4. Wall Penetration Systems: Wall sleeve assembly, consisting of housing, gaskets, and pipe sleeve, with 1 mechanical-joint end conforming to AWWA C110 and 1 plain pipe-sleeve end.

   a. Penetrating Pipe Deflection: 5 percent without leakage.
   b. Housing: Ductile-iron casting having waterstop and anchor ring, with ductile-iron gland, steel studs and nuts, and rubber gasket conforming to AWWA C111, of housing and gasket size as required to fit penetrating pipe.
   c. Pipe Sleeve: AWWA C151, ductile-iron pipe.
   d. Housing-to-Sleeve Gasket: Rubber or neoprene, push-on type, of manufacturer's design.

5. Cast-Iron Sleeve Fittings: Commercially-made, sleeve having integral clamping flange, with clamping ring, bolts, and nuts for membrane flashing.

   a. Underdeck Clamp: Clamping ring with set-screws.

2.4 IDENTIFYING DEVICES AND LABELS

A. General: Manufacturer's standard products of categories and types required for each application as referenced in other Division 15 Sections. Where more than single type is specified for listed application, selection is Installer's option, but provide single selection for each product category.

B. Equipment Nameplates: Metal nameplate with operational data engraved or stamped; permanently fastened to equipment.

1. Data: Manufacturer, product name, model number, serial number, capacity, operating and power characteristics, labels of tested compliances, and similar essential data.

2. Location: An accessible and visible location.

C. Stencils: Standard stencils, prepared for required applications with letter sizes conforming to recommendations of ASME A13.1 for piping and similar applications, but not less than 1-1/4-inches-high letters for ductwork and not less than 3/4-inch-high letters for access door signs and similar operational instructions.

1. Material: Fiberboard.

2. Material: Brass.

3. Stencil Paint: Standard exterior type stenciling enamel; black, except as otherwise indicated; either brushing grade or pressurized spray-can form and grade.

4. Identification Paint: Standard identification enamel of colors indicated or, if not otherwise indicated for piping systems, comply with ASME A13.1 for colors.

D. Plastic Duct Markers: Manufacturer's standard laminated plastic, color coded duct markers. Conform to following color code:

1. Green: Cold air.

2. Yellow: Hot air.

3. Yellow/Green: Supply air.

4. Blue: Exhaust, outside, return, and mixed air.

5. For hazardous exhausts, use colors and designs recommended by ASME A13.1.

6. Nomenclature: Include following:

a. Direction of air flow.
b. Duct service (supply, return, exhaust, etc.).

E. Plastic Equipment Markers: Laminated-plastic, color-coded equipment markers. Conform to following color code:

1. Green: Cooling equipment and components.

2. Yellow: Heating equipment and components.

3. Yellow/Green: Combination cooling and heating equipment and components.

4. Brown: Energy reclamation equipment and components.

5. Blue: Equipment and components that do not meet any of above criteria.

6. For hazardous equipment, use colors and designs recommended by ASME A13.1.

7. Nomenclature: Include following, matching terminology on schedules as closely as possible:

a. Name and plan number.
b. Equipment service.
c. Design capacity.
d. Other design parameters such as pressure drop, entering and leaving conditions, and rpm.

8. Size: Approximate 2-1/2 by 4 inches for control devices, dampers, and valves; and 4-1/2 by 6 inches for equipment.

F. Lettering and Graphics: Coordinate names, abbreviations, and other designations used in mechanical identification, with corresponding designations indicated. Use numbers,

lettering, and wording indicated for proper identification and operation/maintenance of mechanical systems and equipment.

1. Multiple Systems: Where multiple systems of same generic name are indicated, provide identification that indicates individual system number as well as service such as "Boiler No. 3" and "Air Supply No. 1H."

PART 3 - EXECUTION

3.1 PIPING SYSTEMS - COMMON REQUIREMENTS

A. General: Install piping as described below, except where system Sections specify otherwise. Individual piping system specification Sections in Division 15 specify piping installation requirements unique to the piping system.

B. General Locations and Arrangements: Drawings (plans, schematics, and diagrams) indicate general location and arrangement of piping systems. Indicated locations and arrangements were used to size pipe and calculate friction loss, expansion, pump sizing, and other design considerations. Install piping as indicated, except where deviations to layout are approved on coordination drawings.

C. Install piping at indicated slope.

D. Install components having pressure rating equal to or greater than system operating pressure.

E. Install piping in concealed interior and exterior locations, except in equipment rooms and service areas.

F. Install piping free of sags and bends.

G. Install exposed interior and exterior piping at right angles or parallel to building walls. Diagonal runs are prohibited, except where indicated.

H. Install piping tight to slabs, beams, joists, columns, walls, and other building elements. Allow sufficient space above removable ceiling panels to allow for ceiling panel removal.

I. Install piping to allow application of insulation plus 1-inch clearance around insulation.

J. Locate groups of pipes parallel to each other, spaced to permit valve servicing.

K. Install fittings for changes in direction and branch connections.

L. Install couplings according to manufacturer's printed instructions.

M. Install pipe escutcheons for pipe penetrations of concrete and masonry walls, wall board partitions, and suspended ceilings according to the following:

1. Chrome-Plated Piping: Cast-brass, one-piece, with set-screw, and polished chrome-plated finish. Use split-casting escutcheons where required, for existing piping.

2. Uninsulated Piping Wall Escutcheons: Cast-brass or stamped-steel, with set-screw.

3. Uninsulated Piping Floor Plates in Utility Areas: Cast-iron floor plates.

4. Insulated Piping: Cast-brass or stamped-steel, with concealed hinge, spring clips, and chrome-plated finish.

5. Piping in Utility Areas: Cast-brass or stamped-steel, with set-screw or spring clips.

N. Sleeves are not required for core drilled holes.

O. Install sleeves for pipes passing through concrete and masonry walls, concrete floor and roof slabs, and where indicated.

P. Install sleeves for pipes passing through concrete and masonry walls, gypsum-board partitions, concrete floor and roof slabs, and where indicated.

1. Cut sleeves to length for mounting flush with both surfaces.

a. Exception: Extend sleeves installed in floors of mechanical equipment areas or other wet areas 2 inches above finished floor level. Extend cast-iron sleeve fittings below floor slab as required to secure clamping ring where specified.

2. Build sleeves into new walls and slabs as work progresses.

3. Install large enough sleeves to provide 1/4-inch annular clear space between sleeve and pipe or pipe insulation. Use the following sleeve materials:

a. Steel Pipe Sleeves: For pipes smaller than 6 inches.
b. Steel Sheet-Metal Sleeves: For pipes 6 inches and larger, penetrating gypsum-board partitions.
c. Cast-Iron Sleeve Fittings: For floors having membrane waterproofing. Secure flashing between clamping flanges. Install section of cast-iron soil pipe to extend sleeve to 2 inches above finished floor level. Flashing is specified in Division 7 Section "Flashing and Sheet Metal."

1) Seal space outside of sleeve fittings with nonshrink, nonmetallic grout.

4. Except for below-grade wall penetrations, seal annular space between sleeve and pipe or pipe insulation, using elastomeric joint sealants specified in Division 7 Section "Joint Sealants."

Q. Above Grade, Exterior Wall, Pipe Penetrations: Seal penetrations using sleeves and mechanical sleeve seals. Size sleeve for 1-inch annular clear space between pipe and sleeve for installation of mechanical seals.

1. Install steel pipe for sleeves smaller than 6 inches.
2. Install cast-iron "wall pipes" for sleeves 6 inches and larger.
3. Assemble and install mechanical seals according to manufacturer's printed instructions.

R. Below Grade, Exterior Wall, Pipe Penetrations: Install cast-iron "wall pipes" for sleeves. Seal pipe penetrations using mechanical sleeve seals. Size sleeve for 1-inch annular clear space between pipe and sleeve for installation of mechanical seals.

S. Below Grade, Exterior Wall, Pipe Penetrations: Install ductile-iron wall penetration system sleeves according to manufacturer's printed installation instructions.

T. Fire Barrier Penetrations: Maintain indicated fire rating of walls, partitions, ceilings, and floors at pipe penetrations. Seal pipe penetrations with firestopping sealant material. Firestopping materials are specified in Division 7.

U. Verify final equipment locations for roughing-in.

V. Refer to equipment specifications in other Sections of these Specifications for roughing-in requirements.

W. Piping Joint Construction: Join pipe and fittings as follows and as specifically required in individual piping system specification Sections.

1. Ream ends of pipes and tubes and remove burrs. Bevel plain ends of steel pipe.

2. Remove scale, slag, dirt, and debris from inside and outside of pipe and fittings before assembly.

3. Soldered Joints: Construct joints according to AWS "Soldering Manual," Chapter 22 "The Soldering of Pipe and Tube."

4. Brazed Joints: Construct joints according to AWS "Brazing Manual," Chapter 28 "Pipe and Tube."

5. Threaded Joints: Thread pipe with tapered pipe threads according to ASME B1.20.1. Cut threads full and clean using sharp dies. Ream threaded pipe ends to remove burrs and restore full inside diameter. Join pipe fittings and valves as follows:

   a. Note the internal length of threads in fittings or valve ends, and proximity of internal seat or wall, to determine how far pipe should be threaded into joint.
   b. Apply appropriate tape or thread compound to external pipe threads (except where dry seal threading is specified).
   c. Align threads at point of assembly.
   d. Tighten joint with wrench. Apply wrench to valve end into which pipe is being threaded.
   e. Damaged Threads: Do not use pipe or pipe fittings having threads that are corroded or damaged. Do not use pipe sections that have cracked or open welds.

6. Welded Joints: Construct joints according to AWS D10.12 "Recommended Practices and Procedures for Welding Low Carbon Steel Pipe" using qualified processes and welding operators according to "Quality Assurance" Article.

7. Flanged Joints: Align flange surfaces parallel. Select appropriate gasket material, size, type, and thickness for service application. Install gasket concentrically positioned. Assemble joints by sequencing bolt tightening to make initial contact of flanges and gaskets as flat and parallel as possible. Use suitable lubricants on bolt threads. Tighten bolts gradually and uniformly using torque wrench.

X. Piping Connections: Except as otherwise indicated make piping connections as specified below.

1. Install unions, in piping 2 inches and smaller, adjacent to each valve and at final connection to each piece of equipment having 2-inches or smaller threaded pipe connection.

2. Install flanges, in piping 2-1/2 inches and larger, adjacent to flanged valves and at final connection to each piece of equipment having flanged pipe connection.

3. Dry Piping Systems (Gas, Compressed Air, and Vacuum): Install dielectric unions and flanges to connect piping materials of dissimilar metals.

4. Wet Piping Systems (Water and Steam): Install dielectric coupling and nipple fittings to connect piping materials of dissimilar metals.

3.2 EQUIPMENT INSTALLATION - COMMON REQUIREMENTS

A. Install equipment to provide the maximum possible headroom, where mounting heights are not indicated.

B. Install equipment according to approved submittal data. Portions of the Work are shown only in diagrammatic form. Refer conflicts to the Architect.

C. Install equipment level and plumb, parallel and perpendicular to other building systems and components in exposed interior spaces, except where otherwise indicated.

D. Install mechanical equipment to facilitate servicing, maintenance, and repair or replacement of equipment components. Connect equipment for ease of disconnecting, with minimum of interference with other installations. Extend grease fittings to an accessible location.

E. Install equipment giving right-of-way to piping systems installed at a required slope.

3.3 LABELING AND IDENTIFYING

A. Piping Systems: Install pipe markers on each system. Include arrows showing normal direction of flow and as indicated in other Division 15 sections.

1. Stenciled Markers: Complying with ASME A13.1.

2. Plastic markers, with application systems. Install on pipe insulation segment where required for hot non-insulated pipes.

3. Locate pipe markers as follows wherever piping is exposed in finished spaces, machine rooms, accessible maintenance spaces (shafts, tunnels, plenums) and exterior non-concealed locations.

a. Near each valve and control device.
b. Near each branch, excluding short take-offs for fixtures and terminal units. Mark each pipe at branch, where flow pattern is not obvious.
c. Near locations where pipes pass through walls, floors, ceilings, or enter non-accessible enclosures.
d. At access doors, manholes, and similar access points that permit view of concealed piping.
e. Near major equipment items and other points of origination and termination.
f. Spaced at a maximum of 50 feet intervals along each run. Reduce intervals to 25 feet in congested areas of piping and equipment.

g. On piping above removable acoustical ceilings, except omit intermediately spaced markers.

B. Equipment: Install engraved plastic laminate sign or equipment marker on or near each major item of mechanical equipment.

1. Lettering Size: Minimum 1/4-inch-high lettering for name of unit where viewing distance is less than 2 feet, 1/2-inch-high for distances up to 6 feet, and proportionately larger lettering for greater distances. Provide secondary lettering 2/3 to 3/4 of size of principal lettering.
2. Text of Signs: Provide text to distinguish between multiple units, inform operator of operational requirements, indicate safety and emergency precautions, and warn of hazards and improper operations, in addition to name of identified unit.

C. Duct Systems: Identify air supply, return, exhaust, intake, and relief ducts with duct markers; or provide stenciled signs and arrows, showing duct system service and direction of flow.

1. Location: In each space where ducts are exposed or concealed by removable ceiling system, locate signs near points where ducts enter into space and at maximum intervals of 50 feet.

D. Adjusting: Relocate identifying devices which become visually blocked by work of this Division or other Divisions.

3.4 PAINTING AND FINISHING

A. Refer to Division 9, Section 09900 "Painting" for field painting requirements.

B. Damage and Touch-Up: Repair marred and damaged factory painted finishes with materials and procedures to match original factory finish.

3.5 CONCRETE BASES

A. Construct concrete equipment bases of dimensions indicated, but not less than 4 inches larger in both directions than supported unit. Follow supported equipment manufacturer's setting templates for anchor bolt and tie locations. Use 3000 psi, 28-day compressive strength concrete and reinforcement as specified in Division 3, Section 03300 "Cast-In-Place Concrete."

3.6 ERECTION OF METAL SUPPORTS AND ANCHORAGE

A. Cut, fit, and place miscellaneous metal supports accurately in location, alignment, and elevation to support and anchor mechanical materials and equipment.

B. Field Welding: Comply with AWS D1.1 "Structural Welding Code - Steel."

3.7 ERECTION OF WOOD SUPPORTS AND ANCHORAGE

A. Cut, fit, and place wood grounds, nailers, blocking, and anchorage to support and anchor mechanical materials and equipment.

B. Select fastener sizes that will not penetrate members where opposite side will be exposed to view or will receive finish materials. Make tight connections between members. Install fasteners without splitting wood members.

C. Attach to substrates as required to support applied loads.

3.8 CUTTING AND PATCHING

A. Cut, channel, chase, and drill floors, walls, partitions, ceilings, and other surfaces necessary for mechanical installations. Perform cutting and patching as specified in other section.

B. Repair cut surfaces to match adjacent surfaces.

3.9 TEST AND TESTING

A. General: Tests shall be as required by the various Sections under Division 15, as well as by this Section.

B. Tests required by other Sections and the Sections where they are specified include the following:

1. Testing, adjusting and balancing: Section 15260.

2. Tests of Smoke or Fire Detectors: Division 16.

C. Tests may be required in the case of materials and equipment submittals and substitutions:

1. For items submitted which are altered, substituted, or which cannot readily be determined by the City Engineer as exactly conforming to the Specifications, Contractor may be required to submit certified test results to prove that the items in question meet Specification requirements.

2. Tests may also be required on certain items which are as specified, including fan and pump performance. Should such tests be required of specified items and tests prove that items do meet Specification requirements, the City will pay for applicable portions of tests.

D. Piping Tests:

1. Perform engineering tests required to demonstrate that operation of mechanical systems and their parts are in accordance with Specifications covering each item or system, and furnish materials, instruments and equipment necessary to conduct such tests. Tests shall be made in presence of the City Engineer, the Architect or the Field Inspector, and the representatives of any governmental agency having jurisdiction. Work shall not be concealed or covered until required approvals are obtained.

2. Should Contractor refuse or neglect to perform any test required by Specifications, the City Engineer may perform such tests and Contractor shall pay charges in connection therewith.

3. Pressure gages used in testing shall have one pound graduations; vacuum gages shall have one-inch mercury graduations. Air shall be bled from lines requiring hydrostatic or water tests.

4. Systems shall be pressure tested in accordance with Pipe Test Schedule below. Pipe test shall show no loss in pressure after a minimum duration of 4 hours at test pressures indicated. Where local codes require higher test pressures than specified herein for Fire Sprinkler Systems, local codes shall govern.

5. Flue gas lines shall be tested twice: First with piping exposed, before backfilling trenches or lathing; second with pipe in finished arrangement, ground backfilled (paved where required) and walls finished.

6. Refrigerant piping may be tested using a halide detector or calibrated electronic testing equipment.

7. Piping systems may be tested as a unit or in sections as directed by the City Engineer, but entire system shall successfully meet requirements specified herein, before acceptance by the City Engineer.

8. Repair of damage to pipes and their appurtenances, or to any other structures resulting from or caused by these tests, shall be performed by Contractor.

E. Pipe Testing Schedule:

System Tested	Test Pressure (psig)	Test With:
Vent and roof drain (except pipes running under a slab or under-ground)	Fill with water to top of highest vent, allow to stand two hours, or longer, as directed by Inspector. Minimum head required for any joint shall be 10-feet in building.	Water
Cast-iron soil, waste and interior downspout, con-densate drain from air conditioning equipment	10-feet of water vertically	
Storm water disposal lines	Running water test	Water
Hot water heating system piping	150	Water
Domestic water piping (metallic)	200	Water
Fire Sprinkler piping	200	Water
Gas piping (steel threaded or plastic)	60 (both tests)	Air
Gas piping (steel welded)	100 (both tests)	Air
Refrigeration Suction Freon R407C	150	Nitrogen & Freon
Puron R410A	250	
Refrigeration Liquid & Hot Gas Piping Freon R407C	150	Nitrogen & Freon
Puron R410A	300	

F. Operational Tests:

1. Before operating any equipment or systems, a through check shall be made to determine that all systems have been flushed and cleaned as required and that all equipment has been properly installed, aligned, lubricated, and serviced.

   Factory instructions shall be checked to see that installations have been made accordingly and that recommended lubricants have been used in all bearings, gearboxes, crankcases, and similar equipment. Particular care shall be used in lubricating bearings to avoid damage by over-lubrication and blowing out seals. Equipment shall also be checked for any damage that may have occurred during shipment, after delivery, or during installation. In event of any damage, equipment shall be replaced, renewed, or repaired at Contractor's expense.

2. Contractor shall provide, maintain, and pay costs for equipment, instruments, and operating personnel as required for all tests hereinafter specified.

3. Contractor shall pay for electric energy and fuel required for tests.

4. Any final adjustment to equipment or systems shall meet specified performances requirements.

5. Any equipment, system, or work found deficient during any test shall be replaced or corrected. Retest and obtain approval from the City Engineer.

G. Project Completion Tests:

1. Upon completion of Mechanical work, or such a time prior to completion as may be determined by the City Engineer, all mechanical equipment and systems shall be operated and tested for a period of at least 5 consecutive 8-hour days to demonstrate satisfactory over-all operation of building or project as a completed unit. Tests shall include operation of heating, ventilating, and air conditioning equipment and systems for a period of not less than 2, 8-hour, days at not less than 90% of full, specified heating and cooling capacities.

2. Tests shall commence after preliminary balancing and adjustments to equipment and systems have been completed, and all running equipment has been checked and thoroughly lubricated.

3. Immediately before starting tests all air filter media shall be cleaned or renewed. Roll type filters shall be advanced to provide new clean media. Cleanable type media shall be thoroughly cleaned and shall be re-oiled with new clean oil as recommended by manufacturer if they are of viscous impingement type. Disposable type filters shall be replaced with new filters. Replaceable media shall be replaced with new media.

4. An accurate means of measuring air flow and temperatures shall be used to balance air supply, return, and exhaust systems, so that uniform temperatures occur in every room and design air flow is obtained through registers, diffusers and grilles.

5. Systems shall be adjusted to provide air flows indicated including maximum fresh air and maximum return air. Dampers shall be checked for proper settings and operation. Air and water inlet and leaving temperatures at coils shall be checked. Complete operational data including air flows, room temperatures, fan speeds, motor currents, plenum and duct static pressures shall be tabulated.

6. Welding done on this project may be subject to radiographic inspections at random.

H. Post Contract Tests: If required full load operating conditions cannot be obtained at time of project completion test, due to unfavorable outdoor temperatures or conditions, Contractor shall return to job site when requested by the City Engineer and operate and test equipment and systems at such times of year when proper loading of system can be accomplished. Such tests shall be conducted within a one-year period from completion date. Contractor will be notified at least 10 days prior to start.

3.10 LOCATION

A. Location of piping, apparatus and equipment as indicated on Drawings is approximate only and shall be altered to avoid all obstructions, preserve headroom and keep openings and passageways clear.

B. Placement of equipment in locations and spaces indicated shall be Contractor's responsibility. Any disassembling and reassembling of equipment, or other work necessary, shall be done without extra cost to the City.

3.11 CUTTING, NOTCHING AND BACKING:

A. Conform to State Building Code, Title 24, Part 2, Section 2517(9) 8, 9, for notches and bored holes in wood; Section 2606, for pipes and sleeves embedded in concrete and for cuts in steel, as detailed on Structural Drawings.

B. Where pipes or ducts pass through, or are located within 1" of any construction element, install a resilient pad, 1/2" thick minimum, to prevent contact.

C. Contractor shall make provisions for recesses, chases, accesses, and provide sheet metal spacers, channel and backing as necessary for proper reception and installation of Mechanical work.

3.12 SERVICE INTERRUPTIONS, OFFSITE, GAS AND WATER

A. Arrange work so that there will be NO service interruptions of any existing systems.

B. When service interruptions are mandatory, arrange in advance with the City Engineer as to time and date of such interruptions.

C. Systems, which are interrupted, shall be put back into operation in such manner that they will function as they were originally intended.

3.13 OPERATION AND MAINTENANCE MANUALS AND REPAIR MANUAL

A. General: Submit 2 copies of operation and maintenance manuals in acceptable form and content. If no revisions are required, furnish one additional acceptable copy. If revisions are required, one copy will be returned with instructions for changes; make such changes and return 3 copies of acceptable manuals. Manuals shall be bound in hard-back, three-ring, loose-leaf binders. Deliver manuals to the City Engineer Inspector.

B. Contents of Manual:

1. Title sheet with job name, and names, addresses and telephone numbers of Contractor, Subcontractor and related equipment suppliers.

2. Typewritten manufacturer's operating instructions describing how to start and stop each piece of equipment, how to set temperature control systems for normal operation and normal restarting procedures, and caution and warning notices.

3. Manufacturer's product data and parts and maintenance booklet for each item of equipment furnished under Division 15.

4. Project Record drawings of Electrical and control diagrams.

5. Test and balance reports.

6. Valve directory.

7. Pipe and component identification chart.

C. Submit one complete copy of repair manual.

(END OF SECTION)

SECTION 15060
PLUMBING FIXTURES

PART 1 -- GENERAL

1.1 THE REQUIREMENT

A. The CONTRACTOR shall furnish and install all plumbing fixtures specified herein and in combination with work prescribed in other Sections of the Contract Documents, to provide a complete and finished plumbing system in accordance with the requirements of the Contract Documents.

1.2 RELATED WORK SPECIFIED ELSEWHERE

A. Section 15410 Building Plumbing Piping.

1.3 REFERENCE SPECIFICATIONS, CODES AND STANDARDS

A. Comply with the reference specifications of the GENERAL REQUIREMENTS.

1.4 CONTRACTOR SUBMITTALS

A. Submittals shall be made in accordance with the GENERAL REQUIREMENTS.

1.5 QUALITY ASSURANCE

A. Quality assurance shall conform to the level of quality equal to or better than the quality of the specified manufacturer at the product grade specified.

PART 2 -- PRODUCTS

2.1 GENERAL

A. All plumbing piping, fixtures, specialties, equipment, etc., shall be new, highest grade products manufactured for the intended usage. Materials, capacities, features, finishes, and manufacturers shall be as specified herein and shall be compatible with elements of the work to which they relate or connect.

B. All plumbing fixtures shall be new, without flaws, with white finish unless otherwise shown. All exposed brass, faucets, wastes, traps, etc., shall be chrome-plated. Each fixture shall be provided with individual stops and shall be anchored firmly to the building wall or floor. Unless otherwise specified, all fixtures shall be by Crane Co.; Kohler; American Standard; or equal. All other plumbing equipment like softeners, water heaters, lab equipment, etc., shall have drains and isolating valves on each side.

2.2 FIXTURE SCHEDULE

Dwg. Callout	Fixture Type	Description
WC-1	Water Closet (floor mounted)	Water closet, with elongated blow out bowl, wall mounted, stainless steel, with metal wall sleeve. Acorn model 1696-W-1 or approved equal

Dwg. Callout	Fixture Type	Description
WC-2	Water Closet (tank-type)	Water closet, floor-mounted with elongated siphon jet bowl, low silhouette flush tank with cover, solid, white, plastic seat and chrome-plated angle supply with wheel handle stop.
LAV-1	Lavatory (wall hung)	Lavatory basin, Acorn model 1652LRB or approved equal with all mounting hardware and automatic faucet.
LAV-3	Lavatory (wall-hung) - for wheelchair patients	Lavatory basin, vitreous china, size 20 x 27-inch complete with wall carrier, chrome-plated wrist handle combination supply and pop-up fitting with aerator, a 1-1/2 inch , chrome-plated "P" trap with chrome-plated escutcheon, and chrome-plated angle stops with escutcheons. (Piping shall be insulated for protection of handicapped persons.)
MS	Mop Sink	Floor-mounted mop sink of terrazzo, with integral back, size 24x24 with rim guard, drain channels, 3-inch outlet with "P" trap and stainless steel strainer, and chrome-plated service sink faucet with vacuum breaker, hose, and hose bracket.
KS-1	Kitchen Sink	18-gage stainless steel countertop sink with back ledge and clamps, 16 x 11-1/2 x 7-1/2 inches deep (inside), with rounded corners, 1-1/2-inch brass "P" trap, single-handle faucet, and sound-insulated garbage grinder.

PART 3 -- EXECUTION

3.1 INSTALLATION

A. Each fixture shall be installed with trap, easily removable for servicing and cleaning, and vented in accordance with the applicable plumbing code.

B. The CONTRACTOR shall provide chrome-plated rigid or flexible supplies to fixtures with angle stops, reducers, and escutcheons.

C. All components shall be installed level and plumb. Supplies and wastes shall be centered on or between the wall tiles.

D. All fixtures shall be installed and secured in place with **[wall supports] [wall carriers]** and bolts.

E. Fixtures shall be sealed to wall and floor surfaces with sealant as specified in Section **[07900]**, "Joint Sealants." Color shall match fixture.

F. All fixtures shall be mounted to the following heights above finished floor:

Water Closet:		
Standard	15 in.	(380 mm) to top of bowl rim
Handicapped	17-19 in.	(455 mm) to top of seat
Lavatory:		
Standard	31 in.	(785 mm) to top of basin rim
Handicapped	34 in.	(847 mm) to top of basin rim(max.)
	29 in.	(739.5 mm) floor to bottom of the apron
Water Closet Flush Valves:		
Standard	11 in.	(280 mm) in. above bowl rim
Recessed	10 in.	(255 mm) min. above bowl rim
Handicapped	44 in.	(1120 mm) above the floor

3.2 ADJUSTING AND CLEANING

A. Stops or valves shall be adjusted for intended water flow rate to fixtures without splashing, noise, or overflow.

B. At completion, the CONTRACTOR shall clean all plumbing fixtures and equipment.

C. Water closets shall be solidly attached to floor with brass closet screws.

(END OF SECTION)

SECTION 15070
PLUMBING EQUIPMENT

PART -- GENERAL

THE REQUIREMENT

The CONTRACTOR shall furnish and install gas and electric water heaters and other plumbing equipment as shown, complete with water, gas, and/or electric connections and hook-ups for a complete and operable installation as specified herein and in accordance with the requirements of the Contract Documents.

RELATED WORK SPECIFIED ELSEWHERE

Section 15410 Building Plumbing Piping.

REFERENCE SPECIFICATIONS, CODES AND STANDARDS

Comply with the reference specifications of the GENERAL REQUIREMENTS.

CONTRACTOR SUBMITTALS

Submittals shall be made in accordance with the GENERAL REQUIREMENTS.

The submittals shall include operation, maintenance, and inspection data, replacement part numbers and availability, and service depot location and telephone number.

QUALITY ASSURANCE

Quality assurance shall conform to a level of quality equal to or better than the quality of the product of the specified manufacturers.

PART -- PRODUCTS

GENERAL

All plumbing piping, fixtures, specialties, equipment, etc., shall be new, first-quality products manufactured for the intended usage. Materials, capacities, features, finishes, and manufacturers shall be as specified herein and shall be compatible with elements of the work to which they relate or connect.

ELECTRIC WATER HEATERS

General: Electric water heaters shall be furnished as shown, complete with electric, cold and hot water connections; 3/4-inch drain valve piped to drain; 3/4-inch (min) temperature and pressure relief valve, piped to floor sink or drain; and aquastat. The tank shall be of welded steel construction for a working pressure of not less than 150 psi, with magnesium anode, glass-lining, minimum 1-inch fiberglass insulation, enameled steel jacket, and feet. The burners shall be of the electric immersion type.

PART -- EXECUTION

WATER HEATER INSTALLATION

The CONTRACTOR shall install water heaters in accordance with manufacturer's printed instructions.

The work hereunder shall be coordinated with plumbing piping and electrica**]** work to achieve operating system.

The CONTRACTOR shall provide steel pipesupport for tanks, independent of building structural framing members.

(END OF SECTION)

SECTION 15080
PLUMBING PUMPS

PART 1 – GENERAL

1.1 RELATED DOCUMENTS

A. Drawings and general provisions of Contract, including General and Supplementary Conditions and Division 1 Specification Sections, apply to this Section.

B. Requirements of the following Division 15 Sections apply to this section:

1. "Basic Mechanical Requirements."

2. "Basic Mechanical Materials and Methods."

1.2 SUMMARY

A. This Section includes the following types of plumbing pumps:

1. Inline circulators.

B. Related Sections: The following sections contain requirements that relate to this section:

4. Division 16 Section "Electrical Connections for Equipment" for power-supply wiring including field-installed disconnects and required electrical devices.

5. Division 16 Section "Motor Controllers" for field-installed, AC motor controllers.

1.3 SUBMITTALS

A. General: Submit the following in accordance with Conditions of Contract and Division **11000** Specification Sections.

D. Wiring diagrams detailing wiring for power, signal, and control systems; differentiating between manufacturer-installed wiring and field-installed wiring.

E. Maintenance data for plumbing pumps, for inclusion in Operating and Maintenance Manuals specified in Division 1 and Division 15 Section "Basic Mechanical Requirements."

1.4 QUALITY ASSURANCE

A. Hydraulic Institute Compliance: Design, manufacture, and install plumbing pumps in accordance with "Hydraulic Institute Standards."

B. National Electrical Code Compliance: Components shall comply with NFPA 70 "National Electrical Code."

C. UL Compliance: Plumbing pumps shall be listed and labeled by UL and comply UL Standard 778 "Motor Operated Water Pumps."

D. NEMA Compliance: Electric motors and components shall be listed and labeled NEMA.

F. Single-Source Responsibility: Obtain plumbing pumps of the same type from a single manufacturer.

G. Design Criteria: The Drawings indicate sizes, profiles, connections, and dimensional requirements of plumbing pumps and are based on the specific manufacturer types and models indicated. Pumps having equal performance characteristics by other manufacturers may be considered, provided that deviations in dimensions and profiles do not change the design concept or intended performance as judged by the Architect. The burden of proof for equality of plumbing pumps is on the proposer.

1.5 DELIVERY, STORAGE, AND HANDLING

A. Store pumps in a dry location.

B. Retain shipping flange protective covers and protective coatings during storage.

C. Protect bearings and couplings against damage from sand, grit, and other foreign matter.

D. For extended storage times (greater than 5 days), dry internal parts with hot air or a vacuum-producing device. After drying, coat internal parts with light oil, kerosene, or antifreeze. Dismantle bearings and couplings, dry and coat with an acid-free, heavy oil, and tag and store in dry location.

E. Comply with manufacturer's rigging instructions for handling.

PART 2 – PRODUCTS

2.1 MANUFACTURERS

A. Available Products: Subject to compliance with requirements, products that may be incorporated in the Work include, but are not limited to, the following:

1. Inline Circulators:

a. "GT/M200," Amtrol, Inc.
b. "Series 1000," Armstrong Pumps, Inc.
c. "Series 60," Bell & Gossett, ITT.
d. "1600 Series," Taco, Inc.

2.2 PUMPS, GENERAL

A. Pumps and circulators: factory assembled and factory tested.

B. Preparation for shipping: After assembly and testing, clean flanges and exposed machined metal surfaces and treat with an anticorrosion compound. Protect flanges, pipe openings, and nozzles with wooden flange covers or with screwed-in plugs.

C. Motors: Conform to NEMA standards; single, multiple, or variable speed with type of enclosure and electrical characteristics as indicated; have built-in thermal-overload protection and grease-

lubricated ball bearings. Select motors that are non overloading within the full range of the pump performance curve.

D. Apply factory finish paint to assembled, tested units prior to shipping.

2.3 INLINE CIRCULATORS

A. General Description: Circulators shall be horizontal inline, centrifugal, separately coupled, single-stage, all-bronze, radially split case design, with mechanical seals, and rated for 125 psig working pressure and 225 deg F continuous water temperature.

B. Casings: Bronze, with threaded companion flanges for piping connections smaller than 2-1/2 inches, and threaded gage tappings at inlet and outlet connections.

C. Impeller: Statically and dynamically balanced, closed, overhung, single suction, fabricated from Rolled Temper brass conforming to ASTM B 36, and keyed to shaft.

D. Pump Shaft and Sleeve: Steel shaft with oil-lubricated copper sleeve.

E. Mechanical Seals: Carbon steel rotating ring, stainless-steel spring, ceramic seat, and Buna-N bellows and gasket.

F. Pump Bearings: Oil-lubricated, bronze journal and thrust bearings.

G. Motor Bearings: Oil-lubricated sleeve bearings.

H. Shaft Couplings: Flexible; capable of absorbing torsional vibration and shaft misalignment.

I. Motors: Resiliently mounted to the pump casing.

PART 3 – EXECUTION

3.1 EXAMINATION

A. Examine areas, equipment foundations, and conditions with Installer present, for compliance with requirements for installation and other conditions affecting performance of plumbing pumps. Do not proceed with installation until unsatisfactory conditions have been corrected.

B. Examine rough-in for plumbing piping systems to verify actual locations of piping connections prior to installation.

3.3 INSTALLATION

A. General: Comply with the manufacturer's written installation and alignment instructions.

B. Install pumps in locations and arrange to provide access for periodic maintenance, including removal of motors, impellers, couplings, and accessories.

C. Support pumps and piping separately so that the weight of the piping system does not rest on the pump.

D. Suspend inline pumps with althread hanger rod and vibration isolation hangers of sufficient size to support the weight of the pump independent from the piping system.

3.5 CONNECTIONS

A. General: Install valves that are same size as the piping connecting the pump.

B. Install suction and discharge pipe sizes equal to or greater than the diameter of the pump nozzles.

C. Install a nonslam check valve and globe valve on the discharge side of pumps.

D. Install a gate valve and strainer on the suction side of inline pumps.

E. Install flexible connectors on the suction and discharge side of each base-mounted pump. Install flexible connectors between the pump casing and the discharge valves and upstream from the pump suction diffuser.

F. Install pressure gages on the suction and discharge of each pump at the integral pressure gage tappings provided.

G. Install pressure gage connector plugs in suction and discharge piping around pump. Pressure gage connector plugs are specified in Division **15** Section "Meters and Gages."

H. Electrical wiring and connections are specified in Division **16** sections.

I. Control wiring and connections are specified in other Division **15** sections.

3.6 FIELD QUALITY CONTROL

A. Check suction lines connections for tightness to avoid drawing air into the pump.

END OF SECTION

SECTION 15120
HEATING EQUIPMENT

PART 1 -- GENERAL

1.1 THE REQUIREMENT

A. The CONTRACTOR shall furnish all tools, equipment, materials, and supplies and shall perform all labor required to complete the work as indicated on the Drawings and specified herein.

B. Heating equipment shall include but not be limited to the following:

1. Hot Water Heating Boiler.

2. Unit Heaters.

3. Natural Gas Fuel System Piping and Accessories.

1.2 RELATED WORK SPECIFIED ELSEWHERE

1. Section 15050 Basic Mechanical Materials and Methods.

2. Section 15130 Air Conditioning and Air Handling Equipment.

3. Section 15410 Building Plumbing Piping.

1.3 QUALITY ASSURANCE

A. Standards and Codes: Comply with applicable codes, specifications and standards having jurisdiction: ASME, AGA, CEC, ANSI, ASTM, UL, NEC, UMC and SCAQMD.

B. Manufacturer and Installers Qualifications: Comply with provisions stated in Section **15010** "Basic Mechanical Requirements."

1.4 CONTRACTOR SUBMITTALS

A. Submittals shall be made in accordance with the GENERAL REQUIREMENTS.

B. Manufacturers' Data: Submit the following:

1. Complete material list of all items proposed to be furnished and installed under this Section. Material lists which do not require performance data shall include manufacturers' names, types, and model numbers for usages indicated.

2. Manufacturers' specifications and other data required to demonstrate compliance with specified requirements. Literature shall include descriptions of equipment, types, models and sizes proposed, capacity tables or curves marked to indicate performance characteristics, electrical requirements, options selected, space requirements (including allowances for servicing if indicated) and any other data necessary to ensure compliance with requirements of this Specification and performances indicated on Drawings.

C. Shop drawings indicating methods of installation of equipment and materials, and details of supporting structures for items indicated. Check Drawings for coordination with other trades before submittal. Items to be covered shall include but not necessarily be limited to the following:

1. Layout Drawings of Equipment: Include plans, elevations and sections, of proposed equipment drawn to scale, to establish that equipment will fits in allotted spaces with clearance for installation and maintenance. Show proposed details for attachment and anchoring to, and hanging from structural framing of building. Show vibration isolation units, foundations and supports, and openings for passage of pipes and ducts. If departures from Contract Drawings are deemed necessary by Contractor, details of such departures, including changes in related portions of project and reasons thereof, shall be submitted with drawings. Approved departures shall be made at no additional cost to the City.

2. Electrical interlock or control diagrams for all electrically controlled components having more than one automatic or manual control devices, which are not indicated on Drawings.

D. Manufacturer's Recommended Installation Procedures: Manufacturer's recommended installation procedures, when approved by the Architect will become basis for inspecting and accepting or rejecting actual installation procedures used on Work.

E. Modification of Contract Drawings: In each case where proposed substitute materials or equipment will require, for proper installation, changes to design of project as indicated on Drawings, appropriate proposed revision drawings in format accepted by the Architect, shall be furnished by Contractor for review by the Architect. Such drawing shall be sufficiently complete for proper installation of proposed substitute materials or equipment and for construction by all interested trades of proposed revisions to project. Cost of drawings, cost of plan check and approval by all legally constituted authorities having jurisdiction, and cost of proposed revised construction shall be borne by Contractor.

1.5 PRODUCT HANDLING

1. Protection, Replacements, Delivery and Storage: Comply with provisions stated under Section 15050 "Basic Mechanical Materials and Methods."

1.6 COORDINATION

1. Coordinate all activities in accordance with provisions of Section 15050 "Basic Mechanical Materials and Methods."

PART 2 -- PRODUCTS

2.1 HEATING EQUIPMENT AND MATERIALS

1. Provide heating equipment and materials as indicated on Drawings and specified herein. Sizes, capacities, and operating conditions shall be as indicated on equipment schedules.

2.2 UNIT HEATERS

A.

B. Unit heaters are designed for ceiling suspension with a propeller fan for air delivery. Standard features include a manual match-lit pilot with 100% shutoff and a single-stage, A terminal strip connector facilitates field connection to a remote 24-volt thermostat for automatic operation. Each unit is provided with a fan control and all required limit safety controls, including an energy cutoff (ECO) device. These units are approved for installation in the United States.

PART 3 -- EXECUTION

3.1 INSTALLATION

3.2 INSTALLATION CODES

A. Installation of appliances in this Section shall conform to applicable requirements of current issue of National Fire Codes, NEC, ANSI, NFPA 70, UMC, , UL 795 and ANSI S21.13.

(END OF SECTION)

SECTION 15130
AIR CONDITIONING AND AIR HANDLING EQUIPMENT

PART 1 - GENERAL

1.1 SECTION INCLUDES

A. Furnish and install air conditioning and air handling equipment as indicated on Drawings and as specified. Air conditioning and air handling equipment shall include but not be limited to following:

1. Packaged Constant Volume Air Conditioning Units.

2. Exhaust Fans.

1.2 SUBMITTALS

A. Submit in accordance with Section 01330: Shop Drawings/Submittals.

1.3 QUALITY ASSURANCE

A. Make submittals in accordance with Section 15310: Basic Mechanical Requirements.

1.4 INSTRUCTIONS

A. Contractor shall provide instructions on equipment operation and maintenance procedure, as required, before or during completion test, to the Owner's maintenance personnel:

B. Instructions shall be entrusted to a qualified and experienced person, who has been adequately trained and is able to demonstrate correct operation and maintenance of equipment and related components.

PART 2 - PRODUCTS

2.1 APPROVED MANUFACTURERS AND ACCEPTABILITY REQUIREMENTS

Manufacturers: The design shown on the drawing is based upon products of the manufacturer scheduled. Alternate equipment manufacturers will be acceptable if equipment meets the scheduled performance and complies with these specifications. If equipment manufactured by manufacturer other than that scheduled is utilized, then the Mechanical Contractor will be responsible for coordinating with the General Contractor and all affected Subcontractors to insure proper provisions for installation of the furnished unit. This coordination will include, but not limited to the following:

A. Structural supports for units.

B. Roof curb transition.

.

D. Electrical power requirements and wire/conduit and overcurrent protection sizing.

E. All costs incurred to modify the building provisions to accept the furnished units.

2.2 ROOFTOP PACKAGE AIR CONDITIONING UNIT

A. Custom designed units shall be self-contained, packaged, factory assembled and prewired, consisting of cabinet and frame, supply fan, return fan (where applicable), gas furnace (where applicable), controls, air filters, refrigerant cooling coil and compressors, condenser coil and condenser fans.

B. Include accessories as shown or specified herein or on drawings.

C. Units shall have the capacities, electrical power, and EER requirement as indicated on the drawings.

D. Units shall be manufactured by: York, McQuay, Trane, Carrier or equal.

E. GENERAL DESCRIPTION

1. Furnish as shown on plans, Unit performance, EERs and electrical characteristics shall be per the job schedule.

2. Configuration: Fabricate as detailed on prints.

3. The complete unit shall be ETL/UL listed.

4. Each unit shall be specifically designed for outdoor rooftop application and include a weatherproof cabinet. Units shall be of a modular design with factory installed access sections available to provide maximum design flexibility. Unit shall be completely factory assembled and shipped in one piece. Units shall be shipped fully charged with R22.

5. The unit shall undergo a complete factory run test prior to shipment and factory test sheets shall be available upon request. The factory test shall include final balancing of all fan assemblies; a refrigeration circuit run test, a unit control system operations checkout, a unit refrigerant leak test and a final unit inspection.

6. All units shall have decals and tags to indicate caution areas and aid unit service. Unit nameplates shall be fixed to the main control panel door. Electrical wiring diagrams shall

be attached to the control panels. Installation, operating and maintenance bulletins and start-up forms shall be supplied with each unit.

7. Performance: All scheduled capacities and face areas are the minimum accepted value. All scheduled amps, KW, and HP are maximum accepted values that allow scheduled capacity to be met.

F. CABINET, CASING, AND FRAME

1. For units greater than 40 tons, unit cabinet shall be designed to operate at total static pressures up to 6.5 inches w.g.

2. Unit shall have heavy gauge solid galvanized steel liners provided throughout, allowing no exposed insulation within the air stream. All cabinet insulation, except floor panels, shall be a nominal 2" thick, 1 ½ lb. density, R6.5, glass fiber. Floor panels to be a minimum 1" thick, 3 lb. density, R4.2, glass fiber.

3. Exterior surfaces shall be constructed of pre-painted galvanized steel for aesthetics and long term durability. Paint finish to include a base primer with a high quality, polyester resin topcoat of a neutral beige color. Finished surface to withstand a minimum 750-hour salt spray test in accordance with ASTM B117 standard for salt spray resistance.

4. Service doors shall be provided on both sides of each section in order to provide user access to all unit components. Service doors shall be constructed of heavy gauge galvanized steel with galvanized steel interior liners. All service doors shall be mounted on multiple, stainless steel hinges and shall be secured by a stainless steel latch system that is operated by a single, flush mounted handle. The latch system shall feature a staggered engagement for ease of operation and a safety catch shall protect the user from injury in case a positive pressure door is opened while the fan is operating. Removable panels, or doors secured by multiple, mechanical fasteners are not acceptable.

5. For unit sizes greater than 40 tons, the unit base frame shall be constructed of 13 gauge pre-painted galvanized steel.

6. The unit base shall overhang the roof curb for positive water runoff and shall have a formed recess that seats on the roof curb gasket to provide a positive, weathertight seal. Lifting brackets shall be provided on the unit base with lifting holes to accept cable or chain hooks.

G. INDOOR AIR FANS

1. All fan assemblies shall be statically and dynamically balanced at the factory, including a final trim balance, prior to shipment. All fan assemblies shall employ solid steel fan shafts. Heavy-duty pillow block type, self-aligning, grease lubricated ball bearings shall be used. Bearings shall be sized to provide an L-50 life at 200,000 hours. The entire fan assembly shall be isolated from the fan bulkhead and rigidly mounted to the unit's floor. Fixed pitch V-belt drives with matching belts shall be provided. V-belt drives shall be selected at the manufacturer's standard service factor.

2. Fan motors shall be heavy-duty 1800 rpm open drip-proof (ODP), premium efficiency. Fan motors to have grease lubricated ball bearings. Motors shall be mounted on an adjustable base that provides for proper alignment and belt tension adjustment.

3. Airfoil supply fans. Forward curved fans are not acceptable.

Supply fan shall be a double width, double inlet (DWDI) airfoil centrifugal fan. All fans shall be mounted using shafts and hubs with mating keyways. Fans shall be Class II

type and fabricated from heavy-gauge aluminum. Fan blades shall be continuously welded to the back plate and end rim.

I. ELECTRICAL

1. Unit wiring shall comply with NEC requirements and with all applicable UL standards. All electrical components shall be UL recognized where applicable. All wiring and electrical components provided with unit shall be number and color coded and labeled according to the electrical diagram provided for easy identification. The unit shall be provided with a factory wired weatherproof control panel with deadfront cover. Unit shall have a single point power terminal block for main power connection. A terminal board shall be provided for low voltage control wiring. Branch circuit fusing, 115 volt control circuit transformer and fuse, system switches, high temperature sensor, and a 115 volt receptacle with a separate electrical connection shall also be provided with unit (separate 120V power for service lights to be provided by others). UV lights will be powered from unit provided transformer. Each compressor and condenser fan motor shall be furnished with contactors and inherent thermal overload protection. A separate keylocked control panel shall house all controls for the condensing section. Supply and return fan motors shall have contactors and external overload protection. Knockouts shall be provided in the bottom of the main control panels for field wiring entrance thru the unit's curb. All 115-600 volt internal and external wiring between control boxes and components shall be protected from damage by raceways or conduit.

J. HEATING AND COOLING SECTIONS

1. The cooling coil section shall be installed in a draw through configuration, upstream of the supply air fan. The coil section shall be complete with factory piped cooling coil and sloped drain pan. Hinged access doors on both sides of the section shall provide convenient access to the cooling coil and drain pan for inspection and cleaning.

2. Cooling coil performance schedule is based on mixed air and coil leaving air temperatures, not including fan motor heat. Manufacturer shall add motor heat to the DX coil LAT to calculate unit LAT on draw through models. Scheduled total and sensible capacities are gross capacities, are minimum accepted values, and do not include fan motor heat.

3. Direct expansion (DX) cooling coils shall be fabricated of seamless 1/2" diameter high efficiency copper tubing that is mechanically expanded into high efficiency aluminum plate fins. Coils shall be a multi-row, staggered tube design. All multiple compressor units shall have two independent refrigerant circuits and shall use an interlaced coil circuiting that keeps the full coil face active at all load conditions.

4. All coils shall be factory leak tested with high pressure air under water.

5. A stainless steel, positively sloped drain pan shall be provided with the cooling coil. The drain pan shall extend beyond the leaving side of the coil and underneath the cooling coil connections. The drain pan shall have a minimum slope of 1/8" per foot to provide positive draining. The drain pan shall be connected to a threaded drain connection extending through the unit base. Units with stacked cooling coils shall be provided with a secondary drain pan piped to the primary drain pan.

L. FILTERS

1. Unit shall be provided with a draw-through filter section. The filter section shall be supplied complete with the filter rack as an integral part of the unit. The draw-through filter section shall be provided with cartridge filters.

2. 12" deep 80-85% efficient, UL Std. 900, Class 1, cartridge filters shall be provided. 2" panel, 30% efficient pre-filters shall be included. Cartridge filters shall consist of filter media permanently attached to a metal frame and shall slide into a gasketed, extruded aluminum rack contained within the unit. The filter rack shall have secondary gasketed, hinged end panels to insure proper sealing. Filters shall be accessible from both sides of the filter section.

O. CONDENSING SECTION

1. Air Cooled Condenser

a. The condensing section shall be open on the sides and bottom to provide access and to allow airflow through the coils. Condenser coils shall be multi-row and fabricated from 3/8" high efficiency rifled copper tubing mechanically bonded to high efficiency aluminum fins. Each condenser coil shall be factory leak tested with high-pressure air under water. Each refrigerant circuit shall include a subcooling circuit to provide 15 degrees of liquid subcooling. Condenser coil guards shall provide protection from incidental contact to coil fins. Coil guards to be constructed of cross wire welded steel with PVC coating.

b. Condenser fans shall be direct drive, propeller type designed for low tip speed, vertical air discharge, and include service guards. Fan blades shall be constructed of steel and riveted to a steel center hub. Condenser fan motors shall be heavy-duty, inherently protected, three-phase, non-reversing type with permanently lubricated ball bearing and integral rain shield.

c. Units shall have at least one condenser fan controlled to maintain positive head pressure. An ambient thermostat shall prevent the refrigeration system from operating below 45º F ambient.

2. Scroll Compressors

a. Each unit shall have multiple, heavy-duty Copeland scroll compressors.

b. Each compressor shall be complete with gauge ports, crankcase heater, sight-glass, anti-slug protection, motor overload protection and a time delay to prevent short cycling and simultaneous starting of compressors following a power failure.

c. Compressors shall be isolated with resilient rubber isolators to decrease noise transmission.

d. Each unit shall have two independent refrigeration circuits. Each circuit shall be complete with a liquid line solenoid valve, low pressure control, filter drier, liquid moisture indicator/sight-glass, thermal expansion valve, liquid line shutoff valve with charging port, discharge line shutoff valve, a manual reset high pressure safety switch, high pressure relief device and pump down switch. The thermal expansion valve shall be capable of modulation from 100% to 25% of its rated capacity. Sight-glasses shall be accessible for viewing without disrupting unit operation. Each circuit shall be dehydrated and factory charged with Refrigerant 22 and oil.

e. Refrigeration capacity control shall be accomplished by staging of the unit's multiple compressors. All compressor capacity control staging shall be controlled by the factory installed main unit control system.

P. CONTROLS

1. Each unit shall be equipped with a microprocessor based control system. The unit control system shall include all required temperature and pressure sensors, input/output boards, main microprocessor and operator interface. The unit control system shall perform all unit control functions including scheduling, temperature controls, alarms, unit diagnostics and safeties. All boards shall be individually replaceable for ease of service. All microprocessors, boards, and sensors shall be factory mounted, wired and tested.

2. The microprocessor shall be a stand-alone DDC controller not dependent on communications with any on-site or remote PC or master control panel. The microprocessor shall maintain existing set points and operate stand alone if the unit loses either direct connect or network communications. The microprocessor memory shall be protected from voltage fluctuations as well as any extended power failures. All factory and user set schedules and control points shall be maintained in nonvolatile memory. No settings shall be lost, even during extended power shutdowns.

3. The main microprocessor shall support an RS-232 direct connection to a product service tool or a modem. A communications port shall be provided for direct communication into the BAS network.

4. All digital inputs and outputs shall be protected against damage from transients or wrong voltages. Each digital input and digital output shall be equipped with an LED for ease of service. All field wiring shall be terminated at a separate, clearly marked terminal strip.

5. The microprocessor memory shall be protected from all voltage fluctuations as well as any extended power failures. The microprocessor shall support an RS-232 direct connect from an IBM PC or 100% true compatible using MicroTech software. The microprocessor shall maintain existing set points and operate stand alone if the rooftop loses either direct connect or network communications.

6. The microprocessor shall have a built-in time schedule. The schedule shall be programmable from the unit keypad interface. The schedule shall be maintained in nonvolatile memory to insure that it is not lost during a power failure. There shall be one start/stop per day and a separate holiday schedule. The controller shall accept up to sixteen holidays each with up to a 5-day duration. Each unit shall also have the ability to accept a time schedule via BAS network communications.

7. If the unit is to be programmed with a night setback or setup function, an optional space sensor shall be provided. Space sensors shall be available to support field selectable features. Sensor options shall include Zone sensor with tenant override switch, or Zone sensor with tenent override switch and heating/cooling set point adjustment.

8. User Interface (UI)

   a. The keypad/display character format shall be 20 characters x 4 lines. The character font shall be a 5 x 8 dot matrix. The display shall be a super twist liquid crystal display (LCD) with black characters on yellow background providing high visibility. The display form shall be in plain English coded formats. Lookup tables are not acceptable.

   b. The keypad shall be equipped with 8 individual touch-sensitive membrane key switches. All control settings shall be password protected from changes by unauthorized personnel.

9. The display shall provide the following information:

   a. Supply, return, outdoor and space air temperature.

b. Duct and building static pressure- the control contractor is responsible for providing and installing sensing tubes.

c. Supply fan status and airflow verification.

d.

f. Cooling and changeover status.

g. Occupied, unoccupied, and dirty filter status.

h. Date and time schedules.

i. Up to 4 current alarms and 8 previous alarms with time and date.

10. The keypad shall provide the following set points as a minimum:

a. Six control modes including off manual, auto, heat/cool, cool only, heat only and fan only.

b. Four occupancy modes including auto, occupied, unoccupied and bypass (tenant override with adjustable duration).

c. Control changeover based on return air temperature, or space temperature.

d. Primary cooling and heating set point temperature based on supply or space temperature.

e. Night setback and setup space temp.

f. Cooling and heating control differential (or dead band).

g. Cooling and heating supply temperature reset options based on one of the following: Return air temperature, outdoor air temperature, space temperature, Airflow, or external (1-5VDC) signal.

h. Reset schedule temperature.

i. High supply, low supply and high return air temperature alarm limits.

j. Ambient compressor and heat lockout temperatures.

k. Auto or manual lead lag method on compressors.

l. Compressor interstage timers duration.

m.

.

r. Current time and date.

s. Occupied/unoccupied time schedules with allowances for holiday/ event dates and duration.

t. Three types of service modes including timers normal (all time delays,) timers fast (all time delays 20 seconds,) and normal.

2.3

.

PART 3 - EXECUTION

3.1 GENERAL

A. Examine areas under which work of this Section will be performed. Correct conditions detrimental to proper and timely completion of work. Do not proceed until unsatisfactory conditions have been corrected.

3.2

3.3 EQUIPMENT DESIGN AND INSTALLATION

A. Uniformity: Unless otherwise specified, equipment of same type or classification shall be product of same manufacturer.

B. Application: Only use equipment recommended by manufacturer, and approved by the Owner or the Architect.

C. Equipment Installation: Equipment installation shall be strictly in accordance with these Specifications, and installation instructions of manufacturers. Equipment mounted on concrete foundations shall be grouted before piping is installed. All piping shall be installed in such a manner as not to place a strain on any of the equipment. Flanged joints shall be adequately extended before installation.

All piping shall be graded, anchored, guided and supported, without low pockets.

1. Erect equipment in a neat and workmanlike manner, properly aligned, leveled and adjusted for satisfactory operation.

2. Install so that connecting and disconnecting of piping and accessories can be readily accomplished, and so that all parts are readily accessible for inspection, service and repair. Space shall be provided to readily remove filters, coils, compressors and fan wheels. All access doors shall be hinged with cam lock door handles.

3.4 ROOF-TOP EQUIPMENT MOUNTING

A. All Units: Install unit on a prefabricated isolation curb with seismic restraints secured directly to roof. Follow manufacturer's recommended installation manuals. Submit shop drawings for approval of the Architect.

3.5 NOISE AND VIBRATION

A. Operation of Equipment: Mechanical equipment and piping systems shall operate with noise and vibration to design level or less.

B. Corrective Measures: If such objectionable noise and vibration should be produced, make necessary changes to produce satisfactory results.

3.6 FIELD TESTS AND INSPECTION

A. General: Perform all field inspections, field tests, and trial operations as specified in Sections 15260 “Testing, Adjusting and Balancing” and 15280 “Mechanical Testing Requirements”. Provide all labor, equipment and incidentals required for testing. The Owner and Inspector will witness all field tests and trial operations as specified in Sections 15260 “Testing, Adjusting and Balancing” and 15280 “Mechanical Testing Requirements”.

B. Equipment and Material: Equipment and material certified as having been successfully tested by manufacturer, in accordance with referenced Specifications and standards, will not require re-testing before installation. Equipment and materials not tested at the place of manufacture will be tested before or after installation, as applicable or necessary, to determine compliance with reference Specifications and standards.

C. Start-Up and Operational Test: System shall be started up and initially operated with all components operating. During this test, various strainers or filters shall be periodically cleaned until no further accumulation of foreign material occurs. Exercise care so that minimum loss of water occurs when strainers are cleaned. Adjust safety and automatic control instruments as

necessary to place them in proper operation and sequence. See also Sections 15260 “Testing, Adjusting and Balancing”; 15270 “Mechanical Systems Commissioning”; and 15280 “Mechanical Testing Requirements”.

D. Single-zone systems shall be provided with factory start-up.

E. Extent of Field Tests: After installation and before acceptance, work of this Section shall be subjected to all necessary field tests, including those specified here and in Sections 15260 “Testing, Adjusting and Balancing” and 15280 “Mechanical Testing Requirements”.

F. Operation and Maintenance Data: Provide required operation and maintenance data as specified in Section 15270 “Mechanical Systems Commissioning”.

(END OF SECTION)

SECTION 15160
FANS

PART 1 – GENERAL

1.1 RELATED DOCUMENTS

A. Drawings and general provisions of the Contract, including General and Supplementary Conditions and Division 1 Specification Sections, apply to this Section.

1.2 SUMMARY

A. This Section includes the following:

1. Centrifugal roof ventilators.

2. In-line centrifugal fans.

1.3 PERFORMANCE REQUIREMENTS

A. Project Altitude: Base air ratings on **[actual site elevations] [sea-level conditions]**.

B. Operating Limits: Classify according to AMCA 99.

1.4 SUBMITTALS

A. Product Data: Include rated capacities, furnished specialties, and accessories for each type of product indicated and include the following:

1. Certified fan performance curves with system operating conditions indicated.

2. Certified fan sound-power ratings.

3. Motor ratings and electrical characteristics, plus motor and electrical accessories.

4. Material gages and finishes, including color charts.

5. Dampers, including housings, linkages, and operators.

B. Shop Drawings: Detail equipment assemblies and indicate dimensions, weights, loads, required clearances, method of field assembly, components, and location and size of each field connection.

1. Wiring Diagrams: Power, signal, and control wiring. Differentiate between manufacturer-installed and field-installed wiring.

2. Design Calculations: Calculate requirements for selecting vibration isolators and seismic restraints and for designing vibration isolation bases.

3. Vibration Isolation Base Details: Detail fabrication, including anchorages and attachments to structure and to supported equipment. Include auxiliary motor slides and rails, and base weights.

C. Coordination Drawings: Show roof penetration requirements and reflected ceiling plans drawn to scale and coordinating roof penetrations and units mounted above ceiling. Show the following:

1. Roof framing and support members relative to duct penetrations.

2. Ceiling suspension assembly members.

3. Size and location of initial access modules for acoustical tile.

4. Ceiling-mounted items including light fixtures, diffusers, grilles, speakers, sprinklers, access panels, and special moldings.

A. Maintenance Data: For power ventilators to include in maintenance manuals specified in Division 1.

1.5 QUALITY ASSURANCE

A. Electrical Components, Devices, and Accessories: Listed and labeled as defined in NFPA 70, Article 100, by a testing agency acceptable to authorities having jurisdiction, and marked for intended use.

B. AMCA Compliance: Products shall comply with performance requirements and shall be licensed to use the AMCA-Certified Ratings Seal.

C. NEMA Compliance: Motors and electrical accessories shall comply with NEMA standards.

D. UL Standard: Power ventilators shall comply with UL 705.

1.6 DELIVERY, STORAGE, AND HANDLING

A. Deliver fans as factory-assembled unit, to the extent allowable by shipping limitations, with protective crating and covering.

B. Disassemble and reassemble units, as required for moving to final location, according to manufacturer's written instructions.

C. Lift and support units with manufacturer's designated lifting or supporting points.

1.7 COORDINATION

A. Coordinate size and location of structural-steel support members.

B. Coordinate size and location of concrete bases. Cast anchor-bolt inserts into bases. Concrete, reinforcement, and formwork requirements are specified in Division 3 Section "Cast-in-Place Concrete."

C. Coordinate installation of roof curbs, equipment supports, and roof penetrations. These items are specified in Division 7.

1.8 EXTRA MATERIALS

A. Furnish extra materials described below that match products installed and that are packaged with protective covering for storage and identified with labels describing contents.

B. Belts: **[One] <Insert number>** set**[s]** for each belt-driven unit.

PART 2 – PRODUCTS

2.1 MANUFACTURERS

A. Manufacturers: Subject to compliance with requirements, provide products by one of the following:

1. Centrifugal Roof Ventilators:

a. Acme Engineering & Mfg. Corp.
b. Cook, Loren Company.
c. Greenheck Fan Corp.
d. JennFan; Div. of Breidert Air Products, Inc.
e. Penn Ventilation Companies, Inc.
f. <Insert manufacturer's name.>

2. In-Line Centrifugal Fans:

a. Acme Engineering & Mfg. Corp.
b. Cook, Loren Company.
c. Greenheck Fan Corp.
d. JennFan; Div. of Breidert Air Products, Inc.
e. Penn Ventilation Companies, Inc.
f. <Insert manufacturer's name.>

2.2 CENTRIFUGAL ROOF VENTILATORS

A. Description: Belt-driven or direct-driven centrifugal fans consisting of housing, wheel, fan shaft, bearings, motor and disconnect switch, drive assembly, curb base, and accessories.

B. Housing: Removable,spun-aluminum, dome top and outlet baffle; square, one-piece, aluminum base with venturi inlet cone.

C. Fan Wheels: Aluminum hub and wheel with backward-inclined blades.

D. Belt-Driven Drive Assembly: Resiliently mounted to housing, with the following features:

1. Fan Shaft: Turned, ground, and polished steel; keyed to wheel hub.

2. Shaft Bearings: Permanently lubricated, permanently sealed, and self-aligning ball bearings.

3. Pulleys: Cast-iron, adjustable-pitch motor pulley.

4. Fan and motor isolated from exhaust airstream.

E. Accessories:

1. Disconnect Switch: Nonfusible type, with thermal-overload protection mounted inside fan housing, factory wired through an internal aluminum conduit.

2. Bird Screens: Removable, 1/2-inch mesh, aluminum or brass wire.

3. Dampers: Counterbalanced, parallel-blade, backdraft dampers mounted in curb base; factory set to close when fan stops.

F. Roof Curbs: Galvanized steel; mitered and welded corners; 1-1/2-inch- thick, rigid, fiberglass insulation adhered to inside walls; and 1-1/2-inch wood nailer. Size as required to suit roof opening and fan base.

1. Configuration: Self-flashing without a cant strip, with mounting flange.

2. Overall Height: 12 inches

3. Sound Curb: Curb with sound-absorbing insulation matrix.

4. Pitch Mounting: Manufacture curb for roof slope.

5. Metal Liner: Galvanized steel.

2.3 IN-LINE CENTRIFUGAL FANS

A. Description: In-line, belt-driven centrifugal fans consisting of housing, wheel, outlet guide vanes, fan shaft, bearings, motor and disconnect switch, drive assembly, mounting brackets, and accessories.

B. Housing: Split, spun aluminum with aluminum straightening vanes, inlet and outlet flanges, and support bracket adaptable to floor, side wall, or ceiling mounting.

C. Direct-Driven Units: Motor encased in housing outside of airstream, factory wired to disconnect switch located on outside of fan housing.

D. Belt-Driven Units: Motor mounted on adjustable base, with adjustable sheaves, enclosure around belts within fan housing, and lubricating tubes from fan bearings extended to outside of fan housing.

E. Fan Wheels: Aluminum, airfoil blades welded to aluminum hub.

F. Accessories:

1. Volume-Control Damper: Manually operated with quadrant lock, located in fan outlet.

2. Companion Flanges: For inlet and outlet duct connections.

3. Fan Guards: 1/2- by 1-inch mesh of galvanized steel in removable frame. Provide guard for inlet or outlet for units not connected to ductwork.

4. Motor and Drive Cover (Belt Guard): Epoxy-coated steel.

2.4 MOTORS

A. Comply with requirements in Division 15 Section "Motors."

B. Enclosure Type: Guarded drip proof.

2.5 SOURCE QUALITY CONTROL

A. Sound-Power Level Ratings: Comply with AMCA 301, "Methods for Calculating Fan Sound Ratings from Laboratory Test Data." Factory test fans according to AMCA 300, "Reverberant Room Method for Sound Testing of Fans." Label fans with the AMCA-Certified Ratings Seal.

B. Fan Performance Ratings: Establish flow rate, pressure, power, air density, speed of rotation, and efficiency by factory tests and ratings according to AMCA 210, "Laboratory Methods of Testing Fans for Rating."

PART 3 – EXECUTION

3.1 INSTALLATION

A. Install power ventilators level and plumb.

B. Secure roof-mounting fans to roof curbs with cadmium-plated hardware. Refer to Division 7 Section "Roof Accessories" for installation of roof curbs.

C. Support suspended units from structure using threaded steel rods and spring hangers Vibration-control devices are specified in Division 15 Section "Mechanical Vibration Controls and Seismic Restraints."

1. In seismic zones, restrain support units.

D. Install units with clearances for service and maintenance.

E. Label units according to requirements specified in Division 15 Section "Mechanical Identification."

CONNECTIONS

A. Duct installation and connection requirements are specified in other Division 15 Sections. Drawings indicate general arrangement of ducts and duct accessories. Make final duct connections with flexible connectors. Flexible connectors are specified in Division 15 Section "Duct Accessories."

B. Install ducts adjacent to power ventilators to allow service and maintenance.

C. Ground equipment.

D. Tighten electrical connectors and terminals according to manufacturer's published torque-tightening values. If manufacturer's torque values are not indicated, use those specified in UL 486A and UL 486B.

FIELD QUALITY CONTROL

A. Equipment Startup Checks:

1. Verify that shipping, blocking, and bracing are removed.

2. Verify that unit is secure on mountings and supporting devices and connections to ducts and electrical components are complete. Verify that proper thermal-overload protection is installed in motors, starters, and disconnect switches.

3. Verify that cleaning and adjusting are complete.

4. Disconnect fan drive from motor, verify proper motor rotation direction, and verify fan wheel free rotation and smooth bearing operation. Reconnect fan drive system, align and adjust belts, and install belt guards.

5. Verify lubrication for bearings and other moving parts.

6. Verify that manual and automatic volume control and fire and smoke dampers in connected ductwork systems are in fully open position.

7. Disable automatic temperature-control operators.

B. Starting Procedures:

1. Energize motor and adjust fan to indicated rpm.

2. Measure and record motor voltage and amperage.

C. Operational Test: After electrical circuitry has been energized, start units to confirm proper motor rotation and unit operation. Remove malfunctioning units, replace with new units, and retest.

D. Test and adjust controls and safeties. Replace damaged and malfunctioning controls and equipment.

E. Shut unit down and reconnect automatic temperature-control operators.

F. Refer to Division 15 Section "Testing, Adjusting, and Balancing" for testing, adjusting, and balancing procedures.

G. Replace fan and motor pulleys as required to achieve design airflow.

H. Repair or replace malfunctioning units. Retest as specified above after repairs or replacements are made.

ADJUSTING

A. Adjust damper linkages for proper damper operation.

B. Adjust belt tension.

C. Lubricate bearings.

CLEANING

A. On completion of installation, internally clean fans according to manufacturer's written instructions. Remove foreign material and construction debris. Vacuum fan wheel and cabinet.

B. After completing system installation, including outlet fitting and devices, inspect exposed finish. Remove burrs, dirt, and construction debris and repair damaged finishes.

COMMISSIONING

A. Verify that power ventilators are installed and connected according to the Contract Documents.

B. Adjust flows and controls to deliver specified performance.

C. Test and adjust controls and safeties. Replace damaged and malfunctioning controls and equipment.

DEMONSTRATION

A. Engage a factory-authorized service representative to train Owner's maintenance personnel to adjust, operate, and maintain power ventilators.

1. Train Owner's maintenance personnel on procedures and schedules for starting and stopping, troubleshooting, servicing, and maintaining equipment and schedules.

2. Review data in maintenance manuals. Refer to Division 1.

3. Schedule training with Owner, through Architect, with at least seven days' advance notice.

END OF SECTION

SECTION 15170
AIR TRANSMISSION AND AIR DISTRIBUTION SYSTEMS

PART 1 - GENERAL

1.1 SECTION INCLUDES

A. Providing ductwork and appurtenances required to complete air transmission and distribution system of heating, ventilating, and air conditioning systems indicated on Drawings and as specified.

1.2 SUBMITTALS

A. Submit in accordance with Division 01 and Section 15010.

B. Submit Following Manufacturer's Data:

1. Complete list of all items to be furnished and installed under this Section. Material lists that do not require performance data shall include manufacturers' names, types and model numbers.

2. Manufacturers' specifications and other data required to demonstrate compliance with specified requirements.

   Literature shall include descriptions of equipment, types, models, sizes, capacity tables or curves marked to indicate performance characteristics, electrical requirements, options selected, space requirements (including allowances for servicing) and any other data necessary to ensure compliance with requirements of these Specifications and performances indicated on Drawings. Data shall also include name and address of nearest service and maintenance organization that regularly stocks repair parts. Listings of items that function as parts of an integrated system shall be furnished at one time.

3. Shop drawings indicating methods of installation of equipment and materials, sizes and gages of ducts, and details of supports. Check Drawings and coordinate with other trades before submittal. Items to be covered shall include but not be limited to following:

   a. Layout of ductwork, and equipment drawn to scale, to establish that equipment will fit into allotted spaces with clearance for installation and maintenance. Show proposed details for attachment and anchoring to and hanging from structural framing of building. Show vibration isolation units, foundations and supports, and openings for passage of pipes and ducts. If departures from the Contract Drawings are deemed necessary by Contractor, details of such departures, including changes in related portions of project and reasons for such changes, shall be submitted with Drawings. Approved departures shall be made at no additional cost to the Owner.

   b. Drawings indicating locations and sizes of sleeves and prepared openings for pipes and ducts.

   c. Typical details of supports for equipment and ductwork.

1.3 QUALITY ASSURANCE

A. Installers and Manufacturer's Qualifications: Comply with provisions stated under Section [15130.
B.

1.4 PRODUCT HANDLING

A. Protection, Replacements, Delivery and Storage: Comply with provisions stated in Section
B. 15130
C.

1.5 COORDINATION

A. Coordinate all activities in accordance with provisions of Section 15130.

PART 2 – PRODUCTS

2.1 GENERAL

A. Unless otherwise noted, all provisions, including amendments thereto, of the 1985 first edition of the HVAC DUCT CONSTRUCTION STANDARDS of Sheet Metal and Air Conditioning Contractors National Association (referred to as SMACNA) and latest issue of the California Mechanical Code (CMC), are hereby made part of this Section. Any references made thereto shall be strictly followed.

B. Rectangular, round and flat oval ducts shall be manufactured and installed in accordance with requirements of the HVAC DUCT CONSTRUCTION STANDARDS OF SMACNA.

C. Sheet metal ducts shall be fabricated from galvanized steel, aluminum or stainless steel.

D. Galvanized steel ducts shall be fabricated of galvanized steel sheet, lock forming grade, conforming to ASTM A525 and A527.

E. Galvanized steel ducts gage thickness and permissible joints and seams to conform to requirements in Table No. 2 Construction Details for Rectangular Sheet Metal Ducts, this Section.

F. Ducts shall be reinforced in accordance with SMACNA Standards.

1. Cross Broken Duct: Duct sizes 19" wide and larger which have more than 10 square feet of unbraced panel shall be beaded or cross broken. This requirement is applicable to #20 gage or less thickness and 3" W.G. or less pressure. For details see SMACNA Manual.

G. Round, Oval and Flexible Duct; for Galvanized Steel Ducts:

1. Round Spiral Ducts and Fittings: Fabricated from galvanized sheet steel shall be machine-formed spiral pipe with sealed spiral locking joints. All fittings shall have continuous corrosion-resistant welds. Ducts and fittings shall be as manufactured by United Sheet Metal or approval equal. Use gages of ducts and fittings recommended by manufacturer.

2. Details of seams and transverse joints for round duct and fittings shall conform to SMACNA Standards.

3. Flat oval ducts shall be provided as indicated on the Contract Drawings. Details in SMACNA Manual.

4. Minimum duct wall thickness for flat oval duct construction shall be as indicated in of SMACNA Manual.

5. Non-metallic flexible duct for Tee-Bar Suspended Ceiling only shall be used with approval of Mechanical Engineer after submittal of installation and bench details and certified test

data in accordance with the Air Diffusion Council Test Code FD-72. Flexible duct shall be rated for not less than 6" W.G. static pressure.

6. Flexible duct shall be metallic or non-metallic, insulated or Uninsulated-insulated, factory fabricated complying with NFPA Standard 90A or 90B, tested in accordance with UL Standard, UL-181.

7. Methods of installations, standards for joining and attaching, and supporting flexible duct shall conform to applicable provisions of SMACNA Manual.

8. These provisions apply for ducts used for indoor comfort heating, ventilating and air conditioning service only.

9. Specifications herein shall not supersede application contingencies dictated by flexible duct manufacturer if those are more stringent.

H. Fittings and Other Construction Details: Details of fittings such as elbows, turning vanes, branch take off and connections, duct access doors, connections for grilles, registers, and ceiling diffusers, flexible connector at fan, etc., shall conform to applicable provisions in Section II or SMACNA Manual.

I. Duct Seam and Joint Sealant: Furnish duct seam and joint sealant or tape for all metal ducts. Sealant for low-pressure ducts shall be 3M Company "Miracle D17" or other approved equivalent, for use with a Calking gun. Tape joints with canvas using Borden Chemical Division "Arabol" or other approved adhesive. Provide sealing material for medium-pressure ducts as described in the SMACNA Manual for those pressures.

2.3 ACOUSTICAL DUCT AND PLENUM LINERS

A. Duct liners shall conform to requirements of Section **15510**.

2.4 DAMPERS

A. Manually Operated Volume Control Damper:

1. Rectangular multi-blade type, opposed blade operation, #16 gage galvanized steel blades; Center pivoted on 3/8" diameter steel trunnions. Interlocking edges; All dampers shall be in own angle frame, full duct size as indicated on Drawings; Frame of minimum #16 gage steel channel construction. Provide with damper operator and axles positively locked to blade.

RUSKIN MD 35, or approved equal.

2. Round. Frame shall be constructed of not less than #16 gage galvanized steel, blades of not less than #16 gage galvanized steel channel construction with factory neoprene seals, 1/2" diameter axle shafts and locking hand quadrant.

RUSKIN CDR. S25, or approved equal.

3. Oval. Frame shall be constructed of not less than #14 gage galvanized steel channels with factory blade seals of not less than #12 gage galvanized steel with not less than 1/2" diameter axle shafts. Use Ruskin standard construction for frame, blade and axle size, thickness and material variation. Provide adjustable locking hand quadrant.

RUSKIN CDO25 or approved equal.

B. Motorized Volume Control Damper:

1. Rectangular: Multi-blade type opposed blade operation, #16-gage minimum steel channel frame construction. #16-gage galvanized steel blades center pivoted on ½" diameter steel trunnions. Interlocking edges. Dampers shall be in own angle frame. Full duct size as indicated on the Contract Drawings. Complete with matching two-position motorized actuator with linkages, 120 VAC by Barber Colman, Honeywell, or equal.

RUSKIN DAMPER CD35, POTTORFF, or approved equal.

2. Round: Butterfly type constructed with minimum #18 gaged galvanized steel frame with steel angle reinforcement on above 20" diameter. Blade two-layer, minimum #14-gage equivalent thickness. Neoprene seal to ensure air tightness in closed position. Complete with matching two-position motorized actuator with linkage 120 VAC by Barber Colman, Honeywell, or approved equal.

C.

D.

E. Duct Access Panel: Provide factory fabricated access panel in ducts where required for servicing fire or smoke dampers, and at other locations as required in Part 3 under Access Plates and Panels. Units shall consist of removable panel, gasketed and pressure sealed by controlled spring tension locks. Construct unit, including all interior parts, of same material as duct. Units shall be constructed so as to be suitable for use in systems of up to 5" water gage static pressure.

2.5 AIR DISTRIBUTION DEVICES

A. General:

1. Grilles, registers, diffusers, and appurtenances shall conform to requirements specified herein and shall be of type and sizes as specified and indicated on Drawings. Performance shall be in accordance with Air Diffusion Council Test Code 1602R2 including airflow velocity, pressure, temperature, and sound measurements.

2. Sponge neoprene, rubber, vinyl or felt border gaskets shall be provided for all surface-mounted registers, grilles or diffusers.

3. Maximum sound level for supply diffusers and return and exhaust grilles shall not exceed NC 35.

4. Ceiling diffusers shall be provided with equalizing deflectors: Anemostat, Tuttle and Bailey or approved equal.

5. Ceiling mounted grilles, registers and diffusers shall be provided with a factory applied baked enamel dull finish, bone white, to match acoustical ceiling tile.

6. Grilles or registers to be mounted on painted walls or other surfaces shall be furnished with a baked prime coat, to be finish painted under Painting Section **09910**.

7. Ceiling diffusers, return grilles with duct connections, and exhaust grilles shall be provided with loose key operated opposed blade volume control. Volume controls for return grilles without duct connections are not required.

B. Ceiling Diffusers, Round, Square, Rectangular:

1. Acoustical Tile on Plaster Ceilings or Exposed Ceilings: Units shall be square or rectangular modular core type flush and flanged for surface mounting: Titus Model PMC or approved equal.

2. Prefabricated Acoustical Tile Ceilings with Inverted Exposed T-Bars: Units shall be square or rectangular modular core lay-in, flush panel type with a nominal overall dimension of 24" x 24": Titus Model PMC or approved equal.

C. Ceiling Grilles, Return:

1. Prefabricated Acoustical Tile Ceilings with Inverted Exposed T-Bars: Units shall be square lay-in, flush perforated panel type with a nominal overall dimension of 24" x 24": Titus Model PXP or approved equal.

D. Ceiling Diffuser, Return, Relief, Exhaust, Ceiling, Square, Rectangular:

1. Acoustical Tile on Plaster Ceilings or Exposed Ceilings: Units shall be square type flush and flanged for surface mounting: Titus Model PAR or approved equal.

2. Prefabricated Acoustical Tile Ceilings with Inverted Exposed T-Bars: Units shall be square lay-in, flush perforated panel type with a nominal overall dimension of 24" x 24": Titus Model PAR or approved equal.

E. Registers, Supply, Return, Wall:

1. Sidewall supply register shall be double deflecting type with loose key operated opposed blade volume control: Titus Model 300 or approved equal.

2. Sidewall return register shall be single deflecting type with horizontal fixed face bars set at 45 degree angle flush and flanged for surface mounting and complete with loose key operated opposed blade volume control: Titus Model 350 or approval equal.

F. Linear Diffuser:

1. Supply: Titus Model ML.
2. Return: Titus Model MLR.

G. Security Registers:

The security registers, supply and exhaust operations, shall be maximum security type. Security registers shall comply with National Institute of Corrections guidelines for suicide prevention and California Title 24.

1. Exposed Ceilings or Security Ceilings: Units shall be square type flush and flanged for surface mounting: Titus Model SG-SD or approved equal.

2.6

PART 3 - EXECUTION

3.1 EXAMINATION

A. Examine areas and conditions under which work of this Section will be performed. Correct conditions detrimental to proper and timely completion of work. Do not proceed until unsatisfactory conditions have been corrected.

3.2 DUCTWORK

A. Construct all ductwork using details of fabrication, and methods of support as indicated in the SMACNA Manuals and California Mechanical Code (CMC), unless specified or indicated otherwise in following Paragraphs or on Drawings. In event of conflict, the most stringent requirement shall be used.

B. Unless otherwise approved, construct ducts to conform accurately to dimensions indicated and to be straight and smooth on inside, with joints neatly finished.

C. DUCT DIMENSIONS INDICATED ARE NET INSIDE DIMENSIONS. SHOULD DUCT BE INDICATED WITH ACOUSTIC LINING, ADD TWICE THE THICKNESS OF THE ACOUSTIC LINER IN BOTH DIMENSIONS (WIDTH AND HEIGHT) TO OBTAIN THE GROSS SHEET METAL DUCT DIMENSIONS.

D. Anchor ducts to building structural slab, framing and roof decking and detail method of anchoring and fastening if not indicated on Drawings. All supports shall be seismically constructed.

F. Construct and install ducts so as to be completely free from vibration under all conditions of operation.

G. Indicate on layout drawing, required for suspended ductwork, location of supports, loads imposed on each fastening or anchor, typical details for anchorage, and details for special anchorage for supports attached to metal roof decking.

H. Attach supports only to building structural framing members and concrete slabs.

I. Where supports are required between structural framing members, detail and install suitable intermediate metal framing.

J. Ducts handling air conditioning or heating supply air shall be insulated in accordance with requirements of Section 15510.

(1) Ducts exposed to weather shall have exterior insulation with weather jacket and interior lining as indicated on Table 2, Section **15510**.

K. Ferrous angles and structural members and joining collars specified for construction and support of ductwork and plenums, shall be primed with one heavy coat of approved asphaltic aluminum paint before installation or fabrication. Metal surface shall be thoroughly cleaned before application of paint. Galvanizing may be used instead of painting. Duct hanger rods installed concealed in furred ceilings and walls need not be primed or painted.

L. Broken places in galvanized coating shall be acid washed and then completely soldered over or painted with galvanizing paint, Devcon Z or ZRC "Cold Galvanizing" compound.

M. For ducts of brushed stainless steel shall be as indicated on drawings.

3.3 DUCT CONSTRUCTION

A. Minimum ductwork gages, joints, reinforcing, and bracing shall conform to the following Tables 1 and 2. Plenums and castings shall not be thinner than the duct thickness listed in Table 2 for corresponding dimensions. Additional bracing shall be used to prevent objectionable panel vibration.

B. TABLE 1 - SHEET METAL THICKNESS FOR CIRCULAR DUCTS AND FLAT - OVAL (FOR STATIC PRESSURES LISTED):

Gage Thickness 2" water column maximum S.P. Round / Oval		Diameter of Duct Max. Diameter (inches)	Horizontal support max. distance	Girth Joints
26	24	To 9	10'-0"	2" slip
26	24	9 - 14	8'-0"	4"
24	22	14 - 23	8'-0"	4"
22	20	23 - 37	8'-0"	4"
20	18	37 - 51	6'-0"	1-1/4 x 1-1/8" Flange

1. Acceptable longitudinal seams are grooved, snap lock and standing, sealed and taped, or sealed spiral or continuously welded. For exhaust duct, taping may be omitted.

C. TABLE 2 - CONSTRUCTION DETAILS FOR RECTANGULAR SHEET METAL DUCTS FOR LOW PRESSURE SYSTEM WHERE VELOCITIES DO NOT EXCEED 2000 FEET PER MINUTE

1. For pressures in excess of 2" water column, duct wall thickness shall be two gages heavier than set forth in this table.

2. Duct specifications shown below are applicable when ducts larger than 18" are cross broken. Where cross breaking is not used, duct wall thickness shall be two gages heavier on ducts 19" through 60" wide unless longitudinal standing seams are used.

MINIMUM METAL GAGES

Minimum Gage Thickness Steel		(Max. Side) Gross Dimensions (in inches)	Duct Permissible Girth Joints & Longitudinal Seams	Horizontal Support Maximum Distance
26	24	Up through 12	Drive slip, plain "S" slip, or 1" pocket lock	10' - 0"
24	22	13 through 18	Drive slip, plain "S" slip, 1" pocket lock	10' - 0"
24	22	19 through 30	Hemmed "S" slip, 1" bar slip, or 1" pocket lock on 5' centers. Hemmed "S" slip, 1" slip, or 1" pocket lock on 5' centers with 1"x 1"x 1/8" angles on center line between. Hemmed "S" slip, 1" bar slip,	10' - 0"

			or 1" pocket lock on 10' centers with cross break 1" standing seam on 5' centers.		
22	20	31 through 42	1" bar slip, reinforced bar slip, or pocket lock 5' centers. 1" bar slip, reinforced bar slip, or pocket lock on 10' centers with 1" x 1" x 1/8" angles on center line between. 1" standing seam on 5' centers inside longitudinal standing seams with 1"x 1"x 1/8" angles on 5' centers on exterior.	8' - 0"	
22	20	43 through 54	1-1/2" bar slip, reinforced bar slip, or pocket lock on 4' centers. 1-1/2" bar slip, reinforced bar slip, or pocket lock on 8' centers with 1-1/2"x 1-1/2"x 1/8" angles on center line between. 1-1/2" bar slip, reinforced bar slip, or pocket lock on 4' centers with cross break.		8'-0" 8'-0"
*20	18	55 through 60	1-1/2" standing seam on 3' centers inside longitudinal standing seam with 1-1/2" x 1-1/2" x 1/8" angles on 4” centers on exterior.		8'-0"
*20	18	61 through 84	Reinforced bar slip, angle slip, alternate bar slip, or angle reinforced pocket lock on 4' centers using 1-1/2" x 1-1/2” 1/8" 1-1/2" x 1/8" angles on centerline between reinforced bar slip, angle slip, alternate bar slip, or angle reinforced pocket lock on 8' centers using 1-1/2" x1-1/2" x 1/8" reinforcing angles 2' on centers in between 1-1/2" angle reinforced standing seam on 2' center using 1-1/2" x 1-1/2" x 1/8" reinforcing angles. Inside longitudinal standing seams with 1-1/2" x 1-1/2" 1/8" angles on 2' centers on exterior.		6'-0"

* Button punch snap lock seams, "Lockformer" acceptable as an alternate only on 20 and 22 gage galvanized steel ducts. For aluminum duct, Button Punch SnapLock will not be permitted.

D. Ferrous angles and structural members and joining collars specified herein for the construction and support of ductwork and plenums, shall be primed with one heavy coat of approved asphaltic aluminum paint before installation or fabrication. The metal surface shall be thoroughly cleaned before application of the paint. Galvanizing may be used instead of painting. Duct hanger rods installed concealed in furred ceilings and walls need not be primed or painted.

E. Broken places in galvanized coating shall be acid washed and then completely soldered over or painted with galvanizing paint, Devcon Z or ZRC "Cold Galvanizing" compound.

F. No "S" or drive slip type girth or longitudinal seam shall be used on any ductwork installed outdoors or mounted on roofs. Use angle-reinforced government lock only.

G. Broken places in galvanized coating shall be acid washed and then completely soldered over or painted with galvanizing paint, Devcon Z or ZRC “Cold Galvanizing" compound.

3.4 DUCT AND PLENUM WITH LINERS

A. Ducts and plenums lined with acoustical insulation are as indicated on Drawings.

B. Duct dimensions indicated on Drawings are net. Add thickness of acoustic liners to obtain gross sheet metal duct dimensions.

C. Refer to Section **15510** for duct liner specifications and installations.

3.5 DUCT ELBOWS AND TURNING VANES

A. Duct elbows, including supply, exhaust, and return, shall be made with a centerline radius of 1.5 times duct width parallel to radius whenever possible, and in no case shall centerline radius be less than width of duct parallel to radius.

B. Where space does not permit above radius, or where square elbows are indicated on Drawings, turning vanes of an approved type shall be installed whether indicated on Drawings or not.

C. Turning vanes shall be thick double-wall vane type, Titus Y or Z, Tuttle and Bailey Ducturn, or equal. "DuroDyne" vane rail system duct turns may be used, provided that they are of thick double wall type and shop Drawings are submitted to and approved by the Mechanical Engineer. Duct turning vanes shall be of same material as ductwork, and shall be rigidly fixed in ductwork.

3.6 DUCT JOINTS AND SEAMS

A. Conditioned air supply ducts shall have joints and seams taped for air tightness or welded, except spiral seam factory machine formed duct components. Sprial seam is exempted. Joints between slip-fit components may be assembled with an approved seam and sheet metal screws, and taped.

B. Other ducts shall have joints and seams sealed by calking, taping, soldering, or welding. Ducts for grease hood exhaust shall use grease-tight welding or brazing on external surface for joints and seams. Fiberglass ducts shall have a thermally activated closure system, Manville “Fortifiber Therm-Lock with Automatic Bond Indicator dots” or approved equal.

C. No “S” or drive slip type girth or longitudinal seam shall be allowed on any exterior or exposed rooftop mounted ductwork. Use angle-reinforced government lock only.

D. Calking, taping, or other joint or seam treatment shall not be used as a substitute for good workmanship.

E. Unless otherwise detailed, taping shall be with Duro-Dyne FT-2, 2” wide tape, applied over S-2 duct sealer or Arabol and canvas tape or listed “Miracle” tape. No ducts shall be covered or insulated on

outside until joints are approved by the Owner Inspector. A second coat of Arabol or adhesive shall be applied 24 hours after initial application if any separation occurs. Use only approved and U.L. or Factory Mutual listed material for sealing and calking.

F. Seams around fan and coil housing and plenums shall be sealed with gaskets or calking compound, to provide an airtight assembly.

G. Ductwork connected to range hoods shall have grease-tight seams, and shall be constructed and installed so that grease or other material cannot become pocketed in any portion thereof, and system shall slope downward toward hood not less than 1/4" per lineal foot. (Refer to the City of Los Angeles Building Code). Joint calking or sealing compound shall be listed by THE CITY OF LOS ANGELES.

Duro-Dyne S-2 or approved equal, as recommended and guaranteed by manufacturer for this specific application shall be applied in accordance with manufacturer's recommendations. Metal surfaces shall be thoroughly cleaned before applying calking compound. Galvanized surfaces shall be etched, if necessary, to obtain a good bond between metal and calking compound.

3.7 DUCT TRANSITION

A. Slopes in sides of transition pieces shall be no greater than 1 to 5. No abrupt changes or offsets of any kind in duct system will be permitted, except when approved by the Mechanical Engineer. Radius turns or turning vanes may be used as previously noted, or special approved guiding vaned may be utilized.

3.8 DUCT TEST HOLES

A. Holes in ducts and plenums shall be provided for using pitot or static tubes for taking air measurements to balance or check air systems. Holes shall be covered with neoprene gasketed sheet metal cover or plugged with a fitted neoprene plug chained to duct.

3.9 SOUND ATTENUATING EQUIPMENT

A. Install sound attenuators where required and indicated on Drawings. Refer to manufacturer’s instructions for proper installation.

3.10 FLEXIBLE CONNECTIONS

A. At points where sheet metal connections are made to fans or air handling units, or where ducts of dissimilar metals are connected, a flexible connection of commercial grade “Duralon” by Dury-Dyne Corporation, or other approved non-combustible material, shall be installed and securely fastened by zinc-coated steel clinch-type bands or a flange type connection. Inlet and outlet openings shall be axially in-line, maximum deviation of centerline shall be less than 5% of diameter or shortest dimension of a rectangular inlet of fan or air handling unit, with system at rest. Duct end of connection shall be seismically restrained if more than 4’-0” from last support.

3.11 AIR TERMINAL DEVICES

A. General: Install supply devices, where indicated, after ducts, plenums, and casings have been cleaned and blown free of small particles, as specified. Devices shall be aligned to be parallel to ceiling construction or walls and ceiling surfaces, and shall be pulled tightly to compress gaskets and to fit neatly against surfaces.

After system is in operation, if drafts, dead spots, or excessive noise are noticeable in conditioned spaces due to improper selection of type and size diffuser, grille, or register, change unit to proper size and type without additional cost to the Owner.

B. Diffusers: Support surface-mounted ceiling diffusers from angles or channels resting on and fastened to ceiling construction. Do not support from ducts. Install lay-in diffusers on T-bar ceilings, to be supported by ceiling structure. In addition, provide sheet metal adaptor box above each diffuser to allow space for volume controller with round collars for connection to round ducts where indicated on Drawings. Fasten duct-mounted diffusers to duct collars.

C. Registers and Grilles:

1. Install wall supply registers at least 6" below ceiling, unless otherwise indicated. Locate return and exhaust registers 6" below ceiling unless otherwise indicated.

2. Support ceiling diffuser type inlets, registers, and grilles as described above for ceiling diffusers.

3. Fasten wall mounted and duct mounted registers and grilles to flanges of duct collars.

3.12 DAMPERS

A. Manually operated dampers, gravity dampers, fire dampers, and motor operated dampers shall be furnished and installed as specified herein and as indicated. Upon completion of installation, dampers shall be checked, lubricated, and adjusted so that they operate freely, without binding. Dampers shall be of standard commercial manufacture, complete with damper frame. Where painting is required they shall be shop finished unless otherwise noted.

1. Balancing dampers shall be installed in all main supply ducts from fan discharge plenums, where 2 or more ducts are connected to each plenum, even though such balancing dampers are not indicated. Each zone shall have a manual volume damper. A sheet metal screw shall be run through handle, into duct, to lock damper in place after final contractor balancing.

2. Each supply, return, or exhaust branch shall have a manual volume damper.

3. Dampers installed in accessible locations shall have locking and indicating quadrants; Ventlock, or Duro-Dyne Corporation.

4. Dampers installed in ductwork in furred ceiling spaces or in roof spaces with less than 30" of clearance below beams, joists, or other construction, and where access panels are not provided shall have damper rods extended below ceiling and terminated with a concealed damper regulation; Ventlock or Young.

5. Dampers not identified as splitter, extractor, or butterfly dampers shall be of multi-louver type arranged for opposed blade operation. Damper shall be same dimension as adjoining duct, and be tight closing. Blades shall be not greater than 4". Dampers shall be not less than 20-gage steel. Damper bearings shall be Teflon, or approved equal.

6. Motor operated damper shall be furnished by temperature control manufacturer as part of temperature control equipment and shall conform to requirements of Section **15240**: Temperature Control Systems.

7. Dampers shall have accessible operating mechanism, and where operators occur in finished portions of building, operators shall be chromium-plated with exposed edges rounded. Splitter dampers shall not be used unless specified and construction details approved by the Architect.

8. Dampers shall not be installed in combustion air ducts.

9. Access Panel shall be installed for access at each damper's operating mechanism.

3.13

A.

3.16 DUCT SLEEVES AND PREPARED OPENINGS

A. Furnish duct sleeves for 15" diameter ducts or less passing through floors, walls, ceilings, or roof and install during construction of the floor, wall, ceiling, or roof. Install round ducts larger than 15" diameter and square and rectangular ducts passing through floors, walls, ceilings or roof through prepared openings. Provide duct sleeves and prepared openings for duct mains and duct branches.

B. Provide 1" clearance between duct and sleeve or between insulation and sleeves for insulated ducts, except at grilles, registers, and diffusers.

C. Provide prepared openings for round ducts larger than 15" in diameter and for square and rectangular ducts with 1" clearance between duct and openings or between insulation and opening for insulated ducts, except at grilles, registers, and diffusers.

D. Provide closure collar of galvanized sheet metal not less than 4" wide unless otherwise indicated on Drawings on each side of walls or floors where sleeves or prepared openings are provided except where grilles or diffusers are installed. Install collar tight against surface. Fit sharp edges of collar installed around insulated duct to preclude tearing or puncturing insulation covering vapor barrier. Fabricate collars from round ducts in steel. Use not less than 4 nails to attach collars where openings are 12" in diameter or less and not less than 8 nails where openings are 20" in diameter or less.

E. Pack space between sleeve or opening and duct or duct insulation with commercial grade packing yarn.

3.17 FLEXIBLE DUCT RUNOUTS

A. Runouts from branches, risers or mains to air terminal units and outlets may be pre-insulated, factory fabricated flexible ducts complying with NFPA #90A. Flexible ductwork shall not exceed 7'-0” in length. When required to suspend flexible ducts, furnish hangers of type recommended by manufacturers of pre-insulated flexible duct and install at intervals recommended. Method of attachment to other components of air distribution system for a vapor tight joint shall be in accordance with printed instructions of flexible duct manufacturer. Bend radius shall be 1½ time diameter of duct, measured from centerline. Bends greater than 90-degree angle are not permitted. Non-metallic flexible duct shall be permitted only in Tee Bar Suspended Ceilings.

3.18 DUCT HANGERS AND SUPPORTS

A. Single horizontal ducts shall be suspended from heavy steel hanger straps securely fastened to overhead structural members. Ducts shall be supported by a hanger strap passing around and fastened to duct with not less than 2 Parker #10 screws set approximately 2” in from each edge, to form a supporting stirrup attached to overhead supports. Rectangular ducts shall have 2 hanger straps, one located on each side of duct. Round ducts may be hung from a single hanger strap unless conditions require that duct be held tight against ceiling, in which case 2 hanger straps may be brought down each side of duct, oriented at right angles to axis of duct and securely fastened to duct standing leg seam or angle iron stiffener with a; minimum of two ¼” bolts for each side of duct. Hanger straps shall be galvanized and a minimum size of 1 1/8” x #14 gage. Angels of galvanized steel of 1 1/8” x 1 1/8” x #16 gage (#14 gage for ducts 60” or greater) may be used in lieu of straps.

B. Where ducts are run adjacent one above the other, they shall be individually supported on a trapeze of steel angles with 3/8" supporting steel rods securely fastened to overhead construction.

A minimum distance of 3" shall be maintained between ducts wherever possible, but in no event shall distance be less than 2". Minimum sizes of steel angles shall be 1-1/2" x 1-1/2" x 1/8" for duct sizes through 60" in greatest dimension, 2" x 2" x 1/8" for duct sizes 61" through 84", 2" x 2" x 3/16" for duct sizes 85" through 96", and 2" x 2" x 1/4" for duct sizes over 97"

C. All ducts 30" square area and greater and all ducts 20'-0" long and longer shall be seismically restrained. See Noise, Vibration and Seismic Control, Section **15020**.

D. Hangers shall not be supported by, or fastened to, non-structural members including blocking. Toggle or Molly type bolts shall not be used.

E. Vertical ducts shall be supported with suitable angles on each side of each duct located at each floor and at intervals not to exceed 8'-0". Angles shall be sized for required span so that they will be rigid, without any bending or sagging.

F. Where method of duct manufacture or hanging cannot be in accordance with previous Paragraphs because of interference or structural difficulties Contractor shall submit detail of an alternate method to the Architect for approval before work is begun.

G. Roof mounted ductwork shall be held at a minimum 12 inches above roof and shall be supported by galvanized welded pipe, one on each side, and fastened to roof in pitch pan filled cold process cement. Install supports at each turn, unit connections, and each penetration, also space at maximum 6 feet off center in general.

3.19 ACCESS PLATES AND DOORS

A. Access plates and doors shall be furnished and installed wherever stops, valves, fire dampers, fusible links, coils, damper operating mechanism, control equipment, lubrication fittings, air filters, air handling equipment and similar items normally requiring adjustment or servicing are installed in concealed spaces.

B. Access plates and doors shall be located to permit convenient access to equipment; of a size to permit removal of equipment for servicing. Access plates shall be no less than 12" x 12" in usable opening. Proper servicing of equipment requires adequate access for maintenance personnel. Access doors shall not be less than 24" x 24", unless otherwise detailed. 2 or more valves shall not be located in same access area unless sufficient clearance is provided for operation, servicing and removal of each valve.

C. Openings in ducts or plenums whose longer dimension does not exceed 12" may be covered by a plate of same material as duct, gasketed and fastened to duct or plenum with sheet metal screws.

D. Access plates in floors shall not be less than 8" x 8" and shall be carborundum surface brass with cast brass frames anchored into concrete. Access plates in tile walls shall be chromium plated brass and polished. Approved serrated plates furnished as part of a clean-out assembly are acceptable in floors instead of a separate plate.

E. Access plates and doors in walls and ceilings of finished rooms and in locations normally accessible to students shall be supplied with continuous piano hinges, unless otherwise specified, and a special flush type spring loaded latch requiring an Allen wrench to operate. Access devices shall be installed after plastering in plaster ground openings.

F. Access panels or doors penetrating one-hour fire resistive ceilings shall meet code requirements for such openings.

G. Access panels shall be fire-rated equal to Milcor manufactured by Inland Steel Products Co. Access doors shall be approved for installation in openings penetrating one-hour fire resistive ceilings.

Access doors shall have a flush, key-operated cylinder lock, furnished with 2 keys each, instead of Allen headlock for non-rated ceilings.

H. Access panels that are part of an integrated ceiling are covered in Section **09510**: Acoustical Ceilings. Identification markers (decals) shall be affixed to adjacent supports, under this portion of work, to indicate location and type of mechanical device to be serviced. Standard identification markers will be supplied by the Owner to Contractor for installation.

I. Access panels installed in ducts or plenums located in heater or equipment rooms containing gas-fired equipment shall be supplied with heavy duty spring closing hinges and refrigerator door type catches unless otherwise required. When these panels are intended for maintenance personnel access, catches shall be operable from both interior and exterior.

J. Other access panels, except those specified above, shall be equipped with suitable hinges and one or more sash fasteners.

K. Panels located in ducts and plenums shall be installed with gaskets made of synthetic rubber, felt or similar material to make an airtight installation. Panels shall be constructed and reinforced to prevent vibration.

L. Letter words "FIRE DAMPERS" on panels over fire dampers and words "DO NOT OPEN - HEATER IS OPERATING" on panels located in heater or equipment rooms. Letters shall be approximately 3" high, if space is available.

M. Furnish a key to operate latch access plates, one for each access plate, but not to exceed 5 keys for any one contract.

N. Access plates and panels shall have manufacturer's name or trade mark and model number cast or stamped thereon, or upon a label permanently affixed thereon.

O. Duct Through Roof Flashing: Provide duct through roof flashing as detailed in the SMACNA standards or as indicated on drawings.

P. Refer to SMACNA Figures 2-12 and 2-13 for access plate and door construction.

3.20 PRESSURE TESTING

A. Test and make substantially airtight supply, return, and exhaust ducts, plenums, and casings, at static pressure indicated for system before covering with insulation or concealing in masonry. Substantially airtight shall be construed to mean that no air leakage is noticeable through senses of feeling or hearing at duct joints. Test ductwork for leaks at 1-1/2 times operating pressure but at a minimum of 2" of water.

END OF SECTION

SECTION 15210
METAL DUCTWORK

PART 1 – GENERAL

1.1 RELATED DOCUMENTS

A. Drawings and general provisions of the Contract, including General and Supplementary Conditions and Division 1 Specification Sections, apply to this Section.

1.2 SUMMARY

A. This Section includes metal ducts for supply, return, outside, and exhaust air-distribution systems in pressure classes from minus 2- to plus 10-inch w.c. Metal ducts include the following:

1. Rectangular ducts and fittings.

2. Single-wall, round **and flat-oval** spiral-seam ducts and formed fittings.

3. Double-wall, round **and flat-oval** spiral-seam ducts and formed fittings.

4. Duct liner.

B. Related Sections include the following:

1. Section 15220 "Ductwork Accessories" for dampers, sound-control devices, duct-mounting access doors and panels, turning vanes, and flexible ducts.

1.3 SYSTEM DESCRIPTION

A. Duct system design, as indicated, has been used to select size and type of air-moving and -distribution equipment and other air system components. Changes to layout or configuration of duct system must be specifically approved in writing by the ENGINEER. Accompany requests for layout modifications with calculations showing that proposed layout will provide original design results without increasing system total pressure.

1.4 QUALITY ASSURANCE

A. Welding: Qualify procedures and personnel according to AWS D1.1, "Structural Welding Code--Steel," for hangers and supports, AWS D1.2, "Structural Welding Code--Aluminum," for aluminum supporting members, and AWS D9.1, "Sheet Metal Welding Code," for duct joint and seam welding.

B. NFPA Compliance:

1. NFPA 90A, "Installation of Air Conditioning and Ventilating Systems."

2. NFPA 90B, "Installation of Warm Air Heating and Air Conditioning Systems."

C. Comply with NFPA 96, "Ventilation Control and Fire Protection of Commercial Cooking Operations," C3, "Duct System," for range hood ducts, unless otherwise indicated.

D. Mockups:

1. Before installing duct systems, build mockups representing pressure classes higher than 2-inch wg. Build mockups to comply with the following requirements, using materials indicated for the completed Work, and include each of the following features and fittings:

a. Five (5) transverse joints.
b. One (1) access door(s).
c. Two (2) typical branch connections, each with at least one elbow.
d. Two (2) typical flexible duct or flexible connector connections for each duct and apparatus.
e. Perform tests specified in Part 3 "Field Quality Control" Article. Modify mockup construction and perform additional tests as required to achieve specified minimum acceptable results.

2. Approved mockups may become part of the completed Work if undisturbed at time of Substantial Completion.

PART 2 – PRODUCTS

2.1 MANUFACTURERS

A. In other Part 2 articles where titles below introduce lists, the following requirements apply to product selection:

1. Manufacturers: Subject to compliance with requirements, provide products by one of the manufacturers specified.

2.2 SHEET METAL MATERIALS

A. Comply with SMACNA's "HVAC Duct Construction Standards--Metal and Flexible" for acceptable materials, material thicknesses, and duct construction methods, unless otherwise indicate Sheet metal materials shall be free of pitting, seam marks, roller marks, stains, discolorations, and other

imperfections.

B. Galvanized Sheet Steel: Lock-forming quality; complying with ASTM A 653/A 653M and having **[G60] [G90]** coating designation; ducts shall have mill-phosphatized finish for surfaces exposed to view.

PVC-Coated Galvanized Steel: Acceptable by authorities having jurisdiction for use in fabricating ducts with UL 181, Class 1 listing Lock-forming-quality, galvanized sheet steel complying with ASTM A 653/A 653M and having **[G60] [G90]** coating designation. Factory-applied PVC coatings

2.3 SEALANT MATERIALS

A. Joint and Seam Sealants, General: The term "sealant" is not limited to materials of adhesive or mastic nature but includes tapes and combinations of open-weave fabric strips and mastics.

B. Joint and Seam Tape: 2 inches wide; glass-fiber-reinforced fabric.

C. Tape Sealing System: Woven-fiber tape impregnated with gypsum mineral compound and modified acrylic/silicone activator to react exothermically with tape to form hard, durable, airtight seal.

D. Water-Based Joint and Seam Sealant: Flexible, adhesive sealant, resistant to UV light when cured, UL 723 listed, and complying with NFPA requirements for Class 1 ducts.

E. Solvent-Based Joint and Seam Sealant: One-part, non-sag, solvent-release-curing, polymerized butyl sealant formulated with a minimum of 75 percent solids.

F. Flanged Joint Mastic: One-part, acid-curing, silicone, elastomeric joint sealant complying with ASTM C 920, Type S, Grade NS, Class 25, Use O.

G. Flange Gaskets: Butyl rubber or EPDM polymer with polyisobutylene plasticizer.

2.4 HANGERS AND SUPPORTS

A. Building Attachments: Concrete inserts, powder-actuated fasteners, or structural-steel fasteners appropriate for construction materials to which hangers are being attached.

1. Exception: Do not use powder-actuated concrete fasteners for lightweight-aggregate concretes or for slabs less than 4 inches thick.

B. Hanger Materials: Galvanized sheet steel or threaded steel rod.

1. Hangers Installed in Corrosive Atmospheres: Electrogalvanized, all-thread rods or galvanized rods with threads painted with zinc-chromate primer after installation.

2. Strap and Rod Sizes: Comply with SMACNA's "HVAC Duct Construction Standards--Metal and Flexible" for steel sheet width and thickness and for steel rod diameters.

3. Galvanized-steel straps attached to aluminum ducts shall have contact surfaces painted with zinc-chromate primer.

C. Duct Attachments: Sheet metal screws, blind rivets, or self-tapping metal screws; compatible with duct materials.

D. Trapeze and Riser Supports: Steel shapes complying with ASTM A 36/A 36M.

1. Supports for Galvanized-Steel Ducts: Galvanized-steel shapes and plates.

2. Supports for Stainless-Steel Ducts: Stainless-steel support materials.

3. Supports for Aluminum Ducts: Aluminum support materials unless materials are electrolytically separated from ducts.

2.5 RECTANGULAR DUCT FABRICATION

A. Fabricate ducts, elbows, transitions, offsets, branch connections, and other construction according to SMACNA's "HVAC Duct Construction Standards--Metal and Flexible" and complying with requirements for metal thickness, reinforcing types and intervals, tie-rod applications, and joint types and intervals.

1. Lengths: Fabricate rectangular ducts in lengths appropriate to reinforcement and rigidity class required for pressure class.

2. Deflection: Duct systems shall not exceed deflection limits according to SMACNA's "HVAC Duct Construction Standards--Metal and Flexible."

B. Transverse Joints: Prefabricated slide-on joints and components constructed using manufacturer's guidelines for material thickness, reinforcement size and spacing, and joint reinforcement.

1. Manufacturers:

a. Ductmate Industries, Inc.
b. Nexus Inc.
c. Ward Industries, Inc.

C. Formed-On Flanges: Construct according to SMACNA's "HVAC Duct Construction Standards--Metal and Flexible," Figure 1-4, using corner, bolt, cleat, and gasket details.

1. Manufacturers:

a. Ductmate Industries, In
b. Lockformer.
c.

2. Duct Size: Maximum 30 inches wide and up to 2-inch wg pressure class.

3. Longitudinal Seams: Pittsburgh lock sealed with noncuring polymer sealant.

D. Cross Breaking or Cross Beading: Cross break or cross bead duct sides 19 inches and larger and 0.0359 inch thick or less, with more than 10 sq. ft. of nonbraced panel area unless ducts are lined.

2.6 APPLICATION OF LINER IN RECTANGULAR DUCTS

A. Adhere a single layer of indicated thickness of duct liner with at least 90 percent adhesive coverage at liner contact surface are Attaining indicated thickness with multiple layers of duct liner is prohibited.

B. Apply adhesive to transverse edges of liner facing upstream that do not receive metal nosing.

C. Butt transverse joints without gaps and coat joint with adhesive.

D. Fold and compress liner in corners of rectangular ducts or cut and fit to ensure butted-edge overlapping.

E. Do not apply liner in rectangular ducts with longitudinal joints, except at corners of ducts, unless duct size and standard liner product dimensions make longitudinal joints necessary.

F. Apply adhesive coating on longitudinal seams in ducts with air velocity of 2500 fpm.

G. Secure liner with mechanical fasteners 4 inches from corners and at intervals not exceeding 12 inches transversely; at 3 inches from transverse joints and at intervals not exceeding 18 inches longitudinally.

H. Secure transversely oriented liner edges facing the airstream with metal nosings that have either channel or "Z" profiles or are integrally formed from duct wall. Fabricate edge facings at the following locations:

1. Fan discharges.

2. Intervals of lined duct preceding unlined duct.

3. Upstream edges of transverse joints in ducts where air velocities are greater than 2500 fpm (12.7 m/s) or where indicated.

I. Secure insulation between perforated sheet metal inner duct of same thickness as specified for outer shell. Use mechanical fasteners that maintain inner duct at uniform distance from outer shell without compressing insulation.

1. Sheet Metal Inner Duct Perforations: 3/32-inch diameter, with an overall open area of 23 percent.

J. Terminate inner ducts with buildouts attached to fire-damper sleeves, dampers, turning vane assemblies, or other devices. Fabricated buildouts (metal hat sections) or other buildout means are optional; when used, secure buildouts to duct walls with bolts, screws, rivets, or welds.

2.7 ROUND AND FLAT-OVAL DUCT AND FITTING FABRICATION

A. Diameter as applied to flat-oval ducts in this Article is the diameter of a round duct with a circumference equal to the perimeter of a given size of flat-oval duct.

B. Round, **[Longitudinal] [Spiral Lock] [Longitudinal- and Spiral Lock]**-Seam Ducts: Fabricate supply ducts of galvanized steel according to SMACNA's "HVAC Duct Construction Standards--Metal and Flexible."

C. Flat-Oval, **[Longitudinal] [Spiral Lock] [Longitudinal- and Spiral Lock]**-Seam Ducts: Fabricate supply ducts according to SMACNA's "HVAC Duct Construction Standards--Metal and Flexible."**[Fabricate ducts larger than 72 inches in diameter with butt-welded longitudinal seams.]**

1. Manufacturers:

a. McGill AirFlow Corporation.
b. SEMCO Incorporated.
c.

D. Duct Joints:

1. Ducts up to 20 Inches in Diameter: Interior, center-beaded slip coupling, sealed before and after fastening, attached with sheet metal screws.

2. Ducts 21 to 72 Inches in Diameter: Three-piece, gasketed, flanged joint consisting of two internal flanges with sealant and one external closure band with gasket.

3. Ducts Larger Than 72 Inches in Diameter: Companion angle flanged joints per SMACNA "HVAC Duct Construction Standards--Metal and Flexible," Figure 3-2.

4. Round Ducts: Prefabricated connection system consisting of double-lipped, EPDM rubber gasket. Manufacture ducts according to connection system manufacturer's tolerances.

    a. Manufacturers:

        i. Ductmate Industries, Inc.
        ii. Lindab Inc.
        iii. **<Insert manufacturer's name.>**

5. Flat-Oval Ducts: Prefabricated connection system consisting of two flanges and one synthetic rubber gasket.

    a. Manufacturers:

        i. Ductmate Industries, Inc.
        ii. McGill AirFlow Corporation.
        iii. SEMCO Incorporated.

E. 90-Degree Tees and Laterals and Conical Tees: Fabricate to comply with SMACNA's "HVAC Duct Construction Standards--Metal and Flexible," with metal thicknesses specified for longitudinal-seam straight ducts.

F. Diverging-Flow Fittings: Fabricate with reduced entrance to branch taps and with no excess material projecting from fitting onto branch tap entrance.

G. Fabricate elbows using die-formed, gored, pleated, or mitered construction.**[Bend radius of die-formed, gored, and pleated elbows shall be 1-1/2 times duct diameter.]** Unless elbow construction type is indicated, fabricate elbows as follows:

1. Mitered-Elbow Radius and Number of Pieces: Welded construction complying with SMACNA's "HVAC Duct Construction Standards--Metal and Flexible," unless otherwise indicated.
2. Round Mitered Elbows: Welded construction with the following metal thickness for pressure classes from minus 2- to plus 2-inch wg:

    a. Ducts 3 to 36 Inches in Diameter: 0.034 inch.
    b. Ducts 37 to 50 Inches in Diameter: 0.040 inch.
    c. Ducts 52 to 60 Inches in Diameter: 0.052 inch.
    d. Ducts 62 to 84 Inches in Diameter: 0.064 inch.

3. Round Mitered Elbows: Welded construction with the following metal thickness for pressure classes from 2- to 10-inch wg:

    a. Ducts 3 to 26 Inches in Diameter: 0.034 inch.
    b. Ducts 27 to 50 Inches in Diameter: 0.040 inch.
    c. Ducts 52 to 60 Inches in Diameter: 0.052 inch.
    d. Ducts 62 to 84 Inches in Diameter: 0.064 inch.

4. Flat-Oval Mitered Elbows: Welded construction with same metal thickness as longitudinal-seam flat-oval duct.

5. 90-Degree, 2-Piece, Mitered Elbows: Use only for supply systems or for material-handling Class A or B exhaust systems and only where space restrictions do not permit using radius elbows. Fabricate with single-thickness turning vanes.

6. Round Elbows 8 Inches and Less in Diameter: Fabricate die-formed elbows for 45- and 90-degree elbows and pleated elbows for 30, 45, 60, and 90 degrees only. Fabricate nonstandard bend-angle configurations or nonstandard diameter elbows with gored

construction.

7. Round Elbows 9 through 14 Inches in Diameter: Fabricate gored or pleated elbows for 30, 45, 60, and 90 degrees unless space restrictions require mitered elbows. Fabricate nonstandard bend-angle configurations or nonstandard diameter elbows with gored construction.

8. Round Elbows Larger than 14 Inches in Diameter and All Flat-Oval Elbows: Fabricate gored elbows unless space restrictions require mitered elbows.

9. Die-Formed Elbows for Sizes through 8 Inches in Diameter and All Pressures 0.040 inch thick with 2-piece welded construction.

10. Round Gored-Elbow Metal Thickness: Same as non-elbow fittings specified above.

11. 1Flat-Oval Elbow Metal Thickness: Same as longitudinal-seam flat-oval duct specified above.

12. 1Pleated Elbows for Sizes through 14 Inches in Diameter and Pressures through 10-Inch wg: 0.022 inch.

H. PVC-Coated Elbows and Fittings: Fabricate elbows and fittings as follows:

1. Round Elbows 4 to 8 Inches in Diameter: Two piece, die stamped, with longitudinal seams spot welded, bonded, and painted with PVC aerosol spray.

2. Round Elbows 9 to 26 Inches in Diameter: Standing-seam construction.

3. Round Elbows 28 to 60 Inches in Diameter: Standard gored construction, riveted and bonded.

4. Other Fittings: Riveted and bonded joints.

5. Couplings: Slip-joint construction with a minimum 2-inch insertion length.

PART 3 – EXECUTION

3.1 DUCT APPLICATIONS

A. All ducts shall be galvanized steel:

3.2 **<**DUCT INSTALLATION

A. Construct and install ducts according to SMACNA's "HVAC Duct Construction Standards--Metal and Flexible," unless otherwise indicated.

B. Install round and flat-oval ducts in lengths not less than 12 feet unless interrupted by fittings.

C. Install ducts with fewest possible joints.

D. Install fabricated fittings for changes in directions, size, and shape and for connections.

E. Install couplings tight to duct wall surface with a minimum of projections into duct. Secure couplings with sheet metal screws. Install screws at intervals of 12 inches, with a minimum of 3 screws in each coupling.

F. Install ducts, unless otherwise indicated, vertically and horizontally and parallel and perpendicular to building lines; avoid diagonal runs.

G. Install ducts close to walls, overhead construction, columns, and other structural and permanent enclosure elements of building.

H. Install ducts with a clearance of 1 inch, plus allowance for insulation thickness.

I. Conceal ducts from view in finished spaces. Do not encase horizontal runs in solid partitions unless specifically indicated.

J. Coordinate layout with suspended ceiling, fire- and smoke-control dampers, lighting layouts, and similar finished work.

K. Seal all joints and seams. Apply sealant to male end connectors before insertion, and afterward to cover entire joint and sheet metal screws.

L. Electrical Equipment Spaces: Route ducts to avoid passing through transformer vaults and electrical equipment spaces and enclosures.

M. Non-Fire-Rated Partition Penetrations: Where ducts pass through interior partitions and exterior walls and are exposed to view, conceal spaces between construction openings and ducts or duct insulation with sheet metal flanges of same metal thickness as ducts. Overlap openings on 4 sides by at least 1-1/2 inches.

N. Install ducts with hangers and braces designed to withstand, without damage to equipment, seismic force required by applicable building codes.
Protect duct interiors from the elements and foreign materials until building is enclosed

3.3 SEAM AND JOINT SEALING

A. Seal duct seams and joints according to SMACNA's "HVAC Duct Construction Standards--Metal and Flexible" for duct pressure class indicate

B. For pressure classes lower than 2-inch wg, seal transverse joints.

C. Seal ducts before external insulation is applied.

3.4 HANGING AND SUPPORTING

A. Support horizontal ducts within 24 inches of each elbow and within 48 inches of each branch intersection.

B. Support vertical ducts at maximum intervals of 16 feet and at each floor.

C. Install upper attachments to structures with an allowable load not exceeding one-fourth of failure (proof-test) load.

D. Install concrete inserts before placing concrete.

E. Install powder-actuated concrete fasteners after concrete is placed and completely cure

F. Do not use powder-actuated concrete fasteners for lightweight-aggregate concretes or for slabs less than 4 inches thick.

3.5 CONNECTIONS

A. Make connections to equipment with flexible connectors according to Section 15220 "Ductwork Accessories."

B. Comply with SMACNA's "HVAC Duct Construction Standards--Metal and Flexible" for branch, outlet and inlet, and terminal unit connections.

3.6 FIELD QUALITY CONTROL

A. Perform the following field tests and inspections, regardless of pressure classification, according to SMACNA's "HVAC Air Duct Leakage Test Manual" and prepare test reports:

1. Disassemble, reassemble, and seal segments of systems to accommodate leakage testing and for compliance with test requirements.

2. Conduct tests at static pressures equal to maximum design pressure of system or section being teste If pressure classes are not indicated, test entire system at maximum system design pressure. Do not pressurize systems above maximum design operating pressure. Give seven days' advance notice for testing.

3. Maximum Allowable Leakage: Comply with requirements for Leakage Class 3 for round and flat-oval ducts, Leakage Class 12 for rectangular ducts in pressure classes lower than and equal to 2-inch wg (both positive and negative pressures), and Leakage Class 6 for pressure classes from 2- to 10-inch wg.

4. Remake leaking joints and retest until leakage is equal to or less than maximum allowable.

3.7 CLEANING NEW SYSTEMS

A. Mark position of dampers and air-directional mechanical devices before cleaning, and perform cleaning before air balancing.

B. Use service openings, as required, for physical and mechanical entry and for inspection.

1. Create other openings to comply with duct standards.

2. Disconnect flexible ducts as needed for cleaning and inspection.

3. Remove and reinstall ceiling sections to gain access during the cleaning process.

C. Vent vacuuming system to the outside. Include filtration to contain debris removed from HVAC systems, and locate exhaust down wind and away from air intakes and other points of entry into building.

D. Clean the following metal duct systems by removing surface contaminants and deposits:

1. Air outlets and inlets (registers, grilles, and diffusers).

2. Supply, return, and exhaust fans including fan housings, plenums (except ceiling supply and return plenums), scrolls, blades or vanes, shafts, baffles, dampers, and drive assemblies.

3. Air-handling unit internal surfaces and components including mixing box, coil section, air wash systems, spray eliminators, condensate drain pans, humidifiers and dehumidifiers, filters and filter sections, and condensate collectors and drains.

4. Coils and related components.

5. Return-air ducts, dampers, and actuators except in ceiling plenums and mechanical equipment rooms.

6. Supply-air ducts, dampers, actuators, and turning vanes.

E. Mechanical Cleaning Methodology:

1. Clean metal duct systems using mechanical cleaning methods that extract contaminants from within duct systems and remove contaminants from building.

2. Use vacuum-collection devices that are operated continuously during cleaning. Connect vacuum device to downstream end of duct sections so areas being cleaned are under negative pressure.

3. Use mechanical agitation to dislodge debris adhered to interior duct surfaces without damaging integrity of metal ducts, duct liner, or duct accessories.

4. Clean fibrous-glass duct liner with HEPA vacuuming equipment; do not permit duct liner to get wet.

5. Clean coils and coil drain pans according to NADCA 199 Keep drain pan operational. Rinse coils with clean water to remove latent residues and cleaning materials; comb and straighten fins.

F. Cleanliness Verification:

1. Visually inspect metal ducts for contaminants.

2. Where contaminants are discovered, re-clean and re-inspect ducts.

(END OF SECTION)

SECTION 15240
TEMPERATURE CONTROL SYSTEMS

PART 1 - GENERAL

1.1 SECTION INCLUDES

A. Furnishing and installing temperature controls for air conditioning, heating, and ventilating systems as indicated. Work shall include but not be limited to following:

3. All wiring and conduits, unless otherwise noted, for control systems, including wiring required to connect magnetic starters, (specified in other Sections) to control systems.

4. Testing and adjusting Temperature Control System.

5. Furnishing shop drawings and operational data of systems as installed and finally adjusted.

6. Formal instruction of the District's operating personnel in operation of equipment.

B. Following items are specified in other Sections:

1. Magnetic starters, contacts, power relays and variable resistors or controllers for motors, and other electrical devices.

2. Load carrying wiring for above listed devices and wiring for starting switches not interconnected with temperature control system. (Division 16).

3. Electrical power to control panels and other equipment. (Division 16).

7. Packaged self contained equipment specified complete with temperature controls.

1.2 RELATED SECTIONS

A. Section 15050: Basic Mechanical Materials and Methods.

C. Section 15120: Heating Equipment.

D. Section 15130: Air Conditioning and Air Handling Equipment.

E. Section 15170: Air Transmission and Air Distribution Systems.

F. Section 15250: Environmental Control Systems.

G. Section 15270: Mechanical Systems Commissioning.

H. Section 15280: Mechanical Testing Requirements.

1.3 SUBMITTALS

A. Submit in accordance with Section 01300: Shop Drawings/Submittals.

1. Complete list of items proposed to be furnished and installed under this Section.

2. Manufacturer's specifications and other data required to demonstrate compliance with specified requirements.

3. Manufacturer's recommended installation procedures, which when reviewed and accepted by the Architect/Engineer, will become basis for inspecting and accepting or rejecting actual installation procedures used on the work.

B. Shop drawings showing temperature control diagrams, complete with equipment appurtenances required for system. Include sequence of operation description for each system. Comply with provisions of Project Record Drawings under Division 1.

C. Operating Instructions: Comply with provisions of Section 15050: Basic Mechanical Materials and Methods; Section 15260: Testing, Adjusting and Balancing; Section 15270: Mechanical Systems Commissioning; and Section 15280: Mechanical Testing Requirements. Personally explain and demonstrate operation of system to representative of the District's Maintenance and Operation's Branch and Test and Balance Unit or to future operator, if available.

D. Guarantee: Refer to Section **[15130]**: Basic Mechanical Requirements.

1.4 QUALITY ASSURANCE

A. Manufacturer and Installer Qualifications: Comply with provisions stated under Section **[15130]**: Basic Mechanical Requirements.

1.5 PRODUCT HANDLING

A. Production, Replacement, Delivery and Storage: Refer to Section 01150: Storage of Materials and Equipment, and Section 15050: Basic Mechanical Materials and Methods.

PART 2 - PRODUCTS

2.1 TEMPERATURE CONTROLS

A. Provide temperature controls of electric, electronic microprocessor - DDC type, or a combination thereof, as indicated on Drawings that will provide required sequences or operation control.

2.2 MANUFACTURERS

A. Equipment in any system shall be of same manufacturer or their standard furnished items. Installation, testing, and adjusting of control system shall be under continuous supervision of manufacturer's authorized personnel.

B. Electric, electronic or Direct Digital microprocessor based control equipment shall be one of following manufacturers, unless otherwise noted:

1. Johnson Controls, Inc.

2. Siemens.

3. Honeywell, Inc.

2.3 ELECTRIC EQUIPMENT AND ACCESSORIES

A. Electric control equipment and accessories shall include but not be limited to following:

1. Electric control devices as indicated on Drawings and described herein, including thermostats, temperature controllers, valve and damper operators, switches, relays and control panels for instruments as required to provide a complete and operable system.

2. Wiring and conduit, unless otherwise noted, or control systems including wiring required to connect magnetic starters (specified in other Sections) to control systems.

B. Room Thermostats:

1. Thermostats for various air conditioning units shall be low voltage 5 wire minimum, for combination heating and cooling stages with automatic change over and complete with temperature adjustment button & digital display. The thermostat cable or wire shall be color coded as recommended by manufacturer to prevent voltage drop. Robertshaw No. 300-208 for two stage heat/one stage cool or equal. Provide thermostat guard. Subbase and Guard cover shall accommodate installed thermostat. Thermostats located on outside walls shall be mounted on insulated backplates or as specified by unit manufacturer.

2. Other types of room thermostats for application as follows:

a. Honeywell T822-C - for cooling only.
b. Honeywell T 7100 Microelectronic commercial thermostat with Q 7100 subbase provide electronic control of 18 to 30 VAC single zone HVAC equipment. Thermostate is either stand alone, or arranged in a temperature averaging network consisting of two three, four, five, or nine sensors for corresponding rooms or zones.
c. Honeywell T921 Proportional thermostat, low voltage, three wire controller for valve, damper motors and balancing relays. Unit manufacturer may specify or recommend optional thermostat.
d. Provide tamper proof locking thermostat guards for a, b, and c above. Covers shall be opaque beige plastic in student occupied areas, clear plastic cover in administrative areas. Use Honeywell model TG 500 and TG 501 Universal Thermostat Guards or as recommended by thermostat manufacturer.

E. Time Clocks:

1. TC-1: Time clock shall be solid state digital electronic type capable of 28 ON/OFF set points to be distributed through the week, complete with a day repeat feature, time and set points to be adjustable to nearest minute with a minimum ON duration of one minute and a maximum of 7 days, LED readout to show day of week and time of day using 12 hour AM/PM indicator, wired to be powered by 120 volt 60 cycle source and switch configuration to be SPDT with a rating of 5 amps. UL listed, enclosed in standard case NEMA Type 1, Intermatic Model ET715C or Paragon EC 71/18S, with battery operated carry-over.

2. TC-2: Interval timer (by-pass) shall be manually set and spring operated type Instermatic Model FF6H or Mark Time Model 90007, 0 to 6 hours, without hold feature, or approved equal.

F. Wiring:

1. Wiring in connection with control systems regardless of voltage, power supply circuits excepted, is part of work of this Section. Wiring shall comply with Section 16180: Wiring Devices.

2.4 ELECTRONIC EQUIPMENT AND ACCESSORIES

A. Electronic equipment and accessories shall include, but not be limited to following:

1. Electronic controls and devices as indicated on Drawings and described herein including thermostats, temperature controllers, valve and damper operators, switches, relays and control panels for instruments as required to provide a complete and operable system.

2. Wiring and conduit, unless otherwise noted, for control systems including wiring required to connect magnetic starters (specified in other Sections) to control systems.

B. Room Thermostats: Room thermostats shall be electronic type, using a resistance sensing element to provide, through electronic bridge circuit, a direct acting and reverse-acting signal to operator being controlled, and shall have separate and independent band width adjustments for both direct-acting and reverse-acting output, and be complete with concealed adjustment and guard.

C. Controllers:

1. Electronic controllers will be solid-state type utilizing electronic bridge control circuitry and having capability of providing a separate, direct acting and reverse-acting signal across null with band width adjustments and settings for both direct-acting and reverse-acting signals.

2. Output signals shall be 0-16 volt DC and shall be capable of operating one or 2 electronic operators.

3. Controllers shall be capable of being furnished with main and auxiliary sensing circuits for master and submaster type applications. These circuits shall be available for local or remote set point ranges. Sensing elements utilized with these controllers shall be nickel wire resistance element type.

4. Electronic controllers shall be capable of being used with more than one actuator for sequencing. Controllers shall be panel-mounted.

D. Auxiliary Devices:

1. Furnish and install all necessary auxiliary electronic devices as appropriate to accomplish sequence as specified. These totally electronic devices shall include (but not be limited to) such items as load limiting controllers, low signal selectors, high signal selectors, remote reset control devices, remote set point control devices, floating alarm units, staging networks, damper position indicators, unison amplifiers, reversing networks, sequencing networks and electronic power supplier.

2. Indication meters shall be furnished on panels to indicate output signals from controllers and auxiliary devices.

PART 3 - EXECUTION

3.1 TEMPERATURE CONTROL SYSTEM INSTALLATION

A. Control system shall be installed in accordance with control manufacturer's instructions as accepted by the Architect.

3.2 CONTROL PANELS OR CABINETS

A. Switches, clocks, temperature control instruments, and remote bulb thermometers, whose capillary tubes are under 25'-0" in length, shall be mounted in control panels with required wiring, piping, and tubing behind panel. Control panels shall be galvanized steel sheet metal, with light gray hammertone enamel finish, not lighter than #14 gage. Control panels shall comply with the Los Angeles City Electrical Work Specifications. Panels shall be attached to wall at locations indicated, or as directed. Adjustable apparatus shall be provided with screwed or riveted green Micarta plate engraved in white to indicate function. A clear space of 30" in front shall be maintained.

B. At locations indicated on Drawings, control cabinets shall be provided with door locks. Door locks shall be the flush type, latched, Corbin #15751, 5/8" for metal door, keyed to a Corbin Cat. #60 key. Cabinet shall be prime coated and finish painted under Section 09900: Painting. Cabinet shall be flush mounted.

3.3 ROOM THERMOSTAT

A. Room thermostat shall be wall mounted at a height of approximately 4'-0". Room thermostats not permitted on outside walls, at chalkboards, between shelving, in recesses or above heat producing equipment. When installation is necessary in tackboards, approval shall be secured from the Architect. Units shall be installed as close to edge of the tackboard as possible. Room thermostats shall be equipped with approved tamperproof cover. Thermostats shall have set point windows and integral thermometers. Office thermostats shall have extended adjustment knobs; all others shall have key adjustments. Unless indicated otherwise, room thermostats shall have non-switching subbases.

3.4 COORDINATION

A. Temperature Controls Contractor shall coordinate his work with other aspects of system balancing to obtain a complete operating mechanical system in accordance with design intent, including coordinating with balancing agency subcontractor.

B. Temperature Controls Contractor shall be responsible for coordinating his work with all aspects of alarm, fire alarm, and smoke detector, provided under Electrical Sections.

3.5 SEQUENCE OF OPERATION

A. Each system, electric, electronic, or direct digital control shall operate as graphically and described on Drawings. Contractor's submittal shall include a step-by-step description of sequence of operation for each piece of equipment in system.

3.6 CONTROL SYSTEM ADJUSTMENTS

A. Temperature Controls Contractor shall make all adjustments under operating conditions, to provide sequence of operation for controls indicated. If required operating conditions cannot be obtained prior to completion date of the Contract, due to outdoor seasonal temperatures, Controls Contractor shall return to job site when requested by the District and readjust control system when outdoor temperatures will permit proper operating conditions. Contractor shall start readjustment within 7 calendar days after notification. Final settings of controls and pressure ranges indicated by gages shall be indicated on Record Drawings.

(END OF SECTION)

SECTION 15260
TESTING, ADJUSTING AND BALANCING

PART 1 – GENERAL

1.1 SECTION INCLUDES

A. Perform testing, adjusting and balancing of completed heating, ventilating, and air conditioning systems and prepare reports and recommendations.

1.2 DEFINITIONS

A. Definitions are as indicated in applicable AABC, ASHRAE, ANSI publications, and Division 15 Sections.

1. TAB: Testing, Adjusting and Balancing.

2. AABC: Associated Air Balance Council

3. NEBB: National Environmental Balancing Bureau.

1.3 TESTING, ADJUSTING AND BALANCING AGENDA:

A. Definition: Proposed procedures and proposed forms, diagrams and reports for documenting testing, adjusting and balancing work.

B. Preparation: By testing, adjusting and balancing agency for review and approval by the Architect and the City Engineer.

C. Agenda shall include one complete set of AABC or NEBB publications listed in Article 1.03, Paragraph A, applicable publications, or, in case of other testing, adjusting and balancing organizations, comparable publications to establish an approved systematic and uniform set of procedures.

D. Agenda shall also include the following detailed narrative procedures, system diagrams and forms for test results.

1. Specific standard procedures required and proposed for each system.

2. Specified test forms for recording each procedure and for recording sound and vibration measurements.

3. Systems diagrams for each air, and water system. Diagrams may be single line. In addition to information recorded for standard AABC or NEBB procedures, following information is required:

a. Air handling units: Prepare pressure profile and show design ad actual CFM outside air, return air, supply air). Measure and record each mode (minimum OLA and 100% OA) where economizer cycle is specified. Record pressure drops of all components (coils, heat recovery devices, filters, sound attenuators, louvers, dampers, fans) and compare with design values. Pressure profile and component pressure drops are performance indicators and are not to be used for flow measurements. Set and record purge airflow for heat recovery wheels.
b. Duct distribution systems: Prepare pressure profiles from air handling unit to extremities of system. As a minimum, show pressure at each floor, main branch, and airflow, measuring device. Make pitot tube traverses of all trunk lines and major branch lines

where required for analysis of distribution system. Airflow measuring devices installed in ductwork, if available, may be utilized. Record residual pressures at inlets of volume controlled terminals at ends of system. Show actual pressures at all static pressure control points utilized for constant or variable flow systems.

1.4 SUBMITTALS

A. Submit in accordance with Section 01330: Shop Drawings/Submittals.

B. Work Certification: Submit name of organization proposed to perform work as herein described, for review within 35 days after Contract Award. Include in submittal the certified qualifications of all persons responsible for supervising and performing actual work.

C. Testing and Balancing Contractor shall submit, for approval, 6 copies of procedures to test and balance all mechanical systems.

D. Upon approval of the testing, adjusting and balancing agency submit agenda for approval.

E. Preliminary Report: Review drawings and specifications, examine system installation and submit a written report indicating deficiencies in system that would preclude proper adjusting, balancing, and testing of system.

F. After completion of tests, submit complete test reports for approval. Where test results differ from specified design conditions, indicating a Contract Deficiency, include explanatory comments in report. Contractor shall submit 8 copies of final Testing and Balancing Reports prior to requesting final inspection of project. Distribution of the reports shall be by the Architect as follows:
2 copies to Contractor
3 copies to Design and Construction Branch
1 copy to Inspector
2 retained by the Architect

1.5 QUALITY ASSURANCE

A. Qualifications of Agency and Personnel: Obtain services of an independent, qualified testing organization acceptable to the Architect to perform testing and balancing work as herein specified. Testing organization shall submit proof that it meets technical standards for membership in the AABC as published in the AABC; or, organization is a member of the Associated Air Balance Council; or, certified by the National Environmental Balancing Bureau (NEBB).

B. Performance Criteria: Work shall be performed in accordance with approved TAB agenda.

C. Test Equipment Criteria: Basic instrumentation requirements and accuracy/calibration required by AABC (Section Two) or Section II of the NEBB Procedural Standards for Testing, Adjusting and Balancing of Environmental Systems.

1.6 APPLICABLE PUBLICATIONS

A. Following publications form a part of this specification to extent indicated by reference thereto. In text, publications are referred to by the initials of organization.

1. American Society of Heating, Refrigerating and Air Conditioning Engineers, Inc. (ASHRAE): 1980 Systems Volume.

2. Associated Air Balance Council (AABC): National Standards for Field Measurement and Instrumentation Total System Balance, Volume 4, current edition.

3. American Society of Mechanical Engineers (ASME): Section VIII, Pressure Vessels, Division 1, 1977

4. American Society for Testing and Materials (ASTM):
   B486 ..... Paste Solder
   B88 ..... Seamless Copper Water Tube,
   B280 ..... Seamless Copper Tube for Air Conditioning and Refrigeration Field Service
   D635 ..... Rate of Burning and/or Extent and Time of Burning of Self-supporting Plastics in a Horizontal Position,
   D1693 .... Environmental Stress-Cracking of Ethylene Plastics,

5. National Fire Protection Association (NFPA):
   70 ..... National Electric Code
   90A ..... Installation of Air Conditioning and Ventilating Systems

6. Scientific Apparatus Makers Association (SAMA): Standard PMC 20, 1-1973. Process Measurement and Control Terminology.

7. Underwriters Laboratories, Inc. (UL).

1.7 PRODUCT HANDLING

A. Protection: Protect installed work and materials of other trades.

B. Replacements: In event of damage, immediately make repairs and replacements at no additional cost to the City.

1.8 COORDINATION

A. Coordinate all activities in accordance with provisions of Section 15050 “Basic Mechanical Materials and Methods.”

PART 2 – PRODUCTS (NOT USED)

PART 3 – EXECUTION

3.1 GENERAL

A. At least 14 days before specified occupancy or date of completion of overall contract, Contractor shall put all heating, ventilating, and air conditioning equipment into operation and shall continue operation of same during each work day for not less than five eight-hour periods, until all adjusting, balancing, testing, demonstrations, and instructions on systems have been completed. Final instructions and demonstrations and preparation of reports shall be done during the 2-week period.

B. When an individual building is ready for occupancy, all above equipment relative to that portion of work shall be put into service, tested, and adjusted.

C. Coordinate testing, adjusting and balancing procedures with any phased construction requirements for project so that usable increments of finished work may be accepted for beneficial occupancy. Systems serving partially occupied phases of project may require balancing for each phase prior to final balancing.

D. Conduct final procedures after system has been completed and is in full working order. Put all HVAC systems into full operation and continue operation of the systems during each working day.

Accomplish testing, adjusting and balancing procedures in accordance with the agenda approved by the Architect.

3.2 FIELD EXAMINATION

A. Before starting testing, adjusting and balancing, Contractor shall ascertain that following conditions are fulfilled:

1. Over-voltage and current protection have been provided for motors.

2. Equipment has been labeled as required.

3. Curves and descriptive data on each piece of equipment to be tested and adjusted are available as required.

4. Operations and maintenance manuals have been supplied.

5. Controls manufacturer and boiler-burner representatives shall be available for consultation and supervision of adjustments during tests.

6. Air filters clean and installed.

7. Automatic control systems completed and operating.

3.3 TESTING, ADJUSTING AND BALANCING

A. For each heating, ventilating, or air conditioning system following shall be performed, recorded and submitted in approved forms for review. Readings shall include but not be limited to following:

1. Distribution Systems:

a. Outside Climatic Conditions: Outside air DB, WB, atmospheric conditions, during final adjusted cfm run.
b. System Operation Temperatures: Supply, mixed and return air WB and DB temperatures during final adjusted cfm.
c. Heat Exchangers (furnaces, duct heaters, heating or cooling coils): Face velocity, WB and DB temperatures in and out.
d. Diffusers or Registers and Grilles: Supply or return air:
Identification number, location, type, size, manufacturer, number and factor, airflow hood factor, design cfm and fpm, and final adjusted cfm and fpm tabulated; fpm tabulation; not required if airflow hood is used.
e. Space Conditions - Final and balanced condition DB and WB temperatures.
f. Fans and air handling equipment make, type, and model cfm, static pressure, fan rpm, outlet velocity, brake horsepower, etc.
g. Motors rpm, voltage, and ampere draw.
h. Sound levels in decibels at each diffuser, grille or register in occupied areas. Sound levels shall be measured approximately 5'-0" above floor on a line approximately 45 degrees to center of opening, on the "A" and "C" scales of a General Radio Company sound level meter, or similar instrument.
i. Report shall also include ambient sound levels of rooms in which above openings are located, taken without air-handling equipment operating. A report shall also be made of any noise caused by mechanical vibration, which is at an intensity deemed to be objectionable.

2. Air Conditioning, Condensing and Refrigeration Units:

a. Suction pressure and temperature.
b. Discharge pressure and temperature.
c. Amps and volts.
d. Make, type, and model of unit; capacity rating.
e. Ambient temperature: WB, DB

3. Air Moving Equipment - Fan Systems: Identification number, location, manufacturer, model or size and serial numbers, cfm requirements, total and/or external static pressure, fan and motor rpm, fan and motor sheave size, belt size and number.

4. Fan Motor: Manufacturer, frame, horsepower, voltage and phase, amperage, service factor, mag-starter heater elements and/or fuse size.

5. All Pumps: Identification number, location, manufacturer, size, impeller, service: chilled or hot water, gpm, feet head, suction and discharge pressure.

3.4 FINAL TABULATION

A. After heating, ventilating, and air conditioning components have been balanced, entire system shall be put into operation and all pressures, temperatures, gpm, cfm, velocities, etc., recorded and checked against design schedules. Design requirements shall be listed on reports and final tabulation shall be within a tolerance of plus or minus 10% of design requirements.

B. Readings at various locations as described herein will be made every hour for 4 hours, during normal working hours. Boilers, forced warm air furnaces, and chillers shall be started up far enough in advance to meet design conditions of day during period of testing.

3.5 VIBRATION TESTING

A. Furnish instruments and perform vibration measurements as specified in Section 15020: Sound Vibration and Seismic Control. Provide measurements for all rotating HVAC equipment half horsepower and larger, including centrifugal/screw compressors, pumps, fans and motors.

B. Record initial and final measurements for each unit of equipment on test forms. Where vibration readings exceed allowable tolerance and efforts to make corrections have proved unsuccessful, forward a separate report to the Architect.

3.6 SOUND TESTING

A. Perform and record sound measurements as specified in paragraph 3.03(A) (1) in this section. Take readings in additional rooms as designated by the Architect.

B. Take measurements with a calibrated sound level meter and octave band analyzer of accuracy required by AABC or NEBB.

C. Sound reference levels, formulae and coefficients shall be according to ASHRAE handbook, 1986 Systems Volume; Chapter: Sound and Vibration Control.

D. Determine compliance with Specifications as follows:

1. Where sound pressure levels are specified, including noise criteria in Section 15020: Sound, Vibration and Seismic Control.

a. Reduce background noise as much as possible by shutting off unrelated audible equipment.

b. Measure octave band sound pressure levels with specified equipment "off".
c. Measure octave band sound pressure levels with specified equipment "on".
d. Use difference in corresponding readings to determine sound pressure due to equipment.

DIFF.:	0	1	2	3	4	5	9-10 or More
FACTOR:	10	7	4	3	2	1	0

Sound pressure level, due to equipment, equals sound pressure level with equipment "on" minus factor.
e. Plot octave bands of sound pressure level due to equipment for typical rooms, on a graph which also shows noise criteria (NC) curves.

2. When sound power levels are specified:

a. Perform steps Article 3.10, Paragraph D, 1.a. through 1.d.
b. For indoor equipment: Determine room attenuating effect; i.e., difference between sound power level and sound pressure level. Determine sound power level will be sum of sound pressure level due to equipment, plus room attenuating effect.
c. For outdoor equipment: Use directivity factor and distance from noise source to determine distance factor, i.e., difference between sound power level and sound pressure level. Measured sound power level will be sum of sound pressure level due to equipment, plus distance factor.

3. Where sound pressure levels are specified in terms of dbA, measure sound levels using the "A" scale of meter. Single value readings will be used instead of octave band analysis.

E. Where measured sound levels exceed specified level, installing Contractor or equipment manufacturer shall take remedial action approved by the Architect and necessary sound tests shall be repeated.

(END OF SECTION)

SECTION 15400
PLUMBING, GENERAL

PART 1 - GENERAL

1.1 SUMMARY

A. Work Included: Provide all labor, materials and equipment for all plumbing work indicated on the Contract Drawings or in these Specifications, including but not limited to the major items listed as follows:

1. Service connections to sewer, water, storm drain and gas lines.
2. Installation of pipe, valves, and fittings.
3. Furnish and set all sleeves for pipes thru walls.
4. Flashing of pipe stacks.
5. Pipe coverings, insulation, and waterproofing.
6. Access panels for cleanouts, valves, and water hammer arrestors.
7. Sealing of all penetrations thru fire walls and floors.
8. Final connection to equipment specified in other sections.
9. Water for construction and temporary connections.
10. Grouting and cleanup.

B. Related Documents: Documents affecting work of this Section include, but are not necessarily limited to the GENERAL CONDITIONS, SUPPLEMENTARY CONDITIONS and Sections in DIVISION 1 of these Specifications.

C. Related Work:

1. Section 02310 Earthwork
2. Section 02510 Water Distribution
3. Section 02530 Site Sanitary Sewer System
4. Section 02545 Storm Drain System
5. Section 02810 Sprinkler Irrigation System
6. Section 03300 Cast In Place Concrete Work
7. Section 09900 Painting
8. Section 15050 Basic Mechanical Materials And Methods
9. Electrical Conduit and Wiring, including Motor Starters for Plumbing Equipment in Division 16

1.2 QUALITY ASSURANCE

A. Use adequate numbers of skilled laborers who are thoroughly trained and experienced in the necessary crafts and who are completely familiar with the specified requirements and the methods needed for proper performance of the work of this Section.

B. Without additional cost to the City, provide such other labor and materials as are required to complete the work of this Section in accordance with the requirements of governmental agencies having jurisdiction, regardless of whether such materials and associated labor are called for elsewhere in these Contract Documents.

C. Conform to applicable Codes and regulations.

D. In addition to the requirements of all governing codes, ordinances and agencies, conform to the requirements of the following codes and standards:

1. Latest Edition of Uniform Building Code with the City of Los Angeles Latest Amendments and Ordinances.

2. Uniform Plumbing Code, latest Edition with the City of Los Angeles Latest Amendments.

3. City Engineer’s requirements.

4. State Fire Marshall/N.F.P.A.

5. Uniform Fire Code, latest Edition.

6. City of Los Angeles Fire department requirements.

7. California Administrative Code.

8. All requirements of Federal/OSHA

9. All other regulatory agencies having jurisdiction over this work.

E. Guarantees: Furnish a written guarantee form required under Division 1, against defects in materials and workmanship for one year. Guarantee shall include repair of damage to, or replacement (if so required) of any part of premises caused by water, oil, gas leaks or breaks in pipes, fixtures or equipment provided under this Section.

1.3 SUBMITTALS

A. Comply with pertinent provisions of Section 01330 – SHOP DRAWINGS/SUBMITTALS of DIVISION 1 – GENERAL REQUIREMENTS of the Bid Documents.

B. Product Data: Within 40 calendar days after the Contractor has received the City Engineer's "Notice to Proceed", submit:

1. Design drawings, signed by a properly licensed engineer and showing proposed layout of the system;

2. Calculations demonstrating the adequacy of the proposed systems and its compliance with these Specifications;

3. Manufacturers’ catalogs, Samples, and other items needed to fully demonstrate the quality of the proposed materials and equipment.

4. Material list of items proposed to be provided under this Section.

C. Record Drawings:

1. Comply with pertinent provisions of GENERAL CONDITIONS of these Specifications.

2. Include a copy of the Record Drawings in each copy of the operation and maintenance manual described below.

D. Upon completion of this portion of the Work, and as a condition of its acceptance, deliver to the City Engineer three copies of an operation and maintenance manual compiled in accordance with the provisions of the GENERAL CONDITIONS of these Specifications.

1.4 PRODUCT HANDLING

A. Except as otherwise approved by the City Engineer, determine and comply with manufacturer's recommendations on product handling, storage and protection.

B. Deliver products to the job-site in their manufacturer's original container, with labels intact and legible.

1. Maintain packaged materials with seals unbroken and labels intact until time of use.

2. Promptly remove damaged material and unsuitable items from the job-site, and promptly replace with material meeting the specified requirements, at no additional cost to the City.

C. The City Engineer may reject as non-complying such material and products that do not bear identification satisfactory to the City Engineer as to manufacturer, grade, quality and other pertinent information.

1.5 GENERAL REQUIREMENTS

A. Locations Indicated on Drawings: For purpose of clarity, the Drawings are generally diagrammatic omitting offsets and small details. Certain pipe runs are shown distorted to avoid confusion. Where locations are fixed by dimension notations, follow as closely as possible consistent with proper installation.

B. Exact Location: As required for proper installation, avoid interference with architectural and structural features and work of other trades and to preserve head room and to keep openings and passageways clear. Arrange neatly and occupy minimum space; install piping parallel or at right angles to structures at the elevations indicated. Provide flanges and unions where required to permit servicing, removal and re-connection of each item of equipment.

C. Discrepancies or Errors: In case discrepancies or errors occur between plans, specifications, structural members, regulating codes, etc. Notify the City Engineer for instructions as directed in the GENERAL CONDITIONS of these Specifications.

D. Openings: Provide as necessary for passage of pipes through walls, floors, partitions, and other construction whether indicated on the Contract Drawings or not.

E. Cutting and Repairing:

1. Do no cutting of structural members without written authorization by the City Engineer. Where permitted, provide all reinforcement with repair materials as directed by the City Engineer.

2. Repairing: By appropriate craft persons to restore construction to a condition as approved by the City Engineer and Contract Administration.

F. Protection of Work: Provide as necessary to prevent damage of any kind to materials and installation. Adequately cover fixtures and equipment during construction as required by the City Engineer.

G. Record Drawings: Provide accurate dimension locations including depths of underground piping, valves and cleanouts, and all control equipment as installed in strict accordance with provisions in GENERAL CONDITIONS of these Specifications.

H. Shop Drawings and Lists of All Materials, Fixtures and Equipment:

1. General: Submit for approval within 30 calendar days after the Contractor has received the City Engineer's "Notice to Proceed", in accordance with provisions of the GENERAL CONDITIONS of these Specifications, to assure ample time for checking and processing of the submittals by the City. Delays resulting from improper and untimely submittals shall be the responsibility of the Contractor. Start no construction work before approval of submittals.

2. Required Shop Drawings: Only required when proposing a substitute (different brand) except when specifically specified for an individual item.

3. Required List of All Materials, Fixtures, and Equipment: Provide complete list with names and addresses of manufacturers, catalog numbers, trade numbers, trade names, illustrations, and descriptive literature for each article. Underline all pertinent data for each item in each copy of catalog or brochure in which it is described. Note in letter of transmittal all variations in performance, design and installation. Identify each article in submittals with reference to Section Number and Subsection Number of this Section and the specified item.

4. Procure specified items after the 40 days from the Contract date.

5. Disapprovals: Delete articles disapproved by the City Engineer as not conforming to the Specifications or grade, and provide suitable articles in lieu thereof in conformity with Specifications. Start no purchasing or no work related to the submittals prior to approval of submittals.

6. Approval of Shop Drawings or other submittals will be general and will not relieve the Contractor of the responsibility for the proper fitting and construction of the specified work, nor from furnishing and performing work required by the Contract which may not be indicated on the shop drawings when approved as required by provisions of Section 11 in the GENERAL CONDITIONS of these Specifications.

7. Use Approved List for procurement without deviations, unless otherwise authorized by the City Engineer.

8. Modification of Contract Drawings: Furnish appropriate proposed revisions drawings prepared by a licensed Architect or Engineer for approval by the City Engineer. Required, in each case where proposed substitute material or equipment for proper installation will require changes to the design of the project on the Contract Drawings and make such drawings sufficiently complete for proper installation of substitute material or equipment and for construction by

interested trades for the proposed revisions. Contractor shall bear the cost of the drawings and of the proposed revised construction.

I. Materials and Workmanship:

1. General: In conformity with Los Angeles City Plumbing, Industrial Waste, Pressure Vessel and Mechanical Codes, Underwriters' Laboratories, Los Angeles County, and California State Requirements.

2. Materials: To be recently manufactured and in perfect condition; materials for similar uses to be same type and manufacture unless otherwise approved.

3. Workmanship: In accordance with best trade practices.

J. Permits and Inspections:

1. Permits: Obtain and pay for permits as required by the latest editions of the Uniform Plumbing and Mechanical Codes with the City of Los Angeles Latest Amendments.

2. Inspections Required: For all installations prior to concealment of the work, by the Los Angeles City Department of Building and Safety, and by the City Engineer. "Final Certificate of Approval" for the entire plumbing system required.

K. Maintenance and Operating Manuals: Provide the City with three (3) copies of neatly bound and indexed maintenance and operating manuals for all equipment as per provisions in the GENERAL PROVISIONS of these Specifications.

L. Closing in of Work: Do not conceal or close-in work until it has been inspected and approved by the City Engineer and authorities having jurisdiction. Contractor shall uncover prematurely covered or closed-in work before testing and inspection and shall re-conceal or re-close-in the work after testing and inspection, at no added cost to the City.

1.6 ACCEPTANCE OF WORK

A. Plumbing systems will not be considered for acceptance until the Contractor has completed disinfection of domestic water systems and all other work as hereinafter specified, including all testing work and has demonstrated to the City Engineer that all such systems operate properly in accordance with these Specifications and the standards herein referenced.

1.7 SERVICE CONNECTIONS

A. Sewer: Contractor to determine exact location of required connection and to be responsible for proper location of building drain and building sewer lines from buildings to street sewer main for most direct and suitable connection. Sewer permit and connection fees shall be arranged and paid by the Contractor. Sewer facility fee to be paid for by the City.

B. Water: Contractor to arrange for installation of water service meter and vault by Department of Water and Power and to pay all fees, charges and assessments. Water for construction shall be separately arranged for and paid for by the Contractor.

C. Gas: To gas meter at location shown on the Drawing; Contractor to arrange for installation of gas service meter and earthquake shut-off valve downstream of gas meter by Southern California Gas Company and to pay all fees, charges and assessments. Gas required for testing to be paid for by the Contractor.

D. Storm Drain: Contractor shall determine exact location of required connection and shall be responsible for proper location of on-site storm drains. Storm drain permit and connection fees to be arranged and paid for by site work Contractor.

PART 2 - PRODUCTS

2.1 GENERAL

A. Isolate all bare copper piping from hangers, supports, or structures with prefabricated isolator consisting of steel shell with corrosion resistant coating and chemically treated hair-felt pad.

B. Wherever work penetrates any waterproofing, do so with care and make opening through such waterproofing absolutely watertight in a manner approved by the City Engineer.

C. Do not conceal or cover work until inspected, tested, and approved by the City Engineer. Should any work be enclosed or covered up prior to inspection and testing, the Contractor, at his expense, shall uncover the work, make necessary tests and corrections to proper conditions as approved by the City Engineer.

D. Replace defective pipes, fittings, or joints with new materials. Repairing with dope, tar, cement, or other materials not permitted.

E. All piping and equipment shall operate without objectionable noises or vibration, as determined by the City Engineer. Provide positive type isolators as hereinafter specified.

2.2 MISCELLANEOUS EQUIPMENT & MATERIALS

A. Couplings: Same material as pipe on which couplings are used.

B. Unions:

1. For Solder-Joint Piping: Wrought copper or cast bronze, close grained and nonporous, extra heavy type, 150-lb. working pressure, ground joint, individually tested by manufacturer.

2. For Screwed-Joint Piping: Galvanized malleable iron, brass to iron seat, 250-lb. working pressure female pattern, ground joint.

C. Hose Bibb Controls: Chicago Faucet No. 1771, ½-inch concealed control stops with lock-shield caps on concealed piping; gate valves on exposed piping.

D. Pressure Regulating Assembly:

1. Pressure Reducing Valve: With built-in bypass to reduce thermal expansion; assembled sized and piped as detailed on drawings; brass bolts and nuts used for assembly; to be Los Angeles approved type.

2. Pressure Gauge: Bourdon tube type, non-corrodible movement, 3-½-inch dial, re-calibrator design, 0 to 200-lb. range, ¼-inch IPS male bottom connection.

3. Relief Valve: McDonnell and Miller No. 240-1 in. - 125, set as 125 psi, conforming to ASME Code requirements.

2.3 SLEEVES

A. Required:

1. In Concrete Slabs: Standard weight galvanized steel pipe in forms before concrete is placed.

2. In Masonry and Concrete Walls and Footings: Set treated fiber rigid concrete sleeves or standard weight galvanized steel pipe, in forms before concrete is placed or built into masonry. See Structural Plans.

3. In Stud Walls: 24 gage galvanized iron or steel.

B. Clearance: Provide ½-inch between sleeve and pipe or covered pipe, extend sleeve in floor slabs 2-inches above finished floor and 4-inches above rough floor.

2.4 PIPE COVERING

A. Waterproofing Protection on Pipe:

1. Required Covering: Cover all copper and steel pipe and fitting embedded in ground, in concrete masonry, or solid plaster.

2. Material: Plastic tape approved by City of Los Angeles, Department of Building and Safety.

3. Hand Application:

a. Clean all materials thoroughly to the bare metal base, remove all grease and oil with a nonoily solvent; file or grind burrs, sharp edges, and rough spots smooth. Make all surfaces dry and dust free.

b. Spiral wrap pipes with uniform laps of plastic tape by hand, completing one layer with prescribed laps; reverse direction of wrapping and apply a second layer in the same manner, again maintaining prescribed laps. All widths of tape, length of rolls, and dimensions of laps shall be as recommended by manufacturer in the manufacturer's material requirements table. Take care to insure a uniformly applied, tightly bonded tape, free of air pockets, voids and wrinkles.

4. Machine Application:

a. Clean as outlined above for hand application.

b. Spiral wrap uniformly by an approved manual or power driven machine with 50 percent laps and one over- wrap of 50/50/50# asphalt laminated kraft, either wet strength one side, or reinforced. All width of tape, length of rolls, and application as recommended by manufacturer in manufacturer's material requirements tablet. Exercise care to insure a uniformly applied, tightly bonded tape, free of air pockets, voids, and wrinkles.

5. Testing: Holiday detection testing prior to installation underground shall be required at the discretion of the City Engineer. Use a holiday detector set at 5,000 and 6,000 volts. Patch all holidays detected with a double "cigarette wrap" of No. 665 (15 mil) tape.

2.5 FLASHING OF PIPE STACKS

A. Required: For all pipes, passing through roof, comply with Specification Section 07600.

2.6 ACCESS PANELS

A. For Valves or Equipment Located Behind Ceramic Tile Walls: Provide 8-inch x 8-inch opening; stainless steel, beveled edge frame; stainless steel cover secured with flush-head screws; polished finish; vandal-proof screws where indicated or required.

B. For Valves, Clean-outs or Equipment Located Behind Finish Plaster Walls or Ceilings: Provide 8-inch x 8-inch minimum opening, 16-gage steel frame; 14-gagesteel door with concealed hinges arranged to open 180 degrees or to be removable and with Allen head locking device; with bonderized and prime coated finish.

C. Installation: Required for ready accessibility to all valves and water hammer arrestor unless installed, in pipe spaces or in readily accessible ceiling space.

D. Manufacturer's Reference Data: Required as noted in 1.3 of this Section.

2.7 STORAGE TYPE WATER HEATER/ EXPANSION TANK

A. Water heater tank: Glass lined with anode rods, AGA approved and listed, and State Energy Standard listed item.

B. Expansion tank: Steel shell, ASME designed, Pre-charged air chamber, Butyl diaphram, rigid polypropylene liner.

C. Capacity: As indicated on the Drawings.

D. Installation: Anchor to floor and with earthquake restraint (2-18 gage sheet metal bolt to wall as indicated on the drawings) . Connect to gas, water and vent lines.

E. Vent:

1. Carried vertically through roof as detailed on the Drawings.

2. In accordance with Los Angeles City Plumbing Code.

3. Type B, air insulated, double wall construction from flue collar or draft hood on water heater appliance through roof, size as indicated on the drawings; constructed of noncombustible corrosion-resistant materials; pipe and fitting as listed and approved by the Los Angeles City Heating Code and Underwriter's Laboratories, Inc. Where water heater manufacturer specifies pressurized double wall flue that includes combustion air, provide manufacturers recommended product.

4. Provide bird-proof vent cap, storm collar and 12-inch adjustable cone roof flashing constructed of galvanized steel outer casing and aluminum inner pipe.

F. Combination Temperature and Pressure Relief Valve: Resetting type constructed and listed to meet AGA and American National Standards Requirements. Install with temperature sensing element immersed in water within the top 6-inches of the tank with a 1-inch relief line to floor sink.

G. Manufacturer's Reference Data: Required as noted in 1.3 of this Section.

2.8 INSTANTANEOUS TYPE WATER HEATER

A. Electrical, wall mounted, UL approved, with flow restrictor.

2.9 FIRE SEAL

A. Required: Seal around pipe passing through fire-rated wall or floor to maintain fire rating.

B. Material: Fire-Seal, U.L. classified for fire rating three hours.

C. Manufacturer's Reference Data: Required as noted in 1.3 of this Section.

PART 3 - EXECUTION

3.1 GENERAL

A. Make all equipment and piping systems to operate without objectionable noise and vibration, as determined by the City Engineer. Do not interfere with other trades (electrical, mechanical, structural, etc.) to avoid noise and vibration transmission. Provide positive type isolators as herein after specified.

B. Surface Conditions: Examine all areas and conditions under which work of this Section will be performed. Correct conditions detrimental to timely and proper completion of the work. Do not proceed until detrimental conditions are corrected.

3.2 INSTALLATION OF PIPE

A. Pipe Inside Building: Conceal with in building walls, partitions, furred spaces or ceilings except in mechanical equipment room, where indicated or possible and work into position without springing or forcing.

B. Underground Pipe Outside Building: Locate top of all pipes not less than 2-feet below finish grade, except where otherwise indicated on the drawings. Lay sewer pipe in a separate trench. Space all pipe lines at a minimum of 12-inches center to center with a minimum of 2-feet horizontal distance from footing or wall, and above 45 degree downward line from the footing. Install all pipes in a straight line with neat appearance when completed. Take precautions to prevent damage to wrapped pipe. Trench bottom to be free of rocks and gravel. Lay pipe parallel or at right angles to building or property lines. Set drain lines on a firm foundation or sub-grade, true to line and grade. When entering building, water and gas pipes to rise above footing (with shut-off valve on riser) and go through the wall.

C. Soil and Waste Lines in Building: Provide a removable coupling at floor level where lines go underground; bring cast iron pipe up to waste connection of each fixture.

D. Gas Piping:

1. Install so that branch lines are tapped off tops of pipe valve end of main lines, valved to bleed off condensate that my form in pipe. Plug or cap valves.

2. Run main fuel line from meter to gas appliances. Provide gas service stop at all appliances.

E. Pipe Openings: Keep closed to prevent obstructions and damage during construction.

F. Grade or Slope:

1. Sanitary Piping and Other Drain Lines: Horizontal runs to have uniform fall of not less than 1/4-inch per foot; 1/8- inch in yard areas, and in ceiling spaces when approved by City Engineer.

2. Vent Piping: Grade to positively prevent accumulation of water or condensation.

3. Gas Piping: All lines to slope downward to meter, fixture, gas drip, or dirt leg.

G. Bends: Run drainage pipe as straight as possible, with long radius turns and offsets at angle of 45 degrees or less. Make changes in direction of all piping with fittings.

H. Clean-outs: To be located:

1. Where indicated on drawings. Exact locations as directed by the City Engineer.

2. At all horizontal offsets, or changes in direction of piping greater than 45-degrees.

3. At ends of all waste and sewer lines more than 5-feet in length.

4. At intervals of 50-feet for piping of4-inches and smaller, and 100-feet for larger piping.

5. At base of each vertical stack (waste, soil and storm drains).

6. After testing remove C.O. plug; apply water pump grease to male threads and replace hand tight.

I. Noises: Piping to be free from unusual noises due to flow of water under normal conditions.

J. Full-Length Sections of Pipe: Required for all pipe lines wherever practical; short sections with unnecessary couplings will not be allowed.

K. Floor and Ceiling Plates: Required where exposed pipes pass through walls, floors or ceilings; polished chromium-plated split-flange or one piece.

L. Hot and Cold Water Separation: Separate hot and cold water lines by at least 6-inches on parallel runs.

M. Expansion of Piping: Provide as required in all piping and for prevention of damage to pipe or insulation where expansion or contraction occurs.

N. Seismic Bracing: Provide lateral and longitudinal sway bracing required for all suspended piping in compliance with Drawing Details or as specified in Section 15240 – HVAC Equipment Seismic Restraints and Vibration Isolation.

O. Inspection:

1. By Contractor: All installations to determine that pipes are free from defective workmanship and that pipes and fittings are free from obstructions and are in their proper locations.

2. By Inspector and All Duly Constituted Authorities: All installations prior to concealment.

3.3 INSTALLATION OF VALVES AND FITTINGS

A. Care in Fitting and Installing Fixtures: Install all exposed plated or enameled connections to fixtures with special care to avoid tool marks or threads showing at fittings.

B. Unions: Required at each valve, at gas pressure regulator, and on connections to all equipment; to be of the same materials as fittings.

C. Water Hammer Arrestors:

1. Install water hammer arrestors indicated on the Drawings and in the following locations: (only non-ferrous arrestors may be used in copper water systems).

a. On water lines to service sinks, kitchen sinks, water closets and urinals.

b. Between the last two fixtures when three or more fixtures, other than those listed in (a) above, areas served by a common server.

2. When possible, arrestor shall be installed in the wall or furring. When arrestor is installed in wall or furring, furnish an access plate large enough to permit removal of the arrestor. The access plate shall be a minimum of 2" larger in each direction than the arrestor. See equipment list for sizes, makes and models or arrestors. Where not specifically offered in the Contract Documents installation shall be in accordance with the Plumbing and Drainage Institute Standard PDI-WH201.

3. Each fixture water line shall be provided with a dampening device. When such service is not provided by water hammer arrestors, provide an air chamber at each fixture supply. This shall be an 18" long vertical piece of capped pipe one size larger than the branch to a fixture. In lieu of individual air chambers, header air chamber may be used where header serves two fixtures. This shall be located at each end of the header and shall be a 36" length of vertical pipe, capped, not less than one pipe size larger than the header.

D. Reducing Fittings: Required only where changes in pipe sizes occur.

E. Prohibited Fittings: Screw or sand bushings; 90 degrees or 45 degrees street elbows, close nipples, long screws, bullhead tees, and special fittings, unless approved by the City Engineer.

F. Valves: Use gate, ball and butterfly valves for shut-off duty; globe, ball and butterfly for throttling bypass or manual flow control duty. Install on each branch line to one or more fixtures and on every underground branch line for complete control of the system. Place valves with stems horizontal wherever possible. Adjust, regulate, and pack glands before final acceptance.

G. Separate Control: Install valves at each fixture on hot and cold water to permit repairs without interference with any other fixture. Provide hose bibbs with individual control valves, except where otherwise indicated adjacent to and either concealed or exposed as indicated by location of hose bibb.

H. Dielectric Couplings or Flanges:

1. Required where copper pipe is joined to steel or iron pipe or equipment. Unions will not be allowed. Not required for bronze valves in steel lines or for caulked joints between copper and cast iron drainage lines.

2. Use couplings only on cold water installations.

3. Use flanges on all installations above 140 degrees Fahrenheit and made of material suitable for temperatures involved.

I. Exposed Toilet Flush Valves: Locate rough and finish 4-3/4 inches to right of center of valve to center of wheel handle angle stop, and 12-inches above top rim of bowl to center line of flush valve, locate oscillating handle to left facing bowl. Install sensor operated valves per manufacturer's recommendations.

J. All Flushometer Valves: Disassemble and lubricate with water pump grease and graphite before installation.

3.4 EQUIPMENT AND FIXTURE CONNECTIONS

A. General: Stub all piping out to the exact location and set symmetrical with the fixtures.

B. Water Headers Serving Water Closets: Shall be as indicated on drawings.

C. Water Headers Serving Urinals: Shall be as indicated on drawings.

3.5 ATTACHMENT OF FIXTURES

A. Required: Support and attach all fixtures hereinbefore specified properly and adequately to walls, ceilings, or floors in true right angles with floor and wall using adjustable fixture carrier as indicated on the Drawings or as specified.

B. To Concrete Backing: Machine bolts through concrete with nut and washer on space side, or with heavy expansion bolts of required length.

C. To Steel Stud Backing: Bolt to 4-inch x 1/4-inch steel plate; plate to be welded or clamped by U-bolts to steel studs.

D. Anchor Bolts, Sleeves, and Templates: Required: Anchor bolts for fixture attachment, steel pipe sleeves for bolt adjustment and templates for holding anchor bolts.

E. Toilets and Urinals: Set finish with approved type graphite ring and stainless plumber's putty.

F. Disassemble all flushometer valves and lubricate with water pump grease and graphite before installation.

G. Fixture Height for Handicapped Persons: As indicated on the Architectural and Plumbing Drawings.

H. Grouting and Cleaning:

1. Required between base of toilet bowl and floor and between back of all plumbing and wall areas.

2. Use hard, white, durable plaster materials filling all voids and cracks and provide adequate bearing surface mounting.

3. Before plaster materials have hardened, scrape a reasonable amount of plaster from void or crack allowing sufficient depression to receive caulking. Completely fill cracks or voids to a finished surface between all plumbing fixtures and walls or floors with "Tub-Caulk" manufactured by Miracle Adhesive Co., New York, New York or equal. Apply as recommended by the manufacturer.

4. Floor Sinks: Except in kitchen areas, install one-inch above finish floor and neatly grout all four sides.

I. Cleaning: Thoroughly clean all equipment, fixtures, trim, and exposed piping of cement, plaster, grease, and oil spots. Carefully wipe surfaces and scrape cracks and corners clean.

J. Polishing: Polish all exposed chromium-plated or nickel-plated surfaces, with clean cloths.

K. Completed Work: Leave in a neat, clean condition, ready for use.

L. Inspection:

1. By Contractor: Inspect all installations to determine that pipes are free from defective workmanship and that pipes and fittings are free from obstructions and are in their proper locations.

2. By City Engineer and All Duly Constituted Authorities: All installations prior to concealment.

3.6 PLUMBING CONNECTIONS TO EQUIPMENT SPECIFIED IN OTHER DIVISIONS

A. Fuel Gas: To gas roof-top package units with appliance gas service stops adjacent to equipment.

B. Drain: From air conditioning coils to sink tailpieces, material as specified in Water Supply Materials Subsection.

C. Final Connections: Required by the Plumbing Contractor to all appliances.

3.7 DISINFECTING OF WATER SYSTEMS

A. Required: For each hot water, cold water, and drinking water system, after all fixtures have been completely connected and are ready for operation.

B. Disinfecting Agent: Gas or liquid chlorine, as normally used for the chlorination of water systems. Calcium or sodium hypochlorite as approved by Federal and American Water Works Association procedures may be used.

C. Disinfecting Connection: Locate service cock or riser, 3/4-inch to 1-1/4-inch size, near water service entrance.

D. Procedure:

1. Remove all screens on faucets.

2. Flush all lines and fixtures thoroughly with clear water.

3. Adjust all faucets and outlets so that a trickle of water flows from each; water service supply valve to remain open.

4. Connect a hand-operated pump or other injection device to the disinfecting connection, the pump or device to provide a pressure greater than that of the water supply to the system.

5. Inject the disinfectant slowly and continuously at an even rate (not in slugs).

6. Check the effluent at each faucet and outlet with an orthotolidin solution while injection is continuing until the chlorine residual concentration indicates not less than 50 parts per million at all outlets.

7. Close all outlets including water service supply valve and disinfecting connection and hold for 24 hours.

8. After retention the chlorine residual concentration at most outlets when checked with an orthotolidin solution to be not less than ten parts per million. If less, disinfecting procedure to be repeated.

9. If check is satisfactory, flush all disinfected systems with clear water until chlorine residual concentration when checked with an orthotolidin solution to be not greater than that of the incoming water supply.

E. Bacteriological Analysis:

1. Upon completion of final flushing after retention period, obtain and test a water sample by a recognized laboratory acceptance to the City Engineer.

2. A written report to be submitted by the laboratory to the City Engineer showing:

a. Name and location of job and date sample was obtained.

b. That the coliform aerogenes are negative.

c. That the total plate count is less than 100 bacteria per cubic centimeter.

d. That the water is safe to use.

F. Costs: All cost of the materials, equipment, and application, including water charges and laboratory fees, shall be borne by the Contractor.

3.8 BACK SIPHONAGE PROTECTION

A. Protect water supplies of all plumbing fixtures against back siphonage in the event of a vacuum in the piping system.

B. Locate discharge outlets of all supply faucets for lavatories and sinks so as to clear the top of overflow rim at least 1-inch.

C. Install approved hose bibb vacuum breaker at each hose bibb, recessed and exposed.

D. Equip toilet flush valves with approved vacuum breakers. Install at the height required by the Los Angeles City Plumbing Code.

E. Atmospheric type backflow preventers required for lawn sprinkler systems and are shown on the Landscaping Drawings.

F. Reduced Pressure Type Backflow Preventer: Los Angeles City approved type.

G. Vacuum Breaker Assembly: Required for interceptor connection.

H. All backflow prevention devices shall be approved by the City of Los Angeles, Department of Building and Safety and Los Angeles County Health Department and other official agencies having jurisdiction. Use test devices designed for testing, so tested by a certified tester, paid for by the Contractor. Submit certification to the "General Maintenance Superintendent", General Services Department, prior to acceptance of the project. Such certification shall in no way nullify the warranty of such device or equipment. Perform all tests in the presence of the City Engineer or his duly appointed representative.

3.12 TESTS

A. Sanitary Systems: In accordance with the latest edition of the Uniform Plumbing Code with the City of Los Angeles Latest Amendments.

B. Roof Drain System: Similar to tests on sanitary system.

C. Water Systems: Minimum hydrostatic pressure of 250 psi for a period of four hours.

D. Gas Piping: In accordance with the latest edition of the Uniform Plumbing Code with the City of Los Angeles Latest Amendments.

E. Supervision: Make all tests in the presence of the City Engineer and demonstrate all fixtures and equipment to function satisfactorily and to the approval of the City Engineer. Provide and pay for all equipment, materials, and labor necessary for tests.

3.13 EMERGENCY REPAIRS

A. The City reserves the right to make emergency repairs as required to keep equipment in operation, without voiding the Contractor's guarantee bond, nor relieving the Contractor of his responsibilities during the bonding period.

(END OF SECTION)

SECTION 15410
BUILDING PLUMBING PIPING

PART 1 - GENERAL

1.1 RELATED DOCUMENTS

A. Drawings and general provisions of the Contract, including General and Supplementary Conditions and Division 1 Specification Sections, apply to this Section.

1.2 SUMMARY

A. This Section includes plumbing piping systems to a point 5 feet outside the building. Systems include the following:

1. Potable water distribution, including cold- and hot-water supply and hot-water circulation.

2. Drainage and vent systems, including sanitary and storm.

3. Engineered drainage systems, including the following:

a. Storm drainage systems.

B. Related Sections: The following sections contain requirements that relate to this Section:

1. Section 07920 “Caulking and Sealants” for sealing pipe penetrations through floor, walls and fire rated.

2. Section 15050 "Basic Mechanical Materials and Methods" for piping joining materials, joint construction, and installation requirements not specified in this Section.

3. Section 15340 Section “Hangers & Supports”.

4. Section 15360 "Meters and Gages" for thermometers, pressure gages, and fittings.

5. Section 15390 “Building Mechanical Identification”.

6. Division **[15490 Section "Special Systems" for plumbing system components.]**

7. Section 15510 “Building Mechanical Insulation”.

1.3 SYSTEM PERFORMANCE REQUIREMENTS

A. Provide components and installation capable of producing piping systems with the following minimum working pressure ratings, except where indicated otherwise:

1. Water Distribution Systems, Below Ground: 150 psig.

2. Water Distribution Systems, Above Ground: 125 psig.

3. Soil, Waste, and Vent Systems: 10-foot head of water.

4. Storm Drainage Systems: 10-foot head of water.

1.4 SUBMITTALS

A. General: Submit the following in accordance with Conditions of Contract and Division 1 Specification Sections.

1. Water samples, test results, and reports specified in "Field Quality Control" and "Cleaning" Articles.

2. Coordination drawings, drawn accurately to scale and coordinating penetrations.

1.5 QUALITY ASSURANCE

A. Comply with the provisions of ASME B31.9 "Building Services Piping" for materials, products, and installation.

B. Provide listing/approval stamp, label, or other marking on piping made to specified standards.

C. Comply with the provisions of ASME Boiler and Pressure Vessel Code. Section IX, Weldings and Brazing Qualification for Welding Processes and Operators.

PART 2 - PRODUCTS

2.1 MANUFACTURERS

A. Manufacturers: Subject to compliance with requirements, provide products by one of the following:

1. Couplings for Grooved-End Steel Pipe and Grooved-End Ferrous Fittings:

a. Grinnell Supply Sales Co., Grinnell Corp.
b. Gustin-Bacon Div., Tyler Pipe.
c. Mech-Line Div., James Hardie Industries, Ltd.
d. Stockham Valves & Fittings, Inc.
e. Victaulic Co. of America.

2. Couplings for AWWA-Size, Grooved-End, Ductile-Iron Pipe and Fittings:

a. Gustin-Bacon Div., Tyler Pipe.
b. Victaulic Co. of America.

2.2 PIPES AND TUBES

A. General: The application of the following pipe, tube, and fitting materials and joining methods required for plumbing piping systems are indicated in Part 3 Article "Pipe and Fittings Applications."

B. Hard Copper Tube: ASTM B 88, Types K and L, water tube, drawn temper.

C. Soft Copper Tube: ASTM B 88, Types K and L, water tube, annealed temper.

D. Steel Pipe: ASTM A 53, Type S, Grade A, Schedule 40, seamless, black, plain ends.

1. Steel Pipe Nipples: ASTM A 733, made of ASTM A 53 or ASTM A 106, Schedule 40, seamless, black, carbon-steel pipe.

E. Hub and Spigot, Cast-Iron Soil Pipe: ASTM A 74, Service Class.

F. Hubless, Cast-Iron Soil Pipe: CISPI 301.

2.3 PIPE FITTINGS AND TUBE FITTINGS

A. Wrought-Copper, Solder-Joint Pressure Fittings: ASME B16.22.

B. Cast-Copper-Alloy, Solder-Joint Pressure Fittings: ASME B16.18.

C. Bronze Flanges: ASME B16.24, Classes 150 and 300.

D. Copper Unions: ASME B16.18, cast-copper-alloy body, hexagonal stock, with ball-and-socket joint, metal-to-metal seating surfaces, and solder-joint, threaded, or solder-joint and threaded ends.

1. Threaded Ends: Threads conforming to ASME B1.20.1.

E. Malleable-Iron Unions: ASME B16.39, Classes 150 and 300, hexagonal stock, with ball-and-socket joint, metal-to-metal bronze seating surfaces, and female threaded ends having threads conforming to ASME B1.20.1.

F. Galvanized, Cast-Iron Threaded Fittings: ASME B16.4, Classes 150 and 250, standard pattern, with threads conforming to ASME B1.20.1.

G. Galvanized, Cast-Iron Threaded Drainage Fittings: ASME B16.12, recessed drainage pattern, with threads conforming to ASME B1.20.1.

H. Steel Pipe, Grooved-End Fittings: ASTM A 47 malleable-iron, ASTM A 106 steel, or ASTM A 536 ductile-iron, galvanized, grooved-end fittings designed to accept couplings for grooved or shouldered joints.

I. Cast-Iron Threaded Flanges: ASME B16.1, Classes 125 and 300.

J. Ductile-Iron, Flexible Expansion Joints: Compound fitting with combination of flanged and mechanical-joint ends conforming to AWWA C110 or AWWA C153. Units have 2 gasketed ball-joint sections and 1 or more gasketed sleeve sections, rated for 250 psig minimum working pressure and with FDA-approved epoxy interior coating, for offset and expansion indicated.

K. Hub and Spigot, Cast-Iron Soil Pipe Fittings: ASTM A 74, Service Class.

L. Hubless, Cast-Iron Soil Pipe Fittings: CISPI 301.

M. Cast-Iron, Solvent Drainage Fittings: ASME B16.45.

2.4 JOINING MATERIALS

A. Solder, brazing, and welding filler metals are specified in Division 15 Section "Basic Mechanical Materials and Methods."

B. Cast-Iron Soil Pipe and Fittings: ASTM C 564 neoprene rubber gaskets and lubricant.

C. CISPI Couplings for Hubless Cast-Iron Soil Pipe and Fittings: CISPI 310, having ASTM C 564 neoprene sealing sleeve, with 300 Series stainless-steel corrugated shield-and-clamp assembly.

D. Stainless Steel, Heavy-Duty Couplings for Hubless Cast-Iron Soil Pipe and Fittings: ASTM C 564 neoprene sealing gasket, with Type 304 stainless-steel housing or shield and stainless-steel clamps. Coupling shall be 3 inches wide in sizes 1-1/2 to 4 inches and 4 inches wide in sizes 5 to 10 inches.

E. Cast-Iron, Heavy-Duty Couplings for Hubless Cast-Iron Soil Pipe and Fittings: ASTM C 564 neoprene sealing gasket, with cast-iron housing and stainless steel bolts.

F. FM-Type, Heavy-Duty Couplings for Hubless Cast-Iron Soil Pipe and Fittings: FM-approved, ASTM C 564 elastomeric sleeve, with stainless steel band and strips or cast-iron housing and corrosion-resistant bolts.

G. Sleeve-Type Couplings for Plain-End, Nonpressure System Pipe: Rubber or elastomeric sleeve and stainless steel band assembly, fabricated to match outside diameters of pipes to be joined.

1. Sleeves: ASTM C 564, rubber for cast-iron soil pipe and ASTM F 477, elastomeric seal for plastic pipe. Sleeves for dissimilar or other pipe materials shall be compatible with pipe materials being joined.

2. Bands: Stainless steel, one at each pipe insert.

H. Gasket-Type Couplings for Plain-End, Nonpressure System Pipe: Rubber or elastomeric compression gasket, made to match pipe inside diameter or hub and adjoining pipe outside diameter.

1. Gaskets: ASTM C 564, rubber for cast-iron soil pipe and ASTM F 477, elastomeric seal for plastic pipe. Gaskets for dissimilar or other pipe materials shall be compatible with pipe materials being joined.

PART 3 - EXECUTION

3.1 EXCAVATION

A. Excavation, trenching, and backfilling are specified in Section 02310 "Earthwork."

3.2 PREPARATION OF FOUNDATION FOR BURIED PIPING

A. Grade trench bottom to provide smooth, firm, stable, and rock-free foundation throughout length of piping.

B. Remove unstable, soft, and unsuitable materials at surface on which piping is to be laid and backfill with clean sand or pea gravel to indicated level.

C. Shape bottom of trench to fit bottom of piping. Fill unevenness with tamped-sand backfill. Dig bell holes at each pipe joint to relieve bells of loads and to ensure continuous bearing of pipe barrel on foundation.

3.3 PIPE AND FITTINGS APPLICATIONS

A. General: Use pipe, tube, fittings, and joining methods for piping systems according to the following applications.

B. Water Distribution Piping Below Ground: Use the following:

1. 3/4" Inches and larger: Soft copper tube, Type K, cast-copper-alloy solder-joint pressure fittings, and soldered joints with Alloy no lead solder City of L.A. approved.

C. Water Distribution Piping Above Ground: Use the following:

1. 4 to 6 Inches: Hard copper tube, Type L; wrought-copper and bronze grooved-end fittings; couplings for grooved-end copper tube and grooved-end copper fittings; and grooved copper tube and grooved tube fitting joints.

2. 3 Inches and Smaller: Hard copper tube, Type L; wrought-copper or cast-copper-alloy pressure fittings; copper unions; bronze flanges; and solder joints with Alloy no lead City of L.A. approved.

D. Soil, Waste, and Vent Piping Below Ground: Use the following:

1. 2 to 6 Inches: Hub-and-spigot cast-iron soil pipe, hub-and-spigot cast-iron soil pipe fittings, neoprene rubber gaskets, and compression joints.

E. Soil, Waste, and Vent Piping Above Ground: Use the following:

1. 6 Inches: Hubless cast-iron soil pipe, hubless cast-iron soil pipe fittings, stainless-steel, cast-iron, or FM-type heavy-duty couplings for hubless cast-iron soil pipe and fittings; and hubless joints.

2. 2 to 4 Inches: Hubless cast-iron soil pipe, hubless cast-iron soil pipe fittings, CISPI-type couplings for hubless cast-iron soil pipe and fittings, and hubless joints.

F. Storm Drainage Piping Below Ground: Use the following:

1. 3 to 8 Inches: Hub-and-spigot cast-iron soil pipe, hub-and-spigot cast-iron soil pipe fittings, neoprene rubber gaskets, and compression joints.

G. Storm Drainage Piping Above Ground: Use the following:

1. 3 to 6 Inches: Hubless cast-iron soil pipe; hubless cast-iron soil pipe fittings; stainless-steel, cast-iron, or FM-type heavy-duty couplings for hubless cast-iron soil pipe and fittings; and hubless joints.

H. Gas Piping Above Ground:

1. ½ to 2 Inches: Schedule 40 black steel with threaded malleable iron fittings.

2. 2-1/2 to 6 Inches: Schedule 40 black steel with butt welded fittings.

I. Gas Piping Below Ground:

1. Polyethylene plastic pipe, ASTM D1248 and D2513, standard dimension ratio 11, rated at 80 psi working pressure at 73 degrees F. for 3 inches and smaller, SDR 11.5 rated at 76 psi at 73 degrees F., joined by heat fusion, color orange or yellow, Plexco PE 2406, Phillips, or equal. Transition to anodeless steel riser at meter, regulator, or building wall.

2. Polyethylene plastic fittings shall be ASTM D 3261 and D 2683, standard dimension ratio 11, rated at 80 psi working pressure at 73 degrees F. for 3 inches and smaller, butt or socket type fittings, joined by heat fusion, color orange or yellow, Plexco, Phillips, or equal. (Provide with P-8)

J. Condensate & Equipment Drain Piping:

1. ½ to 2 Inches: Type 'L' copper with wrought copper alloy drainage fittings with solder joints.

3.4 VALVE APPLICATIONS

A. Drawings indicate valve types to be used. Where specific valve types are not indicated, the following requirements apply:

1. Shutoff Duty: Use gate, ball, or butterfly valves.

2. Throttling Duty: Use globe, ball, or butterfly valves.

3.5 PIPING INSTALLATION, GENERAL

A. Basic piping installation requirements are specified in Division 15 Section "Basic Mechanical Materials and Methods."

3.6 WATER DISTRIBUTION PIPING INSTALLATION

A. Install piping level without pitch.

3.7 DRAINAGE AND VENT PIPING INSTALLATION

A. Install cast-iron soil pipe and cast-iron soil pipe fittings according to CISPI 1990 revised and edited edition of "Cast Iron Soil Pipe and Fittings Handbook, Volume I," Chapter IV, "Installation of Cast Iron Soil Pipe and Fittings."

B. Make changes in direction for drainage and vent piping using appropriate Y branches, Y branches with 1/8 bends, and long-sweep 1/4, 1/5, 1/6, 1/8, and 1/16 bends. Sanitary tees and short-sweep quarter bends may be used on vertical stacks of drainage lines where change in direction of flow is from horizontal to vertical. Use long-turn double-Y-branch and 1/8-bend fittings where 2 fixtures are installed back to back or side by side and have a common drain. Straight tees, elbows, and crosses may be used on vent lines. Make no change in direction of flow greater than 90 degrees. Where different sizes of drainage pipes and fittings are connected, use proper size standard increasers and reducers. Reduction of the size of drainage piping in the direction of flow is prohibited.

C. Lay buried building drains beginning at low point of each system, true to grades and alignment indicated, with unbroken continuity of invert. Place hub or bell ends of piping facing upstream. Install required gaskets according to manufacturer's recommendations for use of lubricants, cements, and other special installation requirements. Maintain swab or drag in piping and pull past each joint as completed.

D. Install drainage and vent piping at the following minimum slopes, except where another slope is indicated:

1. Horizontal Sanitary Drainage Piping: 1/8 inch per foot (1 percent) to 5ft. within the bldg.

2. Storm Building Drain: 1/8 inch per foot (1 percent) to 5ft. within the bldg.

3. Vent Piping: 1/8 inch per foot (1 percent).

E. Sleeves are not required for cast-iron soil pipes passing through concrete slab, without membrane waterproofing, on grade.

3.8 JOINT CONSTRUCTION

A. Basic piping joint construction is specified in Division 15 Section "Basic Mechanical Materials and Methods."

B. Cast-Iron Soil Pipe and Cast-Iron Soil Pipe Fitting Joints: Make joints according to recommendations in CISPI 1990 revised and edited edition of "Cast Iron Soil Pipe and Fittings Handbook, Volume I," Chapter IV, "Installation of Cast Iron Soil Pipe and Fittings."

1. Compression Joint: Make with neoprene gasket matching class of pipe and fittings.

2. Hubless Joint: Make with neoprene gasket and sleeve or clamp.

C. PE Heat-Fusion and Compression Joints: Conform to ASTM D 3309.

3.9 INSTALLATION OF VALVES

A. Sectional Valves: Install sectional valves close to main on each branch and riser serving 2 or more plumbing fixtures or equipment connections and where indicated. Use gate or ball valves for sectional valves 2 inches and smaller. Use gate or butterfly valves for sectional valves 2-1/2 inches and larger.

B. Shutoff Valves: Install shutoff valves on inlet to each plumbing equipment item, on each supply to each plumbing fixture not having stops on supplies, and elsewhere as indicated. For shutoff valves 2 inches and smaller, use gate or ball valves; for shutoff valves 2-1/2 inches and larger, use gate or butterfly valves.

C. Drain Valves: Install drain valves specified in Division 15 Section "Special Systems" on each plumbing equipment item located to drain equipment for service and repair. Install drain valve at base of each riser, at low points of horizontal runs, and where required to drain water distribution piping system.

1. Install hose-end drain valves at low points in water mains, risers, and branches.

D. Check Valves: Install swing check valve on discharge side of each pump and elsewhere as indicated. Use MSS SP-80, Class 125, cast-bronze body for 2-inch and smaller piping and MSS SP-71, Class 125, cast-iron body for 2-1/2-inch and larger piping.

E. Balance Valves: Install valve in each hot-water circulating loop, discharge side of each pump, and elsewhere as indicated. Use ball valve for 2-inch and smaller piping and butterfly valve for 2-1/2-inch and larger piping.

3.10 HANGERS AND SUPPORTS INSTALLATION

A. Hanger and support devices are specified in Section 15340 "Hangers and Supports."

3.11 CONNECTIONS

A. Supply Runouts to Fixtures: Install hot- and cold-water supply piping runouts of sizes indicated, but not smaller than required by plumbing code to fixtures.

B. Drainage Runouts to Fixtures: Provide drainage and vent piping runouts, with approved trap, of sizes indicated, but not smaller than required by plumbing code, to plumbing fixtures and drains.

C. Locate drainage piping runouts as close as possible to bottom of floor slab supporting fixtures or drains.

D. Mechanical equipment connections: Connect hot and cold water supply piping system to mechanical equipment as indicated. Provide shutoff valve and union for each connections. Use flanges instead of unions for 2 1/2 inches and larger.

3.12 FIELD QUALITY CONTROL

A. Inspect water distribution piping as follows:

1. Do not enclose, cover, or put into operation water distribution piping system until it has been inspected and approved by the authority having jurisdiction.

2. During progress of the installation, notify the plumbing official having jurisdiction at least 24 hours prior to time inspection must be made. Perform tests specified below in presence of the plumbing official.

   a. Roughing-In Inspection: Arrange for inspection of piping system before concealed or closed-in after system roughing-in and prior to setting fixtures.
   b. Final Inspection: Arrange for final inspection by plumbing official to observe tests specified below and to ensure compliance with requirements of plumbing code.

3. Reinspections: When a plumbing official finds that piping system will not pass test or inspection, make required corrections and arrange for reinspection by the plumbing official.

4. Reports: Prepare inspection reports signed by plumbing official.

B. Test water distribution piping as follows:

1. Test for leaks and defects in new water distribution piping systems and parts of existing systems that have been altered, extended, or repaired. If testing is performed in segments, submit separate report for each test, complete with diagram of portion of system tested.

2. Leave uncovered and unconcealed in new, altered, extended, or replaced water distribution piping until it has been tested and approved. Expose work that has been covered or concealed before it has been tested and approved for testing.

3. Cap and subject the piping system and test per U.P.S. (Uniform Plumbing Code) & City of L.A. Code requirements.

4. Repair leaks and defects with new materials and retest system or portion thereof until satisfactory results are obtained.

5. Prepare reports for tests and required corrective action.

C. Inspect drainage piping as follows:

1. Do not enclose, cover, or put into operation drainage and vent piping system until it has been inspected and approved by the authority having jurisdiction.

2. During progress of installation, notify the plumbing official having jurisdiction at least 24 hours prior to time such inspection must be made. Perform tests specified below in presence of the plumbing official.

   a. Roughing-In Inspection: Arrange for inspection of piping system after system roughing-in, before concealing, and prior to setting fixtures.
   b. Final Inspection: Arrange for final inspection by plumbing official to observe tests specified below and to ensure compliance with requirements of plumbing code.

3. Reinspections: Make required corrections and arrange for reinspection by plumbing official when piping system fails to pass test or inspection.

4. Reports: Prepare inspection reports signed by the plumbing official.

D. Drainage and Vent Piping System Tests: Test drainage and vent systems according to procedures of authority having jurisdiction or, in absence of published procedure, as follows:

1. Test for leaks and defects in new drainage and vent piping systems and parts of existing systems that have been altered, extended, or repaired. If testing is performed in segments, submit a separate report for each test, complete with a diagram of the portion of the system tested.

2. Leave uncovered and unconcealed in new, altered, extended, or replaced drainage and vent piping until it has been tested and approved. Expose for testing work that has been covered or concealed before it has been tested and approved.

3. Rough Plumbing Test Procedure: Except for outside leaders and perforated or open-jointed drain tile, test piping of plumbing drainage and venting systems on completion of roughing-in piping installation. Tightly close all openings in piping system and fill with water to point of overflow, but not less than 10 feet head of water. Water level shall not drop during the period from 15 minutes before inspection starts through completion of inspection. Inspect joints for leaks.

4. Finished Plumbing Test Procedure: After plumbing fixtures have been set and their traps filled with water, test connections and prove gastight and watertight. Plug stack openings on roof and building drain where it leaves the building and introduce air into the system equal to pressure of 1-inch water column. Use a U tube or manometer inserted in the trap of a water closet to measure this pressure. Air pressure shall remain constant without introducing additional air throughout period of inspection. Inspect plumbing fixture connections for gas and water leaks.

5. Repair leaks and defects using new materials and retest system or portion thereof until satisfactory results are obtained.

6. Prepare reports for tests and required corrective action.

3.13 CLEANING

A. Clean and disinfect water distribution piping as follows:

1. Purge new potable water distribution piping systems and parts of existing potable water systems that have been altered, extended, or repaired prior to use.

2. Use purging and disinfecting procedure prescribed by authority having jurisdiction or, if a method is not prescribed by that authority, the procedure described in either AWWA C651 or AWWA C652 or per IAPMO Code (Uniform Plumbing Code).

3.14 COMMISSIONING

A. Fill water systems.

B. Before operating systems, perform these steps:

1. Close drain valves, hydrants, and hose bibbs.

2. Open shutoff valves to full open position.

3. Open throttling valves to proper setting.

4. Remove plugs used during testing of piping systems and plugs used for temporary sealing of piping during installation.

5. Remove and clean strainer screens. Close drain valves and replace drain plugs.

6. Remove filter cartridges from housings and verify that cartridges are as specified for application where used, clean, and ready for use.

C. Check plumbing equipment and verify proper settings, adjustments, and operation. Do not operate water heaters before filling with water.

D. Check plumbing specialties and verify proper settings, adjustments, and operation.

E. Energize pumps and verify proper operation.

3.15 PROTECTION

A. Protect drains during remainder of construction period to avoid clogging with dirt and debris and to prevent damage from traffic and construction work.

B. Place plugs in ends of uncompleted piping at end of day or when work stops.

(END OF SECTION)

SECTION 15510
BUILDING MECHANICAL INSULATION

PART 1 - GENERAL

1.1 SECTION INCLUDES

A. Insulation shall be furnished and installed under this Section and meet minimum legal requirements of the Building Energy Efficiency Standards adopted and incorporated in the California Energy Commission, Title 24, Part 2, Chapters 2 through 53, unless otherwise noted, for following piping, ductwork, and equipment:

1. Condensate drain piping from air conditioning equipment.

2. High and low temperature equipment.

3. Hot water heating supply and return piping.

4. Refrigerant piping.

5. Supply and return heating and cooling systems air ducts.

6. Plumbing piping and equipment including hot and tempered domestic water supply and return piping.

1.2 SUBMITTALS

A. Submit in accordance with Division 01: Submittals.

1. Complete list of all items to be furnished and installed under this Section.

2. Manufacturer's specifications and other data required to demonstrate compliance with the specified requirements. Standard Specifications: ASTM C262, ASTM C547, ASTM 553, ASTM C612.

3. Shop drawings, catalog cuts and manufacturer's data showing insulation, jacketing, adhesives, and coating. Insulating materials shall be certified by manufacturer to comply with the California Quality standards for insulating material.

4. Display sample cutaway sections.

5. Manufacturer's recommended method of installation procedures, which will become part of this Section of Specifications.

1.3 QUALITY ASSURANCE

A. Manufacturer's and Installer's Qualifications: Comply with provisions stated under Section **[15010]** and **[15110]**.

B. Insulation work shall be in accordance with the State of California Building Energy Efficiency Standards, CCR, Title 24, Part 2; and Uniform Mechanical Code.

C. Test Ratings:

1. Comply with ASTM E84, NFPA 255, or UL 723. ASTM C167, ASTM C302, Underwriters' Laboratories, Inc. label or listing of satisfactory test results from the National Bureau of Standards, or a satisfactory certified test report from an acceptable testing laboratory. Approval by the State Fire Marshal is required.

2. Ensure that labels (legibly printed with the name of the manufacturer) or listings indicate that fire hazard ratings do not exceed those specified for materials proposed for use. Flame spread not more than 25 and smoke developed not exceeding 50.

3. Test each item individually, when insulation, vapor barrier covering, wrapping materials, or adhesives are applied separately in the field.

4. Test insulation, vapor barrier covering, wrapping materials and adhesives as an assembly when they are factory composite systems.

1.4 PRODUCT HANDLING

A. Protection, Replacement, Delivery and Storage: Comply with provisions stated under Section 15050 “Basic Mechanical Materials and Methods.”

PART 2 - PRODUCTS

2.1 MATERIALS

A. General:

1. Insulating material shall be fire resistant, non-corrosive, shall not break, settle, sag, pack or disintegrate under vibration, nor absorb more than 1% moisture by weight.

2. Insulating material shall have thickness indicated in Table 1, and shall have thermal resistance in the range of R = 4.0 to 4.6 per inch at 75° F. For any other value of R, insulation thickness shall be calculated accordingly and submitted for approval.

3. Asbestos in any quantity in insulating material shall not be permitted.

4. Provide insulation materials, adhesives, coatings, sealants, fitting covers, and other accessories with a fire hazard rating not to exceed 25 for flame spread, 25 for fuel contributed and 50 for smoke developed, except for materials listed as follows:

a. Nylon anchors for securing insulation to ducts or equipment.

5. Flameproofing treatments subject to moisture damage are not acceptable.

TABLE 1
MINIMUM PIPING INSULATION THICKNESS (1)

PIPING SYSTEM TYPE	FLUID TEMP RANGE °F	NOMINAL PIPE DIAMETER (INCHES) Runouts up to (2)	1 & Less	1.25-2	2.50-4	5-6	8 and Larger
		Insulation Thickness Required (in inches) Space Heating Systems (Hot Water)					
Domestic Hot Water	105-140	0.5	1.0	1.0	1.0	1.5	1.5
Domestic Hot Water	141-200	0.5	1.5	1.5	1.5	1.5	1.5
Service Water Heating Systems (recirculating, all piping supply and return)							
Hot Water	Above 105	0.5	1.0	1.0.	1.5	1.5	1.5
Space Cooling Systems (Refrigerant)							
Refrigerant	40-60	0.5	0.5	0.5	1.0	1.0	1.0
	Below 40	1.0	1.0	1.5	1.5	1.5	1.5
Condensate Drain	1/2" Minimum insulation thickness.						
From A/C Equipment:	Insulate all condensate drain lines within building, in room and in ceilings.						

NOTES:

(1) For piping exposed to ambient temperatures, increase thickness by 0.5".

(2) Runouts to individual terminal units (not exceeding 12'-0" in length).

B. Lagging Adhesives: All insulation finished with canvas shall have their laps adhered with Childers "Chil-Seal" CP50A/AHV2 or Foster's "Sealfas" 30-36, or approved equal. A finish coat of CP50A or 30-36 shall be applied to entire outer surface of lagging cloth at coverage specified by manufacturer.

C. Canvas Jackets: Shall be 6 oz. per square foot minimum, 48 x 48 thread count canvas jacketing.

D. Insulation Jackets:

1. All exterior insulation exposed to weather shall be weatherproofed with Childers aluminum jacketing or equal. Jacketing is to be manufactured from 1100, 3105 or 5010 aluminum alloy with 3/16" corrugations. Smooth or embossed jackets may be approved in special situations to match an existing installation. All jacketing shall have an integrally bonded moisture barrier over entire surface in contact with insulation. A minimum thickness of 0.016 aluminum jacketing is to be used on ducts and piping. A minimum thickness of 0.020 is to be used on tanks, equipment and heat exchangers.

2. All 90 and 45 degree insulated elbows having a nominal iron pipe size of 1/2" to 8" shall be protected with Childers aluminum Ell-Jacs insulation covers, or approved equal, manufactured from 1100 aluminum alloy of 0.024" thickness. Insulated elbows having a nominal pipe size of 10" thru 18" shall be protected by Childers 4-piece aluminum Ell-Jacs.

3. All Tees, Flanges, and Valve Insulation in Conjunction with Aluminum Jacketing: Use Childers Aluminum Special Fabrications Insulation Covers as manufactured by Childers Products Company.

E. Adhesives: Adhesives shall be acceptable to the State Fire Marshal. Name, type and method of application shall be submitted for approval. Acceptable products are stated under each category of insulation work in following Paragraphs:

1. Duct Liner Edge Sealing - (Adhesive exposed to air stream): Childers "Chil-Spray NF" CP-89 or 3M "Fastbond" 38-NF for spray applications. For brush applications use Childers "Chil-Stix" CP-82 or Foster's "Spark-Fas" 85-20.

2. Duct Joint Sealing:

a. **[Childers "Chil-Seal" CP50A/50AHVZ}**

b. **[Foster's "Sealfas" 30-36]**

c. **[Borden "Arabol" 60-89-05 with canvas tape, minimum 2" width.]**

3. Duct Joint Calking:

a. **[Childers "Veloseal" CP-72]**

b. **[3M 321.]**

4. Valve and Fitting Cover: When applied in conjunction with PVC jacketing, use Zeston 25/50 rated polyvinyl chloride fitting covers as manufactured by Manville.

2.2 SPACE HEATING PIPING SYSTEM AND DOMESTIC HOT WATER PIPING SYSTEM INSULATION

A. General: Insulate condensate, hot water space heating supply and return, domestic hot water supply and return piping, including valves, strainers and fittings with insulation thickness as indicated on Table 1.

B. Materials:

1. Classes of Insulation:

a. Class C: Flexible open-cell melamine (foam insulation) suitable for service temperature -320° F. to 400° F. Thermal conductivity at 75° F. K=.26. Pipe insulation, one piece pre-formed, laminated to heavy non-reinforced PVC jacket, with locking trac, factory applied to jacket, to snap insulation and jacket onto pipe. Similar or equal to Thermazip insulating or Techlite Melamine Form Insulation System as manufactured by Accessible Products Co. Installation to conform to manufacturers recommendations.

b. Class D: Mineral fiber pipe insulation suitable for service temperatures up to 1200° F. Pipe insulation shall be one-piece preformed up to 3" thickness and have a minimum R factor of 4.0 at 75° F. mean temperature. Insulation shall be faced with all-purpose fire-retardant vapor barrier jacket. Pipe insulation shall be 8 pounds per cubic foot density by Industrial Insulation of Texas, Inc. "Delta Snap Wrap", Bradford Enercon "Enerok", "Lapinus 1200", or approved equal.

2. Locations and Class of Insulation Required:

LOCATION	CLASS OF INSULATION
Boiler and Mechanical Equipment Room	C or D
All Other Locations	C or D

3. Fittings on indoor piping shall be covered with flush, hand-wrapped Class C or D insulation, to match the adjoining pipe insulation and covered with polyvinyl chloride fitting covers: Zeston 2000 25/50 by Manville.

4. Adhesive: Childers "Fibrous Adhesive" CP97, or equal, to bond calcium silicate to itself and non-porous surfaces.

2.3 COOLING PIPING SYSTEM INSULATION

A. General: Insulate refrigerant piping.

B. Materials:

1. Classes of Insulation:

a. Class D: Foamed plastic pipe insulation, self-extinguishing type, ASTM C534 Type 1 - tubular. Pipe insulation shall be one-piece preformed, flexible tubing type and have a minimum K factor of 0.28 at 75° F. mean temperature. Pipe insulation shall be Manville "Rubatex", Armstrong "Armaflex II" or approved equal.

b. Class E: Mineral fiber pipe insulation ASTM C547. Pipe insulation shall be one piece preformed up to 3" thickness and have a minimum R factor of 4 at 75° F. mean temperature. Insulation shall be faced with all-purpose fire-retardant vapor barrier jacket. Pipe insulation shall be Industrial

Insulation of Texas, Inc. "Delta Snap Wrap", Bradford Enercon "Enerok", "Lapinus 1200", or approved equal.

2. Locations and Class of Insulation Required:

SERVICE	LOCATION	CLASS OF INSULATION
Condensate drains from air condition-ing equipment	Indoors at ceilings and in rooms	D
Refrigerant suction. Liquid line as required	All locations except under-ground	D
All other piping, except underground	All locations except underground	E

3. Thickness: See Table 1, this Section.

4. Adhesives:

a. Polystyrene adhesives: **[Childers "Chil-Rene" CP-96 or King Adhesive Co. 15-165.]**

b. Vapor barrier laps and penetrations: Use **[Childers "Chil-Perm NF" CP-32 or Epolux 660]** on all butt joints of foil-faced vapor barriers, and also where pins and staples puncture facings.

2.4 DUCTWORK AND PLENUM INSULATION

A. General: Insulate ductwork and plenums with no less than the amount of insulation tabulated in Table 2. Insulation may be omitted on that portion of a duct which is located within a wall- or a floor- ceiling space where:

1. Both sides of the space are exposed to conditioned air.

2. Space is not ventilated.

3. Space not used as a return plenum.

4. Space not exposed to unconditioned air

5. Ceilings, which form plenums, need not be insulated.

TABLE 2 INSULATION OF DUCTS AND PLENUM

INSULATION TYPES

Duct Location	Cooling Only	Heating Only
On roof or exterior of building	F-3 (supply, return, relief & exhaust duct)	F-3 (supply, return, relief & exhaust duct)
In space between roof and insulated ceiling	F-3	F-3
In space directly under roof With openings to outside	F-3	F-3
In unconditioned crawl space	F-3	F-3
In other unconditioned space	F-3	F-3
In walls, within floor-ceiling spaces and hot and cold plenums	F-1	F-1
Within the conditioned space or in basement	None Required	None Required
Cement slabs or within ground	None Required	None Required

B. Insulation Types:

F-1. Provide 1" blanket fiberglass, factory-laminated with all-service jacket vapor barrier. See "MATERIALS" for external insulation below. And, provide 1" duct liner as indicated on drawings.

F-2. Provide 1-1/2" blanket fiberglass factory-laminated with all-service jacket vapor barrier. See "MATERIALS" for external insulation below. And, provide 1" duct liner as indicated on drawings.

F-3. Provide 2" duct liner as indicated.

6. Weatherproof Jacket: 0.016 thick aluminum or stainless steel.

NOTES:

(1) Where ducts are used for both heating and cooling, minimum insulation shall be as required for most restrictive condition.

(2) See "Materials" for external insulation and internal lining, this Section, below.

(3) Thickness of duct liners is based on Type of mounting.

C. Materials:

1. Fire Resistive Insulation Materials and Coatings: Submit for approval to the State Fire Marshal.

2. Adhesives: See Articles 2.01, Paragraphs F, G and H for applicable products.

3. External Insulation: A minimum "R" value of 4.0 to 6.3 at 75° F. (installed) glass fiber blanket, factory-laminated with reinforced foil Kraft (FRK) vapor barrier facing; Manville "Microlite", Owens Corning all-service faced duct wrap, Ultralite # 100, Pittsburgh Plate Glass "Superfine", Silvercote "Silvercel", or equal.

4. Internal Lining: Manville Permacote® Linacoustic ® and/or Permacote® Spiracoustic®, Certainteed, or approved equal. Internal lining shall conform to NFPA 90A, shall be UL listed, and meet ASTM G21, 22 Specifications Compliance and State Fire Marshal approved.

a. Noise Regulatory Criteria (NRC)

(1) Duct Lining: Minimum NRC of 0.75 for interior spaces and minimum NRC of 0.90 for exposed to weather.

(2) Hot and Cold Plenums separated by single partition: Minimum NRC of 0.75, both sides.

PART 3 - EXECUTION

3.1 INSTALLATION

A. Except as specified herein, install all material in accordance with recommendations of manufacturer. Do not apply insulation materials until tests specified in other Sections are completed. Remove foreign material such as rust, scale, or dirt. Make sure that surfaces are clean and dry. Keep insulation clean and dry at all times.

B. On cold surfaces where a vapor barrier must be maintained, insulation shall be applied with a continuous, unbroken moisture and vapor seal. All hangers, supports, anchors, or other projections that are secured to cold surfaces shall be insulated and vapor sealed to prevent condensation.

C. All surface finishes shall be extended in such a manner as to protect all raw edges, ends and surfaces of insulation.

D. All pipe or duct insulation shall be continuous through walls, ceiling or floor openings, or sleeves; except where firestop or firesafing materials are required.

E. Metal shields shall be installed between hangers or supports and the piping insulation. Rigid insulation inserts shall be installed between the pipe and the insulation shields. Inserts shall be of equal thickness to adjacent insulation and shall be vapor sealed accordingly.

F. Insulation shall not be installed in following locations (unless otherwise noted):

1. On unions, flanged connections or valve handles.

2. Over edges of any manhole, clean-out hole, clean-out plug, access door or opening to a fire damper, so as to restrict opening or identification of access.

3. Over any label or stamp showing make, approval, rating, inspection, or similar data, unless provision is made for identification and access to label or stamp.

3.2 INSTALLATION OF HEATING PIPING SYSTEM INSULATION

A. General: Space heating hot water, domestic hot water, tempered water supply and return piping and condensate piping, after having been tested, shall be cleaned and insulated.

B. Application: Hot water heating supply and return piping, domestic hot water supply and return, including tempered supply and return piping as per manufacturer's instructions and as specified herein.

1. Extend insulation on valve bodies up to valve bonnet. Fill void in saddles, provided under Section 15340 "Hangers and Supports" and Section 15050 “Basic Mechanical Materials and Methods”, with insulation and seal all joints.

2. Apply insulating material to fittings, valves, and strainers and smooth to thickness of adjacent covering. Leave strainer clean-out plugs accessible. Covers fabricated from polyvinyl chloride shall be used.

C. Insulation Jackets:

1. Exposed Indoor Locations:

a. Cover completed insulation with canvas jacket tightly pasted to covering with lagging adhesive. Lap jacket seams 1-1/2" minimum. Finish entire jacket with coating of undiluted adhesive.

b. Equivalent factory applied pre-sized, glass fiber reinforced, or glass fiber jackets may be used. Seal jacket seams with adhesive per manufacturer's instructions.

c. In addition to above requirements, cover exposed insulated piping within a distance of 8'-0" above floors with #26 gage galvanized steel jacket. Omit jacket in areas accessible only to maintenance personnel, such as mechanical equipment rooms, utility corridors, accessible pipe tunnels and manholes.

2. Concealed Indoor Locations: Cover insulation over fittings, valves, and strainers with canvas. Provide pipe insulation with factory or field applied standard jacket of 4 oz. minimum canvas, fiberglass cloth, or glass fiber reinforced jacket. Seal jacket laps with adhesive per manufacturer's instructions.

3. Exposed Outdoors: In addition to canvas or fiberglass cloth cover, pipe insulation exposed to weather shall be provided with an additional 0.016" thick aluminum jacket with 2" lap connected with 1" hem overlap joint located on side of pipe and turned down to shed water. Jacket shall be strapped 12" on center with 1/2" wide stainless steel strapping and wing seals. Aluminum jacket shall be mitered to fit fittings.

3.3 INSTALLATION OF COOLING PIPING SYSTEM INSULATION

A. General: Refrigerant piping and condensate drain lines, after having been tested, shall be cleaned and insulated.

B. Application: Insulation on chilled water lines, refrigerant suction lines and liquid lines, if indicated, and air conditioner interior drain lines shall be jacketed with fire-resistant vapor barrier of laminated aluminum foil consisting of 2 plies with glass-yarn reinforcing. All jacket joints shall be lapped and sealed with an approved adhesive. Insulation shall be secured with aluminum bands not less than 0.005” thick by ¾” wide, spaced not over 12” on centers, or as recommended by manufacturer.

1. Longitudinal Seams: Butt hinged sections of covering tightly together and seal down jacket flap with adhesive, Childers CP-82, Foster’s 85-20, or approved equal, or with factory-applied, self-sealing lap with pressure-sensitive sealer protected with release paper.

2. End Joints: Wrap joint with a 3-inch wide (minimum) self-sealing tape.

3. Fittings and Valves: Fittings and valves shall be covered with same material of same thickness as pipe insulation, sealed with an approved, vapor-sealing tape or compound and covered with Zeston polyvinyl-chloride cover.

4. Pipe hangers shall be insulated or attached to pipe by an insulating insert, butted between adjoining insulation sections.

C. Additional Jackets:

1. Exposed Indoor Insulation: Cover to 8’-0” above floors, except in mechanical equipment rooms and accessible pipe tunnels with #26-gage galvanized sheet metal jacket.

2. Exposed Outdoor Insulation: In addition to canvas or fiberglass cloth cover, provide .016” thick aluminum jacket with 1” wide aluminum bands and seals. Use appropriate jackets on valves and fittings.

3.4 INSTALLATION OF DUCTWORK AND PLENUM INSULATION

A. External Covering:

1. Before applying duct insulation, sheet metal ducts shall be clean, dry, and tightly sealed at all joints and seams.

2. Duct exterior insulation shall be firmly wrapped around ductwork with all joints lapped a minimum of 2". Insulation shall be securely held in place with #18 gage copper-lined steel wire, or #16 gage soft-annealed galvanized wire spaced approximately 12" on centers and at all loose ends, presenting a neat and workmanlike appearance. Where duct width is such that wiring will not hold insulation firmly against duct, an approved adhesive shall be used to fasten insulation to duct; wiring may then be at ends of insulation segment.

3. Duct insulation in finished rooms shall be covered with wrapped fiberglass cloth cover. Install on each corner of duct #26 gage galvanized steel small nose, wide flange corner bead of appropriate height. In unfinished rooms the insulation shall have a vinyl or similar coating. In all rooms, insulation shall be attached to the ducts with an approved adhesive instead of wire. Corners shall be cut and formed instead of bending the insulating material. Raw edges shall be taped.

4. All insulation on ductwork carrying conditioned air, both supply and return, and outside air intake ducts shall have a factory applied, fire-resistant vapor barrier.

5. Exposed Ducts or Plenum:

   a. Apply insulation to ducts or plenum using butt joints, without voids and with adhesive over entire surface of duct. Cover insulation with canvas jacket, pasted tightly to insulation with lagging adhesive. Apply 2 finish coats of undiluted adhesive.

   b. When applying jacket finished covering shall be even and level, without humps, and constant diameters on round ducts maintained.

   c. For non-lined insulated ducts or plenums exposed to weather: Insulation finish shall be 0.016" thick aluminum sheet with joints lapped not less than 3", sealed, and secured with #6 by 3/8" aluminum sheet metal screws, or aluminum handgun-type rivets.

B. Lining:

1. General:

   a. Floors of cold plenums and fan enclosure plenums shall not be insulated.

   b. Cover short damper sections on lined ducts on outside to permit free operation of dampers and linkage.

   c. Dimensions of ducts indicated are net inside dimensions and must include thickness of duct liners to obtain the correct duct size.

   d. Install insulation in square turns, where required, to cover interior surfaces before duct turns are installed.

2. Interior insulation (lining) of ducts shall be as specified in Article 2.06, Paragraph C.4. Lining may only be one of following assemblies:

a. Factory installed, integral with sheet metal outer duct and interior perforated or non-perforated sheet metal liner, non-metal components not exposed to air stream; United Sheet Metal, Type P-27 or K-27.

b. Liner material installed during fabrication of duct with sealed face only exposed to air stream. Insulation shall be fastened to sheet metal with an approved fire-retardant adhesive, with minimum 90% coverage and all edges firmly adhered. Mechanical fasteners shall supplement the adhesive on top sections of ducts more than 12" wide and on sides of ducts more than 24" high, and shall be spaced on 16" centers maximum. Fastener posts shall be cut off approximately 1/4" from metal disc.

3. Interior insulation in ducts or plenums shall not have any exposed edges. Edges open to entering or leaving air streams shall be covered, secured in place and sealed with approved duct liner edge sealers.

(END OF SECTION)

SECTION 15610
PIPING, GENERAL

PART 1 -- GENERAL

1.1 THE REQUIREMENT

A. It shall be the responsibility of the CONTRACTOR to furnish and install all piping systems specified herein and shown on the contract drawings. Each system shall be installed complete with all applicable fittings, hangers, supports, anchors, expansion joints, flexible connections, valves, and accessories to provide a functional system as designed. In addition, all insulation, lining and coating, heat tracing, testing, disinfection, excavation, backfill and encasement shall be the responsibility of the CONTRACTOR.

B. The CONTRACTOR shall provide all tools, equipment, materials, and supplies necessary and shall perform all labor necessary to complete the work specified herein and indicated on the drawings. The CONTRACTOR shall provide all testing apparatus necessary to perform testing as required by the contract documents. The CONTRACTOR shall provide any equipment necessary for inspection of and testing of piping systems specified.

C. Piping shown on drawings and specified herein is intended to define the general layout, configuration, routing, required method of support, pipe size and type only. It is the responsibility of the CONTRACTOR to provide a complete system in accordance with the contract drawings and requirements set forth herein. All details necessary to provide a complete system as specified herein are the responsibility of the CONTRACTOR. The CONTRACTOR shall provide all spools, spacers, adapters, connectors, and supports necessary to provide a complete and functional system. The CONTRACTOR shall furnish pipe supports, hangers, anchors, etc., in addition to those shown on the contract drawings, when necessary to provide a system as specified herein. The CONTRACTOR shall provide lay-out drawings of all piping systems prior to installation showing all piping, equipment, accessories, supports, etc.

1.2 RELATED WORK SPECIFIED ELSEWHERE

A. Division 02 as applicable. Site Work.

B. Section 02310 Earthwork.

C. Section 02515 Water Pipeline Testing and Disinfection.

D. Section 03300 Cast-in-Place Concrete.

E. Section 05500 Metal Fabrications.

F. Section 09800 Protective Coating.

G. Division 15 as applicable. Mechanical.

H. Section 15410 Building Plumbing Piping.

I. Section **[15430]** Piping Specialties.

J. Section 15510 Building Mechanical Insulation.

K. Section **[16500] [16510]** Cathodic Protection.

L. Section **[16520]** Electric Heat Tracing System.

1.3 REFERENCE SPECIFICATIONS, CODES, AND STANDARDS

A. Comply with the reference specifications of the GENERAL REQUIREMENTS.

B. Commercial Standards:

ANSI/ASME B1.20.1	Pipe Threads, General Purpose (inch).
ANSI B16.5	Pipe Flanges and Flanged Fittings, Steel Nickel Alloy and other Special Alloys.
ANSI/AWWA C207	Steel Pipe Flanges for Water Works Service, Sizes 4 in through 144 in.
ANSI/AWWA C606	Grooved and Shouldered Joints.
ANSI/AWS D1.1	Structural Welding Code.
ASTM A 307	Specification for Carbon Steel Bolts and Studs, 6,000 psi Tensile.
ASTM A 325	Specification for High-Strength Bolts for Structural Steel Joints.
ASTM D 792	Test Methods for Specific Gravity and Density of Plastics by Displacement.
ASTM D 2000	Classification System for Rubber Products in Automotive Applications.

1.4 CONTRACTOR SUBMITTALS

A. The CONTRACTOR shall complete shop drawings of all piping systems, equipment, accessories, and supports in accordance with Section 01330 SHOP DRAWINGS/SUBMITTALS of the GENERAL REQUIREMENTS. The shop drawings shall include all necessary dimensions and details on pipe joints, fittings, fitting specials, valves, appurtenances, design calculations, and material lists. The submittals shall include detailed layout, spool, or fabrication drawings which show all pipe spools, spacers, adapters, connectors, fittings, and pipe supports necessary to accommodate the equipment and valves provided in a complete and functional system. The CONTRACTOR shall submit detailed LAY-OUT drawings of all systems for approval prior to starting installation. LAY-OUT drawings shall include all dimensions and spacings for pipe joints, fittings, fitting specials, valves, appurtenances, connectors, adapters, supports, hangers, anchors, etc. necessary to provide a complete and functional system as specified herein.

B. All expenses incurred in making samples for certification of tests shall be borne by the CONTRACTOR.

C. The CONTRACTOR shall submit as part of the shop drawings a statement from the pipe fabricator certifying that all pipes will be fabricated subject to a recognized Quality Control Program. An outline of the program shall be submitted to the ENGINEER for review prior to the fabrication of any pipe.

1.5 QUALITY ASSURANCE

A. Inspection: All pipe shall be subject to inspection at the place of manufacture. During the manufacture of the pipe, the INSPECTOR shall be given access to all areas where

manufacturing is in progress and shall be permitted to make all inspections necessary to confirm compliance with the Specifications.

B. Material Testing: The INSPECTOR shall have the right at any time to call for and witness the making of test specimens by any welder in accordance with these specifications. Any and all tests shall be at the CONTRACTOR'S expense. The CONTRACTOR shall furnish the ENGINEER 3 (three) certified copies of mill test reports. Mill test reports shall show results of the chemical and physical tests made on each melt of steel representing the steel plate furnished for the manufacture of the pipe.

Specimen Plates: The INSPECTOR may require the CONTRACTOR to furnish specimen plates of the steel to be used in the fabrication of the pipe. Specimen plates shall be large enough to provide the number of test specimens required. Should any test specimen fail to meet the requirements of the plate specification, a second specimen plate of the same heat number shall be furnished. Should any one test specimen from the second plate fail, then all plates furnished from the same heat number will be rejected. Tests of these specimens will be made by an Independent Laboratory approved by the ENGINEER. The CONTRACTOR will be responsible for all expenses incurred in making the tests.

Required Tests: Specimen Plates shall be tested as follows:

Reduced Section Tensile Test: The yield point and ultimate tensile strength shall not be less than the minimum of the specified tensile range of the plate used.

Guided Bend Test: Bend tests shall be performed on both root and face weld specimens. The specimen shall be bent cold without fracture 180 degrees around a pin or mandrel, having a diameter 3 times the thickness of the plate, and shall show an elongation of not less than 20 percent across the weld.

Radiographic Test: A 4-1/2" by 17" spot x-ray shall be taken at a location as directed by the INSPECTOR. Procedures and interpretation shall be in accordance with ASME Boiler and Pressure Vessel Code, Section 8, Division I, Part UW51, with the exception that ASTM E94, Type I, industrial radiographic film shall be used.

Porosity: The maximum acceptable porosity shall be as set forth in Appendix IV of the ASME Boiler and Pressure Vessel Code.

Retest of Welds: Should any of the tests taken from a shift's production fail to meet any of the requirements of these specifications, one additional set of weld tests shall be made from each of the adjoining pipe sections. Retest of welds shall be performed at the CONTRACTOR'S expense, and shall be made and approved before beginning the next shift's production. Should any retest result in failure to meet any of the requirements of these specifications, all pipe sections of that shift's production will be rejected.

C. Welding Procedures: Welding procedure specifications shall be furnished to the ENGINEER for approval prior to the welding of pipe. The specifications shall specify, on a form equivalent to the ASME welding procedure form, the type of plate edge preparation, welding method, arc-voltage, arc-amperes, travel speed, wire size and type, flux type, and all other procedures necessary to make the weld.

D. Welder Qualifications: All welders and welding operators shall be qualified under the applicable provisions of the standard qualification procedure of the ASME Boiler and Pressure Vessel Code, Section IX.

1.6 MATERIAL DELIVERY, STORAGE, AND PROTECTION

A. All piping materials, fittings, valves, and accessories shall be delivered in a clean and undamaged condition and stored off the ground, to provide protection against oxidation caused by ground contact. All defective or damaged materials shall be replaced with new materials.

1.7 CLEANUP

A. After completion of the work, all remaining pipe cuttings, joining and wrapping materials, and other scattered debris, shall be removed from the site. The entire piping system shall be handed over in a clean and functional condition.

PART 2 -- PRODUCTS

2.1 GENERAL

A. All pipes, fittings, and appurtenances shall be furnished in accordance with the requirements of the applicable Sections of Divisions 02 and 15 and as specified herein.

B. Pipe Supports: All pipes shall be adequately supported in accordance with the requirements of Section 15340, "Hangers and Supports", and as shown.

C. Lining: All requirements pertaining to thickness, application, and curing of pipe lining, are in accordance with the requirements of the applicable Sections of Division 02, unless otherwise specified.

D. Coating: All requirements pertaining to thickness, application, and curing of pipe coating, are in accordance with the requirements of the applicable Sections of Division 02, unless otherwise specified. Pipes above ground or in structures shall be coated in accordance with Section 09800, "Protective Coating."

E. Pressure Rating: All piping systems shall be designed for the maximum expected pressure as defined in Section 02515 "Water Pipeline Testing and Disinfection" or as shown on the piping schedule.

F. Grooved Piping Systems: Piping systems with grooved joints and fittings may be provided in lieu of screwed, flanged, welded, or mechanical joint systems for steel and ductile iron yard piping, subject to approval of the ENGINEER. (Applicable to all piping above and below ground within the property limits of treatment plants, pump stations, and similar installations). All grooved couplings on buried piping must be bonded. To assure uniform and compatible piping components, all grooved fittings, couplings, and valves shall be from the same manufacturer.

G. Fasteners: Whenever stainless steel bolts are specified, it shall mean that all bolts, nuts and washers shall be made of Type 316 stainless steel, unless otherwise noted.

2.2 PIPE FLANGES

A. Flanges: Where the design pressure is 150 psi or less, flanges shall conform to either ANSI/AWWA C207 Class D or ANSI B16.5 150-lb class. Where the design pressure is greater than 150 psi, up to a maximum of 275 psi, flanges shall conform to either ANSI/AWWA C207 Class E, Class F, or ANSI B16.5 150-lb class. Where the design pressure is greater than 275 psi up to a maximum of 700 psi, flanges shall conform to ANSI B16.5 300-lb class. Flanges shall have flat faces and shall be attached with bolt holes straddling the vertical axis of the pipe unless otherwise shown. Attachment of the flanges to the pipe shall conform to the applicable requirements of ANSI/AWWA C207. Flanges for miscellaneous small pipes shall be in accordance with the standards specified for these pipes.

a. **[Manufacturer b]**;

b. **[Manufacturer c]**;

c. Or equal.

B. All flanges are subject to inspection and testing at the discretion of the INSPECTOR.

2.3 THREADED INSULATING CONNECTIONS

A. General: Threaded insulating bushings, unions, or couplings, as appropriate, shall be used for joining threaded pipes of dissimilar metals and for piping systems where corrosion control or cathodic protection are involved.

B. Materials: Threaded insulating connections shall be of nylon, Teflon, polycarbonate, polyethylene, or other nonconductive materials, and shall have ratings and properties to suit the service and loading conditions.

2.4 GROOVED END COUPLINGS

A. General: Grooved End Couplings shall be provided where shown. The couplings shall conform to the requirements of ANSI/AWWA C606, "flexible" grooving for buried piping, or "rigid" grooving for above ground piping and gallery piping inside structures.

Gaskets: Shall be halogenated butyl rubber suitable for the service intended and designed for use with the specified pipe material.

Couplings: Shall be ductile iron conforming to ASTM A536; with Type 316 Stainless Steel bolts, ASTM A193, Grade B-8, Class 2, in buried locations and heat-treated track-head bolts conforming to ASTM A183, minimum tensile 110,000 psi for above ground piping and gallery piping inside structures.

The wall thickness of all grooved piping shall be as specified.

B. Steel Pipe Coupling Manufacturers:

1. **[Manufacturer 1]**;

2. **[Manufacturer 2]**;

3. **[Manufacturer 3]**;

4. Or equal.

C. Ductile Iron Pipe Coupling Manufacturers:

1. **[Manufacturer 1]**;

2. **[Manufacturer 2]**;

3. **[Manufacturer 3]**;

4. Or equal.

Note: Ductile iron pipe couplings shall be furnished with flush seal gaskets.

D. PVC Pipe Coupling Manufacturers:

2.5 SLEEVE-TYPE COUPLINGS

Construction: Sleeve-type couplings shall be of steel construction with steel bolts, and of sizes to fit the pipe and fittings. The middle ring shall be not less than 1/4-inch in thickness and 5 or 7-inches long for standard couplings, and 16-inches long for long-sleeve couplings. The followers shall be single-piece contoured mill section welded and cold-expanded to fit for the middle rings. They shall be of sufficient strength to accommodate the number of bolts necessary to obtain adequate gasket pressures without excessive rolling. The shape of the follower shall be designed as to provide positive confinement of the gasket. Bolts and nuts shall be Type 316 Stainless Steel in buried locations and heat-treated Grade 5 or better for above ground piping and gallery piping inside structures. Buried sleeve-type couplings shall be factory-applied epoxy-coated as specified in Section 09800 "Protective Coating."

A. Pipe Preparation: The ends of the pipe shall be prepared to fit steel couplings. Plain ends for use with couplings shall be smooth and round for a distance of 12-inches from the ends of the pipe, with outside diameter not more than 1/64-inch smaller than the nominal outside diameter of the pipe. The middle ring shall be tested by cold-expanding a minimum of one percent beyond the yield point, to proof-test the weld to the strength of the parent metal. The weld of the middle ring shall be subjected to air test for porosity.

B. Gaskets: Gaskets for sleeve-type couplings shall be rubber-compound material that will not deteriorate from age or exposure to air under normal storage or use conditions. Gaskets for wastewater and sewerage applications shall be Buna "N," Grade 60, or equivalent suitable elastomer. The rubber in the gasket shall meet the following specifications:

1. Color - Jet Black

2. Surface - Non-blooming

3. Durometer Hardness - 74 □ 5

4. Tensile Strength - 1000 psi minimum

5. Elongation - 175 percent minimum

The gaskets shall be immune to attack by impurities normally found in water or wastewater. All gaskets shall meet the requirements of ASTM D 2000, AA709Z, meeting Suffix B13 Grade 3, except as noted above. All gaskets shall be compatible with the piping service and fluid utilized.

C. Insulating Couplings: Where insulating couplings are required, both ends of the coupling shall have a wedge-shaped gasket which assembles over a rubber sleeve of an insulating compound in order to obtain complete insulation of all coupling metal parts from the pipe.

D. Restrained Joints: Restrained joints for sleeve-type couplings shall be in accordance with AWWA M-11.

2.6 FLEXIBLE CONNECTORS

A. Flexible connectors shall be installed in all piping connections to engines, blowers, compressors, and other vibrating equipment, and where shown. Flexible connectors shall be flanged, braided stainless steel spools with inner, annular, corrugated stainless steel hose, rated for minimum 150 psi working pressure, unless otherwise shown. The connectors shall be minimum of 9-inches

long, face-to-face flanges, unless otherwise shown. The CONTRACTOR shall submit manufacturer's shop drawings and calculations.

2.7 PIPE THREADS

A. All pipe threads shall be in accordance with ANSI/ASME B1.20.

2.8 PIPE INSULATION

A. Hot and cold liquid piping, flues, and engine exhaust piping shall be insulated as shown. Pipe insulation shall be in accordance with Section 15510, “Building Mechanical Insulation.”

2.9 PIPE SLEEVES

A. Where specified or as indicated on the contract drawings, pipe sleeves shall be provided for piping passing through concrete or masonry walls.

B. Pipe sleeves shall be Type 316L stainless steel with a welded water-stop ring.

PART 3 -- EXECUTION

3.1 GENERAL

A. All piping and appurtenances shall be installed in accordance with the requirements of all applicable and related Divisions of these specifications.

B. Any deviation from lines, grades, or elevations shown on the Contract Drawings must be approved in writing by the ENGINEER

C. Where core drilling is required for pipes passing through existing concrete, all core drilling locations shall be determined by radiograph of the concrete construction to avoid damage to embedded raceways, conduits, and reinforcing steel.

D. Prior to any core drilling of existing concrete, the CONTRACTOR shall obtain approval of all locations, in writing, from the ENGINEER.

3.2 HANDLING

A. All pipe, fittings, and related appurtenances shall be handled in a manner that will insure installation in sound, undamaged, like new condition.

B. Pipe and fittings with cement mortar or epoxy lining or special coatings shall handled with rubber covered hooks, or other type of equipment to prevent damage.

C. Bare fork lift arms, hooks, cables, or chains shall not be used for handling pipe with special lining or coating.

D. Pipe and fittings in which the lining or coating has been damaged shall be immediately removed from the job site and replaced.

1. In instances where damage is minimal, the CONTRACTOR may, with approval from the ENGINEER, have the damage repaired by a qualified representative of the pipe manufacturer or fabricator.

3.3 STORAGE

A. All pipes shall be stored off the ground at all times, even during installation.

B. Store coated pipe on "extra wide" skids to protect the coating.

C. PVC pipe shall be stored out of direct sunlight to prevent damage and premature deterioration.

D. Pipe with special coatings shall be stored out of direct sunlight to prevent damage to coating.

E. Copper and galvanized pipe shall be covered or stored indoors.

F. Threaded ends of pipe shall be covered to protect the threads.

G. Flanged pipe shall have the flange faces protected.

H. Pipe that has become damaged or unidentifiable due to improper storage shall be rejected and immediately removed from the job site.

3.4 CUTTING PIPE

A. Cutting of pipe shall be done in a neat manner, without damage to the pipe, pipe lining, or pipe coating.

B. Cuts shall be smooth, straight, and at right angles to the pipe axis.

C. Pipe shall be cut using a portable guillotine saw, abrasive wheel "cut-off" saw, or milling cutter only. Use of gas torches for cutting pipe will not be permitted.

1. Where it becomes necessary to cut steel pipe larger than 6" in diameter, the CONTRACTOR may, with written permission of the ENGINEER, use gas torch to cut the pipe.

2. Only a qualified pipe fitter or boiler-maker shall make any approved torch cuts of pipe.

D. Field cut holes for saddles shall be made utilizing a hole saw or other mechanical means. Gas torch cutting of holes will not be permitted.

E. After cutting, the end of the pipe shall be dressed with a file or power grinder to remove all internal and external burrs and sharp edges.

F. All damaged or removed lining or coating shall be repaired by a qualified representative of the pipe manufacturer or fabricator.

3.5 CLEANING

A. The interior of all pipe and fittings shall be thoroughly cleaned of all foreign matter prior to installation, and shall be kept clean until the work has been accepted.

B. Before jointing, all joint contact surfaces shall be wire brushed, wiped clean, and kept clean until

the jointing is completed.

C. Flange faces shall be wire brushed and cleaned to remove all oil, grease, loose primer, mill scale, or any other foreign matter which could effect the proper seating of the gasket.

D. Prior to testing, pipe shall be thoroughly cleaned and/or purged in accordance with these specifications.

E. Cleaning of fresh and potable water lines shall be in accordance with these specifications, County of Los Angeles Health Department regulations, and shall be done under the supervision of the INSPECTOR and the Plant Fresh Water Supervisor.

F. Cleaning of weld joints and weld joint areas of stainless steel piping system, both before and after welding, shall conform to ASTM A380. Use only stainless steel brushes or stainless steel wool.

G. Finishing: Following fabrication of stainless steel piping connections, all weld areas shall be pickled to remove all mill scale, weld inclusions, and color, and passivated inside and out in conformance to ASTM A380.

H. Contractor shall submit the cleaning and passivation procedure of stainless steel piping system in compliance with the above requirements for ENGINEER's review and approval.

3.6 PURGING

A. The CONTRACTOR shall coordinate all purging with adjacent work under other contracts as necessary to preclude work interference or duplication of effort, and to eliminate any safety hazard to adjacent work.

B. All purging work shall be done in the presence of the INSPECTOR, and in accordance with these specifications and the latest revisions of applicable City of Los Angeles codes.

C. All existing valves shall be operated by the City Plant Personnel only.

D. The ENGINEER shall be notified of purging operations as indicated per General Requirements. The notification shall include a detailed purging plan which includes the following:

1. Method of purging and proposed procedure

2. Required coordination

3. Drawings or sketches of lines to be purged

4. Sequence of operation

5. Anticipated flow rate in standard cubic feet per minute (scfm) of vented gas to be purged

6. Equipment to be used

7. Proposed method of disposing of vented gases

E. The CONTRACTOR shall provide all necessary piping connections, temporary piping, temporary valves, sampling taps, purge nitrogen, methane and oxygen monitoring apparatus, and all other items or equipment or material required to complete this work.

F. Pressure within the pipe shall be reduced to atmospheric pressure prior to beginning purging operations.

G. The pressure shall not exceed the normal operating pressure of the line being purged.

H. Unless otherwise approved in writing by the ENGINEER, vent gas containing digester/natural gas shall be disposed of in accordance with all applicable City, State, and Federal laws and regulations.

I. Other vent gases shall be piped outside of structures to the open atmosphere for disposal.

J. Pipelines Containing Digester/Natural Gas:

1. At least eight volume changes of Nitrogen gas shall be available for purging.

2. The CONTRACTOR shall utilize a combustible gas meter to determine the methane gas content in the vented gas.

3. The pipeline shall be purged until the residual methane in the vent gas is less than 1 percent.

Note: Following this purge, the piping is filled with Nitrogen, an asphyxiant. Proper ventilation must be provided if the pipe is opened.

K. After the piping has been purged, the CONTRACTOR shall notify the City, in writing, that the piping is ready to be placed in service.

L. City plant personnel will place the line in service.

3.7 PIPE SLEEVES

A. Unless otherwise specified or indicated on the contract drawings, pipes passing through concrete or masonry shall be installed through Type 316 stainless steel sleeves installed before concrete is placed or masonry is laid.

B. The CONTRACTOR shall be responsible for coordinating the installation of sleeves for all piping.

C. Pipe sleeves installed through floors provided with a special finish, such as ceramic tile, resilient tile, or seamless flooring, shall be flush with the finished floor surface, and shall be provided with nickel or chromium plated floor plates.

D. In all other locations where pipes pass through floors, pipe sleeves shall project 2" above the finished floor surface, with the projection uniform throughout each floor area.

E. In the case of insulated pipes, the insulation shall be carried through the pipe sleeve.

F. Where it is indicated on the contract drawings to provide for future installation of pipe, sleeves shall be provided and the ends sealed with an approved plastic cap/plug.

G. For piping passing through existing concrete or masonry floors or walls, core drilled holes will be accepted when approved in writing by the ENGINEER.

1. Any reinforcement which is cut while drilling holes in existing concrete or masonry must be coated with an approved epoxy coating prior to pipe being installed.

H. All pipes passing through interior concrete or masonry walls or slabs shall be caulked on both sides with approved caulking.

1. Caulking in fire-rated walls must be approved fire caulking of a color approved by the

ENGINEER.

I. All pipes passing through walls or slabs which have one side exposed to the outside, have one side in contact with earth, or have one side exposed to a water bearing or water conveying structure, shall be sealed watertight by the use of modular casing seals ("link-seals") and be caulked on both sides of the wall or slab.

3.8 PIPE INSTALLATION

A. All piping shall be installed as specified, as indicated on the contract drawings and in a manner acceptable to the INSPECTOR.

B. The CONTRACTOR shall provide pipe cut from measurements made at the job site, and not from the contract drawings.

C. Provisions shall be made in laying out all piping throughout to provide for expansion and contraction.

D. Expansion joints or fittings shall be provided on all piping as specified or otherwise indicated on the contract drawings.

E. Piping shall not obstruct openings or passageways.

F. Piping shall be held free of any contact with building construction so as not to transmit noise.

G. All water, gas, and air supply piping at each fixture, or unit of equipment, shall be provided with an approved shutoff valve and union - WHETHER INDICATED ON THE CONTRACT DRAWINGS OR NOT - which will permit isolation and disconnection of each item without disturbing the rest of the system.

H. Air supply piping shall be provided with approved sectionalizing valves and valved air inlet connections as required for isolating portions of the system for periodic testing.

I. The gas supply line to each building shall be provided with an approved shutoff valve and union located above finish grade immediately outside the building. The gas shutoff valve shall have an approved, clearly visible, sign installed indicating "GAS SHUTOFF".

J. A union shall be provided within 2 feet of every threaded-end valve installed, unless there are other acceptable connections which will permit easy removal of the valve.

K. Unions shall also be provided in piping at locations adjacent to all devices or equipment which may require removal in the future, and at all locations specified or indicated on the contract drawings.

L. Non-pressure piping installed above electrical panels or cabinets shall be insulated and drip shields shall be installed to contain and channel any condensate or leakage away from the panels or cabinets.

M. Pressure piping shall not be installed above electrical panels or cabinets.

N. All air and digester gas piping shall be graded to points of drainage collection and approved drip legs and valve shall be installed.

O. Water supply piping within structures shall be arranged, and facilities provided, for complete drainage.

P. All piping serving metering equipment shall be uniformly graded so that air traps are eliminated

and complete venting is provided.

Q. Seal water supply shall be piped to within 3 feet of the pumping unit seal box.

1. Connection to the pump from the seal water piping shall be made using stainless steel tubing as specified.

R. Stuffing box leakage from water sealed pumps shall be piped to the nearest point of drainage collection.

1. Seal water leakage shall not be allowed to free flow on the floor to the drainage collection point.

S. Taps for pressure gage connections on the suction and discharge sides of pumping units shall be provided with a nipple and an approved shutoff valve.

1. Drilling and tapping of pipe walls for installation of pressure gages or switches will not be permitted.

2. Taps shall be provided by factory threaded taps or a factory welded boss.

T. All branch connections in horizontal runs of air, gas, or steam piping shall be made from the top of the pipe.

U. In all piping, insulating fittings shall be provided to prevent contact of dissimilar metals wherever copper pipe, tubing, or fittings are connected to iron or steel pipe or fittings.

3.9 PIPE JOINTS

A. Pipe joints shall be provided as specified or as indicated on the contract drawings.

B. Threaded Joints:

1. Pipe threads shall conform to ANSI B2.1, NPT, and shall be full and cleanly cut.

2. Not more than three threads at each pipe connection shall remain exposed after installation.

3. Ends of pipe shall be reamed after threading and before assembly to remove all burrs.

4. Threaded joints in plastic piping shall be made up with Teflon thread tape applied to all male threads.

5. Threaded joints in stainless steel piping shall be made up with Teflon thread sealer and Teflon thread tape applied to all male threads.

6. Thread tape and joint compound or sealers are not to be used in threaded joints which are to be seal welded.

C. Solder and Brazed Joints:

1. Where solder fittings are specified in lines smaller than 2", joints may be soldered or brazed, at the option of the CONTRACTOR.

2. Joints in 2" and larger copper tubing shall be brazed.

3. Joints in copper refrigerant piping shall be brazed.

   a. Solder will not be accepted.

4. Surfaces to be joined shall be thoroughly cleaned with flint paper and coated with a thin film of flux.

5. At each joint, tubing shall enter to the full length of the fitting socket.

6. Care should be taken to avoid overheating the metal or flux.

7. While the joint is still hot, all excess filler metal and flux shall be removed with a rag or a brush.

D. Solvent Welded Joints:

1. All joint preparation, cutting, and jointing operations shall comply with the pipe manufacturer's recommendations and ASTM D2855.

2. Pipe ends shall be beveled or chamfered to the dimensions recommended by the pipe manufacturer.

3. Newly assembled joints shall be suitably blocked or restrained to prevent movement during the set time recommended by the manufacturer.

4. Pressure testing of solvent welded piping systems shall not be performed until the applicable curing time, set forth in Table X2.1 of ASTM D2855, has elapsed.

E. Rubber Gasketed Joints:

1. Clamps for hubless cast iron soil pipe shall be installed in accordance with the manufacturer's recommendations.

3.10 ALIGNMENT

A. All piping shall be installed to lines, grades, and elevations indicated on the contract drawings.

B. All deviations from the line, grade, or elevation as indicated on the contract drawings shall be approved in writing by the ENGINEER.

C. The CONTRACTOR is responsible for coordinating all other work to ensure that piping is installed as indicated on the contract drawings.

D. Piping intended to be straight shall be straight. Deflections from a straight line or grade shall be approved in writing by the ENGINEER and shall be accomplished by the use of approved fittings.

E. For buried piping, all pipe subgrades shall be determined and checked by survey.

F. If laser equipment is used for piping installation, periodic elevation measurements shall be made with survey equipment to verify the accuracy of grade or elevation. If such measurements indicate thermal deflection of the laser due to differences between ground or atmospheric temperature and the air temperature within the pipe, steps shall be taken to prevent further thermal deflections.

3.11 PIPE INSULATION

A. All domestic hot water piping, cold water piping, and roof drain/overflow lines which pass through spaces above finished ceilings, or are suspended over equipment, electrical panels, or cabinets shall be insulated.

B. Piping shall be tested and shall be approved by the INSPECTOR prior to insulation installation.

C. All end joints of insulation shall be tightly butted.

D. All seams and joints shall be held by manufacturer's standard adhesive.

E. Jacket laps shall be neatly pasted in place.

F. All joints shall be pointed with insulating cement.

G. Fittings, flanges, and valves shall be insulated with approved molded insulation or insulating cement of the same thickness as the pipe insulation.

H. Hangers shall permit insulation to pass through and suitable saddles shall be provided to prevent the weight of the piping from being supported by the insulation.

3.12 PROTECTIVE COATING

A. All stainless steel, copper, and black steel pipe in buried locations shall have exterior surfaces protected in accordance with Section 09800, Protection Coating.

3.13 COATING INSPECTION

A. All shop-applied coatings on pipe or fittings shall be inspected for holidays and other defects after receipt of the pipe or fittings on the job site, and again after installation if it is determined by the INSPECTOR that the coating may have been damaged.

1. Inspection shall be made using an electrical holiday detector.

2. The detector used, and inspection procedures, shall be in conformance with the requirements of Section 4.4 of AWWA C209.

B. All field-applied tape wrap on pipe, pipe joints, fittings and valves shall be inspected for holidays and other defects following completion of wrapping and again following installation if it is determined by the INSPECTOR that the wrapping may have been damaged.

C. Inspection of all field-applied wrapping shall be conducted by the City of Los Angeles Bureau of Standards.

D. Holidays and other defects detected during inspection shall be repaired in accordance with the recommendations of the coating or tape wrap manufacturer, as applicable.

1. At the discretion of the INSPECTOR, major areas of defects in pipe coatings may result in rejection of the pipe and its immediate removal from the job-site.

2. At the discretion of the INSPECTOR, major areas of defects in pipe coatings may be repaired on site by a qualified representative of the manufacturer or supplier.

3.14 BURIED PIPE

A. All stainless steel, copper, and black steel pipe in buried locations shall have exterior surfaces

protected with a shop-applied plastic coating.

B. All galvanized piping in buried locations shall be wrapped with an approved pipe wrap, or be coated with an approved coal tar coating.

C. Buried pipe shall be protected from lateral displacement by use of the specified pipe embedment and/or encasement.

D. Under no circumstance shall pipe be laid in water.

E. All pipes will be laid on native material unless otherwise specified or indicated on the contract drawings.

F. All pipe subgrade shall be compacted to a relative density of 95%, unless otherwise indicated on the contract drawings.

G. All subgrade shall have compaction tests taken and be approved by the INSPECTOR prior to pipe installation.

H. When pipe laying is interrupted, or stopped at the end of the work shift, the open ends of pipe shall be sealed with a watertight plug, or other means acceptable to the INSPECTOR, to prevent water from entering the pipe.

I. Plastic pipe shall be "snaked" in the trench, and shall be kept shaded and shall be covered with backfill immediately following testing.

J. No piping will be encased or backfilled prior to testing and without approval of the INSPECTOR.

K. [All fresh and potable water piping shall be completely encased in blue concrete after testing per Section 3.16 of this specification.]

3.15 AS-BUILT DRAWINGS

A. The CONTRACTOR shall provide surveyed "as-built" drawings for all piping installed.

B. "As-built" drawings shall be provided for buried pipe installations as well as pipe installed in tunnels, galleries, inside buildings, and above-ground outside.

C. For buried pipe installations, surveyed "as-builts" shall include the elevation and location of pipe, valves, and all other pertinent information of the installation, as well as all existing piping or structures in the immediate area.

D. For buried installations, survey shall be taken of location and elevations of all piping installed prior to any encasement or backfill.

E. For buried, encased piping, survey shall be taken both prior to encasement and after the encasement is in place.

F. Drawings shall be forwarded to the ENGINEER for review and approval within five days after the installation is completed.

G. Progress payment will be withheld for all pipe installations for which "as-built" drawings are not received as specified.

3.16 TESTING

A. Testing of all pipe installations shall be done in conformance with Section **[15620 "Ductile Iron Pipe" Paragraph 3.23]** of the specifications.

3.17 DISINFECTION

A. Disinfection of miscellaneous piping, as applicable, shall be in conformance with the specifications.

1. Disinfecting Solution: Water solution containing chlorine at the minimum concentration of 50 parts per million.

2. Fill entire system with disinfecting solution.

3. Allow to stand 6 hours minimum.

4. Flush system until chlorine content is at or below content of local water supply.

(END OF SECTION)

SECTION 15640
POLYVINYL CHLORIDE (PVC) PIPE, FITTINGS, AND VALVES

PART 1 -- GENERAL

1.1 THE REQUIREMENT

A. The CONTRACTOR shall furnish all tools, equipment, materials, and supplies and shall perform all labor required to complete the work as indicated on the Drawings and specified herein.

B. This Section covers furnishing and installing polyvinyl chloride (PVC) pipeline, fittings, flanges, and valves, complete, in place, in accordance with the requirements of the Contract Documents.

1.2 RELATED WORK SPECIFIED ELSEWHERE

A. Section 15610 Piping, General.

B. Section **[09800]** Protective Coating.

C. Section 02200 Earthwork.

1.3 REFERENCE SPECIFICATIONS, CODES, AND STANDARDS

A. Comply with the reference specifications of the GENERAL REQUIREMENTS.

B. Comply with the current provisions of the following Codes and Standards.

1. Commercial Standards:

ANSI/AWWA C900	Polyvinyl Chloride (PVC) Pressure Pipe 4-in Through 12-in for Water
ANSI/AWWA C905	Polyvinyl Chloride (PVC) Pressure Pipe 14-in Through 36-in for Water
ASTM D1784	Specification for Rigid Polyvinyl Chloride (PVC) Compounds and Chlorinated Polyvinyl Chloride (CPVC)
ASTM D1785	Specification for Polyvinyl Chloride (PVC) Plastic Pipe, Schedules 40, 80, and 120.
ASTM D2584	Test Method for Ignition Loss of Cured Reinforced Resins
ASTM D4101	Specification for Polypropylene Injection and Extrusion Materials
PPI Technical Report TR 3/4	Policies and Procedures for Developing Recommended Hydrostatic Design Stresses for Thermoplastic Pipe Materials
AWWA Manual M23	PVC Pipe - Design and Installation

1.4 CONTRACTOR SUBMITTALS

A. Submittals shall be made in accordance with the GENERAL REQUIREMENTS.

B. Shop Drawings: The CONTRACTOR shall submit shop drawings of pipe, fittings, flanges, valves, and appurtenances.

C. Certifications: The CONTRACTOR shall furnish a certified affidavit of compliance for all pipe and other products or materials furnished under this Section of the Specifications, as specified in the referenced standards and the following supplemental requirements:

1. Hydrostatic proof test reports.

2. Sustained pressure test reports.

3. Burst strength test reports.

D. All expenses incurred in making samples for certification of tests shall be borne by the CONTRACTOR.

1.5 QUALITY ASSURANCE

A. Inspection: All pipes shall be subject to inspection at the place of manufacture in accordance with the provisions of the referenced standards as supplemented by the requirements herein. The CONTRACTOR shall notify the INSPECTOR in writing of the manufacturing starting date not less than 14 calendar days prior to the start of any phase of the pipe manufacture.

B. During the manufacture of the pipe, the INSPECTOR shall be given access to all areas where manufacturing is in process and shall be permitted to make all inspections necessary to confirm compliance with the Specifications.

C. Tests: Except as modified herein, all materials used in the manufacture of the pipe shall be tested in accordance with the requirements of this Section of the Specifications, as specified in the referenced standards, as applicable.

D. The CONTRACTOR shall perform said material tests in accordance with the requirements of the Contract Documents. The INSPECTOR shall have the right to witness all testing conducted by the CONTRACTOR provided that the CONTRACTOR's schedule is not delayed for the convenience of the INSPECTOR.

E. In addition to those tests specifically required, the INSPECTOR may request additional samples of any material for testing by the ENGINEER. The additional samples shall be furnished at no additional cost to the CITY.

PART 2 -- PRODUCTS

2.1 GENERAL

A. PVC pressure pipe 4-inch through 12-inch shall conform to the applicable requirements of ANSI/AWWA C900; 14-inch through 36-inch pipe shall conform to the applicable requirements of AWWA C905; and all sizes are subject to the additional requirements specified herein.

B. PVC piping systems shall have design pressure limit of 100 psig and temperature limit of 110 degree F, unless otherwise noted.

2.2 PIPE

A. The pipe shall be of the diameter and pressure class specified or shown, shall be furnished complete with elastomeric gaskets, and all specials and fittings shall be provided as required in the Contract Documents. The dimensions and pressure classes for 4-inch through 12-inch PVC

pressure pipe with cast-iron pipe equivalent O.D.'s shall conform to the requirements of AWWA C900. The dimensions for 14-inch through 36-inch PVC transmission pipe with cast-iron outside diameters shall conform to the requirements of AWWA C905.

B. Additives and Fillers: Unless otherwise provided in alternate qualification procedures of PPI-TR3, compounds which have a Hydrostatic Design Basis (HDB) of 4000 psi at 73.4 degrees F for water shall not contain additives and fillers that exceed the recommended values in Table 1, Part Y of PPI-TR3 (e.g., allowable content range for calcium carbonate is 0.0-5.0 parts per hundred of resin). If requested by the ENGINEER, the additive and filler content shall be determined using the pyrolysis method as specified in ASTM D 2584.

C. Joints: All joints for buried PVC pipe shall be either an integral bell manufactured on the pipe or a separate coupling, both employing an elastomeric gasket. The bell and coupling shall be the same thickness as the pipe barrel, or greater thickness. The sealing ring groove in the coupling shall be of the same design as the groove in cast iron fittings and valves available from local water works supply distributors. Where shown, restrained joint pipe shall be ductile iron pipe. No restrained joint PVC pipe will be allowed.

D. Joint Deflection: Deflection at the joint shall not exceed 1.5 degrees or the maximum deflection recommended by the manufacturer. No deflection of the joint shall be allowed for joints which are over-belled or not belled to the stop mark.

2.3 FITTINGS

A. Fittings

1. Fittings shall be per ASTM D2466, Cell Classification 12454-B, bearing NSF seal, socket, Schedule 80 ASTM D2467**.**

B. Solvent Cement:

1. Unless otherwise specified, all PVC piping shall be of solvent-welded construction.

2. Primer shall be per ASTM F656.

3. Solvent cement shall be per ASTM D 2564, CPVC / PVC for Sodium Hypochlorite.

4. Manufacturers:

PART 3 -- EXECUTION

3.1 GENERAL

A. All laying, jointing, testing for defects and for leakage shall be performed in the presence of the INSPECTOR, and shall be subject to his approval before acceptance. All material found during the progress to have defects will be rejected and the CONTRACTOR shall promptly remove such defective materials from the site of the work.

B. Installation shall conform to the requirements of AWWA M23, instructions furnished by the pipe

manufacturer, and to the supplementary requirements or modifications specified herein. Wherever the provisions of this Section and the aforementioned requirements are in conflict, the more stringent provision shall apply.

3.2 HANDLING AND STORAGE

A. Handling: Pipe, fittings and accessories shall be carefully inspected before and after installation and those found defective shall be rejected. Pipe and fittings shall be free from fins and burrs. Before being placed in position, pipe, fittings, and accessories shall be cleaned, and shall be maintained in a clean condition. Proper facilities shall be provided for lowering sections of pipe into trenches. Under no circumstances shall pipe, fittings or any other material be dropped or dumped into trenches.

B. Storage: Pipe should be stored, if possible, at the job site in unit packages provided by the manufacturer. Caution should be exercised to avoid compression damage or deformation to bell ends of the pipe. Pipe should be stored in such a way as to prevent sagging or bending and protected from exposure to direct sunlight by covering with an opaque material while permitting adequate air circulation above and around the pipe. Gaskets should be stored in a cool, dark place out of the direct rays of the run, preferably in original cartons.

3.3 TRENCHING AND BACKFILL

A. Trench excavation and backfill shall conform to the requirements of Section **02310** "Earthwork," and as specified herein. The minimum backfill compaction in the pipe zone shall be **[90]** percent of maximum density per ASTM **[D698] [D1557]**.

3.4 INSTALLATION

A. Pipe shall be supported at its proper elevation and grade, care being taken to secure firm and uniform support. Wood support blocking will not be permitted. The full length of each section of pipe and fittings shall rest solidly on the pipe bed, with recessed excavation to accommodate bells, joints, and couplings. Anchors and supports shall be provided where necessary and where indicated on the drawings for fastening work into place. Fittings shall be independently supported.

B. Short lengths of pipe shall be used in and out of each rigid joint or rigid structure. Piping that does not allow sufficient space for proper installation of jointing material shall be replaced by one of proper dimensions. Blocking or wedging between bells and spigots will not be permitted.

C. Joints shall be installed according to manufacturer's recommendations. Trenches shall be kept free of water until joints have been properly made. The maximum combined deflection at any coupling shall be in accordance with the manufacturer's recommendations.

D. Pipe shall be cut by means of saws, power driven abrasive wheels or pipe cutters, which will produce a square cut. No wedge-type roller cutters will be permitted. After cutting, the end of the pipe shall be beveled using a beveling tool, portable type sander or abrasive disc.

E. Pipe joints shall be solvent-welded in accordance with the manufacturer's instructions.

3.5 SERVICE CONNECTIONS

A. Service Connections: Direct tapping will not be permitted. Double strap **[bronze]** service clamps shall be used for all service connections. Service clamps shall have a bearing area of sufficient width along the axis of the pipe, so that the pipe will not be distorted when the saddle is made tight. An internal shell cutter shall be used to drill through the corporation stop to minimize PVC shavings, retain the coupon, and reduce stress. Single fluted shell cutters or twist drills are not acceptable. Lubricate the cutting and tapping edges of the tool with cutting lubricant. Make the

cuts slowly and use the follower very lightly - do not force cutter through pipe wall. Shell cutter shall have sufficient throat depth to handle the heavy wall PVC pipe. Maximum outlet size permitted with service clamps or saddle is 2 inches.

B. Tapping sleeves and valves shall be used for all outlet sizes greater than 2 inches in diameter. Tapping sleeves shall be assembled and installed in accordance with the manufacturer's recommendations.

3.6 CONNECTIONS TO EXISTING PIPELINES

A. The CONTRACTOR shall locate all underground improvements and install the pipelines to the depths shown on the drawings. Where the new work is to be connected to existing pipelines, the CONTRACTOR shall make its arrangements with the serving utility well in advance of the connections, to allow adequate time for dewatering of the existing line, if necessary, and shall expedite the work to minimize water outages to the users. Where sections of existing distribution mains are taken permanently out of service and abandoned in place, the cut ends shall be plugged solid with concrete to a depth of not less than one pipe diameter.

3.7 FIELD TESTING AND DISINFECTION

A. Field testing and disinfection of fresh or potable water pipe installations shall conform to the requirements of Section **[02666]** "Water Pipeline Testing and Disinfection."

B. Field testing of all pipe installations other than fresh or potable water piping shall be done in conformance with Section **[15620]** "Pipe System Testing."

3.8 PIPE SUPPORTS

A. Pipe supports, hangers, anchors, and guides shall be in accordance with the requirements of Section 15770, "Pipe Supports and Mechanical Joint Restraints."

3.9 PROTECTIVE COATING

A. Protective coating shall be provided in accordance with the requirements of Section **[09800]** "Protective Coating."

END OF SECTION

SECTION 15690
COPPER TUBING AND BRASS PIPE, FITTINGS, AND VALVES

PART 1 -- GENERAL

1.1 THE REQUIREMENT

A. The CONTRACTOR shall furnish all tools, equipment, materials, and supplies and shall perform all labor required to complete the work as indicated on the Drawings and specified herein.

B. This Section covers furnishing and installing copper tubing and brass pipeline, fittings, flanges, and valves, complete, in place, in accordance with the requirements of the Contract Documents.

1.2 RELATED WORK SPECIFIED ELSEWHERE

A. Section **[9800]** Protective Coating.

B. Section 15610 Piping, General.

1.3 REFERENCE SPECIFICATIONS, CODES, AND STANDARDS

A. Comply with the reference specifications of the GENERAL REQUIREMENTS.

B. Comply with the current provisions of the following Codes and Standards.

1. Commercial Standards:

ASTM B43	Specification for Seamless Red Brass Pipe, Standard Sizes.
ASTM B62	Specification for Composition Bronze or Ounce Metal Castings.
ASTM B88	Specification for Seamless Copper Water Tube.
ASTM B280	Standard Specification for Seamless Copper Tube for Air Conditioning and Refrigeration Field Service.

1.4 CONTRACTOR SUBMITTALS

A. Submittals shall be made in accordance with the GENERAL REQUIREMENTS.

B. Shop Drawings: The CONTRACTOR shall submit shop drawings of pipe, fittings, flanges, valves, and appurtenances.

C. Certifications: The CONTRACTOR shall furnish a certified affidavit of compliance for all pipe and other products or materials furnished under this Section of the Specifications, as specified in the referenced standards and the following supplemental requirements:

1. Hydrostatic proof test reports.

2. Sustained pressure test reports.

3. Burst strength test reports.

1.5 QUALITY ASSURANCE

A. The CONTRACTOR shall comply with the provisions of this specification, Section 15610 Piping General, and all other applicable sections of this specification, standards, codes, and regulations.

PART 2 -- PRODUCTS

2.1 COPPER TUBING

A. Copper Tubing shall be per ASTM B88, Type K, seamless water tubing.

1. Annealed for buried applications.

2. Hard drawn for above ground and gallery piping applications.

3. Wall thickness for ½" tubing shall be 0.049" minimum.

4. Wall thickness for 3/4" to 1" tubing shall be 0.065" minimum.

5. Wall thickness for 1½" to 2 ½" tubing shall be 0.083" minimum.

6. Wall thickness for 3" tubing shall be 0.109" minimum.

B. Copper tubing for air conditioning, condensate drains, and refrigeration field service shall be per ASTM B280.

C. Flared Fittings shall be per ANSI B16.26.

D. Solder Joint Fittings shall be per ANSI B16.18 OR B16.22.

E. Insulating Fittings shall conform to the following:

1. Threaded: Dielectric steel pipe nipple, ASTM A53 Schedule 40, polypropylene lined, zinc plated.

2. Flanged: EPCO "Dielectric Flange Unions", Central Plastics "Insulating Flange Unions", or equal

F. Compression Joint Fittings shall be Brass.

G. Pipe nipples for ½" to 2" size shall be IPS Brass pipe with threaded ends.

H. Fittings for ½" to 3" size shall be wrought copper or bronze solder joint tube.

I. Solder shall be solid wire, lead free, ASTM B32, Alloy Grade, 95 percent tin and 5 percent antimony. For oxygen service, joints shall be silver soldered.

J. Soldering Flux shall be paste type, Federal Spec 0-F-506, Type I, Form A.

K. Brazing Filler Metal shall be per AWS A5.8, BCuP-5.

L. Brazing Flux shall be paste type, Federal Spec O-F-499, Type B.

M. Flanges shall conform to ANSI B16.24, Class 150, Cast Bronze, Brazed Joint.

N. Flange nuts and bolts shall be Type 316 Stainless Steel with insulating kits.

2.2 PIPE FLANGES

A. Flanges for 3” size shall be Class 150# threaded bronze ASTM B62.

B. Flanged coupling adaptors for 3” size shall be wrought copper or bronze solder tube x threaded joint.

C. Gaskets shall be as ASTM D1330, Grade 1; red rubber with 1/8” minimum thickness.

D. Bolts

1. Studs: 316 Stainless Steel ASTM 193 Grade B8M.
2. Nuts: 316 Stainless steel ASTM 194 Grade 8M.
3. Washers: 316 Stainless Steel ANSI B18.22.1.
4. Assemble with anti-seize compound.

2.3 VALVES

A. Ball Valves

1. Sizes **[1/2" - 3"]**:

a. Class: 400 Solder Joint
b. Style: Regular port
c. Body: Bronze ASTM B584 Alloy 844
d. Ball: Brass
e. Seat: Reinforced TFE
f. Stem: Brass
g. Operator: Lever
h. Manufacturers:
(1) **[Manufacturer 1]**;
(2) **[Manufacturer 2]**;
(3) **[Manufacturer 3]**;
(4) Or equal

B. Check Valves

1. Sizes **[1/2" - 3"]**:

a. Class: 125 Solder Joint.
b. Type: Swing.
c. Body: Bronze ASTM B62.
d. Trim: Bronze.
e. Bonnet: Threaded.
f. Manufacturers:
(1) **[Manufacturer 1]**;
(2) **[Manufacturer 2]**;
(3) **[Manufacturer 3]**;
(4) Or equal.

C. Gate Valves

1. Sizes **[1/2" - 3"]**:

a. Class: 125 Solder Joint.
b. Body: Bronze ASTM B62.
c. Trim: Bronze
d. Bonnet: Screwed.
e. Packing: PTFE.

f. Operator: Handwheel.

2. Sizes **[1/2" - 3"]**: Use for instrument connection only

a. Class: 200 # Threaded.
b. Body: Bronze.
c. Trim: Nickel Alloy
d. Bonnet: Union.
e. Packing: Non-Asbestos.
f. Operator: Handwheel, Rising Stem.

D. Globe Valves

1. Sizes **[1/2" – 3"]**:

a. Class: 125 Solder Joint.
b. Body: Bronze ASTM B62.
c. Trim: Bronze
d. Bonnet: Screwed.
e. Packing: Non-Asbestos, Fiber-Reinforced.
f. Operator: Handwheel.

PART 3 -- EXECUTION

3.1 GENERAL

A. All laying, jointing, testing for defects and for leakage shall be performed in the presence of the INSPECTOR, and shall be subject to his approval before acceptance. All material found during the progress to have defects will be rejected and the CONTRACTOR shall promptly remove such defective materials from the site of the work.

B. Gaskets for Flanged Joints: Gaskets shall be in accordance with the requirements of Section 15610**,** "Piping, General."

C. Insulating Connections: All insulating connections shall be installed in accordance with manufacturer's printed instructions. Care shall be exercised to prevent damage to insulating fittings, while making up the joints.

3.2 HANDLING AND STORAGE

A. Handling: Pipe, fittings and accessories shall be carefully inspected before and after installation and those found defective shall be rejected. Pipe and fittings shall be free from fins and burrs. Before being placed in position, pipe, fittings, and accessories shall be cleaned, and shall be maintained in a clean condition.

B. Storage: Pipe should be stored, if possible, at the job site in unit packages provided by the manufacturer. Caution should be exercised to avoid compression damage or deformation to bell ends of the pipe. Pipe should be stored in such a way as to prevent sagging or bending and protected from exposure to direct sunlight by covering with an opaque material while permitting adequate air circulation above and around the pipe. Gaskets should be stored in a cool, dark place out of the direct rays of the run, preferably in original cartons.

3.3 PIPE SUPPORTS

A. Not Used.

3.4 PROTECTIVE COATING

A. Protective coating shall be provided in accordance with the requirements of Section **[09800]**

"Protective Coating."

END OF SECTION

SECTION 16020
MUNICIPAL FACILITIES GENERAL ELECTRICAL REQUIREMENTS

PART 1-- GENERAL

1.1 DESCRIPTION:

A. Related Work:

1. 01022 Environmental Procedures
2. 01810 Commissioning Requirements
3. 01813 Prefunctional Checklists
4. 16560 Municipal Facilities Electrical Systems Commissioning
5. 16570 Municipal Facilities Electrical Testing Requirements

B. Electrical subcontractor shall attend the Commissioning pre-construction meeting and other required meetings to facilitate coordination and execution of the commissioning scope.

C. Provide pre-functional checklists and complete functional testing under the supervision of the commissioning authority, including preparation of data in form templates. Provide qualifying calibrated instrumentation needed for the prescribed testing procedures.

D. Provide the services of specialized technicians for testing and validation. Technicians may be supplied by the equipment suppliers or from qualified independent testing services.

E. Systems that shall be commissioned are:

1. Lighting system and controls
2. Fire Life and Safety system using Chief's 4 testing procedures
3. Emergency Generator

F. Detailed descriptions of electrical commissioning requirements are provided in Section 01810.

G. Comply with all provisions of the General Conditions, Supplementary Conditions and General Requirements as applicable to work of all Sections of Division 16 concerning definitions, guarantees, submittals, as-builts, clean-up, etc.

H. Examine all Technical Sections for work required to be included in work in Sections of Division 16 - Electrical Work.

I. All work of this Division shall be coordinated with work of other trades.

1.2 SCOPE

A. Required: Provide all labor, materials, equipment, tools and appliances required to furnish and install all electrical work shown on the Contract Drawing and herein specified in the Sections of Division 16 complete and operable but not limited to the following:

1. All construction power and lighting and power for testing equipment and systems through final acceptance of test.

2. Power and lighting service raceway(s) underground from the new transformer installed by LADWP to the two main service switchboards. One switchboard is located in West Park and the other switchboard is located in East Park.

3. Complete lighting and power system(s) including branch circuits, fixtures, outlets, lamps, switches, controllers, and auxiliary equipment.

4. Complete distribution system(s) including switchboards, panelboards, transformers, feeders, and auxiliary equipment.

5. Complete system of exterior vandal resistant lighting.

6. Underground service conduits from property line to transformers and switchboards.

7. Complete Grounding System.

8. Complete Music and Paging System(s)

9. Complete Intercom System(s)

   a. Telephone system, including service raceways, cabinets, backboards, grounding, and AC power provisions.
   b. Television antenna and coaxial cable distribution system.

10. Distribution for emergency power system including but not limited to a central battery inverter, lighting panelboard and branded circuit wiring.

11. Conduit System including backboards, pullboxes, wiring devices, grounding, etc. for the following as applicable:

    a. Telephone System
    b. Television antenna and coaxial cable distribution.

12. Control wiring and devices for equipment specified in Sections of Division 16 and other Technical Sections, except where specifically indicated or noted otherwise on the Contract Drawings or in the Specifications.

13. Complete and Operable Fire Alarm System.

14. Connection and testing of electrical equipment and controls specified in Division 16 and other technical sections, except where specifically indicated or noted elsewhere on the Contract Drawing or in the Specifications.

15. Applicable excavating, trenching and backfilling.

16. All electrical equipment that require relocations and/or adjustments to grade, as indicated on the Contract Drawings.

1.3 WORK NOT INCLUDED

A. Furnishing all electrical or partially electrically devices related uniquely to mechanical equipment and only as specified in the Mechanical Division 15.

B. Furnishing and installing of all motors.

1.4 RELATED WORK

A. Preparation of Soils Reports, refer to Section 02310 EARTHWORK.

B. Painting of exposed raceways and equipment in DIVISION 9.

C. Ventilation and exhaust systems, and fuel supply system for engine-generator set in DIVISION 15.

D. Integrated ceiling system luminaries in DIVISION 13.

E. Air conditioning system controls in DIVISION 15.

F. Commissioning requirements in DIVISION 1.

G. Municipal Facilities Electrical Commissioning Requirements in DIVISION 16.

H. Municipal Facilities Electrical Testing Requirements in DIVISION 16.

1.5 LEGAL REQUIREMENTS AND STANDARDS

A. Required: Comply with the latest, as applicable and effective, during the progress of Contracted Work.

1. Latest Los Angeles City Electrical, Fire and Building Codes and U.B.C. Supplement.

2. California State Administrative Code, Title 24, State Building Standard.

3. (CAL/OSHA) California State Occupational Safety and Health Act.

4. California State Fire Marshal Standards.

5. Los Angeles City Department of Water and Power.

6. U.L. - Underwriters Laboratories Inc.

7. NEC - National Electric Code.

8. ASTM - American Society of Testing and Materials.

9. Current publications of the National Fire Protection Association.

10. National and American Standards Association.

B. General Compliance as Applicable

1. Drawings and specification requirements shall govern where they exceed Code requirements.

2. Where requirements between governing Codes and Regulations vary, the more restrictive provision shall apply.

3. Nothing contained in Contract Documents shall be construed as authority or permission to disregard or violate legal requirements.

1.6 GENERAL REQUIREMENTS

A. Permits and Inspections:

1. Apply and pay for all required electrical work (construction and installation) prescribed by legally constituted public authorities.

2. Arrange and pay for all required inspections or examinations and shall deliver "certifications" of such inspections to the City Engineer prior to acceptance of the electrical work. Obtain approved plans from the Los Angeles City Department of Building and Safety.

B. Site Inspections:

1. Carefully examine the job-site and existing facilities and compare the Contract Drawings for work coordination.

2. By act of submitting bid, it will be deemed the Contractor has made required inspections and has accepted such job-site conditions and has made allowances thereof in the preparation of "Bid" figures.

C. Verification of Dimensions: All dimensions (scaled, figured or noted) are approximate, given for estimating purposes. Before proceeding with work Contractor shall carefully check and verify all dimensions, sizes, etc. and shall assume full responsibility for proper fitting in and attachment of all materials and equipment to other equipment and to the structure.

D. Examination of the Contract Drawings:

1. Carefully study Contract Drawings and Specifications to verify if any work as laid out or indicated is contrary to or in conflict with applicable Codes and Standards. Report to the City Engineer such data prior to submittal of Bid(s).

2. The City Engineer will then instruct the Contractor on how to proceed.

3. By the act of submitting a "Bid" or "Proposal" Contractor is deemed to have made such study and has accepted all job-site conditions.

E. Substitutions:

1. Items, articles or products named on the Contract Drawings and in the Specifications are intended to establish a standard of quality and required functional performance.

2. If the Contractor desires to propose a substitution or alternate, submit a complete list with detailed specifications and manufacturer's data which differ from those specified within

thirty-five (35) days after award of Contract for approval or rejection by the City Engineer.

3. If such submittals are not approved, use specified materials and equipment throughout the Electrical Work.

F. Interpretations:

1. Make all requests for interpretations of the Contract Drawings and/or Specifications to the Contractor through the Architect or City Engineer.

2. Manufacturer's or Supplier's requests for interpretations will be referred to the Contractor.

G. Submittals: Conform to applicable provisions of Section 01330 of the General Requirements and as hereinafter specified.

1. Prepare, review and coordinate schedule of submittals, determining necessary lead time for preparation, submitting, checking, and ordering and delivering materials and equipment to the job-site for timely arrival and conformance with the overall Construction schedule.

2. All submittals will be checked for general compliance with Specifications only. Contractor will be responsible for deviations from the Drawings or Specifications and for errors or omissions of any sort in the Submittals.

3. Shop drawings shall be submitted in completed groups of materials (i.e., all lighting fixtures or all switchgear, etc.). The Contractor shall add and sign the following paragraph on all equipment and materials submitted for review.

a. "It is hereby certified that the (equipment) (material) shown and marked in this submittal is that proposed to be incorporated into the project; is in compliance with the Contract Drawings and Specifications and can be installed in the allocated spaces".

b. Failure to add the above written statement for compliance will result in return of submittals to be reviewed.

4. All required submittals on electrical items and equipment shall include complete catalog information such as construction ratings, insulation systems, including manufacturer's certification that items or equipment meet or exceed U.L. and Trade Standards, and the Specifications.

5. Equipment Floor Plans: Submit after approval of material and/or equipment is secured. Prepare for each electrical equipment room drawn to 1/2" = 1'0" scale. Layout drawing shall be to exact scale.

6. Materials list of items and equipment proposed to be provided for the work of this Division 16 and shall include the following as applicable:

a. Service and distribution switchgear.

b. Motor control centers.

c. Central battery inverter.

d. Lighting panelboards.

e. Dry type transformers.

f. Conduits.

g. Conductors.

h. Electrical equipment layout at 1/2" = 1'-0" scale indicating exact dimensions of equipment, clearances, housekeeping pads.

i. Disconnect switches, pull boxes and fuses.

j. Lighting fixtures.

k. Fire alarm and detection system.

l. Control devices, standard and special receptacles, switches and finish device plates.

m. Cabinets for signal and telephone systems, special terminals and cabinets.

n. Vibration isolators, including lateral and vertical seismic restraints.

o. All fabricated equipment.

p. Clock and program system.

q. Time clocks, contactors, control switches, etc. including wiring diagrams and sequence of operation.

r. Grounding Systems.

s. Cable Trays.

H. Special Submissions:

1. Test Reports for the Following:

a. Ground fault devices.

b. Megger Readings: Ground system, motors, feeders and switchgear.

c. Voltage Readings: Distribution, service and motors.

d. Fire alarm system.

2. Maintenance service and operating manuals for all equipment.

3. Items as outlined in other Sections.

I. "No Exceptions Taken": Be responsible for equipment ordered and/or installed prior to receipt of shop drawings returned from the City Engineer bearing the Electrical Engineer's stamp of "No Exceptions Taken". Corrections or modifications to equipment as noted on shop drawings shall be performed or equipment removed from the job site at request of City Engineer without additional compensation.

J. Disapprovals: Any article or equipment supplied by the Contractor disapproved by the Architect or City Engineer as not conforming to the Specifications or not of proper quality or grade or suitability shall be deleted and suitable article or equipment be provided in lieu thereof in conformance with the Specifications at no added cost to the City.

K. Terminology: Generally speaking throughout this Division 16 of the Specifications when the words "or equal" or other words of similar intent and meaning are used implying judgment or decision is to be exercised, it is understood that it is the judgment, discretion, or decision of the City Engineer to which reference is made.

L. Modification of Contract Drawings: In each case where proposed substitute material or equipment will require changes to the design of the Project as indicated on the drawings, for proper installation or operation, appropriate proposed revision drawings prepared and signed by a licensed Engineer shall be furnished by the Contractor for approval by the City Engineer. Make such drawings sufficiently complete for the proper installation and operation of the proposed substitute materials or equipment, and for construction by all of the involved trades of the proposed revisions. The cost of the drawings and the proposed revised construction shall be borne by the Contractor.

M. Record Drawings: Provide in strict accordance with applicable provisions of Section 30 in the GENERAL CONDITIONS of these Specifications concerning accurate locations of raceways, cable runs, outlets and equipment. See also applicable provisions of Section 01783 RECORD DRAWINGS AND RECORDS PROJECT MANUAL of the GENERAL REQUIREMENTS of these Specifications.

N. Operation and Maintenance Manuals: Prior to final acceptance of Contracted Work by the City, furnish 4 bound copies of operation and maintenance manuals for all electrical equipment, as required in this Section. The contents shall include description of equipment, names of manufacturers, parts lists, model numbers, maintenance schedules, location of nearest facility for replacement parts or service, wiring and connection diagrams, internal schematic drawings, and other electrical/mechanical data necessary for operation and maintenance.

1.7 QUALITY ASSURANCE

A. General:

1. All equipment and accessories to be the product of a manufacturer regularly engaged in its manufacture.

2. Supply all equipment and accessories new, free from defects and listed by Underwriters' Laboratories, Inc. or bearing its label. Special or custom equipment must bear the label of laboratory recognized by the City of Los Angeles Department of Building and Safety.

3. Supply all equipment and accessories in compliance with the applicable standards listed in Article 1.5 of this Section and with all applicable National, State and Local codes.

4. All items of a given type shall be the product of the same manufacturer.

B. Labor: Use adequate numbers of skilled workers who are thoroughly trained and experienced in the necessary crafts and completely familiar with specifications, requirements and methods needed for proper performance of the work of Electrical Division 16.

C. Superintendence: Provide an experienced Superintendent to be in charge of erection and/or installation of electrical work together with journeymen helpers to properly unload, erect, connect, adjust, operate and test the work involved to provide a neat, workmanlike and operable installation.

1.8 LOCATION

A. The location of apparatus and equipment indicated on the Contract Drawings are approximate only and shall be changed to meet the Architectural and Structural conditions as required.

B. Any change in work which has not been installed shall be made by the Contractor without additional compensation, except changes which are caused by Architectural changes which increase or decrease the size of apparatus or materials specified or indicated on the drawings. The Contractor shall submit a detailed breakdown cost estimate of, or credit for, such changes and shall proceed only upon the written authority of the Architect and Engineer.

C. All apparatus and equipment shall be furnished and installed in a manner and in locations avoiding all obstructions, preserving head room, and keeping openings and passageways clear. Changes shall be made in locations of equipment and materials which may be necessary in order to accomplish this.

D. The drawings are essentially diagrammatic to the extent that many offsets, bends, special fittings, and exact locations are not indicated. The Contractor shall carefully study the Contract Drawings and premises in order to determine the best methods, exact location, routes, and building obstructions, etc., and shall install all apparatus and equipment in the available location.

1.9 CUTTING AND PATCHING

A. Conform to provisions of Section 01731 of the General Requirements.

B. The Contractor shall do all drilling, cutting and patching of the general construction work existing or new, rough finish and trim, which may be required for the installation of electrical equipment. All patching shall be of the same materials, workmanship and finish as the original work, and shall accurately match all surrounding work.

C. All cutting and patching shall be as approved by the Architect or his authorized representative.

1.10 PROTECTION OF WORK

A. The Contractor shall protect all work, material and equipment from damage from any cause whatsoever, and shall provide adequate and proper storage facilities during the progress of the Work. Contractor shall provide for the safety and good condition of all work until final acceptance of the work by the City, and replace all damaged or defective work, materials and equipment before requesting final acceptance.

B. The Contractor shall be held responsible for the protection and correction of the work of all trades from smears, splashes, stain or damages that might occur in the progress of the work.

1.11 WORK COORDINATION

A. The Contractor shall so order electrical work that progress will harmonize with that of other trades so that all work may proceed as expeditiously as possible.

B. So far as possible, the work has been indicated on the Contract Drawings in such positions as to suit and accommodate the work of the other trades, but the work as indicated is largely diagrammatic, and the correct finish position of all equipment and materials cannot always be indicated. Therefore, the Contractor is hereby made directly responsible for the correct placing of electrical work and the proper location and connection of electrical work in relation to the work of other trades.

1.12 JOB SAFETY

A. The Contractor shall be solely and completely responsible for the condition of the premises on which the work is performed and for the safety of all persons and property on the site during performance of the Contract. These requirements shall not be limited to normal working hours, but shall apply continuously.

B. Contractor shall conform to all governing safety regulations.

PART 2 -- PRODUCTS

2.1 MATERIALS

A. All materials, items and equipment furnished under this Contract shall be new, recently manufactured and available locally.

B. All materials shall comply with applicable legal requirements and standards hereinbefore specified in this Section 16020.

C. The label of listing by UL shall appear on all materials and equipment for which standards have been established by that agency.

D. Where local or other authorities having jurisdiction have established label or approval requirements, furnish all materials and equipment with either the required labels affixed or the necessary written approval.

E. Examine the Drawings and Specifications and determine the work to be performed by the electrical and other trades. Provide the type and quantity of electrical materials and equipment necessary to complete this work and all systems in proper operation, tested and ready for use.

F. Provide and install all incidental items not indicated on the Drawings nor mentioned in the Specifications that belong to the work described or are required for complete systems.

2.2 MATERIALS LISTING

A. Required: See Subsection 1.6 G 6 of this Section 16020.

PART 3 -- EXECUTION

3.1 UTILITY SERVICES (AS APPLICABLE)

A. Every effort has been made to determine as accurately as possible the requirements of the electrical and telephone services. However, before submitting bid, the Contractor shall verify the locations shown on the plans and shall include sufficient funds for material, labor and utility fees for installation of an approved utility service.

B. Before any work is performed on these facilities, verify all electrical, civil, architectural and structural, dimensional and other requirements related to these facilities with the serving utility companies.

C. Should any major changes to the work indicated be necessary to complete the power and telephone systems, notify the City Engineer at once and cease all work affected until approval for required modifications has been obtained from the City Engineer.

3.2 WORK RESPONSIBILITIES

A. The drawings indicate diagrammatically the desired locations or arrangement of conduit runs, outlets, equipment, etc., and are to be followed as closely as possible. Proper judgment must be exercised in executing the work so as to secure the best possible installation in the available space and to overcome local difficulties due to space limitations or interference with structural conditions. The Contractor is responsible for the correct placement and coordination of electrical work in relation to the work of other trades. Advise appropriate trade as to locations of access panels.

B. Locations shown on architectural plans and elevations shall take precedence over electrical plan locations, but where a major conflict is evident; notify the Architect or City Engineer for instructions.

C. In the event changes in the indicated locations or arrangement are necessary due to developed conditions in the building construction or rearrangement of furnishings or equipment, such changes shall be made without extra cost, providing the change is ordered before the conduit runs, etc., and work directly connected to same are installed and no extra materials are required.

D. Where equipment is furnished by others, verify dimensions and the correct location of this equipment before proceeding with the roughing in of connections.

E. Lighting fixtures and equipment disconnects in mechanical spaces and elevator machine rooms and pits are shown in their approximate locations only. Do no install outlets, switches, equipment disconnects or fixtures until mechanical piping and ductwork are installed; then lights shall be installed in locations best suited for equipment arrangement or as directed by the City Engineer. Verify exact locations of elevator equipment disconnects, switches, receptacles and fixtures in elevator machine room and pits with the elevator equipment installer before rough in.

F. All scaled and figured dimensions are approximate of typical equipment of the class indicated. Before proceeding with any work, carefully check and verify all dimensions, sizes, etc., with the drawings to see that the equipment will fit into the spaces provided without violation of applicable codes.

G. Should any changes to the work indicated on the Drawings or described in the Specifications be necessary in order to comply with the above requirements, notify the City Engineer immediately and cease work for all parts of the Contract Work which are affected until approval for any required modifications to the construction has been obtained from the City Engineer.

H. Be responsible for any cooperative work which must be altered due to lack of proper supervision or failure to make proper provisions in time. Such changes shall be under the direction of the City Engineer and shall be made to their satisfaction.

I. Perform all work with competent and skilled personnel. Conform to provisions of Subsection 1. 7B of this Section.

J. All work, including aesthetic as well as electrical and mechanical aspects of the work, shall be of the highest quality consistent with the best practices of the trade.

K. Replace or repair, without additional compensation, any work which, in the opinion of the City Engineer does not comply with these requirements.

3.3 GENERAL INSTALLATION (AS APPLICABLE)

* For special requirements, refer to specific equipment under other sections.

A. Unless otherwise specified elsewhere in the Specifications, do all excavating necessary for the proper installation of the electrical work in accordance with the "Earthwork" Section 02310.

B. Locations of Openings: Obtain approval for all chases, shafts and openings required for the installation of the electrical work. Cutting or drilling in any structural member is prohibited without written approval of the Architect or City Engineer. Furnish access panels as required.

C. Finish Around Sleeves: Rough edges shall be finished smooth. Space between conduit and sleeves where conduit passes through exterior walls shall be sealed to permit movement of conduit but prevent entrance of water. Space between conduit and sleeves where conduit passes through fire rated interior walls and slabs shall be sealed with approved materials to provide a fire barrier conforming to the requirements of the governing authorities having jurisdiction, use Dow Corning 3-6548 RTV silicone foam or equal by General Electric if so approved by the applicable and/or authorities having jurisdiction of the job site.

D. Wherever conduit extends through roof, furnish and install flashings in accordance with City Engineer's directions.

E. Be responsible for all cutting and patching which may be required for the proper installation of the electrical work. Work shall be performed by the trade originally installing same and paid for under this Section of the work.

F. Protect all work, materials and equipment from damage from any cause whatever and provide adequate and proper storage facilities during the progress of the work. Storage outdoors shall be weather protected and shall include space heaters to prevent condensation. Provide for the safety and good condition of all work until final acceptance of the work by the City Engineer and replace all damaged or defective work, materials and equipment before requesting final acceptance at no added cost to the City.

G. Conduit and Equipment to be installed: Clean thoroughly to remove plaster, spattered paint, cement and dirt on both exterior and interior.

H. Conduit and Equipment to be painted: Clean all conduits exposed to view in completed structure by removing plaster and dirt. Remove grease, oil and similar material from conduit and equipment by wiping with clean rags and suitable solvents in preparation for paint.

I. All Items with Factory Finish: Remove cement, plaster, grease and oil, and leave all surfaces, including cracks and corners, clean and polished. Touch up any scratched or bare spots to match finish. Factory finish may be approved as prime coat by the Architect (see "Painting" Section).

J. Site Cleaning: Remove from site all packing cartons, scrap materials and other rubbish relating to electrical installation.

K. Electrical equipment and materials exposed to public and in finished areas shall be finish-painted after installation to coordinate with surrounding walls. Surfaces shall be thoroughly cleaned for receiving painting. Paint color coordination shall be as directed by the Architect or City Engineer. Paint shall be identical to that on adjacent surfaces to insure proper matching of quality and color with surrounding areas.

3.4 EXCAVATION, CUTTING AND PATCHING

A. All excavating, trenching and backfilling required for the work of this Division shall conform to the applicable requirements of the "Earthwork" Section 02310 in the Project Specifications. All excavating and backfilling connected with electrical work, repaving all cuts and providing and maintaining all protective measures for the electrical work excavation required by the governing authorities having jurisdiction shall be performed as a part of the work of this Division.

B. At a time in advance of the work, verify all openings indicated on the Drawings. Should the work of this division require it, furnish new instruction as to requirements for these openings, subject to the Architect's approval. All cutting, patching and reinforcement of the building (subject to the City Engineer's approval) shall be performed under the Section of the Specifications under which the work was originally performed, but the coat shall be an obligation of the Contractor.

3.5 TESTS

A. Conduct resistance to ground tests by qualified personnel to measure resistance to ground at all grounding electrodes. Make tests before slabs of affected areas are poured in order that corrective measures, if requested, may be taken. Submit to the City Engineer a report showing the results of these measurements. If the resistances exceed values specified elsewhere, perform all corrective measures as directed by the City Engineer at no additional cost to City.

B. Prior to energizing any motors, measure the service voltage for phase balance and report immediately to the City Engineer if unbalance exceeds 1% from means.

C. Measure the three-phase voltage at no load and at maximum load conditions and submit to the City Engineer a report showing the results of these measurements.

D. Upon completion of the work and adjustment of all equipment, conduct an operating test for approval at such time as the Architect directs. Conduct the test in the presence of an authorized representative of the State. Demonstrate all systems and equipment to operate in accordance with all requirements of the Contract documents and to be free from all electrical and mechanical defects. Provide all systems free from short circuits and grounds and show an insulation resistance between phase conductors and ground not less than the requirements of the governing electric code. Test all circuits for proper neutral connections.

E. Complete all tests prior to final inspection of project, including corrective work based on the results of the tests.

F. Perform special tests on systems and equipment as specified herein in other sections of this

division, using personnel qualified to perform such tests.

G. Measure voltage on secondary side of all transformers with full load connected and adjust taps to provide rated secondary voltage.

H. Submit to the City Engineer a report showing test voltage of L-N on the secondaries of all transformers.

3.6 PROTECTION

A. Besides the provisions of Subsection 1.10 of this Section comply with the following:

1. Protect all finish parts of the materials and equipment against damage during the progress of the work and until final completion and acceptance. Cover all materials and equipment in storage and during construction in such a manner that no finished surfaces will be damaged or marred. Keep all moving parts clean, dry and lubricated.

3.7 PRELIMINARY OPERATIONS

A. Required: Should the City require that any portion of the systems or equipment be operated prior to the final scheduled dates for completion and acceptance of the work, the Contractor shall consent. Such operation shall be under the direct supervision of, and at the expense of the Contractor, and shall not be construed as an acceptance of any of the work by the City.

3.8 CLEANING UP

A. Conform to applicable provisions of Section 01740 of the General Requirements and the following as applicable.

B. Upon completion of the work and at various times during the progress of the work, remove from the building all surplus materials, rubbish and debris resulting from the work of this division and leave the involved portions of the job-site in a neat, clean and acceptable conditions.

C. Thoroughly clean all switchgear, apparatus, exposed conduit, metal work and accessories for the work of this Division of cement, plaster and other deleterious materials; remove all grease and oil spots with cleaning solvent; carefully wipe all surfaces and scrape all cracks and corners clean.

D. Thoroughly polish all chromium and all plated work. Remove all dirt and stains from lighting fixtures.

E. Leave the entire installation in a neat, clean and usable condition.

3.9 COMPLETION

A. The work will not be reviewed for final acceptance until operating and maintenance data, manufacturer's literature, panel directories and nameplates specified herein have been approved and properly posted or installed and final cleaning of equipment and premises has been completed.

B. When the installation is complete and all adjustments have been made, operate the systems for a period of one week, during which time demonstrate to the City Engineer that the systems are completed and operating in conformance with the Specifications.

3.10 GUARANTEE

A. Conform to applicable provisions of the GENERAL CONDITIONS of these Specifications.

B. Required: Except as may be specified under other sections in the Specifications, guarantee all equipment furnished under the specifications for a period of one year from date of acceptance against defective workmanship and material, and improper installation. Upon notification of failure, correct deficiency immediately and without cost to the City.

C. Standard warranty of manufacturer shall apply for replacement of parts after expiration of the above period. Manufacturer shall furnish replacement parts to the City or his service agency as directed. Furnish to the City Engineer printed manufacturer's warranties complete with material included and expiration dates, upon completion of project.

3.11 OPERATING AND MAINTENANCE DATA

A. Required: Submit to the City Engineer, complete and at one time, prior to acceptance of the installation, 10 copies of manufacturer's instructions for operation and maintenance of electrical equipment, including replacement parts lists. Each set to be bound in an indexed loose leaf ring binder with permanent cover and permanent identification on back.

3.12 RECORD DRAWINGS

A. Required: Conform to the provisions of Subsection 1.6 M of this Section and as noted hereinafter as applicable.

B. Provide and maintain in good order at the field office a complete set of electrical contract prints. All changes to the contract shall be clearly recorded on this set of prints and initialed by the Contractor on a weekly basis. At the end of the project transfer all changes, using same symbols, to one set of Mylar transparencies. Obtain Mylar transparencies from the Architect at Contractor's cost.

C. Accurately indicate and dimension all underground conduit runs and conduit stub-outs and all pullboxes from building walls on all Record Drawings.

D. Upon completion of the work and as a prerequisite to issuance of certificate for final payment, deliver one complete set of final prints of the mylars and the Mylar originals themselves.

E. Initial and identify name and telephone number of installing Contractor on all sheets as being a correct and accurate record of the installation. This also includes, but is not limited to, fire alarm and control systems.

3.13 INSPECTION AND ACCEPTANCE PROCEDURES

The City Engineer will submit observation reports periodically during the construction phase detailing Contract deficiencies. The Contractor is responsible for making all corrections immediately to avoid delaying other trades. Final acceptances of the project will not be made until all items have been corrected.

3.14 FINAL ACCEPTANCE OF ELECTRICAL SYSTEMS

A. Prior to Final Acceptance of operating electrical systems Contractor shall do the following, as applicable:

1. Provide materials of the type and quality specified and as necessary for proper operation, tested and ready for use.

2. Deliver to the City Engineer the "as-built" transparency and set of prints as "Record Drawings".

3. Furnish the required operating and maintenance data/manuals.

4. Clean-up of the project pertaining to this Division of the work, as hereinbefore noted in Subsection 3.8 of this Division.

5. After installation has been completed and adjustments made, operate the system for a period of one week, during which time, demonstrate to the City Engineer that all systems are complete and operating in conformance with Contract documents.

6. Conduct all tests required and as specified in Sections of this Division and submit test reports and corrective actions taken.

7. Submission of all warranties and guarantees.

B. Final Acceptance of Electrical Work Shall Be Contingent On The Following:

1. Contractor replacing defective materials and workmanship.

2. Upon completion of work and adjustments made, Contractor shall conduct an operating test for each system for approval at such time as City Engineer directs. Conduct test in presence of authorized representative of the City Engineer demonstrate that systems and equipment do operate in accordance with requirements of the Contract documents and are free from electrical and mechanical defects.

3. Contractor shall provide the necessary training programs and instructions to the City's representative.

4. Submit copies of manufacturer's instructions and maintenance of electrical equipment including replacement parts lists. Each set shall include one set of shop drawings of equipment installed.

3.15 SUBMITTALS FOR CHANGE ORDERS

A. General: When changes are made during the construction phase, deletions and additions shall be presented in a manner that will indicate the cost of each item of material and corresponding labor. Overhead and profit makeup shall be then added in accordance with the requirements of the GENERAL CONDITIONS.

1. Unit costs shall apply in event of changes, additions and deletions to the contract, as follows:

2. Submit with Bid Costs a unit cost, covering one hour of labor, including all applicable supervision, nonproductive labor, burdens, benefits, insurance, taxes, direct and indirect job expenses including drawings, engineering, temporary power, warehouse, tools,

equipment, clean-up, bonds, overhead and profit, charged for labor. Unit cost of labor shall be applicable for duration through completion of the project.

3. Material unit costs shall be based on the latest edition of "Electrical Trade Book", published by Trade Service Publications, Inc. Unit cost shall be taken from extreme right-hand column.

4. Labor unit quantities, for specific items required, shall be those listed in the third column from the National Electrical Contractors' Association, Inc., "NECA Manual of Labor Units".

(END OF SECTION)

SECTION 16110
RACEWAYS

PART 1 -- GENERAL

1.1 THE REQUIREMENT

A. The CONTRACTOR shall furnish all tools, equipment, materials, and supplies and shall perform all labor required to complete the work as indicated on the Drawings and specified herein.

1.2 RELATED WORK SPECIFIED ELSEWHERE

A. The following Divisions and Sections applies to the WORK of this Section. Other Sections of the Specifications, not referenced below, shall also apply to the extent required for proper performance of this WORK.

1. Division 02 Site Work.

2. Division 03 Concrete.

3. Division 05 Metals.

4. Division 09 Finishes.

5. Division 15 Mechanical.

B. Materials and equipment furnished and installed under Divisions with raceway and electrical conductors furnished, installed, and connected under Division 16, Electrical.

1.3 REFERENCE CODES AND STANDARDS

A. All work specified herein shall conform to or exceed the applicable requirements of the referenced portions of the following publications to the extent that the provisions thereof are not in conflict with other provisions of these specifications.

B. Comply with the current provisions of the following Codes and Standards.

1. Codes and Standards:

LAEC	City of Los Angeles Electrical Code, latest adopted edition.

Title 8, Industrial Relations, Subchapter 5, Electrical Safety Orders, California Code of Regulations.

2. Commercial Standards:

ANSI C80.1	Electrical Rigid Steel Conduit (ERSC).
ANSI/NEMA FB 1	Fittings, Cast Metal Boxes, and Conduit Bodies for Conduit
ANSI/UL 467	Grounding and Bonding Equipment, Safety Standard For.

NEMA TC 2	Electrical Polyvinyl Chloride (PVC) Conduit
NEMA TC 3	Polyvinyl Chloride (PVC) Fittings
NEMA VE-1	Metal Cable Tray Systems.
UL 6	Electrical Rigid Metal Conduit - Steel

C. All equipment furnished by the CONTRACTOR shall be listed by and shall bear the label of Underwriters' Laboratories, Incorporated (UL), or of an independent testing laboratory acceptable to the Building and Safety Department of the City of Los Angeles.

D. The construction and installation of all electrical equipment and materials shall comply with all provisions of the CAL OSHA Safety orders Title 8 CCR, as applicable, State Building Standards, and applicable local codes and regulations.

1.4 CONTRACTOR SUBMITTALS

A. Submittals shall be made in accordance with the requirements of Section 16020 “Municipal Facilities General Electrical Requirements.”

B. The following submittals and specific information shall be provided.

1. Catalog cuts, bulletins, or brochures shall be submitted for mass produced non-custom material.

2. The CONTRACTOR shall furnish copies of the manufacturer’s certified test reports for the material being supplied to establish compliance with NEMA RN-1.

1.5 QUALITY ASSURANCE

A. Quality Assurance shall be in accordance with Section 16020 “Municipal Facilities General Electrical Requirements.”

PART 2 -- PRODUCTS

2.1 RIGID GALVANIZED STEEL CONDUIT

A. Use rigid steel conduit, including bushings, couplings, elbows, nipples, and other fittings,

galvanized by hot-dipping, and meeting the requirements of ANSI C80.1, ANSI/NEMA FB 1, UL, and the LAEC. Do not use setscrew type couplings, bushings, bends, nipples, and other fittings, unless approved by the ENGINEER or the INSPECTOR. Factory bends are not permitted unless approved by the ENGINEER or the INSPECTOR. Conduit bending radius shall not be less than the minimum cable bending radius of the cable to be installed. See NEC Section 300.34 for conductor bending radius.

2.2 PVC SCHEDULE 40 CONDUIT

A. Use rigid PVC Schedule 40 conduit, UL listed for concrete-encased, underground direct burial, concealed and direct sunlight exposed use, and UL listed and marked for use with conductors having 90 degrees C insulation. Use conduits, couplings, bushings, elbows, nipples, and other fittings meeting the requirements of NEMA TC 2 and TC 3, UL, NEC, and ASTM specified tests for the intended use. Use only conduit with a factory formed bell on one end. Conduit that requires the use of couplings for straight runs will not be acceptable.

2.3 PVC SCHEDULE 80 CONDUIT (N/A)

2.4 PVC COATED RIGID GALVANIZED STEEL CONDUIT

A. Use PVC coated rigid steel conduit, galvanized inside and out. Prior to coating, the galvanized conduits and fittings shall be UL listed. The galvanized conduit shall have an exterior PVC coating of 40 mils nominal (+10 mils / -5 mils) bonded to the metal. The interior shall be coated with a urethane coating no more than 7 mils thick. Use PVC coated fittings with the same interior and exterior coating requirements. PVC coated fittings and sleeves shall be completely watertight to prevent moisture from penetrating the interior of the conduits and fittings. The PVC coating shall be resistant to ultra-violet rays when installed outdoors. The conduit and fittings shall meet all the requirements of NEMA RN-1.

2.5 FLEXIBLE METAL CONDUIT, LIQUID-TIGHT

A. Use UL listed liquid-tight flexible metal conduit consisting of galvanized steel flexible conduit covered with an extruded PVC jacket and terminated with nylon bushings or bushings with steel or malleable iron body and insulated throat and sealing O-ring. Provide external grounding connector and appropriately sized grounding conductor to assure ground continuity.

2.6 WIREWAYS (N/A)

2.7 RACEWAY FITTINGS

A. Fittings for Rigid Steel.

1. Use insulated throat bushings of metal with integral plastic bushings rated for 105 degrees C.

2. For insulated throat bushings for rigid steel conduit, use Thomas & Betts Nylon Insulated Metallic Bushings, or O.Z. Gedney Type B, or equal.

3. Use Myers Scru-Tite, or equal hubs for rigid steel conduit.

4. Use conduit bodies for rigid steel conduit of metal and sized as required by the NEC. Use Appleton Form 35 threaded Unilets; Crouse-Hinds Mark 9 or Form 7 threaded condulets; Killark Series O Electrolets; or equal, for normal conduit bodies for rigid steel conduit. Where conduit bodies for rigid steel conduit are required to be approved for hazardous (classified) locations, use conduit bodies manufactured by Appleton, Crouse-Hinds, Killark, or equal.

5. Use only couplings for rigid steel conduit supplied by the conduit manufacturer.

6. Use Appleton Type EYF, EYM, or ESU; Crouse-Hinds Type EYS or EZS; Killark Type EY or EYS; or equal, 40% fill sealing fittings for rigid steel conduit. Where condensate may collect on top of a seal, provide a drain by using Appleton Type SF Crouse-Hinds Type EYD or EZD, or equal Drain Seal.

7. Use Appleton Type ECDB, Crouse-Hinds ECD, or equal drain fittings for rigid steel conduit.

8. Fittings for Liquid-Tight Flexible Metal Conduit: Use insulated throat connectors for liquid-tight flexible metal conduit of metal with an integral plastic bushing rated for 105 degrees C, and of the long design type extending outside of the box or other device at least 2-inches. Use Thomas & Betts Super-Tite Nylon Insulated Connectors or equal.

9. Fittings in Hazardous Areas: In hazardous areas, use only fittings approved for the atmosphere involved.

10. Use cable sealing fittings forming a watertight nonslip connection to pass cords and cables into conduit. Size cable sealing fitting for the conductor OD. For conductors with OD's of 1/2-inch or less, provide a neoprene bushing where the conductor enters the connector. Use Crouse-Hinds CGBS, Appleton CG Series, or equal, cable 40% fill sealing fittings.

11. Coating thickness of PVC coated fittings shall be the same as that for PVC coated conduits.

2.8 CABLE TRAY (N/A)

2.9 PRECAST MAINTENANCE HOLES AND HANDHOLES

A. Install maintenance holes and handholes precast with 28-day, 3,000 psi minimum compressive strength concrete and designed for AASHTO H-20 loading. Minimum dimensions for maintenance holes and handholes are shown on the Drawings. Increase these as required by use of extension sections to accommodate the several raceway entrances at their required elevations.

B. Slope floors toward drain points, leaving no pockets or other nondraining areas. Provide a drainage outlet at the low point of the floor.

C. Provide raceway entrances on 4 sides. For raceways installed under this Contract, knockout panels or precast individual raceway openings may be used. On sides where no raceways are installed under this Contract, provide knockout panels for future raceway installation.

D. Utilize heavy-duty type frames and covers made of cast iron, as per CITY of Los Angeles standards, suitable for H-20 loading, and having machined bearing surfaces. Provide indented type covers, solid top design, with two drop handles each. On the upper side of each cover, cast or burned by welder, in integral letters not less than 2-inches high appropriate titles, ELECTRIC HV (for above 600 volts), ELECTRIC LV (for 600 volts and below), or TELEPHONE. Field stamp covers with manhole or handhole numbers indicated on the Drawings.

E. Provide heavy weight cable racks with adjustable arms and acceptable insulators for all cables in each maintenance hole. Set adjustable inserts in the concrete walls for the attachment of racks. Do not use bolts or studs embedded in concrete for attaching racks. Set racks and inserts on not greater than 3-foot centers around the entire inside perimeter of the maintenance hole, arranged so that all spare conduit ends are clear for future cable installation. Provide racks with a sufficient number of arms and insulators to accommodate cables for each conduit entering or leaving the maintenance hole, including spares.

F. Provide a pulling iron embedded in the concrete wall opposite each raceway entrance and one in the floor vertically below the center of the manhole or handhole cover. Utilize 3/4-inch round stock securely fastened to the overall steel reinforcement before concrete is poured.

G. Utilize maintenance hole and handhole hardware of steel, hot-dip galvanized after fabrication.

H. Acceptable Manufacturers:

1. Brooks Products;

2. Jensen Precast;

3. Oldcastle Precast;

4. Or equal.

I. All prefabricated maintenance holes shall be shop inspected before delivery to the site.

2.10 RACEWAY TAGS

A. Provide permanent, stainless steel markers with raceway designations, minimum 1/4-inch high lettering, pressure stamped, embossed, or engraved onto the tag. Tags relying on adhesives or taped-on markers are not acceptable. Attach tags to raceways with stainless steel wire.

2.11 WARNING TAPE

A. Provide heavy-gauge, yellow plastic tape of 3-inch minimum width for use in trenches containing electric circuits. Utilize tape made of material resistant to corrosive soil. Use tape with printed warning that an electric circuit is located below the tape.

Acceptable Manufacturers:

1. Brady;

2. Marking Services Inc.;

3. Seton;

4. Or equal.

PART 3 -- EXECUTION

3.1 GENERAL

A. Provide raceway systems meeting or exceeding the requirements of the NEC.

3.2 PROTECTION DURING CONSTRUCTION

A. In addition to the provisions of the GENERAL REQUIREMENTS, and Section 16020 "Municipal Facilities General Electrical Requirements," prior to installation, store all products specified in this section in a dry location. Following installation, protect products from the effects of moisture, corrosion, and physical damage during construction. Keep openings in conduit and tubing capped with manufactured seals during construction.

3.3 MINIMUM RACEWAY SIZE

A. Use no circular raceway less than 3/4-inch.

3.4 REQUIRED RACEWAY TYPE FOR LOCATION AND INSTALLATION METHOD

A. Exterior, Exposed:

1. Rigid galvanized steel conduit.

B. Interior, Exposed:

1. Rigid galvanized steel conduit.

2. EMT for above-ceiling application.

C. Interior, Concealed (Not Embedded in Concrete):

1. Rigid galvanized steel conduit.

D. Embedded in Concrete Walls or Floors:

1. PVC Schedule 40 conduit.

E. Underground, Direct Earth Burial:

1. PVC Schedule 40 conduit.

2. PVC Schedule 80 conduit. (For vehicular traffic areas)

F. Concrete Encased Raceways:

1. PVC Schedule 40 conduit.

G. Under Concrete Floor Slabs:

1. PVC Schedule 40 conduit.

H. Final Connection to Certain Equipment:

1. Make final connection to motors, wall or ceiling mounted fans and unit heaters, dry type transformers, valves, local instrumentation, and other equipment where flexible connection is required to minimize vibration or where required to facilitate removal or adjustment of equipment, with 36-inch maximum length liquid-tight, PVC-jacketed, flexible steel conduit.

2. The flexible conduit shall be long enough to allow the item to which it is connected to be withdrawn or moved off its base. Use liquid-tight flexible metal conduit in outside areas, process areas exposed to moisture, and areas required to be oil free and dust-tight.

I. Special Locations:

1. Use PVC coated rigid galvanized steel conduit:

a. Where conduit changes from underground and/or concrete embedded to exposed.

b. Under equipment mounting pads.

c. In exterior light pole foundations.

J. Communication and Instrumentation Conduits:

1. Communication and instrumentation conduits shall be PVC coated rigid galvanized steel.

3.5 GENERAL INSTALLATION REQUIREMENTS FOR RACEWAYS

A. Location, Routing, and Grouping:

1. Conceal or expose raceways as indicated. Group raceways in same area together. Locate raceways at least 12-inches away from parallel runs of heated piping for other utility systems.

2. Run exposed raceways parallel or perpendicular to walls, structural members, or intersections of vertical planes to provide a neat appearance. Follow surface contours as much as possible.

3. Avoid obstruction of passageways. Run concealed raceways with a minimum of bends in the shortest practical distance considering the building construction and other systems.

4. In block walls, do not run raceways in the same horizontal course with reinforcing steel.

5. In outdoor, underground, or wet locations, use watertight couplings and connections in raceways. Install and equip boxes and fittings so as to prevent water from entering the raceway.

6. Paint all threads of galvanized conduits with UL approved zinc-rich paint or liquid galvanizing compound before assembling. Touch up after assembly to cover nicks or scars.

7. Do not notch or penetrate structural members for passage of raceways except with prior approval of the ENGINEER or the INSPECTOR.

8. Do not run raceways in equipment base foundations.

9. Locate above ground raceways concealed in poured concrete so that the minimum concrete covering is not less than 1-1/2-inches.

10. Except at raceway crossings, separate raceways in slabs not less than six times the raceway outside diameter.

11. Raceways installed under slab floors shall lie completely under the slab with no part of the horizontal run of the raceway embedded within the slab.

12. Install concealed, embedded, and buried raceways so that they emerge at right angles to the surface. Provide support during pouring of concrete to ensure that raceways remain in position.

13. Allow a minimum headroom of 7 feet for conduit passing over walkways.

14. Communication and instrumentation conduits crossing power circuits shall be separated from such circuits by the minimum distance stipulated by the IEEE standards.

B. Support:

1. Support raceways at intervals not exceeding LAEC requirements unless otherwise indicated. Support multiple raceways adjacent to each other by ceiling trapeze. Support individual raceways by wall brackets, strap hangers, or ceiling trapeze, fastened by toggle bolts on hollow masonry units, expansion shields on concrete or brick, and machine screws or welded thread studs on steelwork.

2. Threaded studs driven in by a powder charge shall not be accepted.

3. Support all raceways from building structural members only.

4. Do not use nails anywhere or wooden plugs inserted in concrete or masonry as a base for raceway or box fastenings. Do not weld raceways or pipe straps to steel structures. Do not use wire in lieu of straps or hangers.

C. Bends:

1. Make changes in direction of runs with symmetrical bends. Make bends and offsets of the longest practical radius. Do not heat metal raceways to facilitate bending.

2. Make bends in parallel or banked runs of raceways from the same center or centerline so that bends are parallel and of neat appearance. Make field bends in parallel runs.

3. For PVC conduits, use factory made elbows for all bends 30 degrees or larger. Use acceptable heating methods for forming smaller bends.

4. Make no bends in flexible conduit that exceed 90 degrees or allowable bending radius of the cable to be installed or that significantly restricts the conduits flexibility.

D. Bushing and Insulating Sleeves:

1. Where metallic conduit enters metal equipment enclosures through conduit openings, install a bonding bushing on the end of each conduit. Install a bonding jumper from the bushing to any equipment ground bus or ground pad.

2. If neither exists, connect the jumper to a threaded bolt connection to the metallic enclosure.

3. Use manufacturer's standard insulating sleeves in all metallic conduits or insulated bushings terminating at an enclosure.

E. Expansion Joints: Provide suitable expansion fittings for raceways crossing expansion joints in structures or concrete slabs, or provide other suitable means to compensate for expansion and contraction. Provide for the high rate of thermal expansion and contraction of PVC conduit by providing PVC expansion joints as recommended by the manufacturer and as required.

F. PVC Conduit: Solvent weld PVC conduit joints with solvent recommended by the conduit manufacturer. Follow manufacturer's solvent welding instructions and provide watertight joints. Use acceptable PVC terminal adapters when joining PVC conduit to metallic fittings. Use acceptable PVC female adapters when joining PVC conduit to rigid metal conduit.

G. PVC Coated Rigid Steel Conduit: Install in strict accordance with the manufacturer's instructions. Touch up any damage to the coating with conduit manufacturer acceptable patching compound. PVC boot shall cover all threads. Where belled conduits are used, bevel the unbelled end of the joint before joining. Leave no metallic threads uncovered.

H. Penetrations:

1. Seal the interior of all raceways entering structures at the first box or outlet with oakum or suitable plastic expandable compound to prevent the entrance into the structure of gases, liquids, or rodents.

2. Dry pack with nonshrink grout around raceways that penetrate concrete walls, floors, or ceilings aboveground, or use one of the methods specified for underground penetrations.

3. Where an underground conduit enters a structure through a concrete roof or a membrane waterproofed wall or floor, provide an acceptable, malleable iron, watertight, entrance sealing device. Provide a device having a gland type sealing assembly at each end with

pressure bushings which may be tightened at any time when there is no raceway concrete encasement specified or indicated. When there is raceway concrete encasement specified or indicated, provide such a device with a gland type sealing assembly on the accessible side. Securely anchor all such devices into the masonry construction with one or more integral flanges. Secure membrane waterproofing to such devices in a permanently watertight manner.

4. Where an underground raceway without concrete encasement enters a structure through a nonwaterproofed wall or floor, install a sleeve made of Schedule 40 galvanized pipe.

   Fill the space between the conduit and sleeve with a suitable plastic expandable compound, or oakum and lead joint, on each side of the wall or floor in such a manner as to prevent entrance of moisture. A watertight entrance sealing device as specified may be used in lieu of the sleeve.

5. Where raceways penetrate fire-rated walls, floors, or ceilings, fire stop openings around electrical penetrations to maintain the fire-resistance rating.

6. Raceways passing through roofs shall be flashed.

7. Provide conduit seals where required by Article 500 of the LAEC.

3.6 INSTALLATION REQUIREMENTS FOR UNDERGROUND DIRECT BURIAL CONCRETE-ENCASED RACEWAYS

A. General:

1. Coordinate installation of underground raceways with other outside and building construction work. Maintain existing outside utilities in operation unless otherwise authorized by the ENGINEER.

2. Remove entirely and properly reinstall all raceway installations not in compliance with these requirements.

3. Do not use union type fittings underground.

4. Provide a minimum cover per NEC Table 300.5 for all underground raceways unless otherwise indicated. Warning tape as specified in Part 2 shall be placed no less than 12 inches above conduit and duct bank.

5. Where a concrete-encased duct bank is installed over an extensive area of disturbed earth such as that within the periphery of a building, provide a separate concrete base under the duct bank to ensure stability of raceways during installation. Allow this base to set before the duct bank is installed.

6. Do not backfill underground direct burial and concrete-encased raceways until they have been inspected by the ENGINEER and the INSPECTOR.

7. Warning Tapes: Bury warning tapes approximately 8-inches below grade and above all underground conduit runs or duct banks. Align parallel to and within 12-inches of the centerline of runs.

B. Separation and Support:

1. Separate parallel runs of two or more raceways in a single trench with preformed, nonmetallic spacers designed for the purpose. Install spacers at intervals not greater than that specified in the LAEC for support of the type raceways used, and in no case greater than 10-feet.

2. Support raceways installed in fill areas to prevent accidental bending until backfilling is complete. Tie raceways to supports, and raceways and supports to the ground, so that raceways will not be displaced when concrete encasement or earth backfill is placed.

C. Arrangement and Routing:

1. Arrange multiple conduit runs substantially in accordance with any details shown on the Drawings. Locate underground conduits where indicated on the Drawings.

2. Make minor changes in location or cross-section as necessary to avoid obstructions or conflicts. Where raceway runs cannot be installed substantially as shown because of conditions not discoverable prior to digging of trenches, refer the condition to the ENGINEER for instructions before further work is done.

3. Where other utility piping systems are encountered or being installed along a raceway route, maintain a 12-inch minimum vertical separation between raceways and other systems at crossings. Maintain a 12-inch minimum separation between raceways and other systems in parallel runs. Do not place raceways over valves or couplings in other piping systems. Refer conflicts with these requirements to the ENGINEER for instructions before further work is done.

4. Provide insulated grounding bushings on all metallic raceways entering manholes. Provide bell-ends flush with manhole walls on all nonmetallic raceways entering manholes.

5. In multiple conduit runs, stagger raceway coupling locations so that couplings in adjacent raceways are not in the same transverse line.

6. All conduits shall enter maintenance holes and structures at right angles.

D. Provide expandable grommets for concrete encased raceway passing through wall to the earth.

E. Concrete Encasement:

1. Where indicated, encase conduits in a red concrete envelope sized as indicated and located at the elevation shown. Use 2,500 psi concrete as specified in Section 03300 CAST-IN-PLACE CONCRETE.

2. Maintain a grade of at least 4-inches per 100-feet, either from one maintenance hole or pull box to the next, or from a high point between them, depending on the surface contour.

3. Hold conduits for concrete-encased raceways securely in place by acceptable window type spacer supports. Where, in the opinion of the ENGINEER, ground conditions are such as to require concrete forms, install forms constructed of materials and in a manner acceptable to the ENGINEER. No variations greater than 1/2-inch in 50-feet will be permitted from a straight line.

4. Envelopes may be poured directly against the sides of trenches if the cut is clean, even, and free of loose material. Remove loose material from trenches before and during pouring of concrete to ensure sound envelopes. Carefully spade concrete during pouring to eliminate all voids under and between raceways and honeycombing of the exterior surface.

5. Do not use power-driven tampers unless they are specifically designed for the application, in order to ensure that the watertight integrity of the raceways is maintained.

6. Generally, pour an entire concrete envelope in one continuous pour. Where more than one pour is necessary, terminate each pour in a sloped plane, and insert 3/4-inch reinforcing

rod dowels extending into the concrete 18-inches minimum on each side of the joint. Obtain Engineers' approval for the number and location of dowels.

7. Provide reinforcement shown where envelopes connect to manholes or building structures to prevent shearing of joints.

F. Backfill Installation Above Conduit Zone of Direct Burial Conduit or Above Concrete Envelope of Concrete Encased Conduit:

1. Provide backfill meeting the requirements of Section 02310 "Earthwork" for above the conduit zone of direct burial conduit and above concrete envelope of concrete-encased conduit.

3.7 MAINTENANCE HOLES AND HANDHOLES

A. Install maintenance holes and handholes where shown on the Drawings. Provide excavation, shoring, bracing, backfilling, grading, etc., in accordance with requirements specified elsewhere in these Contract Documents.

B. Do not install maintenance holes or handholes until final conduit grading, including field changes necessitated by underground interferences, has been determined. Set frames to final grades as required.

C. Make installation so that raceways enter maintenance holes or handholes at nearly right angles and as near as possible to one end of a wall, unless otherwise indicated.

D. Install one ground rod in each maintenance hole and handhole. Connect all noncurrent-carrying metal parts in the maintenance holes and any metallic raceway grounding bushings to this ground rod with No. 6 AWG (minimum) copper conductor.

E. CONTRACTOR shall clean and remove all debris from maintenance holes and handholes whether new or existing.

3.8 WIREWAYS (N/A)

3.9 CABLE TRAYS (N/A)

3.10 PREPARATION FOR PULLING IN CONDUCTORS

A. Do not install crushed or deformed raceways. Avoid traps in raceways where possible. Take care to prevent the lodging of plaster, concrete, dirt, or trash in raceways, boxes, fittings, and equipment during the course of construction. Make raceways entirely free of obstructions or replace them. Ream all raceways, remove burrs, and clean raceway interior before introducing conductors or pull wires.

B. Immediately after installation, plug or cap all raceway ends with watertight and dust-tight seals until the time for pulling in conductors.

C. For concrete-encased raceways, after the concrete envelope has set, pull a mandrel of a diameter approximately 1/4-inch less than the raceway inside diameter, through each raceway. Then pull a bristle brush through each raceway to remove debris.

3.11 EMPTY RACEWAYS

A. Certain raceways will have no conductors pulled in as part of this Contract. Identify with tags at

each end and at any intermediate pull point the origin and destination of each such empty raceway. Where a raceway has been identified with a name (number) in the Raceway Schedule, use that name on the tag in lieu of origin and destination. Provide a removable permanent cap over each end of each empty raceway. Mandrel and provide a nylon pull cord in each empty raceway.

3.12 PAINTING

A. Paint raceway systems in accordance with and as specified in Section 09900 “Painting”."

(END OF SECTION)

SECTION 16150
CONDUCTORS, 600 VOLTS AND BELOW

PART 1 - GENERAL

1.1 SCOPE

A. Required: Provide and install insulated, solid and/or stranded type wire conductors and wire connectors for circuit voltage of 600 volts or less as herein specified.

B. Comply with the General Conditions, General Requirements and Section 16020 of this Division 16 concerning definitions, guarantees, submittals, as-builts, clean-up, etc. as applicable to work of this Section.

PART 2 - PRODUCTS

2.1 CONDUCTORS AND INSULATION

Insulated wire conductors for circuit voltage, 600 volts or less, shall be copper. Conductors shall have UL approved 600 volt insulation of type specified below or elsewhere in the Specifications.

A. Branch Circuits and Feeders - Lighting and Power:

1. #10 AWG and smaller, solid wire.

2. #8 AWG and larger, stranded type.

3. Insulation @ 75 degrees C Type THW, THWN, XHHW, THHN.

B. For conductors installed in areas subjected to temperatures exceeding 140 degrees F., including terminating in incandescent lighting fixtures and installed through or into housing containing ballasts, provide type FEPB, RHH or THHN.

C. For conductors installed in exposed conduit outside of buildings and conduit within or just under roofing material, provide type XHHW.

D. Control Circuits for Mechanical Equipment: Use 600 volt Underwriters' type THWN conductors except where subject to abnormally high temperatures such as on or near boilers. Under these conditions, use type FEPB.

E. Conductors for Class 2 or 3 Bell Buzzer or Intercom Systems: Synthetic plastic insulation type.

F. Conductor for Intercom System: Jacketed multiconductor stranded type. The number of conductors shall be as indicated on the Contract Drawing and in Submittal of wiring diagrams.

G. Conductors for Music and Paging Systems:

1. For Speakers: Stranded No. 18 A.W.G. size jacketed twisted pair.

2. For Microphone: Shielded No. 20 A.W.G. size.

H. Conductors for Conversation Recording: Stranded No. 20 A.W.G. size jacketed shielded pair type.

I. Conductor for Door Status and Lock: Stranded jacketed twisted pair for Class 2 or 3 systems, No. 18 A.W.G. size.

J. Conductors for Fire Protective Signaling Systems: Solid No. 14 A.W.G. size minimum.

K. Conductors for Cable Tray Systems: U.L. listed single or multiconductor type, identified for use.

2.2 GENERAL FABRICATION

A. For General Wiring: Use type THHN-THWN where operating temperature is 90 degrees F or less, or shall use type AVA-AWM where temperature exceeds 90 degrees F or where exceeding 140 degrees provide type FEPB, RHH or THHN.

B. For Wiring Individually Mounted Lighting Fixtures or Lamp Holders: Stranded type SF-2 or PGF fixture wire.

C. For General Wiring: Use No. 10 A.W.G. size and smaller solid type where flexibility or regular movement is not required, or use No. 8 A.W.G. stranded type where flexibility or regular movement is required.

D. The minimum conductor size for general wiring shall be No. 12 A.W.G. except as indicated otherwise on the Drawings.

E. Connectors for #10 conductors and smaller UL listed for 600 volts, approved for use with copper and/or cone shaped, expandable coil spring insert, insulated with a nylon shell and two wings placed opposite to each other to service as a "built-in" wrench. Shell shall be molded one-piece as manufactured by Ideal Industries "Wing Nut" connectors.

F. Connectors for #8 AWG and larger shall be screw pressure lugs made of high strength structural aluminum alloy and UL approved for use with copper wire as manufactured by Ilsco, T & B Burndy or O.Z. Companies.

G. Conductor insulation type, size and UL approval shall be printed with permanent white paint on all conductor insulation continually repeating.

H. Provide all conductors used for power, lighting, signal and communications systems (operating at 600 volts and below) with a minimum insulation rating of 600 volts.

I. Minimum Size of Conductors: #12 AWG copper for power and lighting, #14 AWG copper for controls and low voltage wiring (less than 120 volts) if adequate.

J. All conductors shall be new and shall have been manufactured within 12 months of the date of delivery to the job-site and continuously stored where protected from the sun, heat or weather.

K. Deliver all conductors to the site on their original cable reels or in their original unbroken packages.

L. Provide all conductor packages and cable reels plainly marked or tagged with UL labels, AWG

size, voltage rating, insulation type, type of stranding, manufacturer's name, trade name, and month and year when manufactured.

PART 3 - EXECUTION

3.1 GENERAL

A. All conductors shall be insulated and installed in raceways, cable trays, boxes, fixture or equipment enclosures unless specifically indicated otherwise on the Drawings.

B. Do not install conductors until raceway runs are completed with terminating enclosures installed and plastering, drywall, masonry, concrete, or other work which may damage conductors is completed, except as otherwise approved by the City Engineer. Raceways shall be clean and dry prior to installation of conductors.

C. Mechanical devices or equipment for pulling conductors shall be identified and suitable for the purposes. Vehicles, cranes, etc., shall not be used.

D. Group, tie wrap, and suitably identify the conductors of each system, where conductors of circuits with different electrical characteristics are installed in the same enclosure.

E. Conform control wiring to the wiring diagrams on the Mechanical Drawing and on the manufacturer's wiring diagrams as necessary to control the equipment in the manner specified in the Mechanical Specifications.

F. Pull Conductors: Use manufacturer-approved pulling compound or lubricant where necessary; compound used must not deteriorate conductor or insulation. Do not exceed manufacturer's recommended maximum pulling tensions and sidewall pressure values.

G. Use pulling means; including fish tape, cable, rope, and basket-weave wire/cable grips, which will not damage cables or raceway.

H. Wiring at Outlets: Install conductor at each outlet, with at least 6-inches of slack.

3.2 COLOR CODING

A. Required: For all branch circuit wiring, feeders, bonding and grounding conductors as follows:

1. 480/277 Volt 3 Phase 4 Wire Systems:

Phase A	Phase B	Phase C	Neutral
brown	orange	yellow	white

2. 208/120 Volt 3 Phase 4 Wire Systems:

Phase A	Phase B	Phase C	Neutral
black	red	blue	white

3. 240/120 Volt 3 Phase 4 Wire Systems:

Phase A	Phase B	Phase C	Neutral
black	orange	blue	white

4. 120/240 Volt 1 Phase 3 Wire Systems:

Phase A	Phase B	Neutral
black	red	white

5. Bonding or Grounding Conductors: Green or green with yellow stripe(s).

6. Do not use light gray or natural gray colors.

7. When a color is established it shall be maintained throughout the entire length of the circuit, except that switch loops between 3-way or 4-way switches may be different colors.

8. Color coding for conductors No. 6 A.W.G. or smaller shall be accomplished by inherent insulation color; tags, paint tape or other marking shall not be used for color identification.

9. Mark each phase of leg in each panelboard with identifying tape.

3.3 TAGGING

A. General: Install identification markers on ungrounded conductors of all circuits, in switchboards, panelboards, pull, junction and outlet boxes, lighting fixtures, switches, receptacles and other terminating enclosures. Grounded circuit conductors shall have identification markers in switchboards, panelboards, and all enclosures where more than one circuit grounded circuit conductor is installed. Identification shall include switchboard, panelboard, or other source and circuit number. Tags shall be 3M Co. "Scotchcode" write-on tape or shall be pre-marked with self-adhesive wraparound cloth type EZ Code, Brady.

B. Tagging: Conductors shall be tagged in each junction box, pullbox, wireway or auxiliary gutter and at each device, motor outlet, panelboard, switchboard or other conductor termination. Tag shall show feeder number, size, phase and origin.

3.4 SPLICES

A. Make splices for No. 8 A.W.G. and smaller conductors with twist-on type pressure connectors suitable for the number and size of conductors. Connectors shall be Ideal Industries Inc., "Wingnut" or equal.

B. Make splices for No. 6 A.W.G. and larger conductors with bronze split-bolt or solderless compression type connectors requiring the use of a pressure tool. Connectors shall be wrapped with varnished cambric prior to taping, where tape is used as the insulating medium.

C. Make "pigtail" type splices at multiple conductor terminations for lighting fixtures, switches, receptacles, and other devices or outlets, to provide for connection of a single set of circuit conductors to the device or load. This requirement shall not apply to line and load conductors connected to GFCI type receptacles.

D. Install each feeder conductor without splice or joint, from equipment terminal to equipment terminal, except as specifically indicated otherwise on the Drawings.

3.5 MISCELLANEOUS (AS APPLICABLE)

A. Make all branch circuit and fixture joints for #10 AWG and smaller wire with UL approved connectors, listed for 600 volts. Provide Minnesota Mining and Manufacturing Co. insulated "Scotch locks", Ideal Co. "Wing-Nut", or T&B Burndy Co. "Piggy" connectors.

B. Make all branch circuit joints of #8 AWG and larger with screw pressure lugs, and insulate with electrical tape to 150% of the insulating value of the conductor insulation.

C. Tape all connections made with non-insulated type connectors with half-lapped, rubber-type tape, to 1-1/2 times the thickness of the conductor insulation, then cover with Scotch #33 tape.

D. Each circuit must correspond to the branch circuit number indicated on the panel schedule shown on the drawings except where departures are approved by the Architect.

E. Neatly group or tape together wiring within equipment enclosures.

F. Where conductors in conduit pass through exterior walls, a sealing compound of moisture-resistant material shall be applied in the ends of the conduits to seal around the conductors.

G. Megger tests shall be taken on all feeder conductors and on all conductors for motors over 15 HP. Tests shall be made in presence of the City's representative and prior to connection of equipment. Written reports of results shall be submitted to the City Engineer. Conductors testing below manufacturer's standard shall be replaced.

END OF SECTION

SECTION 16170
CABINETS AND ENCLOSURES

PART 1 - GENERAL

1.1 GENERAL CONDITIONS:

A. See the Conditions of the Contract (General, Supplementary and Special Conditions) and the General Requirements (Division 1).

1.2 WORK INCLUDED:

A. This section covers all equipment cabinets and enclosures as shown on the drawings or as required to house the specified devices and equipment. The work under this section consists of furnishing materials and equipment, performing labor and services necessary for the installation of the cabinets and enclosures required for the security system.

1.3 RELATED WORK SPECIFIED ELSEWHERE:

A. Refer to all other Division 16 specification sections and drawings, and to the specifications and drawings under the General Construction Contract to ascertain the extent of work included.

1.4 REFERENCED SPECIFICATIONS, MATERIALS AND/OR CODES:

A. National Electrical Code

1.5 COOPERATION WITH OTHER TRADES:

A. The Contractor shall coordinate the work of the section with that of other sections as required to ensure that the entire work of this Project will be carried out in an orderly, complete and coordinated fashion.

1.6 SUBMITTALS:

A. General: Submittals shall be made in accordance with the Section 01330 “Shop Drawings/Submittals” of the General Requirements of these specifications.

PART 2 - PRODUCTS

2.1 MATERIALS:

A. Cabinets - Wall Mounted:

1. All equipment cabinets installed indoors shall be NEMA 1 enclosures.

2. All equipment cabinets installed outside or exposed to weather shall be NEMA 3R enclosures.

3. Cabinets shall be constructed of 14 gauge rolled steel.

4. Cabinet doors shall be furnished with key lockable doors with all cabinets under Division 16 keyed alike.

5. All cabinets shall be furnished with removable steel back panels for mounting equipment.

6. Cabinets shall be furnished with appropriate size and quantity of knock-outs for conduit entry.

7. Cabinets shall be grounded as specified in Section 16290 “Municipal Facilities Grounding Systems.”

8. Cabinets shall be provided with adequate vents.

9. All cabinets shall be furnished with white-on- black laminated plastic name plates identifying each cabinet as noted on the drawings. Lettering shall be minimum 3/16” high.

10. Cabinet finish shall be ANSI 61 gray inside and out.

11. Cabinets shall be sized in strict accordance with the NEC.

12. Cabinet back panels shall be furnished with a ground buss bar.

13. Door size shall be selected to allow a minimum door swing of 90 degrees within the dimensional constraints of the equipment room.

14. Cabinets shall be equipped with index card holders and cards mounted behind heavy plastic on inside of cabinet doors.

15. Affix nameplates to cabinet doors with a minimum of two escutcheon pins or screws.

B. Vertical Cabinet - Floor Mounted:

1. All vertical cabinets shall be free-standing floor mounted type having features and/or characteristics as follows:

   a. Panel Width - 19" or as shown otherwise.

   b. Panel Height - 78-3/4" or as shown otherwise.

   c. Overall Height - 87" Nominal or as shown otherwise.

   d. Overall Depth - 25" Nominal or as shown otherwise.

   e. Rear Door - Vented, except as otherwise specified.

   f. Front door with vents at top and bottom, except as otherwise specified.

   g. Plain top panel

   h. Frame- 14 ga. CRS

i. Side panels - 18 ga.

j. Styled frames with trim

k. 19" EIA adjustable mounting rails for front and rear equipment mounting

l. Locks - all cabinets to be keyed alike

m. Units shall be pre-assembled type

n. Color - to be selected by Architect

2. Cabinets grouped side-by-side shall have side panels on each section.

3. Furnish and install blank 19" panels of color to match cabinet for all unused vertical mounting units on front mounting rails. Maximum height of each filler panel shall be 10.5".

C. Power Strips:

1. Furnish and install plug-in or hardwired outlet strips as required to support the installed equipment.

2. Power strips shall have a metallic case.

3. Plug-in power strips shall be equipped with a locking plug and shall only be used with a compatible locking-type receptacle.

D. Pedestals:

1. Pedestals shall be weather-tight, seam welded, constructed of 14 gauge galvanized steel. Where indicated on the drawings construction shall be stainless steel.

2. Pedestals shall be furnished with gasketed panel for access to equipment contained within. Panel shall be secured with security screws as specified in the Security Hardware Division of these specifications.

3. Pedestal shall be painted to withstand environmental conditions and the final color shall be as specified by the Architect.

4. Pedestal shall be pre-drilled for mounting of intercom stations, loop detectors, and other equipment as specified herein.

5. Pedestal dimensions shall be as shown on the drawings.

PART 3 - EXECUTION

3.1 EXECUTION:

A. Cabinets:

1. Provide cabinets as necessary for proper installation of the equipment specified and in compliance with all codes and regulations.

2. Secure all cabinets in place with lead shield anchors and lag bolts.

3. Unused openings in cabinets shall be closed to afford protection equivalent to that of the wall of the cabinet.

B. Ventilation:

1. Furnish and install ventilation fans, vents, and filters for all cabinets where forced air cooling is required to maintain interior cabinet temperature at or below 95°F.

2. For cabinets with forced ventilation, doors and side panels shall be solid with no louvers.

3. Division 17 Subcontractor shall select vented vs. forced air cabinets based on the environment's conditions of the equipment room and equipment to be installed in each cabinet.

C. Pedestals:

1. Provide pedestals at all locations shown on the drawings.

2. Secure pedestals to concrete base with four (4) redhead type anchors. Anchors shall be located such that they are only accessible from inside the enclosure.

3. Coordinate installation of required conduit such that all conduit is stubbed up inside pedestal enclosure.

4. Cabinets shall be large enough and equipment spaced in cabinets to provide adequate spacing for airflow and maintenance.

5. Locate all heat producing equipment, such as power supplies and amplifiers, at top of equipment cabinets.

3.2 COMPLETION:

A. General:

1. Upon completion of the work, remove excess debris, materials, equipment, apparatus, tools and the like and leave the premises clean, neat and orderly.

2. All cables shall be dressed neatly in each cabinet and enclosure. Excess cable shall be trimmed and disposed of.

(END OF SECTION)

SECTION 16180
WIRING DEVICES

1- GENERAL

1.1 SCOPE

A. Required: Provide and install wiring devices as indicated on the Contract Drawing and herein specified.

B. Comply with the General Conditions, General Requirements and Section 16020 of this Division 16 concerning definitions, guarantees, submittals, as-builts, clean-up, etc. as applicable to work of this Section.

1.2 SUBMITTALS

A. Submit under the provision of Section 01330.

B. Product Data: For each product specified.

C Maintenance Data: For materials and products to include in maintenance manuals specified in Division 1.

PART 2 - PRODUCTS

2.1 GENERAL

A. All wiring devices shall be specification grade, UL listed and labeled, conform to NEMA standards and meet the requirements of Federal specifications.

2.2 BOXES

A. Types:

1. Provide galvanized steel knockout type outlet boxes with suitable plaster rings of similar material, for interior concealed wiring in dry, non-hazardous (classified) locations.

2. Provide cast metal boxes for floor outlets, and where installed in walls direct contact with the earth. Floor outlet boxes shall be Walker box 880 series or equal.

3. Provide weatherproof cast metal outlet boxes for surface wiring, or in wet or damp locations, or where indicated on the Drawings, unless otherwise directed by the City Engineer. Boxes shall be Crouse-Hinds FS, FD, GRF, GS, or VXF series.

4. Provide sheet steel type with screw cover for pull and junction boxes over 100 cubic inches, in dry non-hazardous (classified) locations.

B. Sizes: In accordance with Code for the number and size of conductors, but not less than indicated on the drawings nor less than 4 inch square trade size, except for cast metal type, or multigang masonry type embedded in concrete or masonry walls.

C. Accessories:

1. Plaster rings, fixture studs, covers, plates, dividers, etc., as required.

2. Weatherproof covers, plates, and other accessories in wet or damp locations.

2.3 SWITCHES

A. All switches shall be specification grade and meet Federal Spec. W-S-896E.

B. Provide screw type; push-in type connections not acceptable.

C. Switches shall be self-grounding, color coded, silent or quiet type, and rated 120-277 Volts AC, 20 ampere rating, totally enclosed, where installed in AC systems Bakelite or composition base with "T" rating for AC loads, standard toggle handle, side wired only and binding screw terminals with screwdriver slot.

D. Where pilot lights are specified for switches, they shall be the neon type 1/25 W. mounted under the same plate as the switch. Lighted toggles are not acceptable.

E. Momentary contact switches shall be three position toggle, 20 Ampere rating at 120 Volts AC.

F. Single pole switches shall be equal to Bryant 1121-I; two pole switches Bryant 1122-I; three way switches Bryant 1123-I; four way switches Bryant 1124-I.

G. Approved Manufacturers:

1. Hubbell;

2. Levinton;

3. Or equal.

2.4 WALLBOX DIMMERS

A. Include line-voltage surge protection in all solid-state equipment. Comply with UL. 1449 and ANSI C62.41.

B. Load Compatibility: Components compatible with each other and with controlled loads.

C. DIMMERS:

1. Comply with UL 508.

2. Noise and Radio Frequency Interface (RFI) Suppression: Solid-state dimmers operate smoothly over their operating ranges without audible lamp noise or RFI at any setting. Modules include integral or external filters that provide audible noise and RFI suppression.

3. Dimmer Rating: As indicated, but not less than 125 percent of connected load.

4. Fluorescent Dimmers: Control lights smoothly over a minimum range of 100 to 10 percent of full brightness. Shall be listed by the ballast manufacturer as being compatible with the ballast. Integrated linear slide control. Rotary control is not acceptable. Provide integrated positive OFF position.

5. Manufacturers: As specified on the contract drawings or approved equal.

2.5 PLATES AND COVERS

A. Required: For all switches, receptacles, junction boxes, telephone and other outlets.

B. Finishes of Plates and Devices:

Location	Plate	Device
General interior finished areas	White	White
Interior finished areas over wood panels	Black	Black
On exterior with spring loaded cover	Corrosion resistant	Brown
In equipment rooms or other generally unfinished areas	Galvanized	Brown
Janitor and utility rooms	Stainless steel	Gray
Toilet rooms	Stainless steel	Ivory

C. Provide the Following: Unless otherwise directed by the City Engineer, provide telephone, TV, and communication outlet plates with a bushed hole.

D. Provide engraved or etched plates for all lock switches, pilot switches, switches from which the equipment or circuit controlled cannot be readily seen, three or more switches under a common plate and for switches as indicated.

E. Stainless steel plates, type 302 non-magnetic with beveled edges, 0.040" thick with satin finish. Leviton 84000-40 series or approved equal.

F. Galvanized steel plates shall be square or rectangular and hot dipped galvanized or sherardized beveled edges and 0.040" thick.

G. Provide weatherproof receptacles with spring-loaded, corrosion resistant covers with gasket for mounting on outdoor type or flush wall boxes. Leviton 6196-V or approved equal.

H. Provide plates equipped with close fitting openings for the exact device to be used. Provide plates for telephone outlets equipped with bushed openings. Synthetic plates shall be smooth finish as manufactured by Pass & Seymour, Sierra, Leviton, or approved equal.

I. Provide brass covers for floor receptacles with duplex flap opening flush with floor.

J. Provide brass covers for data and communications floor outlets with 2-1/8 x 1 inch combination threaded opening.

K. Engraved plates and covers for equipment and controls, motors, for switches out of sight of the equipment controlled, for receptacles rated other than 125 volts, and for ganged switches (except no more than two switches controlling lights in the same room). Engraving shall provide positive identification acceptable to the City Engineer.

2.6 RECEPTACLES

A. Types:

1. All receptacles shall be specification grade and meet Federal Spec. WC 596 E.

2. Provide screw terminal type receptacles. Push-in type connections are not acceptable.

3. Straight blade 125 volt, 15 and 20 ampere duplex type shall be equal to Bryant 5262-I or 5263-I; single type shall be Bryant 5661-I or 5461-I.

4. Straight blade 250 volt, 15 and 20 ampere duplex type shall be equal to Bryant 5662-I or 5462-I; single type shall be Bryant 5661-I or 5461-I.

5. Combination duplex receptacles, straight blade 125/250 volt, 15 and 20 amperes, shall be equal to Bryant 5292-I or 5492-I.

6. Clock hanger receptacles shall be Bryant 2828-GS or equal.

7. Special outlets of other types shall be as indicated on the Contract Drawings.

2.7 OCCUPANCY SENSORS:

A. Wall-mounted, passive infrared sensors, as specified on the contract drawings or approved equal.

B. Ceiling mounted combination, passive infrared and ultra sonic, as approved on the contract drawings or approved equal.

2.8 CONTROLS

A. Required: For all equipment furnished in this and other divisions, as required by Code, and as indicated on the Contract Drawings and in the specifications. All devices shall be listed by U.L. or another approved testing laboratory.

B. Types:

1. Circuit Breakers: Thermal-magnetic with interrupting and trip ratings as indicated on the drawings. Equip each breaker with a device for individual padlocking. Circuit breakers shall meet Federal Specifications W-C-375B.

2. Enclosed Safety Switches: Shall be externally operable, heavy duty "tease-proof", fusible

and nonfusible with number of poles and ratings as indicated on the Contract Drawings. Provide suitable rejection type fuse holders for Class R fuses. Switches shall meet Federal Spec. W-S-865C. Switches shall be as manufactured by Square D Co. or equal.

3. Fuses: All fuses shall meet U.L. Standard 198. Provide a label within each fuse enclosure indicating fuse replacement type and ratings. Provide one complete set of each type and rating of fuses and limiters, as spares. Fuses shall be one of the following types:

   a. Current-limiting Class L; Bussman KRP-C or KTU.

   b. Current-limiting Class J; Bussman JKS or JHC.

   c. Dual element Class RK-1; Bussman KTS-R or KTN-R.

   d. Dual element Class RK-5; Bussman FRS-R or FRN-R.

   e. Low Peak dual element Class RK-5; Bussman LPS-R or LPN-R.

   f. For secondary protection of control transformers rated 500 V.A. and 50 volts, or less; Bussman FNQ fuses with HPS-D or HPL-B fuse holder or equal.

   g. Fuses for direct-current circuits shall be identified for the use.

   h. Other required fuses, if not specified, shall be standard nonrenewable type; Bussman FRN or FRS for circuits where available fault current is 10,000 amperes or less.

4. Terminal connection blocks shall be provided in switch and circuit breaker enclosures in which grounded (neutral) conductors are installed.

5. Magnetic Motor Starters: Shall be across-the-line start type with overload and low voltage protection; Square D. Co. Class 8536. Combination starters shall be fusible or nonfusible disconnect switch type; Square D. Co. Class 8538, or motor circuit protector type (instantaneous trip only); Square D. Co. Class 8539. Reversing starters shall be Square D. Co. Class 8736 or 8739 or equal. Ratings shall be as indicated on the Drawings. Equip each circuit breaker with a device for individual padlocking.

6. Manual Motor Starters: Pushbutton type with overloads; Square D. Co. Class 2510 Type M. Toggle type with overloads; Square D. Co. Class 2510 Type F. Toggle type without overloads; Square D. Co. Class 2510 Type K or equal. Each device shall have provision for padlocking.

7. General Purpose Contactors: Shall be ASCO 1000 Series or equal with number of poles and ratings as indicated on the drawings. Provide suitable hinged door enclosures.

8. Lighting Contactors: Electrically operated, mechanically held, with coil clearing contacts; ASCO Remote Control (RC) Switches or equal with number of poles and ratings as indicated on the Drawings. Provide suitable hinged door enclosures.

9. Pushbutton and Other Control Devices: Shall be Square D.Co. Class 9001 Type K or equal, in suitable enclosures with legend plates.

10. Pilot Lights: Shall be Square D. Co. Class 9001 Type K, transformer type or equal. Shall have push-to-test feature where installed in switchboards or motor control centers.

11. Control Relays: Shall be Square D. Co. Class 8501 Types D, H, or L. or equal. Install relays in suitable enclosures.

12. Time Switches: Provide types with minimum 10-hour spring driven automatic rewind reserve power. For control of mechanical systems or equipment provide 7 day dial type with features permitting daily control or omission; Paragon 7000 Series. For control of mechanically-held lighting contactors provide astronomic type with day omitting device and momentary contact single pole double-throw switching; Paragon 47216-OSZ or equal. Number of poles and voltages for time switches shall be as indicated on the Drawings.

13. Emergency Control Switches: Shall be ASCO equal to #124 Series break-glass devices for mechanical or data processing rooms or similar applications.

14. Three-Position Selector Switches: Shall be equal to Bryant 4922-I for maintained contact type; Bryant 4921-I for momentary contact type.

15. Manual Timers: Spring-wound timers shall be equal to M.R. Rhoades Inc. "Mark-Time" 125 V. 20 A.

16. Identification: Identify all control and disconnecting devices by engraved laminated plastic nameplates designating the equipment controlled, except where device plates are engraved.

    a. Motors and other equipment shall be suitably and durably identified to correspond to the control or disconnecting device. Nameplate lettering shall be white on black finish and 1/8 inch high minimum.

    b. Marking shall be as indicated on the drawings or as approved by the City Engineer. Nameplates shall be affixed with a minimum of two escutcheon pins or screws.

PART 3 - EXECUTION

3.1 GENERAL

Each class of device shall be furnished by one manufacturer for the total project. Mixing of devices by different suppliers will not be permitted.

3.2 BOX INSTALLATION

A. Install boxes where indicated on the Contract Drawings and coordinate locations with structural and architectural features for proper installation. Boxes shall be accessible.

B. Install boxes for wall mounted local switches at 4 feet to center above floor or standing surface unless otherwise directed by the City Engineer. The maximum height in handicapped areas shall be 48 inches.

C. Install boxes for wall mounted receptacles, signal and communication outlets at 15 inches to center above floor or standing surface except where located above counter tops, or used for clock outlets, or as otherwise indicated on the Drawings or directed by the City Engineer.

D. Install boxes for wall mounted fixtures, speakers, cameras, etc., at 7 feet to center above floor or standing surface, or as otherwise indicated on the Contract Drawings or directed by the City Engineer.

E. Install boxes for wall mounted thermostats at 4 feet to center above floors or standing surface, or as otherwise indicated on the Contract Drawings or directed by the City Engineer..

F. Junction and pull boxes shall only be installed where indicated on the Drawings unless otherwise approved by the City Engineer.

G. Boxes shall be securely supported. Boxes for flush outlets shall be mounted on bar hangers or brackets with the front edge of the box or plaster ring flush with combustible finish surfaces and not more than 1/4 inch behind non-combustible finish surfaces. Do not use nails for direct support of boxes. Do not use extension boxes (rings) for installation of flush outlets. Flush boxes used for support lighting fixtures or other equipment shall be securely fastened to two structural support members unless embedded in masonry or concrete. Do not use powder-driven fastening devices unless specifically approved by the City Engineer.

3.3 RECEPTACLE AND SNAP SWITCH INSTALLATION

A. General:

1. Install receptacles and switches square, level, secure, and connected to a single set of circuit conductors at each outlet. Plaster ears of receptacles and switches installed in flush boxes shall be seated against the finish surface.

2. Install closely adjacent snap switches in a single multi-gang type box, unless otherwise directed by the City Engineer.

3. Install permanent barriers between switches where the voltage between switches exceed 300 volts.

4. Connect all devices by wrapping conductor around binding screw terminals.

5. Provide GFCI type receptacles in toilet, kitchen counters and for all outdoor locations where required by code.

3.4 OUTLET PLATES AND COVER INSTALLATIONS

A. General:

1. Install square, level and secure. Plates installed at flush outlets shall be seated against the finish.

2. Properly identify plates and covers as required and noted in Subsections 2. 5 D and K of this Section as applicable.

3. Provide jumbo size plates for outlets installed in masonry walls.

4. Properly align and plumb all devices and plates. Fit plates flat against walls and tights against surfaces of devices without strain on the plate.

5. Code sized (#12 minimum) bonding jumper shall connect grounded outlet box to receptacle

grounding terminal on all flush mounted units.

3.5 MISCELLANEOUS

A. Install switches, convenience and telephone outlets vertically in all locations unless otherwise indicated.

B. Install convenience and telephone outlets horizontally where noted on Drawings, elevations, mill work, or notations. Locate grounding prong to the left when facing the outlets.

C. Where convenience outlets are mounted vertically, locate ground prong at bottom.

(END OF SECTION)

SECTION 16190
ELECTRICAL IDENTIFICATION

PART 1 -- GENERAL

1.1 SCOPE

A. Required: Furnish and install nameplates and warning sign where indicated on the Contract Drawings or herein specified.

B. Comply with the General Conditions, General Requirements and Section 16020 of this Division 16 concerning definitions, guarantees, submittals, as-builts, clean-up, etc. as applicable to work of this Section.

C. Work includes but is not necessarily limited to the following:

1. Nameplates and warning signs permanently installed on all electrical equipment and devices including, but not limited to, the following items:

2. Enclosures for transformers, switchboards, motor control, panels, pullboxes, cabinets and motors.

3. Enclosures for all separately enclosed devices including, but not limited to, disconnect switches, circuit breakers, contactors, time switches control stations and relays, fire alarm panels and lighting control panel.

4. Wall switches not within sight of outlet controlled.

5. Special systems such as, but not limited to, telephone, fire alarm, warning and signal systems. Identification shall be at each equipment rack, terminal cabinet, control panel, annunciator and pullbox.

6. Devices mounted within and part of equipment including circuit breakers, switches, control devices, control transformers, relays, indication devices and instruments.

PART 2 -- PRODUCTS

2.1 NAMEPLATE DESIGNATIONS SHALL CLEARLY STATE

A. Manufacturer's nameplate including equipment design rating of current, voltage, KVA, HP, bus bracing rating or as applicable.

B. Equipment nameplates designating system usage and purpose, system nominal voltage, equipment rating in KVA, amperes, HP and RPM as applicable. Designation data per drawings shall be supplied with Shop Drawings approval.

C. Panelboard nameplates showing panel designation, voltage, phase and source.

2.2 MANUFACTURERS DEVICE NAMEPLATES

Device usage, purpose, or circuit number; manufacturer and electrical characteristic ratings

including the following:

A. Circuit Breakers: Voltage, continuous current, maximum interrupting current and trip current.

B. Switches: Voltage, continuous current, horsepower or maximum current switching. If fused, include nameplate stating "Fuses must be replaced with current limiting type of identical characteristics".

C. Contactors: Voltage, continuous current, horsepower or interrupting current, and whether "mechanically held" or "electrically held".

D. Motors: Rated voltage, full load amperes, frequency, phases, speed, horsepower, code letter rating, time rating, type of winding, class and temperature.

E. Controllers: Voltage, current, horsepower and trip setting of motor running overcurrent protection.

2.3 MATERIALS

A. For Nameplates**:** Three layer laminated plastic or Micarta with engraved white letters over black background.

B. For Emergency Equipment: Use engraved white letters over red background.

C. For Warning Signs: Minimum 18 gauge steel with red lettering on white porcelain enamel finish.

PART 3 -- EXECUTION

3.1 MOUNTING

Nameplates shall be mounted by self-tapping, threaded screws and bolts, or by rivets. Adhesive types are not acceptable.

3.2 MINIMUM LETTER HEIGHTS ON NAMEPLATES (AS APPLICABLE)

A. Panelboards, Switchboards and Motor Control Centers and Special Systems Enclosures: 1/4 inch identifies equipment designation; 1/8 inch identifies voltage rating and source.

B. Individual Circuit Breakers, Switches, and Motor Starters in Panelboards, Switchboards, and Motor Control Centers: 3/16 inch identifies circuit and load served, including location.

C. Individual Circuit Breakers, Enclosed Switches, and Motor Starters: 3/16 inch identify load served.

D. Transformers: 3/16 inch identifies equipment designation; 1/8 inch identifies primary and secondary voltages, primary source and secondary load. Include location of primary source or secondary load if remote from transformer.

3.3 WARNING SIGNS

A. Warning signs shall be permanently mounted with cadmium plated steel screws or nickel-plated brass bolts.

B. Warning signs to read "DANGER - HIGH VOLTAGE", with letters 1-1/2 inch high, 3/16 inch stroke minimum.

C. Provide warning sign on all doors or immediately next to door for equipment rooms or closets containing equipment energized above 150 volts to ground.

(END OF SECTION)

SECTION 16210
SWITCHES, DISCONNECT AND SAFETY

PART 1 -- GENERAL

1.1 SCOPE

A. Work Included: Not limited to the following:

1. Fabricate, provide and install disconnect and safety type switches where indicated on the Contract Drawing and hereinafter specified.

2. Comply with General Conditions, the General Requirements and the requirements of Section 16020 of this Division 16 concerning definitions, guarantees, submittals, as-builts, clean-up, etc. as applicable to the work of this Section.

3. Examine all other Sections for work related to those Sections which are required to be included as work under this Section.

1.2 QUALITY ASSURANCE

A. Conform to applicable provisions of Subsection 1.7 of Section 16020 –Municipal Facilities General Electrical Requirements.

B. Conform to applicable Codes and NEMA, ANSI and IEEE Standards and Federal Specification W-S-865.

1.3 SUBMITTALS

Conform to applicable provisions of Section 01330 of Division 1 - General Requirements and Subsection 1.6 G of Section 16020.

PART 2 -- PRODUCTS

2.1 GENERAL

A. Approved Manufacturers:

1. Eaton;

2. General Electric;

3. Schneider Electric/ Square D;

4. Siemens;

5. Or equal.

B. Disconnect Switches: Provide with devices enabling the switch to be locked in the open or closed positions.

C. Manual Motor Switches: Tumbler type rated 3HP, 208 Volts three phase or single phase with or without overload heaters as required to protect equipment served.

D. Externally Operable Safety Switches: To have quick-make, quick-break mechanism, capable of switching 10 times switch rating, with cover interlock to prevent opening with switch in ON position and defeat mechanism for maintenance.

E. Switches: Shall be type HD unless otherwise indicated. Provide NEMA 1 enclosures for interior locations and NEMA 3R enclosures for exterior or wet locations. Provide with number of poles, ampacity, voltage and HP rating, fusible or nonfusible as indicated.

F. Fusible Switches: Equip them with rejection clips for UL Class R fuses. Switches having a dual rating when used with dual element fuses shall have a rating so indicated.

G. 600 Amperes or Less Fuses: UL Class RKI with a minimum interrupting rating of 200,000 Amperes, Bussmann "Low-Peak Type" or equal.

PART 3 -- EXECUTION

3.1 GENERAL INSTALLATION

A. Locations: Install switches, disconnects and safety where indicated on the Contract Drawings.

B. Fastenings: Securely fasten switches to structural members or unistrut support as directed by the manufacturer.

C. Manual Motor Starters: Install flush mounted for switching motors 3HP and smaller in finished areas. Install surface mounted in equipment rooms and non-finished areas. Where installed above inaccessible ceilings provide access panels.

(END OF SECTION)

SECTION 16250
ELECTRICAL SERVICE AND DISTRIBUTION

PART 1 -- GENERAL

1.1 THE REQUIREMENT

A. The CONTRACTOR shall furnish and install all electrical service sections, distribution switchboards, motor control centers, special control panels and switchboards, control and terminal cabinets, control devices, circuit breakers, and all appurtenant work, complete and operable, all in accordance with the requirements of the Contract Documents.

1.2 RELATED WORK SPECIFIED ELSEWHERE

A. The WORK of the following Sections applies to the WORK of this Section. Other Sections of the Specifications, not referenced below, shall also apply to the extent required for proper performance of this WORK.

1. Section 02310 Earthwork.

2. Section 03300 Cast-in Place Concrete.

3. Section 16020 Municipal Facilities General Electrical Requirements.

4. Section 16290 Municipal Facilities Grounding Systems.

1.3 REFERENCE SPECIFICATIONS, CODES, AND STANDARDS

A. Without limiting the generality of other requirements of these specifications, all work specified herein shall conform to or exceed the applicable requirements of the National Electric Code (NEC), provided, that where a local code or ordinance is in conflict with the NEC, the provisions of said local code or ordinance shall take precedence.

B. All work specified herein shall conform to or exceed the applicable requirements of the referenced portions of he following publications to the extent that the provisions thereof are not in conflict with other provisions of these specifications.

1. Codes:

LAEC	City of Los Angeles Electrical Code, latest adopted edition.

2. Commercial Standards:

ANSI/IEEE C37.20	Switchgear Assemblies, including Metal-Enclosed Bus.
ANSI/NEMA ICS-2	Devices, Controllers, and Assemblies for Industrial Control.
ANSI/UL 1008	Automatic Transfer Switches, Safety Standard for.

IEEE	Institute of Electrical and Electronic Engineers
NEMA	National Electrical Manufacturers Association
NFPA	National Fire Protection Association
UL	Underwriters' Laboratories, Inc.

1.4 CONTRACTOR SUBMITTALS

A. The CONTRACTOR shall submit shop drawings of all Service and Distribution components in accordance with the requirements of Section 16020 Municipal Facilities General Electrical Requirements.

B. The Service Section and the revenue metering compartment shall comply with all utility requirements. After review of shop drawings of the Service Section by the ENGINEER, they shall also be submitted to the utility company for approval prior to fabrication.

1.5 QUALITY ASSURANCE

A. Quality assurance shall be in accordance with the requirements of Section 16020 Municipal Wastewater Facilities General Electrical Requirements.

PART 2 -- PRODUCTS

2.1 GENERAL

A. Materials: All equipment and materials furnished under this specification shall be new, unused and free of defects, and shall be in accordance with the specifications of the Institute of Electrical and Electronic Engineers, National Electrical Manufacturer's Association, National Fire Protection Association, and the National Electrical Code.

B. Equipment: All equipment for the same purpose shall be of the same manufacturer and make.

C. Enclosure Requirements: All outdoor equipment, fixtures, and wiring devices shall be of approved, weatherproof, corrosion-resistant, stainless steel 316 construction.

D. Standard Products: Materials and equipment submitted for approval shall be the cataloged products of companies regularly engaged in the manufacture of such items, shall be the latest standard design that conforms to the specification requirements, and where applicable, shall essentially duplicate material and equipment that have been in satisfactory use for several years.

2.2 SWITCHGEAR (LOW VOLTAGE)

A. Indoor construction shall be of the universal frame type using die-formed welded and bolted members. Enclosing panels shall be 14-gage steel and shall be bolted in place. In addition, indoor switchgear shall conform to the following:

1. Switchgear shall be totally enclosed, enclosure type as indicated on the Drawings and shall have ventilating louvers top and bottom.
Where full length doors are required, they shall have continuous hinges with lockable handles and 3-point catches. All doors at the same switchgear lineup shall be hinged on the same side. Doors shall have welded corners ground smooth.

2. Bus bar shall be copper fully insulated and shall be silver plated at joints. Bus bars shall be braced for short circuits of 22,000 amperes minimum, or more if so indicated on the Drawings. A full length copper ground bus bar shall be provided at the bottom of the switchgear enclosure.

B. Outdoor construction shall be as described in the previous paragraph, except that louvers shall have dust filters. Switchgear installation shall be rodent- and bird-proof. Outdoor switchgear construction shall be, NEMA 3Rnon-walk-in type with sufficient enclosed aisle space provided to allow the outer door to close with draw-out circuit breakers in the “test” position. Every other section (cubicle) shall be equipped with a switched overhead lighting fixture. One convenience receptacle shall be provided for the entire enclosure. An insulating compound shall be applied to the interior surface of roof panels for condensation control.

C. Floor-standing switchgear, i.e., distribution switchboards, motor control centers, and main service switchboard, shall be cataloged products of the main circuit breaker manufacturer. Floor-standing switchgear shall be shipped fully assembled and tested. If not practicable to ship fully assembled, the units shall be assembled and tested, then broken down for shipping.

2.3 MAIN SERVICE SWITCHBOARD

A. General: The main service switchboard shall consist of a free-standing assembly which complies with the Contract Documents, with particular reference to the provisions of the above paragraph entitled, "Switchgear (Low Voltage)".

B. Switchboard: Switchboard shall be front-accessible. Switchboards shall be constructed to accommodate additional distribution sections. The switchboard shall consist of the sections described in the following paragraphs herein.

1. Service Section: The service section shall consists of an underground pull compartment and a revenue metering compartment all to utility requirements.

2. Main Circuit Breaker Compartment: The main circuit breaker compartment's circuit breaker unit shall have the ratings shown on the Drawings. Service neutral shall be brought to a terminal in the main circuit breaker compartment. A disconnecting link shall be provided in a bus bar connection between the neutral terminal and the switchboard ground bus.

   Circuit breaker shall be individually mounted stationaryf the size and type indicated. Motorized spring charging shall be provided where indicated.

3. Distribution Section: The distribution section shall consist of stationary, group mounted molded case circuit breakers of the size indicated. Full length vertical bus shall be provided for each distribution section. Rating shall be 300-amperes, or more where indicated on the Drawings.

2.4 SWITCHBOARD INSTRUMENTS

A. Indicating instruments shall be approximately 4-1/2-inch square with 250-degree scales and white dials with black graduations. Case shall be semi-flush mounted with anti-glare glass. Front access zero adjustment shall be provided. Indication accuracy shall be within 2 percent.

B. Instrument transformers shall comply with ANSI/IEEE C37.20 and shall have standard accuracy for relaying with the burdens imposed. Mechanical and thermal ratings of current transformers shall be coordinated with short circuit ratings of related circuit breakers. Potential transformers shall be mounted on a disconnecting rack and shall have primary fuse protection.

C. Protective relays shall be mounted within draw-out cases; current measuring circuits shall be fitted with jacks to short circuit current transformers when relays are withdrawn. Relays shall have means for testing measuring circuitry with the relay in place. Relays shall be solid state type General Electric, Westinghouse or equal.

2.5 SWITCHES

A. Disconnect Switches: Disconnect switches shall be externally operated with quick-make/quick-break mechanisms. The handle shall be interlocked with the switch cover by means of a defeatable interlock device. The switch shall be lockable in the "off" position. Switches shall have nameplates stating manufacturer, rating, and catalog number. Heavy-duty switches shall have arc suppressors, pin hinges, and shall be horsepower rated at 600-volt. Horsepower rated switches shall be provided for all motor circuits above 3 horsepower. In smaller motor circuits switches shall be general duty. Switch enclosure shall be NEMA 1, NEMA 3, NEMA 4, NEMA 4X, or as shown and shall be as manufactured by Square D, GE, ITE, or equal.

B. Pushbutton Switches: The pushbutton stations shall be heavy-duty type with NEMA enclosures, of the type as required in these Specifications, such as Allen Bradley Bulletin 800, Square D Class 9001, or equal. Where required, provisions shall be made for padlocking the "stop" button. Pushbutton devices in damp or outdoor locations shall be fitted with appropriate neoprene boots.

2.6 TRANSFORMERS (AIR COOLED)

A. All indoor transformers shall be air cooled, dry-type, and shall conform to the latest applicable NEMA and ANSI standards. Transformers rated 3 kva and below shall be insulated with 80 degree C insulation; 5 to 25 kva with 120 degree C insulation.

B. Transformers rated 15 kVA and above shall have 2-1/2 percent taps above and below 480-volts. Transformers shall be floor or wall-mounted type by General Electric, Square D, or equal.

2.7 OVERCURRENT PROTECTIVE DEVICES

A. Circuit breakers having a frame size of 150-amperes or less shall be molded-case type with thermal magnetic non-interchangeable, trip-free, sealed trip units. Breaker contact material shall be a non-weldable silver alloy. Breakers shall have arc-extinguishing chutes. Ground fault tripping shall be provided as required and as specified in the short circuit and coordination study.

B. Circuit breakers with a frame size of 225-amperes to 600-amperes shall be molded case with interchangeable thermal and adjustable magnetic trip elements but otherwise shall be as specified in the paragraph above. Ground fault protection, where required, shall be provided by means of a core balance transformer encircling all feeder leads. The transformer shall energize a surface-mounted, solid-state relay, adjustable from 10-20 percent of phase current with an adjustable time delay of zero to 36 cycles. Ground fault protection shall include a test panel containing indication and test tripping circuits.

C. Circuit breakers with a frame size more than 600-amperes shall be molded case as described in the foregoing Paragraph B, except if power circuit breakers are indicated. Molded case circuit breakers shall have an integral, solid state over-current trip unit and line current sensors. Trip units shall have adjustable long time tripping in the range of 60 to 100 percent of continuous rating, instantaneous tripping adjustable in the range of 300 to 1000 percent of continuous rating, and ground fault tripping adjustable in the range of 20 to 60 percent of continuous rating with adjustable delay of approximately 5 to 40 cycles.

PART 3 -- EXECUTION

3.1 INSTALLATION - GENERAL

A. All electrical equipment materials shall be installed securely in place. Equipment shall be mounted parallel and perpendicular to the walls, floors, and ceilings.

B. All anchors and fasteners shall be types designed for the intended purpose and shall be capable of adequately, safely, and permanently securing the material in place. Generally, screws shall be used on wood surfaces, masonry anchors in concrete or brick, toggle bolts on hollow walls, machine screws, bolts, or welded studs on steel. Nails shall be used only for temporary attachment or support.

C. Omissions or conflicts on Drawings or between Drawings and Specifications shall be brought to the attention of the ENGINEER for clarification before proceeding with the work.

D. The CONTRACTOR shall make all necessary provisions throughout the site to receive the work as construction progresses and shall furnish and install adequate backing, supports, inserts, and anchor bolts for the hanging and support of all electrical fixtures, conduit, panelboard, and switches, and shall furnish and install sleeves through walls, floors, or foundations where electrical lines are required to penetrate.

E. Floor standing equipment shall be leveled with shims as required to maintain horizontal surfaces within 1/32-inch per horizontal foot; after leveling, equipment shall be anchored, then grouted so that no space is existing between concrete and equipment support beams.

3.2 SECONDARY GROUNDING

A. The CONTRACTOR shall install secondary grounds in accordance with Section 16290 Municipal Facilities Grounding Systems.

END OF SECTION

SECTION 16270
SERVICE AND DISTRIBUTION SWITCHBOARD

PART 1-- GENERAL

1.1 SCOPE

A. Work Included: Not limited to the following:

1. Fabricate, provide and install service and distribution switchboards as indicated on the Contract Drawings and hereinafter specified.

2. Comply with the General Conditions, the General Requirements and the requirements of Section 16020 of this Division 16, concerning definitions, guarantees, submittals, as-builts, clean-up, etc. as applicable to the Work of this Section.

3. Examine all other Sections for work related to those Sections which are required to be included as Work under this Section.

1.2 RELATED WORK

A. Related Sections: The following sections contain requirements that relate to this section:

1. Section 16560 " Municipal Facilities Electrical Commissioning Requirements " for commissioning requirements.

2. Section 16570 " Municipal Facilities Electrical Testing Requirements" for testing requirements.

1.3 QUALITY ASSURANCE

A. Conform to applicable provisions of Sub-Section 1.7 of Section 16020.

B. Conform to applicable Codes and NEMA, ANSI and IEEE Standards.

1.4 SUBMITTALS

A. Conform to applicable provisions of Section 01330 of Division 1 - General Requirements and of Sub-Section 1.6G of Section 16020.

B. Shop Drawings shall show and contain the following information:

1. Plans showing top and bottom of switchboards.

2. Front, rear and side elevations of switchboards.

3. Schematic Wiring Diagrams showing the following:

a. One-line diagram with each circuit numbered.

b. Schedule showing circuit number, description and rating of protective device(s).

c. Complete short circuit availability of bus.

4. 1/2" - 1'-0" scale drawings of electrical rooms or areas overall dimensions for equipment layout including space available for conduits and protective devices.

PART 2 -- PRODUCTS

2.1 MATERIALS

A. Each switchboard shall be U.L. listed deadfront, deadrear, completely self-supporting, with the required number of vertical sections bolted together to form one floorstanding switchboard. Construction shall be NEMA Class II with line and load and main bus connections accessible from the front. Provide switchboards of 1000 amperes or greater rating with line and load insulated bus bars. Overcurrent protective devices shall be grouped in convertible type construction. Vertical sections shall have full height bussing and where space for future devices is indicated on the Drawings all the necessary mounting hardware shall be furnished. Switchboards shall include all protective devices and other equipment indicated on the Contract Drawings with the necessary interconnections, instrumentation, and control wiring. Bus shall be copper with plated joints, or tin plated aluminum. Bus bars shall be mounted on supports of high impact-resistant, non-tracking insulating material, and braced to withstand the maximum available fault current as indicated on the Contract Drawings. Other ratings shall be as indicated on the Contract Drawings. Series-connected or "integrated equipment" short circuit ratings shall not be applied in lieu of, or to comply with, short circuit and interrupting capacity ratings indicated on the Drawings, unless specifically approved by the City Engineer. Switchboards shall be as manufactured by Square D. Co., Power Style Class 2700.

B. Service and distribution sections shall contain circuit breakers, fusible switches, and combination motor starters, with shunt trips, motor operators, ground fault protection, and other accessories, as indicated on the Drawings, as well as provisions for utility metering in accordance with the serving electric utility requirements. Each disconnecting means shall be provided with a means for individual padlocking. Switches shall be heavy-duty, quick-make and quick-break, and horsepower rated through 500 HP. Switches rated over 600 amperes shall be bolted pressure contact type. Ratings of disconnecting means and overcurrent protective devices shall be as indicated on the Drawings. Combination motor controllers shall comply with applicable requirements of Section 16200 for Motor Control Centers.

C. Finish: Interior finish shall be a gray lacquer or enamel; exterior finish shall be a gray baked-on enamel or lacquer. Apply all finish coatings over a rust-inhibiting metal primer.

D. Identification: Each switchboard shall have an engraved laminated plastic nameplate identifying the switchboard as designated and located on the Contract Drawings, and indicating voltage, phase, and number of system conductors. For example, "Switchboard MS 277/480V. 3Ø 4W. Lettering shall be white on black finish and 1/4-inch high minimum. Nameplates shall be affixed by a minimum of two escutcheon pins or screws. Each device on the switchboard shall be provided with an engraved plastic nameplate as specified in Section 16190.

PART 3 -- EXECUTION

3.1 GENERAL INSTALLATION

A. Switchboard(s) shall be securely bolted to the flooring or structure. Final attachment means shall be in compliance with the seismic requirements of governing authority. Shop Drawings indicating the bolt down requirements shall be provided by the manufacturer along with all necessary calculations and shall be submitted with the Shop Drawings of the switchboard equipment. Refer

to other Sections of the Specifications related to seismic requirements.

B. Switchboard(s) shall be installed on a level floor, with shims provided where necessary to attain both horizontal and vertical "plumb" conditions.

C. Switchboard(s) equipment shall be protected during construction in such a manner to prevent plaster, paint, dust, etc. from defacing the finish of equipment. Prior to final acceptance of the equipment, the interior of the equipment shall be cleaned of all foreign materials and debris. Any blemishes or defects on the exterior of the equipment shall be repaired by painting the equipment with paint supplied by the manufacturer of the equipment to match the factory finishes.

D. No operating handles in any switchboard shall be located above 6-foot 6-inches above finish floor. Code clearances on all sides of the switchboard equipment shall be maintained.

E. Switchboards shall be mechanically grounded to the grounding system.

F. Furnish ammeters, voltmeters, current and potential transformers, test blocks, control switches, fuses and circuit breakers, and other devices as indicated on the Drawings. Meters shall be switchboard type semi-flush mounted, with phase selector switches. The height of all devices shall comply with Code and utility company requirements with the switchboard installed on a 2-inch high concrete pad.

G. For solidly grounded "wye" services of more than 150 volts to ground, but not exceeding 600 volts phase to phase, provide ground fault protection of equipment for each service disconnecting means for services rated 1000 amperes or more, without a single main disconnecting means. Provide ground fault protection of equipment for other systems as indicated on the Drawings.

H. Ground fault sensors shall be zero sequence type unless indicated otherwise on the Drawings. Trip settings shall be as indicated on the Drawings or as directed by the City Engineer.

I. Protection: Keep switchboards covered during construction operations. Clean interior and exterior after all connections are completed. Factory connections shall be checked and re-torqued tight as required. Damage shall be field or factory repaired to a condition acceptable to the City Engineer at no added cost to the City.

J. Operational Test of the ground fault protection system using the primary current injection method shall be performed by qualified personnel with suitable testing/recording equipment in the presence of the City Engineer. Provide the City Engineer with a "Certified Test Report" including test parameters.

3.2 COMMISSIONING OF SWITCHGEAR AND SWITCHBOARD ASSEMBLIES

A. General:

1. Inspect for physical damage.

2. Compare equipment nameplate information with latest single line diagram and report discrepancies.

3. Inspect for proper alignment, anchorage and grounding.

4. Check tightness of accessible bolted bus joints by calibrated torque wrench method. Refer to manufacturer's instruction for proper foot pound levels.

5. Spot check breaker settings against Short Circuit Study.

6. Key interlock systems shall be physically tested to insure proper function.

   a. Closure attempt shall be made on locked open devices. Opening attempt shall be made on locked closed devices.
   b. Key exchange shall be made with devices operated in off-normal positions.

7. All doors, panels and sections shall be inspected for paint, dents, and scratches.

(**END OF SECTION)**

SECTION 16290
MUNICIPAL FACILITIES GROUNDING SYSTEMS

PART 1 -- GENERAL

1.1 SCOPE

A. Required: Provide and ground electrical systems completely and effectively as required by Code and herein specified.

B. Comply with the General Conditions, General Requirements and the requirements of Section 16020 of this Division 16 concerning definitions, guarantees, submittals, as-builts, clean-up, etc. as applicable to work of this Section.

1.2 SUBMITTALS

A. General: Submit each item in this article according to the conditions of the Contract and Division 1 Specifications 01330.

B. Product Data for grounding rods, connectors and connection materials, and grounding fittings.

C. Field tests and observation reports certified by the testing organization and indicating and interpreting the test reports for compliance with performance requirements.

1.3 RELATED WORK

A. Related Sections: The following sections contain requirements that relate to this section:

1. Section 16560 "Municipal Facilities Electrical Systems Commissioning" for commissioning requirements.

2. Section 16570 "Municipal Facilities Electrical Testing Requirements" for testing requirements.

1.4 QUALITY ASSURANCE:

A. Testing Agency Qualifications: A “National Recognized Teating Laboratory” (NRTL) As defined in OSHA Regulation 1910.7.

B. Comply with NFPA 70.

C. Comply with UL 467.

D. Listing and Labeling: Provide products specified in this Section that are listed and labeled.

1. The Terms “Listed” and “Labeled”: As defined in the National Electrical Code Article 100.

2 Listing and Labeling Agency Qualifications: A “Nationally Recognized Testing Laboratory” (NRTL) as defined in OSHA Regulation 1910.7.

1.5 REFERENCE STANDARDS:

A. NFPA 70: National Electrical Code – Article 250.

B. Federal Information Processing Standard Publication #94 “Guideline on Electrical Power for ADP Installations”.

C. IEE Std. 142-1982 “Grounding of Industrial and Commercial Power System (GREEN Book).

D. IEE Std. 1100-1992 “Powering and Grounding Sensitive Electronic Equipment” (Emerald Book).

1.6 SYSTEM DESCRIPTION

A. Ground the electrical service system neutral at service entrance equipment to metallic water service and to concrete encased grounding electrodes.

B. Ground each separately-derived system neutral to nearest effectively grounded metallic water pipe.

C. Provide telephone and data system grounding conductor at main terminals of respective system bonded to service entrance grounding electrode.

D. Bond together system neutrals, service equipment enclosures, exposed non-current carrying metal parts of electrical equipment, metal raceway systems, grounding conductor in raceways and cables, receptacle ground connectors, metallic plumbing systems and concrete encased electrode.

PART 2 -- PRODUCTS

2.1 MATERIALS

A. Grounding and Bonding Conductors: Soft-drawn stranded copper.

B. Buried or Concealed Joints: Exothermic welded, inspected and approved the Los Angeles City Building Department before concealment.

C. System grounding conductors shall be a minimum of #3 AWG unless otherwise indicated, and shall be continuous without joints or splices.

D. Bolted Connections: Everdur hardware, bolts, and lock washers or equal.

E. Welded Connections: Either Erico Cadweld Process or Continental Industries Thermoweld Process or equal.

F. Compression Connections: Thomas & Betts Series 5300 fittings or equal. Use manufacturer's specific instructions and tools for each connection.

G. Ground Rods: Copperweld Steel Company or equal. Provide 3/4 inch copperclad steel driven ground rods, 10 feet long, UL listed, in each manhole and where indicated on Contract Drawings.

PART 3 -- EXECUTION

3.1 GENERAL INSTALLATION

A. Grounding and Bonding: Provide in accordance with all requirements of NEC and other applicable codes, Contract Drawings and the following descriptions. Comply with the codes as a minimum requirement with specifications where they are more stringent. Ground each electrical service to cold water systems and provide supplemental grounding as follows:

1. Structural Steel Electrode: Bond the structural steel frame of the building or structure to the point of ground at service equipment with a continuous bonding conductor equal in size to the grounding electrode conductor, but not smaller than No. 4 AWG or

2. Concrete-Encased Electrode: Provide three minimum No. 4 horizontal reinforcing bars in and near the bottom of the building or structure footing, each with a minimum continuous (no splices) length of 20 feet. Install a continuous bonding conductor equal in size to the grounding electrode conductors, but not smaller than No. 4 A.W.G., bonded to each reinforcing bar by means of corrosion-resistant clamps or welding, to the point of ground at service equipment. The bonding conductor shall be installed in schedule 40 rigid PVC conduit from a point within the footing continuous to the service equipment. A single size 3/0 bare copper conductor with a minimum continuous length of 20 feet may be used in lieu of the three No. 4 reinforcing bars.

B. Separate Buildings or Structures: When two or more buildings or structures are supplied from a common source or service, the grounding system in each building or structure shall have a grounding electrode connected to the metal enclosure of the building or structure disconnecting means and to the AC system grounded circuit conductor on the supply of the building or structure disconnecting means.

C. Separately Derived Systems: Shall be bonded and grounded in accordance with Code.

D. Customer-Station Transformer: Shall be bonded and grounded in accordance with the requirements of the serving electric utility.

E. Nonmetallic Raceways: A Code-sized green, or green with yellow stripe insulated conductor shall be installed with the circuit conductors, for equipment grounding. Ground conductor shall be installed in raceways with branch circuit wiring where indicated on the Contract Drawings.

F. Communication, Sound, and Signal Systems: Metal raceways and enclosures shall be grounded as directed by the City Engineer.

G. The interior metallic cold water pipe system shall be bonded to the main grounding electrode by a conductor sized in accordance with Code, but not smaller than No. 8 A.W.G.

H. Telephone service main backboard or cabinet shall be grounded in accordance with requirements of the telephone serving facility.

I. All grounding and bonding conductors shall be installed with sufficient slack to avoid breaking due to settlement and movement of conductors at attached points.

J. Flexible Conduit: Where equipment grounding or bonding conductors are required they shall be installed inside the conduit except bonding conductors may be installed exterior of the conduit if not over 3 feet maximum length, not smaller than No. 8 A.W.G., and if secured to the conduit at 6 inch. Flexible conduit not to be used as a ground path. Include code size green conductors in all flexible conduit.

K. Transformers and other isolated neutrals shall be grounded from the neutral bushing or connector to grounding electrodes, building steel or metallic code water pipe system.

L. All conduit stub-ups shall be grounded and where multiple stub-ups are made within an equipment enclosure such as a switchboard, they shall be equipped with grounding bushings and bonded together to the enclosure, and the enclosure ground bus with code sized copper conductors.

M. Metallic conduits, wireways, metal enclosures of busways, electrical equipment housing and all non-current carrying metallic parts shall be grounded. The metallic conduit system shall be used for equipment and enclosure grounding but not as a system ground conductor.

3.2 MEASUREMENT OF RESISTANCE TO GROUND

A. All Systems**:** Measure by the "direct" method or the "Fall of Potential" method. The "direct" method, or two terminal test, includes a Megger Earth Tester with terminals connected to the electrode under test and to an all metallic water pipe system. The following limitations apply to this method:

1. The water pipe system must be extensive enough to have a negligible resistance.

2. The water pipe system must be metallic throughout, without any insulating couplings or flanges.

3. The earth electrode under test must be far enough away from the water pipe system to be outside its sphere of influence. Rule of thumb: Distance from the earth-electrode system to the water pipe system should be about 10 times the radius of the electrode or grid to obtain a measurement within an accuracy of p 10%.

4. Submit test report of the main building grounding electrode's resistance to ground to the City Engineer.

B. Test each receptacle or branch circuit breaker having ground-fault circuit protection to assure that the ground-fault circuit interrupter will not operate when subjected to a ground-fault current of less than 4 milliamperes and will operate when subjected to a ground-fault current exceeding 6 milliamperes. Perform testing using an instrument specifically designed and manufactured for testing ground-fault circuit interrupters. "TEST" button operation will not be acceptable as a substitute for this test. Replace receptacles that do not shutoff power with 5/1000 of an ampere within 1/40th of a second and retest. Submit test report signed by Test Engineer who performed this test.

(END OF SECTION)

SECTION 16320
TRANSFORMERS

PART 1- GENERAL

1.1 SCOPE

A. Required**:** Provide and install dry type transformers work as indicated on the Contract Drawings and Schedules and herein specified.

B**.** Comply with the General Conditions, General Requirements and the requirements of Section 16020 of this Division 16 concerning definitions, guarantees, submittals, as-builts, clean-up, etc. as applicable to work of this Section.

1.2 RELATED WORK

A. Related Sections: The following sections contain requirements that relate to this section:

1. Section 16560 "Municipal Facilities Electrical Systems Commissioning" for commissioning requirements.

2. Section 16570 "Municipal Facilities Electrical Testing Requirements" for testing requirements.

1.3 QUALITY ASSURANCE

A. Manufacturers: Firms regularly engaged in manufacture of power/distribution transformers of types and ratings required, whose products have been in satisfactory use in similar service for not less than 5 years.

B. Installer's Qualifications: Firm with at least 5 years of successful installation experience on projects utilizing electrical power and distribution transformers similar to those required for this project.

C**.** NEC Compliance: Comply with NEC as applicable to installation and construction of electrical power/distribution transformers.

D**.** ANSI Compliance: Comply with applicable requirements of ANSI Standards C57-Series pertaining to power/distribution transformers.

E**.** NEMA Compliance: Comply with requirements of NEMA Std Pub/No.'s ST 20; "Dry-Type Transformers for General Applications", TR 1, and TR 27.

F. UL Compliance: Comply with applicable requirements of ANSI/UL 506; "Safety Standard for Specialty Transformers". Provide power/distribution transformers and components which are UL-listed and labeled.

G. NESC Compliance: Comply with applicable requirements of National Electrical Safety Code (ANSI Std C2) pertaining to indoor installation of transformers.

1.4 QUALITY ASSURANCE

A. Testing Agency Qualifications: In addition to requirements specified in Section 01453, "Sampling, Testing and Fabrication Inspection" an independent testing agency shall meet OSHA criteria for accreditation of testing laboratories, Title 29, Part 1907; or shall be a full-member company of the International Electrical Testing Association.

1. Testing Agency's Field Supervisor: Person currently certified by the InterNational Electrical Testing Association or the National Institute for Certification in Engineering Technologies, to supervise on-site testing specified in Part 3.

B. Listing and Labeling: Provide transformers specified in this Section that are listed and labeled.

1. The Terms "Listed" and "Labeled": As defined in NFPA 70, Article 100.

2. Listing and Labeling Agency Qualifications: A "Nationally Recognized Testing Laboratory" as defined in OSHA Regulation 1910.7.

C. Comply with IEEE C2.

D. Comply with NFPA 70.

1.5 SUBMITTALS

A. Conform to applicable provisions of Section 01330 and Section 16020, and as herein specified.

B. Product Data: Submit manufacturer's technical product data including rated KVA, frequency, primary and secondary voltages, percent taps, polarity, impedance and certification of transformer performance efficiency at indicated loads, percentage regulation at 100% and 80% power factor, no-load and full-load losses in watts, % impedance at 75 deg. C, hot-spot and average temperature rise above 40 deg. C ambient temperature, sound level in decibels, and standard published data.

C. Shop Drawings: Submit manufacturer's drawings indicating dimensions, and weight loadings for transformer installations, showing layouts, mountings and supports, spatial relationship to panelboards and associated equipment, include transformer connections to electrical equipment.

D. Wiring Diagrams: Submit wiring protection and control diagrams for power distribution transformers. Clearly differentiate between portions of wiring that are manufacturer-installed and portions to be field-installed.

PART 2 -- PRODUCTS

2.1 ACCEPTABLE MANUFACTURERS

A. Available Manufacturers: Subject to compliance with requirements, manufacturers offering products which may be incorporated in the work included, but are not limited to the following:

1. Acme Electric;

2. Eaton;

3. General Electric;

4. Schneider Electric/ Square D;

5. Siemens;

6. Or equal.

2.2 DISTRIBUTION TRANSFORMERS

A. General: Except as otherwise indicated, provide manufacturer's standard materials and components as indicated by published product information, designed and constructed as recommended by manufacturer, and as required for completed installation.

B. 15 KVA and Above: Shall have drip-proof ventilated enclosures and copper coils of continuous wound construction impregnated with non-hygroscopic thermosetting varnish. Cores shall be constructed of high grade non-aging silicon steel, with high magnetic permeability and low hysteresis losses. Flux densities shall be well below the saturation point. Vibration-absorbing mounts shall be provided between the core/coil and the mounting base. Provide four 2-1/2 percent full capacity primary taps, two above and two below, the rated nominal voltage. Terminals shall be accessible from the front. Insulation materials shall be in accordance with NEMA ST20 standards for a 220 degree C. U.L. recognized insulation system. Full load temperature rise shall not exceed 80 degrees C. in a 40 degree C. ambient.

C. Less than 15 KVA: Wall mounted type, copper coils; end load temperature fire shall not exceed 115 degrees C. in a 40 degree C. ambient. Transformers shall be Sorgel Class 7410, 7411, as manufactured by Square D. Company. Or equal.

D. Finishes: Coat interior and exterior surfaces of transformer, including bolted joints, with manufacturer's standard color baked-on enamel.

2. 3 CONTROL AND SIGNAL TRANSFORMERS

A. Units comply with NEMA ST 1 and are listed and labeled as complying with UL 506.

B. Ratings: Continuous duty. If rating is not indicated, provide capacity exceeding peak load by 50 percent minimum.

C. Description: Self-cooled, 2 windings.

2.4 UNDERGROUND TRANSFORMER OR TELEPHONE VAULTS

A. Provide a complete installation, including pulling irons, racks, grounding, drains, ladders, and other appurtenances as indicated on the Contract Drawings.

B. Vaults and installation shall comply with requirements of the serving utility, where applicable.

C. Shop Drawings: Submit shop drawings to the City Engineer for approval, indicating details of construction, and for pre-cast type, the manufacturer.

PART 3 -- EXECUTION

3.1 INSPECTION

A. Installer must examine areas and conditions under which power/distribution transformers and ancillary equipment are to be installed, and notify Contractor in writing of conditions detrimental to

proper completion of the work. Do not proceed with the work until satisfactory conditions have been corrected in a manner acceptable to Installer.

B. Coordinate transformer installation work with electrical raceway and wire/cable work, as necessary for proper interface.

C. Tighten electrical connectors and terminals, including screws and bolts, in accordance with equipment manufacturer's published torque tightening values for equipment connectors. Where manufacturer's torquing requirements are not indicated, tighten connectors and terminals to comply with tightening torques specified in UL Std 486A and B.

3.3 GROUNDING

Provide equipment grounding connections for power/ distribution transformers as indicated. Tighten connections to comply with tightening torques specified in UL Std 486A to assure permanent and effective grounding.

3.4 CLEANING

A. On completion of installation, inspect components. Remove paint splatters and other spots, dirt, and debris. Repair scratches and mars on finish to match original finish. Clean components internally using methods and materials recommended by manufacturer.

3.5 INSTALLATION

A. Comply with safety requirements of IEEE C2.

B. Arrange equipment to provide adequate spacing for access and for circulation of cooling air.

C. Identify transformers and install warning signs according to Section 16190, "Electrical Identification."

D. Tighten electrical connectors and terminals according to manufacturer's published torque-tightening values. If manufacturer's torque values are not indicated, use those specified in UL 486A and UL 486B.

3.6 TESTING

A. Prior to energizing of transformers, check all accessible connections for compliance with manufacturer's torque tightening Specifications.

B. Prior to energizing, check circuitry for electrical continuity, and for short-circuits.

C. Upon completion of installation of transformers, energize primary circuitry at rated voltage and frequency from normal power source, and test transformers, including, but not limited to, audible sound levels, to demonstrate capability and compliance with requirements. Where possible, correct malfunctioning units at site, then retest to demonstrate compliance; otherwise, remove and replace with new units or components, and proceed with retesting.

(END OF SECTION)

SECTION 16330
PANELBOARDS

PART 1 -- GENERAL

1.1 SCOPE

A. Required: Provide and install complete equipment including circuit breakers and panelboards as indicated on the Contract Drawings and herein specified.

B. Comply with the General Conditions, General Requirements and the requirements of Section 16020 of this Division 16 concerning definitions, guarantees, submittals, as-builts, clean-up, etc. as applicable to work of this Section.

1.2 RELATED WORK

A. Related Sections: The following sections contain requirements that relate to this section:

1. Section 16560 "Municipal Facilities Electrical Systems Commissioning" for commissioning requirements.

2. Section 16570 "Municipal Facilities Electrical Testing Requirements" for testing requirements.

1.3 QUALITY ASSURANCE

A. Comply with applicable provisions of Subsection 1.2 of Section 16020.

B. Conform to the applicable provisions of Subsection 1.6 of Section 16020 related to legal requirements and standards including NEMA, ANSI and IEEE Standards, NFPA 70, and Federal Specifications.

1. 4 SUBMITTALS

A. Submit under the provisions of Section 01330.

B. Product Data: For each type of panelboard, overcurrent protective device, accessory, and component indicated. Include dimensions and manufacturers' technical data on features, performance, electrical characteristics, ratings, and finishes.

C. Maintenance Data: For panelboards and components to include in maintenance manuals specified in Division 1. In addition to requirements specified in Section 01770, "Project Closeout," include the following:

1. Manufacturer's written instructions for testing and adjusting overcurrent protective devices.

2. Time-current curves, including selectable ranges for each type of overcurrent protective device.

PART 2 -- PRODUCTS

2.1 GENERAL REQUIREMENTS

A. Cabinets to House Panelboards: Cabinets shall be formed of galvanized metal, chemically cleaned, and all breaks in galvanizing shall be painted with metallic aluminum paint.

Minimum size: 20 inches wide by 5-3/4 inches deep. Trims and doors shall be chemically cleaned. Provide ANSI synthetic alkalyd factory enamel finish on the exterior and interior of panels. Provide for circuit directory behind door with glass or heavy plastic protection. Cabinets shall be flush or surface mounted type as indicated with screw cover, hinged doors with flush lock keyed to operate from one key. Cabinets greater than three feet shall have three trim bolts on each side.

B. Identification: Each panelboard shall have an exterior engraved laminated plastic nameplate identifying the panelboard as designated on the Drawings and indicating voltage, phases, and number of system conductors. For example:

"Panel A 277/480V. 3ph, 4W". Lettering shall be white on black finish and 3/16 inch high minimum. Nameplates shall be affixed with a minimum of two escutcheon pins or screws. Each circuit breaker shall have a permanent metal or plastic number to identify each circuit. A circuit schedule card and holder shall be mounted on the inside of the door and covered with plastic.

C. Protective Devices:

1. Protective devices, main, branch or sub-feed shall be thermal-magnetic-molded-case circuit breakers, bolt-on type ampacities as scheduled on Drawings. Provide single handle, common trip for two and three-pole units. Handle ties are not acceptable

2. Circuit Breakers, 250A and Larger: Adjustable magnetic trip setting

3. Electronic Circuit Breakers, 400A and Larger: RMS sensing; field-replaceable rating plug; with the following field-adjustable settings:

   a. Instantaneous trip.

   b. Long- and short-time pickup levels.

   c. Long- and short-time time adjustments.

   d. Ground-fault pickup level, time delay, and I^2t response. Where indicated on the drawings.

4. GFCI Circuit Breakers: Single- and two-pole configurations with 5-mA trip sensitivity, where indicated on the lighting and appliance panelboards.

5. Molded-case circuit breakers shall be suitable for application; Type SWD for switching fluorescent lighting loads; Type HACR for heating, air-conditioning, and refrigerating equipment.

D. Electrical Equipment Adjacent to Panelboards: Where scheduled provide a separate cabinet with screw cover and hinged door with flush lock keyed alike with panelboard. A single cabinet may be used when a compartment (with appropriate barriers) under separate lockable door and cover is provided.

E. Finish: As specified for service switchboards in Section 16270 service and distribution switchboards.

2.2 DISTRIBUTION PANELBOARDS

A. Each distribution panelboard shall be a deadfront, deadrear, U.L. listed, circuit breaker type with copper buses and comply with Federal Specification W-P-115a. Construction shall be NEMA Class I. Electrical ratings shall be as indicated on the Drawings.

Series-connected or "integrated equipment" short circuit ratings shall not be applied in lieu of, or to comply with, short circuit and interrupting capacity ratings indicated on the Drawings unless specifically approved by the City Engineer. Provide fronts with flush cylinder tumbler locks, trim clamps, and concealed hinges.

Double doors or doors over 48 inches high shall have 3 point latching. Provide 2 keys for each panelboard. Furnish panelboards with main lugs or main circuit breakers and all other circuit breakers as indicated on the drawings. Each circuit breaker shall be provided with a means for individual padlocking. Distribution panelboards shall be Square D. Co. I-line type or equal.

2.3 LIGHTING AND APPLIANCE PANELBOARDS

A. Each lighting and appliance panelboard shall be a U.L. listed circuit breaker type with copper buses and meet Federal Spec. W-P115a. Electrical ratings shall be as indicated on the Drawings. Series connected or "integrated equipment" ratings shall not be applied in lieu of or to comply with short circuit and interrupting ratings indicated on the Drawings, unless specifically approved by the City Engineer. Provide fronts with flush cylinder tumbler locks, trim clamps, and concealed hinges. Provide two keys for each panelboard. Furnish panelboards with main lugs or main circuit breakers and all circuit breakers as indicated on the Drawings.

B. Each circuit breaker shall be provided with a means for individual padlocking. Lighting and appliance panelboards shall be Square D. Co. or equal. Type NQO for 120/240 or 208/120 volt systems, and Type NEHB for 480/277 volt systems.

2.4 FABRICATION AND FEATURES

A. Hinged Front Cover: Entire front trim hinged to box and with standard door within hinged trim cover.

B. Directory Card: With transparent protective cover, mounted inside metal frame, inside panelboard door.

C. Bus: Hard-drawn copper, 98 percent conductivity or Tin-plated aluminum.

D. Main and Neutral Lugs: Mechanical type suitable for use with conductor material.

E. Equipment Ground Bus: Adequate for feeder and branch-circuit equipment ground conductors; bonded to box.

F. Future Devices: Mounting brackets, bus connections, and necessary appurtenances required for future installation of devices.

G. Isolated Equipment Ground Bus: Adequate for branch-circuit equipment ground conductors; insulated from box, where indicated on the Drawings.

H. Extra-Capacity Neutral Bus: Neutral bus rated 200 percent of phase bus and UL listed as suitable for nonlinear loads, where indicated on the Drawings.

I. Skirt for Surface-Mounted Panelboards: Same gage and finish as panelboard front with flanges for attachment to panelboard, wall, and ceiling or floor. Provide back, sides and removable front.

J. Feed-through Lugs: Mechanical type suitable for use with conductor material. Locate at opposite end of bus from incoming lugs or main device, where indicated on the Drawings.

PART 3 -- EXECUTION

3.1 GENERAL INSTALLATION OF PANELBOARDS

A. Install equipment square, level and secure to the building structure by bolting.

B. Align top of adjacent panelboards unless specifically noted otherwise. Install panelboards over 29 inches high to mount highest protective device handle a maximum of 6'-6" or 5'-6" for panelboards up to 29 inches high, except where adjacent to taller panelboards.

C. Flush enclosures shall be installed with the front edge flush with combustible finish surfaces and not more than 1/4 inch behind noncombustible finish surfaces, and shall be secured to framing or blocking except where embedded in masonry or concrete.

D. Provide weather-proof gaskets on trims and doors of panelboards located in mechanical areas.

3.2 OTHER APPLICABLE REQUIREMENTS

A. Provide a typewritten circuit directory for each branch circuit. Obtain City facility room numbers and use in final directory.

B. Provide a schematic diagram and sequence of operation for control devices installed under separate door adjacent to panelboards.

C. Install nameplates in accordance with provisions noted in Section 16190 – Electrical Identification.

D. Equip each circuit breaker for electrical discharge lamps with a locking device unless circuit will be switched at panelboard. Equip each circuit breaker for night-light circuits, fire alarm, security and control circuits with a locking device.

E. Provide filler plates for all unused spaces.

F. Stub five 3/4-inch empty conduits from each flush mounted panelboard into accessible ceiling space and cap for future use. Stub four 1-inch empty conduits into raised floor space or below slab not on grade

G. Wiring in Panelboard Gutters: Arrange conductors into groups and bundle and wrap with wire ties after completing load balancing.

3.3 COMMISSIONING

A. Spot check breaker settings against Short Circuit Study

B. Spot check phase balance after system is under load. Ensure proper, thorough and accurate identification of load. Trip breakers and validate load identified. Test GFI breakers.

C. Receptacle Polarity Test: Spot check receptacles installed or reconnected under this contract with a receptacle circuit tester. Tester shall test for open ground, reverse polarity, open hot, open neutral, hot and ground reversed, hot or neutral and hot open.

D. Check circuit labeling by de-energizing circuits while circuit tester is in the receptacle. Labeling shall be checked on the load/receptacle and at the breaker

3.4 CLEANING

A. On completion of installation, inspect interior and exterior of panelboards. Remove paint splatters and other spots. Vacuum dirt and debris; do not use compressed air to assist in cleaning. Repair exposed surfaces to match original finish.

(END OF SECTION)

SECTION 16360
MUNICIPAL FACILITIES LIGHTING

PART 1 -- GENERAL

1.1 SCOPE

A. Furnish and install lighting fixtures, lamps and ballasts as indicated on the Contract Drawings and specified hereinafter.

B. Comply with the General Conditions, General Requirements and the requirements of Section 16020 of this Division 16 concerning definitions, guarantees, submittals, as-builts, etc. as applicable to work of this Section.

1.2 RELATED WORK

A. Related Sections: The following sections contain requirements that relate to this section:

1. Section 16560 "Municipal Facilities Electrical Systems Commissioning" for commissioning requirements.

2. Section 16570 "Municipal Facilities Electrical Testing Requirements" for testing requirements.

1.3 SUBMITTALS

A. Conform to applicable provisions of Section 01330 of the General Requirements and of Subsection 1.6 of Section 16020.

B. Conform to the following as applicable:

1. Ballast catalog indicating lamp wattage, input watts, sound rating, power factor and type of ballast, as well as levels of total harmonic distortion.

2. Photocell data indicating switching capacity, means of adjusting the lighting pickup level and enclosure.

3. Regarding pole-mounted fixtures provide complete data on the pole material, finish, handpole anchoring and fixture attachment and support method for interior fixtures weighing over fifty pounds.

4. Substitutions for specified fixtures, etc. shall be based upon quality of specified fixture construction, light distribution, appearance and maintenance.

5. Provide pictures or cuts of all lighting fixtures with photometric data and isofootcandle curves.

1. 4 QUALITY ASSURANCE

A. Conform to applicable provisions of Subsection 1.7 in Section 16020.

B. Work of this Section shall comply with applicable legal requirements and standards specified in Subsection 1.6 in Section 16020 and the following:

1. ANSI C82.1 Specifications for Fluorescent Lamp Ballasts

2. ANSI C84.4 Specifications for High-Intensity-Discharge Lamp Ballasts (Multiple Supply Type).

3. ASHRAE/IES 90.1 High Efficiency Electrical Lighting Systems.

4. Standards of the Certified Ballast Manufacturer's Association.

5. NFPA 70

C. Demonstrations:

1. Exterior lighting system operation shall be demonstrated during the hours of darkness to indicate that fixtures are properly focused, photocell operation is correct, and that fixture switching functions as intended. Similar requirements shall apply to interior lighting. Through demonstration, the CONTRACTOR shall also verify that panel schedules properly indicate the lighting outlets connected to each circuit.

2. Lighting demonstration shall occur within 2 weeks prior to project acceptance.

1.5 CLEANING PROCEDURES

A. Comply with applicable provisions of Section 01740 of the General Requirements.

B. Clean fixture lenses, diffusers and reflectors just prior to time specified for required demonstrations noted above in 1.3C.

C. Clean damaged finish of fixture trim, including poles and support brackets, prior to required refinishing.

D. Before installation of louvers, diffusers or lenses clean reflector surfaces and lamps of all lighting fixtures of accumulated dust, dirt, grease, plaster, paint, etc.

1. 6 WARRANTY

A. General Warranty: Special warranty specified in this Article shall not deprive Owner of other rights Owner may have under other provision of the Contract Documents and shall be in addition to, and run concurrent with, other warranties made by Contractor under requirements of the Contract Documents.

B. Special Warranty for Batteries: Written warranty, executed by manufacturer agreeing to replace rechargeable batteries that fail in materials or workmanship within specified warranty period.

1. Special Warranty Period for Batteries: Manufacturer's standard, but not less than 10 years from date of Substantial Completion. Full warranty shall apply for first year, and prorated warranty for last nine years.

C. Special Warranties for Fluorescent Ballasts: Written warranty, executed by manufacturer agreeing to replace fluorescent ballasts that fail in materials or workmanship within specified warranty period.

1. Special Warranty Period for Electronic Ballasts: Five years from date of manufacture, but not less than four years from date of Substantial Completion.

2. Special Warranty Period for Electromagnetic Ballasts: Manufacturers' standard warranty, but not less than two years from date of Substantial Completion.

1. 7 EXTRA MATERIALS

A. Furnish extra materials described below that match products installed and that are packaged with protective covering for storage and identified with labels describing contents.

1. Lamps: 10 for every 100 of each type and rating installed. Furnish at least one of each type.

2. Plastic Diffusers and Lenses: 1 for every 100 of each type and rating installed. Furnish at least one of each type.

3. Ballasts: 1 for every 100 of each type and rating installed. Furnish at least one of each type.

4. Globes and Guards: 1 for every 20 of each type and rating installed .Furnish at least one of each type.

PART 2 -- PRODUCTS

2.1 LIGHTING SYSTEMS GENERAL REQUIREMENTS

A. Conform to ASHRAE/IES 90.1-1989 Standards for High Efficiency Electrical Lighting Systems.

B. Lighting fixtures shall have all parts and fittings necessary for complete and proper installation.

C. Where both catalog numbers and narrative descriptions are indicated, the narrative description requirements shall take precedence and prevail.

D. All fixtures of one type shall be one manufacturer and of identical finish and appearance.

E. Fixture types shall be as indicated on the Contract Drawings. However, if the fixture type is not shown, the bid shall be based on installing fixtures specified in similar areas.

F. Recessed fixtures in suspended ceilings shall be free of light leaks below ceiling and shall have adequate ventilation and clearance.

G. Fixtures in exterior locations, wash-down areas, wet or moist locations shall bear a UL label for installation in wet or moist areas or locations.

H. All exposed metal parts of exterior lighting fixtures shall be stainless steel or anodized aluminum with specified finish over. Screws and fastening shall be stainless steel.

I. Complete units and all electrical components for H.I.D., fluorescent, incandescent and special fixtures shall bear the Underwriters' Laboratories, Inc., IBEW and Electrical Testing Laboratory labels.

2. 2 FLUORESCENT FIXTURES (N/A)

2. 3 INCANDESCENT FIXTURES (N/A)

2.4 LAMPS

A. General: Lamp shall be new and of wattage size and type indicated or as required for the particular fixture and or ballast installed. For high pressure sodium lamps, provide "color corrected" version of wattages specified where available.

2.5 BALLASTS (N/A)

2. 5 EXIT SIGNS

A. General Requirements: Comply with UL 924 and the following:

1. Sign Colors and Lettering Size: Comply with authorities having jurisdiction.

2. Lamps for Self-Luminous Operation: Light-emitting diodes (LED's) 70,000 hours minimum rated lamp life.

2.6 LIGHTING CONTROLS

A. General: Provide a time switch, photocell, dimming system, lighting control system performing all functions shown.

B. Time Switch: See details in Section 16550.

C. Photocells:

1. Provide automatic ON/OFF switching photo control device, completely self-contained in the die-cast aluminum housing, not affected by moisture, vibration, or temperature changes; ON at dusk and OFF at dawn; time delay feature to prevent false switching; and field adjustable to control operating levels.
Provide a by-bass switch to override photocell.

2. Approved Manufacturers:

1. Tork 2100 Series;

2. Or equal.

D. Lighting Control Panel (N/A)

2.7 FOUNDATIONS

Install required number and type of reinforced concrete pole bases as indicated on the Contract Drawings.

PART 3 -- EXECUTION

3. 1 INSTALLATION OF LIGHTING FIXTURES (LUMINARIES)

A. General:

1. Install fixtures in a manner recommended by the fixture manufacturer and accepted by the City Engineer.

2. Furnish and install all additional ceiling bracing, hanger supports, and other structural reinforcements to the building and to concrete pole bases required to properly and safely mount luminaires, all acceptable to the City Engineer.

3. Be responsible for handling the luminaires, installing plumb and level, and keeping luminaires clean.

4. Where luminaires are wall mounted and a mounting height is indicated in the Luminaire Schedule or on the Contract Drawings, the height is from the bottom of the luminaire to finished floor or finished grade, whichever is applicable.

5. Where luminaires are pendant-mounted and a mounting height is indicated in the Luminaire Schedule or on the Contract Drawings, the height is from the bottom of the luminaire to finished floor.

6. Provide each luminaire outlet box with a galvanized luminaire stud to fit the luminaire selected.

7. Provide pendant-mounted luminaires with swivel type hangers and canopies as approved by the city ENGINEER. Finish hangers and canopies to match luminaires, unless otherwise noted. Use twin stem hangers on single luminaires.

8. After construction of total project is completed, remove all labels and other markings, wash dirty luminaires inside and out with a nonabrasive mild soap or cleaner. Clean luminaire plastic lenses with antistatic cleaners only. Touch up all painted surfaces of luminaires with high-grade exterior enamel, and poles with paint supplied by manufacturer.

B. Finished Areas:

1. Locate luminaires where shown on the Architectural Reflected Ceiling Plans and Electrical Site Plan.

2. Install all luminaires straight and true with reference to adjacent walls and where mounted on tiled ceilings; locate luminaires symmetrically with the tile pattern as shown on the Drawings. In all cases, locate centerlines of luminaires either on centerline of tile or on joint between adjacent tile runs, as best suits luminaire spacing shown.

3. Provide surface-mounted luminaires, not accepted for installation on combustible low-density cellulose fiberboard, with accepted spacers to mount luminaires 1-1/2-inches from the ceiling surface.

4. Provide flush and recessed luminaires installed in ceilings with junction boxes located at least 1-foot from luminaires. Provide wiring from junction box to luminaire of temperature rating as required by the luminaire in not less than 4-feet, but no more than 6-feet of flexible steel conduit. In concealed locations, install junction boxes to be accessible by removing luminaire.

5. Install all recessed luminaires tight with the finished surface so that no spill light will show between the ceilings and the sealing rings, and furnish plaster frames when required by ceiling construction.

6. All fixtures installed in gypsum board ceilings or plaster soffits shall be provided with metal frames. Fixtures in concrete shall be steel housing with bitumastic paint finish. Fixtures shall be compatible with type of ceiling.

7. Exterior fixtures requiring exposed exterior boxes shall be mounted on approved cast boxes equipped with suitable gaskets.

8. Support recessed fluorescent fixtures to building structure independently of ceiling system with steel wires 12 AWG at each corner suspended of each fixture. Wires to have 1/4 inch slack.

9. All adjustable lighting fixtures shall be aimed (during non-daylight hours) and set to the satisfaction of, and in the presence of, the City Engineer.

C. Unfinished Areas:

1. Install all luminaires straight and true with reference to adjacent walls and structural members. Locate luminaires symmetrically in the pattern shown on the Contract Drawings.

2. Coordinate luminaire locations with other utility systems (e.g., Plumbing, HVAC).

Relocate luminaires to avoid conflict with these other systems and to avoid blockage of luminaire light output per city engineer's direction.

3.2 STEMS

A. Required:

1. Stem hung fixtures shall be provided with ball swivels (located at the canopies) and rockers (at the fixtures) allowing minimum 45 degree swing from the vertical. Stems shall be of 3/8" ID minimum pipe and shall be finished to match the lighting fixture.

3.3 INSTALLATION OF LAMPS

A. Replace all lamps used during construction operations with new lamps prior to acceptance of the project.

B. After installation clean all lamps.

3. 4 MISCELLANEOUS (AS APPLICABLE)

A. Provide all metal shims, spacers and/or mounting bolts or devices, where necessary, in order to permit surface mounted fixtures to be pulled tight to ceiling supports or backing without causing ceiling tiles to be raised out of place.

B. Fluorescent lighting fixtures which are to be mounted in continuous rows of two or more fixtures, shall be designed with at least two bolts or other interlocking devices, as approved by the City Engineer at each connection to provide for positive and true alignment of the fixtures.

C. Louvers, diffusers or lenses shall not be installed in lighting fixtures until such time as all glazing has been completed and all construction work involving plastering, grinding, sanding, painting, etc., and final clean-up sweeping and dusting have been completed by the Contractor as noted in Subsection 1.4 of this Section.

D. Reflector surfaces and lamps in all lighting fixtures shall be thoroughly cleaned of accumulated dust, dirt, plaster, paint, etc., before the installation of the louvers, diffusers or lenses.

E. After completion of this portion of the work, it shall be the responsibility of the Contractor to clean and/or repair any damage to the finished building caused by this work, to the complete satisfaction of the Architect at no added cost to the City.

3.5 INSTALLATION OF BALLASTS (N/A)

3.6 LIGHTING CONTROL

A. Photocell: Install photo control as shown on Drawings.

B. Time Switch: Install per manufacturer's recommendations.

C. Lighting Control Panel: Install as shown on the drawings and in strict compliance with manufacturer's recommendation.

3.7 FIELD QUALITY CONTROL

A. Inspect each installed fixture for damage. Replace damaged fixtures and components.

B. Advance Notice: Give dates and times for field tests.

C. Provide instruments to make and record test results.

D. Tests: As follows:

1. Verify normal operation of each fixture after installation.

2. Emergency Lighting: Interrupt electrical supply to demonstrate proper operation.

3. Verify normal transfer to battery source and retransfer to normal.

4. Verify actuation and termination on photocell, timer, or other control function, as applicable, and in coordination with required testing per Section 16570.

5. Report results in writing.

E. Malfunctioning Fixtures and Components: Replace or repair, then retest. Repeat procedure until units operate properly.

F. Corrosive Fixtures: Replace during warranty period.

3.8 COMMISSIONING (FOR LIGHTING CONTROL SYSTEMS)

A. Spot check the lighting systems start up and ensure that the all lamps are operational and fixtures are clean.

B. Spot check occupancy sensor placement and test reliability of activation/deactivation.

C. Test photocells for functionality and accuracy

D. Spot check switches to ensure proper operation and circuiting

E. Spot check lighting schedules to ensure they are programmed per the ENGINEER direction.

F. Spot check lighting levels to ensure compliance with IES for the respective occupancy

G. Test operation of circuits by changing system date and time to cause various circuits to switch modes. For rooms with occupancy sensors, validate the circuit energizes with occupancy in the space after the lights have been swept off. Test warning flicker prior to off sweep. Test cleaning and shed features.

H. For exterior fixtures, simulate night mode to validate function. Measure and record light level to ensure they meet the requirements and are generally provide adequate security. Check for excessive light level fluctuations or dark spots.

(END OF SECTION)

SECTION 16430
LIFE SAFETY FIRE ALARM SYSTEMS

PART 1 -- GENERAL

1.1 SCOPE

A. Required: Furnish all labor, materials, equipment, services, permits, fees and transportation necessary for and/or reasonably incidental to the Construction and completion of life safety fire alarms systems.

B. Comply with the General Conditions, General Requirements and the requirements of Section 16020 of this Division 16 concerning definitions, guarantees, submittals, as-builts, clean-up, etc. as applicable to work of this Section.

C. Work Includes, but is not limited to the following:

1. Life safety fire alarm detection and signaling system.

2. Plan check approval.

3. Furnishing and installation of equipment and devices.

4. Wiring in conduit, and connections.

5. Interface with security system CPU.

6. Conduit, wire and connections for control and status of H&V motors, smoke dampers, for shutdown and smoke exhaust.

7. Conduit, wire, and connections for control and status of book conveyor fire dampers.

8. Testing, cleaning, and adjusting of completed work.

9. Wiring diagrams, shop drawings, equipment data.

10. Complete maintenance and off-site fire monitoring service for one year. Proposal for subsequent maintenance contract and monitoring service.

11. All work and material for complete and operable systems as indicated or specified.

12. Record drawings.

13. Permits, inspections, fees. See General Conditions.

14. Identification and instruction.

15. Coordination with other trades in the project.

16. Furnishing of special back boxes for installation under electrical section.

17. Install at least one automatic smoke detector in each enclosed room, connecting to the main Fire Alarm Control Panel.

1.2 RELATED WORK SPECIFIED ELSEWHERE

A. Conduit and outlet boxes (Section 16115).

B. Conductors, 600 Volts And Below (Section 16150).

C. Wiring Devices (Section 16180).

D. Electrical Identification (Section 16190).

E. Painting, except shop finishing and field touch-up (Section "Painting").

F. HVAC and fire protection systems (Division 15).

G. Temporary service (General Conditions).

H. Emergency-Standby generators (Section 16410).

I. Municipal Facilities Electrical Systems Commissioning in DIVISION 16.

J. Municipal Facilities Electrical Testing Requirements in DIVISION 16.

1.3 LEGAL REQUIREMENTS AND STANDARDS

A. Legal: Conform to all applicable requirements of California State, Los Angeles City Fire and Building Departments concerning life safety and smoke control systems and requirements of local authorities having jurisdiction. See Sub-Section 1.5 of Section 16020 – Municipal Facilities General Electrical Requirements.

B. Standards: Comply with guidelines of the Electronics Industries Association, the National Fire Protection Association (NFPA) and Underwriters Laboratories (U.L.).

1.4 APPROVALS

Prepare complete plans, risers, wiring diagrams, battery calculations, and installation drawings for the fire alarm system. Obtain City Fire Department and Building Department approval for fire alarm system after incorporating all shop drawing review comments. Submit voltage drop calculations conforming to fire code limitations. Install system per review shop drawings.

1.5 QUALITY ASSURANCE

A. Manufacturer: Company specializing in smoke detection and fire alarm systems with five years documented experience.

B. Installer:

1. Submit evidence of completion and satisfactory operation of five projects of equal scope for the specified systems.

2. Submit evidence that installers are factory authorized agents.

3. Submit letter from equipment manufacturers indicating intent to maintain local service organizations or direct factory service.

4. Installers to be prepared to offer a service contract on expiration of guarantee.

1.6 SUBMITTALS

A. Comply with applicable provisions of Sections 01330 & 16020.

B. Shop Drawings:

1. Provide schematic layout, floor plan, drawings indicating location of all components and equipment, required size and location of conduit and outlets and type and quantity of system conductors. Include voltage drop calculations and battery calculations.

2. Riser Diagram.

3. Include wiring diagrams for overall system and components.

4. Include physical and electrical characteristics of equipment to indicate conformance with the Specifications.

5. Describe system characteristics and function.

C. Data Sheets: Show California State Fire Marshall Listing, U.L. listing, equipment ratings, dimensions and finishes.

D. Manufacturer's Certificate: Note that system meets or exceeds specified requirements.

E. Test Procedures: Provide one copy for necessary review.

F. Operating and Maintenance Instruction Manual:

1. Conform to applicable provisions of Subsection 1.6N of Section 16020.

2. Manual shall include the following:

a. Operational description.

b. Coded cabling plan.

c. Two wire circuit diagrams.

d. Wiring destination schedule.

e. Schematic component diagrams and PC board layouts.

f. Maintenance and alignment procedures.

1.7 COORDINATION

Refer to the electrical and mechanical drawings and specifications to determine quantities and location of devices and required scope of work and coordinate work with mechanical and electrical installers. Provide function described under mechanical section Sequence of Control, for fire and/or emergency conditions. Submit conduit requirements to electrical installer. For self-contained door release, coordinate with door supplier.

1.8 SYSTEM DESCRIPTION

A. General: System to be listed by Underwriters Laboratories and the California State Fire Marshal, designed to meet the functional requirements of NFPA 72A, 72B, 72D and the California High Rise Code (as applicable).

B. Features:

1. Main fire alarm control panel with graphic annunciator as located on the Contract Drawings.

2. Remote annunciators at the main entry.

3. Alarm/trouble point transmitters.

4. Manual alarm reporting stations.

5. Ionization smoke detectors.

7. Fan duct smoke detectors.

8. Smoke detectors in ducts at smoke dampers.

9. Power supply for smoke damper motors.

10. Combination fixed temperature/rate of rise heat detectors.

11. Electromagnetic door hold open devices as required.

12. Combination horn/visual alarm signal devices. Visual alarm signal devices.

13. Cabling and connections.

14. Interface with the standby generator and day tank for alarm and status reporting and control.

15. Provision for connection to off-site central station via leased telephone lines.

16. Interface with the HVAC system for duct Detector “shut-off”

17. Operating and supervising electrical power for the system at 120-volt single phase, three wire from the emergency system to the fire command center. Internal battery back up, sized for 24 hours of standby and 5 minutes of alarm.

1.9 SYSTEM OPERATION

A. System to be the active interrogate/respond type alarm system, 24 volt DC non-coded, positive, non-interfering, successive operation, in which all devices are constantly sending status signals to the main fire control command center from remote data transmitter panels approximately every one second. A change in status to be reported twice to determine that it is a valid signal, and be automatically and permanently recorded. The requirements in NFPA 72B for 60 hours standby power to be met by the emergency standby generator system.

B. Wiring, equipment and devices for alarm initiation, annunciation, and audible signaling to be

continuously supervised for open circuits, shorts or grounds (trouble). Each alarm initiating device circuit to be provided with illuminated and audible annunciation of both trouble and alarm conditions. Non-illumination indicates a normal condition. Wiring to the equipment in one conduit, the return portion of the loop in the second conduit. Wiring between reporting devices to the field equipment cabinets to be Class "B" wiring in conduit, with end-of-line device.

C. Any alarm or trouble condition to sound an audible signal at the fire command center and the remote annunciator. Signal to be silenced by a momentary contact switch which shall transfer the signal to a visual indicator. Subsequent trouble conditions to cause the signal to resound and in turn may be silenced. Upon restoration to normal, the trouble signal silencing indicator to extinguish automatically.

D. Activation of any automatic or manual alarm initiating device to cause the following to occur:

1. Sound an audible alarm and illuminate the visual indicator for zone and type of alarm at the fire command center and the remote annunciator.

2. Sound, by building of origin, the slow whoop alarm signal over the system speakers and activate the visual signal devices.

3. Transmit signal to release the electromagnetic hold open devices on corridor doors by floor.

4. Transmit signal by one to close smoke dampers, via autodialer.

5. Transmit alarm signal to the central station office.

E. System not to incorporate a time delay for any of the alarm initiating devices.
All alarms to be considered confirmed alarms.

F. Detection and reporting of fire conditions to be accomplished by the following basic methods:

1. Manual stations.

2. Smoke detectors.

3. Heat detectors.

4. Duct detectors.

5. Water flow switches.

G. Fire alarm system inputs to be further subdivided as follows, for a more defined indication of the location and nature of the fire or trouble condition:

1. Manual station. By floor and zone.

4. Smoke detectors at smoke dampers. By device.

5. Smoke and/or heat detector in mechanical and electrical rooms. By floor and room.

6. Door held open detector. By floor and location.

7. Water flow or pressure switch. By floor and zone.

8. Sprinkler valve position indication. By floor and zone.

H. Alarm condition to override trouble indication. Trouble indication to reappear after alarm reset.

I. Selective manual testing of any device point in the system to determine normal trouble or alarm status

J. Remote annunciator to duplicate annunciation from the main fire alarm control panel.

K. System to be capable of manual operation in the event of malfunction of the central processor. Supplier to include a statement in the system shop drawing submittal explaining the manual operating capability of the system. Provide redundant processor to duplicate primary processor function.

L. Sequence of Operation Under Alarm Condition:

1. Sound an audible alarm at the main fire control command center and the remote annunciator and simultaneously illuminate the visual indicator for zone and type of alarm.

2. Manual acknowledge switch operation, to illuminate alarm acknowledge light and silence and audible signal. Visual indicator for zone of alarm to remain illuminated. New alarm to re-sound the audible alarm and repeat sequence.

3. Transmit signal to off-site central station office.

4. Correction of alarm condition to provide return to normal status and to print out.

5. Sound building alarm as described in "System Features and Operation."

M. Sequence of Operation for Supervision:

1. The following trouble conditions to sound an audible alarm and illuminate the visual trouble zone indicator at the main fire control command center and the remote annunciators:

a. Malfunction or trouble in any equipment or component of the fire alarm system.

b. Opens, shorts or grounds in the fire alarm system wiring.

c. Closed sprinkler system valve.

d. Removal of any fire alarm detection or reporting device.

e. Wet system water flow switch - tamper switch.

2. Manual acknowledge switch operation, to illuminate trouble acknowledge light and silence audible signal. Visual indicator for zone of trouble to remain illuminated.

N. HVAC Interface: Coordinate system function with sequence of control described in the mechanical section.

O. Operation: All components connected in accordance with the manufacturer's instructions to provide a complete and operable system.

1.10 LOADS OF EQUIPMENT AND COMPONENTS

A. Follow Electronics Industries Association Standard where applicable.

B. Provide fuse protection for equipment and spare fuses.

C. Design systems for operation at 120 volts, normal or emergency power as indicated, 60 Hz nominal input.

D. Operating voltage dissipated by resistors shall not exceed 25% of ratings.

E. Operating voltage of capacitors shall not exceed 80% of rated voltage.

F. Operating loads and voltages on transistors and solid-state devices shall not exceed manufacturer's recommendation for normal full load operation.

G. Use electronic components of types and rating commonly available from stock of established commercial distribution.

1.11 GUARANTEE

A. Conform to applicable provisions of the General Conditions.

B. Service technicians and replacement components for the system shall be available locally from a service representative of the manufacturer who is able to provide evidence of technical training and authorization by the manufacturer.

C. For a period of one year from date of final acceptance, the system shall be under full guarantee for materials and labor at no cost to the City. The system shall be under a service contract with a technician authorized by the manufacturer. Replacement parts and labor shall be readily available during normal business hours while the service contract is in effect. A complete system inspection and test shall be performed at five months and again at eleven months after final acceptance. Tests shall include all smoke detector sensitivity settings.

D. Any component failures shall be remedied to the satisfaction of the Owner.

E. A continuing service contract shall be offered at time of bid to commence at the expiration of warranty included with the system.

PART 2 -- PRODUCTS

2.1 GENERAL

A. Manufacturers: Equipment descriptions refer to the Edwards System Technology. Equivalent systems conforming to the Specifications are acceptable.

B. Provide materials and equipment of new and recent manufacture, UL labeled and/or listed for specific use.

C. The system and equipment described and furnished under these Specifications are to be the standard product of the manufacturer specified for each system. All reference to model numbers and other pertinent information herein is intended to establish the standards of performance, quality, and appearance.

D. System and equipment proposed as equivalent to that specified shall conform to the standards herein. Contractor and Manufacturer to supply evidence of having produced and installed similar

equipment for at least five years, and list systems of equal scope rendering satisfactory service. Obtain the Project Manager's approval in writing ten working days prior to bidding equipment other than as specified. Submit the manufacturer's name, model numbers, and three copies of working drawings and engineering data sheets for approval.

Include in the submittal a certified statement from the manufacturer of the substitute equipment that it does, in fact, equal the electronic and physical features and functions of the specified equipment.

E. A continuing service contract shall be offered at time of bid to commence at the expiration of warranty included with the system.

2.2 FIRE ALARM CONTROL PANEL

A. Modular design with all modules and spacing panels to be the same size. All solid-state circuitry and components. Battery backup.

B. Dead front panel construction. Panels to be mounted in heavy gauge steel cabinets finished in read with module front plates finished in black. Hinged cabinet doors with locks to provide access to field wiring terminals. Internal audible signal.

C. Fire alarm control panel to Incorporate the Following Basic Components for Fire Alarm System Functions:

1. Operators control module.

2. Remote annunciator (approved by Fire Department).

3. Signal generator module.

4. Amplifier module or modules.

D. Operators Control Module to Incorporate:

1. Eighty character alpha-numeric display for continuous indication of time-of-day, day-of-week, month, date-of-month and year or for indication of manual function entries.

2. LED indicators for operating and supervising power, common alarm, alarm silenced, manual mode, system trouble, audible silenced, common trouble, loop fault, alarm circuit trouble and disconnect and auxiliary circuit trouble.

3. Keypad for the following entries and call ups displayed on the alpha-numeric display:

a. Alarm silence.

b. Audible silence.

c. System reset.

d. Auxiliary disconnect for central station circuit.

e. Call up of all system troubles not annunciated.

f. Call up of the status of any system point.

g. Set time, day-of-week, month, date-of-month and year.

h. Annunciator LED test.

E. Annunciator Module to Incorporate:

1. LED indicators for zone alarm and trouble.

2. Provision for indicating zone designations.

F. Signal Generator Module to Incorporate:

1. Two separate electrically supervised fire tone circuits.

2. Failure of one circuit to sound a trouble signal and the second circuit to take over automatically.

G. Battery Backup: Sealed lead acid type, with automatic battery charger. Four hour standby, five minute alarm.

H. Model EST-3 or equal.

2.3 REMOTE ANNUNCIATOR

A. The remote annunciator to be a Graphic type. The Graphic Annunciator to have a display of LED's for displaying individual initiating devices and be approved by

B. Model "ENVOY" Series or equal.

2.4 ALARM/TROUBLE POINT TRANSMITTERS

A. Single, four or eight input point Class "B" units as required by the system design and layout.

B. Number of units in any one zone as required by the system design and layout.

C. For mounting in standard module cabinets.

D. Power supplied from the main fire alarm control panel.

E. Model SIGA-CT1, or equal.

2.5 MANUAL ALARM REPORTING STATIONS

A. Non-coded, semi-flush, double action with "Lift to Break - Pull Lever Down" lettering on clear plastic shield.

B. Mechanically locked until manually reset, rigid metal construction with raised lettering "Pull Down".

C. Model SIGA-270 single action or equal.

D. Manual Stations shall have a protective clear plastic cover model “Stopper II”.

2.6 AUTOMATIC SMOKE DETECTORS

A. Solid-state dual chamber type ionization detector, allowing for compensation for pressure and humidity changes.

B. Equipped with solid state voltage regulator to maintain detection sensitivity over varying voltages, and current regulator to insulate from power surges.

C. Detector mounted LED visual alarm indicator.

D. Model SIGA-IS with base model SIGA-SB or equal.

2.7 HEAT DETECTORS

A. Combination fixed temperature and rate-of-rise type, 135 degrees Fahrenheit fixed temperature rating, 15 degrees F per minute rate-of-rise rating, normally open contacts.

B. Flush mounted in finished areas, surface mounted in unfinished areas, off-white finish.

C. Model SIGA-HFS with base model SIGA-SB or equal.

2.8 AUDIBLE/VISUAL SIGNAL DEVICES

A. Combination speaker/lamp units, steel back box, recessed or surface mounted as indicated, on supervised circuits. Visual portion to flash on alarm condition.

B. Model 757-8A-T, Model 757-7A-T, Model 757-5A-T or equal.

2.9 VISUAL SIGNAL DEVICES

A. Solid-state lamp flasher, built-in lamp unit, red thermoplastic lens, steel back box, red molded phenolic front panel, recessed or surface mounted as indicated, on supervised circuits. Unit to flash on alarm condition.

B. Model 202-5A-Tor equal.

2.10 DUCT DETECTORS

A. Furnished under H.V.A.C., Section, connected under this section.

B. Coordinate with H.V.A.C., Section.

2.11 WATERFLOW AND/OR PRESSURE SWITCHES

A. Furnished under Fire Protection section connected under this section.

B. Coordinate with Fire Protection section.

2.12 SPRINKLER VALVE TAMPER SWITCH

A. Furnished under Fire Protection Section, connected under this section.

Coordinate with Fire Protection section.

2.13 CONDUCTORS

No. 14 AWG, 600 volt, minimum shielded as required. Twisted pairs for audio. Conductor layout and quantities to be delineated on the shop drawing submittals as described in Paragraph 1.B. of the specifications. Calculate voltage drop and increase conductor size as required.

2.14 SUPPLEMENTARY RELAYS

A. Designed to activate or deactivate external circuit controls such as fans, smoke dampers, door releases.

B. Contacts rated two amperes minimum, but adequate for circuit controlled.

C. Relay coil supplied from system power supply.

D. Where remote from command center, enclose in NEMA 12 dust tight enclosure.

E. State Fire Marshal approved for use in fire alarm system.

2.15 DIGITAL COMMUNICATOR

A. Furnish and install a digital communicator by “Silent Night” Model 5104 or equal with all required accessories to send alarm and trouble signals to the Park Rangers Station located in Griffith Park.

B. The Contractor shall arrange for the activation of the Building fire alarm system to the Park Rangers Station located in Griffith Park.

C. The Contractor shall pay for all accessories, including communicator.

2.16 Door Hold Open Devices

Electromagnetic type at doors where required, 24 VDC. Door release on activation of fire alarm system by floor.

PART 3 -- EXECUTION

3.1 GENERAL

A. Comply with all applicable paragraphs in Section 16020 – Municipal Facilities General Electrical Requirements, apply as though repeated herein.

B. Install system(s) in accordance with manufacturer's instructions.

C. Include services of certified technicians to supervise installation, adjustments, final connections and system testing.

3.2 OPERATION

Systems outlined herein to be complete and operable including all labor and material necessary for the required performance. Exact wiring and connections per suppliers' wiring diagrams.

3.3 GROUNDING

All equipment to be grounded by means of green ground wire to "U" contact of duplex receptacles and bonded to ground provided under Electrical Section.

3.4 INSPECTION

Systems to meet all the requirements of the code enforcing agency and shall be approved thereby before installation.

3.5 LOCATION

Before installation, verify exact location of control equipment and outlets. The City reserves the right to relocate outlets within a radius of 10' at no increase in cost before rough-in work is started for the respective outlet.

3.6 WIRING

A. Furnish all conductors, equipment, plugs, terminal strips, etc., and labor to install a complete and operable system. All cable conductors to be color coded and numbered for identification at all terminals. Green for grounding conductor. White for grounded conductor.

B. All cables and wiring shall be installed in conduits.

3.7 TESTING

After all equipment specified herein for each system has been installed and is in operating condition, conduct performance tests to determine if the installation and components comply with these specifications. Perform smoke removal test. Furnish competent personnel, all test material and approved test instruments and conduct the tests under supervision of factory personnel, in the presence of the Project Manager, and the City building and fire inspecting agencies. Test atrium smoke control system before sunrise or after sunset.

3.8 COMMISSIONING

A. Spot check location of sensors and switches to ensure conformance with requirements.

B. Verify sampling of all types of devices. Cause activation of the device, assure alarms are initiated and resulting response is per the requirements.

C. Verify interfaces with all other inter-related systems or equipment including FMS, sound

systems, security systems, HVAC systems, vertical delivery systems, etc.

D. Validate output devices (speakers and strobes) meet the code criteria (96 dBa at 10’ and 117 candela at peak)

E. Activate smoke detector and verify all smoke control sequences and ensure fire/smoke dampers actuate as required.

F. Activate a sample of sprinkler flow switches. Validate that appropriate zone enunciates and alarms sound.

G. Verify audio aspects of the system function as required. Verify paging messages can be heard throughout the building.

H. Testing of the HVAC response is included with the associated equipment. Coordinate testing of the fire alarm system with the testing of the individual HVAC systems including shaft pressurization systems.

I. Ensure that the system functions while using all sources of power including normal, emergency, and battery. Check battery life by simulating an extended outage.

3.8 REPORT

Prepare written report of final test results, signed by witnessing parties. Submit to the Project Manager in triplicate.

(END OF SECTION)

SECTION 16440
SECURITY SYSTEMS

PART 1 -- GENERAL

1.1 SUMMARY

A. General: This Section includes complete and operable security intrusion alarm and monitoring system (SMS) including devices, wiring in conduit, and dedicated central station monitoring panel that will provide required surveillance as herein specified and indicated on Drawings.

B. Work Included: Furnish, install, start-up, test, commission and warrant all necessary hardware, alarm/status sensing devices, conduit, wire and cable, line conditioning and data transmission medium that is required to provide a fully operational SMS, integrated into a single control system as described herein. The equipment shall include, but not be limited to:

1. All devices

2. Wiring in conduit

3. Miscellaneous associated equipment.

C. Related Documents: Documents affecting work of this Section include, but are not necessarily limited to the GENERAL CONDITIONS, SUPPLEMENTARY CONDITIONS, Sections in DIVISION 1 -GENERAL REQUIREMENTS of these Specifications, and the requirements of Section 16020 of this Division 16 concerning definitions, guarantees, submittals, as-builts, clean-up, etc. as applicable to work of this Section.

1.2 GENERAL REQUIREMENTS

A. Procedures:

1. Contractor shall coordinate all work with other project contractors with whom interface meetings and/or coordination of work efforts would identify and solve possible problem areas ahead of time.

2. The manufacturer of the major components shall maintain a replacement parts department and provide and recommend test equipment when needed. A complete parts department shall be located in geographical proximity consistent with the most expedient method of shipping replacement parts. An ample stock of individual components and equivalent unit replacements shall be carried for as long a period as demand warrants. This period shall extend well beyond the normal life expectancy of the equipment.

B. Abbreviations: Throughout these specifications the following basic abbreviations will be noted:

1. SCMS Security Control Monitoring System

2 EMT Electrical Metallic Tubing

3. MD Motion Detector (sensors)

C. Codes and Regulations: Contractor shall comply with all applicable sections of national, state, and local codes, regulations, ordinances, laws, and rules of authorities having jurisdiction including:

1. State and local electrical and building codes.

2. National Electrical Code (NEC).

3. National Fire Protection Association (NFPA).

4. State and local fire regulations and requirements.

5. State Occupational Safety and Health Administration. (CAL/OSHA)

6. Underwriter's Laboratories, Inc. (UL).

D. Standards: Contractor shall comply with the latest editions of applicable and standards of:

1. Institute of Electrical and Electronic Engineers (IEEE).

2. National Electrical Manufacturers Association (NEMA).

3. American National Standards Institute (ANSI).

4. Where there is a conflict between codes, regulations, or standards, the most stringent shall apply. Whenever the Contract Drawings, this specification or its appendices call for materials or construction of better quality or larger size and/or capacity than that required by the code, laws, rules and/or regulations noted above, they shall take precedence.

E. Permits: The contractor shall obtain all required permits and inspections and pay all required fees unless otherwise specified. All permits and certificates of compliance shall be turned over to the City Engineer.

F. Signs: During construction the contractor shall provide appropriate hazard and warning signs per ANSI and OSHA requirements wherever applicable. Contractor shall place and maintain suitable barriers, protective devices, lights and warning signs for the protection of the workers and LACL employees from the work performed under this section. Contractor shall also comply with all applicable safety regulations of the City.

1.3 QUALITY ASSURANCE

A. Previous Experience and Capabilities:

1. Contractor shall have had complete engineering, sales, installation, and service operations within Southern California for a period of not less than five (5) years prior to the bid date of this project.

2. Contractor must have done at least two (2) projects similar to this project in size and type in the last three (3) years.

3. Contractor shall have an in-place service/support facility within fifty (50) miles of the project site capable of being on site within fifty (50) miles of the project site capable of being on site within 4 hours. Service and support services must be available seven (7) days a week 24-hours a day. This facility shall have on hand sufficient technical staff,

spare parts inventory, and all necessary test and diagnostic equipment required in responding effectively.

4. Subcontracted work for the installation of the conduit and wire shall be with a firm who has provided services to the Contractor for a period of two (2) years or more.

B. The Contractor shall have single source responsibility for the complete installation and proper operation of the SCMS including initial debugging, and calibration of all system components.

C. Electrical and mechanical installations/connections shall be made by manufacturer-trained and certified technicians.

D. Equipment and accessories must be:

1. Product of a manufacturer regularly engaged in its manufacture.

2. New, currently manufactured, and free from defects with a meantime between failure rate (MTBF) of 20,000 hours at 90% confidence or better

3. In compliance with the codes, regulations, and standards listed in this section.

E. All items of a given type shall be the products of the same manufacturer and of the same series.

1.4 SUBMITTALS

A. Required**:** Submit complete system documentation in accordance with the General Conditions and Section 16020 – Municipal Facilities General Electrical Requirements. Such documentation shall include but not be limited to the following:

1. Equipment location and conduit routing drawings.

2. Point-to-point wiring diagrams.

3. Descriptive literature and specification sheets on all hardware and equipment.

4. Operating and maintenance instructions on all hardware and equipment.

5. Point assignment to field interface devices.

6. Complete equipment schedule and legend listing sensors, alarm panels, keypads, siren, pushbuttons, etc. indicating for each as applicable: size/capacity, configuration, location, make and model number, I/O assignment, etc.

7. Procedures and documents to be used for training, check-out, and commissioning (prior approval required).

8. Types of extended training opportunities available and their cost.

9. Recommended service maintenance schedule with complete description.

10. Types of service and maintenance agreements available and their costs.

B. Submittals shall be in brochure form with all listings referenced to the applicable article in the specification. Partial submittals will not be acceptable.

C. Submittals will be reviewed for general design only, and not for method of assembly, erection, construction, or detailed compliance with contract documentation. Submittal shall be approved by L.A. City Building Safety Department. No deviation from contract documentation is permitted unless specifically so noted by the contractor and accepted by the City Engineer in writing.

D. The contractor shall provide a detailed written description of his understanding of the alarm monitoring and control interface between the SCMS and the facility fire alarm, environmental, and lighting control systems. The description shall list all equipment, wiring, and devices he expects to be provided by others as well as that to be provided by himself.

E. The contractor shall provide the following documentation at completion of the work:

1. As-built drawings for equipment locations, conduit routing, and point-to-point wiring diagrams.

2. Recommended spare parts lists with costs.

3. Assemble the above information into the operation and maintenance manuals, organized, indexed and bound in an easy-to-read tab format with a table of contents and contain all documentation listed as part of the submittal.

F. The contractor shall supply, under separate cover, the report of the system check-out and commissioning effort and shall indicate all problems encountered during that effort as well as their resolution and sign-off of acceptance of all noted items.

1.5 WARRANTY

A. General Warranty: Special project warranty specified in this Article shall not deprive the Owner of other rights the Owner may have under other provisions of the Contract Documents and shall be in addition to, and run concurrent with, other warranties made by the Contractor under requirements of the Contract Documents.

B. Special Project Warranty:

1. Compliance: Conform to applicable provisions of the General Conditions.

2. Warrant the Facility “SMS” including all hardware and software components for a period of one (1) year following the acceptance date for beneficial use. Any hardware or software problems arising during this period shall be corrected at no added cost to the City.

3. Inform the City Engineer, in writing, of the various types of service agreements available after the warranty period and their cost at the time of acceptance for beneficial use.

1.5 SYSTEM COMMISSIONING AND WARRANTY

A. Compliance: Conform to applicable provisions of the Contract Conditions.

B. Upon Completion of the Installation: Start-up the system, perform all necessary testing and diagnostics to ensure proper operation. An acceptance test in the presence of the City's representative. When the system performance is deemed satisfactory by these observers, the system will be accepted for beneficial use and placed under warranty.

PART 2 -- PRODUCTS

2.1 GENERAL

The SMS is an alarm monitoring system. The system is monitored from the operator's console at the Security Headquarters Station located in **[?]** building via telephone lines. Codes and central station numbers will be furnished to the contractor at the time of alarm installation by the City Engineer.

2.2 ACCESS CONTROL/ALARM MONITORING SYSTEM

A. This System shall be an integration of hardware and software that provides card access control, security, management, critical point monitoring, and output point control and shall operate in real time and have the following performance characteristics:

1. Provide access control utilizing entry keypad technology.

2. Monitor equipment and devices for on/off, alarm/normal, open/closed, run/stop, etc.

3. Perform preprogrammed functions automatically based on time, event, or by manual entry.

4. Selectively display events for operator acknowledgment.

B. The System shall be designed to be operated by one person with minimal training, able to control and record access transactions, and monitor alarmed security conditions within the facility, and shall be prompted as to the required response(s).

C. Access control decisions shall be made automatically without the need for any operator intervention. Whenever an alarm or other exceptional situation occurs, the System shall automatically alert the operator and simultaneously execute pre-programmed outputs (established by the City) to the display and to the other systems or devices to produce an orchestrated response to the emergency condition.

D. The System shall also perform data acquisition of site security conditions and shall be capable of recording all transactions that include the date, time, location, nature of the event, and whether it be a card access attempt, alarm, or reset.

E. The control and monitoring functions shall be truly distributed in such a way as to ensure minimum upsets or shutdowns in the event of a single or multiple component failures. The System shall be capable of identifying the failed component(s) and bring it to the attention of the operator.

F. The System shall possess a fully modular architecture, permitting expansion through the addition of more field interface devices, sensors, readers, and/or operator terminals.

G. The System shall be designed to provide 25% spare live capacity in each FID and 100% spare possible capacity in the host computer hardware and software. System shall be software upgradeable without hardware of existing database modifications.

2.3 COMPONENTS

A. Operator Interface: Access control shall consist of keypads located where specified in the drawings; Model LCD5000 by DSC, or approved equal.

B. Security Panel: Solid state including, but not limited to the following features:

1. 8-zones with two additional 8-zone expansion cards.

2. Panel shall be equipped with EEPROM memory to retain all program information even if all AC and battery power is lost.

3. Panel shall be complete with an integrated digital communicator capable of being programmed to transmit to three separate monitoring stations or locations with 2-accounts.

4. Standby 12-volt, 7 A.H. rechargeable battery; Model YUASA-NP7-12, or approved equal.

5. Transformer, 120/16.5 VAC, 40VA; Model AMSECO 40VA, or approved equal.

6. Security panel shall be by Digital Security Control; Model No. Power 832, or approved equal.

C. Siren shall be 12-VDC by “AMESCO” Model No. SSX-51 surface mounted or approved equal.

D. Panic Buttons shall be by “Amseco” Model No. HUSK-10 outlet mounted with matching device plate, or approved equal.

E. Telephone Jack shall be Model RJ-31X.

F. Panel Interface Cord shall be by “Ademco” Model 620. Or approved equal.

G Motion Detector

1. Motion detectors shall be passive infrared technology and utilize dual element sensors. The dual elements shall be linked by an internal comparator circuit. This circuit performs comparison and analysis of both sensor signals and alarms only when both reach the alarm threshold limit. Common false alarms such as small animals, air turbulence, and external lights shall be negated.

2. Unit shall contain circuitry that detects vandalism or sabotage by attempts to blind the device and trigger a tamper alarm contact output.

3. Unit shall also contain a self-checking circuit that periodically monitors itself for any internal failure. If a malfunction is detected, the unit initiates the trouble contact output.

4. All contact outputs shall be dry and voltage free.

5. Unit shall be capable of detecting a man-sized target walking at the rate of 1 foot per second or faster at a minimum range of 40 feet.

6. Unit shall be by “Optex” Model SX-360Z for ceiling mounted and Model No. CX-50 for wall mounted.

H. Door Contact: By “Sentrol Inc. “Model No. 1078C Series, or approved equal for doors and Model No. 2500 Series, approved equal for roof hatch.

PART 3 -- EXECUTION

3.1 GENERAL

A. Installation of electrical equipment, wire, and conduit shall conform with Section 16020, Part 3, the vendor's recommendations, and approved practices of conventions, whichever is most stringent.

B. Installation, testing, commissioning, and training shall be provided conforming to Parts 1 and 2 of this specification.

C. Contractor to supply and install all conduit and wire.

D. Conduit and fittings for signal/control wiring cable shall be electrical metallic tubing (EMT) with compression fittings where permitted, or galvanized rigid steel conduit with threaded connections.

1. Outlet boxes in dry locations shall be galvanized steel, knockout type with full access screw-on cover plates with corrosion resistant screws.

2. Outlet boxes exposed to weather shall be corrosion resistant cast aluminum or iron boxes with gasketed screw-on cover plates.

3. Pull and junction boxes shall be selected and sized as required by N.E.C. code requirements. Enclosure type shall be suited to location.

E. Signal and control wiring shall be a minimum 18 AWG twisted shielded cable. Number of cables required shall be per manufactures' instructions.

F. Power supply wiring (120VAC) shall be in accordance with Section 16180 – Wiring Devices. Coordinate locations of devices and or equipment requiring 120VAC power with the electrical contractor to identify closest source of power and availability of power circuits.

3.2 INSTALLATION

A. All hardware shall be accessible for service.

B. Control elements located in outdoor installations shall be weatherproof or housed in a NEMA 4 enclosure.

C. Install controls in accordance with manufacturer's instructions and approved shop drawings.

D. All wiring and conduit shall be run concealed except in equipment rooms or areas where other piping or conduit is exposed.

E. Splices in shielded cables shall not be permitted. Terminations shall be done in accordance with the manufacturer's instructions and located in accessible locations. Cables shall be harnessed with tie wraps in a neat orderly fashion.

F. Cable runs shall be kept as short as possible, allowing extra length for connections to the terminal strips.

G. Each electrical field wire shall be labeled or coded at each end to show location of the opposite

end. Each point of all field terminal strips shall be permanently labeled or coded to show the instrument or item served. Color-coded cable with cable diagrams may be used to accomplish cable identification and terminal strip identification.

H. Relays shall be general purpose, enclosed plug-in type with 8-pin octal plug and protected by a heat and shock resistant dust cover. Number of contacts and operational function shall be as required.

I. Communications, Signal and Control Circuits shall have the following characteristics:

1. Cables shall not be installed closer than six feet to high power transformers or run parallel within six feet of electrical high power cables. Care shall be taken to route the cable as far from interference generating devices as possible. Contractor to coordinate with appropriate contractors.

2. All shields shall be grounded (earth ground) in the alarm panel at one point only, to eliminate ground loops.

J. Conduit Installation (Refer to Section 16115) shall be done in the following manner:

1. Conceal conduit within finished shafts, ceilings, and walls as required. Install exposed conduit parallel with or at right angles to building walls.

2. Plug or cap all unused conduit openings and stub-ups. Do not use caulking compound. Cap open ends of conduits during construction to keep debris out until conductors are installed.

3. Route all conduit to clear beams, plates, footings, and structural members. Do not run conduit through column footings or grade beams.

4. Seal conduits with an approved watertight sealant where conduit is run between floors and through walls designated as smoke or fire rated barriers. Coordinate with architect to identify such locations. Conduit shall also be sealed watertight at penetration through outside foundation walls.

5. Support one inch and smaller exposed conduit from the building with one-hole malleable iron or steel pipe clamps, spaced as required by N.E.C. Do not use perforated iron strap (plumber's tape). Suspend conduits larger than one inch on pipe racks with split-ring hangers and rods.

6. Where exposed to the elements or in damp or wet locations, waterproof rigid and/or flexible conduit and fittings shall be installed.

7. Provide floor, wall and ceiling penetration plates for all conduits passing through walls, floors, or ceilings. Use prime coated cast iron, split-ring type plates, except in exposed finished spaces where plates with a polished chrome-plated finish shall be used. Contractor to coordinate with electrical contractor.

K. Software installation shall be the responsibility of the contractor and shall include:

1. Initial set-up of user password access levels with the City Engineer.

3.3 PRE-ACCEPTANCE TESTING

A. Prior to the acceptance test, the contractor shall perform the following tasks:

1. Check for electrical continuity, eliminating all shorts and open circuits, and verifying grounding.

2. The training program shall be accomplished in two (2) phases with the hour distribution appropriately divided between the two phases as mutually agreed to between the contractor and the City. A training day is defined as eight (8) hours of instruction including two 15-minute breaks and excluding lunch time. A minimum of twenty (20) 8-hour instructor days for training, exclusive of system startup and programming, shall be provided.

3.4 TRAINING

A. General

1. Operator's Manual: Provide two bound copies of an operator's manual describing all operating and routine maintenance service procedures to be used. The manual shall be reviewed and approved by the City's representative prior to the acceptance tests and shall be used during the acceptance test training period.

2. Instruct the City's designated personnel in these procedures during the start-up and test period. These training sessions are to be conducted during normal working hours and shall consist of hands-on training at the job-site.

3. This phase shall be performed prior to the acceptance test period at a time mutually agreeable between the contractor and the City.

B. Facility, operational, supervisory, and programming personnel shall be trained in the functional operations of the systems installed and the procedures that are employed for normal day-to-day system operation.

1. Training shall include:

a. Sign on/sign off procedures.

b. Setup and selection of all displays.

c. Commanding of points, English and graphic mode.

d. Modifying alarm limits, start-stop and/or on-off times.

e. Initialization of systems.

f. Troubleshooting of equipment (determining bad component).

g. Use of the Panel keypad and remote keypads.

h. General equipment layout.

I. Trouble shooting of "SMS" components.

j. Preventative maintenance of "SMS" components.

k. Maintenance and calibration of devices.

2. City facility supervisor training shall include an additional session encompassing:

a. Password assignment/modification.

b. Operator assignment/modification.

c. Operator authority assignment/modification.

d. Point disable/enable.

3. City facility programmer training shall include an additional two day session encompassing:

a. Software review of both sub-system's programs.

b. Modification of control programs.

c. Add/delete/modify data points.

d. Use of diagnostics.

e. System maintenance procedures for both sub-systems.

f. Review of initialization procedures.

g. Upload/download and off-line archiving of all system software.

4. Programmer training shall be for two City personnel and shall be scheduled by the City with two week notice any time during the warranty period.

C. City facility personnel shall then be given training in the maintenance of SCMS equipment. This training shall include:

1. General equipment layout.

2. Trouble shooting of SCMS components.

3. Preventive maintenance of SCMS components.

4. Maintenance and calibration of field devices.

3.5 CITY'S ACCEPTANCE

Upon the successful completion of the acceptance tests and of the training sessions, the SCMS shall be considered acceptable to the City. At this time the City shall issue a letter to the contractor signifying acceptance of the SCMS, as installed, and further signifying the date of the letter as being the start of the system warranty period.

(END OF SECTION)

SECTION 16 50 10

ARCHITECTURAL LIGHTING FIXTURES, LAMPS, BALLASTS

PART 1 - GENERAL

1.1 DESCRIPTION

A. Provide and install lighting fixtures as shown on drawings and as specified in this and all related Sections.

1.2 DEFINITIONS

A. The term Architect refers to the Architect, Interior Designer, Lighting Designer or Owner's Representative individually or collectively.

1.3 GENERAL REQUIREMENTS

A. Provide all lighting fixtures as shown complete with all lamps, completely wired, controlled and securely attached to supports.

B. Where a catalog number and a narrative or pictorial descriptions are provided, the written description shall take precedence and prevail.

C. General Contractor shall provide electrical subcontractor with entire lighting specification (including fixture illustrations and sketches); electrical subcontractor shall provide each specified manufacturer with complete information about the fixtures they will supply.

D. Type of fixtures shall be as indicated alphanumerically and as specified.

E. Fixture details shown may be modified by the manufacturer provided all of the following conditions have been met:

1. Fixture performance is equal or improved;
2. Structural, mechanical, electrical, safety, and maintenance characteristics are equal or improved;
3. Cost to the Owner is reduced or equal.
4. Modifications have been reviewed by the Architect and have been approved by the Architect in writing.

1.4 STANDARDS

A. The standards and regulating committees referred to in this specification and to which compliance with is required are:

1. UL Underwriters Laboratories

2. NRTL Nationally Recognized Testing Laboratory
3. NEC National Electric Code
4. ANSI American National Standards Institute
5. ASTM American Society of Testing and Materials
6. NEMA National Electrical Manufacturers Association
7. IEC International Electrotechnical Commission
8. USITT United States Institute for Theatre Technology

B. All fixtures and assembled components shall be new, of good quality, and be approved by and bear the label of UL for the applicable location and conditions (wet, damp, dry, etc.) or other approved testing agencies, i.e. CSA, ETL, unless otherwise specified in writing.

C. All fixtures shall meet all required local, state and/or national building, electrical and energy codes and regulations.

1.5 BIDDING

A. Follow bidding procedures as described in Division 01 of this specification.

B. Provide unit and alternate prices as required in the Lighting Fixture Schedule at the end of this section.

1.6 SUBSTITUTIONS

A. Bidders' attention is called to the following procedure to be followed in submitting alternate fixture manufacturers than those specified:

1. Bidders wishing to obtain approval on brands other than those specified by name and/or catalog number in the Lighting Fixture Schedule at the end of this section, shall submit their requests not later than ten (10) business days before the bid opening. Approval will be in the form of an addendum to the specifications issued to all prospective bidders indicating that the additional brand or brands are approved as equal to those specified as far as the requirements of the project are concerned. If the bidders do not elect to obtain prior approval during the time so specified, the Owner has no obligation to review or consider any such article after the contract award.
2. If the bidder wishes to substitute fixtures from alternate manufacturers, their attention is called to Section 2.01, GENERAL MATERIAL REQUIREMENTS of PART 2 - PRODUCTS. In addition, he shall note that the dimensions of visible parts of many fixtures (for example, the aperture diameters of incandescent fixtures) are binding to the bidder and cannot be changed without prior approval by the Architect.
3. Contractor shall pay professional fees (at current standard hourly rates) and reimburse expenses directly to all designers (Architect, Engineer, Lighting Designer, et. al.) for time spent reviewing substitutions proposed by the Contractor. If payment by the Contractor is not made within 60 days of invoice date, the Owner shall deduct the amount due from subsequent payments to the Contractor in order to reimburse designers.
4. Request for approval shall be accompanied by working fixture samples (with an appropriate lamp, complete photometric, mechanical and electrical data, list of materials and finishes and unit cost to the Owner) of both the specified brand and the proposed substitutes as required to make complete comparison and evaluation. These samples shall be in addition to those required by Lighting Fixture Specification. The above data shall be delivered separately to the Architect and the Lighting Designer. The fixture

samples shall be furnished and installed, at the bidder's expense, at the location selected by the Architect. In addition, the bidder shall furnish the Architect and the Lighting Designer with the name and location of at least one completed project where each proposed substitute has been in operation for a period of at least six (6) months, as well as the names and addresses of the Owner, the Lighting Designer and the Architect of record.

1.7 SUBMITTALS

A. For standard catalog items with no modifications, submit catalog cut sheets prepared by the manufacturer which clearly show all elements to be supplied and all corresponding product data (including lamping; ballast manufacturer and model number; voltage; accessories or options and any miscellaneous items detailed in the written description of the specification.) If cut sheet shows more than one (1) fixture type, all non-applicable information shall be crossed out.

B. For standard cataloged fixtures:

1. Submit one sample cone for each fixture type for review. Submit a certificate of compliance with Alzak finish requirements with all requests for approval.
2. When more than one louver panel occurs in a fixture, submit as a part of shop drawings the dimensioned layout of individual louver panels and supporting "tee" members.

C. For custom fixtures, modified fixtures or linear fluorescent fixtures mounted in continuous rows, submit an engineered line drawing prepared by the manufacturer showing all details of construction, lengths of runs, lamping layout, pendant locations, power locations, finishes and list of materials. Drawings must be to scale. Contractor shall provide manufacturer with field dimensions where required. If scallop shields, wallwash reflectors or baffles are required, drawings shall indicate relative position to wall or adjacent vertical surface.

D. For all submittals under paragraphs A through C above, manufacturer shall provide submittals with fixture installation instruction sheets.

E. For all submittals under paragraphs A through C above, manufacturer shall provide submittals within two weeks of receipt of order. All submittals shall have project name and fixture type clearly shown.

F. Fixture cuts and shop drawings shall be submitted in quantities and format as described in the general conditions section the specification.

G. The Architect shall make the final determination as to whether or not the submittal contains sufficient information and reserves the right to request a shop drawing if the fixture cut is insufficient.

1.8 MOCK-UPs

A. It shall be the responsibility of the Contractor to provide a mock-up of the lighting fixture or lighting systems as indicated in the fixture description. The mock-up shall be erected within a time period and in a location that is acceptable to the Architect.

B. The mock-up installation shall closely conform to the conditions of the actual installation as to: height, distance from ceiling, number and type of lamps, material, color and etc. The Contractor

shall submit a written description of each proposed mock-up with drawings in order to obtain the Architect's approval prior to commencement of each mock-up.

C. The purpose of the mock-up will be to study the general appearance and performance of the intended lighting systems. At that time, certain minimal test variations may be requested as to lamp location, lamp type, reflector shape, color and etc. Final modifications, if any, shall be considered a part of these Specifications and shall be accomplished with no additional cost to the Owner.

1.9 SAMPLES

A. It shall be the responsibility of the Contractor to provide a sample(s) fixture as indicated in the Lighting Fixture Schedule at the end of this section. When samples are called for the manufacturer shall provide two working samples complete with lamp, ballast (rated for 120 Volt operation) and 6' pig-tail with 3-prong Edison plug.

B. The sample(s) shall be shipped to a location that is determined by the Architect. Shipping and return shipping costs shall be provided as part of the contract.

C. The purpose of the sample is to review manufacturing techniques, detailing, lamping and scale. Sample fixtures must be approved prior to fabrication of fixtures for the project. Minor modifications, if any, shall be considered part of these Specifications and shall be accomplished with no additional cost to the Owner.

D. Sample fixtures may not be used on the project.

1.10 EXTRA STOCK

A. Furnish to the Owner and store at the site where directed, extra stock of each type of lighting fixture type and lamp type installed in the Project in quantities as required by Owner, packaged in manufacturer's unopened cartons and identified as to contents by fixture type.

B. Furnish items above with appropriate quantity of each exposed trim, fastener, bracket and other items as required for a complete installation.

1.11 WARRANTIES

A. All fixtures and workmanship shall be guaranteed free of defects and fully operational for a minimum of one year after the acceptance of the project by the Owner. Any fixtures or workmanship found to be defective during the warranty period will be either fixed or replaced by the Contractor at no cost to the Owner.

B. Ballasts for fluorescent fixtures shall be covered by a five year warranty and high intensity discharge fixtures shall be covered by a two year warranty against defects in workmanship or material. Warranty shall include in-warranty service program providing for payment of authorized labor charges incurred in replacement of inoperative, in- warranty ballasts.

PART 2 - PRODUCTS

2.1 GENERAL MATERIAL REQUIREMENTS

A. Ferrous mounting hardware and accessories shall be finished using either a galvanic or phosphate primer/baked paint process to prevent corrosion and discoloration of adjacent materials.

B. For weatherproof and vapor-tight installation, painted finishes of fixtures and accessories shall be weatherproof enamel using proper primers or hot dipped galvanized and bonderized epoxy, in accordance with manufacturer's requirements. Unless otherwise specified all painted surfaces shall have a life expectancy of not less than twenty years.

1. Hangers shall be conduit with chemically resistant, weatherproof, baked enamel finish.
2. Where dissimilar metal parts come in contact with each other, apply to both surfaces a coating material to prevent corrosion.
3. Colors shall be as specified in the Lighting Fixture Schedule at the end of this section.

C. Fasteners shall be manufactured of non-magnetic stainless steel or anodized aluminum, except in indoor applications where galvanized steel shall be acceptable.

D. Fixtures shall be free of light leaks and shall be designed to provide sufficient ventilation of lamps and ballasts including vent holes where required.

E. Outdoor fixtures shall have wire mesh corrosion resistant screens in the vent holes properly sized to prevent incursion of insects, small animals, and/or other small rodents.

F. All sheet metal work shall be free from tool marks and dents and shall have accurate angles bent as sharp as compatible with the gauges of the required metal. All intersections and joints shall be formed true and of adequate strength and structural rigidity to prevent any distortion after assembly. All sheet metal shall be free of light leaks. All edges shall be finished so there are no sharp edges exposed. All miters shall be in accurate alignment with abutting intersecting members. Piecing of plates in individual runs in single planes and the use of spliced pieces or filler material to cover defective workmanship shall not be acceptable. Sheet metal work shall be properly fabricated so that planes will not deform (i.e. become concave or convex, due to normal expected ambient and operating conditions).

G. Reflector Cones:

1. Provide 45 degree lamp and lamp image cut-off unless otherwise specified. In fixtures where upper reflector is separate from cone, cut-off shall be 45 degrees unless otherwise specified.
2. Plastic materials shall not be used for reflector cones or aperture plates.
3. Fixtures in which reflector cones are riveted or welded to housing or where removal of cone requires pressure to be applied to finished surface of reflector shall not be acceptable.
4. Cone flange shall be formed as an integral part of the cone and shall have identical color and finish as the cone, except as shown. The flange major surface shall be perpendicular to the cone axis. The width of the flange shall adequately cover the ceiling opening without light leaks. No fixture parts (housing, mounting frame, etc.) shall be visible between the ceiling surface and the edge of the cone flange. The same

requirement shall be applicable to fixtures where main reflector extends down to the bottom edge of the fixture without a separate cone. In such case, the flange shall be formed as an integral part of the main reflector.

5. Reflector cones shall be manufactured of uniform gauge, not less than 0.032-inch thick, high purity aluminum Alcoa 3002 alloy free of spin marks or other defects or blemishes caused during manufacturing.
6. The finish of the inner surface of the reflector shall be highly specular as produced under the Alzak process. The reflector shall have an anodic coating of not less than four mils thick. The reflector inner surface shall be free of water spotting and shall maintain a reflectivity ratio of not less than 85percent on clear specular finish. The reflector shall have a low iridescence finish free from multiple colors seen from normal viewing angles. Colors shall be derived from dyes supplied by Sandoz Chemical Company or approved equal.
7. The reflecting surface of the cone shall be tested for proper sealing. Test per ASTM B136-63T.
8. Fixtures with Alzak reflector cones, unless otherwise specified, must be furnished by the same manufacturer.
9. Reflector cone retention devices shall not deform cone in any manner whatsoever.
10. Submit a certificate of compliance with Alzak finish requirements with all requests for approval.

H. Lenses:

1. Fresnel:

   a. Lens shall have uniform brightness throughout the entire visible area at angles from 45 degrees to 90 degrees from vertical, without bright spots or striations.
   b. Lens shall have opaque risers; color shall be as specified in the Lighting Fixture Schedule at the end of this section.
   c. Finish of visible regress surface of door shall be matte baked enamel paint, special color as selected by Architect.
   d. All fixtures with fresnel lenses, unless otherwise specified, must be furnished by the same manufacturer.

2. Glass:

   a. Flat glass lenses shall be heat tempered borosilicate glass unless otherwise noted.
   b. Glass finishes, i.e. sandblasting, etching, polishing shall be performed as described in the fixture description.

3. Acrylic:

   a. Lenses shall be of injection molded crystal clear material 100% virgin acrylic (except as shown). For lenses with male pattern of pyramids or cones, specified minimum thickness refers to distance from flat surface to base of pyramids (cones), or thickness of undisturbed material. For lenses with female pattern, specified minimum thickness refers to overall thickness of material.
   b. Lenses shall fully eliminate lamp images when viewed from all directions within the 45 degrees to 90 degrees angle from vertical when the ratio of lamp spacing to the distance from lamp underside to top of lens does not exceed 1.50. Within the viewing angle from 0 degrees to 45 degrees the ratio of maximum brightness (under a lamp) to minimum brightness (between lamps) shall not exceed 3 to 1.

c. Finishes, i.e. sandblasting, etching, polishing shall be performed as described in the fixture description.

I. Solid State Lighting / Light Emitting Diode (LED) Lamps and Luminaires:

1. General:

a. Luminaire manufacturer shall have a minimum of five (5) years experience in the manufacture and design of LED products and systems and no less than one hundred (100) North American installations.
b. Unless otherwise specified, all LED luminaires and power/data supplies shall be provided by a single manufacturer to ensure compatibility.
c. All components, peripheral devices and control software are to be provided by and shall be the responsibility of a single entity. All components shall perform successfully as a complete system and shall operate as described in Lighting Designer's Control Narrative documents or the Lighting Fixture Schedule at the end of this section.
d. Provide submittals as described in Part 1 above.
e. Include all components necessary for a complete installation. Provide all power supplies, synchronizers, data cables, and data terminators for a complete working system.
f. All LED sources used in the LED luminaire shall be of proven quality from established and reputable LED manufacturers and shall have been fabricated after 2007. Acceptable LED lamp manufacturers unless otherwise noted are:

1) Cree, Inc.
2) Philips Lighting
3) Bridgelux
4) Xicato
5) Nichia Corporation
6) Norlux
7) Opto Technology, Inc.
8) Osram Optronic Semiconductors

2. Replacement and Spares:

a. Manufacturer shall provide written guarantee of the following:

1) Manufacturer will keep record of original bin for each LED module and have replacement modules from the same bin available for three (3) years after date of installation.
2) Manufacturer will keep an inventory of replacement parts (source assembly, power and control components).
3) Manufacturer's LED system will not become obsolete for ten (10) years: Manufacturer will provide exact replacement parts, or provide upgraded parts that are designed to fit into the original luminaire and provide equivalent distribution and lumen output to the original, without any negative consequences.

b. All parts of system shall replaceable in field. Manufacturer shall provide written guarantee of the following:

1) Manufacturer has in place a written recycling and re-use program, and will accept returned product and/or components for recycling or re-use.
2) Manufacturer will properly dispose of non-recyclable components that are deemed harmful to the environment.

c. System shall carry a full warranty for five (5) years. Manufacturer shall be responsible for cost of labor not to exceed $50 per individual part, and cost of shipping, to replace any component of the system that fails within 2 years of installation.

3. Products and Components – Performance

a. LED luminaires and components shall be UL listed or UL classified.
b. LED luminaires and components shall be CE certified.
c. LED luminaires and components shall be PSE marked.
d. All LED luminaires shall be subjected to the following JEDEC Reliability Tests for Lead-free Semiconductors: HTOL, RTOL, LTOL, PTMCL, TMSK, Mechanical Shock, Variable Vibration Frequency, SHR, Autoclave.
e. To ensure luminaire quality, luminaire shall have been tested under accelerated life test conditions including an operating temperature span of 360 degrees Fahrenheit, and cyclic loading up to 60G.
f. All products included in system shall use Mil-Std 810F, Random Vibration 7.698g as a minimum standard. In installations subject to vibration, luminaire shall be installed with vibration isolation hardware to sufficiently dampen vibrations.
g. All LED components shall be mercury and lead-free.
h. All manufacturing processes and materials shall conform to the requirements of the European Union's Restriction on the Use of Hazardous Substances in Electrical and Electronics Equipment (RoHS) Directive, 2002/95/EC.
i. LEDs shall comply with ANSI/NEMA/ANSLG C78.377-2008 – Specifications for the Chromaticity of Solid State Lighting Products. Color shall remain stable throughout the life of the lamp. Color shall match approved sample.
j. LEDs shall comply with IESNA LM-80 – Standards for Lumen Maintenance of LED Lighting Products
k. White LEDs shall have a rated source life of 50,000 hours under normal operating conditions. RGB LEDs shall have a rated source life of 100,000 hours. LED “rated source life” is defined as the time when a minimum of 70 percent of initial lumen output remains.
l. Luminaire assembly shall include a method of dissipating heat so as to not degrade life of source, electronic equipment, or lenses. LED luminaire housing shall be designed to transfer heat from the LED board to the outside environment. Luminaire housing shall have no negative impact on life of components.
m. Manufacturer shall supply in writing a range of permissible operating temperatures in which system will perform optimally.
n. High power LED luminaires shall be thermally protected using one or more of the following thermal management techniques: metal core board, gap pad, and/or internal monitoring firmware
o. LEDs shall be adequately protected from moisture or dust in interior applications.
p. For wet and damp use, LED-based luminaires itself shall be sealed, rated, and tested for appropriate environmental conditions, not accomplished by using an additional housing or enclosure. Such protection shall have no negative impact on rated life of source or components, or if so, such reductions shall be explicitly brought to the attention of the designer.

q. All hardwired connections to LED luminaires shall be reverse polarity protected and provide high voltage protection in the event connections are reversed or shorted during the installation process.
r. The LED luminaire shall be operated at constant and carefully regulated current levels. LEDs shall not be overdriven beyond their specified nominal voltage and current.
s. RGB LED luminaires shall utilize an equal combination of high brightness red, blue and green LEDs, unless otherwise noted, to provide up to 16.7 million additive RGB colors and shall be capable of at least 8-bit control.
t. Manufacturer shall be able to provide supporting documentation of the product meeting third party regulatory compliance.
u. Manufacturer shall ensure that products undergo and successfully meet appropriate design and manufacturability testing including Design FMEA, Process FMEA, Environmental Engineering Considerations and Laboratory Tests, IEC standards and UL/CE testing.
v. All LED luminaires (100 percent of each lot) shall undergo a minimum twenty-four (24) hour burn-in during manufacturing, prior to shipping.
w. Manufacturer shall provide Luminaire Efficacy (lm/W), total luminous flux (lumens), luminous intensity (candelas) chromaticity coordinates, CCT and CRI. optical performance, polar diagrams, and relevant luminance and illuminance photometric data. Provide data in IES file format in accordance with IES LM-79-2008, based on test results from an independent Nationally Recognized Testing Laboratory.
x. Power / data supply shall have the following:

1) Supply outputs shall have current limiting protection.
2) Supply shall provide miswiring protection.
3) Supply shall have power factor correction.
4) Supply shall provide connections that are conduit-ready or clamp-style connections in the case of low-voltage wiring.
5) Supply shall come with a housing that meets a minimum IP20 rating for dry location installation unless located in a damp or wet location.
6) Supply shall be UL listed for Class 1 or Class 2 wiring

J. Wiring:

1. Voltage Rating

a. For voltages up to 120 volts fixture wiring shall be rated for 300 volts minimum.
b. For voltages above 120 volts fixture wiring shall be rated for 600 volts minimum.

2. Temperature Rating - Internal to Fixture

a. All wiring shall be code-approved for fixture wiring, and shall comply with the following temperature ratings unless fixture design or local codes require higher temperature wire.
b. Incandescent

1) minimum rated between lampholder(s) and separately mounted junction box or internal transformer.
2) minimum rated between internal transformer and separately mounted junction box.

3) Tungsten-halogen lamp seal temperature shall not exceed 350 degrees Celsius at ambient of 25 degrees Celsius when tested per UL Bulletin 57, Par. 328-334. Submit certified heat test data by independent testing laboratory.

3. Temperature Rating - External to Fixture

a. All flexible cord wiring between fixture components or to electrical receptacle and not in wireways shall have a minimum temperature rating of 105 degrees Celsius.
b. Cord type shall be suitable for application and shall be fitted with proper strain relief and watertight entries where required by application.

4. Splices

a. Splices internal to fixture shall be made within separate splice compartments and shall utilize nylon insulated crimped connections or insulated quick disconnects.
b. Splices to branch circuit wiring in separate junction boxes shall utilize flame retardant thermoplastic caps with fully seated helical metal spring and threaded entry.

5. No internal wiring shall be visible at normal viewing angles, i.e., above 45 degrees from vertical. Use additional wire clamps if necessary. Anticipate increased visibility if fixtures are mounted on or recessed within a sloping surface.
6. Any fixture fed from more than one panel, i.e., for normal and night or emergency operation, shall have separate neutrals to each panel.
7. Furnish code-approved wiring in ceiling cavities forming air plenums.

K. Lamps:

PART 3 - EXECUTION

3.1 SHIPPING AND STORAGE

A. All fixtures received at the site shall be stored in clean and dry space until fixtures are installed.

B. Manufacturer shall clearly mark each box with fixture designation prior to shipping.

C. Reflector cones, baffles, louvers, aperture plates, and decorative elements of fixtures shall be packed by the manufacturer separate from the housing (body, stem, etc.) of the fixture.

3.2 LOCATION

A. Locations of fixtures are shown diagrammatically. Verify exact location and spacing with Reflected Ceiling Plans and other reference data before ordering of fixtures and during installation.

B. Notify Architect about field conditions at variance with Contract Documents before commencing installation.

C. Coordinate space conditions with other trades before ordering of fixtures.

D. Pendant mount, as approved, surface type fixtures where required to meet space conditions.

E. Coordinate length of continuous-run fluorescent fixtures with adjacent walls, partitions, coffers and other architectural elements as required.

1. Continuous runs shall be defined as the optimal combination of 3’ and 4’ lamp length as necessary to complete runs with no more than 6” of free space at either end of the run as provided by the contractor.

3.3 INSTALLATION

A. Provide accessories as required for ceiling construction type indicated on Finish Schedule. Fixture catalog numbers do not necessarily denote specific mounting accessories for type of ceiling in which a fixture may be installed.

B. Provide adequate and sturdy support for each lighting fixture. Contractor shall be responsible for verifying weight and mounting method of all fixtures and furnish and install suitable supports. Fixture mounting assemblies shall comply with all local seismic codes and regulations.

C. Install rows of fixtures accurately on straight lines unless otherwise indicated on drawings. Coordinate with mechanical work.

D. Install fixtures with vent holes free of air blocking obstacles.

E. Where plaster ceilings occur, furnish plaster frames for setting under other applicable sections. Direct the setting and be responsible for correct location; make sure the bottom of frame is flush with finished ceiling, forming screed edge for finished plaster.

1. Fixtures shall be supported by plaster frames utilizing yokes or leveling lugs.

    a. Fixtures and support elements shall not be mounted to or in contact with ducts or pipes.
    b. Yoke shall have channel cross section of sufficient gauge, and shall support a fixture by means of not fewer than two (2) bolts each.

2. If air diffusers are located in common continuous rows with lighting fixtures in plaster ceilings, furnish plaster frames of proper length to accommodate diffusers.
3. Lighting fixtures recessed in ceilings which have a fire resistive rating of one hour or more shall be enclosed in a box which has a fire resistive rating equal to that of the ceiling.

F. Contractor shall be responsible for adjusting aperture rings on all ceiling recessed fixtures to accommodate various ceiling material thickness. Contractor shall responsible for coordinating the cut-out size in ceiling to ensure aperture covers cut-out entirely. The bottom of aperture rings shall be flush with finished ceiling or not more that 1/16" above. Under no circumstances will the aperture ring extend below the finished ceiling surface.

G. For fixtures with variable position lampholder assemblies Contractor shall confirm prior to installation proper lampholder (socket) position in field, and shall adjust, if necessary, after coordination with manufacturer.

H. Surface Mounted Fixtures: Support surface mounted fixtures from structural members other than ceiling tees.

I. Pendant Mounted Fixtures:

1. Pendant mounted fixtures shall be supported from structural framework of ceiling or from inserts cast into slab.
2. All pendants shall have swivel aligners located at the top ends; pendants shall be 1/2-inch rigid steel conduit unless specifically indicated otherwise on drawings or in specifications.
3. All linear pendant and surface mounted fixtures shall be supported with two (2) supports per four foot section or three (3) per eight foot section unless otherwise recommended by manufacturer.

J. Bracket Mounted Fixtures: For each bracket fixture, provide flanged metal stem attached to outlet box, with threaded end suitable for supporting the fixture rigidly in design position. Flanged part of fixture stud shall be of broad base type, secured to outlet box at not fewer than three (3) points.

K. Mask the trims and bottoms of all lighting fixtures if necessary to protect the fixture during construction.

L. At the completion of construction clean the bottoms, the trim, the reflecting surfaces, lenses, baffles, louvers and reflector cones of all lighting fixtures so as to render them free of any material, substance or film foreign to the fixture. If the luminaires are deemed dirty by the Architect at the completion of the project, the Contractor shall clean them at no additional cost to the Owner. Luminaire components whose finishes are damaged shall be replaced at no cost to the Owner.

M. Ascertain and ensure that all lamps installed are exactly as specified for each fixture type.

N. Replace all burned-out or inoperative lamps, and inoperative ballasts in all high intensity discharge and fluorescent fixtures before the building is accepted by the Owner so that all lighting fixtures will be in first-class operating condition.

O. Provide labor and materials for final aiming of all adjustable fixtures under the Architect's supervision. Aiming shall take place immediately before building is turned over to Owner, after regular working hours where required.

END OF SECTION 16 50 10

Type	Description	Mfr / Catalog No.	Alternates	Finish	Lamping	Electrical Data	Notes
XF1	Pole-mounted LED pedestrian light , nominal 18' height,						
	symmetric optic, dimmable, wet-rated Location: Main Paths	Kim UR20-56L-75-3K8-5W-UNV-FM33-FINISH LTRA-MOD18-51xx-FM-FINISH Pole	Eaton	Allow Standard	75W LED Module (Pole) 3000K +/- 75K CCT 80+ CRI 50,000hr+ L70 Lumens: 9895	Integral Dimmable Power Supplies Input Watts: 75	1. Fixture to be U.L. listed and rated "Suitable for wet locations." 2. Electrical Engineer/Contractor to verify compatibility of lamp, power supply and dimming system. 3. Refer to base and anchorage detail by Architect/Civil Engineer. Provide pole to meet local and AASHTO requirements for EPA of fixture configuration. Architect/Civil Engineer shall coordinate pole anchorage detail to concrete base.
XF1a	Similar to Type XF1 but lower height, nominal 12' height Location: Under Bridge	Kim UR20-56L-75-3K8-5W-UNV-FM33-FINISH LTRA-MOD12-51xx-FM-FINISH Pole	Eaton	Allow Standard	75W LED Module (Pole) 3000K +/- 75K CCT 80+ CRI 50,000hr+ L70 Lumens: 9895	Integral Dimmable Power Supplies Input Watts: 75	1. Refer to Type XF1 Notes. 4. Provide house side shield that is co-planar to the bottom of the LED modules. Must not stick down below the bottom plane.
XF2	Similar to Type XF1 but with an asymmetric house side shield Location: Main Paths	Kim UR20-56L-75-3K8-5W-UNV-FM33-FINISH-MOD BC LTRA-MOD18-51xx-FM-FINISH Pole	Eaton	Allow Standard	75W LED Module (Pole) 3000K +/- 75K CCT 80+ CRI 50,000hr+ L70 Lumens: 9895	Integral Dimmable Power Supplies Input Watts: 75	1. Refer to Type XF1 Notes. 4. Provide house side shield that is co-planar to the bottom of the LED modules. Must not stick down below the bottom plane.
XF3	NOT USED						
XF4	Pole with (6) LED adjustable accent lights at the top, nominal 20' height, dimmable, wet-rated Location: Throughout	Bega (6) 84 528-K3-FINISH Fixture (6) 79 511 Mounting Block (6) 71 111 Glare Shield 1908HR MOD 20'-FINISH-2x3D Pole	Ligman BK Ecosense	Allow Standard	(6)37.5W LED Module 3000K +/- 75K CCT 80+ CRI 50,000hr+ L70 Lumens: 3773ea	Integral 0-10V-Dimmable Power Supply Input Watts: 225	1. Fixture to be U.L. listed and rated "Suitable for wet locations." 2. Electrical Engineer/Contractor to verify compatibility of lamp, power supply and dimming system. 3. Refer to base and anchorage detail by Architect/Civil Engineer. Provide pole to meet local and AASHTO requirements for EPA of fixture configuration. Architect/Civil Engineer shall coordinate pole anchorage detail to concrete base.
XF4a	Similar to Type F4 but with a nominal 10' height pole Location: West Park Dining Area, East Park Helical Ramp	Bega (6) 84 528-K3 Fixture (6) 79 511 Mounting Block (6) 71 111 Glare Shield 0908HR MOD 10'-FINISH-2x3D Pole	Ligman BK Ecosense	Allow Standard	(6)37.5W LED Module 3000K +/- 75K CCT 80+ CRI 50,000hr+ L70 Lumens: 3773ea	Integral 0-10V-Dimmable Power Supply Input Watts: 225	1. Refer to Type F4 Notes.
XF5	NOT USED						
XF6	Surface-mounted linear LED lensed downlight, nominal 1.5" aperture and 48" length, dimmable with remote power supply, submersible-rated Location: Tunnel	Hydrel W6348-LED-120MA-30K-24-VWFL-A3-SCF-LENGTH-LP Underwater Junction Boxes, Connectors, TQD-WATT-VOLTAGE Remote Transformers As Required	Acolyte Optic Arts Luminii	Allow Standard	10W/ft Integral LED 3000K +/- 75K CCT 80+ CRI 50,000hr+ L70 Lumens: 2576	Remote 0-10V-Dimmable Power Supply Input Watts: per Power Supply (35.2 ea)	1. Fixture to be U.L. listed and rated "Suitable for submersible locations." 2. Fixture to be surface-mounted to ceiling, contractor to provide mounting accessories as required. 3. Fixture shall be ordered with necessary power supplies, power feeds and mounting accessories as required for a complete system. 4. Locate remote power supplies in a secure, concealed, accessible and well-ventilated location in compliance with manufacturer's directions. 5. Electrical Engineer/Contractor to verify compatibility of lamp, power supply and dimming system.
XF7	Pole with (6) adjustable color changing LED theatrical ellipsoidal reflector spotlights and (6) LED adjustable accent lights at the top, nominal 24' height, DMX control and dimmable, wet-rated Location: Arts Plaza	Bega (6) 84 528-K3-FINISH Fixture (6) 79 511 Mounting Block (6) 71 111 Glare Shield 1908HR MOD 25'-FINISH-2x3D/3x2D Coemar (6)LEDko EXT2 Full Spectrum Bega (6)70 379 Pole Arms	Fixtures: No Alternate Pole: Valmont Lithonia Hubbell	Fixtures: Black Pole: Allow Standard	(6)180W RGBW LED Module 20,000hr+ L70 (6)37.5W LED Module 3000K +/- 75K CCT 80+ CRI 50,000hr+ L70 Lumens: 3773ea	Integral DMX 512A-Controlled Power Supply Input Watts: 1080 Integral 0-10V-Dimmable Power Supply Input Watts: 225	1. Fixture to be U.L. listed and rated "Suitable for wet locations." 2. Refer to base and pole detail by Architect/Civil Engineer. Provide pole to meet AASHTO requirements for EPA of fixture configuration. Architect/Civil Engineer shall coordinate pole anchorage detail to concrete base. 3. Pole to be modified for vertical mounting of accent lights as close to the top of the pole as possible, wiring withing the pole and any power supplies mounted inside the base accessible through a handhole. Contractor/Manufacturer to submit shop drawings showing all fixtures, connections etc. for design team review prior to fabrication. 4. Note fixture is dual-circuit dimmable. Theatrical fixtures to be controlled by theatrical DMX controller with manual control per fixture of color, brightness and saturation. Fixture shall be ordered with necessary data controllers, drivers and power feeds for installation of a complete system. Electrical Engineer/Contractor to verify compatibility of standard fixtures, power supplies and dimming system. 5. Supply, install and commission a complete working system that will provide DMX-controlled color-changing light for the stage lighting as a complete system capable of unified color changes and control fixture. The controls for this feature shall control the color-changing luminaires as indicated on drawings. The system shall include all luminaires, control wire and control equipment as required to provide a functioning system. 6. Contractor shall hire an integrator to ensure that the units are installed correctly, to address the control system programming and to coordinate the control system and programming. Integrator to coordinate with contractor, other required disciplines and with fixture manufacturer to ensure that the lighting color-changing control system is coordinated between the various disciplines for a fully functioning system. 7. Commissioning shall include intermittent testing of lighting system and other components during the process of construction as well as up to one (1) day of programming sessions with the owner's representatives and lighting and theatrical designer, this shall be subsequent to the final completion of system start-up. Additional programming days may be added as required.

Type	Description	Mfr / Catalog No.	Alternates	Finish	Lamping	Electrical Data	Notes
XF8	Pole with (4) adjustable color changing LED theatrical PAR wash lights and (6) LED adjustable accent lights at the top, nominal 24' height, DMX control and dimmable, wet-rated Location: Arts Plaza	ETC (4)SELD60XTI-V (2)D60XTIDPM Double Pole Mount Kit (4)D60XTIHH Half Shield (4)400SC Safety Cable (2)D60XTI-RM Medium Lens (2)D60XTI-RW Wide Lens (2)D60XTI-RXWExtraWideLens	Fixtures: No Alternate Pole: Allow Standard Pole: Valmont Lithonia Hubbell	Fixtures: Black Pole: Allow Standard	(4)124W LED Modules Color Changing 50,000hr+ L70 (6)37.5W LED Module 3000K +/- 75K CCT 80+ CRI 50,000hr+ L70	Integral DMX 512A-Controlled Power Supply Input Watts: 496 Integral 0-10V-Dimmable Power Supply	1. Refer to Type XF7 Notes. 8. Provide all accessories as noted, final accessories shall be determined in the field. Any unused accessories shall be provided to the Owner for extra stock.
XF9	Ingrade continuous linear color changing LED adjustable wall graze light, remote DMX control, wet-rated Location: Arts Plaza	Lumenpulse LOI-100/277-LENGTH-RGBW-30x30-TS0-INTL-DMX-RDM-ASL (1) LID CBX Remote Powersupplies as Required	Traxon Acclaim Color Kinetics	Hidden	17.25W/ft LED RGBW Lengths 50,000hr+ L70	Remote DMX 512A/RDM-Controlled Power Supply Input Watts: 17.25/ft	1. Refer to Type XF7 Notes except #2-4. 2. Modular units to be field-installed for a continuous run condition as shown on drawings. Refer to architectural drawings for lengths of continuous runs. 3. Contractor to coordinate fixture mounting with housing type, architectural details and field conditions including drainage per installation instructions. 4. Locate remote data controllers in a secure, concealed, accessible and well-ventilated location in compliance with manufacturer's directions. 5. Electrical Engineer/Contractor to verify compatibility of lamp, power supply and dimming system. 6. Fixture shall be U.L. listed and rated "Suitable for wet locations." 7. Fixtures to be controlled by theatrical DMX controller with manual control per foot of color, brightness and saturation. Fixture shall be ordered with necessary data controllers, drivers, control cables,devices and power feeds for installation of a complete system.
XF11	Surface-mounted LED lensed downlight, nominal 6" aperture, dimmable, wet-rated Location: Buildings	Alphabet NU4-RA-XTM19-20LM-35K-DC50-DIM10-NC	Ligman Luminis We-ef	Allow Standard	13.1W LED Module 3000K +/- 75K CCT 80+ CRI 50,000hr+ L70 Lumens: 815	Integral 0-10V-Dimmable Power Supply Input Watts: 15	1. Fixture to be U.L. listed and rated "Suitable for wet locations." 2. Luminaire shall be mounted over a recessed/surface-mounted junction box (by electrician). Manufacturer to provide a surface wiring box cover to match fixture as required. 3. Electrical Engineer/Contractor to verify compatibility of lamp, power supply and dimming system.
XF12	Surface-mounted linear LED lensed striplight, nominal 8" width and 48" length, damp-rated Location: Buildings	Mark Lighting SL4L-QS-LOP-4FT-FLP-80CRI-35K-600LMF	Lithonia Prudential HE Williams	White	25W LED Module 4000K +/- 75K CCT 80+ CRI 50,000hr+ L70 Lumens: 5,250	Integral Switching Power Supply Input Watts: 25	1. Fixture to be U.L listed and rated "Suitable for damp locations." 2. Contractor to verify and coordinate fixture mounting with Architectual details and field conditions. Fixture Canopy to be mounted over surface mounted junction box (by electrician).
XF12a	Wall Mounted linear LED lensed strip light, wet-rated Location: Buildings	Pinnacle Lighting EV3-WET-835HO-3IND-FLF-1	Mark Lighting Selux	Allow Standard	25W LED Module 4000K +/- 75K CCT 80+ CRI 50,000hr+ L70 Lumens: 5,250	Integral Switching Power Supply Input Watts: 25	1. Refer to Type XF12 Notes.
XF13	Ground nominal 6" arm-mounted LED linear adjustable shielded path light, nominal 1.5" aperture and 48" length, wet rated Location: Walkway Curb	HK Lighting ZXLLI-BD-3K-FSS-FINISH	No Alternate	Allow Standard	12W/ft LED Modules 3000K +/- 75K CCT 80+ CRI 50,000hr+ L70	Integral Switching Power Supply Input Watts: 48	1. Fixture to be U.L. listed and rated "Suitable for wet locations." 2. Contractor to install crash rated post for this fixture to slide over. Contractor shall provide details for approval. Contractor to coordinate mounting of fixture with crash rated post installtion and anchor bolts needed for fixture.
XF14	Handrail-mounted LED asymmetric downlight, remote power supply, wet-rated Location: Arts Plaza	Alphabet 750-3-3-FACE-WALL P70418-500 Remote Power Supplies As Required (1) 750 Zeta Toolkit	Klik Wagner	Allow Standard	1.5W LED Modules 3000K +/- 75K CCT 80+ CRI 50,000hr+ L70 Lumens: 110	Remote Power Supply Input Watts: (Per Power Supply): (1.5 ea)	1. Fixture to be U.L. listed and rated "Suitable for wet locations." 2. Refer to handrail detail by Architect/Civil Engineer. Contractor to coordinate installation with the handrail contractor. Please note that the Tool kit is required to rent to drill the holes in the rail at the correct angle. Please coordinate with Manufacturer as they often can come out and do the drilling themselves. 3. Fixture shall be ordered with necessary power supplies, power feeds and mounting accessories as required for a complete system. 4. Locate remote power supplies in a secure, concealed, accessible and well-ventilated location in compliance with manufacturer's directions.
XF15	Surface-mounted continuous linear LED tape light, dimmable, wet-rated Location: Site	Optic Arts FLEXNEON-SR-35A-24-S02-FNC1	Kelvix Core	Allow Standard	12W/ft LED Modules 3000K +/- 75K CCT 80+ CRI 50,000hr+ L70	Remote Power Supply Input Watts: (Per Power Supply): (1.5 ea)	1. Fixture to be U.L. listed and rated "Suitable for submersible locations." 2. Fixture to be cut to exact lengths, refer to architectural drawings for lengths of continuous runs. Contractor to field-measure lengths prior to ordering. 3. Fixture to be concealed in a bench detail, refer to Architectural drawings for details. 4. Fixture shall be ordered with necessary power supplies, power feeds and mounting accessories as required for a complete system. 5. Locate remote power supplies in a secure, concealed, accessible and well-ventilated location in compliance with manufacturer's directions.

Type	Description	Mfr / Catalog No.	Alternates	Finish	Lamping	Electrical Data	Notes
XF16	Wall Mounted linear LED lensed strip light, wet-rated Location: Buildings	Lithonia Lighting CLX-L48-HEF-MVOLT-35K-80CRI	Mark Lighting Selux	Allow Standard	25W LED Module 4000K +/- 75K CCT 80+ CRI 50,000hr+ L70 Lumens: 5,250	Integral 0-10V- Dimmable Power Supply Input Watts: 15	1. Fixture to be U.L listed and rated "Suitable for damp locations." 2. Contractor to verify and coordinate fixture mounting with Architectual details and field conditions. Fixture Canopy to be mounted over surface mounted junction box (by electrician).

GENERAL NOTES:

1. Provide all lighting fixtures as shown complete with all lamps, completely wired, controlled and securely attached to supports.
2. Where both narrative and/or pictorial fixture descriptions are provided, the written description shall take precedence and prevail.
3. The lighting fixtures and workmanship must be in accordance with and meet the standards and regulations of the following: a.) Underwriters Laboratories b.) National Electric Code c.)Local Building and Life Safety Code Agencies.
4. All fixtures and workmanship shall be guaranteed free of defects and fully operational for a minimum of one year after the acceptance of the project by the Owner. Any fixtures or workmanship (excluding lamps) found to be defective during the warranty period will be either fixed or replaced by the
5. Locations of fixtures are shown diagrammatically. Verify exact location and spacing with Plans and designer at the site during installation. Notify Owner about field conditions at variance with Contract Documents before commencing installation.
6. Provide adequate and sturdy support for each lighting fixture. Contractor shall be responsible for verifying weight and mounting method of all fixtures and furnish and install suitable supports. Fixture mounting assemblies shall comply with all local seismic codes and regulations.
7. At the completion of construction, clean lenses and reflectors of all lighting fixtures so as to render them free of any material, substance or film foreign to the fixture. Blemished, damaged, or unsatisfactory fixtures shall be replaced in a satisfactory manner.
8. Replace all burned-out or inoperative lamps, and inoperative ballasts in all fixtures before the building is accepted by the Owner so that all lighting fixtures will be in first class operating condition.
9. Contractor to review existing circuiting, verify new loads and panel capacity. Contractor shall notify Owner if a conflict between design documents and field conditions occur.
10. For all fixtures that are dimmed refer to electrical drawings for information on controls and dimming requirements. Provide appropriate dimming system based on load type. Contractor to provide all required components for a fully functioning system.
11. Contractor to provide line item pricing per fixture type with labor and installation shown as line items.
12. Refer to electrical drawings for Voltage information.
13. Per section 265010 Part III/U: For all adjustable fixtures provide labor and materials for final aiming and locking of all adjustable fixtures under the Architect's supervision. Aiming shall take place immediately before building is turned over to Owner, after regular working hours where required.

END OF SECTION 16500

SECTION 16550
CONTACTORS, RELAYS AND TIME SWITCHES

PART 1 -- GENERAL

1.1 SCOPE

A. Work Included**:** Not limited to the following:

1. Furnish and install contactors, relays, time switches and photocells where indicated or noted on the Contract Drawings and hereinafter specified.

2. Comply with the General Conditions, the General Requirements and the requirements of Section 16020 of this Division 16 concerning definitions, guarantees, submittals, as-builts, clean-up, etc. as applicable to work of this Section.

3. Examine all other Sections for work related to those Sections which are required to be included as work under this Section.

1.2 QUALITY ASSURANCE

A**.** Conform to applicable provisions of Sub-Section 1. 7 of Section 16020 - General Electrical Requirements.

B. Conform to applicable Codes and ASCO Bulletins.

1.3 SUBMITTALS

Conform to applicable provisions of Section 01330 of Division 1 - General Requirements and Sub-Section 1. 6G of Section 16020.

PART 2 -- PRODUCTS

2.1 GENERAL

A. Contactors:

1. For controlling individual branch circuits less than 25 amperes, provide ASCO Bulletin 917 relays with number of poles as indicated on the Drawings, and ASCO Bulletin 920 for 25 amperes and larger.

2. For contactors controlling bus sections, provide ASCO Bulletin 920 with ampere rating and number of poles as indicated on the Drawings. Install contactors on sound absorbing mounts.

B**.** Time Switches:

1. For controlling mechanically held relays or contactors shall be single pole, double throw, with no overlapping contacts. Time switches shall be seven-day dial with skip-a-day

feature. Time switches shall have manual bypass switches accessible without opening the time switch door.

Acceptable Manufacturers:

1. Intermatic;

2. Tork;

3. Or approved equal.

2. Time switches controlling light circuits directly shall have 40 ampere ratings and number of poles indicated on plans. Time switches shall have astronomic dial and manual bypass for all circuits.

Acceptable Manufacturers:

1. Paragon Electric Company model EC71ST;

2. Or approved equal.

C. Photocells**:** Single pole, single throw contacts rated at 120 volts, 1500 watts installed in a weatherproof and tamperproof aluminum housing with adjustable light level selector from 2 to 50 FC. Provide a five second delay.

Acceptable Manufacturers:

1. Tork 2100 Series;

2. Or approved equal.

PART3 -- EXECUTION

3.1 GENERAL INSTALLATION

A. Locations**:** Install where indicated on the Contract Drawings.

B**.** Mountings**:**

1. Unless otherwise indicated, contactors and relays for remote control of lighting circuits, etc., shall be mechanically held and mounted on shock mounts in bottom of panelboards, in enclosures adjacent to panelboards or in relay cabinets as indicated on the Contract Drawings.

2. Mount all contactors on live rubber shock mounts.

3. Mount all contactors, relays and time switches in panelboard with separate doors or NEMA 1 enclosures adjacent to panelboards, as indicated on the Contract Drawings.

4. Mount photoelectric cells where not shadowed.

END OF SECTION

SECTION 16560
MUNICIPAL FACILITIES ELECTRICAL SYSTEMS COMMISSIONING

PART 1 -- GENERAL

1.1 DESCRIPTION

A. The purpose of this section is to specify Division 16 responsibilities in the commissioning process which are being directed by the CA. Other electrical systems testing are required under the direction of the CM.

B. The list of commissioned equipment and systems is found in Section 01810.

C. Commissioning requires the participation of Division 16 to ensure that all systems are operating in a manner consistent with the Contract Documents. The general commissioning requirements and coordination are detailed in Division 01. Division 16 shall be familiar with all parts of Division 01 and the commissioning plan issued by the CA and shall execute all commissioning responsibilities assigned to them in the Contract Documents.

1.2 RESPONSIBILITIES

A. Electrical Contractors. The commissioning responsibilities applicable to the electrical contractor are as follows (all references apply to commissioned equipment only):

1. Construction and Acceptance Phases

a. Include the cost of commissioning in the contract price, if not yet let.

b. In each purchase order or subcontract written, include requirements for submittal data, O&M data and training.

c. Attend a commissioning kickoff meeting and other necessary meetings scheduled by the CA to facilitate the construction process.

d. Contractors shall provide normal cut sheets and shop drawing submittals to the CA of commissioned equipment.

e. Provide additional requested documentation, prior to normal O&M manual submittals, to the CA for development of start-up and functional testing procedures.

1) Typically this will include detailed manufacturer installation and start-up, operating, troubleshooting and maintenance procedures, full details of any owner-contracted tests, fan and pump curves, full factory testing reports, if any, and full warranty information, including all responsibilities of the Owner to keep the warranty in force clearly identified. In addition, the installation and checkout materials that are actually shipped inside the equipment and the actual field checkout sheet forms to be used by the factory or field technicians shall be submitted to the Commissioning Agent.
2) The Commissioning Agent may request further documentation necessary for the commissioning process.
3) This data request may be made prior to normal submittals.

f. Provide a copy of the O&M manuals submittals of commissioned equipment, through normal channels, to the CA for review and approval.

g. Contractors shall assist (along with the design engineers) in clarifying the operation and control of commissioned equipment in areas where the specifications, control drawings or equipment documentation is not sufficient for writing detailed testing procedures

h. Provide assistance to the CA in preparation of the specific functional performance test procedures specified in Section 16570. Subs shall review test procedures to ensure feasibility, safety and equipment protection and provide necessary written alarm limits to be used during the tests.

i. Develop a full start-up and initial checkout plan using manufacturer's start-up procedures and the prefunctional checklists from the CA. Submit manufacturer's detailed start-up procedures and the full start-up plan and procedures and other requested equipment documentation to CA for review.

j. During the startup and initial checkout process, execute and document the electrical-related portions of the prefucntional checklists provided by the CA for all commissioned equipment.

k. Perform and clearly document all completed startup and system operational checkout procedures, providing a copy to the CA.

l. Address current A/E punch list items before functional testing.

m. Provide skilled technicians to execute starting of equipment and to execute the functional performance tests. Ensure that they are available and present during the agreed upon schedules and for sufficient duration to complete the necessary tests, adjustments and problem-solving.

n. Perform functional performance testing under the direction of the CA for specified equipment in Section 16570 and 01810. Assist the CA in interpreting the monitoring data, as necessary.

o. Correct deficiencies (differences between specified and observed performance) as interpreted by the CA, CM and A/E and retest the equipment.

p. Prepare O&M manuals according to the Contract Documents, including clarifying and updating the original sequences of operation to as-built conditions.

q. During construction, maintain as-built red-line drawings for all drawings and final CAD as-builts for contractor-generated coordination drawings. Update after completion of commissioning (excluding deferred testing). Prepare red-line as-built drawings for all drawings and final as-builts for contractor-generated coordination drawings.

r. Provide training of the Owner's operating personnel as specified.

s. Coordinate with equipment manufacturers to determine specific requirements to maintain the validity of the warranty.

2. Warranty Period

a. Execute seasonal or deferred functional performance testing, witnessed by the CA, according to the specifications.

b. Correct deficiencies and make necessary adjustments to O&M manuals and as-built drawings for applicable issues identified in any seasonal testing.

B. Electrical Designer/Engineer

1. Refer to Section 01810 for the responsibilities of the Electrical Designer/Engineer.

1.3 RELATED WORK

A. Refer to Section 01810 for systems to be commissioned and Section 16570 for functional testing requirements.

PART 2 -- PRODUCTS

2.1 TEST EQUIPMENT

A. Division 16 shall provide all test equipment necessary to fulfill the testing requirements of this Division (i.e. light meters).

PART 3 -- EXECUTION

3.1 SUBMITTALS

A. Division 16 shall provide submittal documentation relative to commissioning to the CA as requested by the CA. Refer to Section 01810 for additional Division 16 requirements.

3.2 STARTUP

A. The electrical contractors shall follow the start-up and initial checkout procedures listed in the Responsibilities list in this section and in 01810 Part 3.2. Division 16 has start-up responsibility and is required to complete systems and sub-systems so they are fully functional, meeting the design objectives of the Contract Documents. The commissioning procedures and functional testing do not relieve or lessen this responsibility or shift that responsibility partially to the commissioning agent or Owner.

B. Functional testing is intended to begin upon completion of a system. Functional testing may proceed prior to the completion of systems, or sub-systems at the discretion of the CA and CM. Beginning system testing before full completion does not relieve the Contractor from fully completing the system, including all prefunctional checklists as soon as possible.

3.3 FUNCTIONAL PERFORMANCE TESTS

A. Refer to Section 01810 for a list of systems to be commissioned and for a description of the process and to Section 16570 for specific details on the required functional performance tests.

3.4 TESTING DOCUMENTATION, NON-CONFORMANCE AND APPROVALS

A. Refer to Section 01810 for specific details on non-conformance issues relating to prefunctional checklists and tests.

B. Refer to Section 01810 for issues relating to functional performance tests.

3.5 OPERATIONS AND MAINTENANCE (O&M) MANUALS

A. Division 16 shall compile and prepare documentation for all equipment and systems covered in Division 16 and deliver to the GC for inclusion in the O&M manuals, according to Section 01810.

B. The CA shall receive a copy of the O&M manuals for review.

3.6 TRAINING OF OWNER PERSONNEL

A. The GC shall be responsible for training coordination and scheduling and ultimately to ensure that training is completed. Refer to Section 01810 for additional details.

B. The CA shall be responsible for overseeing and approving the content and adequacy of the training of Owner personnel for commissioned equipment. Refer to Section 01810 for additional details.

C. Electrical Contractor. The electrical contractor shall have the following training responsibilities:

1. Provide the CA with a training plan two weeks before the planned training according to the outline described in Section 01810.

2. Provide designated Owner personnel with comprehensive training in the understanding of the systems and the operation and maintenance of each major piece of commissioned electrical equipment or system.

3. Training shall start with classroom sessions, if necessary, followed by hands on training on each piece of equipment, which shall illustrate the various modes of operation, including startup, shutdown, fire/smoke alarm, power failure, etc.

4. During any demonstration, should the system fail to perform in accordance with the requirements of the O&M manual or sequence of operations, the system will be repaired or adjusted as necessary and the demonstration repeated.

5. The appropriate trade or manufacturer's representative shall provide the instructions on each major piece of equipment. This person may be the start-up technician for the piece of equipment, the installing contractor or manufacturer’s representative. Practical building operating expertise as well as in-depth knowledge of all modes of operation of the specific piece of equipment is required. More than one party may be required to execute the training.

6. The training sessions shall follow the outline in the Table of Contents of the operation and maintenance manual and illustrate whenever possible the use of the O&M manuals for reference.

7. Training shall include:

   a. Use the printed installation, operation and maintenance instruction material included in the O&M manuals.

   b. Include a review of the written O&M instructions emphasizing safe and proper operating requirements, preventative maintenance, special tools needed and spare parts inventory suggestions. The training shall include start-up, operation in all modes possible, shut-down, seasonal changeover and any emergency procedures.

   c. Discuss relevant health and safety issues and concerns.

   d. Discuss warranties and guarantees.

   e. Cover common troubleshooting problems and solutions.

   f. Explain information included in the O&M manuals and the location of all plans and manuals in the facility.

   g. Discuss any peculiarities of equipment installation or operation.

   h. The format and training agenda in Guidelines for Commissioning HVAC Systems, ASHRAE, 1989R, 1996 is a recommended reference.

   i. Classroom sessions shall include the use of overhead projections, slides, video and audio taped material as might be appropriate.

8. Hands-on training shall include start-up, operation in all modes possible, including manual, shut-down and any emergency procedures and maintenance of all pieces of equipment.

9. The electrical contractor shall fully explain and demonstrate the operation, function and overrides of any local packaged controls, not controlled by the central control system.

   a. Training shall occur after functional testing is complete, unless approved otherwise by the Project Manager.

   b. Duration of Training. The electrical contractor shall provide training on each piece of equipment according to the following schedule.

Hours	System
4	Lighting controls, controllers, and schedules
2	Occupancy sensors and photo sensors

3.7 DEFERRED TESTING

A. Refer to Section 01810 for requirements of deferred testing.

3.8 WRITTEN WORK PRODUCTS

A. Written work products of Contractors will consist of the startup and initial checkout plan described in Section 01810 and the filled out startup, initial checkout and pre-functional checklists.

(END OF SECTION)

SECTION 16570
MUNICIPAL FACILITIES ELECTRICAL TESTING REQUIREMENTS

PART 1 -- GENERAL

1.1 INCLUDED SYSTEMS AND EQUIPMENT

A. The following is a list of the equipment and system test requirements included in this section:

1. Lighting sweep controls (weekday, weekend, and holiday schedules).

2. Occupancy sensors.

3. Photo sensors (indoor and outdoor).

4. Lighting controllers (indoor and outdoor).

1.2 DESCRIPTION

A. This section specifies the functional testing requirements for Division 16 systems and equipment. From these requirements, the Commissioning Authority (CA) shall develop step-by-step procedures to be executed by the Subs. The general functional testing process, requirements and testing methods definitions are described in Section 01810. The test requirements for each piece of equipment or system contain the following:

1. The contractors responsible to execute the tests, under the direction of the CA.

2. A list of the integral components being tested.

3. Prefunctional checklists associated with the components.

4. Functions and modes to be tested.

5. Required conditions of the test for each mode.

6. Special procedures.

7. Required methods of testing.

8. Required monitoring.

9. Acceptance criteria.

10. Sampling strategies allowed.

1.3 PREREQUISITES

A. The following applicable generic prerequisite checklist items are required to be listed on each written functional test form and be completed prior to functional testing.

1. All related equipment has been started up and calibrated and start-up reports and prefunctional checklists submitted and approved ready for functional testing. Sample prefunctional checklists can be found in Section 01813. These are samples and for reference only. Final prefunctional checklists will be provided as part of the Construction

Phase Commissioning Plan.

2. All A/E punchlist items for this equipment corrected.

3. These functional test procedures reviewed and approved by installing contractor.

4. Safeties and operating ranges reviewed by the CA.

5. Test requirements and sequences of operation attached.

6. Schedules and set points attached.

7. Record of all values for pre-test set points changed to accommodate testing has been made and a check box provided to verify return to original values (control parameters, limits, delays, lockouts, schedules, etc.).

PART 2 -- PRODUCTS

NOT USED.

PART 3 -- EXECUTION

3.1 LIGHTING SWEEP CONTROLS

A. Parties Responsible to Execute Functional Test

1. Lighting Controls contractor: operate the controls

2. Electrical contractor: assist in testing sequences

3. CA: to witness, direct and document testing.

B. Prerequisites

1. The applicable prerequisite checklist items listed in the beginning of Section 16570 shall be listed on each functional test form and checked off prior to functional testing.

C. Functions / Modes Required To Be Tested and Test Methods

1. The following testing requirements are an addition to and do not replace any testing requirements elsewhere in this Division.

Function / Mode	Test Method Manual (demonstration), Monitoring, Either or Both
MISCELLANEOUS FUNCTIONS	
1. All specified functions and features are set up, debugged and fully operable.	Verbal discussion of features
2. Power failure and battery backup and power-up restart functions.	Demonstration
3. Security and access codes.	Demonstration
4. Verify override duration setting.	Demonstration
5. Scheduling features fully functional and setup, including weekdays, weekends, and holidays.	Observation in terminal screens or printouts
SWEEP FUNCTIONS	
1. 50% of the zones with a minimum of 2 zones per controller or relay must be verified by turning on at least 25% of the lights in the zone and witnessing an actual sweep.	Either
OVERRIDE FUNCTIONS	
1. Manual occupant overrides: 25% of the local override switches, with a minimum of 4 switches must be verified by turning the override switches ON after a sweep and seeing the lights turn back on. 100% of the remainder of the switches should be sight verified to be in place.	Either

D. Acceptance Criteria (referenced by function or mode ID)

1. For the conditions, sequences and modes tested, the sweep controls, integral components and related equipment respond to changing conditions and parameters appropriately as expected, as specified and according to acceptable operating practice.

E. Sampling Strategy for Identical Units

1. Sample the units per the above table. If 10% of the units in the first sample fail the functional performance tests, test another 10% of the group (the 2nd sample). If 10% of the units in the 2nd sample fail, test all remaining units in the whole group, fully at the contractor's expense.

3.2 OCCUPANCY SENSORS

A. Parties Responsible to Execute Functional Test

1. Electrical contractor: assist in testing sequences
2. CA: to witness, direct and document testing.

B. Prerequisites

1. All occupancy sensor calibration and set points shall be verified prior to functional testing.

2. The applicable prerequisite checklist items listed in the beginning of Section 16570 shall be listed on each functional test form and checked off prior to functional testing.

C. Functions / Modes Required To Be Tested and Test Methods

1. The following testing requirements are an addition to and do not replace any testing requirements elsewhere in this Division.

Function / Mode	Test Method Manual (demonstration), Monitoring, Either or Both
MISCELLANEOUS FUNCTIONS	
1. All specified functions and features are set up, calibrated, debugged and fully operable.	Verbal discussion of features
2. Occupant over-ride functions and duration setting.	Demonstration
OCCUPANCY SENSOR FUNCTIONS	
1. Test the sequence of operation for all features and modes.	Manual
2. Verify that the controls and sensors are not easily overridden or disabled by occupants.	Visual inspection
3. Verify that the occupancy sensor is in an adequate location and is not being affected by obstructions.	Visual inspection

D. Acceptance Criteria (referenced by function or mode ID)

1. For the conditions, sequences and modes tested, the dimming controls, integral components and related equipment respond to changing conditions and parameters appropriately as expected, as specified and according to acceptable operating practice.

E. Sampling Strategy for Identical Units

1. Each occupancy sensor and its controlled zone must be tested (no sampling).

3.3 PHOTO SENSORS

A. Parties Responsible to Execute Functional Test

1. Electrical contractor: assist in testing sequences

2. CA: to witness, direct and document testing.

B. Prerequisites

1. All photo sensor calibration and set points shall be verified prior to functional testing.

2. The applicable prerequisite checklist items listed in the beginning of Section 16570 shall be listed on each functional test form and checked off prior to functional testing.

C. Functions / Modes Required To Be Tested and Test Methods

1. The following testing requirements are an addition to and do not replace any testing requirements elsewhere in this Division.

Function / Mode	Test Method Manual (demonstration), Monitoring, Either or Both
MISCELLANEOUS FUNCTIONS	
1. All specified functions and features are set up, calibrated, debugged and fully operable (indoor and outdoor sensors).	Verbal discussion of features
PHOTO SENSOR FUNCTIONS	
1. Test the sequence of operation for all features and modes (weekday, weekend, and holiday schedules) and interlocks with time clocks, if any.	Manual
2. Verify that the controls and sensors are not easily overridden or disabled by occupants.	Visual inspection
3. Verify that the photo sensor is in an adequate location and is not being affected by obstructions.	Visual inspection
DIMMING FUNCTIONS	
1. Verify that dimming does not cause lower than specified light levels in adjacent “non-dimmed” spaces.	

D. Acceptance Criteria (referenced by function or mode ID)

1. For the conditions, sequences and modes tested, the dimming controls, integral components and related equipment respond to changing conditions and parameters appropriately as expected, as specified and according to acceptable operating practice.

E. Sampling Strategy for Identical Units

1. Each photo sensor and its controlled zone must be tested (no sampling).

(END OF SECTION)

BUREAU OF ENGINEERING

SIXTH STREET PARK, ARTS AND RIVER CONNECTIVITY IMPROVEMENTS (PARC)
WORK ORDER NO. E700235D

ATTACHMENTS

BID SUBMITTAL
JULY 2022

City of Los Angeles
California

Department of Public Works
Bureau of Engineering

ENGINEERING
CITY OF LOS ANGELES

BUREAU OF ENGINEERING

SIXTH STREET PARK, ARTS AND RIVER CONNECTIVITY IMPROVEMENTS (PARC) WORK ORDER NO. E700235D

ATTACHMENT NO. 1
SOIL INVESTIGATIONS

BID SUBMITTAL
JULY 2022

City of Los Angeles
California

Department of Public Works
Bureau of Engineering

TETRA TECH

Project No. TET 21-203E
August 3, 2021

Mr. Justin Smith
Tetra Tech
17885 Von Karman Avenue, Suite 500
Irvine, California, 92614

Subject: UPDATE OF DRAFT GEOTECHNICAL REPORT
Sixth Street Viaduct – Parc Improvements
Los Angeles, California

Reference: Draft Geotechnical Site Investigation
Sixth Street Viaduct – Parc Improvements
Los Angeles, California
Prepared by Hushmand Associates, Inc, dated January 2018.

This document presents Tetra Tech's review and recommended updates to the above referenced geotechnicial report prepared by Hushmand Associates, Inc. (HAI) dated January 2018. These updates are required for Tetra Tech to become the Geotechnical Engineer of Record for the project.

PROJECT DESCRIPTION AND GEOTECHNICAL CONDITONS

The project consists of a greenbelt constructed below and adjacent to the Sixth Street Viaduct that will include recreational amenities. Structures associated with these improvements include restroom/concession buildings, arts plaza, and retaining walls as well as bike trails adjacent to the Los Angeles River.

Hushmand and Associates, Inc. (HAI) performed a geotechnical investigation for the project as summarized in the above referenced draft geotechnical report. The field exploration performed by HAI included a total of 9 hollow-stem auger borings, including 3 borings drilled to depths of approximately 21 to 39 feet to evaluate foundation conditions, and 6 borings drilled to depths of approximately 6 feet to perform percolation and agronomic testing. The subsurface soils encountered in the borings generally consisted of loose to medium dense silty sand to poorly graded sand with silt to the maximum depth explored. Groundwater was not encountered in the HAI borings. However, based on review of the previous investigation performed for the Viaduct Replacement (EMI, 2015), HAI adopted a design groundwater elevation that varied along the project alignment with the shallowest design groundwater elevation approximately 33 feet below surface grade near the Los Angeles River.

UPDATES TO HAI REPORT

Tetra Tech has reviewed the HAI report and concur with many of the findings and recommendations, however, there are several design recommendations that require updates or

revisions. Specific sections of the report where updates are required are presented below. Unless specifically updated herein, the recommendations presented in the HAI report remain valid.

Section 6.2 Site Seismic Design Coefficients

The seismic coefficients should be updated based on ASCE 7-16 as presented in Table 6.2 below.

Table 6.2
Site Categorization and Site Coefficients

Categorization / Coefficient	Design Values
Site Coordinates	34.03851°N, 118.22804°W
Site Soil Classification	S_D
Short Period Spectral Acceleration S_s (g)	1.930
1-sec. Period Spectral Acceleration S_1 (g)	0.688
Short Period (MCE_R) Spectral Acceleration S_{MS} (g)	1.930
1 -sec. Period (MCE_R) Spectral Acceleration S_{M1} (g)	1.170 [1]
Short Period Design Spectral Acceleration S_{DS} (g)	1.287
1 -sec. Period Design Spectral Acceleration S_{D1} (g)	0.780 [1]
Site Modified Peak Ground Acceleration PGA_M (g)	0.910

[1] Assumes that an exception for site specific ground motion analyses per ASCE 7-16 Section 11.4.8 applies.

Section 6.4 Liquefaction

Tetra Tech concurs that soil liquefaction is not expected to develop at the project site during design seismic event. There is potential for dynamic settlement of dry / nonsaturated sands. The amount of dynamic settlement was estimated using the procedures outlined by Pradel (1998a and 1998b) based on the design level earthquake event. The estimated values ranged from about 0.2 to 1.7 inches with an average value of approximately 0.9 inches.

Section 7.0 Pavement Design

It is recommended that the design R-value for the subgrade soils be set at 50. The revised recommended pavement sections for various traffic loading conditions are presented on Tables 7.1a and 7.1b below.

Table 7.1a
Recommended Pavement Structural Sections (Design R-value = 50)

Option	Traffic Index	6	7	8	9	10	11	12	13
I	Hot Mix Asphalt (in.)	3.0	4.0	5.0	5.5	6.5	7.0	7.5	8.0
	Class 2 Aggregate Base (in.)	4.5	4.5	5.0	6.5	7.0	8.0	9.5	10.5
II	Portland Cement Concrete (in.)	9.0				10.0	10.5	--	--
	Class 2 Aggregate Base (in.)	6.0				7.5	8.5	--	--
III	Full-depth Hot Mix Asphalt (in.)	5.5	7.0	8.0	9.0	10.0	11.0	12.0	13.0

For parking and light traffic areas, Portland cement concrete (PCC) pavement may be designed per Table 7.1b below.

Table 7.1b
Recommended Portland Cement Concrete (PCC) Thickness (k = 200 pci)

Traffic Loading[1] (ADTT)	With concrete curb & gutter or concrete shoulder		Without concrete curb & gutter or concrete shoulder	
	PCC (in.)[2]	AB Class 2 (in.)	PCC (in.)[2]	AB Class 2 (in.)
3	5.0	6.0	5.5	6.0
10	5.5	6.0	6.0	6.0
20	5.5	6.0	6.5	6.0
50	5.5	6.0	6.5	6.0

[1] ADTT = Average daily truck traffic
[2] Concrete thickness based on minimum modulus of rupture = 550 psi

In areas of occasional maintenance vehicle crossing over pathways composed of Disintegrated Granite (DG) a minimum section of 3-inches of DG over 4-inches of aggregate base (AB) is recommended.

Crushed Miscellaneous Base (CMB) my be used as a substitute for AB Class 2 provided it meets the requirements of the Caltrans Standard Specifications (Section 26-1.02B).

The upper 12 inches of subgrade below pavement sections should be moisture conditioned to at least 2 percent over optimum moisture content and compacted to at least 95 percent of maximum dry density per ASTM D1557.

Section 8.1.3 Subgrade Preparation

Note that specific subgrade improvement below footing foundations and mat foundations are presented in Section 8.4 and for slabs in Section 8.5.

Section 8.2 Lateral Earth Pressures for Retaining Structures

The parameters presented in Tables 8.1 to 8.4 in the HAI report may be used for design of retaining walls. However, the seismic lateral earth pressure may be taken as $13.5 \times H^2$ lbs/foot of wall where H is the height of wall in feet. The seismic force should be assumed to act at a height of 2/3H measured from the bottom of the wall footings.

Section 8.4 Foundations

Overexcavation of 2 feet below and 3 feet beyond all footings and mat founcations will be required. Preparation of the exposed surface and placement and compaction of "granular fill" should be performed per the recommendations in the HAI report except that the "granular" soils should have no more than 30 percent passing the #200 sieve and have no particle size greater than 3 inches.

Section 8.4.1 - 700-Square Foot Restroom Facility

The maximum allowable bearing pressure should be limited to 3,000 psf for static loading with a 1/3 increase for transient loads including wind and seismic.

Section 8.4.2 - Arts Plaza

The maximum allowable bearing pressure should be limited to 3,200 psf for static loading with a 1/3 increase for transient loads including wind and seismic.

Section 8.4.3 - Los Angeles River Bike Path

The maximum allowable bearing pressure should be limited to 3,200 psf for static loading with a 1/3 increase for transient loads including wind and seismic.

Section 8.4.4 - 2,000-Square Foot Restroom Facility

The maximum allowable bearing pressure should be limited to 3,200 psf for static loading with a 1/3 increase for transient loads including wind and seismic.

Section 8.4.5 (New) – Mat Foundations

Mat foundations should be at least 12 inches thick. The thickness of the mat foundation should be determined by the Structural Engineer in accordance with 2019 CBC requirements. The embedment depth of the mat foundations should be at least 18 inches below the lowest adjacent grade.

Design of the mat foundations should be performed by the Structural Engineer in accordance with 2019 California Building Code. Geotechnical parameters for design of the mat foundations are provided in Table 8.5 below.

Table 8.5
Geotechnical Design Parameters
(Mat Foundations)

Allowable Bearing Pressure	• Average allowable bearing pressure = 1,500 psf • The allowable bearing value may be increased by one-third for transient live loads from wind and seismic loading.
Estimated Settlement	• Approximately 1-inch total settlement (static). • Approximately 0.5-inch differential settlement (static). • Mat foundations should also be designed for seismically-induced total settlement up to about 2 inches and differential settlement up to about 1 inches.
Modulus of Subgrade Reaction	For design of mat foundation, a modulus of subgrade reaction k_1 of 150 pci derived for a bearing plate with 1 foot x 1 foot dimensions may be used. For the on-site sandy soils, the modulus of subgrade reaction for the design of a concrete element of a given dimension can be calculated as: $k = k_1(\frac{B+1}{2B})^2(\frac{1+0.5\frac{B}{L}}{1.5})$ Where B and L is the governing width and length of the element in feet, but no more than 14 times the thickness of the mat foundation.
Allowable Coefficient of Friction (incorporates a Factor of Safety of 1.5)	• 0.35 for mass concrete on soils • 0.15 for mass concrete underlain by a moisture vapor barrier
Ultimate Lateral Passive Resistance	• 350 pcf equivalent fluid density. • The passive earth pressure value is an ultimate value

Section 8.5 Slabs-on-Grade

The subgrade below building and exterior slabs should be over-excavated a depth of at least 1 foot. The exposed surface should be moisture conditioned to at least 3 percent above optimum moisture content and compacted to 90 percent of maximum dry density per ASTM D1557 to a depth of 8 inches. Fill used to establish design grade should have no more than 30 percent passing the #200 sieve and no particles size greater than 3 inches. The fill should be moisture conditioned to at least 2 percent above optimum moisture content and compacted to at least 95 percent of maximum dry density per ASTM D1557.

LIMITATIONS

The recommendations and opinions expressed in this report are based on Tetra Tech's review of background documents and on information obtained from field explorations and associated laboratory testing performed by others. It should be noted that this study did not evaluate the possible presence of hazardous materials at the site.

Due to the limited nature of the field explorations, conditions not observed and described in this report may be present on the site. Uncertainties relative to subsurface conditions can be reduced through additional subsurface exploration. Additional subsurface evaluation and laboratory testing can be performed upon request. It should be understood that conditions different from those anticipated in this report may be encountered during grading operations, for example, the extent of unsuitable soil and the associated additional effort required to mitigate them.

Site conditions, including groundwater level, can change with time as a result of natural processes or the activities of man at the subject site or at nearby sites. Changes to the applicable laws, regulations, codes, and standards of practice may occur as a result of government action or the broadening of knowledge. The findings of this report may, therefore, be invalidated over time, in part or in whole, by changes over which Tetra Tech has no control. Therefore, this report should be reviewed and recertified by Tetra Tech if it were to be used for a project design commencing more than one year after the date of issuance of this report.

Tetra Tech's recommendations for this site are, to a high degree, dependent upon appropriate quality control of subgrade preparation, fill placement, and foundation construction. Accordingly, the recommendations are made contingent upon the opportunity for Tetra Tech to observe grading operations and foundation construction for the proposed construction. If parties other than Tetra Tech are engaged to provide such services, such parties are automatically assuming complete responsibility as the Geotechnical Engineer of Record for the project and are deemed concurring with the recommendations in this report and/or are obligated to provide alternative recommendations.

This document is intended to be used only in its entirety. No portion of the document, by itself, is designed to completely represent any aspect of the project described herein. Tetra Tech should be contacted if the reader requires additional information or has questions regarding the content, interpretations presented, or completeness of this document. Reliance by others on the data presented herein or for purposes other than those stated in the text is authorized only if so permitted in writing by Tetra Tech. It should be understood that such an authorization may incur additional expenses and charges.

Tetra Tech has endeavored to perform its evaluation using the degree of care and skill ordinarily exercised under similar circumstances by reputable geotechnical professionals with experience in this area in similar soil conditions. No other warranty, either expressed or implied, is made as to the conclusions and recommendations contained in this report.

CLOSURE

We appreciate the opportunity to provide our professional services on this project. If you have any questions regarding this report or if we can be of further service, please do not hesitate to contact the undersigned.

Respectfully submitted,
Tetra Tech BAS, Inc.

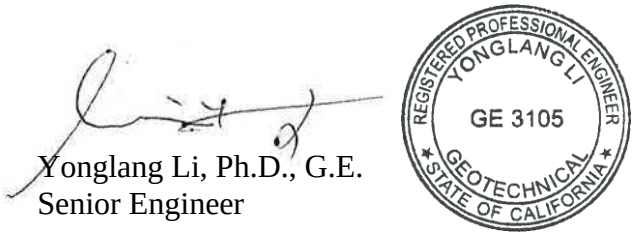

Yonglang Li, Ph.D., G.E.
Senior Engineer

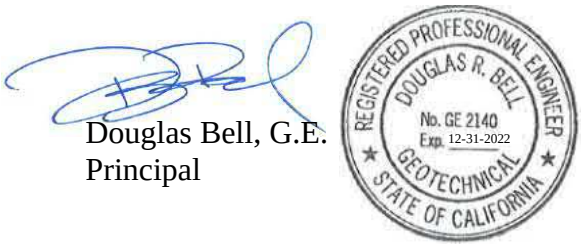

Douglas Bell, G.E.
Principal

Distribution: Addressee (pdf by email justin.t.smith@tetratech.com)
Filename: Final - 6th St Viaduct - Parc Improvements - Geotech Report Update.docx

DRAFT

GEOTECHNICAL SITE INVESTIGATION
SIXTH STREET VIADUCT - PARC IMPROVEMENTS
LOS ANGELES, CALIFORNIA



Prepared for
Tetra Tech
350 S. Grand Avenue, Suite 33100
Los Angeles, CA 90071

and

Sixth Street Viaduct Division
Bureau of Engineering | Department of Public Works
City of Los Angeles
585 S Santa Fe Avenue
Los Angeles, CA 90013

Prepared by
Hushmand Associates, Inc.
250 Goddard
Irvine, California 92618
hai@haieng.com
(949) 777-1266

January 2018

TABLE OF CONTENTS

Page

1.0 INTRODUCTION 1
2.0 SCOPE OF SERVICES 1
3.0 FIELD EXPLORATION 2
3.1 Pre- Field Investigation Activities 2
3.2 Soil Borings 3
3.3 Soil Percolation/Infiltration Tests 3
3.4 Agronomic Tests 4
4.0 LABORATORY TESTING 4
4.1 Geotechnical 4
4.2 Agronomic Testing 5
4.3 Environmental Testing for Soil Disposal 5
5.0 SITE AND SUBSURFACE CONDITIONS 5
5.1 Local Geology 5
5.2 Subsurface soils 5
5.3 Groundwater 6
5.4 Generalized Soil Profiles 6
6.0 SEISMIC DESIGN CONSIDERATIONS 7
6.1 Site Seismicity 7
6.2 Site Seismic Design Coefficients 8
6.3 Fault Rupture Hazards 8
6.4 Liquefaction 9
6.5 Landslides 9
6.6 Collapse Potential 9
6.7 Corrosion Potential 10
7.0 PAVEMENT DESIGN 10
8.0 FINDINGS AND CONCLUSIONS/RECOMMENDATIONS 12
8.1 Earthwork 12
8.1.1. Clearing and Site Preparation 12
8.1.2. Over-Excavation and Preparation for New Improvements 12
8.1.3. Subgrade Preparation 12
8.1.4. Fill Placement and Compaction 12
8.1.5. Oversize Materials and Import Soils 12
8.1.6. Wet Weather Conditions 13

8.1.7. Surface Drainage 13
8.2 Lateral Earth Pressure for Retaining Structures 13
8.2.1. 700-Square Foot Restroom Facility 13
8.2.2. Arts Plaza 14
8.2.3. Los Angeles River Bike Path 15
8.2.4. 2,000-Square Foot Restroom Facility 16
8.3 Temporary Excavation and shoring support system 17
8.4 Foundations 18
8.4.1. 700-Square Foot Restroom Facility 18
8.4.2. Arts Plaza 18
8.4.3. Los Angeles River Bike Path 19
8.4.4. 2,000-Square Foot Restroom Facility 19
8.5 Slabs-On-Grade 20
8.5.1. Building Floor Slab 20
8.5.2. Exterior Concrete Flatwork 20
8.6 Utility Trench Backfill 20
8.6.3. Pipe Zone Bedding and Shading Backfill 20
8.6.4. Trench Zone 21
8.7 Existing Utilities 21
8.8 Site Drainage 22
8.9 Agronomic Usage of Site Soils 22
8.10 Construction Observations and Field Testing 22
9.0 ADDITIONAL SERVICES AND LIMITATIONS 22
9.1 Additional Services 22
9.2 Limitations 22
10.0 REFERENCES 23

LIST OF TABLES

Table 3.1 Summary of Soil Borings
Table 3.2 Summary of Infiltration Test Results
Table 5.1 Generalized Soil Profile for 700 SF Restroom Building
Table 5.2 Generalized Soil Profile for Arts Plaza
Table 5.3 Generalized Soil Profile for Los Angeles River Bike Path
Table 5.4 Generalized Soil Profile for 2,000 SF Restroom/Concession Building
Table 6.1 Nearby Active Faults
Table 6.2 Site Categorization and Site Coefficients
Table 6.3 Results of Corrosivity Testing
Table 7.1 Recommended Pavement Structural Sections (Design R-value = 65)
Table 8.1 Recommended Lateral Earth Pressures for 700 SF Restroom Facility
Table 8.2 Recommended Lateral Earth Pressures for Arts Plaza
Table 8.3 Recommended Lateral Earth Pressures for Los Angeles River Bike Path
Table 8.4 Recommended Lateral Earth Pressures for 2,000 SF Restroom Facility

LIST OF FIGURES

Figure 1 Site Vicinity Map
Figure 2 Conceptual Design Plan
Figure 3 Approximate Soil Boring Locations
Figure 4 Regional Geology Map
Figure 5 Seismic Hazard Map

LIST OF APPENDICES

Appendix A Field Information
Appendix B Laboratory Test Results
Appendix C Soil Management Report

GEOTECHNICAL SITE INVESTIGATION
SIXTH STREET VIADUCT PARC IMPROVEMENTS
LOS ANGELES, CALIFORNIA

1.0 INTRODUCTION

Hushmand Associates, Inc. (HAI) is pleased to provide Tetra Tech Incorporated (TTI) and the City of Los Angeles Bureau of Engineering (City) with this report for geotechnical findings and design recommendations for the proposed Landscape Design of West Park, Arts Plaza, Tunnel Rehabilitation, and East Park areas as part of the Sixth Street Viaduct Replacement Project (PARC Project), as shown in Figure 1. The project site extends along East Sixth Street from Mateo Street and along Whittier Boulevard to west of U.S. Highway 101 (Figure 1).

As part of the PARC project, the following facilities (as shown in Figure 2) are proposed for which design recommendations are requested by TTI:

- 700-square foot (SF) Restroom Building;
- Arts Plaza;
- Los Angeles River Bike Path; and
- 2,000 SF Restroom/Concession Building.

HAI has reviewed the available existing geotechnical investigations and reports for the project area. The following reports from previous investigations in addition to the current investigation were used in providing design recommendations:

- Foundation Report, Sixth Street Viaduct (Replace) Bridge No. 53C-1880/53-0595, Sixth Street Viaduct Replacement Project, Los Angeles, CA, 07-LA-101, PM S0.20, prepared by Earth Mechanics, Inc. for HNTB Corporation, and City of Los Angeles, Bureau of Engineering, dated July 19, 2015, EMI Project No. 13-102.
- Foundation Report, West, North East, and South East Bike Ramps, Sixth Street Viaduct Replacement Project, Los Angeles, CA, 07-LA-101, PM S0.20, prepared by Earth Mechanics, Inc. for HNTB Corporation, and City of Los Angeles, Bureau of Engineering, dated March 15, 2016, EMI Project No. 13-102.
- Geotechnical Drilling Report, Sixth Street Viaduct Replacement Project, Installation of Shoring Piles, Westerly Side of the Los Angeles River at Sixth Street, Los Angeles, CA 90013 prepared by California Testing & Inspections for Skanska, Stacy and Witbeck, dated July 14, 2017.

This report was prepared in accordance with the scope of work of HAI's Proposal No. P16-0728R. The scope of work comprised conducting a field investigation, performing laboratory testing and engineering analyses, and preparing this report presenting our findings, conclusions, and recommendations for the project.

2.0 SCOPE OF SERVICES

The scope of this geotechnical investigation comprised field exploration, perform percolation tests, laboratory testing program, interpretation of field and laboratory test data, engineering analyses, and preparation of this report providing geotechnical engineering data for designing the proposed PARC facilities.

Our scope of work included the following tasks:

- Project coordination and review of existing information provided by TTI.
- Site reconnaissance to document the existing condition of the site, and to select and mark the proposed boring locations. Coordinate with Underground Service Alert for marking underground utility locations prior to drilling.
- Drilling and sampling at nine (9) locations provided by TTI in the project area. The purpose of these borings was to assess subsurface soil conditions and collect soil samples for geotechnical and agronomic laboratory testing.
- Performing percolation tests at six (6) boring locations specified by TTI.
- Laboratory testing of soil samples from the drilling program and field and laboratory data compilation and engineering analyses to determine physical properties of the site soils.
- Compilation of field and laboratory data, and engineering analyses required to provide design recommendations for the proposed PARC improvements; and
- Preparation of this report presenting our findings, conclusions and recommendations pertaining to design and construction of PARC improvements.

The engineering conclusions and recommendations presented herein address the following:

- Potential seismic hazards;
- Site seismic design coefficients;
- Earthwork and compaction criteria;
- Lateral earth pressures;
- Shallow foundation design parameters;
- Agronomic Testing of site soils;
- Pavement design;
- Pipe bedding and shading and trench zone requirements;
- Concrete flatworks, and
- Corrosion potential of soils.

Our scope of services did not include evaluations or recommendations regarding groundwater quality, hazardous waste, asbestos or lead abatement, or demolition of existing structures, utilities, or other facilities.

3.0 FIELD EXPLORATION

3.1 PRE- FIELD INVESTIGATION ACTIVITIES

Prior to the field investigation, a site reconnaissance was performed by our staff to mark the proposed boring locations and to evaluate this location with respect to utility lines and other subsurface structures. Underground Service Alert (USA) was then notified for the proposed nine (9) boring locations (GB-1, GB-2, GB-3, GB-4, GB-6, GB-7, GB-8, GB-9, and GB-10 with corresponding USA ticket nos. A73041625, A73041628, A73041630, A73041633, A73041636, A173100477, A73041642, A73041643, and A73041645, respectively).

The field investigation activities were performed from November 3 through 8, 2017 and consisted of drilling nine (9) borings to a maximum depth of 39.08 feet below ground surface (bgs) and performing percolation tests at six (6) different locations (Borings GB-1, GB-3, GB-6, GB-7, GB-8, and GB-10) at the depths of around 5 to 6 feet bgs.

3.2 SOIL BORINGS

The borings were drilled with 8-inch outside diameter hollow-stem auger (HSA) on a truck-mounted drill rig. California Pacific Drilling (CalPac) from Calimesa, California was subcontracted to drill the boring under the field supervision of HAI personnel. In order not to interfere with any utilities at the proposed drilling location, the upper five (5) feet of onsite soils were drilled using hand auger drilling equipment. Bulk samples were retrieved from the upper five (5) to six (6) feet of onsite soils at the drilling location.

At deep boreholes (GB-2, GB-4, and GB-9), relatively undisturbed samples were recovered from five (5) feet to the maximum drilling depth. Samples were taken at about every 2.5 or 5 feet using either Standard Penetration Test (SPT) sampler or a Modified California (MC) ring sampler. The MC sampler has a 2.42-inch inside diameter and a 3.0-inch outside diameter and was used to collect relatively undisturbed samples.

After the sampler was withdrawn from the boring, soil samples were carefully removed, visually inspected and classified according to the Unified Soil Classification System (USCS), sealed to reduce moisture loss, and delivered to our laboratory for further inspection, soil classification, and testing. All the deep boreholes were backfilled with cement-bentonite grout. The excess soil cuttings generated from drilling activities were stored in drums and temporarily stored at the site. After receipt of analytical tests drums containing the soil cuttings were disposed offsite by professional drum disposal company, Belshire Environmental Services, Inc.

Approximate locations of the exploratory borings are shown on Figure 3. Logs of exploratory borings, as well as a key to these logs, are presented in Appendix A.

Table 3.1 Summary of Soil Borings

Boring ID	Final Depth (ft)	Purpose
GB-1	6.00	Percolation Test & Agronomic Testing
GB-2	21.00	Geotechnical Design Parameters
GB-3	6.00	Percolation Test & Agronomic Testing
GB-4	39.08	Geotechnical Design Parameters
GB-6	6.08	Percolation Test & Agronomic Testing
GB-7	6.04	Percolation Test & Agronomic Testing
GB-8	5.67	Percolation Test & Agronomic Testing
GB-9	21.50	Geotechnical Design Parameters
GB-10	6.08	Percolation Test & Agronomic Testing

3.3 SOIL PERCOLATION/INFILTRATION TESTS

Per the locations provided by TTI, we performed six (6) infiltration rate tests at the borehole locations (GB-1, GB-3, GB-6, GB-7, GB-8, and GB-10) from November 6 through 8, 2017 as shown in Figure 3, in general accordance with the County of Los Angeles guidelines:

- Guidelines for Design, Investigation, and Reporting Low Impact Development Stormwater Infiltration, Document No. GS200.1, Administrative Manual, County of Los Angeles, Department of Public Works, Geotechnical and Material Engineering Division.

To perform the percolation test, 8-inch diameter hand-auger borings were excavated to approximate depths ranging from 5 feet to 6 feet below the existing ground surface. Due to gravelly and cobbly nature of the soils, some of the (GB-1, GB-6, and GB-6) 8-inch diameter holes became larger and irregular shape. A 3-inch diameter perforated PVC pipe with end cap was installed in each of the percolation test borings. Annular space between PVC pipe and native soil were filled with pea gravel.. The hole was pre saturated following the above mentioned guidelines (LADWP, 2014). Finally, the PVC pipe was filled up to the desired elevation with water and the percolation rate was monitored. After the test, the hole was backfilled with the gravels.

The infiltration test results are presented in Appendix A and summarized in Table 3.2.

Table 3.2 Summary of Field Infiltration Test Results

Boring ID	Infiltration Rate (in/hr)
GB-1	58.1
GB-3	17.8
GB-6	116.8
GB-7	37.9
GB-8	38.9
GB-10	16.6

3.4 AGRONOMIC TESTS

As specified in the proposal and provided information by TTI, we collected six (6) soil samples to perform agronomic testing. Wallace Laboratories from El Segundo, California was subcontracted to perform the required laboratory testing and preparation of Soil Management Report.

4.0 LABORATORY TESTING

4.1 GEOTECHNICAL

Soil samples collected during the field investigation were delivered to HAI's geotechnical laboratory for further examination and testing. Selected soil samples were visually inspected to evaluate their physical characteristics including in-situ conditions, classification, index and engineering properties.

The tests were performed in accordance with the following testing procedures:

- In-situ Moisture Content (ASTM D2216) and Dry Density (ASTM D2937);
- Particle Size Analysis (ASTM D6913);
- Swell/Collapse Potential (ASTM D4546);
- Direct Shear (ASTM D3080);
- R-value (CTM 301); and

- Corrosion potential (including pH, minimum resistivity, soluble sulfates and soluble chlorides tests, in accordance with Cal DOT Standard Test Nos. 643, 417 and 422).

R-value and Corrosion potential tests were performed by Labelle-Marvin and Project X laboratories, respectively. Laboratory test results are presented in Appendix B.

4.2 AGRONOMIC TESTING

Wallace Laboratories performed the required laboratory testing and prepared a Soil Management Report as attached in Appendix C.

4.3 ENVIRONMENTAL TESTING FOR SOIL DISPOSAL

To dispose the soil cuttings generated during the field investigation activities, representative composite samples from the soil drums for the following chemical testing:

- Title 22 Metals using EPA Method 6010B;
- Total Petroleum Hydrocarbons (TPH) using EPA Method 8015 Modified; and
- Volatile Organic Compounds (VOCs) using EPA Method 8260.

Based on the obtained test results, the soil cuttings were profiled as non-hazardous. The soil cuttings were disposed by Belshire Environmental Services, Inc. from Foothill Ranch, California at the Soil Recycling Facility located in Adelanto, CA with appropriate soil manifest documentation. The manifest generated during the disposal is attached in Appendix A.

5.0 SITE AND SUBSURFACE CONDITIONS

The Sixth Street Viaduct crosses the Los Angeles River in a predominantly commercial area of downtown Los Angeles. The site elevations vary between 310 feet above mean sea level (AMSL) at the east abutment to around 250 AMSL feet at the west abutment with the lowest elevation in the river channel area around 210 AMSL feet.

5.1 LOCAL GEOLOGY

According to the California Geological Survey (CGS) Seismic Hazard Zone Report for the Los Angeles 7.5-Minute Quadrangle (CGS, 1998), the project site is located in a region with Holocene age Quaternary alluvial deposits fan consisting sand, silt and gravel. Regional geology is presented in Figure 4.

More detailed discussion about the site geologic conditions is presented in foundation reports prepared by Earth Mechanics, Inc. (EMI) for Viaduct Replacement and Bike Ramps.

5.2 SUBSURFACE SOILS

The subsurface soils encountered during the current investigation were very consistent with those observed during the previous investigations. The boreholes performed during this investigation were shallow compared to the available information from previous investigations. The subsurface conditions consisted of about 5 to 20 feet of fill soils consisting of loose to medium dense silty sand to poorly graded sand with silt. The fill is underlain by generally dense to very dense coarse grained materials comprising of sands, silty sands, gravelly sands, sandy gravels, cobbles, and possibly boulders. Detailed information on deeper soil deposits is described in EMI's 2015 Foundation Report for Viaduct Replacement. As part of this work, the subsurface information from previous investigations was also used in our design analysis for obtaining recommendations.

5.3 GROUNDWATER

Groundwater was not encountered in any of the boreholes performed during this investigation. Based on the information from previous investigations, the groundwater elevation varies significantly along the viaduct length. Groundwater elevations encountered in the previous field investigations discussed in EMI's 2015 Foundation Report for the Viaduct Replacement. Historic high groundwater levels according to California Geological Survey (CDMG, 1998) are much lower than those encountered in those field investigations. Therefore, design groundwater elevations proposed by EMI were used in our analysis for each proposed PARC facility. The design groundwater elevations are specified in the notes to the generalized soil profiles for each PARC facility (Table 5.1 through Table 5.4), which are presented in the following section.

5.4 GENERALIZED SOIL PROFILES

Based on the information collected in the previous and current field investigations, generalized soil profiles were developed for use in developing seismic and foundation recommendations for the proposed PARC facilities. Shear strength parameters were estimated using laboratory test data and correlations between field blow count and shear strength. The generalized soil profiles for the proposed PARC facilities are presented in Table 5.1 through Table 5.4.

Table 5.1 Generalized Soil Profile for 700 SF Restroom Building

Elevations of Soil Layer (ft)		Predominant Soil Type	Total Unit Weight (pcf)	Friction Angle (degrees)	Cohesion/Undrained Shear Strength (psf)
Top	Bottom				
Ground Surface	232	SP, SP-SM, SM	110	30	200
232	222	SP, SW, SP-SM	120	35	0
222	150	GP, GP-SM, SW, SW-SM, SM	125	38	0
150	Below	CL, ML	125	0	6,000

Notes:
1. Based on HAI Boring GB2, and EMI Borings A-13-01, 08-03, 08-04.
2. Design groundwater at El. +185 ft.
3. Ground surface at approximately El. +253.

Table 5.2 Generalized Soil Profile for Arts Plaza

Elevations of Soil Layer (ft)		Predominant Soil Type	Total Unit Weight (pcf)	Friction Angle (degrees)	Cohesion/Undrained Shear Strength (psf)
Top	Bottom				
Ground Surface	242	SP, SM	110	30	100
242	222	SP, SP-SM, SM	120	34	0
222	147	GP, GP-GM, SP, SP-SM	125	38	0
147	122	CL, ML	125	0	5,000
122	Below	CL, ML	125	0	6,000

Notes:
1. Based on HAI Boring GB4 and EMI Borings R-13-02, 08-06, A13-21.
2. Design groundwater at El. +195 ft.
3. Ground surface at approximately El. +252.

Table 5.3 Generalized Soil Profile for Los Angeles River Bike Path

Elevations of Soil Layer (ft)		Predominant Soil Type	Total Unit Weight (pcf)	Friction Angle (degrees)	Cohesion/Undrained Shear Strength (psf)
Top	Bottom				
Ground Surface	222	SP-SM, SM	110	32	100
222	210	GP, SP, SP-SM, SM	120	34	0
210	152	GP, SP, SP-SM, SW-SM, SM, SC	130	38	0
152	110	CL, ML	125	0	5,000
110	Below	CL, ML	125	0	6,000

Notes:
1. Based on EMI Borings R-13-03, R-13-04, A-13-23, and 04-02.
2. Design groundwater at El. +210 ft.
3. Ground surface at approximately El. +243.

Table 5.4 Generalized Soil Profile for 2,000 SF Restroom/Concession Building

Elevations of Soil Layer (ft)		Predominant Soil Type	Total Unit Weight (pcf)	Friction Angle (degrees)	Cohesion/Undrained Shear Strength (psf)
Top	Bottom				
Ground Surface	232	SP, SP-SM	110	32	0
232	222	SP, SP-SM	125	35	0
222	200	GP, GP-GM, SP, SP-SM, SW-SM	130	38	0
200	173	SP-SM, SM, SC, ML	125	32	0
173	160	SP-SM	130	38	0
160	140	CL, ML	125	0	6,000
140	Below	CL	125	0	8,000

Notes:
1. Based on HAI Boring GB9 and EMI Borings R-13-12, 04-05.
2. Design groundwater at El. +200 ft.
3. Ground surface at approximately El. +251.

6.0 SEISMIC DESIGN CONSIDERATIONS

6.1 SITE SEISMICITY

The project site is located within a seismically active region. The site is not located within a State-defined Alquist-Priolo Fault Hazard zone, but there are several faults in the region that could produce significant ground shaking.

More detailed site seismicity is discussed in EMI's 2015 Foundation Report for the Viaduct Replacement. The nearby active faults to the project site based on Caltrans Fault Database are summarized in the following Table 6.1.

Table 6.1 Nearby Active Faults

Fault Name	Fault Type	Maximum Earthquake (M_{max})	Approximate Distance from Site (miles)
Elysian Park (Lower CFM)	Reverse	6.7	1.5
Elysian Park (Upper)	Reverse	6.6	1.9
Puente Hills (LA)	Reverse	6.9	3.7
Hollywood	Strike-Slip	6.6	5.75
Raymond	Strike-Slip	6.7	5.7
Verdugo-Eagle Rock	Reverse	6.8	7.8
Newport-Inglewood Fault Zone	Strike-Slip	7.2	7.9
Elsinore Fault Zone (Whittier section)	Strike-Slip	7.5	10.3

6.2 SITE SEISMIC DESIGN COEFFICIENTS

The seismic design coefficients based on Chapter 11 of the ASCE 7-10 are provided in Table 6.2.

Table 6.2 Site Categorization and Site Coefficients

Categorization/Coefficient	Design Value*
Site Coordinates	34.03851°N, 118.22804°W
Site Soil Classification	S_D
Short Period Spectral Acceleration S_S (g)	2.353
1-sec. Period Spectral Acceleration S_1 (g)	0.823
Short Period (MCE_R) Spectral Acceleration S_{MS} (g)	2.353
1-sec. Period (MCE_R) Spectral Acceleration S_{M1} (g)	1.234
Short Period Design Spectral Acceleration S_{DS} (g)	1.568
1-sec. Period Design Spectral Acceleration S_{D1} (g)	0.823

Note: MCE_R stands for Risk-Targeted Maximum Considered Earthquake.

* Values obtained from *USGS U.S. Seismic Design Maps* tool, based on 2010 ASCE 7 Standard with March 2013 errata,

http://earthquake.usgs.gov/designmaps/us/application.php

Based on the available shear wave velocity data from previous site investigations, average shear wave velocity for the top 100 feet (V_{s30}) is around 1,050 ft/s. Therefore, the site classification was assumed as Site Class S_D. The Mapped Peak Ground Acceleration (PGA_M) adjusted for site effects at the site is 0.886g, as defined by ASCE 7-10 Chapter 11. Note that the PGA obtained using USGS database corresponds to earthquake hazard event with a return period of 2,475 years (2% in 50 years) whereas PGA of 0.7g obtained by EMI from Caltrans ARS is for a return period event of 975 years.

6.3 FAULT RUPTURE HAZARDS

Primary ground rupture is ground deformation that occurs along the surface trace of an active fault during an earthquake. CGS defines an active fault as one that has experienced surface rupture within the last approximately 11,000 years (Holocene time). According to CGS Special Publication 42 (1997a), the proposed improvements are not located within an Alquist-Priolo Earthquake Fault Zone. The seismic

hazard map is presented on Figure 5. No known surface expression of active faults is believed to exist within the site. Based on the above mentioned reference, the potential for a fault rupture through the site is considered very low.

6.4 LIQUEFACTION

Soil liquefaction results in loss of strength during cyclic loading, such as imposed by earthquakes. Soils most susceptible to liquefaction are loose to moderately dense, saturated granular soils with poor drainage, such as silty sands or sands and gravels capped by or containing seams of impermeable sediment or non-plastic fine-grained soils. When seismic ground shaking occurs, the cohesionless soil is subjected to cyclic shear stresses that can cause increased pore water pressure that induces liquefaction. Liquefaction can cause softening and large cyclic deformations. In loose granular soils, softening can also be accompanied by a loss of shear strength that may lead to large shear deformations or even flow failure under moderate to high shear stresses, such as beneath a foundation or sloping ground (NCEER/NSF, 1998). Loose granular soil can also settle (densify) during liquefaction and as pore pressures dissipate following an earthquake.

According to the CGS Seismic Hazard Map for the Los Angeles Quadrangle (CGS, 1998), the project site is not located within liquefaction-prone zone. In addition, due to relatively deep groundwater and dense granular onsite soils, soil liquefaction is not expected to develop at the project site during a seismic event. Therefore, a liquefaction potential analysis in accordance with the "Guidelines for Evaluating and Mitigating Seismic Hazards in California" Special Publication 117 of the CGS (formerly the Division of Mines and Geology) is not performed for this project.

6.5 LANDSLIDES

The subject of landslides is a widely encompassing subject and cannot be fully covered in a brief summary; however, landslides are downslope motions of conglomerations of earth materials or bedrock or combinations of both. Landslides are a more defined unit and are similar to slumps, but are on a larger scale. They can move in a translational movement or rotational settlement or motion. It occurs because of the loss of ability of earth materials to maintain their integrity at a specific gradient and settle or deform into a lesser gradient or position of greater equilibrium. The internal strength of the material is lost and the material settles into a form where the mass is centralized on the downhill side of motion. Landslides are usually associated with water increasing the unit weight and decreasing the internal strength of the materials. The chances of a landslide occurring are increased by increases in slope gradient, looseness of materials, unfavorable bedding (out of slope), clay content of the bedrock, underground springs, unfavorable slope orientation with existing fault boundaries, human disturbance of the landslide or its boundaries, rise of groundwater, earthquake forces helping to mobilize the mass, looseness of in-situ materials, increases in water content, and disturbance of the lateral confining forces and/or the toe of a slope.

According to the CGS Seismic Hazard Map for the Los Angeles Quadrangle (CGS, 1998), the project site is not located within earthquake-induced landslide zones.

6.6 COLLAPSE POTENTIAL

Collapsible soils are soils that undergo settlement upon wetting, even without the application of additional load. Water weakens or destroys the bonds between soil particles and severely reduces the bearing capacity of the soil. Typical collapsible soils are lightly colored, are low in plasticity and have relatively low densities.

Based on our current investigation, laboratory analysis and experience with similar projects in the vicinity, it is not anticipated that the soils underlying the subject site are susceptible to collapse. Therefore, potential impacts due to collapsible soil conditions are expected to be low.

6.7 CORROSION POTENTIAL

Three (3) samples were collected at different depths and were submitted to Project X Corrosion Testing Laboratory for pH, minimum resistivity, soluble sulfates and soluble chlorides content testing. The results of the tests are summarized in Table 1. Details of the test results are presented in Appendix B.

Table 6.3 Results of Corrosivity Testing

Boring ID	Sample Depth (feet)	Chloride (mg/kg)[1]	Sulfate (mg/kg)[1]	pH	Minimum Resistivity (ohm-cm)	Estimated Corrosivity Based on Resistivity[2]	Estimated Corrosivity Based on Sulfates[3]	Estimated Corrosivity Based on Caltrans Provision[4]
GB-2	0-5	108	30	8.97	5,695	Mildly Corrosive	S0	Non Corrosive
GB-4	20-21.5	27	15	9.01	12,060	Very Mildly Corrosive	S0	Non Corrosive
GB-9	0-5	42	24	9.75	5,360	Mildly Corrosive	S0	Non Corrosive

Notes:
(1) mg/kg = milligrams per kilogram (parts per million, ppm) of dry soil.
(2) The approximate relationship between soil resistivity and soil corrosivity was developed based on the findings of studies presented in ASTM STP 1013 titled "Effects of Soil Characteristics on Corrosion" (February, 1989).
(3) The approximate relationship between water-soluble sulfate (SO_4) in soil (percent by weight) and soil corrosivity was developed based on the 2016 California Building Code (CBC), referring to ACI 318-14.
(4) Based on Caltrans Corrosion Guidelines Version 2.1 dated January 2015, the site is considered to be corrosive if Chloride concentration is 500 ppm or greater, or sulfate concentration is 2000 ppm or greater, or the pH is 5.5 or less.

These above tests were performed for screening purposes only. Our firm does not practice corrosion engineering; therefore, we recommend that a corrosion engineer be retained to evaluate the corrosion potential of the onsite soils and any impact on the proposed project structures.

7.0 PAVEMENT DESIGN

Based on R-value test results from representative subgrade soil samples collected during the field investigation, Table 7.1 presents our recommendations for minimum pavement structural sections for traffic index (TI) values from 6 to 12.

Table 7.1 Recommended Pavement Structural Sections (Design R-value = 65)

Option	Traffic Index	6	7	8	9	10	11	12	13
I	Hot Mix Asphalt (in.)	3.0	4.0	5.0	5.5	6.5	7.0	7.5	8.0
	Class 2 Aggregate Base (in.)	4.5	4.5	4.5	4.5	4.5	4.5	4.5	4.5
II	Portland Cement Concrete (in.)	8.5				9.0	10.0	-	-
	Class 2 Aggregate Base (in.)	6.0				7.5	8.5	-	-
III	Full-Depth Hot Mix Asphalt (in.)	4.0	5.0	6.0	7.0	8.0	9.0	9.5	10.5

Notes:
1. Caltrans Class 2 aggregate base; minimum R-Value equal to 78.
2. Minimum layer thickness of aggregate base is 4.5 inches.
3. Design life of pavement sections is 20 years.
4. Thicknesses shown for Jointed Plain Concrete Pavement (JPCP) are for doweled pavement only.
5. Thickness shown considers a rigid pavement structural section with lateral support.
6. Transverse construction joints in the concrete slab should be placed at regular intervals not exceeding 15 feet in both directions and should be doweled per Caltrans. To control shrinkage and temperature stresses which may cause cracks, a 4x4–W1.4xW1.4 welded wire fabric should be placed in the middle of the concrete slab. This steel reinforcement is assumed not to contribute for the strength of pavement structural section.

The recommendations provided below are considered general and should be complemented with latest editions of Caltrans' Highway Design Manual (HDM) and the Standard Specifications of Public Work Construction "Greenbook", including all subsequent amendments, supplements and additions. In case of a conflict, the most stringent recommendations should prevail.

Subgrade Preparation: In the case of full depth asphalt pavement, the top 8 inches of the subgrade soil should then be scarified, brought to 2 to 3 percent above optimum moisture content and re-compacted to a minimum of 90 percent relative compaction in accordance with ASTM D1557, latest version. In the case of asphalt over aggregate base pavement, the top 8 inches of the subgrade soil should then be scarified, brought to 2 to 3 percent above optimum moisture content and re-compacted to a minimum of 90 percent relative compaction in accordance with ASTM D1557, latest version. Unsuitable materials encountered during grading should be removed to the satisfaction of the geotechnical engineer and replaced with aggregate base or other materials approved by the geotechnical engineer.

Aggregate Base (AB): In all cases, AB should be in accordance with Class 2 AB per Caltrans' Standard Specifications (latest edition). AB material should be compacted in 6-inch thick lifts to a minimum of 95 percent relative compaction per ASTM D1557, latest edition.

Hot Mix Asphalt (HMA): HMA should be compacted to a minimum of 95 percent of the HMA density determined by ASTM D1561 test procedure (latest version) in lifts not exceeding 3 inches. A "tack coat" should be applied between HMA layers.

Portland Cement Concrete (PCC): PCC should have engineering properties shown in Table 622.1 of Caltrans' HDM. We assume that additional corrosion tests will be performed during construction to verify the cement type. In addition, pavements should be restrained laterally by a concrete shoulder or curb. Proper joint spacing will also be required to prevent excessive slab curling and shrinkage cracking. All joints should be sealed to prevent entry of foreign material and dowelled where necessary for load transfer.

8.0 FINDINGS AND CONCLUSIONS/RECOMMENDATIONS

The discussions and recommendations presented in the following sections are based on our understanding of the proposed project requirements, the results of our geotechnical investigation, and our professional judgment.

It is our opinion that based on the above-cited geotechnical findings, the site is suitable for construction of the proposed PARC facilities, provided that the recommendations in this report are followed, and onsite construction observations and field testing are performed.

8.1 Earthwork

8.1.1. Clearing and Site Preparation

Prior to construction, the site should be cleared of all above-ground obstacles and structures. Existing utility and irrigation lines should be protected in-place, rerouted, or removed if they interfere with the proposed construction. The resulting cavities from removal of utility lines should be properly backfilled and compacted under the supervision of the project geotechnical engineer. Vegetation, debris, and organic matter should not be incorporated into the structural fill.

8.1.2. Over-Excavation and Preparation for New Improvements

In areas receiving fills, complete removal of compressible surficial materials including topsoil, loose or soft alluvium, and unsuitable fill is required prior to fill placement. The excavation should extend to a horizontal distance of at least 2 feet beyond the proposed improvement footprint or the depth of the excavation whichever is deeper.

8.1.3. Subgrade Preparation

After the site has been properly cleared, stripped, and required overexcavations have been made, removal bottom areas receiving fill should be scarified in-place to a depth of 8 inches, moisture conditioned to approximately 2 percent above optimum moisture, and compacted in accordance with the recommendations for fill presented in the "Fill Placement and Compaction" subsection. The finished compacted subgrade should be firm and non-yielding under the weight of compaction equipment. If soft, incompetent soils are found at the excavation bottom, to provide a relatively stable subgrade for placement of the fill we recommend using engineering fabrics and/or crushed rock or chemical treatment.

8.1.4. Fill Placement and Compaction

The onsite soil free of debris, organics, oversized material (larger than 3 inches) and other deleterious materials may be used as fill. Engineered fill, general fill, as well as scarified surface soils in those areas to receive fill should be compacted to at least 90 percent relative compaction as determined by ASTM Test Designation D1557, latest edition. Fill should be placed in lifts no greater than 8 inches in uncompacted thickness at a moisture content of 2 percent points higher than the laboratory optimum. Each successive lift should be firm and non-yielding under the weight of construction equipment. The upper 12 inches of subgrade and all aggregate base should be compacted to at least 95 percent underneath paved areas.

8.1.5. Oversize Materials and Import Soils

Based on the information provided, we understand that during the installation of soldier piles shoring for Bent 5 in the west side of Los Angeles River Channel area, Skanska (Prime contractor for the Viaduct Construction) encountered significant amounts of gravel and cobble sized rocks or debris (larger than 5-inch size) within near surface soils up to depths of 15 feet, which was different from EMI' findings during their investigations. Therefore, Skanska subcontracted California Testing & Inspections (CTI) to perform field investigation to observe and assess the amount of oversize materials at the site during shoring

system installation. 5-inch size was the largest size of rock or debris removed from the fill as observed by CTI due to limitations of the size of the augers used in their field investigation. But, Skanska reported that during the installation of initial soldier piles, cobble and boulder sized rocks up to 3 feet in size were encountered. We recommend removal of any oversize rocks (above 3 inches in size) encountered during grading operations at the site.

If import soil is considered as an alternative, the import soil should not exhibit an Expansion Index (EI) greater than 20 and contain more than 35 percent fines. The proposed import source should be screened by the geotechnical engineer for the following tests:

- Particle Size Analysis (ASTM D6913);
- Atterberg Limits (ASTM D4318);
- Expansion Index (ASTM D4829); and
- Soluble Sulfate, Soluble Chloride, and pH and Soil Resistivity (CTM 417, CTM 422, and CTM 643)

Additional tests may be required if the proposed import source passes the initial screening.

8.1.6. Wet Weather Conditions

Earthwork contractors should be made aware of the moisture sensitivity of fine grained soils and potential compaction difficulties if encountered. If construction is undertaken during wet weather conditions, some of the surficial soils may become saturated, soft and unworkable. Subgrade stabilization techniques might include the use of engineering fabrics and/or crushed rock or chemical treatment.

8.1.7. Surface Drainage

Positive surface water drainage gradients (2 percent minimum) should be provided adjacent to the structures to direct surface water away from foundations and slabs towards suitable discharge facilities. Ponding of surface water should not be allowed on or adjacent to structures or pavements.

8.2 Lateral Earth Pressure for Retaining Structures

8.2.1. 700-Square Foot Restroom Facility

Based on previously available information and encountered soil conditions, the recommended lateral earth pressures for this facility are shown below:

Table 8.1 Recommended Lateral Earth Pressures for 700 SF Restroom Facility

Design Parameter	Design Value
Active Pressure (P_a)	40 H + 0.33 q
At-Rest Pressure (P_o)	60 H + 0.50 q
Passive Pressure (P_p)	Minimum of (350 H, 3500 psf)
Seismic Force (F_e)	$P_e = 27 H^2$ (for cantilever walls, expect some deformations)
Coefficient of Friction (μ)	0.39

Notes:

1. All Design Values were calculated based on zero cohesion, an internal friction angle of 30°, and a unit weight of 120 pcf.
2. All values of height (H) in feet (ft), pressure (P) and surcharge (q) in pounds per square feet (psf) and force (F) in pound force (lbf) are for unit width of walls.
3. The above pressure values apply to horizontal backfill and do not include hydrostatic pressures that might be caused by groundwater or water trapped behind the structure.
4. μ is the friction coefficient applied to dead normal (buoyant) loads. P_e is in addition to the active and at-rest pressures, Pa and Po.
5. For passive pressure use a factor of safety of 2.5 if wall rotation (D/H) is smaller than 0.04. The passive pressure might not be used if soil is subjected to scour.
6. Neglect the upper 1 foot for passive pressure unless the surface is contained by pavement or a slab.
7. Equivalent ground acceleration of 0.443 g (a one-half reduction of the PGA = 0.886g as recommended by AASHTO), and Mononobe-Okabe methodology, were used to calculate Fe. The earthquake load (Fe) may be distributed as an inverted triangle along the wall height.
8. As specified above, retaining walls must be designed to resist horizontal pressures that may be generated by surcharge loads applied at the ground surface such as from uniform loads or vehicle loads.

An efficient drainage system should be provided behind retaining walls, which should consist of a curtain of free-draining material, such as Caltrans permeable Class 2 Aggregate. This drain curtain should be a minimum of 2 feet wide and extend from the bottom of the wall to within 1.5 feet of finish grade. Additionally, drainage geocomposite (Miradrain or equivalent) should be used to wrap the gravel material. The upper 1.5 feet should be a select material of low permeability (clayey soil) to minimize infiltration. A perforated pipe should be placed along the base of the wall and should be sloped at least two percent to drain water by gravity to a suitable discharge facility.

8.2.2. Arts Plaza

Based on the information provided by TTI, the structures which need geotechnical design recommendations at this facility are:

- U-Wall with a maximum height of 17 feet; and
- East Wall with a maximum height of 21 feet.

Based on previously available information and encountered soil condition, the recommended lateral earth pressures for this facility are shown below:

Table 8.2 Recommended Lateral Earth Pressures for Arts Plaza

Design Parameter	Design Value
Active Pressure (P_a)	40 H + 0.33 q
At-Rest Pressure (P_o)	60 H + 0.50 q
Passive Pressure (P_p)	Minimum of (350 H, 3500 psf)
Seismic Force (F_e)	$P_e = 27 H^2$ (for cantilever walls, expect some deformations)
Coefficient of Friction (μ)	0.36

Notes:

1. All Design Values were calculated based on zero cohesion, an internal friction angle of 30°, and a unit weight of 120 pcf.
2. All values of height (H) in feet (ft), pressure (P) and surcharge (q) in pounds per square feet (psf) and force (F) in pound force (lbf) are for unit width of walls.
3. The above pressure values apply to horizontal backfill and do not include hydrostatic pressures that might be caused by groundwater or water trapped behind the structure.
4. μ is the friction coefficient applied to dead normal (buoyant) loads. P_e is in addition to the active and at-rest pressures, Pa and Po.
5. For passive pressure use a factor of safety of 2.5 if wall rotation (D/H) is smaller than 0.04. The passive pressure might not be used if soil is subjected to scour.
6. Neglect the upper 1 foot for passive pressure unless the surface is contained by pavement or a slab.
7. Equivalent ground acceleration of 0.443 g (a one-half reduction of the PGA = 0.886g as recommended by AASHTO), and Mononobe-Okabe methodology, were used to calculate Fe. The earthquake load (Fe) may be distributed as an inverted triangle along the wall height.
8. As specified above, retaining walls must be designed to resist horizontal pressures that may be generated by surcharge loads applied at the ground surface such as from uniform loads or vehicle loads. Must consider railroad surcharge, heavy equipment surcharge and any other possible vehicular surcharge.

An efficient drainage system should be provided behind retaining walls, which should consist of a curtain of free-draining material, such as Caltrans permeable Class 2 Aggregate. This drain curtain should be a minimum of 2 feet wide and extend from the bottom of the wall to within 1.5 feet of finish grade. Additionally, drainage geocomposite (Miradrain or equivalent) should be used to wrap the gravel material. The upper 1.5 feet should be a select material of low permeability (clayey soil) to minimize infiltration. A perforated pipe should be placed along the base of the wall and should be sloped at least two percent to drain water by gravity to a suitable discharge facility.

8.2.3. Los Angeles River Bike Path

Based on the information provided by TTI, the structures which need geotechnical design recommendations at this facility are:

- Retaining Walls with a maximum height of 12 feet.

Based on previously available information, the recommended lateral earth pressures are shown below:

Table 8.3 Recommended Lateral Earth Pressures for Los Angeles River Bike Path

Design Parameter	Design Value
Active Pressure (P_a)	37 H + 0.31 q
At-Rest Pressure (P_o)	56 H + 0.47 q
Passive Pressure (P_p)	Minimum of (390 H, 3500 psf)
Seismic Force (F_e)	$P_e = 25\ H^2$ (for cantilever walls, expect some deformations)
Coefficient of Friction (μ)	0.39

Notes:

1. All Design Values were calculated based on zero cohesion, an internal friction angle of 32°, and a unit weight of 120 pcf.
2. All values of height (H) in feet (ft), pressure (P) and surcharge (q) in pounds per square feet (psf) and force (F) in pound force (lbf) are for unit width of walls.
3. The above pressure values apply to horizontal backfill and do not include hydrostatic pressures that might be caused by groundwater or water trapped behind the structure.
4. μ is the friction coefficient applied to dead normal (buoyant) loads. P_e is in addition to the active and at-rest pressures, Pa and Po.
5. For passive pressure use a factor of safety of 2.5 if wall rotation (D/H) is smaller than 0.04. The passive pressure might not be used if soil is subjected to scour.
6. Neglect the upper 1 foot for passive pressure unless the surface is contained by pavement or a slab.
7. Equivalent ground acceleration of 0.443 g (a one-half reduction of the PGA = 0.886g as recommended by AASHTO), and Mononobe-Okabe methodology, were used to calculate Fe. The earthquake load (Fe) may be distributed as an inverted triangle along the wall height.
8. As specified above, retaining walls must be designed to resist horizontal pressures that may be generated by surcharge loads applied at the ground surface such as from uniform loads or vehicle loads. Must consider railroad surcharge, vehicular surcharge along bike path, heavy equipment surcharge and any other possible vehicular surcharge.
9. To consider the full passive resistance at the foundation, the foundation face shall be 4 feet away from the slope face. Otherwise, the passive resistance should be reduced 60 percent.

An efficient drainage system should be provided behind retaining walls, which should consist of a curtain of free-draining material, such as Caltrans permeable Class 2 Aggregate. This drain curtain should be a minimum of 2 feet wide and extend from the bottom of the wall to within 1.5 feet of finish grade. Additionally, drainage geocomposite (Miradrain or equivalent) should be used to wrap the gravel material. The upper 1.5 feet should be a select material of low permeability (clayey soil) to minimize infiltration. A perforated pipe should be placed along the base of the wall and should be sloped at least two percent to drain water by gravity to a suitable discharge facility.

8.2.4. 2,000-Square Foot Restroom Facility

Based on previously available information and encountered soil condition, the recommended lateral earth pressures for this facility are shown below:

Table 8.4 Recommended Lateral Earth Pressures for 2,000 SF Restroom Facility

Design Parameter	Design Value
Active Pressure (P_a)	37 H + 0.31 q
At-Rest Pressure (P_o)	56 H + 0.47 q
Passive Pressure (P_p)	Minimum of (390 H, 3500 psf)
Seismic Force (F_e)	$P_e = 25\ H^2$ (for cantilever walls, expect some deformations)
Coefficient of Friction (μ)	0.39

Notes:

1. All Design Values were calculated based on zero cohesion, an internal friction angle of 32°, and a unit weight of 120 pcf.
2. All values of height (H) in feet (ft), pressure (P) and surcharge (q) in pounds per square feet (psf) and force (F) in pound force (lbf) are for unit width of walls.
3. The above pressure values apply to horizontal backfill and do not include hydrostatic pressures that might be caused by groundwater or water trapped behind the structure.
4. μ is the friction coefficient applied to dead normal (buoyant) loads. P_e is in addition to the active and at-rest pressures, Pa and Po.
5. For passive pressure use a factor of safety of 2.5 if wall rotation (D/H) is smaller than 0.04. The passive pressure might not be used if soil is subjected to scour.
6. Neglect the upper 1 foot for passive pressure unless the surface is contained by pavement or a slab.
7. Equivalent ground acceleration of 0.443 g (a one-half reduction of the PGA = 0.886g as recommended by AASHTO), and Mononobe-Okabe methodology, were used to calculate Fe. The earthquake load (Fe) may be distributed as an inverted triangle along the wall height.
8. In addition to the abovementioned pressures, retaining walls must be designed to resist horizontal pressures that may be generated by surcharge loads applied at the ground surface such as from uniform loads or vehicle loads.

An efficient drainage system should be provided behind retaining walls, which should consist of a curtain of free-draining material, such as Caltrans permeable Class 2 Aggregate. This drain curtain should be a minimum of 2 feet wide and extend from the bottom of the wall to within 1.5 feet of finish grade. Additionally, drainage geocomposite (Miradrain or equivalent) should be used to wrap the gravel material. The upper 1.5 feet should be a select material of low permeability (clayey soil) to minimize infiltration. A perforated pipe should be placed along the base of the wall and should be sloped at least two percent to drain water by gravity to a suitable discharge facility.

8.3 TEMPORARY EXCAVATION AND SHORING SUPPORT SYSTEM

All temporary excavations, including utility trenches, retaining wall excavations, and other excavations should be performed in accordance with project plans, specifications and all Occupational Safety and Health Administration (OSHA) requirements. Excavations near existing footings or improvements should be performed with care so that the existing footings/improvements are not undermined and the subgrade supporting the footings/improvements is not disturbed. Due to the presence of sandy soils with minor cementation, caving sand may be encountered in excavations. The soil type should be verified or revised based on geotechnical observation and testing during construction, as soil classifications may vary over short horizontal distances.

All excavation deeper than 5 feet should be either shored or sloped. No surcharge loads should be permitted within a horizontal distance equal to the height of cut or five feet, whichever is greater from the

top of the slope, unless the cut is shored appropriately. It should be the Contractor's responsibility to monitor the slopes and provide adequate and safe support for the excavation, as well as nearby structures.

For 700 SF Restroom and Arts Plaza area, an equivalent fluid pressure of 40 psf/ft may be used for designing free cantilever shoring with level ground surface behind the excavation. A uniform pressure of 26 psf may be used for designing braced shoring.

For LA River Bike Path and 2000 SF Restroom area, an equivalent fluid pressure of 37 psf/ft may be used for designing free cantilever shoring with level ground surface behind the excavation. A uniform pressure of 24 psf may be used for designing braced shoring.

Lateral earth pressure for other ground surface configurations can be provided upon request. The project geotechnical engineer should review the contractor's shoring design prior to implementation.

8.4 FOUNDATIONS

Relatively light structures could be supported on continuous or spread footings bearing on 2 feet of compacted clean "granular" soils (soils having less than 20 percent passing standard sieve #200, free of debris, vegetation, and with rocks less than 6 inches in diameter with no more than 15 percent greater than 3 inches in diameter, confirmed with laboratory testing prior to construction) and extending to a zone of 3 feet beyond the edge of the footings and building structure/footprints, compacted in 8-inch-thick lifts (measured in loose state) to a minimum of 95 percent relative compaction per ASTM D1557 (Modified Proctor, latest edition). Imported soils (clean "granular" soils) shouldn't be more corrosive than the onsite soils.

Prior to placing any clean "granular" soil, the upper 8 inches of the excavation bottom should be scarified, moisture-conditioned to approximately 3 percent above the optimum moisture content, and recompacted to at least 90 percent of the maximum dry density per ASTM D1557 (Modified Proctor Test, latest edition) to counteract the potential adverse effects of soil expansiveness.

8.4.1. 700-Square Foot Restroom Facility

Based on information from previous and current investigations, an allowable bearing capacity of 2,500 pounds per square foot may be used for design of 18-inch square or 24-inch wide continuous footings embedded a minimum of 18 inches below adjacent level ground. This value may be increased by 250 and 500 pounds per square foot for every additional foot of width or depth increase, respectively, to a maximum of 4,000 pounds per square foot.

A lateral passive soil resistance on footing walls embedded in compacted engineered fill of 350 psf per foot of depth below the lowest adjacent finished grade, to a maximum of 3,500 psf, may be used for design. This lateral passive resistance may be combined with a lateral base friction resistance. A base friction coefficient of 0.36 may be used. The coefficient of friction should be multiplied by the dead load to obtain the lateral base friction resistance.

Where footings are adjacent to below-grade walls or underground utilities, the footings should extend below a 45-degree plane projected upward from the backside of the wall footing or bottom of the underground utility. Structural loads were not available at the time of our investigation. We should be retained to review the final foundation plans and structural loads for soil settlement estimation.

8.4.2. Arts Plaza

Based on information from previous and current investigations, an allowable bearing capacity of 3,200 pounds per square foot may be used for design of 18-inch square or 24-inch wide continuous footings embedded a minimum of 18 inches below adjacent level ground. This value may be increased by 400 pounds per square foot

for every additional foot of width or depth increase, respectively, to a maximum of 4,000 pounds per square foot.

A lateral passive soil resistance on footing walls embedded in compacted engineered fill of 350 psf per foot of depth below the lowest adjacent finished grade, to a maximum of 3,500 psf, may be used for design. This lateral passive resistance may be combined with a lateral base friction resistance. A base friction coefficient of 0.36 may be used. The coefficient of friction should be multiplied by the dead load to obtain the lateral base friction resistance.

Where footings are adjacent to below-grade walls or underground utilities, the footings should extend below a 45-degree plane projected upward from the backside of the wall footing or bottom of the underground utility. Structural loads were not available at the time of our investigation. We should be retained to review the final foundation plans and structural loads for soil settlement estimation.

8.4.3. Los Angeles River Bike Path

Based on information from previous investigations, an allowable bearing capacity of 3,200 pounds per square foot may be used for design of 18-inch square or 24-inch wide continuous footings embedded a minimum of 18 inches below adjacent level ground. This value may be increased by 400 pounds per square foot for every additional foot of width or depth increase, respectively, to a maximum of 4,000 pounds per square foot.

A lateral passive soil resistance on footing walls embedded in compacted engineered fill of 390 psf per foot of depth below the lowest adjacent finished grade, to a maximum of 3,500 psf, may be used for design. This lateral passive resistance may be combined with a lateral base friction resistance. A base friction coefficient of 0.39 may be used. The coefficient of friction should be multiplied by the dead load to obtain the lateral base friction resistance.

Where footings are adjacent to below-grade walls or underground utilities, the footings should extend below a 45-degree plane projected upward from the backside of the wall footing or bottom of the underground utility. Structural loads were not available at the time of our investigation. We should be retained to review the final foundation plans and structural loads for soil settlement estimation.

To consider the full foundation resistance, the foundation face shall be 4 feet away from the slope face. Otherwise, the passive resistance should be reduced 60 percent.

8.4.4. 2,000-Square Foot Restroom Facility

Based on information from previous and current investigations, an allowable bearing capacity of 3,200 pounds per square foot may be used for design of 18-inch square or 24-inch wide continuous footings embedded a minimum of 18 inches below adjacent level ground. This value may be increased by 400 pounds per square foot for every additional foot of width or depth increase, respectively, to a maximum of 4,000 pounds per square foot.

A lateral passive soil resistance on footing walls embedded in compacted engineered fill of 390 psf per foot of depth below the lowest adjacent finished grade, to a maximum of 3,500 psf, may be used for design. This lateral passive resistance may be combined with a lateral base friction resistance. A base friction coefficient of 0.39 may be used. The coefficient of friction should be multiplied by the dead load to obtain the lateral base friction resistance.

Where footings are adjacent to below-grade walls or underground utilities, the footings should extend below a 45-degree plane projected upward from the backside of the wall footing or bottom of the underground utility. Structural loads were not available at the time of our investigation. We should be retained to review the final foundation plans and structural loads for soil settlement estimation.

8.5 SLABS-ON-GRADE

8.5.1. Building Floor Slab

Concrete slabs-on-grade subjected to special loads should be designed by the structural engineer. For conventional light floor loading conditions, slab-on-grade floors should be at least 5 inches thick and reinforcement should be designed by a structural engineer.

Slabs-on-grade covered with moisture-sensitive flooring, or supporting moisture-sensitive equipment, should be underlain by 6 inches of compacted free-draining granular materials. The free-draining granular material should contain less than 3 percent fines (material passing the #200 sieve) and should be placed immediately below the slab-on-grade. Moisture vapor may tend to migrate through the slab-on-grade. To reduce vapor migration through the floor slabs a minimum 10-mil thick plastic vapor barrier should be placed between the granular materials and the slab. Care should be taken to overlap barrier joints by at least 6 inches, seal the plastic vapor barrier around plumbing, electrical, and other conduits, and avoid sand layer above plastic vapor barrier. The plastic vapor barrier should satisfy the requirements of ASTM E 1745 (Class "A") and should be installed in accordance with ASTM E 1643. Care should be taken to seal the plastic vapor barrier and avoid puncturing the vapor barrier during construction.

8.5.2. Exterior Concrete Flatwork

We recommend that exterior concrete flatwork be supported on at least 6 inches of non-expansive fill placed and compacted based on the "Compaction" section of this report. Exterior concrete sidewalks should be at least 4 inches thick and underlain by at least 4 inches of Class 2 aggregate base compacted to a minimum of 95 percent relative compaction in accordance with ASTM Test Method D1557, latest edition. If sidewalks are subject to wheel loads, they should be separately designed.

8.6 UTILITY TRENCH BACKFILL

8.6.3. Pipe Zone Bedding and Shading Backfill

Pipe bedding should extend to a depth of at least 6 inches or pipe manufacturer's recommendation below the pipeline invert and the shading should extend from the top of the bedding to a height of at least 12 inches over the top of the pipe or pipe manufacturer's recommendation. In addition, there should be a minimum range of 6 to 8 inches of pipe zone backfill material on either side of the pipe or pipe manufacturer's recommendation.

The bedding and shading material may consist of compacted, free draining sand, gravel, or crushed rock, having a sand equivalent of not less than 30, and meeting the gradation and compaction requirements of the Greenbook, latest edition, or pipe manufacturer's recommendation. If open grade rock or crushed slag base is used around the pipe and within any portion of trench backfill, it should be separated from surrounding finer-grained material by installation of a geo-filter fabric. Properties of the pipe zone bedding and shading material should be confirmed with laboratory testing prior to construction. Onsite soils are not recommended to be used as pipe zone bedding or shading backfill.

The bedding material should be compacted to a minimum relative compaction of 90 percent per ASTM D1557 (Modified Proctor). Backfilling should be carried on simultaneously on each side of the pipe to ensure proper protection of the pipe. The bedding layer should be supported on firm, competent material, as determined by the project geotechnical engineer. Disturbed, loose/soft materials at the excavation bottom should be removed to expose firm native material per the project geotechnical engineer recommendations. If firm material is not encountered, the upper 1 foot of the onsite soils below the pipe bedding should be scarified, moisture-conditioned to approximately 2 percent above the optimum moisture content, and recompacted to at least 90 percent of the maximum dry density per ASTM D1557 (Modified Proctor) to counteract the potential adverse effects of soil expansiveness. If compaction of the

native soils below the bedding material is not feasible at any location, a 12-inch thick layer of crushed rock wrapped in geofabric should be placed below the pipe bedding. Questionable areas should be reviewed individually by the project geotechnical engineer to evaluate and recommend corrective measures, as necessary.

Placement of bedding and shading backfill should be observed by the project geotechnical engineer or his representative in the field and tested for compliance with the recommended relative compaction and moisture conditions.

Field density testing should conform to ASTM D6938 (Nuclear Method) and D1556 (Sand Cone Method), latest editions. Tests should be taken at a minimum of every 2 vertical feet of fill placed and every 200 feet of length, or at a frequency otherwise specified by the local regulations, whichever is stricter. Actual test intervals may vary with field conditions. Backfill found not to be in conformance should be removed or recompacted as recommended by the project geotechnical engineer.

Densification by water jetting within the pipe bedding and shading zone is not recommended. During removal of the shoring system, gaps should be filled and compacted. Pipes that are deeper than 5 feet should be able to handle stresses due to moving traffic. Casing of the pipeline might be necessary if pipes are placed shallower than 5 feet.

8.6.4. Trench Zone

Non expansive clean "granular" soils (confirmed with laboratory testing prior to construction) may be used as compacted structural fill, provided they are free of organic material, construction debris, and not containing rocks greater than 6 inches in diameter, with no more than 15 percent rocks greater than 3 inches in diameter. Clean "granular" soils should be placed in thin, loose lifts not more than 8 inches in thickness, moisture-conditioned to approximately 3 percent above the optimum moisture content and compacted to at least 90 percent of the maximum dry density per ASTM D1557 (Modified Proctor) to counteract the potential adverse effect of soil expansiveness. For pavement areas, the upper 12 inches of the trench zone should be moisture-conditioned to approximately 2 percent above the optimum moisture content and compacted to at least 95 percent of the maximum dry density per ASTM D1557 (Modified Proctor).

Placement of backfill should be observed by the project geotechnical engineer or his representative in the field and tested for compliance with the recommended relative compaction and moisture conditions. Field density testing should conform to ASTM D6938 (Nuclear Method) and D1556 (Sand Cone Method). Tests should be taken at a minimum of every 2 vertical feet of fill placed and every 200 feet of length, or at a frequency otherwise specified by the local regulations, whichever is stricter. Actual test intervals may vary with field conditions.

Backfill found not to be in conformance should be removed or recompacted as recommended by the project geotechnical engineer. During removal of the shoring system, gaps should be filled and compacted.

8.7 EXISTING UTILITIES

The proposed facilities will be located near to and/or cross several existing utilities. The contractor should exercise care not to disturb these utilities and to support them during construction. Compacting backfill above the pipe zone could be detrimental to surrounding utilities; we recommend a weak slurry mix (minimum compressive strength of 100 pound per square inch [psi]) to be used for the backfilling operations wherever soil compaction is not feasible. These areas should be limited to zones between two pipes and not exceeding 2 feet on either side of the crossing.

8.8 SITE DRAINAGE

The site should be graded to provide adequate drainage away from building foundations and to prevent ponding on pavements in accordance with guidelines established by the City, Greenbook (latest edition), and the 2016 CBC. Special surface drainage features should be incorporated to drain surface sheet flow of water from retaining walls and intercept sheet flow over the paved areas.

8.9 AGRONOMIC USAGE OF SITE SOILS

Based on laboratory testing of the obtained soil samples from the project site, Wallace Laboratories provided detailed recommendations on the Soil Management for agronomic usage as attached in Appendix C.

8.10 CONSTRUCTION OBSERVATIONS AND FIELD TESTING

Construction observations and field testing should be performed by representatives of a qualified geotechnical engineer to confirm that the conditions and assumptions described in this report are the best representation of the actual conditions.

At a minimum, we recommend that the geotechnical engineer and/or his representative be present to observe and test during the following construction activities:

- Excavation, site grading of cuts and fills;
- Placement of all backfill, and pavement structural sections;
- Backfilling of utility trenches and pits; and
- When any unusual conditions are encountered during grading.

Onsite observation and field testing will be a key component to a suitable geotechnical design for this project. A final report of grading should be submitted to the City.

9.0 ADDITIONAL SERVICES AND LIMITATIONS

9.1 ADDITIONAL SERVICES

If considerable modifications to the concepts included herein are implemented over the course of the design, specific geotechnical consultation and input will be required. Accordingly, we recommend that Hushmand Associates, Inc. be retained to provide such consultation during site preparation and grading on an as-needed basis. As a minimum Hushmand Associates, Inc. should be retained to review the grading and design plans prior to their issuance for conformance and compatibility with the recommendations presented in this report.

9.2 LIMITATIONS

This report is based on the project location and geotechnical data as described herein. The materials encountered on the project site and utilized in our laboratory investigation are believed representative of the project area, and the conclusions and recommendations contained in this report are presented on that basis. However, soils can vary in characteristics between points of exploration, both laterally and vertically, and those variations could affect the conclusions and recommendations contained herein. As such, observation and testing by a geotechnical consultant during the construction phase of the project are essential to confirming the basis of this report. To provide the greatest degree of continuity between the design and construction phases, consideration should be given to retaining HAI for construction services. If we are not retained for these services, HAI cannot assume any responsibility for any potential claims that may arise during or after construction as a result of misuse or misinterpretation of HAI's report by others. Furthermore, HAI will cease to be the Geotechnical-Engineer-of-Record if we are not retained for these services and/or at the time another consultant is retained for follow up services to this report.

This report has been prepared consistent with the level of care being provided by other professionals providing similar services at the same locale and in the same time period. This report provides our professional opinions and as such, they are not to be considered a guaranty or warranty. This report should be reviewed and updated after a period of one year or if the site conditions, ownership or project concept changes from those described herein. This report has not been prepared for use by parties or projects other than those named or described herein and may not contain sufficient information for other parties or other purposes.

The recommendations in this report are based on requirements and anticipated conditions provided by Tetra Tech, Inc. If considerable modifications to these criteria and requirements are implemented over the course of design, specific geotechnical consultation and input will be required. Accordingly, we recommend that HAI be retained to review the proposed construction plans prior to their issuance for conformance and compatibility with the recommendations presented in this report.

10.0 REFERENCES

American Concrete Institute (ACI), 2014, Building Code Requirements for Structural Concrete (ACI 318-14) and Commentary.

American Society for Testing and Materials (ASTM) Standards, latest edition.

ASTM STP 1013 titled "Effects of Soil Characteristics on Corrosion" (February, 1989).

California Department of Transportation (Caltrans)'s ARS Online Tool, version 2.3.06.

Caltrans' Highway Design Manual (HDM), latest edition.

Caltrans's Standard Specifications, latest edition.

California Building Standards Commission and International Conference of Building Officials, 2016, 2016 California Building Code.

California Geological Survey (CGS), 2017, Earthquake Zones of Required Investigation for the Los Angeles 7.5-Minute Quadrangle.

CGS, 1998, Seismic Hazard Zone Report 029 for the Los Angeles 7.5-Minute Quadrangle.

Earth Mechanics, Inc. (2015), Foundation Report, Sixth Street Viaduct (Replace) Bridge No. 53C-1880/53-0595, Sixth Street Viaduct Replacement Project, Los Angeles, CA, 07-LA-101, PM S0.20, prepared by Earth Mechanics, Inc. for HNTB Corporation, and City of Los Angeles, Bureau of Engineering, dated July 19, 2015, EMI Project No. 13-102.

Earth Mechanics, Inc. (2016), Foundation Report, West, North East, and South East Bike Ramps, Sixth Street Viaduct Replacement Project, Los Angeles, CA, 07-LA-101, PM S0.20, prepared by Earth Mechanics, Inc. for HNTB Corporation, and City of Los Angeles, Bureau of Engineering, dated March 15, 2016, EMI Project No. 13-102.

California Testing & Inspections (2017), Geotechnical Drilling Report, Sixth Street Viaduct Replacement Project, Installation of Shoring Piles, Westerly Side of the Los Angeles River at Sixth Street, Los Angeles, CA 90013 prepared by California Testing & Inspections for Skanska, Stacy and Witbeck, dated July 14, 2017.

"Greenbook" Standard Specifications for Public Works Construction, latest edition.

Hart, E.W., and Bryant, W.A., 1999, Fault-Rupture Hazard Zones in California, Alquist-Priolo Earthquake Fault Zoning Act with Index to Earthquake Fault Zones Maps, California Division of Mines and Geology Special Publication 42, 38 p.

Ishihara, K., and Yoshimine, M., 1992, Evaluation of Settlements in Sand Deposits Following Liquefaction during Earthquakes, Soils and Foundations, 32 (1): 173-188.

O'Rourke, M.J. and Liu, X., 1999, Response of Buried Pipelines Subject to Earthquake Effects, Published by Multidisciplinary Center for Earthquake Engineering Research, Monograph Series No. 3.

O'Rourke, T.D., Grigoriu, M.D., and Khater, M.M., 1985, A State of the Art Review: Seismic Response of Buried Pipelines, in C. Sundararajan (editor), Decade of Progress in Pressure Vessel Technology: ASME.

Pradel, D., 1998, Procedure to Evaluate Earthquake-Induced Settlements in Dry Sandy Soils: Journal of Geotechnical and Geoenvironmental Engineering, ASCE, Vol. 124, No. 4, pp. 364-368.

Tokimatsu, K. and Seed, H.B., 1987, Evaluation of Settlements in Sands Due to Earthquake Shaking: Journal of Geotechnical Engineering, Volume 113, No. 8, pp. 861-878.

United States Geological Survey (USGS) U.S. Seismic Design Maps tool, based on 2010 ASCE 7 Standard and 2012 International Building Code (IBC).

Youd, T.L., Idriss, I. M., et al., 2001, "Liquefaction Resistance of Soils: Summary Report from the 1996 NCEER and 1998 NCEER/NSF Workshops on Evaluation of Liquefaction Resistance of Soils," ASCE Journal of Geotechnical and Geoenvironmental Engineering, Vol 127, No. 10, October, 2001.

DRAFT

FIGURES

DRAFT

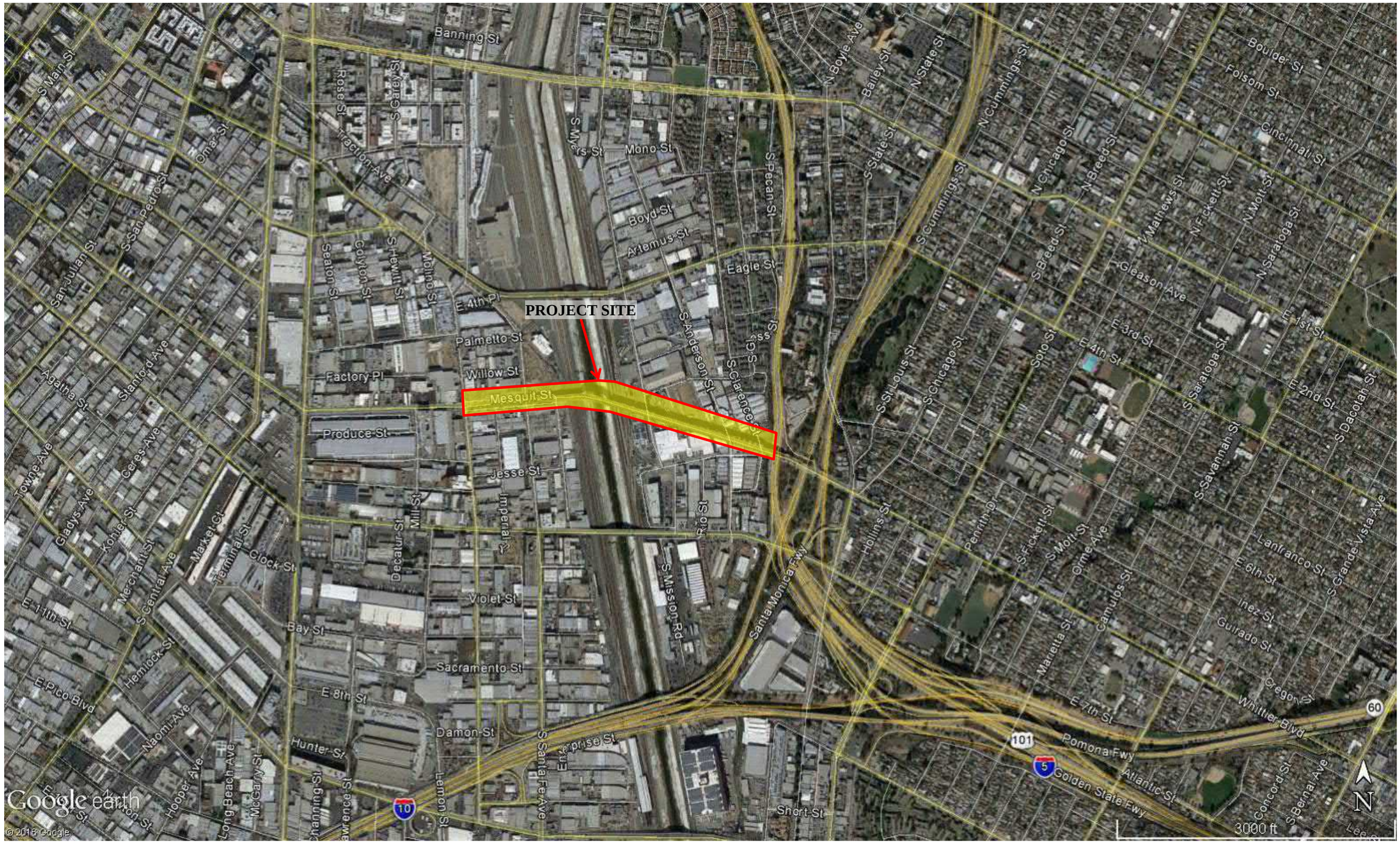

HUSHMAND ASSOCIATES, INC. Geotechnical and Earthquake Engineers	**SIXTH STREET VIADUCT – PARC IMPROVEMENTS** Los Angeles, California	**SITE VICINITY MAP**	Figure **1**

DRAFT

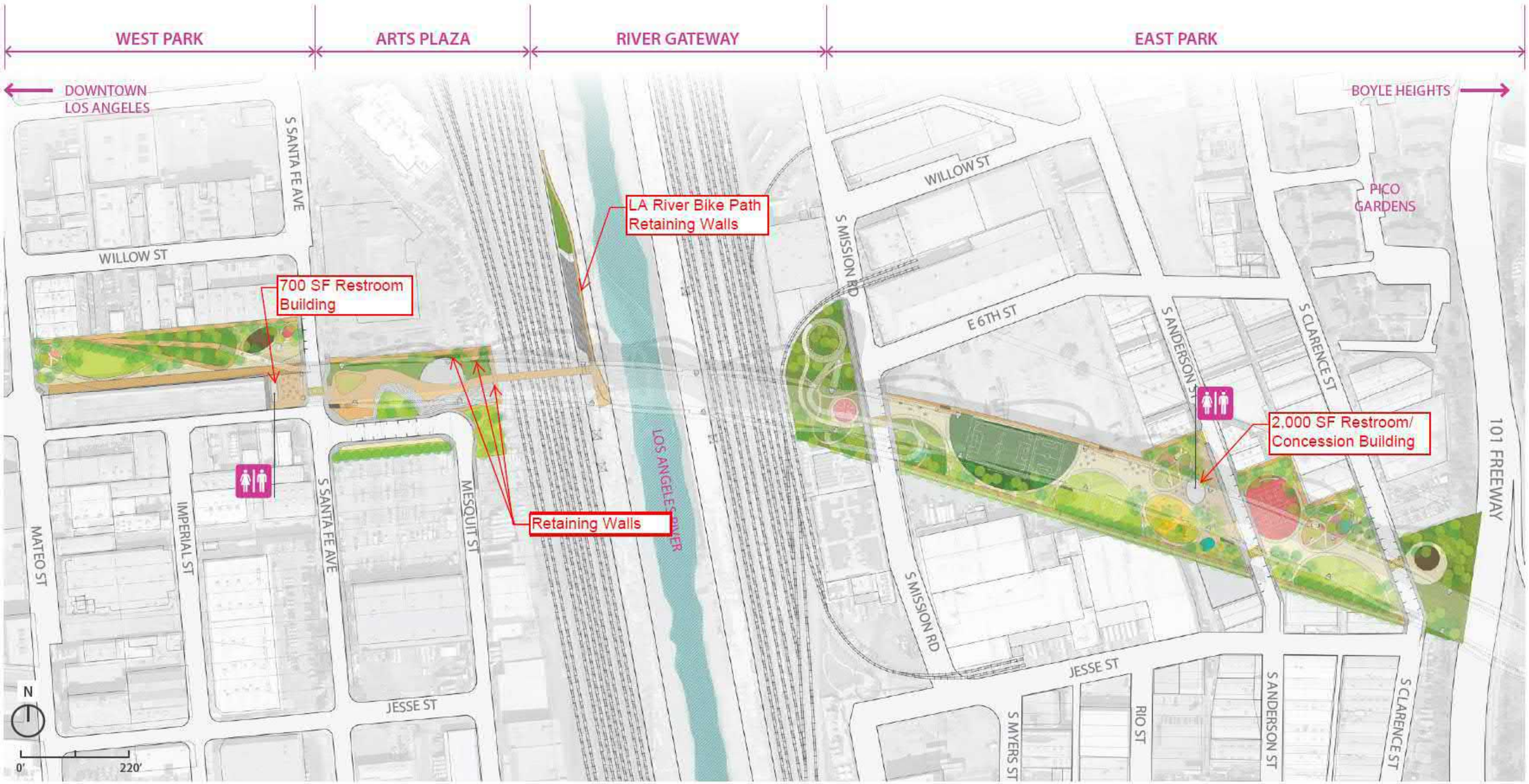

HUSHMAND ASSOCIATES, INC. Geotechnical and Earthquake Engineers	**SIXTH STREET VIADUCT – PARC IMPROVEMENTS** Los Angeles, California	**CONCEPTUAL DESIGN PLAN**	Figure **2**

DRAFT



GB-4
Approximate Boring Location

HUSHMAND ASSOCIATES, INC.
Geotechnical and Earthquake Engineers

SIXTH STREET VIADUCT – PARC IMPROVEMENTS
Los Angeles, California

APPROXIMATE SOIL BORING LOCATIONS

Figure **3A**

DRAFT

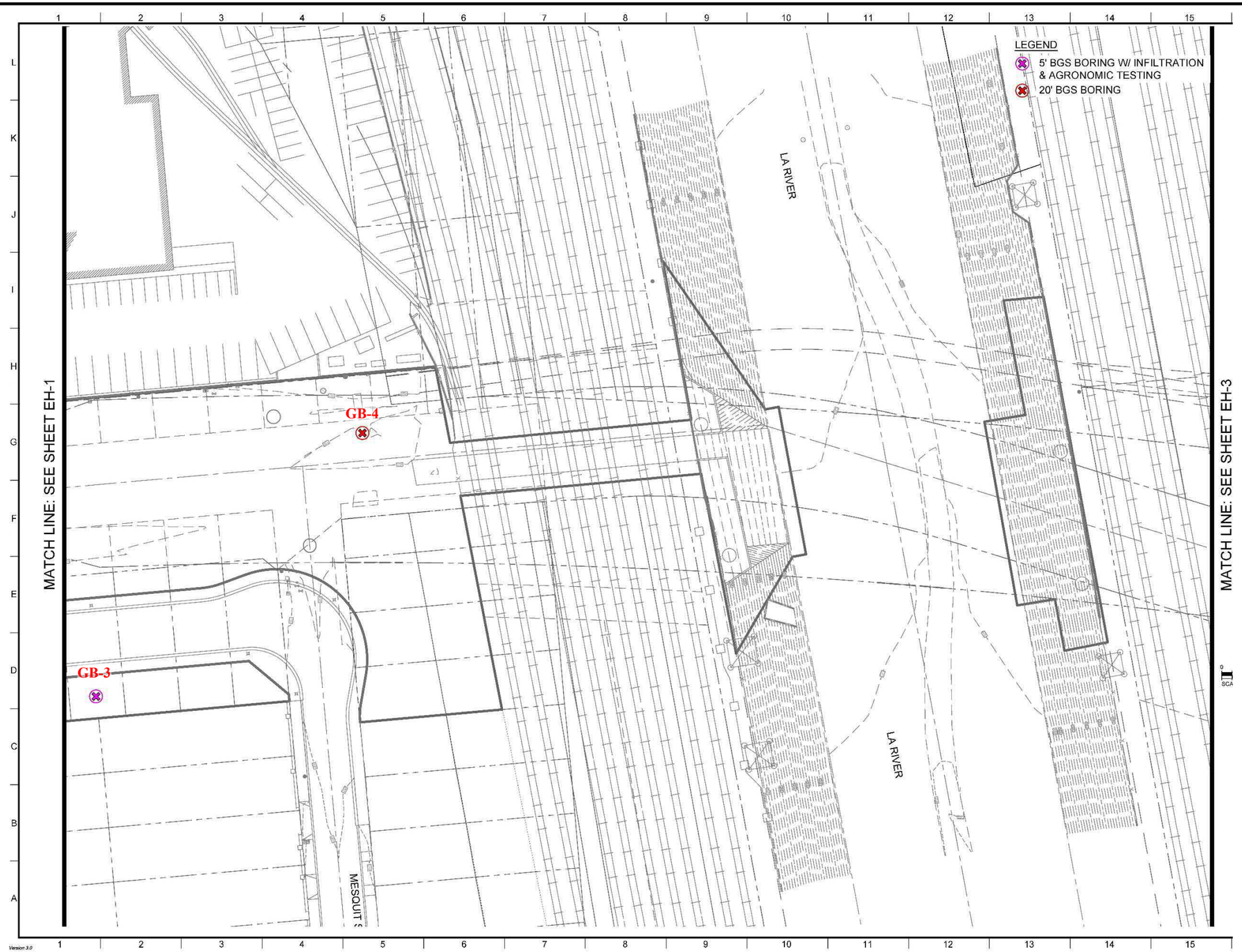

GB-4 **Approximate Boring Location**

HUSHMAND ASSOCIATES, INC. Geotechnical and Earthquake Engineers	**SIXTH STREET VIADUCT – PARC IMPROVEMENTS** Los Angeles, California	**APPROXIMATE SOIL BORING LOCATIONS**	Figure **3B**

DRAFT

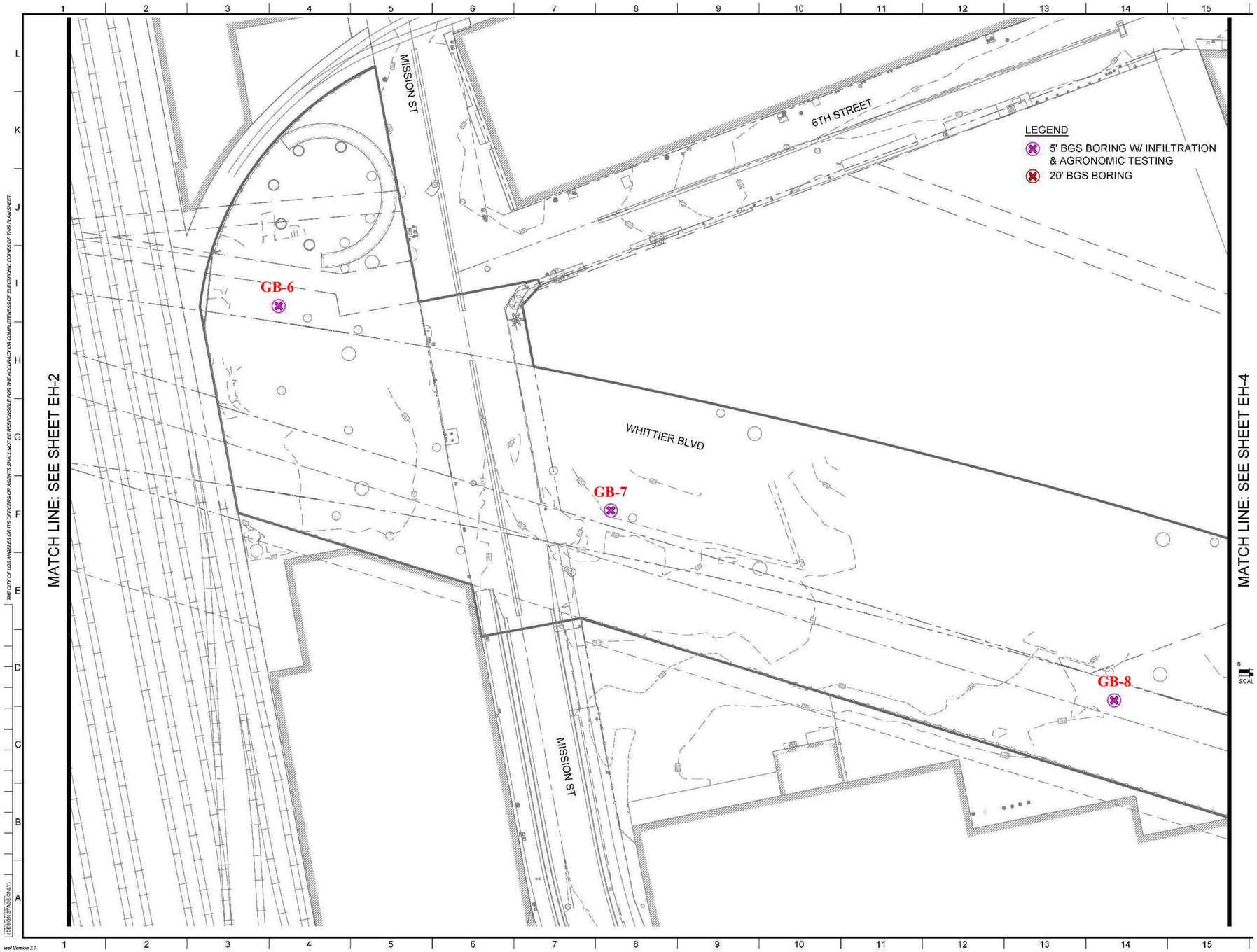

GB-4 ⊗ **Approximate Boring Location**

HUSHMAND ASSOCIATES, INC. Geotechnical and Earthquake Engineers

SIXTH STREET VIADUCT – PARC IMPROVEMENTS
Los Angeles, California

APPROXIMATE SOIL BORING LOCATIONS

Figure **3C**

DRAFT

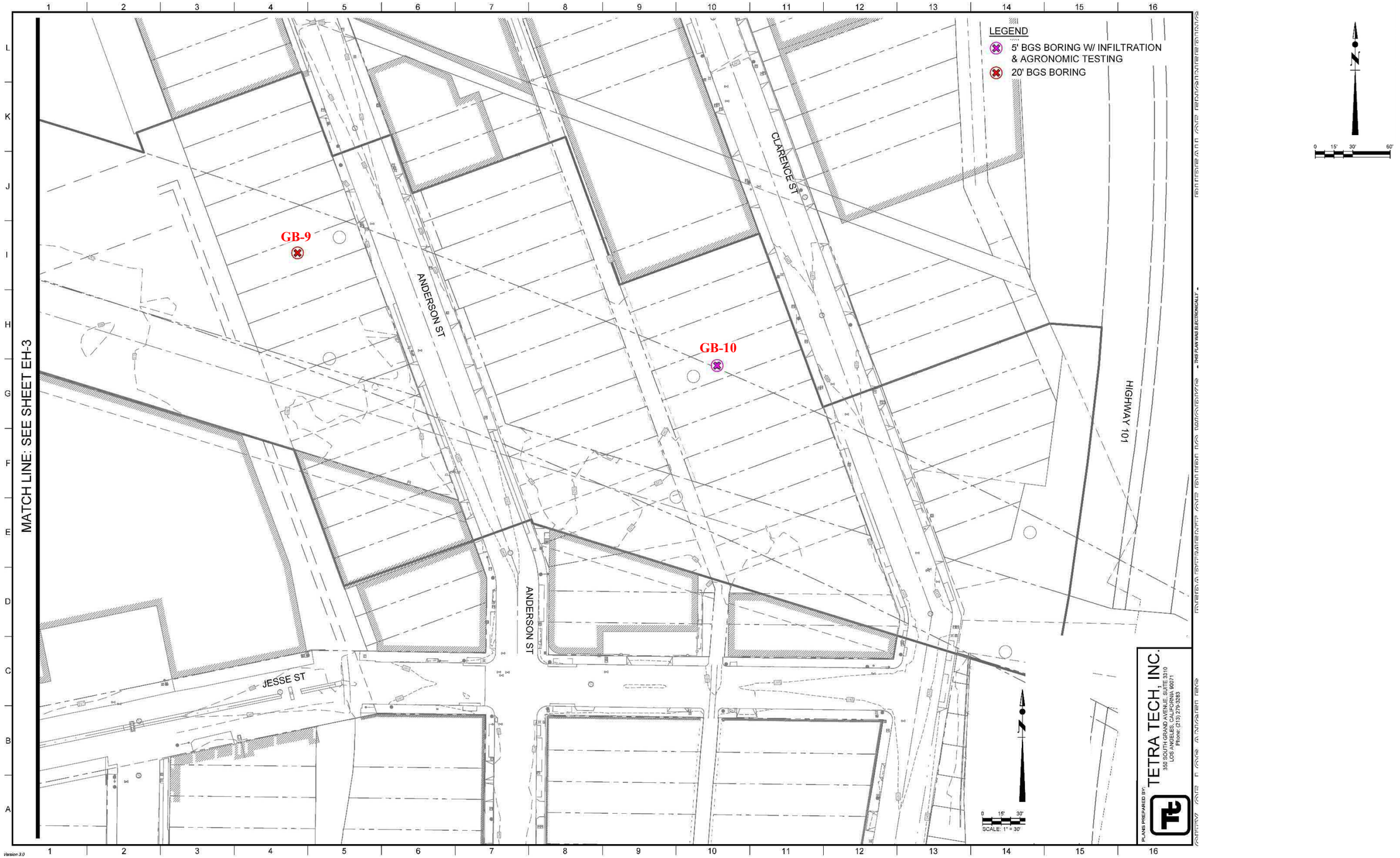

GB-4 Approximate Boring Location

HUSHMAND ASSOCIATES, INC.
Geotechnical and Earthquake Engineers

SIXTH STREET VIADUCT – PARC IMPROVEMENTS
Los Angeles, California

APPROXIMATE SOIL BORING LOCATIONS

Figure **3D**



N

ONE MILE

SCALE

Source: Quaternary Geologic Map of Los Angeles 7.5-Minute Quadrangle (CGS, 1998)

HUSHMAND ASSOCIATES, INC.
Geotechnical and Earthquake Engineers

SIXTH STREET VIADUCT – PARC IMPROVEMENTS
Los Angeles, California

Project No. LAC-17-001

GEOLOGY MAP

Figure 4

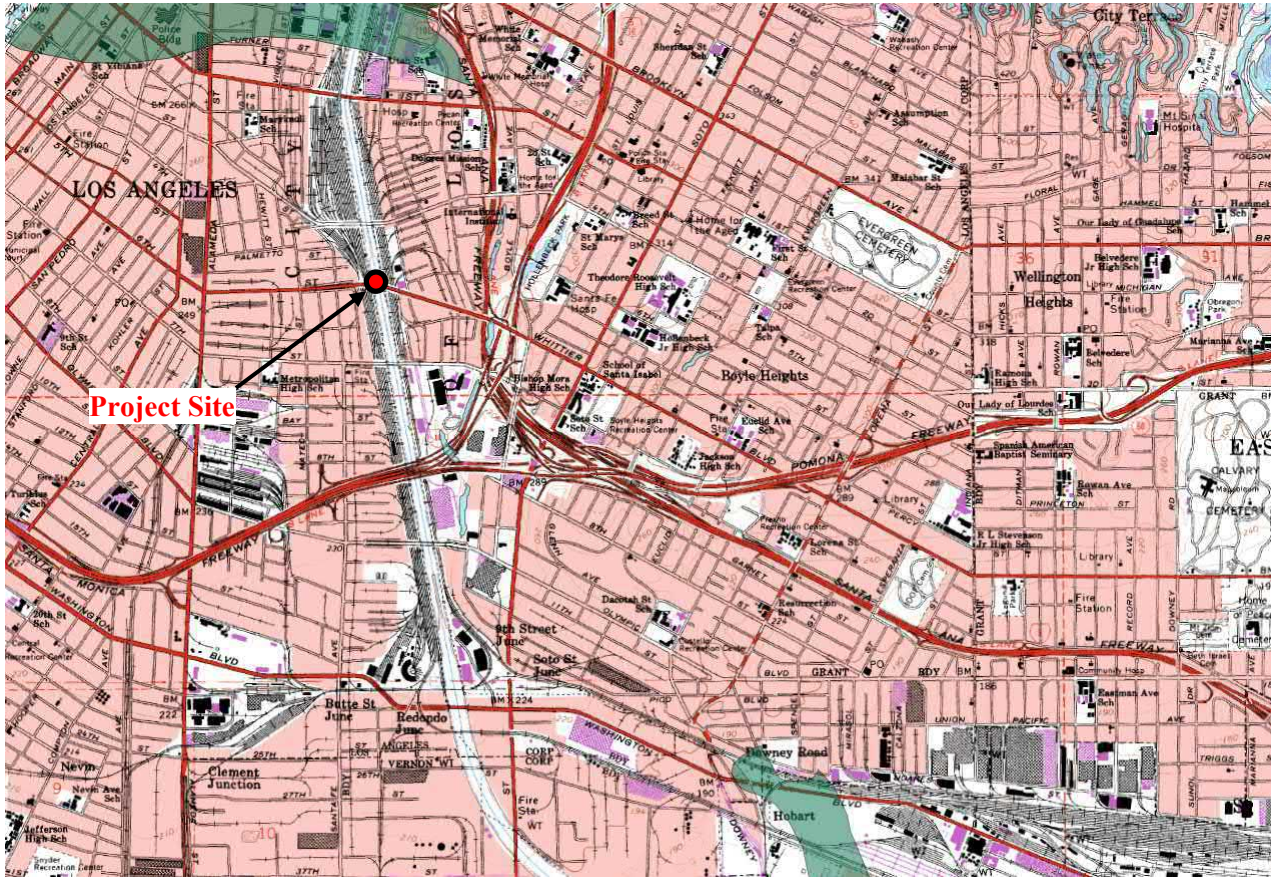

Source: CGS Earthquake Zones of Required Investigation for Los Angeles 7.5-Minute Quadrangle (CGS, 2017)

HUSHMAND ASSOCIATES, INC. Geotechnical and Earthquake Engineers	**SIXTH STREET VIADUCT – PARC IMPROVEMENTS** Los Angeles, California Project No. LAC-17-001	**SEISMIC HAZARD MAP**	Figure 5

DRAFT

APPENDIX A
FIELD INFORMATION

DRAFT

APPENDIX A-1
BOREHOLE LOGS

DRAFT

SOIL CLASSIFICATION SYSTEM - ASTM D2487

MAJOR DIVISIONS			SYMBOLS GRAPH	SYMBOLS LETTER	TYPICAL DESCRIPTIONS
COARSE GRAINED SOILS (MORE THAN 50% OF MATERIAL IS LARGER THAN NO. 200 SIEVE SIZE)	GRAVEL AND GRAVELLY SOILS (MORE THAN 50% OF COARSE FRACTION RETAINED ON NO. 4 SIEVE)	CLEAN GRAVELS		GW	WELL-GRADED GRAVELS, GRAVEL - SAND MIXTURES, LITTLE OR NO FINES
		(LITTLE OR NO FINES)		GP	POORLY-GRADED GRAVELS, GRAVEL - SAND MIXTURES, LITTLE OR NO FINES
		GRAVELS WITH FINES		GM	SILTY GRAVELS, GRAVEL - SAND - SILT MIXTURES
		(APPRECIABLE AMOUNT OF FINES)		GC	CLAYEY GRAVELS, GRAVEL - SAND - CLAY MIXTURES
	SAND AND SANDY SOILS (MORE THAN 50% OF COARSE FRACTION PASSING ON NO. 4 SIEVE)	CLEAN SANDS	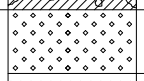	SW	WELL-GRADED SANDS, GRAVELLY SANDS, LITTLE OR NO FINES
		(LITTLE OR NO FINES)	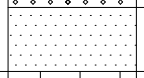	SP	POORLY-GRADED SANDS, GRAVELLY SAND LITTLE OR NO FINES
		SANDS WITH FINES	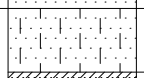	SM	SILTY SANDS, SAND - SILT MIXTURES
		(APPRECIABLE AMOUNT OF FINES)	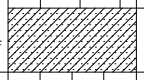	SC	CLAYEY SANDS, SAND - CLAY MIXTURES
FINE GRAINED SOILS (MORE THAN 50% OF MATERIAL IS LARGER THAN NO. 200 SIEVE SIZE)	SILTS AND CLAYS	LIQUID LIMIT LESS THAN 50	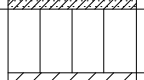	ML	INORGANIC SILTS AND VERY FINE SANDS, ROCK FLOUR, SILTY OR CLAYEY FINE SANDS OR CLAYEY SILTS WITH SLIGHT PLASTICITY
			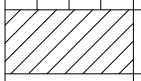	CL	INORGANIC CLAYS OF LOW TO MEDIUM PLASTICITY, GRAVELLY CLAYS, SANDY CLAYS, SILTY CLAYS, LEAN CLAYS
			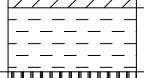	OL	ORGANIC SILTS AND ORGANIC SILTY CLAYS OF LOW PLASTICITY
	SILTS AND CLAYS	LIQUID LIMIT GREATER THAN 50	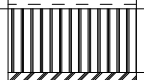	MH	INORGANIC SILTS, MICACEOUS OR DIATOMACEOUS FINE SAND OR SILTY SOILS
			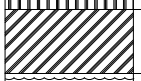	CH	INORGANIC CLAYS OF HIGH PLASTICITY
			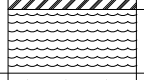	OH	ORGANIC CLAYS OF MEDIUM TO HIGH PLASTICITY, ORGANIC SILTS
HIGHLY ORGANIC SOILS			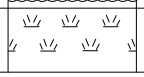	PT	PEAT, HUMUS, SWAMP SOILS WITH HIGH ORGANIC CONTENTS

NOTE: DUAL SYMBOLS ARE USED TO INDICATE BORDERLINE SOIL CLASSIFICATIONS

SAMPLERS


AU Auger Cuttings


GB Grab Sample


MC Modified California Sampler


RC Rock Core


SPT Standard Penetration Test Sampler


ST Shelby Tube

LABORATORY TESTS

RV	: R-Value
CONS	: Consolidation
SA	: Sieve Analysis
COMP	: Compaction
EI	: Expansion Index
SE	: Sand Equivalent
UC	: Unconfined Compression
DS	: Direct Shear
HA	: Hydrometer Analysis
%200	: Percent Passing No. 200 Sieve
AL	: Atterberg Limits
HC	: Hydraulic Conductivity
CORR	: Corrosion Potential
SW	: Sweet Potential
OM	: Organic Matter

HUSHMAND ASSOCIATES, INC.
Geotechnical and Earthquake Engineers

Sixth Street Viaduct PARC Improvements
Los Angeles, CA

KEY TO BORING LOGS

Figure
A0

DRAFT

Hushmand Associates, Inc.

BORING NUMBER GB-1

CLIENT Tetra Tech/City of Los Angeles
PROJECT NAME Sixth Street Viaduct PARC
PROJECT NUMBER LAC-17-001
PROJECT LOCATION 6th Street, Los Angeles, CA
DATE STARTED 11/7/17 **COMPLETED** 11/7/17
GROUND ELEVATION **HOLE SIZE** 10"
DRILLING CONTRACTOR CAL PAC Drilling
GROUND WATER LEVELS:
DRILLING METHOD Hand Auger/Hollow Stem Auger
AT TIME OF DRILLING Not Encountered
LOGGED BY RN **CHECKED BY** NM
AT END OF DRILLING Not Encountered
NOTES Borehole was backfilled with GRAVEL after completion of percolation testing **AFTER DRILLING** Not Encountered

DEPTH (ft)	GRAPHIC LOG	MATERIAL DESCRIPTION	CORE SAMPLE	BULK SAMPLE	SAMPLE NUMBER	BLOW COUNTS (N VALUE)	DRY UNIT WT. (pcf)	MOISTURE CONTENT (%)	OTHER LABORATORY TESTS
		SILT with SAND (ML): Brown, moist, fine grained SAND							
		SILTY SAND (SM): Brown, moist, fine grained SAND.			AU 1A				SA
		SILTY SAND (SM): Brown, moist, fine grained SAND, sub-angular to sub-rounded GRAVEL up to 2" dia. encountered.							
		More sub-angular to sub-rounded GRAVEL up to 3" dia. encountered.							
5		SILTY SAND (SM): Brown, moist, fine to medium grained SAND, GRAVEL up to 3" dia.			AU 1B				
		Poorly graded SAND (SP): Brown, moist, fine to coarse grained SAND, GRAVEL up to 3" dia.							
		Borehole terminated at 6 feet.							

DRAFT

BORING NUMBER GB-2

Hushmand Associates, Inc.

CLIENT Tetra Tech/City of Los Angeles
PROJECT NAME Sixth Street Viaduct PARC
PROJECT NUMBER LAC-17-001
PROJECT LOCATION 6th Street, Los Angeles, CA
DATE STARTED 11/3/17 **COMPLETED** 11/3/17
GROUND ELEVATION **HOLE SIZE** 6"
DRILLING CONTRACTOR CAL PAC Drilling
GROUND WATER LEVELS:
DRILLING METHOD Hand Auger/Hollow Stem Auger
AT TIME OF DRILLING Not Encountered
LOGGED BY RN **CHECKED BY** NM
AT END OF DRILLING Not Encountered
NOTES Backfilled with cement grout
AFTER DRILLING Not Encountered

DEPTH (ft)	GRAPHIC LOG	MATERIAL DESCRIPTION	CORE SAMPLE	BULK SAMPLE	SAMPLE NUMBER	BLOW COUNTS (N VALUE)	DRY UNIT WT. (pcf)	MOISTURE CONTENT (%)	OTHER LABORATORY TESTS
		SILTY SAND (SM): Brown, dry to moist, fine to medium grained SAND.			AU 1				RV CORR SW
5		@ 4': 6" COBBLE encountered.							
		Well-graded SAND with SILT and GRAVEL (SW-SM): Brown, moist, loose, fine to medium grained SAND.			MC 2	6-5-4 (9)	107	2	DS
		Well-graded SAND with SILT and GRAVEL (SW-SM): Brown, moist, medium dense, fine to medium grained SAND. @7.5': 2" dia. sub-angular to sub-rounded GRAVEL encountered.			SPT 3	2-5-8 (13)			SA
10		Poorly graded SAND (SP): Brown, moist, medium dense, fine to medium grained SAND.			MC 4	5-9-19 (28)	105	3	
		Poorly graded SAND with GRAVEL (SP): Brown, moist, very dense, fine to medium grained SAND, scattered sub-angular to sub-rounded fine GRAVEL up to 5 mm.			SPT 5	20-27-21 (48)			
15		Poorly graded SAND with GRAVEL (SP): Pale gray to brown, moist, very dense, fine to medium grained SAND, sub-angular to sub-rounded fine to coarse GRAVEL up to 3" dia. Few sub-angular COBBLES up to 4" dia. encountered.			MC 6	20-21-21 (42)	104	2	SA
		Poorly graded SAND with GRAVEL (SP): Pale gray to brown, moist, dense, fine to coarse grained SAND with fine to coarse grained GRAVEL up to 2" dia. No Sample Recovery			SPT 7	13-16-22 (38)			
20		SILTY SAND (SM): Gray, very moist, very dense, fine grained SAND.			MC 8	13-50	115	4	
		Poorly graded SAND (SP): Gray, very moist, very dense, medium grained SAND.							
		Borehole terminated at 21 feet.							

HAI-AMIR LAC-17-001, SIXTH STREET VIADUCT PARC.GPJ GINT US.GDT 1/12/18

DRAFT

Hushmand Associates, Inc.

BORING NUMBER GB-3

CLIENT Tetra Tech/City of Los Angeles
PROJECT NAME Sixth Street Viaduct PARC
PROJECT NUMBER LAC-17-001
PROJECT LOCATION 6th Street, Los Angeles, CA
DATE STARTED 11/8/17 **COMPLETED** 11/8/17
GROUND ELEVATION _____ **HOLE SIZE** 8"
DRILLING CONTRACTOR CAL PAC Drilling
GROUND WATER LEVELS:
DRILLING METHOD Hand Auger/Hollow Stem Auger
AT TIME OF DRILLING Not Encountered
LOGGED BY RN **CHECKED BY** NM
AT END OF DRILLING Not Encountered
NOTES Borehole was backfilled with GRAVEL after completion of percolation testing **AFTER DRILLING** Not Encountered

DEPTH (ft)	GRAPHIC LOG	MATERIAL DESCRIPTION	CORE SAMPLE	BULK SAMPLE	SAMPLE NUMBER	BLOW COUNTS (N VALUE)	DRY UNIT WT. (pcf)	MOISTURE CONTENT (%)	OTHER LABORATORY TESTS
		CONCRETE ~ 3 inches							
		SILTY SAND (SM): Brown, moist, fine grained SAND.			AU 1				
5									
		Borehole terminated at 6 feet.							

DRAFT

Hushmand Associates, Inc.

BORING NUMBER GB-4

CLIENT Tetra Tech/City of Los Angeles
PROJECT NAME Sixth Street Viaduct PARC
PROJECT NUMBER LAC-17-001
PROJECT LOCATION 6th Street, Los Angeles, CA
DATE STARTED 11/6/17 **COMPLETED** 11/6/17
GROUND ELEVATION **HOLE SIZE** 6"
DRILLING CONTRACTOR CAL PAC Drilling
GROUND WATER LEVELS:
DRILLING METHOD Hand Auger/Hollow Stem Auger
AT TIME OF DRILLING Not Encountered
LOGGED BY RN **CHECKED BY** NM
AT END OF DRILLING Not Encountered
NOTES Backfilled with cement grout
AFTER DRILLING Not Encountered

DEPTH (ft)	GRAPHIC LOG	MATERIAL DESCRIPTION	CORE SAMPLE	BULK SAMPLE	SAMPLE NUMBER	BLOW COUNTS (N VALUE)	DRY UNIT WT. (pcf)	MOISTURE CONTENT (%)	OTHER LABORATORY TESTS
		SILTY SAND (SM): Dark grayish brown, moist, fine grained SAND with sub-rounded to sub-angular GRAVEL up to 2" encountered.			AU 1				
5		SILTY SAND (SM): Dark grayish brown, moist, loose, fine grained SAND.			SPT 2	5-3-3 (6)			
		Poorly graded SAND (SP): Gray, moist, loose, fine to coarse grained SAND.							
		SILTY SAND (SM): Brown, moist, loose, fine grained SAND.			MC 3	4-5-7 (12)			SW
10		Same as above.			SPT 4	2-2-2 (4)			SA
		Poorly graded SAND (SP): Grayish brown, moist, loose, fine to medium grained SAND, fine GRAVEL up to 5 mm. dia.			MC 5	5-4-4 (8)	107	9	DS
15		Poorly graded SAND (SP): Grayish brown, moist, medium dense, fine to medium grained SAND, fine GRAVEL up to 5 mm. dia.			SPT 6	4-5-9 (14)			
		Well-graded SAND (SW): Yellowish brown, moist, medium dense, fine to medium grained SAND, fine GRAVEL up to 5 mm. dia.							
		Poorly graded SAND (SP): Mixture of pale yellow to pale brown, moist, dense, medium to coarse grained SAND, occasional fine GRAVEL.			MC 7	10-18-24 (42)	103	2	SA
20		Poorly graded SAND with GRAVEL (SP): Mixture of pale yellow to pale brown, moist, dense, medium to coarse grained SAND, fine GRAVEL.							
		Poorly graded SAND (SP): Mixture of pale yellow to pale brown, moist, very dense, medium to coarse grained SAND, fine to coarse GRAVEL up to 1.5" dia.			SPT 8	10-21-26 (47)			CORR
25									

HAI-AMIR LAC-17-001, SIXTH STREET VIADUCT PARC.GPJ GINT US.GDT 1/12/18

(Continued Next Page)

DRAFT

Hushmand Associates, Inc.

BORING NUMBER GB-4

CLIENT Tetra Tech/City of Los Angeles **PROJECT NAME** Sixth Street Viaduct PARC

PROJECT NUMBER LAC-17-001 **PROJECT LOCATION** 6th Street, Los Angeles, CA

DEPTH (ft)	MATERIAL DESCRIPTION	CORE SAMPLE	BULK SAMPLE	SAMPLE NUMBER	BLOW COUNTS (N VALUE)	DRY UNIT WT. (pcf)	MOISTURE CONTENT (%)	OTHER LABORATORY TESTS
	SILTY SAND with GRAVEL (SM): Grayish brown, moist, dense, fine to medium grained SAND.	⧓		MC 9	12-16-22 (38)	109	4	DS
30	SILTY SAND with GRAVEL (SM): Gray, moist, very dense, fine SAND with fine GRAVEL, with GRAVEL up to 2" dia.	⊠		SPT 10	21-50/2"			
	@ 30.5' to 31': Color change to dark gray							
	SILTY SAND with GRAVEL (SM): Gray, moist, very dense, fine to medium grained SAND with fine sub-angluar to sub-rounded fine GRAVEL. GRAVEL up to 2" dia. encountered occasionally.							
35	Poorly graded SAND with SILT (SP-SM): Gray, moist, very dense, fine to medium grained SAND. 3" dia. sub-rounded GRAVEL encountered at the bottom of sampler.	⧓		MC 11	50	102	10	DS
	Same as above.			SPT 12	50/1"			
	Borehole terminated at 39.08 feet.							

DRAFT

Hushmand Associates, Inc.

BORING NUMBER GB-6

CLIENT Tetra Tech/City of Los Angeles
PROJECT NAME Sixth Street Viaduct PARC
PROJECT NUMBER LAC-17-001
PROJECT LOCATION 6th Street, Los Angeles, CA
DATE STARTED 11/7/17 **COMPLETED** 11/7/17
GROUND ELEVATION _____ **HOLE SIZE** 9"
DRILLING CONTRACTOR CAL PAC Drilling
GROUND WATER LEVELS:
DRILLING METHOD Hand Auger/Hollow Stem Auger
AT TIME OF DRILLING Not Encountered
LOGGED BY RN **CHECKED BY** NM
AT END OF DRILLING Not Encountered
NOTES Borehole was backfilled with GRAVEL after completion of percolation testing **AFTER DRILLING** Not Encountered

DEPTH (ft)	GRAPHIC LOG	MATERIAL DESCRIPTION	CORE SAMPLE	BULK SAMPLE	SAMPLE NUMBER	BLOW COUNTS (N VALUE)	DRY UNIT WT. (pcf)	MOISTURE CONTENT (%)	OTHER LABORATORY TESTS
		SILTY SAND with GRAVEL (SM): Brown, moist, fine grained SAND, sub-angular to sub-rounded fine to coarse GRAVEL up to 3" dia.							
		@ 1': 4" dia. COBBLE encountered.			AU 1A				SA
		More GRAVEL and COBBLES encountered. Very difficult conditions to perform hand auguring.							
		Poorly graded SAND with SILT and GRAVEL (SP-SM): Brown, moist, fine to medium grained SAND, fine GRAVEL.			AU 1B				
5		@ 4.75': more GRAVEL and COBBLES encountered. Very difficult conditions to perform hand auguring.							
		Poorly graded SAND (SP): Brown, moist, medium grained SAND.							
		Borehole terminated at 6.08 feet.							

DRAFT

Hushmand Associates, Inc.

BORING NUMBER GB-7

CLIENT Tetra Tech/City of Los Angeles
PROJECT NAME Sixth Street Viaduct PARC
PROJECT NUMBER LAC-17-001
PROJECT LOCATION 6th Street, Los Angeles, CA
DATE STARTED 11/8/17 **COMPLETED** 11/8/17
GROUND ELEVATION _____ **HOLE SIZE** 8"
DRILLING CONTRACTOR CAL PAC Drilling
GROUND WATER LEVELS:
DRILLING METHOD Hand Auger/Hollow Stem Auger
AT TIME OF DRILLING Not Encountered
LOGGED BY RN **CHECKED BY** NM
AT END OF DRILLING Not Encountered
NOTES Borehole was backfilled with GRAVEL after completion of percolation testing **AFTER DRILLING** Not Encountered

DEPTH (ft)	GRAPHIC LOG	MATERIAL DESCRIPTION	CORE SAMPLE	BULK SAMPLE	SAMPLE NUMBER	BLOW COUNTS (N VALUE)	DRY UNIT WT. (pcf)	MOISTURE CONTENT (%)	OTHER LABORATORY TESTS
		ASPHALT ~ 3 inches							
		SILT with SAND (ML): Brown, fine SILT with fine grained SAND, sub-rounded GRAVEL up to 1.5" dia.			AU 1A				
		SILTY SAND (SM): Brown, moist, fine grained SAND, sub-rounded GRAVEL up to 1.5" dia.			AU 1B				
5		Poorly graded SAND (SP): Brown, moist, fine grained SAND.							
		Borehole terminated at 6.04 feet.							

DRAFT

Hushmand Associates, Inc.

BORING NUMBER GB-8

CLIENT Tetra Tech/City of Los Angeles
PROJECT NAME Sixth Street Viaduct PARC
PROJECT NUMBER LAC-17-001
PROJECT LOCATION 6th Street, Los Angeles, CA
DATE STARTED 11/6/17 **COMPLETED** 11/6/17
GROUND ELEVATION **HOLE SIZE** 10"
DRILLING CONTRACTOR CAL PAC Drilling
GROUND WATER LEVELS:
DRILLING METHOD Hand Auger/Hollow Stem Auger
AT TIME OF DRILLING Not Encountered
LOGGED BY RN **CHECKED BY** NM
AT END OF DRILLING Not Encountered
NOTES Borehole was backfilled with GRAVEL after completion of percolation testing **AFTER DRILLING** Not Encountered

DEPTH (ft)	GRAPHIC LOG	MATERIAL DESCRIPTION	CORE SAMPLE	BULK SAMPLE	SAMPLE NUMBER	BLOW COUNTS (N VALUE)	DRY UNIT WT. (pcf)	MOISTURE CONTENT (%)	OTHER LABORATORY TESTS
		ASPHALT ~ 3 inches							
		SILTY SAND (SM): Brown, moist, fine grained SAND.			AU 1				
5		Borehole terminated at 5.67 feet.							

DRAFT

Hushmand Associates, Inc.

BORING NUMBER GB-9

CLIENT Tetra Tech/City of Los Angeles
PROJECT NAME Sixth Street Viaduct PARC
PROJECT NUMBER LAC-17-001
PROJECT LOCATION 6th Street, Los Angeles, CA
DATE STARTED 11/3/17 **COMPLETED** 11/3/17
GROUND ELEVATION _____ **HOLE SIZE** 8"
DRILLING CONTRACTOR CAL PAC Drilling
GROUND WATER LEVELS:
DRILLING METHOD Hand Auger/Hollow Stem Auger
AT TIME OF DRILLING Not Encountered
LOGGED BY RN **CHECKED BY** NM
AT END OF DRILLING Not Encountered
NOTES Backfilled with cement grout
AFTER DRILLING Not Encountered

DEPTH (ft)	GRAPHIC LOG	MATERIAL DESCRIPTION	CORE SAMPLE	BULK SAMPLE	SAMPLE NUMBER	BLOW COUNTS (N VALUE)	DRY UNIT WT. (pcf)	MOISTURE CONTENT (%)	OTHER LABORATORY TESTS
		Poorly graded SAND (SP): Gray, moist, fine to medium grained, with angular gravel up to 1" dia.							
		@ 2': 2" dia. GRAVEL encountered.			AU 1				RV CORR
5		Poorly graded SAND (SP): Light gray, moist, medium dense, fine to medium grained.			MC 2	5-5-9 (14)	101	3	DS
		Poorly graded SAND with SILT and GRAVEL(SP): Brown, moist, medium dense, fine to medium grained. @ 8.25': sub-angular GRAVEL up to 1.5" dia. encountered.			SPT 3	5-15-11 (26)			SA
10		Poorly graded SAND (SP): Light gray, moist, dense fine to medium grained. 3" dia. sub-angular GRAVEL found at the bottom of sampler.			MC 4	15-24-28 (52)	118	3	
		Poorly graded SAND (SP): Gray to light brown, moist, dense, medium to coarse grained, fine sub-angular gravel up to 1" dia.			SPT 5	7-10-10 (20)			
15		Poorly graded SAND (SP): Gray, moist, medium dense, fine to coarse grained SAND.			MC 6	10-13-15 (28)	106	3	
		Well-graded SAND with GRAVEL (SW): Light brown, moist, dense, fine to coarse grained SAND.			SPT 7	6-10-14 (24)			SA
		SILTY SAND (SM): Light brown, moist dense, fine grained SAND.							
20		Poorly graded SAND (SP): Light brown, medium dense, fine to coarse grained SAND, fine to coarse GRAVEL up to 1.5" dia. 3" dia. GRAVEL encountered at the bottom of sampler.			MC 8	13-16-10 (26)	118	3	
		Borehole terminated at 21.5 feet.							

DRAFT

Hushmand Associates, Inc.

BORING NUMBER GB-10

CLIENT Tetra Tech/City of Los Angeles
PROJECT NAME Sixth Street Viaduct PARC
PROJECT NUMBER LAC-17-001
PROJECT LOCATION 6th Street, Los Angeles, CA
DATE STARTED 11/7/17 **COMPLETED** 11/7/17
GROUND ELEVATION _____ **HOLE SIZE** 8"
DRILLING CONTRACTOR CAL PAC Drilling
GROUND WATER LEVELS:
DRILLING METHOD Hand Auger/Hollow Stem Auger
AT TIME OF DRILLING Not Encountered
LOGGED BY RN **CHECKED BY** NM
AT END OF DRILLING Not Encountered
NOTES Borehole was backfilled with GRAVEL after completion of percolation testing **AFTER DRILLING** Not Encountered

DEPTH (ft)	GRAPHIC LOG	MATERIAL DESCRIPTION	CORE SAMPLE	BULK SAMPLE	SAMPLE NUMBER	BLOW COUNTS (N VALUE)	DRY UNIT WT. (pcf)	MOISTURE CONTENT (%)	OTHER LABORATORY TESTS
		Poorly graded SAND with SILT (SP-SM): Light brown, moist, fine grained SAND with SILT.							
		SILTY SAND (SM): Brown, moist, fine grained, sub-angular to sub-rounded GRAVEL and COBBLES up to 4" dia. encountered.			AU 1A				SA
5		SILTY SAND (SM): Brown, moist, fine grained SAND.							
		Poorly graded SAND (SP): Brown, moist, fine to coarse grained SAND, very little GRAVEL up to 1.5" dia.			AU 1B				
		Borehole terminated at 6 feet.							

DRAFT

APPENDIX A-2
PERCOLATION TEST LOGS

DRAFT

Field Percolation Test Results

Project Location	Sixth Street, Los Angeles	Test Number	GB-1
Project No.	LAC-17-001	Diameter of Boring (in)	10
Date	11/8/2017	Diameter of Casing	3" Perforated PVC
Tested By	RN	Depth of Boring (ft)	6.00
Test Method	Water Level Sounder	Depth of Invert of BMP (ft)	N/A
		Depth of Groundwater (ft)	Unknown
		Depth to Initial Water Depth (in)	60

Time Interval Standard

Start Time for Pre-Soak	14:51	Water Remaining in Boring (Y/N)	N
Start Time for Standard	15:06	Standard Time Interval Between Readings	1 min

Reading Number	Time Start/ End (hh:mm)	Elapsed Time Δtime (mins)	Water Drop During Standard Time Interval Δd (inches)	Percolation Rate for Reading (in/hr)	Soil Description/ Notes/ Comments
1	15:06 15:07	1	3.0	180.0	
2	15:09 15:10	1	3.0	180.0	
3	15:15 15:16	1	3.0	180.0	
4	15:18 15:19	1	3.0	180.0	
5	15:21 15:22	1	3.0	180.0	
Pre-adjusted Parameter			**3.0**	**180.0**	
		Reduction Factor (Rf)		3.1	
		Adjusted Percolation Rate		**58.1**	in/hr

DRAFT

Field Percolation Test Results

Project Location	Sixth Street, Los Angeles	Test Number	GB-3
Project No.	LAC-17-001	Diameter of Boring (in)	8
Date	11/8/2017	Diameter of Casing	3" Perforated PVC
Tested By	RN	Depth of Boring (ft)	6.00
Test Method	Water Level Sounder	Depth of Invert of BMP (ft)	N/A
		Depth of Groundwater (ft)	Unknown
		Depth to Initial Water Depth (in)	60

Time Interval Standard

Start Time for Pre-Soak	9:00	Water Remaining in Boring (Y/N)	N
Start Time for Standard	9:37	Standard Time Interval Between Readings	5 min

Reading Number	Time Start/ End (hh:mm)	Elapsed Time Δtime (mins)	Water Drop During Standard Time Interval Δd (inches)	Percolation Rate for Reading (in/hr)	Soil Description/ Notes/ Comments
1	9:37 9:42	5	5.25	63.0	
2	9:46 9:51	5	5.25	63.0	
3	9:54 9:59	5	5.00	60.0	
4	10:03 10:08	5	5.00	60.0	
5	10:10 10:15	5	5.00	60.0	
6	10:17 10:22	5	4.75	57.0	
7	10:24 10:29	5	4.75	57.0	
8	10:30 10:35	5	4.75	57.0	
Pre-adjusted Parameter			**5.0**	**60.0**	
		Reduction Factor (Rf)		3.4	
		Adjusted Percolation Rate		**17.8**	in/hr

DRAFT

Field Percolation Test Results

HUSHMAND ASSOCIATES, INC.
Geotechnical and Earthquake Engineers

Project Location	Sixth Street, Los Angeles	Test Number	GB-6
Project No.	LAC-17-001	Diameter of Boring (in)	9
Date	11/7/2017	Diameter of Casing	3" Perforated PVC
Tested By	RN	Depth of Boring (ft)	6.08
Test Method	Water Level Sounder	Depth of Invert of BMP (ft)	N/A
		Depth of Groundwater (ft)	Unknown
		Depth to Initial Water Depth (in)	56

Time Interval Standard

Start Time for Pre-Soak	9:30	Water Remaining in Boring (Y/N)	N
Start Time for Standard	9:44	Standard Time Interval Between Readings	1 min

Reading Number	Time Start/ End (hh:mm)	Elapsed Time Δtime (mins)	Water Drop During Standard Time Interval Δd (inches)	Percolation Rate for Reading (in/hr)	Soil Description/ Notes/ Comments
1	9:44 9:45	1	12.00	720.0	
2	9:47 9:48	1	13.00	780.0	
3	9:51 9:52	1	12.00	720.0	
4	9:53 9:54	1	6.00	360.0	
5	9:56 9:57	1	6.00	360.0	
6	10:00 10:01	1	6.00	360.0	
7	10:02 10:03	1	6.00	360.0	
8	10:05 10:06	1	6.00	360.0	
Pre-adjusted Parameter			**6.00**	**480.0**	
		Reduction Factor (Rf)		4.1	
		Adjusted Percolation Rate		**116.8**	in/hr

DRAFT

Field Percolation Test Results

Project Location	Sixth Street, Los Angeles	Test Number	GB-7
Project No.	LAC-17-001	Diameter of Boring (in)	8
Date	11/8/2017	Diameter of Casing	3" Perforated PVC
Tested By	RN	Depth of Boring (ft)	6.04
Test Method	Water Level Sounder	Depth of Invert of BMP (ft)	N/A
		Depth of Groundwater (ft)	Unknown
		Depth to Initial Water Depth (in)	60

Time Interval Standard

Start Time for Pre-Soak	12:03	Water Remaining in Boring (Y/N)	N
Start Time for Standard	12:19	Standard Time Interval Between Readings	2 min

Reading Number	Time Start/ End (hh:mm)	Elapsed Time Δtime (mins)	Water Drop During Standard Time Interval Δd (inches)	Percolation Rate for Reading (in/hr)	Soil Description/ Notes/ Comments
1	12:19 12:21	2	5.00	150.0	
2	12:22 12:24	2	4.75	142.5	
3	12:27 12:29	2	4.75	142.5	
4	12:30 12:32	2	4.50	135.0	
5	12:33 12:35	2	4.50	135.0	
6	12:45 12:47	2	4.50	135.0	
7	12:49 12:51	2	4.50	135.0	
8	12:53 12:55	2	4.50	135.0	
Pre-adjusted Parameter			**4.50**	**135.0**	
		Reduction Factor (Rf)		3.6	
		Adjusted Percolation Rate		**37.9**	in/hr

DRAFT

Field Percolation Test Results

Project Location	Sixth Street, Los Angeles	Test Number	GB-8
Project No.	LAC-17-001	Diameter of Boring (in)	8
Date	11/6/2017	Diameter of Casing	3" Perforated PVC
Tested By	RN	Depth of Boring (ft)	5.67
Test Method	Water Level Sounder	Depth of Invert of BMP (ft)	N/A
		Depth of Groundwater (ft)	Unknown
		Depth to Initial Water Depth (in)	51

Time Interval Standard

Start Time for Pre-Soak	12:36	Water Remaining in Boring (Y/N)	N
Start Time for Standard	13:10	Standard Time Interval Between Readings	1 min

Reading Number	Time Start/ End (hh:mm)	Elapsed Time Δtime (mins)	Water Drop During Standard Time Interval Δd (inches)	Percolation Rate for Reading (in/hr)	Soil Description/ Notes/ Comments
1	13:10 13:11	1	17.00	1020.0	
2	13:20 13:21	1	17.00	1020.0	
3	13:23 13:24	1	12.00	720.0	
4	13:30 13:31	1	6.00	360.0	
5	13:35 13:36	1	6.00	360.0	
6	13:41 13:42	1	3.00	180.0	
7	13:45 13:46	1	3.00	180.0	
8	13:48 13:49	1	3.00	180.0	
Pre-adjusted Parameter			5.00	180.0	
		Reduction Factor (Rf)		4.6	
		Adjusted Percolation Rate		**38.9**	in/hr

DRAFT

Field Percolation Test Results

Project Location	Sixth Street, Los Angeles	Test Number	GB-10
Project No.	LAC-17-001	Diameter of Boring (in)	8
Date	11/7/2017	Diameter of Casing	3" Perforated PVC
Tested By	RN	Depth of Boring (ft)	6.08
Test Method	Water Level Sounder	Depth of Invert of BMP (ft)	N/A
		Depth of Groundwater (ft)	Unknown
		Depth to Initial Water Depth (in)	60

Time Interval Standard

Start Time for Pre-Soak	11:38	Water Remaining in Boring (Y/N)	N
Start Time for Standard	12:20	Standard Time Interval Between Readings	5 min

Reading Number	Time Start/ End (hh:mm)	Elapsed Time Δtime (mins)	Water Drop During Standard Time Interval Δd (inches)	Percolation Rate for Reading (in/hr)	Soil Description/ Notes/ Comments
1	12:20 12:25	5	5.00	60.0	
2	12:27 12:32	5	5.00	60.0	
3	12:33 12:38	5	5.00	60.0	
4	12:40 12:45	5	5.00	60.0	
5	12:47 12:52	5	5.00	60.0	
6	12:53 12:58	5	5.00	60.0	
Pre-adjusted Parameter			**5.00**	**60.0**	
		Reduction Factor (Rf)		3.6	
		Adjusted Percolation Rate		**16.6**	in/hr

DRAFT

APPENDIX B
LABORATORY TEST RESULTS

DRAFT

GEOTECHNICAL

HUSHMAND ASSOCIATES, INC.
Geotechnical and Earthquake Engineers

PARTICLE-SIZE ANALYSIS OF SOILS

(ASTM D6913)

Client:	City of Los Angeles/Tetra Tech	***HAI Project No.:***	LAC-17-001
Project Name:	Sixth Street Viaduct PARC	***Tested by:***	GA
Project No.:	LAC-17-001	***Checked by:***	KL/MJ
		Date:	11/29/2017

COBBLES	GRAVEL		SAND			SILT AND CLAY
	Coarse	Fine	Coarse	Medium	Fine	

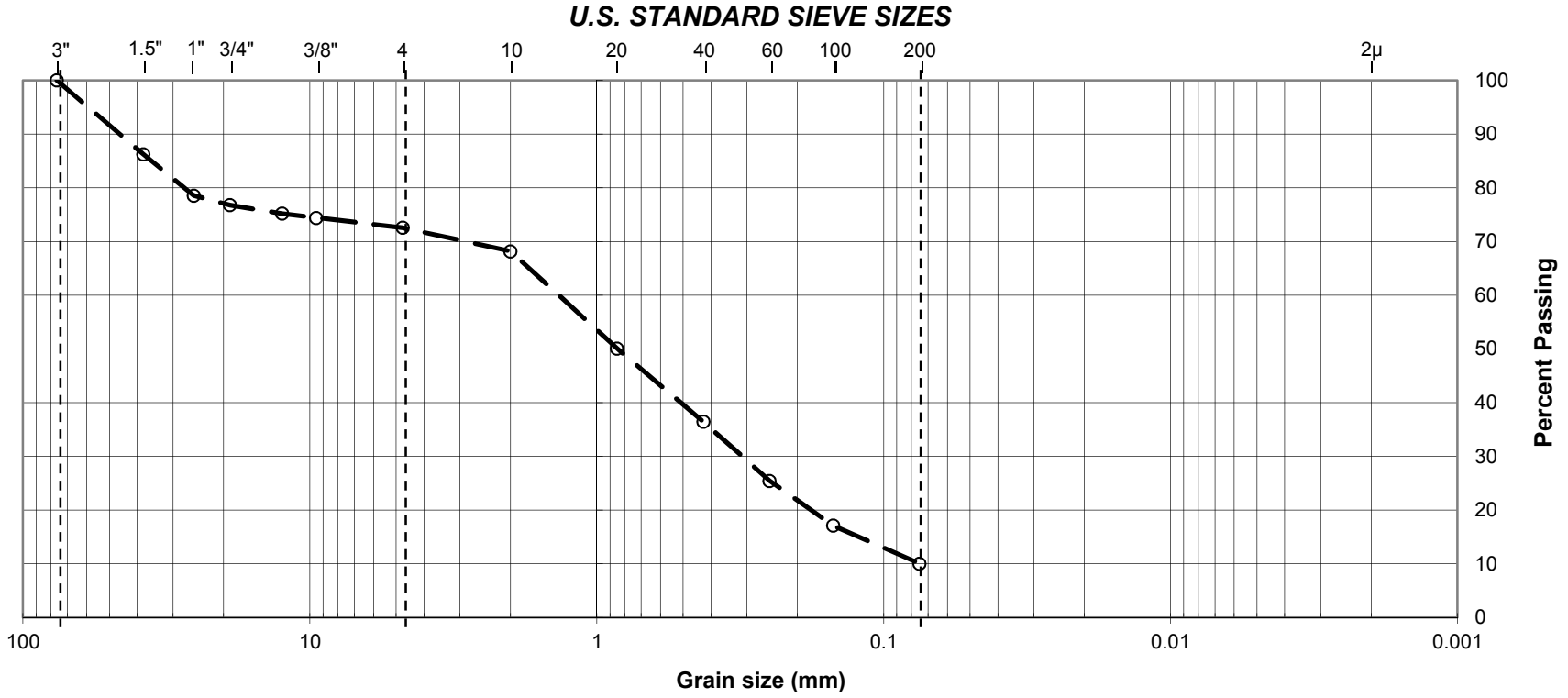

Boring No.	Sample No.	Depth (ft)	Symbol	USCS	% Gravel	% Sand	% Fines
GB-1	Bulk 1A	0-4	○	Brown, Poorly graded Sand with Silt and Gravel (SP-SM)	27.4	62.5	10.0

HUSHMAND ASSOCIATES, INC.
Geotechnical and Earthquake Engineers

PARTICLE-SIZE ANALYSIS OF SOILS
ASTM D6913

Client:	City of Los Angeles/Tetra Tech	***HAI Project No.:***	LAC-17-001
Project Name:	Sixth Street Viaduct PARC	***Tested by:***	GA
Project No.:	LAC-17-001	***Checked by:***	KL/MJ
		Date:	11/29/2017

COBBLES	GRAVEL		SAND			SILT AND CLAY
	Coarse	Fine	Coarse	Medium	Fine	

U.S. STANDARD SIEVE SIZES

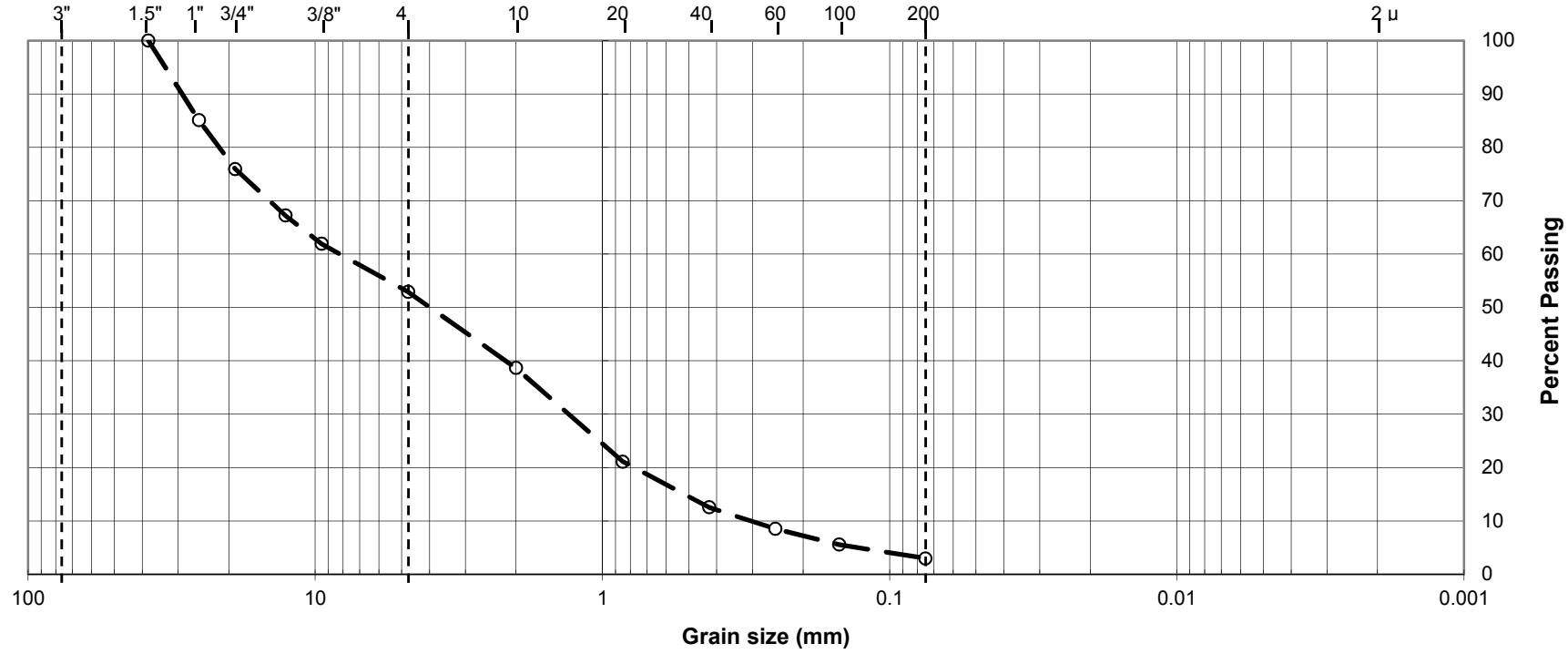

Boring No.	Sample No.	Depth (ft)	Symbol	USCS	% Gravel	% Sand	% Fines
GB-2	MC6A	15.5	○	Brown, Poorly graded Sand with Gravel (SP)	47.1	49.9	3.0

PARTICLE-SIZE ANALYSIS OF SOILS
ASTM D6913

HUSHMAND ASSOCIATES, INC.
Geotechnical and Earthquake Engineers

Client:	City of Los Angeles/Tetra Tech	***HAI Project No.:***	LAC-17-001
Project Name:	Sixth Street Viaduct PARC	***Tested by:***	GA
Project No.:	LAC-17-001	***Checked by:***	KL/MJ
		Date:	11/29/2017

COBBLES	GRAVEL		SAND			SILT AND CLAY
	Coarse	Fine	Coarse	Medium	Fine	

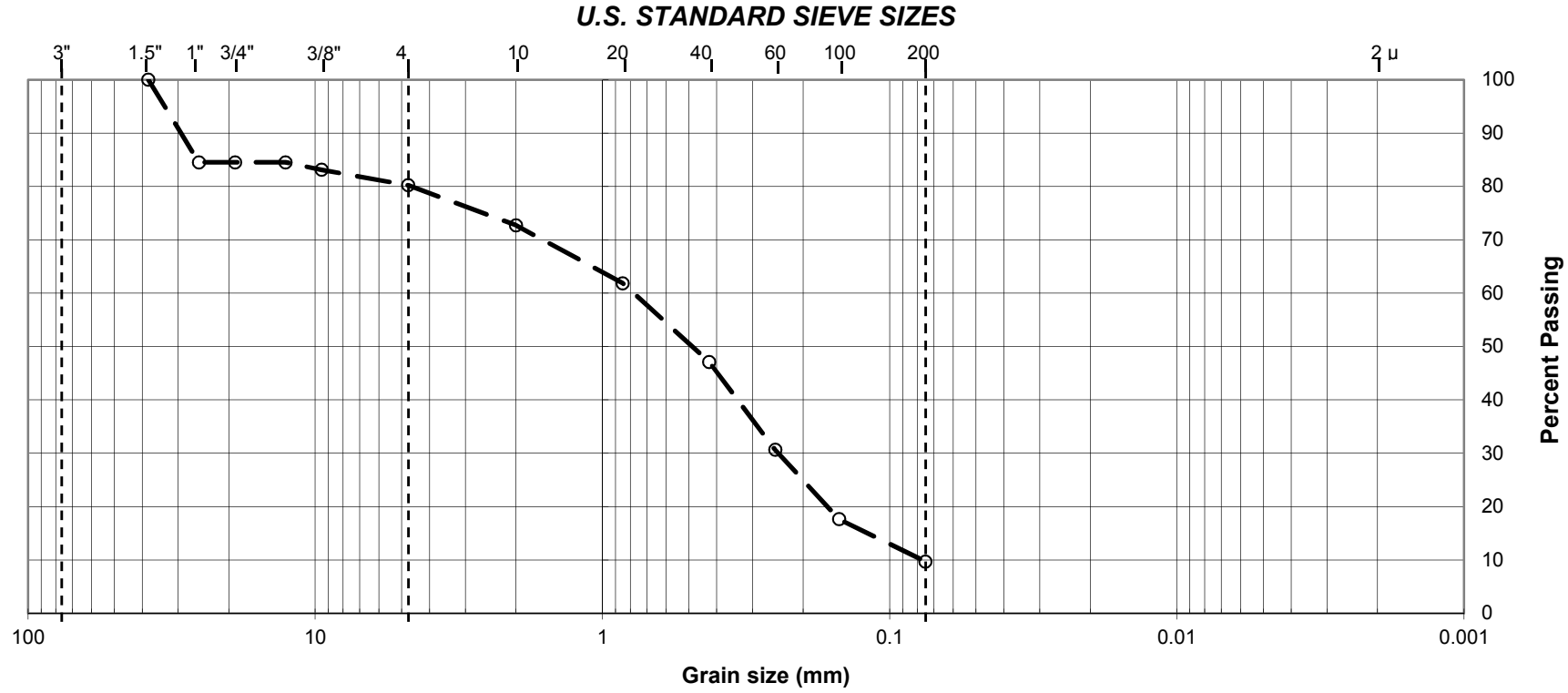

Boring No.	Sample No.	Depth (ft)	Symbol	USCS	% Gravel	% Sand	% Fines
GB-2	SPT3	7.5	○	Brown, Well-graded Sand with Silt and Gravel (SW-SM)	19.8	70.5	9.7

PARTICLE-SIZE ANALYSIS OF SOILS
ASTM D6913

HUSHMAND ASSOCIATES, INC.
Geotechnical and Earthquake Engineers

Client:	City of Los Angeles/Tetra Tech	***HAI Project No.:***	LAC-17-001
Project Name:	Sixth Street Viaduct PARC	***Tested by:***	GA
Project No.:	LAC-17-001	***Checked by:***	KL/MJ
		Date:	11/29/2017

COBBLES	GRAVEL		SAND			SILT AND CLAY
	Coarse	Fine	Coarse	Medium	Fine	

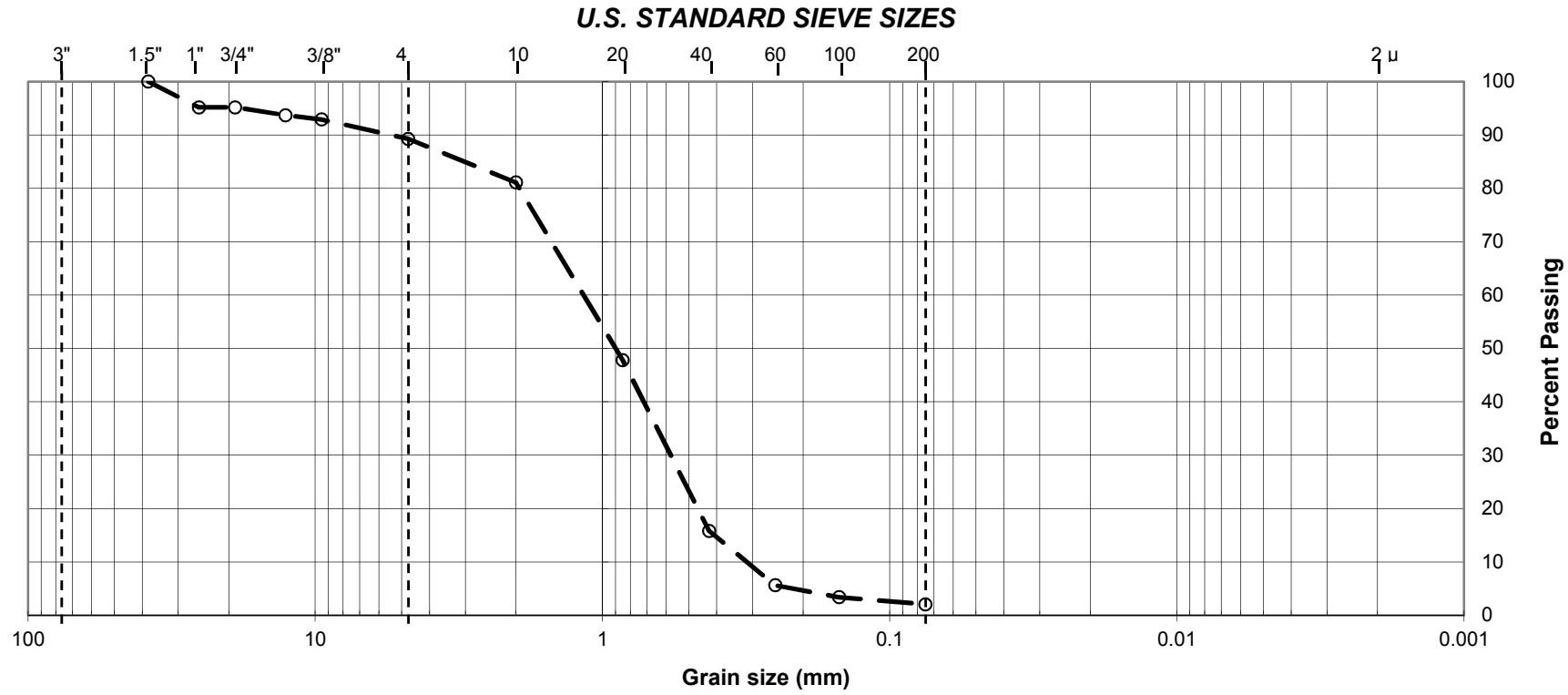

Boring No.	Sample No.	Depth (ft)	Symbol	USCS	% Gravel	% Sand	% Fines
GB-4	MC7A	18	○	Brown, Poorly Graded Sand (SP)	10.7	87.2	2.1

PARTICLE-SIZE ANALYSIS OF SOILS
ASTM D6913

HUSHMAND ASSOCIATES, INC.
Geotechnical and Earthquake Engineers

Client:	City of Los Angeles/Tetra Tech	***HAI Project No.:***	LAC-17-001
Project Name:	Sixth Street Viaduct PARC	***Tested by:***	GA
Project No.:	LAC-17-001	***Checked by:***	KL/MJ
		Date:	11/29/2017

COBBLES	GRAVEL		SAND			SILT AND CLAY
	Coarse	Fine	Coarse	Medium	Fine	

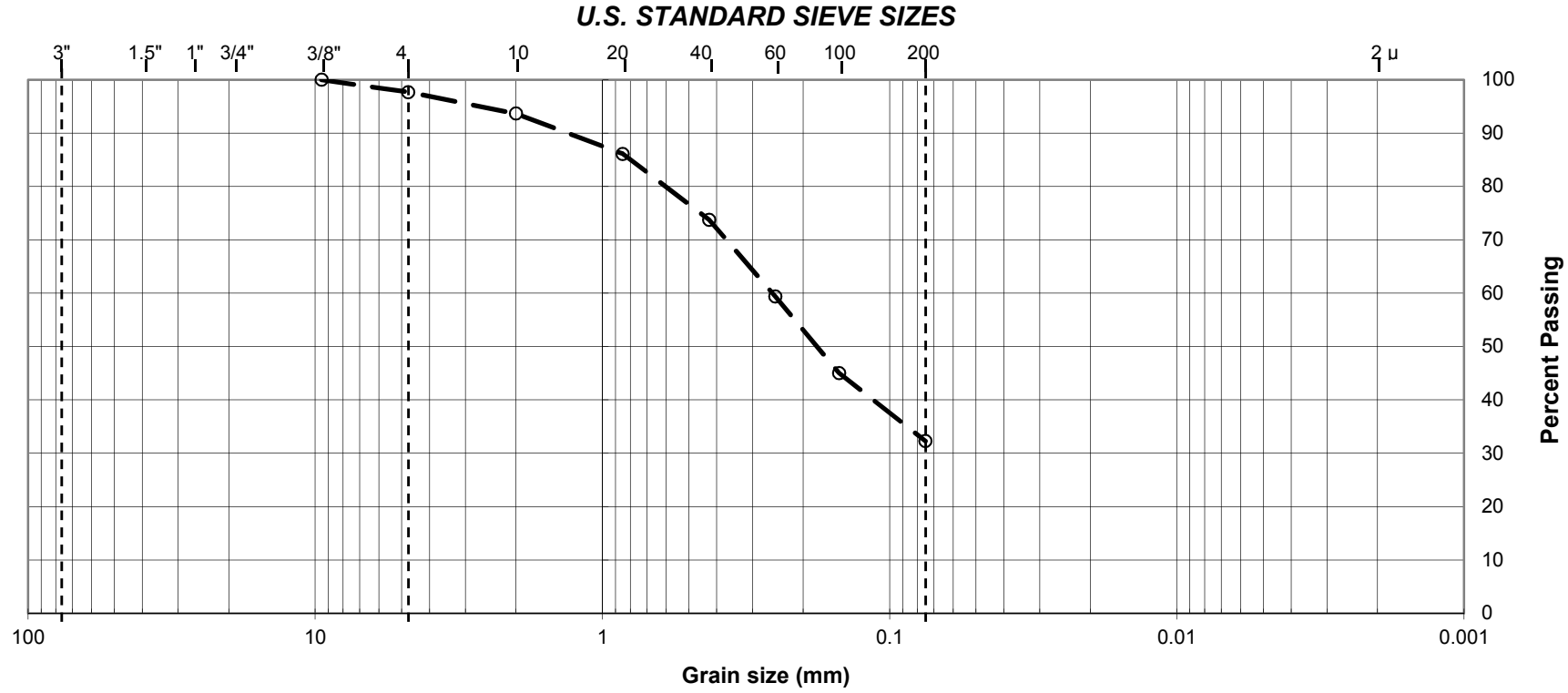

Boring No.	Sample No.	Depth (ft)	Symbol	USCS	% Gravel	% Sand	% Fines
GB-4	SPT4	10	○	Brown, Silty Sand (SM)	2.3	65.4	32.3

HUSHMAND ASSOCIATES, INC.
Geotechnical and Earthquake Engineers

PARTICLE-SIZE ANALYSIS OF SOILS

(ASTM D6913)

Client:	City of Los Angeles/Tetra Tech	***HAI Project No.:***	LAC-17-001
Project Name:	Sixth Street Viaduct PARC	***Tested by:***	GA
Project No.:	LAC-17-001	***Checked by:***	KL/MJ
		Date:	11/29/2017

COBBLES	GRAVEL		SAND			SILT AND CLAY
	Coarse	Fine	Coarse	Medium	Fine	

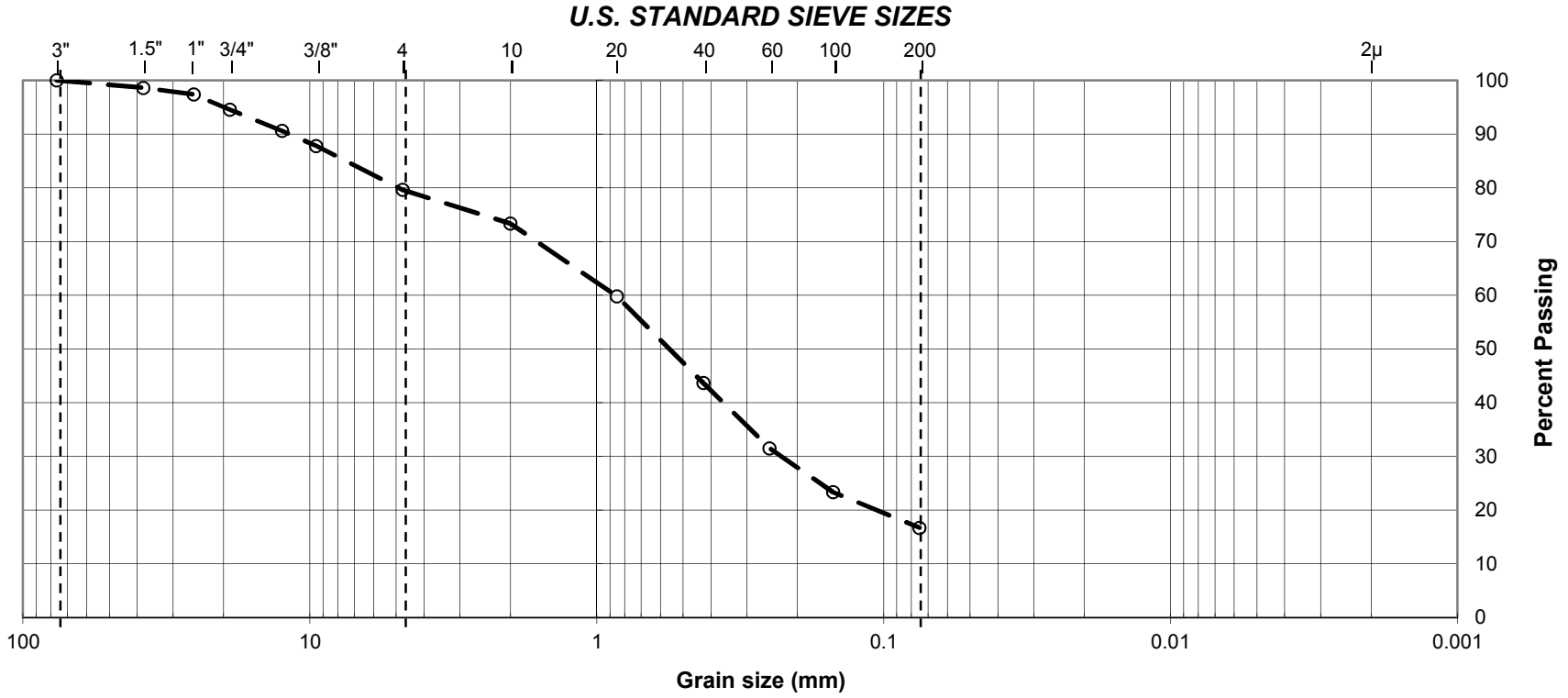

Boring No.	Sample No.	Depth (ft)	Symbol	USCS	% Gravel	% Sand	% Fines
GB-6	Bulk 1A	0-4	○	Brown, Silty Sand with Gravel (SM)	20.4	62.9	16.7

PARTICLE-SIZE ANALYSIS OF SOILS
ASTM D6913

HUSHMAND ASSOCIATES, INC.
Geotechnical and Earthquake Engineers

Client:	City of Los Angeles/Tetra Tech	***HAI Project No.:***	LAC-17-001
Project Name:	Sixth Street Viaduct PARC	***Tested by:***	GA
Project No.:	LAC-17-001	***Checked by:***	KL/MJ
		Date:	11/29/2017

COBBLES	GRAVEL		SAND			SILT AND CLAY
	Coarse	Fine	Coarse	Medium	Fine	

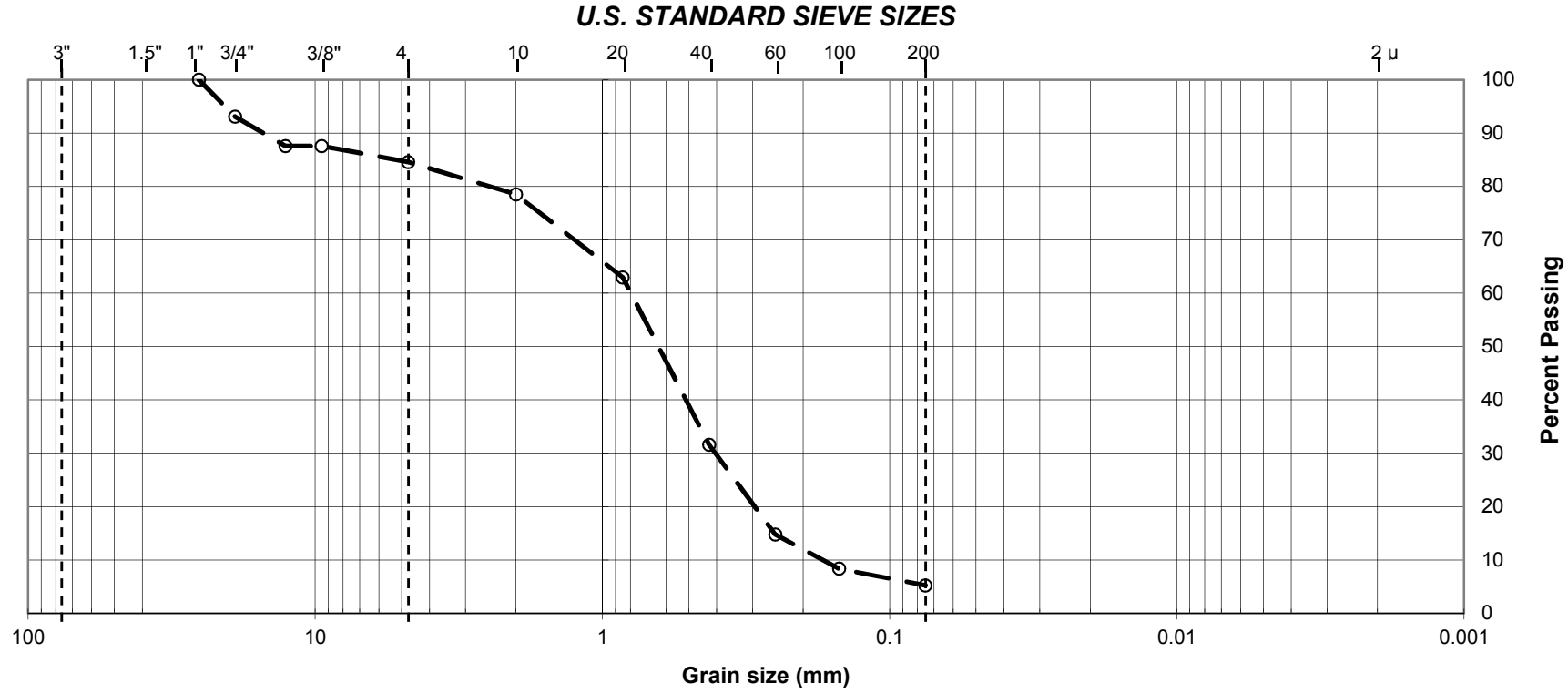

Boring No.	Sample No.	Depth (ft)	Symbol	USCS	% Gravel	% Sand	% Fines
GB-9	SPT3	7.5	○	Brown, Poorly graded Sand with Silt and Gravel (SP-SM)	15.4	79.4	5.2

PARTICLE-SIZE ANALYSIS OF SOILS
ASTM D6913

HUSHMAND ASSOCIATES, INC.
Geotechnical and Earthquake Engineers

Client:	City of Los Angeles/Tetra Tech	***HAI Project No.:***	LAC-17-001
Project Name:	Sixth Street Viaduct PARC	***Tested by:***	GA
Project No.:	LAC-17-001	***Checked by:***	KL/MJ
		Date:	11/29/2017

COBBLES	GRAVEL		SAND			SILT AND CLAY
	Coarse	Fine	Coarse	Medium	Fine	

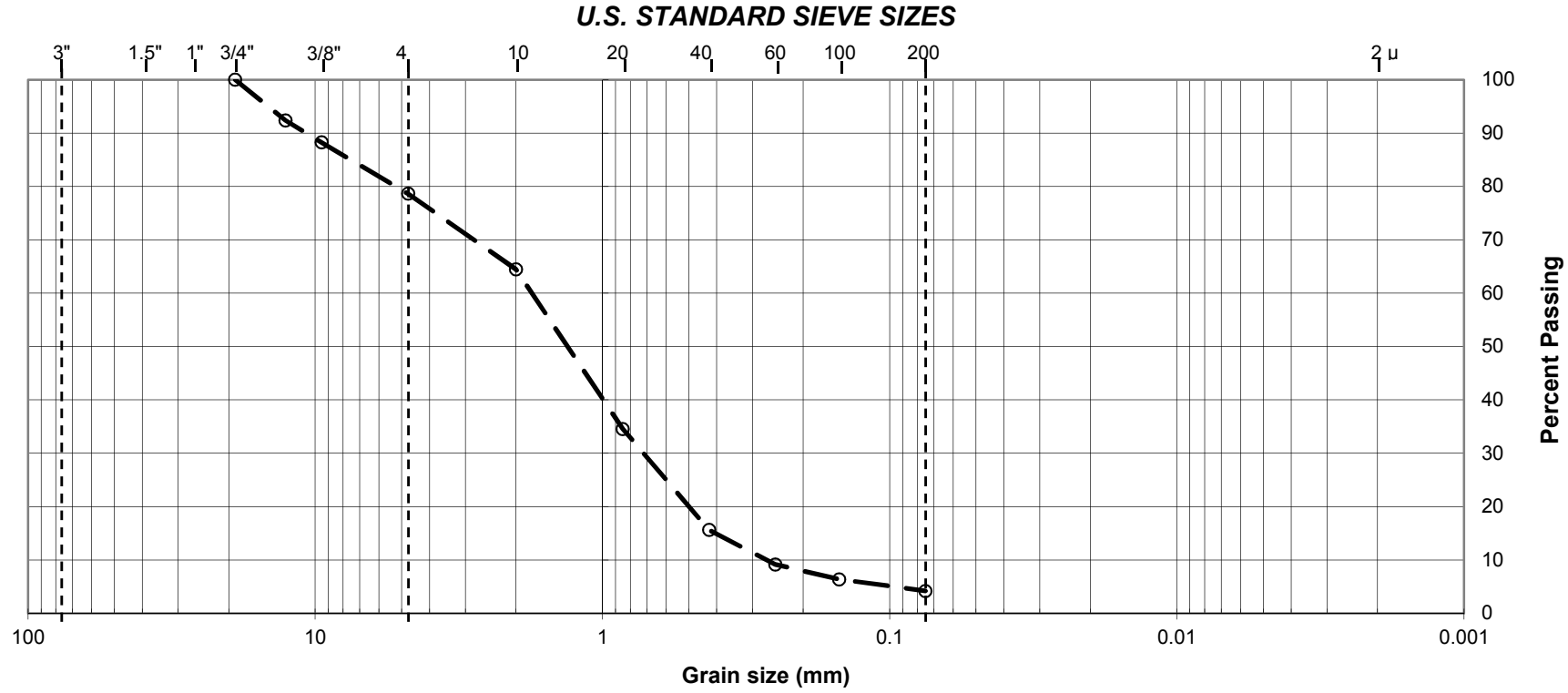

Boring No.	Sample No.	Depth (ft)	Symbol	USCS	% Gravel	% Sand	% Fines
GB-9	SPT7	17.5	○	Brown, Well-graded Sand with Gravel (SW)	21.4	74.5	4.2

HUSHMAND ASSOCIATES, INC.
Geotechnical and Earthquake Engineers

PARTICLE-SIZE ANALYSIS OF SOILS

(ASTM D6913)

Client:	City of Los Angeles/Tetra Tech	***HAI Project No.:***	LAC-17-001
Project Name:	Sixth Street Viaduct PARC	***Tested by:***	GA
Project No.:	LAC-17-001	***Checked by:***	KL/MJ
		Date:	11/29/2017

COBBLES	GRAVEL		SAND			SILT AND CLAY
	Coarse	Fine	Coarse	Medium	Fine	

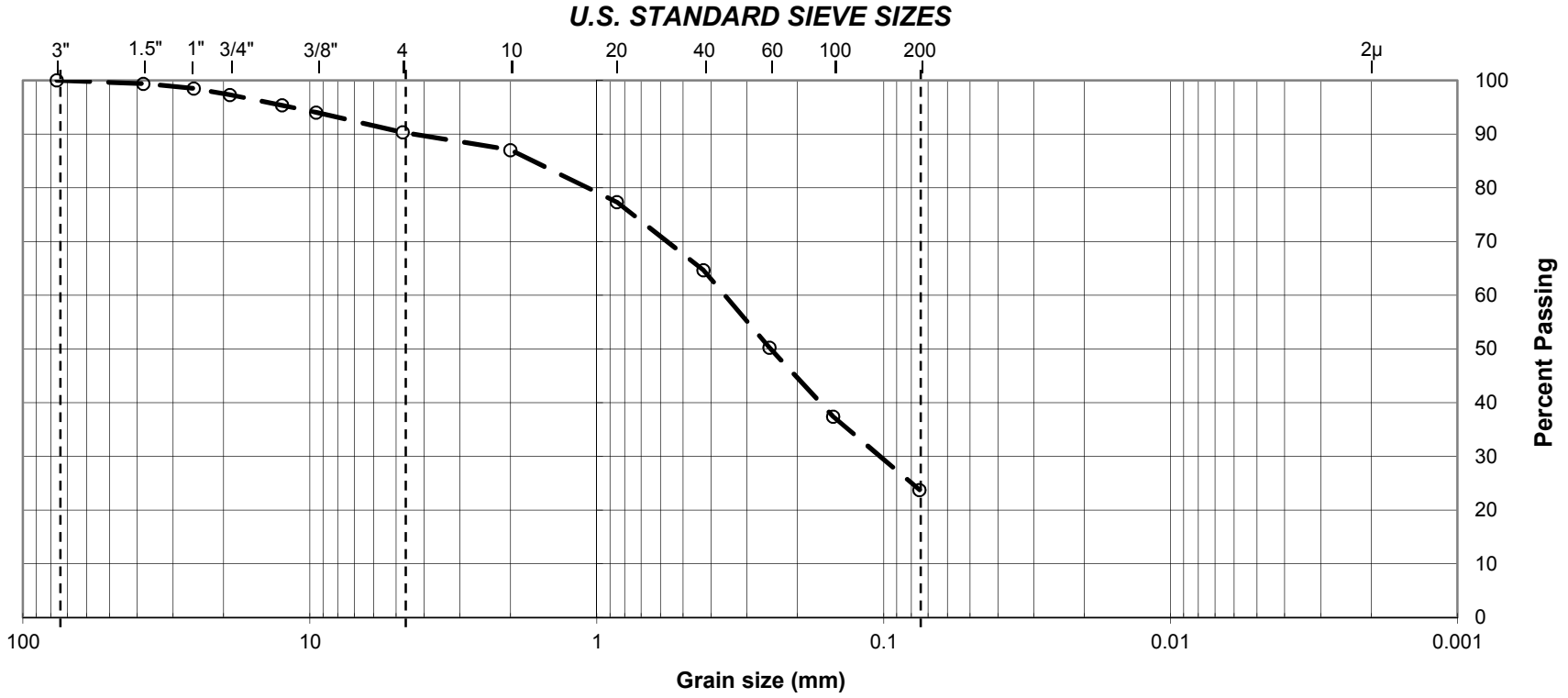

Boring No.	Sample No.	Depth (ft)	Symbol	USCS	% Gravel	% Sand	% Fines
GB-10	Bulk 1A	0-4	○	Brown, Silty Sand (SM)	9.7	66.5	23.8

DRAFT

SWELL / COLLAPSE TEST
ASTM D4546

Client :	City of Los Angeles/Tetra Tech	***HAI Project No.:***	LAC-17-001
Project Name:	Sixth Street Viaduct PARC	***Tested by:***	KL
Project No.:	LAC-17-001	***Checked by:***	KL/MJ
Boring No.:	GB-4	***Date:***	12/18/17
Sample No.:	MC3A		
Type of Sample:	Undisturbed Ring		
Depth (ft):	8		
Soil Description:	Brown, Silty Sand (SM)		

Initial Total Weight (g)	Final Total Weight (g)	Final Dry Weight (g)
134.83	164.18	131.90

			Initial Conditions	Unload
Height	H	(in)	1.003	0.997
Height of Solids	Hs	(in)	0.658	0.658
Height of Water	Hw	(in)	0.039	0.430
Height of Air	Ha	(in)	0.306	0.000
Dry Density		**(pcf)**	**109.2**	**110.3**
Water Content		**(%)**	**2.2**	**24.5**
Saturation		**(%)**	**11.3**	**100.0**

* Saturation is calcualted based on Gs=2.68

Load (ksf)	δH (in)	H (in)	Voids (in)	e	Consol. (%)	a_v (ksf^{-1})	M_v (ksf^{-1})	Comment
0.01	-------	1.0030	0.345	0.525	0			
0.25	0.0010	1.0020	0.344	0.524	0.1	6.7E-03	4.4E-03	
0.5	0.0035	0.9995	0.342	0.520	0.3	1.5E-02	9.8E-03	
1	0.0077	0.9953	0.338	0.514	0.8	1.3E-02	8.4E-03	
0.5	0.0073	0.9957	0.338	0.514	0.7	Unload		
0.25	0.0064	0.9966	0.339	0.515	0.6			
0.5	0.0069	0.9961	0.339	0.515	0.7	2.7E-03	1.8E-03	
1	0.0082	0.9948	0.337	0.513	0.8	4.0E-03	2.6E-03	
1	0.0200	0.9830	0.325	0.495	2.0	Water Added		

DRAFT

HUSHMAND ASSOCIATES, INC.
Geotechnical and Earthquake Engineers

SWELL / COLLAPSE TEST

ASTM D4546

Client:	City of Los Angeles/Tetra Tech	***HAI Project No.:***	LAC-17-001
Project Name:	Sixth Street Viaduct PARC	***Tested by:***	KL
Project No.:	LAC-17-001	***Checked by:***	KL/MJ
Boring No.:	GB-4	***Date:***	12/18/17
Sample No.:	MC3A		
Type of Sample:	Undisturbed Ring		
Depth (ft):	8		
Soil Description:	Brown, Silty Sand (SM)		

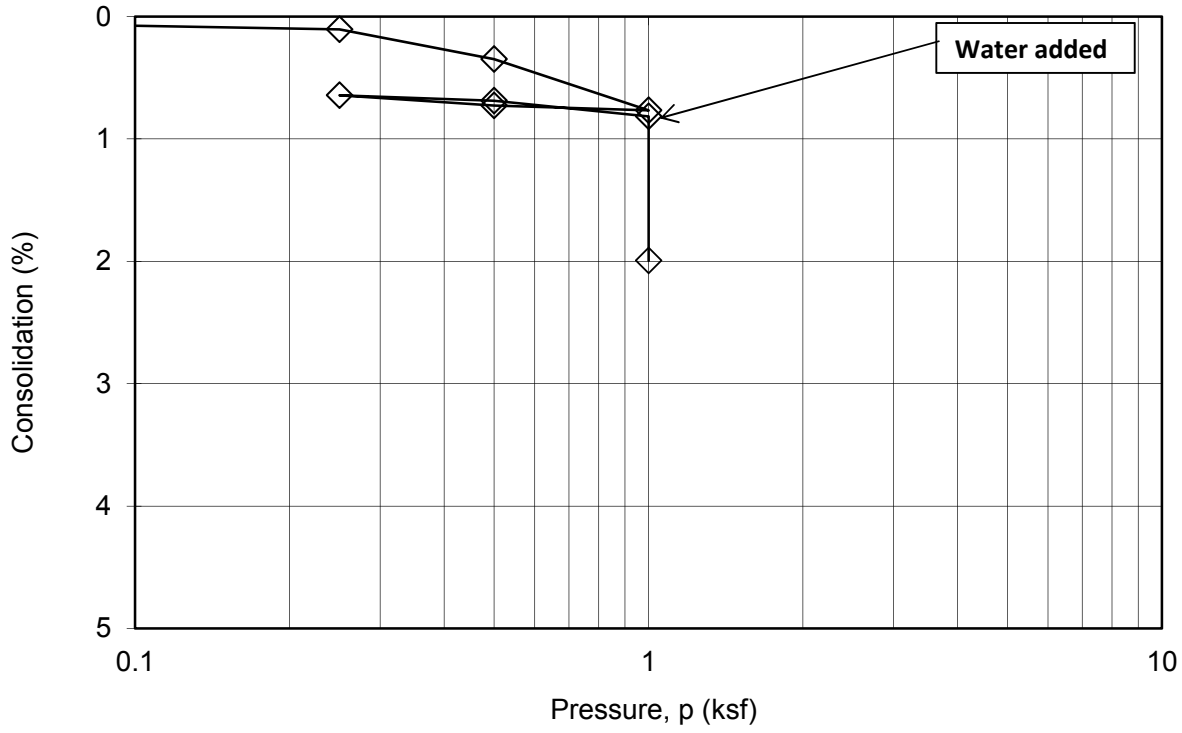

HUSHMAND ASSOCIATES, INC.
Geotechnical and Earthquake Engineers

DIRECT SHEAR TEST

ASTM D3080

HAI Pr No.: LAC-17-001

Tested by: KL/MJ

Checked by: MJ/MZ

Date: 11/29/2017

Client: City of Los Angeles/Tetra Tech

Project Name: Sixth Street Viaduct PARC

Project Number: LAC-17-001

Boring No.: GB-2

Sample No.: MC2B

Sample type: Undristributed Ring

Depth (ft): 6

Soil description: Light Brown, Well-graded Sand with Silt and Gravel (SW-SM)

Type of test: **Consolidated, Drained**

Test No.	1	2	3
Symbol	▲	■	◆
Normal Stress (ksf)	**0.5**	**1**	**2**
Deformation Rate (in/min)	**0.002**	**0.002**	**0.002**

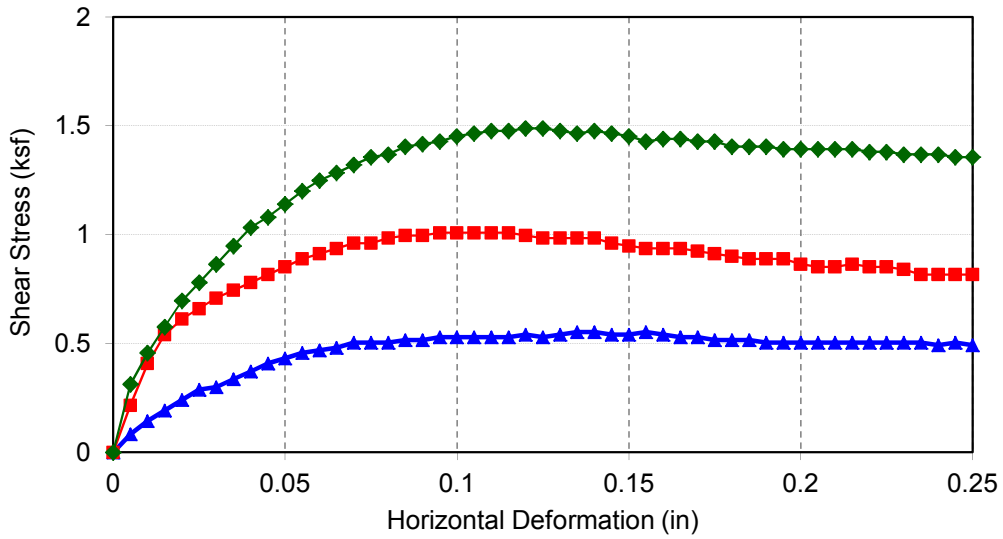

Peak Shear Stress (ksf)	**O**	**0.55**	**1.01**	**1.49**
Shear Stress @ End of Test (ksf)	**X**	**0.49**	**0.82**	**1.36**

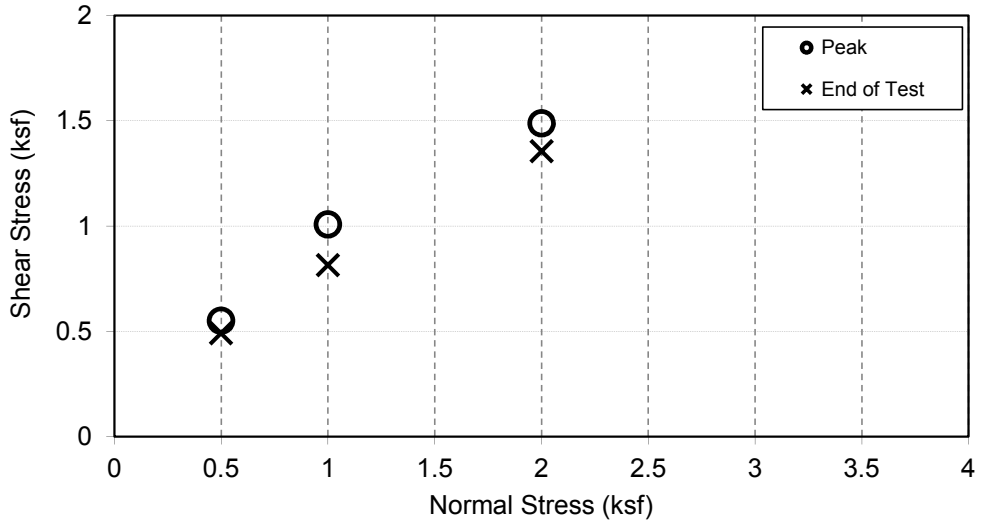

Initial Height of Sample (in)	1.002	1.001	0.999
Height of Sample before Shear (in)	0.9909	0.9921	0.9757
Diameter of Sample (in)	2.416	2.416	2.416
Initial Moisture Content (%)	**1.7**	**1.7**	**1.7**
Final Moisture Content (%)	**15.0**	**15.2**	**15.2**
Dry Density (pcf)	**107.9**	**105.7**	**107.1**

HUSHMAND ASSOCIATES, INC.
Geotechnical and Earthquake Engineers

DIRECT SHEAR TEST

ASTM D3080

HAI Pr No.: LAC-17-001

Client: City of Los Angeles/Tetra Tech
Project Name: Sixth Street Viaduct PARC
Project Number: LAC-17-001
Boring No.: GB-4
Sample No.: MC5B
Sample type: Undristributed Ring
Depth (ft): 13.5
Soil description: Light Brown, Poorly Graded Sand (SP)

Tested by: KL/MJ
Checked by: MJ/MZ
Date: 11/29/2017

Type of test: **Consolidated, Drained**

Test No.	1	2	3
Symbol	▲	■	◆
Normal Stress (ksf)	**1**	**2**	**4**
Deformation Rate (in/min)	**0.002**	**0.002**	**0.002**

Peak Shear Stress (ksf)	**O**	**0.79**	**1.36**	**2.76**
Shear Stress @ End of Test (ksf)	**X**	**0.76**	**1.34**	**2.76**

Initial Height of Sample (in)	1.009	1.017	1.015
Height of Sample before Shear (in)	1.0320	0.9888	0.9012
Diameter of Sample (in)	2.416	2.416	2.416
Initial Moisture Content (%)	**9.2**	**9.2**	**9.2**
Final Moisture Content (%)	**17.7**	**17.5**	**17.7**
Dry Density (pcf)	**107.2**	**107.4**	**106.8**

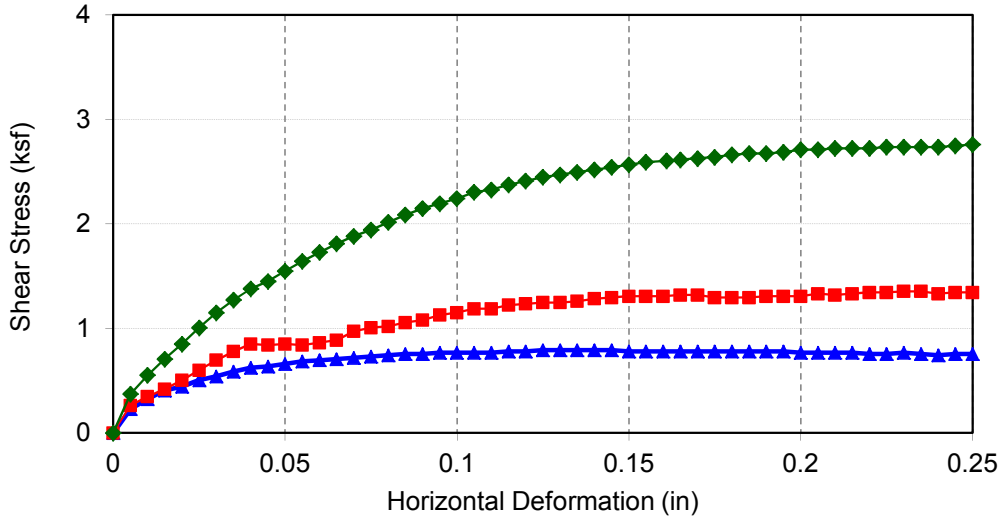

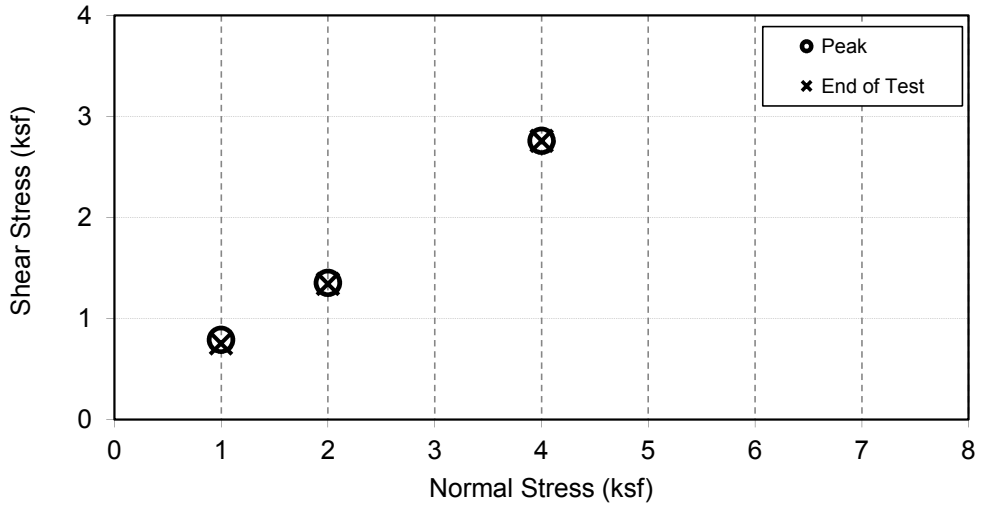

HUSHMAND ASSOCIATES, INC.
Geotechnical and Earthquake Engineers

DIRECT SHEAR TEST

ASTM D3080

HAI Pr No.: LAC-17-001

Client: City of Los Angeles/Tetra Tech

Project Name: Sixth Street Viaduct PARC

Project Number: LAC-17-001

Boring No.: GB-4

Sample No.: MC9B

Sample type: Undristributed Ring

Depth (ft): 26

Soil description: Light Brown, Silty Sand with trace Gravel (SM)

Tested by: KL/MJ

Checked by: MJ/MZ

Date: 11/29/2017

Type of test: **Consolidated, Drained**

Test No.	1	2	3
Symbol	▲	■	◆
Normal Stress (ksf)	**1.5**	**3**	**6**
Deformation Rate (in/min)	**0.002**	**0.002**	**0.002**

Peak Shear Stress (ksf)	**O**	**1.32**	**2.38**	**4.66**
Shear Stress @ End of Test (ksf)	**X**	**0.89**	**2.38**	**4.01**

Initial Height of Sample (in)	1.007	1.018	1.022
Height of Sample before Shear (in)	1.0249	0.9900	0.9824
Diameter of Sample (in)	2.416	2.416	2.416
Initial Moisture Content (%)	**9.6**	**9.6**	**9.6**
Final Moisture Content (%)	**20.0**	**19.0**	**19.1**
Dry Density (pcf)	**102.0**	**101.4**	**102.5**

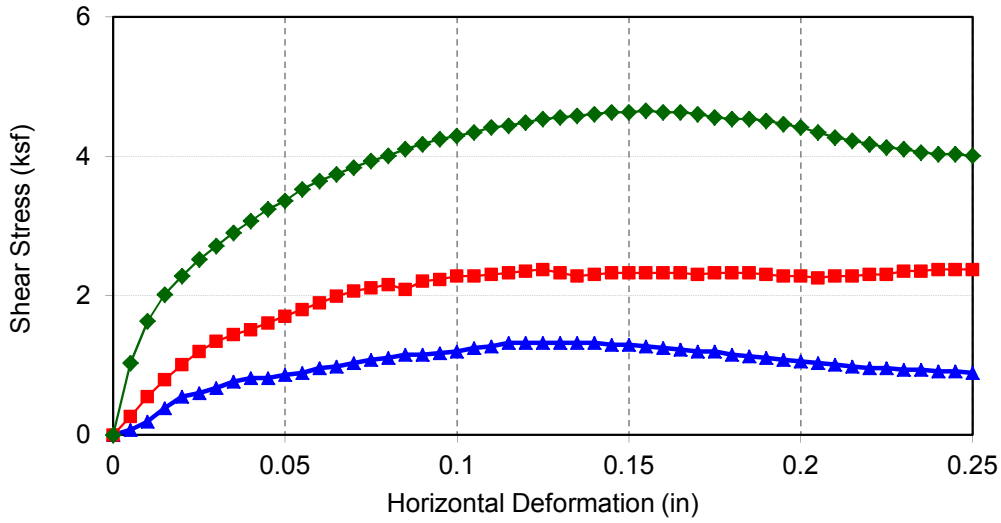

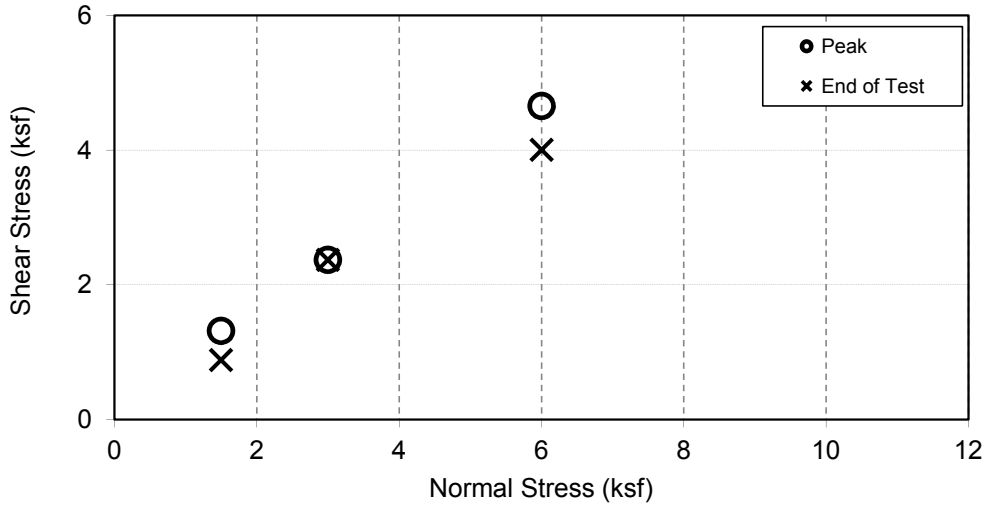

HUSHMAND ASSOCIATES, INC.
Geotechnical and Earthquake Engineers

DIRECT SHEAR TEST

ASTM D3080

HAI Pr No.: LAC-17-001

Client: City of Los Angeles/Tetra Tech
Project Name: Sixth Street Viaduct PARC
Project Number: LAC-17-001
Boring No.: GB-4
Sample No.: MC11B
Sample type: Undristributed Ring
Depth (ft): 35.5
Soil description: Yellowish Brown, Poorly graded Sand with Silt (SP-SM)

Tested by: KL/MJ
Checked by: MJ/MZ
Date: 11/29/2017

Type of test: **Consolidated, Drained**

Test No.	1	2	3
Symbol	▲	■	◆
Normal Stress (ksf)	**2**	**4**	**8**
Deformation Rate (in/min)	**0.002**	**0.002**	**0.002**

Peak Shear Stress (ksf)	**O**	**1.36**	**2.51**	**5.47**
Shear Stress @ End of Test (ksf)	**X**	**1.34**	**2.51**	**5.46**

Initial Height of Sample (in)	1.014	0.997	1.005
Height of Sample before Shear (in)	1.0697	0.9488	0.9551
Diameter of Sample (in)	2.416	2.416	2.416
Initial Moisture Content (%)	**2.8**	**2.8**	**2.8**
Final Moisture Content (%)	**16.6**	**16.5**	**13.9**
Dry Density (pcf)	**100.1**	**103.3**	**102.9**

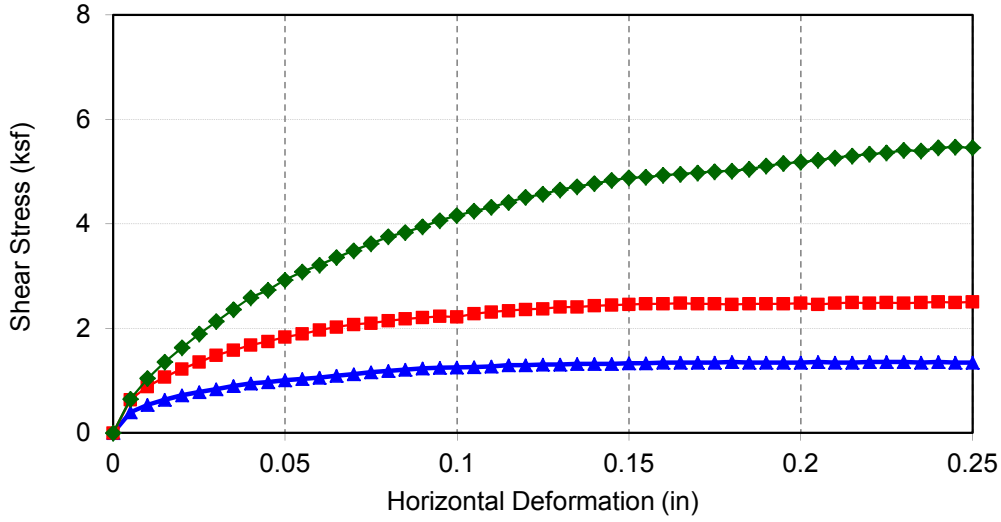

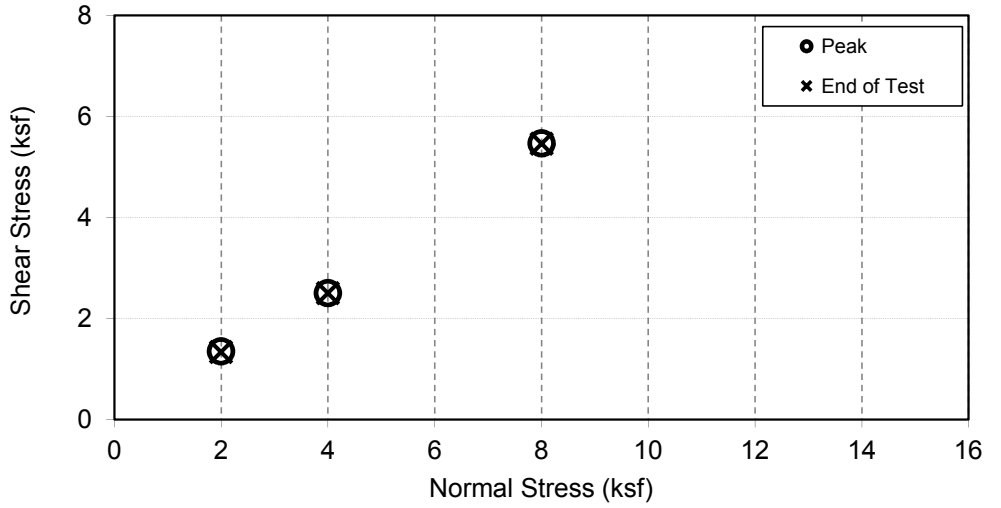

HUSHMAND ASSOCIATES, INC.
Geotechnical and Earthquake Engineers

DIRECT SHEAR TEST

ASTM D3080

HAI Pr No.: LAC-17-001

Client: City of Los Angeles/Tetra Tech
Project Name: Sixth Street Viaduct PARC
Project Number: LAC-17-001
Boring No.: GB-9
Sample No.: MC2B
Sample type: Undristributed Ring
Depth (ft): 6
Soil description: Light Yellowish Brown, Poorly graded Sand (SP)

Tested by: KL/MJ
Checked by: MJ/MZ
Date: 11/29/2017

Type of test: **Consolidated, Drained**

Test No.	1	2	3
Symbol	▲	■	◆
Normal Stress (ksf)	**0.5**	**1**	**2**
Deformation Rate (in/min)	**0.002**	**0.002**	**0.002**

Peak Shear Stress (ksf)	O	**0.42**	**0.70**	**1.67**
Shear Stress @ End of Test (ksf)	X	**0.34**	**0.56**	**1.30**

Initial Height of Sample (in)	0.999	1.005	0.999
Height of Sample before Shear (in)	0.994	0.984	0.988
Diameter of Sample (in)	2.416	2.416	2.416
Initial Moisture Content (%)	**3.3**	**3.3**	**3.3**
Final Moisture Content (%)	**20.9**	**22.5**	**19.5**
Dry Density (pcf)	**100.8**	**101.2**	**102.1**

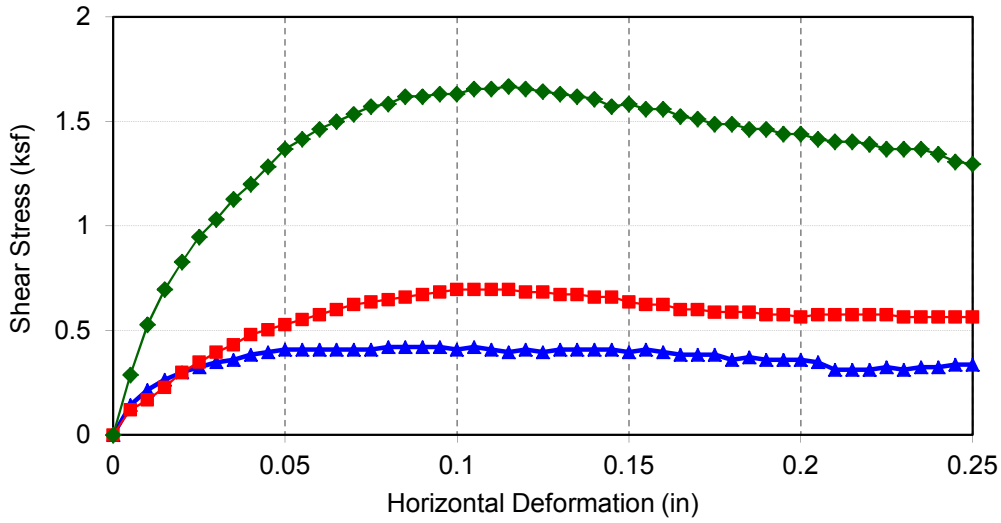

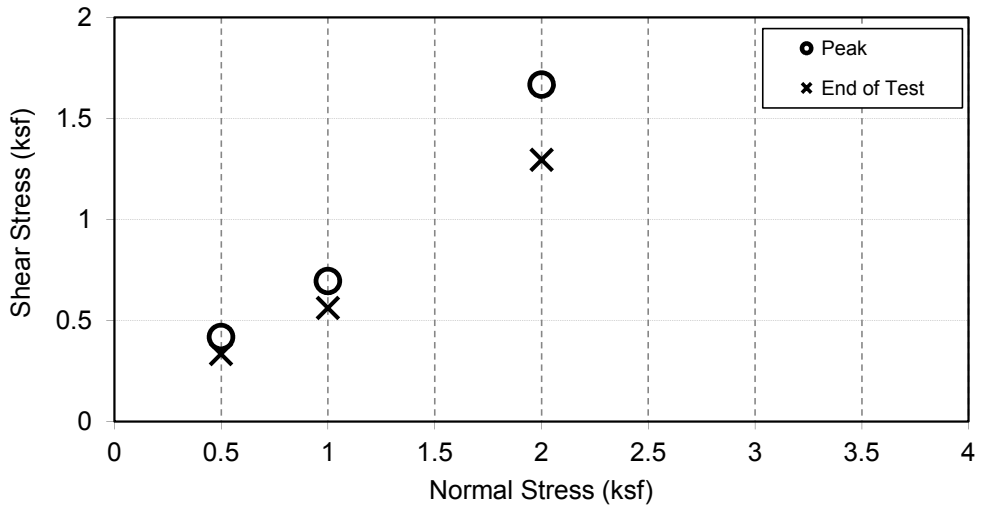

DRAFT

R - VALUE DATA SHEET

LaBelle Marvin

PROJECT No. 43086

DATE: 12/20/2017

BORING NO. GB-2 @ 0'-5'

Sixth Street Viaduct PARC

P.N. LAC-17-001

SAMPLE DESCRIPTION: Brown Silty Sand

R-VALUE TESTING DATA | CA TEST 301

	SPECIMEN ID		
	a	b	c
Mold ID Number	4	5	6
Water added, grams	68	81	61
Initial Test Water, %	8.3	9.6	7.7
Compact Gage Pressure,psi	350	150	350
Exudation Pressure, psi	446	123	551
Height Sample, Inches	2.58	2.58	2.56
Gross Weight Mold, grams	3112	3122	3107
Tare Weight Mold, grams	1959	1960	1958
Sample Wet Weight, grams	1153	1162	1149
Expansion, Inches x 10exp-4	0	0	6
Stability 2,000 lbs (160psi)	13 / 21	16 / 28	12 / 20
Turns Displacement	5.09	5.40	4.80
R-Value Uncorrected	76	69	78
R-Value Corrected	77	71	79
Dry Density, pcf	125.0	124.6	126.3

DESIGN CALCULATION DATA

Traffic Index	Assumed:	4.0	4.0	4.0
G.E. by Stability		0.24	0.30	0.22
G. E. by Expansion		0.00	0.00	0.20

Equilibrium R-Value	**74** by EXUDATION	Examined & Checked: 12 /20/ 17
REMARKS:	Gf = 1.25 10.3% Retained on the 3/4" Sieve.	REGISTERED PROFESSIONAL ENGINEER STEVEN R. MARVIN C 30659 CIVIL STATE OF CALIFORNIA Steven R. Marvin RCE 30659

The data above is based upon processing and testing samples as received from the field. Test procedures in accordance with latest revisions to Department of Transportation, State of California, Materials & Research Test Method No. 301.

R-VALUE GRAPHICAL PRESENTATION

LaBelle Marvin

PROJECT NO. 43086

DATE: 12 /20/ 17

REMARKS:

BORING NO. GB-2 @ 0'-5'

Sixth Street Viaduct PARC

P.N. LAC-17-001

COMPACTOR PRESSURE vs MOISTURE %

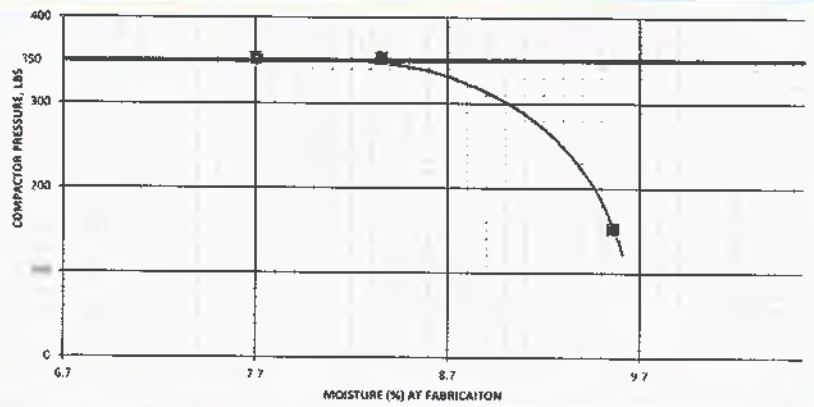

COVER THICKNESS BY EXUDATION vs COVER THICKNESS BY EXPANSION

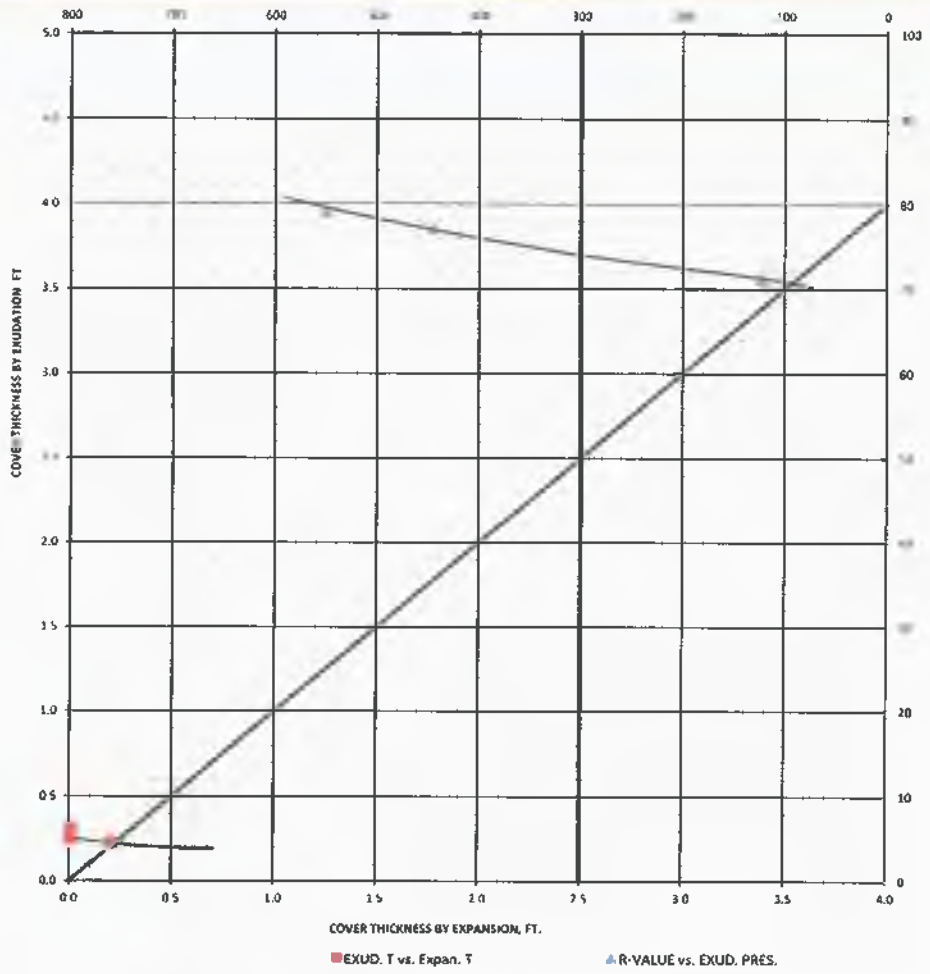

COVER THICKNESS vs MOISTURE %

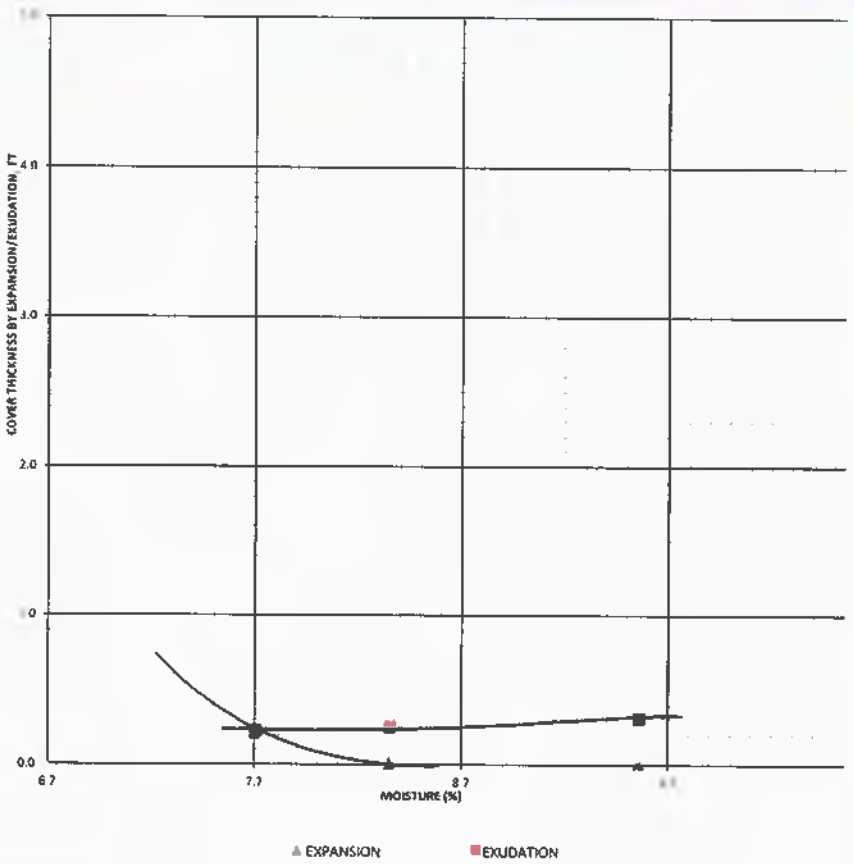

DRAFT

R - VALUE DATA SHEET

LaBelle Marvin

PROJECT No. 43086

DATE: 12/20/2017

BORING NO. GB-9 @ 0'-5'

Sixth Street Viaduct PARC

P.N. LAC-17-001

SAMPLE DESCRIPTION: Brown Slightly Silty Sand

R-VALUE TESTING DATA | CA TEST 301			
	SPECIMEN ID		
	a	b	c
Mold ID Number	1	2	3
Water added, grams	88	73	81
Initial Test Water, %	10.8	9.3	10.1
Compact Gage Pressure,psi	350	350	350
Exudation Pressure, psi	203	506	350
Height Sample, Inches	2.61	2.58	2.59
Gross Weight Mold, grams	3024	3020	2998
Tare Weight Mold, grams	1946	1956	1949
Sample Wet Weight, grams	1078	1064	1049
Expansion, Inches x 10exp-4	0	0	0
Stability 2,000 lbs (160psi)	16 / 29	14 / 27	15 / 28
Turns Displacement	5.65	5.35	5.54
R-Value Uncorrected	67	70	68
R-Value Corrected	69	72	70
Dry Density, pcf	113.0	114.3	111.5

DESIGN CALCULATION DATA

Traffic Index	Assumed:	4.0	4.0	4.0
G.E. by Stability		0.32	0.29	0.31
G. E. by Expansion		0.00	0.00	0.00

Equilibrium R-Value	**70** by EXUDATION	Examined & Checked: 12 /20/ 17
REMARKS:	Gf = 1.25 0.0% Retained on the 3/4" Sieve. Free Drainage.	REGISTERED PROFESSIONAL ENGINEER STEVEN R. MARVIN C 30659 CIVIL STATE OF CALIFORNIA Steven R. Marvin, RCE 30659

The data above is based upon processing and testing samples as received from the field. Test procedures in accordance with latest revisions to Department of Transportation, State of California, Materials & Research Test Method No. 301.

LaBelle Marvin

R-VALUE GRAPHICAL PRESENTATION

PROJECT NO. 43086

DATE: 12 /20/ 17

REMARKS:

BORING NO. GB-9 @ 0'-5'

Sixth Street Viaduct PARC

P.N. LAC-17-001

COMPACTOR PRESSURE vs MOISTURE %

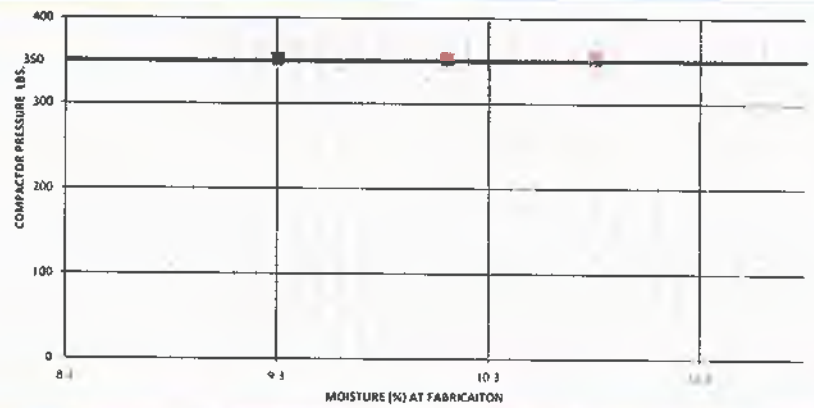

COVER THICKNESS BY EXUDATION vs COVER THICKNESS BY EXPANSION

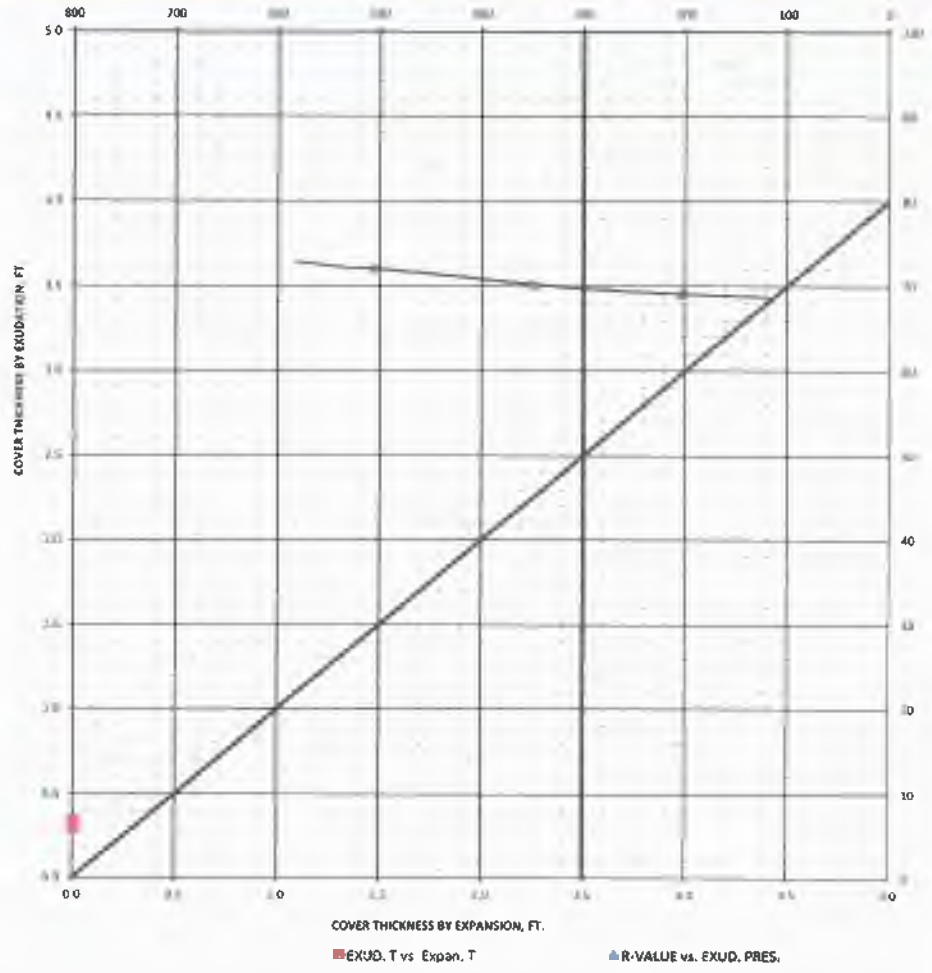

COVER THICKNESS vs MOISTURE %

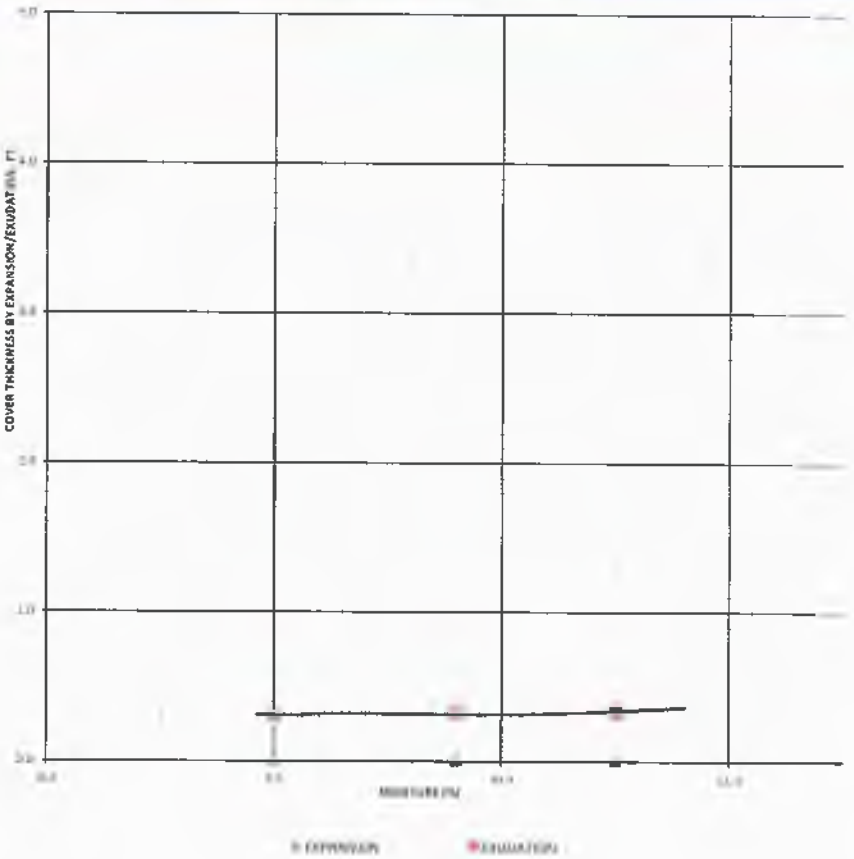

Soil Analysis Lab Results

Client: HAI
Job Name: Sixth Street Viaduct PARC
Client Job Number: LAC-17-001
Project X Job Number: S171130A
December 6, 2017

	Method	ASTM G187		ASTM D516		ASTM D512B		ASTM G51
Bore# / Description	**Depth**	**Resistivity** As Rec'd | Minimum		**Sulfates**		**Chlorides**		**pH**
	(ft)	(Ohm-cm)	(Ohm-cm)	(mg/kg)	(wt%)	(mg/kg)	(wt%)	
GB-2, BULK	0.0-5.0	44,890	5,695	30	0.0030	108	0.0108	8.97
GB-4, SPT8	20.0	227,800	12,060	15	0.0015	27	0.0027	9.01
GB-9, BULK	0.0-5.0	93,800	5,360	24	0.0024	42	0.0042	9.75

Unk = Unknown
NT = Not Tested
mg/kg = milligrams per kilogram (parts per million) of dry soil weight
mg/L - milligrams per liter of liquid volume
Chemical Analysis performed on 1:3 Soil-To-Water extract

Please call if you have any questions.

Prepared by,

Ernesto Padilla, BSME
Field Engineer

Respectfully Submitted,

Eddie Hernandez, M.Sc., P.E.
Sr. Corrosion Consultant
NACE Corrosion Technologist #16592
Professional Engineer
California No. M37102
ehernandez@projectxcorrosion.com

REGISTERED PROFESSIONAL ENGINEER
EDUARDO HERNANDEZ
No. M37102
MECHANICAL
STATE OF CALIFORNIA

DRAFT

ENVIRONMENTAL

DRAFT

ADVANCED TECHNOLOGY LABORATORIES

November 16, 2017

Nitha R. Nitharsan
Hushmand Associates, Inc.
250 Goddard
Irvine, CA 92618
Tel: (949) 777-1266
Fax:(949) 777-1276

ELAP No.: 1838
CSDLAC No.: 10196
ORELAP No.: CA300003

Re: ATL Work Order Number : 1703996
Client Reference : Sixth Street Viaduct PARC, LAC-17-001

Enclosed are the results for sample(s) received on November 08, 2017 by Advanced Technology Laboratories. The sample(s) are tested for the parameters as indicated on the enclosed chain of custody in accordance with applicable laboratory certifications. The laboratory results contained in this report specifically pertains to the sample(s) submitted.

Thank you for the opportunity to serve the needs of your company. If you have any questions, please feel free to contact me or your Project Manager.

Sincerely,

Eddie Rodriguez
Laboratory Director

The cover letter and the case narrative are an integral part of this analytical report and its absence renders the report invalid. Test results contained within this data package meet the requirements of applicable state-specific certification programs. The report cannot be reproduced without written permission from the client and Advanced Technology Laboratories.

Certificate of Analysis

Hushmand Associates, Inc.		Project Number :	Sixth Street Viaduct PARC, LAC-17-001
250 Goddard		Report To :	Nitha R. Nitharsan
Irvine , CA 92618		Reported :	11/16/2017

SUMMARY OF SAMPLES

Sample ID	Laboratory ID	Matrix	Date Sampled	Date Received
Drum 1 - Sample 1	1703996-01	Soil	11/08/17 13:47	11/08/17 15:50
Drum 1 - Sample 2	1703996-02	Soil	11/08/17 13:49	11/08/17 15:50
Drum 2 - Sample 1	1703996-03	Soil	11/08/17 13:52	11/08/17 15:50
Drum 2 - Sample 2	1703996-04	Soil	11/08/17 13:54	11/08/17 15:50

DRAFT

Certificate of Analysis

Hushmand Associates, Inc.	Project Number : Sixth Street Viaduct PARC, LAC-17-001
250 Goddard	Report To : Nitha R. Nitharsan
Irvine , CA 92618	Reported : 11/16/2017

Client Sample ID Drum 1 - Sample 1

Lab ID: 1703996-01

Title 22 Metals by ICP-AES EPA 6010B

Analyst: GO

Analyte	Result (mg/kg)	PQL (mg/kg)	Dilution	Batch	Prepared	Date/Time Analyzed	Notes
Antimony	ND	2.0	1	B7K0386	11/14/2017	11/14/17 16:44	
Arsenic	ND	1.0	1	B7K0386	11/14/2017	11/14/17 16:44	
Barium	**50**	1.0	1	B7K0386	11/14/2017	11/14/17 16:44	
Beryllium	ND	1.0	1	B7K0386	11/14/2017	11/14/17 16:44	
Cadmium	ND	1.0	1	B7K0386	11/14/2017	11/14/17 16:44	
Chromium	**7.6**	1.0	1	B7K0386	11/14/2017	11/14/17 16:44	
Cobalt	**4.8**	1.0	1	B7K0386	11/14/2017	11/14/17 16:44	
Copper	**8.7**	2.0	1	B7K0386	11/14/2017	11/14/17 16:44	
Lead	**5.4**	1.0	1	B7K0386	11/14/2017	11/14/17 16:44	
Molybdenum	ND	1.0	1	B7K0386	11/14/2017	11/14/17 16:44	
Nickel	**5.0**	1.0	1	B7K0386	11/14/2017	11/14/17 16:44	
Selenium	ND	1.0	1	B7K0386	11/14/2017	11/14/17 16:44	
Silver	ND	1.0	1	B7K0386	11/14/2017	11/14/17 16:44	
Thallium	ND	1.0	1	B7K0386	11/14/2017	11/14/17 16:44	
Vanadium	**19**	1.0	1	B7K0386	11/14/2017	11/14/17 16:44	
Zinc	**29**	1.0	1	B7K0386	11/14/2017	11/14/17 16:44	

Mercury by AA (Cold Vapor) EPA 7471A

Analyst: KEK

Analyte	Result (mg/kg)	PQL (mg/kg)	Dilution	Batch	Prepared	Date/Time Analyzed	Notes
Mercury	ND	0.10	1	B7K0388	11/14/2017	11/14/17 16:21	

Gasoline Range Organics by EPA 8015B (Modified)

Analyst: VW

Analyte		Result (mg/kg)	PQL (mg/kg)	Dilution	Batch	Prepared	Date/Time Analyzed	Notes
Gasoline Range Organics		ND	1.0	1	B7K0246	11/09/2017	11/09/17 13:58	
Surrogate: 4-Bromofluorobenzene	*111 %*		*50 - 138*		B7K0246	11/09/2017	*11/09/17 13:58*	

Diesel Range Organics by EPA 8015B

Analyst: TKT

Analyte		Result (mg/kg)	PQL (mg/kg)	Dilution	Batch	Prepared	Date/Time Analyzed	Notes
DRO		ND	10	1	B7K0303	11/10/2017	11/10/17 16:30	
Surrogate: p-Terphenyl	*112 %*		*22 - 143*		B7K0303	11/10/2017	*11/10/17 16:30*	

DRAFT

Certificate of Analysis

Hushmand Associates, Inc.		Project Number :	Sixth Street Viaduct PARC, LAC-17-001
250 Goddard		Report To :	Nitha R. Nitharsan
Irvine , CA 92618		Reported :	11/16/2017

Client Sample ID Drum 1 - Sample 1

Lab ID: 1703996-01

Volatile Organic Compounds by EPA 8260B **Analyst: AG**

Analyte	Result (ug/kg)	PQL (ug/kg)	Dilution	Batch	Prepared	Date/Time Analyzed	Notes
1,1,1,2-Tetrachloroethane	ND	5.0	1	B7K0249	11/09/2017	11/09/17 15:50	
1,1,1-Trichloroethane	ND	5.0	1	B7K0249	11/09/2017	11/09/17 15:50	
1,1,2,2-Tetrachloroethane	ND	5.0	1	B7K0249	11/09/2017	11/09/17 15:50	
1,1,2-Trichloroethane	ND	5.0	1	B7K0249	11/09/2017	11/09/17 15:50	
1,1-Dichloroethane	ND	5.0	1	B7K0249	11/09/2017	11/09/17 15:50	
1,1-Dichloroethene	ND	5.0	1	B7K0249	11/09/2017	11/09/17 15:50	
1,1-Dichloropropene	ND	5.0	1	B7K0249	11/09/2017	11/09/17 15:50	
1,2,3-Trichloropropane	ND	5.0	1	B7K0249	11/09/2017	11/09/17 15:50	
1,2,3-Trichlorobenzene	ND	5.0	1	B7K0249	11/09/2017	11/09/17 15:50	
1,2,4-Trichlorobenzene	ND	5.0	1	B7K0249	11/09/2017	11/09/17 15:50	
1,2,4-Trimethylbenzene	ND	5.0	1	B7K0249	11/09/2017	11/09/17 15:50	
1,2-Dibromo-3-chloropropane	ND	10	1	B7K0249	11/09/2017	11/09/17 15:50	
1,2-Dibromoethane	ND	5.0	1	B7K0249	11/09/2017	11/09/17 15:50	
1,2-Dichlorobenzene	ND	5.0	1	B7K0249	11/09/2017	11/09/17 15:50	
1,2-Dichloroethane	ND	5.0	1	B7K0249	11/09/2017	11/09/17 15:50	
1,2-Dichloropropane	ND	5.0	1	B7K0249	11/09/2017	11/09/17 15:50	
1,3,5-Trimethylbenzene	ND	5.0	1	B7K0249	11/09/2017	11/09/17 15:50	
1,3-Dichlorobenzene	ND	5.0	1	B7K0249	11/09/2017	11/09/17 15:50	
1,3-Dichloropropane	ND	5.0	1	B7K0249	11/09/2017	11/09/17 15:50	
1,4-Dichlorobenzene	ND	5.0	1	B7K0249	11/09/2017	11/09/17 15:50	
2,2-Dichloropropane	ND	5.0	1	B7K0249	11/09/2017	11/09/17 15:50	
2-Chlorotoluene	ND	5.0	1	B7K0249	11/09/2017	11/09/17 15:50	
4-Chlorotoluene	ND	5.0	1	B7K0249	11/09/2017	11/09/17 15:50	
4-Isopropyltoluene	ND	5.0	1	B7K0249	11/09/2017	11/09/17 15:50	
Benzene	ND	5.0	1	B7K0249	11/09/2017	11/09/17 15:50	
Bromobenzene	ND	5.0	1	B7K0249	11/09/2017	11/09/17 15:50	
Bromochloromethane	ND	5.0	1	B7K0249	11/09/2017	11/09/17 15:50	
Bromodichloromethane	ND	5.0	1	B7K0249	11/09/2017	11/09/17 15:50	
Bromoform	ND	5.0	1	B7K0249	11/09/2017	11/09/17 15:50	
Bromomethane	ND	5.0	1	B7K0249	11/09/2017	11/09/17 15:50	
Carbon disulfide	ND	5.0	1	B7K0249	11/09/2017	11/09/17 15:50	
Carbon tetrachloride	ND	5.0	1	B7K0249	11/09/2017	11/09/17 15:50	
Chlorobenzene	ND	5.0	1	B7K0249	11/09/2017	11/09/17 15:50	
Chloroethane	ND	5.0	1	B7K0249	11/09/2017	11/09/17 15:50	
Chloroform	ND	5.0	1	B7K0249	11/09/2017	11/09/17 15:50	
Chloromethane	ND	5.0	1	B7K0249	11/09/2017	11/09/17 15:50	
cis-1,2-Dichloroethene	ND	5.0	1	B7K0249	11/09/2017	11/09/17 15:50	

DRAFT

Certificate of Analysis

Hushmand Associates, Inc.	Project Number : Sixth Street Viaduct PARC, LAC-17-001
250 Goddard	Report To : Nitha R. Nitharsan
Irvine , CA 92618	Reported : 11/16/2017

Client Sample ID Drum 1 - Sample 1

Lab ID: 1703996-01

Volatile Organic Compounds by EPA 8260B **Analyst: AG**

Analyte	Result (ug/kg)	PQL (ug/kg)	Dilution	Batch	Prepared	Date/Time Analyzed	Notes
cis-1,3-Dichloropropene	ND	5.0	1	B7K0249	11/09/2017	11/09/17 15:50	
Di-isopropyl ether	ND	5.0	1	B7K0249	11/09/2017	11/09/17 15:50	
Dibromochloromethane	ND	5.0	1	B7K0249	11/09/2017	11/09/17 15:50	
Dibromomethane	ND	5.0	1	B7K0249	11/09/2017	11/09/17 15:50	
Dichlorodifluoromethane	ND	5.0	1	B7K0249	11/09/2017	11/09/17 15:50	
Ethyl Acetate	ND	50	1	B7K0249	11/09/2017	11/09/17 15:50	
Ethyl Ether	ND	50	1	B7K0249	11/09/2017	11/09/17 15:50	
Ethyl tert-butyl ether	ND	5.0	1	B7K0249	11/09/2017	11/09/17 15:50	
Ethylbenzene	ND	5.0	1	B7K0249	11/09/2017	11/09/17 15:50	
Freon-113	ND	5.0	1	B7K0249	11/09/2017	11/09/17 15:50	
Hexachlorobutadiene	ND	5.0	1	B7K0249	11/09/2017	11/09/17 15:50	
Isopropylbenzene	ND	5.0	1	B7K0249	11/09/2017	11/09/17 15:50	
m,p-Xylene	ND	10	1	B7K0249	11/09/2017	11/09/17 15:50	
Methylene chloride	ND	5.0	1	B7K0249	11/09/2017	11/09/17 15:50	
MTBE	ND	5.0	1	B7K0249	11/09/2017	11/09/17 15:50	
n-Butylbenzene	ND	5.0	1	B7K0249	11/09/2017	11/09/17 15:50	
n-Propylbenzene	ND	5.0	1	B7K0249	11/09/2017	11/09/17 15:50	
Naphthalene	ND	5.0	1	B7K0249	11/09/2017	11/09/17 15:50	
o-Xylene	ND	5.0	1	B7K0249	11/09/2017	11/09/17 15:50	
sec-Butylbenzene	ND	5.0	1	B7K0249	11/09/2017	11/09/17 15:50	
Styrene	ND	5.0	1	B7K0249	11/09/2017	11/09/17 15:50	
tert-Amyl methyl ether	ND	5.0	1	B7K0249	11/09/2017	11/09/17 15:50	
tert-Butanol	ND	100	1	B7K0249	11/09/2017	11/09/17 15:50	
tert-Butylbenzene	ND	5.0	1	B7K0249	11/09/2017	11/09/17 15:50	
Tetrachloroethene	ND	5.0	1	B7K0249	11/09/2017	11/09/17 15:50	
Toluene	ND	5.0	1	B7K0249	11/09/2017	11/09/17 15:50	
trans-1,2-Dichloroethene	ND	5.0	1	B7K0249	11/09/2017	11/09/17 15:50	
trans-1,3-Dichloropropene	ND	5.0	1	B7K0249	11/09/2017	11/09/17 15:50	
Trichloroethene	ND	5.0	1	B7K0249	11/09/2017	11/09/17 15:50	
Trichlorofluoromethane	ND	5.0	1	B7K0249	11/09/2017	11/09/17 15:50	
Vinyl acetate	ND	50	1	B7K0249	11/09/2017	11/09/17 15:50	
Vinyl chloride	ND	5.0	1	B7K0249	11/09/2017	11/09/17 15:50	
Surrogate: 1,2-Dichloroethane-d4	*77.1 %*	*32 - 140*		B7K0249	11/09/2017	*11/09/17 15:50*	
Surrogate: 4-Bromofluorobenzene	*97.6 %*	*68 - 131*		B7K0249	11/09/2017	*11/09/17 15:50*	
Surrogate: Dibromofluoromethane	*84.4 %*	*49 - 134*		B7K0249	11/09/2017	*11/09/17 15:50*	
Surrogate: Toluene-d8	*98.4 %*	*75 - 132*		B7K0249	11/09/2017	*11/09/17 15:50*	

DRAFT

Certificate of Analysis

Hushmand Associates, Inc.	Project Number : Sixth Street Viaduct PARC, LAC-17-001
250 Goddard	Report To : Nitha R. Nitharsan
Irvine , CA 92618	Reported : 11/16/2017

Client Sample ID Drum 1 - Sample 2

Lab ID: 1703996-02

Title 22 Metals by ICP-AES EPA 6010B

Analyst: GO

Analyte	Result (mg/kg)	PQL (mg/kg)	Dilution	Batch	Prepared	Date/Time Analyzed	Notes
Antimony	ND	2.0	1	B7K0386	11/14/2017	11/14/17 16:48	
Arsenic	ND	1.0	1	B7K0386	11/14/2017	11/14/17 16:48	
Barium	**47**	1.0	1	B7K0386	11/14/2017	11/14/17 16:48	
Beryllium	ND	1.0	1	B7K0386	11/14/2017	11/14/17 16:48	
Cadmium	ND	1.0	1	B7K0386	11/14/2017	11/14/17 16:48	
Chromium	**7.4**	1.0	1	B7K0386	11/14/2017	11/14/17 16:48	
Cobalt	**4.2**	1.0	1	B7K0386	11/14/2017	11/14/17 16:48	
Copper	**7.1**	2.0	1	B7K0386	11/14/2017	11/14/17 16:48	
Lead	**4.3**	1.0	1	B7K0386	11/14/2017	11/14/17 16:48	
Molybdenum	ND	1.0	1	B7K0386	11/14/2017	11/14/17 16:48	
Nickel	**4.6**	1.0	1	B7K0386	11/14/2017	11/14/17 16:48	
Selenium	ND	1.0	1	B7K0386	11/14/2017	11/14/17 16:48	
Silver	ND	1.0	1	B7K0386	11/14/2017	11/14/17 16:48	
Thallium	ND	1.0	1	B7K0386	11/14/2017	11/14/17 16:48	
Vanadium	**18**	1.0	1	B7K0386	11/14/2017	11/14/17 16:48	
Zinc	**24**	1.0	1	B7K0386	11/14/2017	11/14/17 16:48	

Mercury by AA (Cold Vapor) EPA 7471A

Analyst: KEK

Analyte	Result (mg/kg)	PQL (mg/kg)	Dilution	Batch	Prepared	Date/Time Analyzed	Notes
Mercury	ND	0.10	1	B7K0388	11/14/2017	11/14/17 16:33	

Gasoline Range Organics by EPA 8015B (Modified)

Analyst: VW

Analyte	Result (mg/kg)	PQL (mg/kg)	Dilution	Batch	Prepared	Date/Time Analyzed	Notes
Gasoline Range Organics	ND	1.0	1	B7K0246	11/09/2017	11/09/17 14:16	
Surrogate: 4-Bromofluorobenzene *109 %*		*50 - 138*		B7K0246	11/09/2017	*11/09/17 14:16*	

Diesel Range Organics by EPA 8015B

Analyst: TKT

Analyte	Result (mg/kg)	PQL (mg/kg)	Dilution	Batch	Prepared	Date/Time Analyzed	Notes
DRO	**24**	10	1	B7K0303	11/10/2017	11/10/17 16:45	
Surrogate: p-Terphenyl *102 %*		*22 - 143*		B7K0303	11/10/2017	*11/10/17 16:45*	

Certificate of Analysis

Hushmand Associates, Inc.	Project Number : Sixth Street Viaduct PARC, LAC-17-001
250 Goddard	Report To : Nitha R. Nitharsan
Irvine , CA 92618	Reported : 11/16/2017

Client Sample ID Drum 1 - Sample 2

Lab ID: 1703996-02

Volatile Organic Compounds by EPA 8260B **Analyst: AG**

Analyte	Result (ug/kg)	PQL (ug/kg)	Dilution	Batch	Prepared	Date/Time Analyzed	Notes
1,1,1,2-Tetrachloroethane	ND	5.0	1	B7K0249	11/09/2017	11/09/17 16:09	
1,1,1-Trichloroethane	ND	5.0	1	B7K0249	11/09/2017	11/09/17 16:09	
1,1,2,2-Tetrachloroethane	ND	5.0	1	B7K0249	11/09/2017	11/09/17 16:09	
1,1,2-Trichloroethane	ND	5.0	1	B7K0249	11/09/2017	11/09/17 16:09	
1,1-Dichloroethane	ND	5.0	1	B7K0249	11/09/2017	11/09/17 16:09	
1,1-Dichloroethene	ND	5.0	1	B7K0249	11/09/2017	11/09/17 16:09	
1,1-Dichloropropene	ND	5.0	1	B7K0249	11/09/2017	11/09/17 16:09	
1,2,3-Trichloropropane	ND	5.0	1	B7K0249	11/09/2017	11/09/17 16:09	
1,2,3-Trichlorobenzene	ND	5.0	1	B7K0249	11/09/2017	11/09/17 16:09	
1,2,4-Trichlorobenzene	ND	5.0	1	B7K0249	11/09/2017	11/09/17 16:09	
1,2,4-Trimethylbenzene	ND	5.0	1	B7K0249	11/09/2017	11/09/17 16:09	
1,2-Dibromo-3-chloropropane	ND	10	1	B7K0249	11/09/2017	11/09/17 16:09	
1,2-Dibromoethane	ND	5.0	1	B7K0249	11/09/2017	11/09/17 16:09	
1,2-Dichlorobenzene	ND	5.0	1	B7K0249	11/09/2017	11/09/17 16:09	
1,2-Dichloroethane	ND	5.0	1	B7K0249	11/09/2017	11/09/17 16:09	
1,2-Dichloropropane	ND	5.0	1	B7K0249	11/09/2017	11/09/17 16:09	
1,3,5-Trimethylbenzene	ND	5.0	1	B7K0249	11/09/2017	11/09/17 16:09	
1,3-Dichlorobenzene	ND	5.0	1	B7K0249	11/09/2017	11/09/17 16:09	
1,3-Dichloropropane	ND	5.0	1	B7K0249	11/09/2017	11/09/17 16:09	
1,4-Dichlorobenzene	ND	5.0	1	B7K0249	11/09/2017	11/09/17 16:09	
2,2-Dichloropropane	ND	5.0	1	B7K0249	11/09/2017	11/09/17 16:09	
2-Chlorotoluene	ND	5.0	1	B7K0249	11/09/2017	11/09/17 16:09	
4-Chlorotoluene	ND	5.0	1	B7K0249	11/09/2017	11/09/17 16:09	
4-Isopropyltoluene	ND	5.0	1	B7K0249	11/09/2017	11/09/17 16:09	
Benzene	ND	5.0	1	B7K0249	11/09/2017	11/09/17 16:09	
Bromobenzene	ND	5.0	1	B7K0249	11/09/2017	11/09/17 16:09	
Bromochloromethane	ND	5.0	1	B7K0249	11/09/2017	11/09/17 16:09	
Bromodichloromethane	ND	5.0	1	B7K0249	11/09/2017	11/09/17 16:09	
Bromoform	ND	5.0	1	B7K0249	11/09/2017	11/09/17 16:09	
Bromomethane	ND	5.0	1	B7K0249	11/09/2017	11/09/17 16:09	
Carbon disulfide	ND	5.0	1	B7K0249	11/09/2017	11/09/17 16:09	
Carbon tetrachloride	ND	5.0	1	B7K0249	11/09/2017	11/09/17 16:09	
Chlorobenzene	ND	5.0	1	B7K0249	11/09/2017	11/09/17 16:09	
Chloroethane	ND	5.0	1	B7K0249	11/09/2017	11/09/17 16:09	
Chloroform	ND	5.0	1	B7K0249	11/09/2017	11/09/17 16:09	
Chloromethane	ND	5.0	1	B7K0249	11/09/2017	11/09/17 16:09	
cis-1,2-Dichloroethene	ND	5.0	1	B7K0249	11/09/2017	11/09/17 16:09	

Certificate of Analysis

Hushmand Associates, Inc.	Project Number : Sixth Street Viaduct PARC, LAC-17-001
250 Goddard	Report To : Nitha R. Nitharsan
Irvine , CA 92618	Reported : 11/16/2017

Client Sample ID Drum 1 - Sample 2

Lab ID: 1703996-02

Volatile Organic Compounds by EPA 8260B **Analyst: AG**

Analyte	Result (ug/kg)	PQL (ug/kg)	Dilution	Batch	Prepared	Date/Time Analyzed	Notes
cis-1,3-Dichloropropene	ND	5.0	1	B7K0249	11/09/2017	11/09/17 16:09	
Di-isopropyl ether	ND	5.0	1	B7K0249	11/09/2017	11/09/17 16:09	
Dibromochloromethane	ND	5.0	1	B7K0249	11/09/2017	11/09/17 16:09	
Dibromomethane	ND	5.0	1	B7K0249	11/09/2017	11/09/17 16:09	
Dichlorodifluoromethane	ND	5.0	1	B7K0249	11/09/2017	11/09/17 16:09	
Ethyl Acetate	ND	50	1	B7K0249	11/09/2017	11/09/17 16:09	
Ethyl Ether	ND	50	1	B7K0249	11/09/2017	11/09/17 16:09	
Ethyl tert-butyl ether	ND	5.0	1	B7K0249	11/09/2017	11/09/17 16:09	
Ethylbenzene	ND	5.0	1	B7K0249	11/09/2017	11/09/17 16:09	
Freon-113	ND	5.0	1	B7K0249	11/09/2017	11/09/17 16:09	
Hexachlorobutadiene	ND	5.0	1	B7K0249	11/09/2017	11/09/17 16:09	
Isopropylbenzene	ND	5.0	1	B7K0249	11/09/2017	11/09/17 16:09	
m,p-Xylene	ND	10	1	B7K0249	11/09/2017	11/09/17 16:09	
Methylene chloride	ND	5.0	1	B7K0249	11/09/2017	11/09/17 16:09	
MTBE	ND	5.0	1	B7K0249	11/09/2017	11/09/17 16:09	
n-Butylbenzene	ND	5.0	1	B7K0249	11/09/2017	11/09/17 16:09	
n-Propylbenzene	ND	5.0	1	B7K0249	11/09/2017	11/09/17 16:09	
Naphthalene	ND	5.0	1	B7K0249	11/09/2017	11/09/17 16:09	
o-Xylene	ND	5.0	1	B7K0249	11/09/2017	11/09/17 16:09	
sec-Butylbenzene	ND	5.0	1	B7K0249	11/09/2017	11/09/17 16:09	
Styrene	ND	5.0	1	B7K0249	11/09/2017	11/09/17 16:09	
tert-Amyl methyl ether	ND	5.0	1	B7K0249	11/09/2017	11/09/17 16:09	
tert-Butanol	ND	100	1	B7K0249	11/09/2017	11/09/17 16:09	
tert-Butylbenzene	ND	5.0	1	B7K0249	11/09/2017	11/09/17 16:09	
Tetrachloroethene	ND	5.0	1	B7K0249	11/09/2017	11/09/17 16:09	
Toluene	ND	5.0	1	B7K0249	11/09/2017	11/09/17 16:09	
trans-1,2-Dichloroethene	ND	5.0	1	B7K0249	11/09/2017	11/09/17 16:09	
trans-1,3-Dichloropropene	ND	5.0	1	B7K0249	11/09/2017	11/09/17 16:09	
Trichloroethene	ND	5.0	1	B7K0249	11/09/2017	11/09/17 16:09	
Trichlorofluoromethane	ND	5.0	1	B7K0249	11/09/2017	11/09/17 16:09	
Vinyl acetate	ND	50	1	B7K0249	11/09/2017	11/09/17 16:09	
Vinyl chloride	ND	5.0	1	B7K0249	11/09/2017	11/09/17 16:09	
Surrogate: 1,2-Dichloroethane-d4	*77.7 %*	*32 - 140*		B7K0249	11/09/2017	*11/09/17 16:09*	
Surrogate: 4-Bromofluorobenzene	*99.9 %*	*68 - 131*		B7K0249	11/09/2017	*11/09/17 16:09*	
Surrogate: Dibromofluoromethane	*86.3 %*	*49 - 134*		B7K0249	11/09/2017	*11/09/17 16:09*	
Surrogate: Toluene-d8	*103 %*	*75 - 132*		B7K0249	11/09/2017	*11/09/17 16:09*	

DRAFT

Certificate of Analysis

Hushmand Associates, Inc.	Project Number : Sixth Street Viaduct PARC, LAC-17-001
250 Goddard	Report To : Nitha R. Nitharsan
Irvine , CA 92618	Reported : 11/16/2017

Client Sample ID Drum 2 - Sample 1

Lab ID: 1703996-03

Title 22 Metals by ICP-AES EPA 6010B

Analyst: GO

Analyte	Result (mg/kg)	PQL (mg/kg)	Dilution	Batch	Prepared	Date/Time Analyzed	Notes
Antimony	ND	2.0	1	B7K0386	11/14/2017	11/14/17 16:49	
Arsenic	ND	1.0	1	B7K0386	11/14/2017	11/14/17 16:49	
Barium	**60**	1.0	1	B7K0386	11/14/2017	11/14/17 16:49	
Beryllium	ND	1.0	1	B7K0386	11/14/2017	11/14/17 16:49	
Cadmium	ND	1.0	1	B7K0386	11/14/2017	11/14/17 16:49	
Chromium	**9.2**	1.0	1	B7K0386	11/14/2017	11/14/17 16:49	
Cobalt	**4.3**	1.0	1	B7K0386	11/14/2017	11/14/17 16:49	
Copper	**11**	2.0	1	B7K0386	11/14/2017	11/14/17 16:49	
Lead	**15**	1.0	1	B7K0386	11/14/2017	11/14/17 16:49	
Molybdenum	ND	1.0	1	B7K0386	11/14/2017	11/14/17 16:49	
Nickel	**9.1**	1.0	1	B7K0386	11/14/2017	11/14/17 16:49	
Selenium	ND	1.0	1	B7K0386	11/14/2017	11/14/17 16:49	
Silver	ND	1.0	1	B7K0386	11/14/2017	11/14/17 16:49	
Thallium	ND	1.0	1	B7K0386	11/14/2017	11/14/17 16:49	
Vanadium	**18**	1.0	1	B7K0386	11/14/2017	11/14/17 16:49	
Zinc	**37**	1.0	1	B7K0386	11/14/2017	11/14/17 16:49	

Mercury by AA (Cold Vapor) EPA 7471A

Analyst: KEK

Analyte	Result (mg/kg)	PQL (mg/kg)	Dilution	Batch	Prepared	Date/Time Analyzed	Notes
Mercury	ND	0.10	1	B7K0388	11/14/2017	11/14/17 16:35	

Gasoline Range Organics by EPA 8015B (Modified)

Analyst: VW

Analyte		Result (mg/kg)	PQL (mg/kg)	Dilution	Batch	Prepared	Date/Time Analyzed	Notes
Gasoline Range Organics		ND	1.0	1	B7K0246	11/09/2017	11/09/17 14:35	
Surrogate: 4-Bromofluorobenzene	*110 %*		*50 - 138*		B7K0246	11/09/2017	*11/09/17 14:35*	

Diesel Range Organics by EPA 8015B

Analyst: TKT

Analyte		Result (mg/kg)	PQL (mg/kg)	Dilution	Batch	Prepared	Date/Time Analyzed	Notes
DRO		**230**	10	1	B7K0303	11/10/2017	11/10/17 18:41	
Surrogate: p-Terphenyl	*110 %*		*22 - 143*		B7K0303	11/10/2017	*11/10/17 18:41*	

Certificate of Analysis

Hushmand Associates, Inc.	Project Number : Sixth Street Viaduct PARC, LAC-17-001
250 Goddard	Report To : Nitha R. Nitharsan
Irvine , CA 92618	Reported : 11/16/2017

Client Sample ID Drum 2 - Sample 1

Lab ID: 1703996-03

Volatile Organic Compounds by EPA 8260B **Analyst: AG**

Analyte	Result (ug/kg)	PQL (ug/kg)	Dilution	Batch	Prepared	Date/Time Analyzed	Notes
1,1,1,2-Tetrachloroethane	ND	5.0	1	B7K0249	11/09/2017	11/09/17 16:28	
1,1,1-Trichloroethane	ND	5.0	1	B7K0249	11/09/2017	11/09/17 16:28	
1,1,2,2-Tetrachloroethane	ND	5.0	1	B7K0249	11/09/2017	11/09/17 16:28	
1,1,2-Trichloroethane	ND	5.0	1	B7K0249	11/09/2017	11/09/17 16:28	
1,1-Dichloroethane	ND	5.0	1	B7K0249	11/09/2017	11/09/17 16:28	
1,1-Dichloroethene	ND	5.0	1	B7K0249	11/09/2017	11/09/17 16:28	
1,1-Dichloropropene	ND	5.0	1	B7K0249	11/09/2017	11/09/17 16:28	
1,2,3-Trichloropropane	ND	5.0	1	B7K0249	11/09/2017	11/09/17 16:28	
1,2,3-Trichlorobenzene	ND	5.0	1	B7K0249	11/09/2017	11/09/17 16:28	
1,2,4-Trichlorobenzene	ND	5.0	1	B7K0249	11/09/2017	11/09/17 16:28	
1,2,4-Trimethylbenzene	ND	5.0	1	B7K0249	11/09/2017	11/09/17 16:28	
1,2-Dibromo-3-chloropropane	ND	10	1	B7K0249	11/09/2017	11/09/17 16:28	
1,2-Dibromoethane	ND	5.0	1	B7K0249	11/09/2017	11/09/17 16:28	
1,2-Dichlorobenzene	ND	5.0	1	B7K0249	11/09/2017	11/09/17 16:28	
1,2-Dichloroethane	ND	5.0	1	B7K0249	11/09/2017	11/09/17 16:28	
1,2-Dichloropropane	ND	5.0	1	B7K0249	11/09/2017	11/09/17 16:28	
1,3,5-Trimethylbenzene	ND	5.0	1	B7K0249	11/09/2017	11/09/17 16:28	
1,3-Dichlorobenzene	ND	5.0	1	B7K0249	11/09/2017	11/09/17 16:28	
1,3-Dichloropropane	ND	5.0	1	B7K0249	11/09/2017	11/09/17 16:28	
1,4-Dichlorobenzene	ND	5.0	1	B7K0249	11/09/2017	11/09/17 16:28	
2,2-Dichloropropane	ND	5.0	1	B7K0249	11/09/2017	11/09/17 16:28	
2-Chlorotoluene	ND	5.0	1	B7K0249	11/09/2017	11/09/17 16:28	
4-Chlorotoluene	ND	5.0	1	B7K0249	11/09/2017	11/09/17 16:28	
4-Isopropyltoluene	ND	5.0	1	B7K0249	11/09/2017	11/09/17 16:28	
Benzene	ND	5.0	1	B7K0249	11/09/2017	11/09/17 16:28	
Bromobenzene	ND	5.0	1	B7K0249	11/09/2017	11/09/17 16:28	
Bromochloromethane	ND	5.0	1	B7K0249	11/09/2017	11/09/17 16:28	
Bromodichloromethane	ND	5.0	1	B7K0249	11/09/2017	11/09/17 16:28	
Bromoform	ND	5.0	1	B7K0249	11/09/2017	11/09/17 16:28	
Bromomethane	ND	5.0	1	B7K0249	11/09/2017	11/09/17 16:28	
Carbon disulfide	ND	5.0	1	B7K0249	11/09/2017	11/09/17 16:28	
Carbon tetrachloride	ND	5.0	1	B7K0249	11/09/2017	11/09/17 16:28	
Chlorobenzene	ND	5.0	1	B7K0249	11/09/2017	11/09/17 16:28	
Chloroethane	ND	5.0	1	B7K0249	11/09/2017	11/09/17 16:28	
Chloroform	ND	5.0	1	B7K0249	11/09/2017	11/09/17 16:28	
Chloromethane	ND	5.0	1	B7K0249	11/09/2017	11/09/17 16:28	
cis-1,2-Dichloroethene	ND	5.0	1	B7K0249	11/09/2017	11/09/17 16:28	

Certificate of Analysis

Hushmand Associates, Inc.	Project Number : Sixth Street Viaduct PARC, LAC-17-001
250 Goddard	Report To : Nitha R. Nitharsan
Irvine , CA 92618	Reported : 11/16/2017

Client Sample ID Drum 2 - Sample 1

Lab ID: 1703996-03

Volatile Organic Compounds by EPA 8260B **Analyst: AG**

Analyte	Result (ug/kg)	PQL (ug/kg)	Dilution	Batch	Prepared	Date/Time Analyzed	Notes
cis-1,3-Dichloropropene	ND	5.0	1	B7K0249	11/09/2017	11/09/17 16:28	
Di-isopropyl ether	ND	5.0	1	B7K0249	11/09/2017	11/09/17 16:28	
Dibromochloromethane	ND	5.0	1	B7K0249	11/09/2017	11/09/17 16:28	
Dibromomethane	ND	5.0	1	B7K0249	11/09/2017	11/09/17 16:28	
Dichlorodifluoromethane	ND	5.0	1	B7K0249	11/09/2017	11/09/17 16:28	
Ethyl Acetate	ND	50	1	B7K0249	11/09/2017	11/09/17 16:28	
Ethyl Ether	ND	50	1	B7K0249	11/09/2017	11/09/17 16:28	
Ethyl tert-butyl ether	ND	5.0	1	B7K0249	11/09/2017	11/09/17 16:28	
Ethylbenzene	ND	5.0	1	B7K0249	11/09/2017	11/09/17 16:28	
Freon-113	ND	5.0	1	B7K0249	11/09/2017	11/09/17 16:28	
Hexachlorobutadiene	ND	5.0	1	B7K0249	11/09/2017	11/09/17 16:28	
Isopropylbenzene	ND	5.0	1	B7K0249	11/09/2017	11/09/17 16:28	
m,p-Xylene	ND	10	1	B7K0249	11/09/2017	11/09/17 16:28	
Methylene chloride	ND	5.0	1	B7K0249	11/09/2017	11/09/17 16:28	
MTBE	ND	5.0	1	B7K0249	11/09/2017	11/09/17 16:28	
n-Butylbenzene	ND	5.0	1	B7K0249	11/09/2017	11/09/17 16:28	
n-Propylbenzene	ND	5.0	1	B7K0249	11/09/2017	11/09/17 16:28	
Naphthalene	ND	5.0	1	B7K0249	11/09/2017	11/09/17 16:28	
o-Xylene	ND	5.0	1	B7K0249	11/09/2017	11/09/17 16:28	
sec-Butylbenzene	ND	5.0	1	B7K0249	11/09/2017	11/09/17 16:28	
Styrene	ND	5.0	1	B7K0249	11/09/2017	11/09/17 16:28	
tert-Amyl methyl ether	ND	5.0	1	B7K0249	11/09/2017	11/09/17 16:28	
tert-Butanol	ND	100	1	B7K0249	11/09/2017	11/09/17 16:28	
tert-Butylbenzene	ND	5.0	1	B7K0249	11/09/2017	11/09/17 16:28	
Tetrachloroethene	ND	5.0	1	B7K0249	11/09/2017	11/09/17 16:28	
Toluene	ND	5.0	1	B7K0249	11/09/2017	11/09/17 16:28	
trans-1,2-Dichloroethene	ND	5.0	1	B7K0249	11/09/2017	11/09/17 16:28	
trans-1,3-Dichloropropene	ND	5.0	1	B7K0249	11/09/2017	11/09/17 16:28	
Trichloroethene	ND	5.0	1	B7K0249	11/09/2017	11/09/17 16:28	
Trichlorofluoromethane	ND	5.0	1	B7K0249	11/09/2017	11/09/17 16:28	
Vinyl acetate	ND	50	1	B7K0249	11/09/2017	11/09/17 16:28	
Vinyl chloride	ND	5.0	1	B7K0249	11/09/2017	11/09/17 16:28	
Surrogate: 1,2-Dichloroethane-d4	*85.7 %*	*32 - 140*		B7K0249	11/09/2017	*11/09/17 16:28*	
Surrogate: 4-Bromofluorobenzene	*99.9 %*	*68 - 131*		B7K0249	11/09/2017	*11/09/17 16:28*	
Surrogate: Dibromofluoromethane	*85.5 %*	*49 - 134*		B7K0249	11/09/2017	*11/09/17 16:28*	
Surrogate: Toluene-d8	*106 %*	*75 - 132*		B7K0249	11/09/2017	*11/09/17 16:28*	

Certificate of Analysis

Hushmand Associates, Inc.	Project Number : Sixth Street Viaduct PARC, LAC-17-001
250 Goddard	Report To : Nitha R. Nitharsan
Irvine , CA 92618	Reported : 11/16/2017

Client Sample ID Drum 2 - Sample 2

Lab ID: 1703996-04

Title 22 Metals by ICP-AES EPA 6010B

Analyst: GO

Analyte	Result (mg/kg)	PQL (mg/kg)	Dilution	Batch	Prepared	Date/Time Analyzed	Notes
Antimony	ND	2.0	1	B7K0386	11/14/2017	11/14/17 16:50	
Arsenic	ND	1.0	1	B7K0386	11/14/2017	11/14/17 16:50	
Barium	**67**	1.0	1	B7K0386	11/14/2017	11/14/17 16:50	
Beryllium	ND	1.0	1	B7K0386	11/14/2017	11/14/17 16:50	
Cadmium	ND	1.0	1	B7K0386	11/14/2017	11/14/17 16:50	
Chromium	**7.5**	1.0	1	B7K0386	11/14/2017	11/14/17 16:50	
Cobalt	**5.4**	1.0	1	B7K0386	11/14/2017	11/14/17 16:50	
Copper	**8.4**	2.0	1	B7K0386	11/14/2017	11/14/17 16:50	
Lead	**6.6**	1.0	1	B7K0386	11/14/2017	11/14/17 16:50	
Molybdenum	ND	1.0	1	B7K0386	11/14/2017	11/14/17 16:50	
Nickel	**5.8**	1.0	1	B7K0386	11/14/2017	11/14/17 16:50	
Selenium	ND	1.0	1	B7K0386	11/14/2017	11/14/17 16:50	
Silver	ND	1.0	1	B7K0386	11/14/2017	11/14/17 16:50	
Thallium	ND	1.0	1	B7K0386	11/14/2017	11/14/17 16:50	
Vanadium	**20**	1.0	1	B7K0386	11/14/2017	11/14/17 16:50	
Zinc	**33**	1.0	1	B7K0386	11/14/2017	11/14/17 16:50	

Mercury by AA (Cold Vapor) EPA 7471A

Analyst: KEK

Analyte	Result (mg/kg)	PQL (mg/kg)	Dilution	Batch	Prepared	Date/Time Analyzed	Notes
Mercury	ND	0.10	1	B7K0388	11/14/2017	11/14/17 16:37	

Gasoline Range Organics by EPA 8015B (Modified)

Analyst: VW

Analyte		Result (mg/kg)	PQL (mg/kg)	Dilution	Batch	Prepared	Date/Time Analyzed	Notes
Gasoline Range Organics		ND	1.0	1	B7K0246	11/09/2017	11/09/17 14:53	
Surrogate: 4-Bromofluorobenzene	*107 %*		*50 - 138*		B7K0246	11/09/2017	*11/09/17 14:53*	

Diesel Range Organics by EPA 8015B

Analyst: TKT

Analyte		Result (mg/kg)	PQL (mg/kg)	Dilution	Batch	Prepared	Date/Time Analyzed	Notes
DRO		**30**	10	1	B7K0303	11/10/2017	11/10/17 17:16	
Surrogate: p-Terphenyl	*102 %*		*22 - 143*		B7K0303	11/10/2017	*11/10/17 17:16*	

Certificate of Analysis

Hushmand Associates, Inc.	Project Number : Sixth Street Viaduct PARC, LAC-17-001
250 Goddard	Report To : Nitha R. Nitharsan
Irvine , CA 92618	Reported : 11/16/2017

Client Sample ID Drum 2 - Sample 2

Lab ID: 1703996-04

Volatile Organic Compounds by EPA 8260B **Analyst: AG**

Analyte	Result (ug/kg)	PQL (ug/kg)	Dilution	Batch	Prepared	Date/Time Analyzed	Notes
1,1,1,2-Tetrachloroethane	ND	5.0	1	B7K0249	11/09/2017	11/09/17 16:46	
1,1,1-Trichloroethane	ND	5.0	1	B7K0249	11/09/2017	11/09/17 16:46	
1,1,2,2-Tetrachloroethane	ND	5.0	1	B7K0249	11/09/2017	11/09/17 16:46	
1,1,2-Trichloroethane	ND	5.0	1	B7K0249	11/09/2017	11/09/17 16:46	
1,1-Dichloroethane	ND	5.0	1	B7K0249	11/09/2017	11/09/17 16:46	
1,1-Dichloroethene	ND	5.0	1	B7K0249	11/09/2017	11/09/17 16:46	
1,1-Dichloropropene	ND	5.0	1	B7K0249	11/09/2017	11/09/17 16:46	
1,2,3-Trichloropropane	ND	5.0	1	B7K0249	11/09/2017	11/09/17 16:46	
1,2,3-Trichlorobenzene	ND	5.0	1	B7K0249	11/09/2017	11/09/17 16:46	
1,2,4-Trichlorobenzene	ND	5.0	1	B7K0249	11/09/2017	11/09/17 16:46	
1,2,4-Trimethylbenzene	ND	5.0	1	B7K0249	11/09/2017	11/09/17 16:46	
1,2-Dibromo-3-chloropropane	ND	10	1	B7K0249	11/09/2017	11/09/17 16:46	
1,2-Dibromoethane	ND	5.0	1	B7K0249	11/09/2017	11/09/17 16:46	
1,2-Dichlorobenzene	ND	5.0	1	B7K0249	11/09/2017	11/09/17 16:46	
1,2-Dichloroethane	ND	5.0	1	B7K0249	11/09/2017	11/09/17 16:46	
1,2-Dichloropropane	ND	5.0	1	B7K0249	11/09/2017	11/09/17 16:46	
1,3,5-Trimethylbenzene	ND	5.0	1	B7K0249	11/09/2017	11/09/17 16:46	
1,3-Dichlorobenzene	ND	5.0	1	B7K0249	11/09/2017	11/09/17 16:46	
1,3-Dichloropropane	ND	5.0	1	B7K0249	11/09/2017	11/09/17 16:46	
1,4-Dichlorobenzene	ND	5.0	1	B7K0249	11/09/2017	11/09/17 16:46	
2,2-Dichloropropane	ND	5.0	1	B7K0249	11/09/2017	11/09/17 16:46	
2-Chlorotoluene	ND	5.0	1	B7K0249	11/09/2017	11/09/17 16:46	
4-Chlorotoluene	ND	5.0	1	B7K0249	11/09/2017	11/09/17 16:46	
4-Isopropyltoluene	ND	5.0	1	B7K0249	11/09/2017	11/09/17 16:46	
Benzene	ND	5.0	1	B7K0249	11/09/2017	11/09/17 16:46	
Bromobenzene	ND	5.0	1	B7K0249	11/09/2017	11/09/17 16:46	
Bromochloromethane	ND	5.0	1	B7K0249	11/09/2017	11/09/17 16:46	
Bromodichloromethane	ND	5.0	1	B7K0249	11/09/2017	11/09/17 16:46	
Bromoform	ND	5.0	1	B7K0249	11/09/2017	11/09/17 16:46	
Bromomethane	ND	5.0	1	B7K0249	11/09/2017	11/09/17 16:46	
Carbon disulfide	ND	5.0	1	B7K0249	11/09/2017	11/09/17 16:46	
Carbon tetrachloride	ND	5.0	1	B7K0249	11/09/2017	11/09/17 16:46	
Chlorobenzene	ND	5.0	1	B7K0249	11/09/2017	11/09/17 16:46	
Chloroethane	ND	5.0	1	B7K0249	11/09/2017	11/09/17 16:46	
Chloroform	ND	5.0	1	B7K0249	11/09/2017	11/09/17 16:46	
Chloromethane	ND	5.0	1	B7K0249	11/09/2017	11/09/17 16:46	
cis-1,2-Dichloroethene	ND	5.0	1	B7K0249	11/09/2017	11/09/17 16:46	

Certificate of Analysis

Hushmand Associates, Inc.	Project Number : Sixth Street Viaduct PARC, LAC-17-001
250 Goddard	Report To : Nitha R. Nitharsan
Irvine , CA 92618	Reported : 11/16/2017

Client Sample ID Drum 2 - Sample 2

Lab ID: 1703996-04

Volatile Organic Compounds by EPA 8260B **Analyst: AG**

Analyte	Result (ug/kg)	PQL (ug/kg)	Dilution	Batch	Prepared	Date/Time Analyzed	Notes
cis-1,3-Dichloropropene	ND	5.0	1	B7K0249	11/09/2017	11/09/17 16:46	
Di-isopropyl ether	ND	5.0	1	B7K0249	11/09/2017	11/09/17 16:46	
Dibromochloromethane	ND	5.0	1	B7K0249	11/09/2017	11/09/17 16:46	
Dibromomethane	ND	5.0	1	B7K0249	11/09/2017	11/09/17 16:46	
Dichlorodifluoromethane	ND	5.0	1	B7K0249	11/09/2017	11/09/17 16:46	
Ethyl Acetate	ND	50	1	B7K0249	11/09/2017	11/09/17 16:46	
Ethyl Ether	ND	50	1	B7K0249	11/09/2017	11/09/17 16:46	
Ethyl tert-butyl ether	ND	5.0	1	B7K0249	11/09/2017	11/09/17 16:46	
Ethylbenzene	ND	5.0	1	B7K0249	11/09/2017	11/09/17 16:46	
Freon-113	ND	5.0	1	B7K0249	11/09/2017	11/09/17 16:46	
Hexachlorobutadiene	ND	5.0	1	B7K0249	11/09/2017	11/09/17 16:46	
Isopropylbenzene	ND	5.0	1	B7K0249	11/09/2017	11/09/17 16:46	
m,p-Xylene	ND	10	1	B7K0249	11/09/2017	11/09/17 16:46	
Methylene chloride	ND	5.0	1	B7K0249	11/09/2017	11/09/17 16:46	
MTBE	ND	5.0	1	B7K0249	11/09/2017	11/09/17 16:46	
n-Butylbenzene	ND	5.0	1	B7K0249	11/09/2017	11/09/17 16:46	
n-Propylbenzene	ND	5.0	1	B7K0249	11/09/2017	11/09/17 16:46	
Naphthalene	ND	5.0	1	B7K0249	11/09/2017	11/09/17 16:46	
o-Xylene	ND	5.0	1	B7K0249	11/09/2017	11/09/17 16:46	
sec-Butylbenzene	ND	5.0	1	B7K0249	11/09/2017	11/09/17 16:46	
Styrene	ND	5.0	1	B7K0249	11/09/2017	11/09/17 16:46	
tert-Amyl methyl ether	ND	5.0	1	B7K0249	11/09/2017	11/09/17 16:46	
tert-Butanol	ND	100	1	B7K0249	11/09/2017	11/09/17 16:46	
tert-Butylbenzene	ND	5.0	1	B7K0249	11/09/2017	11/09/17 16:46	
Tetrachloroethene	ND	5.0	1	B7K0249	11/09/2017	11/09/17 16:46	
Toluene	ND	5.0	1	B7K0249	11/09/2017	11/09/17 16:46	
trans-1,2-Dichloroethene	ND	5.0	1	B7K0249	11/09/2017	11/09/17 16:46	
trans-1,3-Dichloropropene	ND	5.0	1	B7K0249	11/09/2017	11/09/17 16:46	
Trichloroethene	ND	5.0	1	B7K0249	11/09/2017	11/09/17 16:46	
Trichlorofluoromethane	ND	5.0	1	B7K0249	11/09/2017	11/09/17 16:46	
Vinyl acetate	ND	50	1	B7K0249	11/09/2017	11/09/17 16:46	
Vinyl chloride	ND	5.0	1	B7K0249	11/09/2017	11/09/17 16:46	
Surrogate: 1,2-Dichloroethane-d4	*81.4 %*	*32 - 140*		B7K0249	11/09/2017	*11/09/17 16:46*	
Surrogate: 4-Bromofluorobenzene	*99.7 %*	*68 - 131*		B7K0249	11/09/2017	*11/09/17 16:46*	
Surrogate: Dibromofluoromethane	*85.7 %*	*49 - 134*		B7K0249	11/09/2017	*11/09/17 16:46*	
Surrogate: Toluene-d8	*98.9 %*	*75 - 132*		B7K0249	11/09/2017	*11/09/17 16:46*	

Certificate of Analysis

Hushmand Associates, Inc.	Project Number : Sixth Street Viaduct PARC, LAC-17-001
250 Goddard	Report To : Nitha R. Nitharsan
Irvine , CA 92618	Reported : 11/16/2017

QUALITY CONTROL SECTION

Title 22 Metals by ICP-AES EPA 6010B - Quality Control

Analyte	Result (mg/kg)	PQL (mg/kg)	MDL (mg/kg)	Spike Level	Source Result	% Rec	% Rec Limits	RPD	RPD Limit	Notes
Batch B7K0386 - EPA 3050B_S										
Blank (B7K0386-BLK1)							Prepared: 11/14/2017 Analyzed: 11/14/2017			
Antimony	ND	2.0	0.51							
Arsenic	ND	1.0	0.12							
Barium	ND	1.0	0.12							
Beryllium	ND	1.0	0.03							
Cadmium	ND	1.0	0.14							
Chromium	ND	1.0	0.26							
Cobalt	ND	1.0	0.07							
Copper	ND	2.0	0.19							
Lead	ND	1.0	0.18							
Molybdenum	ND	1.0	0.12							
Nickel	ND	1.0	0.18							
Selenium	ND	1.0	0.40							
Silver	ND	1.0	0.12							
Thallium	ND	1.0	0.38							
Vanadium	ND	1.0	0.06							
Zinc	ND	1.0	0.15							
LCS (B7K0386-BS1)							Prepared: 11/14/2017 Analyzed: 11/14/2017			
Antimony	45.6112	2.0	0.51	50.0000		91.2	80 - 120			
Arsenic	43.5969	1.0	0.12	50.0000		87.2	80 - 120			
Barium	46.6267	1.0	0.12	50.0000		93.3	80 - 120			
Beryllium	43.7392	1.0	0.03	50.0000		87.5	80 - 120			
Cadmium	43.6016	1.0	0.14	50.0000		87.2	80 - 120			
Chromium	46.8695	1.0	0.26	50.0000		93.7	80 - 120			
Cobalt	46.1333	1.0	0.07	50.0000		92.3	80 - 120			
Copper	46.2422	2.0	0.19	50.0000		92.5	80 - 120			
Lead	45.3338	1.0	0.18	50.0000		90.7	80 - 120			
Molybdenum	45.3817	1.0	0.12	50.0000		90.8	80 - 120			
Nickel	45.3607	1.0	0.18	50.0000		90.7	80 - 120			
Selenium	42.3506	1.0	0.40	50.0000		84.7	80 - 120			
Silver	49.3328	1.0	0.12	50.0000		98.7	80 - 120			
Thallium	45.7493	1.0	0.38	50.0000		91.5	80 - 120			
Vanadium	46.6600	1.0	0.06	50.0000		93.3	80 - 120			
Zinc	44.4248	1.0	0.15	50.0000		88.8	80 - 120			
Matrix Spike (B7K0386-MS1)			**Source: 1703996-01**				Prepared: 11/14/2017 Analyzed: 11/14/2017			
Antimony	86.2468	2.0	0.51	125.000	ND	69.0	33 - 98			
Arsenic	93.5651	1.0	0.12	125.000	0.407764	74.5	48 - 101			
Barium	147.722	1.0	0.12	125.000	50.1790	78.0	25 - 131			
Beryllium	94.7580	1.0	0.03	125.000	ND	75.8	56 - 97			

Certificate of Analysis

Hushmand Associates, Inc.	Project Number : Sixth Street Viaduct PARC, LAC-17-001
250 Goddard	Report To : Nitha R. Nitharsan
Irvine , CA 92618	Reported : 11/16/2017

Title 22 Metals by ICP-AES EPA 6010B - Quality Control (cont'd)

Analyte	Result (mg/kg)	PQL (mg/kg)	MDL (mg/kg)	Spike Level	Source Result	% Rec	% Rec Limits	RPD	RPD Limit	Notes
Batch B7K0386 - EPA 3050B_S (continued)										
Matrix Spike (B7K0386-MS1) - Continued			**Source: 1703996-01**		Prepared: 11/14/2017 Analyzed: 11/14/2017					
Cadmium	89.3384	1.0	0.14	125.000	ND	71.5	53 - 94			
Chromium	104.070	1.0	0.26	125.000	7.55846	77.2	45 - 113			
Cobalt	97.8859	1.0	0.07	125.000	4.81123	74.5	51 - 97			
Copper	106.742	2.0	0.19	125.000	8.73328	78.4	51 - 113			
Lead	97.3045	1.0	0.18	125.000	5.40702	73.5	33 - 127			
Molybdenum	96.1816	1.0	0.12	125.000	ND	76.9	54 - 97			
Nickel	97.7072	1.0	0.18	125.000	4.97417	74.2	46 - 102			
Selenium	88.7738	1.0	0.40	125.000	ND	71.0	52 - 93			
Silver	102.228	1.0	0.12	125.000	ND	81.8	58 - 98			
Thallium	84.0913	1.0	0.38	125.000	ND	67.3	46 - 93			
Vanadium	115.158	1.0	0.06	125.000	19.1259	76.8	55 - 104			
Zinc	116.766	1.0	0.15	125.000	28.8526	70.3	26 - 118			
Matrix Spike Dup (B7K0386-MSD1)			**Source: 1703996-01**		Prepared: 11/14/2017 Analyzed: 11/14/2017					
Antimony	80.4972	2.0	0.51	125.000	ND	64.4	33 - 98	6.90	20	
Arsenic	89.4080	1.0	0.12	125.000	0.407764	71.2	48 - 101	4.54	20	
Barium	146.594	1.0	0.12	125.000	50.1790	77.1	25 - 131	0.767	20	
Beryllium	92.3674	1.0	0.03	125.000	ND	73.9	56 - 97	2.56	20	
Cadmium	86.2134	1.0	0.14	125.000	ND	69.0	53 - 94	3.56	20	
Chromium	101.261	1.0	0.26	125.000	7.55846	75.0	45 - 113	2.74	20	
Cobalt	94.7490	1.0	0.07	125.000	4.81123	72.0	51 - 97	3.26	20	
Copper	106.140	2.0	0.19	125.000	8.73328	77.9	51 - 113	0.566	20	
Lead	128.007	1.0	0.18	125.000	5.40702	98.1	33 - 127	27.3	20	R
Molybdenum	91.1926	1.0	0.12	125.000	ND	73.0	54 - 97	5.33	20	
Nickel	94.7101	1.0	0.18	125.000	4.97417	71.8	46 - 102	3.12	20	
Selenium	84.9832	1.0	0.40	125.000	ND	68.0	52 - 93	4.36	20	
Silver	99.3504	1.0	0.12	125.000	ND	79.5	58 - 98	2.85	20	
Thallium	79.3074	1.0	0.38	125.000	ND	63.4	46 - 93	5.86	20	
Vanadium	114.614	1.0	0.06	125.000	19.1259	76.4	55 - 104	0.474	20	
Zinc	116.611	1.0	0.15	125.000	28.8526	70.2	26 - 118	0.133	20	

Certificate of Analysis

Hushmand Associates, Inc.	Project Number : Sixth Street Viaduct PARC, LAC-17-001
250 Goddard	Report To : Nitha R. Nitharsan
Irvine , CA 92618	Reported : 11/16/2017

Mercury by AA (Cold Vapor) EPA 7471A - Quality Control

Analyte	Result (mg/kg)	PQL (mg/kg)	MDL (mg/kg)	Spike Level	Source Result	% Rec	% Rec Limits	RPD	RPD Limit	Notes
Batch B7K0388 - EPA 7471_S										
Blank (B7K0388-BLK1)					Prepared: 11/14/2017 Analyzed: 11/14/2017					
Mercury	ND	0.10	0.005							
LCS (B7K0388-BS1)					Prepared: 11/14/2017 Analyzed: 11/14/2017					
Mercury	0.815209	0.10	0.005	0.833333		97.8	80 - 120			
Matrix Spike (B7K0388-MS1)			**Source: 1703996-01**		Prepared: 11/14/2017 Analyzed: 11/14/2017					
Mercury	0.939807	0.10	0.005	0.833333	0.068355	105	70 - 130			
Matrix Spike Dup (B7K0388-MSD1)			**Source: 1703996-01**		Prepared: 11/14/2017 Analyzed: 11/14/2017					
Mercury	0.953310	0.10	0.005	0.833333	0.068355	106	70 - 130	1.43	20	
Post Spike (B7K0388-PS1)			**Source: 1703996-01**		Prepared: 11/14/2017 Analyzed: 11/14/2017					
Mercury	0.006585			5.00000E-3	0.000820	115	85 - 115			M1

Certificate of Analysis

Hushmand Associates, Inc.	Project Number : Sixth Street Viaduct PARC, LAC-17-001
250 Goddard	Report To : Nitha R. Nitharsan
Irvine , CA 92618	Reported : 11/16/2017

Gasoline Range Organics by EPA 8015B (Modified) - Quality Control

Analyte	Result (mg/kg)	PQL (mg/kg)	MDL (mg/kg)	Spike Level	Source Result	% Rec	% Rec Limits	RPD	RPD Limit	Notes
Batch B7K0246 - GCVOA_S										
Blank (B7K0246-BLK1)						Prepared: 11/9/2017 Analyzed: 11/9/2017				
Gasoline Range Organics	ND	1.0	0.20							
Surrogate: 4-Bromofluorobenzene	*0.2124*			*0.200000*		*106*	*50 - 138*			
LCS (B7K0246-BS1)						Prepared: 11/9/2017 Analyzed: 11/9/2017				
Gasoline Range Organics	4.28800	1.0	0.20	5.00000		85.8	70 - 130			
Surrogate: 4-Bromofluorobenzene	*0.2108*			*0.200000*		*105*	*50 - 138*			
Matrix Spike (B7K0246-MS1)			**Source: 1703992-01**			Prepared: 11/9/2017 Analyzed: 11/9/2017				
Gasoline Range Organics	2.72000	1.0	0.20	5.00000	ND	54.4	17 - 141			
Surrogate: 4-Bromofluorobenzene	*0.2245*			*0.200000*		*112*	*50 - 138*			
Matrix Spike Dup (B7K0246-MSD1)			**Source: 1703992-01**			Prepared: 11/9/2017 Analyzed: 11/9/2017				
Gasoline Range Organics	2.94800	1.0	0.20	5.00000	ND	59.0	17 - 141	8.05	20	
Surrogate: 4-Bromofluorobenzene	*0.2268*			*0.200000*		*113*	*50 - 138*			

DRAFT

Certificate of Analysis

Hushmand Associates, Inc.	Project Number : Sixth Street Viaduct PARC, LAC-17-001
250 Goddard	Report To : Nitha R. Nitharsan
Irvine , CA 92618	Reported : 11/16/2017

Diesel Range Organics by EPA 8015B - Quality Control

Analyte	Result (mg/kg)	PQL (mg/kg)	MDL (mg/kg)	Spike Level	Source Result	% Rec	% Rec Limits	RPD	RPD Limit	Notes
Batch B7K0303 - GCSEMI_DRO_S										
Blank (B7K0303-BLK1)						Prepared: 11/10/2017 Analyzed: 11/10/2017				
DRO	ND	10	10							
Surrogate: p-Terphenyl	*92.73*			*80.0000*		*116*	*22 - 143*			
LCS (B7K0303-BS1)						Prepared: 11/10/2017 Analyzed: 11/10/2017				
DRO	1207.87	10	10	1000.00		121	30 - 133			
Surrogate: p-Terphenyl	*90.37*			*80.0000*		*113*	*22 - 143*			
Matrix Spike (B7K0303-MS1)			**Source: 1704013-01**			Prepared: 11/10/2017 Analyzed: 11/10/2017				
DRO	1170.73	10	10	1000.00	ND	117	13 - 148			
Surrogate: p-Terphenyl	*87.48*			*80.0000*		*109*	*22 - 143*			
Matrix Spike Dup (B7K0303-MSD1)			**Source: 1704013-01**			Prepared: 11/10/2017 Analyzed: 11/10/2017				
DRO	1175.10	10	10	1000.00	ND	118	13 - 148	0.373	20	
Surrogate: p-Terphenyl	*87.22*			*80.0000*		*109*	*22 - 143*			

Certificate of Analysis

Hushmand Associates, Inc.	Project Number : Sixth Street Viaduct PARC, LAC-17-001
250 Goddard	Report To : Nitha R. Nitharsan
Irvine , CA 92618	Reported : 11/16/2017

Volatile Organic Compounds by EPA 8260B - Quality Control

Analyte	Result (ug/kg)	PQL (ug/kg)	MDL (ug/kg)	Spike Level	Source Result	% Rec	% Rec Limits	RPD	RPD Limit	Notes
Batch B7K0249 - MSVOA_S										
Blank (B7K0249-BLK1)					Prepared: 11/9/2017 Analyzed: 11/9/2017					
1,1,1,2-Tetrachloroethane	ND	5.0	0.96							
1,1,1-Trichloroethane	ND	5.0	1.1							
1,1,2,2-Tetrachloroethane	ND	5.0	0.62							
1,1,2-Trichloroethane	ND	5.0	1.6							
1,1-Dichloroethane	ND	5.0	0.81							
1,1-Dichloroethene	ND	5.0	2.6							
1,1-Dichloropropene	ND	5.0	2.3							
1,2,3-Trichloropropane	ND	5.0	0.54							
1,2,3-Trichlorobenzene	ND	5.0	1.2							
1,2,4-Trichlorobenzene	ND	5.0	1.1							
1,2,4-Trimethylbenzene	ND	5.0	1.5							
1,2-Dibromo-3-chloropropane	ND	10	1.6							
1,2-Dibromoethane	ND	5.0	3.2							
1,2-Dichlorobenzene	ND	5.0	1.1							
1,2-Dichloroethane	ND	5.0	1.2							
1,2-Dichloropropane	ND	5.0	1.8							
1,3,5-Trimethylbenzene	ND	5.0	1.7							
1,3-Dichlorobenzene	ND	5.0	1.3							
1,3-Dichloropropane	ND	5.0	1.1							
1,4-Dichlorobenzene	ND	5.0	1.2							
2,2-Dichloropropane	ND	5.0	1.2							
2-Chlorotoluene	ND	5.0	1.6							
4-Chlorotoluene	ND	5.0	1.5							
4-Isopropyltoluene	ND	5.0	2.3							
Benzene	ND	5.0	0.64							
Bromobenzene	ND	5.0	1.1							
Bromochloromethane	ND	5.0	0.64							
Bromodichloromethane	ND	5.0	1.2							
Bromoform	ND	5.0	0.80							
Bromomethane	ND	5.0	2.5							
Carbon disulfide	ND	5.0	3.5							
Carbon tetrachloride	ND	5.0	1.2							
Chlorobenzene	ND	5.0	1.0							
Chloroethane	ND	5.0	1.1							
Chloroform	ND	5.0	0.82							
Chloromethane	ND	5.0	1.4							
cis-1,2-Dichloroethene	ND	5.0	0.67							
cis-1,3-Dichloropropene	ND	5.0	1.9							
Di-isopropyl ether	ND	5.0	0.55							
Dibromochloromethane	ND	5.0	1.0							
Dibromomethane	ND	5.0	1.6							

Certificate of Analysis

Hushmand Associates, Inc.	Project Number : Sixth Street Viaduct PARC, LAC-17-001
250 Goddard	Report To : Nitha R. Nitharsan
Irvine , CA 92618	Reported : 11/16/2017

Volatile Organic Compounds by EPA 8260B - Quality Control (cont'd)

Analyte	Result (ug/kg)	PQL (ug/kg)	MDL (ug/kg)	Spike Level	Source Result	% Rec	% Rec Limits	RPD	RPD Limit	Notes
Batch B7K0249 - MSVOA_S (continued)										
Blank (B7K0249-BLK1) - Continued					Prepared: 11/9/2017 Analyzed: 11/9/2017					
Dichlorodifluoromethane	ND	5.0	2.2							
Ethyl Acetate	ND	50	8.1							
Ethyl Ether	ND	50	6.1							
Ethyl tert-butyl ether	ND	5.0	0.67							
Ethylbenzene	ND	5.0	0.91							
Freon-113	ND	5.0	2.8							
Hexachlorobutadiene	ND	5.0	2.5							
Isopropylbenzene	ND	5.0	1.8							
m,p-Xylene	ND	10	1.5							
Methylene chloride	ND	5.0	2.3							
MTBE	ND	5.0	0.63							
n-Butylbenzene	ND	5.0	2.4							
n-Propylbenzene	ND	5.0	2.2							
Naphthalene	ND	5.0	0.97							
o-Xylene	ND	5.0	0.87							
sec-Butylbenzene	ND	5.0	2.3							
Styrene	ND	5.0	1.5							
tert-Amyl methyl ether	ND	5.0	0.59							
tert-Butanol	ND	100	19							
tert-Butylbenzene	ND	5.0	2.0							
Tetrachloroethene	ND	5.0	1.6							
Toluene	ND	5.0	0.94							
trans-1,2-Dichloroethene	ND	5.0	0.59							
trans-1,3-Dichloropropene	ND	5.0	2.1							
Trichloroethene	ND	5.0	3.1							
Trichlorofluoromethane	ND	5.0	1.4							
Vinyl acetate	ND	50	9.8							
Vinyl chloride	ND	5.0	1.7							
Surrogate: 1,2-Dichloroethane-d4	*40.45*			*50.0000*		*80.9*	*32 - 140*			
Surrogate: 4-Bromofluorobenzene	*51.51*			*50.0000*		*103*	*68 - 131*			
Surrogate: Dibromofluoromethan	*43.59*			*50.0000*		*87.2*	*49 - 134*			
Surrogate: Toluene-d8	*52.29*			*50.0000*		*105*	*75 - 132*			
LCS (B7K0249-BS1)					Prepared: 11/9/2017 Analyzed: 11/9/2017					
1,1,1,2-Tetrachloroethane	49.2700	5.0	0.96	50.0000		98.5	80 - 117			
1,1,1-Trichloroethane	44.1300	5.0	1.1	50.0000		88.3	70 - 122			
1,1,2,2-Tetrachloroethane	47.7500	5.0	0.62	50.0000		95.5	69 - 115			
1,1,2-Trichloroethane	52.3400	5.0	1.6	50.0000		105	74 - 120			
1,1-Dichloroethane	43.6200	5.0	0.81	50.0000		87.2	72 - 118			
1,1-Dichloroethene	39.5200	5.0	2.6	50.0000		79.0	61 - 124			
1,1-Dichloropropene	46.5900	5.0	2.3	50.0000		93.2	74 - 128			

Certificate of Analysis

Hushmand Associates, Inc.	Project Number : Sixth Street Viaduct PARC, LAC-17-001
250 Goddard	Report To : Nitha R. Nitharsan
Irvine , CA 92618	Reported : 11/16/2017

Volatile Organic Compounds by EPA 8260B - Quality Control (cont'd)

Analyte	Result (ug/kg)	PQL (ug/kg)	MDL (ug/kg)	Spike Level	Source Result	% Rec	% Rec Limits	RPD	RPD Limit	Notes
Batch B7K0249 - MSVOA_S (continued)										
LCS (B7K0249-BS1) - Continued					Prepared: 11/9/2017 Analyzed: 11/9/2017					
1,2,3-Trichloropropane	47.1600	5.0	0.54	50.0000		94.3	67 - 116			
1,2,3-Trichlorobenzene	49.3200	5.0	1.2	50.0000		98.6	86 - 127			
1,2,4-Trichlorobenzene	51.6800	5.0	1.1	50.0000		103	88 - 137			
1,2,4-Trimethylbenzene	52.6100	5.0	1.5	50.0000		105	78 - 125			
1,2-Dibromo-3-chloropropane	48.9500	10	1.6	50.0000		97.9	70 - 134			
1,2-Dibromoethane	49.7100	5.0	3.2	50.0000		99.4	73 - 127			
1,2-Dichlorobenzene	53.0400	5.0	1.1	50.0000		106	85 - 116			
1,2-Dichloroethane	47.3100	5.0	1.2	50.0000		94.6	65 - 120			
1,2-Dichloropropane	47.7100	5.0	1.8	50.0000		95.4	81 - 114			
1,3,5-Trimethylbenzene	51.7300	5.0	1.7	50.0000		103	76 - 125			
1,3-Dichlorobenzene	51.6200	5.0	1.3	50.0000		103	83 - 117			
1,3-Dichloropropane	48.5400	5.0	1.1	50.0000		97.1	79 - 119			
1,4-Dichlorobenzene	53.4300	5.0	1.2	50.0000		107	84 - 115			
2,2-Dichloropropane	44.3900	5.0	1.2	50.0000		88.8	72 - 121			
2-Chlorotoluene	49.6500	5.0	1.6	50.0000		99.3	76 - 120			
4-Chlorotoluene	49.1500	5.0	1.5	50.0000		98.3	77 - 122			
4-Isopropyltoluene	54.1800	5.0	2.3	50.0000		108	77 - 131			
Benzene	93.8100	5.0	0.64	100.000		93.8	78 - 115			
Bromobenzene	47.1500	5.0	1.1	50.0000		94.3	79 - 113			
Bromochloromethane	43.4800	5.0	0.64	50.0000		87.0	66 - 123			
Bromodichloromethane	47.9600	5.0	1.2	50.0000		95.9	79 - 112			
Bromoform	49.2500	5.0	0.80	50.0000		98.5	67 - 125			
Bromomethane	42.0500	5.0	2.5	50.0000		84.1	49 - 150			
Carbon disulfide	40.0300	5.0	3.5	50.0000		80.1	61 - 146			
Carbon tetrachloride	47.1600	5.0	1.2	50.0000		94.3	65 - 133			
Chlorobenzene	50.0300	5.0	1.0	50.0000		100	82 - 113			
Chloroethane	40.7000	5.0	1.1	50.0000		81.4	46 - 146			
Chloroform	44.4700	5.0	0.82	50.0000		88.9	73 - 116			
Chloromethane	40.5500	5.0	1.4	50.0000		81.1	46 - 158			
cis-1,2-Dichloroethene	42.5700	5.0	0.67	50.0000		85.1	72 - 121			
cis-1,3-Dichloropropene	47.1300	5.0	1.9	50.0000		94.3	79 - 123			
Di-isopropyl ether	45.2300	5.0	0.55	50.0000		90.5	67 - 125			
Dibromochloromethane	46.0600	5.0	1.0	50.0000		92.1	79 - 116			
Dibromomethane	48.1700	5.0	1.6	50.0000		96.3	72 - 117			
Dichlorodifluoromethane	36.5500	5.0	2.2	50.0000		73.1	38 - 168			
Ethyl Acetate	478.470	50	8.1	500.000		95.7	55 - 144			
Ethyl Ether	384.400	50	6.1	500.000		76.9	52 - 133			
Ethyl tert-butyl ether	45.1700	5.0	0.67	50.0000		90.3	68 - 126			
Ethylbenzene	111.120	5.0	0.91	100.000		111	79 - 116			
Freon-113	40.9500	5.0	2.8	50.0000		81.9	66 - 134			
Hexachlorobutadiene	54.5800	5.0	2.5	50.0000		109	84 - 133			
Isopropylbenzene	48.4700	5.0	1.8	50.0000		96.9	67 - 134			

Certificate of Analysis

Hushmand Associates, Inc.	Project Number : Sixth Street Viaduct PARC, LAC-17-001
250 Goddard	Report To : Nitha R. Nitharsan
Irvine , CA 92618	Reported : 11/16/2017

Volatile Organic Compounds by EPA 8260B - Quality Control (cont'd)

Analyte	Result (ug/kg)	PQL (ug/kg)	MDL (ug/kg)	Spike Level	Source Result	% Rec	% Rec Limits	RPD	RPD Limit	Notes
Batch B7K0249 - MSVOA_S (continued)										
LCS (B7K0249-BS1) - Continued						Prepared: 11/9/2017 Analyzed: 11/9/2017				
m,p-Xylene	109.590	10	1.5	100.000		110	78 - 126			
Methylene chloride	42.3100	5.0	2.3	50.0000		84.6	31 - 148			
MTBE	43.8300	5.0	0.63	50.0000		87.7	59 - 131			
n-Butylbenzene	57.8200	5.0	2.4	50.0000		116	75 - 141			
n-Propylbenzene	50.2000	5.0	2.2	50.0000		100	73 - 127			
Naphthalene	47.2600	5.0	0.97	50.0000		94.5	78 - 129			
o-Xylene	104.000	5.0	0.87	100.000		104	81 - 113			
sec-Butylbenzene	53.4200	5.0	2.3	50.0000		107	73 - 129			
Styrene	49.0000	5.0	1.5	50.0000		98.0	88 - 118			
tert-Amyl methyl ether	44.4400	5.0	0.59	50.0000		88.9	62 - 122			
tert-Butanol	230.120	100	19	250.000		92.0	36 - 142			
tert-Butylbenzene	51.4100	5.0	2.0	50.0000		103	74 - 126			
Tetrachloroethene	45.8600	5.0	1.6	50.0000		91.7	74 - 127			
Toluene	108.730	5.0	0.94	100.000		109	79 - 119			
trans-1,2-Dichloroethene	41.3700	5.0	0.59	50.0000		82.7	61 - 128			
trans-1,3-Dichloropropene	53.2200	5.0	2.1	50.0000		106	75 - 116			
Trichloroethene	47.0600	5.0	3.1	50.0000		94.1	76 - 123			
Trichlorofluoromethane	41.7000	5.0	1.4	50.0000		83.4	58 - 134			
Vinyl acetate	479.880	50	9.8	500.000		96.0	63 - 143			
Vinyl chloride	38.1900	5.0	1.7	50.0000		76.4	51 - 145			
Surrogate: 1,2-Dichloroethane-d4	*51.55*			*50.0000*		*103*	*32 - 140*			
Surrogate: 4-Bromofluorobenzene	*51.34*			*50.0000*		*103*	*68 - 131*			
Surrogate: Dibromofluoromethan	*49.98*			*50.0000*		*100*	*49 - 134*			
Surrogate: Toluene-d8	*52.77*			*50.0000*		*106*	*75 - 132*			
Matrix Spike (B7K0249-MS1)			**Source: 1703918-02**			Prepared: 11/9/2017 Analyzed: 11/9/2017				
1,1,1,2-Tetrachloroethane	41.5500	5.0	0.96	50.0000	ND	83.1	27 - 130			
1,1,1-Trichloroethane	40.3700	5.0	1.1	50.0000	ND	80.7	32 - 135			
1,1,2,2-Tetrachloroethane	44.8000	5.0	0.62	50.0000	ND	89.6	17 - 135			
1,1,2-Trichloroethane	44.3000	5.0	1.6	50.0000	ND	88.6	31 - 129			
1,1-Dichloroethane	39.5300	5.0	0.81	50.0000	ND	79.1	37 - 130			
1,1-Dichloroethene	36.7200	5.0	2.6	50.0000	ND	73.4	41 - 125			
1,1-Dichloropropene	40.6300	5.0	2.3	50.0000	ND	81.3	33 - 138			
1,2,3-Trichloropropane	44.7000	5.0	0.54	50.0000	ND	89.4	20 - 137			
1,2,3-Trichlorobenzene	38.9900	5.0	1.2	50.0000	13.1600	51.7	0 - 147			
1,2,4-Trichlorobenzene	79.4300	5.0	1.1	50.0000	42.3600	74.1	0 - 156			
1,2,4-Trimethylbenzene	36.9800	5.0	1.5	50.0000	ND	74.0	10 - 139			
1,2-Dibromo-3-chloropropane	43.0800	10	1.6	50.0000	ND	86.2	17 - 145			
1,2-Dibromoethane	41.2800	5.0	3.2	50.0000	ND	82.6	25 - 136			
1,2-Dichlorobenzene	35.8900	5.0	1.1	50.0000	ND	71.8	8 - 134			
1,2-Dichloroethane	40.1800	5.0	1.2	50.0000	ND	80.4	31 - 123			

Certificate of Analysis

Hushmand Associates, Inc.
250 Goddard
Irvine , CA 92618

Project Number : Sixth Street Viaduct PARC, LAC-17-001
Report To : Nitha R. Nitharsan
Reported : 11/16/2017

Volatile Organic Compounds by EPA 8260B - Quality Control (cont'd)

Analyte	Result (ug/kg)	PQL (ug/kg)	MDL (ug/kg)	Spike Level	Source Result	% Rec	% Rec Limits	RPD	RPD Limit	Notes
Batch B7K0249 - MSVOA_S (continued)										
Matrix Spike (B7K0249-MS1) - Continued			**Source: 1703918-02**		Prepared: 11/9/2017 Analyzed: 11/9/2017					
1,2-Dichloropropane	39.8500	5.0	1.8	50.0000	ND	79.7	38 - 123			
1,3,5-Trimethylbenzene	37.2400	5.0	1.7	50.0000	ND	74.5	10 - 139			
1,3-Dichlorobenzene	35.2000	5.0	1.3	50.0000	ND	70.4	8 - 134			
1,3-Dichloropropane	42.3100	5.0	1.1	50.0000	ND	84.6	34 - 130			
1,4-Dichlorobenzene	36.5300	5.0	1.2	50.0000	ND	73.1	10 - 134			
2,2-Dichloropropane	40.9500	5.0	1.2	50.0000	ND	81.9	36 - 133			
2-Chlorotoluene	38.2200	5.0	1.6	50.0000	ND	76.4	15 - 133			
4-Chlorotoluene	38.0500	5.0	1.5	50.0000	ND	76.1	13 - 135			
4-Isopropyltoluene	34.7700	5.0	2.3	50.0000	ND	69.5	2 - 146			
Benzene	78.6900	5.0	0.64	100.000	ND	78.7	40 - 123			
Bromobenzene	38.9800	5.0	1.1	50.0000	ND	78.0	18 - 132			
Bromochloromethane	38.6000	5.0	0.64	50.0000	ND	77.2	32 - 130			
Bromodichloromethane	40.3500	5.0	1.2	50.0000	ND	80.7	33 - 122			
Bromoform	42.3300	5.0	0.80	50.0000	ND	84.7	20 - 134			
Bromomethane	34.2300	5.0	2.5	50.0000	ND	68.5	35 - 140			
Carbon disulfide	36.1600	5.0	3.5	50.0000	ND	72.3	32 - 143			
Carbon tetrachloride	39.3200	5.0	1.2	50.0000	ND	78.6	23 - 144			
Chlorobenzene	40.5700	5.0	1.0	50.0000	ND	81.1	24 - 128			
Chloroethane	37.2000	5.0	1.1	50.0000	ND	74.4	35 - 135			
Chloroform	39.4000	5.0	0.82	50.0000	ND	78.8	36 - 126			
Chloromethane	35.6400	5.0	1.4	50.0000	ND	71.3	36 - 146			
cis-1,2-Dichloroethene	38.4800	5.0	0.67	50.0000	ND	77.0	31 - 136			
cis-1,3-Dichloropropene	40.1600	5.0	1.9	50.0000	ND	80.3	28 - 130			
Di-isopropyl ether	39.7000	5.0	0.55	50.0000	ND	79.4	32 - 133			
Dibromochloromethane	40.1900	5.0	1.0	50.0000	ND	80.4	30 - 129			
Dibromomethane	40.6200	5.0	1.6	50.0000	ND	81.2	28 - 126			
Dichlorodifluoromethane	34.6300	5.0	2.2	50.0000	ND	69.3	23 - 162			
Ethyl Acetate	388.780	50	8.1	500.000	ND	77.8	0 - 156			
Ethyl Ether	340.220	50	6.1	500.000	ND	68.0	33 - 128			
Ethyl tert-butyl ether	40.0100	5.0	0.67	50.0000	ND	80.0	33 - 138			
Ethylbenzene	88.9700	5.0	0.91	100.000	ND	89.0	22 - 132			
Freon-113	36.7100	5.0	2.8	50.0000	ND	73.4	31 - 140			
Hexachlorobutadiene	24.2200	5.0	2.5	50.0000	ND	48.4	0 - 150			
Isopropylbenzene	38.9300	5.0	1.8	50.0000	ND	77.9	15 - 144			
m,p-Xylene	83.0100	10	1.5	100.000	ND	83.0	19 - 138			
Methylene chloride	36.8700	5.0	2.3	50.0000	ND	73.7	9 - 145			
MTBE	39.3100	5.0	0.63	50.0000	ND	78.6	31 - 136			
n-Butylbenzene	32.8000	5.0	2.4	50.0000	ND	65.6	0 - 153			
n-Propylbenzene	37.4300	5.0	2.2	50.0000	ND	74.9	12 - 141			
Naphthalene	30.1100	5.0	0.97	50.0000	ND	60.2	0 - 145			
o-Xylene	83.7100	5.0	0.87	100.000	ND	83.7	20 - 129			
sec-Butylbenzene	34.9600	5.0	2.3	50.0000	ND	69.9	4 - 143			

Certificate of Analysis

Hushmand Associates, Inc.	Project Number : Sixth Street Viaduct PARC, LAC-17-001
250 Goddard	Report To : Nitha R. Nitharsan
Irvine , CA 92618	Reported : 11/16/2017

Volatile Organic Compounds by EPA 8260B - Quality Control (cont'd)

Analyte	Result (ug/kg)	PQL (ug/kg)	MDL (ug/kg)	Spike Level	Source Result	% Rec	% Rec Limits	RPD	RPD Limit	Notes
Batch B7K0249 - MSVOA_S (continued)										
Matrix Spike (B7K0249-MS1) - Continued			**Source: 1703918-02**		Prepared: 11/9/2017 Analyzed: 11/9/2017					
Styrene	38.8900	5.0	1.5	50.0000	ND	77.8	19 - 136			
tert-Amyl methyl ether	38.8300	5.0	0.59	50.0000	ND	77.7	30 - 128			
tert-Butanol	201.340	100	19	250.000	ND	80.5	22 - 146			
tert-Butylbenzene	36.0100	5.0	2.0	50.0000	ND	72.0	9 - 140			
Tetrachloroethene	36.5400	5.0	1.6	50.0000	ND	73.1	18 - 143			
Toluene	85.3300	5.0	0.94	100.000	ND	85.3	30 - 132			
trans-1,2-Dichloroethene	37.5300	5.0	0.59	50.0000	ND	75.1	32 - 134			
trans-1,3-Dichloropropene	44.0700	5.0	2.1	50.0000	ND	88.1	23 - 127			
Trichloroethene	40.1700	5.0	3.1	50.0000	ND	80.3	17 - 158			
Trichlorofluoromethane	39.9600	5.0	1.4	50.0000	ND	79.9	36 - 135			
Vinyl acetate	267.780	50	9.8	500.000	ND	53.6	0 - 154			
Vinyl chloride	36.8600	5.0	1.7	50.0000	ND	73.7	38 - 140			
Surrogate: 1,2-Dichloroethane-d4	*51.50*			*50.0000*		*103*	*32 - 140*			
Surrogate: 4-Bromofluorobenzene	*49.91*			*50.0000*		*99.8*	*68 - 131*			
Surrogate: Dibromofluoromethan	*49.03*			*50.0000*		*98.1*	*49 - 134*			
Surrogate: Toluene-d8	*50.54*			*50.0000*		*101*	*75 - 132*			
Matrix Spike Dup (B7K0249-MSD1)			**Source: 1703918-02**		Prepared: 11/9/2017 Analyzed: 11/9/2017					
1,1,1,2-Tetrachloroethane	39.6300	5.0	0.96	50.0000	ND	79.3	27 - 130	4.73	20	
1,1,1-Trichloroethane	38.4000	5.0	1.1	50.0000	ND	76.8	32 - 135	5.00	20	
1,1,2,2-Tetrachloroethane	41.8600	5.0	0.62	50.0000	ND	83.7	17 - 135	6.79	20	
1,1,2-Trichloroethane	41.6200	5.0	1.6	50.0000	ND	83.2	31 - 129	6.24	20	
1,1-Dichloroethane	36.6200	5.0	0.81	50.0000	ND	73.2	37 - 130	7.64	20	
1,1-Dichloroethene	33.3400	5.0	2.6	50.0000	ND	66.7	41 - 125	9.65	20	
1,1-Dichloropropene	38.0100	5.0	2.3	50.0000	ND	76.0	33 - 138	6.66	20	
1,2,3-Trichloropropane	41.5800	5.0	0.54	50.0000	ND	83.2	20 - 137	7.23	20	
1,2,3-Trichlorobenzene	34.7000	5.0	1.2	50.0000	13.1600	43.1	0 - 147	11.6	20	
1,2,4-Trichlorobenzene	67.8600	5.0	1.1	50.0000	42.3600	51.0	0 - 156	15.7	20	
1,2,4-Trimethylbenzene	33.6700	5.0	1.5	50.0000	ND	67.3	10 - 139	9.37	20	
1,2-Dibromo-3-chloropropane	41.7600	10	1.6	50.0000	ND	83.5	17 - 145	3.11	20	
1,2-Dibromoethane	39.5700	5.0	3.2	50.0000	ND	79.1	25 - 136	4.23	20	
1,2-Dichlorobenzene	33.1400	5.0	1.1	50.0000	ND	66.3	8 - 134	7.97	20	
1,2-Dichloroethane	39.6700	5.0	1.2	50.0000	ND	79.3	31 - 123	1.28	20	
1,2-Dichloropropane	38.6800	5.0	1.8	50.0000	ND	77.4	38 - 123	2.98	20	
1,3,5-Trimethylbenzene	33.9200	5.0	1.7	50.0000	ND	67.8	10 - 139	9.33	20	
1,3-Dichlorobenzene	31.6600	5.0	1.3	50.0000	ND	63.3	8 - 134	10.6	20	
1,3-Dichloropropane	40.7500	5.0	1.1	50.0000	ND	81.5	34 - 130	3.76	20	
1,4-Dichlorobenzene	33.0200	5.0	1.2	50.0000	ND	66.0	10 - 134	10.1	20	
2,2-Dichloropropane	38.9400	5.0	1.2	50.0000	ND	77.9	36 - 133	5.03	20	
2-Chlorotoluene	35.1400	5.0	1.6	50.0000	ND	70.3	15 - 133	8.40	20	
4-Chlorotoluene	34.9800	5.0	1.5	50.0000	ND	70.0	13 - 135	8.41	20	

Certificate of Analysis

Hushmand Associates, Inc.	Project Number : Sixth Street Viaduct PARC, LAC-17-001
250 Goddard	Report To : Nitha R. Nitharsan
Irvine , CA 92618	Reported : 11/16/2017

Volatile Organic Compounds by EPA 8260B - Quality Control (cont'd)

Analyte	Result (ug/kg)	PQL (ug/kg)	MDL (ug/kg)	Spike Level	Source Result	% Rec	% Rec Limits	RPD	RPD Limit	Notes
Batch B7K0249 - MSVOA_S (continued)										
Matrix Spike Dup (B7K0249-MSD1) - Continued			**Source: 1703918-02**		Prepared: 11/9/2017 Analyzed: 11/9/2017					
4-Isopropyltoluene	31.2900	5.0	2.3	50.0000	ND	62.6	2 - 146	10.5	20	
Benzene	75.4800	5.0	0.64	100.000	ND	75.5	40 - 123	4.16	20	
Bromobenzene	36.4200	5.0	1.1	50.0000	ND	72.8	18 - 132	6.79	20	
Bromochloromethane	37.5700	5.0	0.64	50.0000	ND	75.1	32 - 130	2.70	20	
Bromodichloromethane	38.5600	5.0	1.2	50.0000	ND	77.1	33 - 122	4.54	20	
Bromoform	39.4300	5.0	0.80	50.0000	ND	78.9	20 - 134	7.09	20	
Bromomethane	32.4700	5.0	2.5	50.0000	ND	64.9	35 - 140	5.28	20	
Carbon disulfide	33.1600	5.0	3.5	50.0000	ND	66.3	32 - 143	8.66	20	
Carbon tetrachloride	37.2300	5.0	1.2	50.0000	ND	74.5	23 - 144	5.46	20	
Chlorobenzene	38.0600	5.0	1.0	50.0000	ND	76.1	24 - 128	6.38	20	
Chloroethane	34.7700	5.0	1.1	50.0000	ND	69.5	35 - 135	6.75	20	
Chloroform	37.6100	5.0	0.82	50.0000	ND	75.2	36 - 126	4.65	20	
Chloromethane	33.0900	5.0	1.4	50.0000	ND	66.2	36 - 146	7.42	20	
cis-1,2-Dichloroethene	36.4600	5.0	0.67	50.0000	ND	72.9	31 - 136	5.39	20	
cis-1,3-Dichloropropene	38.7500	5.0	1.9	50.0000	ND	77.5	28 - 130	3.57	20	
Di-isopropyl ether	38.4400	5.0	0.55	50.0000	ND	76.9	32 - 133	3.22	20	
Dibromochloromethane	37.9300	5.0	1.0	50.0000	ND	75.9	30 - 129	5.79	20	
Dibromomethane	37.5800	5.0	1.6	50.0000	ND	75.2	28 - 126	7.77	20	
Dichlorodifluoromethane	32.3900	5.0	2.2	50.0000	ND	64.8	23 - 162	6.68	20	
Ethyl Acetate	356.140	50	8.1	500.000	ND	71.2	0 - 156	8.76	20	
Ethyl Ether	324.850	50	6.1	500.000	ND	65.0	33 - 128	4.62	20	
Ethyl tert-butyl ether	39.0300	5.0	0.67	50.0000	ND	78.1	33 - 138	2.48	20	
Ethylbenzene	84.0800	5.0	0.91	100.000	ND	84.1	22 - 132	5.65	20	
Freon-113	34.7700	5.0	2.8	50.0000	ND	69.5	31 - 140	5.43	20	
Hexachlorobutadiene	22.9500	5.0	2.5	50.0000	ND	45.9	0 - 150	5.38	20	
Isopropylbenzene	36.1400	5.0	1.8	50.0000	ND	72.3	15 - 144	7.43	20	
m,p-Xylene	77.5000	10	1.5	100.000	ND	77.5	19 - 138	6.87	20	
Methylene chloride	34.8900	5.0	2.3	50.0000	ND	69.8	9 - 145	5.52	20	
MTBE	38.2400	5.0	0.63	50.0000	ND	76.5	31 - 136	2.76	20	
n-Butylbenzene	29.3900	5.0	2.4	50.0000	ND	58.8	0 - 153	11.0	20	
n-Propylbenzene	34.6200	5.0	2.2	50.0000	ND	69.2	12 - 141	7.80	20	
Naphthalene	27.9900	5.0	0.97	50.0000	ND	56.0	0 - 145	7.30	20	
o-Xylene	79.0300	5.0	0.87	100.000	ND	79.0	20 - 129	5.75	20	
sec-Butylbenzene	30.8300	5.0	2.3	50.0000	ND	61.7	4 - 143	12.6	20	
Styrene	36.6100	5.0	1.5	50.0000	ND	73.2	19 - 136	6.04	20	
tert-Amyl methyl ether	37.9000	5.0	0.59	50.0000	ND	75.8	30 - 128	2.42	20	
tert-Butanol	221.980	100	19	250.000	ND	88.8	22 - 146	9.75	20	
tert-Butylbenzene	32.9100	5.0	2.0	50.0000	ND	65.8	9 - 140	9.00	20	
Tetrachloroethene	35.1900	5.0	1.6	50.0000	ND	70.4	18 - 143	3.76	20	
Toluene	82.9500	5.0	0.94	100.000	ND	83.0	30 - 132	2.83	20	
trans-1,2-Dichloroethene	35.0400	5.0	0.59	50.0000	ND	70.1	32 - 134	6.86	20	
trans-1,3-Dichloropropene	41.5000	5.0	2.1	50.0000	ND	83.0	23 - 127	6.01	20	

Certificate of Analysis

Hushmand Associates, Inc.	Project Number : Sixth Street Viaduct PARC, LAC-17-001
250 Goddard	Report To : Nitha R. Nitharsan
Irvine , CA 92618	Reported : 11/16/2017

Volatile Organic Compounds by EPA 8260B - Quality Control (cont'd)

Analyte	Result (ug/kg)	PQL (ug/kg)	MDL (ug/kg)	Spike Level	Source Result	% Rec	% Rec Limits	RPD	RPD Limit	Notes
Batch B7K0249 - MSVOA_S (continued)										
Matrix Spike Dup (B7K0249-MSD1) - Continued			**Source: 1703918-02**		Prepared: 11/9/2017 Analyzed: 11/9/2017					
Trichloroethene	37.5800	5.0	3.1	50.0000	ND	75.2	17 - 158	6.66	20	
Trichlorofluoromethane	36.9600	5.0	1.4	50.0000	ND	73.9	36 - 135	7.80	20	
Vinyl acetate	227.450	50	9.8	500.000	ND	45.5	0 - 154	16.3	20	
Vinyl chloride	33.7900	5.0	1.7	50.0000	ND	67.6	38 - 140	8.69	20	
Surrogate: 1,2-Dichloroethane-d4	*50.40*			*50.0000*		*101*	*32 - 140*			
Surrogate: 4-Bromofluorobenzene	*49.91*			*50.0000*		*99.8*	*68 - 131*			
Surrogate: Dibromofluoromethan	*48.53*			*50.0000*		*97.1*	*49 - 134*			
Surrogate: Toluene-d8	*50.88*			*50.0000*		*102*	*75 - 132*			

Certificate of Analysis

Hushmand Associates, Inc.		Project Number :	Sixth Street Viaduct PARC, LAC-17-001
250 Goddard		Report To :	Nitha R. Nitharsan
Irvine , CA 92618		Reported :	11/16/2017

Notes and Definitions

R	RPD value outside acceptance criteria. Calculation is based on raw values.
M1	Matrix spike recovery outside of acceptance limit. The analytical batch was validated by the laboratory control sample.
ND	Analyte is not detected at or above the Practical Quantitation Limit (PQL). When client requests quantitation against MDL, analyte is not detected at or above the Method Detection Limit (MDL)
PQL	Practical Quantitation Limit
MDL	Method Detection Limit
NR	Not Reported
RPD	Relative Percent Difference
CA2	CA-ELAP (CDPH)
OR1	OR-NELAP (OSPHL)

Notes:
(1) The reported MDL and PQL are based on prep ratio variation and analytical dilution.
(2) The suffix [2C] of specific analytes signifies that the reported result is taken from the instrument's second column.
(3) Results are wet unless otherwise specified.

ADVANCED ATECHNOLOGY LABORATORIES
3275 Walnut Ave., Signal Hill, CA 90755
Tel: (562) 989-4045 ● Fax: (562) 989-4040

CHAIN OF CUSTODY RECORD

Page 1 of 1

Instruction: Complete all shaded areas.

For Laboratory Use Only — ATLCOC Ver:20130715

Method of Transport		Sample Conditions Upon Receipt					
		Condition	Y	N	Condition	Y	N
☐Client	☑ATL	1. CHILLED	☑	☐	5. # OF SAMPLES MATCH COC	☑	☐
☐FedEx	☐OnTrac	2. HEADSPACE (VOA)	N/A	☐	6. PRESERVED	☑	☐
☐GSO		3. CONTAINER INTACT	☑	☐	7. COOLER TEMP, deg C:	5.9	
☐Other:		4. SEALED	☐	☐			

ice in bottle

CUSTOMER

Company:	Hushmand Associates, Inc	Address:	250 Goddard	Tel:	(949) 777-1266
		City:	Irvine	State: CA Zip: 92618	Fax: (949) 777-1276

SEND REPORT TO:		SEND INVOICE TO: ☑same as SEND REPORT TO	
Attn:	Nitha R. Nitharsan	Attn:	
Email:	nitha@haieng.com	Email:	
Company:	Hushmand Associates, Inc.	Company:	
Address:	250 Goddard	Address:	
City:	Irvine	City:	
State:	CA	State:	
Zip:	92618	Zip:	

PROJECT SAMPLES

Project Name:	Sixth Street Viaduct PARC	Quote #:	E17E51
Project No.:	LAC-17-001	PO #:	
Sampler:	RN	Special Instructions/Comments:	

ITEM	Lab No.	Sample Description: Sample ID / Location	Date	Time	6010 / 7000 (Title 22 Metals)	8015 (DRO)	8015 (GRO)	8081 (Organochlorine Pesticides)	8082 (PCBs)	8260 / 624 (Volatiles)	8270 (Semi-volatiles)	TO-15	Enter Custom Analysis	Enter Custom Analysis	Enter Custom Analysis	Enter Custom Analysis	Enter Custom Analysis	Enter Custom Analysis	Enter Custom Analysis	Enter Custom Analysis	Enter Custom Analysis	Enter Custom Analysis	Select Soil Matrix (SOIL)	Select Solid Matrix	Select Water Matrix	Select Wastewater Matrix	Select Aqueous Matrix	Enter Custom Matrix	TAT	Container: #	Container: Type	Container: Material	Preservative	REMARKS
1	703996-01	Drum 1 - Sample 1	11/8/17	9:47a	X	X	X		X	X													X							1	5	1		
2	-02	Drum 1 - Sample 2	11/8/17	9:49a	X	X	X		X	X													X							1	5	1		
3	-03	Drum 2 - Sample 1	11/8/17	1:52p	X	X	X		X	X													X							1	5	1		
4	-04	Drum 2 - Sample 2	11/8/17	1:54p	X	X	X		X	X													X							1	5	1		
5																																		
6																																		
7																																		
8																																		
9																																		
10																																		

QA/QC: ☐Routine ☐Caltrans ☐Legal ☐RWQCB ☐Level IV

Preservative: 1=HCl; 2=HNO3; 3=H2SO4; 4 = 4C; 5=Zn (Ac)2; 6=NaOH; 7=NA2S2O3

Material: 1=Glass; 2=Plastic; 3=Metal

Type: 1=Tube; 2=VOA; 3=Liter; 4=Pint; 5=Jar; 6=Tedlar; 7 = Canister

DRAFT

TERMS

1. Sample receiving hours: 7:30 AM to 7:30 PM Monday - Friday; Saturday 8:00 AM to 12:00 PM.
2. Samples submitted AFTER 3:00 PM are considered received the following business day at 8:00 AM.
3. The following turnaround time conditions apply:
   - TAT = 0 : 300% Surcharge SAME BUSINESS DAY if received by 9:00 AM
   - TAT = 1 : 100% Surcharge NEXT BUSINESS DAY (COB 5:00 PM)
   - TAT = 2 : 50% Surcharge 2ND BUSINESS DAY (COB 5:00 PM)
   - TAT = 3 : 30% Surcharge 3RD BUSINESS DAY (COB 5:00 PM)
   - TAT = 4 : 20% Surcharge 4TH BUSINESS DAY (COB 5:00 PM)
   - TAT = 5 : NO SURCHARGE 5th BUSINESS DAY (COB 5:00 PM)
4. Weekend, holiday, after-hours work --- ask for quote.
5. Subcontract TAT is 10 - 15 business days. Projects requiring shorter TATs will incur a surcharge respective to the subcontract lab --- ask for quote.
6. Liquid and solid samples will be disposed of after 45 calendar days from receipt of samples; air samples will be disposed of after 14 calendar days after receipt of samples.
7. Electronic records maintained for five (5) years from report date.
8. Hard copy reports will be disposed of after 45 calendar days from report date.
9. Storage and Report Fees:
   - Liquid & solid samples: Complimentary storage for forty-five (45) calendar days from receipt of samples; $2/sample/month if extended storage or hold is requested.
   - Air samples: Complimentary storage for ten (10) calendar days from receipt of samples; $20/ sample/week if extended storage is requested.
   - Hard copy and regenerated reports/EDDs: $17.50 per hard copy report requested; $50.00 per regenerated/reformatted report; $35 per reprocessed EDD.
10. Rush TCLP/STLC samples: add 2 days to analysis TAT for extraction procedure.
11. Unanalyzed samples will incur a disposal fee of $7 per sample.

As the authorized agent of the company above, I hereby purchase laboratory services from ATL as shown above and hereby guarantee payment as quoted.

Nitha R. Nitharsan — Submitter Print Name

Signature

CUSTODY

Relinquished by: (Signature and Printed Name)	Date:	Time:	Received by: (Signature and Printed Name)	Date:	Time:
R. Nitharsan	11/8/17	15:50	Sophal Ken	11/8/17	15:50
Sophal Ken	11/9/17	17:15		11/10/17	17:15

DRAFT

Marnellie Ramos

From: Carmen Aguila
Sent: Thursday, November 9, 2017 8:30 AM
To: Fernando Diwa
Cc: Marnellie Ramos; customer.relations@atlglobal.com
Subject: FW: LAC-17-001, Sixth Street Viaduct PARC - Soil Samples
Attachments: ATL_COC (signed).pdf

Please log accordingly.

From: Naresh Bellana [mailto:naresh@haieng.com]
Sent: Wednesday, November 08, 2017 5:56 PM
To: Rachelle Arada
Cc: Carmen Aguila; Nitha Nitharsan; Naz Mokarram
Subject: LAC-17-001, Sixth Street Viaduct PARC - Soil Samples

Hi Rachelle & Carmen,

One of your representatives picked up four (4) soil samples from our Irvine office today (11/08) evening . We completed COC and Test assignment for the samples as attached. We would like to make changes to the test assignment as follows:

- Exclude PCBs for all the samples.

Please let us know if you have any questions.

Thank you,

Naresh Bellana, MS, PE
Senior Staff Engineer

Hushmand Associates, Inc.
250 Goddard
Irvine, CA 92618

p. (949) 777-1266
d. (949) 777-1275
f. (949) 777-1276

25 Years of Service Excellence

ADVANCED TECHNOLOGY LABORATORIES
3275 Walnut Ave., Signal Hill, CA 90755
Tel: (562) 989-4045 • Fax: (562) 989-4040

CHAIN OF CUSTODY RECORD

Page 1 of 1

Instruction: Complete all shaded areas.

For Laboratory Use Only — ATLCOC Ver:20130715

Method of Transport: ☐Client ☑ATL ☐Fedex ☐DaTrac ☐SSO ☐Other

Sample Conditions Upon Receipt

Condition	Y	N	Condition	Y	N
1 CHILLED	☐	☐	5 # OF SAMPLES MATCH COC	☐	☐
2 HEADSPACE (VOA)	☐	☐	6 PRESERVED	☐	☐
3 CONTAINER INTACT	☐	☐	7 COOLER TEMP, deg C		
4 SEALED	☐	☐			

CUSTOMER

Company: Hushmand Associates, Inc
Address: 250 Goddard
City: Irvine State: CA Zip: 92618
Tel: (949) 777-1266
Fax: (949) 777-1276

SEND REPORT TO:
Attn: Nitha R. Nitharsan Email: nitha@haieng.com
Company: Hushmand Associates, Inc.
Address: 250 Goddard
City: Irvine State: CA Zip: 92618

SEND INVOICE TO: ☑same as SEND REPORT TO
Attn: Email:
Company:
Address:
City: State: Zip:

PROJECT SAMPLES

Project Name: Sixth Street Viaduct PARC
Project No.: LAC-17-001
Sampler: RN
Quote #: E17E51
PO #:
Special Instructions/Comments:

ITEM	Lab No.	Sample Description: Sample ID / Location	Date	Time	6010 / 7000 (Title 22 Metals)	8015 (DRO)	8015 (GRO)	8081 (Organochlorine Pesticides)	8082 (PCBs)	8260 / 624 (Volatiles)	8270 (Semi-volatiles)	TO-15	Enter Custom Analysis	Select Soil Matrix (SOIL)	Select Solid Matrix	Select Water Matrix	Select Wastewater Matrix	Select Aqueous Matrix	Enter Custom Matrix	TAT	Container: #	Container: Type: 1=Tube; 2=VOA; 3=Liter; 4=Pint; 5=Jar; 6=Bellar; 7=Canister	Container: Material: 1=Glass, 2=Plastic, 3=Metal	Preservative: 1=HCl; 2=HNO3; 3=H2SO4; 4=4C; 5=Zn (NaO); 6=MeOH; 7=NaHSO3	REMARKS
1		Drum 1 - Sample 1	11/8/17	11:47am	X	X	X		X	X				X							1	5	1		
2		Drum 1 - Sample 2	11/8/17	11:49pm	X	X	X		X	X				X							1	5	1		
3		Drum 2 - Sample 1	11/8/17	11:52pm	X	X	X		X	X				X							1	5	1		
4		Drum 2 - Sample 2	11/8/17	11:54pm	X	X	X		X	X				X							1	5	1		
5																									
6																									
7																									
8																									
9																									
10																									

QA/QC: ☐Routine ☐Caltrans ☐Legal ☐RWQCB ☐Level IV

TERMS

1. Sample receiving hours: 7:30 AM to 7:30 PM Monday - Friday, Saturday 8:00 AM to 12:00 PM
2. Samples submitted AFTER 3:00 PM are considered received the following business day at 8:00 AM
3. The following turnaround time conditions apply:
   - TAT = 0 : 300% Surcharge SAME BUSINESS DAY if received by 9:00 AM
   - TAT = 1 : 100% Surcharge NEXT BUSINESS DAY (COB 5:00 PM)
   - TAT = 2 : 50% Surcharge 2ND BUSINESS DAY (COB 5:00 PM)
   - TAT = 3 : 30% Surcharge 3RD BUSINESS DAY (COB 5:00 PM)
   - TAT = 4 : 20% Surcharge 4TH BUSINESS DAY (COB 5:00 PM)
   - TAT = 5 : NO SURCHARGE 5th BUSINESS DAY (COB 5:00 PM)
4. Weekend, holiday, after-hours work — ask for quote
5. Subcontract TAT is 10 - 15 business days. Projects requiring shorter TATs will incur a surcharge respective to the subcontract lab — ask for quote
6. Liquid and solid samples will be disposed of after 45 calendar days from receipt of samples, air samples will be disposed of after 14 calendar days after receipt of samples
7. Electronic records maintained for five (5) years from report date
8. Hard copy reports will be disposed of after 45 calendar days from report date
9. Storage and Report Fees:
   - Liquid & solid samples: Complimentary storage for forty-five (45) calendar days from receipt of samples; $2/sample/month if extended storage or hold is requested
   - Air samples: Complimentary storage for ten (10) calendar days from receipt of samples; $20/ sample/week if extended storage is requested
   - Hard copy and regenerated reports/EDDs: $17.50 per hard copy report requested; $50.00 per regenerated/reformatted report; $35 per reprocessed EDD
10. Rush TCLP/STLC samples: add 2 days to analysis TAT for extraction procedure
11. Unanalyzed samples will incur a disposal fee of $7 per sample

As the authorized agent of the company above, I hereby purchase laboratory services from ATL as shown above and hereby guarantee payment as quoted.

Nitha R. Nitharsan — Submitter Print Name
Nitha — Signature

CUSTODY

Relinquished by: (Signature and Printed Name)	Date:	Time:	Received by: (Signature and Printed Name)	Date:	Time:
R. Nitha	11/8/17	15:50	[illegible]	11/8/17	1550
Relinquished by: (Signature and Printed Name)	Date:	Time:	Received by: (Signature and Printed Name)	Date:	Time:
Relinquished by: (Signature and Printed Name)	Date:	Time:	Received by: (Signature and Printed Name)	Date:	Time:

DRAFT

DRAFT

DISPOSAL MANIFEST

DRAFT

Manifest

SOIL SAFE OF CA – TPST
Non-Hazardous Soils

↓ Manifest # ↓

Date of Shipment:	Responsible for Payment:	Transport Truck #:	Facility #:	Approval Number:	Load #
12/22/17		979/476	A07	48167	001

Generator and/or Consultant

Generator's Name and Billing Address: CITY OF LOS ANGELES SIXTH STREET VIADUCT DIVISION BUREAU OF ENGINEERING, DEPARTMENT OF PUBLIC WORKS 585 S. SANTA FE AVENUE LOS ANGELES, CA 90013	Generator's Phone #: 213-864-4329 Person to Contact: FAX#:	 Customer Account Number
Consultant's Name and Billing Address:	Consultant's Phone #: Person to Contact: FAX#:	 Customer Account Number
Generation Site (Transport from): *(name & address)* SIXTH STREET VIADUCT PARC 585 S. SANTA FE AVENUE LOS ANGELES, CA 90013	Site Phone #: Person to Contact: FAX#:	
Designated Facility (Transport to): *(name & address)* SOIL SAFE 12328 HIBISCUS AVENUE ADELANTO, CA 92301	Facility Phone #: (800) 862-8001 Person to Contact: JOE PROVANSAL FAX#: (760) 246-8004	
Transporter Name and Mailing Address: BELSHIRE 25971 TOWNE CENTRE DRIVE FOOTHILL RANCH, CA 92610 BESI: 288487	Transporter's Phone #: 949-460-5200 Person to Contact: LARRY MOOTHART FAX#: 949-460-5210	CAR000183913 450847 Customer Account Number

Description of Soil	Moisture Content	Contaminated by:	Approx. Qty:	Description of Delivery	Gross Weight	Tare Weight	Net Weight
Sand ☐ Organic ☐ Clay ☐ Other ☐	0 - 10% ☐ 10 - 20% ☐ 20% - over ☐	Gas ☐ Diesel ☐ Other ☐	2 DM	Soil	39480	38300	1180
Sand ☐ Organic ☐ Clay ☐ Other ☐	0 - 10% ☐ 10 - 20% ☐ 20% - over ☐	Gas ☐ Diesel ☐ Other ☐					.59

List any exception to items listed above: Scale Ticket # 138804

Generator's and/or consultant's certification: I/We certify that the soil referenced herein is taken entirely from those soils descried in the Soil Data Sheet completed and certified by me/us for the Generation Site shown above and nothing has been added or done to such soil that would alter it in any way.

Print or Type Name: Generator ☐ Consultant ☐ Larry Moothart of BESI on behalf of generator

Signature and date: Month 11 Day 16 Year 17

Transporter

Transporter's certification: I/We acknowledge receipt of the soil referenced above and certify that such soil is being delivered in exactly the same condition as when received. I/We further certify that the soil is being directly transported from the Generation Site to the Designated Facility without off-loading, adding to, subtracting from or in any way delaying delivery to such site.

Print or Type Name: [illegible]

Signature and date: Month 11 Day 16 Year 17

Recycling Facility

Discrepancies:

Recycling Facility certifies the receipt of the soil covered by this manifest except as noted above:

Print or Type Name: J. PROVANSAL

Signature and date: 12-22-17

Please print or type.

585SSAN/1718531

TRANSPORTER COPY

DRAFT

APPENDIX C
SOIL MANAGEMENT REPORT

DRAFT

WALLACE LABORATORIES, LLC
365 Coral Circle
El Segundo, CA 90245
phone (310) 615-0116 fax (310) 640-6863

November 13, 2017

Naz Mokarram, naz@haieng.com
Hushmand Associates, Inc.
250 Goddard
Irvine, CA 92618

RE: City of LA Sixth Street Viaduct Parc, Job No. LAC-17-001
Soil Management Report

Dear Naz,

Summary Data

description	pH	lime	salinity	chloride
Boring No GB-1, Bulk 1, 0-6"	7.47	no	1.15	25
Boring No GB-3, Bulk 1, 0-6"	10.47	slight	0.95	9
Boring No GB-6, Bulk 1, 0-6"	8.46	yes	3.68	290
Boring No GB-7, Bulk 1, 3-9"	8.02	low	3.16	54
Boring No GB-8, Bulk 1, 0-6"	10.81	yes	1.46	38
Boring No GB-10, Bulk 1, 0-6"	8.89	yes	3.09	212
average	9.02		2.25	105

description	IR	organic matter	texture	gravel	SAR
Boring No GB-1, Bulk 1, 0-6"	3.02	0.52%	gravelly loamy sand	26.7%	1.6
Boring No GB-3, Bulk 1, 0-6"	1.77	0.79%	sandy loam	18.0%	6.1
Boring No GB-6, Bulk 1, 0-6"	1.49	1.01%	gravelly sandy loam	21.0%	5.3
Boring No GB-7, Bulk 1, 3-9"	0.64	1.80%	gravelly sandy loam	47.4%	2.7
Boring No GB-8, Bulk 1, 0-6"	2.02	0.61%	gravelly loamy sand	28.7%	21.0
Boring No GB-10, Bulk 1, 0-6"	0.87	0.68%	gravelly sandy loam	26.1%	6.9
average	1.64	0.90%	gravelly sandy loam	28.0%	7.3

Alkalinity - The average pH is strongly alkaline at 9.02. The lowest pH is Boring No GB-1, Bulk 1, 0-6" at 7.47. The second lowest pH is 8.02 for Boring No GB-7, Bulk 1, 3-9". Samples Boring No GB-3, Bulk 1, 0-6" and Boring No GB-8, Bulk 1, 0-6" have pH values at 10.47 and 10.81, respectively.

Ideally for best growth, the soil pH should normally be in the range of about 6.5 to 7.5. At least, the pH should be less than about 8.0. The pH can be frequently lowered with the addition of gypsum if needed and with deep irrigation. Since the pH scale is logarithmic, pH value 10.81 is 646 times more alkaline than pH 8.0.

Limestone is present in Borings No. GB-6, GB-8 and GB-10. It induces iron deficiency in acid-loving plants.

Salinity - The average salinity of electroconductivity is 2.25 millimho/cm. Salinity ranges from 0.95 to 3.68 millimho/cm. Chloride is moderate at 105 parts per million in the saturation extract on average. The highest level of chloride is 290 parts per million in the saturation extract is Boring No GB-6, Bulk 1, 0-6". Salt-sensitive plants need chloride below about 150 parts per million.

Resistivity at 100% saturation ranges from 272 to 1,053 ohms-cm in saturation extract

Soluble chloride ranges from 3 to 87 mg/kg.

Sodicity- The average SAR (sodium adsorption ratio) is 7.3. SAR ranges from 1.6 to 21.0 for sample Boring No GB-8, Bulk 1, 0-6". Plant available sodium is

High sodium and high SAR values have adverse effects on soil physical properties including reduced water percolation, decreased soil aggregate stability, increased clay dispersion, increased swelling of expandable clays, increased surface crusting and reduced soil tilth. High sodium also restricts the uptake of competitive ions such as potassium. Normally the SAR should be less than 3. Soils are defined as being sodic if the SAR is over 13. Gypsum can be applied followed with leaching to lower the concentration of sodium and SAR.

Soil Organic matter - The average soil organic matter is 0.90% on a dry weight basis. Soil organic matter ranges from 0.52% for sample Boring No GB-1, Bulk 1, 0-6" to 1.80% for sample Boring No GB-7, Bulk 1, 3-9".

Moderate levels of soil organic matter such as about 3% to 5% are beneficial. The benefits of moderate soil organic matter include:

> Maintenance of physical properties, soil aggregation, soil aeration, reduction in erosion potential, sufficient hydraulic conductivity, etc.
> Increases water availability
> Provides for cation-exchange and base saturation
> Supplies available nutrients

Texture - The average soil texture is gravelly sandy loam. Gravel is 28.0% on average. The content of gravel ranges from 18.0% to 47.4%.

Soils are defined as being gravelly if the gravel content is over 20%. The presence of elevated levels of gravel is undesirable. Gravel dilutes the soil fertility. Soil analyses are made with soil fraction that does not contain gravel. If the amount of gravel were taken into account, the actual fertility would be lower than what is reported. Gravel does not supply nutrients nor does it holds moisture. Gravel blocks root growth. Gravel is not permeable. The path of travel of roots, drainage and air exchange is increased, is tortuous and is circuitous in the presence of large amounts of elevated gravel which restricts rooting, drainage and soil aeration.

Rate of hydraulic conductivity- The average estimated rate of water percolation based on Soil Water Characteristics version 6.02.74 model developed by Keith Saxton of the USDA is moderate at 1.64 inches per hour for normal soil compaction. The model is based on the soil texture, percent gravel and percent soil organic matter. The estimated rates of water percolation range from 0.64 to 3.02 inches per hour.

Fertility - On average, phosphorus and potassium are modest. Nitrogen is low in one sample. Phosphorus is low or modest in four samples. Potassium is low or modest in four samples. Boron is modest. Iron, manganese, zinc, and copper are sufficient. Magnesium is low or modest in three samples. Samples Boring No GB-6, Bulk 1, 0-6" and Boring No GB-7, Bulk 1, 3-9" contain gypsum.

The highest soluble sulfate is 1,890 mg/kg.

Heavy Metals - Plant available lead is modest for these samples. The concentrations of plant available lead ranges from 3 to 13 parts per million. Normally for good plant growth, the concentration of plant available needs to be less than about 30 parts per million.

Recommendations

Use the more suitable soils with lower alkalinity and with lower levels of gravel. If possible reduce the gravel content to less than 20%.

General soil preparation on a square foot basis. Broadcast the following uniformly; rates are per 1,000 square feet for a 6-inch lift. Incorporate them homogeneously 6" deep.

Potassium sulfate (0-0-50) – 10 pounds for Borings GB-6, GB-7 and GB-10
K-Mag (sul-po-mag) (0-0-22) - 12 pounds for Borings GB-1, BG-3, and GB-8
Triple superphosphate (0-45-0) – 4 pounds except Borings GB-1 and GB-3
agricultural gypsum - 10 pounds for Boring GB-1, and 30 pounds for GB-3, GB-8 and GB-9
Organic soil amendment - about 4 cubic yards, sufficient for 3% to 5% soil organic matter

For the preparation on a volume basis, homogeneously blend the following materials into the soil. Rates are expressed per cubic yard:

Potassium sulfate (0-0-50) – 1/2 pound for Borings GB-6, GB-7 and GB-10
K-Mag (sul-po-mag) (0-0-22) - 1/2 pound for Borings GB-1, BG-3, and GB-8
Triple superphosphate (0-45-0) – 1/4 pound except Borings GB-1 and GB-3
agricultural gypsum – 1/2 pound for Boring GB- and, 1.5 pounds for GB-3, GB-8 and GB-9
Organic soil amendment - about 20% by volume, sufficient for 3% to 5% soil organic matter

DRAFT

Organic soil amendment:

1. Humus material shall have an acid-soluble ash content of no less than 6% and no more than 20%. Organic matter shall be at least 50% on a dry weight basis.
2. The pH of the material shall be between 6 and 7.5.
3. The salt content shall be less than 10 millimho/cm @ 25° C. on a saturated paste extract.
4. Boron content of the saturated extract shall be less than 1.0 part per million.
5. Silicon content (acid-insoluble ash) shall be less than 50%.
6. Calcium carbonate shall not be present if to be applied on alkaline soils.
7. Types of acceptable products are composts, manures, mushroom composts, straw, alfalfa, peat mosses etc. low in salts, low in heavy metals, free from weed seeds, free of pathogens and other deleterious materials.
8. Composted wood products are conditionally acceptable [stable humus must be present]. Wood based products are not acceptable which are based on red wood or cedar.
9. Sludge-based materials are not acceptable.
10. Carbon:nitrogen ratio is less than 25:1.
11. The compost shall be aerobic without malodorous presence of decomposition products.
12. The maximum particle size shall be 0.5 inch, 80% or more shall pass a No. 4 screen for soil amending.

Maximum total permissible pollutant concentrations in amendment in parts per million on a dry weight basis:

arsenic	12	copper	100	selenium	10
cadmium	15	lead	150	silver	10
chromium	200	mercury	10	vanadium	50
cobalt	50	molybdenum	20	zinc	250
		nickel	100		

Higher amounts of salinity or boron may be present if the soils are to be preleached to reduce the excess or if the plant species will tolerate the salinity and/or boron.

Preleach amended soils prior to planting where needed. Lower the pH to less than 8.0. Lower the SAR to less than 3. Reduce the salinity to less than 3 millimho/cm. Afterwards, apply ammonium sulfate (21-0-0) at 5 pounds per 1,000 square feet if nitrogen is low. Ammonium sulfate (21-0-0) helps to acidify soil.

Monitor the site with periodic testing. Adjust the maintenance program as needed.

Sincerely,

Garn A. Wallace, Ph. D.
GAW:n

WALLACE LABS
365 Coral Circle
El Segundo, CA 90245
(310) 615-0116

SOILS REPORT

DRAFT

Print Date Nov 13, 2017 Receive Date 11/10/17

Location City of LA Sixth Street Viaduct Parc, Job No. LAC-17-001

Requester Naz Mokarram, Hushmand Associates, Inc.

graphic interpretation: * very low, ** low, *** moderate

ammonium bicarbonate/DTPA

* * * * high, * * * * * very high

extractable - mg/kg soil
Interpretation of data
low medium high

	Sample ID Number	17-317-02		17-317-03		17-317-04	
	Sample Description	Boring No GB-1, Bulk 1, 0-6"		Boring No GB-3, Bulk 1, 0-6"		Boring No GB-6, Bulk 1, 0-6"	
	elements		graphic		graphic		graphic
0 - 7 8-15 over 15	phosphorus	58.53	*****	17.45	*****	5.79	**
0-60 60 -120 121-180	potassium	133.05	****	119.36	***	37.63	**
0 - 4 4 - 10 over 10	iron	38.50	*****	40.85	*****	10.54	****
0- 0.5 0.6- 1 over 1	manganese	0.72	***	1.46	****	1.21	****
0 - 1 1 - 1.5 over 1.5	zinc	11.80	*****	1.80	****	2.21	****
0- 0.2 0.3- 0.5 over 0.5	copper	2.65	****	1.74	****	1.68	****
0- 0.2 0.2- 0.5 over 1	boron	0.19	**	0.18	**	0.26	***
	calcium	311.02	***	253.77	***	296.53	***
	magnesium	39.76	**	41.11	**	84.01	***
	sodium	32.35	*	86.71	**	250.66	****
	sulfur	21.14	*	26.75	**	120.96	**
	molybdenum	0.02	**	0.02	***	0.05	***
	nickel	0.17	*	0.18	*	0.08	*
The following trace	aluminum	0.22	*	0.08	*	n d	*
elements may be toxic	arsenic	0.13	*	0.13	*	0.19	*
The degree of toxicity	barium	0.75	*	0.26	*	0.59	*
depends upon the pH of	cadmium	0.05	*	0.03	*	0.03	*
the soil, soil texture,	chromium	0.07	*	0.06	*	0.02	*
organic matter, and the	cobalt	0.02	*	0.06	*	0.02	*
concentrations of the	lead	12.95	***	5.23	***	4.26	**
individual elements as	lithium	n d	*	n d	*	0.01	*
well as to their interactions.	mercury	n d	*	n d	*	n d	*
	selenium	0.09	*	0.10	*	0.10	*
The pH optimum depends	silver	n d	*	n d	*	n d	*
upon soil organic	strontium	1.40	*	0.76	*	1.19	*
matter and clay content-	tin	0.28	*	0.24	*	0.19	*
for clay and loam soils:	vanadium	0.28	*	0.28	*	0.37	*
under 5.2 is too acidic							
6.5 to 7 is ideal	Saturation Extract						
over 9 is too alkaline	pH value	7.47	***	10.47	*****	8.46	****
The ECe is a measure of	ECe (milli-	1.15	***	0.95	***	3.68	****
the soil salinity:	mho/cm)		millieq/l		millieq/l		millieq/l
1-2 affects a few plants	calcium	104.7	5.2	40.0	2.0	430.2	21.5
2-4 affects some plants,	magnesium	16.5	1.4	2.0	0.2	58.4	4.8
> 4 affects many plants.	sodium	66.9	2.9	146.6	6.4	439.4	19.1
	potassium	36.5	0.9	19.7	0.5	5.9	0.1
	cation sum		10.4		9.0		45.6
problems over 150 ppm	chloride	25	0.7	9	0.3	290	8.2
good 20 - 30 ppm	nitrate as N	58	4.1	48	3.4	48	3.5
	phosphorus as P	1.3	0.0	0.3	0.0	0.1	0.0
toxic over 800	sulfate as S	69.6	4.4	54.1	3.4	320.8	20.1
	anion sum		9.2		7.1		31.7
toxic over 1 for many plants	boron as B	0.19	*	0.10	*	0.14	*
increasing problems start at 3	SAR	1.6	**	6.1	****	5.3	***
est. gypsum requirement-lbs./1,000 square feet		6		15		43	
calculated infiltration rate inches/hour		3.02		1.77		1.49	
soil texture		gravelly loamy sand	gravel > 2 mm	sandy loam	gravel > 2 mm	gravelly sandy loam	gravel > 2 mm
sand		81.0%	26.7%	68.8%	18.0%	70.0%	21.0%
silt		14.8%	gravel > 1/4 inch	23.3%	gravel > 1/4 inch	19.8%	gravel > 1/4 inch
clay		4.2%	21.5%	7.9%	14.9%	10.2%	7.3%
lime (calcium carbonate)		no	gravel > 1/2 inch	slight	gravel > 1/2 inch	yes	gravel > 1/2 inch
Total nitrogen		0.018%	20.1%	0.023%	10.4%	0.019%	2.3%
Total organic carbon		0.258%		0.393%		0.506%	
carbon:nitrogen ratio		14.6		17.3		27.1	
organic matter based on carbon		0.52%		0.79%		1.01%	
moisture content of soil		1.0%		2.6%		2.9%	
half saturation percentage		13.4%		15.8%		15.0%	

Elements are expressed as mg/kg dry soil or mg/l for saturation extract.
pH and ECe are measured in a saturation paste extract. nd means not detected.
Analytical data determined on soil fraction passing a 2 mm sieve.

WALLACE LABS
365 Coral Circle
El Segundo, CA 90245
(310) 615-0116

SOILS REPORT

DRAFT

Print Date Nov 13, 2017 Receive Date 11/10/17

Location City of LA Sixth Street Viaduct Parc, Job No. LAC-17-001

Requester Naz Mokarram, Hushmand Associates, Inc.

graphic interpretation: * very low, ** low, *** moderate

ammonium bicarbonate/DTPA

* * * * high, * * * * * very high

extractable - mg/kg soil
Interpretation of data
low medium high

Sample ID Number	17-317-05		17-317-06		17-317-07	
Sample Description	Boring No GB-7, Bulk 1, 3-9"		Boring No GB-8, Bulk 1, 0-6"		Boring No GB-10, Bulk 1, 0-6"	
elements		graphic		graphic		graphic
phosphorus	10.31	***	9.17	***	8.13	***
potassium	39.65	**	82.73	***	33.79	**
iron	14.81	****	34.68	*****	10.50	****
manganese	1.41	****	2.59	****	2.61	****
zinc	9.07	****	4.62	****	2.97	****
copper	2.51	****	2.00	****	2.56	****
boron	0.21	***	0.38	***	0.27	***
calcium	316.43	***	300.54	***	322.72	***
magnesium	228.53	*****	16.25	*	137.69	****
sodium	213.81	****	299.75	****	381.35	*****
sulfur	630.13	****	57.48	**	105.46	**
molybdenum	0.06	***	0.03	***	0.08	***
nickel	0.48	*	0.10	*	0.10	*
aluminum	n d	*	0.05	*	n d	*
arsenic	0.12	*	0.28	*	0.16	*
barium	0.10	*	0.37	*	0.51	*
cadmium	0.14	*	0.04	*	0.03	*
chromium	n d	*	0.11	*	0.02	*
cobalt	0.01	*	0.05	*	0.04	*
lead	2.58	**	6.14	***	4.88	**
lithium	0.03	*	0.01	*	0.03	*
mercury	n d	*	n d	*	n d	*
selenium	0.11	*	0.06	*	0.08	*
silver	n d	*	n d	*	n d	*
strontium	0.36	*	0.73	*	1.56	*
tin	0.20	*	0.17	*	0.15	*
vanadium	0.28	*	0.49	*	0.51	*

The following trace elements may be toxic. The degree of toxicity depends upon the pH of the soil, soil texture, organic matter, and the concentrations of the individual elements as well as to their interactions.

The pH optimum depends upon soil organic matter and clay content- for clay and loam soils: under 5.2 is too acidic 6.5 to 7 is ideal over 9 is too alkaline

Saturation Extract

pH value	8.02	****	10.81	*****	8.89	*****
ECe (milli-mho/cm)	3.16	****	1.46	***	3.09	****
		millieq/l		millieq/l		millieq/l
calcium	474.9	23.7	19.5	1.0	283.6	14.2
magnesium	101.0	8.3	2.1	0.2	37.7	3.1
sodium	251.8	10.9	365.3	15.9	466.9	20.3
potassium	5.6	0.1	8.3	0.2	4.0	0.1
cation sum		43.2		17.2		37.7
chloride	54	1.5	38	1.1	212	6.0
nitrate as N	5	0.4	32	2.3	52	3.7
phosphorus as P	0.2	0.0	0.2	0.0	0.2	0.0
sulfate as S	410.3	25.6	136.5	8.5	261.8	16.4
anion sum		27.5		11.9		26.1
boron as B	0.10	*	0.12	*	0.11	*
SAR	2.7	**	21.0	*****	6.9	****
est. gypsum requirement-lbs./1,000 square feet	36		51		65	

calculated infiltration rate inches/hour	0.64		2.02		0.87	
soil texture	gravelly sandy loam	gravel > 2 mm	gravelly loamy sand	gravel > 2 mm	gravelly sandy loam	gravel > 2 mm
sand	62.4%	47.4%	82.8%	28.7%	66.3%	26.1%
silt	22.6%	gravel > 1/4 inch	9.7%	gravel > 1/4 inch	20.1%	gravel > 1/4 inch
clay	15.1%	36.1%	7.5%	17.1%	13.6%	16.4%
lime (calcium carbonate)	low	gravel > 1/2 inch	yes	gravel > 1/2 inch	yes	gravel > 1/2 inch
Total nitrogen	0.019%	28.8%	0.012%	10.2%	0.015%	7.1%
Total organic carbon	0.902%		0.307%		0.340%	
carbon:nitrogen ratio	48.6		25.7		23.0	
organic matter based on carbon	1.80%		0.61%		0.68%	
moisture content of soil	5.1%		2.3%		3.3%	
half saturation percentage	18.2%		13.6%		18.2%	

Elements are expressed as mg/kg dry soil or mg/l for saturation extract.
pH and ECe are measured in a saturation paste extract. nd means not detected.
Analytical data determined on soil fraction passing a 2 mm sieve.

BUREAU OF ENGINEERING

SIXTH STREET PARK, ARTS AND RIVER CONNECTIVITY IMPROVEMENTS (PARC)
WORK ORDER NO. E700235D

ATTACHMENT NO. 2
SOIL REMEDIATION

BID SUBMITTAL
JULY 2022

City of Los Angeles
California

Department of Public Works
Bureau of Engineering

REMEDIAL ACTION PLAN

PARC PROJECT
SIXTH STREET VIADUCT REPLACEMENT
LOS ANGELES, CALIFORNIA

February 24, 2022

Prepared For:

CITY OF LOS ANGELES
Bureau of Engineering | Department of Public Works
585 S. Santa Fe Avenue
Los Angeles, CA 90013

For Submittal To:

LOS ANGELES COUNTY FIRE DEPARTMENT
Health Hazardous Materials Division
Site Mitigation Unit
5825 Rickenbacker Road
Commerce, CA 90040

Prepared By:

TETRA TECH BAS
21700 Copley Drive, Suite 200
Diamond Bar, California 91765
(909) 860-7777

TETRA TECH
BAS

REMEDIAL ACTION PLAN

PARC PROJECT

SIXTH STREET VIADUCT REPLACEMENT

LOS ANGELES, CALIFORNIA

February 24, 2022

Prepared By:



Marina Grigorova, P.E.

Prepared For:

CITY OF LOS ANGELES
Bureau of Engineering | Department of Public Works
585 S. Santa Fe Avenue
Los Angeles, CA 90013

For Submittal To:

LOS ANGELES COUNTY FIRE DEPARTMENT
Health Hazardous Materials Division
Site Mitigation Unit
5825 Rickenbacker Road
Commerce, CA 90040

Prepared By:

TETRA TECH BAS
21700 Copley Drive, Suite 200
Diamond Bar, California 91765
(909) 860-7777

TETRA TECH
BAS

SIXTH STREET VIADUCT REPLACEMENT PROJECT
PARC IMPROVEMENTS
REMEDIAL ACTION PLAN

TABLE OF CONTENTS

SECTION			Page
1.0	**INTRODUCTION**		**1-1**
	1.1	Site Location and Description	1-1
	1.2	Brief Site and Project History	1-1
	1.3	Project and Remedial Action Objectives	1-2
	1.4	Project Organization	1-3
2.0	**BACKGROUND**		**2-1**
	2.1	Environmental Setting	2-1
	2.2	Project Background	2-1
		2.2.1 AOC 1A	2-2
		2.2.2 AOC 2A	2-3
		2.2.3 AOC 5	2-4
		2.2.4 AOC 6	2-5
		2.2.5 AOC 7	2-6
		2.2.6 AOC 8	2-7
		2.2.7 AOC 9	2-8
		2.2.8 Summary	2-8
3.0	**CLEAN-UP LEVELS**		**3-1**
	3.1	Soil Clean-up Goals	3-1
	3.2	Soil Gas Clean-up Goals	3-2
4.0	**SOIL REMEDIATION**		**4-1**
	4.1	Preliminary Activities	4-1
		4.1.1 Regulatory Notifications and Approvals	4-2
	4.2	Site Controls	4-4
	4.3	Excavation Activities	4-5
	4.4	Confirmatory Sampling	4-6
		4.4.1 Sampling Procedures	4-7
		4.4.2 Analytical Testing	4-7
	4.5	Waste Classification	4-8
	4.6	Waste Stabilization	4-9
	4.7	Stockpiling, Loading, Transportation, and Disposal	4-9
	4.8	Backfill and Compaction	4-10
	4.9	Duration of Soil Remediation	4-11
	4.10	Reporting	4-11

SIXTH STREET VIADUCT REPLACEMENT PROJECT
PARC IMPROVEMENTS
REMEDIAL ACTION PLAN

TABLE OF CONTENTS

SECTION			Page
5.0	**SVE PILOT TEST IN AOC 8**		**5-1**
	5.1	Exploratory Borings	5-1
		5.1.1 Subsurface Soil Sampling	5-3
		5.1.2 Analytical Testing	5-4
	5.2	Soil Vapor Excavation Well Installation	5-4
	5.3	Soil Vapor Extraction Pilot Test	5-5
	5.4	Pilot Test Documentation and Reporting	5-7
6.0	**SVE IMPLEMENTATION IN AOC 7**		**6-1**
	6.1	Vapor Excavation Wells	6-1
		6.1.1 Exploratory Borings	6-1
		6.1.2 Subsurface Soil Sampling	6-2
		6.1.3 Soil Analytical Testing	6-2
		6.1.4 Soil Vapor Excavation Well Installation	6-3
	6.2	SVE Conveyance Piping	6-3
	6.3	SVE Extraction/Treatment System	6-4
	6.4	Operations and Monitoring	6-5
		6.4.1 Routine Operation and Monitoring Procedures	6-6
		6.4.2 Pulse Operation and Rebound Assessment	6-6
		6.4.3 Completion Assessment	6-7
	6.5	SVE Duration and Reporting	6-7
7.0	**OVERALL PROJECT DURATION, SEQUENCING AND REPORTING**		**7-1**

FIGURES

Figure 1 Site Location and Vicinity Map
Figure 2 Site Map
Figure 3 PARC Improvements Plan
Figure 4 AOC Location Map (Index Map)
Figure 5 Map of AOCs 1 and 2 Showing Data Exceeding Cleanup Criteria
Figure 6 Map of AOC 5 Showing Data Exceeding Cleanup Criteria
Figure 7A Map of AOC 6 Showing Data Exceeding Cleanup Criteria (western portion)
Figure 7B Map of AOC 6 Showing Data Exceeding Cleanup Criteria (eastern portion)
Figure 8A Map of AOC 7 Showing Soil Data Exceeding Cleanup Criteria
Figure 8B Map of AOC 7 Showing Soil Gas Data Exceeding Cleanup Criteria

TABLE OF CONTENTS

Figures, continued

Figure 9 Map of AOCs 8 and 9 Showing Data Exceeding Cleanup Criteria
Figure 10 Soil Remediation Approach for AOCs 1 and 2
Figure 11 Soil Remediation Approach for AOC 5
Figure 12A Soil Remediation Approach for Western Portion of AOC 6
Figure 12B Soil Remediation Approach for Eastern Portion of AOC 6
Figure 13 Soil Remediation Approach for AOC 7
Figure 14 Soil Remediation Approach for AOCs 8 and 9
Figure 15 Proposed SVE Approach for AOC 8
Figure 16 Proposed SVE Approach for AOC 7
Figure 17A Preliminary SVE System for AOC 7
Figure 17B SVE System Details
Figure 17C SVE System Details
Figure 18 Schedule

APPENDICES

Appendix A Excerpts from HAI Hazmat Report (May 2019)

1.0 INTRODUCTION

Tetra Tech has been retained by the City of Los Angeles to prepare a *Remedial Action Plan* (RAP) for the Sixth Street PARC (Park, Arts, River and Connectivity Improvements) Project, proposed to be located in Downtown Los Angeles upon completion of the Sixth Street Viaduct Replacement Project (Figure 1, Site Location and Vicinity Map). This RAP is prepared to summarize the background information regarding the PARC site and provide a scope of work for remediation of impacted soil and soil vapor underlying the site. This RAP is prepared in accordance with the requirements of the Los Angeles County Fire Department Site Mitigation Unit (SMU); discussions and meetings between the City of Los Angeles, SMU and Tetra Tech, and the Voluntary Oversight/Remedial Action Agreement between the City of Los Angeles and the SMU of September 2017.

1.1 SITE LOCATION AND DESCRIPTION

The PARC site is a 12-acre project, proposed to be located under, along and adjacent to Sixth Street and Whittier Boulevard, between Mateo Street on the west and Highway 101 on the east (Figure 2, Site Map). The purpose of the PARC project is to provide open and recreational space, connecting Boyle Heights, the Arts District and the Los Angeles River, which would be accessible via improved streets, intersections, bike lanes and from the viaduct via accessible ramps and stairs. The proposed PARC Improvements are shown on Figure 3.

The PARC project site is located within an area encompassing mostly commercial and industrial properties. The Los Angeles River bisects the project approximately at a point of transition of Sixth Street into Whittier Boulevard. Multiple railroad tracks, operated by different railroad companies, are located immediately adjacent to the channelized Los Angeles River on both sides.

1.2 BRIEF SITE AND PROJECT HISTORY

The Sixth Street Viaduct Replacement Project is currently being constructed to replace the original structure built in 1932. Although known for its iconic image and architecture around the world due countless movies, music videos and TV commercials, the original structure was determined to be seismically deficient and required replacement.

The new Viaduct, referred to as "Ribbon of Light", is expected to be completed in the Summer of 2022. Once the new structure is complete, construction of PARC Improvements will take place.

As part of PARC planning, multiple investigations of areas, which will become portions of the PARC, took place. As described in detail in the *Final Report on Environmental Site Investigations*, prepared by Hushmand and Associates, Inc (HAI) in May 2019 (SI Report), site investigations identified seven (7) Areas of Concern (AOCs) requiring remediation. In addition, a few AOCs were further subdivided into several sub-areas, distinguished by type of impacts. Overall, various areas of the site were found to be impacted by heavy metals (mostly, lead, cadmium, copper and arsenic), petroleum hydrocarbons (primarily in the diesel range), and VOCs (mostly, perchloroethylene or PCE). For remediation purposes, these impacts were categorized as follows: RCRA hazardous soil, non-RCRA hazardous soil, both soil gas and non-RCRA hazardous soil, and soil gas impacts only.

A detailed review of site background information related to all AOCs requiring remediation is provided in Section 2.0.

1.3 PROJECT AND REMEDIAL ACTION OBJECTIVES

The goal of the activities described in this RAP is to remediate soil and soil vapor beneath the PARC site. The goal of this RAP is to provide a detailed scope of work for mitigation of soil and soil vapor impacts underlying the site.

The Remedial Action Objectives (RAOs) are to reduce soil and soil vapor concentrations and control migration of VOCs, thus reducing the potential for intrusion of VOCs into breathable air, as well as reducing the inhalation exposure and associated human health risk to levels within the established thresholds and/or risk management range for the proposed recreational use of the property.

The clean-up goals (i.e., the thresholds at which RAOs will be considered achieved) are discussed in Section 3.0.

1.4 PROJECT ORGANIZATION

Regulatory oversight for this project is provided through a Voluntary Oversight/ Remedial Action Agreement (September 2017) and the Unified Program Agency (UPA) alliance between the City of Los Angeles and Los Angeles County Fire Department/SMU. Involved parties can be reached as follows:

Organization	Contact	Phone Number	e-mail address
City of Los Angeles	Gary Lam	(213) 694-4329	gary.lam@lacity.org
Los Angeles County SMU	Richard Clark	(323) 890-4035	richard.clark@fire.lacounty.gov
Remediation Contractor & Consultant	To Be Determined. Once the RAP implementation contractor is selected by the City, the County will be provided their contact information		

.

2.0 BACKGROUND

A detailed review of site investigation information is included in the SI Report (HAI, May 7, 2019), including its Appendix E, Human Health Risk Assessment (HHRA, April 2019, prepared by Fehling Group LLC). A summary of site background information, as it pertains to the proposed remedial activities at the site, is provided in the following sections.

2.1 ENVIRONMENTAL SETTING

The PARC site is located in Downtown Los Angeles, in the western part of Los Angeles County, California, in the northeast portion of the Central Plain of the Los Angeles Basin. The project site is located in a region with Holocene age Quaternary alluvium deposits consisting of sand, silt and gravel.

Based on investigations conducted at and in the general area of the project, the site is underlain by 5 to 20 feet of fill, followed by regional alluvial deposits. The fill consists mostly of loose to medium dense silty sand to poorly graded sand with silt. The fill is underlain by generally dense to very dense coarse-grained materials, comprising sands, silty sands, gravelly sands, sandy gravels, cobbles and possibly boulders.

Depth to groundwater beneath the site is expected to vary and is likely to be first encountered at depths greater than 50 feet below ground surface (bgs). As such, it is highly unlikely that groundwater would be encountered during implementation of remedial actions described herein.

The elevation of the PARC site, albeit slightly variable throughout the full extent of the project, is approximately 250 feet above mean sea level (MSL).

Portions of the project are located within City of Los Angeles designated Methane or Methane Buffer Zones.

2.2 PROJECT BACKGROUND

As mentioned in Section 1.2, the PARC project site has been the subject of various investigations, which have identified the presence of heavy metals, petroleum constituents and/or VOCs in soil and/or soil vapor beneath the site. As part of the conducted investigations, the site was subdivided into multiple areas of concern (AOCs), as shown on Figure 4, with some AOCs further split into sub-areas.

As a result of the final round of investigations and the HHRA, seven (7) AOCs, or portions thereof, were identified as requiring remediation: 1A, 2A, 5, 6, 7, 8 and 9. In addition, AOCs 6, 7 and 8 were further subdivided into several sub-areas, distinguished by type of impacts. The AOCs requiring remediation are discussed in detail in the foregoing subsections. The discussions in Sections 2.2.1 through 2.2.7 focus on those constituents of concern (COCs), which were detected at concentrations above site screening levels and/or calculated to exceed human health risk criteria (for either non-cancer or cancer end-points). A complete summary of all detections, including those that were not remediation "triggers", is included in Appendix A (Pertinent Excerpts from the SI Report and HHRA). The site screening levels and the human health risk criteria are discussed in further detail in Section 3.0.

As part of the HHRA, COCs were evaluated for the following potential routes of exposure:

- Inhalation of VOC vapors in indoor air (for a hypothetical residential receptor; although no occupied structures are included in the proposed development)
- Inhalation of VOC vapors in outdoor air during trenching activities (construction worker only)
- Inhalation of wind-eroded soil particulates in outdoor air (non-VOCs only)
- Dermal contact with soil (non-VOCs only)
- Incidental ingestion of soil

2.2.1 AOC 1A

AOC 1A is located at the western end of the project (West Park), between Mateo Street and Santa Fe Avenue, as shown on Figure 4. This portion of the PARC is anticipated to consist of open recreational areas, including lawn and landscaped areas, a dog play and adult fitness areas (Figure 3).

The impacts within AOC 1A are estimated to extend across approximately 1.5 acres, to depths of between 1.0 and 3.5 ft bgs. Shallow subsurface soil was determined to be impacted with heavy metals and petroleum hydrocarbons, as detailed on Figure 5 and summarized below:

- Lead was detected at total concentrations of up to 860 mg/Kg – well above the site screening criteria of 80 mg/Kg[1]. All detected concentrations were below the California Total Threshold Limit Concentration (TTLC), of 1,000 mg/Kg, but soluble fractions of up to 51 mg/L (i.e., exceeding the California Soluble Threshold Limit Concentration (STLC) of 5 mg/L) were reported for numerous samples. Leachable fractions were below the federal Toxicity Characteristic Leaching Potential (TCLP) limit of 5 mg/L. Based on STLC exceedances, soil represented by these results is classified as non-RCRA California hazardous waste for removal and disposal purposes.
- Total Petroleum Hydrocarbons (TPH) of diesel range (TPH-diesel) were detected in two samples, at concentrations of 63 and 110 mg/Kg. The latter detection was determined to present a slightly elevated non-cancer risk [with a hazard quotient (HQ) of 1.2] to a hypothetical residential receptor.

Neither soil gas nor ambient air were sampled within AOC 1.

The presumptive remedy for AOC 1A is excavation and off-site disposal of impacted soil. Excavation is anticipated to generate approximately 4,000 cubic yards (cy) of non-RCRA California hazardous soil.

2.2.2 AOC 2A

AOC 2 is located east of AOC 1, approximately between Santa Fe Avenue and the railroad tracks on the west side of the river (Figure 4). This portion of the PARC, referred to as the Arts Plaza, is anticipated to consist of a sloped walk to the Los Angeles river, an outdoor stage and open-air terraces (Figure 3).

For investigation purposes, AOC 2 was subdivided into sub-areas A, B and C. Only the very northeastern corner of AOC 2A was found to be impacted at levels requiring remediation. Approximately 2,000 square feet of the upper six (6) feet of soil within AOC 2A were found to be impacted with lead (170 mg/Kg)[2] and TPH. As summarized on Figure 5, TPH of gasoline, diesel and oil ranges were found at a combined concentration of 430 mg/Kg (including 370 mg/Kg of TPH-gas, which exceeded the risk evaluation criteria).

[1] DTSC Screening Level (SL) for lead in a residential land-use scenario. Refer to Section 3.0 for further discussion of applicable screening levels.

[2] It should be noted that sample with 170 mg/Kg of total lead was not analyzed for either soluble or leachable fractions, and thus determination that soil from this AOC should be categorized as non-RCRA hazardous waste appears to be a conservative assumption based on the results of more complete testing for similar samples collected at other locations around the site.

Numerous soil gas samples and one ambient air sample were collected from AOC 2. The ambient air samples did not contain detectable concentrations of any target analytes. The soil gas samples were found to contain detectable concentrations of TPH-gas, as well as petroleum- and/or chlorinated VOCs, including benzene and PCE. However, the HHRA concluded that detected soil gas concentrations would not present an elevated vapor intrusion risk to potential site users, and remediation of soil gas would not be required.

Similar to AOC 1A, the presumptive remedy for northeastern corner of AOC 2A is excavation and off-site disposal of impacted soil. Excavation is anticipated to generate approximately 450 cy of lead- and petroleum-impacted soil.

2.2.3 AOC 5

AOC 5 is located east of the Los Angeles River and west of Mission Road, within the River Gateway portion of the project (Figure 4). As part of the PARC development, AOC 5 is anticipated to be improved with landscaping, a skateboard area and a ramp (Figure 3).

The Central portion of AOC 5, north of the new bridge alignment, was determined to be impacted with lead. Slightly elevated TPH-diesel concentrations were found in 1-foot samples within both north and south portions of AOC 5. However, the impacts were only marginally above the site screening level and/or risk evaluation criteria for a hypothetical residential receptor (Figure 6). Neither soil gas nor ambient air were sampled within AOC 5.

In the SI report (HAI, May 2019), for the purposes of conservative estimating and planning, AOC 5 impacts were assumed be non-RCRA hazardous (although lead concentrations in the analyzed samples did not exceed either the TTLC or the STLC standards). The impacts were estimated to extend to a depth of four (4) ft bgs across an approximately 11,000 square foot (sf) area. Should this soil be excavated (a presumed remedy), the volume of waste would be approximately 1,600 cy (unless clean overburden is segregated). In addition, targeted removals of TPH-diesel impacts are estimated to result in 1- to 2-foot deep excavations across two areas, totaling approximately 5,000 square feet.

2.2.4 AOC 6

Continuing east along the viaduct, AOC 6 lies between Mission Road and Anderson Street, within the East Park area (Figure 4). This is one of the largest PARC areas and is proposed to be developed with multiple athletic fields, a playground, landscaped and picnic areas, and a restroom facility (Figure 3).

Based on the results of investigations, summarized on Figure 7A (western portion of AOC 6) and Figure 7B (eastern portion of AOC 6), this area was divided into five sub-areas for the purposes of remediation:

1) HAI Boring 6-2 sub-area (central portion of AOC 6). At this location, the surficial sample (collected at 0.5 feet bgs) was found to contain 90 mg/Kg of total lead (i.e., above the screening level of 80 mg/Kg). Both soluble and leachable lead fractions were below applicable STLC and TCLP standards. No other constituents of concern were found at levels above screening or risk criteria. If removed from the site, soil associated with available data for boring 6-2, to an estimated depth of 0.75 ft bgs, should be categorized as non-hazardous waste.
2) HAI Boring 6-3 sub-area (east-central portion of AOC 6). Soil samples collected from boring 6-3 were found to contain total lead of up to 4,300 mg/Kg, with a soluble fraction of up to 270 mg/L and a leachable fraction of up to 7.3 mg/L, thus exceeding TTLC, STLC and TCLP standards, respectively. As such, soil associated with this data would be classified as RCRA-hazardous waste if excavated and removed for disposal. Although only based on one soil boring, HAI estimated the extent of the RCRA-hazardous impacts around boring 6-3 to be approximately 12,000 square feet and four (4) feet deep.
3) HAI Borings 6-4, 6-5 and L-6 sub-area (eastern portion of AOC 6). Testing results for these three locations, as presented in Figure 7A, indicate three different types of impacts:
    a. Around boring 6-4, soil is impacted with lead (94 mg/Kg), above the site screening level of 80 mg/Kg, and thus requires removal. Due to a soluble fraction concentration of 5.4 mg/L, which exceeds the STLC, such soil should be classified as non-RCRA California hazardous waste if excavated and removed for disposal. The soil at this location also contained up to 26 mg/Kg of arsenic, which is likewise above its site screening level of 12 mg/Kg.
    b. Soil at location 6-5 contained up to 400 mg/Kg total lead, also exceeding the site screening level, but none of the hazardous waste standards were exceeded. Waste represented by these samples should be classified as non-hazardous lead-impacted soil.
    c. Boring L-6, located between HAI boring locations 6-4 and 6-5, contained concentrations of TPH-diesel (6,600 mg/Kg) above the human health risk criteria; Aroclor 1260 (0.24 mg/Kg), marginally above the human health risk criteria; total lead (200 mg/Kg) above the site screening level, soluble lead

(11 mg/L) above its STLC, and arsenic concentrations up to 26 mg/Kg. On the basis of the STLC exceedance for lead, soil represented by these results would be classified as non-RCRA California hazardous waste upon removal.

These results suggest highly heterogeneous impacts (as would be expected for shallow soil in an urban environment). Therefore, further delineation of impacts will need to be performed as part of remediation. The overall extent of this sub-area is estimated to be approximately 12,000 square feet and approximately two (2) feet deep, which, upon excavation, would result in about 900 cy of waste.

4) Parcel 18.1 sub-Area (southeast corner of AOC 6). At the corner of Anderson Street and Whittier Boulevard, HAI delineated a separate sub-area referred to as Parcel 18.1, which was determined to have impacts in excess of the federal TCLP standards. As shown on Figure 7B, multiple soil samples were collected from parcel 18.1, revealing lead concentrations in excess of all applicable hazardous waste standards at most locations (with total lead of up to 13,900 mg/Kg). Impacts are estimated to extend to 4.5 feet bgs over an area of approximately 16,000 square feet. Implementation of the presumptive remedy of excavation with off-site disposal would therefore result in approximately 2,700 cy of RCRA-hazardous waste.

5) Parcel 18.2 sub-area (northeast corner of AOC 6). Parcel 18.2 is located north of parcel 18.1 (Figure 7B), and was designated by HAI as a separate sub-area of AOC 6. HAI identified this sub area as likewise having soil concentrations in excess of federal TCLP standards. Within parcel 18.2, total lead was detected at concentrations as high as 16,100 mg/Kg. Several samples contained lead concentrations in excess of all hazardous waste standards, although impacts were less consistent than within parcel 18.1. Parcel 18.2 impacts are estimated to extend over approximately 11,000 square feet and to a depth of 3.5 feet bgs. Excavation of this material would generate approximately 1,500 cy of RCRA-hazardous soil.

Soil gas was not sampled within AOC 6. Ambient air sampling did not indicate any concerns.

2.2.5 AOC 7

AOC 7 is located between Anderson and Clarence Streets within the East Park area (Figure 4). It is proposed to be improved with landscaped seating, fitness and grilling areas, and lawns and walkways (Figure 3).

Both soil and soil gas impacts were identified for AOC 7:

1) As shown on Figure 8A, soil impacts include three (3) separate sub-areas of impacts:

a. HAI Boring 20-1 sub-area. A small, approximately 800-square foot area in the northern portion of AOC 7, roughly centered around boring 20-1. This area was found to be impacted with lead to an estimated depth of 2 feet bgs (although only a 1-foot sample was collected at this location). Near surface soil in this portion of AOC 7 was categorized as having non-RCRA California hazardous waste characteristics on the basis of STLC exceedance for lead (at 13.4 mg/L). Excavation of these impacts is estimated to result in less than 60 cy of non-RCRA California hazardous soil.

b. HAI Borings 7-1, 7-4 and L-4 sub-area. This larger sub-area is located in the central portion of AOC 7, where soil impacts are projected to extend over 20,800 square foot area to an estimated depth of 2 feet bgs (sampling locations 7-1, 7-4 and L-4). The soil impacts include the presence of copper, lead and TPH-diesel, at concentrations exceeding site screening levels, hazardous waste standards and/or health risk criteria. Excavation of these impacts may result in over 1,500 cy of non-RCRA California hazardous soil.

c. HAI Borings 7-6 and 7-7 sub-area. Two separate pockets of petroleum-impacted soil were identified in the eastern portion of AOC 7 and near Clarence Street (up to 5' bgs). Removal of TPH-diesel impacts (assuming segregation of clean overburden) is estimated to generate approximately 100 cy of non-hazardous petroleum-impacted soil.

2) As presented on Figure 8B, soil gas impacts were identified in the northern and northeastern portions of AOC 7. TPH-gas and PCE were found in soil gas throughout the northern portion of AOC 7. Based on the conducted HHRA, some of the detections of TPH-gas and PCE in shallow soil gas were determined to exceed risk-based criteria. Soil gas impacts within AOC 7 are estimated to extend across an approximately 30,000-square foot area to an assumed depth of 15 feet bgs. The SI Report proposed remediation of these areas of AOC 7 via soil vapor extraction (SVE).

2.2.6 AOC 8

AOC 8 is located on the northeast corner of Whitter Boulevard and Clarence Street (Figure 4) in the eastern portion of the PARC. At approximately 17,200 square feet, it is one of the smallest areas of the project, proposed to be developed into a dog park (Figure 3).

In the SI Report, the entire AOC 8 was categorized as having soil gas impacts. The determination of soil gas impacts requiring remediation was based on a single detection of PCE (2.0 µg/L) at 5 feet bgs which was above health risk criteria. This PCE detection (in a duplicate sample, data for the primary sample was not reported) was calculated to result in an incremental lifetime cancer risk (ILCR) of $2x10^{-6}$ for a hypothetical residential receptor. While this cancer risk is above the point of

departure ($1x10^{-6}$), it is well within the 10^{-6} to 10^{-4} risk management range, where remediation is generally considered to be not warranted. Because the area is proposed to be a dog park, a single PCE detection and an associated marginally elevated risk do not support the recommendation to implement SVE across the entire AOC 8 footprint. However, further delineation of soil gas impacts can be accomplished as part of installation of vapor wells and performance of an SVE pilot test, and if impacts are confirmed, a more long-term SVE solution can be designed and installed.

Based on the data presented on Figure 9, only the northwestern portion (approximately 6,000 square feet) of AOC 8 requires soil remediation. Shallow soil, to depths of between 1 to 2 feet, was determined to be impacted with lead above the screening level. Upon removal, it is anticipated to be profiled as non-RCRA California hazardous waste on the basis of STLC exceedances. Shallow soil in the other portions of AOC 8 were not impacted with lead above screening levels.

2.2.7 AOC 9

AOC 9 is located at the eastern terminus of the project, within the embankment of the 101 freeway (Figure 4). In this area, existing landscaping will be upgraded to include irrigation and further landscaping improvements will be made (Figure 3).

Investigation of AOC 9 revealed the presence of aerially deposited lead (ADL), as would be expected for an unpaved area adjacent to an historic highway (Figure 9). Based on its location within a Caltrans right-of-way, remediation of AOC 9 is not required on the basis of the Caltrans Soil Management Agreement with DTSC (ADL-soil Agreement, 2016). However, to accommodate PARC upgrades, some soil removal is required for construction purposes. Once removed, the soil will need to be managed in accordance with applicable regulations. Approximately 550 cy of non-RCRA California hazardous waste is expected to be generated at AOC 9.

2.2.8 Summary

As discussed in the preceding sections, the nature of contamination within the PARC project has generally been defined. The contaminants of concern are primarily lead and TPH in soil, and TPH-gas and/or PCE in soil gas. While other metals and/or isolated other organic constituents were also identified, they were generally "co-

located" with the primary COCs, removal of which is anticipated to address secondary constituents.

The exact extent of contamination is not fully defined in all areas of the project, although some areas (e.g., the eastern portion of AOC 6) appear to have more robust data sets than others. Based on the presumptive remedies of soil excavation and SVE to address shallow soil and soil gas impacts, respectively, any additional data needs can be addressed as part of remediation.

The following sections provide discussions of the proposed clean-up goals (Section 3.0), and technical details for the implementation of soil removal via excavation and off-site disposal (Section 4.0) and SVE (Sections 5.0 and 6.0).

3.0 CLEAN-UP LEVELS

The PARC site and/or portions thereof have been the subject of several investigations, starting in approximately 2014. Over the past seven-plus years, several different sets of screening levels were used as criteria for evaluation of certain chemical concentrations and associated human health risks. Utilized screening levels included California Human Health Screening Levels (CHHSLs), published by the California Office of Health Hazard Assessment (OEHHA); Cal-EPA Screening Levels (SLs) published by DTSC in their Note No. 3; and the US EPA Regional Screening Levels (RSLs). In addition, background metal concentrations were also considered, as well as the San Francisco Regional Water Quality Control Board's (RWQCB) Environmental Screening Levels (ESLs). Based on these screening levels, the completed investigations and the HHRA concluded that soil constituents exceeding risk-based criteria are primarily lead and TPH. For soil gas, the primary constituents of concern are TPH-gas and PCE.

All screening levels are subject to periodic updates and revisions. As a result, the currently published screening levels are slightly different from those used during the site investigations and in the HHRA. It is also possible that screening levels will be updated before implementation of this RAP. However, given the nature of primary impacts, no significant changes are anticipated.

3.1 SOIL CLEAN-UP GOALS

The clean-up goals for remediation of shallow soil will be based on the current set of DTSC SLs for residential (unrestricted) land use (June 2020), with consideration for naturally occurring background concentrations and results of the HHRA. In the event that a chemical is detected, for which DTSC does not publish an SL, US EPA RSLs will be used.

The following site-specific cleanup goals are proposed for remediation of shallow soil (within 10 feet of ground surface):

Constituent	Clean-up Goal, mg/Kg	Basis
Lead	80	DTSC SL
TPH-diesel	97	DTSC SL, C9-C16 aromatic medium
TPH-gas	82	US EPA RSL, C6-C8 aromatic low
TPH-total	2,400	DTSC SL, C17-C32 aromatic high
Arsenic	12	DTSC upper-bound estimate for ambient (background) arsenic concentrations in Southern California
Cadmium	71	US EPA RSL, per DTSC Note 3 (*subject to revision*)
Copper	3,100	EPA RSL

3.2 SOIL GAS CLEAN-UP GOALS

Based on the conducted HHRA, a PCE concentration of 1,000 µg/m^3 in soil gas (at depth of 5-ft bgs) was calculated to result in the incremental lifetime cancer risk (ILCR) of 1x10^{-6}, while a TPH-gas concentration of 65,000 µg/m^3 yielded a health index of 1.0. These risk values were calculated for a scenario of potential vapor intrusion into indoor air, although no occupied structures (residential or otherwise) are planned for the site. Therefore, these concentrations are likely to be overly conservative for the proposed project. Nonetheless, these concentration values are proposed to be used in conjunction with the treatment efficacy criteria to evaluate whether clean-up goals have been reached. The treatment efficacy criteria will be met when, upon operation of an SVE system, soil gas concentrations have reached asymptotic levels and rebound testing shows no significant rebound (less than 25% increase of pre-rebound concentrations).

The following site-specific cleanup goals are proposed for remediation of shallow soil gas (at 5-ft bgs, upon reaching asymptotic SVE conditions):

Constituent	Clean-up Goal, µg/L	Basis
PCE	1.0	HHRA, indoor air ILCR
TPH-gas	65	HHRA, indoor air HI
Other constituents	DTSC SL or EPA RSL for residential air, adjusted by an attenuation factor (α). At this time, α for shallow soil gas (not sub-slab) of 0.001 is proposed[1].	

[1] Based on *Final Guidance for the Evaluation and Mitigation of Subsurface Vapor Intrusion to Indoor Air* (Vapor Intrusion Guidance, DTSC, October 2011). If the current Draft *Supplemental Guidance on Screening and Evaluating Vapor Intrusion* (DTSC, February 2020) is finalized prior to this RAP Implementation, the chosen attenuation factor should be adjusted accordingly.

4.0 SOIL REMEDIATION

The following sections describe the procedures to be implemented during the mitigation of lead- and petroleum-impacted soils found at the PARC Project site.

All soil removal activities described herein will be conducted in a manner that minimizes the probability of injury, accident or incident occurrence. A site-specific health and safety plan will be prepared for this work by the selected contractor prior to implementation of this RAP.

4.1 PRELIMINARY ACTIVITIES

As described in Section 2.0, remediation of impacted soils at the PARC site will be accomplished through excavation, off-site disposal of these soils and, as part of PARC improvements, backfill of excavated zones. As illustrated by Figures 5 through 9, construction of the viaduct replacement has resulted in varying degrees of surficial disturbances within the PARC project site, and as such, verification of existing data applicability will be an important initial step in implementation of this RAP. Prior to initiation of any soil removals, each AOC subject to soil remediation will be inspected for access, lateral extent of area available for soil removal, and locations of previously collected data. Based on these observations, screening of surficial soils with a portable instrument, such as X-Ray Fluorescence (XRF) device, will be implemented if site conditions appear to be significantly different from those described herein and in the SI report.

In addition, it is anticipated that customary geophysical survey and utility clearances will be performed prior to any excavation and earthmoving activities. If any subsurface anomalies are identified, they will be addressed prior to start of remediation. The unforeseen situations may include, but not necessarily be limited to, encountering construction/demolition (C/D) debris, former well(s), tank(s) and/or clarifier(s), and/or remnants of piping and/or equipment. Given that the subject site was extensively investigated, the likelihood of encountering significant subsurface anomalies is low. However, considering the historical industrial land use, the above-described unforeseen conditions cannot be ruled out.

4.1.1 Regulatory Notifications and Approvals

In addition to grading permit(s), anticipated to be required by the City of Los Angeles Department of Building and Safety (LADBS), the proposed soil clean-up will need to comply with construction stormwater regulations; applicable South Coast Air Quality Management District (SCAQMD) rules; and, for AOC 9, with the Caltrans-DTSC Soil Management Agreement for ADL-Contaminated Soils.

Stormwater/SWRCB

The soil clean-up will result in total area of disturbance of more than one acre; therefore, this soil remediation project requires compliance with the State of California's Construction General Permit and coverage under the National Pollutant Discharge Elimination System (NPDES) General Permit for Discharges of Storm Water Associated with Construction Activity, Construction General Permit Order 2009-0009-DWQ (as amended by 2010-0014-DWQ and 2012-0006-DWQ)[1].

Prior to commencement of construction activities, Permit Registration Documents (PRDs) will be submitted to the Storm water Multi-Application Report Tracking System (SMARTS). The RPDs consist of, among other items, a Notice of Intent, Stormwater Pollution Prevention Plan (SWPPP), Risk Assessment, Post-Construction Calculations, a Site Map, a signed certification statement and fees. The Construction General Permit requires the development of a SWPPP by a certified Qualified SWPPP Developer (QSD). Preparation of the SWPPP and obtaining coverage under the General Permit are estimated to take at least one (1) month.

In accordance with the General Permit, routine best management practices (BMPs) will be used at the PARC site to control stormwater runoff and discharges to nearby protected bodies of water.

Dust Control/SCAQMD

Soil remediation excavation activities will be performed in compliance with the SCAQMD Rules 403 (Fugitive Dust) and 1466 (Control of Particulate Emissions from Soils with Toxic Air Contaminants). While the exact requirements of these rules should be confirmed at the time of RAP implementation, it is anticipated that, at a minimum, a notification to SCAQMD will be required prior to start of excavation activities. Currently, a 72-hour notification prior to excavation is required, but time

[1] Currently, administratively extended until a new order is adopted and becomes effective.

should be allowed to complete such a notification. Among other requirements, Rule 1466 stipulates monitoring and data-logging for PM10 concentrations using real-time monitors and minimizing fugitive dust emissions; imposes limits on stockpile volumes; and mandates certain fencing, signage, and training/certification of personnel. The contractor selected for RAP implementation should be familiar with these requirements prior to start of any earth-moving activities. While exhibits included in this RAP are likely to be sufficient to satisfy some of the notification requirements, the selected contractor will be required to provide additional information and excavation details, unknown at this time. Therefore, a minimum of one (1) month should be allocated for establishing compliance with Rules 403 and 1466 prior to the start of excavation.

ADL/Caltrans-DTSC

Work within AOC 9, located within a Caltrans ROW, will comply with the Caltrans-DTSC Agreement, which contains numerous requirements for management of ADL-impacted soil. The requirements include notification to DTSC establishing an agreement with and/or receiving a written approval from DTSC; preparation of a Lead Compliance Plan, Health & Safety Plan, and Excavation and Transportation Plan, among others; as well as reporting and documentation requirements. Exact requirements will depend on the arrangements between the City of Los Angeles and Caltrans at the time of RAP implementation. The selected contractor will be required to comply with the provisions of the City/Caltrans agreement and coordinate with Caltrans and DTSC regarding required compliance items. A minimum of one (1) month should be allocated for establishing compliance with Caltrans/DTSC Agreement prior to the start of excavation within AOC 9.

Contingency Situations

If any unplanned materials, such as an old equipment, an underground storage tank (UST) or C/D debris, are encountered, they will be managed separately from provisions of this RAP and may be subject to different regulatory oversight than SMU. For example, if a previously undocumented UST is encountered, its documentation, removal and any associated sampling will be subject to regulatory oversight of the City of Los Angeles Fire Department. A clarifier or a sump-type of equipment may require involvement of the County of Los Angeles Department of Public Works. Old piping and/or C/D debris, if free of any residual product and/or impacted soil, will likely be suitable for disposal using typical construction practices.

However, if any impacted soil is encountered, it will be subject to the provisions of this RAP. The selected contractor will verify applicable jurisdictional authority for the aforementioned contingency scenarios, prior to the start of remediation.

4.2 SITE CONTROLS

Prior to implementation of any soil removal, site controls, including designation of controlled areas of the PARC site such as the exclusion zones (EZ), contamination reduction zones (CRZ), and support zones (SZ) will be established. The EZs and CRZs will be considered controlled areas of the site and will be monitored to ensure no unauthorized personnel enter these areas. Separate EZs and CRZs are anticipated to be established for each AOC and will be established immediately prior to initiation of work activities in each AOC. Physical barriers clearly marked for identification purposes will be installed to prevent unauthorized entrance into controlled areas of the site, particularly within AOC 6, where RCRA hazardous soils are anticipated to be encountered.

Access to EZ areas will be physically controlled during all working phases. Measures will be instituted to minimize the possibility of exposing unprotected personnel and to prevent vendors, visitors, and workers from entering contaminated areas without proper monitoring, safety training, and/or personal protective equipment (PPE). A sign-in log will be maintained for all visitors allowed to enter into the CRZ/EZ.

Activities described in this RAP, including excavation, truck loading, sampling, backfill and re-compaction phases of work, will comply with the provisions of a site-specific health and safety plan, which will be prepared by the selected contractor. In addition to health and safety requirements, as well as any applicable agencies' rules, the following site controls will be implemented:

- Water will be provided for all operations to prevent dust nuisance at the site and along the access roads. (Water shall be made available at the site.)
- Excavation and truck loading will not be conducted when wind speed is consistently greater than 15 mph or when wind gusts exceed 25 mph, unless directed by the City, County SMU or other regulatory agency.
- During excavation, all working areas, excavated material, and any unpaved roads shall be watered down until the surface is moist, and then maintained in a moist condition to eliminate dust emissions. If excavated material is stockpiled, watering of the excavated stockpile will be conducted in such a manner as to not generate any run-off.
- Stockpiling, fencing and signage will meet SCAQMD Rule 1466 requirements.

- No excavation will be conducted if a significant storm event takes place and is capable of generating surface accumulation or flow.
- Soils will be removed from the working face of the excavation in a manner to minimize dust emissions.
- At the end of each workday, the excavation workface will be covered and watered in such a manner as to prevent dust nuisance but not to create run-off.

4.3 EXCAVATION ACTIVITIES

Impacted soil will be excavated using conventional excavation equipment. Depending on the extent of each AOC and access at the time of RAP implementation, equipment may include excavator(s), bulldozer(s), backhoe(s) and loader(s). Based on the projected depths and locations of excavations, the need for shoring is not anticipated.

Upon removal, excavated materials will be stockpiled on plastic sheeting and covered by plastic[2] during periods of inactivity until loading into transport trucks for delivery to disposal facilities, as further described in Section 4.6.

Estimated initial lateral and vertical zones of excavation for each AOC are shown on Figures 10 through 14. These estimates will be re-visited and refined as part of Preliminary Activities, as described in Section 4.1. The final extent of each excavation will be determined upon completion of confirmatory sampling (Section 4.4).

During excavation, an XRF instrument (and in some areas, a PID) will be used to monitor the excavation zone and excavated soils as an aid in determining when the limits of the impacted soil have been reached. Due to the nature of contamination, visual inspection of the soils being excavated and/or olfactory observations cannot be relied upon for determining when the limits of the impacted soil have been reached for most areas.

Upon removal of impacted and immediately underlying soil, confirmatory sampling will be performed as described in Section 4.4. Should the results of confirmatory sampling indicate that clean-up goals have been reached, concurrence from the City and County SMU will be sought prior to demobilization of equipment and initiation of restoration activities. If additional excavation is determined to be necessary, soil will be removed in six-inch thick layers until unimpacted soils are encountered. Confirmatory sampling will be repeated, as necessary.

[2] Refer to SCAQMD Rule 1466 for current thickness requirements

4.4 CONFIRMATORY SAMPLING

Following removal of identified impacted and immediately underlying materials, representative samples of native soils will be collected. It is anticipated that confirmatory samples will be collected from the bottom and sidewalls of the excavation zones, if excavation is deeper than one foot. For excavations of one foot in depth or less, only bottom samples will be collected.

Frequency of sample collection will depend on the extent of each excavation and whether the levels of impacts were relatively uniform across an AOC (e.g., AOC 1) or impacts were highly heterogeneous (e.g., AOC 6), as indicated by the site investigation data, as well as monitoring data collected during excavation.

For larger areas, such as AOC 1A, bottom samples will be collected using a frequency of one (1) sample per every approximately 10,000 square feet of area (approximate 100'x100' grid), or fraction thereof. For sidewalls deeper than one foot, one sample will be collected for every 100 linear feet of excavation wall, or fraction thereof. For smaller excavations and/or areas, where investigation data did not show uniform impacts, bottom samples will be collected using a frequency of one (1) sample per every approximately 2,500 square feet of area (approximate 50'x50' grid), or fraction thereof. For sidewalls deeper than one foot within smaller excavations, one sample will be collected for every 50 linear feet of excavation wall, or fraction thereof. A minimum of one sample will be collected for each base and each sidewall of an excavation.

This frequency is anticipated to result in the following number of samples:

AOC	*Frequency (for each area or sub-area)*		*Estimated Number of Confirmatory Samples*		
	Base, per sq ft	*Sidewall, per lf*	*Base*	*Sidewall*	*AOC Total*
AOC 1A	1/10,000	1/100	7	13	20
AOC 2A	NA		1	4	5
AOC 5	1/2,500	1/50	7	9	16
AOC 6	1/2,500 (for each sub-area)	1/100 (for overall excavation)	28	20	48
AOC 7	1/2,500 (for central portion) + Min 1/base (for others)	1/50 (for central portion) + Min 1/sidewall (for others)	11	20	31
AOC 8	1/2,500	1/50	3	4	7
AOC 9	1/2,500	NA	6	NA	6

Overall, approximately 133 confirmatory samples are estimated to be collected. Due to the uncertainty associated with final site conditions after completion of the viaduct construction, as well as the potential for intermediary samples, the overall number of confirmatory samples is likely to be in the 150 to 200 range.

4.4.1 Sampling Procedures

Samples may be collected from the bucket of the excavation equipment or by digging directly into the exposed subsurface. Samples will be collected by either driving a stainless steel split spoon sampler equipped with stainless steel sample collection sleeve into the material or, depending on the consistency of the material, by digging directly into the material with a stainless steel or disposable polyethylene sampling trowel and transferring the material directly into new clean glass sample jars with Teflon lined lids.

If driven samples are collected, they will be covered with Teflon sheets, capped and sealed immediately upon collection. For samples collected into jars, care will be taken to prevent soil getting into the treads of the lid. All samples (driven or jar collected) will be labeled, placed in a zip-lock bag, and stored on ice immediately upon collection. Sample labels will include the following information: sample ID, laboratory analysis, depth, date, project ID, and sample collector name, as required by EPA sampling protocol. Samples will be placed on ice in a field cooler to preserve the integrity of the samples during shipping to a state-certified analytical laboratory. In addition, a Chain-of-Custody (COC) form will be filled out, that documents sample identification and other pertinent field and sample information. The COC form will accompany all samples and will be signed by all individuals retaining custody of the samples at any time.

All reusable sampling equipment will be decontaminated prior to use and between samples. Decontamination procedures will include washing with a non-phosphate detergent solution followed by a double rinse with de-ionized water. The sampling equipment will be allowed to air dry before use.

4.4.2 Analytical Testing

All collected soil samples will be submitted for analysis for total lead by EPA Method 6010B. In addition, samples from AOC 2A, 5, 6 and 7 will be analyzed for TPH with carbon chain speciation (TPH-cc) by EPA Method 8015M, while samples from AOC 6 will also be analyzed for copper and arsenic (EPA Method 6010B). Samples will be

submitted to a state-certified analytical laboratory for testing for lead on an expedited turn-around basis (24 to 72 hours). If lead results meet clean-up goals, testing for TPH-cc and other metals will be completed on a standard turn-around basis, or as required by the project schedule.

4.5 WASTE CLASSIFICATION

It is anticipated that waste disposal facilities will require relatively current soil profiling data (i.e., collected within one year of disposal). Therefore, confirmation of soil profiles will be required for all material leaving the site. For each AOC and any sub-areas, whether identified herein or designated based on field encountered conditions at the time of remediation, waste profile samples will be collected upon generation of sufficient volume of representative soil and/or upon completion of excavation (e.g., at AOC 2A). Similar to confirmation sampling (Section 4.4), the frequency of profile samples is expected to vary between AOCs or any sub-areas based on overall volume and heterogeneity of impacts. At this time, the following number of samples is anticipated:

AOC	*Anticipated Volume of Excavation(s), cy*	*Estimated Number of Waste Profile Samples (min)*
AOC 1A	4,000	9
AOC 2A	450	4
AOC 5	2,000	6
AOC 6	7,000	15
AOC 7	1,700	6
AOC 8	450	4
AOC 9	550	6

The above estimate of approximately 50 waste profile samples will need to be refined at the time of remediation based on requirements of disposal facilities certified to receive the waste at that time.

Waste profile samples will be collected as described in Section 4.4.1.

Based on currently available information, all waste profile samples are likely to require analytical testing for CAM 17 heavy metals (by EPA Methods 6010B/7000s), TPH-cc (by EPA Method 8015M) and VOCs (by EPA Method 8260B). Additional testing for soluble and leachable metal fractions will likely be required for multiple samples.

Selected samples may require analysis for polychlorinated biphenyls (PCBs) by EPA Method 8082A. Disposal facilities may require additional testing; their requirements will be confirmed prior to implementation of remediation/excavation activities.

4.6 WASTE STABILIZATION

As indicated in previous sections, as much as 6,000 cubic yards of soil, anticipated to be excavated from the PARC site, may be profiled as RCRA-hazardous waste for disposal purposes. Therefore, soil stabilization or chemical fixation of that soil may be prudent in order to reduce the concentrations of leachable fractions and thus allow for disposal as non-RCRA or non-hazardous waste.

Once the final volume of potential RCRA-hazardous waste is known or can be reliably estimated, the selected contractor will evaluate the feasibility of using waste stabilization. If using waste stabilization is cost-effective and can be conducted within the project timeframe, the selected contractor will perform any required bench testing and mix design, and implement waste stabilization in order to reduce the hazardous waste disposal burden.

4.7 STOCKPILING, LOADING, TRANSPORTATION AND DISPOSAL

Removal of impacted soil from the site will begin upon accumulation of enough soil to load one line-up of trucks (estimated to be approximately 200 cy) and confirmation of waste classification. In compliance with SCAQMD Rule 1466, soil stockpiles cannot exceed 400 cy in volume and/or exceed the height of site fencing.

It is anticipated that trucks can reach disposal facilities before closing if they leave the site by 8 a.m. Therefore, the period of 6:30 a.m. to 8:00 a.m. will be designated for truck loading, with the remainder of the working day designated for excavation.

A loading area will be established within each AOC's EZs adjacent to the excavation and stockpiling areas. A flagman will be present during all loading operations to facilitate the safe exit of trucks onto public roadways.

All licenses and paperwork for each truck will be verified before entering the truck loading area to ensure that only qualified licensed drivers are used. After being loaded, trucks will be covered, and proceed from the EZ loading areas to the CRZs, where they will be dry-decontaminated (swept/brushed) and inspected to ensure that no impacted material is present on the truck sideboards or tires prior to entering

the public right-of-way. As necessary, the EZ loading areas will be swept between trucks to prevent the truck tires from coming into contact with the impacted soil.

As indicated in previous sections, as much as 16,000 cubic yards of impacted soils may be removed from the site. Actual quantities will be documented through certified weigh tickets provided by the disposal facilities.

Based on the waste characteristics anticipated at this time, waste materials will be disposed of at different facilities. Currently, the following facilities are likely to be able to accept the waste, anticipated to be generated at the site:

Non-hazardous petroleum- and/or lead-impacted waste	Various locations, including Simi-Valley Landfill
Non-RCRA California hazardous waste (lead)	US Ecology facility in Beatty, Nevada La Paz or South Yuma Landfills, Arizona
RCRA-Hazardous waste	Kettleman Hills or Buttonwillow landfills in CA, or US Ecology in Nevada

The ability of a disposal facility to accept specific waste streams will be verified prior to start of remediation.

All transportation and off-site disposal will be accomplished in accordance with applicable federal, state and local laws, including providing the necessary packaging, labeling, placarding, and manifesting.

4.8 BACKFILL AND COMPACTION

Excavation areas will be backfilled and compacted to surrounding grade elevation with clean soil as part of construction of PARC improvements. Prior to demobilizing from the site, the selected remediation contractor will secure all open excavations to be backfilled by the general contractor.

Any soil brought to the site for backfill and restoration activities will be verified as meeting site clean-up criteria.

4.9 DURATION OF SOIL REMEDIATION

The duration of soil clean-up will depend on daily removal and truck turn-around schedules, as well as weather conditions, the necessity to implement mitigation measures during weather/wind episodes, ability to perform waste stabilization, any discoveries of unexpected materials/objects, and/or based on City and/or regulatory requirements.

Based on the excavation/loading details discussed above and an understanding of the current site conditions, continuous implementation of soil removal is estimated to take approximately two (2) months:

AOC	*Estimated Duration of Excavation (days)*	*Estimated Duration of Loading & Transportation (days)*
AOC 1A	7	11
AOC 2A	1-2	1-2
AOC 5	3	6
AOC 6	13	20 (excluding waste stabilization)
AOC 7	3	5
AOC 8	2	1-2
AOC 9	1-2	1-2

At least one additional month will be required for mobilization and demobilization to/from the site and between AOCs, site preparation and final site controls. To account for time required for receipt of analytical results, as well as any potential unexpected delays, at least 3 to 4 months should be allocated for field activities.

4.8 REPORTING

Upon completion of soil remedial activities, a Soil Remediation Report detailing the activities performed at the site and the final site conditions will be prepared. The report will be signed by a professional civil engineer registered in the State of California and will include the following elements:

- A description of the field activities conducted,
- Daily Field Reports detailing the day to day activities at the site,
- Results of confirmatory sampling, including evaluation of whether clean-up goals were met and if there are residual health risks, if any;

- Health and Safety Logs,
- Other Logs, completed as necessary,
- Waste Manifests and weigh tickets for all soil transported off-site for disposal,
- Photographs of the field activities covered under this RAP,
- Tables, Figures and Appendices, as necessary.

Upon receipt of comments from the City of Los Angeles, the Soil Remediation Report will be issued in final form for submittal to the County SMU, along with a request for no further action (NFA). If any other regulatory agency becomes involved in the project or a portion thereof, the Report and the NFA request would also be submitted to that agency.

5.0 SVE PILOT TEST IN AOC 8

As described in Section 2.1, portions of AOC 7 and AOC 8 have been identified as needing soil gas remediation via SVE. As also noted in that section, AOC 8 is suspected to be impacted with PCE at levels requiring remediation based on the results of a single soil gas sample. Conversely, soil gas impacts within AOC 7, located directly across Clarence Street to the west were shown to exceed health risk criteria based on soil gas sampling at over 20 locations. SVE pilot testing has not been performed in either of these areas. In order to address the data gaps for soil gas in AOC 8 and gather sufficient design data for SVE implementation in these AOCs SVE wells will be installed in AOC 8 and SVE pilot testing will be conducted in that area. Given the close proximity of the two AOCs, pilot test data generated by the AOC 8 pilot test is considered applicable to AOC 7 as well.

The following sections provide a detailed description of the specific field protocols and analytical methods to be used during installation of SVE pilot test wells and implementation of the SVE Pilot Test in AOC 8. Due to the shallow depth of the wells, well permits from the Los Angeles County Department of Public Health, Environmental Health Division, are not anticipated to be needed based on current requirements. The selected contractor will verify requirements at the time of installation.

The following project activities will be conducted in a manner that minimizes the probability of injury, accident or incident occurrence. All personnel, contractors, and visitors will be required to adhere to a site-specific Health & Safety Plan (HSP) prior to admittance to the site.

5.1 EXPLORATORY BORINGS

In order to define the lateral and vertical extent of VOC contamination in AOC 8, exploratory drilling, with associated soil and sampling, will be conducted.

Based on currently available information, three (3) exploratory borings will be drilled, as shown on Figure 15. Exact locations of the borings will be based on conditions encountered in the field and accessibility. Actual locations will be marked in the field and on a scaled site map.

Drilling will be accomplished using a hollow-stem auger drill rig, operated by a licensed drilling contractor under the supervision of a California registered geologist

or engineer. All boring equipment will be decontaminated by steam cleaning before initial use, between each hole and at the end of each workday.

In anticipation of conversion of these borings into soil vapor extraction wells, all borings will be advanced using either 8- or 10-inch diameter augers. All borings will be drilled to a depth of approximately 20 feet bgs.

Subsurface conditions encountered during drilling will be logged by an on-site geologist using the Unified Soil Classification System [USCS (ASTM Method D2488)] and in accordance with the Engineering Geology Field Manual (U.S. Department of the Interior, Bureau of Reclamation).

The information recorded on the boring logs will include:

- Borehole designation and location.
- Times and dates that drilling began and ended.
- Depth and reason for termination of borehole.
- Type of drilling equipment used.
- Name of geologist responsible for the log description.
- Description of the soils encountered using the USCS and accepted geologic nomenclature.
- Systematic descriptions of lithologic and structural changes in strata or soil horizons, including thickness of units.
- Location of samples collected from the borehole, if applicable.
- Depth of first groundwater.
- Any unusual color, staining, or odors.
- Photo Ionization Detector (PID) Readings.
- Any subsurface structures or unusual features encountered.
- Other notes and descriptions, as required.

During drilling and soil sampling, a PID will be used to monitor VOC emissions from the borehole and the soil cuttings. In addition, random soil cuttings will be placed in zip-lock plastic bags and the PID will be used to monitor the headspace. All PID measurements will be documented in the boring logs.

All residual drill cuttings will be contained on-site in 55-gallon drums or other DOT approved containers until results of analytical testing indicate whether the cuttings require special disposal. Cuttings from each borehole will be stored separately until characterization is complete. Cuttings containing hazardous or California regulated waste will be disposed of in compliance with all applicable state and federal regulations. Based on the results of analytical testing, other disposal methods may

become appropriate and will be evaluated at that time. Other investigation-derived waste (IDW), such as used personal protective equipment (PPE) and disposable equipment will be double-bagged and placed in a municipal refuse dumpster. Any PPE and disposable equipment that is to be disposed of, which can still be used, will be rendered inoperable before disposal.

5.1.1 Subsurface Soil Sampling

During borehole advancement, discrete, undisturbed soil samples will be collected using 6-inch stainless steel sleeves, placed inside a California modified split-spoon sampler. The samples will be collected at 2 feet bgs, 5 feet bgs, and every 5 feet thereafter, to a depth of 20 feet bgs or until refusal, whichever occurs first.

For the purposes of analytical testing, soil samples, anticipated to be analyzed for VOCs, will be obtained in accordance with EPA Method 5035 using an EnCore®, Core N' One, Terra Core or an equivalent sampling device. The core samplers (three per sample) will be used to collect samples from either the ends of a driven sample sleeve, or directly from the split spoon core. Terra Core device will be used to transfer soil to 40-mL VOA containers for in-field chemical preservation. The core samplers or the vials will be capped, labeled, placed in a zip-lock bags, and stored on ice immediately upon collection.

Following collection of the core samples from the driven sleeves, the rest of the soil from that sampling sleeve will be placed into a plastic bag for additional PID screening. Based on field screening and observations, soil samples (driven sleeves or transferred into a glass jar) may be retained for additional testing, aside from VOCs. If driven sleeves are retained, their ends will be covered with Teflon sheets, capped and then handled as above.

Sample labels will include the following information: sample ID, laboratory analysis, depth, date, project ID, and sample collector name, as required by EPA sampling protocol. A Chain-of-Custody form will be filled out, with the field samples, that documents sample identification and other pertinent field and sample information. The Chain-of-Custody form will accompany all samples and will be signed by all individuals retaining custody of the samples at any time.

The sampler and sample sleeves will be decontaminated prior to use and between samples. Decontamination procedures will include washing with a non-phosphate

detergent solution followed by a double rinse with deionized water. The sampler and sample sleeves will be allowed to air dry before use.

5.1.2 Analytical Testing

All collected soil samples will be analyzed for VOCs by EPA Method 8260B. Because core samples require 2-day extraction, appropriate arrangements will be made with the analytical laboratory for expedited handling of the samples. It is anticipated that a maximum of 15 soil samples will be collected and submitted for analytical testing.

5.2 SOIL VAPOR EXTRACTION WELL INSTALLATION

All three exploratory borings will be converted into vapor extraction wells (VWs). The VWs will be constructed of 2-inch diameter Schedule 40 PVC blank casing, with a 15-foot section of continuous slot screen casing with a slot size of 0.020", as shown on Figure 17B (Detail 1, Well Construction Diagram). The screened section will be installed at the bottom of the well and throughout the thickness of the soil column, which may result in the majority of the well depth being constructed of slotted casing. Blank casing will be installed above the screened section and up to approximately 2 feet above the ground surface. The bottom of the screen will contain a 2-inch diameter Schedule 40 PVC threaded cap. Actual depths will be determined based on encountered field conditions.

A granular filter sand pack will be placed in the annular space between the screen and the borehole wall to approximately two feet above the top of the screen. As appropriate, a low permeability seal, consisting of bentonite pellets, will be placed immediately above the filter pack. The remaining annular space to ground surface will be filled with a neat cement/bentonite grout. The surface completion will include a locking, monument-type well box set in the concrete. Construction details will be documented on a well construction log.

Information, recorded during well construction will include:

- Screen materials and design
- Casing and screen joint type
- Screen slot size/length
- Filter pack materials/size, volume calculations, placement method
- Sealant materials (percent bentonite), volume (lbs/gallon of cement), placement method
- Surface seal design/construction

- Type of protective well cap
- Ground surface and Surveyor's pin elevation
- Top of well casing elevation
- Detailed drawing of well
- Date/time of construction
- Drilling method
- Well location
- Bore hole diameter and well casing diameter
- Well depth
- Drilling and lithologic logs
- Name of drilling company and drill rig operator
- Type and model of drill rig used
- Name of geologist logging a borehole
- Depths at which screened interval began and ended, filter pack began and ended, grout began and ended, bentonite seal began and ended
- Type of sampler used

Once the soil vapor extraction wells are installed, an SVE pilot test will be planned and conducted, as described in the following section.

5.3 SOIL VAPOR EXTRACTION PILOT TEST

Following completion of well construction activities described in the previous section, an SVE pilot test will be performed in AOC 8. The test will be performed in recognition of the fact that SVE, along with excavation and off-site disposal, is one of the most preferred remedial alternatives for clean-up of subsurface chlorinated VOC (CVOC) contamination, and is considered to be a presumptive remedy by both state and Federal agencies for sites with CVOC impacts. The pilot test procedures and methodologies outlined in this section comply with DSTC' publication *Proven Technologies and Remedies Guidance, Remediation of Chlorinated Volatile Organic Compounds in Vadose Zone Soil* (April 2010).

It is anticipated that a GAC based portable SVE system will be utilized for the duration of the three to five-day (i.e., short-term) pilot test. Equipment with a valid various-locations permit from the South Coast Air Quality Management District (SCAQMD) will be used during the pilot test. At this time, it is anticipated that a 150-250 cubic feet per minute (cfm) blower package will be used for vapor extraction, in combination with two (2) 1,000-pound (lb) GAC vessels, installed in series. Exact equipment configuration will depend on vendor availability at the time of the test.

Depending on the results of analytical testing of collected soil samples, at least two of the three wells, one at a time, will be used for active extraction during the SVE pilot test. In order to conduct the pilot testing, the VWs will be fitted with temporary wellhead assemblies (lateral piping and monitoring ports) and connected to the portable SVE unit as necessary.

Initially, a limited air permeability test will be conducted at one of the extraction wells to estimate the in-situ air permeability of the soils beneath the site and the radius of influence of the vapor extraction system. This test will consist of subjecting the selected extraction well to varying vacuums in a stepped fashion. At a minimum, the test will be performed at the high, intermediate and low vacuum points, produced by the SVE blower. Each vacuum step will be maintained for a period of at least 2 hours, or until measured vacuums and extracted VOC concentrations have stabilized at both the extraction well and the other (monitoring) wells. The test will include monitoring the changes in induced vacuum with time produced by the selected extraction well at surrounding wells.

The estimated radius of influence and average air permeability will be used to calculate the expected air flow rates under different vacuum conditions for each well of the future SVE system.

The pilot test will include frequent monitoring of vacuum, flow rates, VOC concentrations, temperature and other parameters at sampling ports installed at the extraction well, at the other vapor wells, and at the inlet/outlet of the vapor extraction/treatment unit. Monitoring will be performed more frequently (maximum 15-minute intervals between readings) during the initial stages of each testing run. As the tests progress, the frequency of monitoring may decrease, with readings being collected at intervals of up to 30-60 minutes. Vacuum measurements will be taken using magnehelic gages of appropriate resolution, a digital manometer, or a Landtec Gas Extraction Monitor (GEM) Model 5000 (or similar). Chemical composition, including total VOC concentrations, will be measured using portable instruments, such as a Photoionization Detector (PID) and GEM-5000, or similar. At the end of testing at a selected extraction well, an air sample will be collected using a portable sample train to extract vapor from the sampling port installed at the wellhead and then placed into laboratory-provided pre-cleaned Summa canister, supplied under vacuum. Collected samples will be labeled as described above for soil samples and then delivered to a state-certified laboratory for analysis for VOCs by EPA Method TO-15.

At the SVE unit, samples will also be collected at the inlet and outlet sampling ports. It is anticipated that at least one inlet sample will be collected every day of the short-term pilot test. In addition, inlet and outlet sampling ports will be monitored with a portable instrument, such as Landtec GEM 5000, or similar, for oxygen and carbon dioxide concentrations. Inlet and outlet sampling will be performed as required by the SCAQMD permit. Should monitoring indicate breakthrough of the primary unit during the test, this information will be noted and taken into consideration when estimating carbon consumption rates during any subsequent SVE system design.

The pilot test data will be evaluated to calculate radius of influence of VWs and anticipated air flow rates, to determine initial contaminant removal rates, and to estimate duration of the site remediation via SVE. These parameters will then be used to evaluate the feasibility of an SVE remediation system for AOC 8, as well as AOC 7. Analytical data obtained during the test will be used to delineate the extent of the vapor plume in AOC 8.

5.4 PILOT TEST DOCUMENTATION AND REPORTING

Upon completion of the AOC 8 assessment and pilot test activities, a report of findings will be prepared. The Report will include the following elements:

- A description of the field activities conducted,
- A summary of QA/QC efforts and results,
- Results and data from the soil assessment and pilot test, presented as a narrative discussion and in tables, figures, and boring/well logs, as appropriate.
- Conclusions and recommendations, including those for implementation of SVE in AOC 7.

If SVE is determined to be required for mitigation of soil vapor impacts in AOC 8, it will be implemented as described in the following section for AOC 7.

6.0 SVE IMPLEMENTATION IN AOC 7

The following sections describe the proposed remedial action for the mitigation of impacted soil vapor within AOC 7 of the PARC site. As discussed in Section 2.2.5, the selected remediation option this area of the project site is SVE. The approach discussed herein will be confirmed and refined based on the results of a pilot test in AOC 8, described in Section 5.0. Specifically, radius of influence, air permeability and flow assumptions will be confirmed and used to verify the presumptive design included herein.

All remedial activities described herein will be conducted in a manner that minimizes the probability of injury, accident or incident occurrence. A site-specific health and safety plan will be prepared for this work by the selected contractor prior to implementation of this RAP.

A typical SVE system consists of three major components: vapor extraction wells; conveyance piping; and a vapor extraction/treatment unit. The following sections describe each of these components, as well as other details of SVE implementation at AOC 7, in greater detail.

6.1 VAPOR EXTRACTION WELLS

Based on the understood subsurface lithology and previous experience with similar projects, the average radius of influence of an extraction well is anticipated to be approximately 40 to 50 feet. As such, six (6) wells are anticipated to provide complete coverage for AOC 7 (Figure 17A).

The following sections provide descriptions of the specific field protocols and analytical methods to be used during installation of the extraction wells. Activities will commence after obtaining regulatory approvals and utility clearances from Underground Service Alert. Due to shallow depth of the wells, well permits from the Los Angeles County Department of Public Health, Environmental Health Division, are not anticipated to be needed based on current requirements. The selected contractor will verify requirements at the time of installation.

6.1.1 Exploratory Boring

The exploratory borings for the vapor extraction wells will be drilled throughout the northern portion of AOC 7, as shown on Figure 16. The exact locations of the borings will be based on conditions encountered in the field and accessibility. Boring locations will be marked in the field and on a scaled site map.

Borehole drilling and associated soil sampling will be conducted as described in Section 5.1. Drilling will be accomplished using a hollow-stem auger drill rig, operated by a licensed drilling contractor under the supervision of a California registered geologist or engineer. All boring equipment will be decontaminated by steam cleaning before initial use, between borings and at the end of each workday.

In anticipation of conversion of the borings into a soil vapor extraction well, the borings will be advanced using either 8- or 10-inch diameter augers. Based on the current knowledge regarding soil gas impacts below the site, the borings will be drilled to a depth of approximately 20 feet bgs. This depth may change in the future based on conditions encountered in the field at the time of installation.

Subsurface conditions encountered during drilling will be logged and monitored as described in Section 5.1. IDW will be managed also as described in Section 5.1.

6.1.2 Subsurface Soil Sampling

During borehole advancement, discrete, undisturbed soil samples will be collected using 6-inch stainless steel sleeves, placed inside a California modified split-spoon sampler. The samples will be collected at 2 feet bgs, 5 feet bgs, and every 5 feet thereafter, to a depth of 20 feet bgs or until refusal, whichever occurs first.

For the purposes of analytical testing, soil samples, anticipated to be analyzed for VOCs, will be obtained in accordance with EPA Method 5035 using an EnCore®, Core N' One, Terra Core or an equivalent sampling device. Samples will be collected and handled as described in Section 5.1.1.

6.1.3 Soil Analytical Testing

Selected soil samples collected during installation of extraction wells will be analyzed for TPH-cc by EPA Method 8015M and VOCs by EPA Method 8260B. Based on field observations and monitoring, all samples exhibiting signs of impacts (PID readings, odors, discoloration, etc.) will be analyzed. If none of the samples exhibit field evidence of impacts, two samples per boring will be submitted for analytical testing. Selection of samples for analyses will be based on field observations and screening.

Because core samples require 2-day extraction, appropriate arrangements will be made with the analytical laboratory for expedited handling of the samples. It is anticipated that between 12 and a maximum of 24 soil samples will be collected and submitted for analytical testing as part of well installation.

6.1.4 Soil Vapor Extraction Well Installation

Upon completion, the exploratory boring will be converted into soil vapor extraction wells. All wells will be constructed of 2-inch diameter Schedule 40 PVC blank casing, with a minimum of 15-foot section of continuous slot screen casing with a slot size of 0.020", as shown on Figure 17B (Detail 1, Vapor Extraction Well Construction Diagram). The screened section will be installed at the bottom of the well and the blank casing will be installed above the screened section to approximately 2 feet above the ground surface. The bottom of the screen will contain a 2-inch diameter Schedule 40 PVC threaded cap. Actual depths will be determined based on encountered field conditions. If soil excavation zones (refer to Section 4.0 and Figure 8A) will remain open after soil removal and during SVE implementation, this well construction approach will be adjusted accordingly.

A granular filter sand pack will be placed in the annular space between the screen and the borehole wall to approximately two feet above the top of the screen. A low permeability seal, consisting of bentonite pellets, will be placed immediately above the filter pack. Thickness of the seal may vary from 1 to 3 feet, depending on the final depth of the well. The remaining annular space to the surface will be filled with a neat cement/bentonite grout. No surface completion will be provided, aside from a top cap. Construction details will be documented on a well construction log, as described in Section 5.2

Once the soil vapor extraction wells are installed, they will be tied into SVE system, as described in the following section.

6.2 SVE CONVEYANCE PIPING

The conveyance piping system will connect the vapor extraction wells to the vapor extraction/treatment unit. Each well will be fitted with lateral piping, as shown on Figure 17A, and connected to the SVE extraction/treatment unit via a common manifold, equipped with an isolation valve and a monitoring port for each well (Figure 17B). As shown on Figure 17A, conveyance piping is anticipated to consist

of mostly 2-inch diameter Schedule 40 PVC pipe. All conveyance piping will be installed at grade/aboveground, using appropriate supports, as needed. The selected contractor will exercise care laying pipe, especially if open excavations remain in AOC 7 following soil removal. All pipe will be sloped back to the wells.

At the equipment compound, proposed to be installed as shown on Figures 17A and 17C, the lateral lines will be connected into a main header, complete with the main influent valve and sampling ports, prior to final connection to the vapor extraction/treatment system, described in the following section.

6.3 SVE EXTRACTION/TREATMENT SYSTEM

The vapor extraction/treatment system will consist of a trailer- or skid-mounted, pre-plumbed, pre-wired, vapor extraction/blower unit capable of handling up to 500 standard cubic feet per minute (scfm) total flow, and two (2) 1,000 pound (lb) GAC vessels, installed in series.

The unit will contain a minimum of 10 Hp TEFC motor and a positive displacement blower, sized for up to 14 inches of mercury (Hg) vacuum. The blower motor will operate on 208/240 Volt, 1 or 3-phase, up to 150 amps electrical power. The selected contractor will work with the PARC's City of Los Angeles team and the Los Angeles Department of Water and Power (LADWP) to arrange for an electrical power source near the equipment compound.

The blower unit will contain an entrainment separator (minimum of 50-gallon capacity) with high liquid level shut-off and visual sight glass, a vacuum gage, an influent filter, sound-proofing on the blower, and complete valving, instrumentation, and process alarms. Based on the results of the investigations, which identified presence of both petroleum hydrocarbons and chlorinated solvents in soil gas, the extracted air will be treated through GAC, prior to discharge to the atmosphere.

Equipment with a valid various-locations permit from the South Coast Air Quality Management District (SCAQMD) will be used. Obtaining a site-specific permit-to-operate is not anticipated, due to projected duration of the project. The proposed location of the SVE equipment is shown on Figure 17A. A simplified process flow diagram is shown on Figure 17C. Exact equipment configuration will depend on vendor availability at the time of equipment procurement.

6.4 OPERATIONS AND MONITORING

Following installation of the conveyance piping and connection to the SVE blower unit, the SVE system will be started. Each extraction well will be opened to the system individually, one at a time, until all six wells are under vacuum. The start-up procedures will be similar to those typically used during pilot testing (refer to Section 5.3) and will include frequent monitoring of vacuum (direct and induced), flow rates, VOC concentrations, temperature and other parameters at sampling ports installed at the extraction wells and at the inlet/outlet of the vapor extraction/treatment unit. Adjustments will be made to these components to ensure that the SVE system operates at maximum extraction/treatment efficiency and within permitted limits. Vacuum measurements will be taken using magnehelic gages of appropriate resolution, a digital manometer, or a similar device. Chemical composition, including total VOC concentrations, will be measured using portable instruments, such as a PID. Fixes gases can be read with such instruments as a four-gas analyzer, Landtec Gas Extraction Monitor (GEM-5000), or similar.

It is anticipated that following completion of start-up procedures, the SVE system will be initially operated by extracting soil vapor from all wells and treating the vapor through the GAC. Eventually, some wells may be closed and/or treatment may not be necessary, if emissions from the unit do not exceed regulatory limits.

The SVE system is expected to initially operate continuously for a period of at least three (3) months. Following this period of initial continuous operation, the system is anticipated to be either shut-down to allow for vapor rebound or operated in a pulse mode (refer to Section 6.4.2 for further detail). During the shut-down, system monitoring will be performed to determine when, and if, the system should be re-started. It is also anticipated that several vapor rebound periods will be initiated prior to reaching the goals of the remediation. Overall, the SVE system is expected to operate for less than 12 months.

During operation of the SVE system, monthly, weekly and as-needed monitoring activities will be performed to provide efficient operation of the system and to monitor the progress of remediation. The following sections describe the routine monitoring activities to be conducted during operation of the SVE system. As-needed activities will be performed using the same procedures as described below, but their frequency cannot be predetermined.

6.4.1 Routine Operation and Monitoring Procedures

On a weekly basis, the vacuum, SVE influent flow and temperature, and inlet (influent) and outlet (effluent) VOC concentrations will be monitored at the SVE unit and GAC canisters. VOC levels will be monitored with a PID, calibrated to hexane, as required by a typical SCAQMD permit. In addition to monitoring with field instruments, an inlet sample will be collected for analysis for VOCs by EPA Method TO-15 and Total VOCs as hexane by EPA Method TO-3M (SCAQMD).

Monthly visits will include monitoring of individual wells (for vacuum, flow and VOC concentrations), and collection of an outlet sample. The monthly effluent sample will be analyzed for VOCs by EPA Method TO-15 and Total VOCs as hexane by EPA Method TO-3M (SCAQMD).

Monitoring data will be evaluated, and adjustments to the SVE system will be performed if needed. In addition, all components of the SVE system will be inspected and maintained, according to manufacturer's specifications, during the regular monitoring events.

Procedures used to obtain the monitoring data and to collect samples will be the same as described above.

6.4.2 Pulse Operation and Rebound Assessment

As noted earlier, to optimize the system performance, the SVE system may be operated in a pulse mode. The pulse-mode operation (i.e., periodic shut-down and re-start of the SVE system) may begin once diffusion-limited conditions are reached, the influent concentrations are stable or asymptotic, and mass removal rates are low. If utilized, pulse-mode operation will continue until the SVE system is ready for rebound or clean-up completion assessment.

Once influent concentrations are asymptotic and mass removal rates are negligible, a rebound assessment will be performed by shutting the system down for a period of approximately 30 days (or, as determined through continuous or pulse-mode operation); then re-starting the system and assessing whether subsurface concentrations have rebounded. If, after the re-start, VOC concentrations are within 25% of the pre-shut-down concentrations, the SVE operations will be deemed complete and the project completion will be assessed as described further in Section

5.4.3. If subsurface concentrations rebound, SVE operations will continue until levels are again stable or asymptotic and mass removal rates are negligible, at which point rebound testing will be repeated.

If it becomes apparent that no further clean-up can be achieved through SVE, but project objectives cannot be met, the system will be evaluated for permanent shutdown and other options will be assessed, including, but not necessary limited to, a deed restriction.

6.4.3 Completion Assessment

After soil vapor concentrations have reached asymptotic levels and rebound testing has been completed, a round of post-remediation soil vapor confirmation sampling will be performed. Post-remediation sampling will be performed approximately one to three months following SVE system shut down, to allow for soil vapor concentrations to equilibrate and reach steady-state conditions. Post-remediation sampling will generally be performed as part of the regular monitoring and sampling program.

Once it is determined that the project is complete, the SVE system will be decommissioned: the extraction/treatment units will be removed from the site; piping will be either removed or capped; and wells will be destroyed in accordance with State and Los Angeles County standards.

6.5 SVE DURATION AND REPORTING

As noted earlier, it is anticipated that the SVE system will be operated for less than 12 months; the entire project duration, including preliminary and post-remediation work, may continue for up to 18 months. Throughout this period, several reports/submittals are anticipated, which include: a report of system construction and initial operation; progress O&M reports (if operations exceed six months); and a report of completion of SVE activities at project termination. These reports will be prepared under supervision of and signed by a California registered engineer or geologist.

The reports are anticipated to include the following elements, as appropriate:

- A narrative description of operation, maintenance and monitoring activities conducted, including routine and non-routine services and/or adjustments performed;
- Results and evaluation of the data collected during the SVE system operation, such as VOC concentrations and contaminant removal estimates, presented as a narrative discussion and in tables and/or figures, as appropriate; and
- Conclusions and recommendations.

In addition to the above, the report of system construction will include details of extraction well installation (including boring logs/well construction diagrams); as-built details/drawings of the completed SVE system; and a description of the system start-up and initial operation.

7.0 OVERALL PROJECT DURATION, SEQUENCING AND REPORTING

As described in foregoing sections, multiple AOCs will undergo various remedial activities and various remedial actions will be undertaken within the same AOC. Anticipated duration of each of those activities is discussed in the corresponding sections; this section will discuss the overall project schedule and duration.

Smart sequencing of remedial actions throughout the entire PARC alignment should allow for completion of the entire remediation within approximately 18 months. The longest potential remedial action under this RAP is SVE in AOC 7, however, pilot testing in AOC 8 and soil removal from AOC 7 should take place prior to it. Unlike soil remediation, only minimal regulatory involvement (permitting/notification) is required for implementation of pilot testing in AOC 8. Therefore, the following sequence of operations is proposed:

1. Installation of vapor wells and SVE Pilot Test in AOC 8
2. Permitting of soil excavations: stormwater PRDs, preparation of SCAQMD 1466 notification application, and Caltrans/DTSC documents.
3. AOC pre-screening and assessment of access
4. Soil Remediation of AOC 7
5. Installation of SVE system in AOC 7. Operation of the system, while the remaining work is performed.
6. Soil Remediation in AOC 6 (to allow for waste stabilization, if deemed relevant)
7. Soil Remediation in AOC 5 (to allow for segregation of clean overburden, to be used elsewhere)
8. Remaining work, as permitted

The above sequence and its rationale will be re-visited by the selected contractor at the time of RAP implementation and adjusted as necessary in consultation with the City of Los Angeles and in consideration of the overall PARC construction schedule. The above sequence is reflected on the proposed project schedule shown on Figure 18.

Upon completion of all remedial activities, a final report will provide a summary of all conducted activities, results of confirmation/post-remediation sampling, and include a request for no further action.

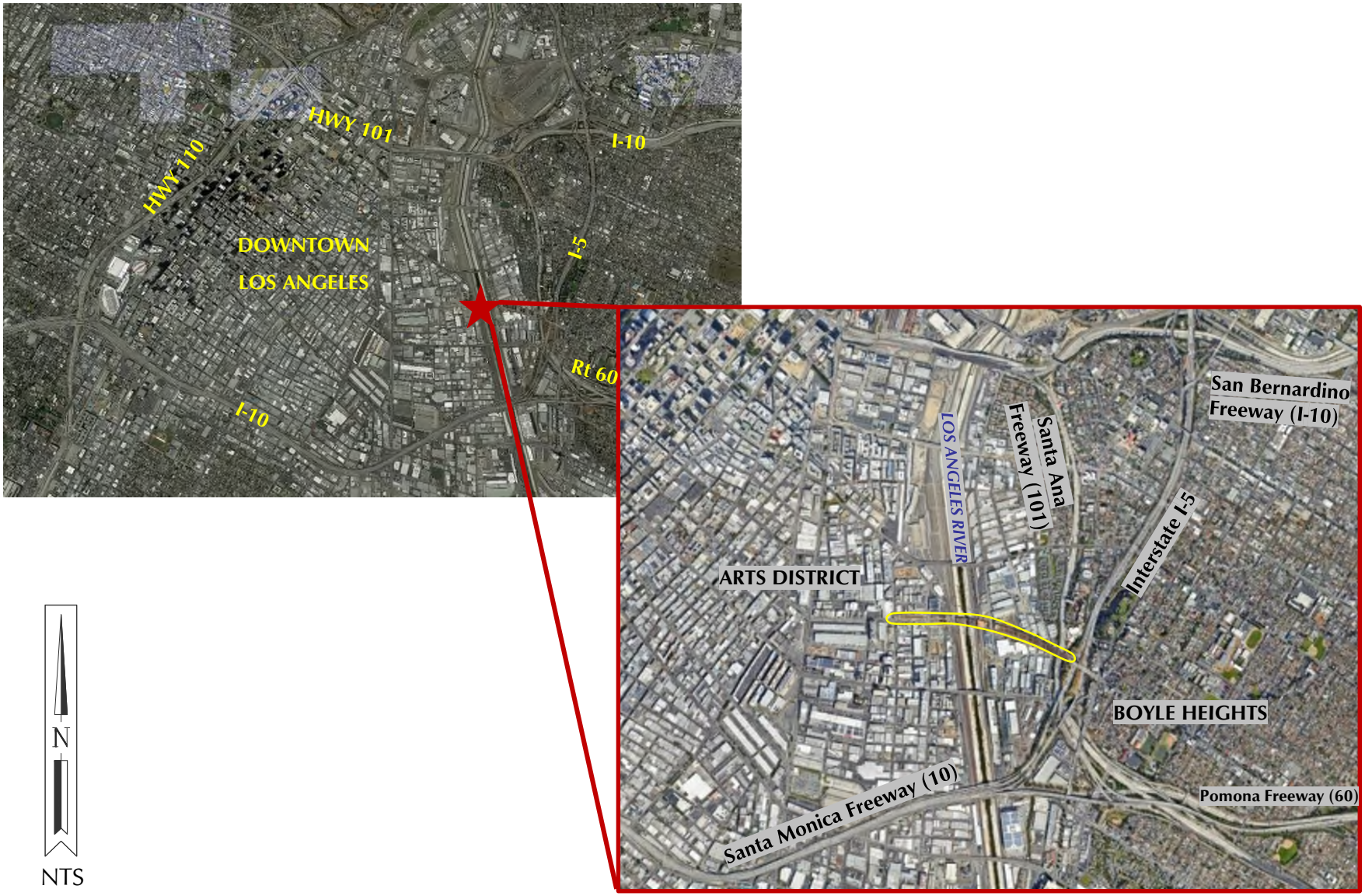

TETRA TECH BAS
21700 COPLEY DRIVE, SUITE 200
DIAMOND BAR, CA
909-860-7777

PARC PROJECT, LOS ANGELES, CA

SITE LOCATION AND VICINITY MAP

FIGURE 1

DATE: MAY 2021

DRAWN BY: MG

FILE: J:\TETRATECH\2021-0079 – Sixth Street PARC RAP



Sixth Street Viaduct – pre-demolition in 2015

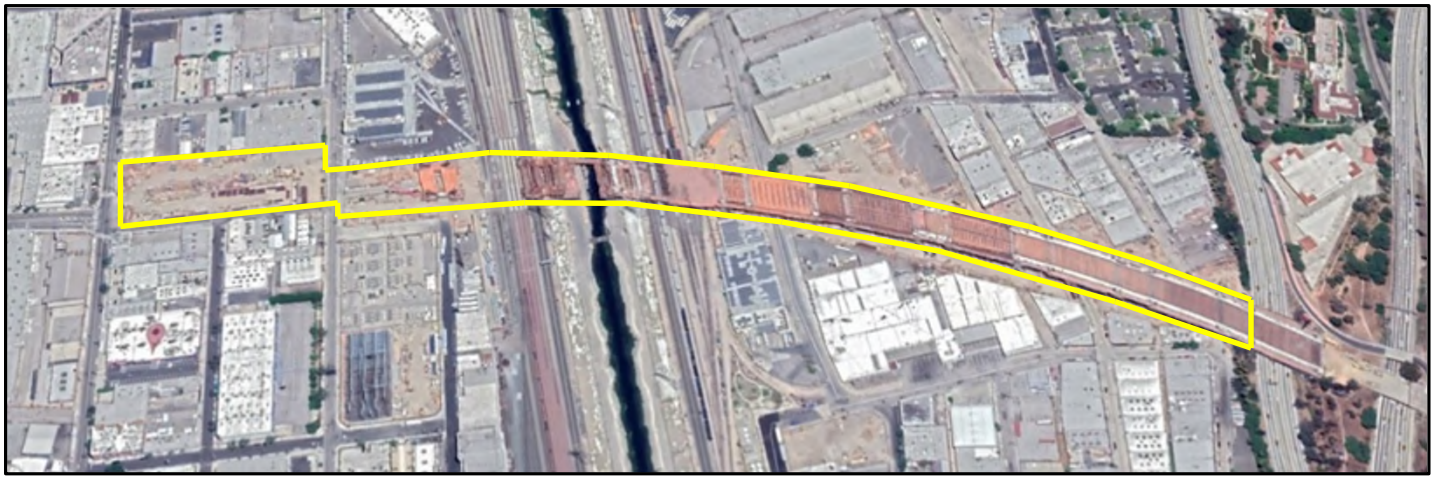

Sixth Street Viaduct Replacement Project under construction in 2020

N

NTS

TETRA TECH BAS
21700 COPLEY DRIVE, SUITE 200
DIAMOND BAR, CA
909-860-7777

PARC PROJECT, LOS ANGELES, CA

SITE MAP

FIGURE 2

DATE: MAY 2021

DRAWN BY: MG

FILE: J:\TETRATECH\2021-0079 – Sixth Street PARC RAP

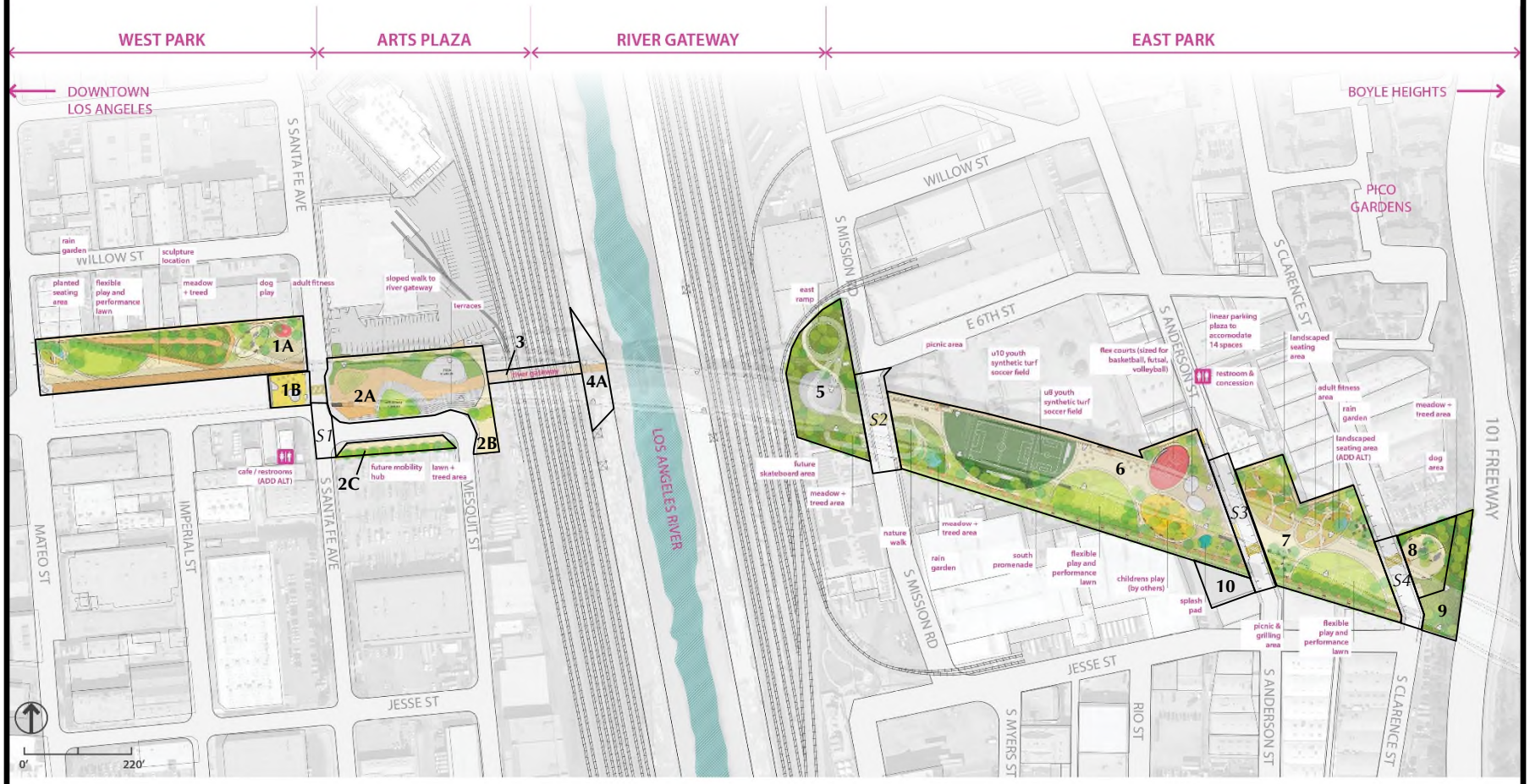

2A – Area of Concern Designation

TETRA TECH BAS
21700 COPLEY DRIVE, SUITE 200
DIAMOND BAR, CA
909-860-7777

PARC PROJECT, LOS ANGELES, CA

PARC DESIGN

FIGURE 3

DATE: MAY 2021

DRAWN BY: CC

FILE: J:\TETRATECH\2021-0079 – Sixth Street PARC RAP

REFER TO FIGURE 5 FOR AOC 1 &2 DATA SUMMARY
REFER TO FIGURE 10 FOR AOC 1&2 REMEDIAL APPROACH

REFER TO FIGURE 6 FOR AOC 5 DATA SUMMARY
REFER TO FIGURE 11 FOR AOC 5 REMEDIAL APPROACH

REFER TO FIGURE 9 FOR AOC 8&9 DATA SUMMARY
REFER TO FIGURE 14 FOR AOC 8&9 SOIL REMEDIAL APPROACH
REFER TO FIGURE 15 FOR AOC 8 SVE APPROACH

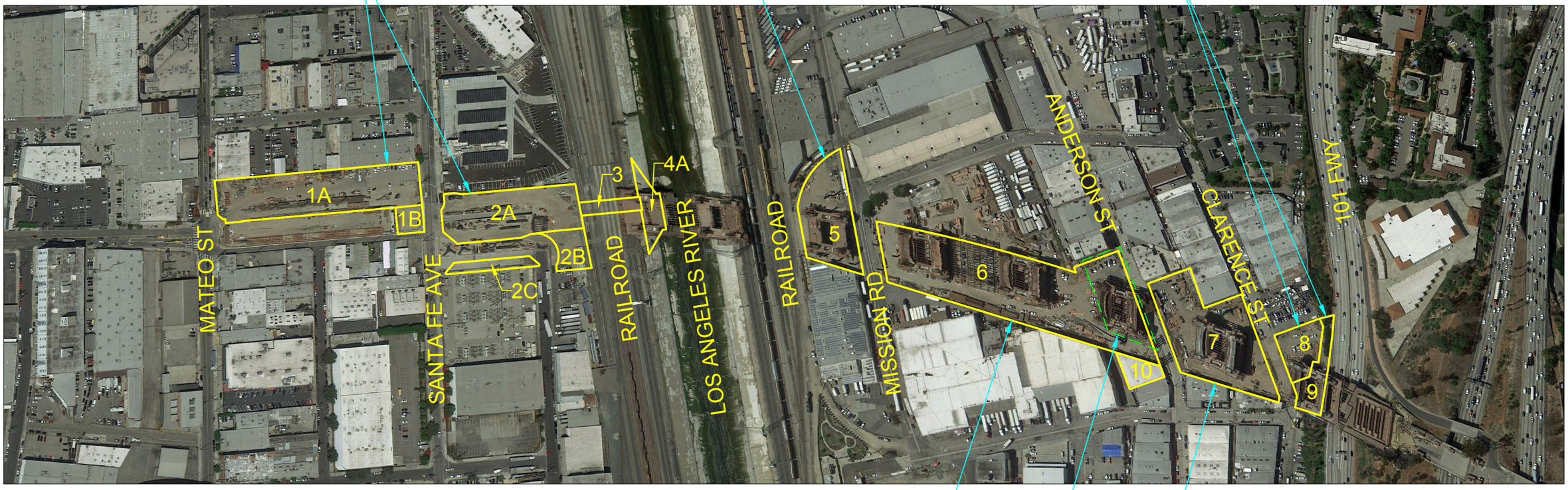

REFER TO FIGURE 7A FOR AOC 6 DATA SUMMARY
REFER TO FIGURE 12A FOR AOC 6 REMEDIAL APPROACH

REFER TO FIGURE 7B FOR AOC 6 DATA SUMMARY
REFER TO FIGURE 12B FOR AOC 6 REMEDIAL APPROACH

REFER TO FIGURE 8A FOR AOC 7 SOIL DATA SUMMARY
REFER TO FIGURE 13 FOR AOC 7 SOIL REMEDIAL APPROACH
REFER TO FIGURE 8B FOR AOC 7 VAPOR DATA SUMMARY
REFER TO FIGURE 16 & 17A FOR AOC 7 SVE APPROACH

LEGEND

1A AREA OF CONCERN

0 300 600
SCALE IN FEET

N

FIGURE 4

J:\TETRA TECH\2021-0079 - SIXTH STREET PARC RAP\FIGURES\FIGURE 4 - AOCS CF

TETRA TECH
21700 Copley Drive, Diamond Bar, CA 91765
TEL 909.860.7777 FAX 909.860.8017

SIXTH STREET VIADUCT PARC IMPROVEMENTS PROJECT

LOCATIONS OF AREAS OF CONCERN (AOCs)

JOB NO.	2021-0079
DATE	05/2021
DRAWN BY	CF
FILE NAME:	FIGURE 4.DWG

BORING ID	DEPTH FT	TOTAL Pb mg/Kg	SOLUBLE Pb mg/L	LEACHABLE Pb mg/L
HAZARDOUS WASTE STANDARD		*1,000*	*5*	*5*
SCREENING LEVEL		*80*	-	-
1A-1	0.5	860	51	3.6
	1.0	230	9.9	ND
	3.0	440	11	1.3
	5.0	1.1	-	-

BORING ID	DEPTH FT	TOTAL Pb mg/Kg	SOLUBLE Pb mg/L	LEACHABLE Pb mg/L
HAZARDOUS WASTE STANDARD		*1,000*	*5*	*5*
SCREENING LEVEL		*80*	-	-
1A-2	0.5	310	26	ND
	1.0	15	-	-
	3.0	1.1	-	-
	5.0	3.2	-	-

BORING ID	DEPTH FT	TOTAL Pb mg/Kg	SOLUBLE Pb mg/L	LEACHABLE Pb mg/L
HAZARDOUS WASTE STANDARD		*1,000*	*5*	*5*
SCREENING LEVEL		*80*	-	-
L-11	1.0	690	41	-
	3.0	2.5	-	-
	5.0	-	-	-

BORING ID	DEPTH FT	TOTAL Pb mg/Kg	SOLUBLE Pb mg/L	LEACHABLE Pb mg/L
HAZARDOUS WASTE STANDARD		*1000*	*5*	*5*
SCREENING LEVEL		*80*	-	-
1A-4	0.5	140	5.1	ND
	1.0	4.2	-	-
	3.0	1.9	-	-
	5.0	1.7	-	-

BORING ID	DEPTH FT	TOTAL Pb mg/Kg	SOLUBLE Pb mg/L	LEACHABLE Pb mg/L
HAZARDOUS WASTE STANDARD		*1,000*	*5*	*5*
SCREENING LEVEL		*80*	-	-
1A-3	0.5	140	5.9	ND
	1.0	130	7.1	ND
	3.0	1.5	-	-
	5.0	ND	-	-

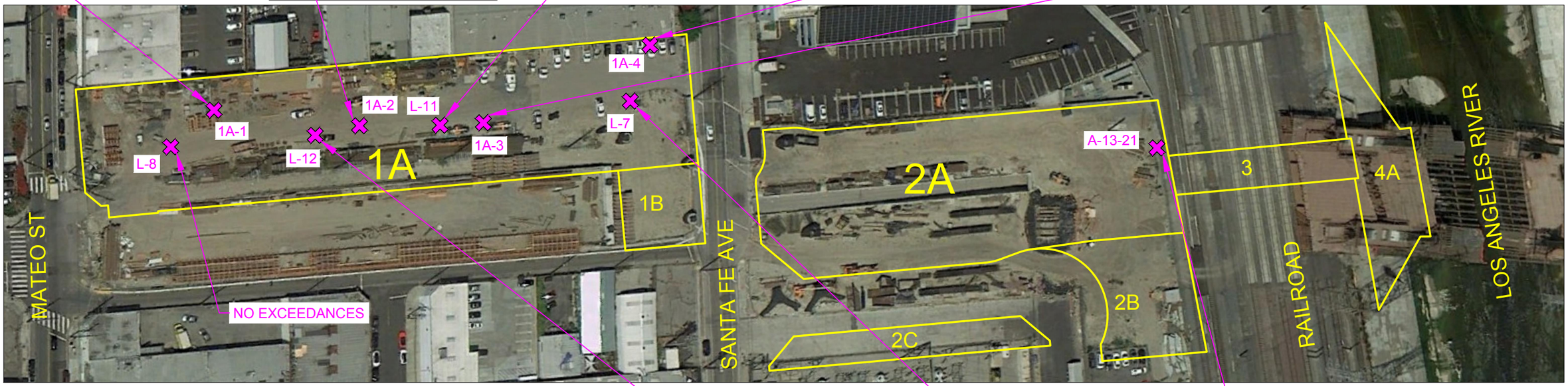

NOTES

1. THE REMAINDER OF THE SAMPLING LOCATIONS IN AOC 2 DO NOT EXCEED THE CLEANUP THRESHOLDS AND ARE CONSEQUENTLY NOT SHOWN.
2. EXCEEDANCES OF SCREENING LEVELS ARE SHOWN IN PINK/MAGENTA, EXCEEDANCES OF HAZARDOUS WASTE STANDARD(S) ARE SHOWN IN RED, AND EXCEEDANCES OF HEALTH RISK CRITERIA (AS CALCULATED IN THE HHRA) ARE SHOWN IN BLUE.
   - SCREENING LEVEL FOR LEAD IS BASED ON DTSC-SL FOR LEAD IN A RESIDENTIAL LAND-USE SCENARIO.
   - HAZARDOUS WASTE STANDARDS: TTLC, STLC, TCLP FOR TOTAL, SOLUBLE AND LEACHABLE FRACTIONS, RESPECTIVELY.

LEGEND

2A AREA OF CONCERN

SOIL SAMPLING LOCATION

N

0 100 200

SCALE IN FEET

BORING ID	DEPTH FT	TOTAL Pb mg/kg	SOLUBLE Pb mg/L	LEACHABLE Pb mg/L	TPH/D mg/kg
HAZARDOUS WASTE STANDARD		*1,000*	*5*	*5*	-
SCREENING LEVEL		*80*	-	-	-
L-12	1.0	76	6	-	-
	2.0	4.9	-	-	110
	3.0	1.0	-	-	-

BORING ID	DEPTH FT	TOTAL Pb mg/kg	SOLUBLE Pb mg/L	LEACHABLE Pb mg/L	TPH/D mg/kg
HAZARDOUS WASTE STANDARD		*1,000*	*5*	*5*	-
SCREENING LEVEL		*80*	-	-	-
L-7	1.0	290	15	-	63
	2.0	3.9	-	-	-
	3.0	5.4	-	-	-

BORING ID	DEPTH FT	TOTAL Pb mg/Kg	SOLUBLE Pb mg/L	LEACHABLE Pb mg/L	TPH/G mg/kg	TPH/D mg/kg	TPH/O mg/kg	TPH TOTAL mg/kg
HAZARDOUS WASTE STANDARD		*1,000*	*5*	*5*	-	-	-	-
SCREENING LEVEL		*80*	-	-	-	-	-	-
A-13-21	5.0	170	-	-	370	50	11	430
	35.0	-	-	-	13	19	1.9	33
	65.0	ND	-	-	ND	ND	ND	ND

FIGURE 5

TETRA TECH
21700 Copley Drive, Diamond Bar, CA 91765
TEL 909.860.7777 FAX 909.860.8017

SIXTH STREET VIADUCT PARC IMPROVEMENTS PROJECT

MAP OF AOCs 1 AND 2 SHOWING DATA EXCEEDING CLEANUP CRITERIA

JOB NO. 2021-0079
DATE 05/2021
DRAWN BY CF
FILE NAME: FIGURE 5.DWG

J:\TETRA TECH\2021-0079 - SIXTH STREET PARC RAP\FIGURES\FIGURES 5 - AOCS 1&2

BORING ID	DEPTH FT	TOTAL Pb mg/Kg	SOLUBLE Pb mg/L	LEACHABLE Pb mg/L
HAZARDOUS WASTE STANDARD		*1,000*	*5*	*5*
SCREENING LEVEL		*80*	-	-
5-1	0.5	20	-	-
	1.0	68	4.8	ND
	3.0	110	3.7	ND
	5.0	2.2	-	-

BORING ID	DEPTH FT	TOTAL Pb mg/kg	SOLUBLE Pb mg/L	LEACHABLE Pb mg/L	TPH/D mg/kg
HAZARDOUS WASTE STANDARD		*1,000*	*5*	*5*	-
SCREENING LEVEL		*80*	-	-	-
L-9	1.0	64	-	-	190
	2.5	16	-	-	-

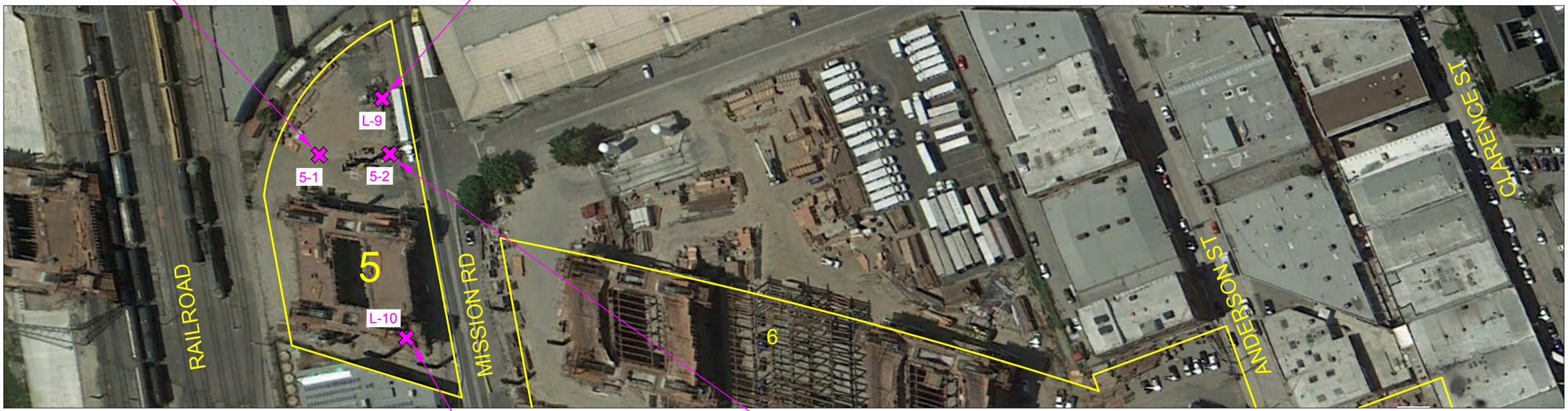

BORING ID	DEPTH FT	TOTAL Pb mg/kg	SOLUBLE Pb mg/L	LEACHABLE Pb mg/L	TPH/D mg/kg
HAZARDOUS WASTE STANDARD		*1,000*	*5*	*5*	-
SCREENING LEVEL		*80*	-	-	-
L-10	1.0	44	-	-	260
	3.0	20	-	-	-

BORING ID	DEPTH FT	TOTAL Pb mg/Kg	SOLUBLE Pb mg/L	LEACHABLE Pb mg/L
HAZARDOUS WASTE STANDARD		*1,000*	*5*	*5*
SCREENING LEVEL		*80*	-	-
5-2	0.5	48	-	-
	1.0	19	-	-
	2.0	2.3	-	-
	3.0	180	ND	ND

LEGEND

5 AREA OF CONCERN

SOIL SAMPLING LOCATION

N

0 100 200

SCALE IN FEET

NOTES

1. EXCEEDANCES OF SCREENING LEVELS ARE SHOWN IN PINK/MAGENTA, EXCEEDANCES OF HAZARDOUS WASTE STANDARD(S) ARE SHOWN IN RED, AND EXCEEDANCES OF HEALTH RISK CRITERIA (AS CALCULATED IN THE HHRA) ARE SHOWN IN BLUE.
   - SCREENING LEVEL FOR LEAD IS BASED ON DTSC-SL FOR LEAD IN A RESIDENTIAL LAND-USE SCENARIO.
   - HAZARDOUS WASTE STANDARDS: TTLC, STLC, TCLP FOR TOTAL, SOLUBLE AND LEACHABLE FRACTIONS, RESPECTIVELY.

FIGURE 6

J:\TETRA TECH\2021-0079 - SIXTH STREET PARC R&P\FIGURES\FIGURES 6 - AOC 5

TETRA TECH
21700 Copley Drive, Diamond Bar, CA 91765
TEL 909.860.7777 FAX 909.860.8017

SIXTH STREET VIADUCT PARC IMPROVEMENTS PROJECT

MAP OF AOC 5 SHOWING DATA EXCEEDING CLEANUP CRITERIA

JOB NO. 2021-0079
DATE 05/2021
DRAWN BY CF
FILE NAME: FIGURE 6.DWG

BORING ID	DEPTH FT	TOTAL Pb mg/Kg	SOLUBLE Pb mg/L	LEACHABLE Pb mg/L	TOTAL As mg/kg
HAZARDOUS WASTE STANDARD		*1,000*	*5*	*5*	*500*
SCREENING LEVEL		*80*	-	-	*12*
6-2	0.5	90	ND	ND	2.9
	1.0	38	-	-	1.2
	3.0	1.2	-	-	ND
	5.0	1.2	-	-	ND

BORING ID	DEPTH FT	TOTAL Pb mg/Kg	SOLUBLE Pb mg/L	LEACHABLE Pb mg/L	TOTAL As mg/kg
HAZARDOUS WASTE STANDARD		*1,000*	*5*	*5*	*500*
SCREENING LEVEL		*80*	-	-	*12*
6-3	0.5	9.1	-	-	ND
	1.0	4,300	270	7.3	11
	3.0	250	ND	ND	1.6
	5.0	1.1	-	-	ND

BORING ID	DEPTH FT	TOTAL Pb mg/kg	SOLUBLE Pb mg/L	LEACHABLE Pb mg/L	TOTAL As mg/kg	SOLUBLE As mg/L
HAZARDOUS WASTE STANDARD		*1,000*	*5*	*5*	*500*	*5*
SCREENING LEVEL		*80*	-	-	*12*	-
6-4	0.5	30	-	-	2.3	-
	1.0	94	5.4	ND	26	1.1
	3.0	16	-	-	11	-
	5.0	3.2	-	-	9.0	-

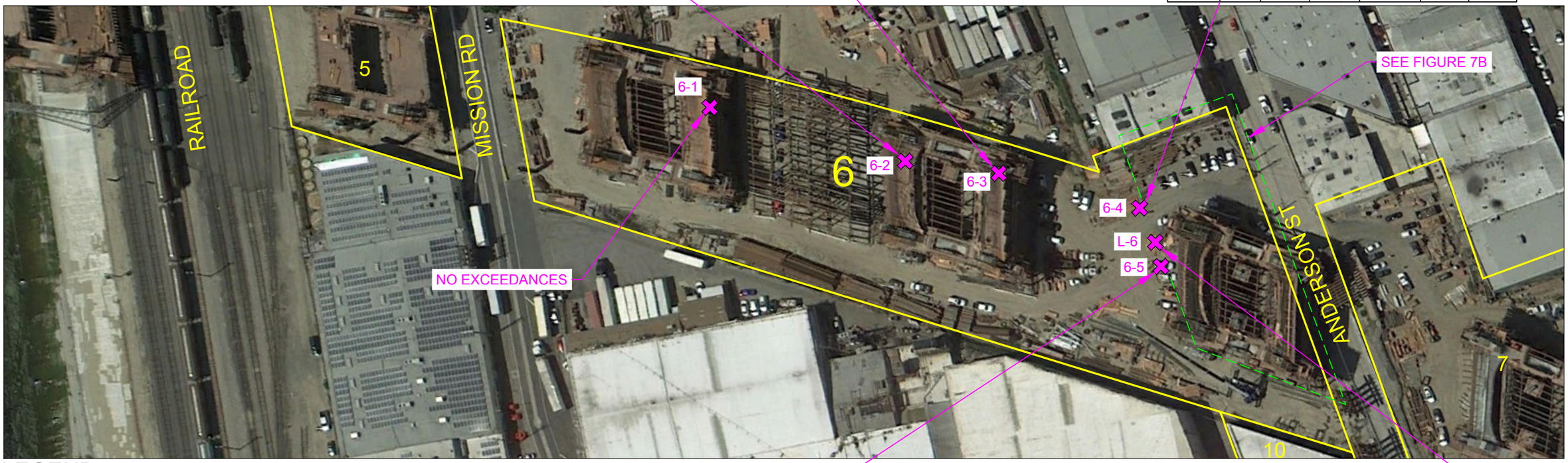

LEGEND

6 AREA OF CONCERN

✖ SOIL SAMPLING LOCATION

N

0 100 200

SCALE IN FEET

NOTES

1. EXCEEDANCES OF SCREENING LEVELS ARE SHOWN IN PINK/MAGENTA, EXCEEDANCES OF HAZARDOUS WASTE STANDARD(S) ARE SHOWN IN RED, AND EXCEEDANCES OF HEALTH RISK CRITERIA ARE SHOWN IN BLUE.
   - SCREENING LEVEL FOR LEAD IS BASED ON DTSC-SL FOR LEAD IN A RESIDENTIAL LAND-USE SCENARIO.
   - HAZARDOUS WASTE STANDARDS: TTLC, STLC, TCLP FOR TOTAL, SOLUBLE AND LEACHABLE FRACTIONS, RESPECTIVELY.
   - SCREENING LEVEL FOR ARSENIC IS BASED ON BACKGROUND CONCENTRATIONS IN SOUTHERN CALIFORNIA.

BORING ID	DEPTH FT	TOTAL Pb mg/Kg	SOLUBLE Pb mg/L	LEACHABLE Pb mg/L	TOTAL As mg/kg
HAZARDOUS WASTE STANDARD		*1,000*	*5*	*5*	*500*
SCREENING LEVEL		*80*	-	-	*12*
6-5	0.5	400	1.9	ND	9.1
	1.0	59	1.9	1.8	3.9
	3.0	2.4	-	-	1.0
	5.0	1.1	-	-	ND

BORING ID	DEPTH FT	TOTAL Pb mg/kg	SOLUBLE Pb mg/L	LEACHABLE Pb mg/L	TPH/D mg/kg	TOTAL As mg/kg
HAZARDOUS WASTE STANDARD		*1,000*	*5*	*5*	-	*500*
SCREENING LEVEL		*80*	-	-	-	*12*
L-6	1.0	200	11	-	6,600	10
	2.0	5.8	-	-	-	26
	3.0	2.4	-	-	-	17

FIGURE 7A

J:\TETRA TECH\2021-0079 - SIXTH STREET PARC R&P\FIGURES\FIGURE 7A - AOC 6

TETRA TECH
21700 Copley Drive, Diamond Bar, CA 91765
TEL 909.860.7777 FAX 909.860.8017

SIXTH STREET VIADUCT PARC IMPROVEMENTS PROJECT

MAP OF AOC 6 SHOWING DATA EXCEEDING CLEANUP CRITERIA

JOB NO. 2021-0079
DATE 05/2021
DRAWN BY CF
FILE NAME: FIGURE 7.DWG

LOCATION 18.2					
BORING ID	DEPTH FT	TOTAL Pb mg/kg	SOLUBLE Pb mg/L	LEACHABLE Pb mg/L	TOTAL As mg/kg
HAZARDOUS WASTE STANDARD		1,000	*5*	*5*	*500*
SCREENING LEVEL		*80*	-	-	*12*
6-8	1.0	140	3.6	0.28	5.0
	3.0	1	-	-	ND
	5.0	1.4	-	-	ND
	7.5	ND	-	-	ND
6-9	1.0	33	-	-	ND
	3.0	3,100	32	6.5	9.4
	5.0	41	-	-	ND
	7.5	3.4	-	-	ND
6-10	1.0	99	14	ND	ND
	3.0	800	360	410	6.5
	5.0	13	-	-	8.6
	7.5	1.2	-	-	ND
18.2-1	1.0	468	9.6	0.24	15.6
	3.5	1.9	-	-	ND
18.2-2	1.0	87	12	-	2.25
	3.5	16,100	-	126	17.1
18.2-3	1.0	433	54.5	0.958	2.05
	3.5	1,310	-	12.2	4.75

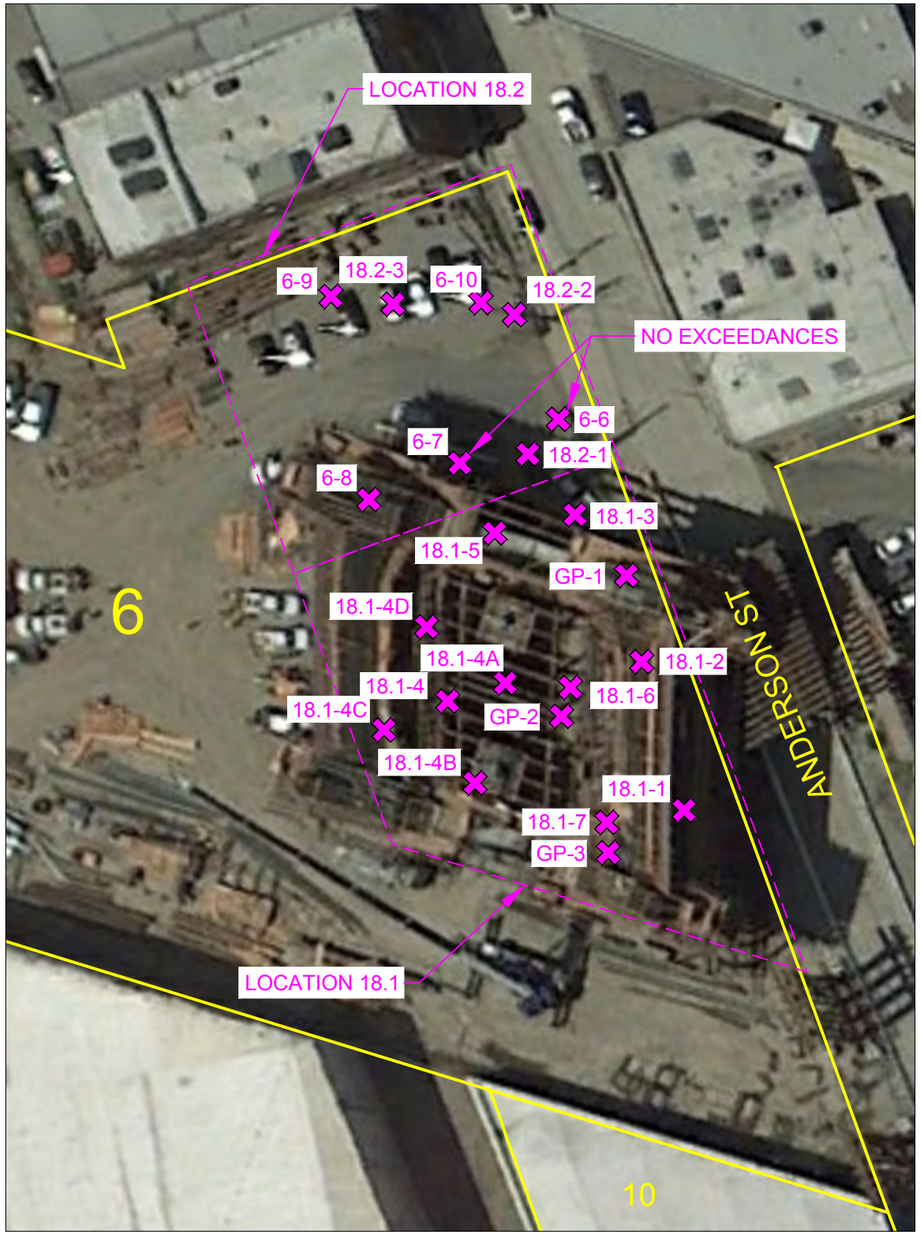

LOCATION 18.1					
BORING ID	DEPTH FT	TOTAL Pb mg/kg	SOLUBLE Pb mg/L	LEACHABLE Pb mg/L	TOTAL As mg/kg
HAZARDOUS WASTE STANDARD		1,000	*5*	*5*	*500*
SCREENING LEVEL		*80*	-	-	*12*
18.1-GP-1	1.0	53	6.1	0.81	1.9
	2.0	74	3.6	0.17	2.4
	3.5	34	ND	ND	1.8
	5.0	1.6	ND	ND	1.0
	6.5	170	15	0.35	2.2
18.1-GP-2	1.0	44	3.4	ND	1.9
	2.0	8,300	950	98	ND
	3.5	71	2.8	16	2.0
	5.0	1.5	ND	ND	ND
18.1-GP-3	1.0	1,600	88	3.8	17
	2.0	62	2.3	ND	3.3
	3.5	1.4	ND	ND	1.2
	5.0	1.5	ND	ND	ND

LOCATION 18.1					
BORING ID	DEPTH FT	TOTAL Pb mg/kg	SOLUBLE Pb mg/L	LEACHABLE Pb mg/L	TOTAL As mg/kg
HAZARDOUS WASTE STANDARD		1,000	*5*	*5*	*500*
SCREENING LEVEL		*80*	-	-	*12*
18.1-1	1.0	61.1	3.77	-	2.0
	3.5	4.67	-	-	ND
18.1-2	1.0	25.4	-	-	ND
	2.0	293	35.1	3.59	0.817
18.1-3	1.0	3.47	-	-	ND
	3.5	554	18.4	ND	1.69
18.1-4	1.0	1,010	102	4.06	8.51
	3.5	17	-	-	3.59
18.1-4A	1.0	13,900	-	8.39	9.97
	3.5	30	-	-	4.58
18.1-4B	1.0	1,690	-	21.3	14
	3.5	2.85	-	-	2.99
18.1-4C	1.0	1,930	-	4.0	12.6
	3.5	8.8	-	-	3.55
18.1-4D	1.0	1,170	-	5.3	10.7
	3.5	2,560	-	6.34	10.6
18.1-5	1.0	2,050	-	6.8	7.35
	3.5	1,020	-	4.9	2.32
18.1-6	1.0	334	65.8	3.08	0.798
	3.5	1,510		205	2.45
18.1-7	1.0	505	56.6	3.77	5.03
	3.5	122	15.3	5.79	1.46

LEGEND

6 AREA OF CONCERN

SOIL SAMPLING LOCATION

N

0 50 100

SCALE IN FEET

FIGURE 7B

J:\TETRA TECH\2021-0079 - SIXTH STREET PARC RAP\FIGURES\FIGURES 7B - AOC 6

TETRA TECH

21700 Copley Drive, Diamond Bar, CA 91765
TEL 909.860.7777 FAX 909.860.8017

SIXTH STREET VIADUCT PARC IMPROVEMENTS PROJECT

MAP OF AOC 6 SHOWING DATA EXCEEDING CLEANUP CRITERIA

JOB NO. 2021-0079
DATE 05/2021
DRAWN BY CF
FILE NAME: FIGURE 8.DWG

BORING ID	DEPTH FT	TOTAL Pb mg/Kg	SOLUBLE Pb mg/L	LEACHABLE Pb mg/L
HAZARDOUS WASTE STANDARD		*1,000*	*5*	*5*
SCREENING LEVEL		*80*	-	-
20-1	1.0	240	13.4	0.5

BORING ID	DEPTH FT	TOTAL Pb mg/Kg	SOLUBLE Pb mg/L	LEACHABLE Pb mg/L
HAZARDOUS WASTE STANDARD		*1,000*	*5*	*5*
SCREENING LEVEL		*80*	-	-
L-4	1.0	98	6	ND
	3.0	2	-	-
	5.0	-	-	-

BORING ID	DEPTH FT	TOTAL Pb mg/Kg	SOLUBLE Pb mg/L	LEACHABLE Pb mg/L	TPH/D mg/kg
HAZARDOUS WASTE STANDARD		*1,000*	*5*	*5*	-
SCREENING LEVEL		*80*	-	-	-
7-4	0.5	70	5.5	ND	26
	1.0	43	-	-	-
	3.0	31	-	-	6,300
	5.0	12	-	-	-

BORING ID	DEPTH FT	TOTAL Pb mg/Kg	SOLUBLE Pb mg/L	LEACHABLE Pb mg/L	TPH/D mg/kg
HAZARDOUS WASTE STANDARD		*1,000*	*5*	*5*	-
SCREENING LEVEL		*80*	-	-	-
7-7	0.5	3.7	-	-	-
	1.0	2.3	-	-	-
	3.0	ND	-	-	ND
	5.0	ND	-	-	470

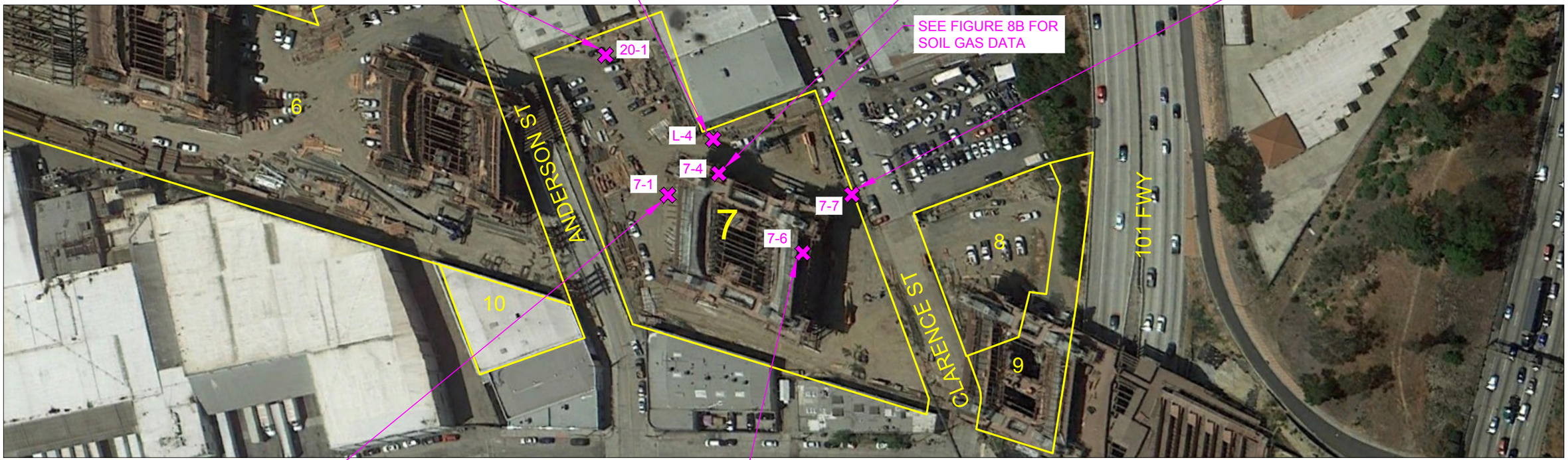

LEGEND

7 AREA OF CONCERN

SOIL SAMPLING LOCATION

N

0 100 200

SCALE IN FEET

BORING ID	DEPTH FT	TOTAL Pb mg/kg	SOLUBLE Pb mg/L	LEACHABLE Pb mg/L	TPH/D mg/kg	TOTAL Cu mg/kg	SOLUBLE Cu mg/L
HAZARDOUS WASTE STANDARD		*1,000*	*5*	*5*	-	*2,500*	25
SCREENING LEVEL		*80*	-	-	-	*3,100*	-
7-1	0.5	45	-	-	62	4,500	12
	1.0	69	6.4	0.47	120	700	140

BORING ID	DEPTH FT	TOTAL Pb mg/Kg	SOLUBLE Pb mg/L	LEACHABLE Pb mg/L	TPH/D mg/kg
HAZARDOUS WASTE STANDARD		*1,000*	*5*	*5*	-
SCREENING LEVEL		*80*	-	-	-
7-6	0.5	31	-	-	200
	1.0	22	-	-	-
	3.0	13	-	-	-
	5.0	2.7	-	-	ND

NOTES

1. EXCEEDANCES OF SCREENING LEVELS ARE SHOWN IN PINK/MAGENTA, EXCEEDANCES OF HAZARDOUS WASTE STANDARD(S) ARE SHOWN IN RED, AND EXCEEDANCES OF HEALTH RISK CRITERIA ARE SHOWN IN BLUE.
   - SCREENING LEVEL FOR LEAD IS BASED ON DTSC-SL FOR LEAD IN A RESIDENTIAL LAND-USE SCENARIO.
   - HAZARDOUS WASTE STANDARDS: TTLC, STLC, TCLP FOR TOTAL, SOLUBLE AND LEACHABLE FRACTIONS, RESPECTIVELY.
   - SCREENING LEVEL FOR ARSENIC IS BASED ON BACKGROUND CONCENTRATIONS IN CALIFORNIA.
   - SCREENING LEVEL FOR COPPER IS BASED ON EPA RSL (RESIDENTIAL).

FIGURE 8A

TETRA TECH
21700 Copley Drive, Diamond Bar, CA 91765
TEL 909.860.7777 FAX 909.860.8017

SIXTH STREET VIADUCT PARC IMPROVEMENTS PROJECT

MAP OF AOC 7 SHOWING SOIL DATA EXCEEDING CLEANUP CRITERIA

JOB NO. 2021-0079
DATE 05/2021
DRAWN BY CF
FILE NAME: FIGURE 8.DWG

J:\TETRA TECH\2021-0079 - SIXTH STREET PARC RAP\FIGURES\FIGURE 8A - AOC 7

LOCATION P-20			
SAMPLE ID	DEPTH FT	TPH-GAS µg/m³	VOCs µg/m³ PCE
VP-1	5.0	120,000	310
VP-2	5.0	21,000	270
VP-3	5.0	27,000	390
VP-4	5.0	6,500	1,000
VP-4 DUP	5.0	2,000	480
VP-5	3.0	7,600	4,700
VP-6	5.0	6,400	1,400
VP-7	3.0	7,500	4,300
VP-8	5.0	5,800	2,600
VP-9	5.0	2,800	120
VP-9 DUP	5.0	4,300	970

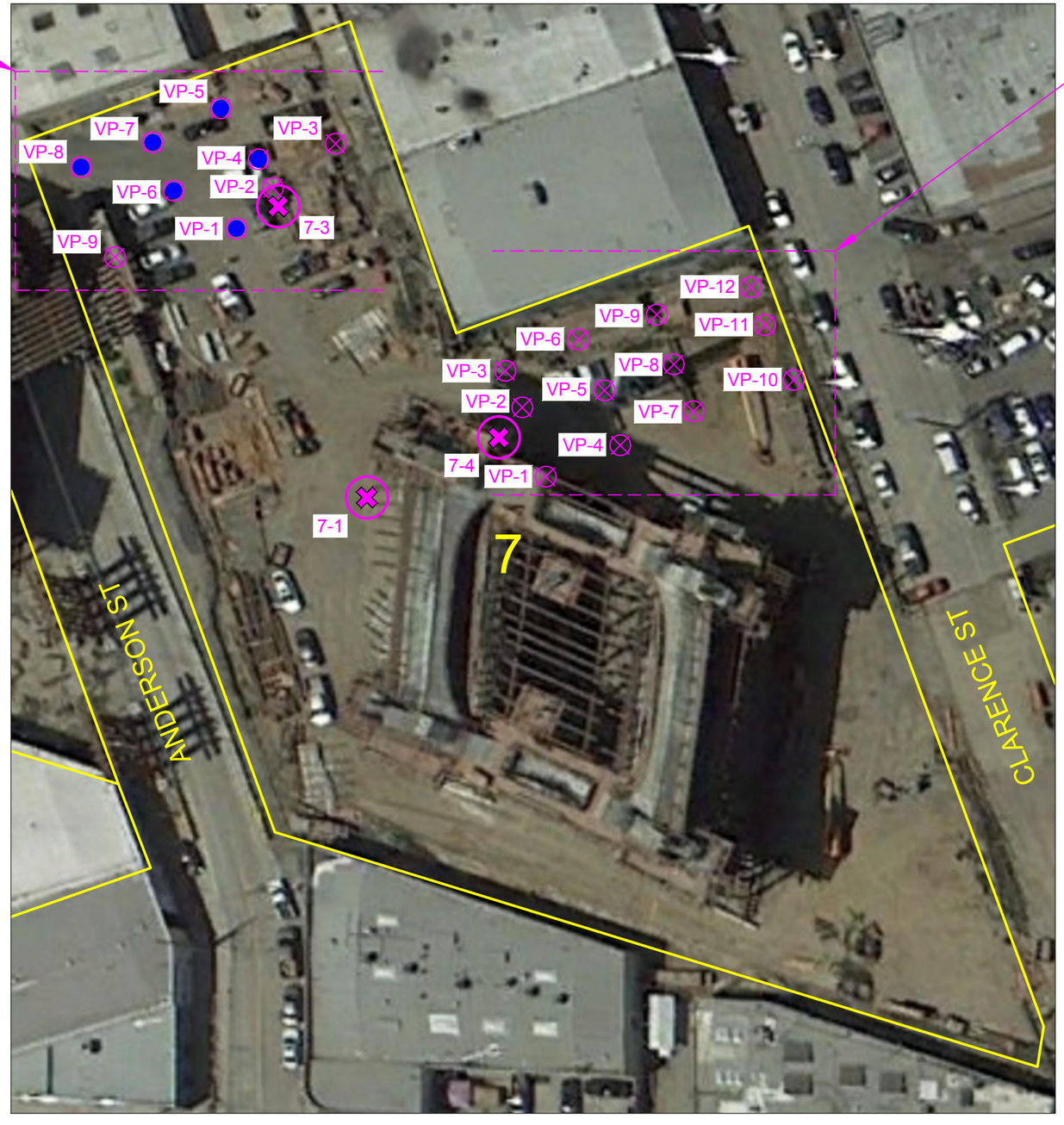

LOCATION P-22			
SAMPLE ID	DEPTH FT	TPH-GAS µg/m³	VOCs µg/m³ PCE
VP-1	5.0	6,100	70
VP-2	5.0	4,900	120
VP-3	5.0	5,600	80
VP-4	5.0	5,200	120
VP-5	5.0	7,700	6
VP-6	5.0	6,500	230
VP-6 DUP	5.0	5,400	170
VP-7	5.0	5,100	180
VP-8	5.0	6,100	160
VP-9	5.0	5,800	270
VP-10	5.0	3,600	2
VP-11	5.0	9,000	180
VP-12	5.0	6,200	120

NOTES

1. EXCEEDANCES OF HEALTH RISK CRITERIA, AS CALCULATED IN HHRA, ARE SHOWN IN BLUE.

LEGEND

7 AREA OF CONCERN

VAPOR SAMPLING LOCATION

SOIL BORING & VAPOR SAMPLING LOCATION

0 50 100

SCALE IN FEET

N

BORING ID	SAMPLE ID	DEPTH FT	TPH-GAS µg/m³	VOCs µg/m³ PCE
7-1	7-1-5	5.0	-	430
7-3	7-3-5	5.0	-	550
7-4	7-4-5	5.0	-	ND
	7-4-5 DUP	5.0	-	ND

FIGURE 8B

TETRA TECH
21700 Copley Drive, Diamond Bar, CA 91765
TEL 909.860.7777 FAX 909.860.8017

SIXTH STREET VIADUCT PARC IMPROVEMENTS PROJECT

MAP OF AOC 7 SHOWING SOIL VAPOR DATA EXCEEDING CLEANUP CRITERIA

JOB NO. 2021-0079
DATE 05/2021
DRAWN BY CF
FILE NAME: FIGURE 8.DWG

J:\TETRA TECH\2021-0079 - SIXTH STREET PARC RAP\FIGURES\FIGURES 8B - AOC 7

BORING ID	DEPTH FT	TOTAL Pb mg/Kg	SOLUBLE Pb mg/L	LEACHABLE Pb mg/L
HAZARDOUS WASTE STANDARD		*1,000*	*5*	*5*
SCREENING LEVEL		*80*	-	-
8-1	0.5	250	14	0.38
	1.0	130	6.0	0.33
	3.0	3.6	-	-
	5.0	2.8	-	—

BORING ID	DEPTH FT	TOTAL Pb mg/Kg	SOLUBLE Pb mg/L	LEACHABLE Pb mg/L
HAZARDOUS WASTE STANDARD		*1,000*	*5*	*5*
SCREENING LEVEL		*80*	-	-
L-1	1.0	310	41	-
	3.0	4.6	-	-
	5.0	-	-	-

BORING ID	DEPTH FT	TOTAL Pb mg/Kg	SOLUBLE Pb mg/L	LEACHABLE Pb mg/L	PCE µg/m^3 (SOIL GAS)
HAZARDOUS WASTE STANDARD		*1,000*	*5*	*5*	-
SCREENING LEVEL		*80*	-	-	-
8-3	0.5	49	6	ND	-
	1.0	35	-	-	-
	3.0	65	11	ND	-
	5.0	5.9	-	-	2,000

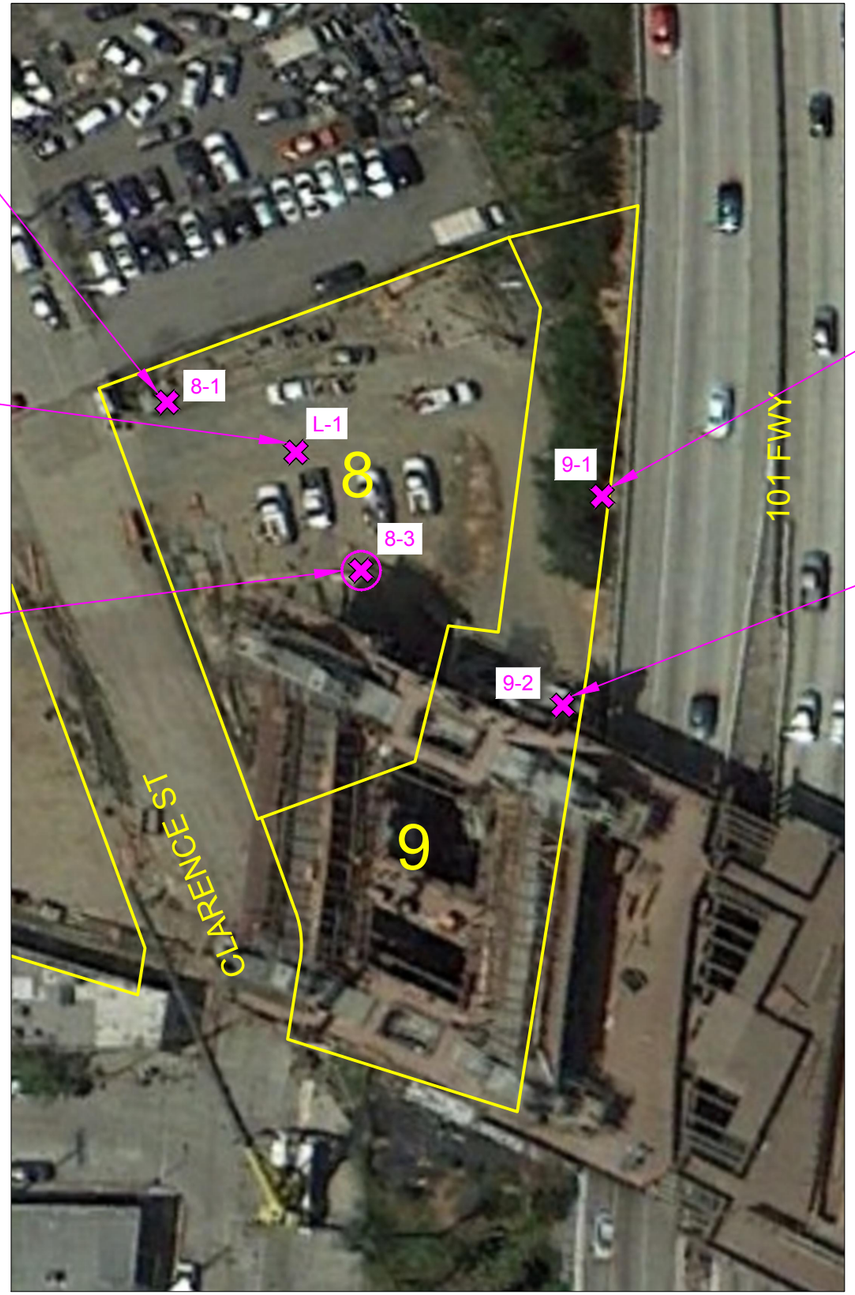

BORING ID	DEPTH FT	TOTAL Pb mg/Kg	SOLUBLE Pb mg/L	LEACHABLE Pb mg/L
HAZARDOUS WASTE STANDARD		*1,000*	*5*	*5*
SCREENING LEVEL		*80*	-	-
9-1	0.5	740	34	0.42
	1.0	94	3.2	ND
	3.0	7.1	-	-
	5.0	2.0	-	-

BORING ID	DEPTH FT	TOTAL Pb mg/Kg	SOLUBLE Pb mg/L	LEACHABLE Pb mg/L
HAZARDOUS WASTE STANDARD		*1,000*	*5*	*5*
SCREENING LEVEL		*80*	-	-
9-2	0.5	78	5.3	ND
	1.0	630	50	1.5

LEGEND

8 AREA OF CONCERN

SOIL SAMPLING LOCATION

SOIL SAMPLING AND VAPOR PROBE LOCATION

0 50 100

SCALE IN FEET

N

NOTES

1. EXCEEDANCES OF SCREENING LEVELS ARE SHOWN IN PINK/MAGENTA, EXCEEDANCES OF HAZARDOUS WASTE STANDARD(S) ARE SHOWN IN RED, AND EXCEEDANCES OF HEALTH RISK CRITERIA ARE SHOWN IN BLUE.
   - SCREENING LEVEL FOR LEAD IS BASED ON DTSC-SL FOR LEAD IN A RESIDENTIAL LAND-USE SCENARIO.
   - HAZARDOUS WASTE STANDARDS: TTLC, STLC, TCLP FOR TOTAL, SOLUBLE AND LEACHABLE FRACTIONS, RESPECTIVELY.

FIGURE 9

J:\TETRA TECH\2021-0079 - SIXTH STREET PARC RAP\FIGURES\FIGURE 9 - AOC 8&9

TETRA TECH
21700 Copley Drive, Diamond Bar, CA 91765
TEL 909.860.7777 FAX 909.860.8017

SIXTH STREET VIADUCT PARC IMPROVEMENTS PROJECT

MAP OF AOCs 8 & 9 SHOWING DATA EXCEEDING CLEANUP CRITERIA

JOB NO. 2021-0079
DATE 05/2021
DRAWN BY CF
FILE NAME: FIGURE 9.DWG

1. EVALUATE ACCESS
2. SCREEN WITH XRF
3. SET-UP SITE CONTROLS
4. EXCAVATE TO 3-3.5' BGS, SCREENING WITH XRF
5. EXPAND AS NECESSARY
6. CONFIRM NON-RCRA CALIFORNIA HAZARDOUS PROFILE

1. EVALUATE ACCESS
2. SCREEN WITH XRF
3. SET-UP SITE CONTROLS
4. EXCAVATE TO 1.5-2' BGS, SCREENING WITH XRF
5. EXPAND AS NECESSARY
6. CONFIRM NON-RCRA CALIFORNIA HAZARDOUS PROFILE

1. EVALUATE ACCESS
2. SCREEN WITH XRF
3. SET-UP SITE CONTROLS
4. EXCAVATE TO 1-1.5' BGS, SCREENING WITH XRF
5. EXPAND AS NECESSARY
6. CONFIRM NON-RCRA CALIFORNIA HAZARDOUS PROFILE

1. EVALUATE ACCESS
2. SCREEN WITH XRF
3. SET-UP SITE CONTROLS
4. EXCAVATE TO 5.5' BGS, SLOPING BACK AND SCREENING WITH XRF AND PID
5. EXPAND AS NECESSARY
6. CONFIRM NON-RCRA CALIFORNIA HAZARDOUS PROFILE

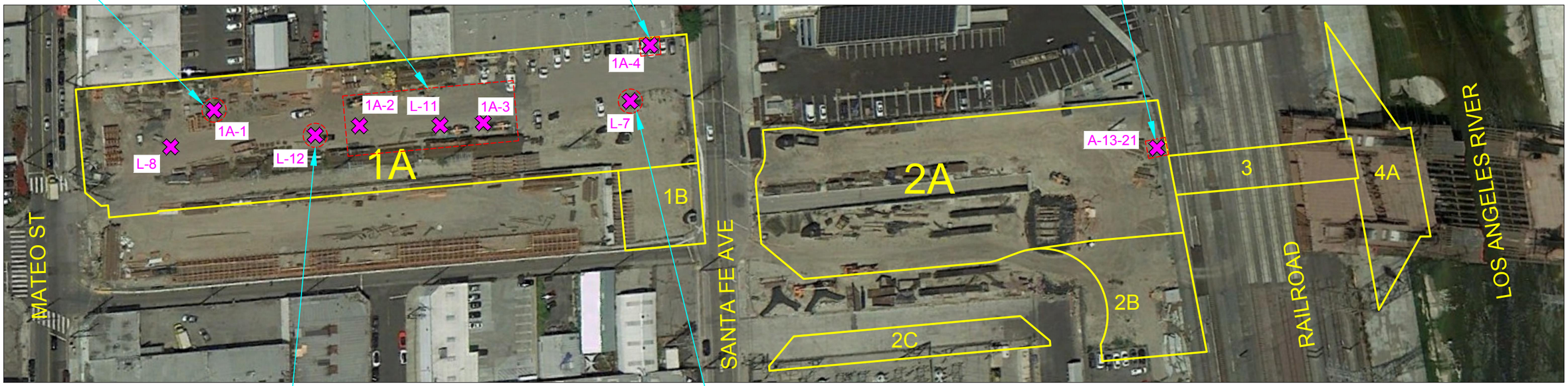

1. EVALUATE ACCESS
2. SCREEN WITH XRF AND PID
3. SET-UP SITE CONTROLS
4. EXCAVATE TO 2-2.5' BGS, SCREENING WITH XRF AND PID. IF NO ELEVATED READINGS, SET ASIDE CLEAN OVERBURDEN FOR SEPARATE PROFILING AND POTENTIAL RE-USE
5. EXPAND AS NECESSARY
6. CONFIRM NON-HAZARDOUS PROFILE

1. EVALUATE ACCESS
2. SCREEN WITH XRF
3. SET-UP SITE CONTROLS
4. EXCAVATE TO 1-1.5' BGS, SCREENING WITH XRF
5. EXPAND AS NECESSARY
6. CONFIRM NON-RCRA CALIFORNIA HAZARDOUS PROFILE

NOTES

1. APPROXIMATE INITIAL EXCAVATIONS ARE SHOWN. FINAL EXTENT OF EXCAVATIONS WILL BE BASED ON FIELD SCREENING AND RESULTS OF CONFIRMATORY SAMPLING. REFER TO SECTIONS 2.0 AND 4.0 FOR ESTIMATES.

LEGEND

2A AREA OF CONCERN

SOIL SAMPLING LOCATION

N

0 100 200

SCALE IN FEET

FIGURE 10

J:\TETRA TECH\2021-0079 - SIXTH STREET PARC RAP\FIGURES\FIGURE 10 - AOCS 1&2

TETRA TECH
21700 Copley Drive, Diamond Bar, CA 91765
TEL 909.860.7777 FAX 909.860.8017

SIXTH STREET VIADUCT PARC IMPROVEMENTS PROJECT

SOIL REMEDIATION APPROACH FOR AOCs 1A AND 2A

JOB NO.	2021-0079
DATE	05/2021
DRAWN BY	CF
FILE NAME:	FIGURE 10.DWG

1. EVALUATE ACCESS
2. SCREEN WITH XRF
3. SET-UP SITE CONTROLS
4. EXCAVATE TO 3-3.5' BGS, SCREENING WITH XRF. IF NO ELEVATED READINGS, SET ASIDE CLEAN OVERBURDEN FOR SEPARATE PROFILING AND POTENTIAL RE-USE.
5. EXPAND AS NECESSARY
6. CONFIRM NON-HAZARDOUS PROFILE

1. EVALUATE ACCESS
2. SCREEN WITH XRF & PID
3. SET-UP SITE CONTROLS
4. EXCAVATE TO 1-1.5' BGS, SCREENING WITH XRF & PID
5. EXPAND AS NECESSARY
6. CONFIRM NON-HAZARDOUS PROFILE

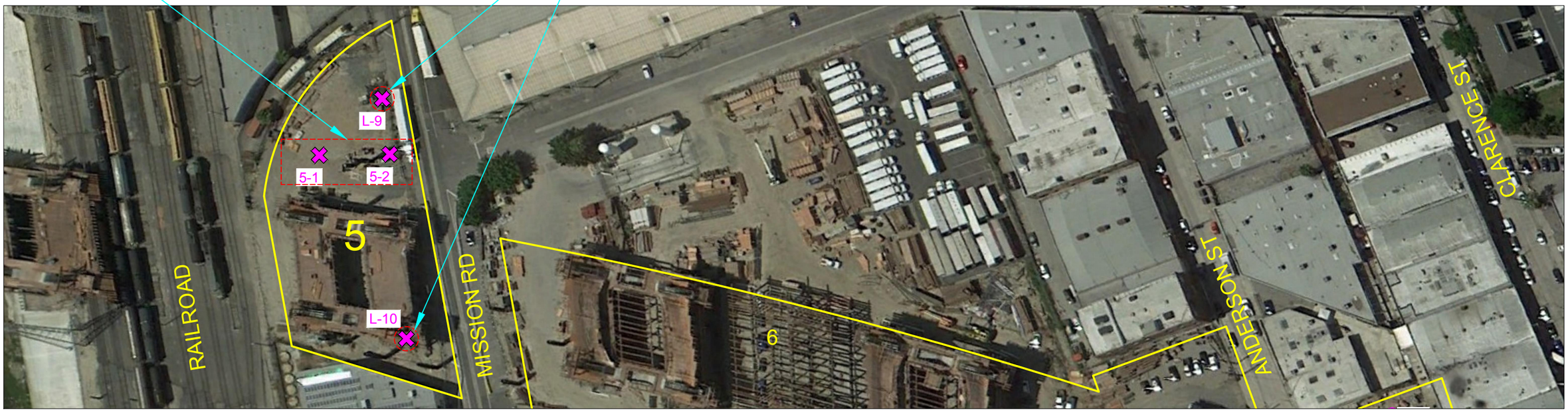

LEGEND

5 AREA OF CONCERN

SOIL SAMPLING LOCATION

N

0 100 200

SCALE IN FEET

NOTES

1. APPROXIMATE INITIAL EXCAVATIONS ARE SHOWN. FINAL EXTENT OF EXCAVATIONS WILL BE BASED ON FIELD SCREENING AND RESULTS OF CONFIRMATORY SAMPLING. REFER TO SECTIONS 2.0 AND 4.0 FOR ESTIMATES.

FIGURE 11

J:\TETRA TECH\2021-0079 - SIXTH STREET PARC RAP\FIGURES\FIGURE 11 - AOC 5

TETRA TECH
21700 Copley Drive, Diamond Bar, CA 91765
TEL 909.860.7777 FAX 909.860.8017

SIXTH STREET VIADUCT PARC IMPROVEMENTS PROJECT

SOIL REMEDIATION APPROACH FOR AOC 5

JOB NO.	2021-0079
DATE	05/2021
DRAWN BY	CF
FILE NAME:	FIGURE 11.DWG

1. EVALUATE ACCESS
2. SCREEN WITH XRF
3. SET-UP SITE CONTROLS
4. EXCAVATE TO 0.5-1.0' BGS, SCREENING WITH XRF
5. EXPAND AS NECESSARY
6. CONFIRM NON-HAZARDOUS PROFILE

1. EVALUATE ACCESS
2. SCREEN WITH XRF
3. SET-UP SITE CONTROLS
4. EXCAVATE TO 3-3.5' BGS, SCREENING WITH XRF
5. EXPAND AS NECESSARY
6. CONFIRM RCRA HAZARDOUS PROFILE

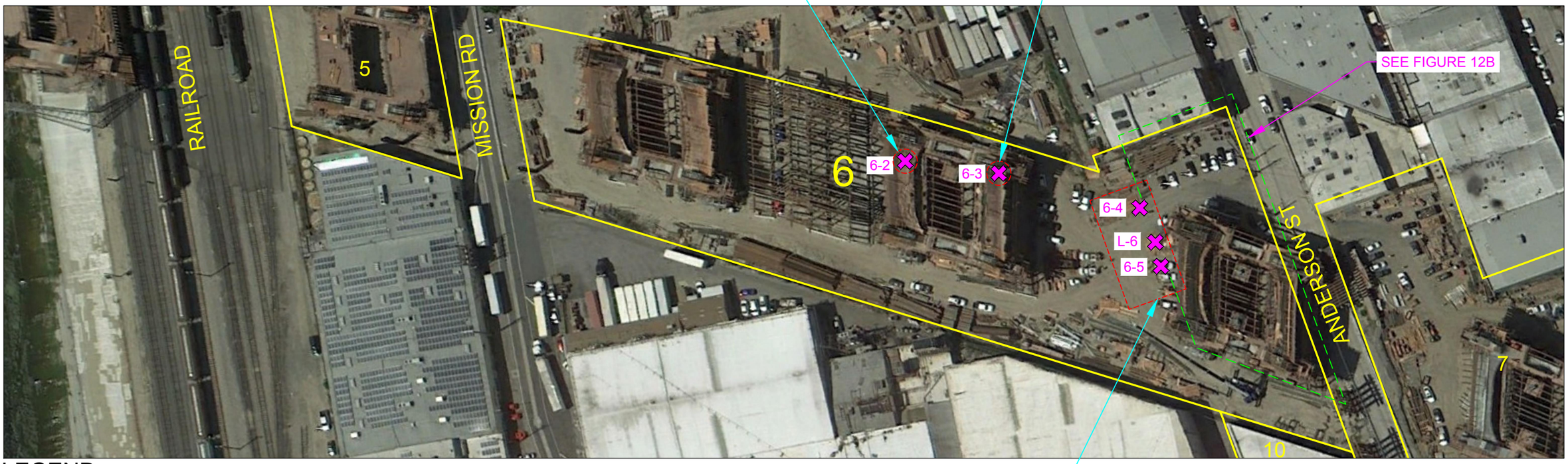

1. EVALUATE ACCESS
2. SCREEN WITH XRF & PID
3. SET-UP SITE CONTROLS
4. EXCAVATE TO 1-1.5' BGS, SCREENING WITH XRF & PID
5. EXPAND AS NECESSARY
6. CONFIRM NON-RCRA CALIFORNIA HAZARDOUS PROFILE

LEGEND

6 AREA OF CONCERN

SOIL SAMPLING LOCATION

N

0 100 200

SCALE IN FEET

NOTES

1. APPROXIMATE INITIAL EXCAVATIONS ARE SHOWN. FINAL EXTENT OF EXCAVATIONS WILL BE BASED ON FIELD SCREENING AND RESULTS OF CONFIRMATORY SAMPLING. REFER TO SECTIONS 2.0 AND 4.0 FOR ESTIMATES.

FIGURE 12A

J:\TETRA TECH\2021-0079 - SIXTH STREET PARC R&P\FIGURES\FIGURE 12A - AOC 6

TETRA TECH
21700 Copley Drive, Diamond Bar, CA 91765
TEL 909.860.7777 FAX 909.860.8017

SIXTH STREET VIADUCT PARC IMPROVEMENTS PROJECT

SOIL REMEDIATION APPROACH FOR WESTERN PORTION OF AOC 6

JOB NO.	2021-0079
DATE	05/2021
DRAWN BY	CF
FILE NAME:	FIGURE 12A.DWG

1. EVALUATE ACCESS
2. SCREEN WITH XRF
3. SET-UP SITE CONTROLS
4. EXCAVATE TO 3.5-4' BGS, SCREENING WITH XRF.
5. EXPAND AS NECESSARY
6. CONFIRM RCRA HAZARDOUS PROFILE

1. EVALUATE ACCESS
2. SCREEN WITH XRF
3. SET-UP SITE CONTROLS
4. EXCAVATE TO 1-1.5' BGS, SCREENING WITH XRF.
5. EXPAND AS NECESSARY
6. CONFIRM NON-HAZARDOUS PROFILE

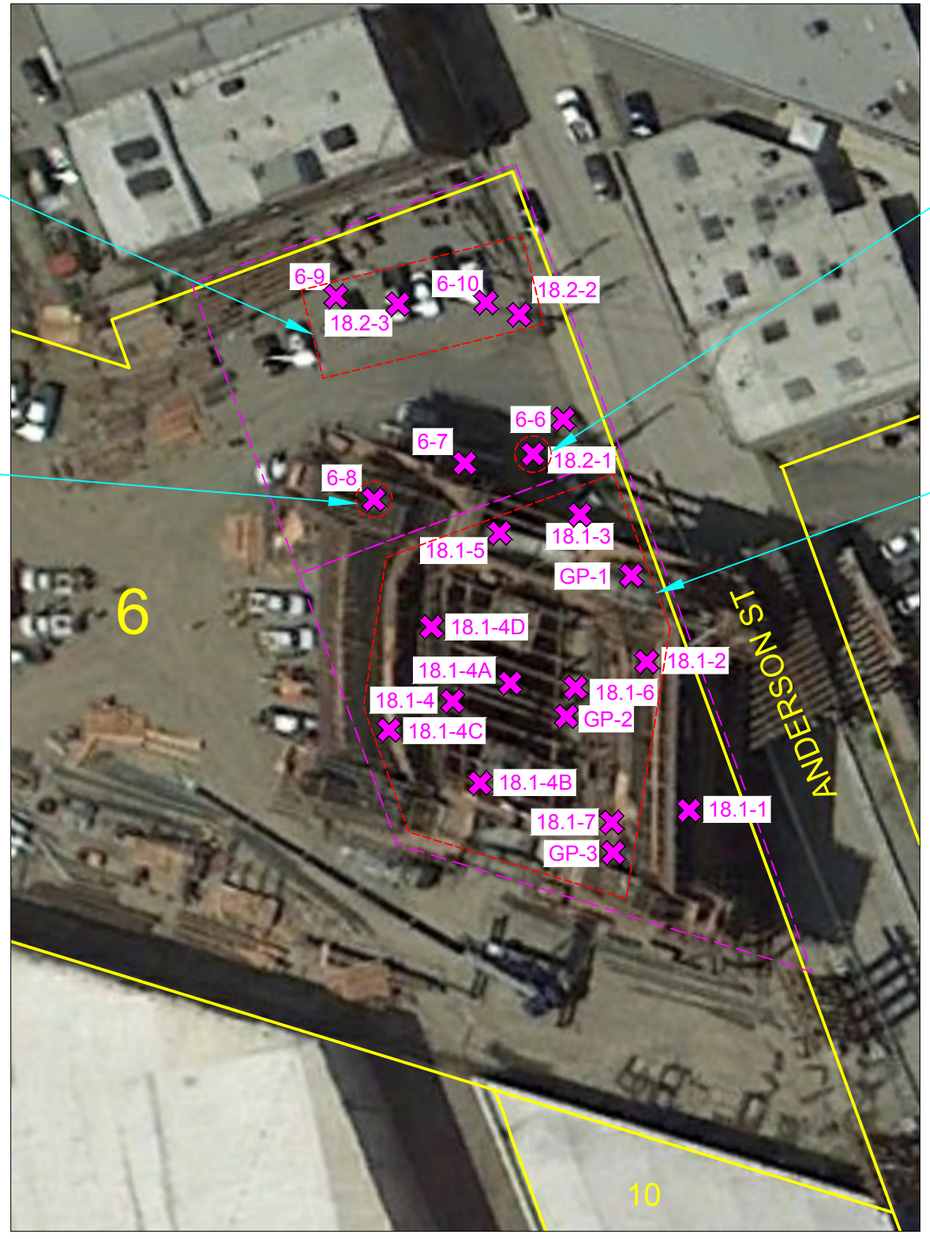

1. EVALUATE ACCESS
2. SCREEN WITH XRF
3. SET-UP SITE CONTROLS
4. EXCAVATE TO 1-1.5' BGS, SCREENING WITH XRF.
5. EXPAND AS NECESSARY
6. CONFIRM NON-RCRA CALIFORNIA HAZARDOUS PROFILE

1. EVALUATE ACCESS
2. SCREEN WITH XRF
3. SET-UP SITE CONTROLS
4. EXCAVATE TO 3.5-4' BGS, SCREENING WITH XRF.
5. EXPAND AS NECESSARY
6. CONFIRM RCRA HAZARDOUS PROFILE

LEGEND

6 AREA OF CONCERN

SOIL SAMPLING LOCATION

N

0 50 100

SCALE IN FEET

NOTES

1. APPROXIMATE INITIAL EXCAVATIONS ARE SHOWN. FINAL EXTENT OF EXCAVATIONS WILL BE BASED ON FIELD SCREENING AND RESULTS OF CONFIRMATORY SAMPLING. REFER TO SECTIONS 2.0 AND 4.0 FOR ESTIMATES.

FIGURE 12B

J:\TETRA TECH\2021-0079 - SIXTH STREET PARC RAP\FIGURES\FIGURE 12B - AOC 6

TETRA TECH
21700 Copley Drive, Diamond Bar, CA 91765
TEL 909.860.7777 FAX 909.860.8017

SIXTH STREET VIADUCT PARC IMPROVEMENTS PROJECT

SOIL REMEDIATION APPROACH FOR EASTERN PORTION OF AOC 6

JOB NO. 2021-0079
DATE 05/2021
DRAWN BY CF
FILE NAME: FIGURE 12B.DWG

1. EVALUATE ACCESS
2. SCREEN WITH XRF
3. SET-UP SITE CONTROLS
4. EXCAVATE TO 1-1.5' BGS, SCREENING WITH XRF.
5. EXPAND AS NECESSARY
6. CONFIRM NON-RCRA CALIFORNIA HAZARDOUS PROFILE

1. EVALUATE ACCESS
2. SCREEN WITH XRF
3. SET-UP SITE CONTROLS
4. EXCAVATE TO 1-1.5' BGS, SCREENING WITH XRF.
5. EXPAND AS NECESSARY
6. CONFIRM NON-RCRA CALIFORNIA HAZARDOUS PROFILE

1. EVALUATE ACCESS
2. SCREEN WITH XRF & PID
3. SET-UP SITE CONTROLS
4. EXCAVATE TO 5-5.5' BGS, SLOPING BACK AS NECESSARY AND SCREENING WITH XRF & PID
5. EXPAND AS NECESSARY
6. CONFIRM NON-HAZARDOUS PROFILE

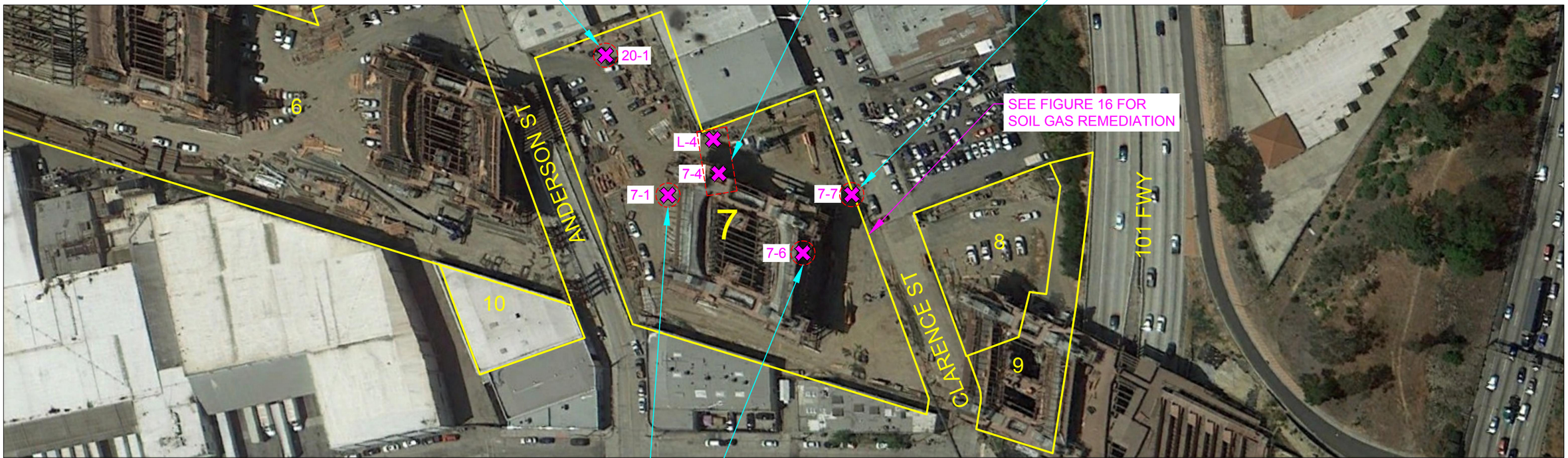

LEGEND

7 AREA OF CONCERN

SOIL SAMPLING LOCATION

1. EVALUATE ACCESS
2. SCREEN WITH XRF
3. SET-UP SITE CONTROLS
4. EXCAVATE TO 0.5-1.0' BGS, SCREENING WITH XRF.
5. EXPAND AS NECESSARY
6. CONFIRM NON-RCRA CALIFORNIA HAZARDOUS PROFILE

1. EVALUATE ACCESS
2. SCREEN WITH XRF & PID
3. SET-UP SITE CONTROLS
4. EXCAVATE TO 0.5-1.0' BGS, SCREENING WITH XRF & PID
5. EXPAND AS NECESSARY
6. CONFIRM NON-HAZARDOUS PROFILE

N

0 100 200

SCALE IN FEET

NOTES

1. APPROXIMATE INITIAL EXCAVATIONS ARE SHOWN. FINAL EXTENT OF EXCAVATIONS WILL BE BASED ON FIELD SCREENING AND RESULTS OF CONFIRMATORY SAMPLING. REFER TO SECTIONS 2.0 AND 4.0 FOR ESTIMATES.

FIGURE 13

J:\TETRA TECH\2021-0079 - SIXTH STREET PARC RAP\FIGURES\FIGURE 13 - AOC 7

TETRA TECH
21700 Copley Drive, Diamond Bar, CA 91765
TEL 909.860.7777 FAX 909.860.8017

SIXTH STREET VIADUCT PARC IMPROVEMENTS PROJECT

SOIL REMEDIATION APPROACH FOR AOC 7

JOB NO.	2021-0079
DATE	05/2021
DRAWN BY	CF
FILE NAME:	FIGURE 13.DWG

1. EVALUATE ACCESS
2. SCREEN WITH XRF
3. SET-UP SITE CONTROLS
4. EXCAVATE TO 1.5-2' BGS, SCREENING WITH XRF
5. EXPAND AS NECESSARY
6. CONFIRM NON-RCRA CALIFORNIA HAZARDOUS PROFILE

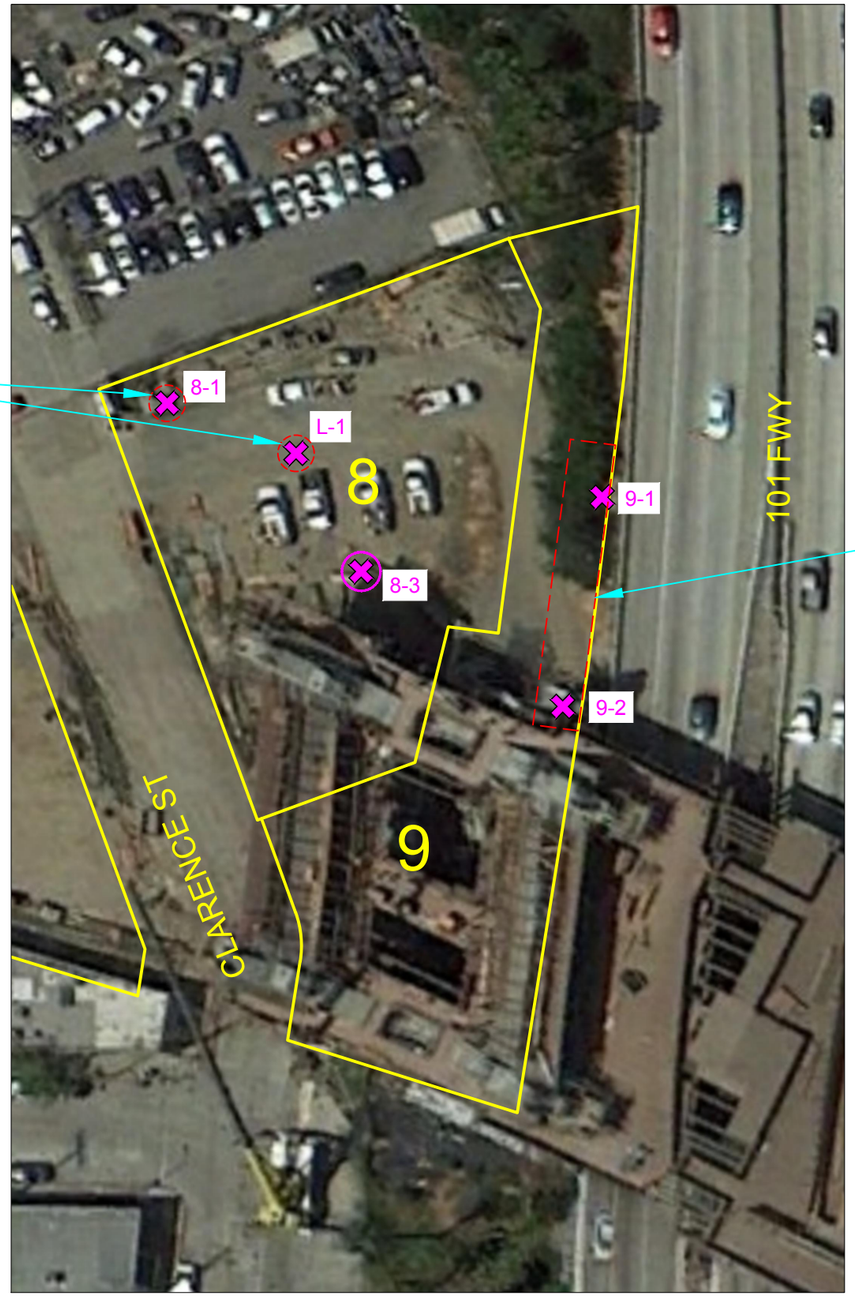

1. EVALUATE ACCESS & COORDINATE WITH CALTRANS AS REQUIRED
2. SCREEN WITH XRF
3. SET-UP SITE CONTROLS
4. EXCAVATE TO 1' BGS, OR AS REQUIRED FOR PARC CONSTRUCTION, SCREENING WITH XRF.
5. EXPAND LATERALLY AS NECESSARY
6. FOR SELECTED PLANTINGS, DEEPER EXCAVATIONS (UP TO 4' DEEP) WILL BE REQUIRED. SEGREGATE SOIL AND PROFILE SEPARATELY FOR DISPOSAL OR ON-SITE RE-USE.
7. CONFIRM NON-RCRA HAZARDOUS PROFILE FOR THE UPPER 1 FOOT OF SOIL

LEGEND

8 AREA OF CONCERN

SOIL SAMPLING LOCATION

SOIL SAMPLING AND VAPOR PROBE LOCATION

0 50 100

SCALE IN FEET

N

NOTES

1. APPROXIMATE INITIAL EXCAVATIONS ARE SHOWN. FINAL EXTENT OF EXCAVATIONS WILL BE BASED ON FIELD SCREENING AND RESULTS OF CONFIRMATORY SAMPLING. REFER TO SECTIONS 2.0 AND 4.0 FOR ESTIMATES.

FIGURE 14

J:\TETRA TECH\2021-0079 - SIXTH STREET PARC RAP\FIGURES\FIGURE 14 - AOC 8&9

TETRA TECH
21700 Copley Drive, Diamond Bar, CA 91765
TEL 909.860.7777 FAX 909.860.8017

SIXTH STREET VIADUCT PARC IMPROVEMENTS PROJECT

SOIL REMEDIATION APPROACH FOR AOCs 8 AND 9

JOB NO.	2021-0079
DATE	05/2021
DRAWN BY	CF
FILE NAME:	FIGURE 14.DWG

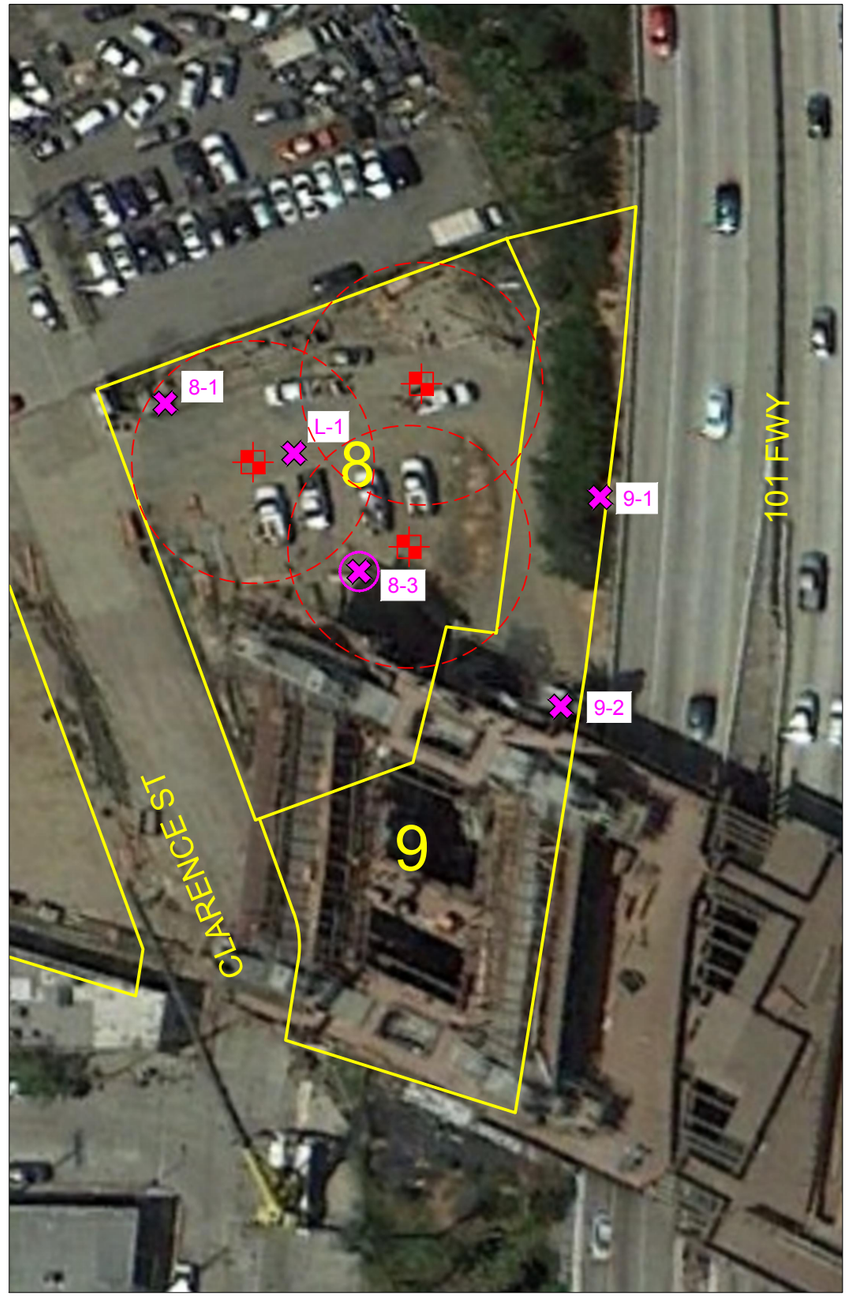

LEGEND

- 8 — AREA OF CONCERN
- SOIL SAMPLING LOCATION
- SOIL SAMPLING AND VAPOR PROBE LOCATION
- PROPOSED VAPOR EXTRACTION WELL
- ASSUMED ROI

0 50 100

SCALE IN FEET

N

FIGURE 15

J:\TETRA TECH\2021-0079 - SIXTH STREET PARC RAP\FIGURES\FIGURE 15 - AOC 8&9

TETRA TECH
21700 Copley Drive, Diamond Bar, CA 91765
TEL 909.860.7777 FAX 909.860.8017

SIXTH STREET VIADUCT PARC IMPROVEMENTS PROJECT

PROPOSED SVE APPROACH FOR AOCs 8

JOB NO.	2021-0079
DATE	05/2021
DRAWN BY	CF
FILE NAME:	FIGURE 15.DWG

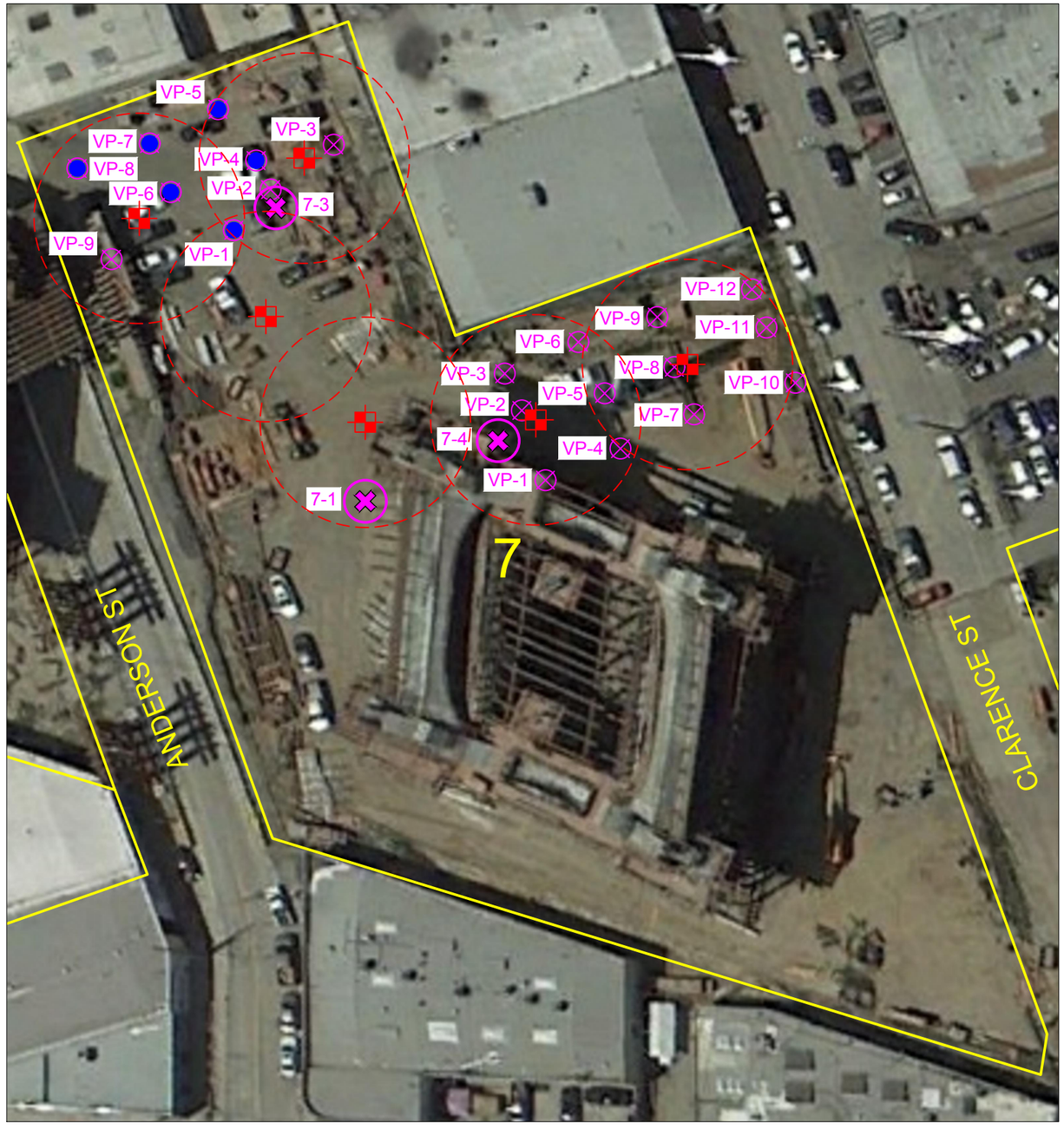

LEGEND

- 7 — AREA OF CONCERN
- ⊗ — VAPOR SAMPLING LOCATION
- ✖ — SOIL BORING & VAPOR SAMPLING LOCATION
- ▪ — PROPOSED VAPOR EXTRACTION WELL
- ◯ — ASSUMED ROI

0 50 100
SCALE IN FEET

N

NOTES

1. PRELIMINARY WELL NUMBER AND PLACEMENT SHOWN. CONFIRM DESIGN AFTER PILOT TEST IN AOC 8.
2. REFER TO SECTIONS 5.0 AND 6.0 FOR DETAILS.

FIGURE 16

J:\TETRA TECH\2021-0079 - SIXTH STREET PARC RAP\FIGURES\FIGURE 16 - AOC 7

TETRA TECH
21700 Copley Drive, Diamond Bar, CA 91765
TEL 909.860.7777 FAX 909.860.8017

SIXTH STREET VIADUCT PARC IMPROVEMENTS PROJECT

PROPOSED SVE APPROACH FOR AOC 7

JOB NO.	2021-0079
DATE	06/2021
DRAWN BY	CF
FILE NAME:	FIGURE 16.DWG



LEGEND

- 7 — AREA OF CONCERN
- PROPOSED VAPOR EXTRACTION WELL
- ASSUMED ROI
- 2" SCH 40 PVC AT-GRADE / ABOVEGROUND PIPING
- PROPOSED FENCE

0 50 100
SCALE IN FEET

N

NOTES

1. PRELIMINARY WELL NUMBER AND PLACEMENT SHOWN. CONFIRM DESIGN AFTER PILOT TEST IN AOC 8.
2. REFER TO SECTIONS 5.0 AND 6.0 FOR DETAILS.

FIGURE 17A

J:\TETRA TECH\2021-0079 - SIXTH STREET PARC RAP\FIGURES\FIGURE 17A - AOC 7

TETRA TECH
21700 Copley Drive, Diamond Bar, CA 91765
TEL 909.860.7777 FAX 909.860.8017

SIXTH STREET VIADUCT PARC IMPROVEMENTS PROJECT

PRELIMINARY SVE SYSTEM FOR AOC 7

JOB NO.	2021-0079
DATE	06/2021
DRAWN BY	CF
FILE NAME:	FIGURE 17A.DWG

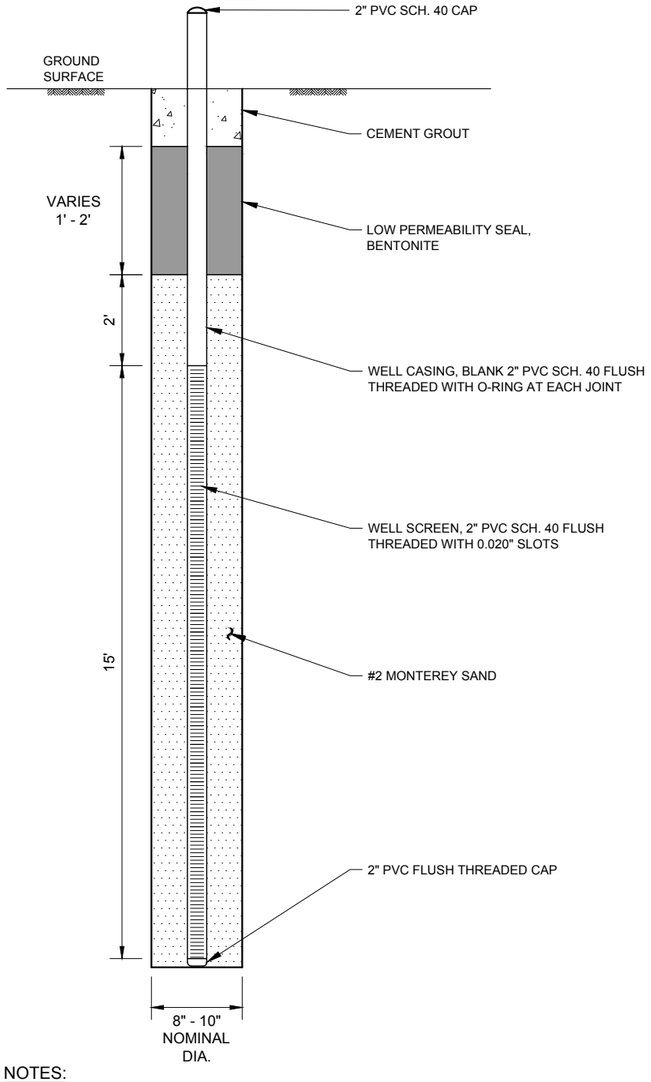

NOTES:

1. PRECISE LOCATION, DEPTH, AND SCREEN LENGTH WILL BE FINALIZED BASED ON SUBSURFACE CONDITIONS ENCOUNTERED DURING DRILLING.

1 SVE WELL CONSTRUCTION
NTS REFERENCE SHEET:

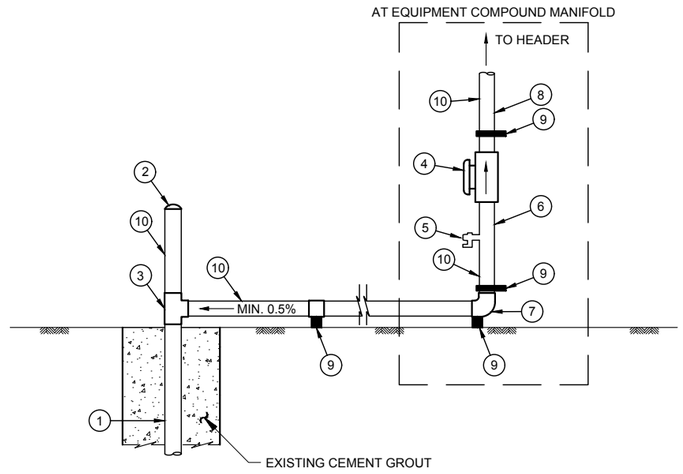

CONSTRUCTION NOTES

1. EXISTING 2" SCH 40 PVC WELL RISER
2. 2" SCH 40 PVC CAP
3. 2" SCH 40 PVC TEE
4. 2" BALL VALVE
5. 1/4" BALL VALVE, 1/4" MPT
6. LABEL RISER WITH WELL I.D.
7. 2" SCH 40 PVC 90° ELBOW
8. LABEL ALL EXPOSED PIPE WITH "VAPOR" PIPE MARKER (GRAINGER ITEM NO. 14J089, OR SIMILAR)
9. INSTALL PIPE SUPPORT
10. 2" SCH 40 PVC

2 SVE WELL CONNECTION
NTS REFERENCE SHEET:

FIGURE 17B

J:\TETRA TECH\2021-0079 - SIXTH STREET PARC RAP\FIGURES\FIGURE 17B - AOC 7 - SVE DETAILS

TETRA TECH
21700 Copley Drive, Diamond Bar, CA 91765
TEL 909.860.7777 FAX 909.860.8017

SIXTH STREET VIADUCT PARC IMPROVEMENTS PROJECT

SVE SYSTEM DETAILS

JOB NO. 2021-0079
DATE 06/2021
DRAWN BY CF
FILE NAME: FIGURE 17B.DWG

LEGEND

- A — VAPOR FLOW
- L — LIQUID FLOW
- E — ELECTRIC LINE
- FI — FLOW INDICATOR
- VI — VACUUM INDICATOR
- CONTROL PANEL LOGIC ELEMENT
- SAMPLING LOCATION

NOTES:

1. PULL THROUGH CARBON CONFIGURATION IS SHOWN.
2. PUSH-THROUGH CONFIGURATION IS ALSO ACCEPTABLE.

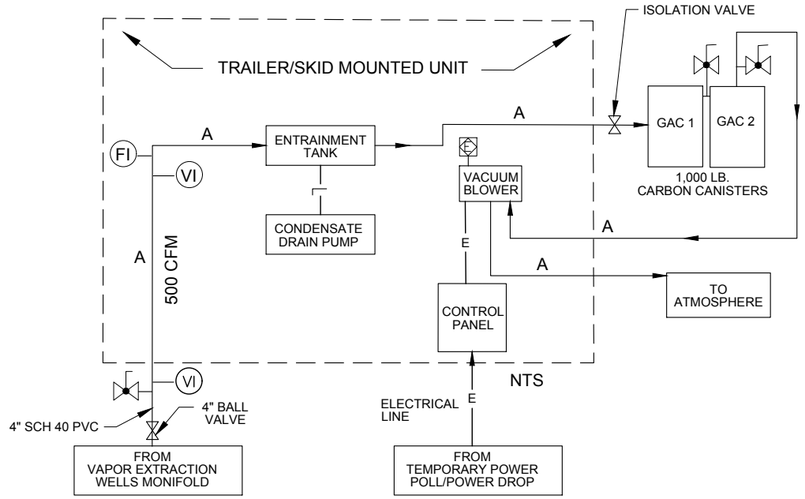

1	PROCESS FLOW & SIMPLIFIED INSTRUMENTATION DIAGRAM
NTS	REFERENCE SHEET:

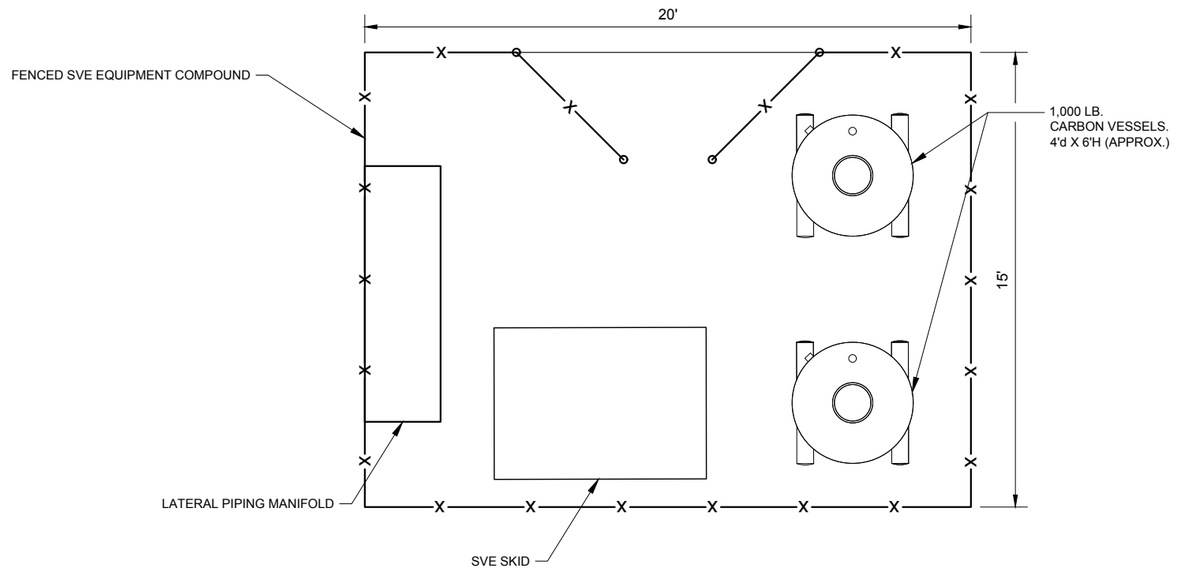

2	TYPICAL SVE EQUIPMENT COMPOUND LAYOUT	FIGURE 17C
NTS	REFERENCE SHEET:	

J:\TETRA TECH\2021-0079 - SIXTH STREET PARC RAP\FIGURES\FIGURE 17C - AOC 7 - SVE DETAILS

TETRA TECH
21700 Copley Drive, Diamond Bar, CA 91765
TEL 909.860.7777 FAX 909.860.8017

SIXTH STREET VIADUCT PARC IMPROVEMENTS PROJECT

SVE SYSTEM DETAILS

JOB NO.	2021-0079
DATE	06/2021
DRAWN BY	CF
FILE NAME:	FIGURE 17B.DWG

TASK DESCRIPTION	MONTHS																	
	1	2	3	4	5	6	7	8	9	10	11	12	13	14	15	16	17	18
Installation of vapor wells and SVE Pilot Test in AOC 8																		
Permitting of soil excavation activities																		
AOC pre-screening and assessment of access																		
Soil Remediation of AOC 7																		
Installation & Operation of SVE system in AOC 7																		
Soil Remediation in AOC 6																		
Soil Remediation in AOC 5																		
Remaining work (except SVE in AOC 8)																		

TETRA TECH BAS
21700 COPLEY DRIVE, SUITE 200
DIAMOND BAR, CA
909-860-7777

SIXTH STREET VIADUCT REPLACEMENT PROJECT
PARC IMPROVEMENTS
RAP IMPLEMENTATION SCHEDULE

FIGURE 18

July 2021
MG

Table 2. Summary of Laboratory Test Results - Soil Samples

PARC AREA	Boring ID	Sample ID	Sample Collection Date	Sample Depth (ft below grade)	Total Petroleum Hydrocarbons (EPA 8015B (M))				VOCs (EPA 8260B) (µg/kg)	SVOCs (EPA 8270C) (µg/kg)	Title 22 Metals (EPA 6010B/7471A)																											pH	Polychlorinated Biphenyls (EPA 8082) µg/kg	Organochlorine Pesticides (EPA 8081) µg/kg	Organophosphorous Pesticides (EPA 8081) µg/kg	Chlorinated Herbicides (EPA 8151A) µg/kg
					TPH GRO mg/kg	TPH DRO mg/kg	TPH ORO mg/kg	TPH Total mg/kg			Antimony mg/kg	STLC Antimony mg/L	Arsenic mg/kg	STLC Arsenic mg/L	TCLP Arsenic mg/L	Barium mg/kg	STLC Barium mg/L	TCLP Barium mg/L	Beryllium mg/kg	Cadmium mg/kg	STLC Cadmium mg/L	TCLP Cadmium mg/L	Chromium mg/kg	Hexavalent Chromium mg/kg	Cobalt mg/kg	Copper mg/kg	STLC Copper mg/L	TCLP Copper mg/L	Lead mg/kg	STLC Lead (CA-WET) mg/L	STLC Lead (DI-WET) mg/L	TCLP Lead mg/L	Mercury mg/kg	STLC Mercury mg/L	TCLP Mercury mg/L	Molybdenum mg/kg	Nickel mg/kg	Selenium mg/kg	Silver mg/kg	Thallium mg/kg	Vanadium mg/kg	Zinc mg/kg	STLC Zinc mg/L	TCLP Zinc mg/L					
1A & 1B	1A-1	1A-1-0.5	05/15/2017	0.5	-	-	-	-	-	-	3.8	-	2.1	-	-	200	-	-	ND	1.9	ND	ND	17	2.9	5.6	230	-	-	860	51	-	3.6	0.91	-	-	ND	11	ND	ND	ND	23	240	-	-	-	-	-	-	-
		1A-1-1.0	05/15/2017	1.0	-	-	-	-	-	-	ND	-	ND	-	-	99	-	-	ND	ND	-	-	9.7	-	5.1	46	-	-	230	9.9	-	ND	ND	-	-	ND	6.8	ND	ND	ND	20	130	-	-	-	-	-	-	-
		1A-1-3.0	05/15/2017	3.0	-	-	-	-	-	-	3.3	-	1.3	-	-	97	-	-	ND	ND	-	-	19	ND	4.8	100	-	-	440	11	-	1.3	0.12	-	-	1.2	8.4	ND	ND	ND	19	170	-	-	-	-	-	-	-
		1A-1-5.0	05/15/2017	5.0	-	-	-	-	-	-	ND	-	ND	-	-	33	-	-	ND	ND	-	-	4.4	-	3.5	4.5	-	-	1.1	-	-	-	ND	-	-	ND	2.8	ND	ND	ND	14	15	-	-	-	-	-	-	-
	1A-2	1A-2-0.5	05/15/2017	0.5	-	-	-	-	-	-	ND	-	2.3	-	-	310	-	-	ND	ND	-	-	15	-	6.3	50	-	-	310	26	-	ND	0.45	-	-	ND	11	ND	ND	ND	25	480	-	-	-	-	-	-	-
		1A-2-1.0	05/15/2017	1.0	-	-	-	-	-	-	ND	-	1.2	-	-	63	-	-	ND	ND	-	-	7.9	-	5.5	9.2	-	-	15	-	-	-	0.2	-	-	ND	5.8	ND	ND	ND	22	45	-	-	-	-	-	-	-
		1A-2-3.0	05/15/2017	3.0	-	-	-	-	-	-	ND	-	ND	-	-	39	-	-	ND	ND	-	-	4.9	-	3.7	4.2	-	-	1.1	-	-	-	ND	-	-	ND	3.1	ND	ND	ND	17	16	-	-	-	-	-	-	-
		1A-2-5.0	05/15/2017	5.0	-	-	-	-	-	-	ND	-	1.7	-	-	120	-	-	ND	ND	-	-	13	-	9.0	18	-	-	3.2	-	-	-	0.17	-	-	ND	9.9	ND	ND	ND	26	45	-	-	-	-	-	-	-
	1A-3	1A-3-0.5	05/15/2017	0.5	-	-	-	-	-	-	ND	-	2.2	-	-	120	-	-	ND	ND	-	-	15	-	6.1	48	-	-	140	5.9	-	ND	0.18	-	-	ND	9.2	ND	ND	ND	23	130	-	-	-	-	-	-	-
		1A-3-1.0	05/15/2017	1.0	-	-	-	-	-	-	ND	-	ND	-	-	130	-	-	ND	ND	-	-	11	-	6.5	26	-	-	130	7.1	-	ND	0.2	-	-	ND	10	ND	ND	ND	27	150	-	-	-	-	-	-	-
		1A-3-3.0	05/15/2017	3.0	-	-	-	-	-	-	ND	-	ND	-	-	68	-	-	ND	ND	-	-	7.7	-	5.4	6.9	-	-	1.5	-	-	-	ND	-	-	ND	5.1	ND	ND	ND	20	25	-	-	-	-	-	-	-
		1A-3-5.0	05/15/2017	5.0	-	-	-	-	-	-	ND	-	35	-	-	35	-	-	ND	ND	-	-	4.7	-	3.4	3.9	-	-	ND	-	-	-	ND	-	-	ND	3.1	ND	ND	ND	14	17	-	-	-	-	-	-	-
	1A-4	1A-4-0.5	05/15/2017	0.5	-	-	-	-	-	-	ND	-	3.4	-	-	100	-	-	ND	ND	-	-	15	-	6.8	43	-	-	140	5.1	-	ND	0.22	-	-	ND	11	ND	ND	ND	26	210	-	-	-	-	-	-	-
		1A-4-1.0	05/15/2017	1.0	-	-	-	-	-	-	ND	-	ND	-	-	83	-	-	ND	ND	-	-	14	-	8.0	16	-	-	4.2	-	-	-	ND	-	-	ND	9.0	ND	ND	ND	29	39	-	-	-	-	-	-	-
		1A-4-3.0	05/15/2017	3.0	-	-	-	-	-	-	ND	-	ND	-	-	66	-	-	ND	ND	-	-	9.0	-	6.6	11	-	-	1.9	-	-	-	ND	-	-	ND	6.3	ND	ND	ND	24	29	-	-	-	-	-	-	-
		1A-4-5.0	05/15/2017	5.0	-	-	-	-	-	-	ND	-	ND	-	-	55	-	-	ND	ND	-	-	7.7	-	5.7	7.7	-	-	1.7	-	-	-	ND	-	-	ND	5.4	ND	ND	ND	19	26	-	-	-	-	-	-	-
	L7	L-7 @ 1'	02/1/2016	1.0	-	-	-	-	-	-	3.5	-	3.7	-	-	150	-	-	ND	3.4	-	-	17	-	5.4	100	-	-	290	15	-	-	0.2	-	-	ND	13	ND	ND	ND	24	200	-	-	-	-	-	-	-
		L-7 @ 3'	02/1/2016	3.0	-	-	-	-	-	-	-	-	-	-	-	-	-	-	-	-	-	-	-	-	-	-	-	-	-	-	-	-	-	-	-	-	-	-	-	-	-	-	-	-	-	-	-	-	-	-
		L-7 @ 5'	02/1/2016	5.0	-	-	-	-	-	-	-	-	-	-	-	-	-	-	-	-	-	-	-	-	-	-	-	-	-	-	-	-	-	-	-	-	-	-	-	-	-	-	-	-	-	-	-	-
	L8	L-8 @ 1'	02/1/2016	1.0	-	-	-	-	-	-	ND	-	2.1	-	-	91	-	-	ND	ND	-	-	9.9	-	5.2	15	-	-	32	-	-	-	ND	-	-	ND	7.4	ND	ND	ND	25	59	-	-	-	-	-	-	-
		L-8 @ 3'	02/1/2016	3.0	-	-	-	-	-	-	-	-	-	-	-	-	-	-	-	-	-	-	-	-	-	-	-	-	-	-	-	-	-	-	-	-	-	-	-	-	-	-	-	-	-	-	-	-
		L-8 @ 5'	02/1/2016	5.0	-	-	-	-	-	-	-	-	-	-	-	-	-	-	-	-	-	-	-	-	-	-	-	-	-	-	-	-	-	-	-	-	-	-	-	-	-	-	-	-	-	-	-	-
	L-11	L-11 @ 1'	02/1/2016	1.0	-	-	-	-	-	-	3.9	-	8.8	-	-	600	-	-	ND	3.1	-	-	25	-	6.6	170	-	-	690	41	-	-	3.3	ND	-	ND	21	ND	ND	ND	27	1500	-	-	-	-	-	-	-
		L-11 @ 3'	02/1/2016	3.0	-	-	-	-	-	-	ND	-	1.8	-	-	73	-	-	ND	ND	-	-	8	-	4.6	9.8	-	-	2.5	-	-	-	0.1	-	-	ND	6.1	ND	ND	ND	21	30	-	-	-	-	-	-	-
		L-11 @ 5'	02/1/2016	5.0	-	-	-	-	-	-	-	-	-	-	-	-	-	-	-	-	-	-	-	-	-	-	-	-	-	-	-	-	-	-	-	-	-	-	-	-	-	-	-	-	-	-	-	-
	L-12	L-12 @ 1'	02/1/2016	1.0	-	-	-	-	-	-	ND	-	2.7	-	-	85	-	-	ND	ND	-	-	8.4	-	4.7	15	-	-	76	6	-	-	0.13	-	-	ND	6.5	ND	ND	ND	22	76	-	-	-	-	-	-	-
		L-12 @ 3'	02/1/2016	3.0	-	-	-	-	-	-	-	-	-	-	-	-	-	-	-	-	-	-	-	-	-	-	-	-	-	-	-	-	-	-	-	-	-	-	-	-	-	-	-	-	-	-	-	-
	L7	L-7 @ 1'	02/26/2016	1.0	ND	63	-	-	ND	ND	-	-	-	-	-	-	-	-	-	-	-	-	-	-	-	-	-	-	-	-	-	-	-	-	-	-	-	-	-	-	-	-	-	-	-	-	-	-	-
		L-7 @ 2'	02/26/2016	2.0	-	-	-	-	-	-	ND	-	3	-	-	100	-	-	ND	ND	-	-	14	-	8.2	19	-	-	3.9	-	-	-	0.1	-	-	ND	10	ND	ND	ND	36	42	-	-	-	-	-	-	-
		L-7 @ 3'	02/26/2016	3.0	-	-	-	-	-	-	ND	-	1.6	-	-	61	-	-	ND	ND	-	-	8.3	-	4.8	12	-	-	5.4	-	-	-	ND	-	-	ND	6	ND	ND	ND	22	29	-	-	-	-	-	-	-
	L8	L-8 @ 1'	02/26/2016	1.0	ND	ND	-	-	ND	ND	-	-	-	-	-	-	-	-	-	-	-	-	-	-	-	-	-	-	-	-	-	-	-	-	-	-	-	-	-	-	-	-	-	-	-	-	-	-	-
		L-8 @ 2'	02/26/2016	2.0	-	-	-	-	-	-	ND	-	ND	-	-	33	-	-	ND	ND	-	-	4.1	-	1.9	3.8	-	-	1.3	-	-	-	0.19	-	-	ND	2.5	ND	ND	ND	11	13	-	-	-	-	-	-	-
		L-8 @ 3'	02/26/2016	3.0	-	-	-	-	-	-	ND	-	ND	-	-	37	-	-	ND	ND	-	-	4.7	-	2.4	3.8	-	-	1.2	-	-	-	ND	-	-	ND	2.9	ND	ND	ND	15	15	-	-	-	-	-	-	-
	L-11	L-11 @ 1'	02/26/2016	1.0	ND	ND	-	-	ND	ND	-	-	-	-	-	-	-	-	-	-	-	-	-	-	-	-	-	-	-	-	-	-	-	-	-	-	-	-	-	-	-	-	-	-	-	-	-	-	-
		L-11 @ 2'	02/26/2016	2.0	-	-	-	-	-	-	ND	-	ND	-	-	42	-	-	ND	ND	-	-	5.2	-	3	4.7	-	-	1.4	-	-	-	ND	-	-	ND	4	ND	ND	ND	14	19	-	-	-	-	-	-	-
		L-11 @ 3'	02/26/2016	3.0	-	-	-	-	-	-	ND	-	1	-	-	48	-	-	ND	ND	-	-	5.3	-	3	5.6	-	-	3.3	-	-	-	ND	-	-	ND	4.1	ND	ND	ND	14	20	-	-	-	-	-	-	-
	L-12	L-12 @ 1'	02/26/2016	1.0	ND	ND	-	-	ND	ND	-	-	-	-	-	-	-	-	-	-	-	-	-	-	-	-	-	-	-	-	-	-	-	-	-	-	-	-	-	-	-	-	-	-	-	-	-	-	-
		L-12 @ 2'	02/26/2016	2.0	ND	110	-	-	ND	ND	ND	-	ND	-	-	45	-	-	ND	ND	-	-	4.6	-	2.6	4.5	-	-	4.9	-	-	-	ND	-	-	ND	3.3	ND	ND	ND	14	19	-	-	-	-	-	17 (Arochlor 1260)	2.9 (4,4' - DDT [2C])
		L-12 @ 3'	02/26/2016	3.0	-	-	-	-	-	-	ND	-	ND	-	-	35	-	-	ND	ND	-	-	4	-	2.2	3.4	-	-	1	-	-	-	ND	-	-	ND	2.7	ND	ND	ND	12	14	-	-	-	-	-	-	-
	1B-1	1B-1-0.5	05/15/2017	0.5	-	-	-	-	-	-	ND	-	1.9	-	-	86	-	-	ND	ND	-	-	13	-	5.2	8.3	-	-	6.6	-	-	-	ND	-	-	4.4	8.4	ND	ND	ND	25	29	-	-	-	-	-	-	-
		1B-1-1.0	05/15/2017	1.0	-	-	-	-	-	-	ND	-	1.9	-	-	84	-	-	ND	ND	-	-	15	-	7.5	8.8	-	-	4.4	-	-	-	ND	-	-	3.3	12	ND	ND	ND	30	31	-	-	-	-	-	-	-
		1B-1-3.0	05/15/2017	3.0	-	-	-	-	-	-	ND	-	ND	-	-	50	-	-	ND	ND	-	-	6.3	-	4.0	6.4	-	-	4.3	-	-	-	ND	-	-	ND	3.9	ND	ND	ND	18	24	-	-	-	-	-	-	-
		1B-1-5.0	05/15/2017	5.0	-	-	-	-	-	-	ND	-	1.3	-	-	69	-	-	ND	ND	-	-	8.4	-	5.5	9.7	-	-	19	-	-	-	0.19	-	-	ND	6.0	ND	ND	ND	21	32	-	-	-	-	-	-	-
	A-13-01	A01@5'	08/21/2013	5.0	6.9	ND	ND	ND	ND	-	ND	-	1.3	-	-	67	-	-	ND	1.2	-	-	9.8	-	5.6	12	-	-	8.2	-	-	-	0.069	-	-	ND	6.8	ND	ND	ND	27	41	-	-	-	-	-	-	-
		A01@30'	08/21/2013	30.0	35	18	ND	53	ND	-	-	-	-	-	-	-	-	-	-	-	-	-	-	-	-	-	-	-	-	-	-	-	-	-	-	-	-	-	-	-	-	-	-	-	-	-	-	-	-
		A01@50'	08/21/2013	50.0	25	28	ND	55	ND	-	-	-	-	-	-	-	-	-	-	-	-	-	-	-	-	-	-	-	-	-	-	-	-	-	-	-	-	-	-	-	-	-	-	-	-	-	-	-	-
		A01@60'	08/21/2013	60.0	ND	ND	ND	ND	9.2 (1,2,4-Trimethylbenzene)	-	-	-	-	-	-	-	-	-	-	-	-	-	-	-	-	-	-	-	-	-	-	-	-	-	-	-	-	-	-	-	-	-	-	-	-	-	-	-	-	-	-
		A01@65'	08/21/2013	65.0	ND	ND	17	17	790,000 (Toluene) 15,000 (Ethylbenzene) 110,000 (Total Xylenes) 15,000 (Sec-Butylbenzene) 29,000 (n-Butylbenzene) 25,000 (Isopropylbenzene) 130,000 (n-Propoylbenzene) 870,000 (1,2,4-Trimethylbenzene) 220,000 (1,3,5-Trimethylbenzene)	-	ND	-	0.62	-	-	29	-	-	ND	ND	-	-	4	-	ND	3.5	-	-	ND	-	-	-	ND	-	-	ND	ND	ND	ND	ND	14	13	-	-	-	-	-	-	-
		A01@80'	08/21/2013	80.0	ND	ND	ND	ND	500 (Toluene) 420 (1,2,4-Trimethylbenzene)	-	-	-	-	-	-	-	-	-	-	-	-	-	-	-	-	-	-	-	-	-	-	-	-	-	-	-	-	-	-	-	-	-	-	-	-	-	-	-	-	-	-
2A, 2B, 2C	2A-1	2A-1-0.5	05/15/2017	0.5	-	-	-	-	-	-	ND	-	ND	-	-	160	-	-	ND	ND	-	-	8.8	-	4.2	12	-	-	7.6	-	-	-	ND	-	-	ND	9.4	ND	ND	ND	19	46	-	-	-	-	-	-	-
		2A-1-1.0	05/15/2017	1.0	ND	ND	-	-	ND	ND	ND	-	ND	-	-	84	-	-	ND	ND	-	-	11	-	7.3	12	-	-	6.3	-	-	-	ND	-	-	ND	7.8	ND	ND	ND	27	36	-	-	-	ND	ND	-	ND
		2A-1-3.0	05/15/2017	3.0	ND	ND	-	-	ND	ND	ND	-	ND	-	-	42	-	-	ND	ND	-	-	5.5	-	4.1	5.7	-	-	5.8	-	-	-	ND	-	-	ND	3.7	ND	ND	ND	15	23	-	-	-	-	-	-	-
		2A-1-5.0	05/15/2017	5.0	-	-	-	-	-	-	ND	-	1.0	-	-	90	-	-	ND	ND	-	-	7.7	-	2.8	5.5	-	-	10	-	-	-	ND	-	-	ND	4.8	ND	ND	ND	14	14	-	-	-	-	-	-	-
	2A-2	2A-2-0.5	05/15/2017	0.5	-	-	-	-	-	-	ND	-	1.9	-	-	85	-	-	ND	ND	-	-	8.8	-	5.6	18	-	-	28	-	-	-	ND	-	-	ND	7.5	ND	ND	ND	22	48	-	-	-	-	-	-	-
		2A-2-1.0	05/15/2017	1.0	ND	18	-	-	ND	ND	ND	-	1.4	-	-	59	-	-	ND	ND	-	-	8.1	-	5.3	8.4	-	-	6.5	-	-	-	ND	-	-	ND	5.6	ND	ND	ND	21	31	-	-	-	ND	ND	-	ND
		2A-2-3.0	05/15/2017	3.0	-	-	-	-	-	-	ND	-	ND	-	-	49	-	-	ND	ND	-	-	6.6	-	4.5	6.7	-	-	2.6	-	-	-	ND	-	-	ND	4.6	ND	ND	ND	18	23	-	-	-	-	-	-	-
		2A-2-5.0	05/15/2017	5.0	ND	ND	-	-	ND	ND	ND	-	ND	-	-	58	-	-	ND	ND	-	-	8.6	-	5.5	6.9	-	-	1.2	-	-	-	ND	-	-	ND	5.1	ND	ND	ND	22	22	-	-	-	-	-	-	-
	P33-B1	MC-1	08/15/2015	2.5	ND	ND	ND	-	ND	ND	ND	-	ND	-	-	71	-	-	ND	ND	-	-	11	-	5	11	-	-	2.4	-	-	-	ND	-	-	ND	7.1	ND	ND	ND	21	33	-	-	-	ND	ND	ND	ND
		MC-2	08/15/2015	5.0	ND	ND	ND	-	ND	ND	ND	-	2.1	-	-	140	-	-	ND	1.3	ND	-	15	-	8.5	23	-	-	4.7	-	-	-	0.12	-	-	ND	11	ND	ND	ND	38	52	-	-	-	-	-	-	-
		MC-3	08/15/2015	7.5	ND	ND	ND	-	ND	ND	ND	-	ND	-	-	136	-	-	ND	ND	-	-	3.3	-	2.9	3.8	-	-	ND	-	-	-	ND	-	-	ND	2.7	ND	ND	ND	11	15	-	-	-	-	-	-	-
	P33-B2	MC-1	08/7/2015	2.5	ND	ND	ND	-	ND	ND	ND	-	ND	-	-	33	-	-	ND	ND	-	-	4.4	-	2.4	4.5	-	-	1.1	-	-	-	ND	-	-	ND	3.2	ND	ND	ND	11	17	-	-	-	-	-	-	-
		MC-2	08/7/2015	5.0	ND	ND	ND	-	ND	ND	ND	-	ND	-	-	130	-	-	ND	1.4	ND	-	17	-	8.6	22	-	-	3.9	-	-	-	0.11	-	-	ND	12	ND	ND	ND	41	60	-	-	-	-	-	-	-
		MC-3	08/7/2015	7.5	ND	ND	ND	-	ND	ND	ND	-	ND	-	-	23	-	-	ND	ND	-	-	3	-	2.1	5.3	-	-	1	-	-	-	0.9	-	-	ND	2.2	ND	ND	ND	10	16	-	-	-	-	-	-	-
		MC-4	08/7/2015	10.0	ND	ND	ND	-	ND	ND	ND	-	ND	-	-	40	-	-	ND	ND	-	-	4.8	-	2.1	4	-	-	ND	-	-	-	ND	-	-	ND	2.3	ND	ND	ND	7.6	14	-	-	-	-	-	-	-
	P33-B3	MC-1	08/7/2015	2.5	ND	ND	ND	-	ND	ND	ND	-	ND	-	-	35	-	-	ND	ND	-	-	5.1	-	2.9	5.4	-	-	1.3	-	-	-	ND	-	-	ND	3.6	ND	ND	ND	14	19	-	-	-	-	-	-	-
		MC-2	08/7/2015	5.0	ND	ND	ND	-	ND	ND	ND	-	1.7	-	-	120	-	-	ND	1.6	ND	-	18	-	8.8	23	-	-	4.5	-	-	-	ND	-	-	ND	13	ND	ND	ND	41	60	-	-	-	-	-	-	-
		MC-3	08/7/2015	7.5	ND	ND	ND	-	ND	ND	ND	-	ND	-	-	27	-	-	ND	ND	-	-	3.5	-	2	3.5	-	-	ND	-	-	-	ND	-	-	ND	2.4	ND	ND	ND	7.5	12	-	-	-	-	-	-	-
		MC-4	08/7/2015	10.0	ND	ND	ND	-	ND	ND	ND	-	ND	-	-	54	-	-	ND	ND	-	-	8.5	-	4.3	7.8	-	-	1.4	-	-	-	ND	-	-	ND	5.3	ND	ND	ND	20	26	-	-	-	-	-	-	-
		MC-5	08/7/2015	12.5	ND	ND	ND	-	ND	ND	ND	-	ND	-	-	21	-	-	ND	ND	-	-	3.3	-	2.1	6.1	-	-	1.5	-	-	-	0.13	-	-	ND	2.2	ND	ND	ND	7.3	13	-	-	-	-	-	-	-
	P33-B4	MC-1	08/7/2015	2.5	ND	ND	ND	-	ND	ND	ND	-	1	-	-	89	-	-	ND	ND	-	-	11	-	5.7	13	-	-	3	-	-	-	ND	-	-	ND	8.1	ND	ND	ND	25	38	-	-	-	ND	ND	ND	ND
		MC-2	08/7/2015	5.0	ND	ND	ND	-	ND	ND	ND	-	ND	-	-	58	-	-	ND	ND	-	-	8	-	4.1	8.2	-	-	1.6	-	-	-	ND	-	-	ND	5.5	ND	ND	ND	17	26	-	-	-	ND	-	-	-
		MC-3	08/7/2015	7.5	ND	ND	ND	-	ND	ND	ND	-	ND	-	-	21	-	-	ND	ND	-	-	3.1	-	2	2.6	-	-	ND	-	-	-	ND	-	-	ND	1.9	ND	ND	ND	5.7	9.3	-	-	-	ND	-	-	-
		MC-4	08/7/2015	10.0	ND	ND	ND	-	ND	ND	ND	-	ND	-	-	20	-	-	ND	ND	-	-	2.7	-	1.5	2.4	-	-	ND	-	-	-	3.4	-	-	ND	1.7	ND	ND	ND	6.5	11	-	-	-	-	-	-	-
	P32-B1	MC-1	08/12/2015	2.5	ND	ND	ND	-	ND	ND	ND	-	ND	-	-	50	-	-	ND	ND	-	-	6.3	-	3.2	6	-	-	1.2	-	-	-	ND	-	-	ND	4.1	ND	ND	ND	16	21	-	-	-	ND	ND	ND	ND
		MC-2	08/12/2015	5.0	ND	ND	ND	-	ND	ND	ND	-	ND	-	-	35	-	-	ND	ND	-	-	5.1	-	2.5	5.9	-	-	1.5	-	-	-	0.12	-	-	ND	3.4	ND	ND	ND	14	18	-	-	-	-	-	-	-
		MC-3	08/12/2015	7.5	ND	ND	ND	-	ND	ND	ND	-	ND	-	-	23	-	-	ND	ND	-	-	3.6	-	2	4.9	-	-	1.2	-	-	-	ND	-	-	ND	2.4	ND	ND	ND	9.6	14	-	-	-	-	-	-	-
		MC-4	08/12/2015	10.0	ND	ND	ND	-	ND	ND	ND	-	ND	-	-	38	-	-	ND	ND	-	-	5.6	-	3.7	5.6	-	-	1.1	-	-	-	ND	-	-	ND	3.8	ND	ND	ND	17	19	-	-	-	-	-	-	-
	P32-B2	MC-1	08/12/2015	2.5	ND	ND	ND	-	ND	ND	ND	-	ND	-	-	58	-	-	ND	ND	-	-	8.3	-	4.1	7.4	-	-	1.8	-	-	-	ND	-	-	ND	5.3	ND	ND	ND	19	26	-	-	-	-	-	-	-
		MC-2	08/12/2015	5.0	ND	ND	ND	-	ND	ND	ND	-	1.1	-	-	52	-	-	ND	ND	-	-	8	-	3.9	10	-	-	2.5	-	-	-	ND	-	-	ND	5.6	ND	ND	ND	18	26	-	-	-	-	-	-	-
		MC-3	08/12/2015	7.5	ND	ND	ND	-	ND	ND	ND	-	ND	-	-	32	-	-	ND	ND	-	-	4.2	-	2.3	4	-	-	1.2	-	-	-	ND	-	-	ND	2.7	ND	ND	ND	11	15	-	-	-	-	-	-	-
		MC-4	08/12/2015	10.0	ND	ND	ND	-	ND	ND	ND	-	1.3	-	-	55	-	-	ND	ND	-	-	7.9	-	4.2	10	-	-	2.2	-	-	-	ND	-	-	ND	5.6	ND	ND	ND	17	23	-	-	-	-	-	-	-
	RR-B1	MC-1	08/25/2015	2.5	ND	ND	ND	-	ND	ND	ND	-	ND	-	-	44	-	-	ND	ND	-	-	6.1	-	3.4	7.6	-	-	2.4	-	-	-	ND	-	-	ND	4.4	ND	ND	ND	15	22	-	-	-	ND	ND	-	-
		MC-2	08/25/2015	5.0	ND	17	43	-	ND	ND	ND	-	ND	-	-	53	-	-	ND	ND	-	-	7.7	-	4.2	10	-	-	3.6	-	-	-	ND	-	-	ND	5.3	ND	ND	ND	19	27	-	-	-	-	-	-	-
		MC-3	08/25/2015	7.5	ND	ND	ND	-	ND	ND	ND	-	1.2	-	-	64	-	-	ND	ND	-	-	9.4	-	4.9	12	-	-	5.9	-	-	-	ND	-	-	ND	6.3	ND	ND	ND	22	33	-	-	-	-	-	-	-
		MC-4	08/25/2015	10.0	ND	ND	ND	-	ND	ND	ND	-	1.1	-	-	52	-	-	ND	ND	-	-	7.9	-	4	8.9	-	-	5.5	-	-	-	ND	-	-	ND	5.4	ND	ND	ND	20	28	-	-	-	-	-	-	-
		MC-5	08/25/2015	15.0	ND	ND	ND	-	ND	ND	ND	-	ND	-	-	37	-	-	ND	ND	-	-	5.1	-	2.7	4.6	-	-	ND	-	-	-	ND	-	-	ND	3.3	ND	ND	ND	15	17	-	-	-	-	-	-	-
	RR-B2	MC-1	08/25/2015	2.5	ND	ND	ND	-	ND	ND	ND	-	ND	-	-	46	-	-	ND	ND	-	-	6	-	3.5	6.2	-	-	1.2	-	-	-	ND	-	-	ND	4.3	ND	ND	ND	17	22	-	-	-	ND	ND	-	-
		MC-2	08/25/2015	5.0	ND	ND	ND	-	ND	ND	ND	-	ND	-	-	86	-	-	ND	ND	-	-	11	-	6.1	11	-	-	2.4	-	-	-	ND	-	-	ND	8.2	ND	ND	ND	26	42	-	-	-	-	-	-	-
		MC-3	08/25/2015	7.5	ND	ND	ND	-	ND	ND	ND	-	ND	-	-	30	-	-	ND	ND	-	-	4.2	-	2.7	4.7	-	-	1.2	-	-	-	ND	-	-	ND	2.9	ND	ND	ND	10	15	-	-	-	-	-	-	-
		MC-4	08/25/2015	10.0	ND	ND	ND	-	ND	ND	ND	-	ND	-	-	21	-	-	ND	ND	-	-	3.4	-	1.4	2.9	-	-	1	-	-	-	ND	-	-	ND	1.7	ND	ND	ND	6.2	12	-	-	-	-	-	-	-
		MC-5	08/25/2015	15.0	ND	ND	ND	-	ND	ND	ND	-	ND	-	-	32	-	-	ND	ND	-	-	4.6	-	2.5	4.7	-	-	1.1	-	-	-	ND	-	-	ND	3.2	ND	ND	ND	11	16	-	-	-	-	-	-	-

Table 2. Summary of Laboratory Test Results - Soil Samples (Cont'd)

PARC AREA	Boring ID	Sample ID	Sample Collection Date	Sample Depth (ft below grade)	Total Petroleum Hydrocarbons (EPA 8015B (M))				VOCs (EPA 8260B) (µg/kg)	SVOCs (EPA 8270C) (µg/kg)	Title 22 Metals (EPA 6010B/7471A)																													pH	Polychlorinated Biphenyls (EPA 8082) µg/kg	Organochlorine Pesticides (EPA 8081) µg/kg	Organophosphorous Pesticides (EPA 8081) µg/kg	Chlorinated Herbicides (EPA 8151A) µg/kg
					TPH GRO mg/kg	TPH DRO mg/kg	TPH ORO mg/kg	TPH Total mg/kg			Antimony mg/kg	STLC Antimony mg/L	Arsenic mg/kg	STLC Arsenic mg/L	TCLP Arsenic mg/L	Barium mg/kg	STLC Barium mg/L	TCLP Barium mg/L	Beryllium mg/kg	Cadmium mg/kg	STLC Cadmium mg/L	TCLP Cadmium mg/L	Chromium mg/kg	Hexavalent Chromium mg/kg	Cobalt mg/kg	Copper mg/kg	STLC Copper mg/L	TCLP Copper mg/L	Lead mg/kg	STLC Lead (CA-WET) mg/L	STLC Lead (DI-WET) mg/L	TCLP Lead mg/L	Mercury mg/kg	STLC Mercury mg/L	TCLP Mercury mg/L	Molybdenum mg/kg	Nickel mg/kg	Selenium mg/kg	Silver mg/kg	Thallium mg/kg	Vanadium mg/kg	Zinc mg/kg	STLC Zinc mg/L	TCLP Zinc mg/L					
	RR-B3	MC-1	08/25/2015	2.5	ND	13	23	-	ND	ND	ND	-	2.3	-	-	150	-	-	ND	ND	-	-	12	-	4.1	14	-	-	41	-	-	-	0.18	-	-	ND	8.9	ND	ND	ND	19	42	-	-	-	ND	ND	-	-
		MC-2	08/25/2015	5.0	ND	12	15	-	ND	ND	ND	-	3.7	-	-	140	-	-	ND	ND	-	-	16	-	5.9	24	-	-	44	-	-	-	0.23	-	-	ND	15	ND	ND	ND	25	93	-	-	-	ND	ND	-	-
		MC-3	08/25/2015	7.5	ND	ND	ND	-	ND	ND	ND	-	2.5	-	-	130	-	-	ND	ND	-	-	17	-	6.1	21	-	-	24	-	-	-	0.18	-	-	ND	13	ND	ND	ND	30	66	-	-	-	-	-	-	-
		MC-4	08/25/2015	10.0	ND	12	31	-	ND	ND	ND	-	1.1	-	-	55	-	-	ND	ND	-	-	8.3	-	3.6	10	-	-	7.5	-	-	-	0.12	-	-	ND	5.1	ND	ND	ND	15	29	-	-	-	-	-	-	-
		MC-5	08/25/2015	15.0	ND	ND	ND	-	ND	ND	ND	-	ND	-	-	50	-	-	ND	ND	-	-	5.3	-	2.7	5.4	-	-	1.4	-	-	-	ND	-	-	ND	3.6	ND	ND	ND	13	21	-	-	-	-	-	-	-
		MC-6	08/25/2015	20.0	ND	ND	ND	-	ND	ND	ND	-	ND	-	-	43	-	-	ND	ND	-	-	4.9	-	2.5	6	-	-	2	-	-	-	ND	-	-	ND	3.1	ND	ND	ND	11	19	-	-	-	-	-	-	-
	R-13-02	R02@5'	08/21/2013	5.0	ND	ND	ND	ND	ND	-	ND	-	1.5	-	-	68	-	-	ND	1.2	-	-	11	-	5.3	13	-	-	ND	-	-	-	0.078	-	-	ND	7.5	ND	ND	ND	31	37	-	-	-	-	-	-	-
		R02@45'	08/21/2013	45.0	ND	ND	ND	ND	ND	-	-	-	-	-	-	-	-	-	-	-	-	-	-	-	-	-	-	-	-	-	-	-	-	-	-	-	-	-	-	-	-	-	-	-	-	-	-	-
		R02@65'	08/21/2013	65.0	ND	ND	ND	ND	ND	-	ND	-	1.2	-	-	190	-	-	ND	1	-	-	8.3	-	3.5	35	-	-	ND	-	-	-	0.048	-	-	9.6	5.8	ND	ND	ND	21	37	-	-	-	-	-	-	-
	A-13-19	A19@5'	08/22/2013	5.0	ND	ND	ND	ND	ND	-	ND	-	ND	-	-	14	-	-	ND	ND	-	-	ND	-	ND	51	-	-	ND	-	-	-	0.058	-	-	ND	ND	ND	ND	ND	ND	66	-	-	-	-	-	-	-
		A19@35'	08/22/2013	35.0	ND	ND	ND	ND	ND	-	-	-	-	-	-	-	-	-	-	-	-	-	-	-	-	-	-	-	-	-	-	-	-	-	-	-	-	-	-	-	-	-	-	-	-	-	-	-
		A19@45'	08/22/2013	45.0	ND	ND	ND	ND	ND	-	-	-	-	-	-	-	-	-	-	-	-	-	-	-	-	-	-	-	-	-	-	-	-	-	-	-	-	-	-	-	-	-	-	-	-	-	-	-
		A19@60'	08/22/2013	60.0	ND	ND	ND	ND	ND	-	-	-	-	-	-	-	-	-	-	-	-	-	-	-	-	-	-	-	-	-	-	-	-	-	-	-	-	-	-	-	-	-	-	-	-	-	-	-
		A19@80'	08/22/2013	80.0	ND	ND	ND	ND	ND	-	ND	-	2.1	-	-	55	-	-	ND	1.2	-	-	7.3	-	4	14	-	-	ND	-	-	-	0.05	-	-	9.6	4.6	ND	ND	ND	21	38	-	-	-	-	-	-	-
	A-13-20	A20@5'	09/23/2013	5.0	14	2.4	ND	16	ND	-	ND	-	ND	-	-	82	-	-	ND	1.7	-	-	12	-	6.8	16	-	-	35	-	-	-	0.097	-	-	ND	9	ND	ND	ND	33	110	-	-	-	-	-	-	-
		A20@25'	09/23/2013	25.0	ND	ND	ND	ND	ND	-	-	-	-	-	-	-	-	-	-	-	-	-	-	-	-	-	-	-	-	-	-	-	-	-	-	-	-	-	-	-	-	-	-	-	-	-	-	-
		A20@65'	09/23/2013	65.0	ND	ND	ND	ND	ND	-	ND	-	4.6	-	-	93	-	-	ND	**3.2**	-	-	12	-	6.4	16	-	-	ND	-	-	-	ND	-	-	12	9	ND	ND	ND	32	54	-	-	-	-	-	-	-
	A-13-21	A21@5'	09/20/2013	5.0	**370**	50	11	430	ND	-	ND	-	6	-	-	83	-	-	ND	**2.7**	-	-	16	-	6	250	-	-	**170**	-	-	-	0.12	-	-	ND	18	ND	ND	ND	25	160	-	-	-	-	-	-	-
		A21@35'	09/20/2013	35.0	13	19	1.9	33	ND	-	-	-	-	-	-	-	-	-	-	-	-	-	-	-	-	-	-	-	-	-	-	-	-	-	-	-	-	-	-	-	-	-	-	-	-	-	-	-
		A21@65'	09/20/2013	65.0	ND	ND	ND	ND	ND	-	ND	-	8.6	-	-	110	-	-	ND	ND	-	-	5.2	-	ND	3.6	-	-	ND	-	-	-	0.028	-	-	110	ND	ND	ND	ND	26	8.1	-	-	-	-	-	-	-
3	A-13-23	A23@5'	09/11/2013	5.0	ND	ND	ND	ND	ND	-	ND	-	42	-	-	140	-	-	ND	ND	-	-	11	-	3.7	8	-	-	ND	-	-	-	0.07	-	-	ND	5.5	ND	ND	ND	21	27	-	-	-	-	-	-	-
		A23@20'	09/11/2013	20.0	ND	ND	ND	ND	ND	-	-	-	-	-	-	-	-	-	-	-	-	-	-	-	-	-	-	-	-	-	-	-	-	-	-	-	-	-	-	-	-	-	-	-	-	-	-	-
		A23@50'	09/11/2013	50.0	ND	ND	ND	ND	ND	-	ND	-	ND	-	-	51	-	-	ND	**2.3**	-	-	16	-	5.3	8.6	-	-	3	-	-	-	0.037	-	-	ND	5.3	ND	ND	ND	57	26	-	-	-	-	-	-	-
4	R-13-03	R03@5'	11/6/2013	5.0	6	ND	ND	ND	ND	-	ND	-	ND	-	-	34	-	-	ND	ND	-	-	5.6	-	ND	6	-	-	ND	-	-	-	0.028	-	-	ND	3.1	ND	ND	ND	14	16	-	-	-	-	-	-	-
		R03@45'	11/6/2013	45.0	ND	ND	ND	ND	ND	-	-	-	-	-	-	-	-	-	-	-	-	-	-	-	-	-	-	-	-	-	-	-	-	-	-	-	-	-	-	-	-	-	-	-	-	-	-	-
		R03@55'	11/6/2013	55.0	ND	ND	ND	ND	ND	-	ND	-	ND	-	-	46	-	-	ND	ND	-	-	ND	-	ND	5.6	-	-	ND	-	-	-	ND	-	-	ND	ND	ND	ND	ND	16	36	-	-	-	-	-	-	-
	R-13-04	R04@5'	11/4/2013	5.0	ND	ND	ND	ND	ND	-	ND	-	**13**	-	-	92	-	-	ND	**3.1**	-	-	9.3	-	12	35	-	-	3.4	-	-	-	0.054	-	-	ND	19	ND	ND	ND	110	79	-	-	-	-	-	-	-
		R04@40'	11/4/2013	40.0	ND	ND	ND	ND	ND	-	ND	-	ND	-	-	90	-	-	ND	1.2	-	-	14	-	7.4	24	-	-	ND	-	-	-	0.026	-	-	ND	11	ND	ND	ND	31	53	-	-	-	-	-	-	-
		R04@60'	11/4/2013	60.0	ND	ND	ND	ND	ND	-	-	-	-	-	-	-	-	-	-	-	-	-	-	-	-	-	-	-	-	-	-	-	-	-	-	-	-	-	-	-	-	-	-	-	-	-	-	-
		5-1-0.5	05/15/2017	0.5	-	-	-	-	-	-	ND	-	1.5	-	-	72	-	-	ND	ND	-	-	7.9	-	5.6	12	-	-	20	-	-	-	ND	-	-	ND	6.6	ND	ND	ND	21	46	-	-	-	-	-	-	-
	5-1	5-1-1.0	05/15/2017	1.0	-	-	-	-	-	-	ND	-	2.1	-	-	84	-	-	ND	ND	-	-	10	-	5.3	19	-	-	**68**	4.8	-	ND	ND	-	-	ND	7.6	ND	ND	ND	22	99	-	-	-	-	-	-	-
		5-1-2.0	05/15/2017	2.0	-	-	-	-	-	-	ND	-	4.7	-	-	42	-	-	ND	ND	-	-	6.0	-	4.9	23	-	-	**110**	3.7	-	ND	0.11	-	-	ND	7.0	ND	ND	ND	18	130	-	-	-	-	-	-	-
		5-1-3.0	05/15/2017	3.0	-	-	-	-	-	-	ND	-	ND	-	-	30	-	-	ND	ND	-	-	4.2	-	3.2	3.8	-	-	2.2	-	-	-	0.14	-	-	ND	2.7	ND	ND	ND	14	16	-	-	-	-	-	-	-
5	5-2	5-2-0.5	05/15/2017	0.5	-	-	-	-	-	-	ND	-	4.1	-	-	75	-	-	ND	ND	-	-	15	-	8.5	20	-	-	48	-	-	-	ND	-	-	ND	14	ND	ND	ND	29	60	-	-	-	-	-	-	-
		5-2-1.0	05/15/2017	1.0	-	-	-	-	-	-	ND	-	ND	-	-	52	-	-	ND	ND	-	-	5.9	-	4.5	9.6	-	-	19	-	-	-	ND	-	-	ND	5.0	ND	ND	ND	18	77	-	-	-	-	-	-	-
		5-2-2.0	05/15/2017	2.0	-	-	-	-	-	-	ND	-	ND	-	-	57	-	-	ND	ND	-	-	6.1	-	4.8	5.9	-	-	2.3	-	-	-	ND	-	-	ND	4.5	ND	ND	ND	17	23	-	-	-	-	-	-	-
		5-2-3.0	05/15/2017	3.0	-	-	-	-	-	-	ND	-	1.1	-	-	21	-	-	ND	ND	-	-	3.2	-	3.2	4.3	-	-	**180**	ND	-	ND	0.12	-	-	ND	4.0	ND	ND	ND	8.5	10	-	-	-	-	-	-	-
	L-9	L-9 @ 1'	02/12/2016	1.0	ND	190	-	-	ND	ND	2.3	-	3.4	-	-	72	-	-	ND	ND	-	-	7.9	-	4.4	20	-	-	**64**	-	-	-	ND	-	-	ND	7.3	ND	ND	ND	24	75	-	-	-	-	-	-	ND
		L-9 @ 2.5'	02/12/2016	2.5	-	-	-	-	ND	-	ND	-	2.2	-	-	44	-	-	ND	ND	-	-	6.3	-	2.9	7	-	-	16	-	-	-	ND	-	-	ND	4.3	ND	ND	ND	24	27	-	-	-	-	-	-	-
	L-10	L-10 @ 1'	02/12/2016	1.0	ND	260	-	-	ND	ND	ND	-	5	-	-	120	-	-	ND	ND	-	-	10	-	5	19	-	-	44	-	-	-	0.25	-	-	1.1	9.2	ND	ND	ND	23	68	-	-	-	-	-	-	ND
		L-10 @ 3'	02/12/2016	3.0	-	-	-	-	ND	-	ND	-	2.8	-	-	58	-	-	ND	ND	-	-	8.1	-	3.6	10	-	-	20	-	-	-	ND	-	-	ND	6.0	ND	ND	ND	22	47	-	-	-	-	-	-	-
		6-1-0.5	05/15/2017	0.5	-	-	-	-	-	-	ND	-	1.5	-	-	69	-	-	ND	ND	-	-	6.0	-	3.3	7.2	-	-	11	-	-	-	0.14	-	-	ND	4.3	ND	ND	ND	14	28	-	-	-	-	-	-	-
	6-1	6-1-1.0	05/15/2017	1.0	ND	ND	-	-	ND	ND	ND	-	1.4	-	-	77	-	-	ND	ND	-	-	6.2	-	3.7	8.5	-	-	13	-	-	-	ND	-	-	ND	6.7	ND	ND	ND	15	33	-	-	-	ND	ND	-	ND
		6-1-3.0	05/15/2017	3.0	-	-	-	-	-	-	ND	-	ND	-	-	70	-	-	ND	ND	-	-	8.2	-	6.6	7.4	-	-	3.3	-	-	-	ND	-	-	ND	6.1	ND	ND	ND	23	32	-	-	-	-	-	-	-
		6-1-5.0	05/15/2017	5.0	-	-	-	-	-	-	ND	-	ND	-	-	66	-	-	ND	ND	-	-	8.1	-	6.3	6.5	-	-	1.2	-	-	-	ND	-	-	ND	5.6	ND	ND	ND	24	28	-	-	-	-	-	-	-
		6-2-0.5	05/16/2017	0.5	-	-	-	-	-	-	ND	-	2.9	-	-	110	-	-	ND	ND	-	-	5.5	-	2.7	6.8	-	-	**90**	ND	-	ND	0.33	-	-	ND	3.2	ND	ND	ND	15	62	-	-	-	ND	ND	-	ND
	6-2	6-2-1.0	05/16/2017	1.0	-	-	-	-	-	-	ND	-	1.2	-	-	87	-	-	ND	ND	-	-	8.2	-	5.7	15	-	-	38	-	-	-	0.78	-	-	ND	8.0	ND	ND	ND	26	89	-	-	-	-	-	-	-
		6-2-3.0	05/16/2017	3.0	ND	ND	-	-	ND	ND	ND	-	ND	-	-	29	-	-	ND	ND	-	-	3.7	-	2.6	2.5	-	-	1.2	-	-	-	ND	-	-	ND	2.4	ND	ND	ND	11	13	-	-	-	-	-	-	-
		6-2-5.0	05/16/2017	5.0	-	-	-	-	-	-	ND	-	ND	-	-	34	-	-	ND	ND	-	-	2.9	-	2.8	3.0	-	-	1.2	-	-	-	ND	-	-	ND	2.4	ND	ND	ND	10	14	-	-	-	-	-	-	-
		6-3-0.5	05/15/2017	0.5	-	-	-	-	-	-	ND	-	46	-	-	190	-	-	ND	ND	-	-	5.8	-	3.5	5.7	-	-	9.1	-	-	-	ND	-	-	ND	3.5	ND	ND	ND	14	28	-	-	-	-	-	-	-
	6-3	6-3-1.0	05/15/2017	1.0	ND	ND	-	-	ND	ND	8.3	-	11	-	-	**1,900**	3.2	ND	ND	**12**	ND	0.99	**69**	3.0	9.2	250	**33**	-	**4,300**	**270**	-	**7.3**	0.44	-	-	ND	31	1.0	ND	ND	22	**10,000**	**1,100**	-	-	ND	ND	-	ND
		6-3-3.0	05/15/2017	3.0	-	-	-	-	-	-	ND	-	1.6	-	-	160	-	-	ND	ND	-	-	8.7	-	3.5	21	-	-	**250**	ND	-	ND	ND	-	-	ND	5.0	ND	ND	ND	11	660	-	-	-	-	-	-	-
		6-3-5.0	05/15/2017	5.0	-	-	-	-	-	-	ND	-	ND	-	-	21	-	-	ND	ND	-	-	3.1	-	2.3	2.4	-	-	1.1	-	-	-	0.4	-	-	ND	1.9	ND	ND	ND	12	13	-	-	-	-	-	-	-
		6-4-0.5	05/15/2017	0.5	-	-	-	-	-	-	ND	-	2.3	-	-	95	-	-	ND	ND	-	-	6.2	-	3.2	13	-	-	30	-	-	-	0.17	-	-	ND	5.6	ND	ND	ND	15	55	-	-	-	-	-	-	-
	6-4	6-4-1.0	05/15/2017	1.0	ND	ND	-	-	ND	ND	ND	-	**26**	1.1	ND	71	-	-	ND	1.2	-	-	11	-	4.6	41	-	-	**94**	**5.4**	-	ND	ND	-	-	ND	8.4	ND	ND	ND	19	960	-	-	-	ND	ND	-	ND
		6-4-3.0	05/15/2017	3.0	-	-	-	-	-	-	ND	-	11	-	-	41	-	-	ND	ND	-	-	6.3	-	4.2	7.1	-	-	16	-	-	-	ND	-	-	ND	3.8	ND	ND	ND	18	32	-	-	-	-	-	-	-
		6-4-5.0	05/15/2017	5.0	-	-	-	-	-	-	ND	-	9.0	-	-	69	-	-	ND	ND	-	-	11	-	7.5	11	-	-	3.2	-	-	-	ND	-	-	ND	7.0	ND	ND	ND	29	59	-	-	-	-	-	-	-
		6-5-0.5	05/15/2017	0.5	-	-	-	-	-	-	4	-	9.1	-	-	95	-	-	ND	**2.3**	ND	ND	19	5.0	7.6	82	-	-	**400**	1.9	-	ND	0.17	-	-	ND	12	ND	ND	ND	21	950	-	-	-	-	-	-	-
	6-5	6-5-1.0	05/15/2017	1.0	-	-	-	-	-	-	ND	-	3.9	-	-	75	-	-	ND	ND	-	-	10	-	6.7	13	-	-	**59**	1.9	-	1.8	ND	-	-	ND	6.9	ND	ND	ND	27	83	-	-	-	-	-	-	-
		6-5-3.0	05/15/2017	3.0	ND	ND	-	-	ND	ND	ND	-	1.0	-	-	31	-	-	ND	ND	-	-	4.5	-	3.2	3.8	-	-	2.4	-	-	-	0.11	-	-	ND	2.8	ND	ND	ND	14	17	-	-	-	ND	ND	-	ND
		6-5-5.0	05/15/2017	5.0	-	-	-	-	-	-	ND	-	ND	-	-	22	-	-	ND	ND	-	-	3.3	-	2.3	2.5	-	-	1.1	-	-	-	1.5	-	-	ND	2.0	ND	ND	ND	9.2	13	-	-	-	-	-	-	-
		6-6-1.0	05/15/2017	1.0	-	-	-	-	-	-	ND	-	1.1	-	-	120	-	-	ND	ND	-	-	15	-	8.3	13	-	-	12	-	-	-	0.12	-	-	ND	12	ND	ND	ND	34	45	-	-	-	-	-	-	-
	6-6	6-6-3.0	05/15/2017	3.0	-	-	-	-	-	-	ND	-	ND	-	-	30	-	-	ND	ND	-	-	3.3	-	2.6	3.0	-	-	1.2	-	-	-	ND	-	-	ND	2.5	ND	ND	ND	10	13	-	-	-	-	-	-	-
		6-6-5.0	05/15/2017	5.0	-	-	-	-	-	-	ND	-	ND	-	-	52	-	-	ND	ND	-	-	4.3	-	3.0	4.0	-	-	1.1	-	-	-	ND	-	-	ND	3.0	ND	ND	ND	14	14	-	-	-	-	-	-	-
		6-6-7.5	05/15/2017	7.5	-	-	-	-	-	-	ND	-	ND	-	-	32	-	-	ND	ND	-	-	7.5	-	3.8	4.1	-	-	1.2	-	-	-	ND	-	-	ND	3.8	ND	ND	ND	21	17	-	-	-	-	-	-	-
		6-7-1.0	05/15/2017	1.0	-	-	-	-	-	-	ND	-	ND	-	-	55	-	-	ND	ND	-	-	7.5	-	5.3	6.1	-	-	3.0	-	-	-	ND	-	-	ND	5.4	ND	ND	ND	22	26	-	-	-	-	-	-	-
	6-7	6-7-3.0	05/15/2017	3.0	-	-	-	-	-	-	ND	-	ND	-	-	25	-	-	ND	ND	-	-	3.7	-	2.7	3.2	-	-	2.0	-	-	-	0.12	-	-	ND	2.3	ND	ND	ND	12	14	-	-	-	-	-	-	-
		6-7-5.0	05/15/2017	5.0	-	-	-	-	-	-	ND	-	ND	-	-	24	-	-	ND	ND	-	-	4.3	-	2.3	3.6	-	-	7.5	-	-	-	ND	-	-	ND	2.8	ND	ND	ND	12	29	-	-	-	-	-	-	-
		6-7-7.5	05/15/2017	7.5	-	-	-	-	-	-	ND	-	ND	-	-	62	-	-	ND	ND	-	-	8.6	-	6.0	7.1	-	-	4.3	-	-	-	ND	-	-	ND	5.6	ND	ND	ND	25	33	-	-	-	-	-	-	-
		6-8-1.0	05/15/2017	1.0	-	-	-	-	-	-	ND	-	5.0	-	-	100	-	-	ND	ND	-	-	7.5	-	4.5	97	-	-	**140**	3.6	-	0.28	0.1	-	-	ND	6.1	ND	ND	ND	21	210	-	-	-	-	-	-	-
	6-8	6-8-3.0	05/15/2017	3.0	-	-	-	-	-	-	ND	-	ND	-	-	25	-	-	ND	ND	-	-	3.9	-	2.7	3.0	-	-	1.0	-	-	-	ND	-	-	ND	2.4	ND	ND	ND	15	13	-	-	-	-	-	-	-
		6-8-5.0	05/15/2017	5.0	-	-	-	-	-	-	ND	-	ND	-	-	47	-	-	ND	ND	-	-	6.3	-	4.8	4.3	-	-	1.4	-	-	-	ND	-	-	ND	4.0	ND	ND	ND	23	21	-	-	-	-	-	-	-
		6-8-7.5	05/15/2017	7.5	-	-	-	-	-	-	ND	-	ND	-	-	17	-	-	ND	ND	-	-	1.7	-	1.8	ND	-	-	ND	-	-	-	**4.6**	ND	ND	ND	1.3	ND	ND	ND	7.2	10	-	-	-	-	-	-	-
		6-9-1.0	05/15/2017	1.0	-	-	-	-	ND	-	ND	-	79	-	-	79	-	-	ND	ND	-	-	10	-	6.4	17	-	-	33	-	-	-	0.19	-	-	ND	9.1	ND	ND	ND	32	61	-	-	-	-	-	-	-
	6-9	6-9-3.0	05/15/2017	3.0	-	-	-	-	7.6 (TCE)	-	**47**	ND	9.4	-	-	110	-	-	ND	1.1	-	-	10	-	4.6	**390**	**31**	-	**3,100**	**32**	-	**6.5**	1.4	-	-	ND	12	ND	1.7	ND	18	510	-	-	-	-	-	-	-
		6-9-5.0	05/15/2017	5.0	-	-	-	-	-	-	ND	-	ND	-	-	81	-	-	ND	ND	-	-	8.1	-	5.5	41	-	-	41	-	-	-	0.2	-	-	ND	8.7	ND	ND	ND	23	56	-	-	-	-	-	-	-
		6-9-7.5	05/15/2017	7.5	-	-	-	-	-	-	ND	-	ND	-	-	78	-	-	ND	ND	-	-	9.9	-	7.7	8.8	-	-	3.4	-	-	-	0.2	-	-	ND	7.0	ND	ND	ND	29	36	-	-	-	-	-	-	-
		6-10-1.0	05/15/2017	1.0	-	-	-	-	7.1 (TCE)	-	ND	-	ND	-	-	110	-	-	ND	ND	-	-	11	-	6.8	24	-	-	**99**	**14**	-	ND	0.29	-	-	ND	7.5	ND	ND	ND	27	92	-	-	-	-	-	-	-
	6-10	6-10-3.0	05/15/2017	3.0	-	-	-	-	7.2 (TCE)	-	5.5	-	6.5	-	-	380	-	-	ND	**1.8**	ND	ND	15	-	3.2	160	-	-	**800**	**360**	-	**410**	0.19	-	-	ND	9.4	ND	ND	ND	14	2,100	-	-	-	-	-	-	-
		6-10-5.0	05/15/2017	5.0	-	-	-	-	-	-	ND	-	8.6	-	-	57	-	-	ND	ND	-	-	9.0	-	3.5	37	-	-	13	-	-	-	ND	-	-	ND	5.0	ND	ND	ND	17	31	-	-	-	-	-	-	-
		6-10-7.5	05/15/2017	7.5	-	-	-	-	-	-	ND	-	38	-	-	38	-	-	ND	ND	-	-	4.8	-	3.6	3.2	-	-	1.2	-	-	-	ND	-	-	ND	3.2	ND	ND	ND	16	17	-	-	-	-	-	-	-
		16-5 @ 1'	02/12/2016	1.0	ND	18	-	-	ND	ND	ND	-	2	-	-	56	-	-	ND	ND	-	-	6.6	-	3.5	8.4	-	-	19	-	-	-	ND	-	-	ND	4.7	ND	ND	ND	20	40	-	-	-	-	-	-	ND
	16-5	16-5 @ 3'	02/12/2016	3.0	-	-	-	-	ND	-	ND	-	2.1	-	-	55	-	-	ND	ND	-	-	7.1	-	3.5	9.4	-	-	19	-	-	-	0.15	-	-	ND	5.1	ND	ND	ND	21	39	-	-	-	-	-	-	-
		16-5 @ 4'	02/12/2016	4.0	-	-	-	-	ND	-	ND	-	2.3	-	-	59	-	-	ND	ND	-	-	8.4	-	3.7	8.8	-	-	21	-	-	-	ND	-	-	ND	5.6	ND	ND	ND	23	42	-	-	-	-	-	-	-
	16-6	16-6 @ 1'	02/1/2016	1.0	-	-	-	-	-	-	ND	-	2.4	-	-	55	-	-	ND	ND	-	-	6.3	-	3.5	8	-	-	11	-	-	-	0.1	-	-	ND	4.8	ND	ND	ND	21	36	-	-	-	-	-	-	-
		16-6 @ 3'	02/1/2016	3.0	-	-	-	-	-	-	-	-	-	-	-	-	-	-	-	-	-	-	-	-	-	-	-	-	-	-	-	-	-	-	-	-	-	-	-	-	-	-	-	-	-	-	-	-
	16-7	16-7 @ 1'	02/1/2016	1.0	-	-	-	-	-	-	ND	-	1.9	-	-	78	-	-	ND	ND	-	-	10	-	5.1	14	-	-	6.1	-	-	-	0.12	-	-	ND	8.2	ND	ND	ND	25	38	-	-	-	-	-	-	-
		16-7 @ 3'	02/1/2016	3.0	-	-	-	-	-	-	ND	-	1.6	-	-	55	-	-	ND	ND	-	-	6.8	-	4	7.3	-	-	4.3	-	-	-	ND	-	-	ND	5.2	ND	ND	ND	20	26	-	-	-	-	-	-	-
		16-7 @ 5'	02/1/2016	5.0	-	-	-	-	-	-	-	-	-	-	-	-	-	-	-	-	-	-	-	-	-	-	-	-	-	-	-	-	-	-	-	-	-	-	-	-	-	-	-	-	-	-	-	-
	L-5	L-5 @ 1'	02/1/2016	1.0	-	-	-	-	-	-	ND	-	1.8	-	-	46	-	-	ND	ND	-	-	5.5	-	3.2	8.4	-	-	25	-	-	-	ND	-	-	ND	4.2	ND	ND	ND	17	32	-	-	-	-	-	-	-
		L-5 @ 3'	02/1/2016	3.0	-	-	-	-	-	-	-	-	-	-	-	-	-	-	-	-	-	-	-	-	-	-	-	-	-	-	-	-	-	-	-	-	-	-	-	-	-	-	-	-	-	-	-	-
		L-5 @ 4.5'	02/1/2016	4.5	-	-	-	-	-	-	-	-	-	-	-	-	-	-	-	-	-	-	-	-	-	-	-	-	-	-	-	-	-	-	-	-	-	-	-	-	-	-	-	-	-	-	-	-
	L-5	L-5 @ 1'	02/26/2016	1.0	ND	ND	-	-	ND	ND	-	-	-	-	-	-	-	-	-	-	-	-	-	-	-	-	-	-	-	-	-	-	-	-	-	-	-	-	-	-	-	-	-	-	-	-	-	-	-
		L-5 @ 2'	02/26/2016	2.0	ND	ND	-	-	ND	930 (Phenol)	ND	-	ND	-	-	46	-	-	ND	ND	-	-	5.6	-	3.2	6.9	-	-	2.7	-	-	-	ND	-	-	ND	3.9	ND	ND	ND	18	23	-	-	-	ND	ND	-	-
		L-5 @ 3'	02/26/2016	3.0	-	-	-	-	-	-	ND	-	ND	-	-	30	-	-	ND	ND	-	-	3.9	-	2.2	2.8	-	-	ND	-	-	-	ND	-	-	ND	2.5	ND	ND	ND	14	14	-	-	-	-	-	-	-
	L-6	L-6 @ 1'	02/1/2016	1.0	-	-	-	-	-	-	ND	-	10	-	-	130	-	-	ND	ND	-	-	15	-	5.1	64	-	-	**200**	**11**	-	-	0.15	-	-	ND	12	ND	ND	ND	26	310	-	-	-	-	-	-	-
		L-6 @ 3'	02/1/2016	3.0	-	-	-	-	-	-	-	-	-	-	-	-	-	-	-	-	-	-	-	-	-	-	-	-	-	-	-	-	-	-	-	-	-	-	-	-	-	-	-	-	-	-	-	-
		L-6 @ 5'	02/1/2016	5.0	-	-	-	-	-	-	-	-	-	-	-	-	-	-	-	-	-	-	-	-	-	-	-	-	-	-	-	-	-	-	-	-	-	-	-	-	-	-	-	-	-	-	-	-

Table 2. Summary of Laboratory Test Results - Soil Samples (Cont'd)

PARC AREA	Boring ID	Sample ID	Sample Collection Date	Sample Depth (ft below grade)	Total Petroleum Hydrocarbons (EPA 8015B (M))				VOCs (EPA 8260B) (µg/kg)	SVOCs (EPA 8270C) (µg/kg)	Title 22 Metals (EPA 6010B/7471A)																												pH	Polychlorinated Biphenyls (EPA 8082) µg/kg	Organochlorine Pesticides (EPA 8081) µg/kg	Organophosphorous Pesticides (EPA 8081) µg/kg	Chlorinated Herbicides (EPA 8151A) µg/kg
					TPH GRO mg/kg	TPH DRO mg/kg	TPH ORO mg/kg	TPH Total mg/kg			Antimony mg/kg	STLC Antimony mg/L	Arsenic mg/kg	STLC Arsenic mg/L	TCLP Arsenic mg/L	Barium mg/kg	STLC Barium mg/L	TCLP Barium mg/L	Beryllium mg/kg	Cadmium mg/kg	STLC Cadmium mg/L	TCLP Cadmium mg/L	Chromium mg/kg	Hexavalent Chromium mg/kg	Cobalt mg/kg	Copper mg/kg	STLC Copper mg/L	TCLP Copper mg/L	Lead mg/kg	STLC Lead (CA-WET) mg/L	STLC Lead (DI-WET) mg/L	TCLP Lead mg/L	Mercury mg/kg	STLC Mercury mg/L	TCLP Mercury mg/L	Molybdenum mg/kg	Nickel mg/kg	Selenium mg/kg	Silver mg/kg	Thallium mg/kg	Vanadium mg/kg	Zinc mg/kg	STLC Zinc mg/L	TCLP Zinc mg/L					
6	L-6	L-6 @ 1'	02/26/2016	1.0	ND	6600	-	-	ND	ND	-	-	-	-	-	-	-	-	-	-	-	-	-	-	-	-	-	-	-	-	-	-	-	-	-	-	-	-	-	240 (Arochlor 1260)	ND	-	-
		L-6 @ 2'	02/26/2016	2.0	ND	ND	-	-	ND	460 (Phenol)	ND	-	26	-	-	93	-	-	ND	ND	-	-	10	-	6	10	-	-	5.8	-	-	-	ND	-	-	ND	7.4	ND	ND	ND	ND	28	53	-	-	-	ND	ND	-	-	-	-
		L-6 @ 3'	02/26/2016	3.0	-	-	-	-	-	-	ND	-	17	-	-	48	-	-	ND	ND	-	-	5.5	-	3.3	5	-	-	2.4	-	-	-	ND	-	-	ND	3.8	ND	ND	ND	ND	17	24	-	-	-	-	-	-	-	-	-
	18.1-GP-1	GP-1 @ 1'	04/1/2016	1.0	-	-	-	-	-	-	ND	-	1.9	-	-	73	-	-	ND	ND	-	-	11	-	4.5	19	ND	0.053	53	6.1	-	0.81	0.55	-	-	ND	12	ND	ND	ND	ND	19	85	-	-	-	-	-	-	-	-	-
		GP-1 @ 2'	04/1/2016	2.0	-	-	480	480	-	-	ND	-	2.4	-	-	160	-	-	ND	1.6	-	-	10	-	4.3	23	ND	ND	74	3.6	-	0.17	0.75	-	-	ND	8.9	ND	ND	ND	ND	22	230	-	-	-	-	-	-	-	-	-
		GP-1 @ 3.5'	04/1/2016	3.5	-	-	-	-	-	-	ND	-	1.8	-	-	70	-	-	ND	ND	-	-	8	-	3.8	15	ND	ND	34	ND	-	ND	0.12	-	-	ND	7.6	ND	ND	ND	ND	22	62	-	-	-	-	-	-	-	-	-
		GP-1 @ 5'	04/1/2016	5.0	-	-	-	-	-	-	ND	-	1	-	-	41	-	-	ND	ND	-	-	5.5	-	3	4.7	ND	ND	1.6	ND	-	ND	ND	-	-	ND	3.9	ND	ND	ND	ND	18	20	-	-	-	-	-	-	-	-	-
		GP-1 @ 6.5'	04/1/2016	6.5	-	-	29	29	-	-	7.3	-	2.2	-	-	100	-	-	ND	ND	-	-	8.8	-	3.5	44	1.7	ND	170	15	-	0.35	1.1	-	-	ND	15	ND	ND	ND	ND	19	290	-	-	-	-	-	-	-	-	-
	18.1-GP-2	GP-2 @ 1'	04/1/2016	1.0	-	-	-	-	-	-	ND	-	1.9	-	-	69	-	-	ND	ND	-	-	6.8	-	3.4	12	ND	ND	44	3.4	-	ND	1.3	-	-	ND	5.5	ND	ND	ND	ND	19	100	-	-	-	-	-	-	-	-	-
		GP-2 @ 2'	04/1/2016	2.0	-	-	-	-	-	-	ND	-	ND	-	-	2100	-	-	ND	ND	-	-	38	-	ND	1400	98	7.4	8300	950	-	98	0.67	-	-	ND	47	ND	ND	ND	ND	29	8300	-	-	-	-	-	-	-	-	-
		GP-2 @ 3.5'	04/1/2016	3.5	-	-	-	-	-	-	ND	-	2	-	-	65	-	-	ND	ND	-	-	8.3	-	3.8	23	1.1	4.3	71	2.8	-	16	0.35	-	-	ND	7.6	ND	ND	ND	ND	21	70	-	-	-	-	-	-	-	-	-
		GP-2 @ 5'	04/1/2016	5.0	-	-	-	-	-	-	ND	-	ND	-	-	49	-	-	ND	ND	-	-	6.2	-	3.6	7.1	ND	ND	1.5	ND	-	ND	ND	-	-	ND	4.2	ND	ND	ND	ND	22	24	-	-	-	-	-	-	-	-	-
	18.1-GP-3	GP-3 @ 1'	04/1/2016	1.0	-	-	-	-	-	-	40	-	17	-	-	350	-	-	ND	ND	-	-	24	-	6.1	370	26	0.27	1600	88	-	3.8	98	-	-	ND	19	ND	ND	ND	ND	31	1500	-	-	-	-	-	-	-	-	-
		GP-3 @ 2'	04/1/2016	2.0	-	24	1000	1000	-	-	ND	-	3.3	-	-	67	-	-	ND	ND	-	-	6.4	-	3.4	18	ND	ND	62	2.3	-	ND	0.11	-	-	ND	6.1	ND	ND	ND	ND	19	92	-	-	-	-	-	-	-	-	-
		GP-3 @ 3.5'	04/1/2016	3.5	-	-	-	-	-	-	ND	-	1.2	-	-	42	-	-	ND	ND	-	-	5.8	-	3.1	5.4	ND	ND	1.4	ND	-	ND	ND	-	-	ND	3.7	ND	ND	ND	ND	20	20	-	-	-	-	-	-	-	-	-
		GP-3 @ 5'	04/1/2016	5.0	-	-	-	-	-	-	ND	-	ND	-	-	44	-	-	ND	ND	-	-	4.6	-	2.8	4.4	ND	ND	1.5	ND	-	ND	ND	-	-	ND	3.2	ND	ND	ND	ND	16	19	-	-	-	-	-	-	-	-	-
	18.1-1	18.1-1-1	10/22/2015	1.0	10	10	162	230	<various	-	<0.758	-	2	-	-	97.5	-	-	<0.253	1.78	-	-	10.4	-	6.34	23.8	-	-	61.1	3.77	-	-	0.182	-	-	0.779	13.8	<0.758	<0.253	<0.758	20.1	112	-	-	-	-	-	-	-	-	-
		18.1-1-3.5	10/22/2015	3.5	5	5.8	43	54	<various	-	<0.769	-	<0.769	-	-	63.9	-	-	<0.256	0.96	-	-	6.81	-	6.29	7.99	-	-	4.67	-	-	-	<0.0862	-	-	<0.256	6.1	<0.769	<0.256	<0.769	18.6	35.1	-	-	-	-	-	-	-	-	-
	18.1-2	18.1-2-1	10/22/2015	1.0	5	5	9.6	19	<various	-	<0.725	-	<0.725	-	-	146	-	-	<0.242	1.12	-	-	7.66	-	4.46	12.2	-	-	25.4	-	-	-	0.108	-	-	0.361	8.56	0.87	<0.242	<0.725	17.2	60.7	-	-	-	-	-	-	-	-	-
		18.1-2-2.0	10/22/2015	2.0	25	25	96	130	<various	-	<0.739	-	0.817	-	-	134	-	-	<0.246	1.44	-	-	11.5	-	5.8	95	-	-	293	35.1	-	3.59	0.18	-	-	0.356	47.9	<0.739	<0.246	<0.739	19.2	288	-	-	-	-	-	-	-	-	-
	18.1-3	18.1-3-1	10/22/2015	1.0	5	5	5	5	<various	-	<0.765	-	<0.765	-	-	72.6	-	-	0.286	1.39	-	-	9.72	-	8.66	12	-	-	3.47	-	-	-	0.103	-	-	0.341	21.6	<0.765	<0.255	<0.765	21.2	39.7	-	-	-	-	-	-	-	-	-
		18.1-3-3.5	10/22/2015	3.5	9.8	9.8	94	140	<various	-	<0.758	-	1.69	-	-	202	-	-	0.277	2.81	-	-	14.5	-	7.42	64.4	-	-	554	18.4	-	<0.100	0.862	-	-	0.256	19.3	<0.758	0.297	<0.758	26.6	545	-	-	-	-	-	-	-	-	-
	18.1-4	18.1-4-1	10/22/2015	1.0	5	5	36	59	<various	-	<0.725	-	8.51	-	-	443	-	-	<0.242	3.99	-	-	27.7	-	10.1	312	38.7	-	1010	102	-	4.06	1.24	-	-	<0.242	39.6	<0.725	0.258	<0.725	41.5	1400	-	-	-	-	-	-	-	-	-
		18.1-4-3.5	12/9/2015	3.5	5	5	5	5	<various	-	<0.750	-	3.59	-	-	72.9	-	-	<0.250	0.785	-	-	7.89	-	6.8	13.4	-	-	17.2	-	-	-	<0.0794	-	-	<0.250	7.04	0.961	<0.250	<0.750	22.4	68.6	-	-	-	-	-	-	-	-	-
	18.1-4A	18.1-4A-1	12/9/2015	1.0	5	5	77	170	<various	-	452	-	9.97	-	-	486	-	-	0.269	5.44	-	-	21.7	-	7.94	531	-	-	13900	-	-	8.39	0.468	-	-	<0.240	21.7	1.16	12.7	<0.721	30.6	2140	-	-	-	-	-	-	-	-	-
		18.1-4A-3.5	12/9/2015	3.5	5	5	100	220	<various	-	<0.739	-	4.58	-	-	99.3	-	-	<0.246	0.906	-	-	9.87	-	8.52	17.9	-	-	29.5	-	-	-	<0.0833	-	-	<0.246	9.27	2.08	<0.246	<0.739	27.1	68.8	-	-	-	-	-	-	-	-	-
	18.1-4B	18.1-4B-1	12/9/2015	1.0	5	5	8.4	20	<various	-	14	-	5.11	-	-	444	-	-	0.28	2.74	-	-	9.07	-	9.07	475	-	-	1690	-	-	21.3	0.341	-	-	<0.250	18.4	1.2	0.71	<0.750	30.9	1500	-	-	-	-	-	-	-	-	-
		18.1-4B-3.5	12/9/2015	3.5	5	5	5	5	<various	-	<0.750	-	2.99	-	-	64.8	-	-	<0.250	0.679	-	-	7.05	-	5.98	6.01	-	-	2.85	-	-	-	<0.0794	-	-	<0.250	5.87	1.68	<0.250	<0.750	22.2	36.6	-	-	-	-	-	-	-	-	-
	18.1-4C	18.1-4C-1	12/9/2015	1.0	5	5	21	47	<various	-	9.45	-	12.6	-	-	727	-	-	0.283	3.16	-	-	35.2	-	8.61	552	-	-	1930	-	-	4	0.439	-	-	<0.246	18	1.66	0.547	<0.739	26.9	1990	-	-	-	-	-	-	-	-	-
		18.1-4C-3.5	12/9/2015	3.5	5	5	5	5	<various	-	<0.750	-	3.55	-	-	70.9	-	-	<0.250	0.764	-	-	7.34	-	6.52	6.66	-	-	8.8	-	-	-	<0.0794	-	-	<0.250	6.65	10.3	<0.250	<0.750	22.2	56.3	-	-	-	-	-	-	-	-	-
	18.1-4D	18.1-4D-1	12/9/2015	1.0	5	5	52	91	<various	-	<0.725	-	10.7	-	-	474	-	-	0.315	2.89	-	-	30.6	-	8.72	308	-	-	1170	-	-	5.3	0.456	-	-	<0.242	25.2	1.4	0.434	<0.725	30.4	1550	-	-	-	-	-	-	-	-	-
		18.1-4D-3.5	12/9/2015	3.5	5	5	150	250	<various	-	3.49	-	10.6	-	-	463	-	-	0.296	3.15	-	-	27.9	-	8.73	535	-	-	2560	-	-	6.34	0.768	-	-	0.311	38.8	0.847	0.639	<0.750	37.7	1820	-	-	-	-	-	-	-	-	-
	18.1-5	18.1-5-1	12/9/2015	1.0	5	5	39	88	<various	-	9.35	-	7.35	-	-	451	-	-	0.408	4.95	-	-	26.1	-	11.6	452	-	-	2050	-	-	6.8	0.374	-	-	1.02	37.4	<0.750	0.622	<0.750	34.7	1310	-	-	-	-	-	-	-	-	-
		18.1-5-3.5	12/9/2015	3.5	5	5	369	1000	<various	-	7.5	-	2.32	-	-	208	-	-	0.277	2.31	-	-	12.3	-	7.09	232	-	-	1020	-	-	4.9	0.254	-	-	0.378	16.8	<0.750	0.472	<0.750	24.9	628	-	-	-	-	-	-	-	-	-
	18.1-6	18.1-6-1	12/9/2015	1.0	5	5	5.7	19	<various	-	2.68	-	0.798	-	-	153	-	-	<0.250	1.45	-	-	8.5	-	5.12	86.4	-	-	334	65.8	-	3.08	0.12	-	-	<0.250	7.49	<0.750	<0.250	<0.750	18.1	423	-	-	-	-	-	-	-	-	-
		18.1-6-3.5	12/9/2015	3.5	5	5	51	140	<various	-	22.8	-	2.45	-	-	196	-	-	0.261	2.49	-	-	12.4	-	7.74	311	-	-	1510	-	-	205	0.24	-	-	<0.250	11.7	<0.750	0.397	<0.750	26.6	597	-	-	-	-	-	-	-	-	-
	18.1-7	18.1-7-1	12/9/2015	1.0	5	5	63	150	<various	-	4.3	-	5.03	-	-	217	-	-	0.376	2.7	-	-	15	-	8.95	110	-	-	505	56.6	-	3.77	0.298	-	-	0.49	17.2	<0.750	0.335	<0.750	31.7	823	-	-	-	-	-	-	-	-	-
		18.1-7-3.5	12/9/2015	3.5	5	5	149	510	<various	-	1.88	-	1.46	-	-	121	-	-	0.264	1.67	-	-	10.5	-	7.45	53.1	-	-	122	15.3	-	5.79	0.115	-	-	<0.250	10.9	<0.750	<0.250	<0.750	27.5	178	-	-	-	-	-	-	-	-	-
	18.2-1	18.2-1-1	04/20/2016	1.0	5	5	5.6	11	11,000 (TCE)	-	<0.765	-	15.6	-	-	163	-	-	0.338	14.2	0.104	-	45.2	-	13	132	-	-	468	9.6	-	0.243	0.125	-	-	<0.255	22.8	<0.765	<0.255	<0.765	34.4	4910	53	-	-	-	-	-	-	-	-
		18.2-1-3.5	04/20/2016	3.5	5	5	5	5	<various	-	<0.781	-	<0.781	-	-	45.6	-	-	<0.260	<0.521	-	-	4.23	-	3.93	4.6	-	-	1.93	-	-	-	<0.0833	-	-	<0.260	3.69	<0.781	<0.260	<0.781	13.1	21.6	-	-	-	-	-	-	-	-	-
	18.2-2	18.2-2-1	04/20/2016	1.0	5	5	34	39	<various	-	3.44	-	2.25	-	-	112	-	-	0.313	0.519	-	-	12.2	-	9.72	43.1	-	-	86.8	12	-	-	0.168	-	-	<0.255	10.4	<0.765	<0.255	<0.765	32	17	-	-	-	-	-	-	-	-	-
		18.2-2-3.5	04/20/2016	3.5	5	5	160	300	67 (TCE)	-	93.1	-	17.1	-	-	1450	-	-	0.291	8.07	-	-	44.7	-	9.36	2770	23.6	-	16100	-	-	126	0.972	-	-	<0.254	32.7	<0.761	2.72	<0.761	28.5	8730	-	<0.100	-	-	-	-	-	-	-
	18.2-3	18.2-3-1	04/20/2016	1.0	5	5	22	50	8.0 (TCE)	-	2.42	-	2.05	-	-	152	-	-	0.344	0.889	-	-	13.8	-	8.58	107	-	-	433	54.5	-	0.958	0.284	-	-	<0.262	10.7	<0.785	<0.262	<0.785	30.9	299	-	-	-	-	-	-	-	-	-
		18.2-3-3.5	04/20/2016	3.5	5	5	47	68	53 (TCE)	-	5.11	-	4.75	-	-	207	-	-	0.28	2.04	-	-	13.1	-	7.46	828	-	-	1310	-	-	12.2	0.829	-	-	0.258	14	<0.739	0.829	<0.739	26.5	1260	-	-	-	-	-	-	-	-	-
	A-13-08	A08@5'	08/27/2013	5.0	300	5	ND	300	ND	-	ND	-	2.1	-	-	91	-	-	ND	ND	-	-	17	-	4.2	15	-	-	26	-	-	-	0.062	-	-	ND	7.5	ND	ND	ND	ND	18	47	-	-	-	-	-	-	-	-	-
		A08@40'	08/27/2013	40.0	ND	ND	ND	ND	ND	-	ND	-	0.56	-	-	24	-	-	ND	ND	-	-	ND	-	ND	4.5	-	-	ND	-	-	-	0.046	-	-	ND	ND	ND	ND	ND	ND	13	-	-	-	-	-	-	-	-	-
		A08@55'	08/27/2013	55.0	ND	ND	ND	ND	ND	-	-	-	-	-	-	-	-	-	-	-	-	-	-	-	-	-	-	-	-	-	-	-	-	-	-	-	-	-	-	-	-	-	-	-	-	-	-	-	-	-	-
		A08@65'	08/27/2013	65.0	ND	ND	ND	ND	ND	-	ND	-	ND	-	-	14	-	-	ND	ND	-	-	5.6	-	ND	ND	-	-	ND	-	-	-	ND	-	-	ND	3.3	ND	ND	ND	ND	7.6	-	-	-	-	-	-	-	-	-
	R-13-09	R09@10'	08/27/2013	10.0	ND	ND	ND	ND	ND	-	ND	-	1.1	-	-	28	-	-	ND	ND	-	-	5.1	-	ND	5.2	-	-	ND	-	-	-	0.06	-	-	ND	3.3	ND	ND	ND	ND	13	16	-	-	-	-	-	-	-	-	-
		R09@50'	08/27/2013	50.0	ND	ND	ND	ND	ND	-	-	-	-	-	-	-	-	-	-	-	-	-	-	-	-	-	-	-	-	-	-	-	-	-	-	-	-	-	-	-	-	-	-	-	-	-	-	-	-	-	-
		R09@60'	08/27/2013	60.0	ND	ND	ND	ND	ND	-	-	-	-	-	-	-	-	-	-	-	-	-	-	-	-	-	-	-	-	-	-	-	-	-	-	-	-	-	-	-	-	-	-	-	-	-	-	-	-	-	-
	A-13-10	R10@5'	08/29/2013	5.0	ND	ND	ND	ND	ND	-	ND	-	ND	-	-	52	-	-	ND	ND	-	-	5.8	-	4.2	5.6	-	-	ND	-	-	-	0.07	-	-	ND	4.2	ND	ND	ND	20	27	-	-	-	-	-	-	-	-	-
		R10@30'	08/29/2013	30.0	ND	ND	ND	ND	ND	-	-	-	-	-	-	-	-	-	-	-	-	-	-	-	-	-	-	-	-	-	-	-	-	-	-	-	-	-	-	-	-	-	-	-	-	-	-	-	-	-	-
		R10@55'	08/29/2013	55.0	ND	ND	ND	ND	ND	-	ND	-	0.96	-	-	46	-	-	ND	ND	-	-	9	-	4.4	12	-	-	ND	-	-	-	0.024	-	-	ND	7.6	ND	ND	ND	17	31	-	-	-	-	-	-	-	-	-
	A-13-12	R12@5'	09/3/2013	5.0	ND	ND	ND	ND	ND	-	ND	-	ND	-	-	39	-	-	ND	ND	-	-	7.9	-	3.4	34	-	-	480	25	-	7.5	0.12	-	-	ND	4.7	ND	ND	ND	19	42	-	-	-	-	-	-	-	-	-
		R12@10'	09/3/2013	10.0	-	-	-	-	-	-	-	-	-	-	-	-	-	-	-	-	-	-	-	-	-	-	-	-	15	-	-	-	-	-	-	-	-	-	-	-	-	-	-	-	-	-	-	-	-	-
		R12@15'	09/3/2013	15.0	-	-	-	-	-	-	-	-	-	-	-	-	-	-	-	-	-	-	-	-	-	-	-	-	ND	-	-	-	-	-	-	-	-	-	-	-	-	-	-	-	-	-	-	-	-	-
		R12@20'	09/3/2013	20.0	-	-	-	-	-	-	-	-	-	-	-	-	-	-	-	-	-	-	-	-	-	-	-	-	ND	-	-	-	-	-	-	-	-	-	-	-	-	-	-	-	-	-	-	-	-	-
		R12@30'	09/3/2013	30.0	ND	ND	ND	ND	ND	-	-	-	-	-	-	-	-	-	-	-	-	-	-	-	-	-	-	-	-	-	-	-	-	-	-	-	-	-	-	-	-	-	-	-	-	-	-	-	-	-	-
		R12@60'	09/3/2013	60.0	ND	ND	ND	ND	ND	-	ND	-	3.4	-	-	110	-	-	ND	2.4	-	-	30	-	11	24	-	-	5.4	-	-	-	0.054	-	-	ND	19	ND	ND	ND	54	69	-	-	-	-	-	-	-	-	-
7	7-1	7-1-0.5	05/16/2017	0.5	ND	62	-	-	ND	ND	ND	-	2.7	-	-	110	-	-	ND	ND	-	-	14	-	6.8	4,500	12	-	45	-	-	-	0.13	-	-	ND	12	ND	ND	ND	30	100	-	-	-	-	-	-	-	-	-
		7-1-1.0	05/16/2017	1.0	ND	120	-	-	ND	ND	ND	ND	1.2	-	-	120	-	-	ND	ND	-	-	8.8	-	4.8	700	140	-	69	6.4	-	0.47	0.22	-	-	ND	13	ND	ND	ND	24	270	-	-	ND	3.4 (4,4'-DDD [2C]) 5.9 (4,4'-DDE [2C]) 6.1 (4,4'-DDT [2C]) 2.5 (alpha-BHC [2C])	-	-	ND
	7-2	7-2-0.5	05/15/2017	0.5	ND	ND	-	-	ND	ND	ND	ND	ND	-	-	93	-	-	ND	ND	-	-	6.1	-	4.3	8.3	-	-	27	-	-	-	0.18	-	-	ND	4.3	ND	ND	ND	19	57	-	-	ND	ND	-	-	-	-	ND
		7-2-1.0	05/15/2017	1.0	-	-	-	-	-	-	ND	-	ND	-	-	35	-	-	ND	ND	-	-	4.5	-	3.9	3.1	-	-	1.1	-	-	-	ND	-	-	ND	3.2	ND	ND	ND	15	17	-	-	-	-	-	-	-	-	-
		7-2-3.0	05/15/2017	3.0	ND	ND	-	-	ND	ND	ND	-	ND	-	-	23	-	-	ND	ND	-	-	2.9	-	2.5	2.1	-	-	ND	-	-	-	0.19	-	-	ND	2.1	ND	ND	ND	11	13	-	-	-	-	-	-	-	-	-
		7-2-5.0	05/15/2017	5.0	-	-	-	-	-	-	ND	-	ND	-	-	24	-	-	ND	ND	-	-	2.7	-	2.2	ND	-	-	ND	-	-	-	ND	-	-	ND	1.9	ND	ND	ND	10	11	-	-	-	-	-	-	-	-	-
	7-3	7-3-0.5	05/15/2017	0.5	-	-	-	-	-	-	ND	-	2.5	-	-	110	-	-	ND	ND	-	-	13	-	7.8	39	-	-	51	4.5	-	-	0.17	-	-	ND	11	ND	ND	ND	28	93	-	-	-	-	-	-	-	-	-
		7-3-1.0	05/15/2017	1.0	ND	ND	-	-	ND	ND	ND	ND	1.1	-	-	77	-	-	ND	ND	-	-	8.3	-	6.1	11	-	-	33	-	-	-	0.11	-	-	ND	5.9	ND	ND	ND	26	44	-	-	ND	ND	-	-	-	-	ND
		7-3-3.0	05/15/2017	3.0	-	-	-	-	-	-	ND	-	ND	-	-	61	-	-	ND	ND	-	-	7.1	-	5.3	6.8	-	-	7.0	-	-	-	ND	-	-	ND	4.8	ND	ND	ND	23	32	-	-	-	-	-	-	-	-	-
		7-3-5.0	05/15/2017	5.0	ND	ND	-	-	ND	ND	ND	ND	ND	-	-	34	-	-	ND	ND	-	-	4.6	-	3.3	3.1	-	-	ND	-	-	-	ND	-	-	ND	2.9	ND	ND	ND	18	15	-	-	-	-	-	-	-	-	-
	7-4	7-4-0.5	05/15/2017	0.5	ND	26	-	-	ND	ND	ND	-	1.1	-	-	130	-	-	ND	ND	-	-	12	-	8.2	36	-	-	70	5.5	-	ND	0.11	-	-	ND	9.3	1.2	ND	ND	32	150	-	-	ND	ND	-	-	-	-	ND
		7-4-1.0	05/15/2017	1.0	-	-	-	-	-	-	ND	-	ND	-	-	100	-	-	ND	ND	-	-	9.8	-	6.2	44	-	-	43	-	-	-	0.12	-	-	ND	9.5	1.1	ND	ND	26	130	-	-	-	-	-	-	-	-	-
		7-4-3.0	05/15/2017	3.0	ND	6,300	-	-	ND	ND	ND	-	92	-	-	92	-	-	ND	ND	-	-	11	-	7.6	13	-	-	31	-	-	-	0.64	-	-	ND	8.4	ND	ND	ND	29	80	-	-	-	-	-	-	-	-	-
		7-4-5.0	05/15/2017	5.0	-	-	-	-	-	-	ND	-	2.3	-	-	150	-	-	ND	ND	-	-	13	-	4.6	35	-	-	12	-	-	-	ND	-	-	ND	22	ND	ND	ND	23	890	-	-	-	-	-	-	-	-	-
	7-5	7-5-0.5	05/16/2017	0.5	-	-	-	-	-	-	ND	-	ND	-	-	95	-	-	ND	ND	-	-	12	-	8.0	9.7	-	-	4.5	-	-	-	ND	-	-	ND	8.3	ND	ND	ND	32	39	-	-	-	-	-	-	-	-	-
		7-5-1.0	05/16/2017	1.0	ND	ND	-	-	ND	ND	ND	-	ND	-	-	95	-	-	ND	ND	-	-	12	-	8.2	10	-	-	3.0	-	-	-	ND	-	-	ND	8.6	1.0	ND	ND	34	38	-	-	ND	ND	-	-	-	-	ND
		7-5-3.0	05/16/2017	3.0	-	-	-	-	-	-	ND	-	ND	-	-	120	-	-	ND	ND	-	-	14	-	9.9	18	-	-	3.5	-	-	-	ND	-	-	ND	12	1.1	ND	ND	38	46	-	-	-	-	-	-	-	-	-
		7-5-5.0	05/16/2017	5.0	ND	ND	-	-	ND	ND	ND	-	ND	-	-	31	-	-	ND	ND	-	-	6.7	-	3.6	2.7	-	-	1.0	-	-	-	ND	-	-	ND	3.0	ND	ND	ND	28	16	-	-	-	-	-	-	-	-	-
	7-6	7-6-0.5	05/16/2017	0.5	ND	200	-	-	ND	ND	ND	-	1.2	-	-	91	-	-	ND	ND	-	-	8.4	-	5.2	28	-	-	31	-	-	-	0.13	-	-	ND	7.3	ND	ND	ND	23	77	-	-	ND	ND	-	-	-	-	ND
		7-6-1.0	05/16/2017	1.0	-	-	-	-	-	-	ND	-	ND	-	-	93	-	-	ND	ND	-	-	8.7	-	5.7	28	-	-	22	-	-	-	0.16	-	-	ND	6.7	ND	ND	ND	24	60	-	-	-	-	-	-	-	-	-
		7-6-3.0	05/16/2017	3.0	-	-	-	-	-	-	ND	-	78	-	-	ND	ND	-	8.2	-	5.2	12	-	-	13	-	-	ND	-	-	ND	6.1	ND	ND	ND	23	50	-	-	-	-	-	-	-	-	-
		7-6-5.0	05/16/2017	5.0	ND	ND	-	-	ND	ND	ND	-	40	-	-	40	-	-	5.0	-	3.5	4.6	-	-	2.7	-	-	ND	-	-	ND	3.4	ND	ND	ND	16	19	-	-	-	-	-	-	-	-	-
	7-7	7-7-0.5	05/16/2017	0.5	-	-	-	-	-	-	ND	-	110	-	-	ND	ND	-	14	-	9.3	13	-	-	3.7	-	-	ND	-	-	ND	10	ND	ND	ND	35	41	-	-	-	-	-	-	-	-	-
		7-7-1.0	05/16/2017	1.0	-	-	-	-	-	-	ND	-	130	-	-	ND	ND	-	12	-	11	9.6	-	-	2.3	-	-	ND	-	-	ND	9.4	ND	ND	ND	37	47	-	-	ND	ND	-	-	-	-	ND
		7-7-3.0	05/16/2017	3.0	ND	ND	-	-	ND	ND	ND	-	26	-	-	ND	ND	-	5.0	-	2.9	2.2	-	-	ND	-	-	ND	-	-	ND	2.4	ND	ND	ND	22	13	-	-	-	-	-	-	-	-	-
		7-7-5.0	05/16/2017	5.0	ND	470	-	-	ND	ND	ND	-	17	-	-	ND	ND	-	3.2	-	2.1	ND	-	-	ND	-	-	ND	-	-	ND	1.8	ND	ND	ND	14	12	-	-	-	-	-	-	-	-	-
	L-2	L-2 @ 1'	02/1/2016	1.0	-	-	-	-	-	-	ND	-	1.8	-	-	97	-	-	ND	ND	-	-	8.7	-	4.7	11	-	-	6.4	-	-	-	ND	-	-	ND	6.5	ND	ND	ND	23	37	-	-	-	-	-	-	-

Table 2. Summary of Laboratory Test Results - Soil Samples (Cont'd)

PARC AREA	Boring ID	Sample ID	Sample Collection Date	Sample Depth (ft below grade)	Total Petroleum Hydrocarbons (EPA 8015B (M))				VOCs (EPA 8260B) (µg/kg)	SVOCs (EPA 8270C) (µg/kg)	Title 22 Metals (EPA 6010B/7471A)																														pH	Polychlorinated Biphenyls (EPA 8082) µg/kg	Organochlorine Pesticides (EPA 8081) µg/kg	Organophosphorous Pesticides (EPA 8081) µg/kg	Chlorinated Herbicides (EPA 8151A) µg/kg
					TPH GRO mg/kg	TPH DRO mg/kg	TPH ORO mg/kg	TPH Total mg/kg			Antimony mg/kg	STLC Antimony mg/L	Arsenic mg/kg	STLC Arsenic mg/L	TCLP Arsenic mg/L	Barium mg/kg	STLC Barium mg/L	TCLP Barium mg/L	Beryllium mg/kg	Cadmium mg/kg	STLC Cadmium mg/L	TCLP Cadmium mg/L	Chromium mg/kg	Hexavalent Chromium mg/kg	Cobalt mg/kg	Copper mg/kg	STLC Copper mg/L	TCLP Copper mg/L	Lead mg/kg	STLC Lead (CA-WET) mg/L	STLC Lead (DI-WET) mg/L	TCLP Lead mg/L	Mercury mg/kg	STLC Mercury mg/L	TCLP Mercury mg/L	Molybdenum mg/kg	Nickel mg/kg	Selenium mg/kg	Silver mg/kg	Thallium mg/kg	Vanadium mg/kg	Zinc mg/kg	STLC Zinc mg/L	TCLP Zinc mg/L					
8	L-3	L-3 @ 1'	02/26/2016	1.0	ND	18	-	-	ND	ND	-	-	-	-	-	-	-	-	-	-	-	-	-	-	-	-	-	-	-	-	-	-	-	-	-	-	-	-	-	-	ND	2.9 (4,4' - DDT [2C])	-	-
		L-3 @ 2'	02/26/2016	2.0	-	-	-	-	-	-	ND	-	1.6	-	-	88	-	-	ND	ND	-	-	9.8	-	6.3	9.5	-	-	2.3	-	-	-	ND	-	-	ND	7.2	ND	ND	ND	30	41	-	-	-	-	-	-
		L-3 @ 3'	02/26/2016	3.0	-	-	-	-	-	-	ND	-	1.7	-	-	89	-	-	ND	ND	-	-	10	-	6.6	9.8	-	-	2.4	-	-	-	ND	-	-	ND	7.4	ND	ND	ND	31	41	-	-	-	-	-	-
	L-4	L-4 @ 1'	02/26/2016	1.0	ND	20	-	-	ND	ND	-	-	-	-	-	-	-	-	-	-	-	-	-	-	-	-	-	-	-	-	-	-	-	-	-	-	-	-	-	-	-	ND	2.1 (4,4' - DDT [2C])	-	-
		L-4 @ 2'	02/26/2016	2.0	-	-	-	-	-	-	ND	-	2.2	-	-	130	-	-	ND	ND	-	-	12	-	6.7	26	-	-	14	-	-	-	ND	-	-	ND	9.9	ND	ND	ND	31	96	-	-	-	-	-	-
		L-4 @ 3'	02/26/2016	3.0	-	-	-	-	-	-	ND	-	2.6	-	-	130	-	-	ND	ND	-	-	12	-	5.3	37	-	-	**67**	-	-	-	0.17	-	-	ND	11	ND	ND	ND	24	150	-	-	-	-	-	-
	20-1	20-1-1	04/20/2016	1.0	<5	<5	25	42	<various	-	<0.789	-	2.7	-	-	172	-	-	<0.263	1.33	-	-	24.8	-	6.72	73.9	-	-	**240**	**13.4**	-	0.5	1.22	-	-	1.02	9.96	<0.789	0.401	<.789	25.8	170	-	-	-	-	-	-
	A-13-14	A14@10'	09/5/2013	10.0	ND	ND	ND	ND	ND	-	ND	-	ND	-	-	46	-	-	ND	1.2	-	-	9.1	-	4.4	6.8	-	-	ND	-	-	-	0.036	-	-	ND	4.8	ND	ND	ND	33	26	-	-	-	-	-	-
		A14@20'	09/5/2013	20.0	6	16	2.4	25	ND	-	-	-	-	-	-	-	-	-	-	-	-	-	-	-	-	-	-	-	-	-	-	-	-	-	-	-	-	-	-	-	-	-	-	-	-	-	-	-
		A14@45'	09/5/2013	45.0	ND	ND	ND	ND	ND	-	-	-	-	-	-	-	-	-	-	-	-	-	-	-	-	-	-	-	-	-	-	-	-	-	-	-	-	-	-	-	-	-	-	-	-	-	-	-
		A14@60'	09/5/2013	60.0	ND	ND	ND	ND	ND	-	ND	-	ND	-	-	20	-	-	ND	ND	-	-	ND	-	ND	ND	-	-	ND	-	-	-	0.1	-	-	ND	3.5	ND	ND	ND	ND	13	-	-	-	-	-	-
	A-13-15	R15@5'	08/23/2013	5.0	ND	ND	ND	ND	ND	-	ND	-	1.4	-	-	50	-	-	ND	ND	-	-	9.4	-	3.2	34	-	-	18	-	-	-	0.074	-	-	ND	4.7	ND	ND	ND	17	58	-	-	-	-	-	-
		R15@50'	08/23/2013	50.0	ND	ND	ND	ND	ND	-	-	-	-	-	-	-	-	-	-	-	-	-	-	-	-	-	-	-	-	-	-	-	-	-	-	-	-	-	-	-	-	-	-	-	-	-	-	-
		R15@60'	08/23/2013	60.0	ND	ND	ND	ND	ND	-	-	-	-	-	-	-	-	-	-	-	-	-	-	-	-	-	-	-	-	-	-	-	-	-	-	-	-	-	-	-	-	-	-	-	-	-	-	-
	8-1	8-1-0.5	05/16/2017	0.5	-	-	-	-	-	-	-	-	-	-	-	-	-	-	-	-	-	-	-	-	-	-	9.6	-	**250**	**14**	-	0.38	-	-	-	-	-	-	-	-	-	-	-	-	-	-	-	-	-
		8-1-1.0	05/16/2017	1.0	-	-	-	-	-	-	-	-	-	-	-	-	-	-	-	-	-	-	-	-	-	-	3.4	-	**130**	**6.0**	-	0.33	-	-	-	-	-	-	-	-	-	-	-	-	-	-	-	-	-
		8-1-3.0	05/16/2017	3.0	-	-	-	-	-	-	-	-	-	-	-	-	-	-	-	-	-	-	-	-	-	-	-	-	3.6	-	-	-	-	-	-	-	-	-	-	-	-	-	-	-	-	-	-	-	-
		8-1-5.0	05/16/2017	5.0	-	-	-	-	-	-	-	-	-	-	-	-	-	-	-	-	-	-	-	-	-	-	-	-	2.8	-	-	-	-	-	-	-	-	-	-	-	-	-	-	-	-	-	-	-	-
	8-2	8-2-0.5	05/16/2017	0.5	-	-	-	-	-	-	-	-	-	-	-	-	-	-	-	-	-	-	-	-	-	-	-	-	44	-	-	-	-	-	-	-	-	-	-	-	-	-	-	-	-	-	-	-	-
		8-2-1.0	05/16/2017	1.0	-	-	-	-	-	-	-	-	-	-	-	-	-	-	-	-	-	-	-	-	-	-	-	-	3.3	-	-	-	-	-	-	-	-	-	-	-	-	-	-	-	-	-	-	-	-
		8-2-3.0	05/16/2017	3.0	-	-	-	-	-	-	-	-	-	-	-	-	-	-	-	-	-	-	-	-	-	-	-	-	9.3	-	-	-	-	-	-	-	-	-	-	-	-	-	-	-	-	-	-	-	-
		8-2-5.0	05/16/2017	5.0	-	-	-	-	-	-	-	-	-	-	-	-	-	-	-	-	-	-	-	-	-	-	-	-	37	-	-	-	-	-	-	-	-	-	-	-	-	-	-	-	-	-	-	-	-
	8-3	8-3-0.5	05/16/2017	0.5	-	-	-	-	-	-	ND	-	2.4	-	-	110	-	-	ND	ND	-	-	12	-	6.9	140	-	-	49	-	-	-	ND	-	-	ND	9.6	ND	ND	ND	28	120	-	-	-	-	-	-
		8-3-1.0	05/16/2017	1.0	ND	ND	-	-	ND	ND	ND	-	1.5	-	-	70	-	-	ND	ND	-	-	7.3	-	4.9	34	-	-	35	-	-	-	ND	-	-	ND	7.4	ND	ND	ND	21	65	-	-	-	ND	ND	-	ND
		8-3-3.0	05/16/2017	3.0	-	-	-	-	-	-	ND	-	2.6	-	-	110	-	-	ND	1.70	ND	ND	11	-	6.0	41	-	-	**65**	**11**	-	ND	0.11	-	-	ND	12	1.2	ND	ND	23	210	-	-	-	-	-	-
		8-3-5.0	05/16/2017	5.0	ND	ND	-	-	ND	ND	ND	-	2.3	-	-	68	-	-	ND	ND	-	-	22	ND	12	23	-	-	5.9	-	-	-	0.14	-	-	ND	20	ND	ND	ND	44	52	-	-	-	-	-	-
	L-1	L-1 @ 1'	02/1/2016	1.0	-	-	-	-	-	-	8.9	-	4.3	-	-	530	-	-	ND	ND	-	-	15	-	7.4	85	-	-	**310**	**41**	-	-	ND	-	-	ND	13	ND	ND	ND	32	870	-	-	-	-	-	-
		L-1 @ 3'	02/1/2016	3.0	-	-	-	-	-	-	ND	-	2.9	-	-	120	-	-	ND	ND	-	-	14	-	7.8	19	-	-	4.6	-	-	-	0.2	-	-	ND	9.6	ND	ND	ND	29	50	-	-	-	-	-	-
		L-1 @ 5'	02/1/2016	5.0	-	-	-	-	-	-	-	-	-	-	-	-	-	-	-	-	-	-	-	-	-	-	-	-	-	-	-	-	-	-	-	-	-	-	-	-	-	-	-	-	-	-	-	-	-	-
	L-1	L-1 @ 1'	02/26/2016	1.0	ND	ND	-	-	ND	ND	-	-	-	-	-	-	-	-	-	-	-	-	-	-	-	-	-	-	-	-	-	-	-	-	-	-	-	-	-	-	-	-	ND	ND	-	-	-	-
		L-1 @ 2'	02/26/2016	2.0	-	-	-	-	-	-	ND	-	2.3	-	-	140	-	-	ND	ND	-	-	12	-	6.8	20	-	-	20	-	-	-	ND	-	-	ND	9.6	ND	ND	ND	29	99	-	-	-	-	-	-
		L-1 @ 3'	02/26/2016	3.0	ND	ND	-	-	ND	ND	ND	-	2.6	-	-	160	-	-	ND	ND	-	-	12	-	6.7	20	-	-	18	-	-	-	0.11	-	-	ND	10	ND	ND	ND	28	87	-	-	-	ND	ND	-	-
9	9-1	9-1-0.5	05/17/2017	0.5	-	-	-	-	-	-	-	-	-	-	-	-	-	-	-	-	-	-	-	-	-	-	-	-	**740**	**34**	ND	0.42	-	-	-	-	-	-	-	-	-	-	-	-	-	6.8	-	-	-
		9-1-1.0	05/17/2017	1.0	-	-	-	-	-	-	-	-	-	-	-	-	-	-	-	-	-	-	-	-	-	-	-	-	**94**	3.2	ND	ND	-	-	-	-	-	-	-	-	-	-	-	-	-	-	-	-	-
		9-1-3.0	05/17/2017	3.0	-	-	-	-	-	-	-	-	-	-	-	-	-	-	-	-	-	-	-	-	-	-	-	-	7.1	-	-	-	-	-	-	-	-	-	-	-	-	-	-	-	-	-	-	-	-
		9-1-5.0	05/17/2017	5.0	-	-	-	-	-	-	-	-	-	-	-	-	-	-	-	-	-	-	-	-	-	-	-	-	2.0	-	-	-	-	-	-	-	-	-	-	-	-	-	-	-	-	-	-	-	-
	9-2	9-2-0.5	05/17/2017	0.5	-	-	-	-	-	-	-	-	-	-	-	-	-	-	-	-	-	-	-	-	-	-	-	-	**78**	**5.3**	ND	ND	-	-	-	-	-	-	-	-	-	-	-	-	-	-	-	-	-
		9-2-1.0	05/17/2017	1.0	-	-	-	-	-	-	-	-	-	-	-	-	-	-	-	-	-	-	-	-	-	-	-	-	**630**	**50**	ND	1.5	-	-	-	-	-	-	-	-	-	-	-	-	-	7.6	-	-	-
	9-3	9-3-0.5	05/17/2017	0.5	-	-	-	-	-	-	-	-	-	-	-	-	-	-	-	-	-	-	-	-	-	-	-	-	**52**	1.0	ND	ND	-	-	-	-	-	-	-	-	-	-	-	-	-	-	-	-	-
		9-3-1.0	05/17/2017	1.0	-	-	-	-	-	-	-	-	-	-	-	-	-	-	-	-	-	-	-	-	-	-	-	-	29	-	-	-	-	-	-	-	-	-	-	-	-	-	-	-	-	-	-	-	-
		9-3-3.0	05/17/2017	3.0	-	-	-	-	-	-	-	-	-	-	-	-	-	-	-	-	-	-	-	-	-	-	-	-	1.7	-	-	-	-	-	-	-	-	-	-	-	-	-	-	-	-	-	-	-	-
		9-3-5.0	05/17/2017	5.0	-	-	-	-	-	-	-	-	-	-	-	-	-	-	-	-	-	-	-	-	-	-	-	-	5.9	-	-	-	-	-	-	-	-	-	-	-	-	-	-	-	-	-	-	-	-
	A-13-17	A17@5'	11/16/2013	5.0	1.2	ND	ND	ND	ND	-	ND	-	2	-	-	84	-	-	ND	1.4	-	-	7.1	-	3.6	7.4	-	-	ND	-	-	-	0.03	-	-	ND	5.2	ND	ND	ND	23	27	-	-	-	-	-	-
		A17@10'	11/16/2013	10.0	-	-	-	-	ND	-	-	-	-	-	-	-	-	-	-	-	-	-	-	-	-	-	-	-	-	-	-	-	-	-	-	-	-	-	-	-	-	-	-	-	-	-	-	-	-	-
		A17@15'	11/16/2013	15.0	ND	ND	ND	ND	ND	-	ND	-	8.3	-	-	78	-	-	ND	**2.4**	-	-	21	-	14	25	-	-	6.3	-	-	-	0.074	-	-	ND	21	ND	ND	ND	41	73	-	-	-	-	-	-
		A17@25'	11/16/2013	25.0	-	-	-	-	ND	-	-	-	-	-	-	-	-	-	-	-	-	-	-	-	-	-	-	-	-	-	-	-	-	-	-	-	-	-	-	-	-	-	-	-	-	-	-	-	-	-
		A17@40'	11/16/2013	40.0	-	-	-	-	ND	-	-	-	-	-	-	-	-	-	-	-	-	-	-	-	-	-	-	-	-	-	-	-	-	-	-	-	-	-	-	-	-	-	-	-	-	-	-	-	-	-
		A17@60'	11/16/2013	60.0	ND	ND	ND	ND	ND	-	-	-	-	-	-	-	-	-	-	-	-	-	-	-	-	-	-	-	-	-	-	-	-	-	-	-	-	-	-	-	-	-	-	-	-	-	-	-	-	-
Trigger Level for Performing State Leachate Analysis (10×STLC)					NE	NE	NE	NE	2,040 (TCE)	varies	150	15 (STLC)	50	5 (STLC)	-	1,000	100 (STLC)	-	8	10	1 (STLC)	-	50	50	800	250	25 (STLC)	-	50	5 (STLC)	1.5 (STLC)	-	2	0.2 (STLC)	-	3,500	200	10	50	70	240	2,500	250 (STLC)	-	-	-	1,000 (DDT/DDE/DDD)	varies	varies
Trigger Level for Performing State and Federal Leachate Analysis (20×TCLP)					NE	NE	NE	NE	10 (TCE)	varies	NE	-	100	-	5 (TCLP)	2,000	-	100 (TCLP)	NE	20	-	1 (TCLP)	100	-	NE	NE	-	-	100	-	-	5 (TCLP)	4	-	0.2 (TCLP)	NE	NE	20	100	NE	NE	NE	-	-	-	-	varies	varies	varies
State Hazardous Disposal Criteria (TTLC)					NE	NE	NE	NE	2,040 (TCE)	varies	500	-	500	-	-	10,000	-	-	75	100	-	-	2,500	500	8,000	2,500	-	-	1,000	-	-	-	20	-	-	3,500	2,000	100	500	700	2,400	5,000	-	-	-	-	1,000 (DDT/DDE/DDD)	varies	varies
Screening Level for Keeping Soil on Site (OEHHA [a,c])					100	1,000	1,000	1,000	-	varies	30	-	12 [b]	-	-	5,200	-	-	16	1.7	-	-	100,000	17 [c]	660	3,000	-	-	80	-	-	-	18	-	-	380	1,600	380	380	5	530	23,000	-	-	-	300	2,300 (DDD) 1,600 (DDE) 1,600 (DDT)	varies	varies

Notes:

bold - Value detected above a trigger/screening value

[a] Office of Environmental Health Hazard Assessment (OEHHA) Residential Scenario's Soil-Screening Numbers (mg/kg soil) for Nonvolatile Chemicals Based on Total Exposure to Contaminated Soil: Inhalation, Ingestion and Dermal Absorption

[b] California EPA/DTSC background levels of Arsenic in Southern California for near surface soils

[c] Screening numbers for Chromium VI are used here. The screening value for Chromium III is 100,000 mg/kg.

µg/kg - microgram per kilogram

mg/kg - milligram per kilogram

mg/L - milligram per liter

ND - Not Detected (below Reporting Limit)

NE - Not Established

HUSHMAND ASSOCIATES, INC.
Environmental & Engineering Consultants

Table 3. Summary of Laboratory Test Results - Soil Gas and Ambient Air Samples

PARC AREA	Boring ID	Sample ID	Sample Collection Date	Sample Depth (ft below grade)	TPH GRO µg/m³ (TO-3)	VOCs, µg/m³ (TO-15)																
						Benzene	Carbon Tetrachloride	1,2-Dichloroethane	cis-1,2-Dichloroethylene	trans-1,2-Dichloroethylene	Ethylbenzene	Mercury (elemental)	Methyl tert-Butyl Ether	Naphthalene	Tetrachloroethylene	Tetraethyl Lead	Toluene	1,1,1-Trichloroethane	Trichloroethylene	Vinyl Chloride	m,p-Xylene	o-Xylene	Other VOCs
2A, 2B, 2C	2A-1	2A-1-5	05/16/2017	5.0	-	6.4	ND	ND	ND	ND	ND	-	ND	ND	**830**	-	28	85	ND	ND	10	ND	-
		2A-1-10	05/16/2017	10.0	-	ND	ND	ND	ND	ND	ND	-	ND	ND	**460**	-	8.5	53	ND	ND	ND	ND	-
		2A-1-15	05/16/2017	15.0	-	5.6	ND	ND	ND	ND	ND	-	ND	ND	**360**	-	12	63	ND	ND	ND	20	-
	2A-2	2A-2-5	05/16/2017	5.0	-	5.7	ND	ND	ND	ND	**27**	-	ND	ND	**370**	-	16	230	ND	ND	61	39	-
		2A-2-5 Dup	05/16/2017	5.0	-	ND	ND	ND	ND	ND	ND	-	ND	ND	**380**	-	14	220	ND	ND	19	8.9	-
		2A-2-10	05/16/2017	10.0	-	ND	ND	ND	ND	ND	ND	-	ND	ND	**280**	-	9.1	200	ND	ND	13	8.1	-
		2A-2-15	05/16/2017	15.0	-	ND	ND	ND	ND	ND	ND	-	ND	ND	130	-	9.8	110	ND	ND	ND	ND	-
	2A-3	2A-3-5	05/16/2017	5.0	-	ND	ND	ND	ND	ND	ND	-	ND	ND	25	-	ND	20	ND	ND	ND	8.1	-
		2A-3-10	05/16/2017	10.0	-	ND	ND	ND	ND	ND	ND	-	ND	ND	28	-	ND	25	ND	ND	ND	ND	-
		2A-3-15	05/16/2017	15.0	-	ND	ND	ND	ND	ND	ND	-	ND	ND	29	-	9.8	24	ND	ND	13	ND	-
	2A-Am	2A-Am	05/16/2017	Ambient	-	ND	ND	ND	ND	ND	ND	-	ND	ND	ND	-	ND	ND	ND	ND	ND	ND	-
	P33-VP-1	VP-1	08/5/2015	5.0	3700	0.86	ND	ND	ND	ND	2	-	ND	ND	20	-	30	30	40	ND	20	3	-
	P33-VP-2	VP-2	08/5/2015	5.0	1900	0.89	ND	ND	ND	ND	1	-	ND	ND	30	-	10	70	-	ND	10	2	-
	P33-VP-3	VP-3	08/5/2015	5.0	2100	0.89	ND	ND	ND	ND	2	-	ND	ND	30	-	20	90	-	ND	20	3	-
		VP-3 Dup	08/5/2015	5.0	3000	ND	ND	ND	ND	ND	2	-	ND	ND	40	-	10	160	420	ND	10	3	-
	P33-VP-4	VP-4	08/5/2015	5.0	2700	0.83	ND	ND	ND	ND	4	-	ND	2	4	-	80	ND	2	ND	30	4	-
	P33-VP-5	VP-5	08/5/2015	5.0	3700	0.83	ND	ND	ND	ND	3	-	ND	ND	20	-	40	80	80	ND	20	4	-
	P33-VP-6	VP-6	08/5/2015	5.0	1700	1	ND	ND	ND	ND	2	-	ND	ND	6	-	30	3	10	ND	10	2	-
	P33-VP-7	VP-7	08/5/2015	5.0	1900	0.89	ND	ND	ND	ND	3	-	ND	ND	40	-	20	40	ND	ND	20	4	-
	P33-VP-8	VP-8	08/5/2015	5.0	2200	1	ND	ND	ND	ND	3	-	ND	ND	20	-	10	20	ND	ND	20	4	-
	P33-VP-9	VP-9	08/5/2015	5.0	2000	0.89	ND	ND	ND	ND	3	-	ND	ND	40	-	40	9	2	ND	20	5	-
		VP-9 Dup	08/5/2015	5.0	2600	2	ND	ND	ND	ND	3	-	ND	ND	20	-	20	9	2	ND	20	4	-
	P33-VP-10	VP-10	08/5/2015	5.0	2600	ND	ND	ND	ND	ND	ND	-	ND	ND	2	-	2	ND	ND	ND	ND	ND	-
	P33-VP-11	VP-11	08/5/2015	5.0	4300	ND	ND	ND	ND	ND	2	-	ND	ND	20	-	10	7	ND	ND	20	3	-
	P33-VP-12	VP-12	08/5/2015	5.0	2900	ND	ND	ND	ND	ND	2	-	ND	ND	70	-	10	3	ND	ND	10	3	-
	P32-VP-1	VP-1	08/7/2015	5.0	2000	2	ND	ND	ND	ND	1	-	ND	ND	20	-	2	5	ND	3	10	2	-
	P32-VP-2	VP-2	08/7/2015	5.0	3100	6	ND	ND	ND	ND	1	-	ND	6	ND	-	10	ND	ND	ND	10	2	-
	P32-VP-3	VP-3	08/7/2015	5.0	4200	ND	ND	ND	ND	ND	ND	-	ND	ND	10	-	0.94	8	ND	ND	ND	ND	-
	P32-VP-4	VP-4	08/7/2015	5.0	12000	ND	ND	ND	ND	ND	10	-	ND	2	6	-	280	5	ND	ND	120	20	-
	P32-VP-5	VP-5	08/7/2015	5.0	7100	1	ND	ND	ND	ND	2	-	ND	ND	10	-	4	4	ND	1	10	2	-
	P32-VP-6	VP-6	08/7/2015	5.0	2400	2	ND	ND	ND	ND	2	-	ND	3	7	-	8	3	ND	ND	20	4	-
	P32-VP-7	VP-7	08/7/2015	5.0	2700	0.93	ND	ND	ND	ND	ND	-	ND	ND	9	-	2	6	ND	ND	7	1	-
		VP-7 Dup	08/7/2015	5.0	2100	1	ND	ND	ND	ND	3	-	ND	**40**	9	-	4	6	ND	1	30	6	-
	P32-VP-8	VP-8	08/7/2015	5.0	2200	ND	ND	ND	ND	ND	ND	-	ND	1	8	-	ND	7	ND	ND	ND	ND	-
	P32-VP-9	VP-9	08/7/2015	5.0	2400	4	ND	ND	ND	ND	5	-	ND	4	5	-	30	3	ND	0.87	70	20	-
	P32-VP-10	VP-10	08/7/2015	5.0	4200	ND	ND	ND	ND	ND	20	-	ND	2	2	-	210	ND	ND	0.69	150	30	-
	P32-VMW-1	VMW-1	11/23/2016	10.0	300	ND	ND	ND	ND	ND	ND	-	ND	ND	10	-	50	ND	ND	ND	20	ND	-
		VMW-1 Dup	11/23/2016	10.0	780	ND	ND	ND	ND	ND	ND	-	ND	ND	**490**	-	40	ND	ND	ND	ND	ND	-
	P32-VMW-2	VMW-2	11/23/2016	5.0	390	ND	ND	ND	ND	ND	ND	-	ND	ND	ND	-	40	ND	ND	ND	ND	ND	-
	P32-VMW-3	VMW-3	11/23/2016	15.0	1500	**70**	ND	ND	ND	ND	8	-	ND	ND	50	-	90	ND	10	ND	40	5	-
	P32-VMW-4	VMW-4	11/23/2016	10.0	370	ND	ND	ND	ND	ND	ND	-	ND	ND	ND	-	30	ND	ND	ND	ND	ND	-
	P32-VMW-1	VMW-1 10'	11/28/2016	10.0	ND	ND	ND	ND	ND	ND	ND	-	ND	ND	10	-	60	5	ND	ND	ND	ND	-
	P32-VMW-2	VMW-2 5'	11/28/2016	5.0	ND	ND	ND	ND	ND	ND	ND	-	ND	ND	9	-	60	ND	ND	ND	ND	ND	-
	P32-VMW-3	VMW-3 15'	11/28/2016	15.0	450	30	ND	ND	ND	ND	3	-	ND	ND	9	-	70	7	ND	ND	10	ND	-
		VMW-3 Dupl. 15'	11/28/2016	15.0	850	20	ND	ND	ND	ND	3	-	ND	ND	7	-	190	6	ND	ND	20	ND	-
	P32-VMW-4	VMW-4 10'	11/28/2016	10.0	360	ND	ND	ND	ND	ND	ND	-	ND	ND	ND	-	90	ND	ND	ND	ND	ND	-
6	6-Am	6-Am	05/16/2017	Ambient	-	ND	ND	ND	ND	ND	ND	-	ND	ND	ND	-	ND	ND	ND	ND	ND	ND	-
7	7-1	7-1-5	05/16/2017	5.0	-	9	ND	ND	ND	ND	ND	-	ND	ND	**430**	-	11	ND	ND	ND	ND	ND	-
	7-3	7-3-5	05/16/2017	5.0	-	ND	ND	ND	ND	ND	ND	-	ND	ND	**550**	-	ND	ND	38	ND	ND	ND	-
	7-4	7-4-5	05/16/2017	5.0	-	ND	ND	ND	ND	ND	ND	-	ND	ND	ND	-	23	ND	ND	ND	150	ND	-
		7-4-5 Dup	05/16/2017	5.0	-	ND	ND	ND	ND	ND	ND	-	ND	ND	ND	-	22	ND	ND	ND	140	ND	-
	7-Am	7-Am	05/16/2017	Ambient	-	ND	ND	ND	ND	ND	ND	-	ND	ND	ND	-	ND	ND	ND	ND	ND	ND	-
	7-Am Dup	7-Am Dup	05/16/2017	Ambient	-	ND	ND	ND	ND	ND	ND	-	ND	ND	ND	-	ND	ND	ND	ND	ND	ND	-

Table 3. Summary of Laboratory Test Results - Soil Gas and Ambient Air Samples (Cont'd)

PARC AREA	Boring ID	Sample ID	Sample Collection Date	Sample Depth (ft below grade)	TPH GRO µg/m³ (TO-3)	VOCs, µg/m³ (TO-15)																
						Benzene	Carbon Tetrachloride	1,2-Dichloroethane	cis-1,2-Dichloroethylene	trans-1,2-Dichloroethylene	Ethylbenzene	Mercury (elemental)	Methyl tert-Butyl Ether	Naphthalene	Tetrachloroethylene	Tetraethyl Lead	Toluene	1,1,1-Trichloroethane	Trichloroethylene	Vinyl Chloride	m,p-Xylene	o-Xylene	Other VOCs
7	P20-VP-1	VP-1	04/26/2016	5.0	120000	ND	ND	ND	ND	ND	ND	-	ND	ND	**310**	-	ND	ND	ND	ND	ND	-
	P20-VP-2	VP-2	04/26/2016	5.0	21000	ND	ND	ND	ND	ND	ND	-	ND	ND	**270**	-	ND	ND	ND	ND	ND	-
	P20-VP-3	VP-3	04/26/2016	5.0	27000	ND	ND	ND	ND	ND	ND	-	ND	ND	**390**	-	ND	ND	ND	ND	ND	-
	P20-VP-4	VP-4	04/26/2016	5.0	6500	ND	ND	ND	ND	ND	ND	-	ND	ND	**1000**	-	ND	ND	20	ND	ND	-
		VP-4 Dup	04/26/2016	5.0	2000	ND	ND	ND	ND	ND	ND	-	ND	ND	**480**	-	ND	ND	ND	ND	ND	-
	P20-VP-5	VP-5	04/26/2016	3.0	7600	ND	ND	ND	ND	ND	ND	-	ND	ND	**4700**	-	ND	ND	ND	ND	ND	-
	P20-VP-6	VP-6	04/26/2016	5.0	6400	ND	ND	ND	ND	ND	ND	-	ND	ND	**1400**	-	ND	ND	ND	ND	ND	-
	P20-VP-7	VP-7	04/26/2016	3.0	7500	ND	ND	ND	ND	ND	ND	-	ND	ND	**4300**	-	ND	ND	ND	ND	ND	-
	P20-VP-8	VP-8	04/26/2016	5.0	5800	ND	ND	ND	ND	ND	ND	-	ND	ND	**2600**	-	ND	ND	ND	ND	ND	-
	P20-VP-9	VP-9	04/26/2016	5.0	2800	ND	ND	ND	ND	ND	ND	-	ND	ND	120	-	20	ND	ND	ND	ND	-
		VP-9 Dup	04/26/2016	5.0	4300	ND	ND	ND	ND	ND	ND	-	ND	ND	**970**	-	ND	ND	ND	ND	ND	-
	P22-VP-1	VP-1	08/13/2015	5.0	6100	2	ND	ND	ND	ND	2	-	ND	2	70	-	7	ND	2	ND	10	-
	P22-VP-2	VP-2	08/13/2015	5.0	4900	2	ND	ND	ND	ND	3	-	ND	10	120	-	8	3	1	ND	20	-
	P22-VP-3	VP-3	08/13/2015	5.0	5600	ND	ND	ND	ND	ND	ND	-	ND	ND	80	-	3	ND	ND	ND	6	-
	P22-VP-4	VP-4	08/13/2015	5.0	5200	3	ND	ND	ND	ND	3	-	ND	3	120	-	20	3	ND	ND	30	-
	P22-VP-5	VP-5	08/13/2015	5.0	7700	4	ND	ND	ND	ND	2	-	ND	5	6	-	10	30	ND	ND	20	-
	P22-VP-6	VP-6	08/13/2015	5.0	6500	ND	ND	ND	ND	ND	ND	-	ND	ND	**230**	-	3	5	ND	ND	5	-
		VP-6 Dup	08/13/2015	5.0	5400	ND	ND	ND	ND	ND	ND	-	ND	ND	170	-	3	4	ND	ND	5	-
	P22-VP-7	VP-7	08/13/2015	5.0	5100	ND	ND	ND	ND	ND	ND	-	ND	ND	180	-	3	3	ND	ND	6	-
	P22-VP-8	VP-8	08/13/2015	5.0	6100	2	ND	ND	ND	ND	ND	-	ND	ND	160	-	4	5	ND	ND	6	-
	P22-VP-9	VP-9	08/13/2015	5.0	5800	ND	ND	ND	ND	ND	1	-	ND	3	**270**	-	3	4	ND	ND	10	-
	P22-VP-10	VP-10	08/13/2015	5.0	3600	4	ND	ND	ND	ND	2	-	ND	ND	2	-	10	ND	ND	ND	10	-
	P22-VP-11	VP-11	08/13/2015	5.0	9000	2	ND	ND	ND	ND	2	-	ND	ND	180	-	20	3	ND	ND	20	-
	P22-VP-12	VP-12	08/13/2015	5.0	6200	ND	ND	ND	ND	ND	1	-	ND	2	120	-	5	2	ND	ND	20	-
	P23-SV1	SV1	11/27/2013	5.0	ND	-	-	-	-	-	-	-	-	-	-	-	-	-	-	-	-	ND
	P23-SV2	SV2	11/27/2013	5.0	ND	-	-	-	-	-	-	-	-	-	-	-	-	-	-	-	-	ND
	P23-SV3	SV3	11/27/2013	5.0	ND	-	-	-	-	-	-	-	-	-	-	-	-	-	-	-	-	ND
	P23-SV4	SV4	11/25/2013	5.0	ND	-	-	-	-	-	-	-	-	-	-	-	-	-	-	-	-	ND
	P23-SV5	SV5	11/27/2013	5.0	ND	-	-	-	-	-	-	-	-	-	-	-	-	-	-	-	-	ND
		SV5 Dup	11/27/2013	5.0	ND	-	-	-	-	-	-	-	-	-	-	-	-	-	-	-	-	ND
	P23-SV6	SV6	11/25/2013	5.0	ND	-	-	-	-	-	-	-	-	-	-	-	-	-	-	-	-	ND
	P23-SV7	SV7	11/25/2013	5.0	ND	-	-	-	-	-	-	-	-	-	-	-	-	-	-	-	-	ND
	P23-SV8	SV8	11/25/2013	5.0	ND	-	-	-	-	-	-	-	-	-	-	-	-	-	-	-	-	ND
	P23-SV9	SV9	11/25/2013	5.0	ND	-	-	-	-	-	-	-	-	-	-	-	-	-	-	-	-	ND
	P23-SV10	SV10	11/25/2013	5.0	ND	-	-	-	-	-	-	-	-	-	-	-	-	-	-	-	-	ND
	P23-SV11	SV11	11/25/2013	5.0	ND	-	-	-	-	-	-	-	-	-	-	-	-	-	-	-	-	ND
	P23-SV12	SV12	11/25/2013	5.0	ND	-	-	-	-	-	-	-	-	-	-	-	-	-	-	-	-	ND
	P23-SV13	SV13	11/25/2013	5.0	ND	-	-	-	-	-	-	-	-	-	-	-	-	-	-	-	-	ND
	P23-Am	Ambient Air	11/27/2013	Ambient	ND	-	-	-	-	-	-	-	-	-	-	-	-	-	-	-	-	ND
8-3	8-3	8-3-5	05/16/2017	5.0	-	-	-	-	-	-	-	-	-	-	-	-	-	-	-	-	-	-
		8-3 Dup	05/16/2017	5.0	-	22	ND	ND	ND	ND	ND	-	ND	ND	**2000**	-	20	81	60	ND	27	11	-
Screening Level for Keeping Soil on Site (OEHHA [a])					-	36	25	50	16,000	32,000	420	45	4,000	32	180	0.21	140,000	990,000	530	13	320,000	320,000	-

Notes:

bold - Value detected above a trigger/screening value

[a] Office of Environmental Health Hazard Assessment (OEHHA) Residential Scenario's Soil-Gas-Screening Numbers for Nonvolatile Chemicals below Buildings Constructed without Engineered Fill below Sub-slab Gravel

µg/m³ - microgram per cubic meter

ND - Not Detected (below Reporting Limit)

NE - Not Established

Results of the baseline HHRA indicate health risk in area 2a, 2b and 2c are acceptable. See HHRA in appendix E.

HUSHMAND ASSOCIATES, INC.
Geotechnical and Earthquake Engineers

Table 5 . Summary of Laboratory Test Results – Soil Samples from ADL Borings

PARC AREA	Boring ID	Sample ID	Sample Collection Date	Sample Depth (ft below grade)	Lead mg/kg	STLC Lead (CA-WET) mg/L	STLC Lead (DI-WET) mg/L	TCLP Lead mg/L	pH
9	9-1	9-1-0.5	05/17/2017	0.5	**740**	**34**	ND	0.42	6.8
		9-1-1.0	05/17/2017	1.0	**94**	3.2	ND	ND	-
		9-1-3.0	05/17/2017	3.0	7.1	-	-	-	-
		9-1-5.0	05/17/2017	5.0	2.0	-	-	-	-
	9-2	9-2-0.5	05/17/2017	0.5	**78**	**5.3**	ND	ND	-
		9-2-1.0	05/17/2017	1.0	**630**	**50**	ND	1.5	7.6
	9-3	9-3-0.5	05/17/2017	0.5	**52**	1.0	ND	ND	-
		9-3-1.0	05/17/2017	1.0	29	-	-	-	-
		9-3-3.0	05/17/2017	3.0	1.7	-	-	-	-
		9-3-5.0	05/17/2017	5.0	5.9	-	-	-	-
Trigger Level for Performing State Leachate Analysis (10×STLC)					50	5 (STLC)	1.5 (STLC)	-	-
Trigger Level for Performing State and Federal Leachate Analysis (20×TCLP)					100	-	-	5 (TCLP)	-
State Hazardous Disposal Criteria (TTLC)					1,000	-	-	-	-
Screening Level for Keeping Soil on Site (OEHHA [(a)])					80	-	-	-	-

Notes:

bold - Value detected above a trigger/screening value

[(a)] Office of Environmental Health Hazard Assessment (OEHHA) Residential Scenario's Soil-Screening Numbers (mg/kg soil) for Nonvolatile Chemicals Based on Total Exposure to Contaminated Soil: Inhalation, Ingestion and Dermal Absorption

mg/kg - milligram per kilogram

mg/L - milligram per liter

ND - Not Detected (below Reporting Limit)

HUSHMAND ASSOCIATES, INC.
Geotechnical and Earthquake Engineers

HUSHMAND ASSOCIATES, INC.
Geotechnical and Earthquake Engineers

Hushmand Associates, Inc.
250 Goddard
Irvine, CA 92618

p. (949) 777-1266
w. www.haieng.com
e. hai@haieng.com

May 7, 2019

Sixth Street Viaduct Division
Bureau of Engineering | Department of Public Works
City of Los Angeles
585 S Santa Fe Avenue
Los Angeles, CA 90013

Attn: Gary Lam, P.E., Senior Civil Engineer

SUBJECT: FINAL REPORT ON
ENVIRONMENTAL SITE INVESTIGATIONS (HAZMAT)
SIXTH STREET VIADUCT - PARC IMPROVEMENTS
LOS ANGELES, CA 90021-23
HAI Project No. LAC-17-001

Dear Mr. Lam:

This document presents the updated findings and recommendations on Environmental Site Investigation Services performed by Hushmand Associates, Inc. (HAI) for Sixth Street Viaduct PARC Improvements Project in the City of Los Angeles, California.

Sincerely yours,

HUSHMAND ASSOCIATES, INC.

.

REGISTERED PROFESSIONAL ENGINEER
BEHNAM HUSHMAND
No. C 044777
Exp. 3/31/20
CIVIL
STATE OF CALIFORNIA

Ben Hushmand

Ben Hushmand, PhD, PE
President, Principal Engineer

Michael Leonard, PE
Associate Principal Engineer

CC: Mauricio Argente, RLA

ENVIRONMENTAL SITE INVESTIGATIONS (HAZMAT)
SIXTH STREET VIADUCT - PARC IMPROVEMENTS
LOS ANGELES, CALIFORNIA



Prepared for
Sixth Street Viaduct Division
Bureau of Engineering | Department of Public Works
City of Los Angeles
585 S Santa Fe Avenue
Los Angeles, CA 90013

and

Tetra Tech
350 S. Grand Avenue, Suite 33100
Los Angeles, CA 90071

Prepared by
Hushmand Associates, Inc.
250 Goddard
Irvine, California 92618
hai@haieng.com
(949) 777-1266

May 2019

EXECUTIVE SUMMARY

Hushmand Associates, Inc. (HAI) has completed this Phase II Environmental Site Assessment for the proposed Landscape Design of West Park, Arts Plaza, Tunnel Rehabilitation, River Terracing & Bicycle Connection, and East Park areas as part of the Sixth Street Viaduct Replacement Project (Project). The project is referred to as Park, Arts, and River Connectivity Improvements (PARC) as part of the Sixth Street Viaduct Replacement Project. At the request of Tetra Tech Inc. (TTI) and the City of Los Angeles (City), HAI has conducted this Phase II Environmental Site Assessment to evaluate soil, soil gas, and groundwater in the project area for potential hazards to construction workers or the general public during construction of the Project and during the planned land uses, and to perform waste characterization of soil and groundwater for proper disposal of surplus soil and groundwater generated during the Project and as part of the remediation. In addition the scope of work and report include evaluation of areas within the PARC Project boundaries with soil and/or soil gas contaminants potentially in excess of the California EPA Department of Toxic Substances (DTSC) Health Risk Screening Values for the unrestricted land use scenario, assessment/selection of alternatives for remediation, and rough order of magnitude (ROM) cost estimates for remediation. The assessment also included borings in an unpaved area in Caltrans Right-of-Way near US-101 Freeway for sampling and testing for aerially-deposited lead (ADL) in near surface soils. The field and laboratory data were analyzed to identify the appropriate handling of soil affected by ADL under the terms of the agreement between DTSC and Caltrans dated June 30, 2016.

HAI reviewed available prior environmental reports and investigations for the project area and used the information to develop a Sampling and Analysis Plan (SAP), including Site-Specific Health and Safety Plan which was approved by TTI and the City and implemented during the field work. The field investigations (borings, soil vapor probes, methane testing) performed for this phase of environmental assessment focused primarily on shallow soil and soil gas conditions due to the nature of the proposed PARC facilities (i.e., no planned deep excavations or foundations) and because prior investigations had completed deep soil and groundwater investigations. In some areas, the investigation focused on contaminants of concern based on prior sampling/testing results. HAI assembled and reviewed the data from this and available prior investigations and performed the screening against published DTSC health risk screening values. Subsequent to issuing of our report in September 2017, the City Bureau of Engineering (BOE) approved completion of a baseline Human Health Risk Assessments (HHRAs) for six (6) of the PARC areas found in prior investigations to have chemical contamination in soil and/or soil gas. This current update to the report includes the findings of those HHRAs.

The results of the review, investigations and HHRAs indicate six zones with soil contamination classifying the soil as California (Non-RCRA) Hazardous Waste or RCRA Hazardous Waste, and two zones with soil gas contamination. The soil contamination is primarily total petroleum hydrocarbons in the diesel range organics (TPH DRO) and lead. Also, two areas have methane mitigation included in the recommendations and ROM remediation cost estimate as they are in the Methane Zone or had methane detected. The areas, category of contamination and estimated extent are shown on figures and tables in this report. The figures and tables have been updated or annotated based on the results of the HHRAs. Section 15 includes review of remediation alternatives and ROM cost estimates, totaling "$5,467,948 (-20%), $6,834,935, and $8,543,669 (+25%), provided in Table 9.

The types and extent of contamination (i.e., heavy metals and some hydrocarbons in near surface soils) is quite typical for areas with many years of industrial and commercial uses. The proposed remedial measures, including removal and replacement of soils with RCRA and non-RCRA (California) Hazardous levels of heavy metals, and soil vapor extraction and treatment for volatile organic compounds prior to venting are established, proven, and safe techniques which have been implemented at many sites in Los Angeles. Also, the City has currently elected to set cleanup criteria at unrestricted land use levels, even though no residences will be within or adjacent to the project limits, to provide further protection to human health and the environment. The remediation will be completed in accordance with a Remedial Action Plan approved

by the lead regulatory agency, i.e. Los Angeles County Fire Department Site Mitigation Unit, which will also provide oversight during the process. Excavation of soils in areas with volatile organic compounds in the soil and/or soil gas will be performed and monitored in accordance with Rule 1166 Mitigation Plan approved by South Coast Air Quality Management District (SCAQMD).

The report also includes recommendations for additional investigations in some areas and during remediation implementation, performance of a focused HHRA prior to construction and design of remediation systems followed by obtaining bids from experienced remediation contractors for implementation of the work. The focused HHRA could include risk analysis based on Park User exposure parameters instead of the very conservative unrestricted land use exposure parameters, definition and exclusion of "outliers" (i.e., individual test results which meet the definition of "outliers") and parsing of the data both vertically and horizontally to focus the extent and depths of remediation in each PARC area. The ROM remediation estimate included in this report is based on the manual/observational analysis of the data to estimate the areas and volumes of remediation and does not utilize the parsing of data based on the HHRA results.

TABLE OF CONTENTS

Page

1.0 INTRODUCTION 1
2.0 BACKGROUND 1
2.1 Current and Prior Site Uses 1
2.2 Site or Sampling Area Description 2
2.3 Previous Investigations/Regulatory Involvement 2
3.0 PROJECT DATA QUALITY ASSURANCE 2
4.0 DESCRIPTION OF FIELD AND LABORATORY INVESTIGATIONS 2
4.1 Pre-Field Investigation Activities 3
4.1.1 Marking of Boring Locations and Utility Clearance 3
4.2 Field Investigation Activities 3
4.2.1 Shallow Soil Borings and ADL Sampling 3
4.2.2 Soil Vapor Probes 4
4.2.3 Combination Soil Boring and Soil Vapor Probes 4
4.3 Laboratory Testing 4
4.4 Data Management 4
5.0 SAMPLING RATIONALE 5
5.1 Sampling and Selection for Laboratory Testing 5
6.0 REQUEST FOR ANALYSES 5
6.1 Analytical Laboratories 5
7.0 FIELD METHODS AND PROCEDURES 5
7.1 Decontamination Procedures 5
8.0 SAMPLE CONTAINERS, PRESERVATION AND STORAGE 5
9.0 DISPOSAL OF RESIDUAL MATERIALS 5
10.0 SAMPLE DOCUMENTATION AND SHIPMENT 6
10.1 Field Notes 6
10.2 Photographs 6
10.3 Labeling 6
10.4 Sample Chain-of-Custody Forms and Custody Seals 6

11.0 QUALITY ASSURANCE/QUALITY CONTROL (QA/QC) AND DATA VALIDATION 6
12.0 FIELD VARIANCES 7
13.0 FIELD HEALTH AND SAFETY PROCEDURES AND TRAFFIC CONTROL 7
14.0 DATA ANALYSIS, FINDINGS, AND RECOMMENDATIONS 7
14.1 Findings and Recommendations for Shallow Soil Conditions 8
14.1.1 Subsurface Conditions 8
14.1.2 Analytical Laboratory Test Results 8
14.1.3 Data Quality Assessment 10
14.1.4 Additional Investigations and/or Analysis 10
14.2 Findings and Recommendations for Aerially Deposited Lead 11
14.2.1 Subsurface Conditions 11
14.2.2 Analytical Laboratory Test Results 11
14.2.3 Data Quality Assessment 12
14.2.4 Statistical Evaluation of ADL Impacted Soil Data 12
14.2.5 Applicability of ADL Agreement 12
14.2.6 Requirements for Managing ADL-Contaminated Soils 13
14.2.7 Entire Data Set (0-5.0 ft. bgs) 13
14.2.8 Depth Specific Layers 14
14.2.9 Conclusions and Recommendations 14
14.2.10 Additional Investigations and/or Analysis 14
14.3 Findings and Recommendations for Soil Gas Conditions 14
14.3.1 Additional Investigations and/or Analysis 15
14.4 Findings and Recommendations Regarding Methane in Soil Gas 15
14.4.1 Additional Investigations and/or Analysis 16
14.5 Recommendations for Handling Groundwater encountered during Construction 16
14.5.1 Additional Investigations and/or Analysis 17
15.0 REMEDIATION ALTERNATIVES AND ROUGH ORDER OF MAGNITUDE COST ESTIMATES 17
15.1 Remediation Alternatives 17
15.2 Selection of Remediation alternative for each PARC Area 21
15.3 Rough Order of Magnitude Cost Estimate for Remediation 23
16.0 LIMITATIONS 23

LIST OF TABLES

Table 1 List of Soil Borings and Vapor Probes
Table 2 Summary of Laboratory Test Results - Soil Samples
Table 3 Summary of Laboratory Test Results - Soil Gas & Ambient Air Samples
Table 4 Summary of Laboratory Test Results and Field Measurements - Methane Gas
Table 5 Summary of Laboratory Test Results – Soil Samples from ADL Borings
Table 6 Summary of Statistical Analysis Results – Soil Samples from ADL Borings
Table 7 Minimum Cover Requirements for ADL-contaminated Soil Based on Extractable and Total Lead Concentrations (95% UCL)
Table 8 Relative Scoring Comparison of Feasible Remediation/Mitigation Alternatives
Table 9 Rough Order of Magnitude Cost Estimate for Remediation – Sixth Street Viaduct PARC Improvements (Not for Budgeting Purposes)
Table 10 Comparison of Unrestricted Land Use and Commercial/Industrial Screening Results – Soil Samples
Table 11 Comparison of Unrestricted Land Use and Commercial/Industrial Screening Results – Soil Gas and Ambient Air Samples

LIST OF FIGURES

Figure 1 Site Vicinity Map
Figure 2a Soil Boring & Vapor Probe Locations from Previous Investigations – West Park
Figure 2b Soil Boring & Vapor Probe Locations from Previous Investigations – East Park
Figure 3a Soil Boring & Vapor Probe Locations from Current Investigation – West Park
Figure 3b Soil Boring & Vapor Probe Locations from Current Investigation – East Park
Figure 4a Soil Boring Locations from All Investigations – West Park
Figure 4b Soil Boring Locations from All Investigations – East Park
Figure 5a Soil Vapor Probe Locations from All Investigations – West Park
Figure 5b Soil Vapor Probe Locations from All Investigations – East Park
Figure 6a Methane & Methane Buffer Zones – West Park
Figure 6b Methane & Methane Buffer Zones – East Park
Figure 7a Contamination Categories with Soil Borings and Vapor Probes – West Park
Figure 7b Contamination Categories with Soil Borings and Vapor Probes – East Park
Figure 8a Areas of Concern with Contamination – West Park
Figure 8b Areas of Concern with Contamination – East Park

LIST OF APPENDICES

Appendix A Field Information
Appendix B QA/QC Checklist
Appendix C Laboratory Test Results
Appendix D Caltrans and DTSC ADL Agreement
Appendix E Report of Human Health Risk Assessments

ENVIRONMENTAL SITE INVESTIGATIONS (HAZMAT)
SIXTH STREET VIADUCT PARC IMPROVEMENTS
LOS ANGELES, CALIFORNIA

1.0 INTRODUCTION

Hushmand Associates, Inc. (HAI) is pleased to provide Tetra Tech Incorporated (TTI) and the City of Los Angeles Bureau of Engineering (City) with this report for hazardous materials investigations for the proposed Landscape Design of West Park, Arts Plaza, Tunnel Rehabilitation, and East Park areas as part of the Sixth Street Viaduct Replacement Project (PARC Project), as shown in Figure 1. The project site extends along East Sixth Street from Mateo Street and along Whittier Boulevard to west of U.S. Highway 101 (Figure 1).

HAI has reviewed the available existing geotechnical and hazardous material investigations and reports for the project area (as shown in Figures 2 and 3). These investigations have shown several locations with some of the following heavy metals: arsenic, barium, cadmium, chromium, copper, lead, mercury and zinc, and/or diesel and oil range petroleum hydrocarbons in soil samples. Other locations have volatile organic compounds in soil gas. The concentrations detected exceed the California EPA/DTSC published human health risk screening levels for unrestricted land use scenario and in some cases they exceed the screening levels for commercial/industrial scenario. Based on this review, it was determined that additional investigations were needed to better define the extent of contamination and assist in developing possible mitigation/remediation procedures and rough order of magnitude costs. The City and TTI requested that HAI prepare a Sampling and Analysis Plan (SAP) for the additional investigations. The SAP was approved by the City and TTI on April 25, 2017.

This report presents:

- Findings of the current investigation;
- Results of the Human Health Risk Assessment (HHRA) recently completed for the PARC areas of concern (Area 1A, 2, 5, 6, 7 and 8);
- Summary of the prior investigation data combined with data from this investigation;
- Recommendations for handling of soil and groundwater expected to be encountered during construction of the project;
- Assessment of alternatives for remediation and rough order of magnitude costs for remediation of soil and soil gas, where appropriate;
- Findings and recommendations for soils with aerially deposited lead (ADL) within Caltrans Right-of-Way; and
- Recommendations for additional sampling and testing where needed, in our opinion and for a focused HHRA.

2.0 BACKGROUND

2.1 CURRENT AND PRIOR SITE USES

The site is currently surrounded by several commercial buildings at the west end of the project between Mateo and Santa Fe Streets, commercial buildings at the east end of the project, open lots and connecting and underlying roadways. The Sixth Street Viaduct, located east of downtown Los Angeles, carries four lanes of traffic in an east-west direction over the Los Angeles River, the Union Pacific Railroad (UPRR)

and Metrolink tracks, and U.S. Highway 101. The Sixth Street Viaduct, the longest of the bridges crossing the Los Angeles River, was constructed in 1932 using state-of-the-art (at that time) concrete technology and onsite mixing plants. Most of the property surrounding the site has not changed to any large extent, and most of the commercial/industrial buildings have been in existence since 1928.

2.2 SITE OR SAMPLING AREA DESCRIPTION

The site or sampling area occupies approximately 13 acres in a primarily commercial/industrial area. The specific locations of the sampling areas from previous and current investigations within West Park and East Park areas are shown in Figures 2a through 5b.

2.3 PREVIOUS INVESTIGATIONS/REGULATORY INVOLVEMENT

The regulatory involvement in the hazardous materials issues at the current project site has been the following. Notification by the City of Los Angeles to the California Environmental Protection Agency (CalEPA)/ California Department of Toxic Substances Control (DTSC) of hazardous levels of heavy metals in soil at Parcel 18.1, 631 South Anderson Street (City filed a Resource Conservation and Recovery Act [RCRA] Subtitle C Site Identification Form), and Parcel 18.2, 625 South Anderson Street with removal/disposal of the stockpile of soil under EPA Hazardous Waste ID. The Metro 20 (prior Butterfield Property) site, located at 590 South Santa Fe Avenue, is in process of implementing remediation of both groundwater and deep soil contamination plumes that extend under the City's Sixth Street Right-of-Way (ROW). The work is being performed under a Voluntary Cleanup Agreement between Metropolitan Transportation Authority (MTA) and EPA/DTSC. The AMEC Foster Wheeler report of subsurface soil and soil gas investigation dated August 8, 2007 for Parcel 32 in PARC Area 2B (called Parcel 2 in the report but at the same address as Parcel 32) discusses a Remedial Action Order (RAO) by the California EPA/DTSC issued to Amtrak for past operations on the property. The AMEC report concluded that Volatile organic compounds (VOCs), Semi-volatile organic compounds (SVOCs) and heavy metals were not of environmental concern and recommended that the site be removed from the RAO. However, the HAI investigation of the property performed in August-September, 2015 did not confirm the findings of the Amec Foster Wheeler (AMEC) report as regards contaminants is soil gas, rather it indicated VOCs in soil gas exceeding DTSC screening levels.

The SAP includes a summary of prior investigations and the findings and recommendations of those investigations. The findings and data from these prior investigations were used to develop the SAP and have been incorporated in the analysis of site conditions presented in this report.

Also, portions of the project area are located within the mapped Methane Zone and Methane Buffer Zone and any structures or underground installations will need to comply with the City of Los Angeles Building Code Methane Zone Standards.

3.0 PROJECT DATA QUALITY ASSURANCE

Data Quality Assurance included acquiring representative samples of the subsurface soil, soil gases, and groundwater for analysis of potential contamination and the extent. Sampling acquisition, field screening, packing, preserving and transporting followed diligent Standard Operating Procedures included in the SAP to avoid sample disturbance, loss or mislabeling. Laboratory testing was performed by testing facilities certified by the State of California as qualified for performing the designated Environmental Protection Agency (EPA) test methods and with Quality Assurance/Quality Control (QA/QC) programs. Further detail is provided in Sections 4.4 and 11.0.

4.0 DESCRIPTION OF FIELD AND LABORATORY INVESTIGATIONS

The purposes of the investigation was to further define the nature and extent of contaminated soils and soil gases, assess the levels of contamination against established guidelines, to prepare a plan for handling and

treatment/disposal of the contaminated materials, and to provide rough order of magnitude cost estimates for the mitigation/remediation. The SAP which was implemented involved an environmental subsurface investigation consisting of the following.

4.1 PRE-FIELD INVESTIGATION ACTIVITIES

4.1.1 Marking of Boring Locations and Utility Clearance

To avoid utility conflicts, HAI reviewed available utility maps for the project area prior to marking the proposed boring locations. The proposed boring locations were marked either with White Marker Spray Paint or Wooden Stakes (with an orange ribbon attached for visibility) for notifying Underground Service Alert (USA) to mark the existing utility lines in the vicinity. Final boring locations were field determined based on access and utility clearances.

4.2 FIELD INVESTIGATION ACTIVITIES

Prior to beginning the fieldwork, all field personnel (including the drilling company personnel) were required to review and sign the site-specific Health and Safety Plan (HASP). Tailgate safety meeting was organized every day prior to beginning of field activities at the site. The site safety meeting logs are included in Appendix A.

Per approved SAP, a total of 33 locations were drilled using either direct push method or hand auger method to obtain soil samples and to install vapor probes for obtaining soil vapor samples at specific depths. All the borings except ADL borings (9-1, 9-2, and 9-3) were performed using direct push method. Continuous sampling was performed at the borings performed using direct push method. The details of the borings are summarized in Table 1.

The field investigation activities were performed from May 15, 2017 through May 17, 2017. Locations of borings and soil vapor probes from this investigation are shown on Figures 3a and 3b.

Locations of all the borings and soil vapor probes from prior investigations and this investigation are shown on Figures 4a through 5b.

4.2.1 Shallow Soil Borings and ADL Sampling

Per approved SAP, shallow soil borings to depths between 2 feet (ft.) and 7.5 ft. below ground surface (bgs) were performed in areas indicated on Figures 3a and 3b. Soil samples were typically collected at 0.5, 1, 3, and 5 ft. depths. Where the borings were 7.5 ft. in depth, samples were collected at 1.0, 3.0, 5.0, and 7.5 ft. depths.

Soil boring 7-1 could not reach the target depth and encountered refusal at shallower depth of 3.0 ft. bgs. Sampling was not possible at 3.0 ft bgs due to refusal. Three more locations were tried around the original location but encountered similar refusal conditions.

Three (3) shallow hand-auger borings to 5 ft. depth bgs were performed in the area near the U.S. Highway 101 as shown on Figure 3b. Samples were typically collected at 0-0.5, 1, 3 and 5 ft. depths and tested for ADL per Caltrans procedures. This investigation was performed since the area is within Caltrans ROW and some improvements are proposed.

Soil boring 9-2 could not reach the target depth and encountered refusal at shallower depth of 1.2 ft. bgs. Few more locations were tried around the original location but encountered similar refusal conditions. The refusal was due to a concrete slab in the area.

The obtained soil samples from these shallow borings were transported to a State-certified environmental laboratory for testing. The details of laboratory testing are discussed in Section 4.3.

4.2.2 Soil Vapor Probes

Per approved SAP, soil vapor probes were installed and sampled at locations shown on Figures 3a and 3b. Soil vapor probes were sampled at 5, 10, and 15 ft. depths such that discrete samples were obtained at each depth. Also, an ambient air sample was obtained at each area or parcel.

The obtained soil vapor and ambient air samples were transported to a State-certified environmental laboratory for testing. Testing of the samples is described in Section 4.3.

4.2.3 Combination Soil Boring and Soil Vapor Probes

Some locations, as specified in SAP, had soil samples taken by the direct push method in the upper 5 ft. depth bgs then continued as soil vapor probes with samples of soil gas taken at 5, 10, and 15 ft. depths. Also, an ambient air sample was obtained at each area or parcel. Testing of the samples is described in Section 4.3.

4.3 LABORATORY TESTING

Soil samples from the shallow soil borings were selected for laboratory analysis based on field screening and transported under chain-of-custody (COC) to a State-certified laboratory and analyzed for the compounds of concern as identified in SAP.

Soil vapor samples and an ambient air sample from each parcel area of sampling were transported under chain-of-custody to a State-certified laboratory and analyzed for the compounds of concern as identified in SAP.

Copies of the chain-of-custody logs are included in Appendix A.

4.4 DATA MANAGEMENT

The following checklist was followed by the project team to ensure quality of data management:

1. A briefing of all staff expected to work was conducted. The briefing included project objectives, sampling methods, health and safety and the analysis process.
2. The Standard Operating Procedures (SOPs) included in Appendix B of the SAP were reviewed and implemented by each staff member who was responsible for the fieldwork.
3. The HAI Project Manager reviewed regularly and checked the project progress against this checklist.
4. The HAI Project Manager received copies of boring logs, daily reports and chain-of-custody forms (which include laboratory tests requested on each sample) from the field and office staff and reviewed for accuracy.
5. The sample testing criteria provided in Section 5.1 was implemented to ensure the testing frequencies and types were being met.
6. The testing laboratory certified their QA/QC procedures and included all QC test results in their reports.
7. HAI's Senior Environmental Engineer/PE established the system for review of the lab results against the relevant criteria, categorizing the soil contaminations and assembling of the boring and lab test data on the graphics to be used for evaluating the extent of each soil contamination category.

8. The draft report of findings and recommendations was reviewed by HAI's QA Manager and Senior Environmental Engineer/PE prior to submittal to Tetra Tech and City for additional review. The final report will incorporate comments by Tetra Tech and City staff.

5.0 SAMPLING RATIONALE

5.1 SAMPLING AND SELECTION FOR LABORATORY TESTING

The investigation included the soil borings and sampling, soil vapor probes and sampling for laboratory chemical analysis as outlined above in Section 4.0. The rationale for sampling program is explained in the approved SAP.

All soil samples from the shallow borings were observed for visual evidence of petroleum hydrocarbons and field screened using either a photoionization detector (PID) for detecting VOCs. The PID logs are included in Appendix A.

6.0 REQUEST FOR ANALYSES

The requests for testing were prepared by the field staff following the guidelines provided in Sections 4.0 and 5.0 above, then reviewed by the HAI Senior Environmental Engineer prior to submittal to the laboratory.

6.1 ANALYTICAL LABORATORIES

The laboratories selected for this project are certified by the State for performance of the indicated test methods. They follow strict QA/QC procedures meeting EPA requirements.

7.0 FIELD METHODS AND PROCEDURES

The field methods and procedures as described in the SAP were implemented during the investigation and sampling activities.

7.1 DECONTAMINATION PROCEDURES

The approved decontamination procedures for field equipment presented in SOP 3 in Appendix B of the SAP were followed. Details of personnel decontamination are provided in the HASP included as Appendix A of the approved SAP.

8.0 SAMPLE CONTAINERS, PRESERVATION AND STORAGE

All soil samples were collected, packaged, preserved and stored for transportation to the laboratory as described in SOP 5 included in Appendix B of the SAP. Soil gas samples were obtained following procedures in SOP 9 in Appendix B of the SAP.

9.0 DISPOSAL OF RESIDUAL MATERIALS

In the process of collecting environmental samples at the Project Site during the site investigation, the HAI sampling team generated different types of potentially contaminated materials that included the following:

- Used personal protective equipment (PPE)

Used PPE and disposable equipment were double-bagged and placed in a municipal refuse dumpster. These wastes are not considered hazardous and can be sent to a municipal landfill.

10.0 SAMPLE DOCUMENTATION AND SHIPMENT

10.1 FIELD NOTES

The following information was recorded during the collection of each sample:

- Sample location and description
- Sampler's name(s)
- Date and time of sample collection
- Type of sample (soil, sediment or water)
- Unique Identification Number (UIN)
- Type of sampling equipment used
- Field instrument readings and calibration
- Field observations and details related to analysis or integrity of samples (e.g., weather conditions, noticeable odors, colors, etc.)
- Preliminary sample descriptions (e.g., for soils: clay, loam, very wet; for water: clear water with strong ammonia-like odor)
- Sample preservation
- Sample identification numbers and any explanatory codes, and chain-of-custody form numbers
- Name(s) of recipient laboratory

10.2 PHOTOGRAPHS

Photographs were taken at the sampling locations and at other areas of interest on site or sampling area. They serve to verify information entered in the field daily logs. Selected photographs taken during field investigation activities are presented in Appendix A.

10.3 LABELING

All samples collected were labeled in a clear and precise way for proper identification in the field and for tracking in the laboratory. The samples were given identifiable and unique numbers.

10.4 SAMPLE CHAIN-OF-CUSTODY FORMS AND CUSTODY SEALS

All sample shipments for analyses were accompanied by a chain-of-custody record. Copies of the completed forms are included in Appendix A.

11.0 QUALITY ASSURANCE/QUALITY CONTROL (QA/QC) AND DATA VALIDATION

Field QA/QC included daily collection of equipment blanks, trip blanks, field blanks and duplicate samples for a total of up to 10% of each soil vapor sample.

Data Validation was performed following the U.S. Environmental Protection Agency (USEPA) Region 9 Superfund Data Evaluation Validation Criteria and the USEPA Guidance on Environmental Data Verification ad Data Validation. Tier 1A Data Validation procedures were utilized for the project. Tier 1A procedures include review of the data package for completeness; review of chain of custody forms (against laboratory reported information), for signatures, sample condition upon receipt by the laboratory, and

sample preservation; review of holding times; review of Quality Control (QC) summaries; review of blank results for possible field or laboratory contamination; and random checks of reported results against raw data.

The following describes the findings of the Data Validation. Prior to submitting soil samples to the laboratory, the chain-of-custody documents were reviewed for accuracy and completeness. The laboratory reports were crosschecked with the chain-of-custody forms to confirm accurate transposing of sample information. Field and laboratory personnel implemented QA/QC procedures in conformance with the criteria specified in the SAP. Laboratory quality assurance and quality control data (method blanks, laboratory control samples and duplicates, matrix spike samples and duplicates) were also reviewed for compliance with project's QA/QC objectives. Based on this validation process, the data contained herein are adequate for the purposes of this study. Copies of the laboratory reports and chain-of-custody forms are included as Appendix C.

12.0 FIELD VARIANCES

As conditions in the field varied, became necessary to implement minor modifications to sampling as presented in the SAP. When appropriate, QA Officer and HAI Project Manager were notified and a verbal approval was obtained before implementing the changes. The variances in the field investigation activities are explained in Section 4.2.

13.0 FIELD HEALTH AND SAFETY PROCEDURES AND TRAFFIC CONTROL

During all field activities, the procedures of site-specific Health and Safety Plan in Appendix A of the SAP were followed.

14.0 DATA ANALYSIS, FINDINGS, AND RECOMMENDATIONS

Locations of borings and soil vapor probes from prior investigations and this investigation are shown on Figures 4a through 5b. The data from the prior site environmental investigations and from this investigation on soil and soil gas contaminants were screened against the California EPA/ DTSC Screening Levels for the unrestricted land use Scenario, RCRA and non-RCRA hazardous material classifications and Caltrans criteria for re-use of soils containing lead (for the samples from borings designated as ADL borings). Screening results are in included in Tables 2, 3, 4, 5 for soil, soil gas and ambient air, methane, ADL, respectively. Findings and recommendations for shallow soil, ADL, and soil gas conditions are presented in sections 14.1, 14.2, and 14.3, respectively. The findings and recommendations have been updated with the results of the baseline HHRAs dated April 2, 2019. The full report on the HHRAs is included as Appendix E. Recommendations regarding handling groundwater which may be encountered (although not likely) during construction are provided in Section 14.5. Remediation alternatives are presented and evaluated in Section 15, which also provides rough order of magnitude cost estimates for remediation.

The HHRA addresses PARC Areas 1A, 2A, 2B, 2C, 5, 6, 7, and 8 as review of environmental data collected over the last several years indicated that these parcels likely pose the greatest potential health risks. This HHRA is conducted in accordance with CalEPA and USEPA guidance. As directed by the Bureau of Engineering (BOE), City of Los Angeles, potential health risks associated with a residential (e.g., unrestricted land use) scenario and a construction scenario are quantified. Soil and soil gas data to depths of ten (10) feet were averaged for each PARC Area. CalEPA/ DTSC HERO HHRA Note 3 (CalEPA, 2018) was the primary source of toxicity criteria. The findings are summarized in the table included in the Executive Summary of the HHRA report and are utilized below in relevant portions of this report.

14.1 FINDINGS AND RECOMMENDATIONS FOR SHALLOW SOIL CONDITIONS

14.1.1 Subsurface Conditions

The soils encountered during sampling were typically fine to coarse, light brown to dark brown, silty, clayey sands with fine to coarse gravel. The moisture content in the soils varied from dry to moist at different locations. Groundwater was not encountered in any of the shallow borings.

14.1.2 Analytical Laboratory Test Results

The laboratory test results from the current and previous investigations are summarized and screened against DTSC unrestricted land use scenario health risk values in Table 2. Complete test reports from the laboratory for this investigation are included in Appendix C, which also includes the laboratories QC reports. Exceedances of the screening values for keeping the soil onsite are identified in the summary tables (highlighted in red). For heavy metals, if the total concentration in soil exceeded the trigger levels, soluble testing was performed. In addition, if total chromium exceeding the screening level additional testing for hexavalent chromium was performed on some of the samples in the area. The following further discusses the results by PARC Area:

PARC Area 1A:

- Seven (7) of the eight (8) borings completed in this area had heavy metals including cadmium and lead at concentrations above the DTSC screening level at depths ranging from 0.5 to 3.0 ft. bgs. Two (2) samples were tested for hexavalent chromium and the results were ND (non-detect, below laboratory reporting limit) and 2.9 milligram per kilogram (mg/kg) which are below the DTSC screening levels. Soluble lead concentrations (STLC) exceeded the DTSC levels but leachable lead concentrations (TCLP) did not exceed RCRA levels. So, the soil would classify as Non-RCRA or California Hazardous Waste.
- Total petroleum hydrocarbons were detected in a few samples but not at levels approaching the screening values.
- Volatile organic compounds (VOCs) were non-detect in the samples tested except for boring A-13-01 which had very high concentrations of VOCs (toluene, ethylbenzene and other hydrocarbon compounds) in the samples acquired at 60 and 65 ft. bgs, just above groundwater. These VOCs are likely related to the release at the adjacent Metro 20 site where a groundwater and deep soil cleanup action is ongoing.
- Semi-Volatile organic compounds (SVOCs) were non-detect (ND) in the four (4) samples tested.
- Three of the four samples tested for Polychlorinated Biphenyls (PCBs) were ND while one sample had Arochlor 1260 detected at a concentration of 17 microgram per kilogram (µg/kg). Arochlor 1260 is a PCB and according to the Risk Assessment Information System (RAIS) information on toxicity of Arochlor® 1260 in humans was not available. However, the detected concentration of 17 µg/kg is orders of magnitude below the oral, inhalation and dermal exposure limits of concern discussed in the RAIS database.
- Four samples tested for organochlorine pesticides were reported as ND or below the DTSC screening levels.
- The baseline HHRA (which utilizes an averaging process for all samples in the upper ten ft. depth) indicates that Total Petroleum Hydrocarbons (TPH) Diesel range organics (DRO) and lead exceed the toxic (non-cancer) risk criteria in the residential and construction worker exposure scenarios.

PARC Area 1B:

One (1) boring, 1B-1, was completed to 5 ft. bgs and tested for Title 22 heavy metals. The results were all below DTSC screening levels for keeping the soil onsite.

PARC Areas 2A, 2B and 2C:

A total of 13 soil borings were completed and sampled in these PARC areas.

- Title 22 metals, VOCs and SVOCs were non-detect or below DTSC screening levels in all samples except for one (1) sample from 65 ft. bgs in boring A-13-20 and one (1) sample from boring A-13-21 from 5 ft. bgs.
- Total Petroleum Hydrocarbons (TPH) in the gasoline carbon chain range was also detected exceeding the DTSC screening level in the boring A-13-21, 5 ft. bgs sample. The soils in the vicinity of the boring A-13-21 would classify as non-RCRA or California Hazardous Waste.
- Eleven (11) samples from the borings were tested for PCBs and results were ND.
- Nine (9) samples were tested for organochlorine pesticides and were each reported ND.
- Three (3) samples tested for organophosphorous pesticides were ND.
- Five (5) samples were tested for chlorinated herbicides and were ND.
- The baseline HHRA confirms the exceedance of TPH as gasoline toxic (non-cancer) risk in the area around boring A-13-21.

PARC Area 3:

One boring (A-13-23) was completed in this area and had no Title 22 metals detected above DTSC screening levels except for one sample at 50 ft. bgs, which had cadmium concentration above the screening level. TPH and VOCs were ND in the three (3) samples from the boring.

PARC Area 4A:

Two (2) borings were completed in this area.

- Only the 5.0 ft. bgs sample in boring R-13-04 had arsenic and cadmium exceeding the DTSC screening levels. The concentrations of arsenic and cadmium would classify the soil as non-RCRA or California Hazardous Waste.
- TPH and VOCs were ND except TPH as gasoline was detected at a very low concentration of 6 mg/kg in the 5.0 ft. bgs sample from boring R-13-03.

PARC Area 5:

Of the four (4) borings sampled in Area 5, two had detections of total lead above the DTSC screening level and to depths of 3.0 ft. bgs. The concentrations classify the soil as non-RCRA or California Hazardous Waste. Also, diesel range TPH was detected in the sample from 1.0 ft. bgs in both boring L-9 and L-10 but does not exceed the DTSC screening level for keeping the soil on site. The baseline HHRA indicates that TPH DRO slightly exceeds the unrestricted land use exposure risk criteria.

PARC Area 6:

A total of 36 soil sampling borings were completed in Area 6. As shown in Table 2, samples from borings in a large portion of this area had no exceedances of DTSC screening levels. Exceedances were found for some Title 22 metals in samples from borings 6-2, 6-4 and 6-5 at non-RCRA levels and in boring 6-3 at RCRA levels. The depths of contamination in these areas are estimated as 0.75 ft., 4.0 ft. and 2.0 ft. bgs,

respectively. Also, the east end of the area includes Parcels 18.1 and 18.2 which have multiple samples from many borings with heavy metals and various VOCs which classify the soil as RCRA Hazardous Waste. In Parcel 18.1, contamination was found in one boring (18.1-GP-1) extending to a depth of 6.5 ft. bgs. The baseline HHRA indicates:

- Cancer risk exceeds the criteria for residential and construction worker exposure scenarios driven by the concentrations of the PCB Arochlor 1260 detected in two (2) soil samples from two (2)borings.
- Toxicity risk exceeds criteria for both residential and construction worker exposure driven by TPH DRO and lead in soil samples.

PARC Area 7:

Borings for soil samples were completed at thirteen (13) locations. Samples from borings in the central portion of this area (7-1, 7-4, 7-5, and L-4) and at one location at the center of the north portion (boring 20-1) had heavy metals concentrations classifying the soil as non-RCRA or California Hazardous Waste. Also, soil gas exceedances were detected in soil vapor probes near the center and north portions of the site (see Section 14.3 below for further discussion). The baseline HHRA indicates concentration of TPH DRO in soil exceeds toxicity exposure levels in both residential and construction worker scenarios.

PARC Area 8:

Borings for soil samples were completed at five (5) locations. Three (3) locations (boring L-1, 8-1, and 8-3) had samples with concentrations reported above DTSC screening levels for lead. TCLP testing was performed on three (3) samples and the results classify the soil as non-RCRA or California Hazardous Waste.

PARC Area 9:

Three (3) borings were completed for ADL sampling (see Section 14.2 below for discussion of the results). One other boring was completed and sampled to 60 ft. bgs. One sample from 15.0 ft. bgs had cadmium exceeding the DTSC screening level.

14.1.3 Data Quality Assessment

Data Quality Assurance included acquiring representative samples of the subsurface soil, surface soil, groundwater and soil gases were acquired for analysis of potential contamination and the extent. Sampling acquisition, field screening, packing, preserving and transporting followed diligent Standard Operating Procedures (included in the SAP) to avoid sample disturbance, loss or mislabeling. Laboratory testing was performed by Advanced Technology Laboratories (ATL), which is certified by the State as qualified for performing the designated EPA test methods and with a QA/QC program.

14.1.4 Additional Investigations and/or Analysis

The following additional soil borings are recommended to better define the limits and categories of contamination:

- As areas adjacent to South Clarence and South Anderson Streets had contamination in borings located near the edge of the street, it is recommended that when locations of excavations extending under the pavements for installation or re-routing of utilities, drainage structures, etc., related to the PARC project construction are identified additional borings should be performed within the streets to investigate whether the contamination extends under the street pavement or the extent of contamination. Two (2) combination soil/soil vapor/methane probes are recommended in Area 1A to confirm the Design Level required for methane mitigation.

- Two (2) additional borings are recommended in Area 5 to better define the limits of contamination.
- Ten (10) additional borings are recommended in Area 6 to better define the limits of contamination and categories.
- Two (2) additional borings are recommended in Area 7 to better define the limits of contamination and categories.
- Two (2) additional combination soil borings/soil vapor probes are recommended in Area 8 to better define the limits of contamination and categories.

It is recommended that further exploration of the depth of contamination by heavy metals in Parcels 18.1 and 18.2 within PARC Area 6 be completed during excavation for removal/disposal of the soil. For example, this can be accomplished by using a backhoe to "pothole" the area immediately adjacent to boring GP-1(where the contamination was reported in the deepest sample at 6.5 ft. bgs) and taking samples from the bottom and sidewalls of the excavation for testing for the contaminants of concern.

Also, when excavations are completed for removal of contaminated soils, verification samples should be taken from the bottom and each sidewall of the excavations and tested for the contaminants of concern at each location.

14.2 FINDINGS AND RECOMMENDATIONS FOR AERIALLY DEPOSITED LEAD

This section applies to only Area 9 which is within Caltrans ROW and has proposed improvements as part of the PARC project.

14.2.1 Subsurface Conditions

The soils encountered during sampling were typically fine to coarse, brown, sandy silts to silty sands, with clay and fine to coarse gravel. The moisture content in the soils varied from dry to moist at different locations. Groundwater was not encountered in any of the ADL borings.

14.2.2 Analytical Laboratory Test Results

A summary of analytical laboratory test results is presented in Table 5 and statistical data of these test results are summarized in Table 6.

Total Lead

A total of ten (10) soil samples were tested for total lead using EPA test method 6010B. Total lead concentrations ranged from 1.7 mg/kg to 740 mg/kg with mean concentration of 37.65 mg/kg. The maximum total lead concentration was 740 mg/kg in the sample obtained at the depth of 0.5 feet bgs from boring 9-1.

Soluble Lead using Citric Acid Waste Extraction Test (CA-WET)

Samples with total lead more than 50 mg/kg were tested for CA-WET test. The soluble lead concentrations ranged from 1.0 to 50 milligram per liter (mg/L) with a mean concentration of 18.7 mg/L. Soluble lead concentrations exceeded the STLC of 5 mg/L in three (3) of the five (5) soil samples tested for soluble lead analysis.

Soluble Lead using Distilled Water Waste Extraction Test (DI-WET)

Five samples were tested for soluble lead concentrations using DI-WET test method. Soluble concentrations were less than the laboratory's practical quantitation limit (1.0 mg/L) in all the tested samples as shown in Table 5.

Toxicity Characteristic Leaching Procedure (TCLP)

Five (5) samples were analyzed using the EPA Toxic Characteristic Leaching Procedure (TCLP) for leachable lead. TCLP concentrations for lead were less than the laboratory's practical quantitation limit (0.25 mg/L) in all the tested samples as shown in Table 5 except the sample from 0.5 ft. bgs in boring 9-1 and the sample from 1.0 ft. bgs in boring 9-2 which had concentrations of 0.42 and 1.5 mg/L, respectively. These reported values are significantly below the level which would classify the soil as RCRA Hazardous Waste.

Hydrogen Ion Concentration (pH)

Two (2) samples were analyzed for pH concentration using EPA method 9045C and the reported values ranged from 6.8 to 7.6. All of the samples analyzed had reported pH concentrations greater than the criterion of 5.0 (listed in the DTSC variance); therefore, soil in these locations is not limited to reuse in covered areas.

14.2.3 Data Quality Assessment

Prior to submitting soil samples to the laboratory, the chain-of-custody documents were reviewed for accuracy and completeness. The laboratory reports were crosschecked with the chain-of-custody forms to confirm accurate transposing of sample information. Field and laboratory personnel implemented QA/QC procedures in conformance with the criteria specified in the SAP. Laboratory quality assurance and quality control (QA/QC) data (method blanks, laboratory control samples and duplicates, matrix spike samples and duplicates) were also reviewed for compliance with project's QA/QC objectives. Based on this validation process, the data contained herein are adequate for the purposes of this study. Copies of the laboratory reports and chain-of-custody forms are included as Appendix C.

14.2.4 Statistical Evaluation of ADL Impacted Soil Data

The field and laboratory data were analyzed to identify the appropriate handling of soil affected by ADL under the terms of the agreement between DTSC and Caltrans dated June 30, 2016 (http://www.dot.ca.gov/hq/env/haz/pdfs/adl/dtsc_ct_adlfinal_063016.pdf). The agreement is included in Appendix D and referred to here as ADL-Agreement, which applies to ADL-contaminated soil generated by Caltrans in the course of State highway projects, in all Caltrans districts, statewide. The variance applies to activities which include stockpiling, disposal, tracking, transportation and final placement of ADL-contaminated soil.

The ADL Agreement includes performing statistical analysis of the laboratory test results on soil samples. USEPA's statistical analysis package ProUCL v5.1.002 was used to perform the statistical evaluation. Statistical analysis was completed on the full depth sampling set. To assist in future soil handling and disposal, statistical evaluation was performed based on depth of the samples. The obtained results are explained in the following sections.

14.2.5 Applicability of ADL Agreement

Section 4.1.5 of the ADL-Agreement states the following:

"*4.1.5 ADL-contaminated soils with any of the following characteristics may not be managed under this Agreement and must be properly disposed of:*

4.1.5.1 Soils that are RCRA hazardous waste, including but not limited to soils exceeding the RCRA hazardous waste threshold for lead according to the Toxicity Characteristic Leaching Procedure (TCLP), USEPA Method 1311.

4.1.5.2 Soils that are non-RCRA hazardous waste, except soils whose sole hazardous constituent posing an unacceptable risk to human health or the environment is lead in concentrations not exceeding

3,200 mg/kg of total lead and not exceeding 150 mg/l of extractable lead based on a modified waste extraction test using deionized water as the extractant (DI WET).

4.1.5.3 Soil having a pH less than or equal to 5.0."

Clean soil is defined in the ADL-Agreement as follows:

"3.1.2 ***Clean Soil.*** *For purposes of this agreement, clean soil is defined as soil not containing total lead over 80 mg/kg based on a 95 percent UCL or soluble lead over 5 mg/L based on a 95 percent UCL as determined by the CA-WET and not containing other constituents at levels that would pose an unacceptable risk to human health or the environment or be unacceptable to the Regional Water Quality Control Board with jurisdiction."*

14.2.6 Requirements for Managing ADL-Contaminated Soils

The ADL-Agreement includes multiple requirements for managing ADL-Contaminated soil, which should be referred to by the construction contractors.

The ADL-Agreement includes the following table for determining minimum cover requirements for ADL-contaminated soil:

Table 7. Minimum Cover Requirements for ADL-contaminated Soil Based on Extractable and Total Lead Concentrations (95% UCL)*

Extractable Lead Concentration		Total Lead Concentration	Minimum Cover Requirement
Less than 5 mg/L CA-WET	and	Less than 320 mg/kg	No cover requirement
Greater than 5 mg/L CA-WET and equal to or below 1.5 mg/L DI-WET	or	Greater than 320 mg/kg but equal to or below 1600 mg/kg	One foot of clean soil**
Greater than 1.5 mg/L DI-WET but equal to or below 150 mg/L DI-WET	or	Greater than 1600 mg/kg but equal to or below 3200 mg/kg	Pavement structure
Greater than 150 mg/L DI-WET	or	Greater than 3200 mg/kg	Subject to full regulation as hazardous waste

* ADL-contaminated soil having a pH less than or equal to 5.0 may not be managed under this Agreement and must be properly disposed of.

** This is the minimum requirement. Such soil may alternatively be covered by a pavement structure.

The ADL-Agreement includes many other requirements for stockpiling and transporting of ADL-contaminated soil, dust control, Lead Compliance Plan, Health and Safety Plan, notification of the Public, and Project Closeout Report. The construction contractor should review and implement the requirements of the full ADL-Agreement.

14.2.7 Entire Data Set (0-5.0 ft. bgs)

Table 6 provides a summary of the 95 percent UCLs calculated for total lead and soluble lead concentrations (using CA-WET) reported for soil samples from the project site. Based on a comparison of the 95 percent UCL values generated by ProUCL, since the 95 percent UCL on mean total lead is 690.5 mg/kg and 95 percent mean STLC (CA-WET) of 46.8 mg/L is greater than 5 mg/L, the data set for total lead does not meet the definition of Clean Soil in the ADL Agreement.

A statistical analysis of soluble lead from DI-WET analyses was not performed since all DI-WET results were below the laboratory's detection limit (0.057 mg/L). However, since the maximum concentration is below the 1.5 mg/L DI-WET criterion for the ADL Agreement, the data set meets the requirement for a minimum of one foot of clean soil cover (alternatively the soil may covered by a pavement structure).

The pH was measured in two (2) samples and their reported values are 6.8 to 7.6. Therefore, since the pH was above 5.0 in all samples tested, the pH concentrations would not change the ADL soil classification.

Since results of total lead, DI-WET and TCLP analyses were below the respective 3,200 mg/kg, 150 mg/L and 5 mg/L regulatory thresholds, waste soils would not be considered RCRA (federal) hazardous.

14.2.8 Depth Specific Layers

The statistical parameters for each sampling depth from all the borings are summarized in Table 6. The cover requirement determination for each interval is provided on the table and as follows:

0-2.9 ft. depth: 1 feet of clean soil cover (alternatively the soil may be covered with pavement)

3.0-5.0 ft. depth: No cover required - soils classify as "Clean" per ADL Agreement

14.2.9 Conclusions and Recommendations

Variance

Soil below 2.9 ft. depth bgs is classified "Clean Soil" and can remain in place or if excavated and handled separately from soils below 2.9 ft. bgs the soils can either be released to the Contractor for unrestricted use on site, used on other Caltrans projects or disposed of as non-ADL contaminated/non-hazardous soil. Soil excavated and handled separately in the 0.0 to 2.9 ft. bgs depth range would require placement with 1 ft. of clean soil cover (alternatively the soil could be covered with pavement).

Should all soil in the 0.0 to 5.0 ft bgs depth range be excavated in mass (i.e. the if the soil in from 0.0 to 2.0 ft bgs is not excavated and handled separately from the soils below 2.0 ft. bgs) all the soil would need to be placed with a minimum one foot of clean soil cover (alternatively the soil could be covered with pavement)..

Two (2) soil samples tested had reported pH values at or above the variance criterion of 5.0. Therefore, soil tested within the Caltrans ROW does not contain a pH value below that which would affect to the DTSC Variance conditions.

Since offsite disposal may be required, the soil should be handled based on the criteria described in following section.

Waste Characterization

Based on the analytical results of this ADL Survey, soil samples collected at the 8 boring locations did not contain total lead in excess of the California TTLC of 3,200 mg/kg or extractable lead by DI-WET method in excess of 150 mg/L, therefore, the soil would not classify as being required to meet full hazardous waste regulations.

14.2.10 Additional Investigations and/or Analysis

None recommended.

14.3 FINDINGS AND RECOMMENDATIONS FOR SOIL GAS CONDITIONS

The EMI Phase I report concluded the following regarding soil gas impacts:

"Hazardous levels of soil gases were not detected in the vadose zone during drilling of hollow stem auger borings. High levels of combustible gas (>100% Lower Explosive Limit [LEL]) and hydrogen sulfide (200 ppm) were detected in borings A-13-01, A-13-08, and A-13-19 while drilling into groundwater. Boring A-13-21 showed 39% LEL after encountering groundwater. Both combustible gas and hydrogen sulfide (H2S) were non-detect in all of the other hollow-stem auger borings. The combustible gas (presumably methane) and hydrogen sulfide are probably due to reducing conditions in the groundwater, which may be naturally occurring or, in AOC-1, due to petroleum hydrocarbon contamination in the groundwater. The rate of hazardous gas production from groundwater is expected to be negligible except during agitation of the groundwater, as during drilling or high-volume pumping of groundwater. Open-hole drilling (as with a bucket or flight auger) into groundwater should be monitored for combustible gas and methane at the ground surface adjacent to the hole. VOC impacts in soil gas are low to very low except where significant soil or groundwater impacts are present."

The results of soil gas sampling and testing during HAI investigations of the Parcels of land within or immediately adjacent to the PARC Project limits and the Phase II PARC investigation recently completed by HAI are summarized in Tables 3 and 4. Based on the HHRA the areas with soil gas constituent concentrations exceeding the health risk criteria include PARC Areas 7 (PCE and TPH DRO) and 8 (PCE). The baseline HHRA (which calculated the attenuation factors for soil gas emissions) indicates that soil gas concentrations in Area 2A do not exceed the risk criteria in either the residential or construction worker exposure scenario (including excavations and trenching).

Based on these results PARC areas requiring mitigation for soil gas exceedances of Health Risk Screening Levels are highlighted on Figure 7. Mitigation alternatives and ROM costs are discussed in Section 15 below.

14.3.1 Additional Investigations and/or Analysis

Additional soil gas sampling and testing is recommended for completion in Areas 1A, 5, 6, 7 and 8. As previously discussed with Tetra Tech and the City, the DTSC Screening Levels for soil gas contaminants are generic and generally quite conservative. The additional sampling and a focused HHRA could potentially eliminate or reduce the need for soil gas remediation..

Should soil vapor extraction (SVE) be the preferred method of remediation, it is recommended that site-specific soil vapor extraction pilot tests be performed for conceptual design and improved estimation of the cost for remediation by SVE.

14.4 FINDINGS AND RECOMMENDATIONS REGARDING METHANE IN SOIL GAS

Since portions of the PARC project are located within the City of Los Angeles Methane and Methane Buffer Zone (see Figure 6) construction of facilities (buildings, underground vaults with access, and certain paved areas) within these areas must consider the requirements of the City of Los Angeles Ordinance 175790 and Division 71, Methane Seepage Regulations.

Sampling and testing for methane, hydrogen sulfide and pressure was performed in three (3) soil gas vapor wells installed at Parcel 32 in PARC Area 2B (see Figure 2a). Methane and hydrogen sulfide was not detected using field instrument (GEM 2000). Also, pressure testing on the three vapor wells resulted in zero indicated pressure. In addition, samples were obtained at depths of 5 to 15 ft. bgs at seven (7) locations during this Phase II investigation (see Figures 3a & 3b). The results are summarized in Table 4. Methane concentrations were reported by the laboratory as "Not Detected (ND)" for all samples except three (3) for which methane concentrations ranged from 21 to 260 parts per million by volume (ppmv). The latter concentration was reported in the sample from 15 ft. bgs in soil vapor probe 2A-2 in Area 2A. The data would classify the areas sampled or tested as Site Design Level I per Table 71, Minimum Methane

Mitigation Requirements of the Methane Seepage Regulations, except Area 2A which would classify as Design Level II.

According to the Exceptions to Table 71 buildings and paved areas within the Methane Buffer Zone with no measured pressure and with Design Level I or II do not require methane mitigation (reference section 91.7104.3.6 and 91.7104.4 of the Methane Seepage Regulations, respectively). This would apply to all of the PARC areas tested for methane except Area 1A (see Figure 6a) which is within the Methane Zone and portions of Area 7 where soil gases were detected and impervious surfaces are to be constructed adjacent to existing buildings. Any buildings (except naturally vented) to be constructed in Area 1A should have methane mitigation systems meeting Level II requirements Table 71 (involving membrane and passive venting) unless additional testing indicates no subsurface gas pressure and lower methane concentrations. Also, paved areas that are over 5,000 square feet in area and within 15 feet of the exterior wall of a commercial, industrial, institutional building, should be vented in accordance with the Methane Mitigation Standards, design Level II unless additional testing indicates no subsurface gas pressure and lower methane concentrations. Additional investigation and testing in these areas are recommended as described in Section 14.4.1 below.

14.4.1 Additional Investigations and/or Analysis

Additional testing for methane concentrations and subsurface pressure should be completed in accordance with the Division 71 Methane Seepage Regulations testing requirements should any buildings or paved areas over 5,000 sf be proposed in Area 1A and in Area 7 where methane was detected in this investigation.

Two (2) vapor/methane probes are recommended in Area 1A and three (3) vapor/methane probes are recommended to be completed in Area 7. In addition to methane concentration measurements the probes will be used to measure pressure in the soil gas.

14.5 RECOMMENDATIONS FOR HANDLING GROUNDWATER ENCOUNTERED DURING CONSTRUCTION

The EMI Phase I report concluded the following regarding groundwater impacts:
"Gasoline-range hydrocarbons, toluene, naphthalene, other aromatic VOCs, 1,4-dioxane, methyl isobutyl ketone, 1,1-dichloroethane, ethanol, and acetone were detected in the groundwater samples from wells A-13-01 and R-13-02. These impacts are probably the result of solvent releases from the BASF/Inmont facility at 590 South Santa Fe Avenue, with possible contributions from other nearby UST sites. Petroleum hydrocarbon and MTBE impacts were detected in groundwater samples from wells A13-08 and R-13-10. Petroleum hydrocarbon and VOC concentrations exceed the screening levels for groundwater discharges to surface waters (including via the storm sewer) in four of the five wells sampled. In addition, the nickel concentration in one sample slightly exceeded the screening level. Treatment will be required for groundwater discharged to the storm sewer or surface water from construction dewatering on this project. If the quantity of groundwater to be generated is expected to be small, the groundwater may be transported to a recycler via tank truck rather than discharged under an National Pollutant Discharge Elimination System (NPDES) permit."
Also, groundwater within the PARC limits near the Metro 20 site has been impacted by contaminants leaking from underground structures previously located on the MTA site. Therefore, it is recommended that all groundwater generated during construction be containerized, sampled and tested for all contaminants included in Screening Levels For General Permits, Los Angeles Regional Water Quality Control Board (LARWQCB) Order No. R4-2013-0095, NPDES No. CAG994004 - Discharge of Groundwater from Construction and Project Dewatering to Surface Waters, Attachment E to determine appropriate disposal. If the test results do not meet the discharge criteria, the water should be transported under manifest to an appropriate treatment/disposal facility. A California Hazardous Waste Identification Number will be required prior to transporting the water. The selected facility may require additional testing prior to accepting the water.

14.5.1 Additional Investigations and/or Analysis

It is recommended that all groundwater generated during construction be containerized, sampled and tested for all contaminants included in Screening Levels for General Permits, LARWQCB Order No. R4-2013-0095, NPDES No. CAG994004 - Discharge of Groundwater from Construction and Project Dewatering to Surface Waters, Attachment E to determine appropriate disposal. If the test results do not meet the discharge criteria, the water should be transported under manifest to an appropriate treatment/disposal facility. A California Hazardous Waste Identification Number will be required prior to transporting the water. The selected facility may require additional testing prior to accepting the water.

15.0 REMEDIATION ALTERNATIVES AND ROUGH ORDER OF MAGNITUDE COST ESTIMATES

15.1 REMEDIATION ALTERNATIVES

The remediation alternatives considered are for the following categories:

- Category 1: Soil with Heavy Metals Concentrations or PCB concentrations above RCRA Hazardous Waste Levels:
    a. With No Soil Gas Contaminants Exceeding DTSC Screening Levels
    b. With Soil Gas Contaminants Exceeding DTSC Screening Levels (NO CONDITIONS WERE FOUND MEETING THIS CATEGORY)
- Category 2: Soil with Heavy Metals Concentrations and/or TPH GRO above DTSC Health Risk Screening Levels but At or Below RCRA Hazardous Waste Levels:
    a. With No Soil Gas Contaminants Exceeding DTSC Screening Levels
    b. With Soil Gas Contaminants Exceeding DTSC Screening Levels
- Category 3: Soil with Soil Gas Contaminants above DTSC Health Risk Screening Levels but No Heavy Metals or Other Hazardous Material Content
- Category 4: Soil with ADL Concentrations Exceeding the Caltrans/DTSC Agreement "Clean Soil" Definition

Remediation alternatives considered feasible for each Category include:

- Category 1a (RCRA Level Heavy Metals, PCB or TPH DRO Only):
  Excavate and Dispose at Class 1 Hazardous Waste Landfill
- Category 2a (Heavy Metals and/or TPH DRO at Non-RCRA Levels Only):
  Excavate and Dispose of Soil at Class 2 Landfill as Non-RCRA Hazardous Waste
- Category 2b (Heavy Metals and/or TPH DRO at Non-RCRA Levels and VOCs in Soil Gas):
  Excavate and Dispose of Soil at Class 2 Landfill as Non-RCRA Hazardous Waste and Install SVE System and Optional Perimeter Vertical Barrier/Liner
- Category 3 (VOCs in Soil Gas but No Heavy Metals or TPH DRO in Soil)):
  Excavate and Dispose of Soil as RCRA Hazardous Waste at Class 1 Landfill OR Install SVE System and Optional Perimeter Vertical Barrier/Liner OR Design and Install Subsurface Gas Mitigation Systems for Proposed Development Facilities
- Category 4 (Soil with ADL):
  Provide Clean Soil Cover or Pavement Cover per the Caltrans/DTSC ADL Agreement

Brief descriptions of each alternative follow:

Category 1a (RCRA Level Heavy Metals, TPH DRO and/or PCBs Only):

Remediation by Excavation and Disposal of the Soil at Appropriate Hazardous Materials Facility

This remediation approach would involve excavation of the soil to the limits designated on Figure 8a and 8b for each PARC Area and transport of the soil under manifest to a facility approved for disposal of RCRA Hazardous Waste. A site-specific EPA Hazardous Waste Generator Identification Number would need to be obtained and manifests completed by the licensed transporter. Additional sampling and testing would likely be required by the facility accepting the soil for disposal. For excavations deeper than 4 feet, shoring or other approved means would be required to maintain stability of the excavation walls. During excavation, the site would need to have dust control and runoff controls to prevent windborne or surface waterborne migration of the soil from the site. The soils would need to be directly loaded into the transport trucks which would require tarps to prevent spillage or windblown loss of soil during transport. These controls would need to be verified and monitored by an independent third party. A site-specific Health and Safety Plan would need to be prepared and implemented during all field work including full time perimeter sampling and testing of particulate/dust from the site. All onsite workers and supervisors would have to have completed a 40-hour Occupational Safety and Health Administration (OSHA) Hazardous Waste Operations and Emergency Response (HAZWOPER) training course and be equipped with the appropriate personal protective equipment. Finally, the excavation would need to be backfilled with certified clean soil meeting the design specifications of the PARC project.

Category 2a (Heavy Metals and/or TPH DRO at Non-RCRA Levels Only):
Excavate and Dispose of Soil at Class 2 Landfill as Non-RCRA Hazardous Waste

This remediation approach would involve excavation of the soil to the limits designated on Figures 8a and 8b for each PARC Area and transport of the soil under manifest to a facility approved for disposal of Non-RCRA Hazardous Waste. A California EPA Non-RCRA Hazardous Waste Generator Identification Number would need to be obtained and manifests completed by the licensed transporter. Additional sampling and testing would likely be required by the facility accepting the soil for disposal. For excavations deeper than 4 feet, shoring or other approved means would be required to maintain stability of the excavation walls. During excavation, the site would need to have dust control and runoff controls to prevent windborne or surface waterborne migration of the soil from the site. The soils would need to be directly loaded into the transport trucks which would require tarps to prevent spillage or windblown loss of soil during transport. These controls would need to be verified and monitored by an independent third party. A site-specific Health and Safety Plan would need to be prepared and implemented during all field work including full time perimeter sampling and testing of particulate/dust from the site. All onsite workers and supervisors would have to have completed a 40-hour OSHA HAZWOPER training course and be equipped with the appropriate personal protective equipment. Finally, the excavation would need to be backfilled with certified clean soil meeting the geotechnical specifications of the PARC project.

Category 2b: (Heavy Metals and/or TPH DRO at Non-RCRA Levels and VOCs in Soil Gas):
Excavate and Dispose of Soil at Class 2 Landfill as Non-RCRA Hazardous Waste and Install SVE System and Optional Perimeter Vertical Barrier/Liner

In addition to the procedures described above for Category 2a the sites with conditions of Category 2b would also require the following due to the VOCs in soil gases:

1. Emission controls such as water spray or application of foam agents to all exposed soil surfaces and/or large spark free fans to clear the area of emitting VOCs. Full time monitoring would be required to verify that the controls prevent the VOCs from impacting workers or the public and the controls and monitoring would need to comply with South Coast Air Quality Management District (SCAQMD) Rule 1166 and a Mitigation Management Plan would need to be approved by SCAQMD.
2. A detailed Health and Safety plan would need to be prepared and implemented during all excavation and transport.

3. The excavation and transport/disposal of the soil would require permitting and approval by the Certified Unified Program Agencies (CUPA), Cal EPA/DTSC and SCAQMD. A detailed Work Plan/Remedial Action Plan would need to be prepared and submitted to these agencies for review and approval. SCAQMD requires submittal and approval of a Mitigation Plan for potential VOC emissions during excavation under their Rule 1166. A site-specific EPA Hazardous Waste Generator Identification Number would need to be obtained and manifests completed by the licensed transporter.
4. A soil vapor extraction system would be required to be designed and installed to remove and treat VOCs in the soil gases. If Health Risk Assessments indicate the need, a vertical barrier/line would be installed around the perimeter of the area to prevent soil gases with VOCs from migrating back into the area. Gases migrating from below the clean backfill or deeper depths would be extracted through the SVE slotted wells and treated by the SVE treatment system. Treatment for VOCs typically involves carbon filtration unless hydrogen sulfide is detected in the gas stream. Operating and maintenance procedures for the SVE system and permit applications would need to be prepared and approved by the oversight agency and SCAQMD.
5. Design and implementation of a "Pilot Study" to evaluate the sustainable flow rate and concentration of VOCs in the soil gas stream and to size the final SVE system components.
6. Design of the SVE system, preparation of a Design Report and Work Plan/Remedial Action Plan (including HASP) for submittal to and approval by the CUPA and/or CalEPA/DTSC.
7. Solicitation of Bids for construction and implementation of the remediation.
8. Implementation and monitoring of the SVE. This may require several months to over a year.
9. Reporting to the agencies with documentation that the SVE has reached the specified clean up goals.
10. Finally, the excavation would need to be backfilled with certified clean soil meeting the geotechnical specifications of the PARC project.

Category 3 (VOCs in Soil Gas but No Heavy Metals):
Alternative 1-- Excavate and Dispose of Soil as RCRA Hazardous Waste at Class 1 Landfill and Install Liner and/or SVE System;
Alternative 2-- Installation and Operation of SVE System and Optional Perimeter Vertical Barrier/Liner; OR
Alternative 3-- Design and Installation of Subsurface Gas Mitigation Systems for Proposed Development Facilities

Three alternatives are considered feasible for this category remediation including 1) excavation and disposal of the soil as RCRA Hazardous Waste and installation of a liner on the bottom and side walls of the excavation and an SVE system, 2) installation and operation of soil vapor extraction system, and 3) design and installation of subsurface gas mitigation systems for proposed development facilities. The first alternative is the same as described above for Category 2b. The perimeter vertical barrier/liner system would function to prevent a return of the contaminated soil gases to the subject area, i.e. the soil gases would not migrate from surrounding areas into the clean backfill. Gases migrating from below the clean backfill or deeper depths would be extracted through the SVE slotted wells and treated by the SVE treatment system. Treatment for VOCs typically involves carbon filtration unless hydrogen sulfide is detected in the gas stream.

The excavation alternative (Alternative 1) would involve removal of the soil containing contaminants to a depth of up to 15 ft. or more. Shoring of the excavation walls would be necessary. A liner would be installed on the bottom of the excavation to prevent contaminated soil gas from re-entering the backfill. The side walls would have gas migration mitigated by either installation of a vertical liner placed on the side walls

of the excavation or SVE wells installed vertically outside the limits of the excavation after backfilling is done. The backfill soil would need to be certified clean fill and placement would need to meet the PARC project geotechnical specifications. During the process the site would require strict emissions controls and monitoring.

The SVE treatment method (Alternative 2) utilizes extraction and monitoring wells (In Situ Method) or excavation and encapsulation of impacted soils in above ground piles with horizontal slotted piping (On Site Method), a vacuum pump or pumps, and carbon filtration units to extract and remove VOCs from the soil gas. The process would require several steps as follows:

1. Design and implementation of a "Pilot Study" to evaluate the sustainable flow rate and concentration of VOCs in the soil gas stream and to size the final SVE system components.
2. Design of the SVE system, preparation of a Design Report and Work Plan/Remedial Action Plan (including HASP) for submittal to and approval by the CUPA and CA EPA/DTSC.
3. Solicitation of Bids for construction and implementation of the remediation.
4. Implementation and monitoring of the SVE. This may require several months to over a year.
5. Reporting to the agencies with documentation that the SVE has reached the specified clean up goals.

The third alternative, Design and Installation of Subsurface Gas Mitigation Systems for Proposed Development Facilities, mitigates the impact of the VOCs and/or methane and hydrogen sulfide by precluding soil gases migration from the subsurface soil and intrusion into structures or other facilities and surface emissions. The approach has been utilized at hundreds of public and private facilities in Los Angeles including those located in the Methane Zone (where structures are at risk of methane and hydrogen sulfide migration from underlying natural oil/gas field deposits) where such systems have continued successfully to protect human health and the environment for many years (Reference Los Angeles Unified School District [LAUSD] Schools in the Methane Zone). Depending on the type of soil gases and pressure in the soil gas, the systems can include several of the following components:

- Shallow excavation (3-4 ft. bgs) to allow installation of the mitigation components (some of the soil would be used to backfill trenches)
- Gravel layers and slotted piping for gas collection
- Liner installation above the slotted piping and extending side wide
- Vacuum pumps for gas extraction or air injection blowers
- Filtration systems to remove VOCs and/or hydrogen sulfide from the gas stream
- Geomembrane barriers placed beneath concrete slabs and/or foundations or fill areas
- Installation of automated and/or manual monitoring systems.

More detail on design and operation of these mitigation systems can be found in Division 71, Methane Seepage Regulation and associated Standard Plans.

We have made the comparison of the Category 3 alternatives as shown in the following table. The relative scoring is based on general experience with these remediation or mitigation processes in the Los Angeles and Southern California areas. The scores are on a scale of 1 to 10, with 10 being the best.

Table 8. Relative Scoring Comparison of Feasible Remediation/Mitigation Alternatives

Criteria	Alt. 1 Excavation/SVE Alternative	Alt. 2 SVE Treatment System	Alt. 3 Subsurface Gas Mitigation	Comments
Design Difficulty	8	7	8	**Alt. 1 requires vertical liners on sidewalls**
Permitting Ease	6	8	8	**Many projects are using Alt. 2 and 3 in LA area**
Requirement for Specialty Contracting	8	7	6	**Many qualified contractors for Alt. 2 and 3 in LA area**
Time to Implement	8	6	4	**SVE can require over 12 to 18 months, Alt. 3 can require very long- term OM&M**
Risk	3	8	5	**Excavation/transport poses more risk to exposure of workers and public. Both Alt 2 and 3 require evidence of successful treatment of emissions**
Potential Conflicts with Site Use	9	8	4	**SVE wells require access and protection. Alt. 3 restricts excavations for utilities, landscaping**
Relative ROM Cost	1	7	9	**Excavation/Disposal as RCRA Haz Waste is High Cost**
Total Score	43	51	44	

The comments indicate key reasons on alternative were given a better score than the other. Based on this comparison, the SVE Treatment system was selected for use in the ROM cost estimates for Category 3. A primary reason for the selection is the reduced conflict with PARC facilities and the finite period for completion of remediation compared to the subsurface gas mitigation alternative and the much lower cost as compared to the removal and disposal alternative.

Category 4 (Soil with ADL Only):
Provide Clean Soil Cover or Pavement Cover per the Caltrans/DTSC ADL Agreement

Category 4 mitigation is discussed above in Section 14.2 regarding soils containing ADL and in Caltrans ROW. The results indicate that the soils above a depth of approximately 2.9 ft. bgs would require one foot of clean soil cover to remain on site per the Caltrans/DTSC ADL Agreement.

15.2 SELECTION OF REMEDIATION ALTERNATIVE FOR EACH PARC AREA

The categories of contamination for each PARC Area or portions thereof are presented below and on Figures 7a and 7b. The lateral limits of contamination were limited to the boundary of the each PARC Area or estimated to be approximately at the mid-point distance between contaminated borings or gas probes and adjacent uncontaminated borings or gas probes in each applicable direction. The areas of contamination in each PARC Area or portion and Category were estimated from the Figures 7a and 7b. Depths of contamination were estimated in each PARC Area or portion thereof as described below. The Areas of Concern with contamination and depths are shown on Figures 8a and 8b.

PARC Area 1A (West, Central and East Portions)

Category 2a: Soils in a portion of this area have heavy metals (cadmium, chromium and lead) exceeding DTSC Health Risk Screening levels to depths of ranging from 1 to 3.5 ft. bgs while samples at 5.0 ft. bgs did not have exceedances. For remediation estimates the depth of contamination was assumed to be as shown on Figure 8a and Table 9 for each sub-zone. As discussed above the area is in the Methane Zone and recommendations regarding this were presented above in Section 14.4.

Area 2A Northeast Corner:

Category 2b: This portion of Area 2A contained non-RCRA levels of heavy metals in sample at 5.0 ft. bgs (for volume and cost estimates a depth of contamination of 6.0 ft. bgs was used).

Area 4A Southern Portion: NO WORK IN THIS AREA IS INVOLVED WITH THE PARC PROJECT SO NO REMEDIATION IS PROPOSED HEREIN)

Category 2a: This portion of Area 4A had non-RCRA levels of arsenic and cadmium to 5ft. bgs in the one boring completed in the portion. For volume and cost estimates the depth of contamination was assumed to be 6.0 ft. bgs.

Area 5 Central Portion:

Category 2a: This portion of the area has heavy metals at non-RCRA Hazardous or California Hazardous Waste levels in samples at 2.0 and 3.0 ft. bgs. A depth of contamination of 4.0 ft. bgs was assumed for volume and cost estimates.

Area 6 Portion around Borings 6-2:

Category 2a: Due to heavy metals at non-RCRA levels in the sample from 0.5 ft. bgs. For volume and cost estimates a depth of 0.75 ft. bgs was used since the sample at 1.0 ft. bgs did not have heavy metals exceeding the screening levels.

Area 6 Portion around Boring 6-3:

Category 1a: Due to heavy metals at RCRA levels to depths of 3.0 ft. bgs in samples. Since the samples at 5.0 ft. bgs did not have exceedance of screening levels a depth of 4.0 ft. bgs was used in volume and cost estimates.

Area 6 Portion around Boring 6-4 and 6-5:

Category 2a: Due to non-RCRA levels of heavy metals in sample at 1.0 ft. bgs. Because samples at 3.0 ft. bgs did not have heavy metals exceedances a depth of contamination of 2.0 ft. bgs was used in volume and cost estimates.

Area 6 (Parcels 18.1 and 18.2):

Category 1a: Due to heavy metals at RCRA Hazardous Waste levels in many samples from 1.0 to 3.5 ft. bgs. A depth of 3.5 ft. and 4.5 ft. bgs was used for volume and cost estimates.

Area 7 North Portion

Category 3: Due to soil gas contamination only.

Area 7 North Central Portion

Category 2b: Due to both non-RCRA levels of lead and soil gas contamination.

Area 7 Central Portion:

Category 2b: Due to presence of both soil gas contaminants (Parcel 22) and heavy metals and TPH exceeding DTSC screening levels but metals are below RCRA Haz Waste levels. The depth of contamination used for volume and cost estimates was 2.0 ft. bgs with the added assumption that the TPH exceedance is localized to the near vicinity of boring 7-4 and can be removed by a limited "potholing" operation.

Area 7 East Portion:

Category 2b: Borings within this portion of Area 7 did not contain soil contaminants exceeding DTSC screening levels. However, soil gas contaminants (VOCs) at concentrations exceeding DTSC screening levels were detected in vapor probes installed in the area (i.e. Parcel 22).

Area 8 East Portion:

Category 3: Due to soil gas contamination only.

Area 8 West Portion:

Category 2b: Due to both soil gas exceedances of DTSC screening levels and heavy metals in soil (non-RCRA level). A depth of 4.0 ft. bgs was used for volume and cost estimates.

15.3 ROUGH ORDER OF MAGNITUDE COST ESTIMATE FOR REMEDIATION

The ROM cost estimates for each PARC Area or portion thereof are presented in Table 9. Unit rates were taken from the references in the notes. Other relevant assumptions are provided at the bottom of the table. Areas of each PARC Area were estimated using Figures 7a and 7b. Depths of soil contamination were estimated as discussed above in Section 15.2. Pavement removal costs for excavations for remediation have not been included as the areas and conditions of pavement have not been completely defined.

The estimate range of -20% to +25% is typical for these types of estimates which are not based on designs and contractor quotes. **It is recommended that the estimates be upgraded when designs are completed and utilizing contractor quotes.**

A comparison of results of screening the soil sample and soil gas sample data using DTSC/ California Office of Environmental Health Hazard Assessment (OEHHA) commercial (CSL) and unrestricted land use (RSL) Human Health Risk Screening Levels was completed. The attached Tables 10 and 11 present the results. The blue highlighted entries indicate that the concentration is between the RSL and CSL. In some instances, the same sample or samples at the same depth in nearby borings had concentrations exceeding the CSL. We have reviewed the results and looked at other factors to develop the following comments. Some areas (including a portion of Area 2, Area 5, the portion of Area 6 near boring 6-2, reduced depth of remediation in Area 6 near boring 6-3, and a small portion of Parcel 18.1 in Area 6) of the Project would have less or no remediation required if CSLs were used for the evaluation. It is roughly estimated that the use of RSLs would add approximately 8-10% to the overall Project remediation cost.

16.0 LIMITATIONS

The observations and conclusions given above are the professional opinions of Hushmand Associates, Inc. based on our observations and on reasonably ascertainable information supplied by government agencies, other records sources, laboratories, and the client. This report was prepared in accordance with the standards of practice commonly used by environmental professionals in this area. No other warranty, express or implied, of any kind is made or intended in connection with this report, or by the fact you are being furnished this report, or by any other oral or written statement.

TABLES

Table 1. List of Soil Borings and Soil Vapor Probes (Current Data Gap Investigation)

Soil Boring / Vapor Probe ID	Proposed Depth (ft)	Completed Depth (ft)	Description	Notes
1A-1	5.0	5.0	Soil sampling only	
1A-2	5.0	5.0	Soil sampling only	
1A-3	5.0	5.0	Soil sampling only	
1A-4	5.0	5.0	Soil sampling only	
1B-1	5.0	5.0	Soil sampling only	
2A-1	15.0	15.0	Soil sampling to 5 ft. bgs; Soil Vapor sampling at 5ft., 10 ft., 15 ft. bgs	
2A-2	15.0	15.0	Soil sampling to 5 ft. bgs; Soil Vapor sampling at 5ft., 10 ft., 15 ft. bgs	
2A-3	15.0	15.0	Soil Vapor sampling only	
5-1	3.0	3.0	Soil sampling only	
5-2	3.0	3.0	Soil sampling only	
6-1	5.0	5.0	Soil sampling only	
6-2	5.0	5.0	Soil sampling only	
6-3	5.0	5.0	Soil sampling only	
6-4	5.0	5.0	Soil sampling only	
6-5	5.0	5.0	Soil sampling only	
6-6	7.5	7.5	Soil sampling only	
6-7	7.5	7.5	Soil sampling only	
6-8	7.5	7.5	Soil sampling only	
6-9	7.5	7.5	Soil sampling only	
6-10	7.5	7.5	Soil sampling only	
7-1	5.0	5.0	Soil sampling to 5 ft. bgs; Soil Vapor sampling at 5 ft. bgs	Could not obtain soil samples at 3 ft. bgs and below due to hard soil conditions. Tried three times to sample but unsuccessful.
7-2	5.0	5.0	Soil sampling only	
7-3	5.0	5.0	Soil sampling to 5 ft bgs; Soil Vapor sampling at 5ft. bgs	
7-4	5.0	5.0	Soil sampling only	
7-5	5.0	5.0	Soil sampling only	
7-6	5.0	5.0	Soil sampling only	
7-7	5.0	5.0	Soil sampling only	
8-1	5.0	5.0	Soil sampling only	
8-2	5.0	5.0	Soil sampling only	
8-3	5.0	5.0	Soil sampling to 5 ft bgs; Soil Vapor sampling at 5ft. bgs	
9-1	5.0	5.0	Soil sampling only	
9-2	5.0	1.2	Soil sampling only	Refusal at 1.2 ft. bgs due to a concrete slab extending several foot.
9-3	5.0	5.0	Soil sampling only	

HUSHMAND ASSOCIATES, INC.
Geotechnical and Earthquake Engineers

Table 2. Summary of Laboratory Test Results - Soil Samples

PARC AREA	Boring ID	Sample ID	Sample Collection Date	Sample Depth (ft below grade)	Total Petroleum Hydrocarbons (EPA 8015B (M))				VOCs (EPA 8260B) (µg/kg)	SVOCs (EPA 8270C) (µg/kg)	Title 22 Metals (EPA 6010B/7471A)																											pH	Polychlorinated Biphenyls (EPA 8082) µg/kg	Organochlorine Pesticides (EPA 8081) µg/kg	Organophosphorous Pesticides (EPA 8081) µg/kg	Chlorinated Herbicides (EPA 8151A) µg/kg
					TPH GRO mg/kg	TPH DRO mg/kg	TPH ORO mg/kg	TPH Total mg/kg			Antimony mg/kg	STLC Antimony mg/L	Arsenic mg/kg	STLC Arsenic mg/L	TCLP Arsenic mg/L	Barium mg/kg	STLC Barium mg/L	TCLP Barium mg/L	Beryllium mg/kg	Cadmium mg/kg	STLC Cadmium mg/L	TCLP Cadmium mg/L	Chromium mg/kg	Hexavalent Chromium mg/kg	Cobalt mg/kg	Copper mg/kg	STLC Copper mg/L	TCLP Copper mg/L	Lead mg/kg	STLC Lead (CA-WET) mg/L	STLC Lead (DI-WET) mg/L	TCLP Lead mg/L	Mercury mg/kg	STLC Mercury mg/L	TCLP Mercury mg/L	Molybdenum mg/kg	Nickel mg/kg	Selenium mg/kg	Silver mg/kg	Thallium mg/kg	Vanadium mg/kg	Zinc mg/kg	STLC Zinc mg/L	TCLP Zinc mg/L					
1A & 1B	1A-1	1A-1-0.5	05/15/2017	0.5	-	-	-	-	-	-	3.8	-	2.1	-	-	200	-	-	ND	1.9	ND	ND	17	2.9	5.6	230	-	-	860	51	-	3.6	0.91	-	-	ND	11	ND	ND	ND	23	240	-	-	-	-	-	-	-
		1A-1-1.0	05/15/2017	1.0	-	-	-	-	-	-	ND	-	ND	-	-	99	-	-	ND	ND	-	-	9.7	-	5.1	46	-	-	230	9.9	-	ND	ND	-	-	ND	6.8	ND	ND	ND	20	130	-	-	-	-	-	-	-
		1A-1-3.0	05/15/2017	3.0	-	-	-	-	-	-	3.3	-	1.3	-	-	97	-	-	ND	ND	-	-	19	ND	4.8	100	-	-	440	11	-	1.3	0.12	-	-	1.2	8.4	ND	ND	ND	19	170	-	-	-	-	-	-	-
		1A-1-5.0	05/15/2017	5.0	-	-	-	-	-	-	ND	-	ND	-	-	33	-	-	ND	ND	-	-	4.4	-	3.5	4.5	-	-	1.1	-	-	-	ND	-	-	ND	2.8	ND	ND	ND	14	15	-	-	-	-	-	-	-
	1A-2	1A-2-0.5	05/15/2017	0.5	-	-	-	-	-	-	ND	-	2.3	-	-	310	-	-	ND	ND	-	-	15	-	6.3	50	-	-	310	26	-	ND	0.45	-	-	ND	11	ND	ND	ND	25	480	-	-	-	-	-	-	-
		1A-2-1.0	05/15/2017	1.0	-	-	-	-	-	-	ND	-	1.2	-	-	63	-	-	ND	ND	-	-	7.9	-	5.5	9.2	-	-	15	-	-	-	0.2	-	-	ND	5.8	ND	ND	ND	22	45	-	-	-	-	-	-	-
		1A-2-3.0	05/15/2017	3.0	-	-	-	-	-	-	ND	-	ND	-	-	39	-	-	ND	ND	-	-	4.9	-	3.7	4.2	-	-	1.1	-	-	-	ND	-	-	ND	3.1	ND	ND	ND	17	16	-	-	-	-	-	-	-
		1A-2-5.0	05/15/2017	5.0	-	-	-	-	-	-	ND	-	1.7	-	-	120	-	-	ND	ND	-	-	13	-	9.0	18	-	-	3.2	-	-	-	0.17	-	-	ND	9.9	ND	ND	ND	26	45	-	-	-	-	-	-	-
	1A-3	1A-3-0.5	05/15/2017	0.5	-	-	-	-	-	-	ND	-	2.2	-	-	120	-	-	ND	ND	-	-	15	-	6.1	48	-	-	140	5.9	-	ND	0.18	-	-	ND	9.2	ND	ND	ND	23	130	-	-	-	-	-	-	-
		1A-3-1.0	05/15/2017	1.0	-	-	-	-	-	-	ND	-	ND	-	-	130	-	-	ND	ND	-	-	11	-	6.5	26	-	-	130	7.1	-	ND	0.2	-	-	ND	10	ND	ND	ND	27	150	-	-	-	-	-	-	-
		1A-3-3.0	05/15/2017	3.0	-	-	-	-	-	-	ND	-	ND	-	-	68	-	-	ND	ND	-	-	7.7	-	5.4	6.9	-	-	1.5	-	-	-	ND	-	-	ND	5.1	ND	ND	ND	20	25	-	-	-	-	-	-	-
		1A-3-5.0	05/15/2017	5.0	-	-	-	-	-	-	ND	-	35	-	-	35	-	-	ND	ND	-	-	4.7	-	3.4	3.9	-	-	ND	-	-	-	ND	-	-	ND	3.1	ND	ND	ND	14	17	-	-	-	-	-	-	-
	1A-4	1A-4-0.5	05/15/2017	0.5	-	-	-	-	-	-	ND	-	3.4	-	-	100	-	-	ND	ND	-	-	15	-	6.8	43	-	-	140	5.1	-	ND	0.22	-	-	ND	11	ND	ND	ND	26	210	-	-	-	-	-	-	-
		1A-4-1.0	05/15/2017	1.0	-	-	-	-	-	-	ND	-	ND	-	-	83	-	-	ND	ND	-	-	14	-	8.0	16	-	-	4.2	-	-	-	ND	-	-	ND	9.0	ND	ND	ND	29	39	-	-	-	-	-	-	-
		1A-4-3.0	05/15/2017	3.0	-	-	-	-	-	-	ND	-	ND	-	-	66	-	-	ND	ND	-	-	9.0	-	6.6	11	-	-	1.9	-	-	-	ND	-	-	ND	6.3	ND	ND	ND	24	29	-	-	-	-	-	-	-
		1A-4-5.0	05/15/2017	5.0	-	-	-	-	-	-	ND	-	ND	-	-	55	-	-	ND	ND	-	-	7.7	-	5.7	7.7	-	-	1.7	-	-	-	ND	-	-	ND	5.4	ND	ND	ND	19	26	-	-	-	-	-	-	-
	L7	L-7 @ 1'	02/1/2016	1.0	-	-	-	-	-	-	3.5	-	3.7	-	-	150	-	-	ND	3.4	-	-	17	-	5.4	100	-	-	290	15	-	-	0.2	-	-	ND	13	ND	ND	ND	24	200	-	-	-	-	-	-	-
		L-7 @ 3'	02/1/2016	3.0	-	-	-	-	-	-	-	-	-	-	-	-	-	-	-	-	-	-	-	-	-	-	-	-	-	-	-	-	-	-	-	-	-	-	-	-	-	-	-	-	-	-	-	-	-	-
		L-7 @ 5'	02/1/2016	5.0	-	-	-	-	-	-	-	-	-	-	-	-	-	-	-	-	-	-	-	-	-	-	-	-	-	-	-	-	-	-	-	-	-	-	-	-	-	-	-	-	-	-	-	-
	L8	L-8 @ 1'	02/1/2016	1.0	-	-	-	-	-	-	ND	-	2.1	-	-	91	-	-	ND	ND	-	-	9.9	-	5.2	15	-	-	32	-	-	-	ND	-	-	ND	7.4	ND	ND	ND	25	59	-	-	-	-	-	-	-
		L-8 @ 3'	02/1/2016	3.0	-	-	-	-	-	-	-	-	-	-	-	-	-	-	-	-	-	-	-	-	-	-	-	-	-	-	-	-	-	-	-	-	-	-	-	-	-	-	-	-	-	-	-	-
		L-8 @ 5'	02/1/2016	5.0	-	-	-	-	-	-	-	-	-	-	-	-	-	-	-	-	-	-	-	-	-	-	-	-	-	-	-	-	-	-	-	-	-	-	-	-	-	-	-	-	-	-	-	-
	L-11	L-11 @ 1'	02/1/2016	1.0	-	-	-	-	-	-	3.9	-	8.8	-	-	600	-	-	ND	3.1	-	-	25	-	6.6	170	-	-	690	41	-	-	3.3	ND	-	ND	21	ND	ND	ND	27	1500	-	-	-	-	-	-	-
		L-11 @ 3'	02/1/2016	3.0	-	-	-	-	-	-	ND	-	1.8	-	-	73	-	-	ND	ND	-	-	8	-	4.6	9.8	-	-	2.5	-	-	-	0.1	-	-	ND	6.1	ND	ND	ND	21	30	-	-	-	-	-	-	-
		L-11 @ 5'	02/1/2016	5.0	-	-	-	-	-	-	-	-	-	-	-	-	-	-	-	-	-	-	-	-	-	-	-	-	-	-	-	-	-	-	-	-	-	-	-	-	-	-	-	-	-	-	-	-
	L-12	L-12 @ 1'	02/1/2016	1.0	-	-	-	-	-	-	ND	-	2.7	-	-	85	-	-	ND	ND	-	-	8.4	-	4.7	15	-	-	76	6	-	-	0.13	-	-	ND	6.5	ND	ND	ND	22	76	-	-	-	-	-	-	-
		L-12 @ 3'	02/1/2016	3.0	-	-	-	-	-	-	-	-	-	-	-	-	-	-	-	-	-	-	-	-	-	-	-	-	-	-	-	-	-	-	-	-	-	-	-	-	-	-	-	-	-	-	-	-
	L7	L-7 @ 1'	02/26/2016	1.0	ND	63	-	-	ND	ND	-	-	-	-	-	-	-	-	-	-	-	-	-	-	-	-	-	-	-	-	-	-	-	-	-	-	-	-	-	-	-	-	-	-	-	-	-	-	-
		L-7 @ 2'	02/26/2016	2.0	-	-	-	-	-	-	ND	-	3	-	-	100	-	-	ND	ND	-	-	14	-	8.2	19	-	-	3.9	-	-	-	0.1	-	-	ND	10	ND	ND	ND	36	42	-	-	-	-	-	-	-
		L-7 @ 3'	02/26/2016	3.0	-	-	-	-	-	-	ND	-	1.6	-	-	61	-	-	ND	ND	-	-	8.3	-	4.8	12	-	-	5.4	-	-	-	ND	-	-	ND	6	ND	ND	ND	22	29	-	-	-	-	-	-	-
	L8	L-8 @ 1'	02/26/2016	1.0	ND	ND	-	-	ND	ND	-	-	-	-	-	-	-	-	-	-	-	-	-	-	-	-	-	-	-	-	-	-	-	-	-	-	-	-	-	-	-	-	-	-	-	-	-	-	-
		L-8 @ 2'	02/26/2016	2.0	-	-	-	-	-	-	ND	-	ND	-	-	33	-	-	ND	ND	-	-	4.1	-	1.9	3.8	-	-	1.3	-	-	-	0.19	-	-	ND	2.5	ND	ND	ND	11	13	-	-	-	-	-	-	-
		L-8 @ 3'	02/26/2016	3.0	-	-	-	-	-	-	ND	-	ND	-	-	37	-	-	ND	ND	-	-	4.7	-	2.4	3.8	-	-	1.2	-	-	-	ND	-	-	ND	2.9	ND	ND	ND	15	15	-	-	-	-	-	-	-
	L-11	L-11 @ 1'	02/26/2016	1.0	ND	ND	-	-	ND	ND	-	-	-	-	-	-	-	-	-	-	-	-	-	-	-	-	-	-	-	-	-	-	-	-	-	-	-	-	-	-	-	-	-	-	-	-	-	-	-
		L-11 @ 2'	02/26/2016	2.0	-	-	-	-	-	-	ND	-	ND	-	-	42	-	-	ND	ND	-	-	5.2	-	3	4.7	-	-	1.4	-	-	-	ND	-	-	ND	4	ND	ND	ND	14	19	-	-	-	-	-	-	-
		L-11 @ 3'	02/26/2016	3.0	-	-	-	-	-	-	ND	-	1	-	-	48	-	-	ND	ND	-	-	5.3	-	3	5.6	-	-	3.3	-	-	-	ND	-	-	ND	4.1	ND	ND	ND	14	20	-	-	-	-	-	-	-
	L-12	L-12 @ 1'	02/26/2016	1.0	ND	ND	-	-	ND	ND	-	-	-	-	-	-	-	-	-	-	-	-	-	-	-	-	-	-	-	-	-	-	-	-	-	-	-	-	-	-	-	-	-	-	-	-	-	-	-
		L-12 @ 2'	02/26/2016	2.0	ND	110	-	-	ND	ND	ND	-	ND	-	-	45	-	-	ND	ND	-	-	4.6	-	2.6	4.5	-	-	4.9	-	-	-	ND	-	-	ND	3.3	ND	ND	ND	14	19	-	-	-	-	-	17 (Arochlor 1260)	2.9 (4,4' - DDT [2C])
		L-12 @ 3'	02/26/2016	3.0	-	-	-	-	-	-	ND	-	ND	-	-	35	-	-	ND	ND	-	-	4	-	2.2	3.4	-	-	1	-	-	-	ND	-	-	ND	2.7	ND	ND	ND	12	14	-	-	-	-	-	-	-
	1B-1	1B-1-0.5	05/15/2017	0.5	-	-	-	-	-	-	ND	-	1.9	-	-	86	-	-	ND	ND	-	-	13	-	5.2	8.3	-	-	6.6	-	-	-	ND	-	-	4.4	8.4	ND	ND	ND	25	29	-	-	-	-	-	-	-
		1B-1-1.0	05/15/2017	1.0	-	-	-	-	-	-	ND	-	1.9	-	-	84	-	-	ND	ND	-	-	15	-	7.5	8.8	-	-	4.4	-	-	-	ND	-	-	3.3	12	ND	ND	ND	30	31	-	-	-	-	-	-	-
		1B-1-3.0	05/15/2017	3.0	-	-	-	-	-	-	ND	-	ND	-	-	50	-	-	ND	ND	-	-	6.3	-	4.0	6.4	-	-	4.3	-	-	-	ND	-	-	ND	3.9	ND	ND	ND	18	24	-	-	-	-	-	-	-
		1B-1-5.0	05/15/2017	5.0	-	-	-	-	-	-	ND	-	1.3	-	-	69	-	-	ND	ND	-	-	8.4	-	5.5	9.7	-	-	19	-	-	-	0.19	-	-	ND	6.0	ND	ND	ND	21	32	-	-	-	-	-	-	-
	A-13-01	A01@5'	08/21/2013	5.0	6.9	ND	ND	ND	ND	-	ND	-	1.3	-	-	67	-	-	ND	1.2	-	-	9.8	-	5.6	12	-	-	8.2	-	-	-	0.069	-	-	ND	6.8	ND	ND	ND	27	41	-	-	-	-	-	-	-
		A01@30'	08/21/2013	30.0	35	18	ND	53	ND	-	-	-	-	-	-	-	-	-	-	-	-	-	-	-	-	-	-	-	-	-	-	-	-	-	-	-	-	-	-	-	-	-	-	-	-	-	-	-	-
		A01@50'	08/21/2013	50.0	25	28	ND	55	ND	-	-	-	-	-	-	-	-	-	-	-	-	-	-	-	-	-	-	-	-	-	-	-	-	-	-	-	-	-	-	-	-	-	-	-	-	-	-	-	-
		A01@60'	08/21/2013	60.0	ND	ND	ND	ND	9.2 (1,2,4-Trimethylbenzene)	-	-	-	-	-	-	-	-	-	-	-	-	-	-	-	-	-	-	-	-	-	-	-	-	-	-	-	-	-	-	-	-	-	-	-	-	-	-	-	-	-	-
		A01@65'	08/21/2013	65.0	ND	ND	17	17	790,000 (Toluene) 15,000 (Ethylbenzene) 110,000 (Total Xylenes) 15,000 (Sec-Butylbenzene) 29,000 (n-Butylbenzene) 25,000 (Isopropylbenzene) 130,000 (n-Propoylbenzene) 870,000 (1,2,4-Trimethylbenzene) 220,000 (1,3,5-Trimethylbenzene)	-	ND	-	0.62	-	-	29	-	-	ND	ND	-	-	4	-	ND	3.5	-	-	ND	-	-	-	ND	-	-	ND	ND	ND	ND	ND	14	13	-	-	-	-	-	-	-
		A01@80'	08/21/2013	80.0	ND	ND	ND	ND	500 (Toluene) 420 (1,2,4-Trimethylbenzene)	-	-	-	-	-	-	-	-	-	-	-	-	-	-	-	-	-	-	-	-	-	-	-	-	-	-	-	-	-	-	-	-	-	-	-	-	-	-	-	-	-	-
2A, 2B, 2C	2A-1	2A-1-0.5	05/15/2017	0.5	-	-	-	-	-	-	ND	-	ND	-	-	160	-	-	ND	ND	-	-	8.8	-	4.2	12	-	-	7.6	-	-	-	ND	-	-	ND	9.4	ND	ND	ND	19	46	-	-	-	-	-	-	-
		2A-1-1.0	05/15/2017	1.0	ND	ND	-	-	ND	ND	ND	-	ND	-	-	84	-	-	ND	ND	-	-	11	-	7.3	12	-	-	6.3	-	-	-	ND	-	-	ND	7.8	ND	ND	ND	27	36	-	-	-	ND	ND	-	ND
		2A-1-3.0	05/15/2017	3.0	ND	ND	-	-	ND	ND	ND	-	ND	-	-	42	-	-	ND	ND	-	-	5.5	-	4.1	5.7	-	-	5.8	-	-	-	ND	-	-	ND	3.7	ND	ND	ND	15	23	-	-	-	-	-	-	-
		2A-1-5.0	05/15/2017	5.0	-	-	-	-	-	-	ND	-	1.0	-	-	90	-	-	ND	ND	-	-	7.7	-	2.8	5.5	-	-	10	-	-	-	ND	-	-	ND	4.8	ND	ND	ND	14	14	-	-	-	-	-	-	-
	2A-2	2A-2-0.5	05/15/2017	0.5	-	-	-	-	-	-	ND	-	1.9	-	-	85	-	-	ND	ND	-	-	8.8	-	5.6	18	-	-	28	-	-	-	ND	-	-	ND	7.5	ND	ND	ND	22	48	-	-	-	-	-	-	-
		2A-2-1.0	05/15/2017	1.0	ND	18	-	-	ND	ND	ND	-	1.4	-	-	59	-	-	ND	ND	-	-	8.1	-	5.3	8.4	-	-	6.5	-	-	-	ND	-	-	ND	5.6	ND	ND	ND	21	31	-	-	-	ND	ND	-	ND
		2A-2-3.0	05/15/2017	3.0	-	-	-	-	-	-	ND	-	ND	-	-	49	-	-	ND	ND	-	-	6.6	-	4.5	6.7	-	-	2.6	-	-	-	ND	-	-	ND	4.6	ND	ND	ND	18	23	-	-	-	-	-	-	-
		2A-2-5.0	05/15/2017	5.0	ND	ND	-	-	ND	ND	ND	-	ND	-	-	58	-	-	ND	ND	-	-	8.6	-	5.5	6.9	-	-	1.2	-	-	-	ND	-	-	ND	5.1	ND	ND	ND	22	22	-	-	-	-	-	-	-
	P33-B1	MC-1	08/15/2015	2.5	ND	ND	ND	-	ND	ND	ND	-	ND	-	-	71	-	-	ND	ND	-	-	11	-	5	11	-	-	2.4	-	-	-	ND	-	-	ND	7.1	ND	ND	ND	21	33	-	-	-	ND	ND	ND	ND
		MC-2	08/15/2015	5.0	ND	ND	ND	-	ND	ND	ND	-	2.1	-	-	140	-	-	ND	1.3	ND	-	15	-	8.5	23	-	-	4.7	-	-	-	0.12	-	-	ND	11	ND	ND	ND	38	52	-	-	-	-	-	-	-
		MC-3	08/15/2015	7.5	ND	ND	ND	-	ND	ND	ND	-	ND	-	-	136	-	-	ND	ND	-	-	3.3	-	2.9	3.8	-	-	ND	-	-	-	ND	-	-	ND	2.7	ND	ND	ND	11	15	-	-	-	-	-	-	-
	P33-B2	MC-1	08/7/2015	2.5	ND	ND	ND	-	ND	ND	ND	-	ND	-	-	33	-	-	ND	ND	-	-	4.4	-	2.4	4.5	-	-	1.1	-	-	-	ND	-	-	ND	3.2	ND	ND	ND	11	17	-	-	-	-	-	-	-
		MC-2	08/7/2015	5.0	ND	ND	ND	-	ND	ND	ND	-	ND	-	-	130	-	-	ND	1.4	ND	-	17	-	8.6	22	-	-	3.9	-	-	-	0.11	-	-	ND	12	ND	ND	ND	41	60	-	-	-	-	-	-	-
		MC-3	08/7/2015	7.5	ND	ND	ND	-	ND	ND	ND	-	ND	-	-	23	-	-	ND	ND	-	-	3	-	2.1	5.3	-	-	1	-	-	-	0.9	-	-	ND	2.2	ND	ND	ND	10	16	-	-	-	-	-	-	-
		MC-4	08/7/2015	10.0	ND	ND	ND	-	ND	ND	ND	-	ND	-	-	40	-	-	ND	ND	-	-	4.8	-	2.1	4	-	-	ND	-	-	-	ND	-	-	ND	2.3	ND	ND	ND	7.6	14	-	-	-	-	-	-	-
	P33-B3	MC-1	08/7/2015	2.5	ND	ND	ND	-	ND	ND	ND	-	ND	-	-	35	-	-	ND	ND	-	-	5.1	-	2.9	5.4	-	-	1.3	-	-	-	ND	-	-	ND	3.6	ND	ND	ND	14	19	-	-	-	-	-	-	-
		MC-2	08/7/2015	5.0	ND	ND	ND	-	ND	ND	ND	-	1.7	-	-	120	-	-	ND	1.6	ND	-	18	-	8.8	23	-	-	4.5	-	-	-	ND	-	-	ND	13	ND	ND	ND	41	60	-	-	-	-	-	-	-
		MC-3	08/7/2015	7.5	ND	ND	ND	-	ND	ND	ND	-	ND	-	-	27	-	-	ND	ND	-	-	3.5	-	2	3.5	-	-	ND	-	-	-	ND	-	-	ND	2.4	ND	ND	ND	7.5	12	-	-	-	-	-	-	-
		MC-4	08/7/2015	10.0	ND	ND	ND	-	ND	ND	ND	-	ND	-	-	54	-	-	ND	ND	-	-	8.5	-	4.3	7.8	-	-	1.4	-	-	-	ND	-	-	ND	5.3	ND	ND	ND	20	26	-	-	-	-	-	-	-
		MC-5	08/7/2015	12.5	ND	ND	ND	-	ND	ND	ND	-	ND	-	-	21	-	-	ND	ND	-	-	3.3	-	2.1	6.1	-	-	1.5	-	-	-	0.13	-	-	ND	2.2	ND	ND	ND	7.3	13	-	-	-	-	-	-	-
	P33-B4	MC-1	08/7/2015	2.5	ND	ND	ND	-	ND	ND	ND	-	1	-	-	89	-	-	ND	ND	-	-	11	-	5.7	13	-	-	3	-	-	-	ND	-	-	ND	8.1	ND	ND	ND	25	38	-	-	-	ND	ND	ND	ND
		MC-2	08/7/2015	5.0	ND	ND	ND	-	ND	ND	ND	-	ND	-	-	58	-	-	ND	ND	-	-	8	-	4.1	8.2	-	-	1.6	-	-	-	ND	-	-	ND	5.5	ND	ND	ND	17	26	-	-	-	ND	-	-	-
		MC-3	08/7/2015	7.5	ND	ND	ND	-	ND	ND	ND	-	ND	-	-	21	-	-	ND	ND	-	-	3.1	-	2	2.6	-	-	ND	-	-	-	ND	-	-	ND	1.9	ND	ND	ND	5.7	9.3	-	-	-	ND	-	-	-
		MC-4	08/7/2015	10.0	ND	ND	ND	-	ND	ND	ND	-	ND	-	-	20	-	-	ND	ND	-	-	2.7	-	1.5	2.4	-	-	ND	-	-	-	3.4	-	-	ND	1.7	ND	ND	ND	6.5	11	-	-	-	-	-	-	-
	P32-B1	MC-1	08/12/2015	2.5	ND	ND	ND	-	ND	ND	ND	-	ND	-	-	50	-	-	ND	ND	-	-	6.3	-	3.2	6	-	-	1.2	-	-	-	ND	-	-	ND	4.1	ND	ND	ND	16	21	-	-	-	ND	ND	ND	ND
		MC-2	08/12/2015	5.0	ND	ND	ND	-	ND	ND	ND	-	ND	-	-	35	-	-	ND	ND	-	-	5.1	-	2.5	5.9	-	-	1.5	-	-	-	0.12	-	-	ND	3.4	ND	ND	ND	14	18	-	-	-	-	-	-	-
		MC-3	08/12/2015	7.5	ND	ND	ND	-	ND	ND	ND	-	ND	-	-	23	-	-	ND	ND	-	-	3.6	-	2	4.9	-	-	1.2	-	-	-	ND	-	-	ND	2.4	ND	ND	ND	9.6	14	-	-	-	-	-	-	-
		MC-4	08/12/2015	10.0	ND	ND	ND	-	ND	ND	ND	-	ND	-	-	38	-	-	ND	ND	-	-	5.6	-	3.7	5.6	-	-	1.1	-	-	-	ND	-	-	ND	3.8	ND	ND	ND	17	19	-	-	-	-	-	-	-
	P32-B2	MC-1	08/12/2015	2.5	ND	ND	ND	-	ND	ND	ND	-	ND	-	-	58	-	-	ND	ND	-	-	8.3	-	4.1	7.4	-	-	1.8	-	-	-	ND	-	-	ND	5.3	ND	ND	ND	19	26	-	-	-	-	-	-	-
		MC-2	08/12/2015	5.0	ND	ND	ND	-	ND	ND	ND	-	1.1	-	-	52	-	-	ND	ND	-	-	8	-	3.9	10	-	-	2.5	-	-	-	ND	-	-	ND	5.6	ND	ND	ND	18	26	-	-	-	-	-	-	-
		MC-3	08/12/2015	7.5	ND	ND	ND	-	ND	ND	ND	-	ND	-	-	32	-	-	ND	ND	-	-	4.2	-	2.3	4	-	-	1.2	-	-	-	ND	-	-	ND	2.7	ND	ND	ND	11	15	-	-	-	-	-	-	-
		MC-4	08/12/2015	10.0	ND	ND	ND	-	ND	ND	ND	-	1.3	-	-	55	-	-	ND	ND	-	-	7.9	-	4.2	10	-	-	2.2	-	-	-	ND	-	-	ND	5.6	ND	ND	ND	17	23	-	-	-	-	-	-	-
	RR-B1	MC-1	08/25/2015	2.5	ND	ND	ND	-	ND	ND	ND	-	ND	-	-	44	-	-	ND	ND	-	-	6.1	-	3.4	7.6	-	-	2.4	-	-	-	ND	-	-	ND	4.4	ND	ND	ND	15	22	-	-	-	ND	ND	-	-
		MC-2	08/25/2015	5.0	ND	17	43	-	ND	ND	ND	-	ND	-	-	53	-	-	ND	ND	-	-	7.7	-	4.2	10	-	-	3.6	-	-	-	ND	-	-	ND	5.3	ND	ND	ND	19	27	-	-	-	-	-	-	-
		MC-3	08/25/2015	7.5	ND	ND	ND	-	ND	ND	ND	-	1.2	-	-	64	-	-	ND	ND	-	-	9.4	-	4.9	12	-	-	5.9	-	-	-	ND	-	-	ND	6.3	ND	ND	ND	22	33	-	-	-	-	-	-	-
		MC-4	08/25/2015	10.0	ND	ND	ND	-	ND	ND	ND	-	1.1	-	-	52	-	-	ND	ND	-	-	7.9	-	4	8.9	-	-	5.5	-	-	-	ND	-	-	ND	5.4	ND	ND	ND	20	28	-	-	-	-	-	-	-
		MC-5	08/25/2015	15.0	ND	ND	ND	-	ND	ND	ND	-	ND	-	-	37	-	-	ND	ND	-	-	5.1	-	2.7	4.6	-	-	ND	-	-	-	ND	-	-	ND	3.3	ND	ND	ND	15	17	-	-	-	-	-	-	-
	RR-B2	MC-1	08/25/2015	2.5	ND	ND	ND	-	ND	ND	ND	-	ND	-	-	46	-	-	ND	ND	-	-	6	-	3.5	6.2	-	-	1.2	-	-	-	ND	-	-	ND	4.3	ND	ND	ND	17	22	-	-	-	ND	ND	-	-
		MC-2	08/25/2015	5.0	ND	ND	ND	-	ND	ND	ND	-	ND	-	-	86	-	-	ND	ND	-	-	11	-	6.1	11	-	-	2.4	-	-	-	ND	-	-	ND	8.2	ND	ND	ND	26	42	-	-	-	-	-	-	-
		MC-3	08/25/2015	7.5	ND	ND	ND	-	ND	ND	ND	-	ND	-	-	30	-	-	ND	ND	-	-	4.2	-	2.7	4.7	-	-	1.2	-	-	-	ND	-	-	ND	2.9	ND	ND	ND	10	15	-	-	-	-	-	-	-
		MC-4	08/25/2015	10.0	ND	ND	ND	-	ND	ND	ND	-	ND	-	-	21	-	-	ND	ND	-	-	3.4	-	1.4	2.9	-	-	1	-	-	-	ND	-	-	ND	1.7	ND	ND	ND	6.2	12	-	-	-	-	-	-	-
		MC-5	08/25/2015	15.0	ND	ND	ND	-	ND	ND	ND	-	ND	-	-	32	-	-	ND	ND	-	-	4.6	-	2.5	4.7	-	-	1.1	-	-	-	ND	-	-	ND	3.2	ND	ND	ND	11	16	-	-	-	-	-	-	-

Table 2. Summary of Laboratory Test Results - Soil Samples (Cont'd)

PARC AREA	Boring ID	Sample ID	Sample Collection Date	Sample Depth (ft below grade)	Total Petroleum Hydrocarbons (EPA 8015B (M))				VOCs (EPA 8260B) (µg/kg)	SVOCs (EPA 8270C) (µg/kg)	Title 22 Metals (EPA 6010B/7471A)																													pH	Polychlorinated Biphenyls (EPA 8082) µg/kg	Organochlorine Pesticides (EPA 8081) µg/kg	Organophosphorous Pesticides (EPA 8081) µg/kg	Chlorinated Herbicides (EPA 8151A) µg/kg
					TPH GRO mg/kg	TPH DRO mg/kg	TPH ORO mg/kg	TPH Total mg/kg			Antimony mg/kg	STLC Antimony mg/L	Arsenic mg/kg	STLC Arsenic mg/L	TCLP Arsenic mg/L	Barium mg/kg	STLC Barium mg/L	TCLP Barium mg/L	Beryllium mg/kg	Cadmium mg/kg	STLC Cadmium mg/L	TCLP Cadmium mg/L	Chromium mg/kg	Hexavalent Chromium mg/kg	Cobalt mg/kg	Copper mg/kg	STLC Copper mg/L	TCLP Copper mg/L	Lead mg/kg	STLC Lead (CA-WET) mg/L	STLC Lead (DI-WET) mg/L	TCLP Lead mg/L	Mercury mg/kg	STLC Mercury mg/L	TCLP Mercury mg/L	Molybdenum mg/kg	Nickel mg/kg	Selenium mg/kg	Silver mg/kg	Thallium mg/kg	Vanadium mg/kg	Zinc mg/kg	STLC Zinc mg/L	TCLP Zinc mg/L					
	RR-B3	MC-1	08/25/2015	2.5	ND	13	23	-	ND	ND	ND	-	2.3	-	-	150	-	-	ND	ND	-	-	12	-	4.1	14	-	-	41	-	-	-	0.18	-	-	ND	8.9	ND	ND	ND	19	42	-	-	-	ND	ND	-	-
		MC-2	08/25/2015	5.0	ND	12	15	-	ND	ND	ND	-	3.7	-	-	140	-	-	ND	ND	-	-	16	-	5.9	24	-	-	44	-	-	-	0.23	-	-	ND	15	ND	ND	ND	25	93	-	-	-	ND	ND	-	-
		MC-3	08/25/2015	7.5	ND	ND	ND	-	ND	ND	ND	-	2.5	-	-	130	-	-	ND	ND	-	-	17	-	6.1	21	-	-	24	-	-	-	0.18	-	-	ND	13	ND	ND	ND	30	66	-	-	-	-	-	-	-
		MC-4	08/25/2015	10.0	ND	12	31	-	ND	ND	ND	-	1.1	-	-	55	-	-	ND	ND	-	-	8.3	-	3.6	10	-	-	7.5	-	-	-	0.12	-	-	ND	5.1	ND	ND	ND	15	29	-	-	-	-	-	-	-
		MC-5	08/25/2015	15.0	ND	ND	ND	-	ND	ND	ND	-	ND	-	-	50	-	-	ND	ND	-	-	5.3	-	2.7	5.4	-	-	1.4	-	-	-	ND	-	-	ND	3.6	ND	ND	ND	13	21	-	-	-	-	-	-	-
		MC-6	08/25/2015	20.0	ND	ND	ND	-	ND	ND	ND	-	ND	-	-	43	-	-	ND	ND	-	-	4.9	-	2.5	6	-	-	2	-	-	-	ND	-	-	ND	3.1	ND	ND	ND	11	19	-	-	-	-	-	-	-
	R-13-02	R02@5'	08/21/2013	5.0	ND	ND	ND	ND	ND	-	ND	-	1.5	-	-	68	-	-	ND	1.2	-	-	11	-	5.3	13	-	-	ND	-	-	-	0.078	-	-	ND	7.5	ND	ND	ND	31	37	-	-	-	-	-	-	-
		R02@45'	08/21/2013	45.0	ND	ND	ND	ND	ND	-	-	-	-	-	-	-	-	-	-	-	-	-	-	-	-	-	-	-	-	-	-	-	-	-	-	-	-	-	-	-	-	-	-	-	-	-	-	-
		R02@65'	08/21/2013	65.0	ND	ND	ND	ND	ND	-	ND	-	1.2	-	-	190	-	-	ND	1	-	-	8.3	-	3.5	35	-	-	ND	-	-	-	0.048	-	-	9.6	5.8	ND	ND	ND	21	37	-	-	-	-	-	-	-
	A-13-19	A19@5'	08/22/2013	5.0	ND	ND	ND	ND	ND	-	ND	-	ND	-	-	14	-	-	ND	ND	-	-	ND	-	ND	51	-	-	ND	-	-	-	0.058	-	-	ND	ND	ND	ND	ND	ND	66	-	-	-	-	-	-	-
		A19@35'	08/22/2013	35.0	ND	ND	ND	ND	ND	-	-	-	-	-	-	-	-	-	-	-	-	-	-	-	-	-	-	-	-	-	-	-	-	-	-	-	-	-	-	-	-	-	-	-	-	-	-	-
		A19@45'	08/22/2013	45.0	ND	ND	ND	ND	ND	-	-	-	-	-	-	-	-	-	-	-	-	-	-	-	-	-	-	-	-	-	-	-	-	-	-	-	-	-	-	-	-	-	-	-	-	-	-	-
		A19@60'	08/22/2013	60.0	ND	ND	ND	ND	ND	-	-	-	-	-	-	-	-	-	-	-	-	-	-	-	-	-	-	-	-	-	-	-	-	-	-	-	-	-	-	-	-	-	-	-	-	-	-	-
		A19@80'	08/22/2013	80.0	ND	ND	ND	ND	ND	-	ND	-	2.1	-	-	55	-	-	ND	1.2	-	-	7.3	-	4	14	-	-	ND	-	-	-	0.05	-	-	9.6	4.6	ND	ND	ND	21	38	-	-	-	-	-	-	-
	A-13-20	A20@5'	09/23/2013	5.0	14	2.4	ND	16	ND	-	ND	-	ND	-	-	82	-	-	ND	1.7	-	-	12	-	6.8	16	-	-	35	-	-	-	0.097	-	-	ND	9	ND	ND	ND	33	110	-	-	-	-	-	-	-
		A20@25'	09/23/2013	25.0	ND	ND	ND	ND	ND	-	-	-	-	-	-	-	-	-	-	-	-	-	-	-	-	-	-	-	-	-	-	-	-	-	-	-	-	-	-	-	-	-	-	-	-	-	-	-
		A20@65'	09/23/2013	65.0	ND	ND	ND	ND	ND	-	ND	-	4.6	-	-	93	-	-	ND	**3.2**	-	-	12	-	6.4	16	-	-	ND	-	-	-	ND	-	-	12	9	ND	ND	ND	32	54	-	-	-	-	-	-	-
	A-13-21	A21@5'	09/20/2013	5.0	**370**	50	11	430	ND	-	ND	-	6	-	-	83	-	-	ND	**2.7**	-	-	16	-	6	250	-	-	**170**	-	-	-	0.12	-	-	ND	18	ND	ND	ND	25	160	-	-	-	-	-	-	-
		A21@35'	09/20/2013	35.0	13	19	1.9	33	ND	-	-	-	-	-	-	-	-	-	-	-	-	-	-	-	-	-	-	-	-	-	-	-	-	-	-	-	-	-	-	-	-	-	-	-	-	-	-	-
		A21@65'	09/20/2013	65.0	ND	ND	ND	ND	ND	-	ND	-	8.6	-	-	110	-	-	ND	ND	-	-	5.2	-	ND	3.6	-	-	ND	-	-	-	0.028	-	-	110	ND	ND	ND	ND	26	8.1	-	-	-	-	-	-	-
3	A-13-23	A23@5'	09/11/2013	5.0	ND	ND	ND	ND	ND	-	ND	-	42	-	-	140	-	-	ND	ND	-	-	11	-	3.7	8	-	-	ND	-	-	-	0.07	-	-	ND	5.5	ND	ND	ND	21	27	-	-	-	-	-	-	-
		A23@20'	09/11/2013	20.0	ND	ND	ND	ND	ND	-	-	-	-	-	-	-	-	-	-	-	-	-	-	-	-	-	-	-	-	-	-	-	-	-	-	-	-	-	-	-	-	-	-	-	-	-	-	-
		A23@50'	09/11/2013	50.0	ND	ND	ND	ND	ND	-	ND	-	ND	-	-	51	-	-	ND	**2.3**	-	-	16	-	5.3	8.6	-	-	3	-	-	-	0.037	-	-	ND	5.3	ND	ND	ND	57	26	-	-	-	-	-	-	-
4	R-13-03	R03@5'	11/6/2013	5.0	6	ND	ND	ND	ND	-	ND	-	ND	-	-	34	-	-	ND	ND	-	-	5.6	-	ND	6	-	-	ND	-	-	-	0.028	-	-	ND	3.1	ND	ND	ND	14	16	-	-	-	-	-	-	-
		R03@45'	11/6/2013	45.0	ND	ND	ND	ND	ND	-	-	-	-	-	-	-	-	-	-	-	-	-	-	-	-	-	-	-	-	-	-	-	-	-	-	-	-	-	-	-	-	-	-	-	-	-	-	-
		R03@55'	11/6/2013	55.0	ND	ND	ND	ND	ND	-	ND	-	ND	-	-	46	-	-	ND	ND	-	-	ND	-	ND	5.6	-	-	ND	-	-	-	ND	-	-	ND	ND	ND	ND	ND	16	36	-	-	-	-	-	-	-
	R-13-04	R04@5'	11/4/2013	5.0	ND	ND	ND	ND	ND	-	ND	-	**13**	-	-	92	-	-	ND	**3.1**	-	-	9.3	-	12	35	-	-	3.4	-	-	-	0.054	-	-	ND	19	ND	ND	ND	110	79	-	-	-	-	-	-	-
		R04@40'	11/4/2013	40.0	ND	ND	ND	ND	ND	-	ND	-	ND	-	-	90	-	-	ND	1.2	-	-	14	-	7.4	24	-	-	ND	-	-	-	0.026	-	-	ND	11	ND	ND	ND	31	53	-	-	-	-	-	-	-
		R04@60'	11/4/2013	60.0	ND	ND	ND	ND	ND	-	-	-	-	-	-	-	-	-	-	-	-	-	-	-	-	-	-	-	-	-	-	-	-	-	-	-	-	-	-	-	-	-	-	-	-	-	-	-
		5-1-0.5	05/15/2017	0.5	-	-	-	-	-	-	ND	-	1.5	-	-	72	-	-	ND	ND	-	-	7.9	-	5.6	12	-	-	20	-	-	-	ND	-	-	ND	6.6	ND	ND	ND	21	46	-	-	-	-	-	-	-
	5-1	5-1-1.0	05/15/2017	1.0	-	-	-	-	-	-	ND	-	2.1	-	-	84	-	-	ND	ND	-	-	10	-	5.3	19	-	-	**68**	4.8	-	ND	ND	-	-	ND	7.6	ND	ND	ND	22	99	-	-	-	-	-	-	-
		5-1-2.0	05/15/2017	2.0	-	-	-	-	-	-	ND	-	4.7	-	-	42	-	-	ND	ND	-	-	6.0	-	4.9	23	-	-	**110**	3.7	-	ND	0.11	-	-	ND	7.0	ND	ND	ND	18	130	-	-	-	-	-	-	-
		5-1-3.0	05/15/2017	3.0	-	-	-	-	-	-	ND	-	ND	-	-	30	-	-	ND	ND	-	-	4.2	-	3.2	3.8	-	-	2.2	-	-	-	0.14	-	-	ND	2.7	ND	ND	ND	14	16	-	-	-	-	-	-	-
5	5-2	5-2-0.5	05/15/2017	0.5	-	-	-	-	-	-	ND	-	4.1	-	-	75	-	-	ND	ND	-	-	15	-	8.5	20	-	-	48	-	-	-	ND	-	-	ND	14	ND	ND	ND	29	60	-	-	-	-	-	-	-
		5-2-1.0	05/15/2017	1.0	-	-	-	-	-	-	ND	-	ND	-	-	52	-	-	ND	ND	-	-	5.9	-	4.5	9.6	-	-	19	-	-	-	ND	-	-	ND	5.0	ND	ND	ND	18	77	-	-	-	-	-	-	-
		5-2-2.0	05/15/2017	2.0	-	-	-	-	-	-	ND	-	ND	-	-	57	-	-	ND	ND	-	-	6.1	-	4.8	5.9	-	-	2.3	-	-	-	ND	-	-	ND	4.5	ND	ND	ND	17	23	-	-	-	-	-	-	-
		5-2-3.0	05/15/2017	3.0	-	-	-	-	-	-	ND	-	1.1	-	-	21	-	-	ND	ND	-	-	3.2	-	3.2	4.3	-	-	**180**	ND	-	ND	0.12	-	-	ND	4.0	ND	ND	ND	8.5	10	-	-	-	-	-	-	-
	L-9	L-9 @ 1'	02/12/2016	1.0	ND	190	-	-	ND	ND	2.3	-	3.4	-	-	72	-	-	ND	ND	-	-	7.9	-	4.4	20	-	-	**64**	-	-	-	ND	-	-	ND	7.3	ND	ND	ND	24	75	-	-	-	-	-	-	ND
		L-9 @ 2.5'	02/12/2016	2.5	-	-	-	-	ND	-	ND	-	2.2	-	-	44	-	-	ND	ND	-	-	6.3	-	2.9	7	-	-	16	-	-	-	ND	-	-	ND	4.3	ND	ND	ND	24	27	-	-	-	-	-	-	-
	L-10	L-10 @ 1'	02/12/2016	1.0	ND	260	-	-	ND	ND	ND	-	5	-	-	120	-	-	ND	ND	-	-	10	-	5	19	-	-	44	-	-	-	0.25	-	-	1.1	9.2	ND	ND	ND	23	68	-	-	-	-	-	-	ND
		L-10 @ 3'	02/12/2016	3.0	-	-	-	-	ND	-	ND	-	2.8	-	-	58	-	-	ND	ND	-	-	8.1	-	3.6	10	-	-	20	-	-	-	ND	-	-	ND	6.0	ND	ND	ND	22	47	-	-	-	-	-	-	-
		6-1-0.5	05/15/2017	0.5	-	-	-	-	-	-	ND	-	1.5	-	-	69	-	-	ND	ND	-	-	6.0	-	3.3	7.2	-	-	11	-	-	-	0.14	-	-	ND	4.3	ND	ND	ND	14	28	-	-	-	-	-	-	-
	6-1	6-1-1.0	05/15/2017	1.0	ND	ND	-	-	ND	ND	ND	-	1.4	-	-	77	-	-	ND	ND	-	-	6.2	-	3.7	8.5	-	-	13	-	-	-	ND	-	-	ND	6.7	ND	ND	ND	15	33	-	-	-	ND	ND	-	ND
		6-1-3.0	05/15/2017	3.0	-	-	-	-	-	-	ND	-	ND	-	-	70	-	-	ND	ND	-	-	8.2	-	6.6	7.4	-	-	3.3	-	-	-	ND	-	-	ND	6.1	ND	ND	ND	23	32	-	-	-	-	-	-	-
		6-1-5.0	05/15/2017	5.0	-	-	-	-	-	-	ND	-	ND	-	-	66	-	-	ND	ND	-	-	8.1	-	6.3	6.5	-	-	1.2	-	-	-	ND	-	-	ND	5.6	ND	ND	ND	24	28	-	-	-	-	-	-	-
		6-2-0.5	05/16/2017	0.5	-	-	-	-	-	-	ND	-	2.9	-	-	110	-	-	ND	ND	-	-	5.5	-	2.7	6.8	-	-	**90**	ND	-	ND	0.33	-	-	ND	3.2	ND	ND	ND	15	62	-	-	-	ND	ND	-	ND
	6-2	6-2-1.0	05/16/2017	1.0	-	-	-	-	-	-	ND	-	1.2	-	-	87	-	-	ND	ND	-	-	8.2	-	5.7	15	-	-	38	-	-	-	0.78	-	-	ND	8.0	ND	ND	ND	26	89	-	-	-	-	-	-	-
		6-2-3.0	05/16/2017	3.0	ND	ND	-	-	ND	ND	ND	-	ND	-	-	29	-	-	ND	ND	-	-	3.7	-	2.6	2.5	-	-	1.2	-	-	-	ND	-	-	ND	2.4	ND	ND	ND	11	13	-	-	-	-	-	-	-
		6-2-5.0	05/16/2017	5.0	-	-	-	-	-	-	ND	-	ND	-	-	34	-	-	ND	ND	-	-	2.9	-	2.8	3.0	-	-	1.2	-	-	-	ND	-	-	ND	2.4	ND	ND	ND	10	14	-	-	-	-	-	-	-
		6-3-0.5	05/15/2017	0.5	-	-	-	-	-	-	ND	-	46	-	-	190	-	-	ND	ND	-	-	5.8	-	3.5	5.7	-	-	9.1	-	-	-	ND	-	-	ND	3.5	ND	ND	ND	14	28	-	-	-	-	-	-	-
	6-3	6-3-1.0	05/15/2017	1.0	ND	ND	-	-	ND	ND	8.3	-	11	-	-	**1,900**	3.2	ND	ND	**12**	ND	0.99	**69**	3.0	9.2	250	**33**	-	**4,300**	**270**	-	**7.3**	0.44	-	-	ND	31	1.0	ND	ND	22	**10,000**	**1,100**	-	-	ND	ND	-	ND
		6-3-3.0	05/15/2017	3.0	-	-	-	-	-	-	ND	-	1.6	-	-	160	-	-	ND	ND	-	-	8.7	-	3.5	21	-	-	**250**	ND	-	ND	ND	-	-	ND	5.0	ND	ND	ND	11	660	-	-	-	-	-	-	-
		6-3-5.0	05/15/2017	5.0	-	-	-	-	-	-	ND	-	ND	-	-	21	-	-	ND	ND	-	-	3.1	-	2.3	2.4	-	-	1.1	-	-	-	0.4	-	-	ND	1.9	ND	ND	ND	12	13	-	-	-	-	-	-	-
		6-4-0.5	05/15/2017	0.5	-	-	-	-	-	-	ND	-	2.3	-	-	95	-	-	ND	ND	-	-	6.2	-	3.2	13	-	-	30	-	-	-	0.17	-	-	ND	5.6	ND	ND	ND	15	55	-	-	-	-	-	-	-
	6-4	6-4-1.0	05/15/2017	1.0	ND	ND	-	-	ND	ND	ND	-	**26**	1.1	ND	71	-	-	ND	1.2	-	-	11	-	4.6	41	-	-	**94**	**5.4**	-	ND	ND	-	-	ND	8.4	ND	ND	ND	19	960	-	-	-	ND	ND	-	ND
		6-4-3.0	05/15/2017	3.0	-	-	-	-	-	-	ND	-	11	-	-	41	-	-	ND	ND	-	-	6.3	-	4.2	7.1	-	-	16	-	-	-	ND	-	-	ND	3.8	ND	ND	ND	18	32	-	-	-	-	-	-	-
		6-4-5.0	05/15/2017	5.0	-	-	-	-	-	-	ND	-	9.0	-	-	69	-	-	ND	ND	-	-	11	-	7.5	11	-	-	3.2	-	-	-	ND	-	-	ND	7.0	ND	ND	ND	29	59	-	-	-	-	-	-	-
		6-5-0.5	05/15/2017	0.5	-	-	-	-	-	-	4	-	9.1	-	-	95	-	-	ND	**2.3**	ND	ND	19	5.0	7.6	82	-	-	**400**	1.9	-	ND	0.17	-	-	ND	12	ND	ND	ND	21	950	-	-	-	-	-	-	-
	6-5	6-5-1.0	05/15/2017	1.0	-	-	-	-	-	-	ND	-	3.9	-	-	75	-	-	ND	ND	-	-	10	-	6.7	13	-	-	**59**	1.9	-	1.8	ND	-	-	ND	6.9	ND	ND	ND	27	83	-	-	-	-	-	-	-
		6-5-3.0	05/15/2017	3.0	ND	ND	-	-	ND	ND	ND	-	1.0	-	-	31	-	-	ND	ND	-	-	4.5	-	3.2	3.8	-	-	2.4	-	-	-	0.11	-	-	ND	2.8	ND	ND	ND	14	17	-	-	-	ND	ND	-	ND
		6-5-5.0	05/15/2017	5.0	-	-	-	-	-	-	ND	-	ND	-	-	22	-	-	ND	ND	-	-	3.3	-	2.3	2.5	-	-	1.1	-	-	-	1.5	-	-	ND	2.0	ND	ND	ND	9.2	13	-	-	-	-	-	-	-
		6-6-1.0	05/15/2017	1.0	-	-	-	-	-	-	ND	-	1.1	-	-	120	-	-	ND	ND	-	-	15	-	8.3	13	-	-	12	-	-	-	0.12	-	-	ND	12	ND	ND	ND	34	45	-	-	-	-	-	-	-
	6-6	6-6-3.0	05/15/2017	3.0	-	-	-	-	-	-	ND	-	ND	-	-	30	-	-	ND	ND	-	-	3.3	-	2.6	3.0	-	-	1.2	-	-	-	ND	-	-	ND	2.5	ND	ND	ND	10	13	-	-	-	-	-	-	-
		6-6-5.0	05/15/2017	5.0	-	-	-	-	-	-	ND	-	ND	-	-	52	-	-	ND	ND	-	-	4.3	-	3.0	4.0	-	-	1.1	-	-	-	ND	-	-	ND	3.0	ND	ND	ND	14	14	-	-	-	-	-	-	-
		6-6-7.5	05/15/2017	7.5	-	-	-	-	-	-	ND	-	ND	-	-	32	-	-	ND	ND	-	-	7.5	-	3.8	4.1	-	-	1.2	-	-	-	ND	-	-	ND	3.8	ND	ND	ND	21	17	-	-	-	-	-	-	-
		6-7-1.0	05/15/2017	1.0	-	-	-	-	-	-	ND	-	ND	-	-	55	-	-	ND	ND	-	-	7.5	-	5.3	6.1	-	-	3.0	-	-	-	ND	-	-	ND	5.4	ND	ND	ND	22	26	-	-	-	-	-	-	-
	6-7	6-7-3.0	05/15/2017	3.0	-	-	-	-	-	-	ND	-	ND	-	-	25	-	-	ND	ND	-	-	3.7	-	2.7	3.2	-	-	2.0	-	-	-	0.12	-	-	ND	2.3	ND	ND	ND	12	14	-	-	-	-	-	-	-
		6-7-5.0	05/15/2017	5.0	-	-	-	-	-	-	ND	-	ND	-	-	24	-	-	ND	ND	-	-	4.3	-	2.3	3.6	-	-	7.5	-	-	-	ND	-	-	ND	2.8	ND	ND	ND	12	29	-	-	-	-	-	-	-
		6-7-7.5	05/15/2017	7.5	-	-	-	-	-	-	ND	-	ND	-	-	62	-	-	ND	ND	-	-	8.6	-	6.0	7.1	-	-	4.3	-	-	-	ND	-	-	ND	5.6	ND	ND	ND	25	33	-	-	-	-	-	-	-
		6-8-1.0	05/15/2017	1.0	-	-	-	-	-	-	ND	-	5.0	-	-	100	-	-	ND	ND	-	-	7.5	-	4.5	97	-	-	**140**	3.6	-	0.28	0.1	-	-	ND	6.1	ND	ND	ND	21	210	-	-	-	-	-	-	-
	6-8	6-8-3.0	05/15/2017	3.0	-	-	-	-	-	-	ND	-	ND	-	-	25	-	-	ND	ND	-	-	3.9	-	2.7	3.0	-	-	1.0	-	-	-	ND	-	-	ND	2.4	ND	ND	ND	15	13	-	-	-	-	-	-	-
		6-8-5.0	05/15/2017	5.0	-	-	-	-	-	-	ND	-	ND	-	-	47	-	-	ND	ND	-	-	6.3	-	4.8	4.3	-	-	1.4	-	-	-	ND	-	-	ND	4.0	ND	ND	ND	23	21	-	-	-	-	-	-	-
		6-8-7.5	05/15/2017	7.5	-	-	-	-	-	-	ND	-	ND	-	-	17	-	-	ND	ND	-	-	1.7	-	1.8	ND	-	-	ND	-	-	-	**4.6**	ND	ND	ND	1.3	ND	ND	ND	7.2	10	-	-	-	-	-	-	-
		6-9-1.0	05/15/2017	1.0	-	-	-	-	ND	-	ND	-	79	-	-	79	-	-	ND	ND	-	-	10	-	6.4	17	-	-	33	-	-	-	0.19	-	-	ND	9.1	ND	ND	ND	32	61	-	-	-	-	-	-	-
	6-9	6-9-3.0	05/15/2017	3.0	-	-	-	-	7.6 (TCE)	-	**47**	ND	9.4	-	-	110	-	-	ND	1.1	-	-	10	-	4.6	**390**	**31**	-	**3,100**	**32**	-	**6.5**	1.4	-	-	ND	12	ND	1.7	ND	18	510	-	-	-	-	-	-	-
		6-9-5.0	05/15/2017	5.0	-	-	-	-	-	-	ND	-	ND	-	-	81	-	-	ND	ND	-	-	8.1	-	5.5	41	-	-	41	-	-	-	0.2	-	-	ND	8.7	ND	ND	ND	23	56	-	-	-	-	-	-	-
		6-9-7.5	05/15/2017	7.5	-	-	-	-	-	-	ND	-	ND	-	-	78	-	-	ND	ND	-	-	9.9	-	7.7	8.8	-	-	3.4	-	-	-	0.2	-	-	ND	7.0	ND	ND	ND	29	36	-	-	-	-	-	-	-
		6-10-1.0	05/15/2017	1.0	-	-	-	-	7.1 (TCE)	-	ND	-	ND	-	-	110	-	-	ND	ND	-	-	11	-	6.8	24	-	-	**99**	**14**	-	ND	0.29	-	-	ND	7.5	ND	ND	ND	27	92	-	-	-	-	-	-	-
	6-10	6-10-3.0	05/15/2017	3.0	-	-	-	-	7.2 (TCE)	-	5.5	-	6.5	-	-	380	-	-	ND	**1.8**	ND	ND	15	-	3.2	160	-	-	**800**	**360**	-	**410**	0.19	-	-	ND	9.4	ND	ND	ND	14	2,100	-	-	-	-	-	-	-
		6-10-5.0	05/15/2017	5.0	-	-	-	-	-	-	ND	-	8.6	-	-	57	-	-	ND	ND	-	-	9.0	-	3.5	37	-	-	13	-	-	-	ND	-	-	ND	5.0	ND	ND	ND	17	31	-	-	-	-	-	-	-
		6-10-7.5	05/15/2017	7.5	-	-	-	-	-	-	ND	-	38	-	-	38	-	-	ND	ND	-	-	4.8	-	3.6	3.2	-	-	1.2	-	-	-	ND	-	-	ND	3.2	ND	ND	ND	16	17	-	-	-	-	-	-	-
		16-5 @ 1'	02/12/2016	1.0	ND	18	-	-	ND	ND	ND	-	2	-	-	56	-	-	ND	ND	-	-	6.6	-	3.5	8.4	-	-	19	-	-	-	ND	-	-	ND	4.7	ND	ND	ND	20	40	-	-	-	-	-	-	ND
	16-5	16-5 @ 3'	02/12/2016	3.0	-	-	-	-	ND	-	ND	-	2.1	-	-	55	-	-	ND	ND	-	-	7.1	-	3.5	9.4	-	-	19	-	-	-	0.15	-	-	ND	5.1	ND	ND	ND	21	39	-	-	-	-	-	-	-
		16-5 @ 4'	02/12/2016	4.0	-	-	-	-	ND	-	ND	-	2.3	-	-	59	-	-	ND	ND	-	-	8.4	-	3.7	8.8	-	-	21	-	-	-	ND	-	-	ND	5.6	ND	ND	ND	23	42	-	-	-	-	-	-	-
	16-6	16-6 @ 1'	02/1/2016	1.0	-	-	-	-	-	-	ND	-	2.4	-	-	55	-	-	ND	ND	-	-	6.3	-	3.5	8	-	-	11	-	-	-	0.1	-	-	ND	4.8	ND	ND	ND	21	36	-	-	-	-	-	-	-
		16-6 @ 3'	02/1/2016	3.0	-	-	-	-	-	-	-	-	-	-	-	-	-	-	-	-	-	-	-	-	-	-	-	-	-	-	-	-	-	-	-	-	-	-	-	-	-	-	-	-	-	-	-	-
	16-7	16-7 @ 1'	02/1/2016	1.0	-	-	-	-	-	-	ND	-	1.9	-	-	78	-	-	ND	ND	-	-	10	-	5.1	14	-	-	6.1	-	-	-	0.12	-	-	ND	8.2	ND	ND	ND	25	38	-	-	-	-	-	-	-
		16-7 @ 3'	02/1/2016	3.0	-	-	-	-	-	-	ND	-	1.6	-	-	55	-	-	ND	ND	-	-	6.8	-	4	7.3	-	-	4.3	-	-	-	ND	-	-	ND	5.2	ND	ND	ND	20	26	-	-	-	-	-	-	-
		16-7 @ 5'	02/1/2016	5.0	-	-	-	-	-	-	-	-	-	-	-	-	-	-	-	-	-	-	-	-	-	-	-	-	-	-	-	-	-	-	-	-	-	-	-	-	-	-	-	-	-	-	-	-
	L-5	L-5 @ 1'	02/1/2016	1.0	-	-	-	-	-	-	ND	-	1.8	-	-	46	-	-	ND	ND	-	-	5.5	-	3.2	8.4	-	-	25	-	-	-	ND	-	-	ND	4.2	ND	ND	ND	17	32	-	-	-	-	-	-	-
		L-5 @ 3'	02/1/2016	3.0	-	-	-	-	-	-	-	-	-	-	-	-	-	-	-	-	-	-	-	-	-	-	-	-	-	-	-	-	-	-	-	-	-	-	-	-	-	-	-	-	-	-	-	-
		L-5 @ 4.5'	02/1/2016	4.5	-	-	-	-	-	-	-	-	-	-	-	-	-	-	-	-	-	-	-	-	-	-	-	-	-	-	-	-	-	-	-	-	-	-	-	-	-	-	-	-	-	-	-	-
	L-5	L-5 @ 1'	02/26/2016	1.0	ND	ND	-	-	ND	ND	-	-	-	-	-	-	-	-	-	-	-	-	-	-	-	-	-	-	-	-	-	-	-	-	-	-	-	-	-	-	-	-	-	-	-	-	-	-	-
		L-5 @ 2'	02/26/2016	2.0	ND	ND	-	-	ND	930 (Phenol)	ND	-	ND	-	-	46	-	-	ND	ND	-	-	5.6	-	3.2	6.9	-	-	2.7	-	-	-	ND	-	-	ND	3.9	ND	ND	ND	18	23	-	-	-	ND	ND	-	-
		L-5 @ 3'	02/26/2016	3.0	-	-	-	-	-	-	ND	-	ND	-	-	30	-	-	ND	ND	-	-	3.9	-	2.2	2.8	-	-	ND	-	-	-	ND	-	-	ND	2.5	ND	ND	ND	14	14	-	-	-	-	-	-	-
	L-6	L-6 @ 1'	02/1/2016	1.0	-	-	-	-	-	-	ND	-	10	-	-	130	-	-	ND	ND	-	-	15	-	5.1	64	-	-	**200**	**11**	-	-	0.15	-	-	ND	12	ND	ND	ND	26	310	-	-	-	-	-	-	-
		L-6 @ 3'	02/1/2016	3.0	-	-	-	-	-	-	-	-	-	-	-	-	-	-	-	-	-	-	-	-	-	-	-	-	-	-	-	-	-	-	-	-	-	-	-	-	-	-	-	-	-	-	-	-
		L-6 @ 5'	02/1/2016	5.0	-	-	-	-	-	-	-	-	-	-	-	-	-	-	-	-	-	-	-	-	-	-	-	-	-	-	-	-	-	-	-	-	-	-	-	-	-	-	-	-	-	-	-	-

Table 2. Summary of Laboratory Test Results - Soil Samples (Cont'd)

PARC AREA	Boring ID	Sample ID	Sample Collection Date	Sample Depth (ft below grade)	Total Petroleum Hydrocarbons (EPA 8015B (M))				VOCs (EPA 8260B) (µg/kg)	SVOCs (EPA 8270C) (µg/kg)	Title 22 Metals (EPA 6010B/7471A)																												pH	Polychlorinated Biphenyls (EPA 8082) µg/kg	Organochlorine Pesticides (EPA 8081) µg/kg	Organophosphorous Pesticides (EPA 8081) µg/kg	Chlorinated Herbicides (EPA 8151A) µg/kg
					TPH GRO mg/kg	TPH DRO mg/kg	TPH ORO mg/kg	TPH Total mg/kg			Antimony mg/kg	STLC Antimony mg/L	Arsenic mg/kg	STLC Arsenic mg/L	TCLP Arsenic mg/L	Barium mg/kg	STLC Barium mg/L	TCLP Barium mg/L	Beryllium mg/kg	Cadmium mg/kg	STLC Cadmium mg/L	TCLP Cadmium mg/L	Chromium mg/kg	Hexavalent Chromium mg/kg	Cobalt mg/kg	Copper mg/kg	STLC Copper mg/L	TCLP Copper mg/L	Lead mg/kg	STLC Lead (CA-WET) mg/L	STLC Lead (DI-WET) mg/L	TCLP Lead mg/L	Mercury mg/kg	STLC Mercury mg/L	TCLP Mercury mg/L	Molybdenum mg/kg	Nickel mg/kg	Selenium mg/kg	Silver mg/kg	Thallium mg/kg	Vanadium mg/kg	Zinc mg/kg	STLC Zinc mg/L	TCLP Zinc mg/L					
6	L-6	L-6 @ 1'	02/26/2016	1.0	ND	6600	-	-	ND	ND	-	-	-	-	-	-	-	-	-	-	-	-	-	-	-	-	-	-	-	-	-	-	-	-	-	-	-	-	-	240 (Arochlor 1260)	ND	-	-
		L-6 @ 2'	02/26/2016	2.0	ND	ND	-	-	ND	460 (Phenol)	ND	-	26	-	-	93	-	-	ND	ND	-	-	10	-	6	10	-	-	5.8	-	-	-	ND	-	-	ND	7.4	ND	ND	ND	ND	28	53	-	-	-	ND	ND	-	-	-	-
		L-6 @ 3'	02/26/2016	3.0	-	-	-	-	-	-	ND	-	17	-	-	48	-	-	ND	ND	-	-	5.5	-	3.3	5	-	-	2.4	-	-	-	ND	-	-	ND	3.8	ND	ND	ND	ND	17	24	-	-	-	-	-	-	-	-	-
	18.1-GP-1	GP-1 @ 1'	04/1/2016	1.0	-	-	-	-	-	-	ND	-	1.9	-	-	73	-	-	ND	ND	-	-	11	-	4.5	19	ND	0.053	53	6.1	-	0.81	0.55	-	-	ND	12	ND	ND	ND	ND	19	85	-	-	-	-	-	-	-	-	-
		GP-1 @ 2'	04/1/2016	2.0	-	-	480	480	-	-	ND	-	2.4	-	-	160	-	-	ND	1.6	-	-	10	-	4.3	23	ND	ND	74	3.6	-	0.17	0.75	-	-	ND	8.9	ND	ND	ND	ND	22	230	-	-	-	-	-	-	-	-	-
		GP-1 @ 3.5'	04/1/2016	3.5	-	-	-	-	-	-	ND	-	1.8	-	-	70	-	-	ND	ND	-	-	8	-	3.8	15	ND	ND	34	ND	-	ND	0.12	-	-	ND	7.6	ND	ND	ND	ND	22	62	-	-	-	-	-	-	-	-	-
		GP-1 @ 5'	04/1/2016	5.0	-	-	-	-	-	-	ND	-	1	-	-	41	-	-	ND	ND	-	-	5.5	-	3	4.7	ND	ND	1.6	ND	-	ND	ND	-	-	ND	3.9	ND	ND	ND	ND	18	20	-	-	-	-	-	-	-	-	-
		GP-1 @ 6.5'	04/1/2016	6.5	-	-	29	29	-	-	7.3	-	2.2	-	-	100	-	-	ND	ND	-	-	8.8	-	3.5	44	1.7	ND	170	15	-	0.35	1.1	-	-	ND	15	ND	ND	ND	ND	19	290	-	-	-	-	-	-	-	-	-
	18.1-GP-2	GP-2 @ 1'	04/1/2016	1.0	-	-	-	-	-	-	ND	-	1.9	-	-	69	-	-	ND	ND	-	-	6.8	-	3.4	12	ND	ND	44	3.4	-	ND	1.3	-	-	ND	5.5	ND	ND	ND	ND	19	100	-	-	-	-	-	-	-	-	-
		GP-2 @ 2'	04/1/2016	2.0	-	-	-	-	-	-	ND	-	ND	-	-	2100	-	-	ND	ND	-	-	38	-	ND	1400	98	7.4	8300	950	-	98	0.67	-	-	ND	47	ND	ND	ND	ND	29	8300	-	-	-	-	-	-	-	-	-
		GP-2 @ 3.5'	04/1/2016	3.5	-	-	-	-	-	-	ND	-	2	-	-	65	-	-	ND	ND	-	-	8.3	-	3.8	23	1.1	4.3	71	2.8	-	16	0.35	-	-	ND	7.6	ND	ND	ND	ND	21	70	-	-	-	-	-	-	-	-	-
		GP-2 @ 5'	04/1/2016	5.0	-	-	-	-	-	-	ND	-	ND	-	-	49	-	-	ND	ND	-	-	6.2	-	3.6	7.1	ND	ND	1.5	ND	-	ND	ND	-	-	ND	4.2	ND	ND	ND	ND	22	24	-	-	-	-	-	-	-	-	-
	18.1-GP-3	GP-3 @ 1'	04/1/2016	1.0	-	-	-	-	-	-	40	-	17	-	-	350	-	-	ND	ND	-	-	24	-	6.1	370	26	0.27	1600	88	-	3.8	98	-	-	ND	19	ND	ND	ND	ND	31	1500	-	-	-	-	-	-	-	-	-
		GP-3 @ 2'	04/1/2016	2.0	-	24	1000	1000	-	-	ND	-	3.3	-	-	67	-	-	ND	ND	-	-	6.4	-	3.4	18	ND	ND	62	2.3	-	ND	0.11	-	-	ND	6.1	ND	ND	ND	ND	19	92	-	-	-	-	-	-	-	-	-
		GP-3 @ 3.5'	04/1/2016	3.5	-	-	-	-	-	-	ND	-	1.2	-	-	42	-	-	ND	ND	-	-	5.8	-	3.1	5.4	ND	ND	1.4	ND	-	ND	ND	-	-	ND	3.7	ND	ND	ND	ND	20	20	-	-	-	-	-	-	-	-	-
		GP-3 @ 5'	04/1/2016	5.0	-	-	-	-	-	-	ND	-	ND	-	-	44	-	-	ND	ND	-	-	4.6	-	2.8	4.4	ND	ND	1.5	ND	-	ND	ND	-	-	ND	3.2	ND	ND	ND	ND	16	19	-	-	-	-	-	-	-	-	-
	18.1-1	18.1-1-1	10/22/2015	1.0	10	10	162	230	<various	-	<0.758	-	2	-	-	97.5	-	-	<0.253	1.78	-	-	10.4	-	6.34	23.8	-	-	61.1	3.77	-	-	0.182	-	-	0.779	13.8	<0.758	<0.253	<0.758	20.1	112	-	-	-	-	-	-	-	-	-
		18.1-1-3.5	10/22/2015	3.5	5	5.8	43	54	<various	-	<0.769	-	<0.769	-	-	63.9	-	-	<0.256	0.96	-	-	6.81	-	6.29	7.99	-	-	4.67	-	-	-	<0.0862	-	-	<0.256	6.1	<0.769	<0.256	<0.769	18.6	35.1	-	-	-	-	-	-	-	-	-
	18.1-2	18.1-2-1	10/22/2015	1.0	5	5	9.6	19	<various	-	<0.725	-	<0.725	-	-	146	-	-	<0.242	1.12	-	-	7.66	-	4.46	12.2	-	-	25.4	-	-	-	0.108	-	-	0.361	8.56	0.87	<0.242	<0.725	17.2	60.7	-	-	-	-	-	-	-	-	-
		18.1-2-2.0	10/22/2015	2.0	25	25	96	130	<various	-	<0.739	-	0.817	-	-	134	-	-	<0.246	1.44	-	-	11.5	-	5.8	95	-	-	293	35.1	-	3.59	0.18	-	-	0.356	47.9	<0.739	<0.246	<0.739	19.2	288	-	-	-	-	-	-	-	-	-
	18.1-3	18.1-3-1	10/22/2015	1.0	5	5	5	5	<various	-	<0.765	-	<0.765	-	-	72.6	-	-	0.286	1.39	-	-	9.72	-	8.66	12	-	-	3.47	-	-	-	0.103	-	-	0.341	21.6	<0.765	<0.255	<0.765	21.2	39.7	-	-	-	-	-	-	-	-	-
		18.1-3-3.5	10/22/2015	3.5	9.8	9.8	94	140	<various	-	<0.758	-	1.69	-	-	202	-	-	0.277	2.81	-	-	14.5	-	7.42	64.4	-	-	554	18.4	-	<0.100	0.862	-	-	0.256	19.3	<0.758	0.297	<0.758	26.6	545	-	-	-	-	-	-	-	-	-
	18.1-4	18.1-4-1	10/22/2015	1.0	5	5	36	59	<various	-	<0.725	-	8.51	-	-	443	-	-	<0.242	3.99	-	-	27.7	-	10.1	312	38.7	-	1010	102	-	4.06	1.24	-	-	<0.242	39.6	<0.725	0.258	<0.725	41.5	1400	-	-	-	-	-	-	-	-	-
		18.1-4-3.5	12/9/2015	3.5	5	5	5	5	<various	-	<0.750	-	3.59	-	-	72.9	-	-	<0.250	0.785	-	-	7.89	-	6.8	13.4	-	-	17.2	-	-	-	<0.0794	-	-	<0.250	7.04	0.961	<0.250	<0.750	22.4	68.6	-	-	-	-	-	-	-	-	-
	18.1-4A	18.1-4A-1	12/9/2015	1.0	5	5	77	170	<various	-	452	-	9.97	-	-	486	-	-	0.269	5.44	-	-	21.7	-	7.94	531	-	-	13900	-	-	8.39	0.468	-	-	<0.240	21.7	1.16	12.7	<0.721	30.6	2140	-	-	-	-	-	-	-	-	-
		18.1-4A-3.5	12/9/2015	3.5	5	5	100	220	<various	-	<0.739	-	4.58	-	-	99.3	-	-	<0.246	0.906	-	-	9.87	-	8.52	17.9	-	-	29.5	-	-	-	<0.0833	-	-	<0.246	9.27	2.08	<0.246	<0.739	27.1	68.8	-	-	-	-	-	-	-	-	-
	18.1-4B	18.1-4B-1	12/9/2015	1.0	5	5	8.4	20	<various	-	14	-	5.11	-	-	444	-	-	0.28	2.74	-	-	9.07	-	9.07	475	-	-	1690	-	-	21.3	0.341	-	-	<0.250	18.4	1.2	0.71	<0.750	30.9	1500	-	-	-	-	-	-	-	-	-
		18.1-4B-3.5	12/9/2015	3.5	5	5	5	5	<various	-	<0.750	-	2.99	-	-	64.8	-	-	<0.250	0.679	-	-	7.05	-	5.98	6.01	-	-	2.85	-	-	-	<0.0794	-	-	<0.250	5.87	1.68	<0.250	<0.750	22.2	36.6	-	-	-	-	-	-	-	-	-
	18.1-4C	18.1-4C-1	12/9/2015	1.0	5	5	21	47	<various	-	9.45	-	12.6	-	-	727	-	-	0.283	3.16	-	-	35.2	-	8.61	552	-	-	1930	-	-	4	0.439	-	-	<0.246	18	1.66	0.547	<0.739	26.9	1990	-	-	-	-	-	-	-	-	-
		18.1-4C-3.5	12/9/2015	3.5	5	5	5	5	<various	-	<0.750	-	3.55	-	-	70.9	-	-	<0.250	0.764	-	-	7.34	-	6.52	6.66	-	-	8.8	-	-	-	<0.0794	-	-	<0.250	6.65	10.3	<0.250	<0.750	22.2	56.3	-	-	-	-	-	-	-	-	-
	18.1-4D	18.1-4D-1	12/9/2015	1.0	5	5	52	91	<various	-	<0.725	-	10.7	-	-	474	-	-	0.315	2.89	-	-	30.6	-	8.72	308	-	-	1170	-	-	5.3	0.456	-	-	<0.242	25.2	1.4	0.434	<0.725	30.4	1550	-	-	-	-	-	-	-	-	-
		18.1-4D-3.5	12/9/2015	3.5	5	5	150	250	<various	-	3.49	-	10.6	-	-	463	-	-	0.296	3.15	-	-	27.9	-	8.73	535	-	-	2560	-	-	6.34	0.768	-	-	0.311	38.8	0.847	0.639	<0.750	37.7	1820	-	-	-	-	-	-	-	-	-
	18.1-5	18.1-5-1	12/9/2015	1.0	5	5	39	88	<various	-	9.35	-	7.35	-	-	451	-	-	0.408	4.95	-	-	26.1	-	11.6	452	-	-	2050	-	-	6.8	0.374	-	-	1.02	37.4	<0.750	0.622	<0.750	34.7	1310	-	-	-	-	-	-	-	-	-
		18.1-5-3.5	12/9/2015	3.5	5	5	369	1000	<various	-	7.5	-	2.32	-	-	208	-	-	0.277	2.31	-	-	12.3	-	7.09	232	-	-	1020	-	-	4.9	0.254	-	-	0.378	16.8	<0.750	0.472	<0.750	24.9	628	-	-	-	-	-	-	-	-	-
	18.1-6	18.1-6-1	12/9/2015	1.0	5	5	5.7	19	<various	-	2.68	-	0.798	-	-	153	-	-	<0.250	1.45	-	-	8.5	-	5.12	86.4	-	-	334	65.8	-	3.08	0.12	-	-	<0.250	7.49	<0.750	<0.250	<0.750	18.1	423	-	-	-	-	-	-	-	-	-
		18.1-6-3.5	12/9/2015	3.5	5	5	51	140	<various	-	22.8	-	2.45	-	-	196	-	-	0.261	2.49	-	-	12.4	-	7.74	311	-	-	1510	-	-	205	0.24	-	-	<0.250	11.7	<0.750	0.397	<0.750	26.6	597	-	-	-	-	-	-	-	-	-
	18.1-7	18.1-7-1	12/9/2015	1.0	5	5	63	150	<various	-	4.3	-	5.03	-	-	217	-	-	0.376	2.7	-	-	15	-	8.95	110	-	-	505	56.6	-	3.77	0.298	-	-	0.49	17.2	<0.750	0.335	<0.750	31.7	823	-	-	-	-	-	-	-	-	-
		18.1-7-3.5	12/9/2015	3.5	5	5	149	510	<various	-	1.88	-	1.46	-	-	121	-	-	0.264	1.67	-	-	10.5	-	7.45	53.1	-	-	122	15.3	-	5.79	0.115	-	-	<0.250	10.9	<0.750	<0.250	<0.750	27.5	178	-	-	-	-	-	-	-	-	-
	18.2-1	18.2-1-1	04/20/2016	1.0	5	5	5.6	11	11,000 (TCE)	-	<0.765	-	15.6	-	-	163	-	-	0.338	14.2	0.104	-	45.2	-	13	132	-	-	468	9.6	-	0.243	0.125	-	-	<0.255	22.8	<0.765	<0.255	<0.765	34.4	4910	53	-	-	-	-	-	-	-	-
		18.2-1-3.5	04/20/2016	3.5	5	5	5	5	<various	-	<0.781	-	<0.781	-	-	45.6	-	-	<0.260	<0.521	-	-	4.23	-	3.93	4.6	-	-	1.93	-	-	-	<0.0833	-	-	<0.260	3.69	<0.781	<0.260	<0.781	13.1	21.6	-	-	-	-	-	-	-	-	-
	18.2-2	18.2-2-1	04/20/2016	1.0	5	5	34	39	<various	-	3.44	-	2.25	-	-	112	-	-	0.313	0.519	-	-	12.2	-	9.72	43.1	-	-	86.8	12	-	-	0.168	-	-	<0.255	10.4	<0.765	<0.255	<0.765	32	17	-	-	-	-	-	-	-	-	-
		18.2-2-3.5	04/20/2016	3.5	5	5	160	300	67 (TCE)	-	93.1	-	17.1	-	-	1450	-	-	0.291	8.07	-	-	44.7	-	9.36	2770	23.6	-	16100	-	-	126	0.972	-	-	<0.254	32.7	<0.761	2.72	<0.761	28.5	8730	-	<0.100	-	-	-	-	-	-	-
	18.2-3	18.2-3-1	04/20/2016	1.0	5	5	22	50	8.0 (TCE)	-	2.42	-	2.05	-	-	152	-	-	0.344	0.889	-	-	13.8	-	8.58	107	-	-	433	54.5	-	0.958	0.284	-	-	<0.262	10.7	<0.785	<0.262	<0.785	30.9	299	-	-	-	-	-	-	-	-	-
		18.2-3-3.5	04/20/2016	3.5	5	5	47	68	53 (TCE)	-	5.11	-	4.75	-	-	207	-	-	0.28	2.04	-	-	13.1	-	7.46	828	-	-	1310	-	-	12.2	0.829	-	-	0.258	14	<0.739	0.829	<0.739	26.5	1260	-	-	-	-	-	-	-	-	-
	A-13-08	A08@5'	08/27/2013	5.0	300	5	ND	300	ND	-	ND	-	2.1	-	-	91	-	-	ND	ND	-	-	17	-	4.2	15	-	-	26	-	-	-	0.062	-	-	ND	7.5	ND	ND	ND	ND	18	47	-	-	-	-	-	-	-	-	-
		A08@40'	08/27/2013	40.0	ND	ND	ND	ND	ND	-	ND	-	0.56	-	-	24	-	-	ND	ND	-	-	ND	-	ND	4.5	-	-	ND	-	-	-	0.046	-	-	ND	ND	ND	ND	ND	ND	13	-	-	-	-	-	-	-	-	-
		A08@55'	08/27/2013	55.0	ND	ND	ND	ND	ND	-	-	-	-	-	-	-	-	-	-	-	-	-	-	-	-	-	-	-	-	-	-	-	-	-	-	-	-	-	-	-	-	-	-	-	-	-	-	-	-	-	-
		A08@65'	08/27/2013	65.0	ND	ND	ND	ND	ND	-	ND	-	ND	-	-	14	-	-	ND	ND	-	-	5.6	-	ND	ND	-	-	ND	-	-	-	ND	-	-	ND	3.3	ND	ND	ND	ND	7.6	-	-	-	-	-	-	-	-	-
	R-13-09	R09@10'	08/27/2013	10.0	ND	ND	ND	ND	ND	-	ND	-	1.1	-	-	28	-	-	ND	ND	-	-	5.1	-	ND	5.2	-	-	ND	-	-	-	0.06	-	-	ND	3.3	ND	ND	ND	ND	13	16	-	-	-	-	-	-	-	-	-
		R09@50'	08/27/2013	50.0	ND	ND	ND	ND	ND	-	-	-	-	-	-	-	-	-	-	-	-	-	-	-	-	-	-	-	-	-	-	-	-	-	-	-	-	-	-	-	-	-	-	-	-	-	-	-	-	-	-
		R09@60'	08/27/2013	60.0	ND	ND	ND	ND	ND	-	-	-	-	-	-	-	-	-	-	-	-	-	-	-	-	-	-	-	-	-	-	-	-	-	-	-	-	-	-	-	-	-	-	-	-	-	-	-	-	-	-
	A-13-10	R10@5'	08/29/2013	5.0	ND	ND	ND	ND	ND	-	ND	-	ND	-	-	52	-	-	ND	ND	-	-	5.8	-	4.2	5.6	-	-	ND	-	-	-	0.07	-	-	ND	4.2	ND	ND	ND	20	27	-	-	-	-	-	-	-	-	-
		R10@30'	08/29/2013	30.0	ND	ND	ND	ND	ND	-	-	-	-	-	-	-	-	-	-	-	-	-	-	-	-	-	-	-	-	-	-	-	-	-	-	-	-	-	-	-	-	-	-	-	-	-	-	-	-	-	-
		R10@55'	08/29/2013	55.0	ND	ND	ND	ND	ND	-	ND	-	0.96	-	-	46	-	-	ND	ND	-	-	9	-	4.4	12	-	-	ND	-	-	-	0.024	-	-	ND	7.6	ND	ND	ND	17	31	-	-	-	-	-	-	-	-	-
	A-13-12	R12@5'	09/3/2013	5.0	ND	ND	ND	ND	ND	-	ND	-	ND	-	-	39	-	-	ND	ND	-	-	7.9	-	3.4	34	-	-	480	25	-	7.5	0.12	-	-	ND	4.7	ND	ND	ND	19	42	-	-	-	-	-	-	-	-	-
		R12@10'	09/3/2013	10.0	-	-	-	-	-	-	-	-	-	-	-	-	-	-	-	-	-	-	-	-	-	-	-	-	15	-	-	-	-	-	-	-	-	-	-	-	-	-	-	-	-	-	-	-	-	-
		R12@15'	09/3/2013	15.0	-	-	-	-	-	-	-	-	-	-	-	-	-	-	-	-	-	-	-	-	-	-	-	-	ND	-	-	-	-	-	-	-	-	-	-	-	-	-	-	-	-	-	-	-	-	-
		R12@20'	09/3/2013	20.0	-	-	-	-	-	-	-	-	-	-	-	-	-	-	-	-	-	-	-	-	-	-	-	-	ND	-	-	-	-	-	-	-	-	-	-	-	-	-	-	-	-	-	-	-	-	-
		R12@30'	09/3/2013	30.0	ND	ND	ND	ND	ND	-	-	-	-	-	-	-	-	-	-	-	-	-	-	-	-	-	-	-	-	-	-	-	-	-	-	-	-	-	-	-	-	-	-	-	-	-	-	-	-	-	-
		R12@60'	09/3/2013	60.0	ND	ND	ND	ND	ND	-	ND	-	3.4	-	-	110	-	-	ND	2.4	-	-	30	-	11	24	-	-	5.4	-	-	-	0.054	-	-	ND	19	ND	ND	ND	54	69	-	-	-	-	-	-	-	-	-
7	7-1	7-1-0.5	05/16/2017	0.5	ND	62	-	-	ND	ND	ND	-	2.7	-	-	110	-	-	ND	ND	-	-	14	-	6.8	4,500	12	-	45	-	-	-	0.13	-	-	ND	12	ND	ND	ND	30	100	-	-	-	-	-	-	-	-	-
		7-1-1.0	05/16/2017	1.0	ND	120	-	-	ND	ND	ND	ND	1.2	-	-	120	-	-	ND	ND	-	-	8.8	-	4.8	700	140	-	69	6.4	-	0.47	0.22	-	-	ND	13	ND	ND	ND	24	270	-	-	ND	3.4 (4,4'-DDD [2C]) 5.9 (4,4'-DDE [2C]) 6.1 (4,4'-DDT [2C]) 2.5 (alpha-BHC [2C])	-	-	ND
	7-2	7-2-0.5	05/15/2017	0.5	ND	ND	-	-	ND	ND	ND	ND	ND	-	-	93	-	-	ND	ND	-	-	6.1	-	4.3	8.3	-	-	27	-	-	-	0.18	-	-	ND	4.3	ND	ND	ND	19	57	-	-	ND	ND	-	-	-	-	ND
		7-2-1.0	05/15/2017	1.0	-	-	-	-	-	-	ND	-	ND	-	-	35	-	-	ND	ND	-	-	4.5	-	3.9	3.1	-	-	1.1	-	-	-	ND	-	-	ND	3.2	ND	ND	ND	15	17	-	-	-	-	-	-	-	-	-
		7-2-3.0	05/15/2017	3.0	ND	ND	-	-	ND	ND	ND	-	ND	-	-	23	-	-	ND	ND	-	-	2.9	-	2.5	2.1	-	-	ND	-	-	-	0.19	-	-	ND	2.1	ND	ND	ND	11	13	-	-	-	-	-	-	-	-	-
		7-2-5.0	05/15/2017	5.0	-	-	-	-	-	-	ND	-	ND	-	-	24	-	-	ND	ND	-	-	2.7	-	2.2	ND	-	-	ND	-	-	-	ND	-	-	ND	1.9	ND	ND	ND	10	11	-	-	-	-	-	-	-	-	-
	7-3	7-3-0.5	05/15/2017	0.5	-	-	-	-	-	-	ND	-	2.5	-	-	110	-	-	ND	ND	-	-	13	-	7.8	39	-	-	51	4.5	-	-	0.17	-	-	ND	11	ND	ND	ND	28	93	-	-	-	-	-	-	-	-	-
		7-3-1.0	05/15/2017	1.0	ND	ND	-	-	ND	ND	ND	ND	1.1	-	-	77	-	-	ND	ND	-	-	8.3	-	6.1	11	-	-	33	-	-	-	0.11	-	-	ND	5.9	ND	ND	ND	26	44	-	-	ND	ND	-	-	-	-	ND
		7-3-3.0	05/15/2017	3.0	-	-	-	-	-	-	ND	-	ND	-	-	61	-	-	ND	ND	-	-	7.1	-	5.3	6.8	-	-	7.0	-	-	-	ND	-	-	ND	4.8	ND	ND	ND	23	32	-	-	-	-	-	-	-	-	-
		7-3-5.0	05/15/2017	5.0	ND	ND	-	-	ND	ND	ND	ND	ND	-	-	34	-	-	ND	ND	-	-	4.6	-	3.3	3.1	-	-	ND	-	-	-	ND	-	-	ND	2.9	ND	ND	ND	18	15	-	-	-	-	-	-	-	-	-
	7-4	7-4-0.5	05/15/2017	0.5	ND	26	-	-	ND	ND	ND	-	1.1	-	-	130	-	-	ND	ND	-	-	12	-	8.2	36	-	-	70	5.5	-	ND	0.11	-	-	ND	9.3	1.2	ND	ND	32	150	-	-	ND	ND	-	-	-	-	ND
		7-4-1.0	05/15/2017	1.0	-	-	-	-	-	-	ND	-	ND	-	-	100	-	-	ND	ND	-	-	9.8	-	6.2	44	-	-	43	-	-	-	0.12	-	-	ND	9.5	1.1	ND	ND	26	130	-	-	-	-	-	-	-	-	-
		7-4-3.0	05/15/2017	3.0	ND	6,300	-	-	ND	ND	ND	-	92	-	-	92	-	-	ND	ND	-	-	11	-	7.6	13	-	-	31	-	-	-	0.64	-	-	ND	8.4	ND	ND	ND	29	80	-	-	-	-	-	-	-	-	-
		7-4-5.0	05/15/2017	5.0	-	-	-	-	-	-	ND	-	2.3	-	-	150	-	-	ND	ND	-	-	13	-	4.6	35	-	-	12	-	-	-	ND	-	-	ND	22	ND	ND	ND	23	890	-	-	-	-	-	-	-	-	-
	7-5	7-5-0.5	05/16/2017	0.5	-	-	-	-	-	-	ND	-	ND	-	-	95	-	-	ND	ND	-	-	12	-	8.0	9.7	-	-	4.5	-	-	-	ND	-	-	ND	8.3	ND	ND	ND	32	39	-	-	-	-	-	-	-	-	-
		7-5-1.0	05/16/2017	1.0	ND	ND	-	-	ND	ND	ND	-	ND	-	-	95	-	-	ND	ND	-	-	12	-	8.2	10	-	-	3.0	-	-	-	ND	-	-	ND	8.6	1.0	ND	ND	34	38	-	-	ND	ND	-	-	-	-	ND
		7-5-3.0	05/16/2017	3.0	-	-	-	-	-	-	ND	-	ND	-	-	120	-	-	ND	ND	-	-	14	-	9.9	18	-	-	3.5	-	-	-	ND	-	-	ND	12	1.1	ND	ND	38	46	-	-	-	-	-	-	-	-	-
		7-5-5.0	05/16/2017	5.0	ND	ND	-	-	ND	ND	ND	-	ND	-	-	31	-	-	ND	ND	-	-	6.7	-	3.6	2.7	-	-	1.0	-	-	-	ND	-	-	ND	3.0	ND	ND	ND	28	16	-	-	-	-	-	-	-	-	-
	7-6	7-6-0.5	05/16/2017	0.5	ND	200	-	-	ND	ND	ND	-	1.2	-	-	91	-	-	ND	ND	-	-	8.4	-	5.2	28	-	-	31	-	-	-	0.13	-	-	ND	7.3	ND	ND	ND	23	77	-	-	ND	ND	-	-	-	-	ND
		7-6-1.0	05/16/2017	1.0	-	-	-	-	-	-	ND	-	ND	-	-	93	-	-	ND	ND	-	-	8.7	-	5.7	28	-	-	22	-	-	-	0.16	-	-	ND	6.7	ND	ND	ND	24	60	-	-	-	-	-	-	-	-	-
		7-6-3.0	05/16/2017	3.0	-	-	-	-	-	-	ND	-	78	-	-	ND	ND	-	8.2	-	5.2	12	-	-	13	-	-	ND	-	-	ND	6.1	ND	ND	ND	23	50	-	-	-	-	-	-	-	-	-
		7-6-5.0	05/16/2017	5.0	ND	ND	-	-	ND	ND	ND	-	40	-	-	40	-	-	5.0	-	3.5	4.6	-	-	2.7	-	-	ND	-	-	ND	3.4	ND	ND	ND	16	19	-	-	-	-	-	-	-	-	-
	7-7	7-7-0.5	05/16/2017	0.5	-	-	-	-	-	-	ND	-	110	-	-	ND	ND	-	14	-	9.3	13	-	-	3.7	-	-	ND	-	-	ND	10	ND	ND	ND	35	41	-	-	-	-	-	-	-	-	-
		7-7-1.0	05/16/2017	1.0	-	-	-	-	-	-	ND	-	130	-	-	ND	ND	-	12	-	11	9.6	-	-	2.3	-	-	ND	-	-	ND	9.4	ND	ND	ND	37	47	-	-	ND	ND	-	-	-	-	ND
		7-7-3.0	05/16/2017	3.0	ND	ND	-	-	ND	ND	ND	-	26	-	-	ND	ND	-	5.0	-	2.9	2.2	-	-	ND	-	-	ND	-	-	ND	2.4	ND	ND	ND	22	13	-	-	-	-	-	-	-	-	-
		7-7-5.0	05/16/2017	5.0	ND	470	-	-	ND	ND	ND	-	17	-	-	ND	ND	-	3.2	-	2.1	ND	-	-	ND	-	-	ND	-	-	ND	1.8	ND	ND	ND	14	12	-	-	-	-	-	-	-	-	-
	L-2	L-2 @ 1'	02/1/2016	1.0	-	-	-	-	-	-	ND	-	1.8	-	-	97	-	-	ND	ND	-	-	8.7	-	4.7	11	-	-	6.4	-	-	-	ND	-	-	ND	6.5	ND	ND	ND	23	37	-	-	-	-	-	-	-

Table 2. Summary of Laboratory Test Results - Soil Samples (Cont'd)

PARC AREA	Boring ID	Sample ID	Sample Collection Date	Sample Depth (ft below grade)	Total Petroleum Hydrocarbons (EPA 8015B (M))				VOCs (EPA 8260B) (µg/kg)	SVOCs (EPA 8270C) (µg/kg)	Title 22 Metals (EPA 6010B/7471A)																														pH	Polychlorinated Biphenyls (EPA 8082) µg/kg	Organochlorine Pesticides (EPA 8081) µg/kg	Organophosphorous Pesticides (EPA 8081) µg/kg	Chlorinated Herbicides (EPA 8151A) µg/kg
					TPH GRO mg/kg	TPH DRO mg/kg	TPH ORO mg/kg	TPH Total mg/kg			Antimony mg/kg	STLC Antimony mg/L	Arsenic mg/kg	STLC Arsenic mg/L	TCLP Arsenic mg/L	Barium mg/kg	STLC Barium mg/L	TCLP Barium mg/L	Beryllium mg/kg	Cadmium mg/kg	STLC Cadmium mg/L	TCLP Cadmium mg/L	Chromium mg/kg	Hexavalent Chromium mg/kg	Cobalt mg/kg	Copper mg/kg	STLC Copper mg/L	TCLP Copper mg/L	Lead mg/kg	STLC Lead (CA-WET) mg/L	STLC Lead (DI-WET) mg/L	TCLP Lead mg/L	Mercury mg/kg	STLC Mercury mg/L	TCLP Mercury mg/L	Molybdenum mg/kg	Nickel mg/kg	Selenium mg/kg	Silver mg/kg	Thallium mg/kg	Vanadium mg/kg	Zinc mg/kg	STLC Zinc mg/L	TCLP Zinc mg/L					
8	L-3	L-3 @ 1'	02/26/2016	1.0	ND	18	-	-	ND	ND	-	-	-	-	-	-	-	-	-	-	-	-	-	-	-	-	-	-	-	-	-	-	-	-	-	-	-	-	-	-	ND	2.9 (4,4' - DDT [2C])	-	-
		L-3 @ 2'	02/26/2016	2.0	-	-	-	-	-	-	ND	-	1.6	-	-	88	-	-	ND	ND	-	-	9.8	-	6.3	9.5	-	-	2.3	-	-	-	ND	-	-	ND	7.2	ND	ND	ND	30	41	-	-	-	-	-	-
		L-3 @ 3'	02/26/2016	3.0	-	-	-	-	-	-	ND	-	1.7	-	-	89	-	-	ND	ND	-	-	10	-	6.6	9.8	-	-	2.4	-	-	-	ND	-	-	ND	7.4	ND	ND	ND	31	41	-	-	-	-	-	-
	L-4	L-4 @ 1'	02/26/2016	1.0	ND	20	-	-	ND	ND	-	-	-	-	-	-	-	-	-	-	-	-	-	-	-	-	-	-	-	-	-	-	-	-	-	-	-	-	-	-	-	ND	2.1 (4,4' - DDT [2C])	-	-
		L-4 @ 2'	02/26/2016	2.0	-	-	-	-	-	-	ND	-	2.2	-	-	130	-	-	ND	ND	-	-	12	-	6.7	26	-	-	14	-	-	-	ND	-	-	ND	9.9	ND	ND	ND	31	96	-	-	-	-	-	-
		L-4 @ 3'	02/26/2016	3.0	-	-	-	-	-	-	ND	-	2.6	-	-	130	-	-	ND	ND	-	-	12	-	5.3	37	-	-	**67**	-	-	-	0.17	-	-	ND	11	ND	ND	ND	24	150	-	-	-	-	-	-
	20-1	20-1-1	04/20/2016	1.0	<5	<5	25	42	<various	-	<0.789	-	2.7	-	-	172	-	-	<0.263	1.33	-	-	24.8	-	6.72	73.9	-	-	**240**	**13.4**	-	0.5	1.22	-	-	1.02	9.96	<0.789	0.401	<.789	25.8	170	-	-	-	-	-	-
	A-13-14	A14@10'	09/5/2013	10.0	ND	ND	ND	ND	ND	-	ND	-	ND	-	-	46	-	-	ND	1.2	-	-	9.1	-	4.4	6.8	-	-	ND	-	-	-	0.036	-	-	ND	4.8	ND	ND	ND	33	26	-	-	-	-	-	-
		A14@20'	09/5/2013	20.0	6	16	2.4	25	ND	-	-	-	-	-	-	-	-	-	-	-	-	-	-	-	-	-	-	-	-	-	-	-	-	-	-	-	-	-	-	-	-	-	-	-	-	-	-	-
		A14@45'	09/5/2013	45.0	ND	ND	ND	ND	ND	-	-	-	-	-	-	-	-	-	-	-	-	-	-	-	-	-	-	-	-	-	-	-	-	-	-	-	-	-	-	-	-	-	-	-	-	-	-	-
		A14@60'	09/5/2013	60.0	ND	ND	ND	ND	ND	-	ND	-	ND	-	-	20	-	-	ND	ND	-	-	ND	-	ND	ND	-	-	ND	-	-	-	0.1	-	-	ND	3.5	ND	ND	ND	ND	13	-	-	-	-	-	-
	A-13-15	R15@5'	08/23/2013	5.0	ND	ND	ND	ND	ND	-	ND	-	1.4	-	-	50	-	-	ND	ND	-	-	9.4	-	3.2	34	-	-	18	-	-	-	0.074	-	-	ND	4.7	ND	ND	ND	17	58	-	-	-	-	-	-
		R15@50'	08/23/2013	50.0	ND	ND	ND	ND	ND	-	-	-	-	-	-	-	-	-	-	-	-	-	-	-	-	-	-	-	-	-	-	-	-	-	-	-	-	-	-	-	-	-	-	-	-	-	-	-
		R15@60'	08/23/2013	60.0	ND	ND	ND	ND	ND	-	-	-	-	-	-	-	-	-	-	-	-	-	-	-	-	-	-	-	-	-	-	-	-	-	-	-	-	-	-	-	-	-	-	-	-	-	-	-
	8-1	8-1-0.5	05/16/2017	0.5	-	-	-	-	-	-	-	-	-	-	-	-	-	-	-	-	-	-	-	-	-	-	9.6	-	**250**	**14**	-	0.38	-	-	-	-	-	-	-	-	-	-	-	-	-	-	-	-	-
		8-1-1.0	05/16/2017	1.0	-	-	-	-	-	-	-	-	-	-	-	-	-	-	-	-	-	-	-	-	-	-	3.4	-	**130**	**6.0**	-	0.33	-	-	-	-	-	-	-	-	-	-	-	-	-	-	-	-	-
		8-1-3.0	05/16/2017	3.0	-	-	-	-	-	-	-	-	-	-	-	-	-	-	-	-	-	-	-	-	-	-	-	-	3.6	-	-	-	-	-	-	-	-	-	-	-	-	-	-	-	-	-	-	-	-
		8-1-5.0	05/16/2017	5.0	-	-	-	-	-	-	-	-	-	-	-	-	-	-	-	-	-	-	-	-	-	-	-	-	2.8	-	-	-	-	-	-	-	-	-	-	-	-	-	-	-	-	-	-	-	-
	8-2	8-2-0.5	05/16/2017	0.5	-	-	-	-	-	-	-	-	-	-	-	-	-	-	-	-	-	-	-	-	-	-	-	-	44	-	-	-	-	-	-	-	-	-	-	-	-	-	-	-	-	-	-	-	-
		8-2-1.0	05/16/2017	1.0	-	-	-	-	-	-	-	-	-	-	-	-	-	-	-	-	-	-	-	-	-	-	-	-	3.3	-	-	-	-	-	-	-	-	-	-	-	-	-	-	-	-	-	-	-	-
		8-2-3.0	05/16/2017	3.0	-	-	-	-	-	-	-	-	-	-	-	-	-	-	-	-	-	-	-	-	-	-	-	-	9.3	-	-	-	-	-	-	-	-	-	-	-	-	-	-	-	-	-	-	-	-
		8-2-5.0	05/16/2017	5.0	-	-	-	-	-	-	-	-	-	-	-	-	-	-	-	-	-	-	-	-	-	-	-	-	37	-	-	-	-	-	-	-	-	-	-	-	-	-	-	-	-	-	-	-	-
	8-3	8-3-0.5	05/16/2017	0.5	-	-	-	-	-	-	ND	-	2.4	-	-	110	-	-	ND	ND	-	-	12	-	6.9	140	-	-	49	-	-	-	ND	-	-	ND	9.6	ND	ND	ND	28	120	-	-	-	-	-	-
		8-3-1.0	05/16/2017	1.0	ND	ND	-	-	ND	ND	ND	-	1.5	-	-	70	-	-	ND	ND	-	-	7.3	-	4.9	34	-	-	35	-	-	-	ND	-	-	ND	7.4	ND	ND	ND	21	65	-	-	-	ND	ND	-	ND
		8-3-3.0	05/16/2017	3.0	-	-	-	-	-	-	ND	-	2.6	-	-	110	-	-	ND	1.70	ND	ND	11	-	6.0	41	-	-	**65**	**11**	-	ND	0.11	-	-	ND	12	1.2	ND	ND	23	210	-	-	-	-	-	-
		8-3-5.0	05/16/2017	5.0	ND	ND	-	-	ND	ND	ND	-	2.3	-	-	68	-	-	ND	ND	-	-	22	ND	12	23	-	-	5.9	-	-	-	0.14	-	-	ND	20	ND	ND	ND	44	52	-	-	-	-	-	-
	L-1	L-1 @ 1'	02/1/2016	1.0	-	-	-	-	-	-	8.9	-	4.3	-	-	530	-	-	ND	ND	-	-	15	-	7.4	85	-	-	**310**	**41**	-	-	ND	-	-	ND	13	ND	ND	ND	32	870	-	-	-	-	-	-
		L-1 @ 3'	02/1/2016	3.0	-	-	-	-	-	-	ND	-	2.9	-	-	120	-	-	ND	ND	-	-	14	-	7.8	19	-	-	4.6	-	-	-	0.2	-	-	ND	9.6	ND	ND	ND	29	50	-	-	-	-	-	-
		L-1 @ 5'	02/1/2016	5.0	-	-	-	-	-	-	-	-	-	-	-	-	-	-	-	-	-	-	-	-	-	-	-	-	-	-	-	-	-	-	-	-	-	-	-	-	-	-	-	-	-	-	-	-	-	-
	L-1	L-1 @ 1'	02/26/2016	1.0	ND	ND	-	-	ND	ND	-	-	-	-	-	-	-	-	-	-	-	-	-	-	-	-	-	-	-	-	-	-	-	-	-	-	-	-	-	-	-	-	ND	ND	-	-	-	-
		L-1 @ 2'	02/26/2016	2.0	-	-	-	-	-	-	ND	-	2.3	-	-	140	-	-	ND	ND	-	-	12	-	6.8	20	-	-	20	-	-	-	ND	-	-	ND	9.6	ND	ND	ND	29	99	-	-	-	-	-	-
		L-1 @ 3'	02/26/2016	3.0	ND	ND	-	-	ND	ND	ND	-	2.6	-	-	160	-	-	ND	ND	-	-	12	-	6.7	20	-	-	18	-	-	-	0.11	-	-	ND	10	ND	ND	ND	28	87	-	-	-	ND	ND	-	-
9	9-1	9-1-0.5	05/17/2017	0.5	-	-	-	-	-	-	-	-	-	-	-	-	-	-	-	-	-	-	-	-	-	-	-	-	**740**	**34**	ND	0.42	-	-	-	-	-	-	-	-	-	-	-	-	-	6.8	-	-	-
		9-1-1.0	05/17/2017	1.0	-	-	-	-	-	-	-	-	-	-	-	-	-	-	-	-	-	-	-	-	-	-	-	-	**94**	3.2	ND	ND	-	-	-	-	-	-	-	-	-	-	-	-	-	-	-	-	-
		9-1-3.0	05/17/2017	3.0	-	-	-	-	-	-	-	-	-	-	-	-	-	-	-	-	-	-	-	-	-	-	-	-	7.1	-	-	-	-	-	-	-	-	-	-	-	-	-	-	-	-	-	-	-	-
		9-1-5.0	05/17/2017	5.0	-	-	-	-	-	-	-	-	-	-	-	-	-	-	-	-	-	-	-	-	-	-	-	-	2.0	-	-	-	-	-	-	-	-	-	-	-	-	-	-	-	-	-	-	-	-
	9-2	9-2-0.5	05/17/2017	0.5	-	-	-	-	-	-	-	-	-	-	-	-	-	-	-	-	-	-	-	-	-	-	-	-	**78**	**5.3**	ND	ND	-	-	-	-	-	-	-	-	-	-	-	-	-	-	-	-	-
		9-2-1.0	05/17/2017	1.0	-	-	-	-	-	-	-	-	-	-	-	-	-	-	-	-	-	-	-	-	-	-	-	-	**630**	**50**	ND	1.5	-	-	-	-	-	-	-	-	-	-	-	-	-	7.6	-	-	-
	9-3	9-3-0.5	05/17/2017	0.5	-	-	-	-	-	-	-	-	-	-	-	-	-	-	-	-	-	-	-	-	-	-	-	-	**52**	1.0	ND	ND	-	-	-	-	-	-	-	-	-	-	-	-	-	-	-	-	-
		9-3-1.0	05/17/2017	1.0	-	-	-	-	-	-	-	-	-	-	-	-	-	-	-	-	-	-	-	-	-	-	-	-	29	-	-	-	-	-	-	-	-	-	-	-	-	-	-	-	-	-	-	-	-
		9-3-3.0	05/17/2017	3.0	-	-	-	-	-	-	-	-	-	-	-	-	-	-	-	-	-	-	-	-	-	-	-	-	1.7	-	-	-	-	-	-	-	-	-	-	-	-	-	-	-	-	-	-	-	-
		9-3-5.0	05/17/2017	5.0	-	-	-	-	-	-	-	-	-	-	-	-	-	-	-	-	-	-	-	-	-	-	-	-	5.9	-	-	-	-	-	-	-	-	-	-	-	-	-	-	-	-	-	-	-	-
	A-13-17	A17@5'	11/16/2013	5.0	1.2	ND	ND	ND	ND	-	ND	-	2	-	-	84	-	-	ND	1.4	-	-	7.1	-	3.6	7.4	-	-	ND	-	-	-	0.03	-	-	ND	5.2	ND	ND	ND	23	27	-	-	-	-	-	-
		A17@10'	11/16/2013	10.0	-	-	-	-	ND	-	-	-	-	-	-	-	-	-	-	-	-	-	-	-	-	-	-	-	-	-	-	-	-	-	-	-	-	-	-	-	-	-	-	-	-	-	-	-	-	-
		A17@15'	11/16/2013	15.0	ND	ND	ND	ND	ND	-	ND	-	8.3	-	-	78	-	-	ND	**2.4**	-	-	21	-	14	25	-	-	6.3	-	-	-	0.074	-	-	ND	21	ND	ND	ND	41	73	-	-	-	-	-	-
		A17@25'	11/16/2013	25.0	-	-	-	-	ND	-	-	-	-	-	-	-	-	-	-	-	-	-	-	-	-	-	-	-	-	-	-	-	-	-	-	-	-	-	-	-	-	-	-	-	-	-	-	-	-	-
		A17@40'	11/16/2013	40.0	-	-	-	-	ND	-	-	-	-	-	-	-	-	-	-	-	-	-	-	-	-	-	-	-	-	-	-	-	-	-	-	-	-	-	-	-	-	-	-	-	-	-	-	-	-	-
		A17@60'	11/16/2013	60.0	ND	ND	ND	ND	ND	-	-	-	-	-	-	-	-	-	-	-	-	-	-	-	-	-	-	-	-	-	-	-	-	-	-	-	-	-	-	-	-	-	-	-	-	-	-	-	-	-
Trigger Level for Performing State Leachate Analysis (10×STLC)					NE	NE	NE	NE	2,040 (TCE)	varies	150	15 (STLC)	50	5 (STLC)	-	1,000	100 (STLC)	-	8	10	1 (STLC)	-	50	50	800	250	25 (STLC)	-	50	5 (STLC)	1.5 (STLC)	-	2	0.2 (STLC)	-	3,500	200	10	50	70	240	2,500	250 (STLC)	-	-	-	1,000 (DDT/DDE/DDD)	varies	varies
Trigger Level for Performing State and Federal Leachate Analysis (20×TCLP)					NE	NE	NE	NE	10 (TCE)	varies	NE	-	100	-	5 (TCLP)	2,000	-	100 (TCLP)	NE	20	-	1 (TCLP)	100	-	NE	NE	-	-	100	-	-	5 (TCLP)	4	-	0.2 (TCLP)	NE	NE	20	100	NE	NE	NE	-	-	-	-	varies	varies	varies
State Hazardous Disposal Criteria (TTLC)					NE	NE	NE	NE	2,040 (TCE)	varies	500	-	500	-	-	10,000	-	-	75	100	-	-	2,500	500	8,000	2,500	-	-	1,000	-	-	-	20	-	-	3,500	2,000	100	500	700	2,400	5,000	-	-	-	-	1,000 (DDT/DDE/DDD)	varies	varies
Screening Level for Keeping Soil on Site (OEHHA [a,c])					100	1,000	1,000	1,000	-	varies	30	-	12 [b]	-	-	5,200	-	-	16	1.7	-	-	100,000	17 [c]	660	3,000	-	-	80	-	-	-	18	-	-	380	1,600	380	380	5	530	23,000	-	-	-	300	2,300 (DDD) 1,600 (DDE) 1,600 (DDT)	varies	varies

Notes:

bold - Value detected above a trigger/screening value

[a] Office of Environmental Health Hazard Assessment (OEHHA) Residential Scenario's Soil-Screening Numbers (mg/kg soil) for Nonvolatile Chemicals Based on Total Exposure to Contaminated Soil: Inhalation, Ingestion and Dermal Absorption

[b] California EPA/DTSC background levels of Arsenic in Southern California for near surface soils

[c] Screening numbers for Chromium VI are used here. The screening value for Chromium III is 100,000 mg/kg.

µg/kg - microgram per kilogram

mg/kg - milligram per kilogram

mg/L - milligram per liter

ND - Not Detected (below Reporting Limit)

NE - Not Established

HUSHMAND ASSOCIATES, INC.
Environmental & Engineering Consultants

Table 3. Summary of Laboratory Test Results - Soil Gas and Ambient Air Samples

PARC AREA	Boring ID	Sample ID	Sample Collection Date	Sample Depth (ft below grade)	TPH GRO µg/m³ (TO-3)	VOCs, µg/m³ (TO-15)																
						Benzene	Carbon Tetrachloride	1,2-Dichloroethane	cis-1,2-Dichloroethylene	trans-1,2-Dichloroethylene	Ethylbenzene	Mercury (elemental)	Methyl tert-Butyl Ether	Naphthalene	Tetrachloroethylene	Tetraethyl Lead	Toluene	1,1,1-Trichloroethane	Trichloroethylene	Vinyl Chloride	m,p-Xylene	o-Xylene	Other VOCs
2A, 2B, 2C	2A-1	2A-1-5	05/16/2017	5.0	-	6.4	ND	ND	ND	ND	ND	-	ND	ND	**830**	-	28	85	ND	ND	10	ND	-
		2A-1-10	05/16/2017	10.0	-	ND	ND	ND	ND	ND	ND	-	ND	ND	**460**	-	8.5	53	ND	ND	ND	ND	-
		2A-1-15	05/16/2017	15.0	-	5.6	ND	ND	ND	ND	ND	-	ND	ND	**360**	-	12	63	ND	ND	ND	20	-
	2A-2	2A-2-5	05/16/2017	5.0	-	5.7	ND	ND	ND	ND	**27**	-	ND	ND	**370**	-	16	230	ND	ND	61	39	-
		2A-2-5 Dup	05/16/2017	5.0	-	ND	ND	ND	ND	ND	ND	-	ND	ND	**380**	-	14	220	ND	ND	19	8.9	-
		2A-2-10	05/16/2017	10.0	-	ND	ND	ND	ND	ND	ND	-	ND	ND	**280**	-	9.1	200	ND	ND	13	8.1	-
		2A-2-15	05/16/2017	15.0	-	ND	ND	ND	ND	ND	ND	-	ND	ND	130	-	9.8	110	ND	ND	ND	ND	-
	2A-3	2A-3-5	05/16/2017	5.0	-	ND	ND	ND	ND	ND	ND	-	ND	ND	25	-	ND	20	ND	ND	ND	8.1	-
		2A-3-10	05/16/2017	10.0	-	ND	ND	ND	ND	ND	ND	-	ND	ND	28	-	ND	25	ND	ND	ND	ND	-
		2A-3-15	05/16/2017	15.0	-	ND	ND	ND	ND	ND	ND	-	ND	ND	29	-	9.8	24	ND	ND	13	ND	-
	2A-Am	2A-Am	05/16/2017	Ambient	-	ND	ND	ND	ND	ND	ND	-	ND	ND	ND	-	ND	ND	ND	ND	ND	ND	-
	P33-VP-1	VP-1	08/5/2015	5.0	3700	0.86	ND	ND	ND	ND	2	-	ND	ND	20	-	30	30	40	ND	20	3	-
	P33-VP-2	VP-2	08/5/2015	5.0	1900	0.89	ND	ND	ND	ND	1	-	ND	ND	30	-	10	70	-	ND	10	2	-
	P33-VP-3	VP-3	08/5/2015	5.0	2100	0.89	ND	ND	ND	ND	2	-	ND	ND	30	-	20	90	-	ND	20	3	-
		VP-3 Dup	08/5/2015	5.0	3000	ND	ND	ND	ND	ND	2	-	ND	ND	40	-	10	160	420	ND	10	3	-
	P33-VP-4	VP-4	08/5/2015	5.0	2700	0.83	ND	ND	ND	ND	4	-	ND	2	4	-	80	ND	2	ND	30	4	-
	P33-VP-5	VP-5	08/5/2015	5.0	3700	0.83	ND	ND	ND	ND	3	-	ND	ND	20	-	40	80	80	ND	20	4	-
	P33-VP-6	VP-6	08/5/2015	5.0	1700	1	ND	ND	ND	ND	2	-	ND	ND	6	-	30	3	10	ND	10	2	-
	P33-VP-7	VP-7	08/5/2015	5.0	1900	0.89	ND	ND	ND	ND	3	-	ND	ND	40	-	20	40	ND	ND	20	4	-
	P33-VP-8	VP-8	08/5/2015	5.0	2200	1	ND	ND	ND	ND	3	-	ND	ND	20	-	10	20	ND	ND	20	4	-
	P33-VP-9	VP-9	08/5/2015	5.0	2000	0.89	ND	ND	ND	ND	3	-	ND	ND	40	-	40	9	2	ND	20	5	-
		VP-9 Dup	08/5/2015	5.0	2600	2	ND	ND	ND	ND	3	-	ND	ND	20	-	20	9	2	ND	20	4	-
	P33-VP-10	VP-10	08/5/2015	5.0	2600	ND	ND	ND	ND	ND	ND	-	ND	ND	2	-	2	ND	ND	ND	ND	ND	-
	P33-VP-11	VP-11	08/5/2015	5.0	4300	ND	ND	ND	ND	ND	2	-	ND	ND	20	-	10	7	ND	ND	20	3	-
	P33-VP-12	VP-12	08/5/2015	5.0	2900	ND	ND	ND	ND	ND	2	-	ND	ND	70	-	10	3	ND	ND	10	3	-
	P32-VP-1	VP-1	08/7/2015	5.0	2000	2	ND	ND	ND	ND	1	-	ND	ND	20	-	2	5	ND	3	10	2	-
	P32-VP-2	VP-2	08/7/2015	5.0	3100	6	ND	ND	ND	ND	1	-	ND	6	ND	-	10	ND	ND	ND	10	2	-
	P32-VP-3	VP-3	08/7/2015	5.0	4200	ND	ND	ND	ND	ND	ND	-	ND	ND	10	-	0.94	8	ND	ND	ND	ND	-
	P32-VP-4	VP-4	08/7/2015	5.0	12000	ND	ND	ND	ND	ND	10	-	ND	2	6	-	280	5	ND	ND	120	20	-
	P32-VP-5	VP-5	08/7/2015	5.0	7100	1	ND	ND	ND	ND	2	-	ND	ND	10	-	4	4	ND	1	10	2	-
	P32-VP-6	VP-6	08/7/2015	5.0	2400	2	ND	ND	ND	ND	2	-	ND	3	7	-	8	3	ND	ND	20	4	-
	P32-VP-7	VP-7	08/7/2015	5.0	2700	0.93	ND	ND	ND	ND	ND	-	ND	ND	9	-	2	6	ND	ND	7	1	-
		VP-7 Dup	08/7/2015	5.0	2100	1	ND	ND	ND	ND	3	-	ND	**40**	9	-	4	6	ND	1	30	6	-
	P32-VP-8	VP-8	08/7/2015	5.0	2200	ND	ND	ND	ND	ND	ND	-	ND	1	8	-	ND	7	ND	ND	ND	ND	-
	P32-VP-9	VP-9	08/7/2015	5.0	2400	4	ND	ND	ND	ND	5	-	ND	4	5	-	30	3	ND	0.87	70	20	-
	P32-VP-10	VP-10	08/7/2015	5.0	4200	ND	ND	ND	ND	ND	20	-	ND	2	2	-	210	ND	ND	0.69	150	30	-
	P32-VMW-1	VMW-1	11/23/2016	10.0	300	ND	ND	ND	ND	ND	ND	-	ND	ND	10	-	50	ND	ND	ND	20	ND	-
		VMW-1 Dup	11/23/2016	10.0	780	ND	ND	ND	ND	ND	ND	-	ND	ND	**490**	-	40	ND	ND	ND	ND	ND	-
	P32-VMW-2	VMW-2	11/23/2016	5.0	390	ND	ND	ND	ND	ND	ND	-	ND	ND	ND	-	40	ND	ND	ND	ND	ND	-
	P32-VMW-3	VMW-3	11/23/2016	15.0	1500	**70**	ND	ND	ND	ND	8	-	ND	ND	50	-	90	ND	10	ND	40	5	-
	P32-VMW-4	VMW-4	11/23/2016	10.0	370	ND	ND	ND	ND	ND	ND	-	ND	ND	ND	-	30	ND	ND	ND	ND	ND	-
	P32-VMW-1	VMW-1 10'	11/28/2016	10.0	ND	ND	ND	ND	ND	ND	ND	-	ND	ND	10	-	60	5	ND	ND	ND	ND	-
	P32-VMW-2	VMW-2 5'	11/28/2016	5.0	ND	ND	ND	ND	ND	ND	ND	-	ND	ND	9	-	60	ND	ND	ND	ND	ND	-
	P32-VMW-3	VMW-3 15'	11/28/2016	15.0	450	30	ND	ND	ND	ND	3	-	ND	ND	9	-	70	7	ND	ND	10	ND	-
		VMW-3 Dupl. 15'	11/28/2016	15.0	850	20	ND	ND	ND	ND	3	-	ND	ND	7	-	190	6	ND	ND	20	ND	-
	P32-VMW-4	VMW-4 10'	11/28/2016	10.0	360	ND	ND	ND	ND	ND	ND	-	ND	ND	ND	-	90	ND	ND	ND	ND	ND	-
6	6-Am	6-Am	05/16/2017	Ambient	-	ND	ND	ND	ND	ND	ND	-	ND	ND	ND	-	ND	ND	ND	ND	ND	ND	-
7	7-1	7-1-5	05/16/2017	5.0	-	9	ND	ND	ND	ND	ND	-	ND	ND	**430**	-	11	ND	ND	ND	ND	ND	-
	7-3	7-3-5	05/16/2017	5.0	-	ND	ND	ND	ND	ND	ND	-	ND	ND	**550**	-	ND	ND	38	ND	ND	ND	-
	7-4	7-4-5	05/16/2017	5.0	-	ND	ND	ND	ND	ND	ND	-	ND	ND	ND	-	23	ND	ND	ND	150	ND	-
		7-4-5 Dup	05/16/2017	5.0	-	ND	ND	ND	ND	ND	ND	-	ND	ND	ND	-	22	ND	ND	ND	140	ND	-
	7-Am	7-Am	05/16/2017	Ambient	-	ND	ND	ND	ND	ND	ND	-	ND	ND	ND	-	ND	ND	ND	ND	ND	ND	-
	7-Am Dup	7-Am Dup	05/16/2017	Ambient	-	ND	ND	ND	ND	ND	ND	-	ND	ND	ND	-	ND	ND	ND	ND	ND	ND	-

Table 3. Summary of Laboratory Test Results - Soil Gas and Ambient Air Samples (Cont'd)

PARC AREA	Boring ID	Sample ID	Sample Collection Date	Sample Depth (ft below grade)	TPH GRO µg/m³ (TO-3)	VOCs, µg/m³ (TO-15)																
						Benzene	Carbon Tetrachloride	1,2-Dichloroethane	cis-1,2-Dichloroethylene	trans-1,2-Dichloroethylene	Ethylbenzene	Mercury (elemental)	Methyl tert-Butyl Ether	Naphthalene	Tetrachloroethylene	Tetraethyl Lead	Toluene	1,1,1-Trichloroethane	Trichloroethylene	Vinyl Chloride	m,p-Xylene	o-Xylene	Other VOCs
7	P20-VP-1	VP-1	04/26/2016	5.0	120000	ND	ND	ND	ND	ND	ND	-	ND	ND	**310**	-	ND	ND	ND	ND	ND	-
	P20-VP-2	VP-2	04/26/2016	5.0	21000	ND	ND	ND	ND	ND	ND	-	ND	ND	**270**	-	ND	ND	ND	ND	ND	-
	P20-VP-3	VP-3	04/26/2016	5.0	27000	ND	ND	ND	ND	ND	ND	-	ND	ND	**390**	-	ND	ND	ND	ND	ND	-
	P20-VP-4	VP-4	04/26/2016	5.0	6500	ND	ND	ND	ND	ND	ND	-	ND	ND	**1000**	-	ND	ND	20	ND	ND	-
		VP-4 Dup	04/26/2016	5.0	2000	ND	ND	ND	ND	ND	ND	-	ND	ND	**480**	-	ND	ND	ND	ND	ND	-
	P20-VP-5	VP-5	04/26/2016	3.0	7600	ND	ND	ND	ND	ND	ND	-	ND	ND	**4700**	-	ND	ND	ND	ND	ND	-
	P20-VP-6	VP-6	04/26/2016	5.0	6400	ND	ND	ND	ND	ND	ND	-	ND	ND	**1400**	-	ND	ND	ND	ND	ND	-
	P20-VP-7	VP-7	04/26/2016	3.0	7500	ND	ND	ND	ND	ND	ND	-	ND	ND	**4300**	-	ND	ND	ND	ND	ND	-
	P20-VP-8	VP-8	04/26/2016	5.0	5800	ND	ND	ND	ND	ND	ND	-	ND	ND	**2600**	-	ND	ND	ND	ND	ND	-
	P20-VP-9	VP-9	04/26/2016	5.0	2800	ND	ND	ND	ND	ND	ND	-	ND	ND	120	-	20	ND	ND	ND	ND	-
		VP-9 Dup	04/26/2016	5.0	4300	ND	ND	ND	ND	ND	ND	-	ND	ND	**970**	-	ND	ND	ND	ND	ND	-
	P22-VP-1	VP-1	08/13/2015	5.0	6100	2	ND	ND	ND	ND	2	-	ND	2	70	-	7	ND	2	ND	10	-
	P22-VP-2	VP-2	08/13/2015	5.0	4900	2	ND	ND	ND	ND	3	-	ND	10	120	-	8	3	1	ND	20	-
	P22-VP-3	VP-3	08/13/2015	5.0	5600	ND	ND	ND	ND	ND	ND	-	ND	ND	80	-	3	ND	ND	ND	6	-
	P22-VP-4	VP-4	08/13/2015	5.0	5200	3	ND	ND	ND	ND	3	-	ND	3	120	-	20	3	ND	ND	30	-
	P22-VP-5	VP-5	08/13/2015	5.0	7700	4	ND	ND	ND	ND	2	-	ND	5	6	-	10	30	ND	ND	20	-
	P22-VP-6	VP-6	08/13/2015	5.0	6500	ND	ND	ND	ND	ND	ND	-	ND	ND	**230**	-	3	5	ND	ND	5	-
		VP-6 Dup	08/13/2015	5.0	5400	ND	ND	ND	ND	ND	ND	-	ND	ND	170	-	3	4	ND	ND	5	-
	P22-VP-7	VP-7	08/13/2015	5.0	5100	ND	ND	ND	ND	ND	ND	-	ND	ND	180	-	3	3	ND	ND	6	-
	P22-VP-8	VP-8	08/13/2015	5.0	6100	2	ND	ND	ND	ND	ND	-	ND	ND	160	-	4	5	ND	ND	6	-
	P22-VP-9	VP-9	08/13/2015	5.0	5800	ND	ND	ND	ND	ND	1	-	ND	3	**270**	-	3	4	ND	ND	10	-
	P22-VP-10	VP-10	08/13/2015	5.0	3600	4	ND	ND	ND	ND	2	-	ND	ND	2	-	10	ND	ND	ND	10	-
	P22-VP-11	VP-11	08/13/2015	5.0	9000	2	ND	ND	ND	ND	2	-	ND	ND	180	-	20	3	ND	ND	20	-
	P22-VP-12	VP-12	08/13/2015	5.0	6200	ND	ND	ND	ND	ND	1	-	ND	2	120	-	5	2	ND	ND	20	-
	P23-SV1	SV1	11/27/2013	5.0	ND	-	-	-	-	-	-	-	-	-	-	-	-	-	-	-	-	ND
	P23-SV2	SV2	11/27/2013	5.0	ND	-	-	-	-	-	-	-	-	-	-	-	-	-	-	-	-	ND
	P23-SV3	SV3	11/27/2013	5.0	ND	-	-	-	-	-	-	-	-	-	-	-	-	-	-	-	-	ND
	P23-SV4	SV4	11/25/2013	5.0	ND	-	-	-	-	-	-	-	-	-	-	-	-	-	-	-	-	ND
	P23-SV5	SV5	11/27/2013	5.0	ND	-	-	-	-	-	-	-	-	-	-	-	-	-	-	-	-	ND
		SV5 Dup	11/27/2013	5.0	ND	-	-	-	-	-	-	-	-	-	-	-	-	-	-	-	-	ND
	P23-SV6	SV6	11/25/2013	5.0	ND	-	-	-	-	-	-	-	-	-	-	-	-	-	-	-	-	ND
	P23-SV7	SV7	11/25/2013	5.0	ND	-	-	-	-	-	-	-	-	-	-	-	-	-	-	-	-	ND
	P23-SV8	SV8	11/25/2013	5.0	ND	-	-	-	-	-	-	-	-	-	-	-	-	-	-	-	-	ND
	P23-SV9	SV9	11/25/2013	5.0	ND	-	-	-	-	-	-	-	-	-	-	-	-	-	-	-	-	ND
	P23-SV10	SV10	11/25/2013	5.0	ND	-	-	-	-	-	-	-	-	-	-	-	-	-	-	-	-	ND
	P23-SV11	SV11	11/25/2013	5.0	ND	-	-	-	-	-	-	-	-	-	-	-	-	-	-	-	-	ND
	P23-SV12	SV12	11/25/2013	5.0	ND	-	-	-	-	-	-	-	-	-	-	-	-	-	-	-	-	ND
	P23-SV13	SV13	11/25/2013	5.0	ND	-	-	-	-	-	-	-	-	-	-	-	-	-	-	-	-	ND
	P23-Am	Ambient Air	11/27/2013	Ambient	ND	-	-	-	-	-	-	-	-	-	-	-	-	-	-	-	-	ND
8-3	8-3	8-3-5	05/16/2017	5.0	-	-	-	-	-	-	-	-	-	-	-	-	-	-	-	-	-	-
		8-3 Dup	05/16/2017	5.0	-	22	ND	ND	ND	ND	ND	-	ND	ND	**2000**	-	20	81	60	ND	27	11	-
Screening Level for Keeping Soil on Site (OEHHA [a])					-	36	25	50	16,000	32,000	420	45	4,000	32	180	0.21	140,000	990,000	530	13	320,000	320,000	-

Notes:

bold - Value detected above a trigger/screening value

[a] Office of Environmental Health Hazard Assessment (OEHHA) Residential Scenario's Soil-Gas-Screening Numbers for Nonvolatile Chemicals below Buildings Constructed without Engineered Fill below Sub-slab Gravel

µg/m³ - microgram per cubic meter

ND - Not Detected (below Reporting Limit)

NE - Not Established

Results of the baseline HHRA indicate health risk in area 2a, 2b and 2c are acceptable. See HHRA in appendix E.

HUSHMAND ASSOCIATES, INC.
Geotechnical and Earthquake Engineers

Table 4 . Summary of Laboratory Test Results and Field Measurements - Methane Gas

Boring ID	Sample ID	Sample Collection Date	Sample Depth (ft below grade)	Methane [a] (ppmv)	Methane [b] (ppmv)	Barometric Pressure (inHg) [b]	Probe Pressure (inH_2O) [c]
2A-1	2A-1-5	05/16/2017	5.0	ND	-	-	-
	2A-1-10	05/16/2017	10.0	ND	-	-	-
	2A-1-15	05/16/2017	15.0	21	-	-	-
2A-2	2A-2-5	05/16/2017	5.0	ND	-	-	-
	2A-2-5 Dup	05/16/2017	5.0	30	-	-	-
	2A-2-10	05/16/2017	10.0	ND	-	-	-
	2A-2-15	05/16/2017	15.0	**260**	-	-	-
2A-3	2A-3-5	05/16/2017	5.0	ND	-	-	-
	2A-3-10	05/16/2017	10.0	ND	-	-	-
	2A-3-15	05/16/2017	15.0	ND	-	-	-
2A-Am	2A-Am	05/16/2017	Ambient	-	-	-	-
6-Am	6-Am	05/16/2017	Ambient	-	-	-	-
7-1	7-1-5	05/16/2017	5.0	ND	-	-	-
7-3	7-3-5	05/16/2017	5.0	ND	-	-	-
7-4	7-4-5	05/16/2017	5.0	ND	-	-	-
	7-4-5 Dup	05/16/2017	5.0	ND	-	-	-
7-Am	7-Am	05/16/2017	Ambient	-	-	-	-
7-Am Dup	7-Am Dup	05/16/2017	Ambient	-	-	-	-
8-3	8-3-5	05/16/2017	5.0	-	-	-	-
	8-3 Dup	05/16/2017	5.0	ND	-	-	-
P20-VP-1	P20-VP-1	08/13/2015	5.0	-	**130**	-	-
P20-VP-2	P20-VP-2	08/13/2015	5.0	-	**170**	-	-
P20-VP-3	P20-VP-3	08/13/2015	5.0	-	95	-	-
P20-VP-4	P20-VP-4	08/13/2015	5.0	-	**110**	-	-
P20-VP-5	P20-VP-5	08/13/2015	3.0	-	**170**	-	-
P20-VP-6	P20-VP-6	08/13/2015	5.0	-	**160**	-	-
P20-VP-7	P20-VP-7	08/13/2015	3.0	-	**140**	-	-
P20-VP-8	P20-VP-8	08/13/2015	5.0	-	**180**	-	-
P20-VP-9	P20-VP-9	08/13/2015	5.0	-	**150**	-	-
P22-VP-1	P22-VP-1	08/13/2015	5.0	-	**150**	-	-
P22-VP-2	P22-VP-2	08/13/2015	5.0	-	**160**	-	-
P22-VP-3	P22-VP-3	08/13/2015	5.0	-	**140**	-	-
P22-VP-4	P22-VP-4	08/13/2015	5.0	-	**130**	-	-
P22-VP-5	P22-VP-5	08/13/2015	5.0	-	**180**	-	-
P22-VP-6	P22-VP-6	08/13/2015	5.0	-	**150**	-	-
	P22-VP-6 Dup	08/13/2015	-	-	-	-	-
P22-VP-7	P22-VP-7	08/13/2015	5.0	-	**120**	-	-
P22-VP-8	P22-VP-8	08/13/2015	5.0	-	100	-	-
P22-VP-9	P22-VP-9	08/13/2015	5.0	-	**190**	-	-
P22-VP-10	P22-VP-10	08/13/2015	5.0	-	**110**	-	-
P22-VP-11	P22-VP-11	08/13/2015	5.0	-	**140**	-	-
P22-VP-12	P22-VP-12	08/13/2015	5.0	-	100	-	-
P32-VP-1	P32-VP-1	08/7/2015	5.0	-	0	-	-
P32-VP-2	P32-VP-2	08/7/2015	5.0	-	0	-	-
P32-VP-3	P32-VP-3	08/7/2015	5.0	-	0	-	-
P32-VP-4	P32-VP-4	08/7/2015	5.0	-	0	-	-
P32-VP-5	P32-VP-5	08/7/2015	5.0	-	0	-	-
P32-VP-6	P32-VP-6	08/7/2015	5.0	-	0	-	-
P32-VP-7	P32-VP-7	08/7/2015	5.0	-	0	-	-
	P32-VP-7 Dup	08/7/2015	5.0	-	-	-	-
P32-VP-8	P32-VP-8	08/7/2015	5.0	-	0	-	-
P32-VP-9	P32-VP-9	08/7/2015	5.0	-	0	-	-
P32-VP-10	P32-VP-10	08/7/2015	5.0	-	0	-	-
P33-VP-1	P33-VP-1	08/5/2015	5.0	-	0	-	-
P33-VP-2	P33-VP-2	08/5/2015	5.0	-	0	-	-
P33-VP-3	P33-VP-3	08/5/2015	5.0	-	0	-	-
	P33-VP-3 Dup	08/5/2015	-	-	-	-	-
P33-VP-4	P33-VP-4	08/5/2015	5.0	-	0	-	-
P33-VP-5	P33-VP-5	08/5/2015	5.0	-	0	-	-
P33-VP-6	P33-VP-6	08/5/2015	5.0	-	0	-	-
P33-VP-7	P33-VP-7	08/5/2015	5.0	-	0	-	-
P33-VP-8	P33-VP-8	08/5/2015	5.0	-	0	-	-
P33-VP-9	P33-VP-9	08/5/2015	5.0	-	0	-	-
	P33-VP-9 Dup	08/5/2015	-	-	-	-	-

Table 4 . Summary of Laboratory Test Results and Field Measurements - Methane Gas (Cont'd)

Boring ID	Sample ID	Sample Collection Date	Sample Depth (ft below grade)	Methane [a] (ppmv)	Methane [b] (ppmv)	Barometric Pressure (inHg) [b]	Probe Pressure (inH_2O) [c]
P33-VP-10	P33-VP-10	08/5/2015	5.0	-	0	-	-
P33-VP-11	P33-VP-11	08/5/2015	5.0	-	0	-	-
P33-VP-12	P33-VP-12	08/5/2015	5.0	-	0	-	-
P32-VMW-1	P32-VMW-1	11/23/2016	5.0	-	0	29.89-0.15"	0
		11/23/2016	5.0	-	0	29.89-0.15"	0
		11/28/2016	5.0	-	0	29.69-0.15"	0
		11/28/2016	5.0	-	0	29.69-0.15"	0
P32-VMW-2	P32-VMW-2	11/23/2016	5.0	-	0	29.85-0.15"	0
		11/23/2016	5.0	-	0	29.85-0.15"	0
		11/28/2016	5.0	-	0	29.69-0.16"	0
		11/28/2016	5.0	-	0	29.69-0.16"	0
P32-VMW-3	P32-VMW-3	11/23/2016	5.0	-	0	29.85-0.15"	0
		11/23/2016	5.0	-	0	29.85-0.15"	0
		11/28/2016	5.0	-	0	29.69-0.16"	0
		11/28/2016	5.0	-	0	29.69-0.16"	0
P32-VMW-4	P32-VMW-4	11/23/2016	5.0	-	0	29.89-0.15"	0
		11/23/2016	5.0	-	0	29.89-0.15"	0
		11/28/2016	5.0	-	0	29.72-0.13"	0
		11/28/2016	5.0	-	0	29.72-0.13"	0
P23-SV1	P23-SV1	11/27/2013	-	-	0	-	-
P23-SV2	P23-SV2	11/27/2013	-	-	0	-	-
P23-SV3	P23-SV3	11/27/2013	-	-	0	-	-
P23-SV4	P23-SV4	11/25/2013	-	-	0	-	-
P23-SV5	P23-SV5	11/27/2013	-	-	0	-	-
	P23-SV5 Dup	11/27/2013	-	-	-	-	-
P23-SV6	P23-SV6	11/25/2013	-	-	0	-	-
P23-SV7	P23-SV7	11/25/2013	-	-	0	-	-
P23-SV8	P23-SV8	11/25/2013	-	-	0	-	-
P23-SV9	P23-SV9	11/25/2013	-	-	0	-	-
P23-SV10	P23-SV10	11/25/2013	-	-	0	-	-
P23-SV11	P23-SV11	11/25/2013	-	-	0	-	-
P23-SV12	P23-SV12	11/25/2013	-	-	0	-	-
P23-SV13	P23-SV13	11/25/2013	-	-	0	-	-
P23-Ambient	Ambient	11/25/2013	Ambient	-	-	-	-
Screening Level for Methane Gas Concentrations (City of Los Angeles Methane Ordinance) [d]				Note [d]	Note [d]		

Notes:

[a] Laboratory Test Results using ASTM D1946

[b] Field measurements were made using RKI Eagle Multi-Gas Meter & GEM 2000

[c] Measurements were made with Dwyer 475 pressure gage

[d] Design Methane Concentration 0-100 ppmv for Level I and 101-1000 ppmv for Level II Site Design based on City of Los Angeles Ordinance No. 175790 on Methane Mitigation Standards

ppmv - parts per million by volume

ND - Not Detected (below Reporting Limit)

HUSHMAND ASSOCIATES, INC.
Geotechnical and Earthquake Engineers

Table 5 . Summary of Laboratory Test Results – Soil Samples from ADL Borings

PARC AREA	Boring ID	Sample ID	Sample Collection Date	Sample Depth (ft below grade)	Lead mg/kg	STLC Lead (CA-WET) mg/L	STLC Lead (DI-WET) mg/L	TCLP Lead mg/L	pH
9	9-1	9-1-0.5	05/17/2017	0.5	**740**	**34**	ND	0.42	6.8
		9-1-1.0	05/17/2017	1.0	**94**	3.2	ND	ND	-
		9-1-3.0	05/17/2017	3.0	7.1	-	-	-	-
		9-1-5.0	05/17/2017	5.0	2.0	-	-	-	-
	9-2	9-2-0.5	05/17/2017	0.5	**78**	**5.3**	ND	ND	-
		9-2-1.0	05/17/2017	1.0	**630**	**50**	ND	1.5	7.6
	9-3	9-3-0.5	05/17/2017	0.5	**52**	1.0	ND	ND	-
		9-3-1.0	05/17/2017	1.0	29	-	-	-	-
		9-3-3.0	05/17/2017	3.0	1.7	-	-	-	-
		9-3-5.0	05/17/2017	5.0	5.9	-	-	-	-
Trigger Level for Performing State Leachate Analysis (10×STLC)					50	5 (STLC)	1.5 (STLC)	-	-
Trigger Level for Performing State and Federal Leachate Analysis (20×TCLP)					100	-	-	5 (TCLP)	-
State Hazardous Disposal Criteria (TTLC)					1,000	-	-	-	-
Screening Level for Keeping Soil on Site (OEHHA [(a)])					80	-	-	-	-

Notes:

bold - Value detected above a trigger/screening value

[(a)] Office of Environmental Health Hazard Assessment (OEHHA) Residential Scenario's Soil-Screening Numbers (mg/kg soil) for Nonvolatile Chemicals Based on Total Exposure to Contaminated Soil: Inhalation, Ingestion and Dermal Absorption

mg/kg - milligram per kilogram

mg/L - milligram per liter

ND - Not Detected (below Reporting Limit)

HUSHMAND ASSOCIATES, INC.
Geotechnical and Earthquake Engineers

Table 6 . Summary of Statistical Analysis Results – Soil Samples from ADL Borings

Parameter	Total Lead (mg/kg)	STLC Lead (CA-WET) (mg/L)	STLC Lead (DI-WET) (mg/L)	TCLP Lead (mg/L)	pH
All Depths					
Number of Data Points	10	5	5	5	2
Minimum Value	1.7	1	ND	0.42	6.8
Maximum Detected Value	740	50	ND	1.5	7.6
Mean	164	18.7	N/A	0.96	7.2
Geo-Mean	30.66	7.798	N/A	0.794	7.189
Standard Deviation	277.7	22.06	N/A	0.764	0.566
80%ile	201.2	37.2	N/A	1.284	7.44
90%ile	641	43.6	N/A	1.392	7.52
95%ile	690.5	46.8	N/A	1.446	7.56
0.5 Foot Depth					
Number of Data Points	3	3	3	3	1
Minimum Value	52	1	ND	ND	6.8
Maximum Detected Value	740	34	ND	0.42	6.8
Mean	290	13.43	N/A	0.42	6.8
Geo-Mean	144.2	5.648	N/A	0.42	6.8
Standard Deviation	389.9	17.94	N/A	N/A	N/A
80%ile	475.2	22.52	N/A	0.42	6.8
90%ile	607.6	28.26	N/A	0.42	6.8
95%ile	673.8	31.13	N/A	0.42	6.8
1.0 Foot Depth					
Number of Data Points	3	2	2	2	1
Minimum Value	29	3.2	ND	ND	7.6
Maximum Detected Value	630	50	ND	1.5	7.6
Mean	251	26.6	N/A	1.5	7.6
Geo-Mean	119.8	12.65	N/A	1.5	7.6
Standard Deviation	329.8	33.09	N/A	N/A	N/A
80%ile	415.6	40.64	N/A	1.5	7.6
90%ile	522.8	45.32	N/A	1.5	7.6
95%ile	576.4	47.66	N/A	1.5	7.6
3.0 Foot Depth					
Number of Data Points	2	0	0	0	0
Minimum Value	1.7	N/A	N/A	N/A	N/A
Maximum Detected Value	7.1	N/A	N/A	N/A	N/A
Mean	4.4	N/A	N/A	N/A	N/A
Geo-Mean	3.474	N/A	N/A	N/A	N/A
Standard Deviation	3.818	N/A	N/A	N/A	N/A
80%ile	6.02	N/A	N/A	N/A	N/A
90%ile	6.56	N/A	N/A	N/A	N/A
95%ile	6.83	N/A	N/A	N/A	N/A
5.0 Foot Depth					
Number of Data Points	2	0	0	0	0
Minimum Value	2	N/A	N/A	N/A	N/A
Maximum Detected Value	5.9	N/A	N/A	N/A	N/A
Mean	3.95	N/A	N/A	N/A	N/A
Geo-Mean	3.435	N/A	N/A	N/A	N/A
Standard Deviation	2.758	N/A	N/A	N/A	N/A
80%ile	5.12	N/A	N/A	N/A	N/A
90%ile	5.51	N/A	N/A	N/A	N/A
95%ile	5.705	N/A	N/A	N/A	N/A

Notes:

N/A - Not Applicable

ND - Not Detected (below Reporting Limit)

HUSHMAND ASSOCIATES, INC.
Geotechnical and Earthquake Engineers

Table 9 . Rough Order of Magnitude Cost Estimate for Remediation - Sixth Street Viaduct PARC Improvements (Not for Budgeting Purposes)

PARC Area Designation	Estimated Area [1] (sq. ft.)	Estimated Perimeter of Excavation or Area [1] (ft.)	Type of Contamination	Conservative Estimate of Contaminated Depth (ft.)	Estimated Volume of Removal & Disposal (inplace cy)	Estimated Tons for Disposal [2]	Rough Estimated Cost for Removal & Disposal [3], [4]	Estimated Backfill Cost [5]	Total Removal & Backfilling Construction Cost	Estimated Perimeter Barrier/Liner Cost [6], [7]	Estimated SVE Installation Cost [8]	Estimated SVE Operation & Monitoring [9]	Methane Mitigation Cost [10]	Estimated Eng./Monitoring Cost [11], [12], [13]	Total ROM Cost	Notes
1A Paved Area Near Existing Building	6,150	-	Methane Zone	N/A	N/A	N/A	N/A	N/A	N/A	N/A	N/A	N/A	$49,200	$84,840	$134,040	Plans Require City Methane Dept. Approval, Methane Mitigation Installed After Removal of Non-RCRA HAZ Soil
1A West Portion	8,673	393	CAT 2a: Non-RCRA HAZ	3.5	1,124	1,518	$135,082	$25,858	$160,940	N/A	N/A	N/A	N/A	$24,141	$185,081	
1A Central Portion	17,062	523	CAT 2a: Non-RCRA HAZ	1.0	632	853	$75,926	$14,534	$90,460	N/A	N/A	N/A	N/A	$13,569	$104,029	
1A East Portion	39,407	873	CAT 2a: Non-RCRA HAZ	1.5	2,189	2,956	$263,042	$50,353	$313,395	N/A	N/A	N/A	N/A	$47,009	$360,404	
2A NE Corner	2,001	220	CAT 2a: Non-RCRA HAZ	6.0	445	600	$53,427	$10,227	$63,654	N/A	N/A	N/A	N/A	$9,548	$73,202	
5 Central Portion	10,940	439	CAT 2a: Non-RCRA HAZ	4.0	1,621	2,188	$194,732	$37,277	$232,009	N/A	N/A	N/A	N/A	$34,801	$266,810	
6 (around boring 6-2)	14,302	490	CAT 2a: Non-RCRA HAZ	0.75	397	536	$47,733	$9,137	$56,870	N/A	N/A	N/A	N/A	$8,531	$65,401	
6 (around borings 6-3)	11,883	438	CAT 1a: RCRA HAZ	4.0	1,760	2,377	$480,073	$40,490	$520,563	N/A	N/A	N/A	N/A	$78,085	$598,648	
6 (around borings 6-4 and 6-5)	11,752	545	CAT 2a: Non-RCRA HAZ	2.0	871	1,175	$104,593	$20,022	$124,615	N/A	N/A	N/A	N/A	$18,692	$143,307	
6 (around Parcel 18.1)	16,015	549	CAT 1a: RCRA HAZ	4.5	2,669	3,603	$727,882	$61,391	$789,273	N/A	N/A	N/A	N/A	$118,391	$907,663	Excludes1 ft. soil previously removed and disposed
6 (around Parcel 18.2)	11,035	421	CAT 1a: RCRA HAZ	3.5	1,430	1,931	$390,087	$32,901	$422,988	N/A	N/A	N/A	N/A	$63,448	$486,436	
7 North Portion	7,223	372	CAT 3: Soil Gas Only	15.0	N/A	N/A	N/A	N/A	N/A	$61,380	$135,135	$48,750	$37,560	$156,815	$439,640	Assumes 65% of Area Has Impervious Surface and Nearby Buildings
7 North Central	759	113	CAT 2b: Soil Gas and Non-RCRA HAZ	2.0	56	76	$6,755	$1,293	$8,048	N/A	$14,200	$48,750	$3,947	$100,239	$175,184	Assumes 65% of Area Has Impervious Surface and Nearby Buildings
7 Central Portion	20,801	592	CAT 2b: Soil Gas and Non-RCRA HAZ	2.0	1,541	2,080	$185,129	$35,439	$220,568	$97,680	$389,167	$48,750	$108,165	$247,088	$1,111,417.41	Assumes 65% of Area Has Impervious Surface and Nearby Buildings
7 East Portion	7,191	349	CAT 3: Soil Gas Only	15.0	N/A	N/A	N/A	N/A	N/A	$57,585	$134,537	$48,750	$37,393	$140,903	$419,168	Assumes 65% of Area Has Impervious Surface and Nearby Buildings
8 West Portion	11,272	484	CAT 2b: Soil Gas and Non-RCRA HAZ	4.0	1,670	2,254	$200,642	$38,408	$239,050	$79,845	$210,888	$48,750	N/A	$135,707	$714,240	
8 East Portion	5,927	374	CAT 3: Soil Gas Only	15.0	N/A	N/A	N/A	N/A	N/A	$61,710	$110,889	$48,750	N/A	$139,270	$360,618	
9	14,949	734	Aerially Deposited Lead	1.0	554	N/A	N/A	$12,734	N/A	N/A	N/A	N/A	N/A	$1,910	$14,644	
Remedial Action Plan	N/A	N/A	N/A	N/A	N/A	N/A	N/A	N/A	N/A	N/A	N/A	N/A	N/A	$50,000	$50,000	
Rule 1166 Mitigation Plan & Permits	N/A	N/A	N/A	N/A	N/A	N/A	N/A	N/A	N/A	N/A	N/A	N/A	N/A	$75,000	$75,000	
QA/QC and RACR	N/A	N/A	N/A	N/A	N/A	N/A	N/A	N/A	N/A	N/A	N/A	N/A	N/A	$150,000	$150,000	
Total Area	**217,342**													**Total**	**$6,834,935**	
														+25%	**$8,543,669**	
														-20%	**$5,467,948**	

Notes/Assumptions:

(1) Area and perimeter estimates from Figures 7a & 7b.
(2) Conversion from cubic yards to tons assumes all soil unit weight is 1.35 tons/inplace cubic yard.
(3) Removal and disposal (at California Class I landfill) cost assumed as $202/ton for RCRA HAZ based on and information from recent City of Los Angeles projects
(4) Non-RCRA HAZ removal and disposal (at California Class II landfill) cost assumed as $89/ton based on BOE unit rate provided. This may vary depending on disposal site and additional testing.
(5) Backfill volume assumed 15% shrinkage for compaction. Unit rate is assumed as $20/cy.
(6) Horizontal liner or vapor barrier cost per sf based on TRC White Paper March 2016, range for field constructed 60 mil liner $5-$10/sf, use $6/sf due to no building complexities. Assumed unit cost of $6/sf.
(7) Reference for Unit Cost: Design and Control of Slurry Wall Backfill Mixes for Groundwater Containment, Composite/Liner $7-$14/vsf, assume $11/vsf.
(8) SVE capital cost pro-rated from sample project in Florida with cost of $173,620 for 11,600 sf site. Assumed unit cost of $14.97/sf x 125% = $18.71/sf for inflation and CA higher rates.
(9) SVE O&M assumed for 12 months in all cases and a monthly rate of $3,250 based on Florida sample project increased by 125% for inflation and high CA rates to $4063/month.
(10) From TRC White Paper field constructed 60 mil liner at $6/sf plus $1/sf for venting and assume $2/sf, assumed total of $8/sf.
(11) Estimate for SVE Pilot Test is $20,000/test.
(12) Assuming monitoring costs to be 15% of total construction costs for Removal & Backfilling; 20% of total construction costs for Gas Intrusion and SVE
(13) Includes 30 yrs of O&M for methane mitigation system at $2500 per year.

HUSHMAND ASSOCIATES, INC.
Geotechnical and Earthquake Engineers

Table 10. Comparison of Unrestricted Land Use and Commercial/Industrial Screening Results - Soil Samples

PARC AREA	Boring ID	Sample ID	Sample Collection Date	Sample Depth (ft below grade)	Total Petroleum Hydrocarbons (EPA 8015B (M))				VOCs (EPA 8260B) (µg/kg)	SVOCs (EPA 8270C) (µg/kg)	Title 22 Metals (EPA 6010B/7471A)																																pH	Polychlorinated Biphenyls (EPA 8082) µg/kg	Organochlorine Pesticides (EPA 8081) µg/kg	Organophosphorous Pesticides (EPA 8081) µg/kg	Chlorinated Herbicides (EPA 8151A) µg/kg
					TPH GRO mg/kg	TPH DRO mg/kg	TPH ORO mg/kg	TPH Total mg/kg			Antimony mg/kg	STLC Antimony mg/L	Arsenic mg/kg	STLC Arsenic mg/L	TCLP Arsenic mg/L	Barium mg/kg	STLC Barium mg/L	TCLP Barium mg/L	Beryllium mg/kg	Cadmium mg/kg	STLC Cadmium mg/L	TCLP Cadmium mg/L	Chromium mg/kg	Hexavalent Chromium mg/kg	Cobalt mg/kg	Copper mg/kg	STLC Copper mg/L	TCLP Copper mg/L	Lead mg/kg	STLC Lead (CA-WET) mg/L	STLC Lead (DI-WET) mg/L	TCLP Lead mg/L	Mercury mg/kg	STLC Mercury mg/L	TCLP Mercury mg/L	Molybdenum mg/kg	Nickel mg/kg	Selenium mg/kg	Silver mg/kg	Thallium mg/kg	Vanadium mg/kg	Zinc mg/kg	STLC Zinc mg/L	TCLP Zinc mg/L				
1A & 1B	1A-1	1A-1-0.5	05/15/2017	0.5	-	-	-	-	-	-	3.8	-	2.1	-	-	200	-	-	ND	1.9	ND	ND	17	2.9	5.6	230	-	-	860	51	-	3.6	0.91	-	-	ND	11	ND	ND	ND	23	240	-	-	-	-	-	-	-
		1A-1-1.0	05/15/2017	1.0	-	-	-	-	-	-	ND	-	ND	-	-	99	-	-	ND	ND	-	-	9.7	-	5.1	46	-	-	230	9.9	-	ND	ND	-	-	ND	6.8	ND	ND	ND	20	130	-	-	-	-	-	-	-
		1A-1-3.0	05/15/2017	3.0	-	-	-	-	-	-	3.3	-	1.3	-	-	97	-	-	ND	ND	-	-	19	ND	4.8	100	-	-	440	11	-	1.3	0.12	-	-	1.2	8.4	ND	ND	ND	19	170	-	-	-	-	-	-	-
		1A-1-5.0	05/15/2017	5.0	-	-	-	-	-	-	ND	-	ND	-	-	33	-	-	ND	ND	-	-	4.4	-	3.5	4.5	-	-	1.1	-	-	-	ND	-	-	ND	2.8	ND	ND	ND	14	15	-	-	-	-	-	-	-
	1A-2	1A-2-0.5	05/15/2017	0.5	-	-	-	-	-	-	ND	-	2.3	-	-	310	-	-	ND	ND	-	-	15	-	6.3	50	-	-	310	26	-	ND	0.45	-	-	ND	11	ND	ND	ND	25	480	-	-	-	-	-	-	-
		1A-2-1.0	05/15/2017	1.0	-	-	-	-	-	-	ND	-	1.2	-	-	63	-	-	ND	ND	-	-	7.9	-	5.5	9.2	-	-	15	-	-	-	0.2	-	-	ND	5.8	ND	ND	ND	22	45	-	-	-	-	-	-	-
		1A-2-3.0	05/15/2017	3.0	-	-	-	-	-	-	ND	-	ND	-	-	39	-	-	ND	ND	-	-	4.9	-	3.7	4.2	-	-	ND	-	-	-	ND	-	-	ND	3.1	ND	ND	ND	17	16	-	-	-	-	-	-	-
		1A-2-5.0	05/15/2017	5.0	-	-	-	-	-	-	ND	-	1.7	-	-	120	-	-	ND	ND	-	-	13	-	9	18	-	-	3.2	-	-	-	0.17	-	-	ND	9.9	ND	ND	ND	26	45	-	-	-	-	-	-	-
	1A-3	1A-3-0.5	05/15/2017	0.5	-	-	-	-	-	-	ND	-	2.2	-	-	120	-	-	ND	ND	-	-	15	-	6.1	48	-	-	140	5.9	-	ND	0.18	-	-	ND	9.2	ND	ND	ND	23	130	-	-	-	-	-	-	-
		1A-3-1.0	05/15/2017	1.0	-	-	-	-	-	-	ND	-	ND	-	-	130	-	-	ND	ND	-	-	11	-	6.5	26	-	-	130	7.1	-	ND	0.2	-	-	ND	10	ND	ND	ND	27	150	-	-	-	-	-	-	-
		1A-3-3.0	05/15/2017	3.0	-	-	-	-	-	-	ND	-	ND	-	-	68	-	-	ND	ND	-	-	7.7	-	5.4	6.9	-	-	1.5	-	-	-	ND	-	-	ND	5.1	ND	ND	ND	20	25	-	-	-	-	-	-	-
		1A-3-5.0	05/15/2017	5.0	-	-	-	-	-	-	ND	-	ND	-	-	35	-	-	ND	ND	-	-	4.7	-	3.4	3.9	-	-	ND	-	-	-	ND	-	-	ND	3.1	ND	ND	ND	14	17	-	-	-	-	-	-	-
	1A-4	1A-4-0.5	05/15/2017	0.5	-	-	-	-	-	-	ND	-	3.4	-	-	100	-	-	ND	ND	-	-	15	-	6.8	43	-	-	140	5.1	-	ND	0.22	-	-	ND	11	ND	ND	ND	26	210	-	-	-	-	-	-	-
		1A-4-1.0	05/15/2017	1.0	-	-	-	-	-	-	ND	-	ND	-	-	83	-	-	ND	ND	-	-	14	-	8	16	-	-	4.2	-	-	-	ND	-	-	ND	9	ND	ND	ND	29	39	-	-	-	-	-	-	-
		1A-4-3.0	05/15/2017	3.0	-	-	-	-	-	-	ND	-	ND	-	-	66	-	-	ND	ND	-	-	9	-	6.6	11	-	-	1.9	-	-	-	ND	-	-	ND	6.3	ND	ND	ND	24	29	-	-	-	-	-	-	-
		1A-4-5.0	05/15/2017	5.0	-	-	-	-	-	-	ND	-	ND	-	-	55	-	-	ND	ND	-	-	7.7	-	5.7	7.7	-	-	1.7	-	-	-	ND	-	-	ND	5.4	ND	ND	ND	19	26	-	-	-	-	-	-	-
	L7	L-7 @ 1'	02/1/2016	1.0	-	-	-	-	-	-	3.5	-	3.7	-	-	150	-	-	ND	3.4	-	-	17	-	5.4	100	-	-	290	15	-	-	0.2	-	-	ND	13	ND	ND	ND	24	200	-	-	-	-	-	-	-
		L-7 @ 3'	02/1/2016	3.0	-	-	-	-	-	-	-	-	-	-	-	-	-	-	-	-	-	-	-	-	-	-	-	-	-	-	-	-	-	-	-	-	-	-	-	-	-	-	-	-	-	-	-	-	-	-
		L-7 @ 5'	02/1/2016	5.0	-	-	-	-	-	-	-	-	-	-	-	-	-	-	-	-	-	-	-	-	-	-	-	-	-	-	-	-	-	-	-	-	-	-	-	-	-	-	-	-	-	-	-	-
	L8	L-8 @ 1'	02/1/2016	1.0	-	-	-	-	-	-	ND	-	2.1	-	-	91	-	-	ND	ND	-	-	9.9	-	5.2	15	-	-	32	-	-	-	ND	-	-	ND	7.4	ND	ND	ND	25	59	-	-	-	-	-	-	-
		L-8 @ 3'	02/1/2016	3.0	-	-	-	-	-	-	-	-	-	-	-	-	-	-	-	-	-	-	-	-	-	-	-	-	-	-	-	-	-	-	-	-	-	-	-	-	-	-	-	-	-	-	-	-
		L-8 @ 5'	02/1/2016	5.0	-	-	-	-	-	-	-	-	-	-	-	-	-	-	-	-	-	-	-	-	-	-	-	-	-	-	-	-	-	-	-	-	-	-	-	-	-	-	-	-	-	-	-	-
	L-11	L-11 @ 1'	02/1/2016	1.0	-	-	-	-	-	-	3.9	-	8.8	-	-	600	-	-	ND	3.1	-	-	25	-	6.6	170	-	-	690	41	-	-	3.3	ND	-	ND	21	ND	ND	ND	27	1500	-	-	-	-	-	-	-
		L-11 @ 3'	02/1/2016	3.0	-	-	-	-	-	-	ND	-	1.8	-	-	73	-	-	ND	ND	-	-	8	-	4.6	9.8	-	-	2.5	-	-	-	0.1	-	-	ND	6.1	ND	ND	ND	21	30	-	-	-	-	-	-	-
		L-11 @ 5'	02/1/2016	5.0	-	-	-	-	-	-	-	-	-	-	-	-	-	-	-	-	-	-	-	-	-	-	-	-	-	-	-	-	-	-	-	-	-	-	-	-	-	-	-	-	-	-	-	-
	L-12	L-12 @ 1'	02/1/2016	1.0	-	-	-	-	-	-	ND	-	2.7	-	-	85	-	-	ND	ND	-	-	8.4	-	4.7	15	-	-	76	6	-	-	0.13	-	-	ND	6.5	ND	ND	ND	22	76	-	-	-	-	-	-	-
		L-12 @ 3'	02/1/2016	3.0	-	-	-	-	-	-	-	-	-	-	-	-	-	-	-	-	-	-	-	-	-	-	-	-	-	-	-	-	-	-	-	-	-	-	-	-	-	-	-	-	-	-	-	-
	L7	L-7 @ 1'	02/26/2016	1.0	ND	63	-	-	ND	ND	-	-	-	-	-	-	-	-	-	-	-	-	-	-	-	-	-	-	-	-	-	-	-	-	-	-	-	-	-	-	-	-	-	-	-	-	ND	ND	-	-
		L-7 @ 2'	02/26/2016	2.0	-	-	-	-	-	-	ND	-	3	-	-	100	-	-	ND	ND	-	-	14	-	8.2	19	-	-	3.9	-	-	-	0.1	-	-	ND	10	ND	ND	ND	36	42	-	-	-	-	-	-	-
		L-7 @ 3'	02/26/2016	3.0	-	-	-	-	-	-	ND	-	1.6	-	-	61	-	-	ND	ND	-	-	8.3	-	4.8	12	-	-	5.4	-	-	-	ND	-	-	ND	6	ND	ND	ND	22	29	-	-	-	-	-	-	-
	L8	L-8 @ 1'	02/26/2016	1.0	ND	ND	-	-	ND	ND	-	-	-	-	-	-	-	-	-	-	-	-	-	-	-	-	-	-	-	-	-	-	-	-	-	-	-	-	-	-	-	-	-	-	-	-	ND	ND	-	-
		L-8 @ 2'	02/26/2016	2.0	-	-	-	-	-	-	ND	-	ND	-	-	33	-	-	ND	ND	-	-	4.1	-	1.9	3.8	-	-	1.3	-	-	-	0.19	-	-	ND	2.5	ND	ND	ND	11	13	-	-	-	-	-	-	-
		L-8 @ 3'	02/26/2016	3.0	-	-	-	-	-	-	ND	-	ND	-	-	37	-	-	ND	ND	-	-	4.7	-	2.4	3.8	-	-	1.2	-	-	-	ND	-	-	ND	2.9	ND	ND	ND	15	15	-	-	-	-	-	-	-
	L-11	L-11 @ 1'	02/26/2016	1.0	ND	ND	-	-	ND	ND	-	-	-	-	-	-	-	-	-	-	-	-	-	-	-	-	-	-	-	-	-	-	-	-	-	-	-	-	-	-	-	-	-	-	-	-	ND	ND	-	-
		L-11 @ 2'	02/26/2016	2.0	-	-	-	-	-	-	ND	-	ND	-	-	42	-	-	ND	ND	-	-	5.2	-	3	4.7	-	-	1.4	-	-	-	ND	-	-	ND	4	ND	ND	ND	14	19	-	-	-	-	-	-	-
		L-11 @ 3'	02/26/2016	3.0	-	-	-	-	-	-	ND	-	1	-	-	48	-	-	ND	ND	-	-	5.3	-	3	5.6	-	-	3.3	-	-	-	ND	-	-	ND	4.1	ND	ND	ND	14	20	-	-	-	-	-	-	-
	L-12	L-12 @ 1'	02/26/2016	1.0	ND	ND	-	-	ND	ND	-	-	-	-	-	-	-	-	-	-	-	-	-	-	-	-	-	-	-	-	-	-	-	-	-	-	-	-	-	-	-	-	-	-	-	-	ND	ND	-	-
		L-12 @ 2'	02/26/2016	2.0	ND	110	-	-	ND	ND	ND	-	4.6	-	-	45	-	-	ND	ND	-	-	4.6	-	2.6	4.5	-	-	4.9	-	-	-	ND	-	-	ND	3.3	ND	ND	ND	14	19	-	-	-	-	-	-	17 (Arochlor 1260)	2.9 (4,4' - DDT [2C])	-	-
		L-12 @ 3'	02/26/2016	3.0	-	-	-	-	-	-	ND	-	ND	-	-	35	-	-	ND	ND	-	-	4	-	2.2	3.4	-	-	1	-	-	-	ND	-	-	ND	2.7	ND	ND	ND	12	14	-	-	-	-	-	-	-	-	-	-
	1B-1	1B-1-0.5	05/15/2017	0.5	-	-	-	-	-	-	ND	-	1.9	-	-	86	-	-	ND	ND	-	-	13	-	5.2	8.3	-	-	6.6	-	-	-	ND	-	-	4.4	8.4	ND	ND	ND	25	29	-	-	-	-	-	-	-
		1B-1-1.0	05/15/2017	1.0	-	-	-	-	-	-	ND	-	1.9	-	-	84	-	-	ND	ND	-	-	15	-	7.5	8.8	-	-	4.4	-	-	-	ND	-	-	3.3	12	ND	ND	ND	30	31	-	-	-	-	-	-	-
		1B-1-3.0	05/15/2017	3.0	-	-	-	-	-	-	ND	-	ND	-	-	50	-	-	ND	ND	-	-	6.3	-	4	6.4	-	-	4.3	-	-	-	ND	-	-	ND	3.9	ND	ND	ND	18	24	-	-	-	-	-	-	-
		1B-1-5.0	05/15/2017	5.0	-	-	-	-	-	-	ND	-	1.3	-	-	69	-	-	ND	ND	-	-	8.4	-	5.5	9.7	-	-	19	-	-	-	0.19	-	-	ND	6	ND	ND	ND	21	32	-	-	-	-	-	-	-
	A-13-01	A01@5'	08/21/2013	5.0	6.9	ND	ND	ND	ND	-	ND	-	1.3	-	-	67	-	-	ND	1.2	-	-	9.8	-	5.6	12	-	-	8.2	-	-	-	0.069	-	-	ND	6.8	ND	ND	ND	27	41	-	-	-	-	-	-	-
		A01@30'	08/21/2013	30.0	35	18	ND	53	ND	-	-	-	-	-	-	-	-	-	-	-	-	-	-	-	-	-	-	-	-	-	-	-	-	-	-	-	-	-	-	-	-	-	-	-	-	-	-	-	-	-
		A01@50'	08/21/2013	50.0	25	28	ND	55	ND	-	-	-	-	-	-	-	-	-	-	-	-	-	-	-	-	-	-	-	-	-	-	-	-	-	-	-	-	-	-	-	-	-	-	-	-	-	-	-	-	-
		A01@60'	08/21/2013	60.0	ND	ND	ND	ND	9.2 (1,2,4-Trimethylbenzene)	-	-	-	-	-	-	-	-	-	-	-	-	-	-	-	-	-	-	-	-	-	-	-	-	-	-	-	-	-	-	-	-	-	-	-	-	-	-	-	-	-	-	-
		A01@65'	08/21/2013	65.0	ND	ND	17	17	790,000 (Toluene) 15,000 (Ethylbenzene) 110,000 (Total Xylenes) 15,000 (Sec-Butylbenzene) 29,000 (n-Butylbenzene) 25,000 (Isopropylbenzene) 130,000 (n-Propoylbenzene) 870,000 (1,2,4-Trimethylbenzene) 220,000 (1,3,5-Trimethylbenzene)	-	ND	-	0.62	-	-	29	-	-	ND	ND	-	-	4	-	ND	3.5	-	-	ND	-	-	-	ND	-	-	ND	ND	ND	ND	ND	14	13	-	-	-	-	-	-	-	-	-	-	-	-	-	-	-
		A01@80'	08/21/2013	80.0	ND	ND	ND	ND	500 (Toluene) 420 (1,2,4-Trimethylbenzene)	-	-	-	-	-	-	-	-	-	-	-	-	-	-	-	-	-	-	-	-	-	-	-	-	-	-	-	-	-	-	-	-	-	-	-	-	-	-	-	-	-	-	-	-	-
2A, 2B, 2C	2A-1	2A-1-0.5	05/15/2017	0.5	-	-	-	-	-	-	ND	-	ND	-	-	160	-	-	ND	ND	-	-	8.8	-	4.2	12	-	-	7.6	-	-	-	ND	-	-	ND	9.4	ND	ND	ND	19	46	-	-	-	-	-	-	-
		2A-1-1.0	05/15/2017	1.0	ND	ND	-	-	ND	ND	ND	-	ND	-	-	84	-	-	ND	ND	-	-	11	-	6.3	12	-	-	6.3	-	-	-	ND	-	-	ND	7.8	ND	ND	ND	27	36	-	-	-	ND	ND	-	ND
		2A-1-3.0	05/15/2017	3.0	ND	ND	-	-	ND	ND	ND	-	ND	-	-	42	-	-	ND	ND	-	-	5.5	-	4.1	5.7	-	-	5.8	-	-	-	ND	-	-	ND	3.7	ND	ND	ND	15	23	-	-	-	-	-	-	-
		2A-1-5.0	05/15/2017	5.0	-	-	-	-	-	-	-	-	ND	-	-	90	-	-	ND	ND	-	-	7.7	-	2.8	5.5	-	-	10	-	-	-	ND	-	-	ND	4.8	ND	ND	ND	14	14	-	-	-	-	-	-	-
	2A-2	2A-2-0.5	05/15/2017	0.5	-	-	-	-	-	-	ND	-	1.9	-	-	85	-	-	ND	ND	-	-	8.8	-	5.6	18	-	-	28	-	-	-	ND	-	-	ND	7.5	ND	ND	ND	22	48	-	-	-	-	-	-	-
		2A-2-1.0	05/15/2017	1.0	ND	18	-	-	ND	ND	ND	-	1.4	-	-	59	-	-	ND	ND	-	-	8.1	-	5.3	8.4	-	-	6.5	-	-	-	ND	-	-	ND	5.6	ND	ND	ND	21	31	-	-	-	ND	ND	-	ND
		2A-2-3.0	05/15/2017	3.0	-	-	-	-	-	-	ND	-	ND	-	-	49	-	-	ND	ND	-	-	6.6	-	4.5	6.7	-	-	2.6	-	-	-	ND	-	-	ND	4.6	ND	ND	ND	18	23	-	-	-	-	-	-	-
		2A-2-5.0	05/15/2017	5.0	ND	ND	-	-	ND	ND	ND	-	ND	-	-	58	-	-	ND	ND	-	-	8.6	-	5.5	6.9	-	-	1.2	-	-	-	ND	-	-	ND	5.1	ND	ND	ND	22	22	-	-	-	-	-	-	-
	P33-B1	MC-1	08/15/2015	2.5	ND	ND	ND	-	ND	ND	ND	-	ND	-	-	71	-	-	ND	ND	-	-	11	-	5	11	-	-	2.4	-	-	-	ND	-	-	ND	7.1	ND	ND	ND	21	33	-	-	-	ND	ND	ND	ND
		MC-2	08/15/2015	5.0	ND	ND	ND	-	ND	ND	ND	-	2.1	-	-	140	-	-	ND	1.3	ND	ND	15	-	8.5	23	-	-	4.7	-	-	-	0.12	-	-	ND	11	ND	ND	ND	38	52	-	-	-	-	-	-	-
		MC-3	08/15/2015	7.5	ND	ND	ND	-	ND	ND	ND	-	ND	-	-	136	-	-	ND	ND	-	-	3.3	-	2.9	3.8	-	-	ND	-	-	-	ND	-	-	ND	2.7	ND	ND	ND	11	15	-	-	-	-	-	-	-
	P33-B2	MC-1	08/7/2015	2.5	ND	ND	ND	-	ND	ND	ND	-	ND	-	-	33	-	-	ND	ND	-	-	4.4	-	2.4	4.5	-	-	1.1	-	-	-	ND	-	-	ND	3.2	ND	ND	ND	11	17	-	-	-	-	-	-	-
		MC-2	08/7/2015	5.0	ND	ND	ND	-	ND	ND	ND	-	ND	-	-	130	-	-	ND	1.4	ND	ND	17	-	8.6	22	-	-	3.9	-	-	-	0.11	-	-	ND	12	ND	ND	ND	41	60	-	-	-	-	-	-	-
		MC-3	08/7/2015	7.5	ND	ND	ND	-	ND	ND	ND	-	ND	-	-	23	-	-	ND	ND	-	-	3	-	2.1	5.3	-	-	1	-	-	-	0.9	-	-	ND	2.2	ND	ND	ND	10	16	-	-	-	-	-	-	-
		MC-4	08/7/2015	10.0	ND	ND	ND	-	ND	ND	ND	-	ND	-	-	40	-	-	ND	ND	-	-	4.8	-	2.1	4	-	-	ND	-	-	-	ND	-	-	ND	2.3	ND	ND	ND	7.6	14	-	-	-	-	-	-	-
	P33-B3	MC-1	08/7/2015	2.5	ND	ND	ND	-	ND	ND	ND	-	ND	-	-	35	-	-	ND	ND	-	-	5.1	-	2.9	5.4	-	-	1.3	-	-	-	ND	-	-	ND	3.6	ND	ND	ND	14	19	-	-	-	-	-	-	-
		MC-2	08/7/2015	5.0	ND	ND	ND	-	ND	ND	ND	-	1.7	-	-	120	-	-	ND	1.6	ND	ND	18	-	8.8	23	-	-	4.5	-	-	-	ND	-	-	ND	13	ND	ND	ND	41	60	-	-	-	-	-	-	-
		MC-3	08/7/2015	7.5	ND	ND	ND	-	ND	ND	ND	-	ND	-	-	27	-	-	ND	ND	-	-	3.5	-	2	3.5	-	-	ND	-	-	-	ND	-	-	ND	2.4	ND	ND	ND	7.5	12	-	-	-	-	-	-	-
		MC-4	08/7/2015	10.0	ND	ND	ND	-	ND	ND	ND	-	ND	-	-	54	-	-	ND	ND	-	-	8.5	-	4.3	7.8	-	-	1.4	-	-	-	ND	-	-	ND	5.3	ND	ND	ND	20	26	-	-	-	-	-	-	-
		MC-5	08/7/2015	12.5	ND	ND	ND	-	ND	ND	ND	-	ND	-	-	21	-	-	ND	ND	-	-	3.3	-	2.1	6.1	-	-	1.5	-	-	-	0.13	-	-	ND	2.2	ND	ND	ND	7.3	13	-	-	-	-	-	-	-
	P33-B4	MC-1	08/7/2015	2.5	ND	ND	ND	-	ND	ND	ND	-	1	-	-	89	-	-	ND	ND	-	-	11	-	5.7	13	-	-	3	-	-	-	ND	-	-	ND	8.1	ND	ND	ND	25	38	-	-	-	ND	ND	ND	ND
		MC-2	08/7/2015	5.0	ND	ND	ND	-	ND	ND	ND	-	ND	-	-	58	-	-	ND	ND	-	-	8	-	4.1	8.2	-	-	1.6	-	-	-	ND	-	-	ND	5.5	ND	ND	ND	17	26	-	-	-	ND	-	-	-
		MC-3	08/7/2015	7.5	ND	ND	ND	-	ND	ND	ND	-	ND	-	-	21	-	-	ND	ND	-	-	3.1	-	2	2.6	-	-	ND	-	-	-	ND	-	-	ND	1.9	ND	ND	ND	5.7	9.3	-	-	-	ND	-	-	-
		MC-4	08/7/2015	10.0	ND	ND	ND	-	ND	ND	ND	-	ND	-	-	20	-	-	ND	ND	-	-	2.7	-	1.5	2.4	-	-	ND	-	-	-	3.4	-	-	ND	1.7	ND	ND	ND	6.5	11	-	-	-	-	-	-	-
	P32-B1	MC-1	08/12/2015	2.5	ND	ND	ND	-	ND	ND	ND	-	ND	-	-	50	-	-	ND	ND	-	-	6.3	-	3.2	6	-	-	1.2	-	-	-	ND	-	-	ND	4.1	ND	ND	ND	16	21	-	-	-	ND	ND	ND	ND
		MC-2	08/12/2015	5.0	ND	ND	ND	-	ND	ND	ND	-	ND	-	-	35	-	-	ND	ND	-	-	5.1	-	2.5	5.9	-	-	1.5	-	-	-	0.12	-	-	ND	3.4	ND	ND	ND	14	18	-	-	-	-	-	-	-
		MC-3	08/12/2015	7.5	ND	ND	ND	-	ND	ND	ND	-	ND	-	-	23	-	-	ND	ND	-	-	3.6	-	2	4.9	-	-	1.2	-	-	-	ND	-	-	ND	2.4	ND	ND	ND	9.6	14	-	-	-	-	-	-	-
		MC-4	08/12/2015	10.0	ND	ND	ND	-	ND	ND	ND	-	ND	-	-	38	-	-	ND	ND	-	-	5.6	-	3.7	5.6	-	-	1.1	-	-	-	ND	-	-	ND	3.8	ND	ND	ND	17	19	-	-	-	-	-	-	-
	P32-B2	MC-1	08/12/2015	2.5	ND	ND	ND	-	ND	ND	ND	-	ND	-	-	58	-	-	ND	ND	-	-	8.3	-	4.1	7.4	-	-	1.8	-	-	-	ND	-	-	ND	5.3	ND	ND	ND	19	26	-	-	-	-	-	-	-
		MC-2	08/12/2015	5.0	ND	ND	ND	-	ND	ND	ND	-	1.1	-	-	52	-	-	ND	ND	-	-	8	-	3.9	10	-	-	2.5	-	-	-	ND	-	-	ND	5.6	ND	ND	ND	18	26	-	-	-	-	-	-	-
		MC-3	08/12/2015	7.5	ND	ND	ND	-	ND	ND	ND	-	ND	-	-	32	-	-	ND	ND	-	-	4.2	-	2.3	4	-	-	1.2	-	-	-	ND	-	-	ND	2.7	ND	ND	ND	11	15	-	-	-	-	-	-	-
		MC-4	08/12/2015	10.0	ND	ND	ND	-	ND	ND	ND	-	1.3	-	-	55	-	-	ND	ND	-	-	7.9	-	4.2	10	-	-	2.2	-	-	-	ND	-	-	ND	5.6	ND	ND	ND	17	23	-	-	-	-	-	-	-
	RR-B1	MC-1	08/25/2015	2.5	ND	ND	ND	-	ND	ND	ND	-	ND	-	-	44	-	-	ND	ND	-	-	6.1	-	3.4	7.6	-	-	2.4	-	-	-	ND	-	-	ND	4.4	ND	ND	ND	15	22	-	-	-	ND	ND	-	-
		MC-2	08/25/2015	5.0	ND	17	43	-	ND	ND	ND	-	ND	-	-	53	-	-	ND	ND	-	-	7.7	-	4.2	10	-	-	3.6	-	-	-	ND	-	-	ND	5.3	ND	ND	ND	19	27	-	-	-	-	-	-	-
		MC-3	08/25/2015	7.5	ND	ND	ND	-	ND	ND	ND	-	1.2	-	-	64	-	-	ND	ND	-	-	9.4	-	4.9	12	-	-	5.9	-	-	-	ND	-	-	ND	6.3	ND	ND	ND	22	33	-	-	-	-	-	-	-
		MC-4	08/25/2015	10.0	ND	ND	ND	-	ND	ND	ND	-	1.1	-	-	52	-	-	ND	ND	-	-	7.9	-	4	8.9	-	-	5.5	-	-	-	ND	-	-	ND	5.4	ND	ND	ND	20	28	-	-	-	-	-	-	-
		MC-5	08/25/2015	15.0	ND	ND	ND	-	ND	ND	ND	-	37	-	-	37	-	-	ND	ND	-	-	5.1	-	2.7	4.6	-	-	ND	-	-	-	ND	-	-	ND	3.3	ND	ND	ND	15	17	-	-	-	-	-	-	-

Table 10. Comparison of Unrestricted Land Use and Commercial/Industrial Screening Results - Soil Samples (Cont'd)

PARC AREA	Boring ID	Sample ID	Sample Collection Date	Sample Depth (ft below grade)	Total Petroleum Hydrocarbons (EPA 8015B (M))				VOCs (EPA 8260B) (µg/kg)	SVOCs (EPA 8270C) (µg/kg)	Title 22 Metals (EPA 6010B/7471A)																													pH	Polychlorinated Biphenyls (EPA 8082) µg/kg	Organochlorine Pesticides (EPA 8081) µg/kg	Organophosphorous Pesticides (EPA 8081) µg/kg	Chlorinated Herbicides (EPA 8151A) µg/kg
					TPH GRO mg/kg	TPH DRO mg/kg	TPH ORO mg/kg	TPH Total mg/kg			Antimony mg/kg	STLC Antimony mg/L	Arsenic mg/kg	STLC Arsenic mg/L	TCLP Arsenic mg/L	Barium mg/kg	STLC Barium mg/L	TCLP Barium mg/L	Beryllium mg/kg	Cadmium mg/kg	STLC Cadmium mg/L	TCLP Cadmium mg/L	Chromium mg/kg	Hexavalent Chromium mg/kg	Cobalt mg/kg	Copper mg/kg	STLC Copper mg/L	TCLP Copper mg/L	Lead mg/kg	STLC Lead (CA-WET) mg/L	STLC Lead (DI-WET) mg/L	TCLP Lead mg/L	Mercury mg/kg	STLC Mercury mg/L	TCLP Mercury mg/L	Molybdenum mg/kg	Nickel mg/kg	Selenium mg/kg	Silver mg/kg	Thallium mg/kg	Vanadium mg/kg	Zinc mg/kg	STLC Zinc mg/L	TCLP Zinc mg/L					
2A, 2B, 2C	RR-B2	MC-1	08/25/2015	2.5	ND	ND	ND	-	ND	ND	ND	-	ND	-	-	46	-	-	ND	ND	-	-	6	-	3.5	6.2	-	-	1.2	-	-	-	ND	-	-	ND	4.3	ND	ND	ND	17	22	-	-	-	ND	ND	-	-
		MC-2	08/25/2015	5.0	ND	ND	ND	-	ND	ND	ND	-	ND	-	-	86	-	-	ND	ND	-	-	11	-	6.1	11	-	-	2.4	-	-	-	ND	-	-	ND	8.2	ND	ND	ND	26	42	-	-	-	-	-	-	-
		MC-3	08/25/2015	7.5	ND	ND	ND	-	ND	ND	ND	-	ND	-	-	30	-	-	ND	ND	-	-	4.2	-	2.7	4.7	-	-	1.2	-	-	-	ND	-	-	ND	2.9	ND	ND	ND	10	15	-	-	-	-	-	-	-
		MC-4	08/25/2015	10.0	ND	ND	ND	-	ND	ND	ND	-	ND	-	-	21	-	-	ND	ND	-	-	3.4	-	1.4	2.9	-	-	1	-	-	-	ND	-	-	ND	1.7	ND	ND	ND	6.2	12	-	-	-	-	-	-	-
		MC-5	08/25/2015	15.0	ND	ND	ND	-	ND	ND	ND	-	ND	-	-	32	-	-	ND	ND	-	-	4.6	-	2.5	4.7	-	-	1.1	-	-	-	ND	-	-	ND	3.2	ND	ND	ND	11	16	-	-	-	-	-	-	-
	RR-B3	MC-1	08/25/2015	2.5	ND	13	23	-	ND	ND	ND	-	2.3	-	-	150	-	-	ND	ND	-	-	12	-	4.1	14	-	-	41	-	-	-	0.18	-	-	ND	8.9	ND	ND	ND	19	42	-	-	-	ND	ND	-	-
		MC-2	08/25/2015	5.0	ND	12	15	-	ND	ND	ND	-	3.7	-	-	140	-	-	ND	ND	-	-	16	-	5.9	24	-	-	44	-	-	-	0.23	-	-	ND	15	ND	ND	ND	25	93	-	-	-	ND	ND	-	-
		MC-3	08/25/2015	7.5	ND	ND	ND	-	ND	ND	ND	-	2.5	-	-	130	-	-	ND	ND	-	-	17	-	6.1	21	-	-	24	-	-	-	0.18	-	-	ND	13	ND	ND	ND	30	66	-	-	-	-	-	-	-
		MC-4	08/25/2015	10.0	ND	12	31	-	ND	ND	ND	-	1.1	-	-	55	-	-	ND	ND	-	-	8.3	-	3.6	10	-	-	7.5	-	-	-	0.12	-	-	ND	5.1	ND	ND	ND	15	29	-	-	-	-	-	-	-
		MC-5	08/25/2015	15.0	ND	ND	ND	-	ND	ND	ND	-	ND	-	-	50	-	-	ND	ND	-	-	5.3	-	2.7	5.4	-	-	1.4	-	-	-	ND	-	-	ND	3.6	ND	ND	ND	13	21	-	-	-	-	-	-	-
		MC-6	08/25/2015	20.0	ND	ND	ND	-	ND	ND	ND	-	ND	-	-	43	-	-	ND	ND	-	-	4.9	-	2.5	6	-	-	2	-	-	-	ND	-	-	ND	3.1	ND	ND	ND	11	19	-	-	-	-	-	-	-
	R-13-02	R02@5'	08/21/2013	5.0	ND	ND	ND	ND	ND	-	ND	-	1.5	-	-	68	-	-	ND	1.2	-	-	11	-	5.3	13	-	-	ND	-	-	-	0.078	-	-	ND	7.5	ND	ND	ND	31	37	-	-	-	-	-	-	-
		R02@45'	08/21/2013	45.0	ND	ND	ND	ND	ND	-	-	-	-	-	-	-	-	-	-	-	-	-	-	-	-	-	-	-	-	-	-	-	-	-	-	-	-	-	-	-	-	-	-	-	-	-	-	-	-
		R02@65'	08/21/2013	65.0	ND	ND	ND	ND	ND	-	ND	-	1.2	-	-	190	-	-	ND	1	-	-	8.3	-	3.5	35	-	-	ND	-	-	-	0.048	-	-	9.6	5.8	ND	ND	ND	21	37	-	-	-	-	-	-	-
	A-13-19	A19@5'	08/22/2013	5.0	ND	ND	ND	ND	ND	-	ND	-	ND	-	-	14	-	-	ND	ND	-	-	ND	-	ND	51	-	-	ND	-	-	-	0.058	-	-	ND	ND	ND	ND	ND	ND	66	-	-	-	-	-	-	-
		A19@35'	08/22/2013	35.0	ND	ND	ND	ND	ND	-	-	-	-	-	-	-	-	-	-	-	-	-	-	-	-	-	-	-	-	-	-	-	-	-	-	-	-	-	-	-	-	-	-	-	-	-	-	-	-
		A19@45'	08/22/2013	45.0	ND	ND	ND	ND	ND	-	-	-	-	-	-	-	-	-	-	-	-	-	-	-	-	-	-	-	-	-	-	-	-	-	-	-	-	-	-	-	-	-	-	-	-	-	-	-	-
		A19@60'	08/22/2013	60.0	ND	ND	ND	ND	ND	-	-	-	-	-	-	-	-	-	-	-	-	-	-	-	-	-	-	-	-	-	-	-	-	-	-	-	-	-	-	-	-	-	-	-	-	-	-	-	-
		A19@80'	08/22/2013	80.0	ND	ND	ND	ND	ND	-	ND	-	2.1	-	-	55	-	-	ND	1.2	-	-	7.3	-	4	14	-	-	ND	-	-	-	0.05	-	-	9.6	4.6	ND	ND	ND	21	38	-	-	-	-	-	-	-
	A-13-20	A20@5'	09/23/2013	5.0	14	2.4	ND	16	ND	-	ND	-	ND	-	-	82	-	-	ND	1.7	-	-	12	-	6.8	16	-	-	35	-	-	-	0.097	-	-	ND	9	ND	ND	ND	33	110	-	-	-	-	-	-	-
		A20@25'	09/23/2013	25.0	ND	ND	ND	ND	ND	-	-	-	-	-	-	-	-	-	-	-	-	-	-	-	-	-	-	-	-	-	-	-	-	-	-	-	-	-	-	-	-	-	-	-	-	-	-	-	-
		A20@65'	09/23/2013	65.0	ND	ND	ND	ND	ND	-	ND	-	4.6	-	-	93	-	-	ND	3.2	-	-	12	-	6.4	16	-	-	ND	-	-	-	ND	-	-	12	9	ND	ND	ND	32	54	-	-	-	-	-	-	-
	A-13-21	A21@5'	09/20/2013	5.0	370	50	11	430	ND	-	ND	-	6	-	-	83	-	-	ND	2.7	-	-	16	-	6	250	-	-	170	-	-	-	0.12	-	-	ND	18	ND	ND	ND	25	160	-	-	-	-	-	-	-
		A21@35'	09/20/2013	35.0	13	19	1.9	33	ND	-	-	-	-	-	-	-	-	-	-	-	-	-	-	-	-	-	-	-	-	-	-	-	-	-	-	-	-	-	-	-	-	-	-	-	-	-	-	-	-
		A21@65'	09/20/2013	65.0	ND	ND	ND	ND	ND	-	ND	-	8.6	-	-	110	-	-	ND	ND	-	-	5.2	-	ND	3.6	-	-	ND	-	-	-	0.028	-	-	110	ND	ND	ND	ND	26	8.1	-	-	-	-	-	-	-
3	A-13-23	A23@5'	09/11/2013	5.0	ND	ND	ND	ND	ND	-	ND	-	ND	-	-	42	-	-	ND	ND	-	-	11	-	3.7	8	-	-	ND	-	-	-	0.07	-	-	ND	5.5	ND	ND	ND	21	27	-	-	-	-	-	-	-
		A23@20'	09/11/2013	20.0	ND	ND	ND	ND	ND	-	-	-	-	-	-	-	-	-	-	-	-	-	-	-	-	-	-	-	-	-	-	-	-	-	-	-	-	-	-	-	-	-	-	-	-	-	-	-	-
		A23@50'	09/11/2013	50.0	ND	ND	ND	ND	ND	-	ND	-	ND	-	-	51	-	-	ND	2.3	-	-	16	-	5.3	8.6	-	-	3	-	-	-	0.037	-	-	ND	5.3	ND	ND	ND	57	26	-	-	-	-	-	-	-
4	R-13-03	R03@5'	11/6/2013	5.0	6	ND	ND	ND	ND	-	ND	-	ND	-	-	34	-	-	ND	ND	-	-	5.6	-	ND	6	-	-	ND	-	-	-	0.028	-	-	ND	3.1	ND	ND	ND	14	16	-	-	-	-	-	-	-
		R03@45'	11/6/2013	45.0	ND	ND	ND	ND	ND	-	-	-	-	-	-	-	-	-	-	-	-	-	-	-	-	-	-	-	-	-	-	-	-	-	-	-	-	-	-	-	-	-	-	-	-	-	-	-	-
		R03@55'	11/6/2013	55.0	ND	ND	ND	ND	ND	-	ND	-	ND	-	-	46	-	-	ND	ND	-	-	ND	-	ND	5.6	-	-	ND	-	-	-	ND	-	-	ND	ND	ND	ND	ND	16	36	-	-	-	-	-	-	-
	R-13-04	R04@5'	11/4/2013	5.0	ND	ND	ND	ND	ND	-	ND	-	13	-	-	92	-	-	1.2	3.1	-	-	9.3	-	12	35	-	-	3.4	-	-	-	0.054	-	-	ND	19	ND	ND	ND	110	79	-	-	-	-	-	-	-
		R04@40'	11/4/2013	40.0	ND	ND	ND	ND	ND	-	ND	-	ND	-	-	90	-	-	ND	1.2	-	-	14	-	7.4	24	-	-	ND	-	-	-	0.026	-	-	ND	11	ND	ND	ND	31	53	-	-	-	-	-	-	-
		R04@60'	11/4/2013	60.0	ND	ND	ND	ND	ND	-	-	-	-	-	-	-	-	-	-	-	-	-	-	-	-	-	-	-	-	-	-	-	-	-	-	-	-	-	-	-	-	-	-	-	-	-	-	-	-
5	5-1	5-1-0.5	05/15/2017	0.5	-	-	-	-	-	-	ND	-	1.5	-	-	72	-	-	ND	ND	-	-	7.9	-	5.6	12	-	-	20	-	-	-	ND	-	-	ND	6.6	ND	ND	ND	21	46	-	-	-	-	-	-	-
		5-1-1.0	05/15/2017	1.0	-	-	-	-	-	-	ND	-	2.1	-	-	84	-	-	ND	ND	-	-	10	-	5.3	19	-	-	68	4.8	-	ND	ND	-	-	ND	7.6	ND	ND	ND	22	99	-	-	-	-	-	-	-
		5-1-2.0	05/15/2017	2.0	-	-	-	-	-	-	ND	-	4.7	-	-	42	-	-	ND	ND	-	-	6	-	4.9	23	-	-	110	3.7	-	ND	0.11	-	-	ND	7	ND	ND	ND	18	130	-	-	-	-	-	-	-
		5-1-3.0	05/15/2017	3.0	-	-	-	-	-	-	ND	-	ND	-	-	30	-	-	ND	ND	-	-	4.2	-	3.2	3.8	-	-	2.2	-	-	-	0.14	-	-	ND	2.7	ND	ND	ND	14	16	-	-	-	-	-	-	-
	5-2	5-2-0.5	05/15/2017	0.5	-	-	-	-	-	-	ND	-	4.1	-	-	75	-	-	ND	ND	-	-	15	-	8.5	20	-	-	48	-	-	-	ND	-	-	ND	14	ND	ND	ND	29	60	-	-	-	-	-	-	-
		5-2-1.0	05/15/2017	1.0	-	-	-	-	-	-	ND	-	ND	-	-	52	-	-	ND	ND	-	-	5.9	-	4.5	9.6	-	-	19	-	-	-	ND	-	-	ND	5	ND	ND	ND	18	77	-	-	-	-	-	-	-
		5-2-2.0	05/15/2017	2.0	-	-	-	-	-	-	ND	-	ND	-	-	57	-	-	ND	ND	-	-	6.1	-	4.8	5.9	-	-	2.3	-	-	-	ND	-	-	ND	4.5	ND	ND	ND	17	23	-	-	-	-	-	-	-
		5-2-3.0	05/15/2017	3.0	-	-	-	-	-	-	ND	-	1.1	-	-	21	-	-	ND	ND	-	-	3.2	-	3.2	4.3	-	-	180	ND	-	ND	0.12	-	-	ND	4	ND	ND	ND	8.5	10	-	-	-	-	-	-	-
	L-9	L-9 @ 1'	02/12/2016	1.0	ND	190	-	-	ND	ND	2.3	-	3.4	-	-	72	-	-	ND	ND	-	-	7.9	-	4.4	20	-	-	64	-	-	-	ND	-	-	ND	7.3	ND	ND	ND	24	75	-	-	-	-	-	-	ND
		L-9 @ 2.5'	02/12/2016	2.5	-	-	-	-	ND	-	ND	-	2.2	-	-	44	-	-	ND	ND	-	-	6.3	-	2.9	7	-	-	16	-	-	-	ND	-	-	ND	4.3	ND	ND	ND	24	27	-	-	-	-	-	-	-
	L-10	L-10 @ 1'	02/12/2016	1.0	ND	260	-	-	ND	ND	ND	-	5	-	-	120	-	-	ND	ND	-	-	10	-	5	19	-	-	44	-	-	-	0.25	-	-	ND	9.2	ND	ND	ND	23	68	-	-	-	-	-	-	ND
		L-10 @ 3'	02/12/2016	3.0	-	-	-	-	ND	-	ND	-	2.8	-	-	58	-	-	ND	ND	-	-	8.1	-	3.6	10	-	-	20	-	-	-	ND	-	-	ND	6	ND	ND	ND	22	47	-	-	-	-	-	-	-
6	6-1	6-1-0.5	05/15/2017	0.5	-	-	-	-	-	-	ND	-	1.5	-	-	69	-	-	ND	ND	-	-	6	-	3.3	7.2	-	-	11	-	-	-	0.14	-	-	ND	4.3	ND	ND	ND	14	28	-	-	-	-	-	-	-
		6-1-1.0	05/15/2017	1.0	ND	ND	-	-	ND	ND	ND	-	1.4	-	-	77	-	-	ND	ND	-	-	6.2	-	3.7	8.5	-	-	13	-	-	-	ND	-	-	ND	6.7	ND	ND	ND	15	33	-	-	+	ND	ND	-	ND
		6-1-3.0	05/15/2017	3.0	-	-	-	-	-	-	ND	-	ND	-	-	70	-	-	ND	ND	-	-	8.2	-	6.6	7.4	-	-	3.3	-	-	-	ND	-	-	ND	6.1	ND	ND	ND	23	32	-	-	-	-	-	-	-
		6-1-5.0	05/15/2017	5.0	-	-	-	-	-	-	ND	-	ND	-	-	66	-	-	ND	ND	-	-	8.1	-	6.3	6.5	-	-	1.2	-	-	-	ND	-	-	ND	5.6	ND	ND	ND	24	28	-	-	-	-	-	-	-
	6-2	6-2-0.5	05/16/2017	0.5	-	-	-	-	-	-	ND	-	2.9	-	-	110	-	-	ND	ND	-	-	5.5	-	2.7	6.8	-	-	90	ND	-	ND	0.33	-	-	ND	3.2	ND	ND	ND	15	62	-	-	-	ND	ND	-	ND
		6-2-1.0	05/16/2017	1.0	-	-	-	-	-	-	ND	-	1.2	-	-	87	-	-	ND	ND	-	-	8.2	-	5.7	15	-	-	38	-	-	-	0.78	-	-	ND	8	ND	ND	ND	26	89	-	-	-	-	-	-	-
		6-2-3.0	05/16/2017	3.0	ND	ND	-	-	ND	ND	ND	-	ND	-	-	29	-	-	ND	ND	-	-	3.7	-	2.6	2.5	-	-	1.2	-	-	-	ND	-	-	ND	2.4	ND	ND	ND	11	13	-	-	-	-	-	-	-
		6-2-5.0	05/16/2017	5.0	-	-	-	-	-	-	ND	-	ND	-	-	34	-	-	ND	ND	-	-	2.9	-	2.8	3	-	-	1.2	-	-	-	ND	-	-	ND	2.4	ND	ND	ND	10	14	-	-	-	-	-	-	-
	6-3	6-3-0.5	05/15/2017	0.5	-	-	-	-	-	-	ND	-	ND	-	-	46	-	-	ND	ND	-	-	5.8	-	3.5	5.7	-	-	9.1	-	-	-	ND	-	-	ND	3.5	ND	ND	ND	14	28	-	-	-	-	-	-	-
		6-3-1.0	05/15/2017	1.0	ND	ND	-	-	ND	ND	8.3	-	11	-	-	1900	3.2	ND	ND	12	ND	0.99	69	3	9.2	250	33	-	4300	270	-	7.3	0.44	-	-	ND	31	1	ND	ND	22	10000	1100	-	+	ND	ND	-	ND
		6-3-3.0	05/15/2017	3.0	-	-	-	-	-	-	ND	-	1.6	-	-	160	-	-	ND	ND	-	-	8.7	-	3.5	21	-	-	250	ND	-	ND	ND	-	-	ND	5	ND	ND	ND	11	660	-	-	-	-	-	-	-
		6-3-5.0	05/15/2017	5.0	-	-	-	-	-	-	ND	-	ND	-	-	21	-	-	ND	ND	-	-	3.1	-	2.3	2.4	-	-	1.1	-	-	-	0.4	-	-	ND	1.9	ND	ND	ND	12	13	-	-	-	-	-	-	-
	6-4	6-4-0.5	05/15/2017	0.5	-	-	-	-	-	-	ND	-	2.3	-	-	95	-	-	ND	ND	-	-	6.2	-	3.2	13	-	-	30	-	-	-	0.17	-	-	ND	5.6	ND	ND	ND	15	55	-	-	-	-	-	-	-
		6-4-1.0	05/15/2017	1.0	ND	ND	-	-	ND	ND	ND	-	26	1.1	ND	71	-	-	ND	1.2	-	-	11	-	4.6	41	-	-	94	5.4	-	ND	ND	-	-	ND	8.4	ND	ND	ND	19	960	-	-	+	ND	ND	-	ND
		6-4-3.0	05/15/2017	3.0	-	-	-	-	-	-	ND	-	11	-	-	41	-	-	ND	ND	-	-	6.3	-	4.2	7.1	-	-	16	-	-	-	ND	-	-	ND	3.8	ND	ND	ND	18	32	-	-	-	-	-	-	-
		6-4-5.0	05/15/2017	5.0	-	-	-	-	-	-	ND	-	9	-	-	69	-	-	ND	ND	-	-	11	-	7.5	11	-	-	3.2	-	-	-	ND	-	-	ND	7	ND	ND	ND	29	59	-	-	-	-	-	-	-
	6-5	6-5-0.5	05/15/2017	0.5	-	-	-	-	-	-	4	-	9.1	-	-	95	-	-	ND	2.3	ND	ND	19	5	7.6	82	-	-	400	1.9	-	ND	0.17	-	-	ND	12	ND	ND	ND	21	950	-	-	-	-	-	-	-
		6-5-1.0	05/15/2017	1.0	-	-	-	-	-	-	ND	-	3.9	-	-	75	-	-	ND	ND	-	-	10	-	6.7	13	-	-	59	1.9	-	1.8	ND	-	-	ND	6.9	ND	ND	ND	27	83	-	-	-	-	-	-	-
		6-5-3.0	05/15/2017	3.0	ND	ND	-	-	ND	ND	ND	-	1	-	-	31	-	-	ND	ND	-	-	4.5	-	3.2	3.8	-	-	2.4	-	-	-	0.11	-	-	ND	2.8	ND	ND	ND	14	17	-	-	-	ND	ND	-	ND
		6-5-5.0	05/15/2017	5.0	-	-	-	-	-	-	ND	-	ND	-	-	22	-	-	ND	ND	-	-	3.3	-	2.3	2.5	-	-	1.1	-	-	-	1.5	-	-	ND	2	ND	ND	ND	9.2	13	-	-	-	-	-	-	-
	6-6	6-6-1.0	05/15/2017	1.0	-	-	-	-	-	-	ND	-	1.1	-	-	120	-	-	ND	ND	-	-	15	-	8.3	13	-	-	12	-	-	-	0.12	-	-	ND	12	ND	ND	ND	34	45	-	-	-	-	-	-	-
		6-6-3.0	05/15/2017	3.0	-	-	-	-	-	-	ND	-	ND	-	-	30	-	-	ND	ND	-	-	3.3	-	2.6	3	-	-	1.2	-	-	-	ND	-	-	ND	2.5	ND	ND	ND	10	13	-	-	-	-	-	-	-
		6-6-5.0	05/15/2017	5.0	-	-	-	-	-	-	ND	-	ND	-	-	52	-	-	ND	ND	-	-	4.3	-	3	4	-	-	1.1	-	-	-	ND	-	-	ND	3	ND	ND	ND	14	14	-	-	-	-	-	-	-
		6-6-7.5	05/15/2017	7.5	-	-	-	-	-	-	ND	-	ND	-	-	32	-	-	ND	ND	-	-	7.5	-	3.8	4.1	-	-	1.2	-	-	-	ND	-	-	ND	3.8	ND	ND	ND	21	17	-	-	-	-	-	-	-
	6-7	6-7-1.0	05/15/2017	1.0	-	-	-	-	-	-	ND	-	ND	-	-	55	-	-	ND	ND	-	-	7.5	-	5.3	6.1	-	-	3	-	-	-	ND	-	-	ND	5.4	ND	ND	ND	22	26	-	-	-	-	-	-	-
		6-7-3.0	05/15/2017	3.0	-	-	-	-	-	-	ND	-	ND	-	-	25	-	-	ND	ND	-	-	3.7	-	2.7	3.2	-	-	2	-	-	-	0.12	-	-	ND	2.3	ND	ND	ND	12	14	-	-	-	-	-	-	-
		6-7-5.0	05/15/2017	5.0	-	-	-	-	-	-	ND	-	ND	-	-	24	-	-	ND	ND	-	-	4.3	-	2.3	3.6	-	-	7.5	-	-	-	ND	-	-	ND	2.8	ND	ND	ND	12	29	-	-	-	-	-	-	-
		6-7-7.5	05/15/2017	7.5	-	-	-	-	-	-	ND	-	ND	-	-	62	-	-	ND	ND	-	-	8.6	-	6	7.1	-	-	4.3	-	-	-	ND	-	-	ND	5.6	ND	ND	ND	25	33	-	-	-	-	-	-	-
	6-8	6-8-1.0	05/15/2017	1.0	-	-	-	-	-	-	ND	-	5	-	-	100	-	-	ND	ND	-	-	7.5	-	4.5	97	-	-	140	3.6	-	0.28	0.1	-	-	ND	6.1	ND	ND	ND	21	210	-	-	-	-	-	-	-
		6-8-3.0	05/15/2017	3.0	-	-	-	-	-	-	ND	-	ND	-	-	25	-	-	ND	ND	-	-	3.9	-	2.7	3	-	-	1	-	-	-	ND	-	-	ND	2.4	ND	ND	ND	15	13	-	-	-	-	-	-	-
		6-8-5.0	05/15/2017	5.0	-	-	-	-	-	-	ND	-	ND	-	-	47	-	-	ND	ND	-	-	6.3	-	4.8	4.3	-	-	1.4	-	-	-	ND	-	-	ND	4	ND	ND	ND	23	21	-	-	-	-	-	-	-
		6-8-7.5	05/15/2017	7.5	-	-	-	-	-	-	ND	-	ND	-	-	17	-	-	ND	ND	-	-	1.7	-	1.8	ND	-	-	ND	-	-	-	4.6	ND	ND	ND	1.3	ND	ND	ND	7.2	10	-	-	-	-	-	-	-
	6-9	6-9-1.0	05/15/2017	1.0	-	-	-	-	ND	-	ND	-	ND	-	-	79	-	-	ND	ND	-	-	10	-	6.4	17	-	-	33	-	-	-	0.19	-	-	ND	9.1	ND	ND	ND	32	61	-	-	-	-	-	-	-
		6-9-3.0	05/15/2017	3.0	-	-	-	-	7.6 (TCE)	-	47	ND	9.4	-	-	110	-	-	ND	1.1	-	-	10	-	4.6	390	31	-	3100	32	-	6.5	1.4	-	-	ND	12	ND	1.7	ND	18	510	-	-	-	-	-	-	-
		6-9-5.0	05/15/2017	5.0	-	-	-	-	-	-	ND	-	ND	-	-	81	-	-	ND	ND	-	-	8.1	-	5.5	41	-	-	41	-	-	-	0.2	-	-	ND	8.7	ND	ND	ND	23	56	-	-	-	-	-	-	-
		6-9-7.5	05/15/2017	7.5	-	-	-	-	-	-	ND	-	ND	-	-	78	-	-	ND	ND	-	-	9.9	-	7.7	8.8	-	-	3.4	-	-	-	0.2	-	-	ND	7	ND	ND	ND	29	36	-	-	-	-	-	-	-
	6-10	6-10-1.0	05/15/2017	1.0	-	-	-	-	7.1 (TCE)	-	ND	-	ND	-	-	110	-	-	ND	ND	-	-	11	-	6.8	24	-	-	99	14	-	ND	0.29	-	-	ND	7.5	ND	ND	ND	27	92	-	-	-	-	-	-	-
		6-10-3.0	05/15/2017	3.0	-	-	-	-	7.2 (TCE)	-	5.5	-	6.5	-	-	380	-	-	ND	1.8	ND	ND	15	-	3.2	160	-	-	800	360	-	410	0.19	-	-	ND	9.4	ND	ND	ND	14	2100	-	-	-	-	-	-	-
		6-10-5.0	05/15/2017	5.0	-	-	-	-	-	-	ND	-	8.6	-	-	57	-	-	ND	ND	-	-	9	-	3.5	37	-	-	13	-	-	-	ND	-	-	ND	5	ND	ND	ND	17	31	-	-	-	-	-	-	-
		6-10-7.5	05/15/2017	7.5	-	-	-	-	-	-	ND	-	ND	-	-	38	-	-	ND	ND	-	-	4.8	-	3.6	3.2	-	-	1.2	-	-	-	ND	-	-	ND	3.2	ND	ND	ND	16	17	-	-	-	-	-	-	-
	16-5	16-5 @ 1'	02/12/2016	1.0	ND	18	-	-	ND	ND	ND	-	2	-	-	56	-	-	ND	ND	-	-	6.6	-	3.5	8.4	-	-	19	-	-	-	ND	-	-	ND	4.7	ND	ND	ND	20	40	-	-	-	-	-	-	ND
		16-5 @ 3'	02/12/2016	3.0	-	-	-	-	ND	-	ND	-	2.1	-	-	55	-	-	ND	ND	-	-	7.1	-	3.5	9.4	-	-	19	-	-	-	0.15	-	-	ND	5.1	ND	ND	ND	21	39	-	-	-	-	-	-	-
		16-5 @ 4'	02/12/2016	4.0	-	-	-	-	ND	-	ND	-	2.3	-	-	59	-	-	ND	ND	-	-	8.4	-	3.7	8.8	-	-	21	-	-	-	ND	-	-	ND	5.6	ND	ND	ND	23	42	-	-	-	-	-	-	-
	16-6	16-6 @ 1'	02/1/2016	1.0	-	-	-	-	-	-	ND	-	2.4	-	-	55	-	-	ND	ND	-	-	6.3	-	3.5	.8	-	-	11	-	-	-	0.1	-	-	ND	4.8	ND	ND	ND	21	36	-	-	-	-	-	-	-
		16-6 @ 3'	02/1/2016	3.0	-	-	-	-	-	-	-	-	-	-	-	-	-	-	-	-	-	-	-	-	-	-	-	-	-	-	-	-	-	-	-	-	-	-	-	-	-	-	-	-	-	-	-	-	-

Table 10. Comparison of Unrestricted Land Use and Commercial/Industrial Screening Results - Soil Samples (Cont'd)

PARC AREA	Boring ID	Sample ID	Sample Collection Date	Sample Depth (ft below grade)	Total Petroleum Hydrocarbons (EPA 8015B (M))				VOCs (EPA 8260B) (µg/kg)	SVOCs (EPA 8270C) (µg/kg)	Title 22 Metals (EPA 6010B/7471A)																														pH	Polychlorinated Biphenyls (EPA 8082) µg/kg	Organochlorine Pesticides (EPA 8081) µg/kg	Organophosphorous Pesticides (EPA 8081) µg/kg	Chlorinated Herbicides (EPA 8151A) µg/kg
					TPH GRO mg/kg	TPH DRO mg/kg	TPH ORO mg/kg	TPH Total mg/kg			Antimony mg/kg	STLC Antimony mg/L	Arsenic mg/kg	STLC Arsenic mg/L	TCLP Arsenic mg/L	Barium mg/kg	STLC Barium mg/L	TCLP Barium mg/L	Beryllium mg/kg	Cadmium mg/kg	STLC Cadmium mg/L	TCLP Cadmium mg/L	Chromium mg/kg	Hexavalent Chromium mg/kg	Cobalt mg/kg	Copper mg/kg	STLC Copper mg/L	TCLP Copper mg/L	Lead mg/kg	STLC Lead (CA-WET) mg/L	STLC Lead (DI-WET) mg/L	TCLP Lead mg/L	Mercury mg/kg	STLC Mercury mg/L	TCLP Mercury mg/L	Molybdenum mg/kg	Nickel mg/kg	Selenium mg/kg	Silver mg/kg	Thallium mg/kg	Vanadium mg/kg	Zinc mg/kg	STLC Zinc mg/L	TCLP Zinc mg/L					
6	16-7	16-7 @ 1'	02/1/2016	1.0	-	-	-	-	-	-	ND	-	1.9	-	-	78	-	-	ND	ND	-	-	10	-	5.1	14	-	-	6.1	-	-	-	0.12	-	-	ND	8.2	ND	ND	ND	25	38	-	-	-	-	-	-
		16-7 @ 3'	02/1/2016	3.0	-	-	-	-	-	-	ND	-	1.6	-	-	55	-	-	ND	ND	-	-	6.8	-	4	7.3	-	-	4.3	-	-	-	ND	-	-	ND	5.2	ND	ND	ND	20	26	-	-	-	-	-	-
		16-7 @ 5'	02/1/2016	5.0	-	-	-	-	-	-	-	-	-	-	-	-	-	-	-	-	-	-	-	-	-	-	-	-	-	-	-	-	-	-	-	-	-	-	-	-	-	-	-	-	-	-	-	-
	L-5	L-5 @ 1'	02/1/2016	1.0	-	-	-	-	-	-	ND	-	1.8	-	-	46	-	-	ND	ND	-	-	5.5	-	3.2	8.4	-	-	25	-	-	-	ND	-	-	ND	4.2	ND	ND	ND	17	32	-	-	-	-	-	-
		L-5 @ 3'	02/1/2016	3.0	-	-	-	-	-	-	-	-	-	-	-	-	-	-	-	-	-	-	-	-	-	-	-	-	-	-	-	-	-	-	-	-	-	-	-	-	-	-	-	-	-	-	-	-
		L-5 @ 4.5'	02/1/2016	4.5	-	-	-	-	-	-	-	-	-	-	-	-	-	-	-	-	-	-	-	-	-	-	-	-	-	-	-	-	-	-	-	-	-	-	-	-	-	-	-	-	-	-	-	-
	L-5	L-5 @ 1'	02/26/2016	1.0	ND	ND	-	-	ND	ND	-	-	-	-	-	-	-	-	-	-	-	-	-	-	-	-	-	-	-	-	-	-	-	-	-	-	-	-	-	-	-	-	-	-	ND	ND	-	-
		L-5 @ 2'	02/26/2016	2.0	ND	ND	-	-	ND	930 (Phenol)	ND	-	ND	-	-	46	-	-	ND	ND	-	-	5.6	-	3.2	6.9	-	-	2.7	-	-	-	ND	-	-	ND	3.9	ND	ND	ND	18	23	-	-	+	ND	ND	-
		L-5 @ 3'	02/26/2016	3.0	-	-	-	-	-	-	ND	-	ND	-	-	30	-	-	ND	ND	-	-	3.9	-	2.2	2.8	-	-	ND	-	-	-	ND	-	-	ND	2.5	ND	ND	ND	14	14	-	-	-	-	-	-
	L-6	L-6 @ 1'	02/1/2016	1.0	-	-	-	-	-	-	ND	-	10	-	-	130	-	-	ND	ND	-	-	15	-	5.1	64	-	-	200	11	-	-	0.15	-	-	ND	12	ND	ND	ND	26	310	-	-	-	-	-	-
		L-6 @ 3'	02/1/2016	3.0	-	-	-	-	-	-	-	-	-	-	-	-	-	-	-	-	-	-	-	-	-	-	-	-	-	-	-	-	-	-	-	-	-	-	-	-	-	-	-	-	-	-	-	-
		L-6 @ 5'	02/1/2016	5.0	-	-	-	-	-	-	-	-	-	-	-	-	-	-	-	-	-	-	-	-	-	-	-	-	-	-	-	-	-	-	-	-	-	-	-	-	-	-	-	-	-	-	-	-
	L-6	L-6 @ 1'	02/26/2016	1.0	ND	6600	-	-	ND	ND	-	-	-	-	-	-	-	-	-	-	-	-	-	-	-	-	-	-	-	-	-	-	-	-	-	-	-	-	-	-	-	-	-	240 (Arochlor 1260)	ND	-	-
		L-6 @ 2'	02/26/2016	2.0	ND	ND	-	-	ND	460 (Phenol)	ND	-	26	-	-	93	-	-	ND	ND	-	-	10	-	6	10	-	-	5.8	-	-	-	ND	-	-	ND	7.4	ND	ND	ND	28	53	-	-	-	ND	ND	-
		L-6 @ 3'	02/26/2016	3.0	-	-	-	-	-	-	ND	-	17	-	-	48	-	-	ND	ND	-	-	5.5	-	3.3	5	-	-	2.4	-	-	-	ND	-	-	ND	3.8	ND	ND	ND	17	24	-	-	-	-	-	-
	18.1-GP-1	GP-1 @ 1'	04/1/2016	1.0	-	-	-	-	-	-	ND	-	1.9	-	-	73	-	-	ND	ND	0.053	-	11	-	4.5	19	ND	0.053	53	6.1	-	0.81	0.55	-	-	ND	12	ND	ND	ND	19	85	-	-	-	-	-	-
		GP-1 @ 2'	04/1/2016	2.0	-	-	480	480	-	-	ND	-	2.4	-	-	160	-	-	ND	1.6	-	-	10	-	4.3	23	ND	ND	74	3.6	-	0.17	0.75	-	-	ND	8.9	ND	ND	ND	22	230	-	-	-	-	-	-
		GP-1 @ 3.5'	04/1/2016	3.5	-	-	-	-	-	-	ND	-	1.8	-	-	70	-	-	ND	ND	-	-	8	-	3.8	15	ND	ND	34	ND	-	ND	0.12	-	-	ND	7.6	ND	ND	ND	22	62	-	-	-	-	-	-
		GP-1 @ 5'	04/1/2016	5.0	-	-	-	-	-	-	ND	-	1	-	-	41	-	-	ND	ND	-	-	5.5	-	3	4.7	ND	ND	1.6	ND	-	ND	ND	-	-	ND	3.9	ND	ND	ND	18	20	-	-	-	-	-	-
		GP-1 @ 6.5'	04/1/2016	6.5	-	-	29	29	-	-	7.3	-	2.2	-	-	100	-	-	ND	ND	-	-	8.8	-	3.5	44	1.7	ND	170	15	-	0.35	1.1	-	-	ND	15	ND	ND	ND	19	290	-	-	-	-	-	-
	18.1-GP-2	GP-2 @ 1'	04/1/2016	1.0	-	-	-	-	-	-	ND	-	1.9	-	-	69	-	-	ND	ND	-	-	6.8	-	3.4	12	ND	ND	44	3.4	-	ND	1.3	-	-	ND	5.5	ND	ND	ND	19	100	-	-	-	-	-	-
		GP-2 @ 2'	04/1/2016	2.0	-	-	-	-	-	-	ND	-	ND	-	-	2100	-	-	ND	ND	-	-	38	-	ND	1400	98	7.4	8300	950	-	98	0.67	-	-	ND	47	ND	ND	ND	29	8300	-	-	-	-	-	-
		GP-2 @ 3.5'	04/1/2016	3.5	-	-	-	-	-	-	ND	-	2	-	-	65	-	-	ND	ND	-	-	8.3	-	3.8	23	1.1	4.3	71	2.8	-	16	0.35	-	-	ND	7.6	ND	ND	ND	21	70	-	-	-	-	-	-
		GP-2 @ 5'	04/1/2016	5.0	-	-	-	-	-	-	ND	-	ND	-	-	49	-	-	ND	ND	-	-	6.2	-	3.6	7.1	ND	ND	1.5	ND	-	ND	ND	-	-	ND	4.2	ND	ND	ND	22	24	-	-	-	-	-	-
	18.1-GP-3	GP-3 @ 1'	04/1/2016	1.0	-	-	-	-	-	-	40	-	17	-	-	350	-	-	ND	ND	-	-	24	-	6.1	370	26	0.27	1600	88	-	3.8	98	-	-	ND	19	ND	ND	ND	31	1500	-	-	-	-	-	-
		GP-3 @ 2'	04/1/2016	2.0	-	24	1000	1000	-	-	ND	-	3.3	-	-	67	-	-	ND	ND	-	-	6.4	-	3.4	18	ND	ND	62	2.3	-	ND	0.11	-	-	ND	6.1	ND	ND	ND	19	92	-	-	-	-	-	-
		GP-3 @ 3.5'	04/1/2016	3.5	-	-	-	-	-	-	ND	-	1.2	-	-	42	-	-	ND	ND	-	-	5.8	-	3.1	5.4	ND	ND	1.4	ND	-	ND	ND	-	-	ND	3.7	ND	ND	ND	20	20	-	-	-	-	-	-
		GP-3 @ 5'	04/1/2016	5.0	-	-	-	-	-	-	ND	-	ND	-	-	44	-	-	ND	ND	-	-	4.6	-	2.8	4.4	ND	ND	1.5	ND	-	ND	ND	-	-	ND	3.2	ND	ND	ND	16	19	-	-	-	-	-	-
	18.1-1	18.1-1	10/22/2015	1.0	10	10	162	230	<various	-	<0.758	-	2	-	-	97.5	-	-	<0.253	1.78	-	-	10.4	-	6.34	23.8	-	-	61.1	3.77	-	-	0.182	-	-	0.779	13.8	<0.758	<0.253	<0.758	20.1	112	-	-	-	-	-	-
		18.1-1-3.5	10/22/2015	3.5	5	5.8	43	54	<various	-	<0.769	-	<0.769	-	-	63.9	-	-	<0.256	0.96	-	-	6.81	-	6.29	7.99	-	-	4.67	-	-	-	<0.0862	-	-	<0.256	6.1	<0.769	<0.256	<0.769	18.6	35.1	-	-	-	-	-	-
	18.1-2	18.1-2-1	10/22/2015	1.0	5	5	9.6	19	<various	-	<0.725	-	<0.725	-	-	146	-	-	<0.242	1.12	-	-	7.66	-	4.46	12.2	-	-	25.4	-	-	-	0.108	-	-	0.361	8.56	0.87	<0.242	<0.725	17.2	60.7	-	-	-	-	-	-
		18.1-2-2.0	10/22/2015	2.0	25	25	96	130	<various	-	<0.739	-	0.817	-	-	134	-	-	<0.246	1.44	-	-	11.5	-	5.8	95	-	-	293	35.1	-	3.59	0.18	-	-	0.356	47.9	<0.739	<0.246	<0.739	19.2	288	-	-	-	-	-	-
	18.1-3	18.1-3-1	10/22/2015	1.0	5	5	5	5	<various	-	<0.765	-	<0.765	-	-	72.6	-	-	0.286	1.39	-	-	9.72	-	8.66	12	-	-	3.47	-	-	-	0.103	-	-	0.341	21.6	<0.765	<0.255	<0.765	21.2	39.7	-	-	-	-	-	-
		18.1-3-3.5	10/22/2015	3.5	9.8	9.8	94	140	<various	-	<0.758	-	1.69	-	-	202	-	-	0.277	2.81	-	-	14.5	-	7.42	64.4	-	-	554	18.4	-	<0.100	0.862	-	-	0.256	19.3	<0.758	0.297	<0.758	26.6	545	-	-	-	-	-	-
	18.1-4	18.1-4-1	10/22/2015	1.0	5	5	36	59	<various	-	<0.725	-	8.51	-	-	443	-	-	<0.242	3.99	-	-	27.7	-	10.1	312	38.7	-	1010	102	-	4.06	1.24	-	-	<0.242	39.6	<0.725	0.258	<0.725	41.5	1400	-	-	-	-	-	-
		18.1-4-3.5	12/9/2015	3.5	5	5	5	5	<various	-	<0.750	-	3.59	-	-	72.9	-	-	<0.250	0.785	-	-	7.89	-	6.8	13.4	-	-	17.2	-	-	-	<0.0794	-	-	<0.250	7.04	0.961	<0.250	<0.750	22.4	68.6	-	-	-	-	-	-
	18.1-4A	18.1-4A-1	12/9/2015	1.0	5	5	77	170	<various	-	452	-	9.97	-	-	486	-	-	0.269	5.44	-	-	21.7	-	7.94	531	-	-	13900	-	-	8.39	0.468	-	-	<0.240	21.7	1.16	12.7	<0.721	30.6	2140	-	-	-	-	-	-
		18.1-4A-3.5	12/9/2015	3.5	5	5	100	220	<various	-	<0.739	-	4.58	-	-	99.3	-	-	<0.246	0.906	-	-	9.87	-	8.52	17.9	-	-	29.5	-	-	-	<0.0833	-	-	<0.246	9.27	2.08	<0.246	<0.739	27.1	68.8	-	-	-	-	-	-
	18.1-4B	18.1-4B-1	12/9/2015	1.0	5	5	8.4	20	<various	-	5.11	-	14	-	-	444	-	-	0.28	2.74	-	-	24.8	-	9.07	475	-	-	1690	-	-	21.3	0.341	-	-	<0.250	18.4	1.2	0.71	<0.750	30.9	1500	-	-	-	-	-	-
		18.1-4B-3.5	12/9/2015	3.5	5	5	5	5	<various	-	<0.750	-	2.99	-	-	64.8	-	-	<0.250	0.679	-	-	7.05	-	5.98	6.01	-	-	2.85	-	-	-	<0.0794	-	-	<0.250	5.87	1.68	<0.250	<0.750	22.2	36.6	-	-	-	-	-	-
	18.1-4C	18.1-4C-1	12/9/2015	1.0	5	5	21	47	<various	-	9.45	-	12.6	-	-	727	-	-	0.283	3.16	-	-	35.2	-	8.61	552	-	-	1930	-	-	4	0.439	-	-	<0.246	18	1.66	0.547	<0.739	26.9	1990	-	-	-	-	-	-
		18.1-4C-3.5	12/9/2015	3.5	5	5	5	5	<various	-	<0.750	-	3.55	-	-	70.9	-	-	<0.250	0.764	-	-	7.34	-	6.52	6.66	-	-	8.8	-	-	-	<0.0794	-	-	<0.250	6.65	10.3	<0.250	<0.750	22.2	56.3	-	-	-	-	-	-
	18.1-4D	18.1-4D-1	12/9/2015	1.0	5	5	52	91	<various	-	<0.725	-	10.7	-	-	474	-	-	0.315	2.89	-	-	30.6	-	8.72	308	-	-	1170	-	-	5.3	0.456	-	-	<0.242	25.2	1.4	0.434	<0.725	30.4	1550	-	-	-	-	-	-
		18.1-4D-3.5	12/9/2015	3.5	5	5	150	250	<various	-	3.49	-	10.6	-	-	463	-	-	0.296	3.15	-	-	27.9	-	8.73	535	-	-	2560	-	-	6.34	0.768	-	-	0.311	38.8	0.847	0.639	<0.750	37.7	1820	-	-	-	-	-	-
	18.1-5	18.1-5-1	12/9/2015	1.0	5	5	39	88	<various	-	9.35	-	7.35	-	-	451	-	-	0.408	4.95	-	-	26.1	-	11.6	452	-	-	2050	-	-	6.8	0.374	-	-	1.02	37.4	<0.750	0.622	<0.750	34.7	1310	-	-	-	-	-	-
		18.1-5-3.5	12/9/2015	3.5	5	5	369	1000	<various	-	7.5	-	2.32	-	-	208	-	-	0.277	2.31	-	-	12.3	-	7.09	232	-	-	1020	-	-	4.9	0.254	-	-	0.378	16.8	<0.750	0.472	<0.750	24.9	628	-	-	-	-	-	-
	18.1-6	18.1-6-1	12/9/2015	1.0	5	5	5.7	19	<various	-	2.68	-	0.798	-	-	153	-	-	<0.250	1.45	-	-	8.5	-	5.12	86.4	-	-	334	65.8	-	3.08	0.12	-	-	<0.250	7.49	<0.750	<0.250	<0.750	18.1	423	-	-	-	-	-	-
		18.1-6-3.5	12/9/2015	3.5	5	5	51	140	<various	-	22.8	-	2.45	-	-	196	-	-	0.261	2.49	-	-	12.4	-	7.74	311	-	-	1510	-	-	205	0.24	-	-	<0.250	11.7	<0.750	0.397	<0.750	26.6	597	-	-	-	-	-	-
	18.1-7	18.1-7-1	12/9/2015	1.0	5	5	63	150	<various	-	4.3	-	5.03	-	-	217	-	-	0.376	2.7	-	-	15	-	8.95	110	-	-	505	56.6	-	3.77	0.298	-	-	0.49	17.2	<0.750	0.335	<0.750	31.7	823	-	-	-	-	-	-
		18.1-7-3.5	12/9/2015	3.5	5	5	149	510	<various	-	1.88	-	1.46	-	-	121	-	-	0.264	1.67	-	-	10.5	-	7.45	53.1	-	-	122	15.3	-	5.79	0.115	-	-	<0.250	10.9	<0.750	<0.250	<0.750	27.5	178	-	-	-	-	-	-
	18.2-1	18.2-1-1	04/20/2016	1.0	5	5	5.6	11	11,000 (TCE)	-	<0.765	-	15.6	-	-	163	-	-	0.338	14.2	0.104	-	45.2	-	13	132	-	-	468	9.6	-	0.243	0.125	-	-	<0.255	22.8	<0.765	<0.255	<0.765	34.4	4910	53	-	-	-	-	-
		18.2-1-3.5	04/20/2016	3.5	5	5	5	5	<various	-	<0.781	-	<0.781	-	-	45.6	-	-	<0.260	<0.521	-	-	4.23	-	3.93	4.6	-	-	1.93	-	-	-	<0.0833	-	-	<0.260	3.69	<0.781	<0.260	<0.781	13.1	21.6	-	-	-	-	-	-
	18.2-2	18.2-2-1	04/20/2016	1.0	5	5	34	39	<various	-	3.44	-	2.25	-	-	112	-	-	0.313	0.519	-	-	12.2	-	9.72	43.1	-	-	86.2	12	-	-	0.168	-	-	<0.255	10.4	<0.765	<0.255	<0.765	32	17	-	-	-	-	-	-
		18.2-2-3.5	04/20/2016	3.5	5	5	160	300	67 (TCE)	-	93.1	-	17.1	-	-	1450	-	-	0.291	8.07	-	-	44.7	-	9.36	2770	23.6	-	16100	-	-	-	0.972	-	-	<0.254	32.7	<0.761	2.72	<0.761	28.5	8730	-	<0.100	-	-	-	-
	18.2-3	18.2-3-1	04/20/2016	1.0	5	5	22	50	8.0 (TCE)	-	2.42	-	2.05	-	-	152	-	-	0.344	0.889	-	-	13.8	-	8.58	107	-	-	433	54.5	-	0.958	0.284	-	-	<0.262	10.7	<0.785	<0.262	<0.785	30.9	299	-	-	-	-	-	-
		18.2-3-3.5	04/20/2016	3.5	5	5	47	68	53 (TCE)	-	5.11	-	4.75	-	-	207	-	-	0.28	2.84	-	-	13.1	-	7.46	828	-	-	1310	-	-	12.2	0.829	-	-	0.258	14	<0.739	0.829	<0.739	26.5	1260	-	-	-	-	-	-
	A-13-08	A08@5'	08/27/2013	5.0	300	5	ND	300	ND	-	ND	-	2.1	-	-	91	-	-	ND	ND	-	-	17	-	4.2	15	-	-	26	-	-	-	0.062	-	-	ND	7.5	ND	ND	ND	18	47	-	-	-	-	-	-
		A08@40'	08/27/2013	40.0	ND	ND	ND	ND	ND	-	ND	-	0.56	-	-	24	-	-	ND	ND	-	-	ND	-	ND	4.5	-	-	ND	-	-	-	0.046	-	-	ND	ND	ND	ND	ND	ND	13	-	-	-	-	-	-
		A08@55'	08/27/2013	55.0	ND	ND	ND	ND	ND	-	-	-	-	-	-	-	-	-	-	-	-	-	-	-	-	-	-	-	-	-	-	-	-	-	-	-	-	-	-	-	-	-	-	-	-	-	-	-
		A08@65'	08/27/2013	65.0	ND	ND	ND	ND	ND	-	ND	-	ND	-	-	14	-	-	ND	ND	-	-	5.6	-	ND	ND	-	-	ND	-	-	-	ND	-	-	ND	3.3	ND	ND	ND	ND	7.6	-	-	-	-	-	-
	R-13-09	R09@10'	08/27/2013	10.0	ND	ND	ND	ND	ND	-	ND	-	1.1	-	-	28	-	-	ND	ND	-	-	5.1	-	ND	5.2	-	-	ND	-	-	-	0.06	-	-	ND	3.3	ND	ND	ND	13	16	-	-	-	-	-	-
		R09@50'	08/27/2013	50.0	ND	ND	ND	ND	ND	-	-	-	-	-	-	-	-	-	-	-	-	-	-	-	-	-	-	-	-	-	-	-	-	-	-	-	-	-	-	-	-	-	-	-	-	-	-	-
		R09@60'	08/27/2013	60.0	ND	ND	ND	ND	ND	-	-	-	-	-	-	-	-	-	-	-	-	-	-	-	-	-	-	-	-	-	-	-	-	-	-	-	-	-	-	-	-	-	-	-	-	-	-	-
	A-13-10	R10@5'	08/29/2013	5.0	ND	ND	ND	ND	ND	-	ND	-	ND	-	-	52	-	-	ND	ND	-	-	5.8	-	4.2	5.6	-	-	ND	-	-	-	0.07	-	-	ND	4.2	ND	ND	ND	20	27	-	-	-	-	-	-
		R10@30'	08/29/2013	30.0	ND	ND	ND	ND	ND	-	-	-	-	-	-	-	-	-	-	-	-	-	-	-	-	-	-	-	-	-	-	-	-	-	-	-	-	-	-	-	-	-	-	-	-	-	-	-
		R10@55'	08/29/2013	55.0	ND	ND	ND	ND	ND	-	ND	-	0.96	-	-	46	-	-	ND	ND	-	-	9	-	4.4	12	-	-	ND	-	-	-	0.024	-	-	ND	7.6	ND	ND	ND	17	31	-	-	-	-	-	-
	A-13-12	R12@5'	09/3/2013	5.0	ND	ND	ND	ND	ND	-	ND	-	ND	-	-	39	-	-	ND	ND	-	-	7.9	-	3.4	34	-	-	480	25	-	7.5	0.12	-	-	ND	4.7	ND	ND	ND	19	42	-	-	-	-	-	-
		R12@10'	09/3/2013	10.0	-	-	-	-	-	-	-	-	-	-	-	-	-	-	-	-	-	-	-	-	-	-	-	-	15	-	-	-	-	-	-	-	-	-	-	-	-	-	-	-	-	-	-	-	-
		R12@15'	09/3/2013	15.0	-	-	-	-	-	-	-	-	-	-	-	-	-	-	-	-	-	-	-	-	-	-	-	-	ND	-	-	-	-	-	-	-	-	-	-	-	-	-	-	-	-	-	-	-	-
		R12@20'	09/3/2013	20.0	-	-	-	-	-	-	-	-	-	-	-	-	-	-	-	-	-	-	-	-	-	-	-	-	ND	-	-	-	-	-	-	-	-	-	-	-	-	-	-	-	-	-	-	-	-
		R12@30'	09/3/2013	30.0	ND	ND	ND	ND	ND	-	-	-	-	-	-	-	-	-	-	-	-	-	-	-	-	-	-	-	-	-	-	-	-	-	-	-	-	-	-	-	-	-	-	-	-	-	-	-	-	-
		R12@60'	09/3/2013	60.0	ND	ND	ND	ND	ND	-	ND	-	3.4	-	-	110	-	-	ND	2.4	-	-	30	-	11	24	-	-	54	-	-	-	0.054	-	-	ND	19	ND	ND	ND	54	69	-	-	-	-	-	-
7	7-1	7-1-0.5	05/16/2017	0.5	ND	62	-	-	ND	ND	ND	-	2.7	-	-	110	-	-	ND	ND	-	-	14	-	6.8	4500	12	-	45	-	-	-	0.13	-	-	ND	12	ND	ND	ND	30	100	-	-	-	-	-	-
		7-1-1.0	05/16/2017	1.0	ND	120	-	-	ND	ND	ND	-	1.2	-	-	120	-	-	ND	ND	-	-	8.8	-	4.8	700	140	-	69	6.4	-	0.47	0.22	-	-	ND	13	ND	ND	ND	24	270	-	-	-	ND	3.4 (4,4'-DDD [2C]) 5.9 (4,4'-DDE [2C]) 6.1 (4,4'-DDT [2C]) 2.5 (alpha-BHC [2C])	-	ND
	7-2	7-2-0.5	05/15/2017	0.5	ND	ND	-	-	ND	ND	ND	-	ND	-	-	93	-	-	ND	ND	-	-	6.1	-	4.3	8.3	-	-	27	-	-	-	0.18	-	-	ND	4.3	ND	ND	ND	19	57	-	-	-	ND	ND	-	ND
		7-2-1.0	05/15/2017	1.0	-	-	-	-	-	-	ND	-	ND	-	-	35	-	-	ND	ND	-	-	4.5	-	3.9	3.1	-	-	1.1	-	-	-	ND	-	-	ND	3.2	ND	ND	ND	15	17	-	-	-	-	-	-
		7-2-3.0	05/15/2017	3.0	ND	ND	-	-	ND	ND	ND	-	ND	-	-	23	-	-	ND	ND	-	-	2.9	-	2.5	2.1	-	-	ND	-	-	-	0.19	-	-	ND	2.1	ND	ND	ND	11	13	-	-	-	-	-	-
		7-2-5.0	05/15/2017	5.0	-	-	-	-	-	-	ND	-	ND	-	-	24	-	-	ND	ND	-	-	2.7	-	2.2	ND	-	-	ND	-	-	-	ND	-	-	ND	1.9	ND	ND	ND	10	11	-	-	-	-	-	-
	7-3	7-3-0.5	05/15/2017	0.5	-	-	-	-	-	-	ND	-	2.5	-	-	110	-	-	ND	ND	-	-	13	-	7.8	39	-	-	51	4.5	-	-	0.17	-	-	ND	11	ND	ND	ND	28	93	-	-	-	-	-	-
		7-3-1.0	05/15/2017	1.0	ND	ND	-	-	ND	ND	ND	-	1.1	-	-	77	-	-	ND	ND	-	-	8.3	-	6.1	11	-	-	33	-	-	-	0.11	-	-	ND	5.9	ND	ND	ND	26	44	-	-	-	ND	ND	-	ND
		7-3-3.0	05/15/2017	3.0	-	-	-	-	-	-	ND	-	ND	-	-	61	-	-	ND	ND	-	-	7.1	-	5.3	6.8	-	-	7	-	-	-	ND	-	-	ND	4.8	ND	ND	ND	23	32	-	-	-	-	-	-
		7-3-5.0	05/15/2017	5.0	ND	ND	-	-	ND	ND	ND	-	ND	-	-	34	-	-	ND	ND	-	-	4.6	-	3.3	3.1	-	-	ND	-	-	-	ND	-	-	ND	2.9	ND	ND	ND	18	15	-	-	-	-	-	-
	7-4	7-4-0.5	05/15/2017	0.5	ND	26	-	-	ND	ND	ND	-	1.1	-	-	130	-	-	ND	ND	-	-	12	-	8.2	36	-	-	70	5.5	-	ND	0.11	-	-	ND	9.3	1.2	ND	ND	32	150	-	-	-	ND	ND	-	ND
		7-4-1.0	05/15/2017	1.0	-	-	-	-	-	-	ND	-	ND	-	-	100	-	-	ND	ND	-	-	9.8	-	6.2	44	-	-	43	-	-	-	0.12	-	-	ND	9.5	1.1	ND	ND	26	130	-	-	-	-	-	-
		7-4-3.0	05/15/2017	3.0	ND	6300	-	-	ND	ND	ND	-	ND	-	-	92	-	-	ND	ND	-	-	11	-	7.6	13	-	-	31	-	-	-	0.64	-	-	ND	8.4	ND	ND	ND	29	80	-	-	-	-	-	-
		7-4-5.0	05/15/2017	5.0	-	-	-	-	-	-	ND	-	2.3	-	-	150	-	-	ND	ND	-	-	13	-	4.6	35	-	-	12	-	-	-	ND	-	-	ND	22	ND	ND	ND	23	890	-	-	-	-	-	-
	7-5	7-5-0.5	05/16/2017	0.5	-	-	-	-	-	-	-	-	ND	-	-	95	-	-	ND	ND	-	-	12	-	8	9.7	-	-	4.5	-	-	-	ND	-	-	ND	8.3	ND	ND	ND	32	39	-	-	-	-	-	-
		7-5-1.0	05/16/2017	1.0	ND	ND	-	-	ND	ND	ND	-	ND	-	-	95	-	-	ND	ND	-	-	12	-	8.2	10	-	-	3	-	-	-	ND	-	-	ND	8.6	1	ND	ND	34	38	-	-	-	ND	ND	-	ND
		7-5-3.0	05/16/2017	3.0	-	-	-	-	-	-	-	-	ND	-	-	120	-	-	ND	ND	-	-	14	-	9.9	18	-	-	3.5	-	-	-	ND	-	-	ND	12	1.1	ND	ND	38	46	-	-	-	-	-	-
		7-5-5.0	05/16/2017	5.0	ND	ND	-	-	ND	ND	ND	-	ND	-	-	31	-	-	ND	ND	-	-	6.7	-	3.6	2.7	-	-	1	-	-	-	ND	-	-	ND	3	ND	ND	ND	28	16	-	-	-	-	-	-

Table 10. Comparison of Unrestricted Land Use and Commercial/Industrial Screening Results - Soil Samples (Cont'd)

PARC AREA	Boring ID	Sample ID	Sample Collection Date	Sample Depth (ft below grade)	Total Petroleum Hydrocarbons (EPA 8015B (M))				VOCs (EPA 8260B) (µg/kg)	SVOCs (EPA 8270C) (µg/kg)	Title 22 Metals (EPA 6010B/7471A)																														pH	Polychlorinated Biphenyls (EPA 8082) µg/kg	Organochlorine Pesticides (EPA 8081) µg/kg	Organophosphorous Pesticides (EPA 8081) µg/kg	Chlorinated Herbicides (EPA 8151A) µg/kg
					TPH GRO mg/kg	TPH DRO mg/kg	TPH ORO mg/kg	TPH Total mg/kg			Antimony mg/kg	STLC Antimony mg/L	Arsenic mg/kg	STLC Arsenic mg/L	TCLP Arsenic mg/L	Barium mg/kg	STLC Barium mg/L	TCLP Barium mg/L	Beryllium mg/kg	Cadmium mg/kg	STLC Cadmium mg/L	TCLP Cadmium mg/L	Chromium mg/kg	Hexavalent Chromium mg/kg	Cobalt mg/kg	Copper mg/kg	STLC Copper mg/L	TCLP Copper mg/L	Lead mg/kg	STLC Lead (CA-WET) mg/L	STLC Lead (DI-WET) mg/L	TCLP Lead mg/L	Mercury mg/kg	STLC Mercury mg/L	TCLP Mercury mg/L	Molybdenum mg/kg	Nickel mg/kg	Selenium mg/kg	Silver mg/kg	Thallium mg/kg	Vanadium mg/kg	Zinc mg/kg	STLC Zinc mg/L	TCLP Zinc mg/L					
7	7-6	7-6-0.5	05/16/2017	0.5	ND	200	-	-	ND	ND	ND	-	1.2	-	-	91	-	-	ND	ND	-	-	8.4	-	5.2	28	-	-	31	-	-	-	0.13	-	-	ND	7.3	ND	ND	ND	23	77	-	-	-	ND	ND	-	ND
		7-6-1.0	05/16/2017	1.0	-	-	-	-	-	-	ND	-	ND	-	-	93	-	-	ND	ND	-	-	8.7	-	5.7	28	-	-	22	-	-	-	0.16	-	-	ND	6.7	ND	ND	ND	24	60	-	-	-	-	-	-	-
		7-6-3.0	05/16/2017	3.0	-	-	-	-	-	-	ND	-	ND	-	-	78	-	-	ND	ND	-	-	8.2	-	5.2	12	-	-	13	-	-	-	ND	-	-	ND	6.1	ND	ND	ND	23	50	-	-	-	-	-	-	-
		7-6-5.0	05/16/2017	5.0	ND	ND	-	-	ND	ND	ND	-	ND	-	-	40	-	-	ND	ND	-	-	5	-	3.5	4.6	-	-	2.7	-	-	-	ND	-	-	ND	3.4	ND	ND	ND	16	19	-	-	-	-	-	-	-
	7-7	7-7-0.5	05/16/2017	0.5	-	-	-	-	-	-	ND	-	ND	-	-	110	-	-	ND	ND	-	-	14	-	9.3	13	-	-	3.7	-	-	-	ND	-	-	ND	10	ND	ND	ND	35	41	-	-	-	-	-	-	-
		7-7-1.0	05/16/2017	1.0	-	-	-	-	-	-	ND	-	ND	-	-	130	-	-	ND	ND	-	-	12	-	11	9.6	-	-	2.3	-	-	-	ND	-	-	ND	9.4	ND	ND	ND	37	47	-	-	-	ND	ND	-	ND
		7-7-3.0	05/16/2017	3.0	ND	ND	-	-	ND	ND	ND	-	ND	-	-	26	-	-	ND	ND	-	-	5	-	2.9	2.2	-	-	ND	-	-	-	ND	-	-	ND	2.4	ND	ND	ND	22	13	-	-	-	-	-	-	-
		7-7-5.0	05/16/2017	5.0	ND	470	-	-	ND	ND	ND	-	ND	-	-	17	-	-	ND	ND	-	-	3.2	-	2.1	ND	-	-	ND	-	-	-	ND	-	-	ND	1.8	ND	ND	ND	14	12	-	-	-	-	-	-	-
	L-2	L-2 @ 1'	02/1/2016	1.0	-	-	-	-	-	-	ND	-	1.8	-	-	97	-	-	ND	ND	-	-	8.7	-	4.7	11	-	-	6.4	-	-	-	ND	-	-	ND	6.5	ND	ND	ND	23	37	-	-	-	-	-	-	-
		L-2 @ 3'	02/1/2016	3.0	-	-	-	-	-	-	-	-	-	-	-	-	-	-	-	-	-	-	-	-	-	-	-	-	-	-	-	-	-	-	-	-	-	-	-	-	-	-	-	-	-	-	-	-	-	-
	L-3	L-3 @ 1'	02/1/2016	1.0	-	-	-	-	-	-	ND	-	1.6	-	-	68	-	-	ND	ND	-	-	6.4	-	3.9	21	-	-	22	-	-	-	0.1	-	-	ND	6.1	ND	ND	ND	18	81	-	-	-	-	-	-	-
		L-3 @ 3'	02/1/2016	3.0	-	-	-	-	-	-	-	-	-	-	-	-	-	-	-	-	-	-	-	-	-	-	-	-	-	-	-	-	-	-	-	-	-	-	-	-	-	-	-	-	-	-	-	-	-	-
		L-3 @ 5'	02/1/2016	5.0	-	-	-	-	-	-	-	-	-	-	-	-	-	-	-	-	-	-	-	-	-	-	-	-	-	-	-	-	-	-	-	-	-	-	-	-	-	-	-	-	-	-	-	-	-	-
	L-4	L-4 @ 1'	02/1/2016	1.0	-	-	-	-	-	-	ND	-	3.6	-	-	250	-	-	ND	1.5	-	-	11	-	5.3	84	-	-	98	6	-	-	0.27	-	-	ND	12	ND	ND	ND	25	290	-	-	-	-	-	-	-
		L-4 @ 3'	02/1/2016	3.0	-	-	-	-	-	-	ND	-	1.5	-	-	86	-	-	ND	ND	-	-	9	-	5.7	9.6	-	-	2	-	-	-	ND	-	-	ND	6.9	ND	ND	ND	27	38	-	-	-	-	-	-	-
		L-4 @ 5'	02/1/2016	5.0	-	-	-	-	-	-	-	-	-	-	-	-	-	-	-	-	-	-	-	-	-	-	-	-	-	-	-	-	-	-	-	-	-	-	-	-	-	-	-	-	-	-	-	-	-	-
	L-2	L-2 @ 1'	02/26/2016	1.0	ND	ND	-	-	ND	ND	-	-	-	-	-	-	-	-	-	-	-	-	-	-	-	-	-	-	-	-	-	-	-	-	-	-	-	-	-	-	-	-	-	-	-	-	-	-	-	-
		L-2 @ 2'	02/26/2016	2.0	-	-	-	-	-	-	ND	-	1	-	-	33	-	-	ND	ND	-	-	4.1	-	2.4	3.7	-	-	1.2	-	-	-	ND	-	-	ND	3.1	ND	ND	ND	12	16	-	-	-	-	-	-	-
		L-2 @ 3'	02/26/2016	3.0	-	-	-	-	-	-	ND	-	1.3	-	-	37	-	-	ND	ND	-	-	5.2	-	2.9	4.4	-	-	1.4	-	-	-	ND	-	-	ND	3.7	ND	ND	ND	17	20	-	-	-	-	-	-	-
	L-3	L-3 @ 1'	02/26/2016	1.0	ND	18	-	-	ND	ND	-	-	-	-	-	-	-	-	-	-	-	-	-	-	-	-	-	-	-	-	-	-	-	-	-	-	-	-	-	-	-	-	-	-	-	-	-	-	-	-
		L-3 @ 2'	02/26/2016	2.0	-	-	-	-	-	-	ND	-	1.6	-	-	88	-	-	ND	ND	-	-	9.8	-	6.3	9.5	-	-	2.3	-	-	-	ND	-	-	ND	7.2	ND	ND	ND	30	41	-	-	-	-	-	-	-
		L-3 @ 3'	02/26/2016	3.0	-	-	-	-	-	-	ND	-	1.7	-	-	89	-	-	ND	ND	-	-	10	-	6.6	9.8	-	-	2.4	-	-	-	ND	-	-	ND	7.4	ND	ND	ND	31	41	-	-	-	-	-	-	-
	L-4	L-4 @ 1'	02/26/2016	1.0	ND	20	-	-	ND	ND	-	-	-	-	-	-	-	-	-	-	-	-	-	-	-	-	-	-	-	-	-	-	-	-	-	-	-	-	-	-	-	-	-	-	-	-	-	-	-	-
		L-4 @ 2'	02/26/2016	2.0	-	-	-	-	-	-	ND	-	2.2	-	-	130	-	-	ND	ND	-	-	12	-	6.7	26	-	-	14	-	-	-	ND	-	-	ND	9.9	ND	ND	ND	31	96	-	-	-	-	-	-	-
		L-4 @ 3'	02/26/2016	3.0	-	-	-	-	-	-	ND	-	2.6	-	-	130	-	-	ND	ND	-	-	12	-	5.3	37	-	-	67	-	-	-	0.17	-	-	ND	11	ND	ND	ND	24	150	-	-	-	-	-	-	-
	20-1	20-1-1	04/20/2016	1.0	<5	<5	25	42	<various	-	<0.789	-	2.7	-	-	172	-	-	<0.263	1.33	-	-	24.8	-	6.72	73.9	-	-	240	13.4	-	0.5	1.22	-	-	1.02	9.96	<0.789	0.401	<.789	25.8	170	-	-	-	-	-	-	-
	A-13-14	A14@10'	09/5/2013	10.0	ND	ND	ND	ND	ND	-	ND	-	ND	-	-	46	-	-	ND	1.2	-	-	9.1	-	4.4	6.8	-	-	ND	-	-	-	0.036	-	-	ND	4.8	ND	ND	ND	33	26	-	-	-	-	-	-	-
		A14@20'	09/5/2013	20.0	6	16	2.4	25	ND	-	-	-	-	-	-	-	-	-	-	-	-	-	-	-	-	-	-	-	-	-	-	-	-	-	-	-	-	-	-	-	-	-	-	-	-	-	-	-	-	-
		A14@45'	09/5/2013	45.0	ND	ND	ND	ND	ND	-	-	-	-	-	-	-	-	-	-	-	-	-	-	-	-	-	-	-	-	-	-	-	-	-	-	-	-	-	-	-	-	-	-	-	-	-	-	-	-	-
		A14@60'	09/5/2013	60.0	ND	ND	ND	ND	ND	-	ND	-	ND	-	-	20	-	-	ND	ND	-	-	ND	-	ND	ND	-	-	ND	-	-	-	0.1	-	-	ND	3.5	ND	ND	ND	ND	13	-	-	-	-	-	-	-
	A-13-15	R15@5'	08/23/2013	5.0	ND	ND	ND	ND	ND	-	ND	-	1.4	-	-	50	-	-	ND	ND	-	-	9.4	-	3.2	34	-	-	18	-	-	-	0.074	-	-	ND	4.7	ND	ND	ND	17	58	-	-	-	-	-	-	-
		R15@50'	08/23/2013	50.0	ND	ND	ND	ND	ND	-	-	-	-	-	-	-	-	-	-	-	-	-	-	-	-	-	-	-	-	-	-	-	-	-	-	-	-	-	-	-	-	-	-	-	-	-	-	-	-	-
		R15@60'	08/23/2013	60.0	ND	ND	ND	ND	ND	-	-	-	-	-	-	-	-	-	-	-	-	-	-	-	-	-	-	-	-	-	-	-	-	-	-	-	-	-	-	-	-	-	-	-	-	-	-	-	-	-
8	8-1	8-1-0.5	05/16/2017	0.5	-	-	-	-	-	-	-	-	-	-	-	-	-	-	-	-	-	-	-	-	-	-	9.6	-	250	14	-	0.38	-	-	-	-	-	-	-	-	-	-	-	-	-	-	-	-	-	-	-
		8-1-1.0	05/16/2017	1.0	-	-	-	-	-	-	-	-	-	-	-	-	-	-	-	-	-	-	-	-	-	-	3.4	-	130	6	-	0.33	-	-	-	-	-	-	-	-	-	-	-	-	-	-	-	-	-	-	-
		8-1-3.0	05/16/2017	3.0	-	-	-	-	-	-	-	-	-	-	-	-	-	-	-	-	-	-	-	-	-	-	-	-	3.6	-	-	-	-	-	-	-	-	-	-	-	-	-	-	-	-	-	-	-	-	-	-
		8-1-5.0	05/16/2017	5.0	-	-	-	-	-	-	-	-	-	-	-	-	-	-	-	-	-	-	-	-	-	-	-	-	2.8	-	-	-	-	-	-	-	-	-	-	-	-	-	-	-	-	-	-	-	-	-	-
	8-2	8-2-0.5	05/16/2017	0.5	-	-	-	-	-	-	-	-	-	-	-	-	-	-	-	-	-	-	-	-	-	-	-	-	44	-	-	-	-	-	-	-	-	-	-	-	-	-	-	-	-	-	-	-	-	-	-
		8-2-1.0	05/16/2017	1.0	-	-	-	-	-	-	-	-	-	-	-	-	-	-	-	-	-	-	-	-	-	-	-	-	3.3	-	-	-	-	-	-	-	-	-	-	-	-	-	-	-	-	-	-	-	-	-	-
		8-2-3.0	05/16/2017	3.0	-	-	-	-	-	-	-	-	-	-	-	-	-	-	-	-	-	-	-	-	-	-	-	-	9.3	-	-	-	-	-	-	-	-	-	-	-	-	-	-	-	-	-	-	-	-	-	-
		8-2-5.0	05/16/2017	5.0	-	-	-	-	-	-	-	-	-	-	-	-	-	-	-	-	-	-	-	-	-	-	-	-	37	-	-	-	-	-	-	-	-	-	-	-	-	-	-	-	-	-	-	-	-	-	-
	8-3	8-3-0.5	05/16/2017	0.5	-	-	-	-	-	-	ND	-	2.4	-	-	110	-	-	ND	ND	-	-	12	-	6.9	140	-	-	49	-	-	-	ND	-	-	ND	9.6	ND	ND	ND	28	120	-	-	-	-	-	-	-
		8-3-1.0	05/16/2017	1.0	ND	ND	-	-	ND	ND	ND	-	1.5	-	-	70	-	-	ND	ND	-	-	7.3	-	4.9	34	-	-	35	-	-	-	ND	-	-	ND	7.4	ND	ND	ND	21	65	-	-	-	ND	ND	-	ND
		8-3-3.0	05/16/2017	3.0	-	-	-	-	-	-	ND	-	2.6	-	-	110	-	-	ND	1.7	ND	ND	11	-	6	41	-	-	65	11	-	ND	0.11	-	-	ND	12	1.2	ND	ND	23	210	-	-	-	-	-	-	-
		8-3-5.0	05/16/2017	5.0	ND	ND	-	-	ND	ND	ND	-	2.3	-	-	68	-	-	ND	ND	-	-	22	ND	12	23	-	-	5.9	-	-	-	0.14	-	-	ND	20	ND	ND	ND	44	52	-	-	-	-	-	-	-
	L-1	L-1 @ 1'	02/1/2016	1.0	-	-	-	-	-	-	-	-	8.9	-	-	530	-	-	ND	ND	-	-	15	-	7.4	85	-	-	310	41	-	-	ND	-	-	ND	13	ND	ND	ND	32	870	-	-	-	-	-	-	-
		L-1 @ 3'	02/1/2016	3.0	-	-	-	-	-	-	-	-	ND	-	-	120	-	-	ND	ND	-	-	14	-	7.8	19	-	-	4.6	-	-	-	0.2	-	-	ND	9.6	ND	ND	ND	29	50	-	-	-	-	-	-	-
		L-1 @ 5'	02/1/2016	5.0	-	-	-	-	-	-	-	-	-	-	-	-	-	-	-	-	-	-	-	-	-	-	-	-	-	-	-	-	-	-	-	-	-	-	-	-	-	-	-	-	-	-	-	-	-	-
	L-1	L-1 @ 1'	02/26/2016	1.0	ND	ND	-	-	ND	ND	-	-	-	-	-	-	-	-	-	-	-	-	-	-	-	-	-	-	-	-	-	-	-	-	-	-	-	-	-	-	-	-	-	-	-	-	-	-	-	-
		L-1 @ 2'	02/26/2016	2.0	-	-	-	-	-	-	ND	-	2.3	-	-	140	-	-	ND	ND	-	-	12	-	6.8	20	-	-	20	-	-	-	ND	-	-	ND	9.6	ND	ND	ND	29	99	-	-	-	-	-	-	-
		L-1 @ 3'	02/26/2016	3.0	ND	ND	-	-	ND	ND	ND	-	2.6	-	-	160	-	-	ND	ND	-	-	12	-	6.7	20	-	-	18	-	-	-	0.11	-	-	ND	10	ND	ND	ND	28	87	-	-	-	ND	ND	-	-
9	9-1	9-1-0.5	05/17/2017	0.5	-	-	-	-	-	-	-	-	-	-	-	-	-	-	-	-	-	-	-	-	-	-	-	-	740	34	ND	0.42	-	-	-	-	-	-	-	-	-	-	-	-	6.8	-	-	-
		9-1-1.0	05/17/2017	1.0	-	-	-	-	-	-	-	-	-	-	-	-	-	-	-	-	-	-	-	-	-	-	-	-	94	3.2	ND	ND	-	-	-	-	-	-	-	-	-	-	-	-	-	-	-	-	-
		9-1-3.0	05/17/2017	3.0	-	-	-	-	-	-	-	-	-	-	-	-	-	-	-	-	-	-	-	-	-	-	-	-	7.1	-	-	-	-	-	-	-	-	-	-	-	-	-	-	-	-	-	-	-	-	-	-
		9-1-5.0	05/17/2017	5.0	-	-	-	-	-	-	-	-	-	-	-	-	-	-	-	-	-	-	-	-	-	-	-	-	2	-	-	-	-	-	-	-	-	-	-	-	-	-	-	-	-	-	-	-	-	-	-
	9-2	9-2-0.5	05/17/2017	0.5	-	-	-	-	-	-	-	-	-	-	-	-	-	-	-	-	-	-	-	-	-	-	-	-	78	5.3	ND	ND	-	-	-	-	-	-	-	-	-	-	-	-	-	-	-	-	-	-	-
		9-2-1.0	05/17/2017	1.0	-	-	-	-	-	-	-	-	-	-	-	-	-	-	-	-	-	-	-	-	-	-	-	-	630	50	ND	1.5	-	-	-	-	-	-	-	-	-	-	-	-	7.6	-	-	-	-	-
	9-3	9-3-0.5	05/17/2017	0.5	-	-	-	-	-	-	-	-	-	-	-	-	-	-	-	-	-	-	-	-	-	-	-	-	52	1	ND	ND	-	-	-	-	-	-	-	-	-	-	-	-	-	-	-	-	-	-	-
		9-3-1.0	05/17/2017	1.0	-	-	-	-	-	-	-	-	-	-	-	-	-	-	-	-	-	-	-	-	-	-	-	-	29	-	-	-	-	-	-	-	-	-	-	-	-	-	-	-	-	-	-	-	-	-	-
		9-3-3.0	05/17/2017	3.0	-	-	-	-	-	-	-	-	-	-	-	-	-	-	-	-	-	-	-	-	-	-	-	-	1.7	-	-	-	-	-	-	-	-	-	-	-	-	-	-	-	-	-	-	-	-	-	-
		9-3-5.0	05/17/2017	5.0	-	-	-	-	-	-	-	-	-	-	-	-	-	-	-	-	-	-	-	-	-	-	-	-	5.9	-	-	-	-	-	-	-	-	-	-	-	-	-	-	-	-	-	-	-	-	-	-
	A-13-17	A17@5'	11/16/2013	5.0	1.2	ND	ND	ND	ND	-	ND	-	2	-	-	84	-	-	ND	1.4	-	-	7.1	-	3.6	7.4	-	-	ND	-	-	-	0.03	-	-	ND	5.2	ND	ND	ND	23	27	-	-	-	-	-	-	-
		A17@10'	11/16/2013	10.0	-	-	-	-	ND	-	-	-	-	-	-	-	-	-	-	-	-	-	-	-	-	-	-	-	-	-	-	-	-	-	-	-	-	-	-	-	-	-	-	-	-	-	-	-	-	-
		A17@15'	11/16/2013	15.0	ND	ND	ND	ND	ND	-	ND	-	8.3	-	-	78	-	-	ND	2.4	-	-	21	-	14	25	-	-	6.3	-	-	-	0.074	-	-	ND	21	ND	ND	ND	41	73	-	-	-	-	-	-	-
		A17@25'	11/16/2013	25.0	-	-	-	-	ND	-	-	-	-	-	-	-	-	-	-	-	-	-	-	-	-	-	-	-	-	-	-	-	-	-	-	-	-	-	-	-	-	-	-	-	-	-	-	-	-	-
		A17@40'	11/16/2013	40.0	-	-	-	-	ND	-	-	-	-	-	-	-	-	-	-	-	-	-	-	-	-	-	-	-	-	-	-	-	-	-	-	-	-	-	-	-	-	-	-	-	-	-	-	-	-	-
		A17@60'	11/16/2013	60.0	ND	ND	ND	ND	ND	-	-	-	-	-	-	-	-	-	-	-	-	-	-	-	-	-	-	-	-	-	-	-	-	-	-	-	-	-	-	-	-	-	-	-	-	-	-	-	-	-
Trigger Level for Performing State Leachate Analysis (10×STLC)					NE	NE	NE	NE	2,040 (TCE)	varies	150	15 (STLC)	50	5 (STLC)	-	1,000	100 (STLC)	-	8	10	1 (STLC)	-	50	50	800	250	25 (STLC)	-	50	5 (STLC)	1.5 (STLC)	-	2	0.2 (STLC)	-	3,500	200	10	50	70	240	2,500	250 (STLC)	-	-	-	1,000 (DDT/DDE/DDD)	varies	varies
Trigger Level for Performing State and Federal Leachate Analysis (20×TCLP)					NE	NE	NE	NE	10 (TCE)	varies	NE	-	100	-	5 (TCLP)	2,000	-	100 (TCLP)	NE	20	-	1 (TCLP)	100	-	NE	NE	-	-	100	-	-	5 (TCLP)	4	-	0.2 (TCLP)	NE	NE	20	100	NE	NE	NE	-	-	-	-	varies	varies	varies
State Hazardous Disposal Criteria (TTLC)					NE	NE	NE	NE	2,040 (TCE)	varies	500	-	500	-	-	10,000	-	-	75	100	-	-	2,500	500	8,000	2,500	-	-	1,000	-	-	-	20	-	-	3,500	2,000	100	500	700	2,400	5,000	-	-	-	1,000 (DDT/DDE/DDD)	varies	varies
Screening Level for Keeping Soil on Site (OEHHA [a])					100	1,000	1,000	1,000	-	varies	30	-	12 [b]	-	-	5,200	-	-	16	1.7	-	-	100,000	17 [c]	660	3,000	-	-	80	-	-	-	18	-	-	380	1,600	380	380	5	530	23,000	-	-	-	300	2,300 (DDD) 1,600 (DDE) 1,600 (DDT)	varies	varies
Screening Level for Keeping Soil on Site (OEHHA [d])					100	1,000	1,000	1,000	-	varies	380	-	12 [b]	-	-	63,000	-	-	190	7.5	-	-	100,000	37 [c]	3,200	38,000	-	-	320	-	-	-	180	-	-	4,800	16,000	4,800	4,800	63	6,700	######	-	-	-	300	2,300 (DDD) 1,600 (DDE) 1,600 (DDT)	varies	varies

Notes:

bold - Value detected above a trigger/screening value

[a] Office of Environmental Health Hazard Assessment (OEHHA) Residential Scenario's Soil-Screening Numbers (mg/kg soil) for Nonvolatile Chemicals Based on Total Exposure to Contaminated Soil: Inhalation, Ingestion and Dermal Absorption

[b] California EPA/DTSC background levels of Arsenic in Southern California for near surface soils

[c] Screening numbers for Chromium VI are used here. The screening value for Chromium III is 100,000 mg/kg.

[d] Office of Environmental Health Hazard Assessment (OEHHA) Commercial/Industrial Scenario's Soil-Screening Numbers (mg/kg soil) for Nonvolatile Chemicals Based on Total Exposure to Contaminated Soil: Inhalation, Ingestion and Dermal Absorption

µg/kg - microgram per kilogram

mg/kg - milligram per kilogram

mg/L - milligram per liter

ND - Not Detected (below Reporting Limit)

NE - Not Established

Concentrations between Residential & Commercial/Industrial Screening Levels

HAI
HIGHLAND ASSOCIATES, INC.
Environmental and Earthquake Engineers

Table 11. Comparison of Unrestricted Land Use and Commercial/Industrial Screening Results - Soil Gas and Ambient Air Samples

PARC AREA	Boring ID	Sample ID	Sample Collection Date	Sample Depth (ft below grade)	TPH GRO µg/m³ (TO-3)	VOCs, µg/m³ (TO-15)																
						Benzene	Carbon Tetrachloride	1,2-Dichloroethane	cis-1,2-Dichloroethylene	trans-1,2-Dichloroethylene	Ethylbenzene	Mercury (elemental)	Methyl tert-Butyl Ether	Naphthalene	Tetrachloroethylene	Tetraethyl Lead	Toluene	1,1,1-Trichloroethane	Trichloroethylene	Vinyl Chloride	m,p-Xylene	o-Xylene	Other VOCs
2A, 2B, 2C	2A-1	2A-1-5	05/16/2017	5.0	-	6.4	ND	ND	ND	ND	ND	-	ND	ND	830	-	28	85	ND	ND	10	ND	-
		2A-1-10	05/16/2017	10.0	-	ND	ND	ND	ND	ND	ND	-	ND	ND	**460**	-	8.5	53	ND	ND	ND	ND	-
		2A-1-15	05/16/2017	15.0	-	5.6	ND	ND	ND	ND	ND	-	ND	ND	**360**	-	12	63	ND	ND	ND	20	-
	2A-2	2A-2-5	05/16/2017	5.0	-	5.7	ND	ND	ND	ND	27	-	ND	ND	**370**	-	16	230	ND	ND	61	39	-
		2A-2-5 Dup	05/16/2017	5.0	-	ND	ND	ND	ND	ND	ND	-	ND	ND	**380**	-	14	220	ND	ND	19	8.9	-
		2A-2-10	05/16/2017	10.0	-	ND	ND	ND	ND	ND	ND	-	ND	ND	**280**	-	9.1	200	ND	ND	13	8.1	-
		2A-2-15	05/16/2017	15.0	-	ND	ND	ND	ND	ND	ND	-	ND	ND	130	-	9.8	110	ND	ND	ND	ND	-
	2A-3	2A-3-5	05/16/2017	5.0	-	ND	ND	ND	ND	ND	ND	-	ND	ND	25	-	ND	20	ND	ND	ND	8.1	-
		2A-3-10	05/16/2017	10.0	-	ND	ND	ND	ND	ND	ND	-	ND	ND	28	-	ND	25	ND	ND	ND	ND	-
		2A-3-15	05/16/2017	15.0	-	ND	ND	ND	ND	ND	ND	-	ND	ND	29	-	9.8	24	ND	ND	13	ND	-
	2A-Am	2A-Am	05/16/2017	Ambient	-	ND	ND	ND	ND	ND	ND	-	ND	ND	ND	-	ND	ND	ND	ND	ND	ND	-
	P33-VP-1	VP-1	08/5/2015	5.0	3700	0.86	ND	ND	ND	ND	2	-	ND	ND	20	-	30	30	40	ND	20	3	-
	P33-VP-2	VP-2	08/5/2015	5.0	1900	0.89	ND	ND	ND	ND	1	-	ND	ND	30	-	10	70	-	ND	10	2	-
	P33-VP-3	VP-3	08/5/2015	5.0	2100	0.89	ND	ND	ND	ND	2	-	ND	ND	30	-	20	90	-	ND	20	3	-
		VP-3 Dup	08/5/2015	5.0	3000	ND	ND	ND	ND	ND	2	-	ND	ND	40	-	10	160	420	ND	10	3	-
	P33-VP-4	VP-4	08/5/2015	5.0	2700	0.83	ND	ND	ND	ND	4	-	ND	2	4	-	80	ND	2	ND	30	4	-
	P33-VP-5	VP-5	08/5/2015	5.0	3700	0.83	ND	ND	ND	ND	3	-	ND	ND	20	-	40	80	80	ND	20	4	-
	P33-VP-6	VP-6	08/5/2015	5.0	1700	1	ND	ND	ND	ND	2	-	ND	ND	6	-	30	3	10	ND	10	2	-
	P33-VP-7	VP-7	08/5/2015	5.0	1900	0.89	ND	ND	ND	ND	3	-	ND	ND	40	-	20	40	ND	ND	20	4	-
	P33-VP-8	VP-8	08/5/2015	5.0	2200	1	ND	ND	ND	ND	3	-	ND	ND	20	-	10	20	ND	ND	20	4	-
	P33-VP-9	VP-9	08/5/2015	5.0	2000	0.89	ND	ND	ND	ND	3	-	ND	ND	40	-	40	9	2	ND	20	5	-
		VP-9 Dup	08/5/2015	5.0	2600	2	ND	ND	ND	ND	3	-	ND	ND	20	-	20	9	2	ND	20	4	-
	P33-VP-10	VP-10	08/5/2015	5.0	2600	ND	ND	ND	ND	ND	ND	-	ND	ND	2	-	2	ND	ND	ND	ND	ND	-
	P33-VP-11	VP-11	08/5/2015	5.0	4300	ND	ND	ND	ND	ND	2	-	ND	ND	20	-	10	7	ND	ND	20	3	-
	P33-VP-12	VP-12	08/5/2015	5.0	2900	ND	ND	ND	ND	ND	2	-	ND	ND	70	-	10	3	ND	ND	10	3	-
	P32-VP-1	VP-1	08/7/2015	5.0	2000	2	ND	ND	ND	ND	1	-	ND	ND	20	-	2	5	ND	3	10	2	-
	P32-VP-2	VP-2	08/7/2015	5.0	3100	6	ND	ND	ND	ND	1	-	ND	6	ND	-	10	ND	ND	ND	10	2	-
	P32-VP-3	VP-3	08/7/2015	5.0	4200	ND	ND	ND	ND	ND	ND	-	ND	ND	10	-	0.94	8	ND	ND	ND	ND	-
	P32-VP-4	VP-4	08/7/2015	5.0	12000	ND	ND	ND	ND	ND	10	-	ND	2	6	-	280	5	ND	ND	120	20	-
	P32-VP-5	VP-5	08/7/2015	5.0	7100	1	ND	ND	ND	ND	2	-	ND	ND	10	-	4	4	ND	1	10	2	-
	P32-VP-6	VP-6	08/7/2015	5.0	2400	2	ND	ND	ND	ND	2	-	ND	3	7	-	8	3	ND	ND	20	4	-
	P32-VP-7	VP-7	08/7/2015	5.0	2700	0.93	ND	ND	ND	ND	ND	-	ND	ND	9	-	2	6	ND	ND	7	1	-
		VP-7 Dup	08/7/2015	5.0	2100	1	ND	ND	ND	ND	3	-	ND	**40**	9	-	4	6	ND	1	30	6	-
	P32-VP-8	VP-8	08/7/2015	5.0	2200	ND	ND	ND	ND	ND	ND	-	ND	1	8	-	ND	7	ND	ND	ND	ND	-
	P32-VP-9	VP-9	08/7/2015	5.0	2400	4	ND	ND	ND	ND	5	-	ND	4	5	-	30	3	ND	0.87	70	20	-
	P32-VP-10	VP-10	08/7/2015	5.0	4200	ND	ND	ND	ND	ND	20	-	ND	2	2	-	210	ND	ND	0.69	150	30	-
	P32-VMW-1	VMW-1	11/23/2016	10.0	300	ND	ND	ND	ND	ND	ND	-	ND	ND	10	-	50	ND	ND	ND	20	ND	-
		VMW-1 Dup	11/23/2016	10.0	780	ND	ND	ND	ND	ND	ND	-	ND	ND	**490**	-	40	ND	ND	ND	ND	ND	-
	P32-VMW-2	VMW-2	11/23/2016	5.0	390	ND	ND	ND	ND	ND	ND	-	ND	ND	ND	-	40	ND	ND	ND	ND	ND	-
	P32-VMW-3	VMW-3	11/23/2016	15.0	1500	**70**	ND	ND	ND	ND	8	-	ND	ND	50	-	90	ND	10	ND	40	5	-
	P32-VMW-4	VMW-4	11/23/2016	10.0	370	ND	ND	ND	ND	ND	ND	-	ND	ND	ND	-	30	ND	ND	ND	ND	ND	-
	P32-VMW-1	VMW-1 10'	11/28/2016	10.0	ND	ND	ND	ND	ND	ND	ND	-	ND	ND	10	-	60	5	ND	ND	ND	ND	-
	P32-VMW-2	VMW-2 5'	11/28/2016	5.0	ND	ND	ND	ND	ND	ND	ND	-	ND	ND	9	-	60	ND	ND	ND	ND	ND	-
	P32-VMW-3	VMW-3 15'	11/28/2016	15.0	450	30	ND	ND	ND	ND	3	-	ND	ND	9	-	70	7	ND	ND	10	ND	-
		VMW-3 Dupl. 15'	11/28/2016	15.0	850	20	ND	ND	ND	ND	3	-	ND	ND	7	-	190	6	ND	ND	20	ND	-
	P32-VMW-4	VMW-4 10'	11/28/2016	10.0	360	ND	ND	ND	ND	ND	ND	-	ND	ND	ND	-	90	ND	ND	ND	ND	ND	-
6	6-Am	6-Am	05/16/2017	Ambient	-	ND	ND	ND	ND	ND	ND	-	ND	ND	ND	-	ND	ND	ND	ND	ND	ND	-

Table 11. Comparison of Unrestricted Land Use and Commercial/Industrial Screening Results - Soil Gas and Ambient Air Samples (Cont'd)

PARC AREA	Boring ID	Sample ID	Sample Collection Date	Sample Depth (ft below grade)	TPH GRO µg/m³ (TO-3)	VOCs, µg/m³ (TO-15)																	
						Benzene	Carbon Tetrachloride	1,2-Dichloroethane	cis-1,2-Dichloroethylene	trans-1,2-Dichloroethylene	Ethylbenzene	Mercury (elemental)	Methyl tert-Butyl Ether	Naphthalene	Tetrachloroethylene	Tetraethyl Lead	Toluene	1,1,1-Trichloroethane	Trichloroethylene	Vinyl Chloride	m,p-Xylene	o-Xylene	Other VOCs
7	7-1	7-1-5	05/16/2017	5.0	-	9	ND	ND	ND	ND	ND	-	ND	ND	**430**	-	11	ND	ND	ND	ND	ND	-
	7-3	7-3-5	05/16/2017	5.0	-	ND	ND	ND	ND	ND	ND	-	ND	ND	**550**	-	ND	ND	38	ND	ND	ND	-
	7-4	7-4-5	05/16/2017	5.0	-	ND	ND	ND	ND	ND	ND	-	ND	ND	ND	-	23	ND	ND	ND	150	ND	-
		7-4-5 Dup	05/16/2017	5.0	-	ND	ND	ND	ND	ND	ND	-	ND	ND	ND	-	22	ND	ND	ND	140	ND	-
	7-Am	7-Am	05/16/2017	Ambient	-	ND	ND	ND	ND	ND	ND	-	ND	ND	ND	-	ND	ND	ND	ND	ND	ND	-
	7-Am Dup	7-Am Dup	05/16/2017	Ambient	-	ND	ND	ND	ND	ND	ND	-	ND	ND	ND	-	ND	ND	ND	ND	ND	ND	-
	P20-VP-1	VP-1	04/26/2016	5.0	120000	ND	ND	ND	ND	ND	ND	-	ND	ND	**310**	-	ND	ND	ND	ND	ND	ND	-
	P20-VP-2	VP-2	04/26/2016	5.0	21000	ND	ND	ND	ND	ND	ND	-	ND	ND	**270**	-	ND	ND	ND	ND	ND	ND	-
	P20-VP-3	VP-3	04/26/2016	5.0	27000	ND	ND	ND	ND	ND	ND	-	ND	ND	**390**	-	ND	ND	ND	ND	ND	ND	-
	P20-VP-4	VP-4	04/26/2016	5.0	6500	ND	ND	ND	ND	ND	ND	-	ND	ND	1000	-	ND	ND	20	ND	ND	ND	-
		VP-4 Dup	04/26/2016	5.0	2000	ND	ND	ND	ND	ND	ND	-	ND	ND	**480**	-	ND	ND	ND	ND	ND	ND	-
	P20-VP-5	VP-5	04/26/2016	3.0	7600	ND	ND	ND	ND	ND	ND	-	ND	ND	4700	-	ND	ND	ND	ND	ND	ND	-
	P20-VP-6	VP-6	04/26/2016	5.0	6400	ND	ND	ND	ND	ND	ND	-	ND	ND	1400	-	ND	ND	ND	ND	ND	ND	-
	P20-VP-7	VP-7	04/26/2016	3.0	7500	ND	ND	ND	ND	ND	ND	-	ND	ND	4300	-	ND	ND	ND	ND	ND	ND	-
	P20-VP-8	VP-8	04/26/2016	5.0	5800	ND	ND	ND	ND	ND	ND	-	ND	ND	2600	-	ND	ND	ND	ND	ND	ND	-
	P20-VP-9	VP-9	04/26/2016	5.0	2800	ND	ND	ND	ND	ND	ND	-	ND	ND	120	-	20	ND	ND	ND	ND	ND	-
		VP-9 Dup	04/26/2016	5.0	4300	ND	ND	ND	ND	ND	ND	-	ND	ND	970	-	ND	ND	ND	ND	ND	ND	-
	P22-VP-1	VP-1	08/13/2015	5.0	6100	2	ND	ND	ND	ND	2	-	ND	2	70	-	7	ND	2	ND	10	2	-
	P22-VP-2	VP-2	08/13/2015	5.0	4900	2	ND	ND	ND	ND	3	-	ND	10	120	-	8	3	1	ND	20	5	-
	P22-VP-3	VP-3	08/13/2015	5.0	5600	ND	ND	ND	ND	ND	ND	-	ND	ND	80	-	3	ND	ND	ND	6	ND	-
	P22-VP-4	VP-4	08/13/2015	5.0	5200	3	ND	ND	ND	ND	3	-	ND	3	120	-	20	3	ND	ND	30	6	-
	P22-VP-5	VP-5	08/13/2015	5.0	7700	4	ND	ND	ND	ND	2	-	ND	5	6	-	10	30	ND	ND	20	3	-
	P22-VP-6	VP-6	08/13/2015	5.0	6500	ND	ND	ND	ND	ND	ND	-	ND	ND	**230**	-	3	5	ND	ND	5	ND	-
		VP-6 Dup	08/13/2015	5.0	5400	ND	ND	ND	ND	ND	ND	-	ND	ND	170	-	3	4	ND	ND	5	ND	-
	P22-VP-7	VP-7	08/13/2015	5.0	5100	ND	ND	ND	ND	ND	ND	-	ND	ND	**180**	-	3	3	ND	ND	6	ND	-
	P22-VP-8	VP-8	08/13/2015	5.0	6100	2	ND	ND	ND	ND	ND	-	ND	ND	160	-	4	5	ND	ND	6	1	-
	P22-VP-9	VP-9	08/13/2015	5.0	5800	ND	ND	ND	ND	ND	1	-	ND	3	**270**	-	3	4	ND	ND	10	3	-
	P22-VP-10	VP-10	08/13/2015	5.0	3600	4	ND	ND	ND	ND	2	-	ND	ND	2	-	10	ND	ND	ND	10	2	-
	P22-VP-11	VP-11	08/13/2015	5.0	9000	2	ND	ND	ND	ND	2	-	ND	ND	**180**	-	20	3	ND	ND	20	4	-
	P22-VP-12	VP-12	08/13/2015	5.0	6200	ND	ND	ND	ND	ND	1	-	ND	2	120	-	5	2	ND	ND	20	4	-
	P23-SV1	SV1	11/27/2013	5.0	ND	-	-	-	-	-	-	-	-	-	-	-	-	-	-	-	-	-	ND
	P23-SV2	SV2	11/27/2013	5.0	ND	-	-	-	-	-	-	-	-	-	-	-	-	-	-	-	-	-	ND
	P23-SV3	SV3	11/27/2013	5.0	ND	-	-	-	-	-	-	-	-	-	-	-	-	-	-	-	-	-	ND
	P23-SV4	SV4	11/25/2013	5.0	ND	-	-	-	-	-	-	-	-	-	-	-	-	-	-	-	-	-	ND
	P23-SV5	SV5	11/27/2013	5.0	ND	-	-	-	-	-	-	-	-	-	-	-	-	-	-	-	-	-	ND
		SV5 Dup	11/27/2013	5.0	ND	-	-	-	-	-	-	-	-	-	-	-	-	-	-	-	-	-	ND
	P23-SV6	SV6	11/25/2013	5.0	ND	-	-	-	-	-	-	-	-	-	-	-	-	-	-	-	-	-	ND
	P23-SV7	SV7	11/25/2013	5.0	ND	-	-	-	-	-	-	-	-	-	-	-	-	-	-	-	-	-	ND
	P23-SV8	SV8	11/25/2013	5.0	ND	-	-	-	-	-	-	-	-	-	-	-	-	-	-	-	-	-	ND
	P23-SV9	SV9	11/25/2013	5.0	ND	-	-	-	-	-	-	-	-	-	-	-	-	-	-	-	-	-	ND
	P23-SV10	SV10	11/25/2013	5.0	ND	-	-	-	-	-	-	-	-	-	-	-	-	-	-	-	-	-	ND
	P23-SV11	SV11	11/25/2013	5.0	ND	-	-	-	-	-	-	-	-	-	-	-	-	-	-	-	-	-	ND
	P23-SV12	SV12	11/25/2013	5.0	ND	-	-	-	-	-	-	-	-	-	-	-	-	-	-	-	-	-	ND
	P23-SV13	SV13	11/25/2013	5.0	ND	-	-	-	-	-	-	-	-	-	-	-	-	-	-	-	-	-	ND
	P23-Am	Ambient Air	11/27/2013	Ambient	ND	-	-	-	-	-	-	-	-	-	-	-	-	-	-	-	-	-	ND
8-3	8-3	8-3-5	05/16/2017	5.0	-	-	-	-	-	-	-	-	-	-	-	-	-	-	-	-	-	-	-
		8-3 Dup	05/16/2017	5.0	-	22	ND	ND	ND	ND	ND	-	ND	ND	2000	-	20	81	60	ND	27	11	-
Screening Level for Keeping Soil on Site (OEHHA [a])					-	36	25	50	16,000	32,000	420	45	4,000	32	180	0.21	140,000	990,000	530	13	320,000	320,000	-
Screening Level for Keeping Soil on Site (OEHHA [b])					-	120	85	170	44,000	89,000	1,400	130	13,000	110	600	0.58	380,000	2,800,000	1,800	45	890,000	880,000	-

Notes:

bold - Value detected above a trigger/screening value

[a] Office of Environmental Health Hazard Assessment (OEHHA) Residential Scenario's Soil-Gas-Screening Numbers for Nonvolatile Chemicals below Buildings Constructed without Engineered Fill below Sub-slab Gravel

[b] Office of Environmental Health Hazard Assessment (OEHHA) Commerical/Industrial Scenario's Soil-Gas-Screening Numbers for Nonvolatile Chemicals below Buildings Constructed without Engineered Fill below Sub-slab Gravel

µg/m³ - microgram per cubic meter

ND - Not Detected (below Reporting Limit)

NE - Not Established

Concentrations between Residential & Commercial/Industrial Screening Levels

HUSHMAND ASSOCIATES, INC.
Geotechnical and Earthquake Engineers

FIGURES

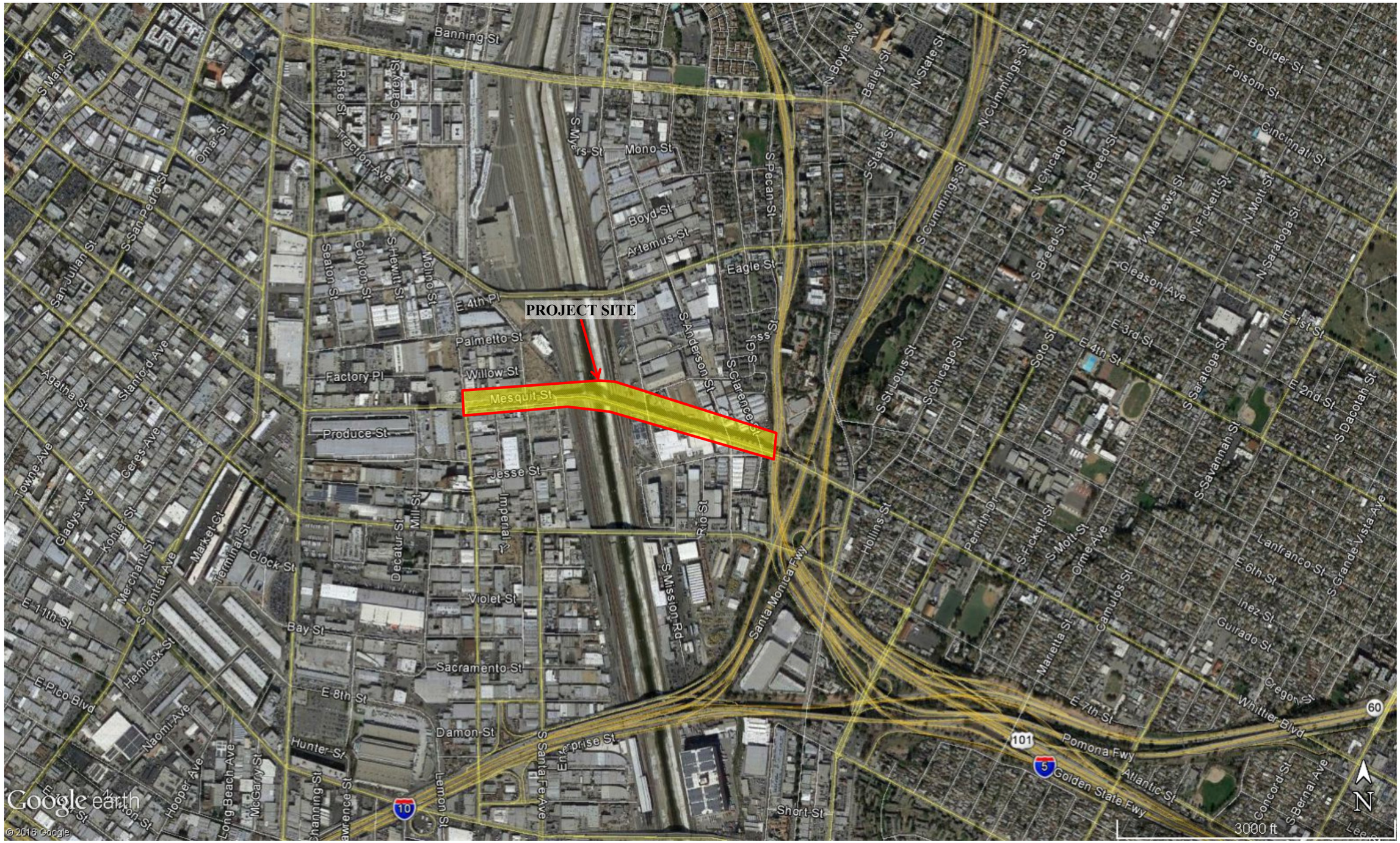

HUSHMAND ASSOCIATES, INC. Geotechnical and Earthquake Engineers	**SIXTH STREET VIADUCT PARC IMPROVEMENTS** Los Angeles, California	**SITE VICINITY MAP**	Figure **1**

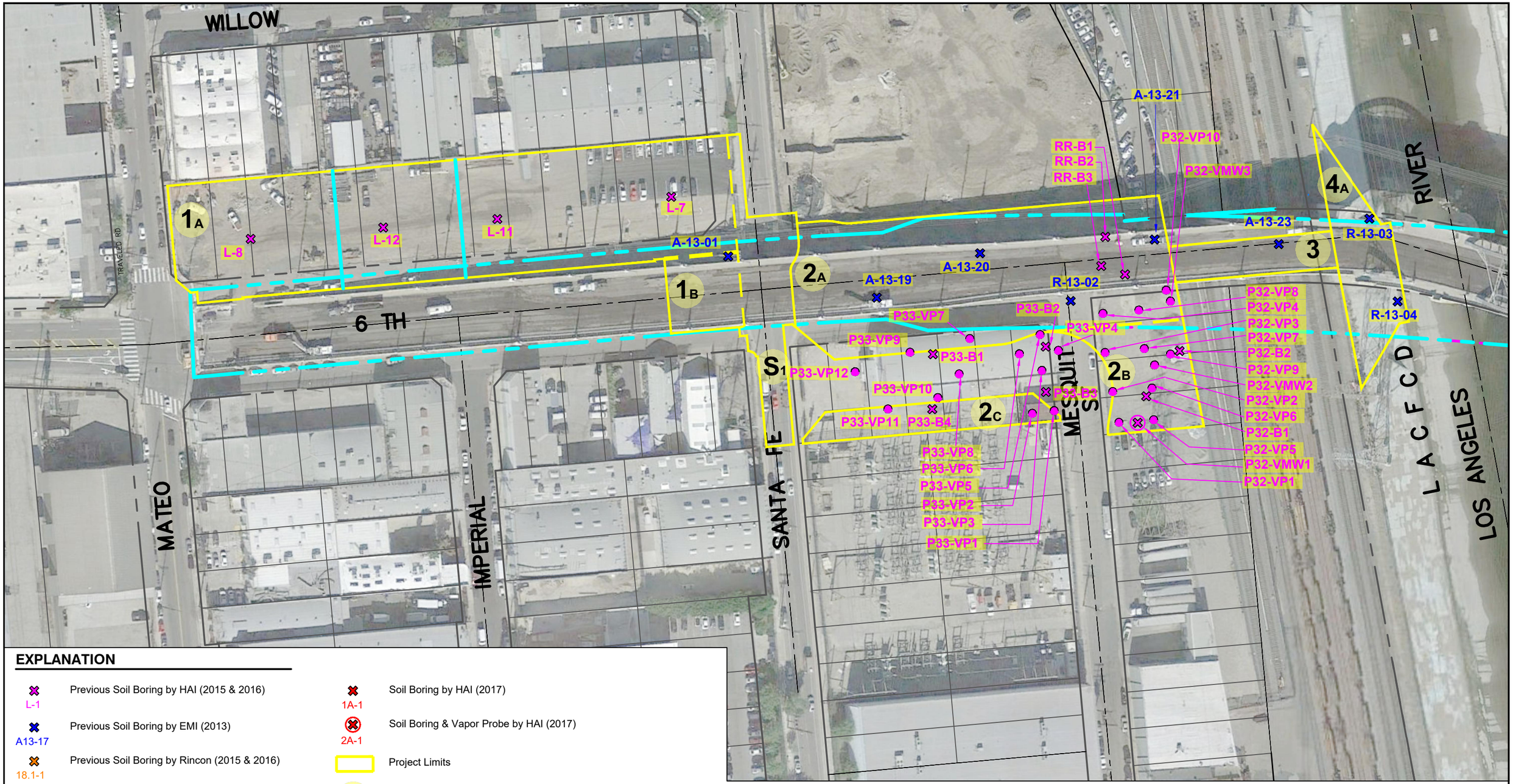

EXPLANATION

- L-1 — Previous Soil Boring by HAI (2015 & 2016)
- A13-17 — Previous Soil Boring by EMI (2013)
- 18.1-1 — Previous Soil Boring by Rincon (2015 & 2016)
- P22-VP12 — Previous Vapor Probe by HAI (2015 & 2016)
- P23-SV13 — Previous Vapor Probe by EMI (2014)
- P32-VMW1 — Previous Soil Boring & Vapor Probe by HAI (2016)
- 1A-1 — Soil Boring by HAI (2017)
- 2A-1 — Soil Boring & Vapor Probe by HAI (2017)
- Project Limits
- 1A — PARC Area Designation

0 100 200 FEET
APPROXIMATE SCALE

HUSHMAND ASSOCIATES, INC.
Geotechnical and Earthquake Engineers

SIXTH STREET VIADUCT PARC IMPROVEMENTS
Los Angeles, California

Project No. LAC-17-001

SOIL BORING & VAPOR PROBE LOCATIONS FROM PREVIOUS INVESTIGATIONS - WEST PARK

Figure **2a**

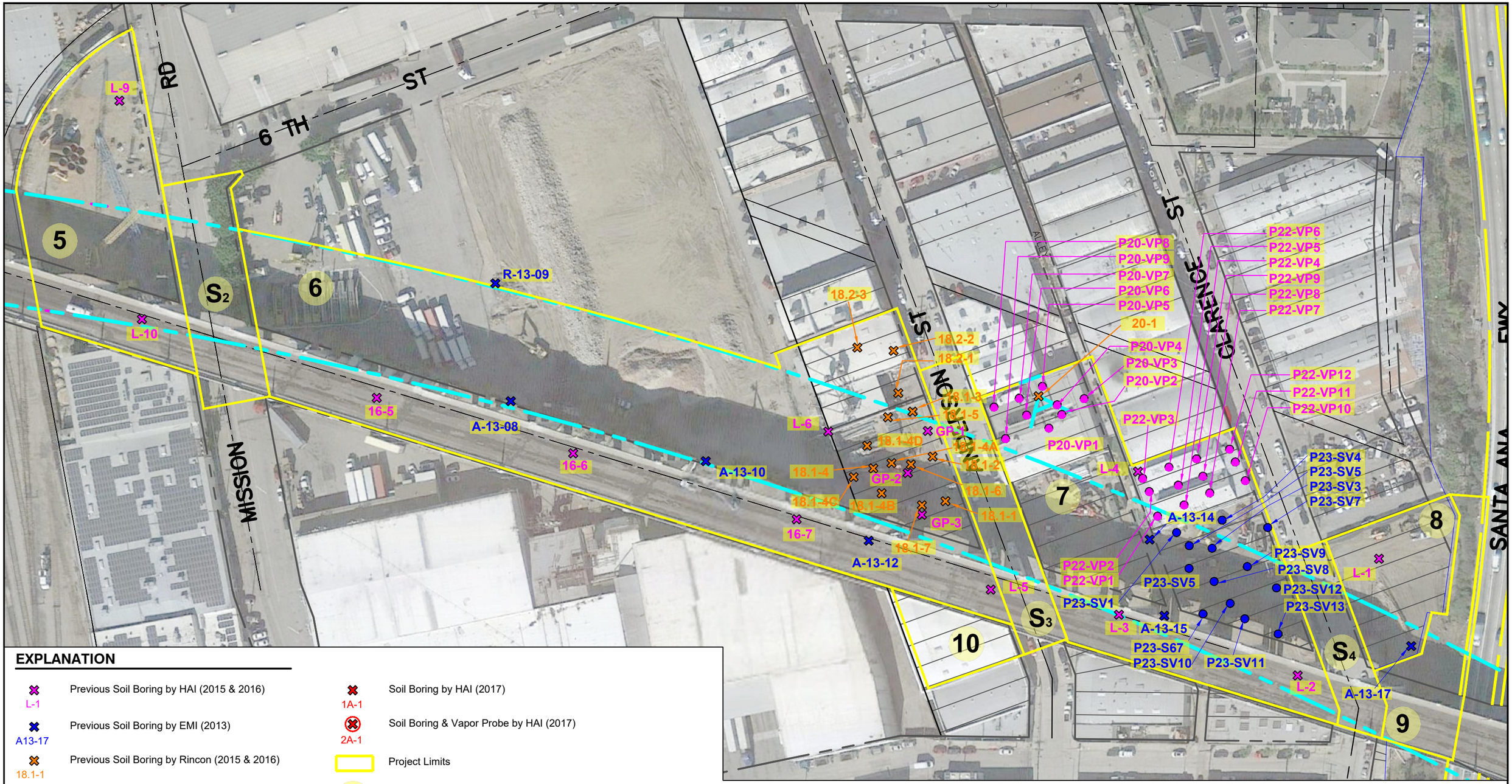

EXPLANATION

- L-1 — Previous Soil Boring by HAI (2015 & 2016)
- A13-17 — Previous Soil Boring by EMI (2013)
- 18.1-1 — Previous Soil Boring by Rincon (2015 & 2016)
- P22-VP12 — Previous Vapor Probe by HAI (2015 & 2016)
- P23-SV13 — Previous Vapor Probe by EMI (2014)
- P32-VMW1 — Previous Soil Boring & Vapor Probe by HAI (2016)
- 1A-1 — Soil Boring by HAI (2017)
- 2A-1 — Soil Boring & Vapor Probe by HAI (2017)
- Project Limits
- 1A — PARC Area Designation

0 100 200 FEET
APPROXIMATE SCALE

HUSHMAND ASSOCIATES, INC.
Geotechnical and Earthquake Engineers

SIXTH STREET VIADUCT PARC IMPROVEMENTS
Los Angeles, California
Project No. LAC-17-001

SOIL BORING & VAPOR PROBE LOCATIONS FROM PREVIOUS INVESTIGATIONS - EAST PARK

Figure **2b**

WILLOW

6 TH

IMPERIAL

SANTA FE

MESQUIT ST

MATEO

TRAVELED RD

L A C F C D

RIVER

LOS ANGELES

1A-4

1A-1

1A-2

1A-3

2A-3

2A-1

2A-2

1B-1

1A

1B

2A

2B

2C

S1

3

4A

EXPLANATION

- L-1 — Previous Soil Boring by HAI (2015 & 2016)
- A13-17 — Previous Soil Boring by EMI (2013)
- 18.1-1 — Previous Soil Boring by Rincon (2015 & 2016)
- P22-VP12 — Previous Vapor Probe by HAI (2015 & 2016)
- P23-SV13 — Previous Vapor Probe by EMI (2014)
- P32-VMW1 — Previous Soil Boring & Vapor Probe by HAI (2016)
- 1A-1 — Soil Boring by HAI (2017)
- 2A-1 — Soil Boring & Vapor Probe by HAI (2017)
- Project Limits
- 1A — PARC Area Designation

0 100 200 FEET

APPROXIMATE SCALE

HUSHMAND ASSOCIATES, INC.
Geotechnical and Earthquake Engineers

SIXTH STREET VIADUCT PARC IMPROVEMENTS
Los Angeles, California

Project No. LAC-17-001

SOIL BORING & VAPOR PROBE LOCATIONS FROM CURRENT INVESTIGATION - WEST PARK

Figure **3a**

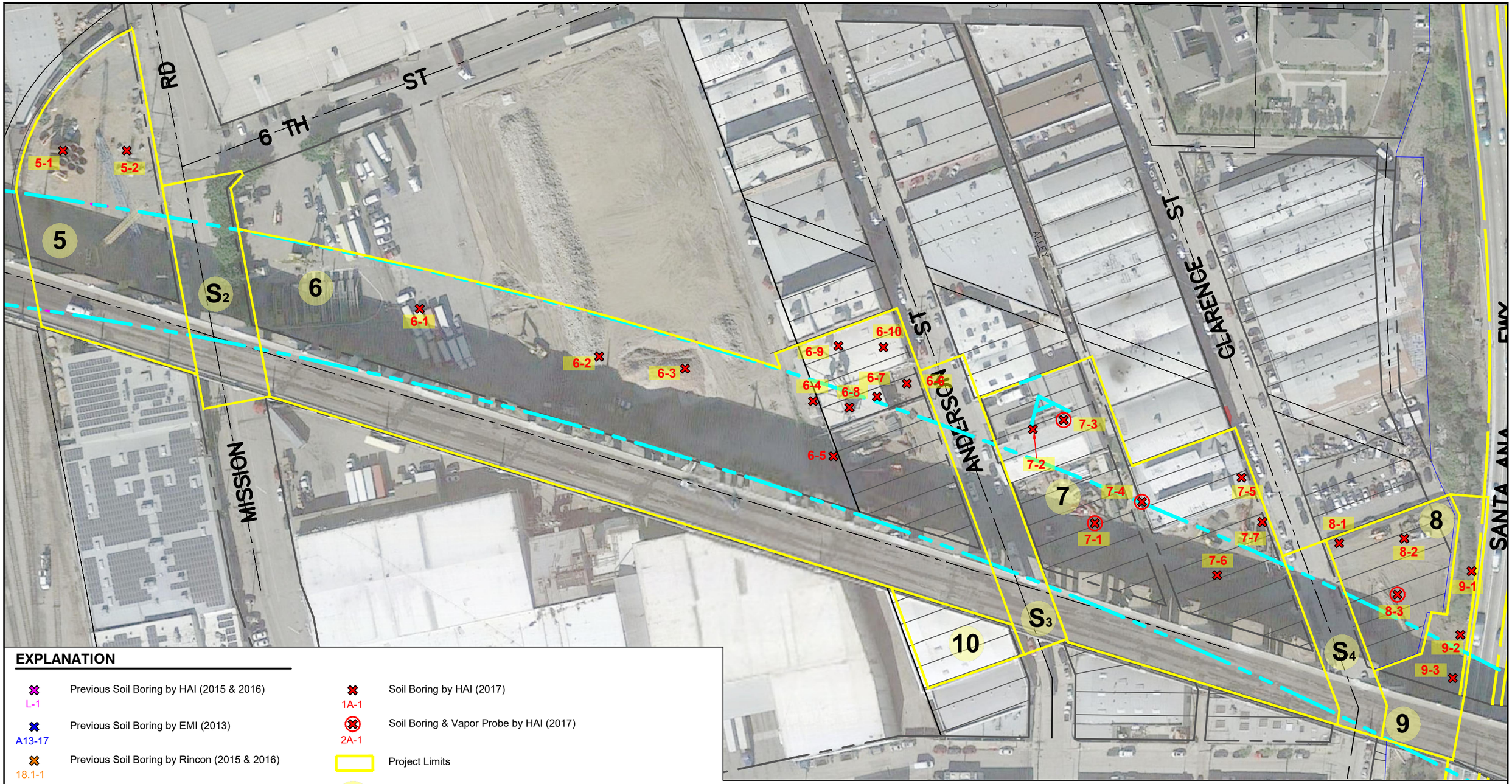

EXPLANATION

- L-1 — Previous Soil Boring by HAI (2015 & 2016)
- A13-17 — Previous Soil Boring by EMI (2013)
- 18.1-1 — Previous Soil Boring by Rincon (2015 & 2016)
- P22-VP12 — Previous Vapor Probe by HAI (2015 & 2016)
- P23-SV13 — Previous Vapor Probe by EMI (2014)
- P32-VMW1 — Previous Soil Boring & Vapor Probe by HAI (2016)
- 1A-1 — Soil Boring by HAI (2017)
- 2A-1 — Soil Boring & Vapor Probe by HAI (2017)
- Project Limits
- 1A — PARC Area Designation

0 100 200 FEET
APPROXIMATE SCALE

HUSHMAND ASSOCIATES, INC.
Geotechnical and Earthquake Engineers

SIXTH STREET VIADUCT PARC IMPROVEMENTS
Los Angeles, California
Project No. LAC-17-001

SOIL BORING & VAPOR PROBE LOCATIONS FROM CURRENT INVESTIGATION - EAST PARK

Figure **3b**

WILLOW

6 TH

MATEO

IMPERIAL

SANTA FE

MESQUIT

RIVER

LOS ANGELES

L A C F C D

TRAVELED RD

1A

1B

2A

2B

2C

S1

3

4A

L-8

1A-1

L-12

1A-2

L-11

1A-3

1A-4

L-7

A-13-01

1B-1

2A-1

2A-2

A-13-19

A-13-20

RR-B1

RR-B2

RR-B3

2A-3

A-13-21

A-13-23

R-13-03

R-13-02

R-13-04

P33-B2

P33-B1

P33-B3

P33-B4

P32-B2

P32-B1

P32-VMW1

EXPLANATION

- L-1 — Previous Soil Boring by HAI (2015 & 2016)
- A13-17 — Previous Soil Boring by EMI (2013)
- 18.1-1 — Previous Soil Boring by Rincon (2015 & 2016)
- P22-VP12 — Previous Vapor Probe by HAI (2015 & 2016)
- P23-SV13 — Previous Vapor Probe by EMI (2014)
- P32-VMW1 — Previous Soil Boring & Vapor Probe by HAI (2016)
- 1A-1 — Soil Boring by HAI (2017)
- 2A-1 — Soil Boring & Vapor Probe by HAI (2017)
- Project Limits
- 1A — PARC Area Designation

0 100 200 FEET

APPROXIMATE SCALE

HUSHMAND ASSOCIATES, INC.
Geotechnical and Earthquake Engineers

SIXTH STREET VIADUCT PARC IMPROVEMENTS
Los Angeles, California

Project No. LAC-17-001

SOIL BORING LOCATIONS FROM ALL INVESTIGATIONS - WEST PARK

Figure 4a

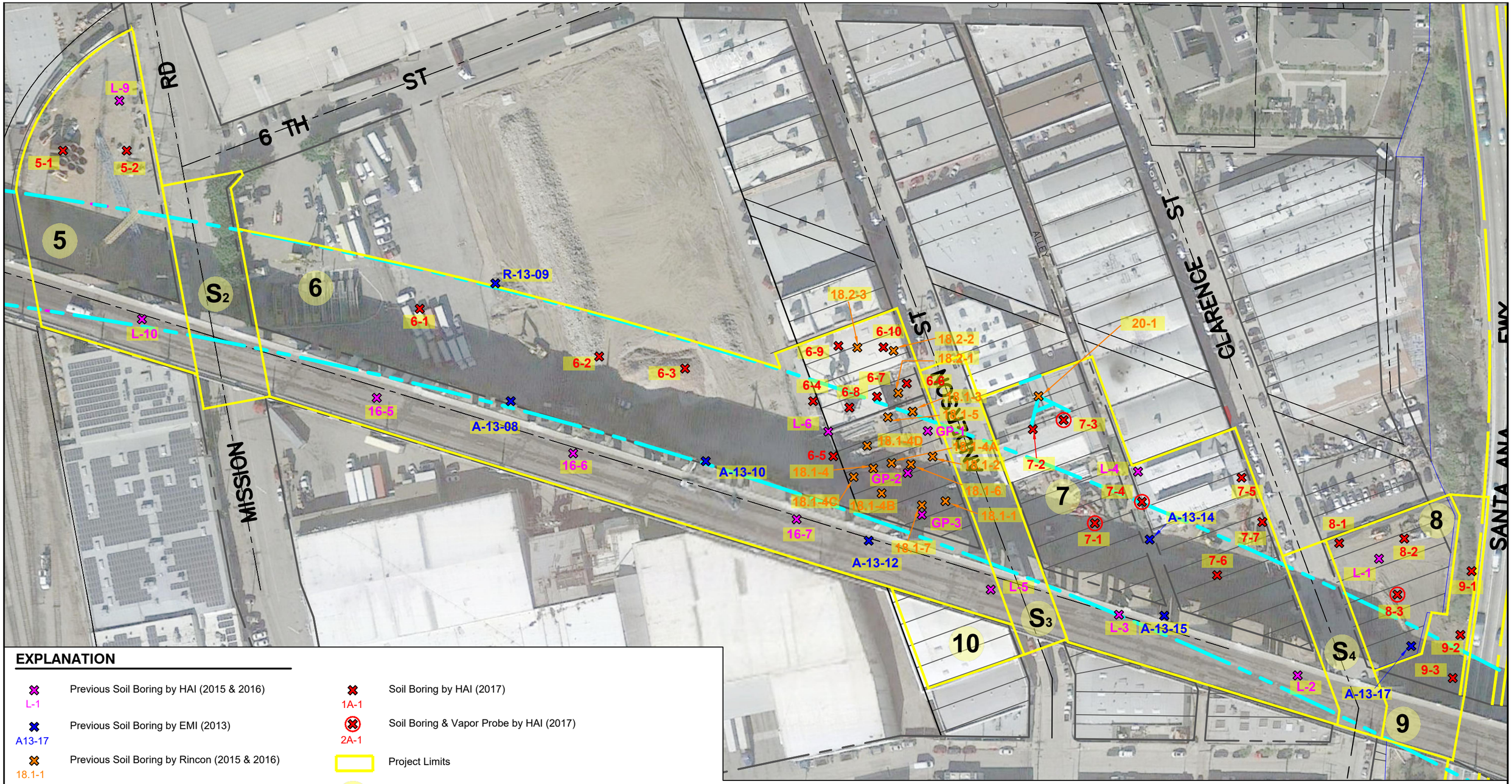

EXPLANATION

- L-1 — Previous Soil Boring by HAI (2015 & 2016)
- A13-17 — Previous Soil Boring by EMI (2013)
- 18.1-1 — Previous Soil Boring by Rincon (2015 & 2016)
- P22-VP12 — Previous Vapor Probe by HAI (2015 & 2016)
- P23-SV13 — Previous Vapor Probe by EMI (2014)
- P32-VMW1 — Previous Soil Boring & Vapor Probe by HAI (2016)
- 1A-1 — Soil Boring by HAI (2017)
- 2A-1 — Soil Boring & Vapor Probe by HAI (2017)
- Project Limits
- 1A — PARC Area Designation

0 100 200 FEET
APPROXIMATE SCALE

HUSHMAND ASSOCIATES, INC.
Geotechnical and Earthquake Engineers

SIXTH STREET VIADUCT PARC IMPROVEMENTS
Los Angeles, California
Project No. LAC-17-001

SOIL BORING LOCATIONS FROM ALL INVESTIGATIONS - EAST PARK

Figure **4b**

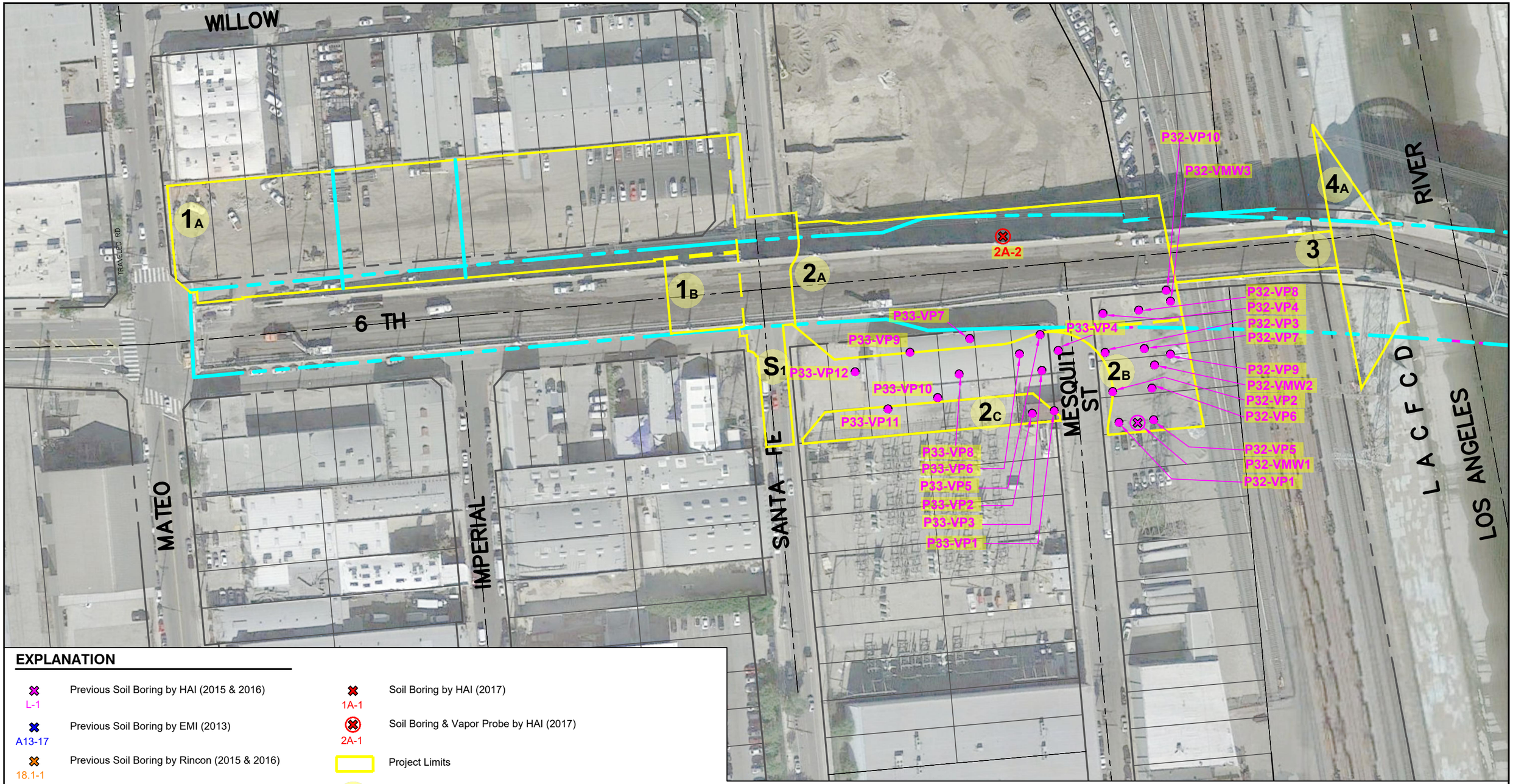

EXPLANATION

- L-1 — Previous Soil Boring by HAI (2015 & 2016)
- A13-17 — Previous Soil Boring by EMI (2013)
- 18.1-1 — Previous Soil Boring by Rincon (2015 & 2016)
- P22-VP12 — Previous Vapor Probe by HAI (2015 & 2016)
- P23-SV13 — Previous Vapor Probe by EMI (2014)
- P32-VMW1 — Previous Soil Boring & Vapor Probe by HAI (2016)
- 1A-1 — Soil Boring by HAI (2017)
- 2A-1 — Soil Boring & Vapor Probe by HAI (2017)
- Project Limits
- 1A — PARC Area Designation

0 100 200 FEET
APPROXIMATE SCALE

HUSHMAND ASSOCIATES, INC.
Geotechnical and Earthquake Engineers

SIXTH STREET VIADUCT PARC IMPROVEMENTS
Los Angeles, California
Project No. LAC-17-001

SOIL VAPOR PROBE LOCATIONS FROM ALL INVESTIGATIONS - WEST PARK

Figure **5a**

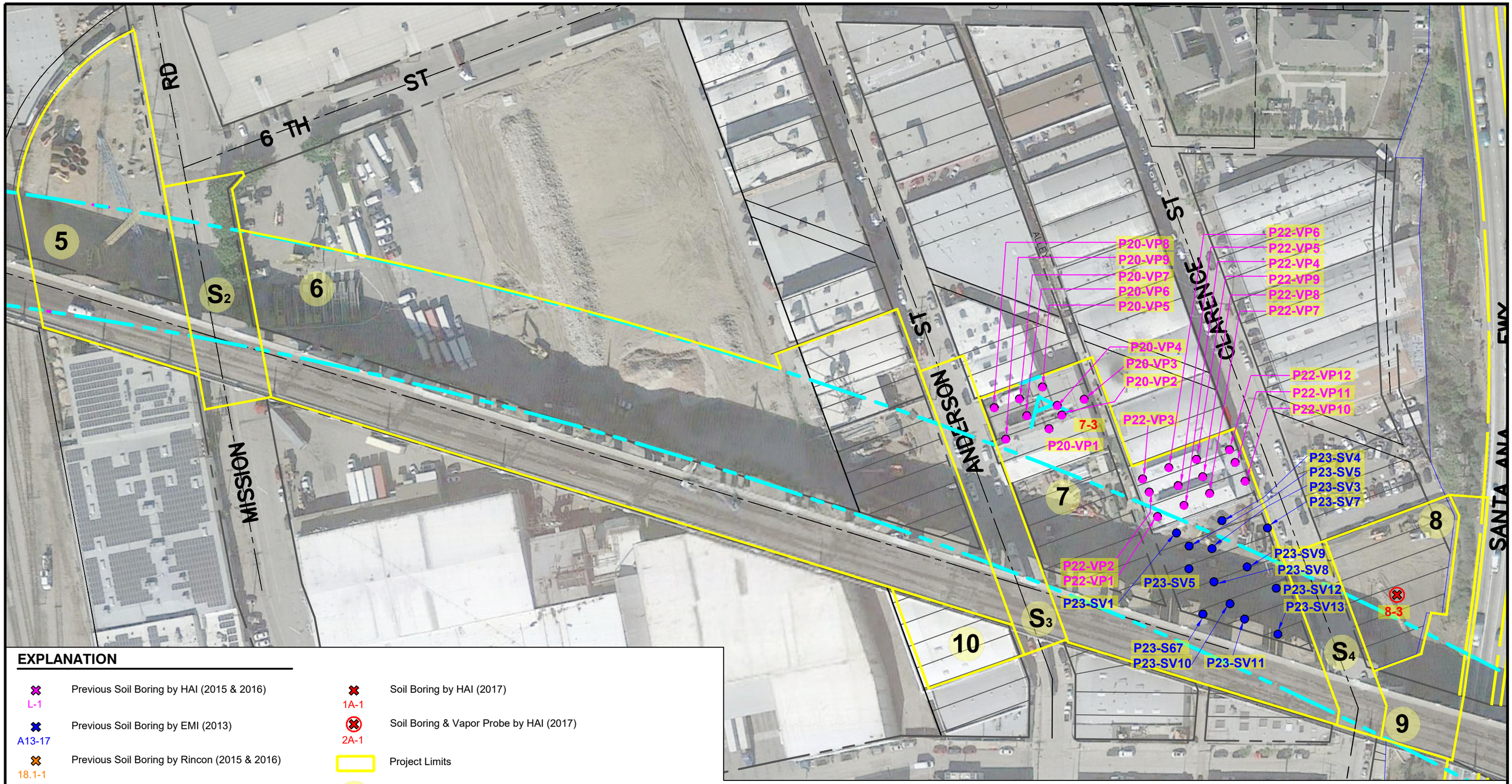

EXPLANATION

- L-1 — Previous Soil Boring by HAI (2015 & 2016)
- A13-17 — Previous Soil Boring by EMI (2013)
- 18.1-1 — Previous Soil Boring by Rincon (2015 & 2016)
- P22-VP12 — Previous Vapor Probe by HAI (2015 & 2016)
- P23-SV13 — Previous Vapor Probe by EMI (2014)
- P32-VMW1 — Previous Soil Boring & Vapor Probe by HAI (2016)
- 1A-1 — Soil Boring by HAI (2017)
- 2A-1 — Soil Boring & Vapor Probe by HAI (2017)
- Project Limits
- 1A — PARC Area Designation

0 100 200 FEET
APPROXIMATE SCALE

HUSHMAND ASSOCIATES, INC.
Geotechnical and Earthquake Engineers

SIXTH STREET VIADUCT PARC IMPROVEMENTS
Los Angeles, California
Project No. LAC-17-001

SOIL VAPOR PROBE LOCATIONS FROM ALL INVESTIGATIONS - EAST PARK

Figure **5b**



EXPLANATION

Met□□ne Z□ne

Met□□ne B□□er Z□ne

Pr□e□t Li□it□

0 100 200 FEET

APPROXIMATE SCALE

HUSHMAND ASSOCIATES, INC.
Geotechnical and Earthquake Engineers

SIXTH STREET VIADUCT PARC IMPROVEMENTS

□□□A□□□□□□□□□□□r□□

□r□□□□□□□□□A□□1□□□□1

METHANE & METHANE BUFFER ZONES - WEST PARK

F□□□r□

6a

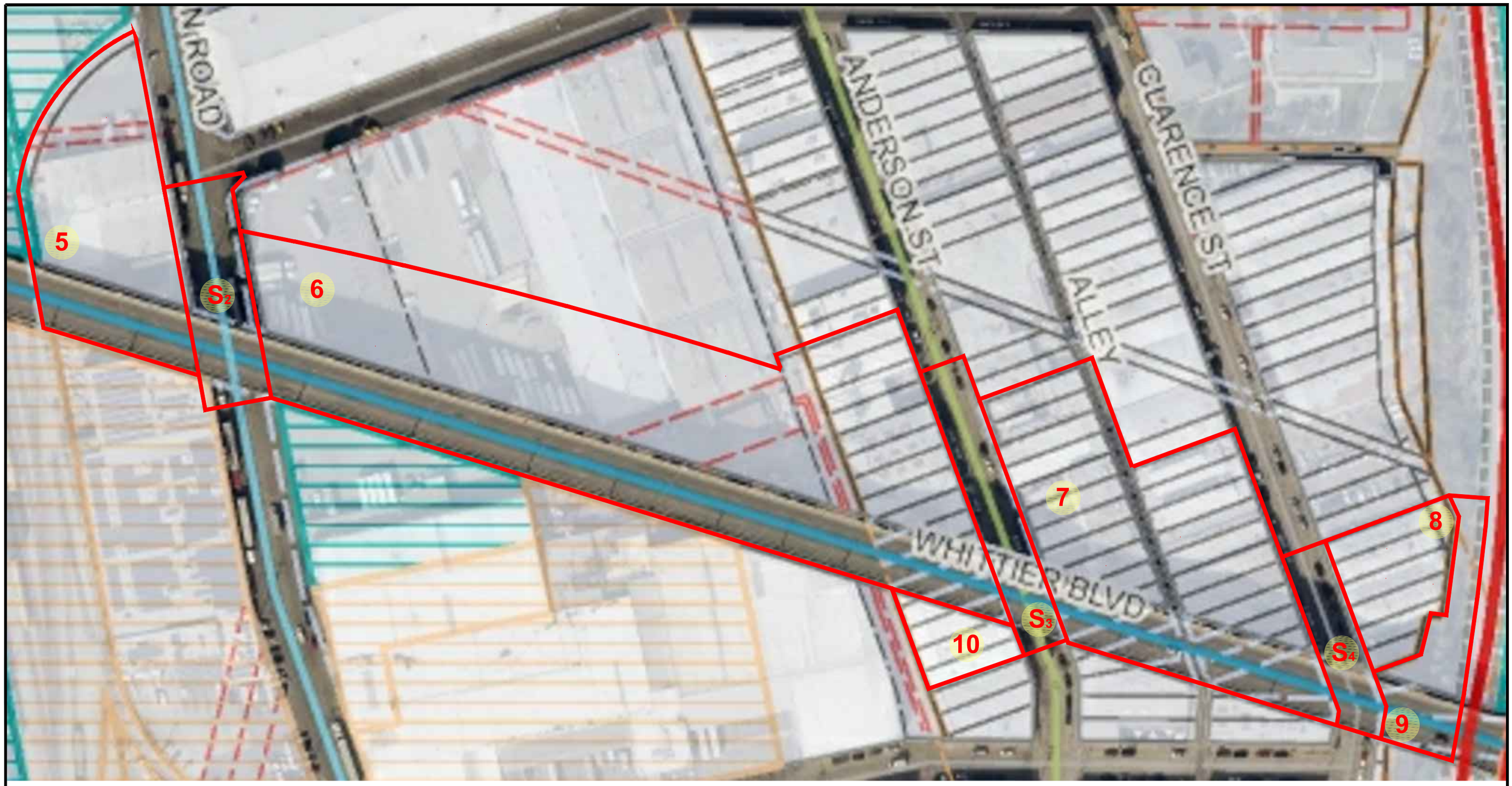

EXPLANATION

Met□□ne Z□ne

Met□□ne B□□er Z□ne

Pr□e□t Li□it□

0 100 200 FEET

APPROXIMATE SCALE

HUSHMAND ASSOCIATES, INC.
Geotechnical and Earthquake Engineers

SIXTH STREET VIADUCT PARC IMPROVEMENTS

□□□A□□□□□□□□□□□r□□

□r□□□□□ □□□A□□1□□□□1

METHANE & METHANE BUFFER ZONES - EAST PARK

F□□□r□

6b

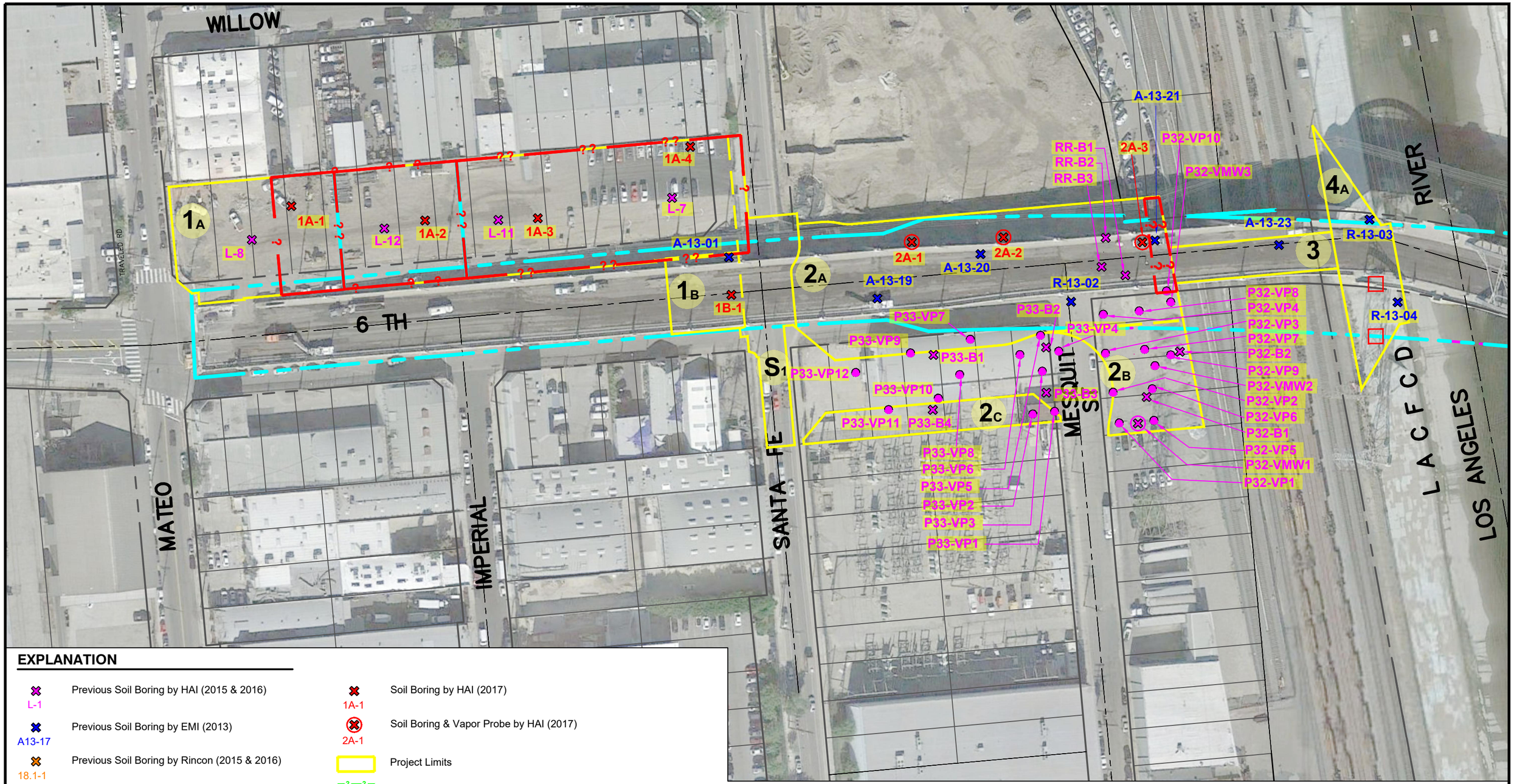

EXPLANATION

- L-1 — Previous Soil Boring by HAI (2015 & 2016)
- A13-17 — Previous Soil Boring by EMI (2013)
- 18.1-1 — Previous Soil Boring by Rincon (2015 & 2016)
- P22-VP12 — Previous Vapor Probe by HAI (2015 & 2016)
- P23-SV13 — Previous Vapor Probe by EMI (2014)
- P32-VMW1 — Previous Soil Boring & Vapor Probe by HAI (2016)
- 1A-1 — Soil Boring by HAI (2017)
- 2A-1 — Soil Boring & Vapor Probe by HAI (2017)
- Project Limits
- Category 1a: RCRA Hazardous Zone
- Category 2a: Non-RCRA Hazardous Zone
- Category 2b: Soil Gas & Non-RCRA Hazardous Zone
- Category 3: Soil Gas Only Zone
- Aerially Deposited Lead Zone
- 1A — PARC Area Designation

0 100 200 FEET
APPROXIMATE SCALE

HUSHMAND ASSOCIATES, INC.
Geotechnical and Earthquake Engineers

SIXTH STREET VIADUCT PARC IMPROVEMENTS
Los Angeles, California

Project No. LAC-17-001

CONTAMINATION CATEGORIES WITH SOIL BORINGS AND VAPOR PROBES - WEST PARK

Figure **7a**

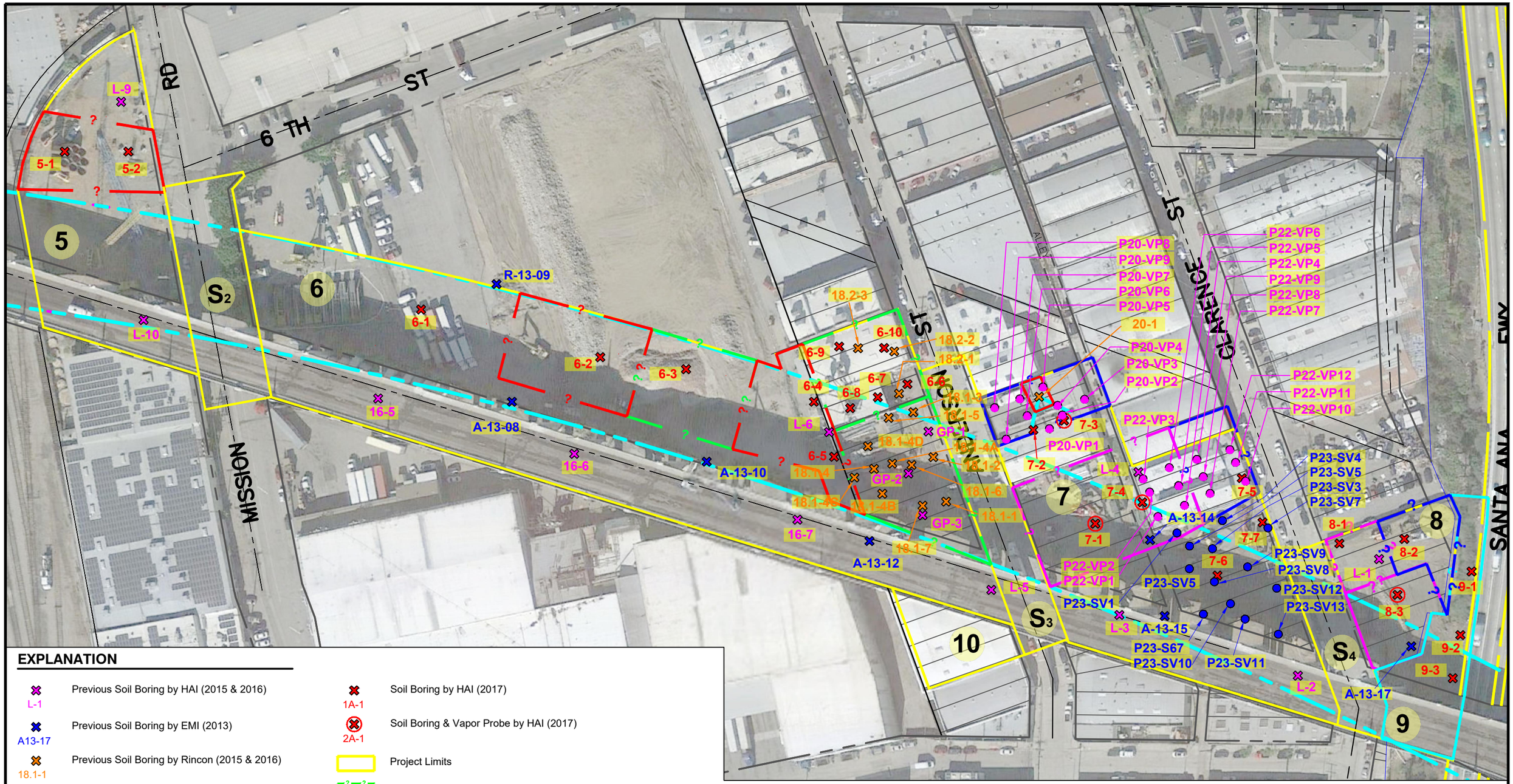

EXPLANATION

- L-1 — Previous Soil Boring by HAI (2015 & 2016)
- A13-17 — Previous Soil Boring by EMI (2013)
- 18.1-1 — Previous Soil Boring by Rincon (2015 & 2016)
- P22-VP12 — Previous Vapor Probe by HAI (2015 & 2016)
- P23-SV13 — Previous Vapor Probe by EMI (2014)
- P32-VMW1 — Previous Soil Boring & Vapor Probe by HAI (2016)
- 1A-1 — Soil Boring by HAI (2017)
- 2A-1 — Soil Boring & Vapor Probe by HAI (2017)
- Project Limits
- Category 1a: RCRA Hazardous Zone
- Category 2a: Non-RCRA Hazardous Zone
- Category 2b: Soil Gas & Non-RCRA Hazardous Zone
- Category 3: Soil Gas Only Zone
- Aerially Deposited Lead Zone
- 1A — PARC Area Designation

0 100 200 FEET
APPROXIMATE SCALE

HUSHMAND ASSOCIATES, INC.
Geotechnical and Earthquake Engineers

SIXTH STREET VIADUCT PARC IMPROVEMENTS
Los Angeles, California
Project No. LAC-17-001

CONTAMINATION CATEGORIES WITH SOIL BORINGS AND VAPOR PROBES - EAST PARK

Figure **7b**

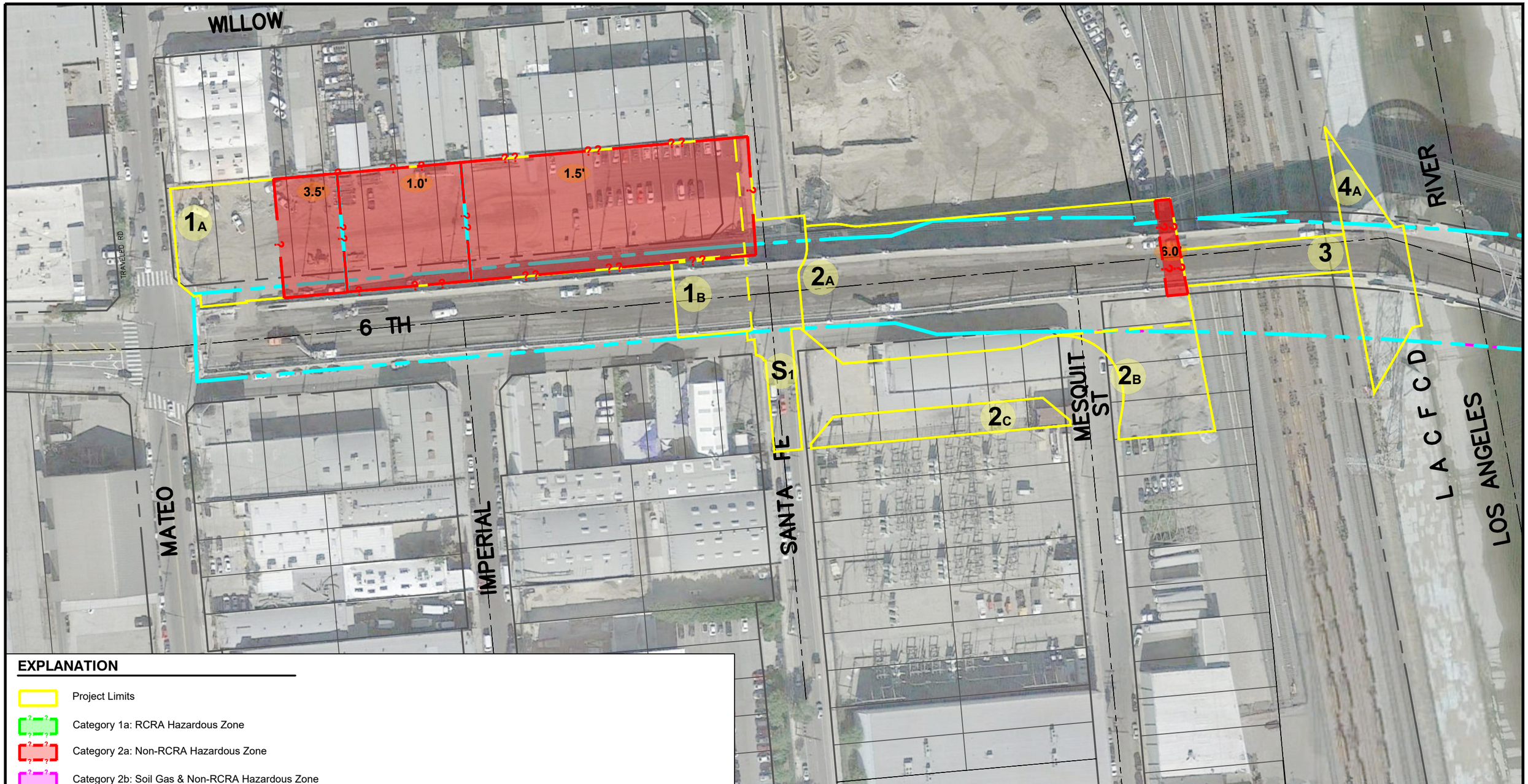

EXPLANATION

- Project Limits
- Category 1a: RCRA Hazardous Zone
- Category 2a: Non-RCRA Hazardous Zone
- Category 2b: Soil Gas & Non-RCRA Hazardous Zone
- Category 3: Soil Gas Only Zone
- Aerially Deposited Lead Zone
- 1A PARC Area Designation
- 0.75' Estimated Soil Removal Depth

0 100 200 FEET
APPROXIMATE SCALE

HUSHMAND ASSOCIATES, INC.
Geotechnical and Earthquake Engineers

SIXTH STREET VIADUCT PARC IMPROVEMENTS
Los Angeles, California
Project No. LAC-17-001

AREAS OF CONCERN WITH CONTAMINATION - WEST PARK

Figure **8a**



EXPLANATION

- Project Limits
- Category 1a: RCRA Hazardous Zone
- Category 2a: Non-RCRA Hazardous Zone
- Category 2b: Soil Gas & Non-RCRA Hazardous Zone
- Category 3: Soil Gas Only Zone
- Aerially Deposited Lead Zone
- 1A PARC Area Designation
- 0.75' Estimated Soil Removal Depth

0 100 200 FEET
APPROXIMATE SCALE

HUSHMAND ASSOCIATES, INC.
Geotechnical and Earthquake Engineers

SIXTH STREET VIADUCT PARC IMPROVEMENTS
Los Angeles, California
Project No. LAC-17-001

AREAS OF CONCERN WITH CONTAMINATION - EAST PARK

Figure **8b**

APPENDIX A
FIELD INFORMATION

SITE SAFETY MEETING LOGS

DRAFT

SITE-SPECIFIC HEALTH & SAFETY ACKNOWLEDGEMENT FORM

I have read the Site-Specific Health & Safety Plan and understand the hazards, precautions required, and responsibilities involved in working at this site.

NAME	SIGNATURE	DATE
Dan Terres		5-15-17
Sean Burford		5-15-17
Rudy Betancourt		5-15-17
Garrett Metzger		5-15-17

DRAFT

Job No. LAC17-001

Boring(s) No. multiple

Page 1 of 1

DAILY MEETING LOG

Project Name: 6th St. Bridge Date: 5-15-17

Field Representative(s): Don Terres, Sean

Work Site Location: 6th st Bridge Sections 1-9

Physical Hazards: related to Geoprobe operations, Trip Hazards

Chemical Hazards: Low concentration VOCs, lead & heavy metal concentrations, TpH

Safety Equipment on Site:

Personal Protection Levels and Specific Equipment: Boots, glasses, Hard Hat, Safety Vests.

Nearest Medical Facility: USC medical Center

First Aid Location: multiple by Stanstc.

Fire Suppression Device: on Rig

Spill Kit: on Rig

Emergency Phone Numbers: 911

Emergency Evacuation Route: Hill 4th to state street Left To USC Med.

The above hazards and controls have been adequately explained to me.

Name	Company	Signature
Rudy Betancourt	KTE	
Garrett Metzger	KTE	
Sean Burford	HAI	

Site Safety Officer: Don Torres

Project Manager: Naresh

Checked By:

Date: 5-15-17

DRAFT

Job No. 17-001 LAC

Boring(s) No. Multiple

Page 1 of 1

DAILY MEETING LOG

Project Name: 6th st Bridge Date: 5-16-17

Field Representative(s): Dan Terres

Work Site Location: 6th st. Bridge

Physical Hazards: Drill Rig, Trip,

Chemical Hazards: VOC's low level, Lead & metals

Safety Equipment on Site:

Personal Protection Levels and Specific Equipment: Boots, Hard Hat, glasses, gloves Safety Vests

Nearest Medical Facility: USC Med. Center

First Aid Location: Multiple - Drill Rig - Car.

Fire Suppression Device: Drill Rig.

Spill Kit:

Emergency Phone Numbers: 911

Emergency Evacuation Route: 7th or 4th, to Soto. Multiply

The above hazards and controls have been adequately explained to me.

Name	Company	Signature
Rudy Betancourt	KTE	
Sean Burford	HAI	
Garrett Metzger	KTE	

Site Safety Officer: Dan Terres

Project Manager:

Checked By:

Date:

FIELD MONITORING LOGS

Project Name: City of Los Angeles - Sixth Street PARC Improvements

Project No.: LAC-17-001

Logged by: Don Terres & Sean Burford

Equipment Used: PID

Boring ID	Sample ID	Sample Depth (ft. below grade)	Date	Time	VOC (ppm)	Notes
1A-1	1A-1	0.5	05/15/2017	7:28 AM	0.0	
	1A-1-1.0	1.0	05/15/2017	7:28 AM	0.0	
	1A-1-3.0	3.0	05/15/2017	7:32 AM	0.0	
	1A-1-5.0	5.0	05/15/2017	7:32 AM	0.0	
1A-2	1A-2-0.5	0.5	05/15/2017	7:47 AM	0.0	
	1A-2-1.0	1.0	05/15/2017	7:47 AM	0.0	
	1A-2-3.0	3.0	05/15/2017	7:52 AM	0.0	
	1A-2-5.0	5.0	05/15/2017	7:52 AM	0.0	
1A-3	1A-3-0.5	0.5	05/15/2017	8:00 AM	0.0	
	1A-3-1.0	1.0	05/15/2017	8:00 AM	0.0	
	1A-3-3.0	3.0	05/15/2017	8:02 AM	0.0	
	1A-3-5.0	5.0	05/15/2017	8:02 AM	0.0	
1A-4	1A-4-0.5	0.5	05/15/2017	8:15 AM	0.0	
	1A-4-1.0	1.0	05/15/2017	8:15 AM	0.0	
	1A-4-3.0	3.0	05/15/2017	8:19 AM	0.0	
	1A-4-5.0	5.0	05/15/2017	8:19 AM	0.0	
1B-1	1B-1-0.5	0.5	05/15/2017	8:32 AM	0.0	
	1B-1-1.0	1.0	05/15/2017	8:32 AM	0.0	
	1B-1-3.0	3.0	05/15/2017	8:37 AM	0.0	
	1B-1-5.0	5.0	05/15/2017	8:37 AM	0.0	
2A-1	2A-1-0.5	0.5	05/15/2017	2:08 PM	0.0	
	2A-1-1.0	1.0	05/15/2017	2:08 PM	0.3	
	2A-1-3.0	3.0	05/15/2017	2:13 PM	0.1	
	2A-1-5.0	5.0	05/15/2017	2:13 PM	0.0	
2A-2	2A-2-0.5	0.5	05/15/2017	2:34 PM	0.2	
	2A-2-1.0	1.0	05/15/2017	2:34 PM	0.8	
	2A-2-3.0	3.0	05/15/2017	2:38 PM	0.1	
	2A-2-5.0	5.0	05/15/2017	2:38 PM	0.1	
5-1	5-1-0.5	0.5	05/15/2017	9:47 AM	0.0	
	5-1-1.0	1.0	05/15/2017	9:47 AM	0.0	
	5-1-2.0	2.0	05/15/2017	9:47 AM	0.0	
	5-1-3.0	3.0	05/15/2017	9:47 AM	0.0	
5-2	5-2-0.5	0.5	05/15/2017	9:55 AM	0.0	
	5-2-1.0	1.0	05/15/2017	9:55 AM	0.0	
	5-2-2.0	2.0	05/15/2017	9:55 AM	0.0	
	5-2-3.0	3.0	05/15/2017	9:55 AM	0.0	
6-1	6-1-0.5	0.5	05/15/2017	10:07 AM	0.0	
	6-1-1.0	1.0	05/15/2017	10:07 AM	0.0	
	6-1-3.0	3.0	05/15/2017	10:25 AM	0.0	
	6-1-5.0	5.0	05/15/2017	10:25 AM	0.0	
6-2	6-2-0.5	0.5	05/16/2017	7:17 AM	0.0	
	6-2-1.0	1.0	05/16/2017	7:17 AM	0.0	
	6-2-3.0	3.0	05/16/2017	7:19 AM	0.0	
	6-2-5.0	5.0	05/16/2017	7:19 AM	0.0	

Project Name: City of Los Angeles - Sixth Street PARC Improvements

Project No.: LAC-17-001

Logged by: Don Terres & Sean Burford

Equipment Used: PID

Boring ID	Sample ID	Sample Depth (ft. below grade)	Date	Time	VOC (ppm)	Notes
6-3	6-3-0.5	0.5	05/15/2017	10:35 AM	0.0	
	6-3-1.0	1.0	05/15/2017	10:35 AM	0.0	
	6-3-3.0	3.0	05/15/2017	10:38 AM	0.0	
	6-3-5.0	5.0	05/15/2017	10:38 AM	0.0	
6-4	6-4-0.5	0.5	05/15/2017	12:07 PM	0.0	
	6-4-1.0	1.0	05/15/2017	12:07 PM	0.0	
	6-4-3.0	3.0	05/15/2017	12:24 PM	0.0	
	6-4-5.0	5.0	05/15/2017	12:24 PM	0.0	
6-5	6-5-0.5	0.5	05/15/2017	12:30 PM	0.0	
	6-5-1.0	1.0	05/15/2017	12:30 PM	0.0	
	6-5-3.0	3.0	05/15/2017	12:33 PM	0.0	
	6-5-5.0	5.0	05/15/2017	12:33 PM	0.0	
6-6	6-6-1.0	1.0	05/15/2017	11:12 AM	0.0	
	6-6-3.0	3.0	05/15/2017	11:12 AM	0.0	
	6-6-5.0	5.0	05/15/2017	11:12 AM	0.0	
	6-6-7.5	7.5	05/15/2017	11:12 AM	0.0	
6-7	6-7-1.0	1.0	05/15/2017	11:19 AM	0.0	
	6-7-3.0	3.0	05/15/2017	11:19 AM	0.0	
	6-7-5.0	5.0	05/15/2017	11:22 AM	0.0	
	6-7-7.5	7.5	05/15/2017	11:22 AM	0.0	
6-8	6-8-1.0	1.0	05/15/2017	11:29 AM	0.0	
	6-8-3.0	3.0	05/15/2017	11:29 AM	0.0	
	6-8-5.0	5.0	05/15/2017	11:33 AM	0.0	
	6-8-7.5	7.5	05/15/2017	11:33 AM	0.0	
6-9	6-9-1.0	1.0	05/15/2017	10:58 AM	0.0	
	6-9-3.0	3.0	05/15/2017	10:58 AM	0.0	
	6-9-5.0	5.0	05/15/2017	11:00 AM	0.0	
	6-9-7.5	7.5	05/15/2017	11:00 AM	0.0	
6-10	6-10-1.0	1.0	05/15/2017	10:48 AM	0.0	
	6-10-3.0	3.0	05/15/2017	10:48 AM	0.0	
	6-10-5.0	5.0	05/15/2017	10:52 AM	0.0	
	6-10-7.5	7.5	05/15/2017	10:52 AM	0.0	
7-1	7-1-0.5	0.5	05/16/2017	7:42 AM	0.0	
	7-1-1.0	1.0	05/16/2017	7:42 AM	0.0	Could not obtain soil samples at 3 ft. bgs and below due to hard soil conditions. Tried three times to sample but unsuccessful.
7-2	7-2-0.5	0.5	05/15/2017	1:45 PM	0.0	
	7-2-1.0	1.0	05/15/2017	1:45 PM	0.0	
	7-2-3.0	3.0	05/15/2017	1:48 PM	0.0	
	7-2-5.0	5.0	05/15/2017	1:48 PM	0.0	
7-3	7-3-0.5	0.5	05/15/2017	1:35 PM	0.0	
	7-3-1.0	1.0	05/15/2017	1:35 PM	0.0	
	7-3-3.0	3.0	05/15/2017	1:38 PM	0.0	
	7-3-5.0	5.0	05/15/2017	1:38 PM	0.0	

Project Name: City of Los Angeles - Sixth Street PARC Improvements

Project No.: LAC-17-001

Logged by: Don Terres & Sean Burford

Equipment Used: PID

Boring ID	Sample ID	Sample Depth (ft. below grade)	Date	Time	VOC (ppm)	Notes
7-4	7-4-0.5	0.5	05/15/2017	1:13 PM	0.0	
	7-4-1.0	1.0	05/15/2017	1:13 PM	0.0	
	7-4-3.0	3.0	05/15/2017	1:15 PM	0.0	
	7-4-5.0	5.0	05/15/2017	1:15 PM	0.0	
7-5	7-5-0.5	0.5	05/16/2017	8:11 AM	0.0	
	7-5-1.0	1.0	05/16/2017	8:11 AM	0.0	
	7-5-3.0	3.0	05/16/2017	8:13 AM	0.0	
	7-5-5.0	5.0	05/16/2017	8:13 AM	0.0	
7-6	7-6-0.5	0.5	05/16/2017	8:34 AM	0.1	
	7-6-1.0	1.0	05/16/2017	8:34 AM	0.1	
	7-6-3.0	3.0	05/16/2017	8:36 AM	0.0	
	7-6-5.0	5.0	05/16/2017	8:36 AM	0.1	
7-7	7-7-0.5	0.5	05/16/2017	8:23 AM	0.0	
	7-7-1.0	1.0	05/16/2017	8:23 AM	0.0	
	7-7-3.0	3.0	05/16/2017	8:25 AM	0.1	
	7-7-5.0	5.0	05/16/2017	8:25 AM	0.1	
8-1	8-1-0.5	0.5	05/16/2017	9:17 AM	0.1	
	8-1-1.0	1.0	05/16/2017	9:17 AM	0.1	
	8-1-3.0	3.0	05/16/2017	9:20 AM	0.1	
	8-1-5.0	5.0	05/16/2017	9:20 AM	0.0	
8-2	8-2-0.5	0.5	05/16/2017	9:08 AM	0.0	
	8-2-1.0	1.0	05/16/2017	9:08 AM	0.0	
	8-2-3.0	3.0	05/16/2017	9:11 AM	0.0	
	8-2-5.0	5.0	05/16/2017	9:11 AM	0.0	
8-3	8-3-0.5	0.5	05/16/2017	8:52 AM	0.0	
	8-3-1.0	1.0	05/16/2017	8:52 AM	0.1	
	8-3-3.0	3.0	05/16/2017	8:55 AM	0.0	
	8-3-5.0	5.0	05/16/2017	8:55 AM	0.1	
9-1	9-1-0.5	0.5	05/17/2017	6:57 AM	0.0	
	9-1-1.0	1.0	05/17/2017	6:59 AM	0.0	
	9-1-3.0	3.0	05/17/2017	7:06 AM	0.0	
	9-1-5.0	5.0	05/17/2017	7:10 AM	0.0	
9-2	9-2-0.5	0.5	05/17/2017	7:25 AM	0.0	
	9-2-1.0	1.0	05/17/2017	7:28 AM	0.0	Refusal at 1.2 feet due to a concrete slab extending several foot.
9-3	9-3-0.5	0.5	05/17/2017	7:33 AM	0.0	
	9-3-1.0	1.0	05/17/2017	7:35 AM	0.0	
	9-3-3.0	3.0	05/17/2017	7:45 AM	0.0	
	9-3-5.0	5.0	05/17/2017	7:55 AM	0.0	

HUSHMAND ASSOCIATES, INC.
Geotechnical and Earthquake Engineers

CHAIN OF CUSTODY FORMS

ADVANCED TECHNOLOGY LABORATORIES

3275 Walnut Ave., Signal Hill, CA 90755
Tel: (562) 989-4045 • Fax: (562) 989-4040

CHAIN OF CUSTODY RECORD

Page 1 of 15

Instruction: Complete all shaded areas.

For Laboratory Use Only — ATLCOC Ver. 20170715

Method of Transport	Sample Conditions Upon Receipt					
	Condition	Y	N	Condition	Y	N
☑ Client ☐ ATL ☐ FedEx ☐ OnTrac ☐ GSO ☐ Other:	1. CHILLED	☐	☐	5. # OF SAMPLES MATCH COC	☐	☐
	2. HEADSPACE (VOA)	☐	☐	6. PRESERVED	☐	☑
	3. CONTAINER INTACT	☑	☐	7. COOLER TEMP, deg C	6.2, 5.1	
	4. SEALED	☐	☐			

CUSTOMER

Company: Hushmand & Assoc HAI
Address: 250 GODDARD
City: IRVINE State: CA Zip: 92618
Tel: (949) 777-1266 Fax: (949) 777-1276

SEND REPORT TO:
Attn: Naresh Bellana Email: naresh@haieng.com
Company: HAI
Address:
City: State: Zip:

SEND INVOICE TO: ☐ same as SEND REPORT TO
Attn: SAME Email:
Company:
Address:
City: State: Zip:

PROJECT SAMPLES

Project Name: 6th St. Bridge
Project No.: LAC-17-001
Sampler: DAT
Quote No: E17ES1
PO #:
Special Instructions/Comments:

ITEM	Lab No.	Sample Description: Sample ID / Location	Date	Time	8260 / 624 (Volatiles)	8015(GRO)	8015(DRO)	8270(Semi-volatiles)	8081(Organochlorine Pesticides)	8082(PCBs)	6010 / 7000(Title 22 Metals)	TO-15	SOIL / SEDIMENT / SLUDGE	SOLIDS / WIPE/ FILTER	WATER - DRINKING / GROUND	WATER - STORM / WASTE	AQUEOUS / LAYERED - OIL	TAT	Container: #	Container: Type	Container: Material	Container: Preservative	REMARKS
1	1703036-1	1A-1 - 0.5	5-15	7:28							X							5	1	1	2	N/A	
2	-2	1A-1 - 1.0		7:28							X								1	1			
3	-3	1A-1 - 3.0		7:32							X								1	1			
4	-4	1A-1 - 5.0		7:32							X								1	1			
5	-5	1A-2 - 0.5		7:47							X								1	1			
6	-6	1A-2 - 1.0		7:47							X								1	1			
7	-7	1A-2 - 3.0		7:52							X								1	1			
8	-8	1A-2 - 5.0		7:52							X								1	1			
9																							
10																							

QA/QC: ☐ Routine ☐ Caltrans ☐ Legal ☐ RWQCB ☐ Level IV

TERMS

1. Sample receiving hours: 7:30 AM to 7:30 PM Monday - Friday, Saturday 8:00 AM to 12:00 PM.
2. Samples Submitted AFTER 3:00 PM, are considered received the following Business day at 8:00 AM.
3. The following turnaround time conditions apply.
   TAT = 0 : 100% Surcharge SAME BUSINESS DAY if received by 9:00 AM
   TAT = 1 : 100% Surcharge NEXT BUSINESS DAY (COB 5:00 PM)
   TAT = 2 : 50% Surcharge 2ND BUSINESS DAY (COB 5:00 PM)
   TAT = 3 : 30% Surcharge 3RD BUSINESS DAY (COB 5:00 PM)
   TAT = 4 : 20% Surcharge 4TH BUSINESS DAY (COB 5:00 PM)
   TAT = 5 : NO SURCHARGE 5th BUSINESS DAY (COB 5:00 PM)
4. Weekend, holiday, after-hours work - ask for quote.
5. Subcontract TAT is 10 - 15 business days. Projects requiring shorter TATs will incur a surcharge respective to the subcontract lab - - - ask for quote.
6. Liquid and solid samples will be disposed of after 45 calendar days from receipt of samples, un-preserved samples will be disposed of after 14 calendar days after receipt of samples.
7. Electronic records maintained for five (5) years from report date.
8. Hard copy reports will be disposed of after 45 calendar days from report date.
9. Storage and Report Fees:
   - Liquid & solid samples: Complimentary storage for forty-five (45) calendar days from receipt of samples, $2/sample/month if extended storage or hold is requested.
   - Air samples: Complimentary storage for ten (10) calendar days from receipt of samples, $20/ sample/week if extended storage is requested.
   - Hard copy and regenerated reports/EDDs: $17.50 per hard copy report requested, $50.00 per regenerated/reformatted report, $35 per reprocessed EDD.
10. Rush ECLP/STLC samples: add 2 days to analysis TAT for extraction procedure.
11. Unanalyzed samples will incur a disposal fee of $2 per sample.

As the authorized agent of the company above, I hereby purchase laboratory services from ATL as shown above and hereby guarantee payment as quoted.

Submitter Print Name _____ Signature _____

CUSTODY

Relinquished by: (Signature and Printed Name)	Date:	Time:	Received by: (Signature and Printed Name)	Date:	Time:
Don Terrs	5-16-17	1:57		5/16/17	1357

ADVANCED TECHNOLOGY LABORATORIES

3275 Walnut Ave., Signal Hill, CA 90755
Tel: (562) 989-4045 • Fax: (562) 989-4040

CHAIN OF CUSTODY RECORD

Page 2 of 15

Instruction: Complete all shaded areas.

For Laboratory Use Only				ATL COC Ver: 20130715
Method of Transport		Sample Conditions Upon Receipt		
		Condition	Y	N	Condition	Y	N
☐ Client ☐ ATL		1. CHILLED	☐	☐	5. # OF SAMPLES MATCH COC	☐	☐
☐ Fedex ☐ On Trac		2. HEADSPACE (VOA)	☐	☐	6. PRESERVED	☐	☐
☐ GSD		3. CONTAINER INTACT	☐	☐	7. COOLER TEMP. deg C:		
☐ Other		4. SEALED	☐	☐			

CUSTOMER

Company:	Address:			Tel:
	City:	State:	Zip:	Fax:

SEND REPORT TO:	SEND INVOICE TO: ☐ same as SEND REPORT TO
Attn: Email:	Attn: Email:
Company:	Company:
Address:	Address:
City: State: Zip:	City: State: Zip:

PROJECT SAMPLES

Project Name:	Quote No:	Special Instructions/Comments:
Project No.:	PO #:	
Sampler:		

Encircle or Write Requested Analysis: 8260 / 624 (Volatiles); 8015(GRO); 8015(DRO); 8270(Semi-volatiles); 8081(Organochlorine Pesticides); 8082(PCBs); 6010 / 7000(Title 22 Metals); TO-15

Encircle Sample Matrix: SOIL / SEDIMENT / SLUDGE; SOLIDS / WIPE / FILTER; WATER - DRINKING / GROUND; WATER - STORM / WASTE; AQUEOUS / LAYERED - OIL

Container: TAT; # ; Type: 1=Tedlar, 2=VOA, 3=Liter, 4=mL, 5=Jar, 6=Encore, 7=Cassette; Material: 1=Glass, 2=Plastic, 3=Metal; Preservative: 1=HCl, 2=HNO3, 3=H2SO4, 4=NaOH, 5=Zn(Ac)2, 6=NaOH+ZnAc, 7=MeOH, 8=NaHSO4, 9=DI; QA/QC: ☐ Routine ☐ Caltrans ☐ Legal ☐ RWQCB ☐ Level IV

ITEM	Lab No.	Sample Description: Sample ID / Location	Date	Time	8260	8015(GRO)	8015(DRO)	8270	8081	8082	6010	TO-15	SOIL	SOLIDS	WATER-DRINKING	WATER-STORM	AQUEOUS	TAT	#	Type	Material	Preservative	REMARKS
1	1702036-8	1A-3 - 0.5	5-15	8:00							X							5	1	1	2	4	
2	-9	1A-3 - 1.0		8:00							X												
3	-10	1A-3 - 3.0		8:02							X												
4	-11	1A-3 - 5.0		8:02							X												
5																							
6	-13	1A-4 - 0.5		8:15							X												
7	-14	1A-4 - 1.0		8:15							X												
8	-15	1A-4 - 3.0		8:19							X												
9	-16	1A-4 - 5.0		8:19							X												
10																							

TERMS

1. Sample receiving hours: 7:30 AM to 7:30 PM Monday - Friday; Saturday 8:00 AM to 12:00 PM
2. Samples Submitted AFTER 3:00 PM, are considered received the following Business day at 8:00 AM
3. The following turnaround time conditions apply:
   - TAT = 0 : 300% Surcharge SAME BUSINESS DAY if received by 9:00 AM
   - TAT = 1 : 100% Surcharge NEXT BUSINESS DAY (COB 5:00 PM)
   - TAT = 2 : 50% Surcharge 2ND BUSINESS DAY (COB 5:00 PM)
   - TAT = 3 : 30% Surcharge 3RD BUSINESS DAY (COB 5:00 PM)
   - TAT = 4 : 20% Surcharge 4TH BUSINESS DAY (COB 5:00 PM)
   - TAT = 5 : NO SURCHARGE 5th BUSINESS DAY (COB 5:00 PM)
4. Weekend, holiday after hours work - ask for quote.
5. Subcontract TAT is 10 - 15 business days. Projects requiring shorter TATs will incur a surcharge respective to the subcontract lab — ask for quote.
6. Liquid and solid samples will be disposed of after 45 calendar days from receipt of samples, air samples will be disposed of after 14 calendar days after receipt of samples.
7. Electronic records maintained for five (5) years from report date.
8. Hard copy reports will be disposed of after 45 calendar days from report date.
9. Storage and Report Fees:
   - Liquid & solid samples: Complimentary storage for forty-five (45) calendar days from receipt of samples; $2/sample/month if extended storage or hold is requested.
   - Air samples: Complimentary storage for ten (10) calendar days from receipt of samples; $20/ sample/week if extended storage is requested.
   - Hard copy and regenerated reports/EDDs: $42.50 per hard copy report requested; $50.00 per regenerated/reformatted report; $35 per reprocessed EDD.
10. Rush PCB/PLC samples: add 2 days to analysis TAT for extraction procedure.
11. Unpreserved samples will incur a disposal fee of $7 per sample.

As the authorized agent of the company above, I hereby purchase laboratory services from ATL as shown above and hereby guarantee payment as quoted.

Submitter Print Name _____ Signature _____

CUSTODY

Relinquished by: (Signature and Printed Name)	Date:	Time:	Received by: (Signature and Printed Name)	Date:	Time:
Dan Dow Tenes	5-16-17	1:57		5/16/17	1357
Relinquished by: (Signature and Printed Name)	Date:	Time:	Received by: (Signature and Printed Name)	Date:	Time:
Relinquished by: (Signature and Printed Name)	Date:	Time:	Received by: (Signature and Printed Name)	Date:	Time:

ADVANCED TECHNOLOGY LABORATORIES

3275 Walnut Ave., Signal Hill, CA 90755
Tel: (562) 989-4045 • Fax: (562) 989-4040

CHAIN OF CUSTODY RECORD

Page 3 of 15

Instruction: Complete all shaded areas.

For Laboratory Use Only — ATLEDC Ver: 20150715

Method of Transport		Sample Conditions Upon Receipt					
		Condition	Y	N	Condition	Y	N
☑ Client	☐ ATL	1. CHILLED	☐	☐	5. # OF SAMPLES MATCH COC	☐	☐
☐ Fedex	☐ Dietrac	2. HEADSPACE (VOA)	☐	☐	6. PRESERVED	☐	☐
☐ GSO		3. CONTAINER INTACT	☐	☐	7. COOLER TEMP, deg C:		
☐ Other:		4. SEALED	☐	☐			

CUSTOMER

Company:
Address:
Tel:
City:
State:
Zip:
Fax:

SEND REPORT TO:
Attn:
Email:
Company:
Address:
City:
State:
Zip:

SEND INVOICE TO: ☐ same as SEND REPORT TO
Attn:
Email:
Company:
Address:
City:
State:
Zip:

PROJECT SAMPLES

Project Name:
Project No.:
Sampler:
Quote No:
PO #:
Special Instructions/Comments:

Encircle or Write Requested Analysis

Encircle Sample Matrix

QA/QC: ☐ Routine ☐ Caltrans ☐ Legal ☐ RWQCB ☐ Level IV

ITEM	Lab No.	Sample ID / Location	Date	Time	8260 / 624 (Volatiles)	8015(GRO)	8015(DRO)	8270(Semi-volatiles)	[illegible]	[illegible]	6010 / 7000(Title 22 Metals)	TO-15	HERBICIDES	8081 (PESTICIDES)	8082 (PCBs)	SOIL / SEDIMENT / SLUDGE	SOLIDS / WIPE / FILTER	WATER - DRINKING / GROUND	WATER - STORM / WASTE	AQUEOUS / LAYERED + OIL	TAT	Container: #	Container: Type	Container: Material	Preservative	REMARKS
1	1702936-17	1B-1 - 0.5	5-15	8:32							X										5	1	1	2	N/A	
2	-18	1B-1 - 1.0		8:32							X											1	1	2		
3	-19	1B-1 - 3.0		8:37							X											1	1	2		
4	-20	1B-1 - 5.0		8:37							X											1	1	2		
5																										
6	-21	2A-1 - 0.5		2:08					[redacted]		X										5	1	1	2		
7	-22	2A-1 - 1.0		2:08	X	X	X	X	[redacted]		X		X	X	X						5	1	1	2		
8	-23	2A-1 - 3.0		2:13	X	X	X	X	[redacted]		X											1	1	2		
9	-24	2A-1 - 5.0		2:13					[redacted]		X											1	1	2		
10																										

TERMS

1. Sample receiving hours: 7:30 AM to 7:00 PM Monday - Friday, Saturday 8:00 AM to 12:00 PM
2. Samples Submitted AFTER 3:00 PM, are considered received the following Business day at 8:00 AM
3. The following turnaround time conditions apply:
   - TAT = 0 : 300% Surcharge SAME BUSINESS DAY if received by 9:00 AM
   - TAT = 1 : 200% Surcharge NEXT BUSINESS DAY (COB 5:00 PM)
   - TAT = 2 : 50% Surcharge 2ND BUSINESS DAY (COB 5:00 PM)
   - TAT = 3 : 30% Surcharge 3RD BUSINESS DAY (COB 5:00 PM)
   - TAT = 4 : 20% Surcharge 4TH BUSINESS DAY (COB 5:00 PM)
   - TAT = 5 : NO SURCHARGE 5th BUSINESS DAY (COB 5:00 PM)
4. Weekend, holiday, after hours work - ask for quote
5. Subcontract TAT is 10 - 15 business days. Projects requiring shorter TATs will incure a surcharge respective to the subcontract lab -- ask for quote
6. Liquid and solid samples will be disposed of after 45 calendar days from receipt of samples, all samples will be disposed of after 14 calendar days after receipt of samples.
7. Electronic records maintained for five (5) years from report date.
8. Hard copy reports will be disposed of after 45 calendar days from report date.
9. Storage and Report Fees:
   - Liquid & solid samples: Complimentary storage for forty-five (45) calendar days from receipt of samples, $2/sample/month if extended storage or hold is requested.
   - Air samples: Complimentary storage for ten (10) calendar days from receipt of samples, $20/ sample/week if extended storage is requested.
   - Hard copy and regenerated reports/EDDs: $17.50 per hard copy report requested; $50.00 per regenerated/reformatted report. $15 per regenerated EDD.
10. Rush (CLP/STLC samples, add 2 days to analysis TAT for extraction procedure.
11. Unanalyzed samples will incur a disposal fee of $7 per sample.

As the authorized agent of the company above, I hereby purchase laboratory services from ATL as shown above and hereby guarantee payment as quoted.

Submitter Print Name _____ Signature _____

CUSTODY

Relinquished by: (Signature and Printed Name)	Date:	Time:	Received by: (Signature and Printed Name)	Date:	Time:
[signature] Don Tenri	5-16	1:57	[signature]	5/16/17	1357
Relinquished by: (Signature and Printed Name)	Date:	Time:	Received by: (Signature and Printed Name)	Date:	Time:
Relinquished by: (Signature and Printed Name)	Date:	Time:	Received by: (Signature and Printed Name)	Date:	Time:

ADVANCED TECHNOLOGY LABORATORIES

3275 Walnut Ave., Signal Hill, CA 90755
Tel: (562) 989-4045 • Fax: (562) 989-4040

CHAIN OF CUSTODY RECORD

Page 4 of 15

Instruction: Complete all shaded areas.

For Laboratory Use Only — ATLCOC Ver. 20130715

Method of Transport	Sample Conditions Upon Receipt					
☐ Client ☐ ATL ☐ FedEx ☐ Ontrac ☐ GSO ☐ Other:	Condition	Y	N	Condition	Y	N
	1. CHILLED	☐	☐	5. # OF SAMPLES MATCH COC	☐	☐
	2. HEADSPACE (VOA)	☐	☐	6. PRESERVED	☐	☐
	3. CONTAINER INTACT	☐	☐	7. COOLER TEMP. deg C:		
	4. SEALED	☐	☐			

CUSTOMER

Company: | Address: | Tel:

City: | State: | Zip: | Fax:

SEND REPORT TO:
Attn: | Email:
Company:
Address:
City: | State: | Zip:

SEND INVOICE TO: ☐ same as SEND REPORT TO
Attn: | Email:
Company:
Address:
City: | State: | Zip:

PROJECT SAMPLES

Project Name: | Quote No: | Special Instructions/Comments:
Project No.:
Sampler: | PO #:

Encircle or Write Requested Analysis: 8260 / 624 (Volatiles); 8015(GRO); 8015(DRO); 8270(Semi-volatiles); 8081(Organochlorine Pesticides); 8082(PCBs); 6010 / 7000(Title 22 Metals); TO-15; HERBICIDES

Encircle Sample Matrix: SOIL / SEDIMENT / SLUDGE; SOLIDS / WIPE / FILTER; WATER - DRINKING / GROUND; WATER - STORM / WASTE; AQUEOUS / LAYERED - OIL

Container: TAT; #; Type: 1-Tube; 2-VOA; 3-Liter; 4-Pint; 5-Jar; 6-Bottle; 7-Cannister; Material: 1-Glass; 2-Plastic; 3-Metal; Preservative: 1-HCl; 2-HNO3; 3-H2SO4; 4-NaOH; 5-Zn(Ac)2; 6-NaOH; 7-NaOH/ZnAc; QA/QC: ☐ Routine ☐ Caltrans ☐ Legal ☐ RWQCB ☐ Level IV; REMARKS

ITEM	Lab No.	Sample ID / Location	Date	Time	8260	8015(GRO)	8015(DRO)	8270	8081	8082	6010/7000	TO-15	HERB	SOIL	SOLIDS	WATER-DRINKING	WATER-STORM	AQUEOUS	TAT	#	Type	Material	Preservative	REMARKS
1	1702936 -25	ZA-2 - 0.5	5-15	2:34							X								5	1	1	2	N/A	
2	-26	ZA-2 - 1.0		2:34	X	X	X	X	X	X	X		X						5	1	1	2		
3	-27	ZA-2 - 3.0		2:38							X								5	1	1	2		
4	-28	ZA2 - 5.0		2:38	X	X	X	X			X								5	1	1	2		
5																								
6	-29	5-1 - 0.5		9:47							X									1	1	2		
7	-30	5-1 - 1.0		9:47							X									1	1	2		
8	-31	5-1 - 2.0		9:47							X									1	1	2		
9	-32	5-1 - 3.0		9:47							X									1	1	2		
10																								

TERMS

1. Sample receiving hours: 7:30 AM to 7:30 PM Monday - Friday, Saturday 8:00 AM to 12:00 PM.
2. Samples Submitted AFTER 3:00 PM, are considered received the following Business day at 8:00 AM.
3. The following turnaround time conditions apply:
   TAT = 0 : 100% Surcharge SAME BUSINESS DAY if received by 9:00 AM
   TAT = 1 : 100% Surcharge NEXT BUSINESS DAY (COB 5:00 PM)
   TAT = 2 : 50% Surcharge 2ND BUSINESS DAY (COB 5:00 PM)
   TAT = 3 : 35% Surcharge 3RD BUSINESS DAY (COB 5:00 PM)
   TAT = 4 : 20% Surcharge 4TH BUSINESS DAY (COB 5:00 PM)
   TAT = 5 : NO SURCHARGE 5th BUSINESS DAY (COB 5:00 PM)
4. Weekend, holiday, after-hours work - ask for quote.
5. Subcontract TAT is 10 - 15 business days. Projects requiring shorter TATs will incur a surcharge respective to the subcontract lab - ask for quote.
6. Liquid and solid samples will be disposed of after 45 calendar days from receipt of samples, air samples will be disposed of after 14 calendar days after receipt of samples.
7. Electronic records maintained for five (5) years from report date.
8. Hard copy reports will be disposed of after 45 calendar days from report date.
9. Storage and Report Fees:
   - Liquid & solid samples: Complimentary storage for forty-five (45) calendar days from receipt of samples; $2/sample/month if extended storage or hold is requested.
   - Air samples: Complimentary storage for ten (10) calendar days from receipt of samples; $20/ sample/week if extended storage is requested.
   - Hard copy and regenerated reports/EDDs: $17.50 per hard copy report requested; $50.00 per regenerated/reformatted report; $35 per regenerated EDD.
10. Rush TCLP/STLC samples: add 2 days to analysis TAT for extraction/preparation procedure.
11. Unpreserved samples will incur a disposal fee of $5 per sample.

As the authorized agent of the company above, I hereby purchase laboratory services from ATL as shown above and hereby guarantee payment as quoted.

Submitter Print Name | Signature

CUSTODY

Relinquished by: (Signature and Printed Name)	Date:	Time:	Received by: (Signature and Printed Name)	Date:	Time:
Dan Terris	5/16/17	1:57		5/16/17	13:57
Relinquished by: (Signature and Printed Name)	Date:	Time:	Received by: (Signature and Printed Name)	Date:	Time:
Relinquished by: (Signature and Printed Name)	Date:	Time:	Received by: (Signature and Printed Name)	Date:	Time:

ADVANCED TECHNOLOGY LABORATORIES

3275 Walnut Ave., Signal Hill, CA 90755
Tel: (562) 989-4045 • Fax: (562) 989-4040

CHAIN OF CUSTODY RECORD

Page 5 of 15

Instruction: Complete all shaded areas.

For Laboratory Use Only				ATLCOC Ver: 20130715		
Method of Transport	Sample Conditions Upon Receipt					
	Condition	Y	N	Condition	Y	N
☐ Client ☐ ATL ☐ Fedex ☐ OnTrac ☐ GSO ☐ Other	1. CHILLED	☐	☐	5. # OF SAMPLES MATCH COC	☐	☐
	2. HEADSPACE (VOA)	☐	☐	6. PRESERVED	☐	☐
	3. CONTAINER INTACT	☐	☐	7. COOLER TEMP. deg C:		
	4. SEALED	☐	☐			

CUSTOMER

Company:	Address:			Tel:
	City:	State:	Zip:	Fax:

SEND REPORT TO:	SEND INVOICE TO: ☐ same as SEND REPORT TO
Attn: Email:	Attn: Email:
Company:	Company:
Address:	Address:
City: State: Zip:	City: State: Zip:

PROJECT SAMPLES

Project Name:	Quote No:	Special Instructions/Comments:
Project No.:	PO #:	
Sampler:		

ITEM	Lab No.	Sample Description: Sample ID / Location	Date	Time	8260 / 624 (Volatiles)	8015(GRO)	8015(DRO)	8270(Semi-volatiles)	8081(Organochlorine Pesticides)	8082(PCBs)	6010 / 7000(Title 22 Metals)	TO-15	HERBICIDES	SOIL / SEDIMENT / SLUDGE	SOLIDS / WIPE/ FILTER	WATER - DRINKING / GROUND	WATER - STORM / WASTE	AQUEOUS / LAYERED - OIL	TAT	Container: #	Container: Type*	Container: Material	Preservative	REMARKS
1	1705238-33	5-2-0.5	5-15	9:55							X								5	1	1	2	N/A	
2	-34	5-2-1.0		9:55							X													
3	-35	5-2-2.0		9:55							X													
4	-36	5-2-3.0		9:55							X													
5																								
6	-37	6-1-0.5		10:07							X													
7	-38	6-1-1.0		10:07	X	X	X	X	X	X	X		X											
8	-39	6-1-3.0		10:25							X													
9	-40	6-1-5.0		10:25							X													
10																								

Encircle or Write Requested Analysis

Encircle Sample Matrix

Container

QA/QC
☐ Routine
☐ Caltrans
☐ Legal
☐ RWQCB
☐ Level IV

TERMS

1. Sample receiving hours: 7:30 AM to 7:30 PM Monday - Friday, Saturday 8:00 AM to 12:00 PM.
2. Samples Submitted AFTER 3:00 PM, are considered received the following Business day at 8:00 AM.
3. The following turnaround time conditions apply:
   TAT = 0 : 300% Surcharge SAME BUSINESS DAY if received by 9:00 AM
   TAT = 1 : 100% Surcharge NEXT BUSINESS DAY (COB 5:00 PM)
   TAT = 2 : 50% Surcharge 2ND BUSINESS DAY (COB 5:00 PM)
   TAT = 3 : 30% Surcharge 3RD BUSINESS DAY (COB 5:00 PM)
   TAT = 4 : 20% Surcharge 4TH BUSINESS DAY (COB 5:00 PM)
   TAT = 5 : NO SURCHARGE 5th BUSINESS DAY (COB 5:00 PM)
4. Weekend, holiday, after hours work - ask for quote.
5. Subcontract TAT is 10 - 15 business days. Projects requiring shorter TATs will incur a surcharge respective to the subcontract lab - ask for quote.
6. Liquid and solid samples will be disposed of after 45 calendar days from receipt of samples, air samples will be disposed of after 14 calendar days after receipt of samples.
7. Electronic records maintained for five (5) years from report date.
8. Hard copy reports will be disposed of after 45 calendar days from report date.
9. Storage and Report Fees:
   - Liquid & solid samples: Complimentary storage for forty-five (45) calendar days from receipt of samples; $2/sample/month if extended storage or hold is requested.
   - Air samples: Complimentary storage for ten (10) calendar days from receipt of samples; $20/ sample/week if extended storage is requested.
   - Hard copy and regenerated reports/EDDs: $17.50 per hard copy report requested; $50.00 per regenerated/reformatted/revised report $35 per reprocessed EDD.
10. Rush TCLP/STLC samples: add 2 days to analysis TAT for extraction on procedure.
11. Unanalyzed samples will incur a disposal fee of $7 per sample.

As the authorized agent of the company above, I hereby purchase laboratory services from ATL as shown above and hereby guarantee payment as quoted.

Submitter Print Name _____ Signature _____

CUSTODY

Relinquished by: (Signature and Printed Name)	Date:	Time:	Received by: (Signature and Printed Name)	Date:	Time:
Jim DeTerra	5-16-17	1:57		5/16/17	1357
Relinquished by: (Signature and Printed Name)	Date:	Time:	Received by: (Signature and Printed Name)	Date:	Time:
Relinquished by: (Signature and Printed Name)	Date:	Time:	Received by: (Signature and Printed Name)	Date:	Time:

ADVANCED TECHNOLOGY LABORATORIES

3275 Walnut Ave., Signal Hill, CA 90755
Tel: (562) 989-4045 • Fax: (562) 989-4040

CHAIN OF CUSTODY RECORD

Page 6 of 15

Instruction: Complete all shaded areas.

For Laboratory Use Only				ATLCOC Ver. 20130715		
Method of Transport		Sample Conditions Upon Accept				
		Condition	Y	N	Condition	Y	N
☐ Client ☐ ATL		1. CHILLED	☐	☐	5. # OF SAMPLES MATCH COC	☐	☐
☐ FedEx ☐ UPS/DX		2. HEADSPACE (VOA)	☐	☐	6. PRESERVED	☐	☐
☐ GSO		3. CONTAINER INTACT	☐	☐	7. COOLER TEMP, deg C:		
☐ Other _____		4. SEALED	☐	☐			

CUSTOMER

Company:	Address:			Tel:
	City:	State:	Zip:	Fax:

SEND REPORT TO:	SEND INVOICE TO: ☐ same as SEND REPORT TO
Attn: Email:	Attn: Email:
Company:	Company:
Address:	Address:
City: State: Zip:	City: State: Zip:

PROJECT SAMPLES

Project Name:	Quote No:	Special Instructions/Comments:
Project No.:	PO #:	
Sampler:		

ITEM	Lab No.	Sample Description: Sample ID / Location	Date	Time	8260 / 624 (Volatiles)	8015(GRO)	8015(DRO)	8270(Semi-volatiles)	8081(Organochlorine Pesticides)	8082(PCBs)	6010 / 7000(Title 22 Metals)	TO-15	HERBICIDES	SOIL / SEDIMENT / SLUDGE	SOLIDS / WIPE/ FILTER	WATER - DRINKING / GROUND	WATER - STORM / WASTE	AQUEOUS / LAYERED - OIL	TAT	Container: #	Container: Type: 1=Tube, 2=VOA, 3=Liter, 4=Pint, 5=Jar, 6=Petri, 7=Canister	Container: Material: 1=Glass, 2=Plastic, 3=Metal	Container: Preservative: 1=HCl, 2=HNO3, 3=H2SO4, 4=NaOH, 5=ZnAc2(NaOH), 6=NaOH, 7=NaAsO2	QA/QC: ☐ Routine ☐ Caltrans ☐ Legal ☐ RWQCB ☐ Level IV	REMARKS
1	17D 2035 -41	6-3-0.5	5-15	10:35							X								5	1	1	2	N/A	
2	-42	6-3-1.0		10:35	X	X	X	X	X	X	X	X												
3	-43	6-3-3.0		10:38							X													
4	-44	6-3-5.0		10:38							X													
5																								
6	-45	6-4-0.5		12:07							X													
7	-46	6-4-1.0		12:07	X	X	X	X	X	X	X	X												
8	-47	6-4-3.0		12:24							X													
9	-48	6-4-5.0		12:24							X													
10																								

TERMS

1. Sample receiving hours: 7:30 AM to 7:30 PM Monday - Friday, Saturday 8:00 AM to 12:00 PM
2. Samples Submitted AFTER 3:00 PM, are considered received the following Business day at 8:00 AM.
3. The following turnaround time conditions apply:
   - TAT = 0 : 300% Surcharge SAME BUSINESS DAY if received by 9:30 AM
   - TAT = 1 : 150% Surcharge NEXT BUSINESS DAY (COB 5:00 PM)
   - TAT = 2 : 50% Surcharge 2ND BUSINESS DAY (COB 5:00 PM)
   - TAT = 3 : 30% Surcharge 3RD BUSINESS DAY (COB 5:00 PM)
   - TAT = 4 : 20% Surcharge 4TH BUSINESS DAY (COB 5:00 PM)
   - TAT = 5 : NO SURCHARGE 5th BUSINESS DAY (COB 5:00 PM)
4. Weekend, holiday, after hours work - ask for quote.
5. Subcontract TAT = 10 - 15 business days. Projects requiring shorter TAT will incur a surcharge respective to the subcontract lab - - ask for quote.
6. Liquid and solid samples will be disposed of after 15 calendar days from receipt of samples; air samples will be disposed of after 14 calendar days after receipt of samples.
7. Electronic records retained for five (5) years from report date.
8. Hard copy reports will be disposed of after 45 calendar days from report date.
9. Storage and Report Fees:
   - Liquid & solid samples: Complimentary storage for forty five (45) calendar days from receipt of samples, $2/sample/month if extended storage or hold is requested.
   - Air samples: Complimentary storage for ten (10) calendar days from receipt of samples, $20/ sample/week if extended storage is requested.
   - Hard copy and regenerated reports/EDDs: $17.50 per hard copy report requested, $50.00 per regenerated/reformatted report; $35 per reprocessed EDD
10. Rush TCLP/STLC samples: add 3 days to analysis TAT for extraction on procedure.
11. Unanalyzed samples will incur a disposal fee of $7 per sample.

As the authorized agent of the company above, I hereby purchase laboratory services from ATL as shown above and hereby guarantee payment as quoted.

Submitter Print Name _____ Signature _____

CUSTODY

Relinquished by: (Signature and Printed Name)	Date:	Time:	Received by: (Signature and Printed Name)	Date:	Time:
Dow Terry	5-16-17	1:57		5/16/17	1357
Relinquished by: (Signature and Printed Name)	Date:	Time:	Received by: (Signature and Printed Name)	Date:	Time:
Relinquished by: (Signature and Printed Name)	Date:	Time:	Received by: (Signature and Printed Name)	Date:	Time:

ADVANCED TECHNOLOGY LABORATORIES

3275 Walnut Ave., Signal Hill, CA 90755
Tel: (562) 989-4045 • Fax: (562) 989-4040

CHAIN OF CUSTODY RECORD

Page 7 of 15

Instruction: Complete all shaded areas.

For Laboratory Use Only — ATLCOC Ver. 20130715

Method of Transport	Sample Conditions Upon Receipt					
☐ Client ☐ ATL	Condition	Y	N	Condition	Y	N
☐ FedEx ☐ OnTrac	1. CHILLED	☐	☐	5. # OF SAMPLES MATCH COC	☐	☐
☐ GSO	2. HEADSPACE (VOA)	☐	☐	6. PRESERVED	☐	☐
☐ Other	3. CONTAINER INTACT	☐	☐	7. COOLER TEMP. deg C:		
	4. SEALED	☐	☐			

CUSTOMER

Company: | Address: | Tel:
City: | State: | Zip: | Fax:

SEND REPORT TO:
Attn: | Email:
Company:
Address:
City: | State: | Zip:

SEND INVOICE TO: ☐ same as SEND REPORT TO
Attn: | Email:
Company:
Address:
City: | State: | Zip:

PROJECT SAMPLES

Project Name: | Quote No: | Special Instructions/Comments:
Project No.: | PO #:
Sampler:

ITEM	Lab No.	Sample Description: Sample ID / Location	Date	Time	8260 / 624 (Volatiles)	8015(GRO)	8015(DRO)	8270(Semi-volatiles)	8081(Organochlorine Pesticides)	8082(PCBs)	6010 / 7000(Title 22 Metals)	TO-15	HERBICIDES
1	1703036-49	6-5 - 0.5	5-15	12:30							X		
2	-50	6-5-1.0		12:30							X		
3	-51	6.5-3.0		12:33	X	X	X	X	X	X	X		X
4	-52	6-5-5.0		12:33							X		
5													
6	-53	6-6-1.0		11:12							X		
7	-54	6-6-3.0		11:12							X		
8	-55	6-6-5.0		11:12							X		
9	-56	6-6-7.5		11:12							X		
10													

Encircle Sample Matrix: SOIL / SEDIMENT / SLUDGE | SOLIDS / WIPE / FILTER | WATER - DRINKING / GROUND | WATER - STORM / WASTE | AQUEOUS / LAYERED - OIL

TAT	Container: #	Type: 1=Tube, 2=VOA, 3=Liter, 4=Pint, 5=Jar, 6=Bottle, 7=Canister	Material: 1=Glass, 2=Plastic, 3=Metal	Preservative: 1=HCl, 2=HNO3, 3=H2SO4, 4=4°C, 5=Zn(Ac)2 & NaOH, 6=MeOH, 7=NH4Cl(2)	QA/QC: ☐ Routine ☐ Caltrans ☐ Legal ☐ RWQCB ☐ Level IV	REMARKS
5	1	1	2	N/A		
↓	↓	↓	↓	↓		

TERMS

1. Sample receiving hours: 7:30 AM to 7:30 PM Monday - Friday, Saturday 8:00 AM to 12:00 PM
2. Samples Submitted AFTER 5:00 PM, are considered received the following Business day at 8:00 AM
3. The following turnaround time conditions apply:
   - TAT = 0 : 200% Surcharge SAME BUSINESS DAY if received by 9:00 AM
   - TAT = 1 : 100% Surcharge NEXT BUSINESS DAY (COB 5:00 PM)
   - TAT = 2 : 50% Surcharge 2ND BUSINESS DAY (COB 5:00 PM)
   - TAT = 3 : 30% Surcharge 3RD BUSINESS DAY (COB 5:00 PM)
   - TAT = 4 : 20% Surcharge 4TH BUSINESS DAY (COB 5:00 PM)
   - TAT = 5 : NO SURCHARGE 5th BUSINESS DAY (COB 5:00 PM)
4. Weekend, holiday, after-hours work - ask for quote.
5. Subcontract TAT is 10 - 15 business days. Projects requiring shorter TATs will incur a surcharge respective to the subcontract lab --- ask for quote.
6. Liquid and solid samples will be disposed of after 45 calendar days from receipt of samples; air samples will be disposed of after 14 calendar days after receipt of samples.
7. Electronic records maintained for five (5) years from report date.
8. Hard copy reports will be discarded after 45 calendar days from report date.
9. Storage and Report Fees:
   - Liquid & solid samples: Complimentary storage for forty-five (45) calendar days from receipt of samples, $2/sample/month if extended storage or hold is requested.
   - Air samples: Complimentary storage for ten (10) calendar days from receipt of samples, $10/ sample/week if extended storage is requested.
   - Hard copy and regenerated reports/EDDs: $17.50 per hard copy report requested, $50.00 per regenerated/reformatted report, $35 per reprocessed EDD.
10. Rush TCLP/STLC samples: add 2 days to analysis TAT for extraction on procedure.
11. Unanalyzed samples will incur a disposal fee of $7 per sample.

As the authorized agent of the company above, I hereby purchase laboratory services from ATL as shown above and hereby guarantee payment as quoted.

Submitter Print Name | Signature

CUSTODY

Relinquished by: (Signature and Printed Name)	Date:	Time:	Received by: (Signature and Printed Name)	Date:	Time:
Don Torres	5/15/17	1:57	FEDEX	5/16/17	1357

ADVANCED TECHNOLOGY LABORATORIES

3275 Walnut Ave., Signal Hill, CA 90755
Tel: (562) 989-4045 • Fax: (562) 989-4040

CHAIN OF CUSTODY RECORD

Page 8 of 15

Instruction: Complete all shaded areas.

For Laboratory Use Only					ATLCOC Ver: 20130715
Method of Transport	Sample Conditions Upon Receipt				
	Condition	Y	N	Condition	Y	N
☐ Client ☐ ATL ☐ FedEx ☐ OnTrac ☐ GSO ☐ Other	1. CHILLED	☐	☐	5. # OF SAMPLES MATCH COC	☐	☐
	2. HEADSPACE (VOA)	☐	☐	6. PRESERVED	☐	☐
	3. CONTAINER INTACT	☐	☐	7. COOLER TEMP. (deg C):		
	4. SEALED	☐	☐			

CUSTOMER

Company:	Address:		Tel:
	City:	State: Zip:	Fax:

SEND REPORT TO:	SEND INVOICE TO: ☐ same as SEND REPORT TO
Attn: Email:	Attn: Email:
Company:	Company:
Address:	Address:
City: State: Zip:	City: State: Zip:

PROJECT SAMPLES

Project Name:	Quote No:	Special Instructions/Comments:
Project No.:	PO #:	
Sampler:		

ITEM	Lab No.	Sample Description: Sample ID / Location	Date	Time	8260 / 624 (Volatiles)	8015(GRO)	8015(DRO)	8270(Semi-volatiles)	8081(Organochlorine Pesticides)	8082(PCBs)	6010 / 7000(Title 22 Metals)	TO-15	HERBICIDES	SOIL / SEDIMENT / SLUDGE	SOLIDS / WIPE / FILTER	WATER - DRINKING / GROUND	WATER - STORM / WASTE	AQUEOUS / LAYERED - OIL	TAT	Container: #	Container: Type: 1-Tube; 2-VOA; 3-Liter; 4-Brass; 5-Encore; 6-Terralink; 7-Canister	Container: Material: 1-Glass, 2-Plastic, 3-Metal	Preservative: 1-HCl; 2-HNO3; 3-H2SO4; 4-NaOH; 5-Zn(Ac)2; 6-NaOH+ZnAc; 7-NH4Cl; 8-Na2S2O3	QA/QC: ☐ Routine ☐ Caltrans ☐ Legal ☐ RWQCB ☐ Level IV	REMARKS
1	1702036-57	6-7-1.0	5-15	11:19							X								5	1	1	2		N/A
2	-58	6-7-3.0		11:19							X													
3	-59	6-7-5.0		11:22							X													
4	-60	6-7-7.5		11:22							X													
5																								
6	-61	6-9-1.0		10:58	X						X													
7	-62	6-9-3.0		10:58	X						X													
8	-63	6-9-5.0		11:00							X													
9	-64	6-9-7.5		11:00							X													
10																								

TERMS

1. Sample receiving hours: 7:30 AM to 7:30 PM Monday - Friday, Saturday 8:00 AM to 12:00 PM.
2. Samples Submitted AFTER 3:00 PM, are considered received the following Business day at 8:00 AM
3. The following turnaround time conditions apply:
   - TAT = 0 : 300% Surcharge SAME BUSINESS DAY if received by 9:00 AM
   - TAT = 1 : 100% Surcharge NEXT BUSINESS DAY (COB 5:00 PM)
   - TAT = 2 : 50% Surcharge 2ND BUSINESS DAY (COB 5:00 PM)
   - TAT = 3 : 30% Surcharge 3RD BUSINESS DAY (COB 5:00 PM)
   - TAT = 4 : 20% Surcharge 4TH BUSINESS DAY (COB 5:00 PM)
   - TAT = 5 : NO SURCHARGE 5TH BUSINESS DAY (COB 5:00 PM)
4. Weekend, holiday, after hours work - ask for quote.
5. Subcontract TAT is 10 – 15 business days. Projects requiring shorter TATs will incur a surcharge respective to the subcontract lab --- ask for quote.
6. Liquid and solid samples will be disposed of after 45 calendar days from receipt of samples; air samples will be disposed of after 14 calendar days after receipt of samples.
7. Electronic records maintained for five (5) years from report date.
8. Hard copy reports will be disposed of after 45 calendar days from report date.
9. Storage and Report Fees:
   - Liquid & solid samples: Complimentary storage for forty-five (45) calendar days from receipt of samples; $2/sample/month if extended storage or RUSH is requested.
   - Air samples: Complimentary storage for ten (10) calendar days from receipt of samples; $20/ sample/week if extended storage is requested.
   - Hard copy and regenerated reports/EDDs: $17.50 per hard copy report requested; $50.00 per regenerated/reformatted report; $35 per reprocessed EDD.
10. Rush TCLP/STLC samples: add 7 days to analysis TAT for extraction on procedure.
11. Unpreserved samples will incur a disposal fee of $7 per sample.

As the authorized agent of the company above, I hereby purchase laboratory services from ATL as shown above and hereby guarantee payment as quoted.

Submitter Print Name _____ Signature _____

CUSTODY

Relinquished by: (Signature and Printed Name)	Date:	Time:	Received by: (Signature and Printed Name)	Date:	Time:
Dan Terrell	5-16-17	1:57	[illegible]	5/16/17	1357
Relinquished by: (Signature and Printed Name)	Date:	Time:	Received by: (Signature and Printed Name)	Date:	Time:
Relinquished by: (Signature and Printed Name)	Date:	Time:	Received by: (Signature and Printed Name)	Date:	Time:

ADVANCED TECHNOLOGY LABORATORIES

3275 Walnut Ave., Signal Hill, CA 90755
Tel: (562) 989-4045 • Fax: (562) 989-4040

CHAIN OF CUSTODY RECORD

Page 9 of 15

Instruction: Complete all shaded areas.

For Laboratory Use Only — ATLCOC Ver: 20130715

Method of Transport	Sample Conditions Upon Receipt					
☐ Client ☐ ATL	Condition	Y	N	Condition	Y	N
☐ FedEx ☐ On Trac	1. CHILLED	☐	☐	5. # OF SAMPLES MATCH COC	☐	☐
☐ GSO	2. HEADSPACE (VOA)	☐	☐	6. PRESERVED	☐	☐
☐ Other	3. CONTAINER INTACT	☐	☐	7. COOLER TEMP. deg C:		
	4. SEALED	☐	☐			

CUSTOMER

Company:	Address:			Tel:
	City:	State:	Zip:	Fax:

SEND REPORT TO:	SEND INVOICE TO: ☐ same as SEND REPORT TO
Attn: Email:	Attn: Email:
Company:	Company:
Address:	Address:
City: State: Zip:	City: State: Zip:

PROJECT SAMPLES

Project Name:	Quote No:	Special Instructions/Comments:
Project No.:	PO #:	
Sampler:		

ITEM	Lab No.	Sample Description: Sample ID / Location	Date	Time	8260 / 624 (Volatiles)	8015(GRO)	8015(DRO)	8270(Semi-volatiles)	8081(Organochlorine Pesticides)	8082(PCBs)	6010 / 7000(Title 22 Metals)	TO-15	HERBICIDES	SOIL / SEDIMENT / SLUDGE	SOLIDS / WIPE / FILTER	WATER - DRINKING / GROUND	WATER - STORM / WASTE	AQUEOUS / LAYERED - OIL	TAT	Container: #	Container: Type: 1: Jars; 2=VOA; 3=Liter; 4=Pint; 5=Jar; 6=Tube; 7=Canister	Container: Material: 1=Glass; 2=Plastic; 3=Metal	Preservative: 1=HCl; 2=HNO3; 3=H2SO4; 4=NaOH; 5=Zn(Ac)2; 6=NaHSO4; 7=MeOH; 8=NaS2O3	QA/QC: ☐ Routine ☐ Caltrans ☐ Legal ☐ RWQCB ☐ Level IV — REMARKS
1	1702035-05	6-10-1.0	5-15	10:48	X						X								5	1	1	2	MA
2	-66	6-10-3.0		10:48	X						X												
3	-67	6-10-5.0		10:52							X												
4	-68	6-10-7.5		10:52							X												
5																							
6	-69	7-2-0.5		1:45	X	X	X	X	X	X	X		X										
7	-70	7-2-1.0		1:45							X												
8	-71	7-2-3.0		1:48	X	X	X	X			X												
9	-72	7-2-5.0		1:48							X												
10																							

TERMS

1. Sample receiving hours: 7:30 AM to 7:30 PM Monday - Friday; Saturday 8:00 AM to 12:00 PM.
2. Samples Submitted AFTER 5:00 PM, are considered received the following Business day at 8:00 AM.
3. The following turnaround time conditions apply:
   - TAT = 0 : 200% Surcharge SAME BUSINESS DAY if received by 9:00 AM
   - TAT = 1 : 100% Surcharge NEXT BUSINESS DAY (COB 5:00 PM)
   - TAT = 2 : 50% Surcharge 2ND BUSINESS DAY (COB 5:00 PM)
   - TAT = 3 : 30% Surcharge 3RD BUSINESS DAY (COB 5:00 PM)
   - TAT = 4 : 20% Surcharge 4TH BUSINESS DAY (COB 5:00 PM)
   - TAT = 5 : NO SURCHARGE 5th BUSINESS DAY (COB 5:00 PM)
4. Weekend, holiday, after-hours work - ask for quote.
5. Subcontract TAT is 10 - 15 business days. Projects requiring shorter TATs will incur a surcharge respective to the subcontract lab - ask for quote.
6. Aqueous and solid samples will be disposed of after 45 calendar days from receipt of samples, air samples will be disposed of after 14 calendar days after receipt of samples.
7. Electronic records maintained for three (3) years from report date.
8. Hard copy reports will be disposed of after 45 calendar days from report date.
9. Storage and Report Fees:
   - Liquid & solid samples: Complimentary storage for forty five (45) calendar days from receipt of samples; $2/sample/month of extended storage or hold is requested.
   - Air samples: Complimentary storage for ten (10) calendar days from receipt of samples; $20/ sample/week of extended storage is requested.
   - Hard copy and regenerated report/EDDs: $17.50 per hard copy report requested; $50.00 per regenerated/reformatted report; $35 per reprocessed EDD.
10. Rush TCLP/SPLP samples: add 2 days to analysis TAT for extraction on procedure.
11. Unanalyzed samples will incur a disposal fee of $7 per sample.

As the authorized agent of the company above, I hereby purchase laboratory services from ATL as shown above and hereby guarantee payment as quoted.

Submitter Print Name _____ Signature _____

CUSTODY

Relinquished by: (Signature and Printed Name)	Date:	Time:	Received by: (Signature and Printed Name)	Date:	Time:
Dow Terrell	5-16-17	1:57	FED-EX	5/16/17	1357
Relinquished by: (Signature and Printed Name)	Date:	Time:	Received by: (Signature and Printed Name)	Date:	Time:
Relinquished by: (Signature and Printed Name)	Date:	Time:	Received by: (Signature and Printed Name)	Date:	Time:

ADVANCED TECHNOLOGY LABORATORIES
3275 Walnut Ave., Signal Hill, CA 90755
Tel: (562) 989-4045 • Fax: (562) 989-4040

CHAIN OF CUSTODY RECORD

Page 10 of 15

Instruction: Complete all shaded areas.

For Laboratory Use Only				ATLCOC Ver: 20130715		
Method of Transport		Sample Conditions Upon Receipt				
		Condition	Y	N	Condition	Y	N
☐ Client ☐ ATL		1. CHILLED	☐	☐	5. # OF SAMPLES MATCH COC	☐	☐
☐ FedEx ☐ OnTrac		2. HEADSPACE (VOA)	☐	☐	6. PRESERVED	☐	☐
☐ GSO		3. CONTAINER INTACT	☐	☐	7. COOLER TEMP, deg C		
☐ Other:		4. SEALED	☐	☐			

CUSTOMER

Company:	Address:			Tel:
	City:	State:	Zip:	Fax:

SEND REPORT TO:	SEND INVOICE TO: ☐ same as SEND REPORT TO
Attn: Email:	Attn: Email:
Company:	Company:
Address:	Address:
City: State: Zip:	City: State: Zip:

PROJECT SAMPLES

Project Name:	Quote No:	Special Instructions/Comments:
Project No.:	PO #:	
Sampler:		

ITEM	Lab No.	Sample Description: Sample ID / Location	Date	Time	8260 / 624 (Volatiles)	8015(GRO)	8015(DRO)	8270(Semi-volaties)	8081(Organochlorine Pesticides)	8082(PCBs)	6010 / 7000(Title 22 Metals)	TO-15	HERBICIDES	SOIL / SEDIMENT / SLUDGE	SOLIDS / WIPE/ FILTER	WATER - DRINKING / GROUND	WATER - STORM / WASTE	AQUEOUS / LAYERED - Oil	TAT	Container: #	Container: Type	Container: Material	Container: Preservative	REMARKS
1	1702136-73	7-3 -0.5	5-15	1:35							X								5	1	1	2	MA	
2	-74	7-3- 1.0		1:35	X	X	X	X	X	X	X		X											
3	-75	7-3 -3.0		1:38							X													
4	-76	7-3 -5.0		1:38	X	X	X	X			X													
5																								
6	-77	7-4 - 0.5		1:13	X	X	X	X	X	X	X		X											
7	-78	7-4 -1.0		1:13							X													
8	-79	7-4-3.0		1:15	X	X	X	X			X													
9	-80	7-4-5.0		1:15							X													
10																								

TERMS

1. Sample receiving hours: 7:30 AM to 7:30 PM Monday - Friday, Saturday 9:00 AM to 12:00 PM
2. Samples Submitted AFTER 3:00 PM, are considered received the following Business day at 8:00 AM
3. The following turnaround time conditions apply:
   - TAT = 0 : 200% Surcharge SAME BUSINESS DAY if received by 9:00 AM
   - TAT = 1 : 100% Surcharge NEXT BUSINESS DAY (COB 5:00 PM)
   - TAT = 2 : 50% Surcharge 2ND BUSINESS DAY (COB 5:00 PM)
   - TAT = 3 : 30% Surcharge 3RD BUSINESS DAY (COB 5:00 PM)
   - TAT = 4 : 20% Surcharge 4TH BUSINESS DAY (COB 5:00 PM)
   - TAT = 5 : NO SURCHARGE 5TH BUSINESS DAY (COB 5:00 PM)
4. Weekends, holiday, after-hours work - ask for quote.
5. Subcontract TAT is 10 - 15 business days. Projects requiring shorter TATs will incur a surcharge respective to the subcontract lab - ask for quote.
6. Liquid and solid samples will be disposed of after 45 calendar days from receipt of samples, air samples will be disposed of after 14 calendar days after receipt of samples.
7. Electronic records maintained for five (5) years from report date.
8. Hard copy reports will be disposed of after 45 calendar days from report date.
9. Storage and Report Fees:
   - Liquid & solid samples: Complimentary storage for forty five (45) calendar days from receipt of samples, $2/sample/month if extended storage or hold is requested.
   - Air samples: Complimentary storage for ten (10) calendar days from receipt of samples, $20/ sample/week if extended storage is requested.
   - Hard copy and regenerated reports/EDDs: $17.50 per hard copy report requested, $50.00 per regenerated/reformatted report, $35 per reprocessed EDD.
10. Rush TCLP/STLC samples: add 2 days to analysis TAT for extraction on prior date.
11. Unanalyzed samples will incur a disposal fee of $7 per sample.

As the authorized agent of the company above, I hereby purchase laboratory services from ATL as shown above and hereby guarantee payment as quoted.

Submitter Print Name _____ Signature _____

CUSTODY

Relinquished by: (Signature and Printed Name)	Date:	Time:	Received by: (Signature and Printed Name)	Date:	Time:
Juan Antonio	5-16-17	1:57	FEDEX	5/16/17	1357
Relinquished by: (Signature and Printed Name)	Date:	Time:	Received by: (Signature and Printed Name)	Date:	Time:
Relinquished by: (Signature and Printed Name)	Date:	Time:	Received by: (Signature and Printed Name)	Date:	Time:

ADVANCED TECHNOLOGY LABORATORIES

3275 Walnut Ave., Signal Hill, CA 90755
Tel: (562) 989-4045 • Fax: (562) 989-4040

CHAIN OF CUSTODY RECORD

Page 11 of 15

Instruction: Complete all shaded areas.

For Laboratory Use Only — ATL COC Ver. 20130715

Method of Transport: ☐ Client ☐ ATL ☐ FedEx ☐ OnTrac ☐ GSO ☐ Other

Sample Conditions Upon Receipt

Condition	Y	N	Condition	Y	N
1. CHILLED	☐	☐	5. # OF SAMPLES MATCH COC	☐	☐
2. HEADSPACE (VOA)	☐	☐	6. PRESERVED	☐	☐
3. CONTAINER INTACT	☐	☐	7. COOLER TEMP, deg C:		
4. SEALED	☐	☐			

CUSTOMER

Company: | Address: | Tel:
City: | State: | Zip: | Fax:

SEND REPORT TO:
Attn: | Email:
Company:
Address:
City: | State: | Zip:

SEND INVOICE TO: ☐ same as SEND REPORT TO
Attn: | Email:
Company:
Address:
City: | State: | Zip:

PROJECT SAMPLES

Project Name:
Project No.:
Sampler:
Quote No:
PO #:
Special Instructions/Comments:

ITEM	Lab No.	Sample Description: Sample ID / Location	Date	Time	8260 / 624 (Volatiles)	8015(GRO)	8015(DRO)	8270(Semi-volatiles)	8081(Organochlorine Pesticides)	8082(PCBs)	6010 / 7000(Title 22 Metals)	TO-15	HERBICIDES	SOIL / SEDIMENT / SLUDGE	SOLIDS / WIPE / FILTER	WATER - DRINKING / GROUND	WATER - STORM / WASTE	AQUEOUS / LAYERED - OIL	TAT	Container: #	Container: Type	Container: Material	Preservative	QA/QC / REMARKS
1	1701076 - 21	6-8-~~0.5~~ 1.0	5-15	11:29							X								5	1	1	2	N/A	
2	- 22	6-8-~~1.0~~ 3.0	↓	11:29							X									1	1			
3	- 23	6-8-~~3.0~~ 5.0		11:33							X									1	1			
4	- 24	6-8-~~5.0~~ 7.5		11:33							X									1	1			
5																								
6	- 25	6-~~8~~-0.5	5-16	7:17					X	X	X		X							1				
7	- 26	6-~~8~~-1.0		7:17							X									1				
8	- 27	6-~~8~~-3.0		7:19	X	X	X	X			X									1				
9	- 28	6-~~8~~-5.0	↓	7:19							X								↓	1	↓	↓	↓	
10																								

QA/QC: ☐ Routine ☐ Caltrans ☐ Legal ☐ RWQCB ☐ Level IV

TERMS

1. Sample receiving hours: 7:30 AM to 7:30 PM Monday - Friday, Saturday 8:00 AM to 12:00 PM.
2. Samples Submitted AFTER 3:00 PM, are considered received the following business day at 8:00 AM.
3. The following turnaround time conditions apply:
   - TAT = 0 : 100% Surcharge SAME BUSINESS DAY (COB 5:00 PM)
   - TAT = 1 : 100% Surcharge NEXT BUSINESS DAY (COB 5:00 PM)
   - TAT = 2 : 50% Surcharge 2ND BUSINESS DAY (COB 5:00 PM)
   - TAT = 3 : 30% Surcharge 3RD BUSINESS DAY (COB 5:00 PM)
   - TAT = 4 : 20% Surcharge 4TH BUSINESS DAY (COB 5:00 PM)
   - TAT = 5 : NO SURCHARGE 5th BUSINESS DAY (COB 5:00 PM)
4. Weekend, holiday, after-hours work - ask for quote.
5. Subcontract TAT is 10 - 15 business days. Projects requiring shorter TATs will incur a surcharge respective to the subcontract lab - ask for quote.
6. Liquid and solid samples will be disposed of after 45 calendar days from receipt of samples; 10 samples will be disposed of after 14 calendar days after receipt of samples.
7. Electronic records maintained for five (5) years from report date.
8. Hard copy reports will be disposed of after 45 calendar days from report date.
9. Storage and Report Fees:
   - Liquid & solid samples: Complimentary storage for forty-five (45) calendar days from receipt of samples; $2/sample/month if extended storage or hold is requested.
   - Air samples: Complimentary storage for ten (10) calendar days from receipt of samples; $10/ sample/week if extended storage is requested.
   - Hard copy and regenerated reports/EDDs: $17.50 per hard copy report requested; $50.00 per regenerated/reformatted report; $35 per regenerated EDD.
10. Rush TCLP/STLC samples: add 2 days to analysis TAT for extraction on procedure.
11. Unanalyzed samples will incur a disposal fee of $7 per sample.

As the authorized agent of the company above, I hereby purchase laboratory services from ATL as shown above and hereby guarantee payment as quoted.

Submitter Print Name | Signature

CUSTODY

Relinquished by: (Signature and Printed Name)	Date	Time	Received by: (Signature and Printed Name)	Date	Time
[signature] Dan Torres	5-16-17	1:57	[signature]	5/16/17	1357

ADVANCED TECHNOLOGY LABORATORIES

3275 Walnut Ave., Signal Hill, CA 90755
Tel: (562) 989-4045 • Fax: (562) 989-4040

CHAIN OF CUSTODY RECORD

Page 12 of 15

Instruction: Complete all shaded areas.

For Laboratory Use Only — ATLCOC Ver: 20130715

Method of Transport	Sample Conditions Upon Receipt					
☐ Client ☐ ATL	Condition	Y	N	Condition	Y	N
☐ FedEx ☐ Contract	1. CHILLED	☐	☐	5. # OF SAMPLES MATCH COC	☐	☐
☐ GSO	2. HEADSPACE (VOA)	☐	☐	6. PRESERVED	☐	☐
☐ Other _____	3. CONTAINER INTACT	☐	☐	7. COOLER TEMP. deg C:		
	4. SEALED	☐	☐			

CUSTOMER

Company: | Address: | Tel:

City: | State: | Zip: | Fax:

SEND REPORT TO:
Attn: | Email:
Company:
Address:
City: | State: | Zip:

SEND INVOICE TO: ☐ same as SEND REPORT TO
Attn: | Email:
Company:
Address:
City: | State: | Zip:

PROJECT SAMPLES

Project Name: | Quote No: | Special Instructions/Comments:
Project No.: | PO #:
Sampler:

ITEM	Lab No.	Sample Description: Sample ID / Location	Date	Time	8260 / 624 (Volatiles)	8015(GRO)	8015(DRO)	8270(Semi-volatiles)	8081(Organochlorine Pesticides)	8082(PCBs)	6010 / 7000(Title 22 Metals)	TO-15	HERBICIDES	TAT
1	1702036-89	7-1-0.5	5/16	7:42	X	X	X	X			X			5
2	-90	7-1-1.0		7:42	X	X	X	X	X	X	X		X	
3		7-1-3.0									X			
4		7-1-5.0									X			
5														
6	-91	7-5-0.5		8:11							X			
7	-92	7-5-1.0		8:11	X	X	X	X	X	X	X		X	
8	-93	7-5-3.0		8:13							X			
9	-94	7-5-5.0		8:13	X	X	X	X			X			
10														

Encircle or Write Requested Analysis

Encircle Sample Matrix: SOIL / SEDIMENT / SLUDGE | SOLIDS / WIPE / FILTER | WATER - DRINKING / GROUND | WATER - STORM / WASTE | AQUEOUS / LAYERED - OIL

Container: # | Type: 1=Tedlar, 2=VOA, 3=Liter, 4=Pint, 5=Liter, 6=Tedlar, 7=Canister | Material: 1=Glass, 2=Plastic, 3=Metal | Preservative: 1=HCl, 2=HNO3, 3=H2SO4, 4=4C, 5=Unpreserved, 6=NaOH, 7=NaHSO4 | QA/QC: ☐ Routine ☐ Caltrans ☐ Legal ☐ RWQCB ☐ Level IV

#	Type	Material	Preservative
1	1	2	N/A

REMARKS

TERMS

1. Sample receiving hours: 7:30 AM to 7:00 PM Monday - Friday, Saturday 9:00 AM to 12:00 PM
2. Samples Submitted AFTER 5:00 PM, are considered received the following business day at 8:00 AM
3. The following turnaround time conditions apply.
   TAT = 0 : 300% Surcharge SAME BUSINESS DAY if received by 7:00 AM
   TAT = 1 : 100% Surcharge NEXT BUSINESS DAY (COB 5:00 PM)
   TAT = 2 : 50% Surcharge 2ND BUSINESS DAY (COB 5:00 PM)
   TAT = 3 : 30% Surcharge 3RD BUSINESS DAY (COB 5:00 PM)
   TAT = 4 : 20% Surcharge 4TH BUSINESS DAY (COB 5:00 PM)
   TAT = 5 : NO SURCHARGE 5th BUSINESS DAY (COB 5:00 PM)
4. Weekend, holiday, after hours work - ask for quote.
5. Subcontract TAT is 10 - 15 business days. Projects requiring shorter TATs will incur a surcharge respective to the subcontract lab --- ask for quote.
6. Liquid and solid samples will be disposed of after 14 calendar days from receipt of samples, or samples will be disposed of after 14 calendar days after receipt of samples.
7. Electronic records maintained for five (5) years from report date.
8. Hard copy reports will be disposed of after 45 calendar days from report date.
9. Storage and Report Fees:
   - Liquid & solid samples: Complimentary storage for forty five (45) calendar days from receipt of samples. $2/sample/month of extended storage or hold is requested.
   - Air samples: Complimentary storage for ten (10) calendar days from receipt of samples; $30/ sample/week if extended storage is requested.
   Hard copy and regenerated reports/EDDs: $17.50 per hard copy report requested; $50.00 per regenerated/reformat of report; $15 per report issued EDD.
10. Rush TCLP/STLC samples: add 2 days to analysis TAT for extraction to be performed.
11. Unanalyzed samples will incur a disposal fee of $7 per sample.

As the authorized agent of the company above, I hereby purchase laboratory services from ATL as shown above and hereby guarantee payment as quoted.

Submitter Print Name | Signature

CUSTODY

Relinquished by: (Signature and Printed Name)	Date	Time	Received by: (Signature and Printed Name)	Date	Time
Dow Tevis	5-16-17	1:57		5/16/17	1357

ADVANCED TECHNOLOGY LABORATORIES

3275 Walnut Ave., Signal Hill, CA 90755
Tel: (562) 989-4045 • Fax: (562) 989-4040

CHAIN OF CUSTODY RECORD

Page 13 of 15

Instruction: Complete all shaded areas.

For Laboratory Use Only — ATLCOC Ver: 20130715

Method of Transport	Sample Conditions Upon Receipt					
☐ Client ☐ ATL	Condition	Y	N	Condition	Y	N
☐ Fedex ☐ Contract	1. CHILLED	☐	☐	5. # OF SAMPLES MATCH COC	☐	☐
☐ GSO	2. HEADSPACE (VOA)	☐	☐	6. PRESERVED	☐	☐
☐ Other:	3. CONTAINER INTACT	☐	☐	7. COOLER TEMP, deg C		
	4. SEALED	☐	☐			

CUSTOMER

Company:	Address:			Tel:
	City:	State:	Zip:	Fax:

SEND REPORT TO:	SEND INVOICE TO: ☐ same as SEND REPORT TO
Attn: Email:	Attn: Email:
Company:	Company:
Address:	Address:
City: State: Zip:	City: State: Zip:

PROJECT SAMPLES

Project Name:	Quote No:	Special Instructions/Comments:
Project No.:	PO #:	
Sampler:		

ITEM	Lab No.	Sample Description: Sample ID / Location	Date	Time	8260 / 624 (Volatiles)	8015(GRO)	8015(DRO)	8270(Semi-volatiles)	8081(Organochlorine Pesticides)	8082(PCBs)	6010 / 7000(Title 22 Metals)	TO-15	HERBICIDES	SOIL / SEDIMENT / SLUDGE	SOLIDS / WIPE / FILTER	WATER - DRINKING / GROUND	WATER - STORM / WASTE	AQUEOUS / LAYERED - OIL	TAT	Container #	Container Type	Container Material	Preservative	REMARKS
1	1702036 -95	7-6-0.5	5/16	8:34	X	X	X	X	X	X	X		X						5	1	1	2	N/A	
2	-96	7-6-1.0		8:34							X													
3	-97	7-6-3.0		8:36							X													
4	-98	7-6-5.0		8:36	X	X	X	X			X													
5																								
6	-99	7-7-0.5		8:23							X													
7	-AA	7-7-1.0		8:23					X	X	X		X											
8	-AB	7-7-3.0		8:25	X	X	X	X			X													
9	-AC	7-7-5.0		8:25	X	X	X	X			X													
10																								

TERMS

1. Sample receiving Hours: 7:30 AM to 7:30 PM Monday - Friday, Saturday 8:00 AM to 12:00 PM.
2. Samples Submitted AFTER 3:00 PM, are considered received the following Business day at 8:00 AM
3. The following turnaround time conditions apply:
   - TAT = 0 : 300% Surcharge SAME BUSINESS DAY if received by 9:00 AM
   - TAT = 1 : 200% Surcharge NEXT BUSINESS DAY (COB 5:00 PM)
   - TAT = 2 : 150% Surcharge 2ND BUSINESS DAY (COB 5:00 PM)
   - TAT = 3 : 100% Surcharge 3RD BUSINESS DAY (COB 5:00 PM)
   - TAT = 4 : 20% Surcharge 4TH BUSINESS DAY (COB 5:00 PM)
   - TAT = 5 : NO SURCHARGE 5th BUSINESS DAY (COB 5:00 PM)
4. Weekend, holiday, after-hours work - ask for quote.
5. Subcontract TAT is 10 - 15 business days. Projects requiring shorter TATs will incur a surcharge respective to the subcontract lab ask for quote.
6. Liquid and solid samples will be disposed of after 45 calendar days from receipt of samples; no samples will be disposed of after 14 calendar days after receipt of samples.
7. Electronic records maintained for five (5) years from report date.
8. Hard copy reports will be disposed of after 45 calendar days from report date.
9. Storage and Report Fees:
   - Liquid & solid samples: Complimentary storage for forty-five (45) calendar days from receipt of samples; $2/sample/month if extended storage or hold is requested.
   - Air samples: Complimentary storage for ten (10) calendar days from receipt of samples; $20/sample/week if extended storage is requested.
   - Hard copy and regenerated reports/EDDs: $12.50 per hard copy report requested; $50.00 per regenerated/reformatted report; $35 per reprocessed EDD.
10. Rush TCLP/STLC samples: add 2 days to analysis TAT for extraction on procedure.
11. Unanalyzed samples will incur a disposal fee of $7 per sample.

As the authorized agent of the company above, I hereby purchase laboratory services from ATL as shown above and hereby guarantee payment as quoted.

Submitter Print Name _____ Signature _____

CUSTODY

Relinquished by: (Signature and Printed Name)	Date:	Time:	Received by: (Signature and Printed Name)	Date:	Time:
Dan Tevis	5-16-17	1:57	FedEx	5/16/17	1357
Relinquished by: (Signature and Printed Name)	Date:	Time:	Received by: (Signature and Printed Name)	Date	Time
Relinquished by: (Signature and Printed Name)	Date:	Time:	Received by: (Signature and Printed Name)	Date:	Time:

ADVANCED TECHNOLOGY LABORATORIES

3275 Walnut Ave., Signal Hill, CA 90755
Tel: (562) 989-4045 • Fax: (562) 989-4040

CHAIN OF CUSTODY RECORD

Page 14 of 15

Instruction: Complete all shaded areas.

For Laboratory Use Only — ATLCOC Ver: 20130715

Method of Transport	Sample Conditions Upon Receipt					
	Condition	Y	N	Condition	Y	N
☐ Client ☐ ATL ☐ Fedex ☐ OnTrac ☐ GSO ☐ Other	1. CHILLED	☐	☐	5. # OF SAMPLES MATCH COC	☐	☐
	2. HEADSPACE (VOA)	☐	☐	6. PRESERVED	☐	☐
	3. CONTAINER INTACT	☐	☐	7. COOLER TEMP, deg C:		
	4. SEALED	☐	☐			

CUSTOMER

Company:
Address:
Tel:
City:
State:
Zip:
Fax:

SEND REPORT TO:
Attn:
Email:
Company:
Address:
City:
State:
Zip:

SEND INVOICE TO: ☐ same as SEND REPORT TO
Attn:
Email:
Company:
Address:
City:
State:
Zip:

PROJECT SAMPLES

Project Name:
Project No.:
Sampler:
Quote No:
PO #:
Special Instructions/Comments:

ITEM	Lab No.	Sample Description: Sample ID / Location	Date	Time	8260 / 624 (Volatiles)	8015(GRO)	8015(DRO)	8270(Semi-volatiles)	8081(Organochlorine Pesticides)	8082(PCBs)	6010 / 7000(Title 22 Metals)	TO-15	HERBICIDES	LEAD	SOIL / SEDIMENT / SLUDGE	SOLIDS / WIPE / FILTER	WATER - DRINKING / GROUND	WATER - STORM / WASTE	AQUEOUS / LAYERED - OIL	TAT	Container: #	Container: Type	Container: Material	Preservative	REMARKS
1	17053[illegible]AD	8-1-0.5	5/16	9:17										X											
2	-AE	8-1-1.0		9:17										X											
3	-AF	8-1-3.0		9:20										X											
4	-AG	8-1-5.0		9:20										X											
5																									
6	-AH	8-2-0.5		9:08										X											
7	-AI	8-2-1.0		9:08										X											
8	-AJ	8-2-3.0		9:11										X											
9	-AK	8-2-5.0		9:11										X											
10																									

Encircle or Write Requested Analysis

Encircle Sample Matrix

QA/QC
☐ Routine
☐ Caltrans
☐ Legal
☐ RWQCB
☐ Level IV

TERMS

1. Sample receiving hours: 7:30 AM to 7:30 PM Monday - Friday; Saturday 8:00 AM to 12:00 PM.
2. Samples submitted AFTER 3:00 PM, are considered received the following Business day at 8:00 AM.
3. The following turnaround time conditions apply:
   - TAT = 0 : 300% Surcharge SAME BUSINESS DAY if received by 9:00 AM
   - TAT = 1 : 100% Surcharge NEXT BUSINESS DAY (COB 5:00 PM)
   - TAT = 2 : 50% Surcharge 2ND BUSINESS DAY (COB 5:00 PM)
   - TAT = 3 : 35% Surcharge 3RD BUSINESS DAY (COB 5:00 PM)
   - TAT = 4 : 25% Surcharge 4TH BUSINESS DAY (COB 5:00 PM)
   - TAT = 5 : NO SURCHARGE 5th BUSINESS DAY (COB 5:00 PM)
4. Weekend, holiday, after-hours work - ask for quote.
5. Subcontract TAT is 10 - 15 business days. Projects requiring shorter TATs will incur a surcharge respective to the subcontract lab -- ask for quote.
6. Liquid and solid samples will be disposed of after 45 calendar days from receipt of samples; air samples will be disposed of after 14 calendar days after receipt of samples.
7. Electronic records maintained for five (5) years from report date.
8. Hard copy reports will be disposed of after 45 calendar days from report date.
9. Storage and Report Fees:
   - Liquid & solid samples: Complimentary storage for forty-five (45) calendar days from receipt of samples; $2/sample/month if extended storage or hold is requested.
   - Air samples: Complimentary storage for ten (10) calendar days from receipt of samples; $30/ sample/week if extended storage is requested.
   - Hard copy and regenerated report/EDDs: $17.50 per hard copy report requested; $50.00 per regenerated/reformatted report, $15 per reprocessed EDD.
10. Rush TCLP/STLC samples: add 2 days to analysis TAT for extraction procedure.
11. Unpreserved samples will incur a disposal fee of $7 per sample.

As the authorized agent of the company above, I hereby purchase laboratory services from ATL as shown above and hereby guarantee payment as quoted.

Submitter Print Name _____ Signature _____

CUSTODY

Relinquished by: (Signature and Printed Name)	Date:	Time:	Received by: (Signature and Printed Name)	Date:	Time:
[signature] Don Torres	5-16-17	1:57	[signature] FEDEX	5/16/17	1357
Relinquished by: (Signature and Printed Name)	Date:	Time:	Received by: (Signature and Printed Name)	Date:	Time:
Relinquished by: (Signature and Printed Name)	Date:	Time:	Received by: (Signature and Printed Name)	Date:	Time:

ADVANCED TECHNOLOGY LABORATORIES
3275 Walnut Ave., Signal Hill, CA 90755
Tel: (562) 989-4045 • Fax: (562) 989-4040

CHAIN OF CUSTODY RECORD

Instruction: Complete all shaded areas.

For Laboratory Use Only — ATLCOC Ver. 20130715

Method of Transport	Sample Conditions Upon Receipt					
☐ Client ☐ ATL ☐ FedEx ☐ Courier ☐ GSO ☐ Other:	Condition	Y	N	Condition	Y	N
	1. CHILLED	☐	☐	5. # OF SAMPLES MATCH COC	☐	☐
	2. HEADSPACE (VOA)	☐	☐	6. PRESERVED	☐	☐
	3. CONTAINER INTACT	☐	☐	7. COOLER TEMP. deg C:		
	4. SEALED	☐	☐			

CUSTOMER

Company: | Address: | Tel:
City: | State: | Zip: | Fax:

SEND REPORT TO:
Attn: | Email:
Company:
Address:
City: | State: | Zip:

SEND INVOICE TO: ☐ same as SEND REPORT TO
Attn: | Email:
Company:
Address:
City: | State: | Zip:

PROJECT SAMPLES

Project Name: | Quote No: | Special Instructions/Comments:
Project No.: | PO #:
Sampler:

ITEM	Lab No.	Sample Description: Sample ID / Location	Date	Time	8260 / 624 (Volatiles)	8015(GRO)	8015(DRO)	8270(Semi-volatiles)	8081(Organochlorine Pesticides)	8082(PCBs)	6010 / 7000(Title 22 Metals)	TO-15	HERBICIDES	TAT	Container: #	Container: Type: 1=Tube, 2=VOA, 3=Liter, 4=Pint: Sulfur, 6=Teflon, 7=Canister	Container: Material: 1=Glass, 2=Plastic, 3=Metal	Preservative: 1=HCl, 2=HNO3, 3=H2SO4, 4=4C, 5=Zn(Ac)2, 6=NaOH, 7=NaAsO2	QA/QC: ☐ Routine ☐ Caltrans ☐ Legal ☐ RWQCB ☐ Level IV — REMARKS
1	1704036 - 01	8-3- 0.5	5/16	8:52							X			5	1	1	2	NA	
2	- 02	8-3- 1.0	↓	8:52	X	X	X	X	X	X	X		X	↓	↓	↓	↓	↓	
3	- 03	8-3- 3.0		8:55							X								
4	- 04	8-3-5.0	↓	8:55	X	X	X	X			X			↓	↓	↓	↓	↓	
5																			
6																			
7																			
8																			
9																			
10																			

Encircle or Write Requested Analysis

Encircle Sample Matrix: SOIL / SEDIMENT / SLUDGE | SOLIDS / WIPE / FILTER | WATER - DRINKING / GROUND | WATER - STORM / WASTE | AQUEOUS / LAYERED - OIL

TERMS

1. Sample receiving hours: 7:30 AM to 7:30 PM Monday - Friday; Saturday 8:00 AM to 12:00 PM.
2. Samples Submitted AFTER 3:00 PM, are considered received the following Business day at 8:00 AM.
3. The following turnaround time conditions apply:
   TAT = 0 : 300% Surcharge SAME BUSINESS DAY if received by 5:00 AM
   TAT = 1 : 100% Surcharge NEXT BUSINESS DAY (COB 5:00 PM)
   TAT = 2 : 50% Surcharge 2ND BUSINESS DAY (COB 5:00 PM)
   TAT = 3 : 35% Surcharge 3RD BUSINESS DAY (COB 5:00 PM)
   TAT = 4 : 20% Surcharge 4TH BUSINESS DAY (COB 5:00 PM)
   TAT = 5 : NO SURCHARGE 5th BUSINESS DAY (COB 5:00 PM)
4. Weekend, holiday after hours work - ask for quote.
5. Subcontract TAT is 10 - 15 business days. Projects requiring shorter TATs will incur a surcharge respective to the subcontract lab — ask for quote.
6. Liquid and solid samples will be disposed of after 45 calendar days from receipt of samples; air samples will be disposed of after 14 calendar days after receipt of samples.
7. Electronic records maintained for five (5) years from report date.
8. Hard copy reports will be disposed of after 45 calendar days from report date.
9. Storage and Report Fees:
   Liquid & solid samples: Complimentary storage for thirty five (45) calendar days from receipt of samples. $2/sample/month of extended storage or hold is requested.
   Air samples: Complimentary storage for ten (10) calendar days from receipt of samples; $2/sample/week if extended storage is requested.
   Hard copy and regenerated reports/EDDs: $17.50 per hard copy report requested; $50.00 per regenerated/reformatted report. $35 per reprocessed EDD.
10. Rush TCLP/STLC samples: add 2 days to analysis TAT for extraction procedure.
11. Unanalyzed samples will incur a disposal fee of $7 per sample.

As the authorized agent of the company above, I hereby purchase laboratory services from ATL as shown above and hereby guarantee payment as quoted.

Submitter Print Name | Signature

CUSTODY

Relinquished by: (Signature and Printed Name)	Date:	Time:	Received by: (Signature and Printed Name)	Date:	Time:
Dan Torres	5-16-17	1:57		5/16/17	1357

ADVANCED TECHNOLOGY LABORATORIES

3275 Walnut Ave., Signal Hill, CA 90755
Tel: (562) 989-4045 • Fax: (562) 989-4040

CHAIN OF CUSTODY RECORD

Page 1 of 2

Instruction: Complete all shaded areas.

For Laboratory Use Only				ATLCOC Ver: 20130715
Method of Transport	Sample Conditions Upon Receipt			
	Condition	Y	N	Condition	Y	N
☑ Client ☐ ATL	1. CHILLED	☐	☐	5. # OF SAMPLES MATCH COC	☐	☐
☐ FedEx ☐ OnTrac	2. HEADSPACE (VOA)	☐	☐	6. PRESERVED	☐	☐
☐ GSO	3. CONTAINER INTACT	☐	☐	7. COOLER TEMP. deg C:		
☐ Other:	4. SEALED	☐	☐			

CUSTOMER

Company: Hushmand & Assoc
Address: 250 GODDARD
City: IRVINE State: CA Zip: 92618
Tel: (949) 777-1266 Fax: (949) 777-1276

SEND REPORT TO:
Attn: Naresh BeNama Email: naresh@hmieng.com
Company: HAT
Address:
City: State: Zip:

SEND INVOICE TO: ☐ Same as SEND REPORT TO
Attn: Sara Email:
Company:
Address:
City: State: Zip:

PROJECT SAMPLES

Project Name: 6th St
Project No.: LAC-17-001
Sampler: DAT
Quote No: E17E51
PO #:
Special Instructions/Comments:

Encircle or Write Requested Analysis: 8260 / 624 (Volatiles); 8015(GRO); 8015(DRO); 8270(Semi-volatiles); 8081(Organochlorine Pesticides); 8082(PCBs); 6010 / 7000(Title 22 Metals); TO-15; METHANE

Encircle Sample Matrix: SOIL / SEDIMENT / SLUDGE; SOLIDS / WIPE / FILTER; WATER - DRINKING / GROUND; WATER - STORM / WASTE; AQUEOUS / LAYERED - OIL; AIR

Container: # | Type: 1=Tube; 2=VOA; 3=Liter; 4=Pint; 5=Liter; 6=Teclar; 7=Canister | Material: 1=Glass; 2=Plastic; 3=Metal | Preservative: 1=HCl; 2=HNO3; 3=H2SO4; 4=4C; 5=Zn (Ac)2; 6=NaOH; 7=NA2S2O3

QA/QC: ☐ Routine ☐ Caltrans ☐ Legal ☐ RWQCB ☐ Level IV

ITEM	Lab No.	Sample ID / Location	Date	Time	TAT	#	Type	Material	Preservative	REMARKS
1	1702039-01	2A3-15'	5-16-17	1017	5	1	7	3	MN	
2	-02	2A-3-10'		10:27			7			
3	-03	2A-3-5'		10:32			7			
4	-04	2A-1-15'		10:50			7			
5	-05	2A-1-10'		10:51			7			
6	-06	2A-1-5'		10:56			7			
7	-07	2A-2-15'		11:17			7			
8	-08	2A-2-10'		11:17			7			
9	-09	2A-2-5'		11:12			7			
10	-10	2A-2-5' Dup		11:21			7			

TERMS

1. Sample receiving hours: 7:30 AM to 7:30 PM Monday - Friday; Saturday 8:00 AM to 12:00 PM.
2. Samples Submitted AFTER 3:00 PM, are considered received the following Business day at 8:00 AM.
3. The following turnaround time conditions apply:
   TAT = 0 : 300% Surcharge SAME BUSINESS DAY if received by 9:00 AM
   TAT = 1 : 100% Surcharge NEXT BUSINESS DAY (COB 5:00 PM)
   TAT = 2 : 50% Surcharge 2ND BUSINESS DAY (COB 5:00 PM)
   TAT = 3 : 30% Surcharge 3RD BUSINESS DAY (COB 5:00 PM)
   TAT = 4 : 20% Surcharge 4TH BUSINESS DAY (COB 5:00 PM)
   TAT = 5 : NO SURCHARGE 5th BUSINESS DAY (COB 5:00 PM)
4. Weekend, holiday, after-hours work – ask for quote.
5. Subcontract TAT is 10 - 15 business days. Projects requiring shorter TATs will incur a surcharge respective to the subcontract lab --- ask for quote.
6. Liquid and solid samples will be disposed of after 45 calendar days from receipt of samples, all samples will be disposed of after 14 calendar days after receipt of samples.
7. Electronic records maintained for five (5) years from report date.
8. Hard copy reports will be disposed of after 45 calendar days from report date.
9. Storage and Report Fees:
   - Liquid & solid samples. Complimentary storage for forty-five (45) calendar days from receipt of samples, $2/sample/month if extended storage or hold is requested.
   - Air samples: Complimentary storage for ten (10) calendar days from receipt of samples; $20/ sample/week if extended storage is requested.
   Hard copy and regenerated reports/EDDs: $17.50 per hard copy report requested; $50.00 per regenerated/reformatted report; $35 per reprocessed EDD.
10. Rush TCLP/SPLP samples. add 2 days to analysis TAT for extraction on procedure.
11. Unanalyzed samples will incur a disposal fee of $7 per sample.

As the authorized agent of the company above, I hereby purchase laboratory services from ATL as shown above and hereby guarantee payment as quoted.

Submitter Print Name _____ Signature _____

CUSTODY

Relinquished by: (Signature and Printed Name)	Date:	Time:	Received by: (Signature and Printed Name)	Date:	Time:
Don Torres	5-16	1:56	FedEx	5/16/17	1356

ADVANCED TECHNOLOGY LABORATORIES

3275 Walnut Ave., Signal Hill, CA 90755
Tel: (562) 989-4045 • Fax: (562) 989-4040

CHAIN OF CUSTODY RECORD

Page 2 of 2

Instruction: Complete all shaded areas.

For Laboratory Use Only — ATLCOC Ver: 20130715

Method of Transport	Sample Conditions Upon Receipt					
	Condition	Y	N	Condition	Y	N
☑ Client ☐ ATL	1. CHILLED	☐	☐	5. # OF SAMPLES MATCH COC	☐	☐
☐ FedEx ☐ OnTrac	2. HEADSPACE (VOA)	☐	☐	6. PRESERVED	☐	☐
☐ GSO	3. CONTAINER INTACT	☐	☐	7. COOLER TEMP, deg C:		
☐ Other:	4. SEALED	☐	☐			

CUSTOMER

Company:	Address:		Tel:
	City:	State: Zip:	Fax:

SEND REPORT TO:	SEND INVOICE TO: ☐ same as SEND REPORT TO
Attn: Email:	Attn: Email:
Company:	Company:
Address:	Address:
City: State: Zip:	City: State: Zip:

PROJECT SAMPLES

Project Name:
Project No.:
Sampler:
Quote No:
PO #:
Special Instructions/Comments:

ITEM	Lab No.	Sample Description: Sample ID / Location	Date	Time	8260 / 624 (Volatiles)	8015(GRO)	8015(DRO)	8270(Semi-volatiles)	8081(Organochlorine Pesticides)	8082(PCBs)	6010 / 7000(Title 22 Metals)	TO-15	METHANE	SOIL / SEDIMENT / SLUDGE	SOLIDS / WIPE / FILTER	WATER - DRINKING / GROUND	WATER - STORM / WASTE	AQUEOUS / LAYERED - OIL	AIR	TAT	Container: #	Container: Type: 1=Tube; 2=VOA; 3=Liter; 4=Pint; 5=Jar; 6=Tedlar; 7=Canister	Container: Material: 1=Glass; 2=Plastic; 3=Metal	Container: Preservative: 1=HCl; 2=HNO3; 3=H2SO4; 4=4C; 5=Zn (Ac)2; 6=NaOH; 7=NA2S2O3	REMARKS
1	1702094-11	2-A-Am	5/16	11:33								X								5	1	7	3	HA
2	-12	6-Am		11:53								X										7		
3	-14	7-4-5' DUP		12:24								X	X									7		
4	-13	7-4-5'		12:12								X	X									7		
5	-15	7-1-5'		12:13								X	X									7		
6	-16	7-3-5'		12:20								X	X									7		
7	-17	7-Am		12:31								X										7		
8	-18	7-Am Dup		12:31								X										7		
9		8-3 - Bad Sample		12:43																		7		Don't Test
10	-19	8-3 Dup		12:51								X	X									7		

Encircle or Write Requested Analysis

Encircle Sample Matrix

QA/QC: ☐ Routine ☐ Caltrans ☐ Legal ☐ RWQCB ☐ Level IV

TERMS

1. Sample receiving hours: 7:30 AM to 7:30 PM Monday - Friday; Saturday 8:00 AM to 12:00 PM.
2. Samples Submitted AFTER 5:00 PM, are considered received the following business day at 8:00 AM.
3. The following turnaround time conditions apply:
   - TAT = 0 : 100% Surchatge SAME BUSINESS DAY if received by 9:00 AM
   - TAT = 1 : 100% Surcharge NEXT BUSINESS DAY (COB 5:00 PM)
   - TAT = 2 : 50% Surcharge 2ND BUSINESS DAY (COB 5:00 PM)
   - TAT = 3 : 30% Surcharge 3RD BUSINESS DAY (COB 5:00 PM)
   - TAT = 4 : 20% Surcharge 4TH BUSINESS DAY (COB 5:00 PM)
   - TAT = 5 : NO SURCHARGE 5th BUSINESS DAY (COB 5:00 PM)
4. Weekend, holiday, after-hours work - ask for quote.
5. Subcontract TAT is 10 - 15 business days. Projects requiring shorter TATs will incur a surcharge respective to the subcontract lab -- ask for quote.
6. Liquid and solid samples will be disposed of after 45 calendar days from receipt of samples; air samples will be disposed of after 14 calendar days after receipt of samples.
7. Electronic records maintained for five (5) years from report date.
8. Hard copy reports will be disposed of after 45 calendar days from report date.
9. Storage and Report Fees:
   - Liquid & solid samples: Complimentary storage for forty five (45) calendar days from receipt of samples; $2/sample/month if extended storage or hold is requested.
   - Air samples: Complimentary storage for ten (10) calendar days from receipt of samples; $20/ sample/week if extended storage is requested.
   - Hard copy and regenerated reports/EDDs: $17.50 per hard copy report requested; $50.00 per regenerated/reformatted report; $35 per reprocessed EDD.
10. Rush TCLP/STLC samples: add 2 days to analysis TAT for extraction on procedure.
11. Unanalyzed samples will incur a disposal fee of $7 per sample

As the authorized agent of the company above, I hereby purchase laboratory services from ATL as shown above and hereby guarantee payment as quoted.

Submitter Print Name _____ Signature _____

CUSTODY

Relinquished by: (Signature and Printed Name) Juan Dou Torres	Date: 5-16	Time: 1:56	Received by: (Signature and Printed Name)	Date: 5/16/17	Time: 1352
Relinquished by: (Signature and Printed Name)	Date:	Time:	Received by: (Signature and Printed Name)	Date:	Time:
Relinquished by: (Signature and Printed Name)	Date:	Time:	Received by: (Signature and Printed Name)	Date:	Time:

ADVANCED TECHNOLOGY LABORATORIES

3275 Walnut Ave., Signal Hill, CA 90755
Tel: (562) 989-4045 • Fax: (562) 989-4040

CHAIN OF CUSTODY RECORD

Page 1 of 1

Instruction: Complete all shaded areas.

For Laboratory Use Only — ATLCOC Ver: 20130715

Method of Transport: ☑ Client ☐ ATL ☐ FedEx ☐ OnTrac ☐ GSO ☐ Other:

Sample Conditions Upon Receipt

Condition	Y	N	Condition	Y	N
1. CHILLED	☐	☐	5. # OF SAMPLES MATCH COC	☑	☐
2. HEADSPACE (VOA)	NA	☐	6. PRESERVED	☐	☑
3. CONTAINER INTACT	☐	☐	7. COOLER TEMP, deg C:		
4. SEALED	☐	☑	NO COOLER		

CUSTOMER

Company: Hushmand & Assoc — Address: — Tel:

City: — State: — Zip: — Fax:

SEND REPORT TO:
Attn: Naresh Bellamkonda — Email:
Company: Hushmand & Assoc
Address: 250 Goddard
City: Irvine — State: — Zip:

SEND INVOICE TO: ☐ same as SEND REPORT TO
Attn: — Email:
Company:
Address:
City: — State: — Zip:

PROJECT SAMPLES

Project Name: LAC- 6th St.
Project No.: LAC-17-001
Sampler: DAT
Quote No:
PO #:
Special Instructions/Comments:

Encircle or Write Requested Analysis: 8260 / 624 (Volatiles); 8015(GRO); 8015(DRO); 8270(Semi-volatiles); 8081(Organochlorine Pesticides); 8082(PCBs); 6010 / 7000(Title 22 Metals); TO-15 — Lead only

Encircle Sample Matrix: (SOIL) SEDIMENT / SLUDGE; SOLIDS / WIPE/ FILTER; WATER DRINKING / GROUND; WATER - STORM / WASTE; AQUEOUS / LAYERED - OIL

Container: TAT; Type: 1=Tube, 2=VOA, 3=Liter, 4=Pint, 5=Jar, 6=Tedlar, 7 = Canister; Material: 1=Glass, 2=Plastic, 3=Metal; Preservative: 1=HCl, 2=HNO3, 3=H2SO4, 4=NaOH, 5=Zn(Ac)2, 6=NaOH, 7=NA2S2O3

EDD: ☐ Routine ☐ Caltrans ☐ Legal ☐ RWQCB ☐ Level IV

ITEM	Lab No.	Sample ID / Location	Date	Time	6010 / 7000	TO-15	SOIL	TAT	Type	Material	Preservative	REMARKS
1	1702042-01	9-1-0.5	5-17	6:57	X			5	1	1	Na	Lead only
2	-02	9-1-1.0		6:59	X				1			
3	-03	9-1-3.0		7:06	X				1			
4	-04	9-1-5.0		7:10	X				1			
5	-05	9-2-0.5		7:25	X				1			
6	-06	9-2-1.0		7:28	X				1			
7	-07	9-3-0.5		7:33	X				1			
8	-08	9-3-1.0		7:35	X				1			
9	-09	9-3-3.0		7:45	X				1			
10	-10	9-3-5.0		7:50	X				1			

TERMS

1. Sample receiving hours: 7:30 AM to 7:30 PM Monday - Friday; Saturday 8:00 AM to 12:00 PM.
2. Samples Submitted AFTER 3:00 PM, are considered received the following Business day at 8:00 AM.
3. The following turnaround time conditions apply:
   TAT = 0 : 300% Surcharge SAME BUSINESS DAY if received by 9:00 AM
   TAT = 1 : 100% Surcharge NEXT BUSINESS DAY (COB 5:00 PM)
   TAT = 2 : 50% Surcharge 2ND BUSINESS DAY (COB 5:00 PM)
   TAT = 3 : 30% Surcharge 3RD BUSINESS DAY (COB 5:00 PM)
   TAT = 4 : 20% Surcharge 4TH BUSINESS DAY (COB 5:00 PM)
   TAT = 5 : NO SURCHARGE 5th BUSINESS DAY (COB 5.00 PM)
4. Weekend, holiday, after-hours work - ask for quote
5. Subcontract TAT is 10 - 15 business days. Projects requiring shorter TATs will incur a surcharge respective to the subcontract lab -- ask for quote.
6. Liquid and solid samples will be disposed of after 45 calendar days from receipt of samples; air samples will be disposed of after 14 calendar days after receipt of samples.
7. Electronic records maintained for five (5) years from report date.
8. Hard copy reports will be disposed of after 45 calendar days from report date.
9. Storage and Report Fees:
   Liquid & solid samples: Complimentary storage for forty-five (45) calendar days from receipt of samples; $2/sample/month if extended storage or hold is requested.
   - Air samples: Complimentary storage for ten (10) calendar days from receipt of samples; $20/ sample/week if extended storage is requested.
   - Hard copy and regenerated reports/EDDs: $17.50 per hard copy report requested; $50.00 per regenerated/reformatted report; $35 per reprocessed EDD
10. Rush TCLP/STLC samples: add 2 days to analysis TAT for extraction on procedure
11. Unanalyzed samples will incur a disposal fee of $7 per sample.

As the authorized agent of the company above, I hereby purchase laboratory services from ATL as shown above and hereby guarantee payment as quoted.

Don Torres — Submitter Print Name — Signature

CUSTODY

Relinquished by: (Signature and Printed Name)	Date	Time	Received by: (Signature and Printed Name)	Date	Time
Don Torres	5-17-17	8:45		5/17/17	08:45

FIELD PHOTOGRAPHS



a. Direct Push Drill Rig with crew working on installation on sample liner



b. Direct Push Drill Rig Penetrating the Asphalt Layer at Soil Boring 1A-4



a. Direct Push Drill Rig with crew working on installation of Vapor Probe at 2A-3



b. Obtaining Ambient Air sample in Area 2A using Summa Canister



a. Hand Auger Sampling at ADL Boring in Area 9

APPENDIX B
QA/QC CHECKLIST

QA/QC, DATA MANAGEMENT AND DATA VERIFICATION AND VALIDATION
SIXTH STREET PARC PHASE II ENVIRONMENTAL SITE INVESTIGATION
Completed by Naresh Bellana and Michael Leonard

1.1 DATA VERIFICATION AND VALIDATION

Data verification and validation should be performed in a manner that materially follows the Tiered approach outlined in the draft Region 9 Superfund Data Evaluation/ Validation Guidance (R9QA/006.1). In accordance with the Guidance it is required that 100% of all data collected be reviewed (per Tier 1A/1B) for the following components (where applicable):

- Completeness Check. __X__DONE
- Chain of Custody (signatures, sample conditions, preservatives, sampling handling/filtering). __X__DONE
- Holding Times. __X__DONE
- Review of Quality Control Summaries including negative control (blanks) and positive control (LCS) along with Sample Specific Controls (replicates, matrix spikes, surrogates, tracers/ yields). __X__DONE
- Overall assessment. __X__DONE

1.2 DATA MANAGEMENT

The following checklist will be followed by the project team to ensure quality of data management:

1. A briefing of all staff expected to work will be conducted by the QA Manager and Health and Safety Officer. The briefing will include project objectives, sampling methods, health and safety and the analysis process. __X__DONE
2. The Standard Operating Procedures (SOPs) included in Appendix B of the SAP will be reviewed and implemented by each staff member who is responsible for the fieldwork. __X__DONE
3. The HAI Project Manager will review regularly and check the project progress against this checklist. __X__DONE
4. The HAI QA Manager will also check the progress against this checklist. __X__DONE
5. The HAI QA Manager and/or Health and Safety Officer will discuss the status during the field work to verify compliance with the SAP and HASP. _X_DONE
6. The HAI Project Manager will receive copies of boring logs, daily reports and chain-of-custody forms (which include laboratory tests requested on each sample) from the field and office staff daily and review for accuracy. __X__DONE
7. The sample testing criteria provided in Section 4.1 of the SAP will be implemented to ensure the testing frequencies and types are being met. __X__DONE

a. A routinely collected soil sample contains sufficient volume for both routine sample analysis and additional laboratory QC analyses. Therefore, a separate soil sample for laboratory QC purposes will not be collected. Field QA/QC will include daily collection of equipment blanks, trip blanks, field blanks and duplicate samples for a total of up to 10% of each sample type (soil, groundwater and ADL). __X__DONE

8. The testing laboratory will certify their QA/QC procedures and include all QC test results in their reports. __X__DONE
9. Laboratory data will be transmitted electronically form the testing laboratory to HAI on the original spreadsheet to avoid errors in transferring data to another form or format. __X__DONE
10. HAI's Senior Environmental Engineer/PE will establish the system for review of the lab results against the relevant criteria, categorizing the soils and assembling of the boring and lab test data on the graphics to be used for evaluating the extent of each soil category. __X__DONE
11. HAI's Senior Environmental Engineer/PE will propose the soil handling plan, conduct internal review and then review the plan with Tetra Tech and the BOE for inputs they may have before finalizing the plan. __X__DONE
12. The draft report of findings and recommendations (including soil handling plan) will be reviewed by HAI's QA Manager and Senior Environmental Engineer/PE prior to submittal to Tetra Tech and BOE for additional review. The final report will incorporate comments by HNTB and BOE staff. __X__DONE

APPENDIX C
LABORATORY TEST RESULTS

March 26, 2018

Naresh Bellana
Hushmand Associates, Inc.
250 Goddard
Irvine, CA 92618
Tel: (949) 777-1266
Fax:(949) 777-1276

ELAP No.: 1838
CSDLAC No.: 10196
ORELAP No.: CA300003

Re: ATL Work Order Number : 1502695

Client Reference : Parcel 33 - 600 S Santa Fe St., Los Angeles

Enclosed are the results for sample(s) received on August 05, 2015 by Advanced Technology Laboratories. The sample(s) are tested for the parameters as indicated on the enclosed chain of custody in accordance with applicable laboratory certifications. The laboratory results contained in this report specifically pertains to the sample(s) submitted.

Thank you for the opportunity to serve the needs of your company. If you have any questions, please feel free to contact me or your Project Manager.

Sincerely,

Eddie Rodriguez
Laboratory Director

The cover letter and the case narrative are an integral part of this analytical report and its absence renders the report invalid. Test results contained within this data package meet the requirements of applicable state-specific certification programs. The report cannot be reproduced without written permission from the client and Advanced Technology Laboratories.

Certificate of Analysis

Hushmand Associates, Inc.		Project Number :	Parcel 33 - 600 S Santa Fe St., Los Angele
250 Goddard		Report To :	Naresh Bellana
Irvine , CA 92618		Reported :	03/26/2018

SUMMARY OF SAMPLES

Sample ID	Laboratory ID	Matrix	Date Sampled	Date Received
VP-1	1502695-01	Air	8/05/15 10:41	8/05/15 13:42
VP-2	1502695-02	Air	8/05/15 10:49	8/05/15 13:42
VP-3	1502695-03	Air	8/05/15 10:12	8/05/15 13:42
VP-4	1502695-04	Air	8/05/15 10:28	8/05/15 13:42
VP-5	1502695-05	Air	8/05/15 10:32	8/05/15 13:42
VP-6	1502695-06	Air	8/05/15 10:59	8/05/15 13:42
VP-7	1502695-07	Air	8/05/15 9:17	8/05/15 13:42
VP-8	1502695-08	Air	8/05/15 8:50	8/05/15 13:42
VP-9	1502695-09	Air	8/05/15 9:00	8/05/15 13:42
VP-10	1502695-10	Air	8/05/15 9:10	8/05/15 13:42
VP-11	1502695-11	Air	8/05/15 9:43	8/05/15 13:42
VP-12	1502695-12	Air	8/05/15 9:50	8/05/15 13:42
VP-3 Dup	1502695-13	Air	8/05/15 10:21	8/05/15 13:42
VP-9 Dup	1502695-14	Air	8/05/15 9:25	8/05/15 13:42

Certificate of Analysis

Hushmand Associates, Inc.	Project Number : Parcel 33 - 600 S Santa Fe St., Los Angele
250 Goddard	Report To : Naresh Bellana
Irvine , CA 92618	Reported : 03/26/2018

Client Sample ID VP-1

Lab ID: 1502695-01

Volatile Organic Compounds in AIR by TO-15 (Canister) **Analyst: MFR**

Analyte	Result (ug/m³)	PQL (ug/m³)	Dilution	Batch	Prepared	Date/Time Analyzed	Notes
1,1,1,2-Tetrachloroethane	ND	2	1	B5H0228	08/06/2015	08/11/15 01:19	
1,1,1-Trichloroethane	**30**	1	1	B5H0228	08/06/2015	08/11/15 01:19	
1,1,2,2-Tetrachloroethane	ND	2	1	B5H0228	08/06/2015	08/11/15 01:19	
1,1,2-Trichloroethane	ND	1	1	B5H0228	08/06/2015	08/11/15 01:19	
1,1-Dichloroethane	ND	1	1	B5H0228	08/06/2015	08/11/15 01:19	
1,1-Dichloroethene	ND	0.99	1	B5H0228	08/06/2015	08/11/15 01:19	
1,1-Dichloropropene	ND	1	1	B5H0228	08/06/2015	08/11/15 01:19	
1,2,3-Trichloropropane	ND	2	1	B5H0228	08/06/2015	08/11/15 01:19	
1,2,4-Trichlorobenzene	ND	2	1	B5H0228	08/06/2015	08/11/15 01:19	
1,2,4-Trimethylbenzene	**6**	1	1	B5H0228	08/06/2015	08/11/15 01:19	
1,2-Dibromo-3-chloropropane	ND	2	1	B5H0228	08/06/2015	08/11/15 01:19	
1,2-Dibromoethane	ND	2	1	B5H0228	08/06/2015	08/11/15 01:19	
1,2-Dichlorobenzene	ND	2	1	B5H0228	08/06/2015	08/11/15 01:19	
1,2-Dichloroethane	ND	1	1	B5H0228	08/06/2015	08/11/15 01:19	
1,2-Dichloropropane	ND	1	1	B5H0228	08/06/2015	08/11/15 01:19	
1,3,5-Trimethylbenzene	**1**	1	1	B5H0228	08/06/2015	08/11/15 01:19	
1,3-Butadiene	ND	0.55	1	B5H0228	08/06/2015	08/11/15 01:19	
1,3-Dichlorobenzene	**7**	2	1	B5H0228	08/06/2015	08/11/15 01:19	
1,4-Dichlorobenzene	ND	2	1	B5H0228	08/06/2015	08/11/15 01:19	
1,4-Dioxane	ND	0.90	1	B5H0228	08/06/2015	08/11/15 01:19	
2,2,4-Trimethylpentane	ND	1	1	B5H0228	08/06/2015	08/11/15 01:19	
2-Butanone	**2**	0.74	1	B5H0228	08/06/2015	08/11/15 01:19	
2-Chloroethyl vinyl ether	ND	1	1	B5H0228	08/06/2015	08/11/15 01:19	
2-Chlorotoluene	ND	1	1	B5H0228	08/06/2015	08/11/15 01:19	
2-Hexanone	ND	1	1	B5H0228	08/06/2015	08/11/15 01:19	
2-Propanol	**60**	6	10	B5H0287	08/06/2015	08/13/15 11:07	
4-Chlorotoluene	ND	1	1	B5H0228	08/06/2015	08/11/15 01:19	
4-Ethyl Toluene	ND	1	1	B5H0228	08/06/2015	08/11/15 01:19	
4-Methyl-2-pentanone	**3**	1	1	B5H0228	08/06/2015	08/11/15 01:19	
Acetone	**10**	0.59	1	B5H0228	08/06/2015	08/11/15 01:19	
Acetonitrile	ND	0.42	1	B5H0228	08/06/2015	08/11/15 01:19	
Acrolein	ND	0.57	1	B5H0228	08/06/2015	08/11/15 01:19	
Acrylonitrile	ND	0.54	1	B5H0228	08/06/2015	08/11/15 01:19	
Benzene	**0.86**	0.80	1	B5H0228	08/06/2015	08/11/15 01:19	
Benzyl chloride	ND	1	1	B5H0228	08/06/2015	08/11/15 01:19	
Bromobenzene	ND	2	1	B5H0228	08/06/2015	08/11/15 01:19	
Bromodichloromethane	ND	2	1	B5H0228	08/06/2015	08/11/15 01:19	

Certificate of Analysis

Hushmand Associates, Inc.	Project Number : Parcel 33 - 600 S Santa Fe St., Los Angele
250 Goddard	Report To : Naresh Bellana
Irvine , CA 92618	Reported : 03/26/2018

Client Sample ID VP-1

Lab ID: 1502695-01

Volatile Organic Compounds in AIR by TO-15 (Canister) **Analyst: MFR**

Analyte	Result (ug/m³)	PQL (ug/m³)	Dilution	Batch	Prepared	Date/Time Analyzed	Notes
Bromoform	ND	3	1	B5H0228	08/06/2015	08/11/15 01:19	
Bromomethane	ND	0.97	1	B5H0228	08/06/2015	08/11/15 01:19	
Carbon disulfide	ND	0.78	1	B5H0228	08/06/2015	08/11/15 01:19	
Carbon tetrachloride	ND	2	1	B5H0228	08/06/2015	08/11/15 01:19	
Chlorobenzene	ND	1	1	B5H0228	08/06/2015	08/11/15 01:19	
Chloroethane	ND	0.66	1	B5H0228	08/06/2015	08/11/15 01:19	
Chloroform	ND	1	1	B5H0228	08/06/2015	08/11/15 01:19	
Chloromethane	ND	0.52	1	B5H0228	08/06/2015	08/11/15 01:19	
cis-1,2-Dichloroethene	ND	0.99	1	B5H0228	08/06/2015	08/11/15 01:19	
cis-1,3-Dichloropropene	ND	1	1	B5H0228	08/06/2015	08/11/15 01:19	
Cyclohexane	**2**	0.86	1	B5H0228	08/06/2015	08/11/15 01:19	
Dibromochloromethane	ND	2	1	B5H0228	08/06/2015	08/11/15 01:19	
Dibromomethane	ND	2	1	B5H0228	08/06/2015	08/11/15 01:19	
Dichlorodifluoromethane	**4**	1	1	B5H0228	08/06/2015	08/11/15 01:19	
Dichlorotetrafluoroethane	ND	2	1	B5H0228	08/06/2015	08/11/15 01:19	
Ethanol	**110**	5	10	B5H0287	08/06/2015	08/13/15 11:07	
Ethylbenzene	**2**	1	1	B5H0228	08/06/2015	08/11/15 01:19	
Freon-113	ND	2	1	B5H0228	08/06/2015	08/11/15 01:19	
Hexachlorobutadiene	ND	3	1	B5H0228	08/06/2015	08/11/15 01:19	
Isopropylbenzene	ND	1	1	B5H0228	08/06/2015	08/11/15 01:19	
m,p-Xylene	**20**	4	1	B5H0228	08/06/2015	08/11/15 01:19	
Methylene chloride	ND	0.87	1	B5H0228	08/06/2015	08/11/15 01:19	
MTBE	ND	0.90	1	B5H0228	08/06/2015	08/11/15 01:19	
n-Butylbenzene	ND	1	1	B5H0228	08/06/2015	08/11/15 01:19	
n-Propylbenzene	ND	1	1	B5H0228	08/06/2015	08/11/15 01:19	
Naphthalene	ND	1	1	B5H0228	08/06/2015	08/11/15 01:19	
o-Xylene	**3**	1	1	B5H0228	08/06/2015	08/11/15 01:19	
p-Isopropyltoluene	**1**	1	1	B5H0228	08/06/2015	08/11/15 01:19	
sec-Butylbenzene	ND	1	1	B5H0228	08/06/2015	08/11/15 01:19	
Styrene	ND	1	1	B5H0228	08/06/2015	08/11/15 01:19	
tert-Butylbenzene	ND	1	1	B5H0228	08/06/2015	08/11/15 01:19	
Tetrachloroethene	**20**	2	1	B5H0228	08/06/2015	08/11/15 01:19	
Toluene	**30**	0.94	1	B5H0228	08/06/2015	08/11/15 01:19	
trans-1,2-Dichloroethene	ND	0.99	1	B5H0228	08/06/2015	08/11/15 01:19	
trans-1,3-Dichloropropene	ND	1	1	B5H0228	08/06/2015	08/11/15 01:19	
Trichloroethene	**40**	1	1	B5H0228	08/06/2015	08/11/15 01:19	
Trichlorofluoromethane	**5**	1	1	B5H0228	08/06/2015	08/11/15 01:19	

Certificate of Analysis

Hushmand Associates, Inc.	Project Number : Parcel 33 - 600 S Santa Fe St., Los Angele
250 Goddard	Report To : Naresh Bellana
Irvine , CA 92618	Reported : 03/26/2018

Client Sample ID VP-1

Lab ID: 1502695-01

Volatile Organic Compounds in AIR by TO-15 (Canister) — **Analyst: MFR**

Analyte		Result (ug/m³)	PQL (ug/m³)	Dilution	Batch	Prepared	Date/Time Analyzed	Notes
Vinyl acetate		**1**	0.88	1	B5H0228	08/06/2015	08/11/15 01:19	
Vinyl chloride		ND	0.64	1	B5H0228	08/06/2015	08/11/15 01:19	
Surrogate: 4-Bromofluorobenzene	*119 %*		*79.2 - 147*		B5H0287	08/06/2015	*08/13/15 11:07*	
Surrogate: 4-Bromofluorobenzene	*116 %*		*79.2 - 147*		B5H0228	08/06/2015	*08/11/15 01:19*	

Gasoline Range Organics in Air by TO-3 — **Analyst: MFR**

Analyte		Result (ug/m³)	PQL (ug/m³)	Dilution	Batch	Prepared	Date/Time Analyzed	Notes
Gasoline Range Organics		**3700**	1000	10	B5H0282	08/12/2015	08/12/15 12:10	
Surrogate: 4-Bromofluorobenzene	*101 %*		*70 - 130*		B5H0282	08/12/2015	*08/12/15 12:10*	

Certificate of Analysis

Hushmand Associates, Inc.	Project Number : Parcel 33 - 600 S Santa Fe St., Los Angele
250 Goddard	Report To : Naresh Bellana
Irvine , CA 92618	Reported : 03/26/2018

Client Sample ID VP-2

Lab ID: 1502695-02

Volatile Organic Compounds in AIR by TO-15 (Canister) **Analyst: MFR**

Analyte	Result (ug/m³)	PQL (ug/m³)	Dilution	Batch	Prepared	Date/Time Analyzed	Notes
1,1,1,2-Tetrachloroethane	ND	2	1	B5H0228	08/06/2015	08/11/15 02:03	
1,1,1-Trichloroethane	**70**	1	1	B5H0228	08/06/2015	08/11/15 02:03	
1,1,2,2-Tetrachloroethane	ND	2	1	B5H0228	08/06/2015	08/11/15 02:03	
1,1,2-Trichloroethane	ND	1	1	B5H0228	08/06/2015	08/11/15 02:03	
1,1-Dichloroethane	ND	1	1	B5H0228	08/06/2015	08/11/15 02:03	
1,1-Dichloroethene	ND	0.99	1	B5H0228	08/06/2015	08/11/15 02:03	
1,1-Dichloropropene	ND	1	1	B5H0228	08/06/2015	08/11/15 02:03	
1,2,3-Trichloropropane	ND	2	1	B5H0228	08/06/2015	08/11/15 02:03	
1,2,4-Trichlorobenzene	ND	2	1	B5H0228	08/06/2015	08/11/15 02:03	
1,2,4-Trimethylbenzene	**3**	1	1	B5H0228	08/06/2015	08/11/15 02:03	
1,2-Dibromo-3-chloropropane	ND	2	1	B5H0228	08/06/2015	08/11/15 02:03	
1,2-Dibromoethane	ND	2	1	B5H0228	08/06/2015	08/11/15 02:03	
1,2-Dichlorobenzene	ND	2	1	B5H0228	08/06/2015	08/11/15 02:03	
1,2-Dichloroethane	ND	1	1	B5H0228	08/06/2015	08/11/15 02:03	
1,2-Dichloropropane	ND	1	1	B5H0228	08/06/2015	08/11/15 02:03	
1,3,5-Trimethylbenzene	ND	1	1	B5H0228	08/06/2015	08/11/15 02:03	
1,3-Butadiene	ND	0.55	1	B5H0228	08/06/2015	08/11/15 02:03	
1,3-Dichlorobenzene	**6**	2	1	B5H0228	08/06/2015	08/11/15 02:03	
1,4-Dichlorobenzene	ND	2	1	B5H0228	08/06/2015	08/11/15 02:03	
1,4-Dioxane	ND	0.90	1	B5H0228	08/06/2015	08/11/15 02:03	
2,2,4-Trimethylpentane	ND	1	1	B5H0228	08/06/2015	08/11/15 02:03	
2-Butanone	**4**	0.74	1	B5H0228	08/06/2015	08/11/15 02:03	
2-Chloroethyl vinyl ether	ND	1	1	B5H0228	08/06/2015	08/11/15 02:03	
2-Chlorotoluene	ND	1	1	B5H0228	08/06/2015	08/11/15 02:03	
2-Hexanone	ND	1	1	B5H0228	08/06/2015	08/11/15 02:03	
2-Propanol	**40**	0.61	1	B5H0228	08/06/2015	08/11/15 02:03	
4-Chlorotoluene	ND	1	1	B5H0228	08/06/2015	08/11/15 02:03	
4-Ethyl Toluene	ND	1	1	B5H0228	08/06/2015	08/11/15 02:03	
4-Methyl-2-pentanone	**2**	1	1	B5H0228	08/06/2015	08/11/15 02:03	
Acetone	**20**	0.59	1	B5H0228	08/06/2015	08/11/15 02:03	
Acetonitrile	ND	0.42	1	B5H0228	08/06/2015	08/11/15 02:03	
Acrolein	ND	0.57	1	B5H0228	08/06/2015	08/11/15 02:03	
Acrylonitrile	ND	0.54	1	B5H0228	08/06/2015	08/11/15 02:03	
Benzene	**0.89**	0.80	1	B5H0228	08/06/2015	08/11/15 02:03	
Benzyl chloride	ND	1	1	B5H0228	08/06/2015	08/11/15 02:03	
Bromobenzene	ND	2	1	B5H0228	08/06/2015	08/11/15 02:03	
Bromodichloromethane	ND	2	1	B5H0228	08/06/2015	08/11/15 02:03	

Certificate of Analysis

Hushmand Associates, Inc.	Project Number : Parcel 33 - 600 S Santa Fe St., Los Angele
250 Goddard	Report To : Naresh Bellana
Irvine , CA 92618	Reported : 03/26/2018

Client Sample ID VP-2

Lab ID: 1502695-02

Volatile Organic Compounds in AIR by TO-15 (Canister) **Analyst: MFR**

Analyte	Result (ug/m³)	PQL (ug/m³)	Dilution	Batch	Prepared	Date/Time Analyzed	Notes
Bromoform	ND	3	1	B5H0228	08/06/2015	08/11/15 02:03	
Bromomethane	ND	0.97	1	B5H0228	08/06/2015	08/11/15 02:03	
Carbon disulfide	ND	0.78	1	B5H0228	08/06/2015	08/11/15 02:03	
Carbon tetrachloride	ND	2	1	B5H0228	08/06/2015	08/11/15 02:03	
Chlorobenzene	ND	1	1	B5H0228	08/06/2015	08/11/15 02:03	
Chloroethane	ND	0.66	1	B5H0228	08/06/2015	08/11/15 02:03	
Chloroform	ND	1	1	B5H0228	08/06/2015	08/11/15 02:03	
Chloromethane	ND	0.52	1	B5H0228	08/06/2015	08/11/15 02:03	
cis-1,2-Dichloroethene	ND	0.99	1	B5H0228	08/06/2015	08/11/15 02:03	
cis-1,3-Dichloropropene	ND	1	1	B5H0228	08/06/2015	08/11/15 02:03	
Cyclohexane	**2**	0.86	1	B5H0228	08/06/2015	08/11/15 02:03	
Dibromochloromethane	ND	2	1	B5H0228	08/06/2015	08/11/15 02:03	
Dibromomethane	ND	2	1	B5H0228	08/06/2015	08/11/15 02:03	
Dichlorodifluoromethane	ND	1	1	B5H0228	08/06/2015	08/11/15 02:03	
Dichlorotetrafluoroethane	ND	2	1	B5H0228	08/06/2015	08/11/15 02:03	
Ethanol	**90**	5	10	B5H0287	08/06/2015	08/12/15 23:30	
Ethylbenzene	**1**	1	1	B5H0228	08/06/2015	08/11/15 02:03	
Freon-113	ND	2	1	B5H0228	08/06/2015	08/11/15 02:03	
Hexachlorobutadiene	ND	3	1	B5H0228	08/06/2015	08/11/15 02:03	
Isopropylbenzene	ND	1	1	B5H0228	08/06/2015	08/11/15 02:03	
m,p-Xylene	**10**	4	1	B5H0228	08/06/2015	08/11/15 02:03	
Methylene chloride	ND	0.87	1	B5H0228	08/06/2015	08/11/15 02:03	
MTBE	ND	0.90	1	B5H0228	08/06/2015	08/11/15 02:03	
n-Butylbenzene	ND	1	1	B5H0228	08/06/2015	08/11/15 02:03	
n-Propylbenzene	ND	1	1	B5H0228	08/06/2015	08/11/15 02:03	
Naphthalene	ND	1	1	B5H0228	08/06/2015	08/11/15 02:03	
o-Xylene	**2**	1	1	B5H0228	08/06/2015	08/11/15 02:03	
p-Isopropyltoluene	ND	1	1	B5H0228	08/06/2015	08/11/15 02:03	
sec-Butylbenzene	ND	1	1	B5H0228	08/06/2015	08/11/15 02:03	
Styrene	ND	1	1	B5H0228	08/06/2015	08/11/15 02:03	
tert-Butylbenzene	ND	1	1	B5H0228	08/06/2015	08/11/15 02:03	
Tetrachloroethene	**30**	2	1	B5H0228	08/06/2015	08/11/15 02:03	
Toluene	**10**	0.94	1	B5H0228	08/06/2015	08/11/15 02:03	
trans-1,2-Dichloroethene	ND	0.99	1	B5H0228	08/06/2015	08/11/15 02:03	
trans-1,3-Dichloropropene	ND	1	1	B5H0228	08/06/2015	08/11/15 02:03	
Trichlorofluoromethane	**3**	1	1	B5H0228	08/06/2015	08/11/15 02:03	
Vinyl acetate	**1**	0.88	1	B5H0228	08/06/2015	08/11/15 02:03	

Certificate of Analysis

Hushmand Associates, Inc.	Project Number : Parcel 33 - 600 S Santa Fe St., Los Angele
250 Goddard	Report To : Naresh Bellana
Irvine , CA 92618	Reported : 03/26/2018

Client Sample ID VP-2

Lab ID: 1502695-02

Volatile Organic Compounds in AIR by TO-15 (Canister) **Analyst: MFR**

Analyte		Result (ug/m³)	PQL (ug/m³)	Dilution	Batch	Prepared	Date/Time Analyzed	Notes
Vinyl chloride		ND	0.64	1	B5H0228	08/06/2015	08/11/15 02:03	
Surrogate: 4-Bromofluorobenzene	*112 %*		*79.2 - 147*		B5H0287	08/06/2015	*08/12/15 23:30*	
Surrogate: 4-Bromofluorobenzene	*110 %*		*79.2 - 147*		B5H0228	08/06/2015	*08/11/15 02:03*	

Gasoline Range Organics in Air by TO-3 **Analyst: MFR**

Analyte		Result (ug/m³)	PQL (ug/m³)	Dilution	Batch	Prepared	Date/Time Analyzed	Notes
Gasoline Range Organics		**1900**	1000	10	B5H0282	08/12/2015	08/12/15 12:46	
Surrogate: 4-Bromofluorobenzene	*104 %*		*70 - 130*		B5H0282	08/12/2015	*08/12/15 12:46*	

Certificate of Analysis

Hushmand Associates, Inc.	Project Number : Parcel 33 - 600 S Santa Fe St., Los Angele
250 Goddard	Report To : Naresh Bellana
Irvine , CA 92618	Reported : 03/26/2018

Client Sample ID VP-3

Lab ID: 1502695-03

Volatile Organic Compounds in AIR by TO-15 (Canister) **Analyst: MFR**

Analyte	Result (ug/m³)	PQL (ug/m³)	Dilution	Batch	Prepared	Date/Time Analyzed	Notes
1,1,1,2-Tetrachloroethane	ND	2	1	B5H0228	08/06/2015	08/11/15 02:46	
1,1,1-Trichloroethane	**90**	1	1	B5H0228	08/06/2015	08/11/15 02:46	
1,1,2,2-Tetrachloroethane	ND	2	1	B5H0228	08/06/2015	08/11/15 02:46	
1,1,2-Trichloroethane	ND	1	1	B5H0228	08/06/2015	08/11/15 02:46	
1,1-Dichloroethane	**2**	1	1	B5H0228	08/06/2015	08/11/15 02:46	
1,1-Dichloroethene	ND	0.99	1	B5H0228	08/06/2015	08/11/15 02:46	
1,1-Dichloropropene	ND	1	1	B5H0228	08/06/2015	08/11/15 02:46	
1,2,3-Trichloropropane	ND	2	1	B5H0228	08/06/2015	08/11/15 02:46	
1,2,4-Trichlorobenzene	ND	2	1	B5H0228	08/06/2015	08/11/15 02:46	
1,2,4-Trimethylbenzene	**4**	1	1	B5H0228	08/06/2015	08/11/15 02:46	
1,2-Dibromo-3-chloropropane	ND	2	1	B5H0228	08/06/2015	08/11/15 02:46	
1,2-Dibromoethane	ND	2	1	B5H0228	08/06/2015	08/11/15 02:46	
1,2-Dichlorobenzene	ND	2	1	B5H0228	08/06/2015	08/11/15 02:46	
1,2-Dichloroethane	ND	1	1	B5H0228	08/06/2015	08/11/15 02:46	
1,2-Dichloropropane	ND	1	1	B5H0228	08/06/2015	08/11/15 02:46	
1,3,5-Trimethylbenzene	ND	1	1	B5H0228	08/06/2015	08/11/15 02:46	
1,3-Butadiene	ND	0.55	1	B5H0228	08/06/2015	08/11/15 02:46	
1,3-Dichlorobenzene	**7**	2	1	B5H0228	08/06/2015	08/11/15 02:46	
1,4-Dichlorobenzene	ND	2	1	B5H0228	08/06/2015	08/11/15 02:46	
1,4-Dioxane	ND	0.90	1	B5H0228	08/06/2015	08/11/15 02:46	
2,2,4-Trimethylpentane	ND	1	1	B5H0228	08/06/2015	08/11/15 02:46	
2-Butanone	**2**	0.74	1	B5H0228	08/06/2015	08/11/15 02:46	
2-Chloroethyl vinyl ether	ND	1	1	B5H0228	08/06/2015	08/11/15 02:46	
2-Chlorotoluene	ND	1	1	B5H0228	08/06/2015	08/11/15 02:46	
2-Hexanone	ND	1	1	B5H0228	08/06/2015	08/11/15 02:46	
2-Propanol	**160**	6	10	B5H0287	08/06/2015	08/13/15 00:05	
4-Chlorotoluene	ND	1	1	B5H0228	08/06/2015	08/11/15 02:46	
4-Ethyl Toluene	ND	1	1	B5H0228	08/06/2015	08/11/15 02:46	
4-Methyl-2-pentanone	**3**	1	1	B5H0228	08/06/2015	08/11/15 02:46	
Acetone	**10**	0.59	1	B5H0228	08/06/2015	08/11/15 02:46	
Acetonitrile	ND	0.42	1	B5H0228	08/06/2015	08/11/15 02:46	
Acrolein	ND	0.57	1	B5H0228	08/06/2015	08/11/15 02:46	
Acrylonitrile	ND	0.54	1	B5H0228	08/06/2015	08/11/15 02:46	
Benzene	**0.89**	0.80	1	B5H0228	08/06/2015	08/11/15 02:46	
Benzyl chloride	ND	1	1	B5H0228	08/06/2015	08/11/15 02:46	
Bromobenzene	ND	2	1	B5H0228	08/06/2015	08/11/15 02:46	
Bromodichloromethane	ND	2	1	B5H0228	08/06/2015	08/11/15 02:46	

Certificate of Analysis

Hushmand Associates, Inc.	Project Number : Parcel 33 - 600 S Santa Fe St., Los Angele
250 Goddard	Report To : Naresh Bellana
Irvine , CA 92618	Reported : 03/26/2018

Client Sample ID VP-3

Lab ID: 1502695-03

Volatile Organic Compounds in AIR by TO-15 (Canister) **Analyst: MFR**

Analyte	Result (ug/m³)	PQL (ug/m³)	Dilution	Batch	Prepared	Date/Time Analyzed	Notes
Bromoform	ND	3	1	B5H0228	08/06/2015	08/11/15 02:46	
Bromomethane	ND	0.97	1	B5H0228	08/06/2015	08/11/15 02:46	
Carbon disulfide	ND	0.78	1	B5H0228	08/06/2015	08/11/15 02:46	
Carbon tetrachloride	ND	2	1	B5H0228	08/06/2015	08/11/15 02:46	
Chlorobenzene	ND	1	1	B5H0228	08/06/2015	08/11/15 02:46	
Chloroethane	ND	0.66	1	B5H0228	08/06/2015	08/11/15 02:46	
Chloroform	**2**	1	1	B5H0228	08/06/2015	08/11/15 02:46	
Chloromethane	ND	0.52	1	B5H0228	08/06/2015	08/11/15 02:46	
cis-1,2-Dichloroethene	ND	0.99	1	B5H0228	08/06/2015	08/11/15 02:46	
cis-1,3-Dichloropropene	ND	1	1	B5H0228	08/06/2015	08/11/15 02:46	
Cyclohexane	**1**	0.86	1	B5H0228	08/06/2015	08/11/15 02:46	
Dibromochloromethane	ND	2	1	B5H0228	08/06/2015	08/11/15 02:46	
Dibromomethane	ND	2	1	B5H0228	08/06/2015	08/11/15 02:46	
Dichlorodifluoromethane	**3**	1	1	B5H0228	08/06/2015	08/11/15 02:46	
Dichlorotetrafluoroethane	ND	2	1	B5H0228	08/06/2015	08/11/15 02:46	
Ethanol	**140**	5	10	B5H0287	08/06/2015	08/13/15 00:05	
Ethylbenzene	**2**	1	1	B5H0228	08/06/2015	08/11/15 02:46	
Freon-113	ND	2	1	B5H0228	08/06/2015	08/11/15 02:46	
Hexachlorobutadiene	ND	3	1	B5H0228	08/06/2015	08/11/15 02:46	
Isopropylbenzene	ND	1	1	B5H0228	08/06/2015	08/11/15 02:46	
m,p-Xylene	**20**	4	1	B5H0228	08/06/2015	08/11/15 02:46	
Methylene chloride	ND	0.87	1	B5H0228	08/06/2015	08/11/15 02:46	
MTBE	ND	0.90	1	B5H0228	08/06/2015	08/11/15 02:46	
n-Butylbenzene	ND	1	1	B5H0228	08/06/2015	08/11/15 02:46	
n-Propylbenzene	ND	1	1	B5H0228	08/06/2015	08/11/15 02:46	
Naphthalene	ND	1	1	B5H0228	08/06/2015	08/11/15 02:46	
o-Xylene	**3**	1	1	B5H0228	08/06/2015	08/11/15 02:46	
p-Isopropyltoluene	ND	1	1	B5H0228	08/06/2015	08/11/15 02:46	
sec-Butylbenzene	ND	1	1	B5H0228	08/06/2015	08/11/15 02:46	
Styrene	ND	1	1	B5H0228	08/06/2015	08/11/15 02:46	
tert-Butylbenzene	ND	1	1	B5H0228	08/06/2015	08/11/15 02:46	
Tetrachloroethene	**30**	2	1	B5H0228	08/06/2015	08/11/15 02:46	
Toluene	**20**	0.94	1	B5H0228	08/06/2015	08/11/15 02:46	
trans-1,2-Dichloroethene	ND	0.99	1	B5H0228	08/06/2015	08/11/15 02:46	
trans-1,3-Dichloropropene	ND	1	1	B5H0228	08/06/2015	08/11/15 02:46	
Trichlorofluoromethane	**2**	1	1	B5H0228	08/06/2015	08/11/15 02:46	
Vinyl acetate	**1**	0.88	1	B5H0228	08/06/2015	08/11/15 02:46	

Certificate of Analysis

Hushmand Associates, Inc.	Project Number : Parcel 33 - 600 S Santa Fe St., Los Angele
250 Goddard	Report To : Naresh Bellana
Irvine , CA 92618	Reported : 03/26/2018

Client Sample ID VP-3

Lab ID: 1502695-03

Volatile Organic Compounds in AIR by TO-15 (Canister) — **Analyst: MFR**

Analyte		Result (ug/m³)	PQL (ug/m³)	Dilution	Batch	Prepared	Date/Time Analyzed	Notes
Vinyl chloride		ND	0.64	1	B5H0228	08/06/2015	08/11/15 02:46	
Surrogate: 4-Bromofluorobenzene	*109 %*		*79.2 - 147*		B5H0228	08/06/2015	*08/11/15 02:46*	
Surrogate: 4-Bromofluorobenzene	*112 %*		*79.2 - 147*		B5H0287	08/06/2015	*08/13/15 00:05*	

Gasoline Range Organics in Air by TO-3 — **Analyst: MFR**

Analyte		Result (ug/m³)	PQL (ug/m³)	Dilution	Batch	Prepared	Date/Time Analyzed	Notes
Gasoline Range Organics		**2100**	1000	10	B5H0282	08/12/2015	08/12/15 13:21	
Surrogate: 4-Bromofluorobenzene	*104 %*		*70 - 130*		B5H0282	08/12/2015	*08/12/15 13:21*	

Certificate of Analysis

Hushmand Associates, Inc.	Project Number : Parcel 33 - 600 S Santa Fe St., Los Angele
250 Goddard	Report To : Naresh Bellana
Irvine , CA 92618	Reported : 03/26/2018

Client Sample ID VP-4
Lab ID: 1502695-04

Volatile Organic Compounds in AIR by TO-15 (Canister) **Analyst: MFR**

Analyte	Result (ug/m³)	PQL (ug/m³)	Dilution	Batch	Prepared	Date/Time Analyzed	Notes
1,1,1,2-Tetrachloroethane	ND	2	1	B5H0228	08/06/2015	08/11/15 03:30	E3, E4
1,1,1-Trichloroethane	ND	1	1	B5H0228	08/06/2015	08/11/15 03:30	E3, E4
1,1,2,2-Tetrachloroethane	ND	2	1	B5H0228	08/06/2015	08/11/15 03:30	E3, E4
1,1,2-Trichloroethane	ND	1	1	B5H0228	08/06/2015	08/11/15 03:30	E3, E4
1,1-Dichloroethane	ND	1	1	B5H0228	08/06/2015	08/11/15 03:30	E3, E4
1,1-Dichloroethene	ND	0.99	1	B5H0228	08/06/2015	08/11/15 03:30	E3, E4
1,1-Dichloropropene	ND	1	1	B5H0228	08/06/2015	08/11/15 03:30	E3, E4
1,2,3-Trichloropropane	ND	2	1	B5H0228	08/06/2015	08/11/15 03:30	E3, E4
1,2,4-Trichlorobenzene	ND	2	1	B5H0228	08/06/2015	08/11/15 03:30	E3, E4
1,2,4-Trimethylbenzene	**3**	1	1	B5H0228	08/06/2015	08/11/15 03:30	E3, E4
1,2-Dibromo-3-chloropropane	ND	2	1	B5H0228	08/06/2015	08/11/15 03:30	E3, E4
1,2-Dibromoethane	ND	2	1	B5H0228	08/06/2015	08/11/15 03:30	E3, E4
1,2-Dichlorobenzene	ND	2	1	B5H0228	08/06/2015	08/11/15 03:30	E3, E4
1,2-Dichloroethane	ND	1	1	B5H0228	08/06/2015	08/11/15 03:30	E3, E4
1,2-Dichloropropane	ND	1	1	B5H0228	08/06/2015	08/11/15 03:30	E3, E4
1,3,5-Trimethylbenzene	ND	1	1	B5H0228	08/06/2015	08/11/15 03:30	E3, E4
1,3-Butadiene	ND	0.55	1	B5H0228	08/06/2015	08/11/15 03:30	E3, E4
1,3-Dichlorobenzene	**5**	2	1	B5H0228	08/06/2015	08/11/15 03:30	E3, E4
1,4-Dichlorobenzene	ND	2	1	B5H0228	08/06/2015	08/11/15 03:30	E3, E4
1,4-Dioxane	ND	0.90	1	B5H0228	08/06/2015	08/11/15 03:30	E3, E4
2,2,4-Trimethylpentane	ND	1	1	B5H0228	08/06/2015	08/11/15 03:30	E3, E4
2-Butanone	**2**	0.74	1	B5H0228	08/06/2015	08/11/15 03:30	E3, E4
2-Chloroethyl vinyl ether	ND	1	1	B5H0228	08/06/2015	08/11/15 03:30	E3, E4
2-Chlorotoluene	ND	1	1	B5H0228	08/06/2015	08/11/15 03:30	E3, E4
2-Hexanone	ND	1	1	B5H0228	08/06/2015	08/11/15 03:30	E3, E4
2-Propanol	**1100**	30	50	B5H0287	08/06/2015	08/13/15 12:19	
4-Chlorotoluene	ND	1	1	B5H0228	08/06/2015	08/11/15 03:30	E3, E4
4-Ethyl Toluene	ND	1	1	B5H0228	08/06/2015	08/11/15 03:30	E3, E4
4-Methyl-2-pentanone	**1**	1	1	B5H0228	08/06/2015	08/11/15 03:30	E3, E4
Acetone	**20**	0.59	1	B5H0228	08/06/2015	08/11/15 03:30	E3, E4
Acetonitrile	ND	0.42	1	B5H0228	08/06/2015	08/11/15 03:30	E3, E4
Acrolein	ND	0.57	1	B5H0228	08/06/2015	08/11/15 03:30	E3, E4
Acrylonitrile	ND	0.54	1	B5H0228	08/06/2015	08/11/15 03:30	E3, E4
Benzene	**0.83**	0.80	1	B5H0228	08/06/2015	08/11/15 03:30	E3, E4
Benzyl chloride	ND	1	1	B5H0228	08/06/2015	08/11/15 03:30	E3, E4
Bromobenzene	ND	2	1	B5H0228	08/06/2015	08/11/15 03:30	E3, E4
Bromodichloromethane	ND	2	1	B5H0228	08/06/2015	08/11/15 03:30	E3, E4

Certificate of Analysis

Hushmand Associates, Inc.	Project Number : Parcel 33 - 600 S Santa Fe St., Los Angele
250 Goddard	Report To : Naresh Bellana
Irvine , CA 92618	Reported : 03/26/2018

Client Sample ID VP-4
Lab ID: 1502695-04

Volatile Organic Compounds in AIR by TO-15 (Canister) **Analyst: MFR**

Analyte	Result (ug/m³)	PQL (ug/m³)	Dilution	Batch	Prepared	Date/Time Analyzed	Notes
Bromoform	ND	3	1	B5H0228	08/06/2015	08/11/15 03:30	E3, E4
Bromomethane	ND	0.97	1	B5H0228	08/06/2015	08/11/15 03:30	E3, E4
Carbon disulfide	ND	0.78	1	B5H0228	08/06/2015	08/11/15 03:30	E3, E4
Carbon tetrachloride	ND	2	1	B5H0228	08/06/2015	08/11/15 03:30	E3, E4
Chlorobenzene	**2**	1	1	B5H0228	08/06/2015	08/11/15 03:30	E3, E4
Chloroethane	ND	0.66	1	B5H0228	08/06/2015	08/11/15 03:30	E3, E4
Chloroform	ND	1	1	B5H0228	08/06/2015	08/11/15 03:30	E3, E4
Chloromethane	**0.68**	0.52	1	B5H0228	08/06/2015	08/11/15 03:30	E3, E4
cis-1,2-Dichloroethene	ND	0.99	1	B5H0228	08/06/2015	08/11/15 03:30	E3, E4
cis-1,3-Dichloropropene	ND	1	1	B5H0228	08/06/2015	08/11/15 03:30	E3, E4
Cyclohexane	**1**	0.86	1	B5H0228	08/06/2015	08/11/15 03:30	E3, E4
Dibromochloromethane	ND	2	1	B5H0228	08/06/2015	08/11/15 03:30	E3, E4
Dibromomethane	ND	2	1	B5H0228	08/06/2015	08/11/15 03:30	E3, E4
Dichlorodifluoromethane	ND	1	1	B5H0228	08/06/2015	08/11/15 03:30	E3, E4
Dichlorotetrafluoroethane	ND	2	1	B5H0228	08/06/2015	08/11/15 03:30	E3, E4
Ethanol	**60**	5	10	B5H0287	08/06/2015	08/13/15 00:40	
Ethylbenzene	**4**	1	1	B5H0228	08/06/2015	08/11/15 03:30	E3, E4
Freon-113	ND	2	1	B5H0228	08/06/2015	08/11/15 03:30	E3, E4
Hexachlorobutadiene	ND	3	1	B5H0228	08/06/2015	08/11/15 03:30	E3, E4
Isopropylbenzene	ND	1	1	B5H0228	08/06/2015	08/11/15 03:30	E3, E4
m,p-Xylene	**30**	4	1	B5H0228	08/06/2015	08/11/15 03:30	E3, E4
Methylene chloride	**0.94**	0.87	1	B5H0228	08/06/2015	08/11/15 03:30	E3, E4
MTBE	ND	0.90	1	B5H0228	08/06/2015	08/11/15 03:30	E3, E4
n-Butylbenzene	ND	1	1	B5H0228	08/06/2015	08/11/15 03:30	E3, E4
n-Propylbenzene	ND	1	1	B5H0228	08/06/2015	08/11/15 03:30	E3, E4
Naphthalene	**2**	1	1	B5H0228	08/06/2015	08/11/15 03:30	E3, E4
o-Xylene	**4**	1	1	B5H0228	08/06/2015	08/11/15 03:30	E3, E4
p-Isopropyltoluene	ND	1	1	B5H0228	08/06/2015	08/11/15 03:30	E3, E4
sec-Butylbenzene	ND	1	1	B5H0228	08/06/2015	08/11/15 03:30	E3, E4
Styrene	ND	1	1	B5H0228	08/06/2015	08/11/15 03:30	E3, E4
tert-Butylbenzene	ND	1	1	B5H0228	08/06/2015	08/11/15 03:30	E3, E4
Tetrachloroethene	**4**	2	1	B5H0228	08/06/2015	08/11/15 03:30	E3, E4
Toluene	**80**	9	10	B5H0287	08/06/2015	08/13/15 00:40	
trans-1,2-Dichloroethene	ND	0.99	1	B5H0228	08/06/2015	08/11/15 03:30	E3, E4
trans-1,3-Dichloropropene	ND	1	1	B5H0228	08/06/2015	08/11/15 03:30	E3, E4
Trichloroethene	**2**	1	1	B5H0228	08/06/2015	08/11/15 03:30	E3, E4
Trichlorofluoromethane	ND	1	1	B5H0228	08/06/2015	08/11/15 03:30	E3, E4

Certificate of Analysis

Hushmand Associates, Inc.	Project Number : Parcel 33 - 600 S Santa Fe St., Los Angele
250 Goddard	Report To : Naresh Bellana
Irvine , CA 92618	Reported : 03/26/2018

Client Sample ID VP-4

Lab ID: 1502695-04

Volatile Organic Compounds in AIR by TO-15 (Canister) — **Analyst: MFR**

Analyte		Result (ug/m³)	PQL (ug/m³)	Dilution	Batch	Prepared	Date/Time Analyzed	Notes
Vinyl acetate		ND	0.88	1	B5H0228	08/06/2015	08/11/15 03:30	E3, E4
Vinyl chloride		ND	0.64	1	B5H0228	08/06/2015	08/11/15 03:30	E3, E4
Surrogate: 4-Bromofluorobenzene	*109 %*		*79.2 - 147*		B5H0228	08/06/2015	*08/11/15 03:30*	
Surrogate: 4-Bromofluorobenzene	*111 %*		*79.2 - 147*		B5H0287	08/06/2015	*08/13/15 12:19*	
Surrogate: 4-Bromofluorobenzene	*114 %*		*79.2 - 147*		B5H0287	08/06/2015	*08/13/15 00:40*	

Gasoline Range Organics in Air by TO-3 — **Analyst: MFR**

Analyte		Result (ug/m³)	PQL (ug/m³)	Dilution	Batch	Prepared	Date/Time Analyzed	Notes
Gasoline Range Organics		**2700**	1000	10	B5H0282	08/12/2015	08/12/15 13:55	
Surrogate: 4-Bromofluorobenzene	*101 %*		*70 - 130*		B5H0282	08/12/2015	*08/12/15 13:55*	

Certificate of Analysis

Hushmand Associates, Inc.	Project Number : Parcel 33 - 600 S Santa Fe St., Los Angele
250 Goddard	Report To : Naresh Bellana
Irvine , CA 92618	Reported : 03/26/2018

Client Sample ID VP-5
Lab ID: 1502695-05

Volatile Organic Compounds in AIR by TO-15 (Canister) **Analyst: MFR**

Analyte	Result (ug/m³)	PQL (ug/m³)	Dilution	Batch	Prepared	Date/Time Analyzed	Notes
1,1,1,2-Tetrachloroethane	ND	2	1	B5H0228	08/06/2015	08/11/15 04:13	E3, E4
1,1,1-Trichloroethane	**80**	1	1	B5H0228	08/06/2015	08/11/15 04:13	E3, E4
1,1,2,2-Tetrachloroethane	ND	2	1	B5H0228	08/06/2015	08/11/15 04:13	E3, E4
1,1,2-Trichloroethane	ND	1	1	B5H0228	08/06/2015	08/11/15 04:13	E4, E3
1,1-Dichloroethane	**2**	1	1	B5H0228	08/06/2015	08/11/15 04:13	E3, E4
1,1-Dichloroethene	ND	0.99	1	B5H0228	08/06/2015	08/11/15 04:13	E3, E4
1,1-Dichloropropene	ND	1	1	B5H0228	08/06/2015	08/11/15 04:13	E3, E4
1,2,3-Trichloropropane	ND	2	1	B5H0228	08/06/2015	08/11/15 04:13	E3, E4
1,2,4-Trichlorobenzene	ND	2	1	B5H0228	08/06/2015	08/11/15 04:13	E3, E4
1,2,4-Trimethylbenzene	**4**	1	1	B5H0228	08/06/2015	08/11/15 04:13	E3, E4
1,2-Dibromo-3-chloropropane	ND	2	1	B5H0228	08/06/2015	08/11/15 04:13	E3, E4
1,2-Dibromoethane	ND	2	1	B5H0228	08/06/2015	08/11/15 04:13	E3, E4
1,2-Dichlorobenzene	ND	2	1	B5H0228	08/06/2015	08/11/15 04:13	E3, E4
1,2-Dichloroethane	ND	1	1	B5H0228	08/06/2015	08/11/15 04:13	E4, E3
1,2-Dichloropropane	ND	1	1	B5H0228	08/06/2015	08/11/15 04:13	E3, E4
1,3,5-Trimethylbenzene	ND	1	1	B5H0228	08/06/2015	08/11/15 04:13	E3, E4
1,3-Butadiene	ND	0.55	1	B5H0228	08/06/2015	08/11/15 04:13	E3, E4
1,3-Dichlorobenzene	**7**	2	1	B5H0228	08/06/2015	08/11/15 04:13	E3, E4
1,4-Dichlorobenzene	ND	2	1	B5H0228	08/06/2015	08/11/15 04:13	E3, E4
1,4-Dioxane	ND	0.90	1	B5H0228	08/06/2015	08/11/15 04:13	E3, E4
2,2,4-Trimethylpentane	**1**	1	1	B5H0228	08/06/2015	08/11/15 04:13	E3, E4
2-Butanone	**3**	0.74	1	B5H0228	08/06/2015	08/11/15 04:13	E3, E4
2-Chloroethyl vinyl ether	ND	1	1	B5H0228	08/06/2015	08/11/15 04:13	E3, E4
2-Chlorotoluene	ND	1	1	B5H0228	08/06/2015	08/11/15 04:13	E3, E4
2-Hexanone	ND	1	1	B5H0228	08/06/2015	08/11/15 04:13	E3, E4
2-Propanol	**160**	6	10	B5H0287	08/06/2015	08/13/15 01:15	
4-Chlorotoluene	ND	1	1	B5H0228	08/06/2015	08/11/15 04:13	E3, E4
4-Ethyl Toluene	ND	1	1	B5H0228	08/06/2015	08/11/15 04:13	E3, E4
4-Methyl-2-pentanone	**3**	1	1	B5H0228	08/06/2015	08/11/15 04:13	E3, E4
Acetone	**10**	0.59	1	B5H0228	08/06/2015	08/11/15 04:13	E3, E4
Acetonitrile	ND	0.42	1	B5H0228	08/06/2015	08/11/15 04:13	E3, E4
Acrolein	ND	0.57	1	B5H0228	08/06/2015	08/11/15 04:13	E3, E4
Acrylonitrile	ND	0.54	1	B5H0228	08/06/2015	08/11/15 04:13	E3, E4
Benzene	**0.83**	0.80	1	B5H0228	08/06/2015	08/11/15 04:13	E3, E4
Benzyl chloride	ND	1	1	B5H0228	08/06/2015	08/11/15 04:13	E3, E4
Bromobenzene	ND	2	1	B5H0228	08/06/2015	08/11/15 04:13	E3, E4
Bromodichloromethane	ND	2	1	B5H0228	08/06/2015	08/11/15 04:13	E3, E4

Certificate of Analysis

Hushmand Associates, Inc.	Project Number : Parcel 33 - 600 S Santa Fe St., Los Angele
250 Goddard	Report To : Naresh Bellana
Irvine , CA 92618	Reported : 03/26/2018

Client Sample ID VP-5

Lab ID: 1502695-05

Volatile Organic Compounds in AIR by TO-15 (Canister) **Analyst: MFR**

Analyte	Result (ug/m³)	PQL (ug/m³)	Dilution	Batch	Prepared	Date/Time Analyzed	Notes
Bromoform	ND	3	1	B5H0228	08/06/2015	08/11/15 04:13	E3, E4
Bromomethane	ND	0.97	1	B5H0228	08/06/2015	08/11/15 04:13	E3, E4
Carbon disulfide	ND	0.78	1	B5H0228	08/06/2015	08/11/15 04:13	E3, E4
Carbon tetrachloride	ND	2	1	B5H0228	08/06/2015	08/11/15 04:13	E3, E4
Chlorobenzene	ND	1	1	B5H0228	08/06/2015	08/11/15 04:13	E3, E4
Chloroethane	ND	0.66	1	B5H0228	08/06/2015	08/11/15 04:13	E3, E4
Chloroform	ND	1	1	B5H0228	08/06/2015	08/11/15 04:13	E3, E4
Chloromethane	ND	0.52	1	B5H0228	08/06/2015	08/11/15 04:13	E3, E4
cis-1,2-Dichloroethene	ND	0.99	1	B5H0228	08/06/2015	08/11/15 04:13	E3, E4
cis-1,3-Dichloropropene	ND	1	1	B5H0228	08/06/2015	08/11/15 04:13	E3, E4
Cyclohexane	**1**	0.86	1	B5H0228	08/06/2015	08/11/15 04:13	E3, E4
Dibromochloromethane	ND	2	1	B5H0228	08/06/2015	08/11/15 04:13	E3, E4
Dibromomethane	ND	2	1	B5H0228	08/06/2015	08/11/15 04:13	E3, E4
Dichlorodifluoromethane	**1**	1	1	B5H0228	08/06/2015	08/11/15 04:13	E3, E4
Dichlorotetrafluoroethane	ND	2	1	B5H0228	08/06/2015	08/11/15 04:13	E3, E4
Ethanol	**200**	5	10	B5H0287	08/06/2015	08/13/15 01:15	
Ethylbenzene	**3**	1	1	B5H0228	08/06/2015	08/11/15 04:13	E3, E4
Freon-113	ND	2	1	B5H0228	08/06/2015	08/11/15 04:13	E3, E4
Hexachlorobutadiene	ND	3	1	B5H0228	08/06/2015	08/11/15 04:13	E3, E4
Isopropylbenzene	ND	1	1	B5H0228	08/06/2015	08/11/15 04:13	E3, E4
m,p-Xylene	**20**	4	1	B5H0228	08/06/2015	08/11/15 04:13	E3, E4
Methylene chloride	ND	0.87	1	B5H0228	08/06/2015	08/11/15 04:13	E3, E4
MTBE	ND	0.90	1	B5H0228	08/06/2015	08/11/15 04:13	E3, E4
n-Butylbenzene	ND	1	1	B5H0228	08/06/2015	08/11/15 04:13	E3, E4
n-Propylbenzene	ND	1	1	B5H0228	08/06/2015	08/11/15 04:13	E3, E4
Naphthalene	ND	1	1	B5H0228	08/06/2015	08/11/15 04:13	E3, E4
o-Xylene	**4**	1	1	B5H0228	08/06/2015	08/11/15 04:13	E3, E4
p-Isopropyltoluene	ND	1	1	B5H0228	08/06/2015	08/11/15 04:13	E3, E4
sec-Butylbenzene	ND	1	1	B5H0228	08/06/2015	08/11/15 04:13	E3, E4
Styrene	ND	1	1	B5H0228	08/06/2015	08/11/15 04:13	E3, E4
tert-Butylbenzene	ND	1	1	B5H0228	08/06/2015	08/11/15 04:13	E3, E4
Tetrachloroethene	**20**	2	1	B5H0228	08/06/2015	08/11/15 04:13	E3, E4
Toluene	**40**	0.94	1	B5H0228	08/06/2015	08/11/15 04:13	E3, E4
trans-1,2-Dichloroethene	ND	0.99	1	B5H0228	08/06/2015	08/11/15 04:13	E3, E4
trans-1,3-Dichloropropene	ND	1	1	B5H0228	08/06/2015	08/11/15 04:13	E3, E4
Trichloroethene	**80**	1	1	B5H0228	08/06/2015	08/11/15 04:13	E3, E4
Trichlorofluoromethane	**2**	1	1	B5H0228	08/06/2015	08/11/15 04:13	E3, E4

Certificate of Analysis

Hushmand Associates, Inc.	Project Number : Parcel 33 - 600 S Santa Fe St., Los Angele
250 Goddard	Report To : Naresh Bellana
Irvine , CA 92618	Reported : 03/26/2018

Client Sample ID VP-5

Lab ID: 1502695-05

Volatile Organic Compounds in AIR by TO-15 (Canister) — **Analyst: MFR**

Analyte		Result (ug/m³)	PQL (ug/m³)	Dilution	Batch	Prepared	Date/Time Analyzed	Notes
Vinyl acetate		**2**	0.88	1	B5H0228	08/06/2015	08/11/15 04:13	E3, E4
Vinyl chloride		ND	0.64	1	B5H0228	08/06/2015	08/11/15 04:13	E3, E4
Surrogate: 4-Bromofluorobenzene	*110 %*		*79.2 - 147*		B5H0228	08/06/2015	*08/11/15 04:13*	
Surrogate: 4-Bromofluorobenzene	*115 %*		*79.2 - 147*		B5H0287	08/06/2015	*08/13/15 01:15*	

Gasoline Range Organics in Air by TO-3 — **Analyst: MFR**

Analyte		Result (ug/m³)	PQL (ug/m³)	Dilution	Batch	Prepared	Date/Time Analyzed	Notes
Gasoline Range Organics		**3700**	1000	10	B5H0282	08/12/2015	08/12/15 17:22	
Surrogate: 4-Bromofluorobenzene	*104 %*		*70 - 130*		B5H0282	08/12/2015	*08/12/15 17:22*	

Certificate of Analysis

Hushmand Associates, Inc.	Project Number : Parcel 33 - 600 S Santa Fe St., Los Angele
250 Goddard	Report To : Naresh Bellana
Irvine , CA 92618	Reported : 03/26/2018

Client Sample ID VP-6
Lab ID: 1502695-06

Volatile Organic Compounds in AIR by TO-15 (Canister) **Analyst: MFR**

Analyte	Result (ug/m³)	PQL (ug/m³)	Dilution	Batch	Prepared	Date/Time Analyzed	Notes
1,1,1,2-Tetrachloroethane	ND	2	1	B5H0228	08/06/2015	08/11/15 04:55	E3, E4
1,1,1-Trichloroethane	**3**	1	1	B5H0228	08/06/2015	08/11/15 04:55	E3, E4
1,1,2,2-Tetrachloroethane	ND	2	1	B5H0228	08/06/2015	08/11/15 04:55	E3, E4
1,1,2-Trichloroethane	ND	1	1	B5H0228	08/06/2015	08/11/15 04:55	E3, E4
1,1-Dichloroethane	ND	1	1	B5H0228	08/06/2015	08/11/15 04:55	E3, E4
1,1-Dichloroethene	ND	0.99	1	B5H0228	08/06/2015	08/11/15 04:55	E3, E4
1,1-Dichloropropene	ND	1	1	B5H0228	08/06/2015	08/11/15 04:55	E3, E4
1,2,3-Trichloropropane	ND	2	1	B5H0228	08/06/2015	08/11/15 04:55	E3, E4
1,2,4-Trichlorobenzene	ND	2	1	B5H0228	08/06/2015	08/11/15 04:55	E3, E4
1,2,4-Trimethylbenzene	**3**	1	1	B5H0228	08/06/2015	08/11/15 04:55	E3, E4
1,2-Dibromo-3-chloropropane	ND	2	1	B5H0228	08/06/2015	08/11/15 04:55	E3, E4
1,2-Dibromoethane	ND	2	1	B5H0228	08/06/2015	08/11/15 04:55	E3, E4
1,2-Dichlorobenzene	ND	2	1	B5H0228	08/06/2015	08/11/15 04:55	E3, E4
1,2-Dichloroethane	ND	1	1	B5H0228	08/06/2015	08/11/15 04:55	E3, E4
1,2-Dichloropropane	ND	1	1	B5H0228	08/06/2015	08/11/15 04:55	E3, E4
1,3,5-Trimethylbenzene	ND	1	1	B5H0228	08/06/2015	08/11/15 04:55	E3, E4
1,3-Butadiene	ND	0.55	1	B5H0228	08/06/2015	08/11/15 04:55	E3, E4
1,3-Dichlorobenzene	**7**	2	1	B5H0228	08/06/2015	08/11/15 04:55	E3, E4
1,4-Dichlorobenzene	ND	2	1	B5H0228	08/06/2015	08/11/15 04:55	E3, E4
1,4-Dioxane	ND	0.90	1	B5H0228	08/06/2015	08/11/15 04:55	E3, E4
2,2,4-Trimethylpentane	ND	1	1	B5H0228	08/06/2015	08/11/15 04:55	E3, E4
2-Butanone	**2**	0.74	1	B5H0228	08/06/2015	08/11/15 04:55	E3, E4
2-Chloroethyl vinyl ether	ND	1	1	B5H0228	08/06/2015	08/11/15 04:55	E3, E4
2-Chlorotoluene	ND	1	1	B5H0228	08/06/2015	08/11/15 04:55	E3, E4
2-Hexanone	ND	1	1	B5H0228	08/06/2015	08/11/15 04:55	E3, E4
2-Propanol	**370**	6	10	B5H0287	08/06/2015	08/13/15 01:50	
4-Chlorotoluene	ND	1	1	B5H0228	08/06/2015	08/11/15 04:55	E3, E4
4-Ethyl Toluene	ND	1	1	B5H0228	08/06/2015	08/11/15 04:55	E3, E4
4-Methyl-2-pentanone	**1**	1	1	B5H0228	08/06/2015	08/11/15 04:55	E3, E4
Acetone	**10**	0.59	1	B5H0228	08/06/2015	08/11/15 04:55	E3, E4
Acetonitrile	ND	0.42	1	B5H0228	08/06/2015	08/11/15 04:55	E3, E4
Acrolein	ND	0.57	1	B5H0228	08/06/2015	08/11/15 04:55	E3, E4
Acrylonitrile	ND	0.54	1	B5H0228	08/06/2015	08/11/15 04:55	E3, E4
Benzene	**1**	0.80	1	B5H0228	08/06/2015	08/11/15 04:55	E3, E4
Benzyl chloride	ND	1	1	B5H0228	08/06/2015	08/11/15 04:55	E3, E4
Bromobenzene	ND	2	1	B5H0228	08/06/2015	08/11/15 04:55	E3, E4
Bromodichloromethane	ND	2	1	B5H0228	08/06/2015	08/11/15 04:55	E3, E4

Certificate of Analysis

Hushmand Associates, Inc.	Project Number : Parcel 33 - 600 S Santa Fe St., Los Angele
250 Goddard	Report To : Naresh Bellana
Irvine , CA 92618	Reported : 03/26/2018

Client Sample ID VP-6

Lab ID: 1502695-06

Volatile Organic Compounds in AIR by TO-15 (Canister) **Analyst: MFR**

Analyte	Result (ug/m³)	PQL (ug/m³)	Dilution	Batch	Prepared	Date/Time Analyzed	Notes
Bromoform	ND	3	1	B5H0228	08/06/2015	08/11/15 04:55	E3, E4
Bromomethane	ND	0.97	1	B5H0228	08/06/2015	08/11/15 04:55	E3, E4
Carbon disulfide	ND	0.78	1	B5H0228	08/06/2015	08/11/15 04:55	E3, E4
Carbon tetrachloride	ND	2	1	B5H0228	08/06/2015	08/11/15 04:55	E3, E4
Chlorobenzene	ND	1	1	B5H0228	08/06/2015	08/11/15 04:55	E3, E4
Chloroethane	ND	0.66	1	B5H0228	08/06/2015	08/11/15 04:55	E3, E4
Chloroform	ND	1	1	B5H0228	08/06/2015	08/11/15 04:55	E3, E4
Chloromethane	**2**	0.52	1	B5H0228	08/06/2015	08/11/15 04:55	E3, E4
cis-1,2-Dichloroethene	ND	0.99	1	B5H0228	08/06/2015	08/11/15 04:55	E3, E4
cis-1,3-Dichloropropene	ND	1	1	B5H0228	08/06/2015	08/11/15 04:55	E3, E4
Cyclohexane	**1**	0.86	1	B5H0228	08/06/2015	08/11/15 04:55	E3, E4
Dibromochloromethane	ND	2	1	B5H0228	08/06/2015	08/11/15 04:55	E3, E4
Dibromomethane	ND	2	1	B5H0228	08/06/2015	08/11/15 04:55	E3, E4
Dichlorodifluoromethane	ND	1	1	B5H0228	08/06/2015	08/11/15 04:55	E3, E4
Dichlorotetrafluoroethane	ND	2	1	B5H0228	08/06/2015	08/11/15 04:55	E3, E4
Ethanol	**70**	5	10	B5H0287	08/06/2015	08/13/15 01:50	
Ethylbenzene	**2**	1	1	B5H0228	08/06/2015	08/11/15 04:55	E3, E4
Freon-113	ND	2	1	B5H0228	08/06/2015	08/11/15 04:55	E3, E4
Hexachlorobutadiene	ND	3	1	B5H0228	08/06/2015	08/11/15 04:55	E3, E4
Isopropylbenzene	ND	1	1	B5H0228	08/06/2015	08/11/15 04:55	E3, E4
m,p-Xylene	**10**	4	1	B5H0228	08/06/2015	08/11/15 04:55	E3, E4
Methylene chloride	**1**	0.87	1	B5H0228	08/06/2015	08/11/15 04:55	E3, E4
MTBE	ND	0.90	1	B5H0228	08/06/2015	08/11/15 04:55	E3, E4
n-Butylbenzene	ND	1	1	B5H0228	08/06/2015	08/11/15 04:55	E3, E4
n-Propylbenzene	ND	1	1	B5H0228	08/06/2015	08/11/15 04:55	E3, E4
Naphthalene	ND	1	1	B5H0228	08/06/2015	08/11/15 04:55	E3, E4
o-Xylene	**2**	1	1	B5H0228	08/06/2015	08/11/15 04:55	E3, E4
p-Isopropyltoluene	ND	1	1	B5H0228	08/06/2015	08/11/15 04:55	E3, E4
sec-Butylbenzene	ND	1	1	B5H0228	08/06/2015	08/11/15 04:55	E3, E4
Styrene	ND	1	1	B5H0228	08/06/2015	08/11/15 04:55	E3, E4
tert-Butylbenzene	ND	1	1	B5H0228	08/06/2015	08/11/15 04:55	E3, E4
Tetrachloroethene	**6**	2	1	B5H0228	08/06/2015	08/11/15 04:55	E3, E4
Toluene	**30**	0.94	1	B5H0228	08/06/2015	08/11/15 04:55	E3, E4
trans-1,2-Dichloroethene	ND	0.99	1	B5H0228	08/06/2015	08/11/15 04:55	E3, E4
trans-1,3-Dichloropropene	ND	1	1	B5H0228	08/06/2015	08/11/15 04:55	E3, E4
Trichloroethene	**10**	1	1	B5H0228	08/06/2015	08/11/15 04:55	E3, E4
Trichlorofluoromethane	ND	1	1	B5H0228	08/06/2015	08/11/15 04:55	E3, E4

Certificate of Analysis

Hushmand Associates, Inc.	Project Number : Parcel 33 - 600 S Santa Fe St., Los Angele
250 Goddard	Report To : Naresh Bellana
Irvine , CA 92618	Reported : 03/26/2018

Client Sample ID VP-6

Lab ID: 1502695-06

Volatile Organic Compounds in AIR by TO-15 (Canister) — **Analyst: MFR**

Analyte		Result (ug/m³)	PQL (ug/m³)	Dilution	Batch	Prepared	Date/Time Analyzed	Notes
Vinyl acetate		ND	0.88	1	B5H0228	08/06/2015	08/11/15 04:55	E3, E4
Vinyl chloride		ND	0.64	1	B5H0228	08/06/2015	08/11/15 04:55	E3, E4
Surrogate: 4-Bromofluorobenzene	*113 %*		*79.2 - 147*		B5H0287	08/06/2015	*08/13/15 01:50*	
Surrogate: 4-Bromofluorobenzene	*108 %*		*79.2 - 147*		B5H0228	08/06/2015	*08/11/15 04:55*	

Gasoline Range Organics in Air by TO-3 — **Analyst: MFR**

Analyte		Result (ug/m³)	PQL (ug/m³)	Dilution	Batch	Prepared	Date/Time Analyzed	Notes
Gasoline Range Organics		**1700**	1000	10	B5H0343	08/13/2015	08/13/15 11:56	
Surrogate: 4-Bromofluorobenzene	*100 %*		*70 - 130*		B5H0343	08/13/2015	*08/13/15 11:56*	

Certificate of Analysis

Hushmand Associates, Inc.	Project Number : Parcel 33 - 600 S Santa Fe St., Los Angele
250 Goddard	Report To : Naresh Bellana
Irvine , CA 92618	Reported : 03/26/2018

Client Sample ID VP-7

Lab ID: 1502695-07

Volatile Organic Compounds in AIR by TO-15 (Canister) **Analyst: MFR**

Analyte	Result (ug/m³)	PQL (ug/m³)	Dilution	Batch	Prepared	Date/Time Analyzed	Notes
1,1,1,2-Tetrachloroethane	ND	2	1	B5H0228	08/06/2015	08/11/15 05:36	E3, E4
1,1,1-Trichloroethane	**40**	1	1	B5H0228	08/06/2015	08/11/15 05:36	E3, E4
1,1,2,2-Tetrachloroethane	ND	2	1	B5H0228	08/06/2015	08/11/15 05:36	E3, E4
1,1,2-Trichloroethane	ND	1	1	B5H0228	08/06/2015	08/11/15 05:36	E3, E4
1,1-Dichloroethane	ND	1	1	B5H0228	08/06/2015	08/11/15 05:36	E3, E4
1,1-Dichloroethene	ND	0.99	1	B5H0228	08/06/2015	08/11/15 05:36	E3, E4
1,1-Dichloropropene	ND	1	1	B5H0228	08/06/2015	08/11/15 05:36	E3, E4
1,2,3-Trichloropropane	ND	2	1	B5H0228	08/06/2015	08/11/15 05:36	E3, E4
1,2,4-Trichlorobenzene	ND	2	1	B5H0228	08/06/2015	08/11/15 05:36	E3, E4
1,2,4-Trimethylbenzene	**4**	1	1	B5H0228	08/06/2015	08/11/15 05:36	E3, E4
1,2-Dibromo-3-chloropropane	ND	2	1	B5H0228	08/06/2015	08/11/15 05:36	E3, E4
1,2-Dibromoethane	ND	2	1	B5H0228	08/06/2015	08/11/15 05:36	E3, E4
1,2-Dichlorobenzene	ND	2	1	B5H0228	08/06/2015	08/11/15 05:36	E3, E4
1,2-Dichloroethane	ND	1	1	B5H0228	08/06/2015	08/11/15 05:36	E3, E4
1,2-Dichloropropane	ND	1	1	B5H0228	08/06/2015	08/11/15 05:36	E3, E4
1,3,5-Trimethylbenzene	**1**	1	1	B5H0228	08/06/2015	08/11/15 05:36	E3, E4
1,3-Butadiene	ND	0.55	1	B5H0228	08/06/2015	08/11/15 05:36	E3, E4
1,3-Dichlorobenzene	**9**	2	1	B5H0228	08/06/2015	08/11/15 05:36	E3, E4
1,4-Dichlorobenzene	ND	2	1	B5H0228	08/06/2015	08/11/15 05:36	E3, E4
1,4-Dioxane	ND	0.90	1	B5H0228	08/06/2015	08/11/15 05:36	E3, E4
2,2,4-Trimethylpentane	**1**	1	1	B5H0228	08/06/2015	08/11/15 05:36	E3, E4
2-Butanone	**2**	0.74	1	B5H0228	08/06/2015	08/11/15 05:36	E3, E4
2-Chloroethyl vinyl ether	ND	1	1	B5H0228	08/06/2015	08/11/15 05:36	E3, E4
2-Chlorotoluene	ND	1	1	B5H0228	08/06/2015	08/11/15 05:36	E3, E4
2-Hexanone	ND	1	1	B5H0228	08/06/2015	08/11/15 05:36	E3, E4
2-Propanol	**50**	0.61	1	B5H0228	08/06/2015	08/11/15 05:36	E3, E4
4-Chlorotoluene	ND	1	1	B5H0228	08/06/2015	08/11/15 05:36	E3, E4
4-Ethyl Toluene	**2**	1	1	B5H0228	08/06/2015	08/11/15 05:36	E3, E4
4-Methyl-2-pentanone	**3**	1	1	B5H0228	08/06/2015	08/11/15 05:36	E3, E4
Acetone	**10**	0.59	1	B5H0228	08/06/2015	08/11/15 05:36	E3, E4
Acetonitrile	ND	0.42	1	B5H0228	08/06/2015	08/11/15 05:36	E3, E4
Acrolein	ND	0.57	1	B5H0228	08/06/2015	08/11/15 05:36	E3, E4
Acrylonitrile	ND	0.54	1	B5H0228	08/06/2015	08/11/15 05:36	E3, E4
Benzene	**0.89**	0.80	1	B5H0228	08/06/2015	08/11/15 05:36	E3, E4
Benzyl chloride	ND	1	1	B5H0228	08/06/2015	08/11/15 05:36	E3, E4
Bromobenzene	ND	2	1	B5H0228	08/06/2015	08/11/15 05:36	E3, E4
Bromodichloromethane	ND	2	1	B5H0228	08/06/2015	08/11/15 05:36	E3, E4

Certificate of Analysis

Hushmand Associates, Inc.	Project Number : Parcel 33 - 600 S Santa Fe St., Los Angele
250 Goddard	Report To : Naresh Bellana
Irvine , CA 92618	Reported : 03/26/2018

Client Sample ID VP-7

Lab ID: 1502695-07

Volatile Organic Compounds in AIR by TO-15 (Canister) **Analyst: MFR**

Analyte	Result (ug/m³)	PQL (ug/m³)	Dilution	Batch	Prepared	Date/Time Analyzed	Notes
Bromoform	ND	3	1	B5H0228	08/06/2015	08/11/15 05:36	E3, E4
Bromomethane	ND	0.97	1	B5H0228	08/06/2015	08/11/15 05:36	E3, E4
Carbon disulfide	ND	0.78	1	B5H0228	08/06/2015	08/11/15 05:36	E3, E4
Carbon tetrachloride	ND	2	1	B5H0228	08/06/2015	08/11/15 05:36	E3, E4
Chlorobenzene	ND	1	1	B5H0228	08/06/2015	08/11/15 05:36	E3, E4
Chloroethane	ND	0.66	1	B5H0228	08/06/2015	08/11/15 05:36	E3, E4
Chloroform	ND	1	1	B5H0228	08/06/2015	08/11/15 05:36	E3, E4
Chloromethane	ND	0.52	1	B5H0228	08/06/2015	08/11/15 05:36	E3, E4
cis-1,2-Dichloroethene	ND	0.99	1	B5H0228	08/06/2015	08/11/15 05:36	E3, E4
cis-1,3-Dichloropropene	ND	1	1	B5H0228	08/06/2015	08/11/15 05:36	E3, E4
Cyclohexane	**1**	0.86	1	B5H0228	08/06/2015	08/11/15 05:36	E3, E4
Dibromochloromethane	ND	2	1	B5H0228	08/06/2015	08/11/15 05:36	E3, E4
Dibromomethane	ND	2	1	B5H0228	08/06/2015	08/11/15 05:36	E3, E4
Dichlorodifluoromethane	**3**	1	1	B5H0228	08/06/2015	08/11/15 05:36	E3, E4
Dichlorotetrafluoroethane	ND	2	1	B5H0228	08/06/2015	08/11/15 05:36	E3, E4
Ethanol	**200**	5	10	B5H0287	08/06/2015	08/13/15 02:25	
Ethylbenzene	**3**	1	1	B5H0228	08/06/2015	08/11/15 05:36	E3, E4
Freon-113	ND	2	1	B5H0228	08/06/2015	08/11/15 05:36	E3, E4
Hexachlorobutadiene	ND	3	1	B5H0228	08/06/2015	08/11/15 05:36	E3, E4
Isopropylbenzene	ND	1	1	B5H0228	08/06/2015	08/11/15 05:36	E3, E4
m,p-Xylene	**20**	4	1	B5H0228	08/06/2015	08/11/15 05:36	E3, E4
Methylene chloride	ND	0.87	1	B5H0228	08/06/2015	08/11/15 05:36	E3, E4
MTBE	ND	0.90	1	B5H0228	08/06/2015	08/11/15 05:36	E3, E4
n-Butylbenzene	ND	1	1	B5H0228	08/06/2015	08/11/15 05:36	E3, E4
n-Propylbenzene	ND	1	1	B5H0228	08/06/2015	08/11/15 05:36	E3, E4
Naphthalene	ND	1	1	B5H0228	08/06/2015	08/11/15 05:36	E3, E4
o-Xylene	**4**	1	1	B5H0228	08/06/2015	08/11/15 05:36	E3, E4
p-Isopropyltoluene	ND	1	1	B5H0228	08/06/2015	08/11/15 05:36	E3, E4
sec-Butylbenzene	ND	1	1	B5H0228	08/06/2015	08/11/15 05:36	E3, E4
Styrene	ND	1	1	B5H0228	08/06/2015	08/11/15 05:36	E3, E4
tert-Butylbenzene	ND	1	1	B5H0228	08/06/2015	08/11/15 05:36	E3, E4
Tetrachloroethene	**40**	2	1	B5H0228	08/06/2015	08/11/15 05:36	E3, E4
Toluene	**20**	0.94	1	B5H0228	08/06/2015	08/11/15 05:36	E3, E4
trans-1,2-Dichloroethene	ND	0.99	1	B5H0228	08/06/2015	08/11/15 05:36	E3, E4
trans-1,3-Dichloropropene	ND	1	1	B5H0228	08/06/2015	08/11/15 05:36	E3, E4
Trichloroethene	ND	1	1	B5H0228	08/06/2015	08/11/15 05:36	E3, E4
Trichlorofluoromethane	**2**	1	1	B5H0228	08/06/2015	08/11/15 05:36	E3, E4

Certificate of Analysis

Hushmand Associates, Inc.	Project Number : Parcel 33 - 600 S Santa Fe St., Los Angele
250 Goddard	Report To : Naresh Bellana
Irvine , CA 92618	Reported : 03/26/2018

Client Sample ID VP-7

Lab ID: 1502695-07

Volatile Organic Compounds in AIR by TO-15 (Canister) **Analyst: MFR**

Analyte		Result (ug/m³)	PQL (ug/m³)	Dilution	Batch	Prepared	Date/Time Analyzed	Notes
Vinyl acetate		ND	0.88	1	B5H0228	08/06/2015	08/11/15 05:36	E3, E4
Vinyl chloride		ND	0.64	1	B5H0228	08/06/2015	08/11/15 05:36	E3, E4
Surrogate: 4-Bromofluorobenzene	*113 %*		*79.2 - 147*		B5H0287	08/06/2015	*08/13/15 02:25*	
Surrogate: 4-Bromofluorobenzene	*106 %*		*79.2 - 147*		B5H0228	08/06/2015	*08/11/15 05:36*	

Gasoline Range Organics in Air by TO-3 **Analyst: MFR**

Analyte		Result (ug/m³)	PQL (ug/m³)	Dilution	Batch	Prepared	Date/Time Analyzed	Notes
Gasoline Range Organics		**1900**	1000	10	B5H0282	08/12/2015	08/12/15 18:30	
Surrogate: 4-Bromofluorobenzene	*98.0 %*		*70 - 130*		B5H0282	08/12/2015	*08/12/15 18:30*	

Certificate of Analysis

Hushmand Associates, Inc.	Project Number : Parcel 33 - 600 S Santa Fe St., Los Angele
250 Goddard	Report To : Naresh Bellana
Irvine , CA 92618	Reported : 03/26/2018

Client Sample ID VP-8
Lab ID: 1502695-08

Volatile Organic Compounds in AIR by TO-15 (Canister) **Analyst: MFR**

Analyte	Result (ug/m³)	PQL (ug/m³)	Dilution	Batch	Prepared	Date/Time Analyzed	Notes
1,1,1,2-Tetrachloroethane	ND	2	1	B5H0228	08/06/2015	08/11/15 06:20	E3, E4
1,1,1-Trichloroethane	**20**	1	1	B5H0228	08/06/2015	08/11/15 06:20	
1,1,2,2-Tetrachloroethane	ND	2	1	B5H0228	08/06/2015	08/11/15 06:20	E3, E4
1,1,2-Trichloroethane	ND	1	1	B5H0228	08/06/2015	08/11/15 06:20	E3, E4
1,1-Dichloroethane	ND	1	1	B5H0228	08/06/2015	08/11/15 06:20	
1,1-Dichloroethene	ND	0.99	1	B5H0228	08/06/2015	08/11/15 06:20	
1,1-Dichloropropene	ND	1	1	B5H0228	08/06/2015	08/11/15 06:20	E3, E4
1,2,3-Trichloropropane	ND	2	1	B5H0228	08/06/2015	08/11/15 06:20	E3, E4
1,2,4-Trichlorobenzene	ND	2	1	B5H0228	08/06/2015	08/11/15 06:20	E3, E4
1,2,4-Trimethylbenzene	**5**	1	1	B5H0228	08/06/2015	08/11/15 06:20	E3, E4
1,2-Dibromo-3-chloropropane	ND	2	1	B5H0228	08/06/2015	08/11/15 06:20	E3, E4
1,2-Dibromoethane	ND	2	1	B5H0228	08/06/2015	08/11/15 06:20	E3, E4
1,2-Dichlorobenzene	ND	2	1	B5H0228	08/06/2015	08/11/15 06:20	E3, E4
1,2-Dichloroethane	ND	1	1	B5H0228	08/06/2015	08/11/15 06:20	E3, E4
1,2-Dichloropropane	ND	1	1	B5H0228	08/06/2015	08/11/15 06:20	E3, E4
1,3,5-Trimethylbenzene	**1**	1	1	B5H0228	08/06/2015	08/11/15 06:20	E3, E4
1,3-Butadiene	ND	0.55	1	B5H0228	08/06/2015	08/11/15 06:20	E3, E4
1,3-Dichlorobenzene	**8**	2	1	B5H0228	08/06/2015	08/11/15 06:20	E3, E4
1,4-Dichlorobenzene	ND	2	1	B5H0228	08/06/2015	08/11/15 06:20	E3, E4
1,4-Dioxane	ND	0.90	1	B5H0228	08/06/2015	08/11/15 06:20	E3, E4
2,2,4-Trimethylpentane	**2**	1	1	B5H0228	08/06/2015	08/11/15 06:20	E3, E4
2-Butanone	**2**	0.74	1	B5H0228	08/06/2015	08/11/15 06:20	
2-Chloroethyl vinyl ether	ND	1	1	B5H0228	08/06/2015	08/11/15 06:20	E3, E4
2-Chlorotoluene	ND	1	1	B5H0228	08/06/2015	08/11/15 06:20	E3, E4
2-Hexanone	ND	1	1	B5H0228	08/06/2015	08/11/15 06:20	E3, E4
2-Propanol	**100**	6	10	B5H0287	08/06/2015	08/13/15 03:03	
4-Chlorotoluene	ND	1	1	B5H0228	08/06/2015	08/11/15 06:20	E3, E4
4-Ethyl Toluene	**1**	1	1	B5H0228	08/06/2015	08/11/15 06:20	E3, E4
4-Methyl-2-pentanone	**4**	1	1	B5H0228	08/06/2015	08/11/15 06:20	E3, E4
Acetone	**10**	0.59	1	B5H0228	08/06/2015	08/11/15 06:20	
Acetonitrile	ND	0.42	1	B5H0228	08/06/2015	08/11/15 06:20	
Acrolein	ND	0.57	1	B5H0228	08/06/2015	08/11/15 06:20	
Acrylonitrile	ND	0.54	1	B5H0228	08/06/2015	08/11/15 06:20	
Benzene	**1**	0.80	1	B5H0228	08/06/2015	08/11/15 06:20	E3, E4
Benzyl chloride	ND	1	1	B5H0228	08/06/2015	08/11/15 06:20	E4, E3
Bromobenzene	ND	2	1	B5H0228	08/06/2015	08/11/15 06:20	E4, E3
Bromodichloromethane	ND	2	1	B5H0228	08/06/2015	08/11/15 06:20	E4, E3

Certificate of Analysis

Hushmand Associates, Inc.	Project Number : Parcel 33 - 600 S Santa Fe St., Los Angele
250 Goddard	Report To : Naresh Bellana
Irvine , CA 92618	Reported : 03/26/2018

Client Sample ID VP-8

Lab ID: 1502695-08

Volatile Organic Compounds in AIR by TO-15 (Canister) **Analyst: MFR**

Analyte	Result (ug/m³)	PQL (ug/m³)	Dilution	Batch	Prepared	Date/Time Analyzed	Notes
Bromoform	ND	3	1	B5H0228	08/06/2015	08/11/15 06:20	E4, E3
Bromomethane	ND	0.97	1	B5H0228	08/06/2015	08/11/15 06:20	
Carbon disulfide	ND	0.78	1	B5H0228	08/06/2015	08/11/15 06:20	
Carbon tetrachloride	ND	2	1	B5H0228	08/06/2015	08/11/15 06:20	E4, E3
Chlorobenzene	ND	1	1	B5H0228	08/06/2015	08/11/15 06:20	E4, E3
Chloroethane	ND	0.66	1	B5H0228	08/06/2015	08/11/15 06:20	
Chloroform	**2**	1	1	B5H0228	08/06/2015	08/11/15 06:20	
Chloromethane	ND	0.52	1	B5H0228	08/06/2015	08/11/15 06:20	
cis-1,2-Dichloroethene	ND	0.99	1	B5H0228	08/06/2015	08/11/15 06:20	
cis-1,3-Dichloropropene	ND	1	1	B5H0228	08/06/2015	08/11/15 06:20	E4, E3
Cyclohexane	**2**	0.86	1	B5H0228	08/06/2015	08/11/15 06:20	E3, E4
Dibromochloromethane	ND	2	1	B5H0228	08/06/2015	08/11/15 06:20	E3, E4
Dibromomethane	ND	2	1	B5H0228	08/06/2015	08/11/15 06:20	E3, E4
Dichlorodifluoromethane	**8**	1	1	B5H0228	08/06/2015	08/11/15 06:20	
Dichlorotetrafluoroethane	ND	2	1	B5H0228	08/06/2015	08/11/15 06:20	
Ethanol	**330**	5	10	B5H0287	08/06/2015	08/13/15 03:03	
Ethylbenzene	**3**	1	1	B5H0228	08/06/2015	08/11/15 06:20	E3, E4
Freon-113	ND	2	1	B5H0228	08/06/2015	08/11/15 06:20	
Hexachlorobutadiene	ND	3	1	B5H0228	08/06/2015	08/11/15 06:20	E3, E4
Isopropylbenzene	ND	1	1	B5H0228	08/06/2015	08/11/15 06:20	E3, E4
m,p-Xylene	**20**	4	1	B5H0228	08/06/2015	08/11/15 06:20	E3, E4
Methylene chloride	ND	0.87	1	B5H0228	08/06/2015	08/11/15 06:20	
MTBE	ND	0.90	1	B5H0228	08/06/2015	08/11/15 06:20	
n-Butylbenzene	ND	1	1	B5H0228	08/06/2015	08/11/15 06:20	E3, E4
n-Propylbenzene	ND	1	1	B5H0228	08/06/2015	08/11/15 06:20	E3, E4
Naphthalene	ND	1	1	B5H0228	08/06/2015	08/11/15 06:20	E3, E4
o-Xylene	**4**	1	1	B5H0228	08/06/2015	08/11/15 06:20	E3, E4
p-Isopropyltoluene	ND	1	1	B5H0228	08/06/2015	08/11/15 06:20	E3, E4
sec-Butylbenzene	ND	1	1	B5H0228	08/06/2015	08/11/15 06:20	E3, E4
Styrene	ND	1	1	B5H0228	08/06/2015	08/11/15 06:20	E4, E3
tert-Butylbenzene	ND	1	1	B5H0228	08/06/2015	08/11/15 06:20	E3, E4
Tetrachloroethene	**20**	2	1	B5H0228	08/06/2015	08/11/15 06:20	E3, E4
Toluene	**10**	0.94	1	B5H0228	08/06/2015	08/11/15 06:20	E3, E4
trans-1,2-Dichloroethene	ND	0.99	1	B5H0228	08/06/2015	08/11/15 06:20	
trans-1,3-Dichloropropene	ND	1	1	B5H0228	08/06/2015	08/11/15 06:20	E3, E4
Trichloroethene	ND	1	1	B5H0228	08/06/2015	08/11/15 06:20	E3, E4
Trichlorofluoromethane	**2**	1	1	B5H0228	08/06/2015	08/11/15 06:20	

Certificate of Analysis

Hushmand Associates, Inc.	Project Number : Parcel 33 - 600 S Santa Fe St., Los Angele
250 Goddard	Report To : Naresh Bellana
Irvine , CA 92618	Reported : 03/26/2018

Client Sample ID VP-8

Lab ID: 1502695-08

Volatile Organic Compounds in AIR by TO-15 (Canister) — **Analyst: MFR**

Analyte		Result (ug/m³)	PQL (ug/m³)	Dilution	Batch	Prepared	Date/Time Analyzed	Notes
Vinyl acetate		**3**	0.88	1	B5H0228	08/06/2015	08/11/15 06:20	
Vinyl chloride		ND	0.64	1	B5H0228	08/06/2015	08/11/15 06:20	
Surrogate: 4-Bromofluorobenzene	*118 %*		*79.2 - 147*		B5H0287	08/06/2015	*08/13/15 03:03*	
Surrogate: 4-Bromofluorobenzene	*110 %*		*79.2 - 147*		B5H0228	08/06/2015	*08/11/15 06:20*	

Gasoline Range Organics in Air by TO-3 — **Analyst: MFR**

Analyte		Result (ug/m³)	PQL (ug/m³)	Dilution	Batch	Prepared	Date/Time Analyzed	Notes
Gasoline Range Organics		**2200**	1000	10	B5H0282	08/12/2015	08/12/15 19:06	
Surrogate: 4-Bromofluorobenzene	*101 %*		*70 - 130*		B5H0282	08/12/2015	*08/12/15 19:06*	

Certificate of Analysis

Hushmand Associates, Inc.	Project Number : Parcel 33 - 600 S Santa Fe St., Los Angele
250 Goddard	Report To : Naresh Bellana
Irvine , CA 92618	Reported : 03/26/2018

Client Sample ID VP-9

Lab ID: 1502695-09

Volatile Organic Compounds in AIR by TO-15 (Canister) **Analyst: MFR**

Analyte	Result (ug/m³)	PQL (ug/m³)	Dilution	Batch	Prepared	Date/Time Analyzed	Notes
1,1,1,2-Tetrachloroethane	ND	2	1	B5H0228	08/06/2015	08/11/15 07:04	E3, E4
1,1,1-Trichloroethane	**9**	1	1	B5H0228	08/06/2015	08/11/15 07:04	
1,1,2,2-Tetrachloroethane	ND	2	1	B5H0228	08/06/2015	08/11/15 07:04	E3, E4
1,1,2-Trichloroethane	ND	1	1	B5H0228	08/06/2015	08/11/15 07:04	E3, E4
1,1-Dichloroethane	ND	1	1	B5H0228	08/06/2015	08/11/15 07:04	
1,1-Dichloroethene	ND	0.99	1	B5H0228	08/06/2015	08/11/15 07:04	
1,1-Dichloropropene	ND	1	1	B5H0228	08/06/2015	08/11/15 07:04	E3, E4
1,2,3-Trichloropropane	ND	2	1	B5H0228	08/06/2015	08/11/15 07:04	E3, E4
1,2,4-Trichlorobenzene	ND	2	1	B5H0228	08/06/2015	08/11/15 07:04	E3, E4
1,2,4-Trimethylbenzene	**6**	1	1	B5H0228	08/06/2015	08/11/15 07:04	E3, E4
1,2-Dibromo-3-chloropropane	ND	2	1	B5H0228	08/06/2015	08/11/15 07:04	E3, E4
1,2-Dibromoethane	ND	2	1	B5H0228	08/06/2015	08/11/15 07:04	E3, E4
1,2-Dichlorobenzene	ND	2	1	B5H0228	08/06/2015	08/11/15 07:04	E3, E4
1,2-Dichloroethane	ND	1	1	B5H0228	08/06/2015	08/11/15 07:04	E3, E4
1,2-Dichloropropane	ND	1	1	B5H0228	08/06/2015	08/11/15 07:04	E3, E4
1,3,5-Trimethylbenzene	**1**	1	1	B5H0228	08/06/2015	08/11/15 07:04	E3, E4
1,3-Butadiene	ND	0.55	1	B5H0228	08/06/2015	08/11/15 07:04	
1,3-Dichlorobenzene	**8**	2	1	B5H0228	08/06/2015	08/11/15 07:04	E3, E4
1,4-Dichlorobenzene	ND	2	1	B5H0228	08/06/2015	08/11/15 07:04	E3, E4
1,4-Dioxane	ND	0.90	1	B5H0228	08/06/2015	08/11/15 07:04	E3, E4
2,2,4-Trimethylpentane	**1**	1	1	B5H0228	08/06/2015	08/11/15 07:04	E4, E3
2-Butanone	**2**	0.74	1	B5H0228	08/06/2015	08/11/15 07:04	
2-Chloroethyl vinyl ether	ND	1	1	B5H0228	08/06/2015	08/11/15 07:04	E4, E3
2-Chlorotoluene	ND	1	1	B5H0228	08/06/2015	08/11/15 07:04	E4, E3
2-Hexanone	ND	1	1	B5H0228	08/06/2015	08/11/15 07:04	E4, E3
2-Propanol	**80**	6	10	B5H0287	08/06/2015	08/13/15 03:40	
4-Chlorotoluene	ND	1	1	B5H0228	08/06/2015	08/11/15 07:04	E3, E4
4-Ethyl Toluene	**1**	1	1	B5H0228	08/06/2015	08/11/15 07:04	E3, E4
4-Methyl-2-pentanone	**3**	1	1	B5H0228	08/06/2015	08/11/15 07:04	E3, E4
Acetone	**10**	0.59	1	B5H0228	08/06/2015	08/11/15 07:04	
Acetonitrile	ND	0.42	1	B5H0228	08/06/2015	08/11/15 07:04	
Acrolein	ND	0.57	1	B5H0228	08/06/2015	08/11/15 07:04	
Acrylonitrile	ND	0.54	1	B5H0228	08/06/2015	08/11/15 07:04	
Benzene	**0.89**	0.80	1	B5H0228	08/06/2015	08/11/15 07:04	E3, E4
Benzyl chloride	ND	1	1	B5H0228	08/06/2015	08/11/15 07:04	E3, E4
Bromobenzene	ND	2	1	B5H0228	08/06/2015	08/11/15 07:04	E3, E4
Bromodichloromethane	ND	2	1	B5H0228	08/06/2015	08/11/15 07:04	E3, E4

Certificate of Analysis

Hushmand Associates, Inc.	Project Number : Parcel 33 - 600 S Santa Fe St., Los Angele
250 Goddard	Report To : Naresh Bellana
Irvine , CA 92618	Reported : 03/26/2018

Client Sample ID VP-9

Lab ID: 1502695-09

Volatile Organic Compounds in AIR by TO-15 (Canister) **Analyst: MFR**

Analyte	Result (ug/m³)	PQL (ug/m³)	Dilution	Batch	Prepared	Date/Time Analyzed	Notes
Bromoform	ND	3	1	B5H0228	08/06/2015	08/11/15 07:04	E3, E4
Bromomethane	ND	0.97	1	B5H0228	08/06/2015	08/11/15 07:04	
Carbon disulfide	ND	0.78	1	B5H0228	08/06/2015	08/11/15 07:04	
Carbon tetrachloride	ND	2	1	B5H0228	08/06/2015	08/11/15 07:04	E3, E4
Chlorobenzene	ND	1	1	B5H0228	08/06/2015	08/11/15 07:04	E3, E4
Chloroethane	ND	0.66	1	B5H0228	08/06/2015	08/11/15 07:04	
Chloroform	ND	1	1	B5H0228	08/06/2015	08/11/15 07:04	
Chloromethane	ND	0.52	1	B5H0228	08/06/2015	08/11/15 07:04	
cis-1,2-Dichloroethene	ND	0.99	1	B5H0228	08/06/2015	08/11/15 07:04	
cis-1,3-Dichloropropene	ND	1	1	B5H0228	08/06/2015	08/11/15 07:04	E3, E4
Cyclohexane	**1**	0.86	1	B5H0228	08/06/2015	08/11/15 07:04	E3, E4
Dibromochloromethane	ND	2	1	B5H0228	08/06/2015	08/11/15 07:04	E3, E4
Dibromomethane	ND	2	1	B5H0228	08/06/2015	08/11/15 07:04	E3, E4
Dichlorodifluoromethane	**2**	1	1	B5H0228	08/06/2015	08/11/15 07:04	
Dichlorotetrafluoroethane	ND	2	1	B5H0228	08/06/2015	08/11/15 07:04	
Ethanol	**250**	5	10	B5H0287	08/06/2015	08/13/15 03:40	
Ethylbenzene	**3**	1	1	B5H0228	08/06/2015	08/11/15 07:04	E3, E4
Freon-113	ND	2	1	B5H0228	08/06/2015	08/11/15 07:04	
Hexachlorobutadiene	ND	3	1	B5H0228	08/06/2015	08/11/15 07:04	E3, E4
Isopropylbenzene	ND	1	1	B5H0228	08/06/2015	08/11/15 07:04	E3, E4
m,p-Xylene	**20**	4	1	B5H0228	08/06/2015	08/11/15 07:04	E3, E4
Methylene chloride	ND	0.87	1	B5H0228	08/06/2015	08/11/15 07:04	
MTBE	ND	0.90	1	B5H0228	08/06/2015	08/11/15 07:04	
n-Butylbenzene	ND	1	1	B5H0228	08/06/2015	08/11/15 07:04	E4, E3
n-Propylbenzene	ND	1	1	B5H0228	08/06/2015	08/11/15 07:04	E4, E3
Naphthalene	ND	1	1	B5H0228	08/06/2015	08/11/15 07:04	E4, E3
o-Xylene	**5**	1	1	B5H0228	08/06/2015	08/11/15 07:04	E4, E3
p-Isopropyltoluene	ND	1	1	B5H0228	08/06/2015	08/11/15 07:04	E4, E3
sec-Butylbenzene	ND	1	1	B5H0228	08/06/2015	08/11/15 07:04	E4, E3
Styrene	ND	1	1	B5H0228	08/06/2015	08/11/15 07:04	E3, E4
tert-Butylbenzene	ND	1	1	B5H0228	08/06/2015	08/11/15 07:04	E3, E4
Tetrachloroethene	**40**	2	1	B5H0228	08/06/2015	08/11/15 07:04	E3, E4
Toluene	**40**	0.94	1	B5H0228	08/06/2015	08/11/15 07:04	E3, E4
trans-1,2-Dichloroethene	ND	0.99	1	B5H0228	08/06/2015	08/11/15 07:04	
trans-1,3-Dichloropropene	ND	1	1	B5H0228	08/06/2015	08/11/15 07:04	E3, E4
Trichloroethene	**2**	1	1	B5H0228	08/06/2015	08/11/15 07:04	E3, E4
Trichlorofluoromethane	**1**	1	1	B5H0228	08/06/2015	08/11/15 07:04	

Certificate of Analysis

Hushmand Associates, Inc.	Project Number : Parcel 33 - 600 S Santa Fe St., Los Angele
250 Goddard	Report To : Naresh Bellana
Irvine , CA 92618	Reported : 03/26/2018

Client Sample ID VP-9

Lab ID: 1502695-09

Volatile Organic Compounds in AIR by TO-15 (Canister) **Analyst: MFR**

Analyte		Result (ug/m³)	PQL (ug/m³)	Dilution	Batch	Prepared	Date/Time Analyzed	Notes
Vinyl acetate		**2**	0.88	1	B5H0228	08/06/2015	08/11/15 07:04	
Vinyl chloride		ND	0.64	1	B5H0228	08/06/2015	08/11/15 07:04	
Surrogate: 4-Bromofluorobenzene	*114 %*		*79.2 - 147*		B5H0287	08/06/2015	*08/13/15 03:40*	
Surrogate: 4-Bromofluorobenzene	*110 %*		*79.2 - 147*		B5H0228	08/06/2015	*08/11/15 07:04*	

Gasoline Range Organics in Air by TO-3 **Analyst: MFR**

Analyte		Result (ug/m³)	PQL (ug/m³)	Dilution	Batch	Prepared	Date/Time Analyzed	Notes
Gasoline Range Organics		**2000**	1000	10	B5H0282	08/12/2015	08/12/15 20:49	
Surrogate: 4-Bromofluorobenzene	*102 %*		*70 - 130*		B5H0282	08/12/2015	*08/12/15 20:49*	

Certificate of Analysis

Hushmand Associates, Inc.	Project Number : Parcel 33 - 600 S Santa Fe St., Los Angele
250 Goddard	Report To : Naresh Bellana
Irvine , CA 92618	Reported : 03/26/2018

Client Sample ID VP-10

Lab ID: 1502695-10

Volatile Organic Compounds in AIR by TO-15 (Canister) **Analyst: MFR**

Analyte	Result (ug/m³)	PQL (ug/m³)	Dilution	Batch	Prepared	Date/Time Analyzed	Notes
1,1,1,2-Tetrachloroethane	ND	2	1	B5H0228	08/06/2015	08/11/15 07:55	E3, E4
1,1,1-Trichloroethane	ND	1	1	B5H0228	08/06/2015	08/11/15 07:55	E3, E4
1,1,2,2-Tetrachloroethane	ND	2	1	B5H0228	08/06/2015	08/11/15 07:55	E3, E4
1,1,2-Trichloroethane	ND	1	1	B5H0228	08/06/2015	08/11/15 07:55	E3, E4
1,1-Dichloroethane	ND	1	1	B5H0228	08/06/2015	08/11/15 07:55	E3, E4
1,1-Dichloroethene	ND	0.99	1	B5H0228	08/06/2015	08/11/15 07:55	E3, E4
1,1-Dichloropropene	ND	1	1	B5H0228	08/06/2015	08/11/15 07:55	E3, E4
1,2,3-Trichloropropane	ND	2	1	B5H0228	08/06/2015	08/11/15 07:55	E3, E4
1,2,4-Trichlorobenzene	ND	2	1	B5H0228	08/06/2015	08/11/15 07:55	E3, E4
1,2,4-Trimethylbenzene	ND	1	1	B5H0228	08/06/2015	08/11/15 07:55	E3, E4
1,2-Dibromo-3-chloropropane	ND	2	1	B5H0228	08/06/2015	08/11/15 07:55	E3, E4
1,2-Dibromoethane	ND	2	1	B5H0228	08/06/2015	08/11/15 07:55	E3, E4
1,2-Dichlorobenzene	ND	2	1	B5H0228	08/06/2015	08/11/15 07:55	E3, E4
1,2-Dichloroethane	ND	1	1	B5H0228	08/06/2015	08/11/15 07:55	E3, E4
1,2-Dichloropropane	ND	1	1	B5H0228	08/06/2015	08/11/15 07:55	E3, E4
1,3,5-Trimethylbenzene	ND	1	1	B5H0228	08/06/2015	08/11/15 07:55	E3, E4
1,3-Butadiene	ND	0.55	1	B5H0228	08/06/2015	08/11/15 07:55	E3, E4
1,3-Dichlorobenzene	ND	2	1	B5H0228	08/06/2015	08/11/15 07:55	E3, E4
1,4-Dichlorobenzene	ND	2	1	B5H0228	08/06/2015	08/11/15 07:55	E3, E4
1,4-Dioxane	ND	0.90	1	B5H0228	08/06/2015	08/11/15 07:55	E3, E4
2,2,4-Trimethylpentane	ND	1	1	B5H0228	08/06/2015	08/11/15 07:55	E3, E4
2-Butanone	ND	0.74	1	B5H0228	08/06/2015	08/11/15 07:55	E3, E4
2-Chloroethyl vinyl ether	ND	1	1	B5H0228	08/06/2015	08/11/15 07:55	E3, E4
2-Chlorotoluene	ND	1	1	B5H0228	08/06/2015	08/11/15 07:55	E3, E4
2-Hexanone	ND	1	1	B5H0228	08/06/2015	08/11/15 07:55	E3, E4
4-Chlorotoluene	ND	1	1	B5H0228	08/06/2015	08/11/15 07:55	E3, E4
4-Ethyl Toluene	ND	1	1	B5H0228	08/06/2015	08/11/15 07:55	E3, E4
4-Methyl-2-pentanone	ND	1	1	B5H0228	08/06/2015	08/11/15 07:55	E3, E4
Acetone	**2**	0.59	1	B5H0228	08/06/2015	08/11/15 07:55	E3, E4
Acetonitrile	ND	0.42	1	B5H0228	08/06/2015	08/11/15 07:55	E3, E4
Acrolein	ND	0.57	1	B5H0228	08/06/2015	08/11/15 07:55	E3, E4
Acrylonitrile	ND	0.54	1	B5H0228	08/06/2015	08/11/15 07:55	E3, E4
Benzene	ND	0.80	1	B5H0228	08/06/2015	08/11/15 07:55	E3, E4
Benzyl chloride	ND	1	1	B5H0228	08/06/2015	08/11/15 07:55	E3, E4
Bromobenzene	ND	2	1	B5H0228	08/06/2015	08/11/15 07:55	E3, E4
Bromodichloromethane	ND	2	1	B5H0228	08/06/2015	08/11/15 07:55	E3, E4
Bromoform	ND	3	1	B5H0228	08/06/2015	08/11/15 07:55	E3, E4

Certificate of Analysis

Hushmand Associates, Inc.	Project Number : Parcel 33 - 600 S Santa Fe St., Los Angele
250 Goddard	Report To : Naresh Bellana
Irvine , CA 92618	Reported : 03/26/2018

Client Sample ID VP-10

Lab ID: 1502695-10

Volatile Organic Compounds in AIR by TO-15 (Canister) **Analyst: MFR**

Analyte	Result (ug/m³)	PQL (ug/m³)	Dilution	Batch	Prepared	Date/Time Analyzed	Notes
Bromomethane	ND	0.97	1	B5H0228	08/06/2015	08/11/15 07:55	E3, E4
Carbon disulfide	ND	0.78	1	B5H0228	08/06/2015	08/11/15 07:55	E3, E4
Carbon tetrachloride	ND	2	1	B5H0228	08/06/2015	08/11/15 07:55	E3, E4
Chlorobenzene	ND	1	1	B5H0228	08/06/2015	08/11/15 07:55	E3, E4
Chloroethane	ND	0.66	1	B5H0228	08/06/2015	08/11/15 07:55	E3, E4
Chloroform	ND	1	1	B5H0228	08/06/2015	08/11/15 07:55	E3, E4
Chloromethane	ND	0.52	1	B5H0228	08/06/2015	08/11/15 07:55	E3, E4
cis-1,2-Dichloroethene	ND	0.99	1	B5H0228	08/06/2015	08/11/15 07:55	E3, E4
cis-1,3-Dichloropropene	ND	1	1	B5H0228	08/06/2015	08/11/15 07:55	E3, E4
Cyclohexane	ND	0.86	1	B5H0228	08/06/2015	08/11/15 07:55	E3, E4
Dibromochloromethane	ND	2	1	B5H0228	08/06/2015	08/11/15 07:55	E3, E4
Dibromomethane	ND	2	1	B5H0228	08/06/2015	08/11/15 07:55	E3, E4
Dichlorodifluoromethane	ND	1	1	B5H0228	08/06/2015	08/11/15 07:55	E3, E4
Dichlorotetrafluoroethane	ND	2	1	B5H0228	08/06/2015	08/11/15 07:55	E3, E4
Ethanol	**280**	5	10	B5H0287	08/06/2015	08/13/15 11:44	
Ethylbenzene	ND	1	1	B5H0228	08/06/2015	08/11/15 07:55	E3, E4
Freon-113	ND	2	1	B5H0228	08/06/2015	08/11/15 07:55	E3, E4
Hexachlorobutadiene	ND	3	1	B5H0228	08/06/2015	08/11/15 07:55	E3, E4
Isopropylbenzene	ND	1	1	B5H0228	08/06/2015	08/11/15 07:55	E3, E4
m,p-Xylene	ND	4	1	B5H0228	08/06/2015	08/11/15 07:55	E3, E4
Methylene chloride	ND	0.87	1	B5H0228	08/06/2015	08/11/15 07:55	E3, E4
MTBE	ND	0.90	1	B5H0228	08/06/2015	08/11/15 07:55	E3, E4
n-Butylbenzene	ND	1	1	B5H0228	08/06/2015	08/11/15 07:55	E4, E3
n-Propylbenzene	ND	1	1	B5H0228	08/06/2015	08/11/15 07:55	E4, E3
Naphthalene	ND	1	1	B5H0228	08/06/2015	08/11/15 07:55	E3, E4
o-Xylene	ND	1	1	B5H0228	08/06/2015	08/11/15 07:55	E4, E3
p-Isopropyltoluene	ND	1	1	B5H0228	08/06/2015	08/11/15 07:55	E4, E3
sec-Butylbenzene	ND	1	1	B5H0228	08/06/2015	08/11/15 07:55	E4, E3
Styrene	ND	1	1	B5H0228	08/06/2015	08/11/15 07:55	E4, E3
tert-Butylbenzene	ND	1	1	B5H0228	08/06/2015	08/11/15 07:55	E3, E4
Tetrachloroethene	**2**	2	1	B5H0228	08/06/2015	08/11/15 07:55	E3, E4
Toluene	**2**	0.94	1	B5H0228	08/06/2015	08/11/15 07:55	E3, E4
trans-1,2-Dichloroethene	ND	0.99	1	B5H0228	08/06/2015	08/11/15 07:55	E3, E4
trans-1,3-Dichloropropene	ND	1	1	B5H0228	08/06/2015	08/11/15 07:55	E3, E4
Trichloroethene	ND	1	1	B5H0228	08/06/2015	08/11/15 07:55	E3, E4
Trichlorofluoromethane	ND	1	1	B5H0228	08/06/2015	08/11/15 07:55	E3, E4
Vinyl acetate	ND	0.88	1	B5H0228	08/06/2015	08/11/15 07:55	E3, E4

Certificate of Analysis

Hushmand Associates, Inc.	Project Number : Parcel 33 - 600 S Santa Fe St., Los Angele
250 Goddard	Report To : Naresh Bellana
Irvine , CA 92618	Reported : 03/26/2018

Client Sample ID VP-10

Lab ID: 1502695-10

Volatile Organic Compounds in AIR by TO-15 (Canister) **Analyst: MFR**

Analyte		Result (ug/m³)	PQL (ug/m³)	Dilution	Batch	Prepared	Date/Time Analyzed	Notes
Vinyl chloride		ND	0.64	1	B5H0228	08/06/2015	08/11/15 07:55	E3, E4
Surrogate: 4-Bromofluorobenzene	*116 %*		*79.2 - 147*		B5H0287	08/06/2015	*08/13/15 11:44*	
Surrogate: 4-Bromofluorobenzene	*106 %*		*79.2 - 147*		B5H0228	08/06/2015	*08/11/15 07:55*	

Gasoline Range Organics in Air by TO-3 **Analyst: MFR**

Analyte		Result (ug/m³)	PQL (ug/m³)	Dilution	Batch	Prepared	Date/Time Analyzed	Notes
Gasoline Range Organics		**2600**	1000	10	B5H0282	08/12/2015	08/13/15 01:58	
Surrogate: 4-Bromofluorobenzene	*99.2 %*		*70 - 130*		B5H0282	08/12/2015	*08/13/15 01:58*	

Certificate of Analysis

Hushmand Associates, Inc.	Project Number : Parcel 33 - 600 S Santa Fe St., Los Angele
250 Goddard	Report To : Naresh Bellana
Irvine , CA 92618	Reported : 03/26/2018

Client Sample ID VP-11

Lab ID: 1502695-11

Volatile Organic Compounds in AIR by TO-15 (Canister) **Analyst: MFR**

Analyte	Result (ug/m³)	PQL (ug/m³)	Dilution	Batch	Prepared	Date/Time Analyzed	Notes
1,1,1,2-Tetrachloroethane	ND	2	1	B5H0228	08/06/2015	08/11/15 11:05	
1,1,1-Trichloroethane	**7**	1	1	B5H0228	08/06/2015	08/11/15 11:05	E3, E4
1,1,2,2-Tetrachloroethane	ND	2	1	B5H0228	08/06/2015	08/11/15 11:05	
1,1,2-Trichloroethane	ND	1	1	B5H0228	08/06/2015	08/11/15 11:05	E3, E4
1,1-Dichloroethane	ND	1	1	B5H0228	08/06/2015	08/11/15 11:05	E3, E4
1,1-Dichloroethene	ND	0.99	1	B5H0228	08/06/2015	08/11/15 11:05	E3, E4
1,1-Dichloropropene	ND	1	1	B5H0228	08/06/2015	08/11/15 11:05	E3, E4
1,2,3-Trichloropropane	ND	2	1	B5H0228	08/06/2015	08/11/15 11:05	
1,2,4-Trichlorobenzene	ND	2	1	B5H0228	08/06/2015	08/11/15 11:05	
1,2,4-Trimethylbenzene	**4**	1	1	B5H0228	08/06/2015	08/11/15 11:05	
1,2-Dibromo-3-chloropropane	ND	2	1	B5H0228	08/06/2015	08/11/15 11:05	
1,2-Dibromoethane	ND	2	1	B5H0228	08/06/2015	08/11/15 11:05	E3, E4
1,2-Dichlorobenzene	ND	2	1	B5H0228	08/06/2015	08/11/15 11:05	
1,2-Dichloroethane	ND	1	1	B5H0228	08/06/2015	08/11/15 11:05	E3, E4
1,2-Dichloropropane	ND	1	1	B5H0228	08/06/2015	08/11/15 11:05	E3, E4
1,3,5-Trimethylbenzene	ND	1	1	B5H0228	08/06/2015	08/11/15 11:05	
1,3-Butadiene	ND	0.55	1	B5H0228	08/06/2015	08/11/15 11:05	E3, E4
1,3-Dichlorobenzene	**7**	2	1	B5H0228	08/06/2015	08/11/15 11:05	
1,4-Dichlorobenzene	ND	2	1	B5H0228	08/06/2015	08/11/15 11:05	
1,4-Dioxane	ND	0.90	1	B5H0228	08/06/2015	08/11/15 11:05	E3, E4
2,2,4-Trimethylpentane	**2**	1	1	B5H0228	08/06/2015	08/11/15 11:05	E3, E4
2-Butanone	**1**	0.74	1	B5H0228	08/06/2015	08/11/15 11:05	E3, E4
2-Chloroethyl vinyl ether	ND	1	1	B5H0228	08/06/2015	08/11/15 11:05	E3, E4
2-Chlorotoluene	ND	1	1	B5H0228	08/06/2015	08/11/15 11:05	
2-Hexanone	ND	1	1	B5H0228	08/06/2015	08/11/15 11:05	E4, E3
2-Propanol	**40**	0.61	1	B5H0228	08/06/2015	08/11/15 11:05	E4, E3
4-Chlorotoluene	ND	1	1	B5H0228	08/06/2015	08/11/15 11:05	
4-Ethyl Toluene	ND	1	1	B5H0228	08/06/2015	08/11/15 11:05	
4-Methyl-2-pentanone	**4**	1	1	B5H0228	08/06/2015	08/11/15 11:05	E4, E3
Acetone	**8**	0.59	1	B5H0228	08/06/2015	08/11/15 11:05	E4, E3
Acetonitrile	ND	0.42	1	B5H0228	08/06/2015	08/11/15 11:05	E4, E3
Acrolein	ND	0.57	1	B5H0228	08/06/2015	08/11/15 11:05	E4, E3
Acrylonitrile	ND	0.54	1	B5H0228	08/06/2015	08/11/15 11:05	E4, E3
Benzene	ND	0.80	1	B5H0228	08/06/2015	08/11/15 11:05	E4, E3
Benzyl chloride	ND	1	1	B5H0228	08/06/2015	08/11/15 11:05	
Bromobenzene	ND	2	1	B5H0228	08/06/2015	08/11/15 11:05	
Bromodichloromethane	ND	2	1	B5H0228	08/06/2015	08/11/15 11:05	E3, E4

Certificate of Analysis

Hushmand Associates, Inc.	Project Number : Parcel 33 - 600 S Santa Fe St., Los Angele
250 Goddard	Report To : Naresh Bellana
Irvine , CA 92618	Reported : 03/26/2018

Client Sample ID VP-11

Lab ID: 1502695-11

Volatile Organic Compounds in AIR by TO-15 (Canister) **Analyst: MFR**

Analyte	Result (ug/m³)	PQL (ug/m³)	Dilution	Batch	Prepared	Date/Time Analyzed	Notes
Bromoform	ND	3	1	B5H0228	08/06/2015	08/11/15 11:05	
Bromomethane	ND	0.97	1	B5H0228	08/06/2015	08/11/15 11:05	E3, E4
Carbon disulfide	ND	0.78	1	B5H0228	08/06/2015	08/11/15 11:05	E3, E4
Carbon tetrachloride	ND	2	1	B5H0228	08/06/2015	08/11/15 11:05	E3, E4
Chlorobenzene	ND	1	1	B5H0228	08/06/2015	08/11/15 11:05	
Chloroethane	ND	0.66	1	B5H0228	08/06/2015	08/11/15 11:05	E3, E4
Chloroform	ND	1	1	B5H0228	08/06/2015	08/11/15 11:05	E3, E4
Chloromethane	ND	0.52	1	B5H0228	08/06/2015	08/11/15 11:05	E3, E4
cis-1,2-Dichloroethene	ND	0.99	1	B5H0228	08/06/2015	08/11/15 11:05	E3, E4
cis-1,3-Dichloropropene	ND	1	1	B5H0228	08/06/2015	08/11/15 11:05	E3, E4
Cyclohexane	**1**	0.86	1	B5H0228	08/06/2015	08/11/15 11:05	E3, E4
Dibromochloromethane	ND	2	1	B5H0228	08/06/2015	08/11/15 11:05	
Dibromomethane	ND	2	1	B5H0228	08/06/2015	08/11/15 11:05	E3, E4
Dichlorodifluoromethane	ND	1	1	B5H0228	08/06/2015	08/11/15 11:05	E3, E4
Dichlorotetrafluoroethane	ND	2	1	B5H0228	08/06/2015	08/11/15 11:05	E3, E4
Ethanol	**200**	5	10	B5H0287	08/06/2015	08/13/15 08:33	
Ethylbenzene	**2**	1	1	B5H0228	08/06/2015	08/11/15 11:05	
Freon-113	ND	2	1	B5H0228	08/06/2015	08/11/15 11:05	E3, E4
Hexachlorobutadiene	ND	3	1	B5H0228	08/06/2015	08/11/15 11:05	
Isopropylbenzene	ND	1	1	B5H0228	08/06/2015	08/11/15 11:05	
m,p-Xylene	**20**	4	1	B5H0228	08/06/2015	08/11/15 11:05	
Methylene chloride	ND	0.87	1	B5H0228	08/06/2015	08/11/15 11:05	E3, E4
MTBE	ND	0.90	1	B5H0228	08/06/2015	08/11/15 11:05	E3, E4
n-Butylbenzene	ND	1	1	B5H0228	08/06/2015	08/11/15 11:05	
n-Propylbenzene	ND	1	1	B5H0228	08/06/2015	08/11/15 11:05	
Naphthalene	ND	1	1	B5H0228	08/06/2015	08/11/15 11:05	
o-Xylene	**3**	1	1	B5H0228	08/06/2015	08/11/15 11:05	
p-Isopropyltoluene	ND	1	1	B5H0228	08/06/2015	08/11/15 11:05	
sec-Butylbenzene	ND	1	1	B5H0228	08/06/2015	08/11/15 11:05	
Styrene	ND	1	1	B5H0228	08/06/2015	08/11/15 11:05	
tert-Butylbenzene	ND	1	1	B5H0228	08/06/2015	08/11/15 11:05	
Tetrachloroethene	**20**	2	1	B5H0228	08/06/2015	08/11/15 11:05	
Toluene	**10**	0.94	1	B5H0228	08/06/2015	08/11/15 11:05	E3, E4
trans-1,2-Dichloroethene	ND	0.99	1	B5H0228	08/06/2015	08/11/15 11:05	E3, E4
trans-1,3-Dichloropropene	ND	1	1	B5H0228	08/06/2015	08/11/15 11:05	E3, E4
Trichloroethene	ND	1	1	B5H0228	08/06/2015	08/11/15 11:05	E3, E4
Trichlorofluoromethane	ND	1	1	B5H0228	08/06/2015	08/11/15 11:05	E3, E4

Certificate of Analysis

Hushmand Associates, Inc.	Project Number : Parcel 33 - 600 S Santa Fe St., Los Angele
250 Goddard	Report To : Naresh Bellana
Irvine , CA 92618	Reported : 03/26/2018

Client Sample ID VP-11
Lab ID: 1502695-11

Volatile Organic Compounds in AIR by TO-15 (Canister)

Analyst: MFR

Analyte		Result (ug/m³)	PQL (ug/m³)	Dilution	Batch	Prepared	Date/Time Analyzed	Notes
Vinyl acetate		**0.88**	0.88	1	B5H0228	08/06/2015	08/11/15 11:05	E3, E4
Vinyl chloride		ND	0.64	1	B5H0228	08/06/2015	08/11/15 11:05	
Surrogate: 4-Bromofluorobenzene	*114 %*		*79.2 - 147*		B5H0228	08/06/2015	*08/11/15 11:05*	
Surrogate: 4-Bromofluorobenzene	*116 %*		*79.2 - 147*		B5H0287	08/06/2015	*08/13/15 08:33*	

Gasoline Range Organics in Air by TO-3

Analyst: MFR

Analyte		Result (ug/m³)	PQL (ug/m³)	Dilution	Batch	Prepared	Date/Time Analyzed	Notes
Gasoline Range Organics		**4300**	1000	10	B5H0343	08/13/2015	08/13/15 10:29	
Surrogate: 4-Bromofluorobenzene	*102 %*		*70 - 130*		B5H0343	08/13/2015	*08/13/15 10:29*	

Certificate of Analysis

Hushmand Associates, Inc.	Project Number : Parcel 33 - 600 S Santa Fe St., Los Angele
250 Goddard	Report To : Naresh Bellana
Irvine , CA 92618	Reported : 03/26/2018

Client Sample ID VP-12

Lab ID: 1502695-12

Volatile Organic Compounds in AIR by TO-15 (Canister) **Analyst: MFR**

Analyte	Result (ug/m³)	PQL (ug/m³)	Dilution	Batch	Prepared	Date/Time Analyzed	Notes
1,1,1,2-Tetrachloroethane	ND	2	1	B5H0228	08/06/2015	08/11/15 11:47	E3, E4
1,1,1-Trichloroethane	**3**	1	1	B5H0228	08/06/2015	08/11/15 11:47	E3, E4
1,1,2,2-Tetrachloroethane	ND	2	1	B5H0228	08/06/2015	08/11/15 11:47	E3, E4
1,1,2-Trichloroethane	ND	1	1	B5H0228	08/06/2015	08/11/15 11:47	E3, E4
1,1-Dichloroethane	ND	1	1	B5H0228	08/06/2015	08/11/15 11:47	E3, E4
1,1-Dichloroethene	ND	0.99	1	B5H0228	08/06/2015	08/11/15 11:47	E3, E4
1,1-Dichloropropene	ND	1	1	B5H0228	08/06/2015	08/11/15 11:47	E3, E4
1,2,3-Trichloropropane	ND	2	1	B5H0228	08/06/2015	08/11/15 11:47	E3, E4
1,2,4-Trichlorobenzene	ND	2	1	B5H0228	08/06/2015	08/11/15 11:47	E3, E4
1,2,4-Trimethylbenzene	**3**	1	1	B5H0228	08/06/2015	08/11/15 11:47	E3, E4
1,2-Dibromo-3-chloropropane	ND	2	1	B5H0228	08/06/2015	08/11/15 11:47	E3, E4
1,2-Dibromoethane	ND	2	1	B5H0228	08/06/2015	08/11/15 11:47	E3, E4
1,2-Dichlorobenzene	ND	2	1	B5H0228	08/06/2015	08/11/15 11:47	E3, E4
1,2-Dichloroethane	ND	1	1	B5H0228	08/06/2015	08/11/15 11:47	E3, E4
1,2-Dichloropropane	ND	1	1	B5H0228	08/06/2015	08/11/15 11:47	E3, E4
1,3,5-Trimethylbenzene	ND	1	1	B5H0228	08/06/2015	08/11/15 11:47	E3, E4
1,3-Butadiene	ND	0.55	1	B5H0228	08/06/2015	08/11/15 11:47	E3, E4
1,3-Dichlorobenzene	**7**	2	1	B5H0228	08/06/2015	08/11/15 11:47	E3, E4
1,4-Dichlorobenzene	ND	2	1	B5H0228	08/06/2015	08/11/15 11:47	E3, E4
1,4-Dioxane	ND	0.90	1	B5H0228	08/06/2015	08/11/15 11:47	E3, E4
2,2,4-Trimethylpentane	**1**	1	1	B5H0228	08/06/2015	08/11/15 11:47	E3, E4
2-Butanone	**1**	0.74	1	B5H0228	08/06/2015	08/11/15 11:47	E3, E4
2-Chloroethyl vinyl ether	ND	1	1	B5H0228	08/06/2015	08/11/15 11:47	E3, E4
2-Chlorotoluene	ND	1	1	B5H0228	08/06/2015	08/11/15 11:47	E3, E4
2-Hexanone	ND	1	1	B5H0228	08/06/2015	08/11/15 11:47	E3, E4
2-Propanol	**40**	0.61	1	B5H0228	08/06/2015	08/11/15 11:47	E3, E4
4-Chlorotoluene	ND	1	1	B5H0228	08/06/2015	08/11/15 11:47	E3, E4
4-Ethyl Toluene	ND	1	1	B5H0228	08/06/2015	08/11/15 11:47	E3, E4
4-Methyl-2-pentanone	**2**	1	1	B5H0228	08/06/2015	08/11/15 11:47	E3, E4
Acetone	**9**	0.59	1	B5H0228	08/06/2015	08/11/15 11:47	E3, E4
Acetonitrile	ND	0.42	1	B5H0228	08/06/2015	08/11/15 11:47	E3, E4
Acrolein	ND	0.57	1	B5H0228	08/06/2015	08/11/15 11:47	E3, E4
Acrylonitrile	ND	0.54	1	B5H0228	08/06/2015	08/11/15 11:47	E3, E4
Benzene	ND	0.80	1	B5H0228	08/06/2015	08/11/15 11:47	E3, E4
Benzyl chloride	ND	1	1	B5H0228	08/06/2015	08/11/15 11:47	E3, E4
Bromobenzene	ND	2	1	B5H0228	08/06/2015	08/11/15 11:47	E3, E4
Bromodichloromethane	ND	2	1	B5H0228	08/06/2015	08/11/15 11:47	E3, E4

Certificate of Analysis

Hushmand Associates, Inc.	Project Number : Parcel 33 - 600 S Santa Fe St., Los Angele
250 Goddard	Report To : Naresh Bellana
Irvine , CA 92618	Reported : 03/26/2018

Client Sample ID VP-12

Lab ID: 1502695-12

Volatile Organic Compounds in AIR by TO-15 (Canister) **Analyst: MFR**

Analyte	Result (ug/m³)	PQL (ug/m³)	Dilution	Batch	Prepared	Date/Time Analyzed	Notes
Bromoform	ND	3	1	B5H0228	08/06/2015	08/11/15 11:47	E3, E4
Bromomethane	ND	0.97	1	B5H0228	08/06/2015	08/11/15 11:47	E3, E4
Carbon disulfide	ND	0.78	1	B5H0228	08/06/2015	08/11/15 11:47	E3, E4
Carbon tetrachloride	ND	2	1	B5H0228	08/06/2015	08/11/15 11:47	E3, E4
Chlorobenzene	ND	1	1	B5H0228	08/06/2015	08/11/15 11:47	E3, E4
Chloroethane	ND	0.66	1	B5H0228	08/06/2015	08/11/15 11:47	E3, E4
Chloroform	ND	1	1	B5H0228	08/06/2015	08/11/15 11:47	E3, E4
Chloromethane	ND	0.52	1	B5H0228	08/06/2015	08/11/15 11:47	E3, E4
cis-1,2-Dichloroethene	ND	0.99	1	B5H0228	08/06/2015	08/11/15 11:47	E3, E4
cis-1,3-Dichloropropene	ND	1	1	B5H0228	08/06/2015	08/11/15 11:47	E3, E4
Cyclohexane	**1**	0.86	1	B5H0228	08/06/2015	08/11/15 11:47	E3, E4
Dibromochloromethane	ND	2	1	B5H0228	08/06/2015	08/11/15 11:47	E3, E4
Dibromomethane	ND	2	1	B5H0228	08/06/2015	08/11/15 11:47	E3, E4
Dichlorodifluoromethane	ND	1	1	B5H0228	08/06/2015	08/11/15 11:47	E3, E4
Dichlorotetrafluoroethane	ND	2	1	B5H0228	08/06/2015	08/11/15 11:47	E3, E4
Ethanol	**200**	5	10	B5H0287	08/06/2015	08/13/15 09:09	
Ethylbenzene	**2**	1	1	B5H0228	08/06/2015	08/11/15 11:47	E3, E4
Freon-113	ND	2	1	B5H0228	08/06/2015	08/11/15 11:47	E3, E4
Hexachlorobutadiene	ND	3	1	B5H0228	08/06/2015	08/11/15 11:47	E3, E4
Isopropylbenzene	ND	1	1	B5H0228	08/06/2015	08/11/15 11:47	E3, E4
m,p-Xylene	**10**	4	1	B5H0228	08/06/2015	08/11/15 11:47	E3, E4
Methylene chloride	ND	0.87	1	B5H0228	08/06/2015	08/11/15 11:47	E3, E4
MTBE	ND	0.90	1	B5H0228	08/06/2015	08/11/15 11:47	E3, E4
n-Butylbenzene	ND	1	1	B5H0228	08/06/2015	08/11/15 11:47	E3, E4
n-Propylbenzene	ND	1	1	B5H0228	08/06/2015	08/11/15 11:47	E3, E4
Naphthalene	ND	1	1	B5H0228	08/06/2015	08/11/15 11:47	E3, E4
o-Xylene	**3**	1	1	B5H0228	08/06/2015	08/11/15 11:47	E3, E4
p-Isopropyltoluene	ND	1	1	B5H0228	08/06/2015	08/11/15 11:47	E3, E4
sec-Butylbenzene	ND	1	1	B5H0228	08/06/2015	08/11/15 11:47	E3, E4
Styrene	ND	1	1	B5H0228	08/06/2015	08/11/15 11:47	E3, E4
tert-Butylbenzene	ND	1	1	B5H0228	08/06/2015	08/11/15 11:47	E3, E4
Tetrachloroethene	**70**	2	1	B5H0228	08/06/2015	08/11/15 11:47	E3, E4
Toluene	**10**	0.94	1	B5H0228	08/06/2015	08/11/15 11:47	E3, E4
trans-1,2-Dichloroethene	ND	0.99	1	B5H0228	08/06/2015	08/11/15 11:47	E3, E4
trans-1,3-Dichloropropene	ND	1	1	B5H0228	08/06/2015	08/11/15 11:47	E3, E4
Trichloroethene	ND	1	1	B5H0228	08/06/2015	08/11/15 11:47	E3, E4
Trichlorofluoromethane	**2**	1	1	B5H0228	08/06/2015	08/11/15 11:47	E3, E4

Certificate of Analysis

Hushmand Associates, Inc.	Project Number : Parcel 33 - 600 S Santa Fe St., Los Angele
250 Goddard	Report To : Naresh Bellana
Irvine , CA 92618	Reported : 03/26/2018

Client Sample ID VP-12

Lab ID: 1502695-12

Volatile Organic Compounds in AIR by TO-15 (Canister) **Analyst: MFR**

Analyte		Result (ug/m³)	PQL (ug/m³)	Dilution	Batch	Prepared	Date/Time Analyzed	Notes
Vinyl acetate		ND	0.88	1	B5H0228	08/06/2015	08/11/15 11:47	E3, E4
Vinyl chloride		ND	0.64	1	B5H0228	08/06/2015	08/11/15 11:47	E3, E4
Surrogate: 4-Bromofluorobenzene	*114 %*		*79.2 - 147*		B5H0287	08/06/2015	*08/13/15 09:09*	
Surrogate: 4-Bromofluorobenzene	*107 %*		*79.2 - 147*		B5H0228	08/06/2015	*08/11/15 11:47*	E3

Gasoline Range Organics in Air by TO-3 **Analyst: MFR**

Analyte		Result (ug/m³)	PQL (ug/m³)	Dilution	Batch	Prepared	Date/Time Analyzed	Notes
Gasoline Range Organics		**2900**	1000	10	B5H0282	08/12/2015	08/12/15 23:04	
Surrogate: 4-Bromofluorobenzene	*110 %*		*70 - 130*		B5H0282	08/12/2015	*08/12/15 23:04*	

Certificate of Analysis

Hushmand Associates, Inc.	Project Number : Parcel 33 - 600 S Santa Fe St., Los Angele
250 Goddard	Report To : Naresh Bellana
Irvine , CA 92618	Reported : 03/26/2018

Client Sample ID VP-3 Dup
Lab ID: 1502695-13

Volatile Organic Compounds in AIR by TO-15 (Canister) **Analyst: MFR**

Analyte	Result (ug/m³)	PQL (ug/m³)	Dilution	Batch	Prepared	Date/Time Analyzed	Notes
1,1,1,2-Tetrachloroethane	ND	2	1	B5H0228	08/06/2015	08/11/15 12:31	
1,1,1-Trichloroethane	**160**	10	10	B5H0364	08/06/2015	08/13/15 22:11	
1,1,2,2-Tetrachloroethane	ND	2	1	B5H0228	08/06/2015	08/11/15 12:31	
1,1,2-Trichloroethane	ND	1	1	B5H0228	08/06/2015	08/11/15 12:31	E3, E4
1,1-Dichloroethane	**3**	1	1	B5H0228	08/06/2015	08/11/15 12:31	
1,1-Dichloroethene	ND	0.99	1	B5H0228	08/06/2015	08/11/15 12:31	
1,1-Dichloropropene	ND	1	1	B5H0228	08/06/2015	08/11/15 12:31	E3, E4
1,2,3-Trichloropropane	ND	2	1	B5H0228	08/06/2015	08/11/15 12:31	
1,2,4-Trichlorobenzene	ND	2	1	B5H0228	08/06/2015	08/11/15 12:31	
1,2,4-Trimethylbenzene	**4**	1	1	B5H0228	08/06/2015	08/11/15 12:31	
1,2-Dibromo-3-chloropropane	ND	2	1	B5H0228	08/06/2015	08/11/15 12:31	
1,2-Dibromoethane	ND	2	1	B5H0228	08/06/2015	08/11/15 12:31	E3, E4
1,2-Dichlorobenzene	ND	2	1	B5H0228	08/06/2015	08/11/15 12:31	
1,2-Dichloroethane	ND	1	1	B5H0228	08/06/2015	08/11/15 12:31	E3, E4
1,2-Dichloropropane	ND	1	1	B5H0228	08/06/2015	08/11/15 12:31	E3, E4
1,3,5-Trimethylbenzene	ND	1	1	B5H0228	08/06/2015	08/11/15 12:31	
1,3-Butadiene	ND	0.55	1	B5H0228	08/06/2015	08/11/15 12:31	
1,3-Dichlorobenzene	**8**	2	1	B5H0228	08/06/2015	08/11/15 12:31	
1,4-Dichlorobenzene	ND	2	1	B5H0228	08/06/2015	08/11/15 12:31	
1,4-Dioxane	ND	0.90	1	B5H0228	08/06/2015	08/11/15 12:31	E3, E4
2,2,4-Trimethylpentane	ND	1	1	B5H0228	08/06/2015	08/11/15 12:31	E3, E4
2-Butanone	**1**	0.74	1	B5H0228	08/06/2015	08/11/15 12:31	
2-Chloroethyl vinyl ether	ND	1	1	B5H0228	08/06/2015	08/11/15 12:31	E3, E4
2-Chlorotoluene	ND	1	1	B5H0228	08/06/2015	08/11/15 12:31	
2-Hexanone	**1**	1	1	B5H0228	08/06/2015	08/11/15 12:31	E3, E4
2-Propanol	**120**	6	10	B5H0287	08/06/2015	08/13/15 09:44	
4-Chlorotoluene	ND	1	1	B5H0228	08/06/2015	08/11/15 12:31	
4-Ethyl Toluene	ND	1	1	B5H0228	08/06/2015	08/11/15 12:31	
4-Methyl-2-pentanone	**2**	1	1	B5H0228	08/06/2015	08/11/15 12:31	E3, E4
Acetone	**10**	0.59	1	B5H0228	08/06/2015	08/11/15 12:31	
Acetonitrile	ND	0.42	1	B5H0228	08/06/2015	08/11/15 12:31	
Acrolein	ND	0.57	1	B5H0228	08/06/2015	08/11/15 12:31	
Acrylonitrile	ND	0.54	1	B5H0228	08/06/2015	08/11/15 12:31	
Benzene	ND	0.80	1	B5H0228	08/06/2015	08/11/15 12:31	E3, E4
Benzyl chloride	ND	1	1	B5H0228	08/06/2015	08/11/15 12:31	
Bromobenzene	ND	2	1	B5H0228	08/06/2015	08/11/15 12:31	
Bromodichloromethane	ND	2	1	B5H0228	08/06/2015	08/11/15 12:31	E4, E3

Certificate of Analysis

Hushmand Associates, Inc.	Project Number : Parcel 33 - 600 S Santa Fe St., Los Angele
250 Goddard	Report To : Naresh Bellana
Irvine , CA 92618	Reported : 03/26/2018

Client Sample ID VP-3 Dup

Lab ID: 1502695-13

Volatile Organic Compounds in AIR by TO-15 (Canister) **Analyst: MFR**

Analyte	Result (ug/m³)	PQL (ug/m³)	Dilution	Batch	Prepared	Date/Time Analyzed	Notes
Bromoform	ND	3	1	B5H0228	08/06/2015	08/11/15 12:31	
Bromomethane	ND	0.97	1	B5H0228	08/06/2015	08/11/15 12:31	
Carbon disulfide	ND	0.78	1	B5H0228	08/06/2015	08/11/15 12:31	
Carbon tetrachloride	ND	2	1	B5H0228	08/06/2015	08/11/15 12:31	E4, E3
Chlorobenzene	ND	1	1	B5H0228	08/06/2015	08/11/15 12:31	
Chloroethane	ND	0.66	1	B5H0228	08/06/2015	08/11/15 12:31	
Chloroform	**3**	1	1	B5H0228	08/06/2015	08/11/15 12:31	
Chloromethane	ND	0.52	1	B5H0228	08/06/2015	08/11/15 12:31	
cis-1,2-Dichloroethene	ND	0.99	1	B5H0228	08/06/2015	08/11/15 12:31	
cis-1,3-Dichloropropene	ND	1	1	B5H0228	08/06/2015	08/11/15 12:31	E4, E3
Cyclohexane	**1**	0.86	1	B5H0228	08/06/2015	08/11/15 12:31	E4, E3
Dibromochloromethane	ND	2	1	B5H0228	08/06/2015	08/11/15 12:31	
Dibromomethane	ND	2	1	B5H0228	08/06/2015	08/11/15 12:31	E4, E3
Dichlorodifluoromethane	**3**	1	1	B5H0228	08/06/2015	08/11/15 12:31	
Dichlorotetrafluoroethane	ND	2	1	B5H0228	08/06/2015	08/11/15 12:31	
Ethanol	**90**	5	10	B5H0287	08/06/2015	08/13/15 09:44	
Ethylbenzene	**2**	1	1	B5H0228	08/06/2015	08/11/15 12:31	
Freon-113	ND	2	1	B5H0228	08/06/2015	08/11/15 12:31	
Hexachlorobutadiene	ND	3	1	B5H0228	08/06/2015	08/11/15 12:31	
Isopropylbenzene	ND	1	1	B5H0228	08/06/2015	08/11/15 12:31	
m,p-Xylene	**10**	4	1	B5H0228	08/06/2015	08/11/15 12:31	
Methylene chloride	ND	0.87	1	B5H0228	08/06/2015	08/11/15 12:31	
MTBE	ND	0.90	1	B5H0228	08/06/2015	08/11/15 12:31	
n-Butylbenzene	ND	1	1	B5H0228	08/06/2015	08/11/15 12:31	
n-Propylbenzene	ND	1	1	B5H0228	08/06/2015	08/11/15 12:31	
Naphthalene	ND	1	1	B5H0228	08/06/2015	08/11/15 12:31	
o-Xylene	**3**	1	1	B5H0228	08/06/2015	08/11/15 12:31	
p-Isopropyltoluene	ND	1	1	B5H0228	08/06/2015	08/11/15 12:31	
sec-Butylbenzene	ND	1	1	B5H0228	08/06/2015	08/11/15 12:31	
Styrene	ND	1	1	B5H0228	08/06/2015	08/11/15 12:31	
tert-Butylbenzene	ND	1	1	B5H0228	08/06/2015	08/11/15 12:31	
Tetrachloroethene	**40**	2	1	B5H0228	08/06/2015	08/11/15 12:31	
Toluene	**10**	0.94	1	B5H0228	08/06/2015	08/11/15 12:31	E4, E3
trans-1,2-Dichloroethene	ND	0.99	1	B5H0228	08/06/2015	08/11/15 12:31	
trans-1,3-Dichloropropene	ND	1	1	B5H0228	08/06/2015	08/11/15 12:31	E4, E3
Trichloroethene	**420**	1	1	B5H0228	08/06/2015	08/11/15 12:31	E3, E4
Trichlorofluoromethane	**2**	1	1	B5H0228	08/06/2015	08/11/15 12:31	

Certificate of Analysis

Hushmand Associates, Inc.	Project Number : Parcel 33 - 600 S Santa Fe St., Los Angele
250 Goddard	Report To : Naresh Bellana
Irvine , CA 92618	Reported : 03/26/2018

Client Sample ID VP-3 Dup

Lab ID: 1502695-13

Volatile Organic Compounds in AIR by TO-15 (Canister) **Analyst: MFR**

Analyte		Result (ug/m³)	PQL (ug/m³)	Dilution	Batch	Prepared	Date/Time Analyzed	Notes
Vinyl acetate		**0.95**	0.88	1	B5H0228	08/06/2015	08/11/15 12:31	
Vinyl chloride		ND	0.64	1	B5H0228	08/06/2015	08/11/15 12:31	
Surrogate: 4-Bromofluorobenzene	*113 %*		*79.2 - 147*		B5H0287	08/06/2015	*08/13/15 09:44*	
Surrogate: 4-Bromofluorobenzene	*112 %*		*79.2 - 147*		B5H0228	08/06/2015	*08/11/15 12:31*	
Surrogate: 4-Bromofluorobenzene	*99.6 %*		*79.2 - 147*		B5H0364	08/06/2015	*08/13/15 22:11*	

Gasoline Range Organics in Air by TO-3 **Analyst: MFR**

Analyte		Result (ug/m³)	PQL (ug/m³)	Dilution	Batch	Prepared	Date/Time Analyzed	Notes
Gasoline Range Organics		**3000**	1000	10	B5H0282	08/12/2015	08/12/15 23:38	
Surrogate: 4-Bromofluorobenzene	*105 %*		*70 - 130*		B5H0282	08/12/2015	*08/12/15 23:38*	

Certificate of Analysis

Hushmand Associates, Inc.	Project Number : Parcel 33 - 600 S Santa Fe St., Los Angele
250 Goddard	Report To : Naresh Bellana
Irvine , CA 92618	Reported : 03/26/2018

Client Sample ID VP-9 Dup

Lab ID: 1502695-14

Volatile Organic Compounds in AIR by TO-15 (Canister) **Analyst: MFR**

Analyte	Result (ug/m³)	PQL (ug/m³)	Dilution	Batch	Prepared	Date/Time Analyzed	Notes
1,1,1,2-Tetrachloroethane	ND	2	1	B5H0228	08/06/2015	08/11/15 13:14	E3, E4
1,1,1-Trichloroethane	**9**	1	1	B5H0228	08/06/2015	08/11/15 13:14	
1,1,2,2-Tetrachloroethane	ND	2	1	B5H0228	08/06/2015	08/11/15 13:14	E3, E4
1,1,2-Trichloroethane	ND	1	1	B5H0228	08/06/2015	08/11/15 13:14	E3, E4
1,1-Dichloroethane	ND	1	1	B5H0228	08/06/2015	08/11/15 13:14	
1,1-Dichloroethene	ND	0.99	1	B5H0228	08/06/2015	08/11/15 13:14	
1,1-Dichloropropene	ND	1	1	B5H0228	08/06/2015	08/11/15 13:14	E3, E4
1,2,3-Trichloropropane	ND	2	1	B5H0228	08/06/2015	08/11/15 13:14	E3, E4
1,2,4-Trichlorobenzene	ND	2	1	B5H0228	08/06/2015	08/11/15 13:14	E3, E4
1,2,4-Trimethylbenzene	**5**	1	1	B5H0228	08/06/2015	08/11/15 13:14	E3, E4
1,2-Dibromo-3-chloropropane	ND	2	1	B5H0228	08/06/2015	08/11/15 13:14	E3, E4
1,2-Dibromoethane	ND	2	1	B5H0228	08/06/2015	08/11/15 13:14	E3, E4
1,2-Dichlorobenzene	ND	2	1	B5H0228	08/06/2015	08/11/15 13:14	E3, E4
1,2-Dichloroethane	ND	1	1	B5H0228	08/06/2015	08/11/15 13:14	E3, E4
1,2-Dichloropropane	ND	1	1	B5H0228	08/06/2015	08/11/15 13:14	E3, E4
1,3,5-Trimethylbenzene	**1**	1	1	B5H0228	08/06/2015	08/11/15 13:14	
1,3-Butadiene	ND	0.55	1	B5H0228	08/06/2015	08/11/15 13:14	
1,3-Dichlorobenzene	**8**	2	1	B5H0228	08/06/2015	08/11/15 13:14	E3, E4
1,4-Dichlorobenzene	ND	2	1	B5H0228	08/06/2015	08/11/15 13:14	E3, E4
1,4-Dioxane	ND	0.90	1	B5H0228	08/06/2015	08/11/15 13:14	E3, E4
2,2,4-Trimethylpentane	**2**	1	1	B5H0228	08/06/2015	08/11/15 13:14	E3, E4
2-Butanone	**2**	0.74	1	B5H0228	08/06/2015	08/11/15 13:14	
2-Chloroethyl vinyl ether	ND	1	1	B5H0228	08/06/2015	08/11/15 13:14	E3, E4
2-Chlorotoluene	ND	1	1	B5H0228	08/06/2015	08/11/15 13:14	E3, E4
2-Hexanone	ND	1	1	B5H0228	08/06/2015	08/11/15 13:14	E3, E4
2-Propanol	**110**	6	10	B5H0287	08/06/2015	08/13/15 10:20	
4-Chlorotoluene	ND	1	1	B5H0228	08/06/2015	08/11/15 13:14	E3, E4
4-Ethyl Toluene	**1**	1	1	B5H0228	08/06/2015	08/11/15 13:14	E3, E4
4-Methyl-2-pentanone	**3**	1	1	B5H0228	08/06/2015	08/11/15 13:14	E3, E4
Acetone	**10**	0.59	1	B5H0228	08/06/2015	08/11/15 13:14	
Acetonitrile	ND	0.42	1	B5H0228	08/06/2015	08/11/15 13:14	
Acrolein	ND	0.57	1	B5H0228	08/06/2015	08/11/15 13:14	
Acrylonitrile	ND	0.54	1	B5H0228	08/06/2015	08/11/15 13:14	
Benzene	**2**	0.80	1	B5H0228	08/06/2015	08/11/15 13:14	E3, E4
Benzyl chloride	ND	1	1	B5H0228	08/06/2015	08/11/15 13:14	E3, E4
Bromobenzene	ND	2	1	B5H0228	08/06/2015	08/11/15 13:14	E3, E4
Bromodichloromethane	ND	2	1	B5H0228	08/06/2015	08/11/15 13:14	E3, E4

Certificate of Analysis

Hushmand Associates, Inc.	Project Number : Parcel 33 - 600 S Santa Fe St., Los Angele
250 Goddard	Report To : Naresh Bellana
Irvine , CA 92618	Reported : 03/26/2018

Client Sample ID VP-9 Dup
Lab ID: 1502695-14

Volatile Organic Compounds in AIR by TO-15 (Canister) **Analyst: MFR**

Analyte	Result (ug/m³)	PQL (ug/m³)	Dilution	Batch	Prepared	Date/Time Analyzed	Notes
Bromoform	ND	3	1	B5H0228	08/06/2015	08/11/15 13:14	E3, E4
Bromomethane	ND	0.97	1	B5H0228	08/06/2015	08/11/15 13:14	
Carbon disulfide	ND	0.78	1	B5H0228	08/06/2015	08/11/15 13:14	
Carbon tetrachloride	ND	2	1	B5H0228	08/06/2015	08/11/15 13:14	E3, E4
Chlorobenzene	ND	1	1	B5H0228	08/06/2015	08/11/15 13:14	E3, E4
Chloroethane	ND	0.66	1	B5H0228	08/06/2015	08/11/15 13:14	
Chloroform	ND	1	1	B5H0228	08/06/2015	08/11/15 13:14	
Chloromethane	ND	0.52	1	B5H0228	08/06/2015	08/11/15 13:14	
cis-1,2-Dichloroethene	ND	0.99	1	B5H0228	08/06/2015	08/11/15 13:14	
cis-1,3-Dichloropropene	ND	1	1	B5H0228	08/06/2015	08/11/15 13:14	E3, E4
Cyclohexane	**2**	0.86	1	B5H0228	08/06/2015	08/11/15 13:14	E3, E4
Dibromochloromethane	ND	2	1	B5H0228	08/06/2015	08/11/15 13:14	E3, E4
Dibromomethane	ND	2	1	B5H0228	08/06/2015	08/11/15 13:14	E3, E4
Dichlorodifluoromethane	**2**	1	1	B5H0228	08/06/2015	08/11/15 13:14	
Dichlorotetrafluoroethane	ND	2	1	B5H0228	08/06/2015	08/11/15 13:14	
Ethanol	**230**	5	10	B5H0287	08/06/2015	08/13/15 10:20	
Ethylbenzene	**3**	1	1	B5H0228	08/06/2015	08/11/15 13:14	E3, E4
Freon-113	ND	2	1	B5H0228	08/06/2015	08/11/15 13:14	
Hexachlorobutadiene	ND	3	1	B5H0228	08/06/2015	08/11/15 13:14	E4, E3
Isopropylbenzene	ND	1	1	B5H0228	08/06/2015	08/11/15 13:14	E4, E3
m,p-Xylene	**20**	4	1	B5H0228	08/06/2015	08/11/15 13:14	E4, E3
Methylene chloride	ND	0.87	1	B5H0228	08/06/2015	08/11/15 13:14	
MTBE	ND	0.90	1	B5H0228	08/06/2015	08/11/15 13:14	
n-Butylbenzene	ND	1	1	B5H0228	08/06/2015	08/11/15 13:14	E4, E3
n-Propylbenzene	ND	1	1	B5H0228	08/06/2015	08/11/15 13:14	E4, E3
Naphthalene	ND	1	1	B5H0228	08/06/2015	08/11/15 13:14	E4, E3
o-Xylene	**4**	1	1	B5H0228	08/06/2015	08/11/15 13:14	E4, E3
p-Isopropyltoluene	ND	1	1	B5H0228	08/06/2015	08/11/15 13:14	E4, E3
sec-Butylbenzene	ND	1	1	B5H0228	08/06/2015	08/11/15 13:14	E3, E4
Styrene	ND	1	1	B5H0228	08/06/2015	08/11/15 13:14	E3, E4
tert-Butylbenzene	ND	1	1	B5H0228	08/06/2015	08/11/15 13:14	E3, E4
Tetrachloroethene	**20**	2	1	B5H0228	08/06/2015	08/11/15 13:14	E3, E4
Toluene	**20**	0.94	1	B5H0228	08/06/2015	08/11/15 13:14	
trans-1,2-Dichloroethene	ND	0.99	1	B5H0228	08/06/2015	08/11/15 13:14	
trans-1,3-Dichloropropene	ND	1	1	B5H0228	08/06/2015	08/11/15 13:14	E3, E4
Trichloroethene	**2**	1	1	B5H0228	08/06/2015	08/11/15 13:14	E3, E4
Trichlorofluoromethane	ND	1	1	B5H0228	08/06/2015	08/11/15 13:14	

Certificate of Analysis

Hushmand Associates, Inc.	Project Number : Parcel 33 - 600 S Santa Fe St., Los Angele
250 Goddard	Report To : Naresh Bellana
Irvine , CA 92618	Reported : 03/26/2018

Client Sample ID VP-9 Dup

Lab ID: 1502695-14

Volatile Organic Compounds in AIR by TO-15 (Canister) **Analyst: MFR**

Analyte		Result (ug/m³)	PQL (ug/m³)	Dilution	Batch	Prepared	Date/Time Analyzed	Notes
Vinyl acetate		**2**	0.88	1	B5H0228	08/06/2015	08/11/15 13:14	
Vinyl chloride		ND	0.64	1	B5H0228	08/06/2015	08/11/15 13:14	
Surrogate: 4-Bromofluorobenzene	*112 %*		*79.2 - 147*		B5H0287	08/06/2015	*08/13/15 10:20*	
Surrogate: 4-Bromofluorobenzene	*110 %*		*79.2 - 147*		B5H0228	08/06/2015	*08/11/15 13:14*	

Gasoline Range Organics in Air by TO-3 **Analyst: MFR**

Analyte		Result (ug/m³)	PQL (ug/m³)	Dilution	Batch	Prepared	Date/Time Analyzed	Notes
Gasoline Range Organics		**2600**	1000	10	B5H0282	08/12/2015	08/13/15 00:13	
Surrogate: 4-Bromofluorobenzene	*106 %*		*70 - 130*		B5H0282	08/12/2015	*08/13/15 00:13*	

Certificate of Analysis

Hushmand Associates, Inc.	Project Number : Parcel 33 - 600 S Santa Fe St., Los Angele
250 Goddard	Report To : Naresh Bellana
Irvine , CA 92618	Reported : 03/26/2018

QUALITY CONTROL SECTION

Volatile Organic Compounds in AIR by TO-15 (Canister) - Quality Control

Analyte	Result (ug/m³)	PQL (ug/m³)	MDL (ug/m³)	Spike Level	Source Result	% Rec	% Rec Limits	RPD	RPD Limit	Notes
Batch B5H0228 - No_Prep_AIR										
Blank (B5H0228-BLK1)					Prepared: 8/10/2015 Analyzed: 8/10/2015					
1,1,1,2-Tetrachloroethane	ND	2	0.57							
1,1,1-Trichloroethane	ND	1	0.58							
1,1,2,2-Tetrachloroethane	ND	2	0.77							
1,1,2-Trichloroethane	ND	1	0.45							
1,1-Dichloroethane	ND	1	0.37							
1,1-Dichloroethene	ND	0.99	0.34							
1,1-Dichloropropene	ND	1	0.37							
1,2,3-Trichloropropane	ND	2	0.58							
1,2,4-Trichlorobenzene	ND	2	0.73							
1,2,4-Trimethylbenzene	ND	1	0.54							
1,2-Dibromo-3-chloropropane	ND	2	1							
1,2-Dibromoethane	ND	2	0.73							
1,2-Dichlorobenzene	ND	2	0.54							
1,2-Dichloroethane	ND	1	0.34							
1,2-Dichloropropane	ND	1	0.41							
1,3,5-Trimethylbenzene	ND	1	0.51							
1,3-Butadiene	ND	0.55	0.39							
1,3-Dichlorobenzene	ND	2	0.56							
1,4-Dichlorobenzene	ND	2	0.51							
1,4-Dioxane	ND	0.90	0.65							
2,2,4-Trimethylpentane	ND	1	0.35							
2-Butanone	ND	0.74	0.24							
2-Chloroethyl vinyl ether	ND	1	0.22							
2-Chlorotoluene	ND	1	0.50							
2-Hexanone	ND	1	0.43							
2-Propanol	ND	0.61	0.26							
4-Chlorotoluene	ND	1	0.47							
4-Ethyl Toluene	ND	1	0.47							
4-Methyl-2-pentanone	ND	1	0.30							
Acetone	ND	0.59	0.26							
Acetonitrile	ND	0.42	0.14							
Acrolein	ND	0.57	0.22							
Acrylonitrile	ND	0.54	0.18							
Benzene	ND	0.80	0.28							
Benzyl chloride	ND	1	0.37							
Bromobenzene	ND	2	0.59							
Bromodichloromethane	ND	2	0.70							
Bromoform	ND	3	0.90							
Bromomethane	ND	0.97	0.46							

Hushmand Associates, Inc.	Project Number : Parcel 33 - 600 S Santa Fe St., Los Angele
250 Goddard	Report To : Naresh Bellana
Irvine , CA 92618	Reported : 03/26/2018

Volatile Organic Compounds in AIR by TO-15 (Canister) - Quality Control (cont'd)

Analyte	Result (ug/m³)	PQL (ug/m³)	MDL (ug/m³)	Spike Level	Source Result	% Rec	% Rec Limits	RPD	RPD Limit	Notes
Batch B5H0228 - No_Prep_AIR (continued)										
Blank (B5H0228-BLK1) - Continued					Prepared: 8/10/2015 Analyzed: 8/10/2015					
Carbon disulfide	ND	0.78	0.31							
Carbon tetrachloride	ND	2	0.43							
Chlorobenzene	ND	1	0.41							
Chloroethane	ND	0.66	0.28							
Chloroform	ND	1	0.50							
Chloromethane	ND	0.52	0.22							
cis-1,2-Dichloroethene	ND	0.99	0.28							
cis-1,3-Dichloropropene	ND	1	0.33							
Cyclohexane	ND	0.86	0.25							
Dibromochloromethane	ND	2	0.83							
Dibromomethane	ND	2	0.55							
Dichlorodifluoromethane	ND	1	0.56							
Dichlorotetrafluoroethane	ND	2	0.76							
Ethanol	ND	0.47	0.20							
Ethylbenzene	ND	1	0.35							
Freon-113	ND	2	0.58							
Hexachlorobutadiene	ND	3	1							
Isopropylbenzene	ND	1	0.52							
m,p-Xylene	ND	4	1							
Methylene chloride	ND	0.87	0.31							
MTBE	ND	0.90	0.33							
n-Butylbenzene	ND	1	0.42							
n-Propylbenzene	ND	1	0.41							
Naphthalene	ND	1	0.36							
o-Xylene	ND	1	0.40							
p-Isopropyltoluene	ND	1	0.51							
sec-Butylbenzene	ND	1	0.56							
Styrene	ND	1	0.44							
tert-Butylbenzene	ND	1	0.62							
Tetrachloroethene	ND	2	0.47							
Toluene	ND	0.94	0.28							
trans-1,2-Dichloroethene	ND	0.99	0.34							
trans-1,3-Dichloropropene	ND	1	0.34							
Trichloroethene	ND	1	0.47							
Trichlorofluoromethane	ND	1	0.53							
Vinyl acetate	ND	0.88	0.38							
Vinyl chloride	ND	0.64	0.21							
Surrogate: 4-Bromofluorobenzene	*18.11*			*17.8935*		*101*	*79.2 - 147*			
LCS (B5H0228-BS1)					Prepared: 8/10/2015 Analyzed: 8/10/2015					
1,1,1,2-Tetrachloroethane	13.524	2	0.57	13.7299		98.5	70 - 130			

Hushmand Associates, Inc.
250 Goddard
Irvine , CA 92618

Project Number : Parcel 33 - 600 S Santa Fe St., Los Angele
Report To : Naresh Bellana
Reported : 03/26/2018

Volatile Organic Compounds in AIR by TO-15 (Canister) - Quality Control (cont'd)

Analyte	Result (ug/m³)	PQL (ug/m³)	MDL (ug/m³)	Spike Level	Source Result	% Rec	% Rec Limits	RPD	RPD Limit	Notes
Batch B5H0228 - No_Prep_AIR (continued)										
LCS (B5H0228-BS1) - Continued					Prepared: 8/10/2015 Analyzed: 8/10/2015					
1,1,1-Trichloroethane	10.694	1	0.58	10.9123		98.0	70 - 130			
1,1,2,2-Tetrachloroethane	13.524	2	0.77	13.7299		98.5	70 - 130			
1,1,2-Trichloroethane	11.240	1	0.45	10.9123		103	70 - 130			
1,1-Dichloroethane	7.488	1	0.37	8.09480		92.5	70 - 130			
1,1-Dichloroethene	6.146	0.99	0.34	7.92990		77.5	70 - 130			
1,1-Dichloropropene	11.074	1	0.37	9.07722		122	70 - 130			
1,2,3-Trichloropropane	10.733	2	0.58	12.0597		89.0	70 - 130			
1,2,4-Trichlorobenzene	16.549	2	0.73	14.8422		112	70 - 130			
1,2,4-Trimethylbenzene	11.503	1	0.54	9.83166		117	70 - 130			
1,2-Dibromo-3-chloropropane	21.942	2	1	19.3319		114	70 - 130			
1,2-Dibromoethane	15.444	2	0.73	15.3670		100	70 - 130			
1,2-Dichlorobenzene	11.544	2	0.54	12.0246		96.0	70 - 130			
1,2-Dichloroethane	11.252	1	0.34	8.09480		139	70 - 130			L5
1,2-Dichloropropane	9.889	1	0.41	9.24213		107	70 - 130			
1,3,5-Trimethylbenzene	10.077	1	0.51	9.83166		102	70 - 130			
1,3-Butadiene	4.668	0.55	0.39	4.42454		106	70 - 130			
1,3-Dichlorobenzene	11.604	2	0.56	12.0246		96.5	70 - 130			
1,4-Dichlorobenzene	11.664	2	0.51	12.0246		97.0	70 - 130			
1,4-Dioxane	8.036	0.90	0.65	7.20695		112	70 - 130			
2,2,4-Trimethylpentane	9.484	1	0.35	9.34388		102	70 - 130			
2-Butanone	5.928	0.74	0.24	5.89824		100	70 - 130			
2-Chloroethyl vinyl ether	10.546	1	0.22	8.71583		121	70 - 130			
2-Chlorotoluene	10.924	1	0.50	10.3544		106	70 - 130			
2-Hexanone	10.323	1	0.43	8.19296		126	70 - 130			
2-Propanol	5.603	0.61	0.26	4.91534		114	70 - 130			
4-Chlorotoluene	7.455	1	0.47	10.3544		72.0	70 - 130			
4-Ethyl Toluene	9.979	1	0.47	9.83166		102	70 - 130			
4-Methyl-2-pentanone	10.282	1	0.30	8.19296		126	70 - 130			
Acetone	5.202	0.59	0.26	4.75084		110	70 - 130			
Acetonitrile	3.744	0.42	0.14	3.35804		112	70 - 130			
Acrolein	6.673	0.57	0.22	4.58593		146	70 - 130			L5
Acrylonitrile	4.080	0.54	0.18	4.34053		94.0	70 - 130			
Benzene	6.485	0.80	0.28	6.38953		102	70 - 130			
Benzyl chloride	11.649	1	0.37	10.3544		112	70 - 130			
Bromobenzene	10.082	2	0.59	12.8432		78.5	70 - 130			
Bromodichloromethane	16.148	2	0.70	13.4011		120	70 - 130			
Bromoform	19.226	3	0.90	20.6733		93.0	70 - 130			
Bromomethane	7.960	0.97	0.46	7.76597		102	70 - 130			
Carbon disulfide	5.201	0.78	0.31	6.22847		83.5	70 - 130			
Carbon tetrachloride	15.602	2	0.43	12.5826		124	70 - 130			
Chlorobenzene	8.148	1	0.41	9.20712		88.5	70 - 130			
Chloroethane	5.409	0.66	0.28	5.27722		102	70 - 130			

Hushmand Associates, Inc.
250 Goddard
Irvine , CA 92618

Project Number : Parcel 33 - 600 S Santa Fe St., Los Angele
Report To : Naresh Bellana
Reported : 03/26/2018

Volatile Organic Compounds in AIR by TO-15 (Canister) - Quality Control (cont'd)

Analyte	Result (ug/m³)	PQL (ug/m³)	MDL (ug/m³)	Spike Level	Source Result	% Rec	% Rec Limits	RPD	RPD Limit	Notes
Batch B5H0228 - No_Prep_AIR (continued)										
LCS (B5H0228-BS1) - Continued					Prepared: 8/10/2015 Analyzed: 8/10/2015					
Chloroform	9.277	1	0.50	9.76499		95.0	70 - 130			
Chloromethane	4.068	0.52	0.22	4.12982		98.5	70 - 130			
cis-1,2-Dichloroethene	5.947	0.99	0.28	7.92990		75.0	70 - 130			
cis-1,3-Dichloropropene	9.576	1	0.33	9.07724		106	70 - 130			
Cyclohexane	7.263	0.86	0.25	6.88425		106	70 - 130			
Dibromochloromethane	16.696	2	0.83	17.0371		98.0	70 - 130			
Dibromomethane	19.694	2	0.55	14.2196		138	70 - 130			L5
Dichlorodifluoromethane	10.237	1	0.56	9.89063		104	70 - 130			
Dichlorotetrafluoroethane	13.911	2	0.76	13.9812		99.5	70 - 130			
Ethanol	4.503	0.47	0.20	3.76834		120	70 - 130			
Ethylbenzene	8.380	1	0.35	8.68425		96.5	70 - 130			
Freon-113	13.028	2	0.58	15.3272		85.0	70 - 130			
Hexachlorobutadiene	18.984	3	1	21.3300		89.0	70 - 130			
Isopropylbenzene	9.832	1	0.52	9.83166		100	70 - 130			
m,p-Xylene	35.432	4	1	34.7370		102	70 - 130			
Methylene chloride	5.593	0.87	0.31	6.94740		80.5	70 - 130			
MTBE	6.742	0.90	0.33	7.21047		93.5	70 - 130			
n-Butylbenzene	12.626	1	0.42	10.9790		115	70 - 130			
n-Propylbenzene	8.947	1	0.41	9.83166		91.0	70 - 130			
Naphthalene	11.323	1	0.36	10.4843		108	70 - 130			
o-Xylene	8.945	1	0.40	8.68425		103	70 - 130			
p-Isopropyltoluene	10.101	1	0.51	10.9790		92.0	70 - 130			
sec-Butylbenzene	11.912	1	0.56	10.9790		108	70 - 130			
Styrene	7.795	1	0.44	8.51934		91.5	70 - 130			
tert-Butylbenzene	11.089	1	0.62	10.9790		101	70 - 130			
Tetrachloroethene	11.937	2	0.47	13.5650		88.0	70 - 130			
Toluene	7.348	0.94	0.28	7.53688		97.5	70 - 130			
trans-1,2-Dichloroethene	6.265	0.99	0.34	7.92990		79.0	70 - 130			
trans-1,3-Dichloropropene	10.257	1	0.34	9.07722		113	70 - 130			
Trichloroethene	9.673	1	0.47	10.7474		90.0	70 - 130			
Trichlorofluoromethane	14.158	1	0.53	11.2366		126	70 - 130			
Vinyl acetate	7.746	0.88	0.38	7.04204		110	70 - 130			
Vinyl chloride	4.780	0.64	0.21	5.11231		93.5	70 - 130			
Surrogate: 4-Bromofluorobenzene	*19.40*			*17.8935*		*108*	*79.2 - 147*			
LCS Dup (B5H0228-BSD1)					Prepared: 8/10/2015 Analyzed: 8/10/2015					
1,1,1,2-Tetrachloroethane	12.563	2	0.57	13.7299		91.5	70 - 130	7.37	20	
1,1,1-Trichloroethane	9.821	1	0.58	10.9123		90.0	70 - 130	8.51	20	
1,1,2,2-Tetrachloroethane	12.563	2	0.77	13.7299		91.5	70 - 130	7.37	20	
1,1,2-Trichloroethane	10.312	1	0.45	10.9123		94.5	70 - 130	8.61	20	
1,1-Dichloroethane	7.123	1	0.37	8.09480		88.0	70 - 130	4.99	20	

Hushmand Associates, Inc.	Project Number : Parcel 33 - 600 S Santa Fe St., Los Angele
250 Goddard	Report To : Naresh Bellana
Irvine , CA 92618	Reported : 03/26/2018

Volatile Organic Compounds in AIR by TO-15 (Canister) - Quality Control (cont'd)

Analyte	Result (ug/m³)	PQL (ug/m³)	MDL (ug/m³)	Spike Level	Source Result	% Rec	% Rec Limits	RPD	RPD Limit	Notes
Batch B5H0228 - No_Prep_AIR (continued)										
LCS Dup (B5H0228-BSD1) - Continued					Prepared: 8/10/2015 Analyzed: 8/10/2015					
1,1-Dichloroethene	6.423	0.99	0.34	7.92990		81.0	70 - 130	4.42	20	
1,1-Dichloropropene	11.347	1	0.37	9.07722		125	70 - 130	2.43	20	
1,2,3-Trichloropropane	10.552	2	0.58	12.0597		87.5	70 - 130	1.70	20	
1,2,4-Trichlorobenzene	13.877	2	0.73	14.8422		93.5	70 - 130	17.6	20	
1,2,4-Trimethylbenzene	10.471	1	0.54	9.83166		106	70 - 130	9.40	20	
1,2-Dibromo-3-chloropropane	21.362	2	1	19.3319		110	70 - 130	2.68	20	
1,2-Dibromoethane	13.830	2	0.73	15.3670		90.0	70 - 130	11.0	20	
1,2-Dichlorobenzene	11.183	2	0.54	12.0246		93.0	70 - 130	3.17	20	
1,2-Dichloroethane	9.997	1	0.34	8.09480		124	70 - 130	11.8	20	
1,2-Dichloropropane	9.011	1	0.41	9.24213		97.5	70 - 130	9.29	20	
1,3,5-Trimethylbenzene	9.389	1	0.51	9.83166		95.5	70 - 130	7.07	20	
1,3-Butadiene	4.314	0.55	0.39	4.42454		97.5	70 - 130	7.88	20	
1,3-Dichlorobenzene	11.123	2	0.56	12.0246		92.5	70 - 130	4.23	20	
1,4-Dichlorobenzene	11.063	2	0.51	12.0246		92.0	70 - 130	5.29	20	
1,4-Dioxane	7.351	0.90	0.65	7.20695		102	70 - 130	8.90	20	
2,2,4-Trimethylpentane	8.690	1	0.35	9.34388		93.0	70 - 130	8.74	20	
2-Butanone	5.544	0.74	0.24	5.89824		94.0	70 - 130	6.68	20	
2-Chloroethyl vinyl ether	11.026	1	0.22	8.71583		126	70 - 130	4.44	20	
2-Chlorotoluene	10.458	1	0.50	10.3544		101	70 - 130	4.36	20	
2-Hexanone	9.176	1	0.43	8.19296		112	70 - 130	11.8	20	
2-Propanol	5.186	0.61	0.26	4.91534		106	70 - 130	7.74	20	
4-Chlorotoluene	7.403	1	0.47	10.3544		71.5	70 - 130	0.697	20	
4-Ethyl Toluene	9.340	1	0.47	9.83166		95.0	70 - 130	6.62	20	
4-Methyl-2-pentanone	9.299	1	0.30	8.19296		114	70 - 130	10.0	20	
Acetone	4.585	0.59	0.26	4.75084		96.5	70 - 130	12.6	20	
Acetonitrile	3.476	0.42	0.14	3.35804		104	70 - 130	7.44	20	
Acrolein	6.581	0.57	0.22	4.58593		144	70 - 130	1.38	20	L5
Acrylonitrile	3.885	0.54	0.18	4.34053		89.5	70 - 130	4.90	20	
Benzene	5.910	0.80	0.28	6.38953		92.5	70 - 130	9.28	20	
Benzyl chloride	10.562	1	0.37	10.3544		102	70 - 130	9.79	20	
Bromobenzene	9.889	2	0.59	12.8432		77.0	70 - 130	1.93	20	
Bromodichloromethane	14.607	2	0.70	13.4011		109	70 - 130	10.0	20	
Bromoform	18.192	3	0.90	20.6733		88.0	70 - 130	5.52	20	
Bromomethane	7.300	0.97	0.46	7.76597		94.0	70 - 130	8.65	20	
Carbon disulfide	5.107	0.78	0.31	6.22847		82.0	70 - 130	1.81	20	
Carbon tetrachloride	13.715	2	0.43	12.5826		109	70 - 130	12.9	20	
Chlorobenzene	7.918	1	0.41	9.20712		86.0	70 - 130	2.87	20	
Chloroethane	5.330	0.66	0.28	5.27722		101	70 - 130	1.47	20	
Chloroform	8.642	1	0.50	9.76499		88.5	70 - 130	7.08	20	
Chloromethane	4.006	0.52	0.22	4.12982		97.0	70 - 130	1.53	20	
cis-1,2-Dichloroethene	5.908	0.99	0.28	7.92990		74.5	70 - 130	0.669	20	
cis-1,3-Dichloropropene	8.669	1	0.33	9.07724		95.5	70 - 130	9.95	20	

Certificate of Analysis

Hushmand Associates, Inc.	Project Number : Parcel 33 - 600 S Santa Fe St., Los Angele
250 Goddard	Report To : Naresh Bellana
Irvine , CA 92618	Reported : 03/26/2018

Volatile Organic Compounds in AIR by TO-15 (Canister) - Quality Control (cont'd)

Analyte	Result (ug/m³)	PQL (ug/m³)	MDL (ug/m³)	Spike Level	Source Result	% Rec	% Rec Limits	RPD	RPD Limit	Notes
Batch B5H0228 - No_Prep_AIR (continued)										
LCS Dup (B5H0228-BSD1) - Continued					Prepared: 8/10/2015 Analyzed: 8/10/2015					
Cyclohexane	6.747	0.86	0.25	6.88425		98.0	70 - 130	7.37	20	
Dibromochloromethane	15.419	2	0.83	17.0371		90.5	70 - 130	7.96	20	
Dibromomethane	19.907	2	0.55	14.2196		140	70 - 130	1.08	20	L5
Dichlorodifluoromethane	10.237	1	0.56	9.89063		104	70 - 130	0.00	20	
Dichlorotetrafluoroethane	13.702	2	0.76	13.9812		98.0	70 - 130	1.52	20	
Ethanol	4.277	0.47	0.20	3.76834		114	70 - 130	5.15	20	
Ethylbenzene	7.990	1	0.35	8.68425		92.0	70 - 130	4.77	20	
Freon-113	12.798	2	0.58	15.3272		83.5	70 - 130	1.78	20	
Hexachlorobutadiene	16.531	3	1	21.3300		77.5	70 - 130	13.8	20	
Isopropylbenzene	9.094	1	0.52	9.83166		92.5	70 - 130	7.79	20	
m,p-Xylene	33.087	4	1	34.7370		95.2	70 - 130	6.84	20	
Methylene chloride	5.523	0.87	0.31	6.94740		79.5	70 - 130	1.25	20	
MTBE	6.345	0.90	0.33	7.21047		88.0	70 - 130	6.06	20	
n-Butylbenzene	11.802	1	0.42	10.9790		108	70 - 130	6.74	20	
n-Propylbenzene	8.455	1	0.41	9.83166		86.0	70 - 130	5.65	20	
Naphthalene	11.113	1	0.36	10.4843		106	70 - 130	1.87	20	
o-Xylene	8.380	1	0.40	8.68425		96.5	70 - 130	6.52	20	
p-Isopropyltoluene	9.497	1	0.51	10.9790		86.5	70 - 130	6.16	20	
sec-Butylbenzene	11.089	1	0.56	10.9790		101	70 - 130	7.16	20	
Styrene	7.454	1	0.44	8.51934		87.5	70 - 130	4.47	20	
tert-Butylbenzene	10.759	1	0.62	10.9790		98.0	70 - 130	3.02	20	
Tetrachloroethene	11.259	2	0.47	13.5650		83.0	70 - 130	5.85	20	
Toluene	6.821	0.94	0.28	7.53688		90.5	70 - 130	7.45	20	
trans-1,2-Dichloroethene	6.066	0.99	0.34	7.92990		76.5	70 - 130	3.22	20	
trans-1,3-Dichloropropene	9.213	1	0.34	9.07722		102	70 - 130	10.7	20	
Trichloroethene	9.135	1	0.47	10.7474		85.0	70 - 130	5.71	20	
Trichlorofluoromethane	12.473	1	0.53	11.2366		111	70 - 130	12.7	20	
Vinyl acetate	7.253	0.88	0.38	7.04204		103	70 - 130	6.57	20	
Vinyl chloride	4.908	0.64	0.21	5.11231		96.0	70 - 130	2.64	20	
Surrogate: 4-Bromofluorobenzene	*19.11*			*17.8935*		*107*	*79.2 - 147*			

Certificate of Analysis

Hushmand Associates, Inc.	Project Number : Parcel 33 - 600 S Santa Fe St., Los Angele
250 Goddard	Report To : Naresh Bellana
Irvine , CA 92618	Reported : 03/26/2018

Volatile Organic Compounds in AIR by TO-15 (Canister) - Quality Control

Analyte	Result (ug/m³)	PQL (ug/m³)	MDL (ug/m³)	Spike Level	Source Result	% Rec	% Rec Limits	RPD	RPD Limit	Notes
Batch B5H0287 - No_Prep_AIR										
Blank (B5H0287-BLK1)					Prepared: 8/12/2015 Analyzed: 8/12/2015					
2-Propanol	ND	0.61	0.26							
Ethanol	ND	0.47	0.20							
Tetrachloroethene	ND	2	0.47							
Toluene	ND	0.94	0.28							
Surrogate: 4-Bromofluorobenzene	*19.90*			*17.8935*		*111*	*79.2 - 147*			
LCS (B5H0287-BS1)					Prepared: 8/12/2015 Analyzed: 8/12/2015					
2-Propanol	5.505	0.61	0.26	4.91534		112	70 - 130			
Ethanol	4.070	0.47	0.20	3.76834		108	70 - 130			
Tetrachloroethene	13.972	2	0.47	13.5650		103	70 - 130			
Toluene	5.992	0.94	0.28	7.53688		79.5	70 - 130			
Surrogate: 4-Bromofluorobenzene	*19.47*			*17.8935*		*109*	*79.2 - 147*			
LCS Dup (B5H0287-BSD1)					Prepared: 8/12/2015 Analyzed: 8/12/2015					
2-Propanol	5.309	0.61	0.26	4.91534		108	70 - 130	3.64	20	
Ethanol	3.731	0.47	0.20	3.76834		99.0	70 - 130	8.70	20	
Tetrachloroethene	15.125	2	0.47	13.5650		112	70 - 130	7.93	20	
Toluene	6.180	0.94	0.28	7.53688		82.0	70 - 130	3.10	20	
Surrogate: 4-Bromofluorobenzene	*19.90*			*17.8935*		*111*	*79.2 - 147*			

Certificate of Analysis

Hushmand Associates, Inc.	Project Number : Parcel 33 - 600 S Santa Fe St., Los Angele
250 Goddard	Report To : Naresh Bellana
Irvine , CA 92618	Reported : 03/26/2018

Volatile Organic Compounds in AIR by TO-15 (Canister) - Quality Control

Analyte	Result (ug/m³)	PQL (ug/m³)	MDL (ug/m³)	Spike Level	Source Result	% Rec	% Rec Limits	RPD	RPD Limit	Notes
Batch B5H0364 - No_Prep_AIR										
Blank (B5H0364-BLK1)						Prepared: 8/13/2015 Analyzed: 8/13/2015				
1,1,1-Trichloroethane	ND	1	0.58							
Surrogate: 4-Bromofluorobenzene	*18.54*			*17.8935*		*104*	*79.2 - 147*			
LCS (B5H0364-BS1)						Prepared: 8/13/2015 Analyzed: 8/13/2015				
1,1,1-Trichloroethane	10.367	1	0.58	10.9123		95.0	70 - 130			
Surrogate: 4-Bromofluorobenzene	*18.39*			*17.8935*		*103*	*79.2 - 147*			
LCS Dup (B5H0364-BSD1)						Prepared: 8/13/2015 Analyzed: 8/13/2015				
1,1,1-Trichloroethane	10.039	1	0.58	10.9123		92.0	70 - 130	3.21	20	
Surrogate: 4-Bromofluorobenzene	*18.04*			*17.8935*		*101*	*79.2 - 147*			

Certificate of Analysis

Hushmand Associates, Inc.	Project Number : Parcel 33 - 600 S Santa Fe St., Los Angele
250 Goddard	Report To : Naresh Bellana
Irvine , CA 92618	Reported : 03/26/2018

Gasoline Range Organics in Air by TO-3 - Quality Control

Analyte	Result (ug/m³)	PQL (ug/m³)	MDL (ug/m³)	Spike Level	Source Result	% Rec	% Rec Limits	RPD	RPD Limit	Notes
Batch B5H0282 - No_Prep_AIR										
Blank (B5H0282-BLK1)						Prepared: 8/12/2015 Analyzed: 8/12/2015				
Gasoline Range Organics	ND	100	70							
Surrogate: 4-Bromofluorobenzene	*18.39*			*17.8935*		*103*	*70 - 130*			
LCS (B5H0282-BS1)						Prepared: 8/12/2015 Analyzed: 8/12/2015				
Gasoline Range Organics	610.920	100	70	817.996		74.7	70 - 130			
Surrogate: 4-Bromofluorobenzene	*18.97*			*17.8935*		*106*	*70 - 130*			
LCS Dup (B5H0282-BSD1)						Prepared: 8/12/2015 Analyzed: 8/12/2015				
Gasoline Range Organics	615.501	100	70	817.996		75.2	70 - 130	0.747	20	
Surrogate: 4-Bromofluorobenzene	*18.61*			*17.8935*		*104*	*70 - 130*			

Certificate of Analysis

Hushmand Associates, Inc.	Project Number : Parcel 33 - 600 S Santa Fe St., Los Angele
250 Goddard	Report To : Naresh Bellana
Irvine , CA 92618	Reported : 03/26/2018

Gasoline Range Organics in Air by TO-3 - Quality Control

Analyte	Result (ug/m³)	PQL (ug/m³)	MDL (ug/m³)	Spike Level	Source Result	% Rec	% Rec Limits	RPD	RPD Limit	Notes
Batch B5H0343 - No_Prep_AIR										
Blank (B5H0343-BLK1)						Prepared: 8/13/2015 Analyzed: 8/13/2015				
Gasoline Range Organics	ND	100	70							
Surrogate: 4-Bromofluorobenzene	*18.18*			*17.8935*		*102*	*70 - 130*			
LCS (B5H0343-BS1)						Prepared: 8/13/2015 Analyzed: 8/13/2015				
Gasoline Range Organics	790.184	100	70	817.996		96.6	70 - 130			
Surrogate: 4-Bromofluorobenzene	*17.82*			*17.8935*		*99.6*	*70 - 130*			
LCS Dup (B5H0343-BSD1)						Prepared: 8/13/2015 Analyzed: 8/13/2015				
Gasoline Range Organics	800.450	100	70	817.996		97.9	70 - 130	1.29	20	
Surrogate: 4-Bromofluorobenzene	*18.82*			*17.8935*		*105*	*70 - 130*			

Certificate of Analysis

Hushmand Associates, Inc.	Project Number : Parcel 33 - 600 S Santa Fe St., Los Angele
250 Goddard	Report To : Naresh Bellana
Irvine , CA 92618	Reported : 03/26/2018

Notes and Definitions

L5	Laboratory Control Sample high biased. Sample result/s was non-detect (ND) for the target analyte; therefore reanalysis was not necessary.
E4	Result value is estimated.
E3	Internal standard recoveries did not meet method acceptance due to matrix interference. Result value is estimated.
ND	Analyte is not detected at or above the Practical Quantitation Limit (PQL). When client requests quantitation against MDL, analyte is not detected at or above the Method Detection Limit (MDL)
PQL	Practical Quantitation Limit
MDL	Method Detection Limit
NR	Not Reported
RPD	Relative Percent Difference
CA2	CA-ELAP (CDPH)
OR1	OR-NELAP (OSPHL)

Notes:
(1) The reported MDL and PQL are based on prep ratio variation and analytical dilution.
(2) The suffix [2C] of specific analytes signifies that the reported result is taken from the instrument's second column.
(3) Results are wet unless otherwise specified.

ADVANCED TECHNOLOGY LABORATORIES

3275 Walnut Ave., Signal Hill, CA 90755
Tel: (562) 989-4045 • Fax: (562) 989-4040

CHAIN OF CUSTODY RECORD

Page 1 of 2

Instruction: Complete all shaded areas.

For Laboratory Use Only — ATLCOC Ver: 201307

Method of Transport	Sample Conditions Upon Receipt					
	Condition	Y	N	Condition	Y	N
☑ Client ☐ ATL	1. CHILLED	☐	☐	5. # OF SAMPLES MATCH COC	☑	☐
☐ FedEx ☐ OnTrac	2. HEADSPACE (VOA)	☐	☐	6. PRESERVED	☐	☐
☐ GSO	3. CONTAINER INTACT	☐	☐	7. COOLER TEMP, deg C:		
☐ Other:	4. SEALED	☐	☐			

CUSTOMER

Company: Hushmand & Assoc — Address: — Tel:
City: — State: — Zip: — Fax:

SEND REPORT TO:
Attn: Naresh Bellana — Email:
Company: Hushmand & Assoc
Address: 250 Goddard
City: Irvine — State: CA — Zip: 92618

SEND INVOICE TO: ☐ same as SEND REPORT TO
Attn: — Email:
Company:
Address:
City: — State: — Zip:

PROJECT SAMPLES

Project Name: Santa fe st
Project No.:
Sampler: Don Terres
Quote No:
PO #:
Special Instructions/Comments: ETR# 327 E15G161

ITEM	Lab No.	Sample Description: Sample ID / Location	Date	Time	8260 / 624 (Volatiles)	8015(GRO)	8015(DRO)	8270(Semi-volatiles)	8081(Organochlorine Pesticides)	8082(PCBs)	6010 / 7000(Title 22 Metals)	TO-15	TPH-Gas	SOIL / SEDIMENT / SLUDGE	SOLIDS / WIPE / FILTER	WATER - DRINKING / GROUND	WATER - STORM / WASTE	AQUEOUS / LAYERED - OIL	TAT	Container #	Container Type	Container Material	Preservative	REMARKS
1	1502695 - 1	VP-1	8/5	10:41																7				
2	2	VP-2		10:49																				
3	3	VP-3		10:12																				
4	4	VP-4		10:28																				
5	5	VP-5		10:32																				
6	6	VP-6		10:59																				
7	7	VP-7		9:17																				
8	8	VP-8		8:50																				
9	9	VP-9		9:00																				
10	10	VP-10		9:10																				

QA/QC: ☐ Routine ☐ Caltran ☐ Legal ☐ RWQCB ☐ Level IV

TERMS

1. Sample receiving hours: 7:30 AM to 7:30 PM Monday - Friday; Saturday 8:00 AM to 12:00 PM.
2. Samples Submitted AFTER 3:00 PM, are considered received the following Business day at 8:00 AM.
3. The following turnaround time conditions apply:
   - TAT = 0 : 300% Surcharge SAME BUSINESS DAY if received by 9:00 AM
   - TAT = 1 : 100% Surcharge NEXT BUSINESS DAY (COB 5:00 PM)
   - TAT = 2 : 50% Surcharge 2ND BUSINESS DAY (COB 5:00 PM)
   - TAT = 3 : 30% Surcharge 3RD BUSINESS DAY (COB 5:00 PM)
   - TAT = 4 : 20% Surcharge 4TH BUSINESS DAY (COB 5:00 PM)
   - TAT = 5 : NO SURCHARGE 5th BUSINESS DAY (COB 5:00 PM)
4. Weekend, holiday, after-hours work - ask for quote.
5. Subcontract TAT is 10 - 15 business days. Projects requiring shorter TATs will incur a surcharge respective to the subcontract lab — ask for quote.
6. Liquid and solid samples will be disposed of after 45 calendar days from receipt of samples; air samples will be disposed of after 14 calendar days after receipt of samples.
7. Electronic records maintained for five (5) years from report date.
8. Hard copy reports will be disposed of after 45 calendar days from report date.
9. Storage and Report Fees:
   - Liquid & solid samples: Complimentary storage for forty-five (45) calendar days from receipt of samples; $2/sample/month if extended storage or hold is requested.
   - Air samples: Complimentary storage for ten (10) calendar days from receipt of samples; $20/ sample/week if extended storage is requested.
   - Hard copy and regenerated reports/EDDs: $17.50 per hard copy report requested; $50.00 per regenerated/reforma? ed report; $35 per reprocessed EDD.
10. Rush TCLP/STLC samples: add 2 days to analysis TAT for extraction on procedure.
11. Unanalyzed samples will incur a disposal fee of $7 per sample.

OT OT

As the authorized agent of the company above, I hereby purchase laboratory services from ATL as shown above and hereby guarantee payment as quoted.

Don Terres — Submitter Print Name — Signature

CUSTODY

Relinquished by: (Signature and Printed Name)	Date:	Time:	Received by: (Signature and Printed Name)	Date:	Time:
Don Terres	8-5	1:40	C. Hyde	8/6/15	1342
Relinquished by: (Signature and Printed Name)	Date:	Time:	Received by: (Signature and Printed Name)	Date:	Time:
Relinquished by: (Signature and Printed Name)	Date:	Time:	Received by: (Signature and Printed Name)	Date:	Time:

ADVANCED TECHNOLOGY LABORATORIES
3275 Walnut Ave., Signal Hill, CA 90755
Tel: (562) 989-4045 • Fax: (562) 989-4040

CHAIN OF CUSTODY RECORD

Instruction: Complete all shaded areas.

For Laboratory Use Only — ATLCOC Ver: 2013071

Method of Transport: ☒ Client ☐ ATL ☐ FedEx ☐ OnTrac ☐ GSO ☐ Other: _____

Sample Conditions Upon Receipt

Condition	Y	N	Condition	Y	N
1. CHILLED	☐	☒	5. # OF SAMPLES MATCH COC	☐	☐
2. HEADSPACE (VOA)	☐	☐	6. PRESERVED	☐	☐
3. CONTAINER INTACT	☐	☐	7. COOLER TEMP, deg C:		
4. SEALED	☐	☐			

CUSTOMER

Company: Hushmand & Assoc.
Address:
Tel:
City: State: Zip: Fax:

SEND REPORT TO:
Attn: Naresh Bellana Email:
Company: Hushmand & Assco
Address: 250 Goddard
City: Irvine CA State: Zip: 92618

SEND INVOICE TO: ☐ same as SEND REPORT TO
Attn: Email:
Company:
Address:
City: State: Zip:

PROJECT SAMPLES

Project Name: Santa fe Street
Project No.:
Sampler: Don Terres
Quote No:
PO #:
Special Instructions/Comments: ETR #327 E15G161

QA/QC: ☐ Routine ☐ Caltran ☐ Legal ☐ RWQCE ☐ Level IV

Encircle or Write Requested Analysis / Encircle Sample Matrix

ITEM	Lab No.	Sample ID / Location	Date	Time	8260 / 624 (Volatiles)	8015(GRO)	8015(DRO)	8270(Semi-volatiles)	8081(Organochlorine Pesticides)	8082(PCBs)	6010 / 7000(Title 22 Metals)	TO-15	TD H Gas	SOIL / SEDIMENT / SLUDGE	SOLIDS / WIPE/ FILTER	WATER - DRINKING / GROUND	WATER - STORM / WASTE	AQUEOUS / LAYERED - OIL	TAT	#	Type: 1=Tube; 2=VOA; 3=Liter; 4=Pint; 5=Jar; 6=Tedlar; 7 = Canister	Material: 1=Glass; 2=Plastic; 3=Metal	Preservative: 1=HCl; 2=HNO3; 3=H2SO4; 4 = 4C; 5=Zn ((Ac)2; 6=NaOH; 7=NA2S2O3	REMARKS
1	1502645 - 11	VP-11	8/5	9:43	X							\	\								7			
2	12	VP-12		9:50	X							\	\								7			
3																								
4	13	VP-3 Dup		10:21	X							\	\								7			
5	14	VP-9 Dup		9:25	X							\	\								7			
6					DT							DT												
7																								
8																								
9																								
10																								

TERMS

1. Sample receiving hours: 7:30 AM to 7:30 PM Monday - Friday; Saturday 8:00 AM to 12:00 PM.
2. Samples Submitted AFTER 3:00 PM, are considered received the following Business day at 8:00 AM.
3. The following turnaround time conditions apply:
   - TAT = 0 : 300% Surcharge SAME BUSINESS DAY if received by 9:00 AM
   - TAT = 1 : 100% Surcharge NEXT BUSINESS DAY (COB 5:00 PM)
   - TAT = 2 : 50% Surcharge 2ND BUSINESS DAY (COB 5:00 PM)
   - TAT = 3 : 30% Surcharge 3RD BUSINESS DAY (COB 5:00 PM)
   - TAT = 4 : 20% Surcharge 4TH BUSINESS DAY (COB 5:00 PM)
   - TAT = 5 : NO SURCHARGE 5th BUSINESS DAY (COB 5:00 PM)
4. Weekend, holiday, after-hours work - ask for quote.
5. Subcontract TAT is 10 - 15 business days. Projects requiring shorter TATs will incur a surcharge respective to the subcontract lab --- ask for quote.
6. Liquid and solid samples will be disposed of after 45 calendar days from receipt of samples; air samples will be disposed of after 14 calendar days after receipt of samples.
7. Electronic records maintained for fi ve (5) years from report date.
8. Hard copy reports will be disposed of after 45 calendar days from report date.
9. Storage and Report Fees:
   - Liquid & solid samples: Complimentary storage for forty-fi ve (45) calendar days from receipt of samples; $2/sample/month if extended storage or hold is requested.
   - Air samples: Complimentary storage for ten (10) calendar days from receipt of samples; $20/ sample/week if extended storage is requested.
   - Hard copy and regenerated reports/EDDs: $17.50 per hard copy report requested; $50.00 per regenerated/reforma? ed report; $35 per reprocessed EDD.
10. Rush TCLP/STLC samples: add 2 days to analysis TAT for extraction on procedure.
11. Unanalyzed samples will incur a disposal fee of $7 per sample.

As the authorized agent of the company above, I hereby purchase laboratory services from ATL as shown above and hereby guarantee payment as quoted.

Submitter Print Name _____ Signature _____

CUSTODY

Relinquished by: (Signature and Printed Name)	Date:	Time:	Received by: (Signature and Printed Name)	Date:	Time:
[signature] Don Terres	8/15	140	C. Aguila [signature]	8/15	1342

Rachelle Arada

From: Naresh Bellana [naresh@haieng.com]
Sent: Monday, August 17, 2015 12:31 PM
To: Rachelle Arada
Subject: RE: Final Results/Invoice - Santa Fe St. (ATL# 1502695)

Rachelle,

Could you change the Client Reference to "Parcel 33 - 600 S Santa Fe St., Los Angeles"?

Thanking you,

Sincerely,

Naresh Bellana, MS, PE
Senior Staff Engineer

Hushmand Associates, Inc.
250 Goddard
Irvine, CA 92618

p. *(949) 777-1266*
d. *(949) 777-1275*
f. *(949) 777-1276*

From: Rachelle Arada [mailto:Rachelle@atlglobal.com]
Sent: Monday, August 17, 2015 12:07 PM
To: Naresh Bellana
Subject: Final Results/Invoice - Santa Fe St. (ATL# 1502695)

Hi Naresh,

Attached are the results/invoice for the above project.

Rachelle Arada
Project Manager

Advanced Technology Laboratories
www.atlglobal.com
Tel: (562) 989-4045 ext. 237
Fax: (562) 989-4040

Advanced Technology Laboratories is a full-service environmental lab providing organic and inorganic analyses of soil, water, wastewater, storm water and hazardous waste samples. ATL is accredited by the State of California, NELAP and State of Oregon (Air) and holds various SBE, DBE and MBE certificates and a USDA soil permit. ATL takes pride in providing our customers with quick turnaround time, excellent customer service and defensible data while offering very competitive rates. *Advanced Technology Labs - Your Partner for Quality Environmental Testing*

This message is intended for the use of the individual or entity to which it is addressed. This may contain information that is privileged, confidential, and exempt from disclosure under applicable law. If the reader of this message is not the intended recipient, or the employee or agent responsible for delivering the message to the intended recipient, you are hereby notified that any dissemination, distribution or copying of this communication is strictly prohibited. If you have received this communication in error, please notify us immediately by telephone and delete the original message. Thank you.

March 26, 2018

Naresh Bellana
Hushmand Associates, Inc.
250 Goddard
Irvine, CA 92618
Tel: (949) 777-1266
Fax:(949) 777-1276

ELAP No.: 1838
CSDLAC No.: 10196
ORELAP No.: CA300003

Re: ATL Work Order Number : 1502728
Client Reference : Parcel 32

Enclosed are the results for sample(s) received on August 07, 2015 by Advanced Technology Laboratories. The sample(s) are tested for the parameters as indicated on the enclosed chain of custody in accordance with applicable laboratory certifications. The laboratory results contained in this report specifically pertains to the sample(s) submitted.

Thank you for the opportunity to serve the needs of your company. If you have any questions, please feel free to contact me or your Project Manager.

Sincerely,

Eddie Rodriguez
Laboratory Director

The cover letter and the case narrative are an integral part of this analytical report and its absence renders the report invalid. Test results contained within this data package meet the requirements of applicable state-specific certification programs. The report cannot be reproduced without written permission from the client and Advanced Technology Laboratories.

Certificate of Analysis

Hushmand Associates, Inc.	Project Number : Parcel 32
250 Goddard	Report To : Naresh Bellana
Irvine , CA 92618	Reported : 03/26/2018

SUMMARY OF SAMPLES

Sample ID	Laboratory ID	Matrix	Date Sampled	Date Received
VP-1	1502728-01	Air	8/07/15 12:22	8/07/15 14:47
VP-2	1502728-02	Air	8/07/15 12:28	8/07/15 14:47
VP-3	1502728-03	Air	8/07/15 13:03	8/07/15 14:47
VP-4	1502728-04	Air	8/07/15 13:08	8/07/15 14:47
VP-5	1502728-05	Air	8/07/15 12:32	8/07/15 14:47
VP-6	1502728-06	Air	8/07/15 12:41	8/07/15 14:47
VP-7	1502728-07	Air	8/07/15 12:54	8/07/15 14:47
VP-8	1502728-08	Air	8/07/15 13:16	8/07/15 14:47
VP-9	1502728-09	Air	8/07/15 12:49	8/07/15 14:47
VP-10	1502728-10	Air	8/07/15 12:53	8/07/15 14:47
VP-7 (Duplicate)	1502728-11	Air	8/07/15 13:28	8/07/15 14:47

Certificate of Analysis

Hushmand Associates, Inc.	Project Number : Parcel 32
250 Goddard	Report To : Naresh Bellana
Irvine , CA 92618	Reported : 03/26/2018

Client Sample ID VP-1

Lab ID: 1502728-01

Volatile Organic Compounds in AIR by TO-15 (Canister) **Analyst: MFR**

Analyte	Result (ug/m³)	PQL (ug/m³)	Dilution	Batch	Prepared	Date/Time Analyzed	Notes
1,1,1,2-Tetrachloroethane	ND	2	1	B5H0409	08/15/2015	08/15/15 23:49	
1,1,1-Trichloroethane	**5**	1	1	B5H0409	08/15/2015	08/15/15 23:49	
1,1,2,2-Tetrachloroethane	ND	2	1	B5H0409	08/15/2015	08/15/15 23:49	
1,1,2-Trichloroethane	ND	1	1	B5H0409	08/15/2015	08/15/15 23:49	
1,1-Dichloroethane	ND	1	1	B5H0409	08/15/2015	08/15/15 23:49	
1,1-Dichloroethene	ND	0.99	1	B5H0409	08/15/2015	08/15/15 23:49	
1,1-Dichloropropene	ND	1	1	B5H0409	08/15/2015	08/15/15 23:49	
1,2,3-Trichloropropane	ND	2	1	B5H0409	08/15/2015	08/15/15 23:49	
1,2,4-Trichlorobenzene	ND	2	1	B5H0409	08/15/2015	08/15/15 23:49	
1,2,4-Trimethylbenzene	ND	1	1	B5H0409	08/15/2015	08/15/15 23:49	
1,2-Dibromo-3-chloropropane	ND	2	1	B5H0409	08/15/2015	08/15/15 23:49	
1,2-Dibromoethane	ND	2	1	B5H0409	08/15/2015	08/15/15 23:49	
1,2-Dichlorobenzene	ND	2	1	B5H0409	08/15/2015	08/15/15 23:49	
1,2-Dichloroethane	ND	1	1	B5H0409	08/15/2015	08/15/15 23:49	
1,2-Dichloropropane	ND	1	1	B5H0409	08/15/2015	08/15/15 23:49	
1,3,5-Trimethylbenzene	ND	1	1	B5H0409	08/15/2015	08/15/15 23:49	
1,3-Butadiene	ND	0.55	1	B5H0409	08/15/2015	08/15/15 23:49	
1,3-Dichlorobenzene	ND	2	1	B5H0409	08/15/2015	08/15/15 23:49	
1,4-Dichlorobenzene	ND	2	1	B5H0409	08/15/2015	08/15/15 23:49	
1,4-Dioxane	ND	0.90	1	B5H0409	08/15/2015	08/15/15 23:49	
2,2,4-Trimethylpentane	ND	1	1	B5H0409	08/15/2015	08/15/15 23:49	
2-Butanone	**9**	0.74	1	B5H0409	08/15/2015	08/15/15 23:49	
2-Chloroethyl vinyl ether	ND	1	1	B5H0409	08/15/2015	08/15/15 23:49	
2-Chlorotoluene	ND	1	1	B5H0409	08/15/2015	08/15/15 23:49	
2-Hexanone	ND	1	1	B5H0409	08/15/2015	08/15/15 23:49	
2-Propanol	**210**	6	10	B5H0409	08/16/2015	08/16/15 10:27	
4-Chlorotoluene	ND	1	1	B5H0409	08/15/2015	08/15/15 23:49	
4-Ethyl Toluene	ND	1	1	B5H0409	08/15/2015	08/15/15 23:49	
4-Methyl-2-pentanone	ND	1	1	B5H0409	08/15/2015	08/15/15 23:49	
Acetone	**40**	0.59	1	B5H0409	08/15/2015	08/15/15 23:49	
Acetonitrile	**0.86**	0.42	1	B5H0409	08/15/2015	08/15/15 23:49	
Acrolein	ND	0.57	1	B5H0409	08/15/2015	08/15/15 23:49	
Acrylonitrile	ND	0.54	1	B5H0409	08/15/2015	08/15/15 23:49	
Benzene	**2**	0.80	1	B5H0409	08/15/2015	08/15/15 23:49	
Benzyl chloride	ND	1	1	B5H0409	08/15/2015	08/15/15 23:49	
Bromobenzene	ND	2	1	B5H0409	08/15/2015	08/15/15 23:49	
Bromodichloromethane	ND	2	1	B5H0409	08/15/2015	08/15/15 23:49	

Certificate of Analysis

Hushmand Associates, Inc.	Project Number : Parcel 32
250 Goddard	Report To : Naresh Bellana
Irvine , CA 92618	Reported : 03/26/2018

Client Sample ID VP-1

Lab ID: 1502728-01

Volatile Organic Compounds in AIR by TO-15 (Canister) **Analyst: MFR**

Analyte	Result (ug/m³)	PQL (ug/m³)	Dilution	Batch	Prepared	Date/Time Analyzed	Notes
Bromoform	ND	3	1	B5H0409	08/15/2015	08/15/15 23:49	
Bromomethane	ND	0.97	1	B5H0409	08/15/2015	08/15/15 23:49	
Carbon disulfide	**1**	0.78	1	B5H0409	08/15/2015	08/15/15 23:49	
Carbon tetrachloride	ND	2	1	B5H0409	08/15/2015	08/15/15 23:49	
Chlorobenzene	ND	1	1	B5H0409	08/15/2015	08/15/15 23:49	
Chloroethane	ND	0.66	1	B5H0409	08/15/2015	08/15/15 23:49	
Chloroform	ND	1	1	B5H0409	08/15/2015	08/15/15 23:49	
Chloromethane	ND	0.52	1	B5H0409	08/15/2015	08/15/15 23:49	
cis-1,2-Dichloroethene	ND	0.99	1	B5H0409	08/15/2015	08/15/15 23:49	
cis-1,3-Dichloropropene	ND	1	1	B5H0409	08/15/2015	08/15/15 23:49	
Cyclohexane	ND	0.86	1	B5H0409	08/15/2015	08/15/15 23:49	
Dibromochloromethane	ND	2	1	B5H0409	08/15/2015	08/15/15 23:49	
Dibromomethane	ND	2	1	B5H0409	08/15/2015	08/15/15 23:49	
Dichlorodifluoromethane	**5**	1	1	B5H0409	08/15/2015	08/15/15 23:49	
Dichlorotetrafluoroethane	ND	2	1	B5H0409	08/15/2015	08/15/15 23:49	
Ethanol	**60**	5	10	B5H0409	08/16/2015	08/16/15 10:27	
Ethylbenzene	**1**	1	1	B5H0409	08/15/2015	08/15/15 23:49	
Freon-113	ND	2	1	B5H0409	08/15/2015	08/15/15 23:49	
Hexachlorobutadiene	ND	3	1	B5H0409	08/15/2015	08/15/15 23:49	
Isopropylbenzene	ND	1	1	B5H0409	08/15/2015	08/15/15 23:49	
m,p-Xylene	**10**	4	1	B5H0409	08/15/2015	08/15/15 23:49	
Methylene chloride	ND	0.87	1	B5H0409	08/15/2015	08/15/15 23:49	
MTBE	ND	0.90	1	B5H0409	08/15/2015	08/15/15 23:49	
n-Butylbenzene	ND	1	1	B5H0409	08/15/2015	08/15/15 23:49	
n-Propylbenzene	ND	1	1	B5H0409	08/15/2015	08/15/15 23:49	
Naphthalene	ND	1	1	B5H0409	08/15/2015	08/15/15 23:49	
o-Xylene	**2**	1	1	B5H0409	08/15/2015	08/15/15 23:49	
p-Isopropyltoluene	ND	1	1	B5H0409	08/15/2015	08/15/15 23:49	
sec-Butylbenzene	ND	1	1	B5H0409	08/15/2015	08/15/15 23:49	
Styrene	ND	1	1	B5H0409	08/15/2015	08/15/15 23:49	
tert-Butylbenzene	ND	1	1	B5H0409	08/15/2015	08/15/15 23:49	
Tetrachloroethene	**20**	2	1	B5H0409	08/15/2015	08/15/15 23:49	
Toluene	**2**	0.94	1	B5H0409	08/15/2015	08/15/15 23:49	
trans-1,2-Dichloroethene	ND	0.99	1	B5H0409	08/15/2015	08/15/15 23:49	
trans-1,3-Dichloropropene	ND	1	1	B5H0409	08/15/2015	08/15/15 23:49	
Trichloroethene	ND	1	1	B5H0409	08/15/2015	08/15/15 23:49	
Trichlorofluoromethane	**10**	1	1	B5H0409	08/15/2015	08/15/15 23:49	

Certificate of Analysis

Hushmand Associates, Inc.	Project Number : Parcel 32
250 Goddard	Report To : Naresh Bellana
Irvine , CA 92618	Reported : 03/26/2018

Client Sample ID VP-1

Lab ID: 1502728-01

Volatile Organic Compounds in AIR by TO-15 (Canister)

Analyst: MFR

Analyte		Result (ug/m³)	PQL (ug/m³)	Dilution	Batch	Prepared	Date/Time Analyzed	Notes
Vinyl acetate		**1**	0.88	1	B5H0409	08/15/2015	08/15/15 23:49	
Vinyl chloride		**3**	0.64	1	B5H0409	08/15/2015	08/15/15 23:49	
Surrogate: 4-Bromofluorobenzene	*108 %*		*79.2 - 147*		B5H0409	08/16/2015	*08/16/15 10:27*	
Surrogate: 4-Bromofluorobenzene	*108 %*		*79.2 - 147*		B5H0409	08/15/2015	*08/15/15 23:49*	

Gasoline Range Organics in Air by TO-3

Analyst: MFR

Analyte		Result (ug/m³)	PQL (ug/m³)	Dilution	Batch	Prepared	Date/Time Analyzed	Notes
Gasoline Range Organics		**2000**	1000	10	B5H0412	08/16/2015	08/16/15 18:15	
Surrogate: 4-Bromofluorobenzene	*97.2 %*		*70 - 130*		B5H0412	08/16/2015	*08/16/15 18:15*	

Certificate of Analysis

Hushmand Associates, Inc.	Project Number : Parcel 32
250 Goddard	Report To : Naresh Bellana
Irvine , CA 92618	Reported : 03/26/2018

Client Sample ID VP-2

Lab ID: 1502728-02

Volatile Organic Compounds in AIR by TO-15 (Canister) **Analyst: MFR**

Analyte	Result (ug/m³)	PQL (ug/m³)	Dilution	Batch	Prepared	Date/Time Analyzed	Notes
1,1,1,2-Tetrachloroethane	ND	2	1	B5H0409	08/16/2015	08/16/15 00:33	
1,1,1-Trichloroethane	ND	1	1	B5H0409	08/16/2015	08/16/15 00:33	
1,1,2,2-Tetrachloroethane	ND	2	1	B5H0409	08/16/2015	08/16/15 00:33	
1,1,2-Trichloroethane	ND	1	1	B5H0409	08/16/2015	08/16/15 00:33	
1,1-Dichloroethane	ND	1	1	B5H0409	08/16/2015	08/16/15 00:33	
1,1-Dichloroethene	ND	0.99	1	B5H0409	08/16/2015	08/16/15 00:33	
1,1-Dichloropropene	ND	1	1	B5H0409	08/16/2015	08/16/15 00:33	
1,2,3-Trichloropropane	ND	2	1	B5H0409	08/16/2015	08/16/15 00:33	
1,2,4-Trichlorobenzene	ND	2	1	B5H0409	08/16/2015	08/16/15 00:33	
1,2,4-Trimethylbenzene	**2**	1	1	B5H0409	08/16/2015	08/16/15 00:33	
1,2-Dibromo-3-chloropropane	ND	2	1	B5H0409	08/16/2015	08/16/15 00:33	
1,2-Dibromoethane	ND	2	1	B5H0409	08/16/2015	08/16/15 00:33	
1,2-Dichlorobenzene	ND	2	1	B5H0409	08/16/2015	08/16/15 00:33	
1,2-Dichloroethane	ND	1	1	B5H0409	08/16/2015	08/16/15 00:33	
1,2-Dichloropropane	ND	1	1	B5H0409	08/16/2015	08/16/15 00:33	
1,3,5-Trimethylbenzene	ND	1	1	B5H0409	08/16/2015	08/16/15 00:33	
1,3-Butadiene	ND	0.55	1	B5H0409	08/16/2015	08/16/15 00:33	
1,3-Dichlorobenzene	ND	2	1	B5H0409	08/16/2015	08/16/15 00:33	
1,4-Dichlorobenzene	ND	2	1	B5H0409	08/16/2015	08/16/15 00:33	
1,4-Dioxane	ND	0.90	1	B5H0409	08/16/2015	08/16/15 00:33	
2,2,4-Trimethylpentane	ND	1	1	B5H0409	08/16/2015	08/16/15 00:33	
2-Butanone	**0.97**	0.74	1	B5H0409	08/16/2015	08/16/15 00:33	
2-Chloroethyl vinyl ether	ND	1	1	B5H0409	08/16/2015	08/16/15 00:33	
2-Chlorotoluene	ND	1	1	B5H0409	08/16/2015	08/16/15 00:33	
2-Hexanone	ND	1	1	B5H0409	08/16/2015	08/16/15 00:33	
2-Propanol	**2200**	30	50	B5H0410	08/16/2015	08/16/15 20:32	
4-Chlorotoluene	ND	1	1	B5H0409	08/16/2015	08/16/15 00:33	
4-Ethyl Toluene	ND	1	1	B5H0409	08/16/2015	08/16/15 00:33	
4-Methyl-2-pentanone	ND	1	1	B5H0409	08/16/2015	08/16/15 00:33	
Acetone	**10**	0.59	1	B5H0409	08/16/2015	08/16/15 00:33	
Acetonitrile	ND	0.42	1	B5H0409	08/16/2015	08/16/15 00:33	
Acrolein	ND	0.57	1	B5H0409	08/16/2015	08/16/15 00:33	
Acrylonitrile	ND	0.54	1	B5H0409	08/16/2015	08/16/15 00:33	
Benzene	**6**	0.80	1	B5H0409	08/16/2015	08/16/15 00:33	
Benzyl chloride	ND	1	1	B5H0409	08/16/2015	08/16/15 00:33	
Bromobenzene	ND	2	1	B5H0409	08/16/2015	08/16/15 00:33	
Bromodichloromethane	ND	2	1	B5H0409	08/16/2015	08/16/15 00:33	

Certificate of Analysis

Hushmand Associates, Inc.	Project Number : Parcel 32
250 Goddard	Report To : Naresh Bellana
Irvine , CA 92618	Reported : 03/26/2018

Client Sample ID VP-2
Lab ID: 1502728-02

Volatile Organic Compounds in AIR by TO-15 (Canister) **Analyst: MFR**

Analyte	Result (ug/m³)	PQL (ug/m³)	Dilution	Batch	Prepared	Date/Time Analyzed	Notes
Bromoform	ND	3	1	B5H0409	08/16/2015	08/16/15 00:33	
Bromomethane	ND	0.97	1	B5H0409	08/16/2015	08/16/15 00:33	
Carbon disulfide	ND	0.78	1	B5H0409	08/16/2015	08/16/15 00:33	
Carbon tetrachloride	ND	2	1	B5H0409	08/16/2015	08/16/15 00:33	
Chlorobenzene	ND	1	1	B5H0409	08/16/2015	08/16/15 00:33	
Chloroethane	ND	0.66	1	B5H0409	08/16/2015	08/16/15 00:33	
Chloroform	ND	1	1	B5H0409	08/16/2015	08/16/15 00:33	
Chloromethane	**0.54**	0.52	1	B5H0409	08/16/2015	08/16/15 00:33	
cis-1,2-Dichloroethene	ND	0.99	1	B5H0409	08/16/2015	08/16/15 00:33	
cis-1,3-Dichloropropene	ND	1	1	B5H0409	08/16/2015	08/16/15 00:33	
Cyclohexane	ND	0.86	1	B5H0409	08/16/2015	08/16/15 00:33	
Dibromochloromethane	ND	2	1	B5H0409	08/16/2015	08/16/15 00:33	
Dibromomethane	ND	2	1	B5H0409	08/16/2015	08/16/15 00:33	
Dichlorodifluoromethane	ND	1	1	B5H0409	08/16/2015	08/16/15 00:33	
Dichlorotetrafluoroethane	ND	2	1	B5H0409	08/16/2015	08/16/15 00:33	
Ethanol	**4**	0.47	1	B5H0409	08/16/2015	08/16/15 00:33	
Ethylbenzene	**1**	1	1	B5H0409	08/16/2015	08/16/15 00:33	
Freon-113	ND	2	1	B5H0409	08/16/2015	08/16/15 00:33	
Hexachlorobutadiene	ND	3	1	B5H0409	08/16/2015	08/16/15 00:33	
Isopropylbenzene	ND	1	1	B5H0409	08/16/2015	08/16/15 00:33	
m,p-Xylene	**10**	4	1	B5H0409	08/16/2015	08/16/15 00:33	
Methylene chloride	ND	0.87	1	B5H0409	08/16/2015	08/16/15 00:33	
MTBE	ND	0.90	1	B5H0409	08/16/2015	08/16/15 00:33	
n-Butylbenzene	ND	1	1	B5H0409	08/16/2015	08/16/15 00:33	
n-Propylbenzene	ND	1	1	B5H0409	08/16/2015	08/16/15 00:33	
Naphthalene	**6**	1	1	B5H0409	08/16/2015	08/16/15 00:33	
o-Xylene	**2**	1	1	B5H0409	08/16/2015	08/16/15 00:33	
p-Isopropyltoluene	ND	1	1	B5H0409	08/16/2015	08/16/15 00:33	
sec-Butylbenzene	ND	1	1	B5H0409	08/16/2015	08/16/15 00:33	
Styrene	ND	1	1	B5H0409	08/16/2015	08/16/15 00:33	
tert-Butylbenzene	ND	1	1	B5H0409	08/16/2015	08/16/15 00:33	
Tetrachloroethene	ND	2	1	B5H0409	08/16/2015	08/16/15 00:33	
Toluene	**10**	0.94	1	B5H0409	08/16/2015	08/16/15 00:33	
trans-1,2-Dichloroethene	ND	0.99	1	B5H0409	08/16/2015	08/16/15 00:33	
trans-1,3-Dichloropropene	ND	1	1	B5H0409	08/16/2015	08/16/15 00:33	
Trichloroethene	ND	1	1	B5H0409	08/16/2015	08/16/15 00:33	
Trichlorofluoromethane	ND	1	1	B5H0409	08/16/2015	08/16/15 00:33	

Certificate of Analysis

Hushmand Associates, Inc.	Project Number : Parcel 32
250 Goddard	Report To : Naresh Bellana
Irvine , CA 92618	Reported : 03/26/2018

Client Sample ID VP-2
Lab ID: 1502728-02

Volatile Organic Compounds in AIR by TO-15 (Canister)

Analyst: MFR

Analyte		Result (ug/m³)	PQL (ug/m³)	Dilution	Batch	Prepared	Date/Time Analyzed	Notes
Vinyl acetate		ND	0.88	1	B5H0409	08/16/2015	08/16/15 00:33	
Vinyl chloride		ND	0.64	1	B5H0409	08/16/2015	08/16/15 00:33	
Surrogate: 4-Bromofluorobenzene	*104 %*		*79.2 - 147*		B5H0410	08/16/2015	*08/16/15 20:32*	
Surrogate: 4-Bromofluorobenzene	*108 %*		*79.2 - 147*		B5H0409	08/16/2015	*08/16/15 00:33*	

Gasoline Range Organics in Air by TO-3

Analyst: MFR

Analyte		Result (ug/m³)	PQL (ug/m³)	Dilution	Batch	Prepared	Date/Time Analyzed	Notes
Gasoline Range Organics		**3100**	1000	10	B5H0412	08/16/2015	08/16/15 22:15	
Surrogate: 4-Bromofluorobenzene	*94.8 %*		*70 - 130*		B5H0412	08/16/2015	*08/16/15 22:15*	

Certificate of Analysis

Hushmand Associates, Inc.	Project Number : Parcel 32
250 Goddard	Report To : Naresh Bellana
Irvine , CA 92618	Reported : 03/26/2018

Client Sample ID VP-3

Lab ID: 1502728-03

Volatile Organic Compounds in AIR by TO-15 (Canister) **Analyst: MFR**

Analyte	Result (ug/m³)	PQL (ug/m³)	Dilution	Batch	Prepared	Date/Time Analyzed	Notes
1,1,1,2-Tetrachloroethane	ND	2	1	B5H0409	08/16/2015	08/16/15 01:17	
1,1,1-Trichloroethane	**8**	1	1	B5H0409	08/16/2015	08/16/15 01:17	
1,1,2,2-Tetrachloroethane	ND	2	1	B5H0409	08/16/2015	08/16/15 01:17	
1,1,2-Trichloroethane	ND	1	1	B5H0409	08/16/2015	08/16/15 01:17	
1,1-Dichloroethane	ND	1	1	B5H0409	08/16/2015	08/16/15 01:17	
1,1-Dichloroethene	ND	0.99	1	B5H0409	08/16/2015	08/16/15 01:17	
1,1-Dichloropropene	ND	1	1	B5H0409	08/16/2015	08/16/15 01:17	
1,2,3-Trichloropropane	ND	2	1	B5H0409	08/16/2015	08/16/15 01:17	
1,2,4-Trichlorobenzene	ND	2	1	B5H0409	08/16/2015	08/16/15 01:17	
1,2,4-Trimethylbenzene	ND	1	1	B5H0409	08/16/2015	08/16/15 01:17	
1,2-Dibromo-3-chloropropane	ND	2	1	B5H0409	08/16/2015	08/16/15 01:17	
1,2-Dibromoethane	ND	2	1	B5H0409	08/16/2015	08/16/15 01:17	
1,2-Dichlorobenzene	ND	2	1	B5H0409	08/16/2015	08/16/15 01:17	
1,2-Dichloroethane	ND	1	1	B5H0409	08/16/2015	08/16/15 01:17	
1,2-Dichloropropane	ND	1	1	B5H0409	08/16/2015	08/16/15 01:17	
1,3,5-Trimethylbenzene	ND	1	1	B5H0409	08/16/2015	08/16/15 01:17	
1,3-Butadiene	ND	0.55	1	B5H0409	08/16/2015	08/16/15 01:17	
1,3-Dichlorobenzene	ND	2	1	B5H0409	08/16/2015	08/16/15 01:17	
1,4-Dichlorobenzene	ND	2	1	B5H0409	08/16/2015	08/16/15 01:17	
1,4-Dioxane	ND	0.90	1	B5H0409	08/16/2015	08/16/15 01:17	
2,2,4-Trimethylpentane	ND	1	1	B5H0409	08/16/2015	08/16/15 01:17	
2-Butanone	**3**	0.74	1	B5H0409	08/16/2015	08/16/15 01:17	
2-Chloroethyl vinyl ether	ND	1	1	B5H0409	08/16/2015	08/16/15 01:17	
2-Chlorotoluene	ND	1	1	B5H0409	08/16/2015	08/16/15 01:17	
2-Hexanone	ND	1	1	B5H0409	08/16/2015	08/16/15 01:17	
2-Propanol	**1100**	30	50	B5H0410	08/16/2015	08/16/15 21:05	
4-Chlorotoluene	ND	1	1	B5H0409	08/16/2015	08/16/15 01:17	
4-Ethyl Toluene	ND	1	1	B5H0409	08/16/2015	08/16/15 01:17	
4-Methyl-2-pentanone	ND	1	1	B5H0409	08/16/2015	08/16/15 01:17	
Acetone	**20**	0.59	1	B5H0409	08/16/2015	08/16/15 01:17	
Acetonitrile	ND	0.42	1	B5H0409	08/16/2015	08/16/15 01:17	
Acrolein	ND	0.57	1	B5H0409	08/16/2015	08/16/15 01:17	
Acrylonitrile	ND	0.54	1	B5H0409	08/16/2015	08/16/15 01:17	
Benzene	ND	0.80	1	B5H0409	08/16/2015	08/16/15 01:17	
Benzyl chloride	ND	1	1	B5H0409	08/16/2015	08/16/15 01:17	
Bromobenzene	ND	2	1	B5H0409	08/16/2015	08/16/15 01:17	
Bromodichloromethane	ND	2	1	B5H0409	08/16/2015	08/16/15 01:17	

Certificate of Analysis

Hushmand Associates, Inc.	Project Number : Parcel 32
250 Goddard	Report To : Naresh Bellana
Irvine , CA 92618	Reported : 03/26/2018

Client Sample ID VP-3

Lab ID: 1502728-03

Volatile Organic Compounds in AIR by TO-15 (Canister) **Analyst: MFR**

Analyte	Result (ug/m³)	PQL (ug/m³)	Dilution	Batch	Prepared	Date/Time Analyzed	Notes
Bromoform	ND	3	1	B5H0409	08/16/2015	08/16/15 01:17	
Bromomethane	ND	0.97	1	B5H0409	08/16/2015	08/16/15 01:17	
Carbon disulfide	**3**	0.78	1	B5H0409	08/16/2015	08/16/15 01:17	
Carbon tetrachloride	ND	2	1	B5H0409	08/16/2015	08/16/15 01:17	
Chlorobenzene	ND	1	1	B5H0409	08/16/2015	08/16/15 01:17	
Chloroethane	ND	0.66	1	B5H0409	08/16/2015	08/16/15 01:17	
Chloroform	ND	1	1	B5H0409	08/16/2015	08/16/15 01:17	
Chloromethane	ND	0.52	1	B5H0409	08/16/2015	08/16/15 01:17	
cis-1,2-Dichloroethene	ND	0.99	1	B5H0409	08/16/2015	08/16/15 01:17	
cis-1,3-Dichloropropene	ND	1	1	B5H0409	08/16/2015	08/16/15 01:17	
Cyclohexane	ND	0.86	1	B5H0409	08/16/2015	08/16/15 01:17	
Dibromochloromethane	ND	2	1	B5H0409	08/16/2015	08/16/15 01:17	
Dibromomethane	ND	2	1	B5H0409	08/16/2015	08/16/15 01:17	
Dichlorodifluoromethane	**2**	1	1	B5H0409	08/16/2015	08/16/15 01:17	
Dichlorotetrafluoroethane	ND	2	1	B5H0409	08/16/2015	08/16/15 01:17	
Ethanol	**9**	0.47	1	B5H0409	08/16/2015	08/16/15 01:17	
Ethylbenzene	ND	1	1	B5H0409	08/16/2015	08/16/15 01:17	
Freon-113	ND	2	1	B5H0409	08/16/2015	08/16/15 01:17	
Hexachlorobutadiene	ND	3	1	B5H0409	08/16/2015	08/16/15 01:17	
Isopropylbenzene	ND	1	1	B5H0409	08/16/2015	08/16/15 01:17	
m,p-Xylene	ND	4	1	B5H0409	08/16/2015	08/16/15 01:17	
Methylene chloride	ND	0.87	1	B5H0409	08/16/2015	08/16/15 01:17	
MTBE	ND	0.90	1	B5H0409	08/16/2015	08/16/15 01:17	
n-Butylbenzene	ND	1	1	B5H0409	08/16/2015	08/16/15 01:17	
n-Propylbenzene	ND	1	1	B5H0409	08/16/2015	08/16/15 01:17	
Naphthalene	ND	1	1	B5H0409	08/16/2015	08/16/15 01:17	
o-Xylene	ND	1	1	B5H0409	08/16/2015	08/16/15 01:17	
p-Isopropyltoluene	ND	1	1	B5H0409	08/16/2015	08/16/15 01:17	
sec-Butylbenzene	ND	1	1	B5H0409	08/16/2015	08/16/15 01:17	
Styrene	ND	1	1	B5H0409	08/16/2015	08/16/15 01:17	
tert-Butylbenzene	ND	1	1	B5H0409	08/16/2015	08/16/15 01:17	
Tetrachloroethene	**10**	2	1	B5H0409	08/16/2015	08/16/15 01:17	
Toluene	**0.94**	0.94	1	B5H0409	08/16/2015	08/16/15 01:17	
trans-1,2-Dichloroethene	ND	0.99	1	B5H0409	08/16/2015	08/16/15 01:17	
trans-1,3-Dichloropropene	ND	1	1	B5H0409	08/16/2015	08/16/15 01:17	
Trichloroethene	ND	1	1	B5H0409	08/16/2015	08/16/15 01:17	
Trichlorofluoromethane	**4**	1	1	B5H0409	08/16/2015	08/16/15 01:17	

Certificate of Analysis

Hushmand Associates, Inc.	Project Number : Parcel 32
250 Goddard	Report To : Naresh Bellana
Irvine , CA 92618	Reported : 03/26/2018

Client Sample ID VP-3

Lab ID: 1502728-03

Volatile Organic Compounds in AIR by TO-15 (Canister)

Analyst: MFR

Analyte		Result (ug/m³)	PQL (ug/m³)	Dilution	Batch	Prepared	Date/Time Analyzed	Notes
Vinyl acetate		ND	0.88	1	B5H0409	08/16/2015	08/16/15 01:17	
Vinyl chloride		ND	0.64	1	B5H0409	08/16/2015	08/16/15 01:17	
Surrogate: 4-Bromofluorobenzene	*104 %*		*79.2 - 147*		B5H0410	08/16/2015	*08/16/15 21:05*	
Surrogate: 4-Bromofluorobenzene	*108 %*		*79.2 - 147*		B5H0409	08/16/2015	*08/16/15 01:17*	

Gasoline Range Organics in Air by TO-3

Analyst: MFR

Analyte		Result (ug/m³)	PQL (ug/m³)	Dilution	Batch	Prepared	Date/Time Analyzed	Notes
Gasoline Range Organics		**4200**	1000	10	B5H0412	08/16/2015	08/16/15 22:50	
Surrogate: 4-Bromofluorobenzene	*96.4 %*		*70 - 130*		B5H0412	08/16/2015	*08/16/15 22:50*	

Certificate of Analysis

Hushmand Associates, Inc.	Project Number : Parcel 32
250 Goddard	Report To : Naresh Bellana
Irvine , CA 92618	Reported : 03/26/2018

Client Sample ID VP-4
Lab ID: 1502728-04

Volatile Organic Compounds in AIR by TO-15 (Canister) **Analyst: MFR**

Analyte	Result (ug/m³)	PQL (ug/m³)	Dilution	Batch	Prepared	Date/Time Analyzed	Notes
1,1,1,2-Tetrachloroethane	ND	2	1	B5H0409	08/16/2015	08/16/15 02:01	
1,1,1-Trichloroethane	**5**	1	1	B5H0409	08/16/2015	08/16/15 02:01	
1,1,2,2-Tetrachloroethane	ND	2	1	B5H0409	08/16/2015	08/16/15 02:01	
1,1,2-Trichloroethane	ND	1	1	B5H0409	08/16/2015	08/16/15 02:01	
1,1-Dichloroethane	ND	1	1	B5H0409	08/16/2015	08/16/15 02:01	
1,1-Dichloroethene	ND	0.99	1	B5H0409	08/16/2015	08/16/15 02:01	
1,1-Dichloropropene	ND	1	1	B5H0409	08/16/2015	08/16/15 02:01	
1,2,3-Trichloropropane	ND	2	1	B5H0409	08/16/2015	08/16/15 02:01	
1,2,4-Trichlorobenzene	**3**	2	1	B5H0409	08/16/2015	08/16/15 02:01	
1,2,4-Trimethylbenzene	**7**	1	1	B5H0409	08/16/2015	08/16/15 02:01	
1,2-Dibromo-3-chloropropane	ND	2	1	B5H0409	08/16/2015	08/16/15 02:01	
1,2-Dibromoethane	ND	2	1	B5H0409	08/16/2015	08/16/15 02:01	
1,2-Dichlorobenzene	ND	2	1	B5H0409	08/16/2015	08/16/15 02:01	
1,2-Dichloroethane	ND	1	1	B5H0409	08/16/2015	08/16/15 02:01	
1,2-Dichloropropane	ND	1	1	B5H0409	08/16/2015	08/16/15 02:01	
1,3,5-Trimethylbenzene	**3**	1	1	B5H0409	08/16/2015	08/16/15 02:01	
1,3-Butadiene	ND	0.55	1	B5H0409	08/16/2015	08/16/15 02:01	
1,3-Dichlorobenzene	ND	2	1	B5H0409	08/16/2015	08/16/15 02:01	
1,4-Dichlorobenzene	ND	2	1	B5H0409	08/16/2015	08/16/15 02:01	
1,4-Dioxane	ND	0.90	1	B5H0409	08/16/2015	08/16/15 02:01	
2,2,4-Trimethylpentane	ND	1	1	B5H0409	08/16/2015	08/16/15 02:01	
2-Butanone	**1**	0.74	1	B5H0409	08/16/2015	08/16/15 02:01	
2-Chloroethyl vinyl ether	ND	1	1	B5H0409	08/16/2015	08/16/15 02:01	
2-Chlorotoluene	ND	1	1	B5H0409	08/16/2015	08/16/15 02:01	
2-Hexanone	ND	1	1	B5H0409	08/16/2015	08/16/15 02:01	
2-Propanol	**990**	80	125	B5H0410	08/16/2015	08/17/15 11:20	
4-Chlorotoluene	ND	1	1	B5H0409	08/16/2015	08/16/15 02:01	
4-Ethyl Toluene	**2**	1	1	B5H0409	08/16/2015	08/16/15 02:01	
4-Methyl-2-pentanone	ND	1	1	B5H0409	08/16/2015	08/16/15 02:01	
Acetone	**20**	0.59	1	B5H0409	08/16/2015	08/16/15 02:01	
Acetonitrile	ND	0.42	1	B5H0409	08/16/2015	08/16/15 02:01	
Acrolein	ND	0.57	1	B5H0409	08/16/2015	08/16/15 02:01	
Acrylonitrile	ND	0.54	1	B5H0409	08/16/2015	08/16/15 02:01	
Benzene	ND	0.80	1	B5H0409	08/16/2015	08/16/15 02:01	
Benzyl chloride	ND	1	1	B5H0409	08/16/2015	08/16/15 02:01	
Bromobenzene	ND	2	1	B5H0409	08/16/2015	08/16/15 02:01	
Bromodichloromethane	ND	2	1	B5H0409	08/16/2015	08/16/15 02:01	

Certificate of Analysis

Hushmand Associates, Inc.	Project Number : Parcel 32
250 Goddard	Report To : Naresh Bellana
Irvine , CA 92618	Reported : 03/26/2018

Client Sample ID VP-4

Lab ID: 1502728-04

Volatile Organic Compounds in AIR by TO-15 (Canister) **Analyst: MFR**

Analyte	Result (ug/m³)	PQL (ug/m³)	Dilution	Batch	Prepared	Date/Time Analyzed	Notes
Bromoform	ND	3	1	B5H0409	08/16/2015	08/16/15 02:01	
Bromomethane	ND	0.97	1	B5H0409	08/16/2015	08/16/15 02:01	
Carbon disulfide	ND	0.78	1	B5H0409	08/16/2015	08/16/15 02:01	
Carbon tetrachloride	ND	2	1	B5H0409	08/16/2015	08/16/15 02:01	
Chlorobenzene	ND	1	1	B5H0409	08/16/2015	08/16/15 02:01	
Chloroethane	ND	0.66	1	B5H0409	08/16/2015	08/16/15 02:01	
Chloroform	ND	1	1	B5H0409	08/16/2015	08/16/15 02:01	
Chloromethane	**0.62**	0.52	1	B5H0409	08/16/2015	08/16/15 02:01	
cis-1,2-Dichloroethene	ND	0.99	1	B5H0409	08/16/2015	08/16/15 02:01	
cis-1,3-Dichloropropene	ND	1	1	B5H0409	08/16/2015	08/16/15 02:01	
Cyclohexane	ND	0.86	1	B5H0409	08/16/2015	08/16/15 02:01	
Dibromochloromethane	ND	2	1	B5H0409	08/16/2015	08/16/15 02:01	
Dibromomethane	ND	2	1	B5H0409	08/16/2015	08/16/15 02:01	
Dichlorodifluoromethane	**1**	1	1	B5H0409	08/16/2015	08/16/15 02:01	
Dichlorotetrafluoroethane	ND	2	1	B5H0409	08/16/2015	08/16/15 02:01	
Ethanol	**20**	0.47	1	B5H0409	08/16/2015	08/16/15 02:01	
Ethylbenzene	**10**	1	1	B5H0409	08/16/2015	08/16/15 02:01	
Freon-113	ND	2	1	B5H0409	08/16/2015	08/16/15 02:01	
Hexachlorobutadiene	ND	3	1	B5H0409	08/16/2015	08/16/15 02:01	
Isopropylbenzene	ND	1	1	B5H0409	08/16/2015	08/16/15 02:01	
m,p-Xylene	**120**	4	1	B5H0409	08/16/2015	08/16/15 02:01	
Methylene chloride	ND	0.87	1	B5H0409	08/16/2015	08/16/15 02:01	
MTBE	ND	0.90	1	B5H0409	08/16/2015	08/16/15 02:01	
n-Butylbenzene	ND	1	1	B5H0409	08/16/2015	08/16/15 02:01	
n-Propylbenzene	ND	1	1	B5H0409	08/16/2015	08/16/15 02:01	
Naphthalene	**2**	1	1	B5H0409	08/16/2015	08/16/15 02:01	
o-Xylene	**20**	1	1	B5H0409	08/16/2015	08/16/15 02:01	
p-Isopropyltoluene	ND	1	1	B5H0409	08/16/2015	08/16/15 02:01	
sec-Butylbenzene	ND	1	1	B5H0409	08/16/2015	08/16/15 02:01	
Styrene	ND	1	1	B5H0409	08/16/2015	08/16/15 02:01	
tert-Butylbenzene	ND	1	1	B5H0409	08/16/2015	08/16/15 02:01	
Tetrachloroethene	**6**	2	1	B5H0409	08/16/2015	08/16/15 02:01	
Toluene	**280**	9	10	B5H0410	08/16/2015	08/17/15 00:01	
trans-1,2-Dichloroethene	ND	0.99	1	B5H0409	08/16/2015	08/16/15 02:01	
trans-1,3-Dichloropropene	ND	1	1	B5H0409	08/16/2015	08/16/15 02:01	
Trichloroethene	ND	1	1	B5H0409	08/16/2015	08/16/15 02:01	
Trichlorofluoromethane	**1**	1	1	B5H0409	08/16/2015	08/16/15 02:01	

Certificate of Analysis

Hushmand Associates, Inc.	Project Number : Parcel 32
250 Goddard	Report To : Naresh Bellana
Irvine , CA 92618	Reported : 03/26/2018

Client Sample ID VP-4

Lab ID: 1502728-04

Volatile Organic Compounds in AIR by TO-15 (Canister) **Analyst: MFR**

Analyte		Result (ug/m³)	PQL (ug/m³)	Dilution	Batch	Prepared	Date/Time Analyzed	Notes
Vinyl acetate		ND	0.88	1	B5H0409	08/16/2015	08/16/15 02:01	
Vinyl chloride		ND	0.64	1	B5H0409	08/16/2015	08/16/15 02:01	
Surrogate: 4-Bromofluorobenzene	*111 %*		*79.2 - 147*		B5H0410	08/16/2015	*08/17/15 00:01*	
Surrogate: 4-Bromofluorobenzene	*106 %*		*79.2 - 147*		B5H0410	08/16/2015	*08/17/15 11:20*	
Surrogate: 4-Bromofluorobenzene	*112 %*		*79.2 - 147*		B5H0409	08/16/2015	*08/16/15 02:01*	

Gasoline Range Organics in Air by TO-3 **Analyst: MFR**

Analyte		Result (ug/m³)	PQL (ug/m³)	Dilution	Batch	Prepared	Date/Time Analyzed	Notes
Gasoline Range Organics		**12000**	1000	10	B5H0412	08/16/2015	08/16/15 23:25	
Surrogate: 4-Bromofluorobenzene	*91.2 %*		*70 - 130*		B5H0412	08/16/2015	*08/16/15 23:25*	

Certificate of Analysis

Hushmand Associates, Inc.	Project Number : Parcel 32
250 Goddard	Report To : Naresh Bellana
Irvine , CA 92618	Reported : 03/26/2018

Client Sample ID VP-5
Lab ID: 1502728-05

Volatile Organic Compounds in AIR by TO-15 (Canister) **Analyst: MFR**

Analyte	Result (ug/m³)	PQL (ug/m³)	Dilution	Batch	Prepared	Date/Time Analyzed	Notes
1,1,1,2-Tetrachloroethane	ND	2	1	B5H0409	08/16/2015	08/16/15 02:42	
1,1,1-Trichloroethane	**4**	1	1	B5H0409	08/16/2015	08/16/15 02:42	
1,1,2,2-Tetrachloroethane	ND	2	1	B5H0409	08/16/2015	08/16/15 02:42	
1,1,2-Trichloroethane	ND	1	1	B5H0409	08/16/2015	08/16/15 02:42	
1,1-Dichloroethane	ND	1	1	B5H0409	08/16/2015	08/16/15 02:42	
1,1-Dichloroethene	ND	0.99	1	B5H0409	08/16/2015	08/16/15 02:42	
1,1-Dichloropropene	ND	1	1	B5H0409	08/16/2015	08/16/15 02:42	
1,2,3-Trichloropropane	ND	2	1	B5H0409	08/16/2015	08/16/15 02:42	
1,2,4-Trichlorobenzene	ND	2	1	B5H0409	08/16/2015	08/16/15 02:42	
1,2,4-Trimethylbenzene	**1**	1	1	B5H0409	08/16/2015	08/16/15 02:42	
1,2-Dibromo-3-chloropropane	ND	2	1	B5H0409	08/16/2015	08/16/15 02:42	
1,2-Dibromoethane	ND	2	1	B5H0409	08/16/2015	08/16/15 02:42	
1,2-Dichlorobenzene	ND	2	1	B5H0409	08/16/2015	08/16/15 02:42	
1,2-Dichloroethane	ND	1	1	B5H0409	08/16/2015	08/16/15 02:42	
1,2-Dichloropropane	ND	1	1	B5H0409	08/16/2015	08/16/15 02:42	
1,3,5-Trimethylbenzene	ND	1	1	B5H0409	08/16/2015	08/16/15 02:42	
1,3-Butadiene	ND	0.55	1	B5H0409	08/16/2015	08/16/15 02:42	
1,3-Dichlorobenzene	ND	2	1	B5H0409	08/16/2015	08/16/15 02:42	
1,4-Dichlorobenzene	ND	2	1	B5H0409	08/16/2015	08/16/15 02:42	
1,4-Dioxane	ND	0.90	1	B5H0409	08/16/2015	08/16/15 02:42	
2,2,4-Trimethylpentane	ND	1	1	B5H0409	08/16/2015	08/16/15 02:42	
2-Butanone	**5**	0.74	1	B5H0409	08/16/2015	08/16/15 02:42	
2-Chloroethyl vinyl ether	ND	1	1	B5H0409	08/16/2015	08/16/15 02:42	
2-Chlorotoluene	ND	1	1	B5H0409	08/16/2015	08/16/15 02:42	
2-Hexanone	ND	1	1	B5H0409	08/16/2015	08/16/15 02:42	
2-Propanol	**2300**	30	50	B5H0410	08/16/2015	08/16/15 22:14	
4-Chlorotoluene	ND	1	1	B5H0409	08/16/2015	08/16/15 02:42	
4-Ethyl Toluene	ND	1	1	B5H0409	08/16/2015	08/16/15 02:42	
4-Methyl-2-pentanone	ND	1	1	B5H0409	08/16/2015	08/16/15 02:42	
Acetone	**30**	0.59	1	B5H0409	08/16/2015	08/16/15 02:42	
Acetonitrile	ND	0.42	1	B5H0409	08/16/2015	08/16/15 02:42	
Acrolein	ND	0.57	1	B5H0409	08/16/2015	08/16/15 02:42	
Acrylonitrile	ND	0.54	1	B5H0409	08/16/2015	08/16/15 02:42	
Benzene	**1**	0.80	1	B5H0409	08/16/2015	08/16/15 02:42	
Benzyl chloride	ND	1	1	B5H0409	08/16/2015	08/16/15 02:42	
Bromobenzene	ND	2	1	B5H0409	08/16/2015	08/16/15 02:42	
Bromodichloromethane	ND	2	1	B5H0409	08/16/2015	08/16/15 02:42	

Certificate of Analysis

Hushmand Associates, Inc.	Project Number : Parcel 32
250 Goddard	Report To : Naresh Bellana
Irvine , CA 92618	Reported : 03/26/2018

Client Sample ID VP-5
Lab ID: 1502728-05

Volatile Organic Compounds in AIR by TO-15 (Canister) **Analyst: MFR**

Analyte	Result (ug/m³)	PQL (ug/m³)	Dilution	Batch	Prepared	Date/Time Analyzed	Notes
Bromoform	ND	3	1	B5H0409	08/16/2015	08/16/15 02:42	
Bromomethane	ND	0.97	1	B5H0409	08/16/2015	08/16/15 02:42	
Carbon disulfide	**1**	0.78	1	B5H0409	08/16/2015	08/16/15 02:42	
Carbon tetrachloride	ND	2	1	B5H0409	08/16/2015	08/16/15 02:42	
Chlorobenzene	ND	1	1	B5H0409	08/16/2015	08/16/15 02:42	
Chloroethane	ND	0.66	1	B5H0409	08/16/2015	08/16/15 02:42	
Chloroform	ND	1	1	B5H0409	08/16/2015	08/16/15 02:42	
Chloromethane	ND	0.52	1	B5H0409	08/16/2015	08/16/15 02:42	
cis-1,2-Dichloroethene	ND	0.99	1	B5H0409	08/16/2015	08/16/15 02:42	
cis-1,3-Dichloropropene	ND	1	1	B5H0409	08/16/2015	08/16/15 02:42	
Cyclohexane	ND	0.86	1	B5H0409	08/16/2015	08/16/15 02:42	
Dibromochloromethane	ND	2	1	B5H0409	08/16/2015	08/16/15 02:42	
Dibromomethane	ND	2	1	B5H0409	08/16/2015	08/16/15 02:42	
Dichlorodifluoromethane	**7**	1	1	B5H0409	08/16/2015	08/16/15 02:42	
Dichlorotetrafluoroethane	ND	2	1	B5H0409	08/16/2015	08/16/15 02:42	
Ethanol	**40**	0.47	1	B5H0409	08/16/2015	08/16/15 02:42	
Ethylbenzene	**2**	1	1	B5H0409	08/16/2015	08/16/15 02:42	
Freon-113	ND	2	1	B5H0409	08/16/2015	08/16/15 02:42	
Hexachlorobutadiene	ND	3	1	B5H0409	08/16/2015	08/16/15 02:42	
Isopropylbenzene	ND	1	1	B5H0409	08/16/2015	08/16/15 02:42	
m,p-Xylene	**10**	4	1	B5H0409	08/16/2015	08/16/15 02:42	
Methylene chloride	ND	0.87	1	B5H0409	08/16/2015	08/16/15 02:42	
MTBE	ND	0.90	1	B5H0409	08/16/2015	08/16/15 02:42	
n-Butylbenzene	ND	1	1	B5H0409	08/16/2015	08/16/15 02:42	
n-Propylbenzene	ND	1	1	B5H0409	08/16/2015	08/16/15 02:42	
Naphthalene	ND	1	1	B5H0409	08/16/2015	08/16/15 02:42	
o-Xylene	**2**	1	1	B5H0409	08/16/2015	08/16/15 02:42	
p-Isopropyltoluene	ND	1	1	B5H0409	08/16/2015	08/16/15 02:42	
sec-Butylbenzene	ND	1	1	B5H0409	08/16/2015	08/16/15 02:42	
Styrene	ND	1	1	B5H0409	08/16/2015	08/16/15 02:42	
tert-Butylbenzene	ND	1	1	B5H0409	08/16/2015	08/16/15 02:42	
Tetrachloroethene	**10**	2	1	B5H0409	08/16/2015	08/16/15 02:42	
Toluene	**4**	0.94	1	B5H0409	08/16/2015	08/16/15 02:42	
trans-1,2-Dichloroethene	ND	0.99	1	B5H0409	08/16/2015	08/16/15 02:42	
trans-1,3-Dichloropropene	ND	1	1	B5H0409	08/16/2015	08/16/15 02:42	
Trichloroethene	ND	1	1	B5H0409	08/16/2015	08/16/15 02:42	
Trichlorofluoromethane	**30**	1	1	B5H0409	08/16/2015	08/16/15 02:42	

Certificate of Analysis

Hushmand Associates, Inc.	Project Number : Parcel 32
250 Goddard	Report To : Naresh Bellana
Irvine , CA 92618	Reported : 03/26/2018

Client Sample ID VP-5
Lab ID: 1502728-05

Volatile Organic Compounds in AIR by TO-15 (Canister)

Analyst: MFR

Analyte		Result (ug/m³)	PQL (ug/m³)	Dilution	Batch	Prepared	Date/Time Analyzed	Notes
Vinyl acetate		ND	0.88	1	B5H0409	08/16/2015	08/16/15 02:42	
Vinyl chloride		**1**	0.64	1	B5H0409	08/16/2015	08/16/15 02:42	
Surrogate: 4-Bromofluorobenzene	*102 %*		*79.2 - 147*		B5H0410	08/16/2015	*08/16/15 22:14*	
Surrogate: 4-Bromofluorobenzene	*106 %*		*79.2 - 147*		B5H0409	08/16/2015	*08/16/15 02:42*	

Gasoline Range Organics in Air by TO-3

Analyst: MFR

Analyte		Result (ug/m³)	PQL (ug/m³)	Dilution	Batch	Prepared	Date/Time Analyzed	Notes
Gasoline Range Organics		**7100**	1000	10	B5H0412	08/16/2015	08/17/15 00:00	
Surrogate: 4-Bromofluorobenzene	*87.6 %*		*70 - 130*		B5H0412	08/16/2015	*08/17/15 00:00*	

Certificate of Analysis

Hushmand Associates, Inc.	Project Number : Parcel 32
250 Goddard	Report To : Naresh Bellana
Irvine , CA 92618	Reported : 03/26/2018

Client Sample ID VP-6

Lab ID: 1502728-06

Volatile Organic Compounds in AIR by TO-15 (Canister) **Analyst: MFR**

Analyte	Result (ug/m³)	PQL (ug/m³)	Dilution	Batch	Prepared	Date/Time Analyzed	Notes
1,1,1,2-Tetrachloroethane	ND	2	1	B5H0409	08/16/2015	08/16/15 03:26	
1,1,1-Trichloroethane	**3**	1	1	B5H0409	08/16/2015	08/16/15 03:26	
1,1,2,2-Tetrachloroethane	ND	2	1	B5H0409	08/16/2015	08/16/15 03:26	
1,1,2-Trichloroethane	ND	1	1	B5H0409	08/16/2015	08/16/15 03:26	
1,1-Dichloroethane	ND	1	1	B5H0409	08/16/2015	08/16/15 03:26	
1,1-Dichloroethene	ND	0.99	1	B5H0409	08/16/2015	08/16/15 03:26	
1,1-Dichloropropene	ND	1	1	B5H0409	08/16/2015	08/16/15 03:26	
1,2,3-Trichloropropane	ND	2	1	B5H0409	08/16/2015	08/16/15 03:26	
1,2,4-Trichlorobenzene	ND	2	1	B5H0409	08/16/2015	08/16/15 03:26	
1,2,4-Trimethylbenzene	**10**	1	1	B5H0409	08/16/2015	08/16/15 03:26	
1,2-Dibromo-3-chloropropane	ND	2	1	B5H0409	08/16/2015	08/16/15 03:26	
1,2-Dibromoethane	ND	2	1	B5H0409	08/16/2015	08/16/15 03:26	
1,2-Dichlorobenzene	ND	2	1	B5H0409	08/16/2015	08/16/15 03:26	
1,2-Dichloroethane	ND	1	1	B5H0409	08/16/2015	08/16/15 03:26	
1,2-Dichloropropane	ND	1	1	B5H0409	08/16/2015	08/16/15 03:26	
1,3,5-Trimethylbenzene	**3**	1	1	B5H0409	08/16/2015	08/16/15 03:26	
1,3-Butadiene	ND	0.55	1	B5H0409	08/16/2015	08/16/15 03:26	
1,3-Dichlorobenzene	ND	2	1	B5H0409	08/16/2015	08/16/15 03:26	
1,4-Dichlorobenzene	ND	2	1	B5H0409	08/16/2015	08/16/15 03:26	
1,4-Dioxane	ND	0.90	1	B5H0409	08/16/2015	08/16/15 03:26	
2,2,4-Trimethylpentane	**4**	1	1	B5H0409	08/16/2015	08/16/15 03:26	
2-Butanone	**1**	0.74	1	B5H0409	08/16/2015	08/16/15 03:26	
2-Chloroethyl vinyl ether	ND	1	1	B5H0409	08/16/2015	08/16/15 03:26	
2-Chlorotoluene	ND	1	1	B5H0409	08/16/2015	08/16/15 03:26	
2-Hexanone	ND	1	1	B5H0409	08/16/2015	08/16/15 03:26	
2-Propanol	**70**	6	10	B5H0409	08/16/2015	08/16/15 11:15	
4-Chlorotoluene	ND	1	1	B5H0409	08/16/2015	08/16/15 03:26	
4-Ethyl Toluene	**2**	1	1	B5H0409	08/16/2015	08/16/15 03:26	
4-Methyl-2-pentanone	ND	1	1	B5H0409	08/16/2015	08/16/15 03:26	
Acetone	**10**	0.59	1	B5H0409	08/16/2015	08/16/15 03:26	
Acetonitrile	ND	0.42	1	B5H0409	08/16/2015	08/16/15 03:26	
Acrolein	ND	0.57	1	B5H0409	08/16/2015	08/16/15 03:26	
Acrylonitrile	ND	0.54	1	B5H0409	08/16/2015	08/16/15 03:26	
Benzene	**2**	0.80	1	B5H0409	08/16/2015	08/16/15 03:26	
Benzyl chloride	ND	1	1	B5H0409	08/16/2015	08/16/15 03:26	
Bromobenzene	ND	2	1	B5H0409	08/16/2015	08/16/15 03:26	
Bromodichloromethane	ND	2	1	B5H0409	08/16/2015	08/16/15 03:26	

Certificate of Analysis

Hushmand Associates, Inc.	Project Number : Parcel 32
250 Goddard	Report To : Naresh Bellana
Irvine , CA 92618	Reported : 03/26/2018

Client Sample ID VP-6

Lab ID: 1502728-06

Volatile Organic Compounds in AIR by TO-15 (Canister) **Analyst: MFR**

Analyte	Result (ug/m³)	PQL (ug/m³)	Dilution	Batch	Prepared	Date/Time Analyzed	Notes
Bromoform	ND	3	1	B5H0409	08/16/2015	08/16/15 03:26	
Bromomethane	ND	0.97	1	B5H0409	08/16/2015	08/16/15 03:26	
Carbon disulfide	ND	0.78	1	B5H0409	08/16/2015	08/16/15 03:26	
Carbon tetrachloride	ND	2	1	B5H0409	08/16/2015	08/16/15 03:26	
Chlorobenzene	ND	1	1	B5H0409	08/16/2015	08/16/15 03:26	
Chloroethane	ND	0.66	1	B5H0409	08/16/2015	08/16/15 03:26	
Chloroform	ND	1	1	B5H0409	08/16/2015	08/16/15 03:26	
Chloromethane	ND	0.52	1	B5H0409	08/16/2015	08/16/15 03:26	
cis-1,2-Dichloroethene	ND	0.99	1	B5H0409	08/16/2015	08/16/15 03:26	
cis-1,3-Dichloropropene	ND	1	1	B5H0409	08/16/2015	08/16/15 03:26	
Cyclohexane	ND	0.86	1	B5H0409	08/16/2015	08/16/15 03:26	
Dibromochloromethane	ND	2	1	B5H0409	08/16/2015	08/16/15 03:26	
Dibromomethane	ND	2	1	B5H0409	08/16/2015	08/16/15 03:26	
Dichlorodifluoromethane	**3**	1	1	B5H0409	08/16/2015	08/16/15 03:26	
Dichlorotetrafluoroethane	ND	2	1	B5H0409	08/16/2015	08/16/15 03:26	
Ethanol	**7**	0.47	1	B5H0409	08/16/2015	08/16/15 03:26	
Ethylbenzene	**2**	1	1	B5H0409	08/16/2015	08/16/15 03:26	
Freon-113	ND	2	1	B5H0409	08/16/2015	08/16/15 03:26	
Hexachlorobutadiene	ND	3	1	B5H0409	08/16/2015	08/16/15 03:26	
Isopropylbenzene	ND	1	1	B5H0409	08/16/2015	08/16/15 03:26	
m,p-Xylene	**20**	4	1	B5H0409	08/16/2015	08/16/15 03:26	
Methylene chloride	ND	0.87	1	B5H0409	08/16/2015	08/16/15 03:26	
MTBE	ND	0.90	1	B5H0409	08/16/2015	08/16/15 03:26	
n-Butylbenzene	ND	1	1	B5H0409	08/16/2015	08/16/15 03:26	
n-Propylbenzene	ND	1	1	B5H0409	08/16/2015	08/16/15 03:26	
Naphthalene	**3**	1	1	B5H0409	08/16/2015	08/16/15 03:26	
o-Xylene	**4**	1	1	B5H0409	08/16/2015	08/16/15 03:26	
p-Isopropyltoluene	**3**	1	1	B5H0409	08/16/2015	08/16/15 03:26	
sec-Butylbenzene	ND	1	1	B5H0409	08/16/2015	08/16/15 03:26	
Styrene	ND	1	1	B5H0409	08/16/2015	08/16/15 03:26	
tert-Butylbenzene	ND	1	1	B5H0409	08/16/2015	08/16/15 03:26	
Tetrachloroethene	**7**	2	1	B5H0409	08/16/2015	08/16/15 03:26	
Toluene	**8**	0.94	1	B5H0409	08/16/2015	08/16/15 03:26	
trans-1,2-Dichloroethene	ND	0.99	1	B5H0409	08/16/2015	08/16/15 03:26	
trans-1,3-Dichloropropene	ND	1	1	B5H0409	08/16/2015	08/16/15 03:26	
Trichloroethene	ND	1	1	B5H0409	08/16/2015	08/16/15 03:26	
Trichlorofluoromethane	**30**	1	1	B5H0409	08/16/2015	08/16/15 03:26	

Certificate of Analysis

Hushmand Associates, Inc.	Project Number : Parcel 32
250 Goddard	Report To : Naresh Bellana
Irvine , CA 92618	Reported : 03/26/2018

Client Sample ID VP-6
Lab ID: 1502728-06

Volatile Organic Compounds in AIR by TO-15 (Canister)

Analyst: MFR

Analyte		Result (ug/m³)	PQL (ug/m³)	Dilution	Batch	Prepared	Date/Time Analyzed	Notes
Vinyl acetate		ND	0.88	1	B5H0409	08/16/2015	08/16/15 03:26	
Vinyl chloride		ND	0.64	1	B5H0409	08/16/2015	08/16/15 03:26	
Surrogate: 4-Bromofluorobenzene	*109 %*		*79.2 - 147*		B5H0409	08/16/2015	*08/16/15 03:26*	
Surrogate: 4-Bromofluorobenzene	*108 %*		*79.2 - 147*		B5H0409	08/16/2015	*08/16/15 11:15*	

Gasoline Range Organics in Air by TO-3

Analyst: MFR

Analyte		Result (ug/m³)	PQL (ug/m³)	Dilution	Batch	Prepared	Date/Time Analyzed	Notes
Gasoline Range Organics		**2400**	1000	10	B5H0412	08/16/2015	08/16/15 18:50	
Surrogate: 4-Bromofluorobenzene	*97.2 %*		*70 - 130*		B5H0412	08/16/2015	*08/16/15 18:50*	

Certificate of Analysis

Hushmand Associates, Inc.	Project Number : Parcel 32
250 Goddard	Report To : Naresh Bellana
Irvine , CA 92618	Reported : 03/26/2018

Client Sample ID VP-7

Lab ID: 1502728-07

Volatile Organic Compounds in AIR by TO-15 (Canister) **Analyst: MFR**

Analyte	Result (ug/m³)	PQL (ug/m³)	Dilution	Batch	Prepared	Date/Time Analyzed	Notes
1,1,1,2-Tetrachloroethane	ND	2	1	B5H0409	08/16/2015	08/16/15 04:08	
1,1,1-Trichloroethane	**6**	1	1	B5H0409	08/16/2015	08/16/15 04:08	
1,1,2,2-Tetrachloroethane	ND	2	1	B5H0409	08/16/2015	08/16/15 04:08	
1,1,2-Trichloroethane	ND	1	1	B5H0409	08/16/2015	08/16/15 04:08	
1,1-Dichloroethane	ND	1	1	B5H0409	08/16/2015	08/16/15 04:08	
1,1-Dichloroethene	ND	0.99	1	B5H0409	08/16/2015	08/16/15 04:08	
1,1-Dichloropropene	ND	1	1	B5H0409	08/16/2015	08/16/15 04:08	
1,2,3-Trichloropropane	ND	2	1	B5H0409	08/16/2015	08/16/15 04:08	
1,2,4-Trichlorobenzene	ND	2	1	B5H0409	08/16/2015	08/16/15 04:08	
1,2,4-Trimethylbenzene	ND	1	1	B5H0409	08/16/2015	08/16/15 04:08	
1,2-Dibromo-3-chloropropane	ND	2	1	B5H0409	08/16/2015	08/16/15 04:08	
1,2-Dibromoethane	ND	2	1	B5H0409	08/16/2015	08/16/15 04:08	
1,2-Dichlorobenzene	ND	2	1	B5H0409	08/16/2015	08/16/15 04:08	
1,2-Dichloroethane	ND	1	1	B5H0409	08/16/2015	08/16/15 04:08	
1,2-Dichloropropane	ND	1	1	B5H0409	08/16/2015	08/16/15 04:08	
1,3,5-Trimethylbenzene	ND	1	1	B5H0409	08/16/2015	08/16/15 04:08	
1,3-Butadiene	ND	0.55	1	B5H0409	08/16/2015	08/16/15 04:08	
1,3-Dichlorobenzene	ND	2	1	B5H0409	08/16/2015	08/16/15 04:08	
1,4-Dichlorobenzene	ND	2	1	B5H0409	08/16/2015	08/16/15 04:08	
1,4-Dioxane	ND	0.90	1	B5H0409	08/16/2015	08/16/15 04:08	
2,2,4-Trimethylpentane	ND	1	1	B5H0409	08/16/2015	08/16/15 04:08	
2-Butanone	**3**	0.74	1	B5H0409	08/16/2015	08/16/15 04:08	
2-Chloroethyl vinyl ether	ND	1	1	B5H0409	08/16/2015	08/16/15 04:08	
2-Chlorotoluene	ND	1	1	B5H0409	08/16/2015	08/16/15 04:08	
2-Hexanone	ND	1	1	B5H0409	08/16/2015	08/16/15 04:08	
2-Propanol	**70**	6	10	B5H0409	08/16/2015	08/16/15 11:55	
4-Chlorotoluene	ND	1	1	B5H0409	08/16/2015	08/16/15 04:08	
4-Ethyl Toluene	ND	1	1	B5H0409	08/16/2015	08/16/15 04:08	
4-Methyl-2-pentanone	ND	1	1	B5H0409	08/16/2015	08/16/15 04:08	
Acetone	**20**	0.59	1	B5H0409	08/16/2015	08/16/15 04:08	
Acetonitrile	ND	0.42	1	B5H0409	08/16/2015	08/16/15 04:08	
Acrolein	ND	0.57	1	B5H0409	08/16/2015	08/16/15 04:08	
Acrylonitrile	ND	0.54	1	B5H0409	08/16/2015	08/16/15 04:08	
Benzene	**0.93**	0.80	1	B5H0409	08/16/2015	08/16/15 04:08	
Benzyl chloride	ND	1	1	B5H0409	08/16/2015	08/16/15 04:08	
Bromobenzene	ND	2	1	B5H0409	08/16/2015	08/16/15 04:08	
Bromodichloromethane	ND	2	1	B5H0409	08/16/2015	08/16/15 04:08	

Certificate of Analysis

Hushmand Associates, Inc.	Project Number : Parcel 32
250 Goddard	Report To : Naresh Bellana
Irvine , CA 92618	Reported : 03/26/2018

Client Sample ID VP-7

Lab ID: 1502728-07

Volatile Organic Compounds in AIR by TO-15 (Canister) **Analyst: MFR**

Analyte	Result (ug/m³)	PQL (ug/m³)	Dilution	Batch	Prepared	Date/Time Analyzed	Notes
Bromoform	ND	3	1	B5H0409	08/16/2015	08/16/15 04:08	
Bromomethane	ND	0.97	1	B5H0409	08/16/2015	08/16/15 04:08	
Carbon disulfide	**7**	0.78	1	B5H0409	08/16/2015	08/16/15 04:08	
Carbon tetrachloride	ND	2	1	B5H0409	08/16/2015	08/16/15 04:08	
Chlorobenzene	ND	1	1	B5H0409	08/16/2015	08/16/15 04:08	
Chloroethane	ND	0.66	1	B5H0409	08/16/2015	08/16/15 04:08	
Chloroform	ND	1	1	B5H0409	08/16/2015	08/16/15 04:08	
Chloromethane	ND	0.52	1	B5H0409	08/16/2015	08/16/15 04:08	
cis-1,2-Dichloroethene	ND	0.99	1	B5H0409	08/16/2015	08/16/15 04:08	
cis-1,3-Dichloropropene	ND	1	1	B5H0409	08/16/2015	08/16/15 04:08	
Cyclohexane	**0.93**	0.86	1	B5H0409	08/16/2015	08/16/15 04:08	
Dibromochloromethane	ND	2	1	B5H0409	08/16/2015	08/16/15 04:08	
Dibromomethane	ND	2	1	B5H0409	08/16/2015	08/16/15 04:08	
Dichlorodifluoromethane	**3**	1	1	B5H0409	08/16/2015	08/16/15 04:08	
Dichlorotetrafluoroethane	ND	2	1	B5H0409	08/16/2015	08/16/15 04:08	
Ethanol	**20**	0.47	1	B5H0409	08/16/2015	08/16/15 04:08	
Ethylbenzene	ND	1	1	B5H0409	08/16/2015	08/16/15 04:08	
Freon-113	ND	2	1	B5H0409	08/16/2015	08/16/15 04:08	
Hexachlorobutadiene	ND	3	1	B5H0409	08/16/2015	08/16/15 04:08	
Isopropylbenzene	ND	1	1	B5H0409	08/16/2015	08/16/15 04:08	
m,p-Xylene	**7**	4	1	B5H0409	08/16/2015	08/16/15 04:08	
Methylene chloride	ND	0.87	1	B5H0409	08/16/2015	08/16/15 04:08	
MTBE	ND	0.90	1	B5H0409	08/16/2015	08/16/15 04:08	
n-Butylbenzene	ND	1	1	B5H0409	08/16/2015	08/16/15 04:08	
n-Propylbenzene	ND	1	1	B5H0409	08/16/2015	08/16/15 04:08	
Naphthalene	ND	1	1	B5H0409	08/16/2015	08/16/15 04:08	
o-Xylene	**1**	1	1	B5H0409	08/16/2015	08/16/15 04:08	
p-Isopropyltoluene	ND	1	1	B5H0409	08/16/2015	08/16/15 04:08	
sec-Butylbenzene	ND	1	1	B5H0409	08/16/2015	08/16/15 04:08	
Styrene	ND	1	1	B5H0409	08/16/2015	08/16/15 04:08	
tert-Butylbenzene	ND	1	1	B5H0409	08/16/2015	08/16/15 04:08	
Tetrachloroethene	**9**	2	1	B5H0409	08/16/2015	08/16/15 04:08	
Toluene	**2**	0.94	1	B5H0409	08/16/2015	08/16/15 04:08	
trans-1,2-Dichloroethene	ND	0.99	1	B5H0409	08/16/2015	08/16/15 04:08	
trans-1,3-Dichloropropene	ND	1	1	B5H0409	08/16/2015	08/16/15 04:08	
Trichloroethene	ND	1	1	B5H0409	08/16/2015	08/16/15 04:08	
Trichlorofluoromethane	**20**	1	1	B5H0409	08/16/2015	08/16/15 04:08	

Certificate of Analysis

Hushmand Associates, Inc.	Project Number : Parcel 32
250 Goddard	Report To : Naresh Bellana
Irvine , CA 92618	Reported : 03/26/2018

Client Sample ID VP-7

Lab ID: 1502728-07

Volatile Organic Compounds in AIR by TO-15 (Canister)

Analyst: MFR

Analyte		Result (ug/m³)	PQL (ug/m³)	Dilution	Batch	Prepared	Date/Time Analyzed	Notes
Vinyl acetate		ND	0.88	1	B5H0409	08/16/2015	08/16/15 04:08	
Vinyl chloride		ND	0.64	1	B5H0409	08/16/2015	08/16/15 04:08	
Surrogate: 4-Bromofluorobenzene	*107 %*		*79.2 - 147*		B5H0409	08/16/2015	*08/16/15 04:08*	
Surrogate: 4-Bromofluorobenzene	*107 %*		*79.2 - 147*		B5H0409	08/16/2015	*08/16/15 11:55*	

Gasoline Range Organics in Air by TO-3

Analyst: MFR

Analyte		Result (ug/m³)	PQL (ug/m³)	Dilution	Batch	Prepared	Date/Time Analyzed	Notes
Gasoline Range Organics		**2700**	1000	10	B5H0412	08/16/2015	08/16/15 19:25	
Surrogate: 4-Bromofluorobenzene	*95.6 %*		*70 - 130*		B5H0412	08/16/2015	*08/16/15 19:25*	

Certificate of Analysis

Hushmand Associates, Inc.	Project Number : Parcel 32
250 Goddard	Report To : Naresh Bellana
Irvine , CA 92618	Reported : 03/26/2018

Client Sample ID VP-8

Lab ID: 1502728-08

Volatile Organic Compounds in AIR by TO-15 (Canister) **Analyst: MFR**

Analyte	Result (ug/m³)	PQL (ug/m³)	Dilution	Batch	Prepared	Date/Time Analyzed	Notes
1,1,1,2-Tetrachloroethane	ND	2	1	B5H0409	08/16/2015	08/16/15 04:50	
1,1,1-Trichloroethane	**7**	1	1	B5H0409	08/16/2015	08/16/15 04:50	
1,1,2,2-Tetrachloroethane	ND	2	1	B5H0409	08/16/2015	08/16/15 04:50	
1,1,2-Trichloroethane	ND	1	1	B5H0409	08/16/2015	08/16/15 04:50	
1,1-Dichloroethane	ND	1	1	B5H0409	08/16/2015	08/16/15 04:50	
1,1-Dichloroethene	ND	0.99	1	B5H0409	08/16/2015	08/16/15 04:50	
1,1-Dichloropropene	ND	1	1	B5H0409	08/16/2015	08/16/15 04:50	
1,2,3-Trichloropropane	ND	2	1	B5H0409	08/16/2015	08/16/15 04:50	
1,2,4-Trichlorobenzene	ND	2	1	B5H0409	08/16/2015	08/16/15 04:50	
1,2,4-Trimethylbenzene	ND	1	1	B5H0409	08/16/2015	08/16/15 04:50	
1,2-Dibromo-3-chloropropane	ND	2	1	B5H0409	08/16/2015	08/16/15 04:50	
1,2-Dibromoethane	ND	2	1	B5H0409	08/16/2015	08/16/15 04:50	
1,2-Dichlorobenzene	ND	2	1	B5H0409	08/16/2015	08/16/15 04:50	
1,2-Dichloroethane	ND	1	1	B5H0409	08/16/2015	08/16/15 04:50	
1,2-Dichloropropane	ND	1	1	B5H0409	08/16/2015	08/16/15 04:50	
1,3,5-Trimethylbenzene	ND	1	1	B5H0409	08/16/2015	08/16/15 04:50	
1,3-Butadiene	ND	0.55	1	B5H0409	08/16/2015	08/16/15 04:50	
1,3-Dichlorobenzene	ND	2	1	B5H0409	08/16/2015	08/16/15 04:50	
1,4-Dichlorobenzene	ND	2	1	B5H0409	08/16/2015	08/16/15 04:50	
1,4-Dioxane	ND	0.90	1	B5H0409	08/16/2015	08/16/15 04:50	
2,2,4-Trimethylpentane	ND	1	1	B5H0409	08/16/2015	08/16/15 04:50	
2-Butanone	ND	0.74	1	B5H0409	08/16/2015	08/16/15 04:50	
2-Chloroethyl vinyl ether	ND	1	1	B5H0409	08/16/2015	08/16/15 04:50	
2-Chlorotoluene	ND	1	1	B5H0409	08/16/2015	08/16/15 04:50	
2-Hexanone	ND	1	1	B5H0409	08/16/2015	08/16/15 04:50	
2-Propanol	**30**	0.61	1	B5H0409	08/16/2015	08/16/15 04:50	
4-Chlorotoluene	ND	1	1	B5H0409	08/16/2015	08/16/15 04:50	
4-Ethyl Toluene	ND	1	1	B5H0409	08/16/2015	08/16/15 04:50	
4-Methyl-2-pentanone	ND	1	1	B5H0409	08/16/2015	08/16/15 04:50	
Acetone	**5**	0.59	1	B5H0409	08/16/2015	08/16/15 04:50	
Acetonitrile	ND	0.42	1	B5H0409	08/16/2015	08/16/15 04:50	
Acrolein	ND	0.57	1	B5H0409	08/16/2015	08/16/15 04:50	
Acrylonitrile	ND	0.54	1	B5H0409	08/16/2015	08/16/15 04:50	
Benzene	ND	0.80	1	B5H0409	08/16/2015	08/16/15 04:50	
Benzyl chloride	ND	1	1	B5H0409	08/16/2015	08/16/15 04:50	
Bromobenzene	ND	2	1	B5H0409	08/16/2015	08/16/15 04:50	
Bromodichloromethane	ND	2	1	B5H0409	08/16/2015	08/16/15 04:50	

Certificate of Analysis

Hushmand Associates, Inc.	Project Number : Parcel 32
250 Goddard	Report To : Naresh Bellana
Irvine , CA 92618	Reported : 03/26/2018

Client Sample ID VP-8

Lab ID: 1502728-08

Volatile Organic Compounds in AIR by TO-15 (Canister) **Analyst: MFR**

Analyte	Result (ug/m³)	PQL (ug/m³)	Dilution	Batch	Prepared	Date/Time Analyzed	Notes
Bromoform	ND	3	1	B5H0409	08/16/2015	08/16/15 04:50	
Bromomethane	ND	0.97	1	B5H0409	08/16/2015	08/16/15 04:50	
Carbon disulfide	ND	0.78	1	B5H0409	08/16/2015	08/16/15 04:50	
Carbon tetrachloride	ND	2	1	B5H0409	08/16/2015	08/16/15 04:50	
Chlorobenzene	ND	1	1	B5H0409	08/16/2015	08/16/15 04:50	
Chloroethane	ND	0.66	1	B5H0409	08/16/2015	08/16/15 04:50	
Chloroform	ND	1	1	B5H0409	08/16/2015	08/16/15 04:50	
Chloromethane	ND	0.52	1	B5H0409	08/16/2015	08/16/15 04:50	
cis-1,2-Dichloroethene	ND	0.99	1	B5H0409	08/16/2015	08/16/15 04:50	
cis-1,3-Dichloropropene	ND	1	1	B5H0409	08/16/2015	08/16/15 04:50	
Cyclohexane	ND	0.86	1	B5H0409	08/16/2015	08/16/15 04:50	
Dibromochloromethane	ND	2	1	B5H0409	08/16/2015	08/16/15 04:50	
Dibromomethane	ND	2	1	B5H0409	08/16/2015	08/16/15 04:50	
Dichlorodifluoromethane	**2**	1	1	B5H0409	08/16/2015	08/16/15 04:50	
Dichlorotetrafluoroethane	ND	2	1	B5H0409	08/16/2015	08/16/15 04:50	
Ethanol	**4**	0.47	1	B5H0409	08/16/2015	08/16/15 04:50	
Ethylbenzene	ND	1	1	B5H0409	08/16/2015	08/16/15 04:50	
Freon-113	ND	2	1	B5H0409	08/16/2015	08/16/15 04:50	
Hexachlorobutadiene	ND	3	1	B5H0409	08/16/2015	08/16/15 04:50	
Isopropylbenzene	ND	1	1	B5H0409	08/16/2015	08/16/15 04:50	
m,p-Xylene	ND	4	1	B5H0409	08/16/2015	08/16/15 04:50	
Methylene chloride	ND	0.87	1	B5H0409	08/16/2015	08/16/15 04:50	
MTBE	ND	0.90	1	B5H0409	08/16/2015	08/16/15 04:50	
n-Butylbenzene	ND	1	1	B5H0409	08/16/2015	08/16/15 04:50	
n-Propylbenzene	ND	1	1	B5H0409	08/16/2015	08/16/15 04:50	
Naphthalene	**1**	1	1	B5H0409	08/16/2015	08/16/15 04:50	
o-Xylene	ND	1	1	B5H0409	08/16/2015	08/16/15 04:50	
p-Isopropyltoluene	ND	1	1	B5H0409	08/16/2015	08/16/15 04:50	
sec-Butylbenzene	ND	1	1	B5H0409	08/16/2015	08/16/15 04:50	
Styrene	ND	1	1	B5H0409	08/16/2015	08/16/15 04:50	
tert-Butylbenzene	ND	1	1	B5H0409	08/16/2015	08/16/15 04:50	
Tetrachloroethene	**8**	2	1	B5H0409	08/16/2015	08/16/15 04:50	
Toluene	ND	0.94	1	B5H0409	08/16/2015	08/16/15 04:50	
trans-1,2-Dichloroethene	ND	0.99	1	B5H0409	08/16/2015	08/16/15 04:50	
trans-1,3-Dichloropropene	ND	1	1	B5H0409	08/16/2015	08/16/15 04:50	
Trichloroethene	ND	1	1	B5H0409	08/16/2015	08/16/15 04:50	
Trichlorofluoromethane	**3**	1	1	B5H0409	08/16/2015	08/16/15 04:50	

Certificate of Analysis

Hushmand Associates, Inc.	Project Number : Parcel 32
250 Goddard	Report To : Naresh Bellana
Irvine , CA 92618	Reported : 03/26/2018

Client Sample ID VP-8

Lab ID: 1502728-08

Volatile Organic Compounds in AIR by TO-15 (Canister) **Analyst: MFR**

Analyte		Result (ug/m³)	PQL (ug/m³)	Dilution	Batch	Prepared	Date/Time Analyzed	Notes
Vinyl acetate		ND	0.88	1	B5H0409	08/16/2015	08/16/15 04:50	
Vinyl chloride		ND	0.64	1	B5H0409	08/16/2015	08/16/15 04:50	
Surrogate: 4-Bromofluorobenzene	*107 %*		*79.2 - 147*		B5H0409	08/16/2015	*08/16/15 04:50*	

Gasoline Range Organics in Air by TO-3 **Analyst: MFR**

Analyte		Result (ug/m³)	PQL (ug/m³)	Dilution	Batch	Prepared	Date/Time Analyzed	Notes
Gasoline Range Organics		**2200**	1000	10	B5H0425	08/17/2015	08/17/15 11:31	
Surrogate: 4-Bromofluorobenzene	*95.2 %*		*70 - 130*		B5H0425	08/17/2015	*08/17/15 11:31*	

Certificate of Analysis

Hushmand Associates, Inc.	Project Number : Parcel 32
250 Goddard	Report To : Naresh Bellana
Irvine , CA 92618	Reported : 03/26/2018

Client Sample ID VP-9

Lab ID: 1502728-09

Volatile Organic Compounds in AIR by TO-15 (Canister) **Analyst: MFR**

Analyte	Result (ug/m³)	PQL (ug/m³)	Dilution	Batch	Prepared	Date/Time Analyzed	Notes
1,1,1,2-Tetrachloroethane	ND	2	1	B5H0409	08/16/2015	08/16/15 05:34	
1,1,1-Trichloroethane	**3**	1	1	B5H0409	08/16/2015	08/16/15 05:34	
1,1,2,2-Tetrachloroethane	ND	2	1	B5H0409	08/16/2015	08/16/15 05:34	
1,1,2-Trichloroethane	ND	1	1	B5H0409	08/16/2015	08/16/15 05:34	
1,1-Dichloroethane	ND	1	1	B5H0409	08/16/2015	08/16/15 05:34	
1,1-Dichloroethene	ND	0.99	1	B5H0409	08/16/2015	08/16/15 05:34	
1,1-Dichloropropene	ND	1	1	B5H0409	08/16/2015	08/16/15 05:34	
1,2,3-Trichloropropane	ND	2	1	B5H0409	08/16/2015	08/16/15 05:34	
1,2,4-Trichlorobenzene	ND	2	1	B5H0409	08/16/2015	08/16/15 05:34	
1,2,4-Trimethylbenzene	**20**	1	1	B5H0409	08/16/2015	08/16/15 05:34	
1,2-Dibromo-3-chloropropane	ND	2	1	B5H0409	08/16/2015	08/16/15 05:34	
1,2-Dibromoethane	ND	2	1	B5H0409	08/16/2015	08/16/15 05:34	
1,2-Dichlorobenzene	ND	2	1	B5H0409	08/16/2015	08/16/15 05:34	
1,2-Dichloroethane	ND	1	1	B5H0409	08/16/2015	08/16/15 05:34	
1,2-Dichloropropane	ND	1	1	B5H0409	08/16/2015	08/16/15 05:34	
1,3,5-Trimethylbenzene	**7**	1	1	B5H0409	08/16/2015	08/16/15 05:34	
1,3-Butadiene	ND	0.55	1	B5H0409	08/16/2015	08/16/15 05:34	
1,3-Dichlorobenzene	ND	2	1	B5H0409	08/16/2015	08/16/15 05:34	
1,4-Dichlorobenzene	ND	2	1	B5H0409	08/16/2015	08/16/15 05:34	
1,4-Dioxane	ND	0.90	1	B5H0409	08/16/2015	08/16/15 05:34	
2,2,4-Trimethylpentane	**4**	1	1	B5H0409	08/16/2015	08/16/15 05:34	
2-Butanone	**7**	0.74	1	B5H0409	08/16/2015	08/16/15 05:34	
2-Chloroethyl vinyl ether	ND	1	1	B5H0409	08/16/2015	08/16/15 05:34	
2-Chlorotoluene	ND	1	1	B5H0409	08/16/2015	08/16/15 05:34	
2-Hexanone	ND	1	1	B5H0409	08/16/2015	08/16/15 05:34	
2-Propanol	**480**	6	10	B5H0409	08/16/2015	08/16/15 13:59	
4-Chlorotoluene	ND	1	1	B5H0409	08/16/2015	08/16/15 05:34	
4-Ethyl Toluene	**4**	1	1	B5H0409	08/16/2015	08/16/15 05:34	
4-Methyl-2-pentanone	ND	1	1	B5H0409	08/16/2015	08/16/15 05:34	
Acetone	**30**	0.59	1	B5H0409	08/16/2015	08/16/15 05:34	
Acetonitrile	**0.71**	0.42	1	B5H0409	08/16/2015	08/16/15 05:34	
Acrolein	ND	0.57	1	B5H0409	08/16/2015	08/16/15 05:34	
Acrylonitrile	ND	0.54	1	B5H0409	08/16/2015	08/16/15 05:34	
Benzene	**4**	0.80	1	B5H0409	08/16/2015	08/16/15 05:34	
Benzyl chloride	ND	1	1	B5H0409	08/16/2015	08/16/15 05:34	
Bromobenzene	ND	2	1	B5H0409	08/16/2015	08/16/15 05:34	
Bromodichloromethane	ND	2	1	B5H0409	08/16/2015	08/16/15 05:34	

Certificate of Analysis

Hushmand Associates, Inc.	Project Number : Parcel 32
250 Goddard	Report To : Naresh Bellana
Irvine , CA 92618	Reported : 03/26/2018

Client Sample ID VP-9

Lab ID: 1502728-09

Volatile Organic Compounds in AIR by TO-15 (Canister) **Analyst: MFR**

Analyte	Result (ug/m³)	PQL (ug/m³)	Dilution	Batch	Prepared	Date/Time Analyzed	Notes
Bromoform	ND	3	1	B5H0409	08/16/2015	08/16/15 05:34	
Bromomethane	ND	0.97	1	B5H0409	08/16/2015	08/16/15 05:34	
Carbon disulfide	**2**	0.78	1	B5H0409	08/16/2015	08/16/15 05:34	
Carbon tetrachloride	ND	2	1	B5H0409	08/16/2015	08/16/15 05:34	
Chlorobenzene	ND	1	1	B5H0409	08/16/2015	08/16/15 05:34	
Chloroethane	ND	0.66	1	B5H0409	08/16/2015	08/16/15 05:34	
Chloroform	ND	1	1	B5H0409	08/16/2015	08/16/15 05:34	
Chloromethane	**0.70**	0.52	1	B5H0409	08/16/2015	08/16/15 05:34	
cis-1,2-Dichloroethene	ND	0.99	1	B5H0409	08/16/2015	08/16/15 05:34	
cis-1,3-Dichloropropene	ND	1	1	B5H0409	08/16/2015	08/16/15 05:34	
Cyclohexane	**1**	0.86	1	B5H0409	08/16/2015	08/16/15 05:34	
Dibromochloromethane	ND	2	1	B5H0409	08/16/2015	08/16/15 05:34	
Dibromomethane	ND	2	1	B5H0409	08/16/2015	08/16/15 05:34	
Dichlorodifluoromethane	**3**	1	1	B5H0409	08/16/2015	08/16/15 05:34	
Dichlorotetrafluoroethane	ND	2	1	B5H0409	08/16/2015	08/16/15 05:34	
Ethanol	**20**	0.47	1	B5H0409	08/16/2015	08/16/15 05:34	
Ethylbenzene	**5**	1	1	B5H0409	08/16/2015	08/16/15 05:34	
Freon-113	ND	2	1	B5H0409	08/16/2015	08/16/15 05:34	
Hexachlorobutadiene	ND	3	1	B5H0409	08/16/2015	08/16/15 05:34	
Isopropylbenzene	ND	1	1	B5H0409	08/16/2015	08/16/15 05:34	
m,p-Xylene	**70**	4	1	B5H0409	08/16/2015	08/16/15 05:34	
Methylene chloride	ND	0.87	1	B5H0409	08/16/2015	08/16/15 05:34	
MTBE	ND	0.90	1	B5H0409	08/16/2015	08/16/15 05:34	
n-Butylbenzene	ND	1	1	B5H0409	08/16/2015	08/16/15 05:34	
n-Propylbenzene	ND	1	1	B5H0409	08/16/2015	08/16/15 05:34	
Naphthalene	**4**	1	1	B5H0409	08/16/2015	08/16/15 05:34	
o-Xylene	**20**	1	1	B5H0409	08/16/2015	08/16/15 05:34	
p-Isopropyltoluene	**2**	1	1	B5H0409	08/16/2015	08/16/15 05:34	
sec-Butylbenzene	ND	1	1	B5H0409	08/16/2015	08/16/15 05:34	
Styrene	ND	1	1	B5H0409	08/16/2015	08/16/15 05:34	
tert-Butylbenzene	ND	1	1	B5H0409	08/16/2015	08/16/15 05:34	
Tetrachloroethene	**5**	2	1	B5H0409	08/16/2015	08/16/15 05:34	
Toluene	**30**	0.94	1	B5H0409	08/16/2015	08/16/15 05:34	
trans-1,2-Dichloroethene	ND	0.99	1	B5H0409	08/16/2015	08/16/15 05:34	
trans-1,3-Dichloropropene	ND	1	1	B5H0409	08/16/2015	08/16/15 05:34	
Trichloroethene	ND	1	1	B5H0409	08/16/2015	08/16/15 05:34	
Trichlorofluoromethane	**9**	1	1	B5H0409	08/16/2015	08/16/15 05:34	

Certificate of Analysis

Hushmand Associates, Inc.	Project Number : Parcel 32
250 Goddard	Report To : Naresh Bellana
Irvine , CA 92618	Reported : 03/26/2018

Client Sample ID VP-9

Lab ID: 1502728-09

Volatile Organic Compounds in AIR by TO-15 (Canister)

Analyst: MFR

Analyte		Result (ug/m³)	PQL (ug/m³)	Dilution	Batch	Prepared	Date/Time Analyzed	Notes
Vinyl acetate		**1**	0.88	1	B5H0409	08/16/2015	08/16/15 05:34	
Vinyl chloride		**0.87**	0.64	1	B5H0409	08/16/2015	08/16/15 05:34	
Surrogate: 4-Bromofluorobenzene	*108 %*		*79.2 - 147*		B5H0409	08/16/2015	*08/16/15 05:34*	
Surrogate: 4-Bromofluorobenzene	*107 %*		*79.2 - 147*		B5H0409	08/16/2015	*08/16/15 13:59*	

Gasoline Range Organics in Air by TO-3

Analyst: MFR

Analyte		Result (ug/m³)	PQL (ug/m³)	Dilution	Batch	Prepared	Date/Time Analyzed	Notes
Gasoline Range Organics		**2400**	1000	10	B5H0425	08/17/2015	08/17/15 12:05	
Surrogate: 4-Bromofluorobenzene	*100 %*		*70 - 130*		B5H0425	08/17/2015	*08/17/15 12:05*	

Certificate of Analysis

Hushmand Associates, Inc.	Project Number : Parcel 32
250 Goddard	Report To : Naresh Bellana
Irvine , CA 92618	Reported : 03/26/2018

Client Sample ID VP-10

Lab ID: 1502728-10

Volatile Organic Compounds in AIR by TO-15 (Canister) **Analyst: MFR**

Analyte	Result (ug/m³)	PQL (ug/m³)	Dilution	Batch	Prepared	Date/Time Analyzed	Notes
1,1,1,2-Tetrachloroethane	ND	2	1	B5H0409	08/16/2015	08/16/15 06:18	
1,1,1-Trichloroethane	ND	1	1	B5H0409	08/16/2015	08/16/15 06:18	
1,1,2,2-Tetrachloroethane	ND	2	1	B5H0409	08/16/2015	08/16/15 06:18	
1,1,2-Trichloroethane	ND	1	1	B5H0409	08/16/2015	08/16/15 06:18	
1,1-Dichloroethane	ND	1	1	B5H0409	08/16/2015	08/16/15 06:18	
1,1-Dichloroethene	ND	0.99	1	B5H0409	08/16/2015	08/16/15 06:18	
1,1-Dichloropropene	ND	1	1	B5H0409	08/16/2015	08/16/15 06:18	
1,2,3-Trichloropropane	ND	2	1	B5H0409	08/16/2015	08/16/15 06:18	
1,2,4-Trichlorobenzene	ND	2	1	B5H0409	08/16/2015	08/16/15 06:18	
1,2,4-Trimethylbenzene	**4**	1	1	B5H0409	08/16/2015	08/16/15 06:18	
1,2-Dibromo-3-chloropropane	ND	2	1	B5H0409	08/16/2015	08/16/15 06:18	
1,2-Dibromoethane	ND	2	1	B5H0409	08/16/2015	08/16/15 06:18	
1,2-Dichlorobenzene	ND	2	1	B5H0409	08/16/2015	08/16/15 06:18	
1,2-Dichloroethane	ND	1	1	B5H0409	08/16/2015	08/16/15 06:18	
1,2-Dichloropropane	ND	1	1	B5H0409	08/16/2015	08/16/15 06:18	
1,3,5-Trimethylbenzene	ND	1	1	B5H0409	08/16/2015	08/16/15 06:18	
1,3-Butadiene	ND	0.55	1	B5H0409	08/16/2015	08/16/15 06:18	
1,3-Dichlorobenzene	ND	2	1	B5H0409	08/16/2015	08/16/15 06:18	
1,4-Dichlorobenzene	ND	2	1	B5H0409	08/16/2015	08/16/15 06:18	
1,4-Dioxane	ND	0.90	1	B5H0409	08/16/2015	08/16/15 06:18	
2,2,4-Trimethylpentane	ND	1	1	B5H0409	08/16/2015	08/16/15 06:18	
2-Butanone	**4**	0.74	1	B5H0409	08/16/2015	08/16/15 06:18	
2-Chloroethyl vinyl ether	ND	1	1	B5H0409	08/16/2015	08/16/15 06:18	
2-Chlorotoluene	ND	1	1	B5H0409	08/16/2015	08/16/15 06:18	
2-Hexanone	ND	1	1	B5H0409	08/16/2015	08/16/15 06:18	
2-Propanol	**450**	6	10	B5H0410	08/16/2015	08/16/15 22:49	
4-Chlorotoluene	ND	1	1	B5H0409	08/16/2015	08/16/15 06:18	
4-Ethyl Toluene	**1**	1	1	B5H0409	08/16/2015	08/16/15 06:18	
4-Methyl-2-pentanone	ND	1	1	B5H0409	08/16/2015	08/16/15 06:18	
Acetone	**20**	0.59	1	B5H0409	08/16/2015	08/16/15 06:18	
Acetonitrile	ND	0.42	1	B5H0409	08/16/2015	08/16/15 06:18	
Acrolein	ND	0.57	1	B5H0409	08/16/2015	08/16/15 06:18	
Acrylonitrile	ND	0.54	1	B5H0409	08/16/2015	08/16/15 06:18	
Benzene	ND	0.80	1	B5H0409	08/16/2015	08/16/15 06:18	
Benzyl chloride	ND	1	1	B5H0409	08/16/2015	08/16/15 06:18	
Bromobenzene	ND	2	1	B5H0409	08/16/2015	08/16/15 06:18	
Bromodichloromethane	ND	2	1	B5H0409	08/16/2015	08/16/15 06:18	

Certificate of Analysis

Hushmand Associates, Inc.	Project Number : Parcel 32
250 Goddard	Report To : Naresh Bellana
Irvine , CA 92618	Reported : 03/26/2018

Client Sample ID VP-10

Lab ID: 1502728-10

Volatile Organic Compounds in AIR by TO-15 (Canister) **Analyst: MFR**

Analyte	Result (ug/m³)	PQL (ug/m³)	Dilution	Batch	Prepared	Date/Time Analyzed	Notes
Bromoform	ND	3	1	B5H0409	08/16/2015	08/16/15 06:18	
Bromomethane	ND	0.97	1	B5H0409	08/16/2015	08/16/15 06:18	
Carbon disulfide	ND	0.78	1	B5H0409	08/16/2015	08/16/15 06:18	
Carbon tetrachloride	ND	2	1	B5H0409	08/16/2015	08/16/15 06:18	
Chlorobenzene	ND	1	1	B5H0409	08/16/2015	08/16/15 06:18	
Chloroethane	ND	0.66	1	B5H0409	08/16/2015	08/16/15 06:18	
Chloroform	ND	1	1	B5H0409	08/16/2015	08/16/15 06:18	
Chloromethane	**0.74**	0.52	1	B5H0409	08/16/2015	08/16/15 06:18	
cis-1,2-Dichloroethene	ND	0.99	1	B5H0409	08/16/2015	08/16/15 06:18	
cis-1,3-Dichloropropene	ND	1	1	B5H0409	08/16/2015	08/16/15 06:18	
Cyclohexane	ND	0.86	1	B5H0409	08/16/2015	08/16/15 06:18	
Dibromochloromethane	ND	2	1	B5H0409	08/16/2015	08/16/15 06:18	
Dibromomethane	ND	2	1	B5H0409	08/16/2015	08/16/15 06:18	
Dichlorodifluoromethane	**2**	1	1	B5H0409	08/16/2015	08/16/15 06:18	
Dichlorotetrafluoroethane	ND	2	1	B5H0409	08/16/2015	08/16/15 06:18	
Ethanol	**50**	5	10	B5H0410	08/16/2015	08/16/15 22:49	
Ethylbenzene	**20**	1	1	B5H0409	08/16/2015	08/16/15 06:18	
Freon-113	ND	2	1	B5H0409	08/16/2015	08/16/15 06:18	
Hexachlorobutadiene	ND	3	1	B5H0409	08/16/2015	08/16/15 06:18	
Isopropylbenzene	ND	1	1	B5H0409	08/16/2015	08/16/15 06:18	
m,p-Xylene	**150**	4	1	B5H0409	08/16/2015	08/16/15 06:18	
Methylene chloride	ND	0.87	1	B5H0409	08/16/2015	08/16/15 06:18	
MTBE	ND	0.90	1	B5H0409	08/16/2015	08/16/15 06:18	
n-Butylbenzene	ND	1	1	B5H0409	08/16/2015	08/16/15 06:18	
n-Propylbenzene	ND	1	1	B5H0409	08/16/2015	08/16/15 06:18	
Naphthalene	**2**	1	1	B5H0409	08/16/2015	08/16/15 06:18	
o-Xylene	**30**	1	1	B5H0409	08/16/2015	08/16/15 06:18	
p-Isopropyltoluene	ND	1	1	B5H0409	08/16/2015	08/16/15 06:18	
sec-Butylbenzene	ND	1	1	B5H0409	08/16/2015	08/16/15 06:18	
Styrene	ND	1	1	B5H0409	08/16/2015	08/16/15 06:18	
tert-Butylbenzene	ND	1	1	B5H0409	08/16/2015	08/16/15 06:18	
Tetrachloroethene	**2**	2	1	B5H0409	08/16/2015	08/16/15 06:18	
Toluene	**210**	9	10	B5H0410	08/16/2015	08/16/15 22:49	
trans-1,2-Dichloroethene	ND	0.99	1	B5H0409	08/16/2015	08/16/15 06:18	
trans-1,3-Dichloropropene	ND	1	1	B5H0409	08/16/2015	08/16/15 06:18	
Trichloroethene	ND	1	1	B5H0409	08/16/2015	08/16/15 06:18	
Trichlorofluoromethane	**2**	1	1	B5H0409	08/16/2015	08/16/15 06:18	

Certificate of Analysis

Hushmand Associates, Inc.	Project Number : Parcel 32
250 Goddard	Report To : Naresh Bellana
Irvine , CA 92618	Reported : 03/26/2018

Client Sample ID VP-10

Lab ID: 1502728-10

Volatile Organic Compounds in AIR by TO-15 (Canister)

Analyst: MFR

Analyte		Result (ug/m³)	PQL (ug/m³)	Dilution	Batch	Prepared	Date/Time Analyzed	Notes
Vinyl acetate		ND	0.88	1	B5H0409	08/16/2015	08/16/15 06:18	
Vinyl chloride		**0.69**	0.64	1	B5H0409	08/16/2015	08/16/15 06:18	
Surrogate: 4-Bromofluorobenzene	*110 %*		*79.2 - 147*		B5H0410	08/16/2015	*08/16/15 22:49*	
Surrogate: 4-Bromofluorobenzene	*113 %*		*79.2 - 147*		B5H0409	08/16/2015	*08/16/15 06:18*	

Gasoline Range Organics in Air by TO-3

Analyst: MFR

Analyte		Result (ug/m³)	PQL (ug/m³)	Dilution	Batch	Prepared	Date/Time Analyzed	Notes
Gasoline Range Organics		**4200**	1000	10	B5H0425	08/17/2015	08/17/15 10:24	
Surrogate: 4-Bromofluorobenzene	*98.4 %*		*70 - 130*		B5H0425	08/17/2015	*08/17/15 10:24*	

Certificate of Analysis

Hushmand Associates, Inc.	Project Number : Parcel 32
250 Goddard	Report To : Naresh Bellana
Irvine , CA 92618	Reported : 03/26/2018

Client Sample ID VP-7 (Duplicate)
Lab ID: 1502728-11

Volatile Organic Compounds in AIR by TO-15 (Canister) **Analyst: MFR**

Analyte	Result (ug/m³)	PQL (ug/m³)	Dilution	Batch	Prepared	Date/Time Analyzed	Notes
1,1,1,2-Tetrachloroethane	ND	2	1	B5H0409	08/16/2015	08/16/15 07:02	
1,1,1-Trichloroethane	**6**	1	1	B5H0409	08/16/2015	08/16/15 07:02	
1,1,2,2-Tetrachloroethane	ND	2	1	B5H0409	08/16/2015	08/16/15 07:02	
1,1,2-Trichloroethane	ND	1	1	B5H0409	08/16/2015	08/16/15 07:02	
1,1-Dichloroethane	ND	1	1	B5H0409	08/16/2015	08/16/15 07:02	
1,1-Dichloroethene	ND	0.99	1	B5H0409	08/16/2015	08/16/15 07:02	
1,1-Dichloropropene	ND	1	1	B5H0409	08/16/2015	08/16/15 07:02	
1,2,3-Trichloropropane	ND	2	1	B5H0409	08/16/2015	08/16/15 07:02	
1,2,4-Trichlorobenzene	ND	2	1	B5H0409	08/16/2015	08/16/15 07:02	
1,2,4-Trimethylbenzene	**20**	1	1	B5H0409	08/16/2015	08/16/15 07:02	
1,2-Dibromo-3-chloropropane	ND	2	1	B5H0409	08/16/2015	08/16/15 07:02	
1,2-Dibromoethane	ND	2	1	B5H0409	08/16/2015	08/16/15 07:02	
1,2-Dichlorobenzene	ND	2	1	B5H0409	08/16/2015	08/16/15 07:02	
1,2-Dichloroethane	ND	1	1	B5H0409	08/16/2015	08/16/15 07:02	
1,2-Dichloropropane	ND	1	1	B5H0409	08/16/2015	08/16/15 07:02	
1,3,5-Trimethylbenzene	**5**	1	1	B5H0409	08/16/2015	08/16/15 07:02	
1,3-Butadiene	ND	0.55	1	B5H0409	08/16/2015	08/16/15 07:02	
1,3-Dichlorobenzene	ND	2	1	B5H0409	08/16/2015	08/16/15 07:02	
1,4-Dichlorobenzene	ND	2	1	B5H0409	08/16/2015	08/16/15 07:02	
1,4-Dioxane	ND	0.90	1	B5H0409	08/16/2015	08/16/15 07:02	
2,2,4-Trimethylpentane	**2**	1	1	B5H0409	08/16/2015	08/16/15 07:02	
2-Butanone	**3**	0.74	1	B5H0409	08/16/2015	08/16/15 07:02	
2-Chloroethyl vinyl ether	ND	1	1	B5H0409	08/16/2015	08/16/15 07:02	
2-Chlorotoluene	ND	1	1	B5H0409	08/16/2015	08/16/15 07:02	
2-Hexanone	ND	1	1	B5H0409	08/16/2015	08/16/15 07:02	
2-Propanol	**180**	6	10	B5H0410	08/16/2015	08/16/15 23:24	
4-Chlorotoluene	ND	1	1	B5H0409	08/16/2015	08/16/15 07:02	
4-Ethyl Toluene	**4**	1	1	B5H0409	08/16/2015	08/16/15 07:02	
4-Methyl-2-pentanone	ND	1	1	B5H0409	08/16/2015	08/16/15 07:02	
Acetone	**20**	0.59	1	B5H0409	08/16/2015	08/16/15 07:02	
Acetonitrile	ND	0.42	1	B5H0409	08/16/2015	08/16/15 07:02	
Acrolein	ND	0.57	1	B5H0409	08/16/2015	08/16/15 07:02	
Acrylonitrile	ND	0.54	1	B5H0409	08/16/2015	08/16/15 07:02	
Benzene	**1**	0.80	1	B5H0409	08/16/2015	08/16/15 07:02	
Benzyl chloride	ND	1	1	B5H0409	08/16/2015	08/16/15 07:02	
Bromobenzene	ND	2	1	B5H0409	08/16/2015	08/16/15 07:02	
Bromodichloromethane	ND	2	1	B5H0409	08/16/2015	08/16/15 07:02	

Certificate of Analysis

Hushmand Associates, Inc.	Project Number : Parcel 32
250 Goddard	Report To : Naresh Bellana
Irvine , CA 92618	Reported : 03/26/2018

Client Sample ID VP-7 (Duplicate)
Lab ID: 1502728-11

Volatile Organic Compounds in AIR by TO-15 (Canister) **Analyst: MFR**

Analyte	Result (ug/m³)	PQL (ug/m³)	Dilution	Batch	Prepared	Date/Time Analyzed	Notes
Bromoform	ND	3	1	B5H0409	08/16/2015	08/16/15 07:02	
Bromomethane	ND	0.97	1	B5H0409	08/16/2015	08/16/15 07:02	
Carbon disulfide	**7**	0.78	1	B5H0409	08/16/2015	08/16/15 07:02	
Carbon tetrachloride	ND	2	1	B5H0409	08/16/2015	08/16/15 07:02	
Chlorobenzene	ND	1	1	B5H0409	08/16/2015	08/16/15 07:02	
Chloroethane	ND	0.66	1	B5H0409	08/16/2015	08/16/15 07:02	
Chloroform	ND	1	1	B5H0409	08/16/2015	08/16/15 07:02	
Chloromethane	**0.62**	0.52	1	B5H0409	08/16/2015	08/16/15 07:02	
cis-1,2-Dichloroethene	ND	0.99	1	B5H0409	08/16/2015	08/16/15 07:02	
cis-1,3-Dichloropropene	ND	1	1	B5H0409	08/16/2015	08/16/15 07:02	
Cyclohexane	ND	0.86	1	B5H0409	08/16/2015	08/16/15 07:02	
Dibromochloromethane	ND	2	1	B5H0409	08/16/2015	08/16/15 07:02	
Dibromomethane	ND	2	1	B5H0409	08/16/2015	08/16/15 07:02	
Dichlorodifluoromethane	**3**	1	1	B5H0409	08/16/2015	08/16/15 07:02	
Dichlorotetrafluoroethane	ND	2	1	B5H0409	08/16/2015	08/16/15 07:02	
Ethanol	**60**	5	10	B5H0410	08/16/2015	08/16/15 23:24	
Ethylbenzene	**3**	1	1	B5H0409	08/16/2015	08/16/15 07:02	
Freon-113	ND	2	1	B5H0409	08/16/2015	08/16/15 07:02	
Hexachlorobutadiene	ND	3	1	B5H0409	08/16/2015	08/16/15 07:02	
Isopropylbenzene	ND	1	1	B5H0409	08/16/2015	08/16/15 07:02	
m,p-Xylene	**30**	4	1	B5H0409	08/16/2015	08/16/15 07:02	
Methylene chloride	ND	0.87	1	B5H0409	08/16/2015	08/16/15 07:02	
MTBE	ND	0.90	1	B5H0409	08/16/2015	08/16/15 07:02	
n-Butylbenzene	ND	1	1	B5H0409	08/16/2015	08/16/15 07:02	
n-Propylbenzene	**2**	1	1	B5H0409	08/16/2015	08/16/15 07:02	
Naphthalene	**40**	1	1	B5H0409	08/16/2015	08/16/15 07:02	
o-Xylene	**6**	1	1	B5H0409	08/16/2015	08/16/15 07:02	
p-Isopropyltoluene	**10**	1	1	B5H0409	08/16/2015	08/16/15 07:02	
sec-Butylbenzene	ND	1	1	B5H0409	08/16/2015	08/16/15 07:02	
Styrene	ND	1	1	B5H0409	08/16/2015	08/16/15 07:02	
tert-Butylbenzene	ND	1	1	B5H0409	08/16/2015	08/16/15 07:02	
Tetrachloroethene	**9**	2	1	B5H0409	08/16/2015	08/16/15 07:02	
Toluene	**4**	0.94	1	B5H0409	08/16/2015	08/16/15 07:02	
trans-1,2-Dichloroethene	ND	0.99	1	B5H0409	08/16/2015	08/16/15 07:02	
trans-1,3-Dichloropropene	ND	1	1	B5H0409	08/16/2015	08/16/15 07:02	
Trichloroethene	ND	1	1	B5H0409	08/16/2015	08/16/15 07:02	
Trichlorofluoromethane	**20**	1	1	B5H0409	08/16/2015	08/16/15 07:02	

Certificate of Analysis

Hushmand Associates, Inc.	Project Number : Parcel 32
250 Goddard	Report To : Naresh Bellana
Irvine , CA 92618	Reported : 03/26/2018

Client Sample ID VP-7 (Duplicate)
Lab ID: 1502728-11

Volatile Organic Compounds in AIR by TO-15 (Canister)

Analyst: MFR

Analyte		Result (ug/m³)	PQL (ug/m³)	Dilution	Batch	Prepared	Date/Time Analyzed	Notes
Vinyl acetate		**2**	0.88	1	B5H0409	08/16/2015	08/16/15 07:02	
Vinyl chloride		**1**	0.64	1	B5H0409	08/16/2015	08/16/15 07:02	
Surrogate: 4-Bromofluorobenzene	*105 %*		*79.2 - 147*		B5H0410	08/16/2015	*08/16/15 23:24*	
Surrogate: 4-Bromofluorobenzene	*109 %*		*79.2 - 147*		B5H0409	08/16/2015	*08/16/15 07:02*	

Gasoline Range Organics in Air by TO-3

Analyst: MFR

Analyte		Result (ug/m³)	PQL (ug/m³)	Dilution	Batch	Prepared	Date/Time Analyzed	Notes
Gasoline Range Organics		**2100**	1000	10	B5H0425	08/17/2015	08/17/15 10:57	
Surrogate: 4-Bromofluorobenzene	*102 %*		*70 - 130*		B5H0425	08/17/2015	*08/17/15 10:57*	

Certificate of Analysis

Hushmand Associates, Inc.	Project Number : Parcel 32
250 Goddard	Report To : Naresh Bellana
Irvine , CA 92618	Reported : 03/26/2018

QUALITY CONTROL SECTION

Volatile Organic Compounds in AIR by TO-15 (Canister) - Quality Control

Analyte	Result (ug/m³)	PQL (ug/m³)	MDL (ug/m³)	Spike Level	Source Result	% Rec	% Rec Limits	RPD	RPD Limit	Notes
Batch B5H0409 - No_Prep_AIR										
Blank (B5H0409-BLK1)					Prepared: 8/15/2015 Analyzed: 8/15/2015					
1,1,1,2-Tetrachloroethane	ND	2	0.57							
1,1,1-Trichloroethane	ND	1	0.58							
1,1,2,2-Tetrachloroethane	ND	2	0.77							
1,1,2-Trichloroethane	ND	1	0.45							
1,1-Dichloroethane	ND	1	0.37							
1,1-Dichloroethene	ND	0.99	0.34							
1,1-Dichloropropene	ND	1	0.37							
1,2,3-Trichloropropane	ND	2	0.58							
1,2,4-Trichlorobenzene	ND	2	0.73							
1,2,4-Trimethylbenzene	ND	1	0.54							
1,2-Dibromo-3-chloropropane	ND	2	1							
1,2-Dibromoethane	ND	2	0.73							
1,2-Dichlorobenzene	ND	2	0.54							
1,2-Dichloroethane	ND	1	0.34							
1,2-Dichloropropane	ND	1	0.41							
1,3,5-Trimethylbenzene	ND	1	0.51							
1,3-Butadiene	ND	0.55	0.39							
1,3-Dichlorobenzene	ND	2	0.56							
1,4-Dichlorobenzene	ND	2	0.51							
1,4-Dioxane	ND	0.90	0.65							
2,2,4-Trimethylpentane	ND	1	0.35							
2-Butanone	ND	0.74	0.24							
2-Chloroethyl vinyl ether	ND	1	0.22							
2-Chlorotoluene	ND	1	0.50							
2-Hexanone	ND	1	0.43							
2-Propanol	ND	0.61	0.26							
4-Chlorotoluene	ND	1	0.47							
4-Ethyl Toluene	ND	1	0.47							
4-Methyl-2-pentanone	ND	1	0.30							
Acetone	ND	0.59	0.26							
Acetonitrile	ND	0.42	0.14							
Acrolein	ND	0.57	0.22							
Acrylonitrile	ND	0.54	0.18							
Benzene	ND	0.80	0.28							
Benzyl chloride	ND	1	0.37							
Bromobenzene	ND	2	0.59							
Bromodichloromethane	ND	2	0.70							
Bromoform	ND	3	0.90							
Bromomethane	ND	0.97	0.46							

Certificate of Analysis

Hushmand Associates, Inc.	Project Number : Parcel 32
250 Goddard	Report To : Naresh Bellana
Irvine , CA 92618	Reported : 03/26/2018

Volatile Organic Compounds in AIR by TO-15 (Canister) - Quality Control (cont'd)

Analyte	Result (ug/m³)	PQL (ug/m³)	MDL (ug/m³)	Spike Level	Source Result	% Rec	% Rec Limits	RPD	RPD Limit	Notes
Batch B5H0409 - No_Prep_AIR (continued)										
Blank (B5H0409-BLK1) - Continued					Prepared: 8/15/2015 Analyzed: 8/15/2015					
Carbon disulfide	ND	0.78	0.31							
Carbon tetrachloride	ND	2	0.43							
Chlorobenzene	ND	1	0.41							
Chloroethane	ND	0.66	0.28							
Chloroform	ND	1	0.50							
Chloromethane	ND	0.52	0.22							
cis-1,2-Dichloroethene	ND	0.99	0.28							
cis-1,3-Dichloropropene	ND	1	0.33							
Cyclohexane	ND	0.86	0.25							
Dibromochloromethane	ND	2	0.83							
Dibromomethane	ND	2	0.55							
Dichlorodifluoromethane	ND	1	0.56							
Dichlorotetrafluoroethane	ND	2	0.76							
Ethanol	ND	0.47	0.20							
Ethylbenzene	ND	1	0.35							
Freon-113	ND	2	0.58							
Hexachlorobutadiene	ND	3	1							
Isopropylbenzene	ND	1	0.52							
m,p-Xylene	ND	4	1							
Methylene chloride	ND	0.87	0.31							
MTBE	ND	0.90	0.33							
n-Butylbenzene	ND	1	0.42							
n-Propylbenzene	ND	1	0.41							
Naphthalene	ND	1	0.36							
o-Xylene	ND	1	0.40							
p-Isopropyltoluene	ND	1	0.51							
sec-Butylbenzene	ND	1	0.56							
Styrene	ND	1	0.44							
tert-Butylbenzene	ND	1	0.62							
Tetrachloroethene	ND	2	0.47							
Toluene	ND	0.94	0.28							
trans-1,2-Dichloroethene	ND	0.99	0.34							
trans-1,3-Dichloropropene	ND	1	0.34							
Trichloroethene	ND	1	0.47							
Trichlorofluoromethane	ND	1	0.53							
Vinyl acetate	ND	0.88	0.38							
Vinyl chloride	ND	0.64	0.21							
Surrogate: 4-Bromofluorobenzene	*18.97*			*17.8935*		*106*	*79.2 - 147*			
LCS (B5H0409-BS1)					Prepared: 8/15/2015 Analyzed: 8/15/2015					
1,1,1,2-Tetrachloroethane	16.888	2	0.57	13.7299		123	70 - 130			

Hushmand Associates, Inc.	Project Number : Parcel 32
250 Goddard	Report To : Naresh Bellana
Irvine , CA 92618	Reported : 03/26/2018

Volatile Organic Compounds in AIR by TO-15 (Canister) - Quality Control (cont'd)

Analyte	Result (ug/m³)	PQL (ug/m³)	MDL (ug/m³)	Spike Level	Source Result	% Rec	% Rec Limits	RPD	RPD Limit	Notes
Batch B5H0409 - No_Prep_AIR (continued)										
LCS (B5H0409-BS1) - Continued					Prepared: 8/15/2015 Analyzed: 8/15/2015					
1,1,1-Trichloroethane	11.240	1	0.58	10.9123		103	70 - 130			
1,1,2,2-Tetrachloroethane	15.515	2	0.77	13.7299		113	70 - 130			
1,1,2-Trichloroethane	10.967	1	0.45	10.9123		100	70 - 130			
1,1-Dichloroethane	8.095	1	0.37	8.09480		100	70 - 130			
1,1-Dichloroethene	7.851	0.99	0.34	7.92990		99.0	70 - 130			
1,1-Dichloropropene	8.351	1	0.37	9.07722		92.0	70 - 130			
1,2,3-Trichloropropane	10.733	2	0.58	12.0597		89.0	70 - 130			
1,2,4-Trichlorobenzene	14.768	2	0.73	14.8422		99.5	70 - 130			
1,2,4-Trimethylbenzene	11.503	1	0.54	9.83166		117	70 - 130			
1,2-Dibromo-3-chloropropane	27.065	2	1	19.3319		140	70 - 130			L5
1,2-Dibromoethane	15.674	2	0.73	15.3670		102	70 - 130			
1,2-Dichlorobenzene	12.866	2	0.54	12.0246		107	70 - 130			
1,2-Dichloroethane	7.852	1	0.34	8.09480		97.0	70 - 130			
1,2-Dichloropropane	9.196	1	0.41	9.24213		99.5	70 - 130			
1,3,5-Trimethylbenzene	10.815	1	0.51	9.83166		110	70 - 130			
1,3-Butadiene	4.026	0.55	0.39	4.42454		91.0	70 - 130			
1,3-Dichlorobenzene	13.287	2	0.56	12.0246		110	70 - 130			
1,4-Dichlorobenzene	13.047	2	0.51	12.0246		109	70 - 130			
1,4-Dioxane	7.711	0.90	0.65	7.20695		107	70 - 130			
2,2,4-Trimethylpentane	9.437	1	0.35	9.34388		101	70 - 130			
2-Butanone	5.839	0.74	0.24	5.89824		99.0	70 - 130			
2-Chloroethyl vinyl ether	10.241	1	0.22	8.71583		118	70 - 130			
2-Chlorotoluene	11.183	1	0.50	10.3544		108	70 - 130			
2-Hexanone	8.439	1	0.43	8.19296		103	70 - 130			
2-Propanol	4.522	0.61	0.26	4.91534		92.0	70 - 130			
4-Chlorotoluene	8.646	1	0.47	10.3544		83.5	70 - 130			
4-Ethyl Toluene	10.962	1	0.47	9.83166		112	70 - 130			
4-Methyl-2-pentanone	8.234	1	0.30	8.19296		100	70 - 130			
Acetone	4.300	0.59	0.26	4.75084		90.5	70 - 130			
Acetonitrile	3.106	0.42	0.14	3.35804		92.5	70 - 130			
Acrolein	4.059	0.57	0.22	4.58593		88.5	70 - 130			
Acrylonitrile	4.232	0.54	0.18	4.34053		97.5	70 - 130			
Benzene	6.294	0.80	0.28	6.38953		98.5	70 - 130			
Benzyl chloride	12.011	1	0.37	10.3544		116	70 - 130			
Bromobenzene	10.146	2	0.59	12.8432		79.0	70 - 130			
Bromodichloromethane	14.205	2	0.70	13.4011		106	70 - 130			
Bromoform	25.221	3	0.90	20.6733		122	70 - 130			
Bromomethane	7.882	0.97	0.46	7.76597		102	70 - 130			
Carbon disulfide	6.166	0.78	0.31	6.22847		99.0	70 - 130			
Carbon tetrachloride	13.967	2	0.43	12.5826		111	70 - 130			
Chlorobenzene	9.990	1	0.41	9.20712		108	70 - 130			
Chloroethane	5.013	0.66	0.28	5.27722		95.0	70 - 130			

Hushmand Associates, Inc.	Project Number : Parcel 32
250 Goddard	Report To : Naresh Bellana
Irvine , CA 92618	Reported : 03/26/2018

Volatile Organic Compounds in AIR by TO-15 (Canister) - Quality Control (cont'd)

Analyte	Result (ug/m³)	PQL (ug/m³)	MDL (ug/m³)	Spike Level	Source Result	% Rec	% Rec Limits	RPD	RPD Limit	Notes
Batch B5H0409 - No_Prep_AIR (continued)										
LCS (B5H0409-BS1) - Continued					Prepared: 8/15/2015 Analyzed: 8/15/2015					
Chloroform	9.765	1	0.50	9.76499		100	70 - 130			
Chloromethane	3.965	0.52	0.22	4.12982		96.0	70 - 130			
cis-1,2-Dichloroethene	7.811	0.99	0.28	7.92990		98.5	70 - 130			
cis-1,3-Dichloropropene	9.213	1	0.33	9.07724		102	70 - 130			
Cyclohexane	6.781	0.86	0.25	6.88425		98.5	70 - 130			
Dibromochloromethane	20.870	2	0.83	17.0371		122	70 - 130			
Dibromomethane	12.727	2	0.55	14.2196		89.5	70 - 130			
Dichlorodifluoromethane	12.413	1	0.56	9.89063		126	70 - 130			
Dichlorotetrafluoroethane	15.729	2	0.76	13.9812		112	70 - 130			
Ethanol	3.429	0.47	0.20	3.76834		91.0	70 - 130			
Ethylbenzene	9.379	1	0.35	8.68425		108	70 - 130			
Freon-113	15.710	2	0.58	15.3272		102	70 - 130			
Hexachlorobutadiene	15.678	3	1	21.3300		73.5	70 - 130			
Isopropylbenzene	10.864	1	0.52	9.83166		110	70 - 130			
m,p-Xylene	38.384	4	1	34.7370		110	70 - 130			
Methylene chloride	6.843	0.87	0.31	6.94740		98.5	70 - 130			
MTBE	7.210	0.90	0.33	7.21047		100	70 - 130			
n-Butylbenzene	12.461	1	0.42	10.9790		114	70 - 130			
n-Propylbenzene	10.618	1	0.41	9.83166		108	70 - 130			
Naphthalene	10.589	1	0.36	10.4843		101	70 - 130			
o-Xylene	9.466	1	0.40	8.68425		109	70 - 130			
p-Isopropyltoluene	9.991	1	0.51	10.9790		91.0	70 - 130			
sec-Butylbenzene	12.571	1	0.56	10.9790		114	70 - 130			
Styrene	9.073	1	0.44	8.51934		106	70 - 130			
tert-Butylbenzene	12.845	1	0.62	10.9790		117	70 - 130			
Tetrachloroethene	14.447	2	0.47	13.5650		106	70 - 130			
Toluene	7.537	0.94	0.28	7.53688		100	70 - 130			
trans-1,2-Dichloroethene	7.890	0.99	0.34	7.92990		99.5	70 - 130			
trans-1,3-Dichloropropene	9.213	1	0.34	9.07722		102	70 - 130			
Trichloroethene	10.962	1	0.47	10.7474		102	70 - 130			
Trichlorofluoromethane	11.405	1	0.53	11.2366		102	70 - 130			
Vinyl acetate	8.204	0.88	0.38	7.04204		116	70 - 130			
Vinyl chloride	4.985	0.64	0.21	5.11231		97.5	70 - 130			
Surrogate: 4-Bromofluorobenzene	*18.90*			*17.8935*		*106*	*79.2 - 147*			
LCS Dup (B5H0409-BSD1)					Prepared: 8/15/2015 Analyzed: 8/15/2015					
1,1,1,2-Tetrachloroethane	16.956	2	0.57	13.7299		124	70 - 130	0.406	20	
1,1,1-Trichloroethane	11.240	1	0.58	10.9123		103	70 - 130	0.00	20	
1,1,2,2-Tetrachloroethane	15.446	2	0.77	13.7299		112	70 - 130	0.443	20	
1,1,2-Trichloroethane	10.858	1	0.45	10.9123		99.5	70 - 130	1.00	20	
1,1-Dichloroethane	8.014	1	0.37	8.09480		99.0	70 - 130	1.01	20	

Hushmand Associates, Inc.	Project Number : Parcel 32
250 Goddard	Report To : Naresh Bellana
Irvine , CA 92618	Reported : 03/26/2018

Volatile Organic Compounds in AIR by TO-15 (Canister) - Quality Control (cont'd)

Analyte	Result (ug/m³)	PQL (ug/m³)	MDL (ug/m³)	Spike Level	Source Result	% Rec	% Rec Limits	RPD	RPD Limit	Notes
Batch B5H0409 - No_Prep_AIR (continued)										
LCS Dup (B5H0409-BSD1) - Continued					Prepared: 8/15/2015 Analyzed: 8/15/2015					
1,1-Dichloroethene	7.851	0.99	0.34	7.92990		99.0	70 - 130	0.00	20	
1,1-Dichloropropene	7.670	1	0.37	9.07722		84.5	70 - 130	8.50	20	
1,2,3-Trichloropropane	9.949	2	0.58	12.0597		82.5	70 - 130	7.58	20	
1,2,4-Trichlorobenzene	13.284	2	0.73	14.8422		89.5	70 - 130	10.6	20	
1,2,4-Trimethylbenzene	11.356	1	0.54	9.83166		116	70 - 130	1.29	20	
1,2-Dibromo-3-chloropropane	25.325	2	1	19.3319		131	70 - 130	6.64	20	L5
1,2-Dibromoethane	15.597	2	0.73	15.3670		102	70 - 130	0.491	20	
1,2-Dichlorobenzene	12.926	2	0.54	12.0246		108	70 - 130	0.466	20	
1,2-Dichloroethane	7.811	1	0.34	8.09480		96.5	70 - 130	0.517	20	
1,2-Dichloropropane	9.196	1	0.41	9.24213		99.5	70 - 130	0.00	20	
1,3,5-Trimethylbenzene	10.717	1	0.51	9.83166		109	70 - 130	0.913	20	
1,3-Butadiene	4.270	0.55	0.39	4.42454		96.5	70 - 130	5.87	20	
1,3-Dichlorobenzene	13.287	2	0.56	12.0246		110	70 - 130	0.00	20	
1,4-Dichlorobenzene	13.047	2	0.51	12.0246		109	70 - 130	0.00	20	
1,4-Dioxane	7.567	0.90	0.65	7.20695		105	70 - 130	1.89	20	
2,2,4-Trimethylpentane	9.391	1	0.35	9.34388		100	70 - 130	0.496	20	
2-Butanone	5.780	0.74	0.24	5.89824		98.0	70 - 130	1.02	20	
2-Chloroethyl vinyl ether	9.282	1	0.22	8.71583		106	70 - 130	9.82	20	
2-Chlorotoluene	11.235	1	0.50	10.3544		108	70 - 130	0.462	20	
2-Hexanone	8.316	1	0.43	8.19296		102	70 - 130	1.47	20	
2-Propanol	4.891	0.61	0.26	4.91534		99.5	70 - 130	7.83	20	
4-Chlorotoluene	8.128	1	0.47	10.3544		78.5	70 - 130	6.17	20	
4-Ethyl Toluene	10.471	1	0.47	9.83166		106	70 - 130	4.59	20	
4-Methyl-2-pentanone	8.070	1	0.30	8.19296		98.5	70 - 130	2.01	20	
Acetone	4.466	0.59	0.26	4.75084		94.0	70 - 130	3.79	20	
Acetonitrile	3.375	0.42	0.14	3.35804		100	70 - 130	8.29	20	
Acrolein	3.279	0.57	0.22	4.58593		71.5	70 - 130	21.2	20	R
Acrylonitrile	4.189	0.54	0.18	4.34053		96.5	70 - 130	1.03	20	
Benzene	6.230	0.80	0.28	6.38953		97.5	70 - 130	1.02	20	
Benzyl chloride	12.166	1	0.37	10.3544		117	70 - 130	1.28	20	
Bromobenzene	9.440	2	0.59	12.8432		73.5	70 - 130	7.21	20	
Bromodichloromethane	14.071	2	0.70	13.4011		105	70 - 130	0.948	20	
Bromoform	25.015	3	0.90	20.6733		121	70 - 130	0.823	20	
Bromomethane	8.193	0.97	0.46	7.76597		106	70 - 130	3.86	20	
Carbon disulfide	6.135	0.78	0.31	6.22847		98.5	70 - 130	0.506	20	
Carbon tetrachloride	13.904	2	0.43	12.5826		110	70 - 130	0.451	20	
Chlorobenzene	9.990	1	0.41	9.20712		108	70 - 130	0.00	20	
Chloroethane	5.515	0.66	0.28	5.27722		104	70 - 130	9.52	20	
Chloroform	9.619	1	0.50	9.76499		98.5	70 - 130	1.51	20	
Chloromethane	4.171	0.52	0.22	4.12982		101	70 - 130	5.08	20	
cis-1,2-Dichloroethene	7.771	0.99	0.28	7.92990		98.0	70 - 130	0.509	20	
cis-1,3-Dichloropropene	9.077	1	0.33	9.07724		100	70 - 130	1.49	20	

Certificate of Analysis

Hushmand Associates, Inc.	Project Number : Parcel 32
250 Goddard	Report To : Naresh Bellana
Irvine , CA 92618	Reported : 03/26/2018

Volatile Organic Compounds in AIR by TO-15 (Canister) - Quality Control (cont'd)

Analyte	Result (ug/m³)	PQL (ug/m³)	MDL (ug/m³)	Spike Level	Source Result	% Rec	% Rec Limits	RPD	RPD Limit	Notes
Batch B5H0409 - No_Prep_AIR (continued)										
LCS Dup (B5H0409-BSD1) - Continued					Prepared: 8/15/2015 Analyzed: 8/15/2015					
Cyclohexane	6.678	0.86	0.25	6.88425		97.0	70 - 130	1.53	20	
Dibromochloromethane	20.700	2	0.83	17.0371		122	70 - 130	0.820	20	
Dibromomethane	11.944	2	0.55	14.2196		84.0	70 - 130	6.34	20	
Dichlorodifluoromethane	12.561	1	0.56	9.89063		127	70 - 130	1.19	20	
Dichlorotetrafluoroethane	16.148	2	0.76	13.9812		116	70 - 130	2.63	20	
Ethanol	3.655	0.47	0.20	3.76834		97.0	70 - 130	6.38	20	
Ethylbenzene	9.336	1	0.35	8.68425		108	70 - 130	0.464	20	
Freon-113	15.864	2	0.58	15.3272		104	70 - 130	0.971	20	
Hexachlorobutadiene	17.704	3	1	21.3300		83.0	70 - 130	12.1	20	
Isopropylbenzene	10.766	1	0.52	9.83166		110	70 - 130	0.909	20	
m,p-Xylene	38.037	4	1	34.7370		110	70 - 130	0.909	20	
Methylene chloride	6.774	0.87	0.31	6.94740		97.5	70 - 130	1.02	20	
MTBE	7.102	0.90	0.33	7.21047		98.5	70 - 130	1.51	20	
n-Butylbenzene	12.626	1	0.42	10.9790		115	70 - 130	1.31	20	
n-Propylbenzene	10.766	1	0.41	9.83166		110	70 - 130	1.38	20	
Naphthalene	11.323	1	0.36	10.4843		108	70 - 130	6.70	20	
o-Xylene	9.422	1	0.40	8.68425		108	70 - 130	0.460	20	
p-Isopropyltoluene	9.222	1	0.51	10.9790		84.0	70 - 130	8.00	20	
sec-Butylbenzene	12.406	1	0.56	10.9790		113	70 - 130	1.32	20	
Styrene	9.116	1	0.44	8.51934		107	70 - 130	0.468	20	
tert-Butylbenzene	12.681	1	0.62	10.9790		116	70 - 130	1.29	20	
Tetrachloroethene	14.447	2	0.47	13.5650		106	70 - 130	0.00	20	
Toluene	7.499	0.94	0.28	7.53688		99.5	70 - 130	0.501	20	
trans-1,2-Dichloroethene	7.771	0.99	0.34	7.92990		98.0	70 - 130	1.52	20	
trans-1,3-Dichloropropene	9.213	1	0.34	9.07722		102	70 - 130	0.00	20	
Trichloroethene	10.962	1	0.47	10.7474		102	70 - 130	0.00	20	
Trichlorofluoromethane	11.911	1	0.53	11.2366		106	70 - 130	4.34	20	
Vinyl acetate	8.169	0.88	0.38	7.04204		116	70 - 130	0.430	20	
Vinyl chloride	5.215	0.64	0.21	5.11231		102	70 - 130	4.51	20	
Surrogate: 4-Bromofluorobenzene	*18.97*			*17.8935*		*106*	*79.2 - 147*			

Certificate of Analysis

Hushmand Associates, Inc.	Project Number : Parcel 32
250 Goddard	Report To : Naresh Bellana
Irvine , CA 92618	Reported : 03/26/2018

Volatile Organic Compounds in AIR by TO-15 (Canister) - Quality Control

Analyte	Result (ug/m³)	PQL (ug/m³)	MDL (ug/m³)	Spike Level	Source Result	% Rec	% Rec Limits	RPD	RPD Limit	Notes
Batch B5H0410 - No_Prep_AIR										
Blank (B5H0410-BLK1)					Prepared: 8/16/2015 Analyzed: 8/16/2015					
1,1,1,2-Tetrachloroethane	ND	2	0.57							
1,1,1-Trichloroethane	ND	1	0.58							
1,1,2,2-Tetrachloroethane	ND	2	0.77							
1,1,2-Trichloroethane	ND	1	0.45							
1,1-Dichloroethane	ND	1	0.37							
1,1-Dichloroethene	ND	0.99	0.34							
1,1-Dichloropropene	ND	1	0.37							
1,2,3-Trichloropropane	ND	2	0.58							
1,2,4-Trichlorobenzene	ND	2	0.73							
1,2,4-Trimethylbenzene	ND	1	0.54							
1,2-Dibromo-3-chloropropane	ND	2	1							
1,2-Dibromoethane	ND	2	0.73							
1,2-Dichlorobenzene	ND	2	0.54							
1,2-Dichloroethane	ND	1	0.34							
1,2-Dichloropropane	ND	1	0.41							
1,3,5-Trimethylbenzene	ND	1	0.51							
1,3-Butadiene	ND	0.55	0.39							
1,3-Dichlorobenzene	ND	2	0.56							
1,4-Dichlorobenzene	ND	2	0.51							
1,4-Dioxane	ND	0.90	0.65							
2,2,4-Trimethylpentane	ND	1	0.35							
2-Butanone	ND	0.74	0.24							
2-Chloroethyl vinyl ether	ND	1	0.22							
2-Chlorotoluene	ND	1	0.50							
2-Hexanone	ND	1	0.43							
2-Propanol	ND	0.61	0.26							
4-Chlorotoluene	ND	1	0.47							
4-Ethyl Toluene	ND	1	0.47							
4-Methyl-2-pentanone	ND	1	0.30							
Acetone	ND	0.59	0.26							
Acetonitrile	ND	0.42	0.14							
Acrolein	ND	0.57	0.22							
Acrylonitrile	ND	0.54	0.18							
Benzene	ND	0.80	0.28							
Benzyl chloride	ND	1	0.37							
Bromobenzene	ND	2	0.59							
Bromodichloromethane	ND	2	0.70							
Bromoform	ND	3	0.90							
Bromomethane	ND	0.97	0.46							
Carbon disulfide	ND	0.78	0.31							
Carbon tetrachloride	ND	2	0.43							

Certificate of Analysis

Hushmand Associates, Inc.	Project Number : Parcel 32
250 Goddard	Report To : Naresh Bellana
Irvine , CA 92618	Reported : 03/26/2018

Volatile Organic Compounds in AIR by TO-15 (Canister) - Quality Control (cont'd)

Analyte	Result (ug/m³)	PQL (ug/m³)	MDL (ug/m³)	Spike Level	Source Result	% Rec	% Rec Limits	RPD	RPD Limit	Notes
Batch B5H0410 - No_Prep_AIR (continued)										
Blank (B5H0410-BLK1) - Continued					Prepared: 8/16/2015 Analyzed: 8/16/2015					
Chlorobenzene	ND	1	0.41							
Chloroethane	ND	0.66	0.28							
Chloroform	ND	1	0.50							
Chloromethane	ND	0.52	0.22							
cis-1,2-Dichloroethene	ND	0.99	0.28							
cis-1,3-Dichloropropene	ND	1	0.33							
Cyclohexane	ND	0.86	0.25							
Dibromochloromethane	ND	2	0.83							
Dibromomethane	ND	2	0.55							
Dichlorodifluoromethane	ND	1	0.56							
Dichlorotetrafluoroethane	ND	2	0.76							
Ethanol	ND	0.47	0.20							
Ethylbenzene	ND	1	0.35							
Freon-113	ND	2	0.58							
Hexachlorobutadiene	ND	3	1							
Isopropylbenzene	ND	1	0.52							
m,p-Xylene	ND	4	1							
Methylene chloride	ND	0.87	0.31							
MTBE	ND	0.90	0.33							
n-Butylbenzene	ND	1	0.42							
n-Propylbenzene	ND	1	0.41							
Naphthalene	ND	1	0.36							
o-Xylene	ND	1	0.40							
p-Isopropyltoluene	ND	1	0.51							
sec-Butylbenzene	ND	1	0.56							
Styrene	ND	1	0.44							
tert-Butylbenzene	ND	1	0.62							
Tetrachloroethene	ND	2	0.47							
Toluene	ND	0.94	0.28							
trans-1,2-Dichloroethene	ND	0.99	0.34							
trans-1,3-Dichloropropene	ND	1	0.34							
Trichloroethene	ND	1	0.47							
Trichlorofluoromethane	ND	1	0.53							
Vinyl acetate	ND	0.88	0.38							
Vinyl chloride	ND	0.64	0.21							
Surrogate: 4-Bromofluorobenzene	*18.32*			*17.8935*		*102*	*79.2 - 147*			
LCS (B5H0410-BS1)					Prepared: 8/16/2015 Analyzed: 8/16/2015					
1,1,1,2-Tetrachloroethane	16.133	2	0.57	13.7299		118	70 - 130			
1,1,1-Trichloroethane	10.094	1	0.58	10.9123		92.5	70 - 130			
1,1,2,2-Tetrachloroethane	15.377	2	0.77	13.7299		112	70 - 130			

Certificate of Analysis

Hushmand Associates, Inc.	Project Number : Parcel 32
250 Goddard	Report To : Naresh Bellana
Irvine , CA 92618	Reported : 03/26/2018

Volatile Organic Compounds in AIR by TO-15 (Canister) - Quality Control (cont'd)

Analyte	Result (ug/m³)	PQL (ug/m³)	MDL (ug/m³)	Spike Level	Source Result	% Rec	% Rec Limits	RPD	RPD Limit	Notes
Batch B5H0410 - No_Prep_AIR (continued)										
LCS (B5H0410-BS1) - Continued					Prepared: 8/16/2015 Analyzed: 8/16/2015					
1,1,2-Trichloroethane	11.185	1	0.45	10.9123		102	70 - 130			
1,1-Dichloroethane	7.528	1	0.37	8.09480		93.0	70 - 130			
1,1-Dichloroethene	6.899	0.99	0.34	7.92990		87.0	70 - 130			
1,1-Dichloropropene	8.533	1	0.37	9.07722		94.0	70 - 130			
1,2,3-Trichloropropane	10.974	2	0.58	12.0597		91.0	70 - 130			
1,2,4-Trichlorobenzene	14.545	2	0.73	14.8422		98.0	70 - 130			
1,2,4-Trimethylbenzene	11.257	1	0.54	9.83166		114	70 - 130			
1,2-Dibromo-3-chloropropane	29.674	2	1	19.3319		154	70 - 130			L5
1,2-Dibromoethane	15.367	2	0.73	15.3670		100	70 - 130			
1,2-Dichlorobenzene	12.145	2	0.54	12.0246		101	70 - 130			
1,2-Dichloroethane	8.459	1	0.34	8.09480		104	70 - 130			
1,2-Dichloropropane	9.566	1	0.41	9.24213		104	70 - 130			
1,3,5-Trimethylbenzene	10.274	1	0.51	9.83166		104	70 - 130			
1,3-Butadiene	4.734	0.55	0.39	4.42454		107	70 - 130			
1,3-Dichlorobenzene	12.686	2	0.56	12.0246		106	70 - 130			
1,4-Dichlorobenzene	12.265	2	0.51	12.0246		102	70 - 130			
1,4-Dioxane	7.423	0.90	0.65	7.20695		103	70 - 130			
2,2,4-Trimethylpentane	9.811	1	0.35	9.34388		105	70 - 130			
2-Butanone	5.662	0.74	0.24	5.89824		96.0	70 - 130			
2-Chloroethyl vinyl ether	9.500	1	0.22	8.71583		109	70 - 130			
2-Chlorotoluene	10.820	1	0.50	10.3544		104	70 - 130			
2-Hexanone	8.889	1	0.43	8.19296		108	70 - 130			
2-Propanol	4.620	0.61	0.26	4.91534		94.0	70 - 130			
4-Chlorotoluene	7.973	1	0.47	10.3544		77.0	70 - 130			
4-Ethyl Toluene	10.422	1	0.47	9.83166		106	70 - 130			
4-Methyl-2-pentanone	8.766	1	0.30	8.19296		107	70 - 130			
Acetone	4.941	0.59	0.26	4.75084		104	70 - 130			
Acetonitrile	4.164	0.42	0.14	3.35804		124	70 - 130			
Acrolein	4.563	0.57	0.22	4.58593		99.5	70 - 130			
Acrylonitrile	4.124	0.54	0.18	4.34053		95.0	70 - 130			
Benzene	6.262	0.80	0.28	6.38953		98.0	70 - 130			
Benzyl chloride	11.649	1	0.37	10.3544		112	70 - 130			
Bromobenzene	9.568	2	0.59	12.8432		74.5	70 - 130			
Bromodichloromethane	14.607	2	0.70	13.4011		109	70 - 130			
Bromoform	23.671	3	0.90	20.6733		114	70 - 130			
Bromomethane	8.348	0.97	0.46	7.76597		108	70 - 130			
Carbon disulfide	5.668	0.78	0.31	6.22847		91.0	70 - 130			
Carbon tetrachloride	14.030	2	0.43	12.5826		111	70 - 130			
Chlorobenzene	9.575	1	0.41	9.20712		104	70 - 130			
Chloroethane	5.990	0.66	0.28	5.27722		114	70 - 130			
Chloroform	9.033	1	0.50	9.76499		92.5	70 - 130			
Chloromethane	4.254	0.52	0.22	4.12982		103	70 - 130			

Hushmand Associates, Inc.	Project Number : Parcel 32
250 Goddard	Report To : Naresh Bellana
Irvine , CA 92618	Reported : 03/26/2018

Volatile Organic Compounds in AIR by TO-15 (Canister) - Quality Control (cont'd)

Analyte	Result (ug/m³)	PQL (ug/m³)	MDL (ug/m³)	Spike Level	Source Result	% Rec	% Rec Limits	RPD	RPD Limit	Notes
Batch B5H0410 - No_Prep_AIR (continued)										
LCS (B5H0410-BS1) - Continued					Prepared: 8/16/2015 Analyzed: 8/16/2015					
cis-1,2-Dichloroethene	6.820	0.99	0.28	7.92990		86.0	70 - 130			
cis-1,3-Dichloropropene	9.032	1	0.33	9.07724		99.5	70 - 130			
Cyclohexane	6.884	0.86	0.25	6.88425		100	70 - 130			
Dibromochloromethane	19.508	2	0.83	17.0371		114	70 - 130			
Dibromomethane	13.651	2	0.55	14.2196		96.0	70 - 130			
Dichlorodifluoromethane	11.770	1	0.56	9.89063		119	70 - 130			
Dichlorotetrafluoroethane	15.799	2	0.76	13.9812		113	70 - 130			
Ethanol	4.070	0.47	0.20	3.76834		108	70 - 130			
Ethylbenzene	8.684	1	0.35	8.68425		100	70 - 130			
Freon-113	14.561	2	0.58	15.3272		95.0	70 - 130			
Hexachlorobutadiene	15.144	3	1	21.3300		71.0	70 - 130			
Isopropylbenzene	10.225	1	0.52	9.83166		104	70 - 130			
m,p-Xylene	36.300	4	1	34.7370		104	70 - 130			
Methylene chloride	6.287	0.87	0.31	6.94740		90.5	70 - 130			
MTBE	6.273	0.90	0.33	7.21047		87.0	70 - 130			
n-Butylbenzene	12.626	1	0.42	10.9790		115	70 - 130			
n-Propylbenzene	9.979	1	0.41	9.83166		102	70 - 130			
Naphthalene	10.956	1	0.36	10.4843		104	70 - 130			
o-Xylene	9.075	1	0.40	8.68425		104	70 - 130			
p-Isopropyltoluene	9.607	1	0.51	10.9790		87.5	70 - 130			
sec-Butylbenzene	12.187	1	0.56	10.9790		111	70 - 130			
Styrene	8.221	1	0.44	8.51934		96.5	70 - 130			
tert-Butylbenzene	12.461	1	0.62	10.9790		114	70 - 130			
Tetrachloroethene	13.294	2	0.47	13.5650		98.0	70 - 130			
Toluene	7.311	0.94	0.28	7.53688		97.0	70 - 130			
trans-1,2-Dichloroethene	6.899	0.99	0.34	7.92990		87.0	70 - 130			
trans-1,3-Dichloropropene	9.123	1	0.34	9.07722		100	70 - 130			
Trichloroethene	10.640	1	0.47	10.7474		99.0	70 - 130			
Trichlorofluoromethane	12.248	1	0.53	11.2366		109	70 - 130			
Vinyl acetate	7.711	0.88	0.38	7.04204		110	70 - 130			
Vinyl chloride	5.240	0.64	0.21	5.11231		102	70 - 130			
Surrogate: 4-Bromofluorobenzene	*19.40*			*17.8935*		*108*	*79.2 - 147*			
LCS Dup (B5H0410-BSD1)					Prepared: 8/16/2015 Analyzed: 8/16/2015					
1,1,1,2-Tetrachloroethane	16.476	2	0.57	13.7299		120	70 - 130	2.11	20	
1,1,1-Trichloroethane	10.421	1	0.58	10.9123		95.5	70 - 130	3.19	20	
1,1,2,2-Tetrachloroethane	15.721	2	0.77	13.7299		114	70 - 130	2.21	20	
1,1,2-Trichloroethane	11.512	1	0.45	10.9123		106	70 - 130	2.88	20	
1,1-Dichloroethane	7.771	1	0.37	8.09480		96.0	70 - 130	3.17	20	
1,1-Dichloroethene	7.058	0.99	0.34	7.92990		89.0	70 - 130	2.27	20	
1,1-Dichloropropene	8.124	1	0.37	9.07722		89.5	70 - 130	4.90	20	

Hushmand Associates, Inc.	Project Number : Parcel 32
250 Goddard	Report To : Naresh Bellana
Irvine , CA 92618	Reported : 03/26/2018

Volatile Organic Compounds in AIR by TO-15 (Canister) - Quality Control (cont'd)

Analyte	Result (ug/m³)	PQL (ug/m³)	MDL (ug/m³)	Spike Level	Source Result	% Rec	% Rec Limits	RPD	RPD Limit	Notes
Batch B5H0410 - No_Prep_AIR (continued)										
LCS Dup (B5H0410-BSD1) - Continued					Prepared: 8/16/2015 Analyzed: 8/16/2015					
1,2,3-Trichloropropane	10.371	2	0.58	12.0597		86.0	70 - 130	5.65	20	
1,2,4-Trichlorobenzene	12.393	2	0.73	14.8422		83.5	70 - 130	16.0	20	
1,2,4-Trimethylbenzene	11.454	1	0.54	9.83166		116	70 - 130	1.73	20	
1,2-Dibromo-3-chloropropane	27.935	2	1	19.3319		144	70 - 130	6.04	20	L5
1,2-Dibromoethane	15.751	2	0.73	15.3670		102	70 - 130	2.47	20	
1,2-Dichlorobenzene	12.445	2	0.54	12.0246		104	70 - 130	2.44	20	
1,2-Dichloroethane	8.621	1	0.34	8.09480		106	70 - 130	1.90	20	
1,2-Dichloropropane	9.935	1	0.41	9.24213		108	70 - 130	3.79	20	
1,3,5-Trimethylbenzene	10.372	1	0.51	9.83166		106	70 - 130	0.952	20	
1,3-Butadiene	4.734	0.55	0.39	4.42454		107	70 - 130	0.00	20	
1,3-Dichlorobenzene	12.806	2	0.56	12.0246		106	70 - 130	0.943	20	
1,4-Dichlorobenzene	12.385	2	0.51	12.0246		103	70 - 130	0.976	20	
1,4-Dioxane	7.567	0.90	0.65	7.20695		105	70 - 130	1.92	20	
2,2,4-Trimethylpentane	10.185	1	0.35	9.34388		109	70 - 130	3.74	20	
2-Butanone	5.810	0.74	0.24	5.89824		98.5	70 - 130	2.57	20	
2-Chloroethyl vinyl ether	8.977	1	0.22	8.71583		103	70 - 130	5.66	20	
2-Chlorotoluene	10.665	1	0.50	10.3544		103	70 - 130	1.45	20	
2-Hexanone	9.258	1	0.43	8.19296		113	70 - 130	4.06	20	
2-Propanol	5.333	0.61	0.26	4.91534		108	70 - 130	14.3	20	
4-Chlorotoluene	7.248	1	0.47	10.3544		70.0	70 - 130	9.52	20	
4-Ethyl Toluene	10.667	1	0.47	9.83166		108	70 - 130	2.33	20	
4-Methyl-2-pentanone	9.135	1	0.30	8.19296		112	70 - 130	4.12	20	
Acetone	5.036	0.59	0.26	4.75084		106	70 - 130	1.90	20	
Acetonitrile	3.946	0.42	0.14	3.35804		118	70 - 130	5.38	20	
Acrolein	4.104	0.57	0.22	4.58593		89.5	70 - 130	10.6	20	
Acrylonitrile	4.319	0.54	0.18	4.34053		99.5	70 - 130	4.63	20	
Benzene	6.453	0.80	0.28	6.38953		101	70 - 130	3.02	20	
Benzyl chloride	11.959	1	0.37	10.3544		115	70 - 130	2.63	20	
Bromobenzene	10.210	2	0.59	12.8432		79.5	70 - 130	6.49	20	
Bromodichloromethane	15.143	2	0.70	13.4011		113	70 - 130	3.60	20	
Bromoform	24.291	3	0.90	20.6733		118	70 - 130	2.59	20	
Bromomethane	8.387	0.97	0.46	7.76597		108	70 - 130	0.464	20	
Carbon disulfide	5.824	0.78	0.31	6.22847		93.5	70 - 130	2.71	20	
Carbon tetrachloride	14.785	2	0.43	12.5826		118	70 - 130	5.24	20	
Chlorobenzene	9.760	1	0.41	9.20712		106	70 - 130	1.90	20	
Chloroethane	5.990	0.66	0.28	5.27722		114	70 - 130	0.00	20	
Chloroform	9.228	1	0.50	9.76499		94.5	70 - 130	2.14	20	
Chloromethane	4.398	0.52	0.22	4.12982		106	70 - 130	3.34	20	
cis-1,2-Dichloroethene	7.058	0.99	0.28	7.92990		89.0	70 - 130	3.43	20	
cis-1,3-Dichloropropene	9.531	1	0.33	9.07724		105	70 - 130	5.38	20	
Cyclohexane	7.194	0.86	0.25	6.88425		104	70 - 130	4.40	20	
Dibromochloromethane	20.104	2	0.83	17.0371		118	70 - 130	3.01	20	

Certificate of Analysis

Hushmand Associates, Inc.	Project Number : Parcel 32
250 Goddard	Report To : Naresh Bellana
Irvine , CA 92618	Reported : 03/26/2018

Volatile Organic Compounds in AIR by TO-15 (Canister) - Quality Control (cont'd)

Analyte	Result (ug/m³)	PQL (ug/m³)	MDL (ug/m³)	Spike Level	Source Result	% Rec	% Rec Limits	RPD	RPD Limit	Notes
Batch B5H0410 - No_Prep_AIR (continued)										
LCS Dup (B5H0410-BSD1) - Continued					Prepared: 8/16/2015 Analyzed: 8/16/2015					
Dibromomethane	13.082	2	0.55	14.2196		92.0	70 - 130	4.26	20	
Dichlorodifluoromethane	12.462	1	0.56	9.89063		126	70 - 130	5.71	20	
Dichlorotetrafluoroethane	16.148	2	0.76	13.9812		116	70 - 130	2.19	20	
Ethanol	3.994	0.47	0.20	3.76834		106	70 - 130	1.87	20	
Ethylbenzene	8.945	1	0.35	8.68425		103	70 - 130	2.96	20	
Freon-113	14.867	2	0.58	15.3272		97.0	70 - 130	2.08	20	
Hexachlorobutadiene	15.891	3	1	21.3300		74.5	70 - 130	4.81	20	
Isopropylbenzene	10.422	1	0.52	9.83166		106	70 - 130	1.90	20	
m,p-Xylene	37.169	4	1	34.7370		107	70 - 130	2.36	20	
Methylene chloride	6.392	0.87	0.31	6.94740		92.0	70 - 130	1.64	20	
MTBE	6.417	0.90	0.33	7.21047		89.0	70 - 130	2.27	20	
n-Butylbenzene	12.736	1	0.42	10.9790		116	70 - 130	0.866	20	
n-Propylbenzene	10.274	1	0.41	9.83166		104	70 - 130	2.91	20	
Naphthalene	12.686	1	0.36	10.4843		121	70 - 130	14.6	20	
o-Xylene	9.205	1	0.40	8.68425		106	70 - 130	1.43	20	
p-Isopropyltoluene	8.564	1	0.51	10.9790		78.0	70 - 130	11.5	20	
sec-Butylbenzene	12.351	1	0.56	10.9790		112	70 - 130	1.34	20	
Styrene	8.434	1	0.44	8.51934		99.0	70 - 130	2.56	20	
tert-Butylbenzene	12.626	1	0.62	10.9790		115	70 - 130	1.31	20	
Tetrachloroethene	13.836	2	0.47	13.5650		102	70 - 130	4.00	20	
Toluene	7.612	0.94	0.28	7.53688		101	70 - 130	4.04	20	
trans-1,2-Dichloroethene	7.058	0.99	0.34	7.92990		89.0	70 - 130	2.27	20	
trans-1,3-Dichloropropene	9.486	1	0.34	9.07722		104	70 - 130	3.90	20	
Trichloroethene	10.909	1	0.47	10.7474		102	70 - 130	2.49	20	
Trichlorofluoromethane	12.754	1	0.53	11.2366		114	70 - 130	4.04	20	
Vinyl acetate	8.028	0.88	0.38	7.04204		114	70 - 130	4.03	20	
Vinyl chloride	5.393	0.64	0.21	5.11231		106	70 - 130	2.88	20	
Surrogate: 4-Bromofluorobenzene	*19.11*			*17.8935*		*107*	*79.2 - 147*			

Certificate of Analysis

Hushmand Associates, Inc.	Project Number : Parcel 32
250 Goddard	Report To : Naresh Bellana
Irvine , CA 92618	Reported : 03/26/2018

Gasoline Range Organics in Air by TO-3 - Quality Control

Analyte	Result (ug/m³)	PQL (ug/m³)	MDL (ug/m³)	Spike Level	Source Result	% Rec	% Rec Limits	RPD	RPD Limit	Notes
Batch B5H0412 - No_Prep_AIR										
Blank (B5H0412-BLK1)						Prepared: 8/16/2015 Analyzed: 8/16/2015				
Gasoline Range Organics	ND	100	70							
Surrogate: 4-Bromofluorobenzene	*17.18*			*17.8935*		*96.0*	*70 - 130*			
LCS (B5H0412-BS1)						Prepared: 8/16/2015 Analyzed: 8/16/2015				
Gasoline Range Organics	808.384	100	70	817.996		98.8	70 - 130			
Surrogate: 4-Bromofluorobenzene	*18.18*			*17.8935*		*102*	*70 - 130*			
LCS Dup (B5H0412-BSD1)						Prepared: 8/16/2015 Analyzed: 8/16/2015				
Gasoline Range Organics	826.748	100	70	817.996		101	70 - 130	2.25	20	
Surrogate: 4-Bromofluorobenzene	*18.04*			*17.8935*		*101*	*70 - 130*			

Certificate of Analysis

Hushmand Associates, Inc.	Project Number : Parcel 32
250 Goddard	Report To : Naresh Bellana
Irvine , CA 92618	Reported : 03/26/2018

Gasoline Range Organics in Air by TO-3 - Quality Control

Analyte	Result (ug/m³)	PQL (ug/m³)	MDL (ug/m³)	Spike Level	Source Result	% Rec	% Rec Limits	RPD	RPD Limit	Notes
Batch B5H0425 - No_Prep_AIR										
Blank (B5H0425-BLK1)					Prepared: 8/17/2015 Analyzed: 8/17/2015					
Gasoline Range Organics	ND	100	70							
Surrogate: 4-Bromofluorobenzene	*17.25*			*17.8935*		*96.4*	*70 - 130*			
LCS (B5H0425-BS1)					Prepared: 8/17/2015 Analyzed: 8/17/2015					
Gasoline Range Organics	839.509	100	70	817.996		103	70 - 130			
Surrogate: 4-Bromofluorobenzene	*17.18*			*17.8935*		*96.0*	*70 - 130*			
LCS Dup (B5H0425-BSD1)					Prepared: 8/17/2015 Analyzed: 8/17/2015					
Gasoline Range Organics	863.395	100	70	817.996		106	70 - 130	2.81	20	
Surrogate: 4-Bromofluorobenzene	*17.75*			*17.8935*		*99.2*	*70 - 130*			

Certificate of Analysis

Hushmand Associates, Inc.	Project Number : Parcel 32
250 Goddard	Report To : Naresh Bellana
Irvine , CA 92618	Reported : 03/26/2018

Notes and Definitions

R	RPD value outside acceptance criteria. Calculation is based on raw values.
L5	Laboratory Control Sample high biased. Sample result/s was non-detect (ND) for the target analyte; therefore reanalysis was not necessary.
ND	Analyte is not detected at or above the Practical Quantitation Limit (PQL). When client requests quantitation against MDL, analyte is not detected at or above the Method Detection Limit (MDL)
PQL	Practical Quantitation Limit
MDL	Method Detection Limit
NR	Not Reported
RPD	Relative Percent Difference
CA2	CA-ELAP (CDPH)
OR1	OR-NELAP (OSPHL)

Notes:
(1) The reported MDL and PQL are based on prep ratio variation and analytical dilution.
(2) The suffix [2C] of specific analytes signifies that the reported result is taken from the instrument's second column.
(3) Results are wet unless otherwise specified.

ADVANCED TECHNOLOGY LABORATORIES

3275 Walnut Ave., Signal Hill, CA 90755
Tel: (562) 989-4045 • Fax: (562) 989-4040

CHAIN OF CUSTODY RECORD

Page 1 of 2

Instruction: Complete all shaded areas.

For Laboratory Use Only — ATLCOC Ver: 2013071

Method of Transport		Sample Conditions Upon Receipt					
		Condition	Y	N	Condition	Y	N
☑ Client	☐ ATL	1. CHILLED N/A	☐	☐	5. # OF SAMPLES MATCH COC	☑	☐
☐ FedEx	☐ OnTrac	2. HEADSPACE (VOA)	☐	☐	6. PRESERVED	☐	☑
☐ GSO		3. CONTAINER INTACT	☑	☐	7. COOLER TEMP, deg C:	—	
☐ Other:		4. SEALED	☐	☑			

CUSTOMER

Company: Hushmand & Assoc. | Address: | Tel:
City: | State: | Zip: | Fax:

SEND REPORT TO:
Attn: Narek Bellamian | Email:
Company: Hushmand & Assoc
Address: 250 Goddard
City: Irvine | State: CA | Zip: 92618

SEND INVOICE TO: ☐ same as SEND REPORT TO
Attn: | Email:
Company:
Address:
City: | State: | Zip:

PROJECT SAMPLES

Project Name: Parcel 32
Project No.:
Sampler: Don Terry
Quote No:
PO #:
Special Instructions/Comments: ETR # 327
E15G161

ITEM	Lab No.	Sample Description: Sample ID / Location	Date	Time	8260 / 624 (Volatiles)	8015(GRO)	8015(DRO)	8270(Semi-volatiles)	8081(Organochlorine Pesticides)	8082(PCBs)	6010 / 7000(Title 22 Metals)	TO-15	TPH Gas	TAT	Container #	Container Type: 1=Tube; 2=VOA; 3=Liter; 4=Pint; 5=Jar; 6=Tedlar; 7 = Canister	Container Material: 1=Glass; 2=Plastic; 3=Metal	Preservative: 1=HCl; 2=HNO3; 3=H2SO4; 4 = 4C; 5=Zn (Ac)2; 6=NaOH; 7=NA2S2O3	REMARKS
1	1502728 - 1	VP-1	8/7	12:22								/	/		7				
2	- 2	VP-2		12:28								/	/						
3	- 3	VP-3		1:03								/	/						
4	- 4	VP-4		1:08								/	/						
5	- 5	VP-5		12:32								/	/						
6	- 6	VP-6		12:41								/	/						
7	- 7	VP-7		12:54								/	/						
8	- 8	VP-8		1:16								/	/						
9	- 9	VP-9		12:49								/	/						
10	- 10	VP-10		12:53								/	/						

Encircle or Write Requested Analysis

Encircle Sample Matrix: SOIL / SEDIMENT / SLUDGE; SOLIDS / WIPE/ FILTER; WATER - DRINKING / GROUND; WATER - STORM / WASTE; AQUEOUS / LAYERED - OIL

QA/QC: ☐ Routine ☐ Caltrans ☐ Legal ☐ RWQCB ☐ Level IV

TERMS

1. Sample receiving hours: 7:30 AM to 7:30 PM Monday - Friday; Saturday 8:00 AM to 12:00 PM.
2. Samples Submitted AFTER 3:00 PM, are considered received the following Business day at 8:00 AM.
3. The following turnaround time conditions apply:
   - TAT = 0 : 300% Surcharge SAME BUSINESS DAY if received by 9:00 AM
   - TAT = 1 : 100% Surcharge NEXT BUSINESS DAY (COB 5:00 PM)
   - TAT = 2 : 50% Surcharge 2ND BUSINESS DAY (COB 5:00 PM)
   - TAT = 3 : 30% Surcharge 3RD BUSINESS DAY (COB 5:00 PM)
   - TAT = 4 : 20% Surcharge 4TH BUSINESS DAY (COB 5:00 PM)
   - TAT = 5 : NO SURCHARGE 5th BUSINESS DAY (COB 5:00 PM)
4. Weekend, holiday, after-hours work - ask for quote.
5. Subcontract TAT is 10 - 15 business days. Projects requiring shorter TATs will incur a surcharge respective to the subcontract lab --- ask for quote.
6. Liquid and solid samples will be disposed of after 45 calendar days from receipt of samples; air samples will be disposed of after 14 calendar days after receipt of samples.
7. Electronic records maintained for fi ve (5) years from report date.
8. Hard copy reports will be disposed of after 45 calendar days from report date.
9. Storage and Report Fees:
   - Liquid & solid samples: Complimentary storage for forty-fi ve (45) calendar days from receipt of samples; $2/sample/month if extended storage or hold is requested.
   - Air samples: Complimentary storage for ten (10) calendar days from receipt of samples; $20/ sample/week if extended storage is requested.
   - Hard copy and regenerated reports/EDDs: $17.50 per hard copy report requested; $50.00 per regenerated/reforma? ed report; $35 per reprocessed EDD.
10. Rush TCLP/STLC samples: add 2 days to analysis TAT for extraction on procedure.
11. Unanalyzed samples will incur a disposal fee of $7 per sample.

As the authorized agent of the company above, I hereby purchase laboratory services from ATL as shown above and hereby guarantee payment as quoted.

Don Terry — Submitter Print Name

Signature

CUSTODY

Relinquished by: (Signature and Printed Name)	Date:	Time:	Received by: (Signature and Printed Name)	Date:	Time:
Don Terry	8/7	2:47	ABNER MANGAHA	8/7/15	14:47
Relinquished by: (Signature and Printed Name)	Date:	Time:	Received by: (Signature and Printed Name)	Date:	Time:
Relinquished by: (Signature and Printed Name)	Date:	Time:	Received by: (Signature and Printed Name)	Date:	Time:

ADVANCED TECHNOLOGY LABORATORIES

3275 Walnut Ave., Signal Hill, CA 90755
Tel: (562) 989-4045 • Fax: (562) 989-4040

CHAIN OF CUSTODY RECORD

Page ____ of ____

Instruction: Complete all shaded areas.

For Laboratory Use Only — ATLCOC Ver: 20130715

Method of Transport	Sample Conditions Upon Receipt					
	Condition	Y	N	Condition	Y	N
☑ Client ☐ ATL	1. CHILLED 4/-	☐	☐	5. # OF SAMPLES MATCH COC	☑	☐
☐ FedEx ☐ OnTrac	2. HEADSPACE (VOA)	☐	☐	6. PRESERVED	☐	☑
☐ GSO	3. CONTAINER INTACT	☑	☐	7. COOLER TEMP, deg C:	—	
☐ Other: _____	4. SEALED	☐	☑			

CUSTOMER

Company:

Address:

Tel:

City: State: Zip:

Fax:

SEND REPORT TO:

Attn: See Page 1 Email:

Company: Hushmand & Assoc

Address:

City: State: Zip:

SEND INVOICE TO: ☐ same as SEND REPORT TO

Attn: Email:

Company:

Address:

City: State: Zip:

PROJECT SAMPLES

Project Name: Parcel 32

Project No.:

Sampler:

Quote No:

PO #:

Special Instructions/Comments:

ITEM	Lab No.	Sample Description: Sample ID / Location	Date	Time	8260 / 624 (Volatiles)	8015(GRO)	8015(DRO)	8270(Semi-volatiles)	8081(Organochlorine Pesticides)	8082(PCBs)	6010 / 7000(Title 22 Metals)	TO-15	TPH Gas	SOIL / SEDIMENT / SLUDGE	SOLIDS / WIPE/ FILTER	WATER - DRINKING / GROUND	WATER - STORM / WASTE	AQUEOUS / LAYERED - OIL	TAT	Container #	Container Type	Container Material	Preservative	REMARKS
1	15027K-4	VP-7 (Duplicate)	8/7	1:38								1	1											
2																								
3																								
4																								
5																								
6																								
7																								
8																								
9																								
10																								

Encircle or Write Requested Analysis

Encircle Sample Matrix

Container: # | Type: 1=Tube; 2=VOA; 3=Liter; 4=Pint; 5=Jar; 6=Tedlar; 7 = Canister | Material: 1=Glass; 2=Plastic; 3=Metal

Preservative: 1=HCl; 2=HNO3; 3=H2SO4; 4 = 4C; 5=Zn (Ac)2; 6=NaOH; 7=NA2S2O3

QA/QC: ☐ Routine ☐ Caltrans ☐ Legal ☐ RWQCB ☐ Level IV

TERMS

1. Sample receiving hours: 7:30 AM to 7:30 PM Monday - Friday; Saturday 8:00 AM to 12:00 PM.
2. Samples Submitted AFTER 3:00 PM, are considered received the following Business day at 8:00 AM.
3. The following turnaround time conditions apply:
   - TAT = 0 : 300% Surcharge SAME BUSINESS DAY if received by 9:00 AM
   - TAT = 1 : 100% Surcharge NEXT BUSINESS DAY (COB 5:00 PM)
   - TAT = 2 : 50% Surcharge 2ND BUSINESS DAY (COB 5:00 PM)
   - TAT = 3 : 30% Surcharge 3RD BUSINESS DAY (COB 5:00 PM)
   - TAT = 4 : 20% Surcharge 4TH BUSINESS DAY (COB 5:00 PM)
   - TAT = 5 : NO SURCHARGE 5th BUSINESS DAY (COB 5:00 PM)
4. Weekend, holiday, after-hours work - ask for quote.
5. Subcontract TAT is 10 - 15 business days. Projects requiring shorter TATs will incur a surcharge respective to the subcontract lab --- ask for quote.
6. Liquid and solid samples will be disposed of after 45 calendar days from receipt of samples; air samples will be disposed of after 14 calendar days after receipt of samples.
7. Electronic records maintained for fi ve (5) years from report date.
8. Hard copy reports will be disposed of after 45 calendar days from report date.
9. Storage and Report Fees:
   - Liquid & solid samples: Complimentary storage for forty-fi ve (45) calendar days from receipt of samples; $2/sample/month if extended storage or hold is requested.
   - Air samples: Complimentary storage for ten (10) calendar days from receipt of samples; $20/ sample/week if extended storage is requested.
   - Hard copy and regenerated reports/EDDs: $17.50 per hard copy report requested; $50.00 per regenerated/reforma? ed report; $35 per reprocessed EDD.
10. Rush TCLP/STLC samples: add 2 days to analysis TAT for extraction on procedure.
11. Unanalyzed samples will incur a disposal fee of $7 per sample.

As the authorized agent of the company above, I hereby purchase laboratory services from ATL as shown above and hereby guarantee payment as quoted.

Don Terres — Submitter Print Name

Signature

CUSTODY

Relinquished by: (Signature and Printed Name)	Date:	Time:	Received by: (Signature and Printed Name)	Date:	Time:
Don Terres	8/7	2:47	ABRAHAM MONTALVO	8/7/15	14:47
Relinquished by: (Signature and Printed Name)	Date:	Time:	Received by: (Signature and Printed Name)	Date:	Time:
Relinquished by: (Signature and Printed Name)	Date:	Time:	Received by: (Signature and Printed Name)	Date:	Time:

March 26, 2018

Naresh Bellana
Hushmand Associates, Inc.
250 Goddard
Irvine, CA 92618
Tel: (949) 777-1266
Fax:(949) 777-1276

ELAP No.: 1838
CSDLAC No.: 10196
ORELAP No.: CA300003

Re: ATL Work Order Number : 1502794

Client Reference : Parcel 22 - 637 S Clarence St, Los Angeles

Enclosed are the results for sample(s) received on August 13, 2015 by Advanced Technology Laboratories. The sample(s) are tested for the parameters as indicated on the enclosed chain of custody in accordance with applicable laboratory certifications. The laboratory results contained in this report specifically pertains to the sample(s) submitted.

Thank you for the opportunity to serve the needs of your company. If you have any questions, please feel free to contact me or your Project Manager.

Sincerely,



Eddie Rodriguez
Laboratory Director

The cover letter and the case narrative are an integral part of this analytical report and its absence renders the report invalid. Test results contained within this data package meet the requirements of applicable state-specific certification programs. The report cannot be reproduced without written permission from the client and Advanced Technology Laboratories.

Certificate of Analysis

Hushmand Associates, Inc.	Project Number : Parcel 22 - 637 S Clarence St, Los Angele
250 Goddard	Report To : Naresh Bellana
Irvine , CA 92618	Reported : 03/26/2018

SUMMARY OF SAMPLES

Sample ID	Laboratory ID	Matrix	Date Sampled	Date Received
637 CS VP-1	1502794-01	Air	8/13/15 10:00	8/13/15 10:25
637 CS VP-2	1502794-02	Air	8/13/15 10:07	8/13/15 10:25
637 CS VP-3	1502794-03	Air	8/13/15 10:11	8/13/15 10:25
637 CS VP-4	1502794-04	Air	8/13/15 10:25	8/13/15 10:25
637 CS VP-5	1502794-05	Air	8/13/15 10:19	8/13/15 10:25
637 CS VP-6	1502794-06	Air	8/13/15 10:27	8/13/15 10:25
637 CS VP-7	1502794-07	Air	8/13/15 10:43	8/13/15 10:25
637 CS VP-8	1502794-08	Air	8/13/15 10:33	8/13/15 10:25
637 CS VP-9	1502794-09	Air	8/13/15 10:30	8/13/15 10:25
637 CS VP-10	1502794-10	Air	8/13/15 10:46	8/13/15 10:25
637 CS VP-11	1502794-11	Air	8/13/15 10:48	8/13/15 10:25
637 CS VP-12	1502794-12	Air	8/13/15 10:51	8/13/15 10:25
637 CS VP-6 Dubl.	1502794-13	Air	8/13/15 11:00	8/13/15 10:25

Certificate of Analysis

Hushmand Associates, Inc.	Project Number : Parcel 22 - 637 S Clarence St, Los Angele
250 Goddard	Report To : Naresh Bellana
Irvine , CA 92618	Reported : 03/26/2018

Client Sample ID 637 CS VP-1
Lab ID: 1502794-01

Volatile Organic Compounds in AIR by TO-15 (Canister) **Analyst: MFR**

Analyte	Result (ug/m³)	PQL (ug/m³)	Dilution	Batch	Prepared	Date/Time Analyzed	Notes
1,1,1,2-Tetrachloroethane	ND	2	1	B5H0409	08/16/2015	08/16/15 07:44	
1,1,1-Trichloroethane	ND	1	1	B5H0409	08/16/2015	08/16/15 07:44	
1,1,2,2-Tetrachloroethane	ND	2	1	B5H0409	08/16/2015	08/16/15 07:44	
1,1,2-Trichloroethane	ND	1	1	B5H0409	08/16/2015	08/16/15 07:44	
1,1-Dichloroethane	ND	1	1	B5H0409	08/16/2015	08/16/15 07:44	
1,1-Dichloroethene	ND	0.99	1	B5H0409	08/16/2015	08/16/15 07:44	
1,1-Dichloropropene	ND	1	1	B5H0409	08/16/2015	08/16/15 07:44	
1,2,3-Trichloropropane	ND	2	1	B5H0409	08/16/2015	08/16/15 07:44	
1,2,4-Trichlorobenzene	ND	2	1	B5H0409	08/16/2015	08/16/15 07:44	
1,2,4-Trimethylbenzene	**3**	1	1	B5H0409	08/16/2015	08/16/15 07:44	
1,2-Dibromo-3-chloropropane	ND	2	1	B5H0409	08/16/2015	08/16/15 07:44	
1,2-Dibromoethane	ND	2	1	B5H0409	08/16/2015	08/16/15 07:44	
1,2-Dichlorobenzene	ND	2	1	B5H0409	08/16/2015	08/16/15 07:44	
1,2-Dichloroethane	ND	1	1	B5H0409	08/16/2015	08/16/15 07:44	
1,2-Dichloropropane	ND	1	1	B5H0409	08/16/2015	08/16/15 07:44	
1,3,5-Trimethylbenzene	ND	1	1	B5H0409	08/16/2015	08/16/15 07:44	
1,3-Butadiene	ND	0.55	1	B5H0409	08/16/2015	08/16/15 07:44	
1,3-Dichlorobenzene	ND	2	1	B5H0409	08/16/2015	08/16/15 07:44	
1,4-Dichlorobenzene	ND	2	1	B5H0409	08/16/2015	08/16/15 07:44	
1,4-Dioxane	ND	0.90	1	B5H0409	08/16/2015	08/16/15 07:44	
2,2,4-Trimethylpentane	**2**	1	1	B5H0409	08/16/2015	08/16/15 07:44	
2-Butanone	**1**	0.74	1	B5H0409	08/16/2015	08/16/15 07:44	
2-Chloroethyl vinyl ether	ND	1	1	B5H0409	08/16/2015	08/16/15 07:44	
2-Chlorotoluene	ND	1	1	B5H0409	08/16/2015	08/16/15 07:44	
2-Hexanone	ND	1	1	B5H0409	08/16/2015	08/16/15 07:44	
2-Propanol	**5100**	80	125	B5H0463	08/17/2015	08/17/15 20:15	
4-Chlorotoluene	ND	1	1	B5H0409	08/16/2015	08/16/15 07:44	
4-Ethyl Toluene	ND	1	1	B5H0409	08/16/2015	08/16/15 07:44	
4-Methyl-2-pentanone	ND	1	1	B5H0409	08/16/2015	08/16/15 07:44	
Acetone	**20**	0.59	1	B5H0409	08/16/2015	08/16/15 07:44	
Acetonitrile	ND	0.42	1	B5H0409	08/16/2015	08/16/15 07:44	
Acrolein	ND	0.57	1	B5H0409	08/16/2015	08/16/15 07:44	
Acrylonitrile	ND	0.54	1	B5H0409	08/16/2015	08/16/15 07:44	
Benzene	**2**	0.80	1	B5H0409	08/16/2015	08/16/15 07:44	
Benzyl chloride	ND	1	1	B5H0409	08/16/2015	08/16/15 07:44	
Bromobenzene	ND	2	1	B5H0409	08/16/2015	08/16/15 07:44	
Bromodichloromethane	ND	2	1	B5H0409	08/16/2015	08/16/15 07:44	

Certificate of Analysis

Hushmand Associates, Inc.	Project Number : Parcel 22 - 637 S Clarence St, Los Angele
250 Goddard	Report To : Naresh Bellana
Irvine , CA 92618	Reported : 03/26/2018

Client Sample ID 637 CS VP-1
Lab ID: 1502794-01

Volatile Organic Compounds in AIR by TO-15 (Canister) **Analyst: MFR**

Analyte	Result (ug/m³)	PQL (ug/m³)	Dilution	Batch	Prepared	Date/Time Analyzed	Notes
Bromoform	ND	3	1	B5H0409	08/16/2015	08/16/15 07:44	
Bromomethane	ND	0.97	1	B5H0409	08/16/2015	08/16/15 07:44	
Carbon disulfide	ND	0.78	1	B5H0409	08/16/2015	08/16/15 07:44	
Carbon tetrachloride	ND	2	1	B5H0409	08/16/2015	08/16/15 07:44	
Chlorobenzene	ND	1	1	B5H0409	08/16/2015	08/16/15 07:44	
Chloroethane	ND	0.66	1	B5H0409	08/16/2015	08/16/15 07:44	
Chloroform	ND	1	1	B5H0409	08/16/2015	08/16/15 07:44	
Chloromethane	ND	0.52	1	B5H0409	08/16/2015	08/16/15 07:44	
cis-1,2-Dichloroethene	ND	0.99	1	B5H0409	08/16/2015	08/16/15 07:44	
cis-1,3-Dichloropropene	ND	1	1	B5H0409	08/16/2015	08/16/15 07:44	
Cyclohexane	**1**	0.86	1	B5H0409	08/16/2015	08/16/15 07:44	
Dibromochloromethane	ND	2	1	B5H0409	08/16/2015	08/16/15 07:44	
Dibromomethane	ND	2	1	B5H0409	08/16/2015	08/16/15 07:44	
Dichlorodifluoromethane	**7**	1	1	B5H0409	08/16/2015	08/16/15 07:44	
Dichlorotetrafluoroethane	ND	2	1	B5H0409	08/16/2015	08/16/15 07:44	
Ethanol	**10**	0.47	1	B5H0409	08/16/2015	08/16/15 07:44	
Ethylbenzene	**2**	1	1	B5H0409	08/16/2015	08/16/15 07:44	
Freon-113	ND	2	1	B5H0409	08/16/2015	08/16/15 07:44	
Hexachlorobutadiene	ND	3	1	B5H0409	08/16/2015	08/16/15 07:44	
Isopropylbenzene	ND	1	1	B5H0409	08/16/2015	08/16/15 07:44	
m,p-Xylene	**10**	4	1	B5H0409	08/16/2015	08/16/15 07:44	
Methylene chloride	ND	0.87	1	B5H0409	08/16/2015	08/16/15 07:44	
MTBE	ND	0.90	1	B5H0409	08/16/2015	08/16/15 07:44	
n-Butylbenzene	ND	1	1	B5H0409	08/16/2015	08/16/15 07:44	
n-Propylbenzene	ND	1	1	B5H0409	08/16/2015	08/16/15 07:44	
Naphthalene	**2**	1	1	B5H0409	08/16/2015	08/16/15 07:44	
o-Xylene	**2**	1	1	B5H0409	08/16/2015	08/16/15 07:44	
p-Isopropyltoluene	ND	1	1	B5H0409	08/16/2015	08/16/15 07:44	
sec-Butylbenzene	ND	1	1	B5H0409	08/16/2015	08/16/15 07:44	
Styrene	ND	1	1	B5H0409	08/16/2015	08/16/15 07:44	
tert-Butylbenzene	ND	1	1	B5H0409	08/16/2015	08/16/15 07:44	
Tetrachloroethene	**70**	2	1	B5H0409	08/16/2015	08/16/15 07:44	
Toluene	**7**	0.94	1	B5H0409	08/16/2015	08/16/15 07:44	
trans-1,2-Dichloroethene	ND	0.99	1	B5H0409	08/16/2015	08/16/15 07:44	
trans-1,3-Dichloropropene	ND	1	1	B5H0409	08/16/2015	08/16/15 07:44	
Trichloroethene	**2**	1	1	B5H0409	08/16/2015	08/16/15 07:44	
Trichlorofluoromethane	**60**	1	1	B5H0409	08/16/2015	08/16/15 07:44	

Certificate of Analysis

Hushmand Associates, Inc.	Project Number : Parcel 22 - 637 S Clarence St, Los Angele
250 Goddard	Report To : Naresh Bellana
Irvine , CA 92618	Reported : 03/26/2018

Client Sample ID 637 CS VP-1
Lab ID: 1502794-01

Volatile Organic Compounds in AIR by TO-15 (Canister)

Analyst: MFR

Analyte		Result (ug/m³)	PQL (ug/m³)	Dilution	Batch	Prepared	Date/Time Analyzed	Notes
Vinyl acetate		ND	0.88	1	B5H0409	08/16/2015	08/16/15 07:44	
Vinyl chloride		ND	0.64	1	B5H0409	08/16/2015	08/16/15 07:44	
Surrogate: 4-Bromofluorobenzene	*103 %*		*79.2 - 147*		B5H0463	08/17/2015	*08/17/15 20:15*	
Surrogate: 4-Bromofluorobenzene	*107 %*		*79.2 - 147*		B5H0409	08/16/2015	*08/16/15 07:44*	

Gasoline Range Organics in Air by TO-3

Analyst: MFR

Analyte		Result (ug/m³)	PQL (ug/m³)	Dilution	Batch	Prepared	Date/Time Analyzed	Notes
Gasoline Range Organics		**6100**	1000	10	B5H0425	08/17/2015	08/17/15 23:44	
Surrogate: 4-Bromofluorobenzene	*92.8 %*		*70 - 130*		B5H0425	08/17/2015	*08/17/15 23:44*	

Certificate of Analysis

Hushmand Associates, Inc.	Project Number : Parcel 22 - 637 S Clarence St, Los Angele
250 Goddard	Report To : Naresh Bellana
Irvine , CA 92618	Reported : 03/26/2018

Client Sample ID 637 CS VP-2
Lab ID: 1502794-02

Volatile Organic Compounds in AIR by TO-15 (Canister) **Analyst: MFR**

Analyte	Result (ug/m³)	PQL (ug/m³)	Dilution	Batch	Prepared	Date/Time Analyzed	Notes
1,1,1,2-Tetrachloroethane	ND	2	1	B5H0409	08/16/2015	08/16/15 08:25	
1,1,1-Trichloroethane	**3**	1	1	B5H0409	08/16/2015	08/16/15 08:25	
1,1,2,2-Tetrachloroethane	ND	2	1	B5H0409	08/16/2015	08/16/15 08:25	
1,1,2-Trichloroethane	ND	1	1	B5H0409	08/16/2015	08/16/15 08:25	
1,1-Dichloroethane	ND	1	1	B5H0409	08/16/2015	08/16/15 08:25	
1,1-Dichloroethene	ND	0.99	1	B5H0409	08/16/2015	08/16/15 08:25	
1,1-Dichloropropene	ND	1	1	B5H0409	08/16/2015	08/16/15 08:25	
1,2,3-Trichloropropane	ND	2	1	B5H0409	08/16/2015	08/16/15 08:25	
1,2,4-Trichlorobenzene	ND	2	1	B5H0409	08/16/2015	08/16/15 08:25	
1,2,4-Trimethylbenzene	**10**	1	1	B5H0409	08/16/2015	08/16/15 08:25	
1,2-Dibromo-3-chloropropane	ND	2	1	B5H0409	08/16/2015	08/16/15 08:25	
1,2-Dibromoethane	ND	2	1	B5H0409	08/16/2015	08/16/15 08:25	
1,2-Dichlorobenzene	ND	2	1	B5H0409	08/16/2015	08/16/15 08:25	
1,2-Dichloroethane	ND	1	1	B5H0409	08/16/2015	08/16/15 08:25	
1,2-Dichloropropane	ND	1	1	B5H0409	08/16/2015	08/16/15 08:25	
1,3,5-Trimethylbenzene	**3**	1	1	B5H0409	08/16/2015	08/16/15 08:25	
1,3-Butadiene	ND	0.55	1	B5H0409	08/16/2015	08/16/15 08:25	
1,3-Dichlorobenzene	ND	2	1	B5H0409	08/16/2015	08/16/15 08:25	
1,4-Dichlorobenzene	ND	2	1	B5H0409	08/16/2015	08/16/15 08:25	
1,4-Dioxane	ND	0.90	1	B5H0409	08/16/2015	08/16/15 08:25	
2,2,4-Trimethylpentane	**6**	1	1	B5H0409	08/16/2015	08/16/15 08:25	
2-Butanone	**2**	0.74	1	B5H0409	08/16/2015	08/16/15 08:25	
2-Chloroethyl vinyl ether	ND	1	1	B5H0409	08/16/2015	08/16/15 08:25	
2-Chlorotoluene	ND	1	1	B5H0409	08/16/2015	08/16/15 08:25	
2-Hexanone	**2**	1	1	B5H0409	08/16/2015	08/16/15 08:25	
2-Propanol	**2400**	60	100	B5H0464	08/17/2015	08/18/15 11:49	
4-Chlorotoluene	ND	1	1	B5H0409	08/16/2015	08/16/15 08:25	
4-Ethyl Toluene	**3**	1	1	B5H0409	08/16/2015	08/16/15 08:25	
4-Methyl-2-pentanone	ND	1	1	B5H0409	08/16/2015	08/16/15 08:25	
Acetone	**20**	0.59	1	B5H0409	08/16/2015	08/16/15 08:25	
Acetonitrile	ND	0.42	1	B5H0409	08/16/2015	08/16/15 08:25	
Acrolein	ND	0.57	1	B5H0409	08/16/2015	08/16/15 08:25	
Acrylonitrile	ND	0.54	1	B5H0409	08/16/2015	08/16/15 08:25	
Benzene	**2**	0.80	1	B5H0409	08/16/2015	08/16/15 08:25	
Benzyl chloride	ND	1	1	B5H0409	08/16/2015	08/16/15 08:25	
Bromobenzene	ND	2	1	B5H0409	08/16/2015	08/16/15 08:25	
Bromodichloromethane	ND	2	1	B5H0409	08/16/2015	08/16/15 08:25	

Certificate of Analysis

Hushmand Associates, Inc.	Project Number : Parcel 22 - 637 S Clarence St, Los Angele
250 Goddard	Report To : Naresh Bellana
Irvine , CA 92618	Reported : 03/26/2018

Client Sample ID 637 CS VP-2
Lab ID: 1502794-02

Volatile Organic Compounds in AIR by TO-15 (Canister) **Analyst: MFR**

Analyte	Result (ug/m³)	PQL (ug/m³)	Dilution	Batch	Prepared	Date/Time Analyzed	Notes
Bromoform	ND	3	1	B5H0409	08/16/2015	08/16/15 08:25	
Bromomethane	ND	0.97	1	B5H0409	08/16/2015	08/16/15 08:25	
Carbon disulfide	ND	0.78	1	B5H0409	08/16/2015	08/16/15 08:25	
Carbon tetrachloride	ND	2	1	B5H0409	08/16/2015	08/16/15 08:25	
Chlorobenzene	ND	1	1	B5H0409	08/16/2015	08/16/15 08:25	
Chloroethane	ND	0.66	1	B5H0409	08/16/2015	08/16/15 08:25	
Chloroform	ND	1	1	B5H0409	08/16/2015	08/16/15 08:25	
Chloromethane	ND	0.52	1	B5H0409	08/16/2015	08/16/15 08:25	
cis-1,2-Dichloroethene	ND	0.99	1	B5H0409	08/16/2015	08/16/15 08:25	
cis-1,3-Dichloropropene	ND	1	1	B5H0409	08/16/2015	08/16/15 08:25	
Cyclohexane	**1**	0.86	1	B5H0409	08/16/2015	08/16/15 08:25	
Dibromochloromethane	ND	2	1	B5H0409	08/16/2015	08/16/15 08:25	
Dibromomethane	ND	2	1	B5H0409	08/16/2015	08/16/15 08:25	
Dichlorodifluoromethane	**10**	1	1	B5H0409	08/16/2015	08/16/15 08:25	
Dichlorotetrafluoroethane	ND	2	1	B5H0409	08/16/2015	08/16/15 08:25	
Ethanol	**10**	0.47	1	B5H0409	08/16/2015	08/16/15 08:25	
Ethylbenzene	**3**	1	1	B5H0409	08/16/2015	08/16/15 08:25	
Freon-113	ND	2	1	B5H0409	08/16/2015	08/16/15 08:25	
Hexachlorobutadiene	ND	3	1	B5H0409	08/16/2015	08/16/15 08:25	
Isopropylbenzene	ND	1	1	B5H0409	08/16/2015	08/16/15 08:25	
m,p-Xylene	**20**	4	1	B5H0409	08/16/2015	08/16/15 08:25	
Methylene chloride	ND	0.87	1	B5H0409	08/16/2015	08/16/15 08:25	
MTBE	ND	0.90	1	B5H0409	08/16/2015	08/16/15 08:25	
n-Butylbenzene	ND	1	1	B5H0409	08/16/2015	08/16/15 08:25	
n-Propylbenzene	**1**	1	1	B5H0409	08/16/2015	08/16/15 08:25	
Naphthalene	**10**	1	1	B5H0409	08/16/2015	08/16/15 08:25	
o-Xylene	**5**	1	1	B5H0409	08/16/2015	08/16/15 08:25	
p-Isopropyltoluene	**4**	1	1	B5H0409	08/16/2015	08/16/15 08:25	
sec-Butylbenzene	ND	1	1	B5H0409	08/16/2015	08/16/15 08:25	
Styrene	**1**	1	1	B5H0409	08/16/2015	08/16/15 08:25	
tert-Butylbenzene	**2**	1	1	B5H0409	08/16/2015	08/16/15 08:25	
Tetrachloroethene	**120**	2	1	B5H0409	08/16/2015	08/16/15 08:25	
Toluene	**8**	0.94	1	B5H0409	08/16/2015	08/16/15 08:25	
trans-1,2-Dichloroethene	ND	0.99	1	B5H0409	08/16/2015	08/16/15 08:25	
trans-1,3-Dichloropropene	ND	1	1	B5H0409	08/16/2015	08/16/15 08:25	
Trichloroethene	**1**	1	1	B5H0409	08/16/2015	08/16/15 08:25	
Trichlorofluoromethane	**140**	10	10	B5H0463	08/17/2015	08/17/15 20:51	

Certificate of Analysis

Hushmand Associates, Inc.	Project Number : Parcel 22 - 637 S Clarence St, Los Angele
250 Goddard	Report To : Naresh Bellana
Irvine , CA 92618	Reported : 03/26/2018

Client Sample ID 637 CS VP-2
Lab ID: 1502794-02

Volatile Organic Compounds in AIR by TO-15 (Canister)

Analyst: MFR

Analyte		Result (ug/m³)	PQL (ug/m³)	Dilution	Batch	Prepared	Date/Time Analyzed	Notes
Vinyl acetate		**1**	0.88	1	B5H0409	08/16/2015	08/16/15 08:25	
Vinyl chloride		ND	0.64	1	B5H0409	08/16/2015	08/16/15 08:25	
Surrogate: 4-Bromofluorobenzene	*103 %*		*79.2 - 147*		B5H0464	08/17/2015	*08/18/15 11:49*	
Surrogate: 4-Bromofluorobenzene	*105 %*		*79.2 - 147*		B5H0463	08/17/2015	*08/17/15 20:51*	
Surrogate: 4-Bromofluorobenzene	*107 %*		*79.2 - 147*		B5H0409	08/16/2015	*08/16/15 08:25*	

Gasoline Range Organics in Air by TO-3

Analyst: MFR

Analyte		Result (ug/m³)	PQL (ug/m³)	Dilution	Batch	Prepared	Date/Time Analyzed	Notes
Gasoline Range Organics		**4900**	1000	10	B5H0425	08/17/2015	08/17/15 16:18	
Surrogate: 4-Bromofluorobenzene	*96.8 %*		*70 - 130*		B5H0425	08/17/2015	*08/17/15 16:18*	

Certificate of Analysis

Hushmand Associates, Inc.	Project Number : Parcel 22 - 637 S Clarence St, Los Angele
250 Goddard	Report To : Naresh Bellana
Irvine , CA 92618	Reported : 03/26/2018

Client Sample ID 637 CS VP-3
Lab ID: 1502794-03

Volatile Organic Compounds in AIR by TO-15 (Canister) **Analyst: MFR**

Analyte	Result (ug/m³)	PQL (ug/m³)	Dilution	Batch	Prepared	Date/Time Analyzed	Notes
1,1,1,2-Tetrachloroethane	ND	2	1	B5H0409	08/16/2015	08/16/15 09:09	
1,1,1-Trichloroethane	ND	1	1	B5H0409	08/16/2015	08/16/15 09:09	
1,1,2,2-Tetrachloroethane	ND	2	1	B5H0409	08/16/2015	08/16/15 09:09	
1,1,2-Trichloroethane	ND	1	1	B5H0409	08/16/2015	08/16/15 09:09	
1,1-Dichloroethane	ND	1	1	B5H0409	08/16/2015	08/16/15 09:09	
1,1-Dichloroethene	ND	0.99	1	B5H0409	08/16/2015	08/16/15 09:09	
1,1-Dichloropropene	ND	1	1	B5H0409	08/16/2015	08/16/15 09:09	
1,2,3-Trichloropropane	ND	2	1	B5H0409	08/16/2015	08/16/15 09:09	
1,2,4-Trichlorobenzene	ND	2	1	B5H0409	08/16/2015	08/16/15 09:09	
1,2,4-Trimethylbenzene	**2**	1	1	B5H0409	08/16/2015	08/16/15 09:09	
1,2-Dibromo-3-chloropropane	ND	2	1	B5H0409	08/16/2015	08/16/15 09:09	
1,2-Dibromoethane	ND	2	1	B5H0409	08/16/2015	08/16/15 09:09	
1,2-Dichlorobenzene	ND	2	1	B5H0409	08/16/2015	08/16/15 09:09	
1,2-Dichloroethane	ND	1	1	B5H0409	08/16/2015	08/16/15 09:09	
1,2-Dichloropropane	ND	1	1	B5H0409	08/16/2015	08/16/15 09:09	
1,3,5-Trimethylbenzene	ND	1	1	B5H0409	08/16/2015	08/16/15 09:09	
1,3-Butadiene	ND	0.55	1	B5H0409	08/16/2015	08/16/15 09:09	
1,3-Dichlorobenzene	ND	2	1	B5H0409	08/16/2015	08/16/15 09:09	
1,4-Dichlorobenzene	ND	2	1	B5H0409	08/16/2015	08/16/15 09:09	
1,4-Dioxane	ND	0.90	1	B5H0409	08/16/2015	08/16/15 09:09	
2,2,4-Trimethylpentane	ND	1	1	B5H0409	08/16/2015	08/16/15 09:09	
2-Butanone	**2**	0.74	1	B5H0409	08/16/2015	08/16/15 09:09	
2-Chloroethyl vinyl ether	ND	1	1	B5H0409	08/16/2015	08/16/15 09:09	
2-Chlorotoluene	ND	1	1	B5H0409	08/16/2015	08/16/15 09:09	
2-Hexanone	ND	1	1	B5H0409	08/16/2015	08/16/15 09:09	
2-Propanol	**1500**	60	100	B5H0463	08/17/2015	08/17/15 21:24	
4-Chlorotoluene	ND	1	1	B5H0409	08/16/2015	08/16/15 09:09	
4-Ethyl Toluene	ND	1	1	B5H0409	08/16/2015	08/16/15 09:09	
4-Methyl-2-pentanone	ND	1	1	B5H0409	08/16/2015	08/16/15 09:09	
Acetone	**20**	0.59	1	B5H0409	08/16/2015	08/16/15 09:09	
Acetonitrile	ND	0.42	1	B5H0409	08/16/2015	08/16/15 09:09	
Acrolein	ND	0.57	1	B5H0409	08/16/2015	08/16/15 09:09	
Acrylonitrile	ND	0.54	1	B5H0409	08/16/2015	08/16/15 09:09	
Benzene	ND	0.80	1	B5H0409	08/16/2015	08/16/15 09:09	
Benzyl chloride	ND	1	1	B5H0409	08/16/2015	08/16/15 09:09	
Bromobenzene	ND	2	1	B5H0409	08/16/2015	08/16/15 09:09	
Bromodichloromethane	ND	2	1	B5H0409	08/16/2015	08/16/15 09:09	

Certificate of Analysis

Hushmand Associates, Inc.	Project Number : Parcel 22 - 637 S Clarence St, Los Angele
250 Goddard	Report To : Naresh Bellana
Irvine , CA 92618	Reported : 03/26/2018

Client Sample ID 637 CS VP-3
Lab ID: 1502794-03

Volatile Organic Compounds in AIR by TO-15 (Canister) **Analyst: MFR**

Analyte	Result (ug/m³)	PQL (ug/m³)	Dilution	Batch	Prepared	Date/Time Analyzed	Notes
Bromoform	ND	3	1	B5H0409	08/16/2015	08/16/15 09:09	
Bromomethane	ND	0.97	1	B5H0409	08/16/2015	08/16/15 09:09	
Carbon disulfide	ND	0.78	1	B5H0409	08/16/2015	08/16/15 09:09	
Carbon tetrachloride	ND	2	1	B5H0409	08/16/2015	08/16/15 09:09	
Chlorobenzene	ND	1	1	B5H0409	08/16/2015	08/16/15 09:09	
Chloroethane	ND	0.66	1	B5H0409	08/16/2015	08/16/15 09:09	
Chloroform	ND	1	1	B5H0409	08/16/2015	08/16/15 09:09	
Chloromethane	ND	0.52	1	B5H0409	08/16/2015	08/16/15 09:09	
cis-1,2-Dichloroethene	ND	0.99	1	B5H0409	08/16/2015	08/16/15 09:09	
cis-1,3-Dichloropropene	ND	1	1	B5H0409	08/16/2015	08/16/15 09:09	
Cyclohexane	**0.86**	0.86	1	B5H0409	08/16/2015	08/16/15 09:09	
Dibromochloromethane	ND	2	1	B5H0409	08/16/2015	08/16/15 09:09	
Dibromomethane	ND	2	1	B5H0409	08/16/2015	08/16/15 09:09	
Dichlorodifluoromethane	**6**	1	1	B5H0409	08/16/2015	08/16/15 09:09	
Dichlorotetrafluoroethane	ND	2	1	B5H0409	08/16/2015	08/16/15 09:09	
Ethanol	**7**	0.47	1	B5H0409	08/16/2015	08/16/15 09:09	
Ethylbenzene	ND	1	1	B5H0409	08/16/2015	08/16/15 09:09	
Freon-113	ND	2	1	B5H0409	08/16/2015	08/16/15 09:09	
Hexachlorobutadiene	ND	3	1	B5H0409	08/16/2015	08/16/15 09:09	
Isopropylbenzene	ND	1	1	B5H0409	08/16/2015	08/16/15 09:09	
m,p-Xylene	**6**	4	1	B5H0409	08/16/2015	08/16/15 09:09	
Methylene chloride	ND	0.87	1	B5H0409	08/16/2015	08/16/15 09:09	
MTBE	ND	0.90	1	B5H0409	08/16/2015	08/16/15 09:09	
n-Butylbenzene	ND	1	1	B5H0409	08/16/2015	08/16/15 09:09	
n-Propylbenzene	ND	1	1	B5H0409	08/16/2015	08/16/15 09:09	
Naphthalene	ND	1	1	B5H0409	08/16/2015	08/16/15 09:09	
o-Xylene	ND	1	1	B5H0409	08/16/2015	08/16/15 09:09	
p-Isopropyltoluene	ND	1	1	B5H0409	08/16/2015	08/16/15 09:09	
sec-Butylbenzene	ND	1	1	B5H0409	08/16/2015	08/16/15 09:09	
Styrene	ND	1	1	B5H0409	08/16/2015	08/16/15 09:09	
tert-Butylbenzene	ND	1	1	B5H0409	08/16/2015	08/16/15 09:09	
Tetrachloroethene	**80**	2	1	B5H0409	08/16/2015	08/16/15 09:09	
Toluene	**3**	0.94	1	B5H0409	08/16/2015	08/16/15 09:09	
trans-1,2-Dichloroethene	ND	0.99	1	B5H0409	08/16/2015	08/16/15 09:09	
trans-1,3-Dichloropropene	ND	1	1	B5H0409	08/16/2015	08/16/15 09:09	
Trichloroethene	ND	1	1	B5H0409	08/16/2015	08/16/15 09:09	
Trichlorofluoromethane	**150**	10	10	B5H0463	08/17/2015	08/18/15 02:36	

Certificate of Analysis

Hushmand Associates, Inc.	Project Number : Parcel 22 - 637 S Clarence St, Los Angele
250 Goddard	Report To : Naresh Bellana
Irvine , CA 92618	Reported : 03/26/2018

Client Sample ID 637 CS VP-3
Lab ID: 1502794-03

Volatile Organic Compounds in AIR by TO-15 (Canister)

Analyst: MFR

Analyte		Result (ug/m³)	PQL (ug/m³)	Dilution	Batch	Prepared	Date/Time Analyzed	Notes
Vinyl acetate		ND	0.88	1	B5H0409	08/16/2015	08/16/15 09:09	
Vinyl chloride		ND	0.64	1	B5H0409	08/16/2015	08/16/15 09:09	
Surrogate: 4-Bromofluorobenzene	*106 %*		*79.2 - 147*		B5H0463	08/17/2015	*08/17/15 21:24*	
Surrogate: 4-Bromofluorobenzene	*103 %*		*79.2 - 147*		B5H0463	08/17/2015	*08/18/15 02:36*	
Surrogate: 4-Bromofluorobenzene	*108 %*		*79.2 - 147*		B5H0409	08/16/2015	*08/16/15 09:09*	

Gasoline Range Organics in Air by TO-3

Analyst: MFR

Analyte		Result (ug/m³)	PQL (ug/m³)	Dilution	Batch	Prepared	Date/Time Analyzed	Notes
Gasoline Range Organics		**5600**	1000	10	B5H0425	08/17/2015	08/17/15 16:52	
Surrogate: 4-Bromofluorobenzene	*98.0 %*		*70 - 130*		B5H0425	08/17/2015	*08/17/15 16:52*	

Certificate of Analysis

Hushmand Associates, Inc.	Project Number : Parcel 22 - 637 S Clarence St, Los Angele
250 Goddard	Report To : Naresh Bellana
Irvine , CA 92618	Reported : 03/26/2018

Client Sample ID 637 CS VP-4
Lab ID: 1502794-04

Volatile Organic Compounds in AIR by TO-15 (Canister) **Analyst: MFR**

Analyte	Result (ug/m³)	PQL (ug/m³)	Dilution	Batch	Prepared	Date/Time Analyzed	Notes
1,1,1,2-Tetrachloroethane	ND	2	1	B5H0410	08/16/2015	08/17/15 00:40	
1,1,1-Trichloroethane	**3**	1	1	B5H0410	08/16/2015	08/17/15 00:40	
1,1,2,2-Tetrachloroethane	ND	2	1	B5H0410	08/16/2015	08/17/15 00:40	
1,1,2-Trichloroethane	ND	1	1	B5H0410	08/16/2015	08/17/15 00:40	
1,1-Dichloroethane	ND	1	1	B5H0410	08/16/2015	08/17/15 00:40	
1,1-Dichloroethene	ND	0.99	1	B5H0410	08/16/2015	08/17/15 00:40	
1,1-Dichloropropene	ND	1	1	B5H0410	08/16/2015	08/17/15 00:40	
1,2,3-Trichloropropane	ND	2	1	B5H0410	08/16/2015	08/17/15 00:40	
1,2,4-Trichlorobenzene	ND	2	1	B5H0410	08/16/2015	08/17/15 00:40	
1,2,4-Trimethylbenzene	**7**	1	1	B5H0410	08/16/2015	08/17/15 00:40	
1,2-Dibromo-3-chloropropane	ND	2	1	B5H0410	08/16/2015	08/17/15 00:40	
1,2-Dibromoethane	ND	2	1	B5H0410	08/16/2015	08/17/15 00:40	
1,2-Dichlorobenzene	ND	2	1	B5H0410	08/16/2015	08/17/15 00:40	
1,2-Dichloroethane	ND	1	1	B5H0410	08/16/2015	08/17/15 00:40	
1,2-Dichloropropane	ND	1	1	B5H0410	08/16/2015	08/17/15 00:40	
1,3,5-Trimethylbenzene	**2**	1	1	B5H0410	08/16/2015	08/17/15 00:40	
1,3-Butadiene	ND	0.55	1	B5H0410	08/16/2015	08/17/15 00:40	
1,3-Dichlorobenzene	ND	2	1	B5H0410	08/16/2015	08/17/15 00:40	
1,4-Dichlorobenzene	ND	2	1	B5H0410	08/16/2015	08/17/15 00:40	
1,4-Dioxane	ND	0.90	1	B5H0410	08/16/2015	08/17/15 00:40	
2,2,4-Trimethylpentane	**4**	1	1	B5H0410	08/16/2015	08/17/15 00:40	
2-Butanone	**0.94**	0.74	1	B5H0410	08/16/2015	08/17/15 00:40	
2-Chloroethyl vinyl ether	ND	1	1	B5H0410	08/16/2015	08/17/15 00:40	
2-Chlorotoluene	ND	1	1	B5H0410	08/16/2015	08/17/15 00:40	
2-Hexanone	ND	1	1	B5H0410	08/16/2015	08/17/15 00:40	
2-Propanol	**2000**	60	100	B5H0463	08/17/2015	08/17/15 21:57	
4-Chlorotoluene	ND	1	1	B5H0410	08/16/2015	08/17/15 00:40	
4-Ethyl Toluene	**2**	1	1	B5H0410	08/16/2015	08/17/15 00:40	
4-Methyl-2-pentanone	ND	1	1	B5H0410	08/16/2015	08/17/15 00:40	
Acetone	**30**	0.59	1	B5H0410	08/16/2015	08/17/15 00:40	
Acetonitrile	ND	0.42	1	B5H0410	08/16/2015	08/17/15 00:40	
Acrolein	ND	0.57	1	B5H0410	08/16/2015	08/17/15 00:40	
Acrylonitrile	ND	0.54	1	B5H0410	08/16/2015	08/17/15 00:40	
Benzene	**3**	0.80	1	B5H0410	08/16/2015	08/17/15 00:40	
Benzyl chloride	ND	1	1	B5H0410	08/16/2015	08/17/15 00:40	
Bromobenzene	ND	2	1	B5H0410	08/16/2015	08/17/15 00:40	
Bromodichloromethane	ND	2	1	B5H0410	08/16/2015	08/17/15 00:40	

Certificate of Analysis

Hushmand Associates, Inc.	Project Number : Parcel 22 - 637 S Clarence St, Los Angele
250 Goddard	Report To : Naresh Bellana
Irvine , CA 92618	Reported : 03/26/2018

Client Sample ID 637 CS VP-4
Lab ID: 1502794-04

Volatile Organic Compounds in AIR by TO-15 (Canister) **Analyst: MFR**

Analyte	Result (ug/m³)	PQL (ug/m³)	Dilution	Batch	Prepared	Date/Time Analyzed	Notes
Bromoform	ND	3	1	B5H0410	08/16/2015	08/17/15 00:40	
Bromomethane	ND	0.97	1	B5H0410	08/16/2015	08/17/15 00:40	
Carbon disulfide	ND	0.78	1	B5H0410	08/16/2015	08/17/15 00:40	
Carbon tetrachloride	ND	2	1	B5H0410	08/16/2015	08/17/15 00:40	
Chlorobenzene	ND	1	1	B5H0410	08/16/2015	08/17/15 00:40	
Chloroethane	ND	0.66	1	B5H0410	08/16/2015	08/17/15 00:40	
Chloroform	ND	1	1	B5H0410	08/16/2015	08/17/15 00:40	
Chloromethane	ND	0.52	1	B5H0410	08/16/2015	08/17/15 00:40	
cis-1,2-Dichloroethene	ND	0.99	1	B5H0410	08/16/2015	08/17/15 00:40	
cis-1,3-Dichloropropene	ND	1	1	B5H0410	08/16/2015	08/17/15 00:40	
Cyclohexane	**0.96**	0.86	1	B5H0410	08/16/2015	08/17/15 00:40	
Dibromochloromethane	ND	2	1	B5H0410	08/16/2015	08/17/15 00:40	
Dibromomethane	ND	2	1	B5H0410	08/16/2015	08/17/15 00:40	
Dichlorodifluoromethane	**10**	1	1	B5H0410	08/16/2015	08/17/15 00:40	
Dichlorotetrafluoroethane	ND	2	1	B5H0410	08/16/2015	08/17/15 00:40	
Ethanol	**5**	0.47	1	B5H0410	08/16/2015	08/17/15 00:40	
Ethylbenzene	**3**	1	1	B5H0410	08/16/2015	08/17/15 00:40	
Freon-113	ND	2	1	B5H0410	08/16/2015	08/17/15 00:40	
Hexachlorobutadiene	ND	3	1	B5H0410	08/16/2015	08/17/15 00:40	
Isopropylbenzene	ND	1	1	B5H0410	08/16/2015	08/17/15 00:40	
m,p-Xylene	**30**	4	1	B5H0410	08/16/2015	08/17/15 00:40	
Methylene chloride	**1**	0.87	1	B5H0410	08/16/2015	08/17/15 00:40	
MTBE	ND	0.90	1	B5H0410	08/16/2015	08/17/15 00:40	
n-Butylbenzene	ND	1	1	B5H0410	08/16/2015	08/17/15 00:40	
n-Propylbenzene	ND	1	1	B5H0410	08/16/2015	08/17/15 00:40	
Naphthalene	**3**	1	1	B5H0410	08/16/2015	08/17/15 00:40	
o-Xylene	**6**	1	1	B5H0410	08/16/2015	08/17/15 00:40	
p-Isopropyltoluene	ND	1	1	B5H0410	08/16/2015	08/17/15 00:40	
sec-Butylbenzene	ND	1	1	B5H0410	08/16/2015	08/17/15 00:40	
Styrene	ND	1	1	B5H0410	08/16/2015	08/17/15 00:40	
tert-Butylbenzene	ND	1	1	B5H0410	08/16/2015	08/17/15 00:40	
Tetrachloroethene	**120**	20	10	B5H0463	08/17/2015	08/18/15 03:12	
Toluene	**20**	0.94	1	B5H0410	08/16/2015	08/17/15 00:40	
trans-1,2-Dichloroethene	ND	0.99	1	B5H0410	08/16/2015	08/17/15 00:40	
trans-1,3-Dichloropropene	ND	1	1	B5H0410	08/16/2015	08/17/15 00:40	
Trichloroethene	ND	1	1	B5H0410	08/16/2015	08/17/15 00:40	
Trichlorofluoromethane	**90**	1	1	B5H0410	08/16/2015	08/17/15 00:40	

Certificate of Analysis

Hushmand Associates, Inc.	Project Number : Parcel 22 - 637 S Clarence St, Los Angele
250 Goddard	Report To : Naresh Bellana
Irvine , CA 92618	Reported : 03/26/2018

Client Sample ID 637 CS VP-4
Lab ID: 1502794-04

Volatile Organic Compounds in AIR by TO-15 (Canister)

Analyst: MFR

Analyte		Result (ug/m³)	PQL (ug/m³)	Dilution	Batch	Prepared	Date/Time Analyzed	Notes
Vinyl acetate		ND	0.88	1	B5H0410	08/16/2015	08/17/15 00:40	
Vinyl chloride		ND	0.64	1	B5H0410	08/16/2015	08/17/15 00:40	
Surrogate: 4-Bromofluorobenzene	*106 %*		*79.2 - 147*		B5H0463	08/17/2015	*08/17/15 21:57*	
Surrogate: 4-Bromofluorobenzene	*104 %*		*79.2 - 147*		B5H0463	08/17/2015	*08/18/15 03:12*	
Surrogate: 4-Bromofluorobenzene	*107 %*		*79.2 - 147*		B5H0410	08/16/2015	*08/17/15 00:40*	

Gasoline Range Organics in Air by TO-3

Analyst: MFR

Analyte		Result (ug/m³)	PQL (ug/m³)	Dilution	Batch	Prepared	Date/Time Analyzed	Notes
Gasoline Range Organics		**5200**	1000	10	B5H0425	08/17/2015	08/17/15 17:26	
Surrogate: 4-Bromofluorobenzene	*96.4 %*		*70 - 130*		B5H0425	08/17/2015	*08/17/15 17:26*	

Certificate of Analysis

Hushmand Associates, Inc.	Project Number : Parcel 22 - 637 S Clarence St, Los Angele
250 Goddard	Report To : Naresh Bellana
Irvine , CA 92618	Reported : 03/26/2018

Client Sample ID 637 CS VP-5
Lab ID: 1502794-05

Volatile Organic Compounds in AIR by TO-15 (Canister) **Analyst: MFR**

Analyte	Result (ug/m³)	PQL (ug/m³)	Dilution	Batch	Prepared	Date/Time Analyzed	Notes
1,1,1,2-Tetrachloroethane	ND	2	1	B5H0410	08/16/2015	08/17/15 01:19	
1,1,1-Trichloroethane	**30**	1	1	B5H0410	08/16/2015	08/17/15 01:19	
1,1,2,2-Tetrachloroethane	ND	2	1	B5H0410	08/16/2015	08/17/15 01:19	
1,1,2-Trichloroethane	ND	1	1	B5H0410	08/16/2015	08/17/15 01:19	
1,1-Dichloroethane	ND	1	1	B5H0410	08/16/2015	08/17/15 01:19	
1,1-Dichloroethene	ND	0.99	1	B5H0410	08/16/2015	08/17/15 01:19	
1,1-Dichloropropene	ND	1	1	B5H0410	08/16/2015	08/17/15 01:19	
1,2,3-Trichloropropane	ND	2	1	B5H0410	08/16/2015	08/17/15 01:19	
1,2,4-Trichlorobenzene	**2**	2	1	B5H0410	08/16/2015	08/17/15 01:19	
1,2,4-Trimethylbenzene	**4**	1	1	B5H0410	08/16/2015	08/17/15 01:19	
1,2-Dibromo-3-chloropropane	ND	2	1	B5H0410	08/16/2015	08/17/15 01:19	
1,2-Dibromoethane	ND	2	1	B5H0410	08/16/2015	08/17/15 01:19	
1,2-Dichlorobenzene	ND	2	1	B5H0410	08/16/2015	08/17/15 01:19	
1,2-Dichloroethane	ND	1	1	B5H0410	08/16/2015	08/17/15 01:19	
1,2-Dichloropropane	ND	1	1	B5H0410	08/16/2015	08/17/15 01:19	
1,3,5-Trimethylbenzene	**1**	1	1	B5H0410	08/16/2015	08/17/15 01:19	
1,3-Butadiene	ND	0.55	1	B5H0410	08/16/2015	08/17/15 01:19	
1,3-Dichlorobenzene	ND	2	1	B5H0410	08/16/2015	08/17/15 01:19	
1,4-Dichlorobenzene	ND	2	1	B5H0410	08/16/2015	08/17/15 01:19	
1,4-Dioxane	ND	0.90	1	B5H0410	08/16/2015	08/17/15 01:19	
2,2,4-Trimethylpentane	**3**	1	1	B5H0410	08/16/2015	08/17/15 01:19	
2-Butanone	**10**	0.74	1	B5H0410	08/16/2015	08/17/15 01:19	
2-Chloroethyl vinyl ether	ND	1	1	B5H0410	08/16/2015	08/17/15 01:19	
2-Chlorotoluene	ND	1	1	B5H0410	08/16/2015	08/17/15 01:19	
2-Hexanone	ND	1	1	B5H0410	08/16/2015	08/17/15 01:19	
2-Propanol	**3600**	60	100	B5H0463	08/17/2015	08/17/15 22:32	
4-Chlorotoluene	ND	1	1	B5H0410	08/16/2015	08/17/15 01:19	
4-Ethyl Toluene	ND	1	1	B5H0410	08/16/2015	08/17/15 01:19	
4-Methyl-2-pentanone	ND	1	1	B5H0410	08/16/2015	08/17/15 01:19	
Acetone	**370**	6	10	B5H0463	08/17/2015	08/18/15 03:51	
Acetonitrile	**1**	0.42	1	B5H0410	08/16/2015	08/17/15 01:19	
Acrolein	**7**	0.57	1	B5H0410	08/16/2015	08/17/15 01:19	
Acrylonitrile	ND	0.54	1	B5H0410	08/16/2015	08/17/15 01:19	
Benzene	**4**	0.80	1	B5H0410	08/16/2015	08/17/15 01:19	
Benzyl chloride	ND	1	1	B5H0410	08/16/2015	08/17/15 01:19	
Bromobenzene	ND	2	1	B5H0410	08/16/2015	08/17/15 01:19	
Bromodichloromethane	ND	2	1	B5H0410	08/16/2015	08/17/15 01:19	

Certificate of Analysis

Hushmand Associates, Inc.	Project Number : Parcel 22 - 637 S Clarence St, Los Angele
250 Goddard	Report To : Naresh Bellana
Irvine , CA 92618	Reported : 03/26/2018

Client Sample ID 637 CS VP-5
Lab ID: 1502794-05

Volatile Organic Compounds in AIR by TO-15 (Canister) **Analyst: MFR**

Analyte	Result (ug/m³)	PQL (ug/m³)	Dilution	Batch	Prepared	Date/Time Analyzed	Notes
Bromoform	ND	3	1	B5H0410	08/16/2015	08/17/15 01:19	
Bromomethane	ND	0.97	1	B5H0410	08/16/2015	08/17/15 01:19	
Carbon disulfide	**3**	0.78	1	B5H0410	08/16/2015	08/17/15 01:19	
Carbon tetrachloride	ND	2	1	B5H0410	08/16/2015	08/17/15 01:19	
Chlorobenzene	ND	1	1	B5H0410	08/16/2015	08/17/15 01:19	
Chloroethane	ND	0.66	1	B5H0410	08/16/2015	08/17/15 01:19	
Chloroform	ND	1	1	B5H0410	08/16/2015	08/17/15 01:19	
Chloromethane	ND	0.52	1	B5H0410	08/16/2015	08/17/15 01:19	
cis-1,2-Dichloroethene	ND	0.99	1	B5H0410	08/16/2015	08/17/15 01:19	
cis-1,3-Dichloropropene	ND	1	1	B5H0410	08/16/2015	08/17/15 01:19	
Cyclohexane	**2**	0.86	1	B5H0410	08/16/2015	08/17/15 01:19	
Dibromochloromethane	ND	2	1	B5H0410	08/16/2015	08/17/15 01:19	
Dibromomethane	ND	2	1	B5H0410	08/16/2015	08/17/15 01:19	
Dichlorodifluoromethane	**7**	1	1	B5H0410	08/16/2015	08/17/15 01:19	
Dichlorotetrafluoroethane	ND	2	1	B5H0410	08/16/2015	08/17/15 01:19	
Ethanol	**60**	5	10	B5H0463	08/17/2015	08/18/15 03:51	
Ethylbenzene	**2**	1	1	B5H0410	08/16/2015	08/17/15 01:19	
Freon-113	ND	2	1	B5H0410	08/16/2015	08/17/15 01:19	
Hexachlorobutadiene	ND	3	1	B5H0410	08/16/2015	08/17/15 01:19	
Isopropylbenzene	ND	1	1	B5H0410	08/16/2015	08/17/15 01:19	
m,p-Xylene	**20**	4	1	B5H0410	08/16/2015	08/17/15 01:19	
Methylene chloride	**0.97**	0.87	1	B5H0410	08/16/2015	08/17/15 01:19	
MTBE	ND	0.90	1	B5H0410	08/16/2015	08/17/15 01:19	
n-Butylbenzene	ND	1	1	B5H0410	08/16/2015	08/17/15 01:19	
n-Propylbenzene	ND	1	1	B5H0410	08/16/2015	08/17/15 01:19	
Naphthalene	**5**	1	1	B5H0410	08/16/2015	08/17/15 01:19	
o-Xylene	**3**	1	1	B5H0410	08/16/2015	08/17/15 01:19	
p-Isopropyltoluene	**7**	1	1	B5H0410	08/16/2015	08/17/15 01:19	
sec-Butylbenzene	ND	1	1	B5H0410	08/16/2015	08/17/15 01:19	
Styrene	ND	1	1	B5H0410	08/16/2015	08/17/15 01:19	
tert-Butylbenzene	ND	1	1	B5H0410	08/16/2015	08/17/15 01:19	
Tetrachloroethene	**6**	2	1	B5H0410	08/16/2015	08/17/15 01:19	
Toluene	**10**	0.94	1	B5H0410	08/16/2015	08/17/15 01:19	
trans-1,2-Dichloroethene	ND	0.99	1	B5H0410	08/16/2015	08/17/15 01:19	
trans-1,3-Dichloropropene	ND	1	1	B5H0410	08/16/2015	08/17/15 01:19	
Trichloroethene	ND	1	1	B5H0410	08/16/2015	08/17/15 01:19	
Trichlorofluoromethane	**80**	1	1	B5H0410	08/16/2015	08/17/15 01:19	

Certificate of Analysis

Hushmand Associates, Inc.	Project Number : Parcel 22 - 637 S Clarence St, Los Angele
250 Goddard	Report To : Naresh Bellana
Irvine , CA 92618	Reported : 03/26/2018

Client Sample ID 637 CS VP-5
Lab ID: 1502794-05

Volatile Organic Compounds in AIR by TO-15 (Canister)

Analyst: MFR

Analyte		Result (ug/m³)	PQL (ug/m³)	Dilution	Batch	Prepared	Date/Time Analyzed	Notes
Vinyl acetate		**6**	0.88	1	B5H0410	08/16/2015	08/17/15 01:19	
Vinyl chloride		ND	0.64	1	B5H0410	08/16/2015	08/17/15 01:19	
Surrogate: 4-Bromofluorobenzene	*105 %*		*79.2 - 147*		B5H0463	08/17/2015	*08/18/15 03:51*	
Surrogate: 4-Bromofluorobenzene	*104 %*		*79.2 - 147*		B5H0463	08/17/2015	*08/17/15 22:32*	
Surrogate: 4-Bromofluorobenzene	*110 %*		*79.2 - 147*		B5H0410	08/16/2015	*08/17/15 01:19*	

Gasoline Range Organics in Air by TO-3

Analyst: MFR

Analyte		Result (ug/m³)	PQL (ug/m³)	Dilution	Batch	Prepared	Date/Time Analyzed	Notes
Gasoline Range Organics		**7700**	1000	10	B5H0425	08/17/2015	08/17/15 18:00	
Surrogate: 4-Bromofluorobenzene	*96.0 %*		*70 - 130*		B5H0425	08/17/2015	*08/17/15 18:00*	

Certificate of Analysis

Hushmand Associates, Inc.	Project Number : Parcel 22 - 637 S Clarence St, Los Angele
250 Goddard	Report To : Naresh Bellana
Irvine , CA 92618	Reported : 03/26/2018

Client Sample ID 637 CS VP-6
Lab ID: 1502794-06

Volatile Organic Compounds in AIR by TO-15 (Canister) **Analyst: MFR**

Analyte	Result (ug/m³)	PQL (ug/m³)	Dilution	Batch	Prepared	Date/Time Analyzed	Notes
1,1,1,2-Tetrachloroethane	ND	2	1	B5H0410	08/16/2015	08/17/15 02:00	
1,1,1-Trichloroethane	**5**	1	1	B5H0410	08/16/2015	08/17/15 02:00	
1,1,2,2-Tetrachloroethane	ND	2	1	B5H0410	08/16/2015	08/17/15 02:00	
1,1,2-Trichloroethane	ND	1	1	B5H0410	08/16/2015	08/17/15 02:00	
1,1-Dichloroethane	ND	1	1	B5H0410	08/16/2015	08/17/15 02:00	
1,1-Dichloroethene	ND	0.99	1	B5H0410	08/16/2015	08/17/15 02:00	
1,1-Dichloropropene	ND	1	1	B5H0410	08/16/2015	08/17/15 02:00	
1,2,3-Trichloropropane	ND	2	1	B5H0410	08/16/2015	08/17/15 02:00	
1,2,4-Trichlorobenzene	ND	2	1	B5H0410	08/16/2015	08/17/15 02:00	
1,2,4-Trimethylbenzene	**1**	1	1	B5H0410	08/16/2015	08/17/15 02:00	
1,2-Dibromo-3-chloropropane	ND	2	1	B5H0410	08/16/2015	08/17/15 02:00	
1,2-Dibromoethane	ND	2	1	B5H0410	08/16/2015	08/17/15 02:00	
1,2-Dichlorobenzene	ND	2	1	B5H0410	08/16/2015	08/17/15 02:00	
1,2-Dichloroethane	ND	1	1	B5H0410	08/16/2015	08/17/15 02:00	
1,2-Dichloropropane	ND	1	1	B5H0410	08/16/2015	08/17/15 02:00	
1,3,5-Trimethylbenzene	ND	1	1	B5H0410	08/16/2015	08/17/15 02:00	
1,3-Butadiene	ND	0.55	1	B5H0410	08/16/2015	08/17/15 02:00	
1,3-Dichlorobenzene	ND	2	1	B5H0410	08/16/2015	08/17/15 02:00	
1,4-Dichlorobenzene	ND	2	1	B5H0410	08/16/2015	08/17/15 02:00	
1,4-Dioxane	ND	0.90	1	B5H0410	08/16/2015	08/17/15 02:00	
2,2,4-Trimethylpentane	ND	1	1	B5H0410	08/16/2015	08/17/15 02:00	
2-Butanone	**1**	0.74	1	B5H0410	08/16/2015	08/17/15 02:00	
2-Chloroethyl vinyl ether	ND	1	1	B5H0410	08/16/2015	08/17/15 02:00	
2-Chlorotoluene	ND	1	1	B5H0410	08/16/2015	08/17/15 02:00	
2-Hexanone	ND	1	1	B5H0410	08/16/2015	08/17/15 02:00	
2-Propanol	**2000**	60	100	B5H0463	08/17/2015	08/17/15 23:07	
4-Chlorotoluene	ND	1	1	B5H0410	08/16/2015	08/17/15 02:00	
4-Ethyl Toluene	ND	1	1	B5H0410	08/16/2015	08/17/15 02:00	
4-Methyl-2-pentanone	ND	1	1	B5H0410	08/16/2015	08/17/15 02:00	
Acetone	**20**	0.59	1	B5H0410	08/16/2015	08/17/15 02:00	
Acetonitrile	ND	0.42	1	B5H0410	08/16/2015	08/17/15 02:00	
Acrolein	ND	0.57	1	B5H0410	08/16/2015	08/17/15 02:00	
Acrylonitrile	ND	0.54	1	B5H0410	08/16/2015	08/17/15 02:00	
Benzene	ND	0.80	1	B5H0410	08/16/2015	08/17/15 02:00	
Benzyl chloride	ND	1	1	B5H0410	08/16/2015	08/17/15 02:00	
Bromobenzene	ND	2	1	B5H0410	08/16/2015	08/17/15 02:00	
Bromodichloromethane	ND	2	1	B5H0410	08/16/2015	08/17/15 02:00	

Certificate of Analysis

Hushmand Associates, Inc.	Project Number : Parcel 22 - 637 S Clarence St, Los Angele
250 Goddard	Report To : Naresh Bellana
Irvine , CA 92618	Reported : 03/26/2018

Client Sample ID 637 CS VP-6
Lab ID: 1502794-06

Volatile Organic Compounds in AIR by TO-15 (Canister) **Analyst: MFR**

Analyte	Result (ug/m³)	PQL (ug/m³)	Dilution	Batch	Prepared	Date/Time Analyzed	Notes
Bromoform	ND	3	1	B5H0410	08/16/2015	08/17/15 02:00	
Bromomethane	ND	0.97	1	B5H0410	08/16/2015	08/17/15 02:00	
Carbon disulfide	ND	0.78	1	B5H0410	08/16/2015	08/17/15 02:00	
Carbon tetrachloride	ND	2	1	B5H0410	08/16/2015	08/17/15 02:00	
Chlorobenzene	ND	1	1	B5H0410	08/16/2015	08/17/15 02:00	
Chloroethane	ND	0.66	1	B5H0410	08/16/2015	08/17/15 02:00	
Chloroform	ND	1	1	B5H0410	08/16/2015	08/17/15 02:00	
Chloromethane	ND	0.52	1	B5H0410	08/16/2015	08/17/15 02:00	
cis-1,2-Dichloroethene	ND	0.99	1	B5H0410	08/16/2015	08/17/15 02:00	
cis-1,3-Dichloropropene	ND	1	1	B5H0410	08/16/2015	08/17/15 02:00	
Cyclohexane	ND	0.86	1	B5H0410	08/16/2015	08/17/15 02:00	
Dibromochloromethane	ND	2	1	B5H0410	08/16/2015	08/17/15 02:00	
Dibromomethane	ND	2	1	B5H0410	08/16/2015	08/17/15 02:00	
Dichlorodifluoromethane	**10**	1	1	B5H0410	08/16/2015	08/17/15 02:00	
Dichlorotetrafluoroethane	ND	2	1	B5H0410	08/16/2015	08/17/15 02:00	
Ethanol	**6**	0.47	1	B5H0410	08/16/2015	08/17/15 02:00	
Ethylbenzene	ND	1	1	B5H0410	08/16/2015	08/17/15 02:00	
Freon-113	ND	2	1	B5H0410	08/16/2015	08/17/15 02:00	
Hexachlorobutadiene	ND	3	1	B5H0410	08/16/2015	08/17/15 02:00	
Isopropylbenzene	ND	1	1	B5H0410	08/16/2015	08/17/15 02:00	
m,p-Xylene	**5**	4	1	B5H0410	08/16/2015	08/17/15 02:00	
Methylene chloride	ND	0.87	1	B5H0410	08/16/2015	08/17/15 02:00	
MTBE	ND	0.90	1	B5H0410	08/16/2015	08/17/15 02:00	
n-Butylbenzene	ND	1	1	B5H0410	08/16/2015	08/17/15 02:00	
n-Propylbenzene	ND	1	1	B5H0410	08/16/2015	08/17/15 02:00	
Naphthalene	ND	1	1	B5H0410	08/16/2015	08/17/15 02:00	
o-Xylene	ND	1	1	B5H0410	08/16/2015	08/17/15 02:00	
p-Isopropyltoluene	ND	1	1	B5H0410	08/16/2015	08/17/15 02:00	
sec-Butylbenzene	ND	1	1	B5H0410	08/16/2015	08/17/15 02:00	
Styrene	ND	1	1	B5H0410	08/16/2015	08/17/15 02:00	
tert-Butylbenzene	ND	1	1	B5H0410	08/16/2015	08/17/15 02:00	
Tetrachloroethene	**230**	20	10	B5H0463	08/17/2015	08/18/15 04:29	
Toluene	**3**	0.94	1	B5H0410	08/16/2015	08/17/15 02:00	
trans-1,2-Dichloroethene	ND	0.99	1	B5H0410	08/16/2015	08/17/15 02:00	
trans-1,3-Dichloropropene	ND	1	1	B5H0410	08/16/2015	08/17/15 02:00	
Trichloroethene	ND	1	1	B5H0410	08/16/2015	08/17/15 02:00	
Trichlorofluoromethane	**300**	10	10	B5H0463	08/17/2015	08/18/15 04:29	

Certificate of Analysis

Hushmand Associates, Inc.	Project Number : Parcel 22 - 637 S Clarence St, Los Angele
250 Goddard	Report To : Naresh Bellana
Irvine , CA 92618	Reported : 03/26/2018

Client Sample ID 637 CS VP-6
Lab ID: 1502794-06

Volatile Organic Compounds in AIR by TO-15 (Canister)

Analyst: MFR

Analyte		Result (ug/m³)	PQL (ug/m³)	Dilution	Batch	Prepared	Date/Time Analyzed	Notes
Vinyl acetate		ND	0.88	1	B5H0410	08/16/2015	08/17/15 02:00	
Vinyl chloride		ND	0.64	1	B5H0410	08/16/2015	08/17/15 02:00	
Surrogate: 4-Bromofluorobenzene	*104 %*		*79.2 - 147*		B5H0463	08/17/2015	*08/18/15 04:29*	
Surrogate: 4-Bromofluorobenzene	*104 %*		*79.2 - 147*		B5H0463	08/17/2015	*08/17/15 23:07*	
Surrogate: 4-Bromofluorobenzene	*109 %*		*79.2 - 147*		B5H0410	08/16/2015	*08/17/15 02:00*	

Gasoline Range Organics in Air by TO-3

Analyst: MFR

Analyte		Result (ug/m³)	PQL (ug/m³)	Dilution	Batch	Prepared	Date/Time Analyzed	Notes
Gasoline Range Organics		**6500**	1000	10	B5H0425	08/17/2015	08/17/15 20:51	
Surrogate: 4-Bromofluorobenzene	*99.2 %*		*70 - 130*		B5H0425	08/17/2015	*08/17/15 20:51*	

Certificate of Analysis

Hushmand Associates, Inc.	Project Number : Parcel 22 - 637 S Clarence St, Los Angele
250 Goddard	Report To : Naresh Bellana
Irvine , CA 92618	Reported : 03/26/2018

Client Sample ID 637 CS VP-7
Lab ID: 1502794-07

Volatile Organic Compounds in AIR by TO-15 (Canister) **Analyst: MFR**

Analyte	Result (ug/m³)	PQL (ug/m³)	Dilution	Batch	Prepared	Date/Time Analyzed	Notes
1,1,1,2-Tetrachloroethane	ND	2	1	B5H0410	08/16/2015	08/17/15 02:40	
1,1,1-Trichloroethane	**3**	1	1	B5H0410	08/16/2015	08/17/15 02:40	
1,1,2,2-Tetrachloroethane	ND	2	1	B5H0410	08/16/2015	08/17/15 02:40	
1,1,2-Trichloroethane	ND	1	1	B5H0410	08/16/2015	08/17/15 02:40	
1,1-Dichloroethane	ND	1	1	B5H0410	08/16/2015	08/17/15 02:40	
1,1-Dichloroethene	ND	0.99	1	B5H0410	08/16/2015	08/17/15 02:40	
1,1-Dichloropropene	ND	1	1	B5H0410	08/16/2015	08/17/15 02:40	
1,2,3-Trichloropropane	ND	2	1	B5H0410	08/16/2015	08/17/15 02:40	
1,2,4-Trichlorobenzene	ND	2	1	B5H0410	08/16/2015	08/17/15 02:40	
1,2,4-Trimethylbenzene	**2**	1	1	B5H0410	08/16/2015	08/17/15 02:40	
1,2-Dibromo-3-chloropropane	ND	2	1	B5H0410	08/16/2015	08/17/15 02:40	
1,2-Dibromoethane	ND	2	1	B5H0410	08/16/2015	08/17/15 02:40	
1,2-Dichlorobenzene	ND	2	1	B5H0410	08/16/2015	08/17/15 02:40	
1,2-Dichloroethane	ND	1	1	B5H0410	08/16/2015	08/17/15 02:40	
1,2-Dichloropropane	ND	1	1	B5H0410	08/16/2015	08/17/15 02:40	
1,3,5-Trimethylbenzene	ND	1	1	B5H0410	08/16/2015	08/17/15 02:40	
1,3-Butadiene	ND	0.55	1	B5H0410	08/16/2015	08/17/15 02:40	
1,3-Dichlorobenzene	ND	2	1	B5H0410	08/16/2015	08/17/15 02:40	
1,4-Dichlorobenzene	ND	2	1	B5H0410	08/16/2015	08/17/15 02:40	
1,4-Dioxane	ND	0.90	1	B5H0410	08/16/2015	08/17/15 02:40	
2,2,4-Trimethylpentane	ND	1	1	B5H0410	08/16/2015	08/17/15 02:40	
2-Butanone	**1**	0.74	1	B5H0410	08/16/2015	08/17/15 02:40	
2-Chloroethyl vinyl ether	ND	1	1	B5H0410	08/16/2015	08/17/15 02:40	
2-Chlorotoluene	ND	1	1	B5H0410	08/16/2015	08/17/15 02:40	
2-Hexanone	ND	1	1	B5H0410	08/16/2015	08/17/15 02:40	
2-Propanol	**1500**	60	100	B5H0463	08/17/2015	08/17/15 23:43	
4-Chlorotoluene	ND	1	1	B5H0410	08/16/2015	08/17/15 02:40	
4-Ethyl Toluene	ND	1	1	B5H0410	08/16/2015	08/17/15 02:40	
4-Methyl-2-pentanone	ND	1	1	B5H0410	08/16/2015	08/17/15 02:40	
Acetone	**20**	0.59	1	B5H0410	08/16/2015	08/17/15 02:40	
Acetonitrile	ND	0.42	1	B5H0410	08/16/2015	08/17/15 02:40	
Acrolein	ND	0.57	1	B5H0410	08/16/2015	08/17/15 02:40	
Acrylonitrile	ND	0.54	1	B5H0410	08/16/2015	08/17/15 02:40	
Benzene	ND	0.80	1	B5H0410	08/16/2015	08/17/15 02:40	
Benzyl chloride	ND	1	1	B5H0410	08/16/2015	08/17/15 02:40	
Bromobenzene	ND	2	1	B5H0410	08/16/2015	08/17/15 02:40	
Bromodichloromethane	ND	2	1	B5H0410	08/16/2015	08/17/15 02:40	

Certificate of Analysis

Hushmand Associates, Inc.	Project Number : Parcel 22 - 637 S Clarence St, Los Angele
250 Goddard	Report To : Naresh Bellana
Irvine , CA 92618	Reported : 03/26/2018

Client Sample ID 637 CS VP-7
Lab ID: 1502794-07

Volatile Organic Compounds in AIR by TO-15 (Canister) **Analyst: MFR**

Analyte	Result (ug/m³)	PQL (ug/m³)	Dilution	Batch	Prepared	Date/Time Analyzed	Notes
Bromoform	ND	3	1	B5H0410	08/16/2015	08/17/15 02:40	
Bromomethane	ND	0.97	1	B5H0410	08/16/2015	08/17/15 02:40	
Carbon disulfide	ND	0.78	1	B5H0410	08/16/2015	08/17/15 02:40	
Carbon tetrachloride	ND	2	1	B5H0410	08/16/2015	08/17/15 02:40	
Chlorobenzene	ND	1	1	B5H0410	08/16/2015	08/17/15 02:40	
Chloroethane	ND	0.66	1	B5H0410	08/16/2015	08/17/15 02:40	
Chloroform	ND	1	1	B5H0410	08/16/2015	08/17/15 02:40	
Chloromethane	ND	0.52	1	B5H0410	08/16/2015	08/17/15 02:40	
cis-1,2-Dichloroethene	ND	0.99	1	B5H0410	08/16/2015	08/17/15 02:40	
cis-1,3-Dichloropropene	ND	1	1	B5H0410	08/16/2015	08/17/15 02:40	
Cyclohexane	ND	0.86	1	B5H0410	08/16/2015	08/17/15 02:40	
Dibromochloromethane	ND	2	1	B5H0410	08/16/2015	08/17/15 02:40	
Dibromomethane	ND	2	1	B5H0410	08/16/2015	08/17/15 02:40	
Dichlorodifluoromethane	**7**	1	1	B5H0410	08/16/2015	08/17/15 02:40	
Dichlorotetrafluoroethane	ND	2	1	B5H0410	08/16/2015	08/17/15 02:40	
Ethanol	**3**	0.47	1	B5H0410	08/16/2015	08/17/15 02:40	
Ethylbenzene	ND	1	1	B5H0410	08/16/2015	08/17/15 02:40	
Freon-113	ND	2	1	B5H0410	08/16/2015	08/17/15 02:40	
Hexachlorobutadiene	ND	3	1	B5H0410	08/16/2015	08/17/15 02:40	
Isopropylbenzene	ND	1	1	B5H0410	08/16/2015	08/17/15 02:40	
m,p-Xylene	**6**	4	1	B5H0410	08/16/2015	08/17/15 02:40	
Methylene chloride	ND	0.87	1	B5H0410	08/16/2015	08/17/15 02:40	
MTBE	ND	0.90	1	B5H0410	08/16/2015	08/17/15 02:40	
n-Butylbenzene	ND	1	1	B5H0410	08/16/2015	08/17/15 02:40	
n-Propylbenzene	ND	1	1	B5H0410	08/16/2015	08/17/15 02:40	
Naphthalene	ND	1	1	B5H0410	08/16/2015	08/17/15 02:40	
o-Xylene	ND	1	1	B5H0410	08/16/2015	08/17/15 02:40	
p-Isopropyltoluene	ND	1	1	B5H0410	08/16/2015	08/17/15 02:40	
sec-Butylbenzene	ND	1	1	B5H0410	08/16/2015	08/17/15 02:40	
Styrene	ND	1	1	B5H0410	08/16/2015	08/17/15 02:40	
tert-Butylbenzene	ND	1	1	B5H0410	08/16/2015	08/17/15 02:40	
Tetrachloroethene	**180**	20	10	B5H0463	08/17/2015	08/18/15 05:11	
Toluene	**3**	0.94	1	B5H0410	08/16/2015	08/17/15 02:40	
trans-1,2-Dichloroethene	ND	0.99	1	B5H0410	08/16/2015	08/17/15 02:40	
trans-1,3-Dichloropropene	ND	1	1	B5H0410	08/16/2015	08/17/15 02:40	
Trichloroethene	ND	1	1	B5H0410	08/16/2015	08/17/15 02:40	
Trichlorofluoromethane	**50**	1	1	B5H0410	08/16/2015	08/17/15 02:40	

Certificate of Analysis

Hushmand Associates, Inc.	Project Number : Parcel 22 - 637 S Clarence St, Los Angele
250 Goddard	Report To : Naresh Bellana
Irvine , CA 92618	Reported : 03/26/2018

Client Sample ID 637 CS VP-7
Lab ID: 1502794-07

Volatile Organic Compounds in AIR by TO-15 (Canister)

Analyst: MFR

Analyte		Result (ug/m³)	PQL (ug/m³)	Dilution	Batch	Prepared	Date/Time Analyzed	Notes
Vinyl acetate		ND	0.88	1	B5H0410	08/16/2015	08/17/15 02:40	
Vinyl chloride		ND	0.64	1	B5H0410	08/16/2015	08/17/15 02:40	
Surrogate: 4-Bromofluorobenzene	*107 %*		*79.2 - 147*		B5H0410	08/16/2015	*08/17/15 02:40*	
Surrogate: 4-Bromofluorobenzene	*104 %*		*79.2 - 147*		B5H0463	08/17/2015	*08/18/15 05:11*	
Surrogate: 4-Bromofluorobenzene	*105 %*		*79.2 - 147*		B5H0463	08/17/2015	*08/17/15 23:43*	

Gasoline Range Organics in Air by TO-3

Analyst: MFR

Analyte		Result (ug/m³)	PQL (ug/m³)	Dilution	Batch	Prepared	Date/Time Analyzed	Notes
Gasoline Range Organics		**5100**	1000	10	B5H0425	08/17/2015	08/17/15 21:26	
Surrogate: 4-Bromofluorobenzene	*90.4 %*		*70 - 130*		B5H0425	08/17/2015	*08/17/15 21:26*	

Certificate of Analysis

Hushmand Associates, Inc.	Project Number : Parcel 22 - 637 S Clarence St, Los Angele
250 Goddard	Report To : Naresh Bellana
Irvine , CA 92618	Reported : 03/26/2018

Client Sample ID 637 CS VP-8
Lab ID: 1502794-08

Volatile Organic Compounds in AIR by TO-15 (Canister) **Analyst: MFR**

Analyte	Result (ug/m³)	PQL (ug/m³)	Dilution	Batch	Prepared	Date/Time Analyzed	Notes
1,1,1,2-Tetrachloroethane	ND	2	1	B5H0410	08/16/2015	08/17/15 03:21	
1,1,1-Trichloroethane	**5**	1	1	B5H0410	08/16/2015	08/17/15 03:21	
1,1,2,2-Tetrachloroethane	ND	2	1	B5H0410	08/16/2015	08/17/15 03:21	
1,1,2-Trichloroethane	ND	1	1	B5H0410	08/16/2015	08/17/15 03:21	
1,1-Dichloroethane	ND	1	1	B5H0410	08/16/2015	08/17/15 03:21	
1,1-Dichloroethene	ND	0.99	1	B5H0410	08/16/2015	08/17/15 03:21	
1,1-Dichloropropene	ND	1	1	B5H0410	08/16/2015	08/17/15 03:21	
1,2,3-Trichloropropane	ND	2	1	B5H0410	08/16/2015	08/17/15 03:21	
1,2,4-Trichlorobenzene	ND	2	1	B5H0410	08/16/2015	08/17/15 03:21	
1,2,4-Trimethylbenzene	**2**	1	1	B5H0410	08/16/2015	08/17/15 03:21	
1,2-Dibromo-3-chloropropane	ND	2	1	B5H0410	08/16/2015	08/17/15 03:21	
1,2-Dibromoethane	ND	2	1	B5H0410	08/16/2015	08/17/15 03:21	
1,2-Dichlorobenzene	ND	2	1	B5H0410	08/16/2015	08/17/15 03:21	
1,2-Dichloroethane	ND	1	1	B5H0410	08/16/2015	08/17/15 03:21	
1,2-Dichloropropane	ND	1	1	B5H0410	08/16/2015	08/17/15 03:21	
1,3,5-Trimethylbenzene	ND	1	1	B5H0410	08/16/2015	08/17/15 03:21	
1,3-Butadiene	ND	0.55	1	B5H0410	08/16/2015	08/17/15 03:21	
1,3-Dichlorobenzene	ND	2	1	B5H0410	08/16/2015	08/17/15 03:21	
1,4-Dichlorobenzene	ND	2	1	B5H0410	08/16/2015	08/17/15 03:21	
1,4-Dioxane	ND	0.90	1	B5H0410	08/16/2015	08/17/15 03:21	
2,2,4-Trimethylpentane	ND	1	1	B5H0410	08/16/2015	08/17/15 03:21	
2-Butanone	**8**	0.74	1	B5H0410	08/16/2015	08/17/15 03:21	
2-Chloroethyl vinyl ether	ND	1	1	B5H0410	08/16/2015	08/17/15 03:21	
2-Chlorotoluene	ND	1	1	B5H0410	08/16/2015	08/17/15 03:21	
2-Hexanone	ND	1	1	B5H0410	08/16/2015	08/17/15 03:21	
2-Propanol	**2800**	60	100	B5H0463	08/17/2015	08/18/15 00:18	
4-Chlorotoluene	ND	1	1	B5H0410	08/16/2015	08/17/15 03:21	
4-Ethyl Toluene	ND	1	1	B5H0410	08/16/2015	08/17/15 03:21	
4-Methyl-2-pentanone	ND	1	1	B5H0410	08/16/2015	08/17/15 03:21	
Acetone	**80**	6	10	B5H0463	08/17/2015	08/18/15 05:56	
Acetonitrile	**0.65**	0.42	1	B5H0410	08/16/2015	08/17/15 03:21	
Acrolein	ND	0.57	1	B5H0410	08/16/2015	08/17/15 03:21	
Acrylonitrile	ND	0.54	1	B5H0410	08/16/2015	08/17/15 03:21	
Benzene	**2**	0.80	1	B5H0410	08/16/2015	08/17/15 03:21	
Benzyl chloride	ND	1	1	B5H0410	08/16/2015	08/17/15 03:21	
Bromobenzene	ND	2	1	B5H0410	08/16/2015	08/17/15 03:21	
Bromodichloromethane	ND	2	1	B5H0410	08/16/2015	08/17/15 03:21	

Certificate of Analysis

Hushmand Associates, Inc.	Project Number : Parcel 22 - 637 S Clarence St, Los Angele
250 Goddard	Report To : Naresh Bellana
Irvine , CA 92618	Reported : 03/26/2018

Client Sample ID 637 CS VP-8
Lab ID: 1502794-08

Volatile Organic Compounds in AIR by TO-15 (Canister) **Analyst: MFR**

Analyte	Result (ug/m³)	PQL (ug/m³)	Dilution	Batch	Prepared	Date/Time Analyzed	Notes
Bromoform	ND	3	1	B5H0410	08/16/2015	08/17/15 03:21	
Bromomethane	ND	0.97	1	B5H0410	08/16/2015	08/17/15 03:21	
Carbon disulfide	ND	0.78	1	B5H0410	08/16/2015	08/17/15 03:21	
Carbon tetrachloride	ND	2	1	B5H0410	08/16/2015	08/17/15 03:21	
Chlorobenzene	ND	1	1	B5H0410	08/16/2015	08/17/15 03:21	
Chloroethane	ND	0.66	1	B5H0410	08/16/2015	08/17/15 03:21	
Chloroform	ND	1	1	B5H0410	08/16/2015	08/17/15 03:21	
Chloromethane	ND	0.52	1	B5H0410	08/16/2015	08/17/15 03:21	
cis-1,2-Dichloroethene	ND	0.99	1	B5H0410	08/16/2015	08/17/15 03:21	
cis-1,3-Dichloropropene	ND	1	1	B5H0410	08/16/2015	08/17/15 03:21	
Cyclohexane	**1**	0.86	1	B5H0410	08/16/2015	08/17/15 03:21	
Dibromochloromethane	ND	2	1	B5H0410	08/16/2015	08/17/15 03:21	
Dibromomethane	ND	2	1	B5H0410	08/16/2015	08/17/15 03:21	
Dichlorodifluoromethane	**7**	1	1	B5H0410	08/16/2015	08/17/15 03:21	
Dichlorotetrafluoroethane	ND	2	1	B5H0410	08/16/2015	08/17/15 03:21	
Ethanol	**4**	0.47	1	B5H0410	08/16/2015	08/17/15 03:21	
Ethylbenzene	ND	1	1	B5H0410	08/16/2015	08/17/15 03:21	
Freon-113	ND	2	1	B5H0410	08/16/2015	08/17/15 03:21	
Hexachlorobutadiene	ND	3	1	B5H0410	08/16/2015	08/17/15 03:21	
Isopropylbenzene	ND	1	1	B5H0410	08/16/2015	08/17/15 03:21	
m,p-Xylene	**6**	4	1	B5H0410	08/16/2015	08/17/15 03:21	
Methylene chloride	**1**	0.87	1	B5H0410	08/16/2015	08/17/15 03:21	
MTBE	ND	0.90	1	B5H0410	08/16/2015	08/17/15 03:21	
n-Butylbenzene	ND	1	1	B5H0410	08/16/2015	08/17/15 03:21	
n-Propylbenzene	ND	1	1	B5H0410	08/16/2015	08/17/15 03:21	
Naphthalene	ND	1	1	B5H0410	08/16/2015	08/17/15 03:21	
o-Xylene	**1**	1	1	B5H0410	08/16/2015	08/17/15 03:21	
p-Isopropyltoluene	ND	1	1	B5H0410	08/16/2015	08/17/15 03:21	
sec-Butylbenzene	ND	1	1	B5H0410	08/16/2015	08/17/15 03:21	
Styrene	ND	1	1	B5H0410	08/16/2015	08/17/15 03:21	
tert-Butylbenzene	ND	1	1	B5H0410	08/16/2015	08/17/15 03:21	
Tetrachloroethene	**160**	20	10	B5H0463	08/17/2015	08/18/15 05:56	
Toluene	**4**	0.94	1	B5H0410	08/16/2015	08/17/15 03:21	
trans-1,2-Dichloroethene	ND	0.99	1	B5H0410	08/16/2015	08/17/15 03:21	
trans-1,3-Dichloropropene	ND	1	1	B5H0410	08/16/2015	08/17/15 03:21	
Trichloroethene	ND	1	1	B5H0410	08/16/2015	08/17/15 03:21	
Trichlorofluoromethane	**100**	1	1	B5H0410	08/16/2015	08/17/15 03:21	

Certificate of Analysis

Hushmand Associates, Inc.	Project Number : Parcel 22 - 637 S Clarence St, Los Angele
250 Goddard	Report To : Naresh Bellana
Irvine , CA 92618	Reported : 03/26/2018

Client Sample ID 637 CS VP-8
Lab ID: 1502794-08

Volatile Organic Compounds in AIR by TO-15 (Canister)

Analyst: MFR

Analyte		Result (ug/m³)	PQL (ug/m³)	Dilution	Batch	Prepared	Date/Time Analyzed	Notes
Vinyl acetate		**1**	0.88	1	B5H0410	08/16/2015	08/17/15 03:21	
Vinyl chloride		ND	0.64	1	B5H0410	08/16/2015	08/17/15 03:21	
Surrogate: 4-Bromofluorobenzene	*105 %*		*79.2 - 147*		B5H0463	08/17/2015	*08/18/15 05:56*	
Surrogate: 4-Bromofluorobenzene	*105 %*		*79.2 - 147*		B5H0463	08/17/2015	*08/18/15 00:18*	
Surrogate: 4-Bromofluorobenzene	*108 %*		*79.2 - 147*		B5H0410	08/16/2015	*08/17/15 03:21*	

Gasoline Range Organics in Air by TO-3

Analyst: MFR

Analyte		Result (ug/m³)	PQL (ug/m³)	Dilution	Batch	Prepared	Date/Time Analyzed	Notes
Gasoline Range Organics		**6100**	1000	10	B5H0425	08/17/2015	08/17/15 22:00	
Surrogate: 4-Bromofluorobenzene	*91.2 %*		*70 - 130*		B5H0425	08/17/2015	*08/17/15 22:00*	

Certificate of Analysis

Hushmand Associates, Inc.	Project Number : Parcel 22 - 637 S Clarence St, Los Angele
250 Goddard	Report To : Naresh Bellana
Irvine , CA 92618	Reported : 03/26/2018

Client Sample ID 637 CS VP-9
Lab ID: 1502794-09

Volatile Organic Compounds in AIR by TO-15 (Canister) **Analyst: MFR**

Analyte	Result (ug/m³)	PQL (ug/m³)	Dilution	Batch	Prepared	Date/Time Analyzed	Notes
1,1,1,2-Tetrachloroethane	ND	2	1	B5H0410	08/16/2015	08/17/15 04:02	
1,1,1-Trichloroethane	**4**	1	1	B5H0410	08/16/2015	08/17/15 04:02	
1,1,2,2-Tetrachloroethane	ND	2	1	B5H0410	08/16/2015	08/17/15 04:02	
1,1,2-Trichloroethane	ND	1	1	B5H0410	08/16/2015	08/17/15 04:02	
1,1-Dichloroethane	ND	1	1	B5H0410	08/16/2015	08/17/15 04:02	
1,1-Dichloroethene	ND	0.99	1	B5H0410	08/16/2015	08/17/15 04:02	
1,1-Dichloropropene	ND	1	1	B5H0410	08/16/2015	08/17/15 04:02	
1,2,3-Trichloropropane	ND	2	1	B5H0410	08/16/2015	08/17/15 04:02	
1,2,4-Trichlorobenzene	ND	2	1	B5H0410	08/16/2015	08/17/15 04:02	
1,2,4-Trimethylbenzene	**10**	1	1	B5H0410	08/16/2015	08/17/15 04:02	
1,2-Dibromo-3-chloropropane	ND	2	1	B5H0410	08/16/2015	08/17/15 04:02	
1,2-Dibromoethane	ND	2	1	B5H0410	08/16/2015	08/17/15 04:02	
1,2-Dichlorobenzene	ND	2	1	B5H0410	08/16/2015	08/17/15 04:02	
1,2-Dichloroethane	ND	1	1	B5H0410	08/16/2015	08/17/15 04:02	
1,2-Dichloropropane	ND	1	1	B5H0410	08/16/2015	08/17/15 04:02	
1,3,5-Trimethylbenzene	**3**	1	1	B5H0410	08/16/2015	08/17/15 04:02	
1,3-Butadiene	ND	0.55	1	B5H0410	08/16/2015	08/17/15 04:02	
1,3-Dichlorobenzene	ND	2	1	B5H0410	08/16/2015	08/17/15 04:02	
1,4-Dichlorobenzene	ND	2	1	B5H0410	08/16/2015	08/17/15 04:02	
1,4-Dioxane	ND	0.90	1	B5H0410	08/16/2015	08/17/15 04:02	
2,2,4-Trimethylpentane	ND	1	1	B5H0410	08/16/2015	08/17/15 04:02	
2-Butanone	**1**	0.74	1	B5H0410	08/16/2015	08/17/15 04:02	
2-Chloroethyl vinyl ether	ND	1	1	B5H0410	08/16/2015	08/17/15 04:02	
2-Chlorotoluene	ND	1	1	B5H0410	08/16/2015	08/17/15 04:02	
2-Hexanone	ND	1	1	B5H0410	08/16/2015	08/17/15 04:02	
2-Propanol	**1800**	60	100	B5H0463	08/17/2015	08/18/15 00:51	
4-Chlorotoluene	ND	1	1	B5H0410	08/16/2015	08/17/15 04:02	
4-Ethyl Toluene	**2**	1	1	B5H0410	08/16/2015	08/17/15 04:02	
4-Methyl-2-pentanone	ND	1	1	B5H0410	08/16/2015	08/17/15 04:02	
Acetone	**20**	0.59	1	B5H0410	08/16/2015	08/17/15 04:02	
Acetonitrile	ND	0.42	1	B5H0410	08/16/2015	08/17/15 04:02	
Acrolein	ND	0.57	1	B5H0410	08/16/2015	08/17/15 04:02	
Acrylonitrile	ND	0.54	1	B5H0410	08/16/2015	08/17/15 04:02	
Benzene	ND	0.80	1	B5H0410	08/16/2015	08/17/15 04:02	
Benzyl chloride	ND	1	1	B5H0410	08/16/2015	08/17/15 04:02	
Bromobenzene	ND	2	1	B5H0410	08/16/2015	08/17/15 04:02	
Bromodichloromethane	ND	2	1	B5H0410	08/16/2015	08/17/15 04:02	

Certificate of Analysis

Hushmand Associates, Inc.	Project Number : Parcel 22 - 637 S Clarence St, Los Angele
250 Goddard	Report To : Naresh Bellana
Irvine , CA 92618	Reported : 03/26/2018

Client Sample ID 637 CS VP-9
Lab ID: 1502794-09

Volatile Organic Compounds in AIR by TO-15 (Canister) **Analyst: MFR**

Analyte	Result (ug/m³)	PQL (ug/m³)	Dilution	Batch	Prepared	Date/Time Analyzed	Notes
Bromoform	ND	3	1	B5H0410	08/16/2015	08/17/15 04:02	
Bromomethane	ND	0.97	1	B5H0410	08/16/2015	08/17/15 04:02	
Carbon disulfide	ND	0.78	1	B5H0410	08/16/2015	08/17/15 04:02	
Carbon tetrachloride	ND	2	1	B5H0410	08/16/2015	08/17/15 04:02	
Chlorobenzene	ND	1	1	B5H0410	08/16/2015	08/17/15 04:02	
Chloroethane	ND	0.66	1	B5H0410	08/16/2015	08/17/15 04:02	
Chloroform	ND	1	1	B5H0410	08/16/2015	08/17/15 04:02	
Chloromethane	ND	0.52	1	B5H0410	08/16/2015	08/17/15 04:02	
cis-1,2-Dichloroethene	ND	0.99	1	B5H0410	08/16/2015	08/17/15 04:02	
cis-1,3-Dichloropropene	ND	1	1	B5H0410	08/16/2015	08/17/15 04:02	
Cyclohexane	**0.86**	0.86	1	B5H0410	08/16/2015	08/17/15 04:02	
Dibromochloromethane	ND	2	1	B5H0410	08/16/2015	08/17/15 04:02	
Dibromomethane	ND	2	1	B5H0410	08/16/2015	08/17/15 04:02	
Dichlorodifluoromethane	ND	1	1	B5H0410	08/16/2015	08/17/15 04:02	
Dichlorotetrafluoroethane	ND	2	1	B5H0410	08/16/2015	08/17/15 04:02	
Ethanol	**4**	0.47	1	B5H0410	08/16/2015	08/17/15 04:02	
Ethylbenzene	**1**	1	1	B5H0410	08/16/2015	08/17/15 04:02	
Freon-113	ND	2	1	B5H0410	08/16/2015	08/17/15 04:02	
Hexachlorobutadiene	ND	3	1	B5H0410	08/16/2015	08/17/15 04:02	
Isopropylbenzene	ND	1	1	B5H0410	08/16/2015	08/17/15 04:02	
m,p-Xylene	**10**	4	1	B5H0410	08/16/2015	08/17/15 04:02	
Methylene chloride	ND	0.87	1	B5H0410	08/16/2015	08/17/15 04:02	
MTBE	ND	0.90	1	B5H0410	08/16/2015	08/17/15 04:02	
n-Butylbenzene	ND	1	1	B5H0410	08/16/2015	08/17/15 04:02	
n-Propylbenzene	ND	1	1	B5H0410	08/16/2015	08/17/15 04:02	
Naphthalene	**3**	1	1	B5H0410	08/16/2015	08/17/15 04:02	
o-Xylene	**3**	1	1	B5H0410	08/16/2015	08/17/15 04:02	
p-Isopropyltoluene	ND	1	1	B5H0410	08/16/2015	08/17/15 04:02	
sec-Butylbenzene	ND	1	1	B5H0410	08/16/2015	08/17/15 04:02	
Styrene	ND	1	1	B5H0410	08/16/2015	08/17/15 04:02	
tert-Butylbenzene	ND	1	1	B5H0410	08/16/2015	08/17/15 04:02	
Tetrachloroethene	**270**	20	10	B5H0463	08/17/2015	08/18/15 06:39	
Toluene	**3**	0.94	1	B5H0410	08/16/2015	08/17/15 04:02	
trans-1,2-Dichloroethene	ND	0.99	1	B5H0410	08/16/2015	08/17/15 04:02	
trans-1,3-Dichloropropene	ND	1	1	B5H0410	08/16/2015	08/17/15 04:02	
Trichloroethene	ND	1	1	B5H0410	08/16/2015	08/17/15 04:02	
Trichlorofluoromethane	**170**	10	10	B5H0463	08/17/2015	08/18/15 06:39	

Certificate of Analysis

Hushmand Associates, Inc.	Project Number : Parcel 22 - 637 S Clarence St, Los Angele
250 Goddard	Report To : Naresh Bellana
Irvine , CA 92618	Reported : 03/26/2018

Client Sample ID 637 CS VP-9
Lab ID: 1502794-09

Volatile Organic Compounds in AIR by TO-15 (Canister)

Analyst: MFR

Analyte		Result (ug/m³)	PQL (ug/m³)	Dilution	Batch	Prepared	Date/Time Analyzed	Notes
Vinyl acetate		ND	0.88	1	B5H0410	08/16/2015	08/17/15 04:02	
Vinyl chloride		ND	0.64	1	B5H0410	08/16/2015	08/17/15 04:02	
Surrogate: 4-Bromofluorobenzene	*104 %*		*79.2 - 147*		B5H0463	08/17/2015	*08/18/15 00:51*	
Surrogate: 4-Bromofluorobenzene	*102 %*		*79.2 - 147*		B5H0463	08/17/2015	*08/18/15 06:39*	
Surrogate: 4-Bromofluorobenzene	*107 %*		*79.2 - 147*		B5H0410	08/16/2015	*08/17/15 04:02*	

Gasoline Range Organics in Air by TO-3

Analyst: MFR

Analyte		Result (ug/m³)	PQL (ug/m³)	Dilution	Batch	Prepared	Date/Time Analyzed	Notes
Gasoline Range Organics		**5800**	1000	10	B5H0425	08/17/2015	08/17/15 22:34	
Surrogate: 4-Bromofluorobenzene	*96.4 %*		*70 - 130*		B5H0425	08/17/2015	*08/17/15 22:34*	

Certificate of Analysis

Hushmand Associates, Inc.	Project Number : Parcel 22 - 637 S Clarence St, Los Angele
250 Goddard	Report To : Naresh Bellana
Irvine , CA 92618	Reported : 03/26/2018

Client Sample ID 637 CS VP-10
Lab ID: 1502794-10

Volatile Organic Compounds in AIR by TO-15 (Canister) **Analyst: MFR**

Analyte	Result (ug/m³)	PQL (ug/m³)	Dilution	Batch	Prepared	Date/Time Analyzed	Notes
1,1,1,2-Tetrachloroethane	ND	2	1	B5H0410	08/16/2015	08/17/15 04:47	
1,1,1-Trichloroethane	ND	1	1	B5H0410	08/16/2015	08/17/15 04:47	
1,1,2,2-Tetrachloroethane	ND	2	1	B5H0410	08/16/2015	08/17/15 04:47	
1,1,2-Trichloroethane	ND	1	1	B5H0410	08/16/2015	08/17/15 04:47	
1,1-Dichloroethane	ND	1	1	B5H0410	08/16/2015	08/17/15 04:47	
1,1-Dichloroethene	ND	0.99	1	B5H0410	08/16/2015	08/17/15 04:47	
1,1-Dichloropropene	ND	1	1	B5H0410	08/16/2015	08/17/15 04:47	
1,2,3-Trichloropropane	ND	2	1	B5H0410	08/16/2015	08/17/15 04:47	
1,2,4-Trichlorobenzene	ND	2	1	B5H0410	08/16/2015	08/17/15 04:47	
1,2,4-Trimethylbenzene	**2**	1	1	B5H0410	08/16/2015	08/17/15 04:47	
1,2-Dibromo-3-chloropropane	ND	2	1	B5H0410	08/16/2015	08/17/15 04:47	
1,2-Dibromoethane	ND	2	1	B5H0410	08/16/2015	08/17/15 04:47	
1,2-Dichlorobenzene	ND	2	1	B5H0410	08/16/2015	08/17/15 04:47	
1,2-Dichloroethane	ND	1	1	B5H0410	08/16/2015	08/17/15 04:47	
1,2-Dichloropropane	ND	1	1	B5H0410	08/16/2015	08/17/15 04:47	
1,3,5-Trimethylbenzene	ND	1	1	B5H0410	08/16/2015	08/17/15 04:47	
1,3-Butadiene	**3**	0.55	1	B5H0410	08/16/2015	08/17/15 04:47	
1,3-Dichlorobenzene	ND	2	1	B5H0410	08/16/2015	08/17/15 04:47	
1,4-Dichlorobenzene	ND	2	1	B5H0410	08/16/2015	08/17/15 04:47	
1,4-Dioxane	ND	0.90	1	B5H0410	08/16/2015	08/17/15 04:47	
2,2,4-Trimethylpentane	**4**	1	1	B5H0410	08/16/2015	08/17/15 04:47	
2-Butanone	**2**	0.74	1	B5H0410	08/16/2015	08/17/15 04:47	
2-Chloroethyl vinyl ether	ND	1	1	B5H0410	08/16/2015	08/17/15 04:47	
2-Chlorotoluene	ND	1	1	B5H0410	08/16/2015	08/17/15 04:47	
2-Hexanone	ND	1	1	B5H0410	08/16/2015	08/17/15 04:47	
2-Propanol	**2000**	60	100	B5H0464	08/17/2015	08/18/15 22:45	
4-Chlorotoluene	ND	1	1	B5H0410	08/16/2015	08/17/15 04:47	
4-Ethyl Toluene	ND	1	1	B5H0410	08/16/2015	08/17/15 04:47	
4-Methyl-2-pentanone	ND	1	1	B5H0410	08/16/2015	08/17/15 04:47	
Acetone	**40**	6	10	B5H0463	08/17/2015	08/18/15 01:25	
Acetonitrile	ND	0.42	1	B5H0410	08/16/2015	08/17/15 04:47	
Acrolein	**2**	0.57	1	B5H0410	08/16/2015	08/17/15 04:47	
Acrylonitrile	ND	0.54	1	B5H0410	08/16/2015	08/17/15 04:47	
Benzene	**4**	0.80	1	B5H0410	08/16/2015	08/17/15 04:47	
Benzyl chloride	ND	1	1	B5H0410	08/16/2015	08/17/15 04:47	
Bromobenzene	ND	2	1	B5H0410	08/16/2015	08/17/15 04:47	
Bromodichloromethane	ND	2	1	B5H0410	08/16/2015	08/17/15 04:47	

Certificate of Analysis

Hushmand Associates, Inc.	Project Number : Parcel 22 - 637 S Clarence St, Los Angele
250 Goddard	Report To : Naresh Bellana
Irvine , CA 92618	Reported : 03/26/2018

Client Sample ID 637 CS VP-10
Lab ID: 1502794-10

Volatile Organic Compounds in AIR by TO-15 (Canister) **Analyst: MFR**

Analyte	Result (ug/m³)	PQL (ug/m³)	Dilution	Batch	Prepared	Date/Time Analyzed	Notes
Bromoform	ND	3	1	B5H0410	08/16/2015	08/17/15 04:47	
Bromomethane	ND	0.97	1	B5H0410	08/16/2015	08/17/15 04:47	
Carbon disulfide	ND	0.78	1	B5H0410	08/16/2015	08/17/15 04:47	
Carbon tetrachloride	ND	2	1	B5H0410	08/16/2015	08/17/15 04:47	
Chlorobenzene	ND	1	1	B5H0410	08/16/2015	08/17/15 04:47	
Chloroethane	ND	0.66	1	B5H0410	08/16/2015	08/17/15 04:47	
Chloroform	ND	1	1	B5H0410	08/16/2015	08/17/15 04:47	
Chloromethane	**0.66**	0.52	1	B5H0410	08/16/2015	08/17/15 04:47	
cis-1,2-Dichloroethene	ND	0.99	1	B5H0410	08/16/2015	08/17/15 04:47	
cis-1,3-Dichloropropene	ND	1	1	B5H0410	08/16/2015	08/17/15 04:47	
Cyclohexane	**2**	0.86	1	B5H0410	08/16/2015	08/17/15 04:47	
Dibromochloromethane	ND	2	1	B5H0410	08/16/2015	08/17/15 04:47	
Dibromomethane	ND	2	1	B5H0410	08/16/2015	08/17/15 04:47	
Dichlorodifluoromethane	ND	1	1	B5H0410	08/16/2015	08/17/15 04:47	
Dichlorotetrafluoroethane	ND	2	1	B5H0410	08/16/2015	08/17/15 04:47	
Ethanol	**20**	0.47	1	B5H0410	08/16/2015	08/17/15 04:47	
Ethylbenzene	**2**	1	1	B5H0410	08/16/2015	08/17/15 04:47	
Freon-113	ND	2	1	B5H0410	08/16/2015	08/17/15 04:47	
Hexachlorobutadiene	ND	3	1	B5H0410	08/16/2015	08/17/15 04:47	
Isopropylbenzene	ND	1	1	B5H0410	08/16/2015	08/17/15 04:47	
m,p-Xylene	**10**	4	1	B5H0410	08/16/2015	08/17/15 04:47	
Methylene chloride	**2**	0.87	1	B5H0410	08/16/2015	08/17/15 04:47	
MTBE	ND	0.90	1	B5H0410	08/16/2015	08/17/15 04:47	
n-Butylbenzene	ND	1	1	B5H0410	08/16/2015	08/17/15 04:47	
n-Propylbenzene	ND	1	1	B5H0410	08/16/2015	08/17/15 04:47	
Naphthalene	ND	1	1	B5H0410	08/16/2015	08/17/15 04:47	
o-Xylene	**2**	1	1	B5H0410	08/16/2015	08/17/15 04:47	
p-Isopropyltoluene	ND	1	1	B5H0410	08/16/2015	08/17/15 04:47	
sec-Butylbenzene	ND	1	1	B5H0410	08/16/2015	08/17/15 04:47	
Styrene	ND	1	1	B5H0410	08/16/2015	08/17/15 04:47	
tert-Butylbenzene	ND	1	1	B5H0410	08/16/2015	08/17/15 04:47	
Tetrachloroethene	**2**	2	1	B5H0410	08/16/2015	08/17/15 04:47	
Toluene	**10**	0.94	1	B5H0410	08/16/2015	08/17/15 04:47	
trans-1,2-Dichloroethene	ND	0.99	1	B5H0410	08/16/2015	08/17/15 04:47	
trans-1,3-Dichloropropene	ND	1	1	B5H0410	08/16/2015	08/17/15 04:47	
Trichloroethene	ND	1	1	B5H0410	08/16/2015	08/17/15 04:47	
Trichlorofluoromethane	**3**	1	1	B5H0410	08/16/2015	08/17/15 04:47	

Certificate of Analysis

Hushmand Associates, Inc.	Project Number : Parcel 22 - 637 S Clarence St, Los Angele
250 Goddard	Report To : Naresh Bellana
Irvine , CA 92618	Reported : 03/26/2018

Client Sample ID 637 CS VP-10
Lab ID: 1502794-10

Volatile Organic Compounds in AIR by TO-15 (Canister)

Analyst: MFR

Analyte		Result (ug/m³)	PQL (ug/m³)	Dilution	Batch	Prepared	Date/Time Analyzed	Notes
Vinyl acetate		**2**	0.88	1	B5H0410	08/16/2015	08/17/15 04:47	
Vinyl chloride		ND	0.64	1	B5H0410	08/16/2015	08/17/15 04:47	
Surrogate: 4-Bromofluorobenzene	*105 %*		*79.2 - 147*		B5H0463	08/17/2015	*08/18/15 01:25*	
Surrogate: 4-Bromofluorobenzene	*99.6 %*		*79.2 - 147*		B5H0464	08/17/2015	*08/18/15 22:45*	
Surrogate: 4-Bromofluorobenzene	*108 %*		*79.2 - 147*		B5H0410	08/16/2015	*08/17/15 04:47*	

Gasoline Range Organics in Air by TO-3

Analyst: MFR

Analyte		Result (ug/m³)	PQL (ug/m³)	Dilution	Batch	Prepared	Date/Time Analyzed	Notes
Gasoline Range Organics		**3600**	1000	10	B5H0465	08/18/2015	08/18/15 10:34	
Surrogate: 4-Bromofluorobenzene	*98.4 %*		*70 - 130*		B5H0465	08/18/2015	*08/18/15 10:34*	

Certificate of Analysis

Hushmand Associates, Inc.	Project Number : Parcel 22 - 637 S Clarence St, Los Angele
250 Goddard	Report To : Naresh Bellana
Irvine , CA 92618	Reported : 03/26/2018

Client Sample ID 637 CS VP-11
Lab ID: 1502794-11

Volatile Organic Compounds in AIR by TO-15 (Canister) **Analyst: MFR**

Analyte	Result (ug/m³)	PQL (ug/m³)	Dilution	Batch	Prepared	Date/Time Analyzed	Notes
1,1,1,2-Tetrachloroethane	ND	2	1	B5H0410	08/16/2015	08/17/15 05:30	
1,1,1-Trichloroethane	**3**	1	1	B5H0410	08/16/2015	08/17/15 05:30	
1,1,2,2-Tetrachloroethane	ND	2	1	B5H0410	08/16/2015	08/17/15 05:30	
1,1,2-Trichloroethane	ND	1	1	B5H0410	08/16/2015	08/17/15 05:30	
1,1-Dichloroethane	ND	1	1	B5H0410	08/16/2015	08/17/15 05:30	
1,1-Dichloroethene	ND	0.99	1	B5H0410	08/16/2015	08/17/15 05:30	
1,1-Dichloropropene	ND	1	1	B5H0410	08/16/2015	08/17/15 05:30	
1,2,3-Trichloropropane	ND	2	1	B5H0410	08/16/2015	08/17/15 05:30	
1,2,4-Trichlorobenzene	ND	2	1	B5H0410	08/16/2015	08/17/15 05:30	
1,2,4-Trimethylbenzene	**4**	1	1	B5H0410	08/16/2015	08/17/15 05:30	
1,2-Dibromo-3-chloropropane	ND	2	1	B5H0410	08/16/2015	08/17/15 05:30	
1,2-Dibromoethane	ND	2	1	B5H0410	08/16/2015	08/17/15 05:30	
1,2-Dichlorobenzene	ND	2	1	B5H0410	08/16/2015	08/17/15 05:30	
1,2-Dichloroethane	ND	1	1	B5H0410	08/16/2015	08/17/15 05:30	
1,2-Dichloropropane	ND	1	1	B5H0410	08/16/2015	08/17/15 05:30	
1,3,5-Trimethylbenzene	**1**	1	1	B5H0410	08/16/2015	08/17/15 05:30	
1,3-Butadiene	ND	0.55	1	B5H0410	08/16/2015	08/17/15 05:30	
1,3-Dichlorobenzene	ND	2	1	B5H0410	08/16/2015	08/17/15 05:30	
1,4-Dichlorobenzene	ND	2	1	B5H0410	08/16/2015	08/17/15 05:30	
1,4-Dioxane	ND	0.90	1	B5H0410	08/16/2015	08/17/15 05:30	
2,2,4-Trimethylpentane	ND	1	1	B5H0410	08/16/2015	08/17/15 05:30	
2-Butanone	**2**	0.74	1	B5H0410	08/16/2015	08/17/15 05:30	
2-Chloroethyl vinyl ether	ND	1	1	B5H0410	08/16/2015	08/17/15 05:30	
2-Chlorotoluene	ND	1	1	B5H0410	08/16/2015	08/17/15 05:30	
2-Hexanone	ND	1	1	B5H0410	08/16/2015	08/17/15 05:30	
2-Propanol	**1800**	60	100	B5H0464	08/17/2015	08/18/15 23:26	
4-Chlorotoluene	ND	1	1	B5H0410	08/16/2015	08/17/15 05:30	
4-Ethyl Toluene	**1**	1	1	B5H0410	08/16/2015	08/17/15 05:30	
4-Methyl-2-pentanone	ND	1	1	B5H0410	08/16/2015	08/17/15 05:30	
Acetone	**20**	0.59	1	B5H0410	08/16/2015	08/17/15 05:30	
Acetonitrile	ND	0.42	1	B5H0410	08/16/2015	08/17/15 05:30	
Acrolein	ND	0.57	1	B5H0410	08/16/2015	08/17/15 05:30	
Acrylonitrile	ND	0.54	1	B5H0410	08/16/2015	08/17/15 05:30	
Benzene	**2**	0.80	1	B5H0410	08/16/2015	08/17/15 05:30	
Benzyl chloride	ND	1	1	B5H0410	08/16/2015	08/17/15 05:30	
Bromobenzene	ND	2	1	B5H0410	08/16/2015	08/17/15 05:30	
Bromodichloromethane	ND	2	1	B5H0410	08/16/2015	08/17/15 05:30	

Certificate of Analysis

Hushmand Associates, Inc.	Project Number : Parcel 22 - 637 S Clarence St, Los Angele
250 Goddard	Report To : Naresh Bellana
Irvine , CA 92618	Reported : 03/26/2018

Client Sample ID 637 CS VP-11
Lab ID: 1502794-11

Volatile Organic Compounds in AIR by TO-15 (Canister) **Analyst: MFR**

Analyte	Result (ug/m³)	PQL (ug/m³)	Dilution	Batch	Prepared	Date/Time Analyzed	Notes
Bromoform	ND	3	1	B5H0410	08/16/2015	08/17/15 05:30	
Bromomethane	ND	0.97	1	B5H0410	08/16/2015	08/17/15 05:30	
Carbon disulfide	ND	0.78	1	B5H0410	08/16/2015	08/17/15 05:30	
Carbon tetrachloride	ND	2	1	B5H0410	08/16/2015	08/17/15 05:30	
Chlorobenzene	ND	1	1	B5H0410	08/16/2015	08/17/15 05:30	
Chloroethane	ND	0.66	1	B5H0410	08/16/2015	08/17/15 05:30	
Chloroform	ND	1	1	B5H0410	08/16/2015	08/17/15 05:30	
Chloromethane	ND	0.52	1	B5H0410	08/16/2015	08/17/15 05:30	
cis-1,2-Dichloroethene	ND	0.99	1	B5H0410	08/16/2015	08/17/15 05:30	
cis-1,3-Dichloropropene	ND	1	1	B5H0410	08/16/2015	08/17/15 05:30	
Cyclohexane	ND	0.86	1	B5H0410	08/16/2015	08/17/15 05:30	
Dibromochloromethane	ND	2	1	B5H0410	08/16/2015	08/17/15 05:30	
Dibromomethane	ND	2	1	B5H0410	08/16/2015	08/17/15 05:30	
Dichlorodifluoromethane	ND	1	1	B5H0410	08/16/2015	08/17/15 05:30	
Dichlorotetrafluoroethane	ND	2	1	B5H0410	08/16/2015	08/17/15 05:30	
Ethanol	**2**	0.47	1	B5H0410	08/16/2015	08/17/15 05:30	
Ethylbenzene	**2**	1	1	B5H0410	08/16/2015	08/17/15 05:30	
Freon-113	ND	2	1	B5H0410	08/16/2015	08/17/15 05:30	
Hexachlorobutadiene	ND	3	1	B5H0410	08/16/2015	08/17/15 05:30	
Isopropylbenzene	ND	1	1	B5H0410	08/16/2015	08/17/15 05:30	
m,p-Xylene	**20**	4	1	B5H0410	08/16/2015	08/17/15 05:30	
Methylene chloride	ND	0.87	1	B5H0410	08/16/2015	08/17/15 05:30	
MTBE	ND	0.90	1	B5H0410	08/16/2015	08/17/15 05:30	
n-Butylbenzene	ND	1	1	B5H0410	08/16/2015	08/17/15 05:30	
n-Propylbenzene	ND	1	1	B5H0410	08/16/2015	08/17/15 05:30	
Naphthalene	ND	1	1	B5H0410	08/16/2015	08/17/15 05:30	
o-Xylene	**4**	1	1	B5H0410	08/16/2015	08/17/15 05:30	
p-Isopropyltoluene	ND	1	1	B5H0410	08/16/2015	08/17/15 05:30	
sec-Butylbenzene	ND	1	1	B5H0410	08/16/2015	08/17/15 05:30	
Styrene	ND	1	1	B5H0410	08/16/2015	08/17/15 05:30	
tert-Butylbenzene	ND	1	1	B5H0410	08/16/2015	08/17/15 05:30	
Tetrachloroethene	**180**	20	10	B5H0463	08/17/2015	08/18/15 02:00	
Toluene	**20**	0.94	1	B5H0410	08/16/2015	08/17/15 05:30	
trans-1,2-Dichloroethene	ND	0.99	1	B5H0410	08/16/2015	08/17/15 05:30	
trans-1,3-Dichloropropene	ND	1	1	B5H0410	08/16/2015	08/17/15 05:30	
Trichloroethene	ND	1	1	B5H0410	08/16/2015	08/17/15 05:30	
Trichlorofluoromethane	**40**	1	1	B5H0410	08/16/2015	08/17/15 05:30	

Certificate of Analysis

Hushmand Associates, Inc.	Project Number : Parcel 22 - 637 S Clarence St, Los Angele
250 Goddard	Report To : Naresh Bellana
Irvine , CA 92618	Reported : 03/26/2018

Client Sample ID 637 CS VP-11

Lab ID: 1502794-11

Volatile Organic Compounds in AIR by TO-15 (Canister) **Analyst: MFR**

Analyte		Result (ug/m³)	PQL (ug/m³)	Dilution	Batch	Prepared	Date/Time Analyzed	Notes
Vinyl acetate		ND	0.88	1	B5H0410	08/16/2015	08/17/15 05:30	
Vinyl chloride		ND	0.64	1	B5H0410	08/16/2015	08/17/15 05:30	
Surrogate: 4-Bromofluorobenzene	*104 %*		*79.2 - 147*		B5H0463	08/17/2015	*08/18/15 02:00*	
Surrogate: 4-Bromofluorobenzene	*99.6 %*		*79.2 - 147*		B5H0464	08/17/2015	*08/18/15 23:26*	
Surrogate: 4-Bromofluorobenzene	*108 %*		*79.2 - 147*		B5H0410	08/16/2015	*08/17/15 05:30*	

Gasoline Range Organics in Air by TO-3 **Analyst: MFR**

Analyte		Result (ug/m³)	PQL (ug/m³)	Dilution	Batch	Prepared	Date/Time Analyzed	Notes
Gasoline Range Organics		**9000**	1000	10	B5H0465	08/17/2015	08/18/15 15:32	
Surrogate: 4-Bromofluorobenzene	*96.4 %*		*70 - 130*		B5H0465	08/17/2015	*08/18/15 15:32*	

Certificate of Analysis

Hushmand Associates, Inc.	Project Number : Parcel 22 - 637 S Clarence St, Los Angele
250 Goddard	Report To : Naresh Bellana
Irvine , CA 92618	Reported : 03/26/2018

Client Sample ID 637 CS VP-12
Lab ID: 1502794-12

Volatile Organic Compounds in AIR by TO-15 (Canister) **Analyst: MFR**

Analyte	Result (ug/m³)	PQL (ug/m³)	Dilution	Batch	Prepared	Date/Time Analyzed	Notes
1,1,1,2-Tetrachloroethane	ND	2	1	B5H0410	08/16/2015	08/17/15 10:05	
1,1,1-Trichloroethane	**2**	1	1	B5H0410	08/16/2015	08/17/15 10:05	
1,1,2,2-Tetrachloroethane	ND	2	1	B5H0410	08/16/2015	08/17/15 10:05	
1,1,2-Trichloroethane	ND	1	1	B5H0410	08/16/2015	08/17/15 10:05	
1,1-Dichloroethane	ND	1	1	B5H0410	08/16/2015	08/17/15 10:05	
1,1-Dichloroethene	ND	0.99	1	B5H0410	08/16/2015	08/17/15 10:05	
1,1-Dichloropropene	ND	1	1	B5H0410	08/16/2015	08/17/15 10:05	
1,2,3-Trichloropropane	ND	2	1	B5H0410	08/16/2015	08/17/15 10:05	
1,2,4-Trichlorobenzene	**2**	2	1	B5H0410	08/16/2015	08/17/15 10:05	
1,2,4-Trimethylbenzene	**10**	1	1	B5H0410	08/16/2015	08/17/15 10:05	
1,2-Dibromo-3-chloropropane	ND	2	1	B5H0410	08/16/2015	08/17/15 10:05	
1,2-Dibromoethane	ND	2	1	B5H0410	08/16/2015	08/17/15 10:05	
1,2-Dichlorobenzene	ND	2	1	B5H0410	08/16/2015	08/17/15 10:05	
1,2-Dichloroethane	ND	1	1	B5H0410	08/16/2015	08/17/15 10:05	
1,2-Dichloropropane	ND	1	1	B5H0410	08/16/2015	08/17/15 10:05	
1,3,5-Trimethylbenzene	**3**	1	1	B5H0410	08/16/2015	08/17/15 10:05	
1,3-Butadiene	ND	0.55	1	B5H0410	08/16/2015	08/17/15 10:05	
1,3-Dichlorobenzene	ND	2	1	B5H0410	08/16/2015	08/17/15 10:05	
1,4-Dichlorobenzene	ND	2	1	B5H0410	08/16/2015	08/17/15 10:05	
1,4-Dioxane	ND	0.90	1	B5H0410	08/16/2015	08/17/15 10:05	
2,2,4-Trimethylpentane	ND	1	1	B5H0410	08/16/2015	08/17/15 10:05	
2-Butanone	**1**	0.74	1	B5H0410	08/16/2015	08/17/15 10:05	
2-Chloroethyl vinyl ether	ND	1	1	B5H0410	08/16/2015	08/17/15 10:05	
2-Chlorotoluene	ND	1	1	B5H0410	08/16/2015	08/17/15 10:05	
2-Hexanone	ND	1	1	B5H0410	08/16/2015	08/17/15 10:05	
2-Propanol	**2800**	60	100	B5H0464	08/17/2015	08/19/15 00:07	
4-Chlorotoluene	ND	1	1	B5H0410	08/16/2015	08/17/15 10:05	
4-Ethyl Toluene	**2**	1	1	B5H0410	08/16/2015	08/17/15 10:05	
4-Methyl-2-pentanone	ND	1	1	B5H0410	08/16/2015	08/17/15 10:05	
Acetone	**30**	0.59	1	B5H0410	08/16/2015	08/17/15 10:05	
Acetonitrile	ND	0.42	1	B5H0410	08/16/2015	08/17/15 10:05	
Acrolein	ND	0.57	1	B5H0410	08/16/2015	08/17/15 10:05	
Acrylonitrile	ND	0.54	1	B5H0410	08/16/2015	08/17/15 10:05	
Benzene	ND	0.80	1	B5H0410	08/16/2015	08/17/15 10:05	
Benzyl chloride	ND	1	1	B5H0410	08/16/2015	08/17/15 10:05	
Bromobenzene	ND	2	1	B5H0410	08/16/2015	08/17/15 10:05	
Bromodichloromethane	ND	2	1	B5H0410	08/16/2015	08/17/15 10:05	

Certificate of Analysis

Hushmand Associates, Inc.	Project Number : Parcel 22 - 637 S Clarence St, Los Angele
250 Goddard	Report To : Naresh Bellana
Irvine , CA 92618	Reported : 03/26/2018

Client Sample ID 637 CS VP-12
Lab ID: 1502794-12

Volatile Organic Compounds in AIR by TO-15 (Canister) **Analyst: MFR**

Analyte	Result (ug/m³)	PQL (ug/m³)	Dilution	Batch	Prepared	Date/Time Analyzed	Notes
Bromoform	ND	3	1	B5H0410	08/16/2015	08/17/15 10:05	
Bromomethane	ND	0.97	1	B5H0410	08/16/2015	08/17/15 10:05	
Carbon disulfide	ND	0.78	1	B5H0410	08/16/2015	08/17/15 10:05	
Carbon tetrachloride	ND	2	1	B5H0410	08/16/2015	08/17/15 10:05	
Chlorobenzene	ND	1	1	B5H0410	08/16/2015	08/17/15 10:05	
Chloroethane	ND	0.66	1	B5H0410	08/16/2015	08/17/15 10:05	
Chloroform	ND	1	1	B5H0410	08/16/2015	08/17/15 10:05	
Chloromethane	ND	0.52	1	B5H0410	08/16/2015	08/17/15 10:05	
cis-1,2-Dichloroethene	ND	0.99	1	B5H0410	08/16/2015	08/17/15 10:05	
cis-1,3-Dichloropropene	ND	1	1	B5H0410	08/16/2015	08/17/15 10:05	
Cyclohexane	**0.86**	0.86	1	B5H0410	08/16/2015	08/17/15 10:05	
Dibromochloromethane	ND	2	1	B5H0410	08/16/2015	08/17/15 10:05	
Dibromomethane	ND	2	1	B5H0410	08/16/2015	08/17/15 10:05	
Dichlorodifluoromethane	**4**	1	1	B5H0410	08/16/2015	08/17/15 10:05	
Dichlorotetrafluoroethane	ND	2	1	B5H0410	08/16/2015	08/17/15 10:05	
Ethanol	**9**	0.47	1	B5H0410	08/16/2015	08/17/15 10:05	
Ethylbenzene	**1**	1	1	B5H0410	08/16/2015	08/17/15 10:05	
Freon-113	ND	2	1	B5H0410	08/16/2015	08/17/15 10:05	
Hexachlorobutadiene	ND	3	1	B5H0410	08/16/2015	08/17/15 10:05	
Isopropylbenzene	ND	1	1	B5H0410	08/16/2015	08/17/15 10:05	
m,p-Xylene	**20**	4	1	B5H0410	08/16/2015	08/17/15 10:05	
Methylene chloride	ND	0.87	1	B5H0410	08/16/2015	08/17/15 10:05	
MTBE	ND	0.90	1	B5H0410	08/16/2015	08/17/15 10:05	
n-Butylbenzene	ND	1	1	B5H0410	08/16/2015	08/17/15 10:05	
n-Propylbenzene	ND	1	1	B5H0410	08/16/2015	08/17/15 10:05	
Naphthalene	**2**	1	1	B5H0410	08/16/2015	08/17/15 10:05	
o-Xylene	**4**	1	1	B5H0410	08/16/2015	08/17/15 10:05	
p-Isopropyltoluene	**2**	1	1	B5H0410	08/16/2015	08/17/15 10:05	
sec-Butylbenzene	ND	1	1	B5H0410	08/16/2015	08/17/15 10:05	
Styrene	ND	1	1	B5H0410	08/16/2015	08/17/15 10:05	
tert-Butylbenzene	ND	1	1	B5H0410	08/16/2015	08/17/15 10:05	
Tetrachloroethene	**120**	20	10	B5H0463	08/17/2015	08/17/15 19:02	
Toluene	**5**	0.94	1	B5H0410	08/16/2015	08/17/15 10:05	
trans-1,2-Dichloroethene	ND	0.99	1	B5H0410	08/16/2015	08/17/15 10:05	
trans-1,3-Dichloropropene	ND	1	1	B5H0410	08/16/2015	08/17/15 10:05	
Trichloroethene	ND	1	1	B5H0410	08/16/2015	08/17/15 10:05	
Trichlorofluoromethane	**40**	1	1	B5H0410	08/16/2015	08/17/15 10:05	

Certificate of Analysis

Hushmand Associates, Inc.	Project Number : Parcel 22 - 637 S Clarence St, Los Angele
250 Goddard	Report To : Naresh Bellana
Irvine , CA 92618	Reported : 03/26/2018

Client Sample ID 637 CS VP-12
Lab ID: 1502794-12

Volatile Organic Compounds in AIR by TO-15 (Canister)

Analyst: MFR

Analyte		Result (ug/m³)	PQL (ug/m³)	Dilution	Batch	Prepared	Date/Time Analyzed	Notes
Vinyl acetate		ND	0.88	1	B5H0410	08/16/2015	08/17/15 10:05	
Vinyl chloride		ND	0.64	1	B5H0410	08/16/2015	08/17/15 10:05	
Surrogate: 4-Bromofluorobenzene	*106 %*		*79.2 - 147*		B5H0463	08/17/2015	*08/17/15 19:02*	
Surrogate: 4-Bromofluorobenzene	*108 %*		*79.2 - 147*		B5H0410	08/16/2015	*08/17/15 10:05*	
Surrogate: 4-Bromofluorobenzene	*98.4 %*		*79.2 - 147*		B5H0464	08/17/2015	*08/19/15 00:07*	

Gasoline Range Organics in Air by TO-3

Analyst: MFR

Analyte		Result (ug/m³)	PQL (ug/m³)	Dilution	Batch	Prepared	Date/Time Analyzed	Notes
Gasoline Range Organics		**6200**	1000	10	B5H0425	08/17/2015	08/17/15 23:08	
Surrogate: 4-Bromofluorobenzene	*94.8 %*		*70 - 130*		B5H0425	08/17/2015	*08/17/15 23:08*	

Certificate of Analysis

Hushmand Associates, Inc.	Project Number : Parcel 22 - 637 S Clarence St, Los Angele
250 Goddard	Report To : Naresh Bellana
Irvine , CA 92618	Reported : 03/26/2018

Client Sample ID 637 CS VP-6 Dubl.

Lab ID: 1502794-13

Volatile Organic Compounds in AIR by TO-15 (Canister) **Analyst: MFR**

Analyte	Result (ug/m³)	PQL (ug/m³)	Dilution	Batch	Prepared	Date/Time Analyzed	Notes
1,1,1,2-Tetrachloroethane	ND	2	1	B5H0410	08/16/2015	08/17/15 10:44	
1,1,1-Trichloroethane	**4**	1	1	B5H0410	08/16/2015	08/17/15 10:44	
1,1,2,2-Tetrachloroethane	ND	2	1	B5H0410	08/16/2015	08/17/15 10:44	
1,1,2-Trichloroethane	ND	1	1	B5H0410	08/16/2015	08/17/15 10:44	
1,1-Dichloroethane	ND	1	1	B5H0410	08/16/2015	08/17/15 10:44	
1,1-Dichloroethene	ND	0.99	1	B5H0410	08/16/2015	08/17/15 10:44	
1,1-Dichloropropene	ND	1	1	B5H0410	08/16/2015	08/17/15 10:44	
1,2,3-Trichloropropane	ND	2	1	B5H0410	08/16/2015	08/17/15 10:44	
1,2,4-Trichlorobenzene	ND	2	1	B5H0410	08/16/2015	08/17/15 10:44	
1,2,4-Trimethylbenzene	**1**	1	1	B5H0410	08/16/2015	08/17/15 10:44	
1,2-Dibromo-3-chloropropane	ND	2	1	B5H0410	08/16/2015	08/17/15 10:44	
1,2-Dibromoethane	ND	2	1	B5H0410	08/16/2015	08/17/15 10:44	
1,2-Dichlorobenzene	ND	2	1	B5H0410	08/16/2015	08/17/15 10:44	
1,2-Dichloroethane	ND	1	1	B5H0410	08/16/2015	08/17/15 10:44	
1,2-Dichloropropane	ND	1	1	B5H0410	08/16/2015	08/17/15 10:44	
1,3,5-Trimethylbenzene	ND	1	1	B5H0410	08/16/2015	08/17/15 10:44	
1,3-Butadiene	ND	0.55	1	B5H0410	08/16/2015	08/17/15 10:44	
1,3-Dichlorobenzene	ND	2	1	B5H0410	08/16/2015	08/17/15 10:44	
1,4-Dichlorobenzene	ND	2	1	B5H0410	08/16/2015	08/17/15 10:44	
1,4-Dioxane	ND	0.90	1	B5H0410	08/16/2015	08/17/15 10:44	
2,2,4-Trimethylpentane	ND	1	1	B5H0410	08/16/2015	08/17/15 10:44	
2-Butanone	**0.80**	0.74	1	B5H0410	08/16/2015	08/17/15 10:44	
2-Chloroethyl vinyl ether	ND	1	1	B5H0410	08/16/2015	08/17/15 10:44	
2-Chlorotoluene	ND	1	1	B5H0410	08/16/2015	08/17/15 10:44	
2-Hexanone	ND	1	1	B5H0410	08/16/2015	08/17/15 10:44	
2-Propanol	**2100**	60	100	B5H0464	08/17/2015	08/19/15 00:48	
4-Chlorotoluene	ND	1	1	B5H0410	08/16/2015	08/17/15 10:44	
4-Ethyl Toluene	ND	1	1	B5H0410	08/16/2015	08/17/15 10:44	
4-Methyl-2-pentanone	ND	1	1	B5H0410	08/16/2015	08/17/15 10:44	
Acetone	**20**	0.59	1	B5H0410	08/16/2015	08/17/15 10:44	
Acetonitrile	ND	0.42	1	B5H0410	08/16/2015	08/17/15 10:44	
Acrolein	ND	0.57	1	B5H0410	08/16/2015	08/17/15 10:44	
Acrylonitrile	ND	0.54	1	B5H0410	08/16/2015	08/17/15 10:44	
Benzene	ND	0.80	1	B5H0410	08/16/2015	08/17/15 10:44	
Benzyl chloride	ND	1	1	B5H0410	08/16/2015	08/17/15 10:44	
Bromobenzene	ND	2	1	B5H0410	08/16/2015	08/17/15 10:44	
Bromodichloromethane	ND	2	1	B5H0410	08/16/2015	08/17/15 10:44	

Certificate of Analysis

Hushmand Associates, Inc.	Project Number : Parcel 22 - 637 S Clarence St, Los Angele
250 Goddard	Report To : Naresh Bellana
Irvine , CA 92618	Reported : 03/26/2018

Client Sample ID 637 CS VP-6 Dubl.
Lab ID: 1502794-13

Volatile Organic Compounds in AIR by TO-15 (Canister) **Analyst: MFR**

Analyte	Result (ug/m³)	PQL (ug/m³)	Dilution	Batch	Prepared	Date/Time Analyzed	Notes
Bromoform	ND	3	1	B5H0410	08/16/2015	08/17/15 10:44	
Bromomethane	ND	0.97	1	B5H0410	08/16/2015	08/17/15 10:44	
Carbon disulfide	ND	0.78	1	B5H0410	08/16/2015	08/17/15 10:44	
Carbon tetrachloride	ND	2	1	B5H0410	08/16/2015	08/17/15 10:44	
Chlorobenzene	ND	1	1	B5H0410	08/16/2015	08/17/15 10:44	
Chloroethane	ND	0.66	1	B5H0410	08/16/2015	08/17/15 10:44	
Chloroform	ND	1	1	B5H0410	08/16/2015	08/17/15 10:44	
Chloromethane	ND	0.52	1	B5H0410	08/16/2015	08/17/15 10:44	
cis-1,2-Dichloroethene	ND	0.99	1	B5H0410	08/16/2015	08/17/15 10:44	
cis-1,3-Dichloropropene	ND	1	1	B5H0410	08/16/2015	08/17/15 10:44	
Cyclohexane	ND	0.86	1	B5H0410	08/16/2015	08/17/15 10:44	
Dibromochloromethane	ND	2	1	B5H0410	08/16/2015	08/17/15 10:44	
Dibromomethane	ND	2	1	B5H0410	08/16/2015	08/17/15 10:44	
Dichlorodifluoromethane	**10**	1	1	B5H0410	08/16/2015	08/17/15 10:44	
Dichlorotetrafluoroethane	ND	2	1	B5H0410	08/16/2015	08/17/15 10:44	
Ethanol	**5**	0.47	1	B5H0410	08/16/2015	08/17/15 10:44	
Ethylbenzene	ND	1	1	B5H0410	08/16/2015	08/17/15 10:44	
Freon-113	ND	2	1	B5H0410	08/16/2015	08/17/15 10:44	
Hexachlorobutadiene	ND	3	1	B5H0410	08/16/2015	08/17/15 10:44	
Isopropylbenzene	ND	1	1	B5H0410	08/16/2015	08/17/15 10:44	
m,p-Xylene	**5**	4	1	B5H0410	08/16/2015	08/17/15 10:44	
Methylene chloride	ND	0.87	1	B5H0410	08/16/2015	08/17/15 10:44	
MTBE	ND	0.90	1	B5H0410	08/16/2015	08/17/15 10:44	
n-Butylbenzene	ND	1	1	B5H0410	08/16/2015	08/17/15 10:44	
n-Propylbenzene	ND	1	1	B5H0410	08/16/2015	08/17/15 10:44	
Naphthalene	ND	1	1	B5H0410	08/16/2015	08/17/15 10:44	
o-Xylene	ND	1	1	B5H0410	08/16/2015	08/17/15 10:44	
p-Isopropyltoluene	ND	1	1	B5H0410	08/16/2015	08/17/15 10:44	
sec-Butylbenzene	ND	1	1	B5H0410	08/16/2015	08/17/15 10:44	
Styrene	ND	1	1	B5H0410	08/16/2015	08/17/15 10:44	
tert-Butylbenzene	ND	1	1	B5H0410	08/16/2015	08/17/15 10:44	
Tetrachloroethene	**170**	20	10	B5H0463	08/17/2015	08/17/15 19:40	
Toluene	**3**	0.94	1	B5H0410	08/16/2015	08/17/15 10:44	
trans-1,2-Dichloroethene	ND	0.99	1	B5H0410	08/16/2015	08/17/15 10:44	
trans-1,3-Dichloropropene	ND	1	1	B5H0410	08/16/2015	08/17/15 10:44	
Trichloroethene	ND	1	1	B5H0410	08/16/2015	08/17/15 10:44	
Trichlorofluoromethane	**230**	10	10	B5H0463	08/17/2015	08/17/15 19:40	

Certificate of Analysis

Hushmand Associates, Inc.	Project Number : Parcel 22 - 637 S Clarence St, Los Angele
250 Goddard	Report To : Naresh Bellana
Irvine , CA 92618	Reported : 03/26/2018

Client Sample ID 637 CS VP-6 Dubl.
Lab ID: 1502794-13

Volatile Organic Compounds in AIR by TO-15 (Canister)

Analyst: MFR

Analyte		Result (ug/m³)	PQL (ug/m³)	Dilution	Batch	Prepared	Date/Time Analyzed	Notes
Vinyl acetate		ND	0.88	1	B5H0410	08/16/2015	08/17/15 10:44	
Vinyl chloride		ND	0.64	1	B5H0410	08/16/2015	08/17/15 10:44	
Surrogate: 4-Bromofluorobenzene	*106 %*		*79.2 - 147*		B5H0463	08/17/2015	*08/17/15 19:40*	
Surrogate: 4-Bromofluorobenzene	*100 %*		*79.2 - 147*		B5H0464	08/17/2015	*08/19/15 00:48*	
Surrogate: 4-Bromofluorobenzene	*106 %*		*79.2 - 147*		B5H0410	08/16/2015	*08/17/15 10:44*	

Gasoline Range Organics in Air by TO-3

Analyst: MFR

Analyte		Result (ug/m³)	PQL (ug/m³)	Dilution	Batch	Prepared	Date/Time Analyzed	Notes
Gasoline Range Organics		**5400**	1000	10	B5H0465	08/18/2015	08/18/15 10:00	
Surrogate: 4-Bromofluorobenzene	*99.2 %*		*70 - 130*		B5H0465	08/18/2015	*08/18/15 10:00*	

Certificate of Analysis

Hushmand Associates, Inc.	Project Number : Parcel 22 - 637 S Clarence St, Los Angele
250 Goddard	Report To : Naresh Bellana
Irvine , CA 92618	Reported : 03/26/2018

QUALITY CONTROL SECTION

Volatile Organic Compounds in AIR by TO-15 (Canister) - Quality Control

Analyte	Result (ug/m³)	PQL (ug/m³)	MDL (ug/m³)	Spike Level	Source Result	% Rec	% Rec Limits	RPD	RPD Limit	Notes
Batch B5H0409 - No_Prep_AIR										
Blank (B5H0409-BLK1)					Prepared: 8/15/2015 Analyzed: 8/15/2015					
1,1,1,2-Tetrachloroethane	ND	2	0.57							
1,1,1-Trichloroethane	ND	1	0.58							
1,1,2,2-Tetrachloroethane	ND	2	0.77							
1,1,2-Trichloroethane	ND	1	0.45							
1,1-Dichloroethane	ND	1	0.37							
1,1-Dichloroethene	ND	0.99	0.34							
1,1-Dichloropropene	ND	1	0.37							
1,2,3-Trichloropropane	ND	2	0.58							
1,2,4-Trichlorobenzene	ND	2	0.73							
1,2,4-Trimethylbenzene	ND	1	0.54							
1,2-Dibromo-3-chloropropane	ND	2	1							
1,2-Dibromoethane	ND	2	0.73							
1,2-Dichlorobenzene	ND	2	0.54							
1,2-Dichloroethane	ND	1	0.34							
1,2-Dichloropropane	ND	1	0.41							
1,3,5-Trimethylbenzene	ND	1	0.51							
1,3-Butadiene	ND	0.55	0.39							
1,3-Dichlorobenzene	ND	2	0.56							
1,4-Dichlorobenzene	ND	2	0.51							
1,4-Dioxane	ND	0.90	0.65							
2,2,4-Trimethylpentane	ND	1	0.35							
2-Butanone	ND	0.74	0.24							
2-Chloroethyl vinyl ether	ND	1	0.22							
2-Chlorotoluene	ND	1	0.50							
2-Hexanone	ND	1	0.43							
2-Propanol	ND	0.61	0.26							
4-Chlorotoluene	ND	1	0.47							
4-Ethyl Toluene	ND	1	0.47							
4-Methyl-2-pentanone	ND	1	0.30							
Acetone	ND	0.59	0.26							
Acetonitrile	ND	0.42	0.14							
Acrolein	ND	0.57	0.22							
Acrylonitrile	ND	0.54	0.18							
Benzene	ND	0.80	0.28							
Benzyl chloride	ND	1	0.37							
Bromobenzene	ND	2	0.59							
Bromodichloromethane	ND	2	0.70							
Bromoform	ND	3	0.90							
Bromomethane	ND	0.97	0.46							

Certificate of Analysis

Hushmand Associates, Inc.	Project Number : Parcel 22 - 637 S Clarence St, Los Angele
250 Goddard	Report To : Naresh Bellana
Irvine , CA 92618	Reported : 03/26/2018

Volatile Organic Compounds in AIR by TO-15 (Canister) - Quality Control (cont'd)

Analyte	Result (ug/m³)	PQL (ug/m³)	MDL (ug/m³)	Spike Level	Source Result	% Rec	% Rec Limits	RPD	RPD Limit	Notes
Batch B5H0409 - No_Prep_AIR (continued)										
Blank (B5H0409-BLK1) - Continued					Prepared: 8/15/2015 Analyzed: 8/15/2015					
Carbon disulfide	ND	0.78	0.31							
Carbon tetrachloride	ND	2	0.43							
Chlorobenzene	ND	1	0.41							
Chloroethane	ND	0.66	0.28							
Chloroform	ND	1	0.50							
Chloromethane	ND	0.52	0.22							
cis-1,2-Dichloroethene	ND	0.99	0.28							
cis-1,3-Dichloropropene	ND	1	0.33							
Cyclohexane	ND	0.86	0.25							
Dibromochloromethane	ND	2	0.83							
Dibromomethane	ND	2	0.55							
Dichlorodifluoromethane	ND	1	0.56							
Dichlorotetrafluoroethane	ND	2	0.76							
Ethanol	ND	0.47	0.20							
Ethylbenzene	ND	1	0.35							
Freon-113	ND	2	0.58							
Hexachlorobutadiene	ND	3	1							
Isopropylbenzene	ND	1	0.52							
m,p-Xylene	ND	4	1							
Methylene chloride	ND	0.87	0.31							
MTBE	ND	0.90	0.33							
n-Butylbenzene	ND	1	0.42							
n-Propylbenzene	ND	1	0.41							
Naphthalene	ND	1	0.36							
o-Xylene	ND	1	0.40							
p-Isopropyltoluene	ND	1	0.51							
sec-Butylbenzene	ND	1	0.56							
Styrene	ND	1	0.44							
tert-Butylbenzene	ND	1	0.62							
Tetrachloroethene	ND	2	0.47							
Toluene	ND	0.94	0.28							
trans-1,2-Dichloroethene	ND	0.99	0.34							
trans-1,3-Dichloropropene	ND	1	0.34							
Trichloroethene	ND	1	0.47							
Trichlorofluoromethane	ND	1	0.53							
Vinyl acetate	ND	0.88	0.38							
Vinyl chloride	ND	0.64	0.21							
Surrogate: 4-Bromofluorobenzene	*18.97*			*17.8935*		*106*	*79.2 - 147*			
LCS (B5H0409-BS1)					Prepared: 8/15/2015 Analyzed: 8/15/2015					
1,1,1,2-Tetrachloroethane	16.888	2	0.57	13.7299		123	70 - 130			

Hushmand Associates, Inc.	Project Number : Parcel 22 - 637 S Clarence St, Los Angele
250 Goddard	Report To : Naresh Bellana
Irvine , CA 92618	Reported : 03/26/2018

Volatile Organic Compounds in AIR by TO-15 (Canister) - Quality Control (cont'd)

Analyte	Result (ug/m³)	PQL (ug/m³)	MDL (ug/m³)	Spike Level	Source Result	% Rec	% Rec Limits	RPD	RPD Limit	Notes
Batch B5H0409 - No_Prep_AIR (continued)										
LCS (B5H0409-BS1) - Continued					Prepared: 8/15/2015 Analyzed: 8/15/2015					
1,1,1-Trichloroethane	11.240	1	0.58	10.9123		103	70 - 130			
1,1,2,2-Tetrachloroethane	15.515	2	0.77	13.7299		113	70 - 130			
1,1,2-Trichloroethane	10.967	1	0.45	10.9123		100	70 - 130			
1,1-Dichloroethane	8.095	1	0.37	8.09480		100	70 - 130			
1,1-Dichloroethene	7.851	0.99	0.34	7.92990		99.0	70 - 130			
1,1-Dichloropropene	8.351	1	0.37	9.07722		92.0	70 - 130			
1,2,3-Trichloropropane	10.733	2	0.58	12.0597		89.0	70 - 130			
1,2,4-Trichlorobenzene	14.768	2	0.73	14.8422		99.5	70 - 130			
1,2,4-Trimethylbenzene	11.503	1	0.54	9.83166		117	70 - 130			
1,2-Dibromo-3-chloropropane	27.065	2	1	19.3319		140	70 - 130			L5
1,2-Dibromoethane	15.674	2	0.73	15.3670		102	70 - 130			
1,2-Dichlorobenzene	12.866	2	0.54	12.0246		107	70 - 130			
1,2-Dichloroethane	7.852	1	0.34	8.09480		97.0	70 - 130			
1,2-Dichloropropane	9.196	1	0.41	9.24213		99.5	70 - 130			
1,3,5-Trimethylbenzene	10.815	1	0.51	9.83166		110	70 - 130			
1,3-Butadiene	4.026	0.55	0.39	4.42454		91.0	70 - 130			
1,3-Dichlorobenzene	13.287	2	0.56	12.0246		110	70 - 130			
1,4-Dichlorobenzene	13.047	2	0.51	12.0246		109	70 - 130			
1,4-Dioxane	7.711	0.90	0.65	7.20695		107	70 - 130			
2,2,4-Trimethylpentane	9.437	1	0.35	9.34388		101	70 - 130			
2-Butanone	5.839	0.74	0.24	5.89824		99.0	70 - 130			
2-Chloroethyl vinyl ether	10.241	1	0.22	8.71583		118	70 - 130			
2-Chlorotoluene	11.183	1	0.50	10.3544		108	70 - 130			
2-Hexanone	8.439	1	0.43	8.19296		103	70 - 130			
2-Propanol	4.522	0.61	0.26	4.91534		92.0	70 - 130			
4-Chlorotoluene	8.646	1	0.47	10.3544		83.5	70 - 130			
4-Ethyl Toluene	10.962	1	0.47	9.83166		112	70 - 130			
4-Methyl-2-pentanone	8.234	1	0.30	8.19296		100	70 - 130			
Acetone	4.300	0.59	0.26	4.75084		90.5	70 - 130			
Acetonitrile	3.106	0.42	0.14	3.35804		92.5	70 - 130			
Acrolein	4.059	0.57	0.22	4.58593		88.5	70 - 130			
Acrylonitrile	4.232	0.54	0.18	4.34053		97.5	70 - 130			
Benzene	6.294	0.80	0.28	6.38953		98.5	70 - 130			
Benzyl chloride	12.011	1	0.37	10.3544		116	70 - 130			
Bromobenzene	10.146	2	0.59	12.8432		79.0	70 - 130			
Bromodichloromethane	14.205	2	0.70	13.4011		106	70 - 130			
Bromoform	25.221	3	0.90	20.6733		122	70 - 130			
Bromomethane	7.882	0.97	0.46	7.76597		102	70 - 130			
Carbon disulfide	6.166	0.78	0.31	6.22847		99.0	70 - 130			
Carbon tetrachloride	13.967	2	0.43	12.5826		111	70 - 130			
Chlorobenzene	9.990	1	0.41	9.20712		108	70 - 130			
Chloroethane	5.013	0.66	0.28	5.27722		95.0	70 - 130			

Hushmand Associates, Inc.	Project Number : Parcel 22 - 637 S Clarence St, Los Angele
250 Goddard	Report To : Naresh Bellana
Irvine , CA 92618	Reported : 03/26/2018

Volatile Organic Compounds in AIR by TO-15 (Canister) - Quality Control (cont'd)

Analyte	Result (ug/m³)	PQL (ug/m³)	MDL (ug/m³)	Spike Level	Source Result	% Rec	% Rec Limits	RPD	RPD Limit	Notes
Batch B5H0409 - No_Prep_AIR (continued)										
LCS (B5H0409-BS1) - Continued					Prepared: 8/15/2015 Analyzed: 8/15/2015					
Chloroform	9.765	1	0.50	9.76499		100	70 - 130			
Chloromethane	3.965	0.52	0.22	4.12982		96.0	70 - 130			
cis-1,2-Dichloroethene	7.811	0.99	0.28	7.92990		98.5	70 - 130			
cis-1,3-Dichloropropene	9.213	1	0.33	9.07724		102	70 - 130			
Cyclohexane	6.781	0.86	0.25	6.88425		98.5	70 - 130			
Dibromochloromethane	20.870	2	0.83	17.0371		122	70 - 130			
Dibromomethane	12.727	2	0.55	14.2196		89.5	70 - 130			
Dichlorodifluoromethane	12.413	1	0.56	9.89063		126	70 - 130			
Dichlorotetrafluoroethane	15.729	2	0.76	13.9812		112	70 - 130			
Ethanol	3.429	0.47	0.20	3.76834		91.0	70 - 130			
Ethylbenzene	9.379	1	0.35	8.68425		108	70 - 130			
Freon-113	15.710	2	0.58	15.3272		102	70 - 130			
Hexachlorobutadiene	15.678	3	1	21.3300		73.5	70 - 130			
Isopropylbenzene	10.864	1	0.52	9.83166		110	70 - 130			
m,p-Xylene	38.384	4	1	34.7370		110	70 - 130			
Methylene chloride	6.843	0.87	0.31	6.94740		98.5	70 - 130			
MTBE	7.210	0.90	0.33	7.21047		100	70 - 130			
n-Butylbenzene	12.461	1	0.42	10.9790		114	70 - 130			
n-Propylbenzene	10.618	1	0.41	9.83166		108	70 - 130			
Naphthalene	10.589	1	0.36	10.4843		101	70 - 130			
o-Xylene	9.466	1	0.40	8.68425		109	70 - 130			
p-Isopropyltoluene	9.991	1	0.51	10.9790		91.0	70 - 130			
sec-Butylbenzene	12.571	1	0.56	10.9790		114	70 - 130			
Styrene	9.073	1	0.44	8.51934		106	70 - 130			
tert-Butylbenzene	12.845	1	0.62	10.9790		117	70 - 130			
Tetrachloroethene	14.447	2	0.47	13.5650		106	70 - 130			
Toluene	7.537	0.94	0.28	7.53688		100	70 - 130			
trans-1,2-Dichloroethene	7.890	0.99	0.34	7.92990		99.5	70 - 130			
trans-1,3-Dichloropropene	9.213	1	0.34	9.07722		102	70 - 130			
Trichloroethene	10.962	1	0.47	10.7474		102	70 - 130			
Trichlorofluoromethane	11.405	1	0.53	11.2366		102	70 - 130			
Vinyl acetate	8.204	0.88	0.38	7.04204		116	70 - 130			
Vinyl chloride	4.985	0.64	0.21	5.11231		97.5	70 - 130			
Surrogate: 4-Bromofluorobenzene	*18.90*			*17.8935*		*106*	*79.2 - 147*			
LCS Dup (B5H0409-BSD1)					Prepared: 8/15/2015 Analyzed: 8/15/2015					
1,1,1,2-Tetrachloroethane	16.956	2	0.57	13.7299		124	70 - 130	0.406	20	
1,1,1-Trichloroethane	11.240	1	0.58	10.9123		103	70 - 130	0.00	20	
1,1,2,2-Tetrachloroethane	15.446	2	0.77	13.7299		112	70 - 130	0.443	20	
1,1,2-Trichloroethane	10.858	1	0.45	10.9123		99.5	70 - 130	1.00	20	
1,1-Dichloroethane	8.014	1	0.37	8.09480		99.0	70 - 130	1.01	20	

Certificate of Analysis

Hushmand Associates, Inc.	Project Number : Parcel 22 - 637 S Clarence St, Los Angele
250 Goddard	Report To : Naresh Bellana
Irvine , CA 92618	Reported : 03/26/2018

Volatile Organic Compounds in AIR by TO-15 (Canister) - Quality Control (cont'd)

Analyte	Result (ug/m³)	PQL (ug/m³)	MDL (ug/m³)	Spike Level	Source Result	% Rec	% Rec Limits	RPD	RPD Limit	Notes
Batch B5H0409 - No_Prep_AIR (continued)										
LCS Dup (B5H0409-BSD1) - Continued					Prepared: 8/15/2015 Analyzed: 8/15/2015					
1,1-Dichloroethene	7.851	0.99	0.34	7.92990		99.0	70 - 130	0.00	20	
1,1-Dichloropropene	7.670	1	0.37	9.07722		84.5	70 - 130	8.50	20	
1,2,3-Trichloropropane	9.949	2	0.58	12.0597		82.5	70 - 130	7.58	20	
1,2,4-Trichlorobenzene	13.284	2	0.73	14.8422		89.5	70 - 130	10.6	20	
1,2,4-Trimethylbenzene	11.356	1	0.54	9.83166		116	70 - 130	1.29	20	
1,2-Dibromo-3-chloropropane	25.325	2	1	19.3319		131	70 - 130	6.64	20	L5
1,2-Dibromoethane	15.597	2	0.73	15.3670		102	70 - 130	0.491	20	
1,2-Dichlorobenzene	12.926	2	0.54	12.0246		108	70 - 130	0.466	20	
1,2-Dichloroethane	7.811	1	0.34	8.09480		96.5	70 - 130	0.517	20	
1,2-Dichloropropane	9.196	1	0.41	9.24213		99.5	70 - 130	0.00	20	
1,3,5-Trimethylbenzene	10.717	1	0.51	9.83166		109	70 - 130	0.913	20	
1,3-Butadiene	4.270	0.55	0.39	4.42454		96.5	70 - 130	5.87	20	
1,3-Dichlorobenzene	13.287	2	0.56	12.0246		110	70 - 130	0.00	20	
1,4-Dichlorobenzene	13.047	2	0.51	12.0246		109	70 - 130	0.00	20	
1,4-Dioxane	7.567	0.90	0.65	7.20695		105	70 - 130	1.89	20	
2,2,4-Trimethylpentane	9.391	1	0.35	9.34388		100	70 - 130	0.496	20	
2-Butanone	5.780	0.74	0.24	5.89824		98.0	70 - 130	1.02	20	
2-Chloroethyl vinyl ether	9.282	1	0.22	8.71583		106	70 - 130	9.82	20	
2-Chlorotoluene	11.235	1	0.50	10.3544		108	70 - 130	0.462	20	
2-Hexanone	8.316	1	0.43	8.19296		102	70 - 130	1.47	20	
2-Propanol	4.891	0.61	0.26	4.91534		99.5	70 - 130	7.83	20	
4-Chlorotoluene	8.128	1	0.47	10.3544		78.5	70 - 130	6.17	20	
4-Ethyl Toluene	10.471	1	0.47	9.83166		106	70 - 130	4.59	20	
4-Methyl-2-pentanone	8.070	1	0.30	8.19296		98.5	70 - 130	2.01	20	
Acetone	4.466	0.59	0.26	4.75084		94.0	70 - 130	3.79	20	
Acetonitrile	3.375	0.42	0.14	3.35804		100	70 - 130	8.29	20	
Acrolein	3.279	0.57	0.22	4.58593		71.5	70 - 130	21.2	20	R
Acrylonitrile	4.189	0.54	0.18	4.34053		96.5	70 - 130	1.03	20	
Benzene	6.230	0.80	0.28	6.38953		97.5	70 - 130	1.02	20	
Benzyl chloride	12.166	1	0.37	10.3544		117	70 - 130	1.28	20	
Bromobenzene	9.440	2	0.59	12.8432		73.5	70 - 130	7.21	20	
Bromodichloromethane	14.071	2	0.70	13.4011		105	70 - 130	0.948	20	
Bromoform	25.015	3	0.90	20.6733		121	70 - 130	0.823	20	
Bromomethane	8.193	0.97	0.46	7.76597		106	70 - 130	3.86	20	
Carbon disulfide	6.135	0.78	0.31	6.22847		98.5	70 - 130	0.506	20	
Carbon tetrachloride	13.904	2	0.43	12.5826		110	70 - 130	0.451	20	
Chlorobenzene	9.990	1	0.41	9.20712		108	70 - 130	0.00	20	
Chloroethane	5.515	0.66	0.28	5.27722		104	70 - 130	9.52	20	
Chloroform	9.619	1	0.50	9.76499		98.5	70 - 130	1.51	20	
Chloromethane	4.171	0.52	0.22	4.12982		101	70 - 130	5.08	20	
cis-1,2-Dichloroethene	7.771	0.99	0.28	7.92990		98.0	70 - 130	0.509	20	
cis-1,3-Dichloropropene	9.077	1	0.33	9.07724		100	70 - 130	1.49	20	

Certificate of Analysis

Hushmand Associates, Inc.	Project Number : Parcel 22 - 637 S Clarence St, Los Angele
250 Goddard	Report To : Naresh Bellana
Irvine , CA 92618	Reported : 03/26/2018

Volatile Organic Compounds in AIR by TO-15 (Canister) - Quality Control (cont'd)

Analyte	Result (ug/m³)	PQL (ug/m³)	MDL (ug/m³)	Spike Level	Source Result	% Rec	% Rec Limits	RPD	RPD Limit	Notes
Batch B5H0409 - No_Prep_AIR (continued)										
LCS Dup (B5H0409-BSD1) - Continued					Prepared: 8/15/2015 Analyzed: 8/15/2015					
Cyclohexane	6.678	0.86	0.25	6.88425		97.0	70 - 130	1.53	20	
Dibromochloromethane	20.700	2	0.83	17.0371		122	70 - 130	0.820	20	
Dibromomethane	11.944	2	0.55	14.2196		84.0	70 - 130	6.34	20	
Dichlorodifluoromethane	12.561	1	0.56	9.89063		127	70 - 130	1.19	20	
Dichlorotetrafluoroethane	16.148	2	0.76	13.9812		116	70 - 130	2.63	20	
Ethanol	3.655	0.47	0.20	3.76834		97.0	70 - 130	6.38	20	
Ethylbenzene	9.336	1	0.35	8.68425		108	70 - 130	0.464	20	
Freon-113	15.864	2	0.58	15.3272		104	70 - 130	0.971	20	
Hexachlorobutadiene	17.704	3	1	21.3300		83.0	70 - 130	12.1	20	
Isopropylbenzene	10.766	1	0.52	9.83166		110	70 - 130	0.909	20	
m,p-Xylene	38.037	4	1	34.7370		110	70 - 130	0.909	20	
Methylene chloride	6.774	0.87	0.31	6.94740		97.5	70 - 130	1.02	20	
MTBE	7.102	0.90	0.33	7.21047		98.5	70 - 130	1.51	20	
n-Butylbenzene	12.626	1	0.42	10.9790		115	70 - 130	1.31	20	
n-Propylbenzene	10.766	1	0.41	9.83166		110	70 - 130	1.38	20	
Naphthalene	11.323	1	0.36	10.4843		108	70 - 130	6.70	20	
o-Xylene	9.422	1	0.40	8.68425		108	70 - 130	0.460	20	
p-Isopropyltoluene	9.222	1	0.51	10.9790		84.0	70 - 130	8.00	20	
sec-Butylbenzene	12.406	1	0.56	10.9790		113	70 - 130	1.32	20	
Styrene	9.116	1	0.44	8.51934		107	70 - 130	0.468	20	
tert-Butylbenzene	12.681	1	0.62	10.9790		116	70 - 130	1.29	20	
Tetrachloroethene	14.447	2	0.47	13.5650		106	70 - 130	0.00	20	
Toluene	7.499	0.94	0.28	7.53688		99.5	70 - 130	0.501	20	
trans-1,2-Dichloroethene	7.771	0.99	0.34	7.92990		98.0	70 - 130	1.52	20	
trans-1,3-Dichloropropene	9.213	1	0.34	9.07722		102	70 - 130	0.00	20	
Trichloroethene	10.962	1	0.47	10.7474		102	70 - 130	0.00	20	
Trichlorofluoromethane	11.911	1	0.53	11.2366		106	70 - 130	4.34	20	
Vinyl acetate	8.169	0.88	0.38	7.04204		116	70 - 130	0.430	20	
Vinyl chloride	5.215	0.64	0.21	5.11231		102	70 - 130	4.51	20	
Surrogate: 4-Bromofluorobenzene	*18.97*			*17.8935*		*106*	*79.2 - 147*			

Certificate of Analysis

Hushmand Associates, Inc.	Project Number : Parcel 22 - 637 S Clarence St, Los Angele
250 Goddard	Report To : Naresh Bellana
Irvine , CA 92618	Reported : 03/26/2018

Volatile Organic Compounds in AIR by TO-15 (Canister) - Quality Control

Analyte	Result (ug/m³)	PQL (ug/m³)	MDL (ug/m³)	Spike Level	Source Result	% Rec	% Rec Limits	RPD	RPD Limit	Notes
Batch B5H0410 - No_Prep_AIR										
Blank (B5H0410-BLK1)					Prepared: 8/16/2015 Analyzed: 8/16/2015					
1,1,1,2-Tetrachloroethane	ND	2	0.57							
1,1,1-Trichloroethane	ND	1	0.58							
1,1,2,2-Tetrachloroethane	ND	2	0.77							
1,1,2-Trichloroethane	ND	1	0.45							
1,1-Dichloroethane	ND	1	0.37							
1,1-Dichloroethene	ND	0.99	0.34							
1,1-Dichloropropene	ND	1	0.37							
1,2,3-Trichloropropane	ND	2	0.58							
1,2,4-Trichlorobenzene	ND	2	0.73							
1,2,4-Trimethylbenzene	ND	1	0.54							
1,2-Dibromo-3-chloropropane	ND	2	1							
1,2-Dibromoethane	ND	2	0.73							
1,2-Dichlorobenzene	ND	2	0.54							
1,2-Dichloroethane	ND	1	0.34							
1,2-Dichloropropane	ND	1	0.41							
1,3,5-Trimethylbenzene	ND	1	0.51							
1,3-Butadiene	ND	0.55	0.39							
1,3-Dichlorobenzene	ND	2	0.56							
1,4-Dichlorobenzene	ND	2	0.51							
1,4-Dioxane	ND	0.90	0.65							
2,2,4-Trimethylpentane	ND	1	0.35							
2-Butanone	ND	0.74	0.24							
2-Chloroethyl vinyl ether	ND	1	0.22							
2-Chlorotoluene	ND	1	0.50							
2-Hexanone	ND	1	0.43							
2-Propanol	ND	0.61	0.26							
4-Chlorotoluene	ND	1	0.47							
4-Ethyl Toluene	ND	1	0.47							
4-Methyl-2-pentanone	ND	1	0.30							
Acetone	ND	0.59	0.26							
Acetonitrile	ND	0.42	0.14							
Acrolein	ND	0.57	0.22							
Acrylonitrile	ND	0.54	0.18							
Benzene	ND	0.80	0.28							
Benzyl chloride	ND	1	0.37							
Bromobenzene	ND	2	0.59							
Bromodichloromethane	ND	2	0.70							
Bromoform	ND	3	0.90							
Bromomethane	ND	0.97	0.46							
Carbon disulfide	ND	0.78	0.31							
Carbon tetrachloride	ND	2	0.43							

Certificate of Analysis

Hushmand Associates, Inc.	Project Number : Parcel 22 - 637 S Clarence St, Los Angele
250 Goddard	Report To : Naresh Bellana
Irvine , CA 92618	Reported : 03/26/2018

Volatile Organic Compounds in AIR by TO-15 (Canister) - Quality Control (cont'd)

Analyte	Result (ug/m³)	PQL (ug/m³)	MDL (ug/m³)	Spike Level	Source Result	% Rec	% Rec Limits	RPD	RPD Limit	Notes
Batch B5H0410 - No_Prep_AIR (continued)										
Blank (B5H0410-BLK1) - Continued					Prepared: 8/16/2015 Analyzed: 8/16/2015					
Chlorobenzene	ND	1	0.41							
Chloroethane	ND	0.66	0.28							
Chloroform	ND	1	0.50							
Chloromethane	ND	0.52	0.22							
cis-1,2-Dichloroethene	ND	0.99	0.28							
cis-1,3-Dichloropropene	ND	1	0.33							
Cyclohexane	ND	0.86	0.25							
Dibromochloromethane	ND	2	0.83							
Dibromomethane	ND	2	0.55							
Dichlorodifluoromethane	ND	1	0.56							
Dichlorotetrafluoroethane	ND	2	0.76							
Ethanol	ND	0.47	0.20							
Ethylbenzene	ND	1	0.35							
Freon-113	ND	2	0.58							
Hexachlorobutadiene	ND	3	1							
Isopropylbenzene	ND	1	0.52							
m,p-Xylene	ND	4	1							
Methylene chloride	ND	0.87	0.31							
MTBE	ND	0.90	0.33							
n-Butylbenzene	ND	1	0.42							
n-Propylbenzene	ND	1	0.41							
Naphthalene	ND	1	0.36							
o-Xylene	ND	1	0.40							
p-Isopropyltoluene	ND	1	0.51							
sec-Butylbenzene	ND	1	0.56							
Styrene	ND	1	0.44							
tert-Butylbenzene	ND	1	0.62							
Tetrachloroethene	ND	2	0.47							
Toluene	ND	0.94	0.28							
trans-1,2-Dichloroethene	ND	0.99	0.34							
trans-1,3-Dichloropropene	ND	1	0.34							
Trichloroethene	ND	1	0.47							
Trichlorofluoromethane	ND	1	0.53							
Vinyl acetate	ND	0.88	0.38							
Vinyl chloride	ND	0.64	0.21							
Surrogate: 4-Bromofluorobenzene	*18.32*			*17.8935*		*102*	*79.2 - 147*			
LCS (B5H0410-BS1)					Prepared: 8/16/2015 Analyzed: 8/16/2015					
1,1,1,2-Tetrachloroethane	16.133	2	0.57	13.7299		118	70 - 130			
1,1,1-Trichloroethane	10.094	1	0.58	10.9123		92.5	70 - 130			
1,1,2,2-Tetrachloroethane	15.377	2	0.77	13.7299		112	70 - 130			

Certificate of Analysis

Hushmand Associates, Inc.	Project Number : Parcel 22 - 637 S Clarence St, Los Angele
250 Goddard	Report To : Naresh Bellana
Irvine , CA 92618	Reported : 03/26/2018

Volatile Organic Compounds in AIR by TO-15 (Canister) - Quality Control (cont'd)

Analyte	Result (ug/m³)	PQL (ug/m³)	MDL (ug/m³)	Spike Level	Source Result	% Rec	% Rec Limits	RPD	RPD Limit	Notes
Batch B5H0410 - No_Prep_AIR (continued)										
LCS (B5H0410-BS1) - Continued					Prepared: 8/16/2015 Analyzed: 8/16/2015					
1,1,2-Trichloroethane	11.185	1	0.45	10.9123		102	70 - 130			
1,1-Dichloroethane	7.528	1	0.37	8.09480		93.0	70 - 130			
1,1-Dichloroethene	6.899	0.99	0.34	7.92990		87.0	70 - 130			
1,1-Dichloropropene	8.533	1	0.37	9.07722		94.0	70 - 130			
1,2,3-Trichloropropane	10.974	2	0.58	12.0597		91.0	70 - 130			
1,2,4-Trichlorobenzene	14.545	2	0.73	14.8422		98.0	70 - 130			
1,2,4-Trimethylbenzene	11.257	1	0.54	9.83166		114	70 - 130			
1,2-Dibromo-3-chloropropane	29.674	2	1	19.3319		154	70 - 130			L5
1,2-Dibromoethane	15.367	2	0.73	15.3670		100	70 - 130			
1,2-Dichlorobenzene	12.145	2	0.54	12.0246		101	70 - 130			
1,2-Dichloroethane	8.459	1	0.34	8.09480		104	70 - 130			
1,2-Dichloropropane	9.566	1	0.41	9.24213		104	70 - 130			
1,3,5-Trimethylbenzene	10.274	1	0.51	9.83166		104	70 - 130			
1,3-Butadiene	4.734	0.55	0.39	4.42454		107	70 - 130			
1,3-Dichlorobenzene	12.686	2	0.56	12.0246		106	70 - 130			
1,4-Dichlorobenzene	12.265	2	0.51	12.0246		102	70 - 130			
1,4-Dioxane	7.423	0.90	0.65	7.20695		103	70 - 130			
2,2,4-Trimethylpentane	9.811	1	0.35	9.34388		105	70 - 130			
2-Butanone	5.662	0.74	0.24	5.89824		96.0	70 - 130			
2-Chloroethyl vinyl ether	9.500	1	0.22	8.71583		109	70 - 130			
2-Chlorotoluene	10.820	1	0.50	10.3544		104	70 - 130			
2-Hexanone	8.889	1	0.43	8.19296		108	70 - 130			
2-Propanol	4.620	0.61	0.26	4.91534		94.0	70 - 130			
4-Chlorotoluene	7.973	1	0.47	10.3544		77.0	70 - 130			
4-Ethyl Toluene	10.422	1	0.47	9.83166		106	70 - 130			
4-Methyl-2-pentanone	8.766	1	0.30	8.19296		107	70 - 130			
Acetone	4.941	0.59	0.26	4.75084		104	70 - 130			
Acetonitrile	4.164	0.42	0.14	3.35804		124	70 - 130			
Acrolein	4.563	0.57	0.22	4.58593		99.5	70 - 130			
Acrylonitrile	4.124	0.54	0.18	4.34053		95.0	70 - 130			
Benzene	6.262	0.80	0.28	6.38953		98.0	70 - 130			
Benzyl chloride	11.649	1	0.37	10.3544		112	70 - 130			
Bromobenzene	9.568	2	0.59	12.8432		74.5	70 - 130			
Bromodichloromethane	14.607	2	0.70	13.4011		109	70 - 130			
Bromoform	23.671	3	0.90	20.6733		114	70 - 130			
Bromomethane	8.348	0.97	0.46	7.76597		108	70 - 130			
Carbon disulfide	5.668	0.78	0.31	6.22847		91.0	70 - 130			
Carbon tetrachloride	14.030	2	0.43	12.5826		111	70 - 130			
Chlorobenzene	9.575	1	0.41	9.20712		104	70 - 130			
Chloroethane	5.990	0.66	0.28	5.27722		114	70 - 130			
Chloroform	9.033	1	0.50	9.76499		92.5	70 - 130			
Chloromethane	4.254	0.52	0.22	4.12982		103	70 - 130			

Certificate of Analysis

Hushmand Associates, Inc.	Project Number : Parcel 22 - 637 S Clarence St, Los Angele
250 Goddard	Report To : Naresh Bellana
Irvine , CA 92618	Reported : 03/26/2018

Volatile Organic Compounds in AIR by TO-15 (Canister) - Quality Control (cont'd)

Analyte	Result (ug/m³)	PQL (ug/m³)	MDL (ug/m³)	Spike Level	Source Result	% Rec	% Rec Limits	RPD	RPD Limit	Notes
Batch B5H0410 - No_Prep_AIR (continued)										
LCS (B5H0410-BS1) - Continued					Prepared: 8/16/2015 Analyzed: 8/16/2015					
cis-1,2-Dichloroethene	6.820	0.99	0.28	7.92990		86.0	70 - 130			
cis-1,3-Dichloropropene	9.032	1	0.33	9.07724		99.5	70 - 130			
Cyclohexane	6.884	0.86	0.25	6.88425		100	70 - 130			
Dibromochloromethane	19.508	2	0.83	17.0371		114	70 - 130			
Dibromomethane	13.651	2	0.55	14.2196		96.0	70 - 130			
Dichlorodifluoromethane	11.770	1	0.56	9.89063		119	70 - 130			
Dichlorotetrafluoroethane	15.799	2	0.76	13.9812		113	70 - 130			
Ethanol	4.070	0.47	0.20	3.76834		108	70 - 130			
Ethylbenzene	8.684	1	0.35	8.68425		100	70 - 130			
Freon-113	14.561	2	0.58	15.3272		95.0	70 - 130			
Hexachlorobutadiene	15.144	3	1	21.3300		71.0	70 - 130			
Isopropylbenzene	10.225	1	0.52	9.83166		104	70 - 130			
m,p-Xylene	36.300	4	1	34.7370		104	70 - 130			
Methylene chloride	6.287	0.87	0.31	6.94740		90.5	70 - 130			
MTBE	6.273	0.90	0.33	7.21047		87.0	70 - 130			
n-Butylbenzene	12.626	1	0.42	10.9790		115	70 - 130			
n-Propylbenzene	9.979	1	0.41	9.83166		102	70 - 130			
Naphthalene	10.956	1	0.36	10.4843		104	70 - 130			
o-Xylene	9.075	1	0.40	8.68425		104	70 - 130			
p-Isopropyltoluene	9.607	1	0.51	10.9790		87.5	70 - 130			
sec-Butylbenzene	12.187	1	0.56	10.9790		111	70 - 130			
Styrene	8.221	1	0.44	8.51934		96.5	70 - 130			
tert-Butylbenzene	12.461	1	0.62	10.9790		114	70 - 130			
Tetrachloroethene	13.294	2	0.47	13.5650		98.0	70 - 130			
Toluene	7.311	0.94	0.28	7.53688		97.0	70 - 130			
trans-1,2-Dichloroethene	6.899	0.99	0.34	7.92990		87.0	70 - 130			
trans-1,3-Dichloropropene	9.123	1	0.34	9.07722		100	70 - 130			
Trichloroethene	10.640	1	0.47	10.7474		99.0	70 - 130			
Trichlorofluoromethane	12.248	1	0.53	11.2366		109	70 - 130			
Vinyl acetate	7.711	0.88	0.38	7.04204		110	70 - 130			
Vinyl chloride	5.240	0.64	0.21	5.11231		102	70 - 130			
Surrogate: 4-Bromofluorobenzene	*19.40*			*17.8935*		*108*	*79.2 - 147*			
LCS Dup (B5H0410-BSD1)					Prepared: 8/16/2015 Analyzed: 8/16/2015					
1,1,1,2-Tetrachloroethane	16.476	2	0.57	13.7299		120	70 - 130	2.11	20	
1,1,1-Trichloroethane	10.421	1	0.58	10.9123		95.5	70 - 130	3.19	20	
1,1,2,2-Tetrachloroethane	15.721	2	0.77	13.7299		114	70 - 130	2.21	20	
1,1,2-Trichloroethane	11.512	1	0.45	10.9123		106	70 - 130	2.88	20	
1,1-Dichloroethane	7.771	1	0.37	8.09480		96.0	70 - 130	3.17	20	
1,1-Dichloroethene	7.058	0.99	0.34	7.92990		89.0	70 - 130	2.27	20	
1,1-Dichloropropene	8.124	1	0.37	9.07722		89.5	70 - 130	4.90	20	

Hushmand Associates, Inc.	Project Number : Parcel 22 - 637 S Clarence St, Los Angele
250 Goddard	Report To : Naresh Bellana
Irvine , CA 92618	Reported : 03/26/2018

Volatile Organic Compounds in AIR by TO-15 (Canister) - Quality Control (cont'd)

Analyte	Result (ug/m³)	PQL (ug/m³)	MDL (ug/m³)	Spike Level	Source Result	% Rec	% Rec Limits	RPD	RPD Limit	Notes
Batch B5H0410 - No_Prep_AIR (continued)										
LCS Dup (B5H0410-BSD1) - Continued					Prepared: 8/16/2015 Analyzed: 8/16/2015					
1,2,3-Trichloropropane	10.371	2	0.58	12.0597		86.0	70 - 130	5.65	20	
1,2,4-Trichlorobenzene	12.393	2	0.73	14.8422		83.5	70 - 130	16.0	20	
1,2,4-Trimethylbenzene	11.454	1	0.54	9.83166		116	70 - 130	1.73	20	
1,2-Dibromo-3-chloropropane	27.935	2	1	19.3319		144	70 - 130	6.04	20	L5
1,2-Dibromoethane	15.751	2	0.73	15.3670		102	70 - 130	2.47	20	
1,2-Dichlorobenzene	12.445	2	0.54	12.0246		104	70 - 130	2.44	20	
1,2-Dichloroethane	8.621	1	0.34	8.09480		106	70 - 130	1.90	20	
1,2-Dichloropropane	9.935	1	0.41	9.24213		108	70 - 130	3.79	20	
1,3,5-Trimethylbenzene	10.372	1	0.51	9.83166		106	70 - 130	0.952	20	
1,3-Butadiene	4.734	0.55	0.39	4.42454		107	70 - 130	0.00	20	
1,3-Dichlorobenzene	12.806	2	0.56	12.0246		106	70 - 130	0.943	20	
1,4-Dichlorobenzene	12.385	2	0.51	12.0246		103	70 - 130	0.976	20	
1,4-Dioxane	7.567	0.90	0.65	7.20695		105	70 - 130	1.92	20	
2,2,4-Trimethylpentane	10.185	1	0.35	9.34388		109	70 - 130	3.74	20	
2-Butanone	5.810	0.74	0.24	5.89824		98.5	70 - 130	2.57	20	
2-Chloroethyl vinyl ether	8.977	1	0.22	8.71583		103	70 - 130	5.66	20	
2-Chlorotoluene	10.665	1	0.50	10.3544		103	70 - 130	1.45	20	
2-Hexanone	9.258	1	0.43	8.19296		113	70 - 130	4.06	20	
2-Propanol	5.333	0.61	0.26	4.91534		108	70 - 130	14.3	20	
4-Chlorotoluene	7.248	1	0.47	10.3544		70.0	70 - 130	9.52	20	
4-Ethyl Toluene	10.667	1	0.47	9.83166		108	70 - 130	2.33	20	
4-Methyl-2-pentanone	9.135	1	0.30	8.19296		112	70 - 130	4.12	20	
Acetone	5.036	0.59	0.26	4.75084		106	70 - 130	1.90	20	
Acetonitrile	3.946	0.42	0.14	3.35804		118	70 - 130	5.38	20	
Acrolein	4.104	0.57	0.22	4.58593		89.5	70 - 130	10.6	20	
Acrylonitrile	4.319	0.54	0.18	4.34053		99.5	70 - 130	4.63	20	
Benzene	6.453	0.80	0.28	6.38953		101	70 - 130	3.02	20	
Benzyl chloride	11.959	1	0.37	10.3544		115	70 - 130	2.63	20	
Bromobenzene	10.210	2	0.59	12.8432		79.5	70 - 130	6.49	20	
Bromodichloromethane	15.143	2	0.70	13.4011		113	70 - 130	3.60	20	
Bromoform	24.291	3	0.90	20.6733		118	70 - 130	2.59	20	
Bromomethane	8.387	0.97	0.46	7.76597		108	70 - 130	0.464	20	
Carbon disulfide	5.824	0.78	0.31	6.22847		93.5	70 - 130	2.71	20	
Carbon tetrachloride	14.785	2	0.43	12.5826		118	70 - 130	5.24	20	
Chlorobenzene	9.760	1	0.41	9.20712		106	70 - 130	1.90	20	
Chloroethane	5.990	0.66	0.28	5.27722		114	70 - 130	0.00	20	
Chloroform	9.228	1	0.50	9.76499		94.5	70 - 130	2.14	20	
Chloromethane	4.398	0.52	0.22	4.12982		106	70 - 130	3.34	20	
cis-1,2-Dichloroethene	7.058	0.99	0.28	7.92990		89.0	70 - 130	3.43	20	
cis-1,3-Dichloropropene	9.531	1	0.33	9.07724		105	70 - 130	5.38	20	
Cyclohexane	7.194	0.86	0.25	6.88425		104	70 - 130	4.40	20	
Dibromochloromethane	20.104	2	0.83	17.0371		118	70 - 130	3.01	20	

Certificate of Analysis

Hushmand Associates, Inc.	Project Number : Parcel 22 - 637 S Clarence St, Los Angele
250 Goddard	Report To : Naresh Bellana
Irvine , CA 92618	Reported : 03/26/2018

Volatile Organic Compounds in AIR by TO-15 (Canister) - Quality Control (cont'd)

Analyte	Result (ug/m³)	PQL (ug/m³)	MDL (ug/m³)	Spike Level	Source Result	% Rec	% Rec Limits	RPD	RPD Limit	Notes
Batch B5H0410 - No_Prep_AIR (continued)										
LCS Dup (B5H0410-BSD1) - Continued					Prepared: 8/16/2015 Analyzed: 8/16/2015					
Dibromomethane	13.082	2	0.55	14.2196		92.0	70 - 130	4.26	20	
Dichlorodifluoromethane	12.462	1	0.56	9.89063		126	70 - 130	5.71	20	
Dichlorotetrafluoroethane	16.148	2	0.76	13.9812		116	70 - 130	2.19	20	
Ethanol	3.994	0.47	0.20	3.76834		106	70 - 130	1.87	20	
Ethylbenzene	8.945	1	0.35	8.68425		103	70 - 130	2.96	20	
Freon-113	14.867	2	0.58	15.3272		97.0	70 - 130	2.08	20	
Hexachlorobutadiene	15.891	3	1	21.3300		74.5	70 - 130	4.81	20	
Isopropylbenzene	10.422	1	0.52	9.83166		106	70 - 130	1.90	20	
m,p-Xylene	37.169	4	1	34.7370		107	70 - 130	2.36	20	
Methylene chloride	6.392	0.87	0.31	6.94740		92.0	70 - 130	1.64	20	
MTBE	6.417	0.90	0.33	7.21047		89.0	70 - 130	2.27	20	
n-Butylbenzene	12.736	1	0.42	10.9790		116	70 - 130	0.866	20	
n-Propylbenzene	10.274	1	0.41	9.83166		104	70 - 130	2.91	20	
Naphthalene	12.686	1	0.36	10.4843		121	70 - 130	14.6	20	
o-Xylene	9.205	1	0.40	8.68425		106	70 - 130	1.43	20	
p-Isopropyltoluene	8.564	1	0.51	10.9790		78.0	70 - 130	11.5	20	
sec-Butylbenzene	12.351	1	0.56	10.9790		112	70 - 130	1.34	20	
Styrene	8.434	1	0.44	8.51934		99.0	70 - 130	2.56	20	
tert-Butylbenzene	12.626	1	0.62	10.9790		115	70 - 130	1.31	20	
Tetrachloroethene	13.836	2	0.47	13.5650		102	70 - 130	4.00	20	
Toluene	7.612	0.94	0.28	7.53688		101	70 - 130	4.04	20	
trans-1,2-Dichloroethene	7.058	0.99	0.34	7.92990		89.0	70 - 130	2.27	20	
trans-1,3-Dichloropropene	9.486	1	0.34	9.07722		104	70 - 130	3.90	20	
Trichloroethene	10.909	1	0.47	10.7474		102	70 - 130	2.49	20	
Trichlorofluoromethane	12.754	1	0.53	11.2366		114	70 - 130	4.04	20	
Vinyl acetate	8.028	0.88	0.38	7.04204		114	70 - 130	4.03	20	
Vinyl chloride	5.393	0.64	0.21	5.11231		106	70 - 130	2.88	20	
Surrogate: 4-Bromofluorobenzene	*19.11*			*17.8935*		*107*	*79.2 - 147*			

Certificate of Analysis

Hushmand Associates, Inc.	Project Number : Parcel 22 - 637 S Clarence St, Los Angele
250 Goddard	Report To : Naresh Bellana
Irvine , CA 92618	Reported : 03/26/2018

Volatile Organic Compounds in AIR by TO-15 (Canister) - Quality Control

Analyte	Result (ug/m³)	PQL (ug/m³)	MDL (ug/m³)	Spike Level	Source Result	% Rec	% Rec Limits	RPD	RPD Limit	Notes
Batch B5H0463 - No_Prep_AIR										
Blank (B5H0463-BLK1)					Prepared: 8/17/2015 Analyzed: 8/17/2015					
2-Propanol	ND	0.61	0.26							
Acetone	ND	0.59	0.26							
Ethanol	ND	0.47	0.20							
Tetrachloroethene	ND	2	0.47							
Trichlorofluoromethane	ND	1	0.53							
Surrogate: 4-Bromofluorobenzene	*19.18*			*17.8935*		*107*	*79.2 - 147*			
LCS (B5H0463-BS1)					Prepared: 8/17/2015 Analyzed: 8/17/2015					
2-Propanol	5.161	0.61	0.26	4.91534		105	70 - 130			
Acetone	4.798	0.59	0.26	4.75084		101	70 - 130			
Ethanol	3.844	0.47	0.20	3.76834		102	70 - 130			
Tetrachloroethene	13.226	2	0.47	13.5650		97.5	70 - 130			
Trichlorofluoromethane	11.517	1	0.53	11.2366		103	70 - 130			
Surrogate: 4-Bromofluorobenzene	*18.97*			*17.8935*		*106*	*79.2 - 147*			
LCS Dup (B5H0463-BSD1)					Prepared: 8/17/2015 Analyzed: 8/17/2015					
2-Propanol	5.505	0.61	0.26	4.91534		112	70 - 130	6.45	20	
Acetone	5.178	0.59	0.26	4.75084		109	70 - 130	7.62	20	
Ethanol	3.844	0.47	0.20	3.76834		102	70 - 130	0.00	20	
Tetrachloroethene	13.904	2	0.47	13.5650		102	70 - 130	5.00	20	
Trichlorofluoromethane	12.304	1	0.53	11.2366		110	70 - 130	6.60	20	
Surrogate: 4-Bromofluorobenzene	*18.82*			*17.8935*		*105*	*79.2 - 147*			

Certificate of Analysis

Hushmand Associates, Inc.	Project Number : Parcel 22 - 637 S Clarence St, Los Angele
250 Goddard	Report To : Naresh Bellana
Irvine , CA 92618	Reported : 03/26/2018

Volatile Organic Compounds in AIR by TO-15 (Canister) - Quality Control

Analyte	Result (ug/m³)	PQL (ug/m³)	MDL (ug/m³)	Spike Level	Source Result	% Rec	% Rec Limits	RPD	RPD Limit	Notes
Batch B5H0464 - No_Prep_AIR										
Blank (B5H0464-BLK1)						Prepared: 8/18/2015 Analyzed: 8/18/2015				
2-Propanol	ND	0.61	0.26							
Surrogate: 4-Bromofluorobenzene	*18.47*			*17.8935*		*103*	*79.2 - 147*			
LCS (B5H0464-BS1)						Prepared: 8/18/2015 Analyzed: 8/18/2015				
2-Propanol	5.309	0.61	0.26	4.91534		108	70 - 130			
Surrogate: 4-Bromofluorobenzene	*18.75*			*17.8935*		*105*	*79.2 - 147*			
LCS Dup (B5H0464-BSD1)						Prepared: 8/18/2015 Analyzed: 8/18/2015				
2-Propanol	5.210	0.61	0.26	4.91534		106	70 - 130	1.87	20	
Surrogate: 4-Bromofluorobenzene	*18.61*			*17.8935*		*104*	*79.2 - 147*			

Certificate of Analysis

Hushmand Associates, Inc.	Project Number : Parcel 22 - 637 S Clarence St, Los Angele
250 Goddard	Report To : Naresh Bellana
Irvine , CA 92618	Reported : 03/26/2018

Gasoline Range Organics in Air by TO-3 - Quality Control

Analyte	Result (ug/m³)	PQL (ug/m³)	MDL (ug/m³)	Spike Level	Source Result	% Rec	% Rec Limits	RPD	RPD Limit	Notes
Batch B5H0425 - No_Prep_AIR										
Blank (B5H0425-BLK1)						Prepared: 8/17/2015 Analyzed: 8/17/2015				
Gasoline Range Organics	ND	100	70							
Surrogate: 4-Bromofluorobenzene	*17.25*			*17.8935*		*96.4*	*70 - 130*			
LCS (B5H0425-BS1)						Prepared: 8/17/2015 Analyzed: 8/17/2015				
Gasoline Range Organics	839.509	100	70	817.996		103	70 - 130			
Surrogate: 4-Bromofluorobenzene	*17.18*			*17.8935*		*96.0*	*70 - 130*			
LCS Dup (B5H0425-BSD1)						Prepared: 8/17/2015 Analyzed: 8/17/2015				
Gasoline Range Organics	863.395	100	70	817.996		106	70 - 130	2.81	20	
Surrogate: 4-Bromofluorobenzene	*17.75*			*17.8935*		*99.2*	*70 - 130*			

Certificate of Analysis

Hushmand Associates, Inc.	Project Number : Parcel 22 - 637 S Clarence St, Los Angele
250 Goddard	Report To : Naresh Bellana
Irvine , CA 92618	Reported : 03/26/2018

Gasoline Range Organics in Air by TO-3 - Quality Control

Analyte	Result (ug/m³)	PQL (ug/m³)	MDL (ug/m³)	Spike Level	Source Result	% Rec	% Rec Limits	RPD	RPD Limit	Notes
Batch B5H0465 - No_Prep_AIR										
Blank (B5H0465-BLK1)						Prepared: 8/18/2015 Analyzed: 8/18/2015				
Gasoline Range Organics	ND	100	70							
Surrogate: 4-Bromofluorobenzene	*16.96*			*17.8935*		*94.8*	*70 - 130*			
LCS (B5H0465-BS1)						Prepared: 8/18/2015 Analyzed: 8/18/2015				
Gasoline Range Organics	768.589	100	70	817.996		94.0	70 - 130			
Surrogate: 4-Bromofluorobenzene	*17.32*			*17.8935*		*96.8*	*70 - 130*			
LCS Dup (B5H0465-BSD1)						Prepared: 8/18/2015 Analyzed: 8/18/2015				
Gasoline Range Organics	832.311	100	70	817.996		102	70 - 130	7.96	20	
Surrogate: 4-Bromofluorobenzene	*18.32*			*17.8935*		*102*	*70 - 130*			

Certificate of Analysis

Hushmand Associates, Inc.	Project Number : Parcel 22 - 637 S Clarence St, Los Angele
250 Goddard	Report To : Naresh Bellana
Irvine , CA 92618	Reported : 03/26/2018

Notes and Definitions

R	RPD value outside acceptance criteria. Calculation is based on raw values.
L5	Laboratory Control Sample high biased. Sample result/s was non-detect (ND) for the target analyte; therefore reanalysis was not necessary.
ND	Analyte is not detected at or above the Practical Quantitation Limit (PQL). When client requests quantitation against MDL, analyte is not detected at or above the Method Detection Limit (MDL)
PQL	Practical Quantitation Limit
MDL	Method Detection Limit
NR	Not Reported
RPD	Relative Percent Difference
CA2	CA-ELAP (CDPH)
OR1	OR-NELAP (OSPHL)

Notes:
(1) The reported MDL and PQL are based on prep ratio variation and analytical dilution.
(2) The suffix [2C] of specific analytes signifies that the reported result is taken from the instrument's second column.
(3) Results are wet unless otherwise specified.

ADVANCED TECHNOLOGY LABORATORIES

3275 Walnut Ave., Signal Hill, CA 90755
Tel: (562) 989-4045 • Fax: (562) 989-4040

CHAIN OF CUSTODY RECORD

Page ____ of ____

Instruction: Complete all shaded areas.

For Laboratory Use Only — ATLCOC Ver: 20130711

Method of Transport: ☑ Client ☐ ATL ☐ FedEx ☐ OnTrac ☐ GSO ☐ Other: _____

Sample Conditions Upon Receipt

Condition	Y	N	Condition	Y	N
1. CHILLED 4.6°	☐	☐	5. # OF SAMPLES MATCH COC	☑	☐
2. HEADSPACE (VOA)	☐	☐	6. PRESERVED	☐	☐
3. CONTAINER INTACT	☑	☐	7. COOLER TEMP, deg C:	___	
4. SEALED	☐	☑			

CUSTOMER

Company: Hushmand & Assoc
Address: 250 Goddard
City: Irvine State: CA Zip 92618
Tel:
Fax:

SEND REPORT TO:
Attn: Naresh Bellamy Email:
Company: Hushmand & Assoc
Address: 250 Goddard
City: Irvine State: CA Zip:

SEND INVOICE TO: ☐ same as SEND REPORT TO
Attn: Email:
Company:
Address:
City: State: Zip:

PROJECT SAMPLES

Project Name: Stanton LAC
Project No.: LAC 15-003
Sampler: Don Terres
Quote No:
PO #:
Special Instructions/Comments:

ITEM	Lab No.	Sample Description: Sample ID / Location	Date	Time	8260 / 624 (Volatiles)	8015(GRO)	8015(DRO)	8270(Semi-volatiles)	8081(Organochlorine Pesticides)	8082(PCBs)	6010 / 7000(Title 22 Metals)	TO-15	TO-15 Gases	Soil / Sediment / Sludge	Solids / Wipe / Filter	Water - Drinking / Ground	Water - Storm / Waste	Aqueous / Layered - Oil	Air	TAT	Container #	Container Type	Container Material	Preservative	QA/QC	REMARKS
1	1502794-01	637 CS VP-1	8/13	10:00								✓	✓						✓		7	1=Tube; 2=VOA; 3=Liter; 4=Pint; 5=Jar; 6=Tedlar; 7=Canister	1=Glass; 2=Plastic; 3=Metal	1=HCl; 2=HNO3; 3=H2SO4; 4=4C; 5=Zn ((Ac)2; 6=NaOH; 7=NA2S2O3	☐ Routine ☐ Caltran ☐ Legal ☐ RWQCB ☐ Level IV	
2	-2	VP-2		10:07								✓	✓													
3	-3	VP-3		10:11								✓	✓													
4	-4	VP-4		10:25								✓	✓													
5	-5	VP-5		10:19								✓	✓													
6	-6	VP-6		10:27								✓	✓													
7	-7	VP-7		10:43								✓	✓													
8	-8	VP-8		10:33								✓	✓													
9	-9	VP-9		10:30								✓	✓													
10	-10	VP-10		10:46								✓	✓													

TERMS

1. Sample receiving hours: 7:30 AM to 7:30 PM Monday - Friday; Saturday 8:00 AM to 12:00 PM.
2. Samples Submitted AFTER 3:00 PM, are considered received the following Business day at 8:00 AM.
3. The following turnaround time conditions apply:
   - TAT = 0 : 300% Surcharge SAME BUSINESS DAY if received by 9:00 AM
   - TAT = 1 : 100% Surcharge NEXT BUSINESS DAY (COB 5:00 PM)
   - TAT = 2 : 50% Surcharge 2ND BUSINESS DAY (COB 5:00 PM)
   - TAT = 3 : 30% Surcharge 3RD BUSINESS DAY (COB 5:00 PM)
   - TAT = 4 : 20% Surcharge 4TH BUSINESS DAY (COB 5:00 PM)
   - TAT = 5 : NO SURCHARGE 5th BUSINESS DAY (COB 5:00 PM)
4. Weekend, holiday, after-hours work - ask for quote.
5. Subcontract TAT is 10 - 15 business days. Projects requiring shorter TATs will incur a surcharge respective to the subcontract lab --- ask for quote.
6. Liquid and solid samples will be disposed of after 45 calendar days from receipt of samples; air samples will be disposed of after 14 calendar days after receipt of samples.
7. Electronic records maintained for five (5) years from report date.
8. Hard copy reports will be disposed of after 45 calendar days from report date.
9. Storage and Report Fees:
   - Liquid & solid samples: Complimentary storage for forty-five (45) calendar days from receipt of samples; $2/sample/month if extended storage or hold is requested.
   - Air samples: Complimentary storage for ten (10) calendar days from receipt of samples; $20/ sample/week if extended storage is requested.
   - Hard copy and regenerated reports/EDDs: $17.50 per hard copy report requested; $50.00 per regenerated/reforma? ed report; $35 per reprocessed EDD.
10. Rush TCLP/STLC samples: add 2 days to analysis TAT for extraction on procedure.
11. Unanalyzed samples will incur a disposal fee of $7 per sample.

As the authorized agent of the company above, I hereby purchase laboratory services from ATL as shown above and hereby guarantee payment as quoted.

Don Terres — Submitter Print Name
Signature

CUSTODY

Relinquished by: (Signature and Printed Name)	Date	Time	Received by: (Signature and Printed Name)	Date	Time
Don Terres	8/13	10:25	FPown	8/13/15	1025

ADVANCED TECHNOLOGY LABORATORIES

3275 Walnut Ave., Signal Hill, CA 90755
Tel: (562) 989-4045 • Fax: (562) 989-4040

CHAIN OF CUSTODY RECORD

Page 2 of 2

Instruction: Complete all shaded areas.

For Laboratory Use Only				ATLCOC Ver: 201307
Method of Transport	Sample Conditions Upon Receipt			
	Condition	Y	N	Condition	Y	N
☑ Client ☐ ATL	1. CHILLED	☐	☐	5. # OF SAMPLES MATCH COC	☐	☐
☐ FedEx ☐ OnTrac	2. HEADSPACE (VOA)	☐	☐	6. PRESERVED	☐	☐
☐ GSO	3. CONTAINER INTACT	☐	☐	7. COOLER TEMP, deg C:		
☐ Other:	4. SEALED	☐	☐			

CUSTOMER

Company:	Address:		Tel:
	City:	State: Zip:	Fax:

SEND REPORT TO:	SEND INVOICE TO: ☐ same as SEND REPORT TO
Attn: Naresh Bellamkonda Email:	Attn: Email:
Company: Hushmand & Assoc	Company:
Address:	Address:
City: State: Zip:	City: State: Zip:

PROJECT SAMPLES

Project Name:	Quote No:	Special Instructions/Comments:
Stanislaus LAC		
Project No.: LAC 15003	PO #:	
Sampler:		

ITEM	Lab No.	Sample Description: Sample ID / Location	Date	Time	8260 / 624 (Volatiles)	8015(GRO)	8015(DRO)	8270(Semi-volatiles)	8081(Organochlorine Pesticides)	8082(PCBs)	6010 / 7000(Title 22 Metals)	TO-15	TPH Gas	SOIL / SEDIMENT / SLUDGE	SOLIDS / WIPE/ FILTER	WATER - DRINKING / GROUND	WATER - STORM / WASTE	AQUEOUS / LAYERED - OIL	Air	TAT	Container #:	Container Type: 1=Tube; 2=VOA; 3=Liter; 4=Pint; 5=Jar; 6=Tedlar; 7 = Canister	Container Material: 1=Glass; 2=Plastic; 3=Metal	Preservative: 1=HCl; 2=HNO3; 3=H2SO4; 4 = 4C; 5=Zn (Ac)2; 6=NaOH; 7=NA2S2O3	REMARKS
1	1502794 -11	637 CS VP-11	8/13	10:48								/	/						↓		7				
2	" -12	↓ VP-12	↓	10:51								/	/								↓				
3	" -13	↓ VP-6 Dupl.	↓	11:00								/	/						↓						
4																									
5																									
6																									
7																									
8																									
9																									
10																									

QA/QC
- ☐ Routine
- ☐ Caltrans
- ☐ Legal
- ☐ RWQCB
- ☐ Level IV

TERMS

1. Sample receiving hours: 7:30 AM to 7:30 PM Monday - Friday; Saturday 8:00 AM to 12:00 PM.
2. Samples Submitted AFTER 3:00 PM, are considered received the following Business day at 8:00 AM.
3. The following turnaround time conditions apply:
   - TAT = 0 : 300% Surcharge SAME BUSINESS DAY if received by 9:00 AM
   - TAT = 1 : 100% Surcharge NEXT BUSINESS DAY (COB 5:00 PM)
   - TAT = 2 : 50% Surcharge 2ND BUSINESS DAY (COB 5:00 PM)
   - TAT = 3 : 30% Surcharge 3RD BUSINESS DAY (COB 5:00 PM)
   - TAT = 4 : 20% Surcharge 4TH BUSINESS DAY (COB 5:00 PM)
   - TAT = 5 : NO SURCHARGE 5th BUSINESS DAY (COB 5:00 PM)
4. Weekend, holiday, after-hours work - ask for quote.
5. Subcontract TAT is 10 - 15 business days. Projects requiring shorter TATs will incur a surcharge respective to the subcontract lab --- ask for quote.
6. Liquid and solid samples will be disposed of after 45 calendar days from receipt of samples; air samples will be disposed of after 14 calendar days after receipt of samples.
7. Electronic records maintained for fi ve (5) years from report date.
8. Hard copy reports will be disposed of after 45 calendar days from report date.
9. Storage and Report Fees:
   - Liquid & solid samples: Complimentary storage for forty-fi ve (45) calendar days from receipt of samples; $2/sample/month if extended storage or hold is requested.
   - Air samples: Complimentary storage for ten (10) calendar days from receipt of samples; $20/ sample/week if extended storage is requested.
   - Hard copy and regenerated reports/EDDs: $17.50 per hard copy report requested; $50.00 per regenerated/reforma? ed report; $35 per reprocessed EDD.
10. Rush TCLP/STLC samples: add 2 days to analysis TAT for extraction on procedure.
11. Unanalyzed samples will incur a disposal fee of $7 per sample.

As the authorized agent of the company above, I hereby purchase laboratory services from ATL as shown above and hereby guarantee payment as quoted.

Don Terres — Submitter Print Name

Signature

CUSTODY

Relinquished by: (Signature and Printed Name)	Date:	Time:	Received by: (Signature and Printed Name)	Date:	Time:
Don Terres	8/13	12:25		8/13/15	1225
Relinquished by: (Signature and Printed Name)	Date:	Time:	Received by: (Signature and Printed Name)	Date:	Time:
Relinquished by: (Signature and Printed Name)	Date:	Time:	Received by: (Signature and Printed Name)	Date:	Time:

Rachelle Arada

From: Naresh Bellana [naresh@haieng.com]
Sent: Thursday, August 20, 2015 3:56 PM
To: Rachelle Arada
Subject: RE: Results/Invoice - Skanska LAC, LAC 15-003 (ATL# 1502794)

Rachelle,

Please change the client reference/project number to "Parcel 22 – 637 S Clarence St, Los Angeles".

Let me know if you have any questions.

Thanking you,

Sincerely,

Naresh Bellana, MS, PE
Senior Staff Engineer

Hushmand Associates, Inc.
250 Goddard
Irvine, CA 92618

p. *(949) 777-1266*
d. *(949) 777-1275*
f. *(949) 777-1276*

From: Rachelle Arada [mailto:Rachelle@atlglobal.com]
Sent: Thursday, August 20, 2015 3:51 PM
To: Naresh Bellana
Subject: Results/Invoice - Skanska LAC, LAC 15-003 (ATL# 1502794)

Hi Naresh,

Attached are the results/invoice for the above project.

Rachelle Arada
Project Manager

Advanced Technology Laboratories
www.atlglobal.com
Tel: (562) 989-4045 ext. 237
Fax: (562) 989-4040

Advanced Technology Laboratories is a full-service environmental lab providing organic and inorganic analyses of soil, water, wastewater, storm water and hazardous waste samples. ATL is accredited by the State of California, NELAP and State of Oregon (Air) and holds various SBE, DBE and MBE certificates and a USDA soil permit. ATL takes pride in providing our customers with quick turnaround time, excellent customer service and defensible data while offering very competitive rates. *Advanced Technology Labs - Your Partner for Quality Environmental Testing*

This message is intended for the use of the individual or entity to which it is addressed. This may contain information that is privileged, confidential, and exempt from disclosure under applicable law. If the reader of this message is not the intended recipient, or the employee or agent responsible for delivering the message to the intended recipient, you are hereby notified that any dissemination, distribution or copying of this communication is strictly prohibited. If you have received this communication in error, please notify us immediately by telephone and delete the original message. Thank you.

March 26, 2018

Naresh Bellana
Hushmand Associates, Inc.
250 Goddard
Irvine, CA 92618
Tel: (949) 777-1266
Fax:(949) 777-1276

ELAP No.: 1838
CSDLAC No.: 10196
ORELAP No.: CA300003

Re: ATL Work Order Number : 1601497

Client Reference : Parcel 20 6th St. Bridge, LAC 15-003

Enclosed are the results for sample(s) received on April 26, 2016 by Advanced Technology Laboratories. The sample(s) are tested for the parameters as indicated on the enclosed chain of custody in accordance with applicable laboratory certifications. The laboratory results contained in this report specifically pertains to the sample(s) submitted.

Thank you for the opportunity to serve the needs of your company. If you have any questions, please feel free to contact me or your Project Manager.

Sincerely,

Eddie Rodriguez
Laboratory Director

The cover letter and the case narrative are an integral part of this analytical report and its absence renders the report invalid. Test results contained within this data package meet the requirements of applicable state-specific certification programs. The report cannot be reproduced without written permission from the client and Advanced Technology Laboratories.

Certificate of Analysis

Hushmand Associates, Inc.		Project Number :	Parcel 20 6th St. Bridge, LAC 15-003
250 Goddard		Report To :	Naresh Bellana
Irvine , CA 92618		Reported :	03/26/2018

SUMMARY OF SAMPLES

Sample ID	Laboratory ID	Matrix	Date Sampled	Date Received
P-20 VP-1 @ 5'	1601497-01	Vapor	4/26/16 11:59	4/26/16 14:00
P-20 VP-2 @ 5'	1601497-02	Vapor	4/26/16 12:02	4/26/16 14:00
P-20 VP-3 @ 5'	1601497-03	Vapor	4/26/16 12:05	4/26/16 14:00
P-20 VP-4 @ 5'	1601497-04	Vapor	4/26/16 12:11	4/26/16 14:00
P-20 VP-5 @ 3'	1601497-05	Vapor	4/26/16 12:16	4/26/16 14:00
P-20 VP-6 @ 5'	1601497-06	Vapor	4/26/16 12:20	4/26/16 14:00
P-20 VP-7 @ 3'	1601497-07	Vapor	4/26/16 12:27	4/26/16 14:00
P-20 VP-8 @ 5'	1601497-08	Vapor	4/26/16 12:31	4/26/16 14:00
P-20 VP-9 @ 5'	1601497-09	Vapor	4/26/16 12:36	4/26/16 14:00
P-20 VP-4 @ 5' Dup	1601497-10	Vapor	4/26/16 12:41	4/26/16 14:00
P-20 VP-9 @ 5' Dup	1601497-11	Vapor	4/26/16 12:45	4/26/16 14:00

Certificate of Analysis

Hushmand Associates, Inc.	Project Number : Parcel 20 6th St. Bridge, LAC 15-003
250 Goddard	Report To : Naresh Bellana
Irvine , CA 92618	Reported : 03/26/2018

Client Sample ID P-20 VP-1 @ 5'

Lab ID: 1601497-01

Volatile Organic Compounds in AIR by TO-15 (Canister) **Analyst: LT**

Analyte	Result (ug/m³)	PQL (ug/m³)	Dilution	Batch	Prepared	Date/Time Analyzed	Notes
1,1,1,2-Tetrachloroethane	ND	20	10	B6D0656	04/27/2016	04/27/16 11:39	
1,1,1-Trichloroethane	ND	10	10	B6D0656	04/27/2016	04/27/16 11:39	
1,1,2,2-Tetrachloroethane	ND	20	10	B6D0656	04/27/2016	04/27/16 11:39	
1,1,2-Trichloroethane	**50**	10	10	B6D0656	04/27/2016	04/27/16 11:39	
1,1-Dichloroethane	ND	10	10	B6D0656	04/27/2016	04/27/16 11:39	
1,1-Dichloroethene	ND	10	10	B6D0656	04/27/2016	04/27/16 11:39	
1,1-Dichloropropene	ND	10	10	B6D0656	04/27/2016	04/27/16 11:39	
1,2,3-Trichloropropane	ND	20	10	B6D0656	04/27/2016	04/27/16 11:39	
1,2,4-Trichlorobenzene	ND	20	10	B6D0656	04/27/2016	04/27/16 11:39	
1,2,4-Trimethylbenzene	ND	10	10	B6D0656	04/27/2016	04/27/16 11:39	
1,2-Dibromo-3-chloropropane	ND	20	10	B6D0656	04/27/2016	04/27/16 11:39	
1,2-Dibromoethane	ND	20	10	B6D0656	04/27/2016	04/27/16 11:39	
1,2-Dichlorobenzene	ND	20	10	B6D0656	04/27/2016	04/27/16 11:39	
1,2-Dichloroethane	ND	10	10	B6D0656	04/27/2016	04/27/16 11:39	
1,2-Dichloropropane	ND	10	10	B6D0656	04/27/2016	04/27/16 11:39	
1,3,5-Trimethylbenzene	ND	10	10	B6D0656	04/27/2016	04/27/16 11:39	
1,3-Butadiene	ND	6	10	B6D0656	04/27/2016	04/27/16 11:39	
1,3-Dichlorobenzene	ND	20	10	B6D0656	04/27/2016	04/27/16 11:39	
1,4-Dichlorobenzene	ND	20	10	B6D0656	04/27/2016	04/27/16 11:39	
1,4-Dioxane	ND	9	10	B6D0656	04/27/2016	04/27/16 11:39	
2,2,4-Trimethylpentane	ND	10	10	B6D0656	04/27/2016	04/27/16 11:39	
2-Butanone	ND	7	10	B6D0656	04/27/2016	04/27/16 11:39	
2-Chloroethyl vinyl ether	ND	10	10	B6D0656	04/27/2016	04/27/16 11:39	
2-Chlorotoluene	ND	10	10	B6D0656	04/27/2016	04/27/16 11:39	
2-Hexanone	ND	10	10	B6D0656	04/27/2016	04/27/16 11:39	
2-Propanol	ND	6	10	B6D0656	04/27/2016	04/27/16 11:39	
4-Chlorotoluene	ND	10	10	B6D0656	04/27/2016	04/27/16 11:39	
4-Ethyl Toluene	ND	10	10	B6D0656	04/27/2016	04/27/16 11:39	
4-Methyl-2-pentanone	ND	10	10	B6D0656	04/27/2016	04/27/16 11:39	
Acetone	**60**	6	10	B6D0656	04/27/2016	04/27/16 11:39	
Acetonitrile	ND	4	10	B6D0656	04/27/2016	04/27/16 11:39	
Acrolein	ND	6	10	B6D0656	04/27/2016	04/27/16 11:39	
Acrylonitrile	ND	5	10	B6D0656	04/27/2016	04/27/16 11:39	
Benzene	ND	8	10	B6D0656	04/27/2016	04/27/16 11:39	
Benzyl chloride	ND	10	10	B6D0656	04/27/2016	04/27/16 11:39	
Bromobenzene	ND	20	10	B6D0656	04/27/2016	04/27/16 11:39	
Bromodichloromethane	ND	20	10	B6D0656	04/27/2016	04/27/16 11:39	

Certificate of Analysis

Hushmand Associates, Inc.	Project Number : Parcel 20 6th St. Bridge, LAC 15-003
250 Goddard	Report To : Naresh Bellana
Irvine , CA 92618	Reported : 03/26/2018

Client Sample ID P-20 VP-1 @ 5'

Lab ID: 1601497-01

Volatile Organic Compounds in AIR by TO-15 (Canister) **Analyst: LT**

Analyte	Result (ug/m³)	PQL (ug/m³)	Dilution	Batch	Prepared	Date/Time Analyzed	Notes
Bromoform	ND	30	10	B6D0656	04/27/2016	04/27/16 11:39	
Bromomethane	ND	10	10	B6D0656	04/27/2016	04/27/16 11:39	
Carbon disulfide	ND	8	10	B6D0656	04/27/2016	04/27/16 11:39	
Carbon tetrachloride	ND	20	10	B6D0656	04/27/2016	04/27/16 11:39	
Chlorobenzene	ND	10	10	B6D0656	04/27/2016	04/27/16 11:39	
Chloroethane	ND	7	10	B6D0656	04/27/2016	04/27/16 11:39	
Chloroform	ND	10	10	B6D0656	04/27/2016	04/27/16 11:39	
Chloromethane	ND	5	10	B6D0656	04/27/2016	04/27/16 11:39	
cis-1,2-Dichloroethene	ND	10	10	B6D0656	04/27/2016	04/27/16 11:39	
cis-1,3-Dichloropropene	ND	10	10	B6D0656	04/27/2016	04/27/16 11:39	
Cyclohexane	ND	9	10	B6D0656	04/27/2016	04/27/16 11:39	
Dibromochloromethane	ND	20	10	B6D0656	04/27/2016	04/27/16 11:39	
Dibromomethane	ND	20	10	B6D0656	04/27/2016	04/27/16 11:39	
Dichlorodifluoromethane	**120**	10	10	B6D0656	04/27/2016	04/27/16 11:39	
Dichlorotetrafluoroethane	ND	20	10	B6D0656	04/27/2016	04/27/16 11:39	
Ethanol	ND	5	10	B6D0656	04/27/2016	04/27/16 11:39	
Ethylbenzene	ND	10	10	B6D0656	04/27/2016	04/27/16 11:39	
Freon-113	ND	20	10	B6D0656	04/27/2016	04/27/16 11:39	
Hexachlorobutadiene	ND	30	10	B6D0656	04/27/2016	04/27/16 11:39	
Isopropylbenzene	ND	10	10	B6D0656	04/27/2016	04/27/16 11:39	
m,p-Xylene	ND	40	10	B6D0656	04/27/2016	04/27/16 11:39	
Methylene chloride	ND	9	10	B6D0656	04/27/2016	04/27/16 11:39	
MTBE	ND	9	10	B6D0656	04/27/2016	04/27/16 11:39	
n-Butylbenzene	ND	10	10	B6D0656	04/27/2016	04/27/16 11:39	
n-Propylbenzene	ND	10	10	B6D0656	04/27/2016	04/27/16 11:39	
Naphthalene	ND	10	10	B6D0656	04/27/2016	04/27/16 11:39	
o-Xylene	ND	10	10	B6D0656	04/27/2016	04/27/16 11:39	
p-Isopropyltoluene	ND	10	10	B6D0656	04/27/2016	04/27/16 11:39	
sec-Butylbenzene	ND	10	10	B6D0656	04/27/2016	04/27/16 11:39	
Styrene	ND	10	10	B6D0656	04/27/2016	04/27/16 11:39	
tert-Butylbenzene	ND	10	10	B6D0656	04/27/2016	04/27/16 11:39	
Tetrachloroethene	**310**	20	10	B6D0656	04/27/2016	04/27/16 11:39	
Toluene	ND	9	10	B6D0656	04/27/2016	04/27/16 11:39	
trans-1,2-Dichloroethene	ND	10	10	B6D0656	04/27/2016	04/27/16 11:39	
trans-1,3-Dichloropropene	ND	10	10	B6D0656	04/27/2016	04/27/16 11:39	
Trichloroethene	ND	10	10	B6D0656	04/27/2016	04/27/16 11:39	
Trichlorofluoromethane	**120000**	2800	2000	B6D0710	04/28/2016	04/28/16 19:41	

Certificate of Analysis

Hushmand Associates, Inc.	Project Number : Parcel 20 6th St. Bridge, LAC 15-003
250 Goddard	Report To : Naresh Bellana
Irvine , CA 92618	Reported : 03/26/2018

Client Sample ID P-20 VP-1 @ 5'

Lab ID: 1601497-01

Volatile Organic Compounds in AIR by TO-15 (Canister) **Analyst: LT**

Analyte		Result (ug/m³)	PQL (ug/m³)	Dilution	Batch	Prepared	Date/Time Analyzed	Notes
Vinyl acetate		ND	9	10	B6D0656	04/27/2016	04/27/16 11:39	
Vinyl chloride		ND	6	10	B6D0656	04/27/2016	04/27/16 11:39	
Surrogate: 4-Bromofluorobenzene	*112 %*		*79.2 - 147*		B6D0710	04/28/2016	*04/28/16 19:41*	
Surrogate: 4-Bromofluorobenzene	*100 %*		*79.2 - 147*		B6D0656	04/27/2016	*04/27/16 11:39*	

Gasoline Range Organics in Air by TO-3 **Analyst: LT**

Analyte		Result (ug/m³)	PQL (ug/m³)	Dilution	Batch	Prepared	Date/Time Analyzed	Notes
Gasoline Range Organics		**120000**	41000	400	B6E0059	04/29/2016	04/29/16 12:27	
Surrogate: 4-Bromofluorobenzene	*111 %*		*70 - 130*		B6E0059	04/29/2016	*04/29/16 12:27*	

Certificate of Analysis

Hushmand Associates, Inc.	Project Number : Parcel 20 6th St. Bridge, LAC 15-003
250 Goddard	Report To : Naresh Bellana
Irvine , CA 92618	Reported : 03/26/2018

Client Sample ID P-20 VP-2 @ 5'

Lab ID: 1601497-02

Volatile Organic Compounds in AIR by TO-15 (Canister) **Analyst: LT**

Analyte	Result (ug/m³)	PQL (ug/m³)	Dilution	Batch	Prepared	Date/Time Analyzed	Notes
1,1,1,2-Tetrachloroethane	ND	20	10	B6D0656	04/27/2016	04/27/16 12:52	
1,1,1-Trichloroethane	ND	10	10	B6D0656	04/27/2016	04/27/16 12:52	
1,1,2,2-Tetrachloroethane	ND	20	10	B6D0656	04/27/2016	04/27/16 12:52	
1,1,2-Trichloroethane	**20**	10	10	B6D0656	04/27/2016	04/27/16 12:52	
1,1-Dichloroethane	ND	10	10	B6D0656	04/27/2016	04/27/16 12:52	
1,1-Dichloroethene	ND	10	10	B6D0656	04/27/2016	04/27/16 12:52	
1,1-Dichloropropene	ND	10	10	B6D0656	04/27/2016	04/27/16 12:52	
1,2,3-Trichloropropane	ND	20	10	B6D0656	04/27/2016	04/27/16 12:52	
1,2,4-Trichlorobenzene	ND	20	10	B6D0656	04/27/2016	04/27/16 12:52	
1,2,4-Trimethylbenzene	ND	10	10	B6D0656	04/27/2016	04/27/16 12:52	
1,2-Dibromo-3-chloropropane	ND	20	10	B6D0656	04/27/2016	04/27/16 12:52	
1,2-Dibromoethane	ND	20	10	B6D0656	04/27/2016	04/27/16 12:52	
1,2-Dichlorobenzene	ND	20	10	B6D0656	04/27/2016	04/27/16 12:52	
1,2-Dichloroethane	ND	10	10	B6D0656	04/27/2016	04/27/16 12:52	
1,2-Dichloropropane	ND	10	10	B6D0656	04/27/2016	04/27/16 12:52	
1,3,5-Trimethylbenzene	ND	10	10	B6D0656	04/27/2016	04/27/16 12:52	
1,3-Butadiene	ND	6	10	B6D0656	04/27/2016	04/27/16 12:52	
1,3-Dichlorobenzene	ND	20	10	B6D0656	04/27/2016	04/27/16 12:52	
1,4-Dichlorobenzene	ND	20	10	B6D0656	04/27/2016	04/27/16 12:52	
1,4-Dioxane	ND	9	10	B6D0656	04/27/2016	04/27/16 12:52	
2,2,4-Trimethylpentane	ND	10	10	B6D0656	04/27/2016	04/27/16 12:52	
2-Butanone	ND	7	10	B6D0656	04/27/2016	04/27/16 12:52	
2-Chloroethyl vinyl ether	ND	10	10	B6D0656	04/27/2016	04/27/16 12:52	
2-Chlorotoluene	ND	10	10	B6D0656	04/27/2016	04/27/16 12:52	
2-Hexanone	ND	10	10	B6D0656	04/27/2016	04/27/16 12:52	
2-Propanol	ND	6	10	B6D0656	04/27/2016	04/27/16 12:52	
4-Chlorotoluene	ND	10	10	B6D0656	04/27/2016	04/27/16 12:52	
4-Ethyl Toluene	ND	10	10	B6D0656	04/27/2016	04/27/16 12:52	
4-Methyl-2-pentanone	ND	10	10	B6D0656	04/27/2016	04/27/16 12:52	
Acetone	**70**	6	10	B6D0656	04/27/2016	04/27/16 12:52	
Acetonitrile	ND	4	10	B6D0656	04/27/2016	04/27/16 12:52	
Acrolein	ND	6	10	B6D0656	04/27/2016	04/27/16 12:52	
Acrylonitrile	ND	5	10	B6D0656	04/27/2016	04/27/16 12:52	
Benzene	ND	8	10	B6D0656	04/27/2016	04/27/16 12:52	
Benzyl chloride	ND	10	10	B6D0656	04/27/2016	04/27/16 12:52	
Bromobenzene	ND	20	10	B6D0656	04/27/2016	04/27/16 12:52	
Bromodichloromethane	ND	20	10	B6D0656	04/27/2016	04/27/16 12:52	

Certificate of Analysis

Hushmand Associates, Inc.		Project Number :	Parcel 20 6th St. Bridge, LAC 15-003
250 Goddard		Report To :	Naresh Bellana
Irvine , CA 92618		Reported :	03/26/2018

Client Sample ID P-20 VP-2 @ 5'

Lab ID: 1601497-02

Volatile Organic Compounds in AIR by TO-15 (Canister) **Analyst: LT**

Analyte	Result (ug/m³)	PQL (ug/m³)	Dilution	Batch	Prepared	Date/Time Analyzed	Notes
Bromoform	ND	30	10	B6D0656	04/27/2016	04/27/16 12:52	
Bromomethane	ND	10	10	B6D0656	04/27/2016	04/27/16 12:52	
Carbon disulfide	ND	8	10	B6D0656	04/27/2016	04/27/16 12:52	
Carbon tetrachloride	ND	20	10	B6D0656	04/27/2016	04/27/16 12:52	
Chlorobenzene	ND	10	10	B6D0656	04/27/2016	04/27/16 12:52	
Chloroethane	ND	7	10	B6D0656	04/27/2016	04/27/16 12:52	
Chloroform	ND	10	10	B6D0656	04/27/2016	04/27/16 12:52	
Chloromethane	ND	5	10	B6D0656	04/27/2016	04/27/16 12:52	
cis-1,2-Dichloroethene	ND	10	10	B6D0656	04/27/2016	04/27/16 12:52	
cis-1,3-Dichloropropene	ND	10	10	B6D0656	04/27/2016	04/27/16 12:52	
Cyclohexane	ND	9	10	B6D0656	04/27/2016	04/27/16 12:52	
Dibromochloromethane	ND	20	10	B6D0656	04/27/2016	04/27/16 12:52	
Dibromomethane	ND	20	10	B6D0656	04/27/2016	04/27/16 12:52	
Dichlorodifluoromethane	**50**	10	10	B6D0656	04/27/2016	04/27/16 12:52	
Dichlorotetrafluoroethane	ND	20	10	B6D0656	04/27/2016	04/27/16 12:52	
Ethanol	**6**	5	10	B6D0656	04/27/2016	04/27/16 12:52	
Ethylbenzene	ND	10	10	B6D0656	04/27/2016	04/27/16 12:52	
Freon-113	ND	20	10	B6D0656	04/27/2016	04/27/16 12:52	
Hexachlorobutadiene	ND	30	10	B6D0656	04/27/2016	04/27/16 12:52	
Isopropylbenzene	ND	10	10	B6D0656	04/27/2016	04/27/16 12:52	
m,p-Xylene	ND	40	10	B6D0656	04/27/2016	04/27/16 12:52	
Methylene chloride	ND	9	10	B6D0656	04/27/2016	04/27/16 12:52	
MTBE	ND	9	10	B6D0656	04/27/2016	04/27/16 12:52	
n-Butylbenzene	ND	10	10	B6D0656	04/27/2016	04/27/16 12:52	
n-Propylbenzene	ND	10	10	B6D0656	04/27/2016	04/27/16 12:52	
Naphthalene	ND	10	10	B6D0656	04/27/2016	04/27/16 12:52	
o-Xylene	ND	10	10	B6D0656	04/27/2016	04/27/16 12:52	
p-Isopropyltoluene	ND	10	10	B6D0656	04/27/2016	04/27/16 12:52	
sec-Butylbenzene	ND	10	10	B6D0656	04/27/2016	04/27/16 12:52	
Styrene	ND	10	10	B6D0656	04/27/2016	04/27/16 12:52	
tert-Butylbenzene	ND	10	10	B6D0656	04/27/2016	04/27/16 12:52	
Tetrachloroethene	**270**	20	10	B6D0656	04/27/2016	04/27/16 12:52	
Toluene	ND	9	10	B6D0656	04/27/2016	04/27/16 12:52	
trans-1,2-Dichloroethene	ND	10	10	B6D0656	04/27/2016	04/27/16 12:52	
trans-1,3-Dichloropropene	ND	10	10	B6D0656	04/27/2016	04/27/16 12:52	
Trichloroethene	ND	10	10	B6D0656	04/27/2016	04/27/16 12:52	
Trichlorofluoromethane	**18000**	280	200	B6D0710	04/28/2016	04/28/16 20:19	

Certificate of Analysis

Hushmand Associates, Inc.	Project Number : Parcel 20 6th St. Bridge, LAC 15-003
250 Goddard	Report To : Naresh Bellana
Irvine , CA 92618	Reported : 03/26/2018

Client Sample ID P-20 VP-2 @ 5'

Lab ID: 1601497-02

Volatile Organic Compounds in AIR by TO-15 (Canister) **Analyst: LT**

Analyte		Result (ug/m³)	PQL (ug/m³)	Dilution	Batch	Prepared	Date/Time Analyzed	Notes
Vinyl acetate		ND	9	10	B6D0656	04/27/2016	04/27/16 12:52	
Vinyl chloride		ND	6	10	B6D0656	04/27/2016	04/27/16 12:52	
Surrogate: 4-Bromofluorobenzene	*100 %*		*79.2 - 147*		B6D0710	04/28/2016	*04/28/16 20:19*	
Surrogate: 4-Bromofluorobenzene	*101 %*		*79.2 - 147*		B6D0656	04/27/2016	*04/27/16 12:52*	

Gasoline Range Organics in Air by TO-3 **Analyst: LT**

Analyte		Result (ug/m³)	PQL (ug/m³)	Dilution	Batch	Prepared	Date/Time Analyzed	Notes
Gasoline Range Organics		**21000**	10000	100	B6E0059	04/29/2016	04/29/16 13:08	
Surrogate: 4-Bromofluorobenzene	*110 %*		*70 - 130*		B6E0059	04/29/2016	*04/29/16 13:08*	

Certificate of Analysis

Hushmand Associates, Inc.	Project Number : Parcel 20 6th St. Bridge, LAC 15-003
250 Goddard	Report To : Naresh Bellana
Irvine , CA 92618	Reported : 03/26/2018

Client Sample ID P-20 VP-3 @ 5'

Lab ID: 1601497-03

Volatile Organic Compounds in AIR by TO-15 (Canister) **Analyst: LT**

Analyte	Result (ug/m³)	PQL (ug/m³)	Dilution	Batch	Prepared	Date/Time Analyzed	Notes
1,1,1,2-Tetrachloroethane	ND	20	10	B6D0656	04/27/2016	04/27/16 13:30	
1,1,1-Trichloroethane	ND	10	10	B6D0656	04/27/2016	04/27/16 13:30	
1,1,2,2-Tetrachloroethane	ND	20	10	B6D0656	04/27/2016	04/27/16 13:30	
1,1,2-Trichloroethane	**30**	10	10	B6D0656	04/27/2016	04/27/16 13:30	
1,1-Dichloroethane	ND	10	10	B6D0656	04/27/2016	04/27/16 13:30	
1,1-Dichloroethene	ND	10	10	B6D0656	04/27/2016	04/27/16 13:30	
1,1-Dichloropropene	ND	10	10	B6D0656	04/27/2016	04/27/16 13:30	
1,2,3-Trichloropropane	ND	20	10	B6D0656	04/27/2016	04/27/16 13:30	
1,2,4-Trichlorobenzene	ND	20	10	B6D0656	04/27/2016	04/27/16 13:30	
1,2,4-Trimethylbenzene	ND	10	10	B6D0656	04/27/2016	04/27/16 13:30	
1,2-Dibromo-3-chloropropane	ND	20	10	B6D0656	04/27/2016	04/27/16 13:30	
1,2-Dibromoethane	ND	20	10	B6D0656	04/27/2016	04/27/16 13:30	
1,2-Dichlorobenzene	ND	20	10	B6D0656	04/27/2016	04/27/16 13:30	
1,2-Dichloroethane	ND	10	10	B6D0656	04/27/2016	04/27/16 13:30	
1,2-Dichloropropane	ND	10	10	B6D0656	04/27/2016	04/27/16 13:30	
1,3,5-Trimethylbenzene	ND	10	10	B6D0656	04/27/2016	04/27/16 13:30	
1,3-Butadiene	ND	6	10	B6D0656	04/27/2016	04/27/16 13:30	
1,3-Dichlorobenzene	ND	20	10	B6D0656	04/27/2016	04/27/16 13:30	
1,4-Dichlorobenzene	ND	20	10	B6D0656	04/27/2016	04/27/16 13:30	
1,4-Dioxane	ND	9	10	B6D0656	04/27/2016	04/27/16 13:30	
2,2,4-Trimethylpentane	ND	10	10	B6D0656	04/27/2016	04/27/16 13:30	
2-Butanone	ND	7	10	B6D0656	04/27/2016	04/27/16 13:30	
2-Chloroethyl vinyl ether	ND	10	10	B6D0656	04/27/2016	04/27/16 13:30	
2-Chlorotoluene	ND	10	10	B6D0656	04/27/2016	04/27/16 13:30	
2-Hexanone	ND	10	10	B6D0656	04/27/2016	04/27/16 13:30	
2-Propanol	ND	6	10	B6D0656	04/27/2016	04/27/16 13:30	
4-Chlorotoluene	ND	10	10	B6D0656	04/27/2016	04/27/16 13:30	
4-Ethyl Toluene	ND	10	10	B6D0656	04/27/2016	04/27/16 13:30	
4-Methyl-2-pentanone	ND	10	10	B6D0656	04/27/2016	04/27/16 13:30	
Acetone	**60**	6	10	B6D0656	04/27/2016	04/27/16 13:30	
Acetonitrile	ND	4	10	B6D0656	04/27/2016	04/27/16 13:30	
Acrolein	ND	6	10	B6D0656	04/27/2016	04/27/16 13:30	
Acrylonitrile	ND	5	10	B6D0656	04/27/2016	04/27/16 13:30	
Benzene	ND	8	10	B6D0656	04/27/2016	04/27/16 13:30	
Benzyl chloride	ND	10	10	B6D0656	04/27/2016	04/27/16 13:30	
Bromobenzene	ND	20	10	B6D0656	04/27/2016	04/27/16 13:30	
Bromodichloromethane	ND	20	10	B6D0656	04/27/2016	04/27/16 13:30	

Certificate of Analysis

Hushmand Associates, Inc.	Project Number : Parcel 20 6th St. Bridge, LAC 15-003
250 Goddard	Report To : Naresh Bellana
Irvine , CA 92618	Reported : 03/26/2018

Client Sample ID P-20 VP-3 @ 5'
Lab ID: 1601497-03

Volatile Organic Compounds in AIR by TO-15 (Canister) **Analyst: LT**

Analyte	Result (ug/m³)	PQL (ug/m³)	Dilution	Batch	Prepared	Date/Time Analyzed	Notes
Bromoform	ND	30	10	B6D0656	04/27/2016	04/27/16 13:30	
Bromomethane	ND	10	10	B6D0656	04/27/2016	04/27/16 13:30	
Carbon disulfide	ND	8	10	B6D0656	04/27/2016	04/27/16 13:30	
Carbon tetrachloride	ND	20	10	B6D0656	04/27/2016	04/27/16 13:30	
Chlorobenzene	ND	10	10	B6D0656	04/27/2016	04/27/16 13:30	
Chloroethane	ND	7	10	B6D0656	04/27/2016	04/27/16 13:30	
Chloroform	ND	10	10	B6D0656	04/27/2016	04/27/16 13:30	
Chloromethane	ND	5	10	B6D0656	04/27/2016	04/27/16 13:30	
cis-1,2-Dichloroethene	ND	10	10	B6D0656	04/27/2016	04/27/16 13:30	
cis-1,3-Dichloropropene	ND	10	10	B6D0656	04/27/2016	04/27/16 13:30	
Cyclohexane	ND	9	10	B6D0656	04/27/2016	04/27/16 13:30	
Dibromochloromethane	ND	20	10	B6D0656	04/27/2016	04/27/16 13:30	
Dibromomethane	ND	20	10	B6D0656	04/27/2016	04/27/16 13:30	
Dichlorodifluoromethane	**50**	10	10	B6D0656	04/27/2016	04/27/16 13:30	
Dichlorotetrafluoroethane	ND	20	10	B6D0656	04/27/2016	04/27/16 13:30	
Ethanol	ND	5	10	B6D0656	04/27/2016	04/27/16 13:30	
Ethylbenzene	ND	10	10	B6D0656	04/27/2016	04/27/16 13:30	
Freon-113	ND	20	10	B6D0656	04/27/2016	04/27/16 13:30	
Hexachlorobutadiene	ND	30	10	B6D0656	04/27/2016	04/27/16 13:30	
Isopropylbenzene	ND	10	10	B6D0656	04/27/2016	04/27/16 13:30	
m,p-Xylene	ND	40	10	B6D0656	04/27/2016	04/27/16 13:30	
Methylene chloride	ND	9	10	B6D0656	04/27/2016	04/27/16 13:30	
MTBE	ND	9	10	B6D0656	04/27/2016	04/27/16 13:30	
n-Butylbenzene	ND	10	10	B6D0656	04/27/2016	04/27/16 13:30	
n-Propylbenzene	ND	10	10	B6D0656	04/27/2016	04/27/16 13:30	
Naphthalene	ND	10	10	B6D0656	04/27/2016	04/27/16 13:30	
o-Xylene	ND	10	10	B6D0656	04/27/2016	04/27/16 13:30	
p-Isopropyltoluene	ND	10	10	B6D0656	04/27/2016	04/27/16 13:30	
sec-Butylbenzene	ND	10	10	B6D0656	04/27/2016	04/27/16 13:30	
Styrene	ND	10	10	B6D0656	04/27/2016	04/27/16 13:30	
tert-Butylbenzene	ND	10	10	B6D0656	04/27/2016	04/27/16 13:30	
Tetrachloroethene	**390**	20	10	B6D0656	04/27/2016	04/27/16 13:30	
Toluene	ND	9	10	B6D0656	04/27/2016	04/27/16 13:30	
trans-1,2-Dichloroethene	ND	10	10	B6D0656	04/27/2016	04/27/16 13:30	
trans-1,3-Dichloropropene	ND	10	10	B6D0656	04/27/2016	04/27/16 13:30	
Trichloroethene	ND	10	10	B6D0656	04/27/2016	04/27/16 13:30	
Trichlorofluoromethane	**26000**	1400	1000	B6D0710	04/29/2016	04/29/16 09:06	

Certificate of Analysis

Hushmand Associates, Inc.	Project Number : Parcel 20 6th St. Bridge, LAC 15-003
250 Goddard	Report To : Naresh Bellana
Irvine , CA 92618	Reported : 03/26/2018

Client Sample ID P-20 VP-3 @ 5'

Lab ID: 1601497-03

Volatile Organic Compounds in AIR by TO-15 (Canister) **Analyst: LT**

Analyte		Result (ug/m³)	PQL (ug/m³)	Dilution	Batch	Prepared	Date/Time Analyzed	Notes
Vinyl acetate		ND	9	10	B6D0656	04/27/2016	04/27/16 13:30	
Vinyl chloride		ND	6	10	B6D0656	04/27/2016	04/27/16 13:30	
Surrogate: 4-Bromofluorobenzene	*108 %*		*79.2 - 147*		B6D0710	04/29/2016	*04/29/16 09:06*	
Surrogate: 4-Bromofluorobenzene	*103 %*		*79.2 - 147*		B6D0656	04/27/2016	*04/27/16 13:30*	

Gasoline Range Organics in Air by TO-3 **Analyst: LT**

Analyte		Result (ug/m³)	PQL (ug/m³)	Dilution	Batch	Prepared	Date/Time Analyzed	Notes
Gasoline Range Organics		**27000**	20000	200	B6E0059	04/29/2016	04/29/16 13:46	
Surrogate: 4-Bromofluorobenzene	*106 %*		*70 - 130*		B6E0059	04/29/2016	*04/29/16 13:46*	

Certificate of Analysis

Hushmand Associates, Inc.	Project Number : Parcel 20 6th St. Bridge, LAC 15-003
250 Goddard	Report To : Naresh Bellana
Irvine , CA 92618	Reported : 03/26/2018

Client Sample ID P-20 VP-4 @ 5'

Lab ID: 1601497-04

Volatile Organic Compounds in AIR by TO-15 (Canister) **Analyst: LT**

Analyte	Result (ug/m³)	PQL (ug/m³)	Dilution	Batch	Prepared	Date/Time Analyzed	Notes
1,1,1,2-Tetrachloroethane	ND	20	10	B6D0656	04/27/2016	04/27/16 14:07	
1,1,1-Trichloroethane	ND	10	10	B6D0656	04/27/2016	04/27/16 14:07	
1,1,2,2-Tetrachloroethane	ND	20	10	B6D0656	04/27/2016	04/27/16 14:07	
1,1,2-Trichloroethane	**80**	10	10	B6D0656	04/27/2016	04/27/16 14:07	
1,1-Dichloroethane	ND	10	10	B6D0656	04/27/2016	04/27/16 14:07	
1,1-Dichloroethene	ND	10	10	B6D0656	04/27/2016	04/27/16 14:07	
1,1-Dichloropropene	ND	10	10	B6D0656	04/27/2016	04/27/16 14:07	
1,2,3-Trichloropropane	ND	20	10	B6D0656	04/27/2016	04/27/16 14:07	
1,2,4-Trichlorobenzene	ND	20	10	B6D0656	04/27/2016	04/27/16 14:07	
1,2,4-Trimethylbenzene	ND	10	10	B6D0656	04/27/2016	04/27/16 14:07	
1,2-Dibromo-3-chloropropane	ND	20	10	B6D0656	04/27/2016	04/27/16 14:07	
1,2-Dibromoethane	ND	20	10	B6D0656	04/27/2016	04/27/16 14:07	
1,2-Dichlorobenzene	ND	20	10	B6D0656	04/27/2016	04/27/16 14:07	
1,2-Dichloroethane	ND	10	10	B6D0656	04/27/2016	04/27/16 14:07	
1,2-Dichloropropane	ND	10	10	B6D0656	04/27/2016	04/27/16 14:07	
1,3,5-Trimethylbenzene	ND	10	10	B6D0656	04/27/2016	04/27/16 14:07	
1,3-Butadiene	ND	6	10	B6D0656	04/27/2016	04/27/16 14:07	
1,3-Dichlorobenzene	ND	20	10	B6D0656	04/27/2016	04/27/16 14:07	
1,4-Dichlorobenzene	ND	20	10	B6D0656	04/27/2016	04/27/16 14:07	
1,4-Dioxane	ND	9	10	B6D0656	04/27/2016	04/27/16 14:07	
2,2,4-Trimethylpentane	ND	10	10	B6D0656	04/27/2016	04/27/16 14:07	
2-Butanone	ND	7	10	B6D0656	04/27/2016	04/27/16 14:07	
2-Chloroethyl vinyl ether	ND	10	10	B6D0656	04/27/2016	04/27/16 14:07	
2-Chlorotoluene	ND	10	10	B6D0656	04/27/2016	04/27/16 14:07	
2-Hexanone	ND	10	10	B6D0656	04/27/2016	04/27/16 14:07	
2-Propanol	ND	6	10	B6D0656	04/27/2016	04/27/16 14:07	
4-Chlorotoluene	ND	10	10	B6D0656	04/27/2016	04/27/16 14:07	
4-Ethyl Toluene	ND	10	10	B6D0656	04/27/2016	04/27/16 14:07	
4-Methyl-2-pentanone	ND	10	10	B6D0656	04/27/2016	04/27/16 14:07	
Acetone	**60**	6	10	B6D0656	04/27/2016	04/27/16 14:07	
Acetonitrile	ND	4	10	B6D0656	04/27/2016	04/27/16 14:07	
Acrolein	ND	6	10	B6D0656	04/27/2016	04/27/16 14:07	
Acrylonitrile	ND	5	10	B6D0656	04/27/2016	04/27/16 14:07	
Benzene	ND	8	10	B6D0656	04/27/2016	04/27/16 14:07	
Benzyl chloride	ND	10	10	B6D0656	04/27/2016	04/27/16 14:07	
Bromobenzene	ND	20	10	B6D0656	04/27/2016	04/27/16 14:07	
Bromodichloromethane	ND	20	10	B6D0656	04/27/2016	04/27/16 14:07	

Certificate of Analysis

Hushmand Associates, Inc.	Project Number : Parcel 20 6th St. Bridge, LAC 15-003
250 Goddard	Report To : Naresh Bellana
Irvine , CA 92618	Reported : 03/26/2018

Client Sample ID P-20 VP-4 @ 5'

Lab ID: 1601497-04

Volatile Organic Compounds in AIR by TO-15 (Canister) **Analyst: LT**

Analyte	Result (ug/m³)	PQL (ug/m³)	Dilution	Batch	Prepared	Date/Time Analyzed	Notes
Bromoform	ND	30	10	B6D0656	04/27/2016	04/27/16 14:07	
Bromomethane	ND	10	10	B6D0656	04/27/2016	04/27/16 14:07	
Carbon disulfide	ND	8	10	B6D0656	04/27/2016	04/27/16 14:07	
Carbon tetrachloride	ND	20	10	B6D0656	04/27/2016	04/27/16 14:07	
Chlorobenzene	ND	10	10	B6D0656	04/27/2016	04/27/16 14:07	
Chloroethane	ND	7	10	B6D0656	04/27/2016	04/27/16 14:07	
Chloroform	**10**	10	10	B6D0656	04/27/2016	04/27/16 14:07	
Chloromethane	ND	5	10	B6D0656	04/27/2016	04/27/16 14:07	
cis-1,2-Dichloroethene	ND	10	10	B6D0656	04/27/2016	04/27/16 14:07	
cis-1,3-Dichloropropene	ND	10	10	B6D0656	04/27/2016	04/27/16 14:07	
Cyclohexane	ND	9	10	B6D0656	04/27/2016	04/27/16 14:07	
Dibromochloromethane	ND	20	10	B6D0656	04/27/2016	04/27/16 14:07	
Dibromomethane	ND	20	10	B6D0656	04/27/2016	04/27/16 14:07	
Dichlorodifluoromethane	**60**	10	10	B6D0656	04/27/2016	04/27/16 14:07	
Dichlorotetrafluoroethane	ND	20	10	B6D0656	04/27/2016	04/27/16 14:07	
Ethanol	ND	5	10	B6D0656	04/27/2016	04/27/16 14:07	
Ethylbenzene	ND	10	10	B6D0656	04/27/2016	04/27/16 14:07	
Freon-113	ND	20	10	B6D0656	04/27/2016	04/27/16 14:07	
Hexachlorobutadiene	ND	30	10	B6D0656	04/27/2016	04/27/16 14:07	
Isopropylbenzene	ND	10	10	B6D0656	04/27/2016	04/27/16 14:07	
m,p-Xylene	ND	40	10	B6D0656	04/27/2016	04/27/16 14:07	
Methylene chloride	ND	9	10	B6D0656	04/27/2016	04/27/16 14:07	
MTBE	ND	9	10	B6D0656	04/27/2016	04/27/16 14:07	
n-Butylbenzene	ND	10	10	B6D0656	04/27/2016	04/27/16 14:07	
n-Propylbenzene	ND	10	10	B6D0656	04/27/2016	04/27/16 14:07	
Naphthalene	ND	10	10	B6D0656	04/27/2016	04/27/16 14:07	
o-Xylene	ND	10	10	B6D0656	04/27/2016	04/27/16 14:07	
p-Isopropyltoluene	ND	10	10	B6D0656	04/27/2016	04/27/16 14:07	
sec-Butylbenzene	ND	10	10	B6D0656	04/27/2016	04/27/16 14:07	
Styrene	ND	10	10	B6D0656	04/27/2016	04/27/16 14:07	
tert-Butylbenzene	ND	10	10	B6D0656	04/27/2016	04/27/16 14:07	
Tetrachloroethene	**1000**	20	10	B6D0656	04/27/2016	04/27/16 14:07	
Toluene	ND	9	10	B6D0656	04/27/2016	04/27/16 14:07	
trans-1,2-Dichloroethene	ND	10	10	B6D0656	04/27/2016	04/27/16 14:07	
trans-1,3-Dichloropropene	ND	10	10	B6D0656	04/27/2016	04/27/16 14:07	
Trichloroethene	**20**	10	10	B6D0656	04/27/2016	04/27/16 14:07	
Trichlorofluoromethane	**4700**	140	100	B6D0710	04/28/2016	04/28/16 21:38	

Certificate of Analysis

Hushmand Associates, Inc.		Project Number :	Parcel 20 6th St. Bridge, LAC 15-003
250 Goddard		Report To :	Naresh Bellana
Irvine , CA 92618		Reported :	03/26/2018

Client Sample ID P-20 VP-4 @ 5'

Lab ID: 1601497-04

Volatile Organic Compounds in AIR by TO-15 (Canister) — **Analyst: LT**

Analyte		Result (ug/m³)	PQL (ug/m³)	Dilution	Batch	Prepared	Date/Time Analyzed	Notes
Vinyl acetate		ND	9	10	B6D0656	04/27/2016	04/27/16 14:07	
Vinyl chloride		ND	6	10	B6D0656	04/27/2016	04/27/16 14:07	
Surrogate: 4-Bromofluorobenzene	*108 %*		*79.2 - 147*		B6D0710	04/28/2016	*04/28/16 21:38*	
Surrogate: 4-Bromofluorobenzene	*103 %*		*79.2 - 147*		B6D0656	04/27/2016	*04/27/16 14:07*	

Gasoline Range Organics in Air by TO-3 — **Analyst: LT**

Analyte		Result (ug/m³)	PQL (ug/m³)	Dilution	Batch	Prepared	Date/Time Analyzed	Notes
Gasoline Range Organics		**6500**	4100	40	B6E0059	04/29/2016	04/29/16 15:04	
Surrogate: 4-Bromofluorobenzene	*105 %*		*70 - 130*		B6E0059	04/29/2016	*04/29/16 15:04*	

Certificate of Analysis

Hushmand Associates, Inc.	Project Number : Parcel 20 6th St. Bridge, LAC 15-003
250 Goddard	Report To : Naresh Bellana
Irvine , CA 92618	Reported : 03/26/2018

Client Sample ID P-20 VP-5 @ 3'
Lab ID: 1601497-05

Volatile Organic Compounds in AIR by TO-15 (Canister) **Analyst: LT**

Analyte	Result (ug/m³)	PQL (ug/m³)	Dilution	Batch	Prepared	Date/Time Analyzed	Notes
1,1,1,2-Tetrachloroethane	ND	170	100	B6D0710	04/28/2016	04/28/16 22:18	
1,1,1-Trichloroethane	ND	140	100	B6D0710	04/28/2016	04/28/16 22:18	
1,1,2,2-Tetrachloroethane	ND	170	100	B6D0710	04/28/2016	04/28/16 22:18	
1,1,2-Trichloroethane	**300**	140	100	B6D0710	04/28/2016	04/28/16 22:18	
1,1-Dichloroethane	ND	100	100	B6D0710	04/28/2016	04/28/16 22:18	
1,1-Dichloroethene	ND	100	100	B6D0710	04/28/2016	04/28/16 22:18	
1,1-Dichloropropene	ND	110	100	B6D0710	04/28/2016	04/28/16 22:18	
1,2,3-Trichloropropane	ND	150	100	B6D0710	04/28/2016	04/28/16 22:18	
1,2,4-Trichlorobenzene	ND	190	100	B6D0710	04/28/2016	04/28/16 22:18	
1,2,4-Trimethylbenzene	ND	120	100	B6D0710	04/28/2016	04/28/16 22:18	
1,2-Dibromo-3-chloropropane	ND	240	100	B6D0710	04/28/2016	04/28/16 22:18	
1,2-Dibromoethane	ND	190	100	B6D0710	04/28/2016	04/28/16 22:18	
1,2-Dichlorobenzene	ND	150	100	B6D0710	04/28/2016	04/28/16 22:18	
1,2-Dichloroethane	ND	100	100	B6D0710	04/28/2016	04/28/16 22:18	
1,2-Dichloropropane	ND	120	100	B6D0710	04/28/2016	04/28/16 22:18	
1,3,5-Trimethylbenzene	ND	120	100	B6D0710	04/28/2016	04/28/16 22:18	
1,3-Butadiene	ND	60	100	B6D0710	04/28/2016	04/28/16 22:18	
1,3-Dichlorobenzene	ND	150	100	B6D0710	04/28/2016	04/28/16 22:18	
1,4-Dichlorobenzene	ND	150	100	B6D0710	04/28/2016	04/28/16 22:18	
1,4-Dioxane	ND	90	100	B6D0710	04/28/2016	04/28/16 22:18	
2,2,4-Trimethylpentane	ND	120	100	B6D0710	04/28/2016	04/28/16 22:18	
2-Butanone	ND	70	100	B6D0710	04/28/2016	04/28/16 22:18	
2-Chloroethyl vinyl ether	ND	110	100	B6D0710	04/28/2016	04/28/16 22:18	
2-Chlorotoluene	ND	130	100	B6D0710	04/28/2016	04/28/16 22:18	
2-Hexanone	ND	100	100	B6D0710	04/28/2016	04/28/16 22:18	
2-Propanol	ND	60	100	B6D0710	04/28/2016	04/28/16 22:18	
4-Chlorotoluene	ND	130	100	B6D0710	04/28/2016	04/28/16 22:18	
4-Ethyl Toluene	ND	120	100	B6D0710	04/28/2016	04/28/16 22:18	
4-Methyl-2-pentanone	ND	100	100	B6D0710	04/28/2016	04/28/16 22:18	
Acetone	**350**	60	100	B6D0710	04/28/2016	04/28/16 22:18	
Acetonitrile	ND	40	100	B6D0710	04/28/2016	04/28/16 22:18	
Acrolein	ND	60	100	B6D0710	04/28/2016	04/28/16 22:18	
Acrylonitrile	ND	50	100	B6D0710	04/28/2016	04/28/16 22:18	
Benzene	ND	80	100	B6D0710	04/28/2016	04/28/16 22:18	
Benzyl chloride	ND	130	100	B6D0710	04/28/2016	04/28/16 22:18	
Bromobenzene	ND	160	100	B6D0710	04/28/2016	04/28/16 22:18	
Bromodichloromethane	ND	170	100	B6D0710	04/28/2016	04/28/16 22:18	

Certificate of Analysis

Hushmand Associates, Inc.	Project Number : Parcel 20 6th St. Bridge, LAC 15-003
250 Goddard	Report To : Naresh Bellana
Irvine , CA 92618	Reported : 03/26/2018

Client Sample ID P-20 VP-5 @ 3'
Lab ID: 1601497-05

Volatile Organic Compounds in AIR by TO-15 (Canister) **Analyst: LT**

Analyte	Result (ug/m³)	PQL (ug/m³)	Dilution	Batch	Prepared	Date/Time Analyzed	Notes
Bromoform	ND	260	100	B6D0710	04/28/2016	04/28/16 22:18	
Bromomethane	ND	100	100	B6D0710	04/28/2016	04/28/16 22:18	
Carbon disulfide	ND	80	100	B6D0710	04/28/2016	04/28/16 22:18	
Carbon tetrachloride	ND	160	100	B6D0710	04/28/2016	04/28/16 22:18	
Chlorobenzene	ND	120	100	B6D0710	04/28/2016	04/28/16 22:18	
Chloroethane	ND	70	100	B6D0710	04/28/2016	04/28/16 22:18	
Chloroform	ND	120	100	B6D0710	04/28/2016	04/28/16 22:18	
Chloromethane	ND	50	100	B6D0710	04/28/2016	04/28/16 22:18	
cis-1,2-Dichloroethene	ND	100	100	B6D0710	04/28/2016	04/28/16 22:18	
cis-1,3-Dichloropropene	ND	110	100	B6D0710	04/28/2016	04/28/16 22:18	
Cyclohexane	**90**	90	100	B6D0710	04/28/2016	04/28/16 22:18	
Dibromochloromethane	ND	210	100	B6D0710	04/28/2016	04/28/16 22:18	
Dibromomethane	ND	180	100	B6D0710	04/28/2016	04/28/16 22:18	
Dichlorodifluoromethane	**160**	120	100	B6D0710	04/28/2016	04/28/16 22:18	
Dichlorotetrafluoroethane	ND	170	100	B6D0710	04/28/2016	04/28/16 22:18	
Ethanol	ND	50	100	B6D0710	04/28/2016	04/28/16 22:18	
Ethylbenzene	ND	110	100	B6D0710	04/28/2016	04/28/16 22:18	
Freon-113	ND	190	100	B6D0710	04/28/2016	04/28/16 22:18	
Hexachlorobutadiene	ND	270	100	B6D0710	04/28/2016	04/28/16 22:18	
Isopropylbenzene	ND	120	100	B6D0710	04/28/2016	04/28/16 22:18	
m,p-Xylene	ND	430	100	B6D0710	04/28/2016	04/28/16 22:18	
Methylene chloride	ND	90	100	B6D0710	04/28/2016	04/28/16 22:18	
MTBE	ND	90	100	B6D0710	04/28/2016	04/28/16 22:18	
n-Butylbenzene	ND	140	100	B6D0710	04/28/2016	04/28/16 22:18	
n-Propylbenzene	ND	120	100	B6D0710	04/28/2016	04/28/16 22:18	
Naphthalene	ND	130	100	B6D0710	04/28/2016	04/28/16 22:18	
o-Xylene	ND	110	100	B6D0710	04/28/2016	04/28/16 22:18	
p-Isopropyltoluene	ND	140	100	B6D0710	04/28/2016	04/28/16 22:18	
sec-Butylbenzene	ND	140	100	B6D0710	04/28/2016	04/28/16 22:18	
Styrene	ND	110	100	B6D0710	04/28/2016	04/28/16 22:18	
tert-Butylbenzene	ND	140	100	B6D0710	04/28/2016	04/28/16 22:18	
Tetrachloroethene	**4700**	170	100	B6D0710	04/28/2016	04/28/16 22:18	
Toluene	ND	90	100	B6D0710	04/28/2016	04/28/16 22:18	
trans-1,2-Dichloroethene	ND	100	100	B6D0710	04/28/2016	04/28/16 22:18	
trans-1,3-Dichloropropene	ND	110	100	B6D0710	04/28/2016	04/28/16 22:18	
Trichloroethene	ND	130	100	B6D0710	04/28/2016	04/28/16 22:18	
Trichlorofluoromethane	**3100**	140	100	B6D0710	04/28/2016	04/28/16 22:18	

Certificate of Analysis

Hushmand Associates, Inc.	Project Number : Parcel 20 6th St. Bridge, LAC 15-003
250 Goddard	Report To : Naresh Bellana
Irvine , CA 92618	Reported : 03/26/2018

Client Sample ID P-20 VP-5 @ 3'

Lab ID: 1601497-05

Volatile Organic Compounds in AIR by TO-15 (Canister) **Analyst: LT**

Analyte		Result (ug/m³)	PQL (ug/m³)	Dilution	Batch	Prepared	Date/Time Analyzed	Notes
Vinyl acetate		ND	90	100	B6D0710	04/28/2016	04/28/16 22:18	
Vinyl chloride		ND	60	100	B6D0710	04/28/2016	04/28/16 22:18	
Surrogate: 4-Bromofluorobenzene	*106 %*		*79.2 - 147*		B6D0710	04/28/2016	*04/28/16 22:18*	

Gasoline Range Organics in Air by TO-3 **Analyst: LT**

Analyte		Result (ug/m³)	PQL (ug/m³)	Dilution	Batch	Prepared	Date/Time Analyzed	Notes
Gasoline Range Organics		**7600**	4100	40	B6E0059	04/29/2016	04/29/16 15:43	
Surrogate: 4-Bromofluorobenzene	*111 %*		*70 - 130*		B6E0059	04/29/2016	*04/29/16 15:43*	

Certificate of Analysis

Hushmand Associates, Inc.	Project Number : Parcel 20 6th St. Bridge, LAC 15-003
250 Goddard	Report To : Naresh Bellana
Irvine , CA 92618	Reported : 03/26/2018

Client Sample ID P-20 VP-6 @ 5'

Lab ID: 1601497-06

Volatile Organic Compounds in AIR by TO-15 (Canister) **Analyst: LT**

Analyte	Result (ug/m³)	PQL (ug/m³)	Dilution	Batch	Prepared	Date/Time Analyzed	Notes
1,1,1,2-Tetrachloroethane	ND	170	100	B6D0710	04/28/2016	04/28/16 22:57	
1,1,1-Trichloroethane	ND	140	100	B6D0710	04/28/2016	04/28/16 22:57	
1,1,2,2-Tetrachloroethane	ND	170	100	B6D0710	04/28/2016	04/28/16 22:57	
1,1,2-Trichloroethane	ND	140	100	B6D0710	04/28/2016	04/28/16 22:57	
1,1-Dichloroethane	ND	100	100	B6D0710	04/28/2016	04/28/16 22:57	
1,1-Dichloroethene	ND	100	100	B6D0710	04/28/2016	04/28/16 22:57	
1,1-Dichloropropene	ND	110	100	B6D0710	04/28/2016	04/28/16 22:57	
1,2,3-Trichloropropane	ND	150	100	B6D0710	04/28/2016	04/28/16 22:57	
1,2,4-Trichlorobenzene	ND	190	100	B6D0710	04/28/2016	04/28/16 22:57	
1,2,4-Trimethylbenzene	ND	120	100	B6D0710	04/28/2016	04/28/16 22:57	
1,2-Dibromo-3-chloropropane	ND	240	100	B6D0710	04/28/2016	04/28/16 22:57	
1,2-Dibromoethane	ND	190	100	B6D0710	04/28/2016	04/28/16 22:57	
1,2-Dichlorobenzene	ND	150	100	B6D0710	04/28/2016	04/28/16 22:57	
1,2-Dichloroethane	ND	100	100	B6D0710	04/28/2016	04/28/16 22:57	
1,2-Dichloropropane	ND	120	100	B6D0710	04/28/2016	04/28/16 22:57	
1,3,5-Trimethylbenzene	ND	120	100	B6D0710	04/28/2016	04/28/16 22:57	
1,3-Butadiene	ND	60	100	B6D0710	04/28/2016	04/28/16 22:57	
1,3-Dichlorobenzene	ND	150	100	B6D0710	04/28/2016	04/28/16 22:57	
1,4-Dichlorobenzene	ND	150	100	B6D0710	04/28/2016	04/28/16 22:57	
1,4-Dioxane	ND	90	100	B6D0710	04/28/2016	04/28/16 22:57	
2,2,4-Trimethylpentane	ND	120	100	B6D0710	04/28/2016	04/28/16 22:57	
2-Butanone	ND	70	100	B6D0710	04/28/2016	04/28/16 22:57	
2-Chloroethyl vinyl ether	ND	110	100	B6D0710	04/28/2016	04/28/16 22:57	
2-Chlorotoluene	ND	130	100	B6D0710	04/28/2016	04/28/16 22:57	
2-Hexanone	ND	100	100	B6D0710	04/28/2016	04/28/16 22:57	
2-Propanol	ND	60	100	B6D0710	04/28/2016	04/28/16 22:57	
4-Chlorotoluene	ND	130	100	B6D0710	04/28/2016	04/28/16 22:57	
4-Ethyl Toluene	ND	120	100	B6D0710	04/28/2016	04/28/16 22:57	
4-Methyl-2-pentanone	ND	100	100	B6D0710	04/28/2016	04/28/16 22:57	
Acetone	**150**	60	100	B6D0710	04/28/2016	04/28/16 22:57	
Acetonitrile	ND	40	100	B6D0710	04/28/2016	04/28/16 22:57	
Acrolein	ND	60	100	B6D0710	04/28/2016	04/28/16 22:57	
Acrylonitrile	ND	50	100	B6D0710	04/28/2016	04/28/16 22:57	
Benzene	ND	80	100	B6D0710	04/28/2016	04/28/16 22:57	
Benzyl chloride	ND	130	100	B6D0710	04/28/2016	04/28/16 22:57	
Bromobenzene	ND	160	100	B6D0710	04/28/2016	04/28/16 22:57	
Bromodichloromethane	ND	170	100	B6D0710	04/28/2016	04/28/16 22:57	

Certificate of Analysis

Hushmand Associates, Inc.	Project Number : Parcel 20 6th St. Bridge, LAC 15-003
250 Goddard	Report To : Naresh Bellana
Irvine , CA 92618	Reported : 03/26/2018

Client Sample ID P-20 VP-6 @ 5'

Lab ID: 1601497-06

Volatile Organic Compounds in AIR by TO-15 (Canister) **Analyst: LT**

Analyte	Result (ug/m³)	PQL (ug/m³)	Dilution	Batch	Prepared	Date/Time Analyzed	Notes
Bromoform	ND	260	100	B6D0710	04/28/2016	04/28/16 22:57	
Bromomethane	ND	100	100	B6D0710	04/28/2016	04/28/16 22:57	
Carbon disulfide	ND	80	100	B6D0710	04/28/2016	04/28/16 22:57	
Carbon tetrachloride	ND	160	100	B6D0710	04/28/2016	04/28/16 22:57	
Chlorobenzene	ND	120	100	B6D0710	04/28/2016	04/28/16 22:57	
Chloroethane	ND	70	100	B6D0710	04/28/2016	04/28/16 22:57	
Chloroform	ND	120	100	B6D0710	04/28/2016	04/28/16 22:57	
Chloromethane	ND	50	100	B6D0710	04/28/2016	04/28/16 22:57	
cis-1,2-Dichloroethene	ND	100	100	B6D0710	04/28/2016	04/28/16 22:57	
cis-1,3-Dichloropropene	ND	110	100	B6D0710	04/28/2016	04/28/16 22:57	
Cyclohexane	ND	90	100	B6D0710	04/28/2016	04/28/16 22:57	
Dibromochloromethane	ND	210	100	B6D0710	04/28/2016	04/28/16 22:57	
Dibromomethane	ND	180	100	B6D0710	04/28/2016	04/28/16 22:57	
Dichlorodifluoromethane	**170**	120	100	B6D0710	04/28/2016	04/28/16 22:57	
Dichlorotetrafluoroethane	ND	170	100	B6D0710	04/28/2016	04/28/16 22:57	
Ethanol	ND	50	100	B6D0710	04/28/2016	04/28/16 22:57	
Ethylbenzene	ND	110	100	B6D0710	04/28/2016	04/28/16 22:57	
Freon-113	ND	190	100	B6D0710	04/28/2016	04/28/16 22:57	
Hexachlorobutadiene	ND	270	100	B6D0710	04/28/2016	04/28/16 22:57	
Isopropylbenzene	ND	120	100	B6D0710	04/28/2016	04/28/16 22:57	
m,p-Xylene	ND	430	100	B6D0710	04/28/2016	04/28/16 22:57	
Methylene chloride	ND	90	100	B6D0710	04/28/2016	04/28/16 22:57	
MTBE	ND	90	100	B6D0710	04/28/2016	04/28/16 22:57	
n-Butylbenzene	ND	140	100	B6D0710	04/28/2016	04/28/16 22:57	
n-Propylbenzene	ND	120	100	B6D0710	04/28/2016	04/28/16 22:57	
Naphthalene	ND	130	100	B6D0710	04/28/2016	04/28/16 22:57	
o-Xylene	ND	110	100	B6D0710	04/28/2016	04/28/16 22:57	
p-Isopropyltoluene	ND	140	100	B6D0710	04/28/2016	04/28/16 22:57	
sec-Butylbenzene	ND	140	100	B6D0710	04/28/2016	04/28/16 22:57	
Styrene	ND	110	100	B6D0710	04/28/2016	04/28/16 22:57	
tert-Butylbenzene	ND	140	100	B6D0710	04/28/2016	04/28/16 22:57	
Tetrachloroethene	**1400**	170	100	B6D0710	04/28/2016	04/28/16 22:57	
Toluene	ND	90	100	B6D0710	04/28/2016	04/28/16 22:57	
trans-1,2-Dichloroethene	ND	100	100	B6D0710	04/28/2016	04/28/16 22:57	
trans-1,3-Dichloropropene	ND	110	100	B6D0710	04/28/2016	04/28/16 22:57	
Trichloroethene	ND	130	100	B6D0710	04/28/2016	04/28/16 22:57	
Trichlorofluoromethane	**4400**	140	100	B6D0710	04/28/2016	04/28/16 22:57	

Certificate of Analysis

Hushmand Associates, Inc.	Project Number : Parcel 20 6th St. Bridge, LAC 15-003
250 Goddard	Report To : Naresh Bellana
Irvine , CA 92618	Reported : 03/26/2018

Client Sample ID P-20 VP-6 @ 5'

Lab ID: 1601497-06

Volatile Organic Compounds in AIR by TO-15 (Canister) **Analyst: LT**

Analyte		Result (ug/m³)	PQL (ug/m³)	Dilution	Batch	Prepared	Date/Time Analyzed	Notes
Vinyl acetate		ND	90	100	B6D0710	04/28/2016	04/28/16 22:57	
Vinyl chloride		ND	60	100	B6D0710	04/28/2016	04/28/16 22:57	
Surrogate: 4-Bromofluorobenzene	*107 %*		*79.2 - 147*		B6D0710	04/28/2016	*04/28/16 22:57*	

Gasoline Range Organics in Air by TO-3 **Analyst: LT**

Analyte		Result (ug/m³)	PQL (ug/m³)	Dilution	Batch	Prepared	Date/Time Analyzed	Notes
Gasoline Range Organics		**6400**	4100	40	B6E0059	04/29/2016	04/29/16 16:22	
Surrogate: 4-Bromofluorobenzene	*111 %*		*70 - 130*		B6E0059	04/29/2016	*04/29/16 16:22*	

Certificate of Analysis

Hushmand Associates, Inc.		Project Number :	Parcel 20 6th St. Bridge, LAC 15-003
250 Goddard		Report To :	Naresh Bellana
Irvine , CA 92618		Reported :	03/26/2018

Client Sample ID P-20 VP-7 @ 3'

Lab ID: 1601497-07

Volatile Organic Compounds in AIR by TO-15 (Canister) **Analyst: LT**

Analyte	Result (ug/m³)	PQL (ug/m³)	Dilution	Batch	Prepared	Date/Time Analyzed	Notes
1,1,1,2-Tetrachloroethane	ND	170	100	B6D0710	04/28/2016	04/28/16 23:38	
1,1,1-Trichloroethane	ND	140	100	B6D0710	04/28/2016	04/28/16 23:38	
1,1,2,2-Tetrachloroethane	ND	170	100	B6D0710	04/28/2016	04/28/16 23:38	
1,1,2-Trichloroethane	ND	140	100	B6D0710	04/28/2016	04/28/16 23:38	
1,1-Dichloroethane	ND	100	100	B6D0710	04/28/2016	04/28/16 23:38	
1,1-Dichloroethene	ND	100	100	B6D0710	04/28/2016	04/28/16 23:38	
1,1-Dichloropropene	ND	110	100	B6D0710	04/28/2016	04/28/16 23:38	
1,2,3-Trichloropropane	ND	150	100	B6D0710	04/28/2016	04/28/16 23:38	
1,2,4-Trichlorobenzene	ND	190	100	B6D0710	04/28/2016	04/28/16 23:38	
1,2,4-Trimethylbenzene	ND	120	100	B6D0710	04/28/2016	04/28/16 23:38	
1,2-Dibromo-3-chloropropane	ND	240	100	B6D0710	04/28/2016	04/28/16 23:38	
1,2-Dibromoethane	ND	190	100	B6D0710	04/28/2016	04/28/16 23:38	
1,2-Dichlorobenzene	ND	150	100	B6D0710	04/28/2016	04/28/16 23:38	
1,2-Dichloroethane	ND	100	100	B6D0710	04/28/2016	04/28/16 23:38	
1,2-Dichloropropane	ND	120	100	B6D0710	04/28/2016	04/28/16 23:38	
1,3,5-Trimethylbenzene	ND	120	100	B6D0710	04/28/2016	04/28/16 23:38	
1,3-Butadiene	ND	60	100	B6D0710	04/28/2016	04/28/16 23:38	
1,3-Dichlorobenzene	ND	150	100	B6D0710	04/28/2016	04/28/16 23:38	
1,4-Dichlorobenzene	ND	150	100	B6D0710	04/28/2016	04/28/16 23:38	
1,4-Dioxane	ND	90	100	B6D0710	04/28/2016	04/28/16 23:38	
2,2,4-Trimethylpentane	ND	120	100	B6D0710	04/28/2016	04/28/16 23:38	
2-Butanone	ND	70	100	B6D0710	04/28/2016	04/28/16 23:38	
2-Chloroethyl vinyl ether	ND	110	100	B6D0710	04/28/2016	04/28/16 23:38	
2-Chlorotoluene	ND	130	100	B6D0710	04/28/2016	04/28/16 23:38	
2-Hexanone	ND	100	100	B6D0710	04/28/2016	04/28/16 23:38	
2-Propanol	ND	60	100	B6D0710	04/28/2016	04/28/16 23:38	
4-Chlorotoluene	ND	130	100	B6D0710	04/28/2016	04/28/16 23:38	
4-Ethyl Toluene	ND	120	100	B6D0710	04/28/2016	04/28/16 23:38	
4-Methyl-2-pentanone	ND	100	100	B6D0710	04/28/2016	04/28/16 23:38	
Acetone	**630**	60	100	B6D0710	04/28/2016	04/28/16 23:38	
Acetonitrile	ND	40	100	B6D0710	04/28/2016	04/28/16 23:38	
Acrolein	ND	60	100	B6D0710	04/28/2016	04/28/16 23:38	
Acrylonitrile	ND	50	100	B6D0710	04/28/2016	04/28/16 23:38	
Benzene	ND	80	100	B6D0710	04/28/2016	04/28/16 23:38	
Benzyl chloride	ND	130	100	B6D0710	04/28/2016	04/28/16 23:38	
Bromobenzene	ND	160	100	B6D0710	04/28/2016	04/28/16 23:38	
Bromodichloromethane	ND	170	100	B6D0710	04/28/2016	04/28/16 23:38	

Certificate of Analysis

Hushmand Associates, Inc.	Project Number : Parcel 20 6th St. Bridge, LAC 15-003
250 Goddard	Report To : Naresh Bellana
Irvine , CA 92618	Reported : 03/26/2018

Client Sample ID P-20 VP-7 @ 3'

Lab ID: 1601497-07

Volatile Organic Compounds in AIR by TO-15 (Canister) **Analyst: LT**

Analyte	Result (ug/m³)	PQL (ug/m³)	Dilution	Batch	Prepared	Date/Time Analyzed	Notes
Bromoform	ND	260	100	B6D0710	04/28/2016	04/28/16 23:38	
Bromomethane	ND	100	100	B6D0710	04/28/2016	04/28/16 23:38	
Carbon disulfide	ND	80	100	B6D0710	04/28/2016	04/28/16 23:38	
Carbon tetrachloride	ND	160	100	B6D0710	04/28/2016	04/28/16 23:38	
Chlorobenzene	ND	120	100	B6D0710	04/28/2016	04/28/16 23:38	
Chloroethane	ND	70	100	B6D0710	04/28/2016	04/28/16 23:38	
Chloroform	ND	120	100	B6D0710	04/28/2016	04/28/16 23:38	
Chloromethane	ND	50	100	B6D0710	04/28/2016	04/28/16 23:38	
cis-1,2-Dichloroethene	ND	100	100	B6D0710	04/28/2016	04/28/16 23:38	
cis-1,3-Dichloropropene	ND	110	100	B6D0710	04/28/2016	04/28/16 23:38	
Cyclohexane	ND	90	100	B6D0710	04/28/2016	04/28/16 23:38	
Dibromochloromethane	ND	210	100	B6D0710	04/28/2016	04/28/16 23:38	
Dibromomethane	ND	180	100	B6D0710	04/28/2016	04/28/16 23:38	
Dichlorodifluoromethane	**190**	120	100	B6D0710	04/28/2016	04/28/16 23:38	
Dichlorotetrafluoroethane	ND	170	100	B6D0710	04/28/2016	04/28/16 23:38	
Ethanol	ND	50	100	B6D0710	04/28/2016	04/28/16 23:38	
Ethylbenzene	ND	110	100	B6D0710	04/28/2016	04/28/16 23:38	
Freon-113	ND	190	100	B6D0710	04/28/2016	04/28/16 23:38	
Hexachlorobutadiene	ND	270	100	B6D0710	04/28/2016	04/28/16 23:38	
Isopropylbenzene	ND	120	100	B6D0710	04/28/2016	04/28/16 23:38	
m,p-Xylene	ND	430	100	B6D0710	04/28/2016	04/28/16 23:38	
Methylene chloride	ND	90	100	B6D0710	04/28/2016	04/28/16 23:38	
MTBE	ND	90	100	B6D0710	04/28/2016	04/28/16 23:38	
n-Butylbenzene	ND	140	100	B6D0710	04/28/2016	04/28/16 23:38	
n-Propylbenzene	ND	120	100	B6D0710	04/28/2016	04/28/16 23:38	
Naphthalene	ND	130	100	B6D0710	04/28/2016	04/28/16 23:38	
o-Xylene	ND	110	100	B6D0710	04/28/2016	04/28/16 23:38	
p-Isopropyltoluene	ND	140	100	B6D0710	04/28/2016	04/28/16 23:38	
sec-Butylbenzene	ND	140	100	B6D0710	04/28/2016	04/28/16 23:38	
Styrene	ND	110	100	B6D0710	04/28/2016	04/28/16 23:38	
tert-Butylbenzene	ND	140	100	B6D0710	04/28/2016	04/28/16 23:38	
Tetrachloroethene	**4300**	170	100	B6D0710	04/28/2016	04/28/16 23:38	
Toluene	ND	90	100	B6D0710	04/28/2016	04/28/16 23:38	
trans-1,2-Dichloroethene	ND	100	100	B6D0710	04/28/2016	04/28/16 23:38	
trans-1,3-Dichloropropene	ND	110	100	B6D0710	04/28/2016	04/28/16 23:38	
Trichloroethene	ND	130	100	B6D0710	04/28/2016	04/28/16 23:38	
Trichlorofluoromethane	**3400**	140	100	B6D0710	04/28/2016	04/28/16 23:38	

Certificate of Analysis

Hushmand Associates, Inc.	Project Number : Parcel 20 6th St. Bridge, LAC 15-003
250 Goddard	Report To : Naresh Bellana
Irvine , CA 92618	Reported : 03/26/2018

Client Sample ID P-20 VP-7 @ 3'

Lab ID: 1601497-07

Volatile Organic Compounds in AIR by TO-15 (Canister) **Analyst: LT**

Analyte		Result (ug/m³)	PQL (ug/m³)	Dilution	Batch	Prepared	Date/Time Analyzed	Notes
Vinyl acetate		ND	90	100	B6D0710	04/28/2016	04/28/16 23:38	
Vinyl chloride		ND	60	100	B6D0710	04/28/2016	04/28/16 23:38	
Surrogate: 4-Bromofluorobenzene	*108 %*		*79.2 - 147*		B6D0710	04/28/2016	*04/28/16 23:38*	

Gasoline Range Organics in Air by TO-3 **Analyst: LT**

Analyte		Result (ug/m³)	PQL (ug/m³)	Dilution	Batch	Prepared	Date/Time Analyzed	Notes
Gasoline Range Organics		**7500**	4100	40	B6E0059	04/29/2016	04/29/16 17:40	
Surrogate: 4-Bromofluorobenzene	*106 %*		*70 - 130*		B6E0059	04/29/2016	*04/29/16 17:40*	

Certificate of Analysis

Hushmand Associates, Inc.	Project Number : Parcel 20 6th St. Bridge, LAC 15-003
250 Goddard	Report To : Naresh Bellana
Irvine , CA 92618	Reported : 03/26/2018

Client Sample ID P-20 VP-8 @ 5'

Lab ID: 1601497-08

Volatile Organic Compounds in AIR by TO-15 (Canister) **Analyst: LT**

Analyte	Result (ug/m³)	PQL (ug/m³)	Dilution	Batch	Prepared	Date/Time Analyzed	Notes
1,1,1,2-Tetrachloroethane	ND	170	100	B6D0710	04/29/2016	04/29/16 00:18	
1,1,1-Trichloroethane	ND	140	100	B6D0710	04/29/2016	04/29/16 00:18	
1,1,2,2-Tetrachloroethane	ND	170	100	B6D0710	04/29/2016	04/29/16 00:18	
1,1,2-Trichloroethane	ND	140	100	B6D0710	04/29/2016	04/29/16 00:18	
1,1-Dichloroethane	ND	100	100	B6D0710	04/29/2016	04/29/16 00:18	
1,1-Dichloroethene	ND	100	100	B6D0710	04/29/2016	04/29/16 00:18	
1,1-Dichloropropene	ND	110	100	B6D0710	04/29/2016	04/29/16 00:18	
1,2,3-Trichloropropane	ND	150	100	B6D0710	04/29/2016	04/29/16 00:18	
1,2,4-Trichlorobenzene	ND	190	100	B6D0710	04/29/2016	04/29/16 00:18	
1,2,4-Trimethylbenzene	ND	120	100	B6D0710	04/29/2016	04/29/16 00:18	
1,2-Dibromo-3-chloropropane	ND	240	100	B6D0710	04/29/2016	04/29/16 00:18	
1,2-Dibromoethane	ND	190	100	B6D0710	04/29/2016	04/29/16 00:18	
1,2-Dichlorobenzene	ND	150	100	B6D0710	04/29/2016	04/29/16 00:18	
1,2-Dichloroethane	ND	100	100	B6D0710	04/29/2016	04/29/16 00:18	
1,2-Dichloropropane	ND	120	100	B6D0710	04/29/2016	04/29/16 00:18	
1,3,5-Trimethylbenzene	ND	120	100	B6D0710	04/29/2016	04/29/16 00:18	
1,3-Butadiene	ND	60	100	B6D0710	04/29/2016	04/29/16 00:18	
1,3-Dichlorobenzene	ND	150	100	B6D0710	04/29/2016	04/29/16 00:18	
1,4-Dichlorobenzene	ND	150	100	B6D0710	04/29/2016	04/29/16 00:18	
1,4-Dioxane	ND	90	100	B6D0710	04/29/2016	04/29/16 00:18	
2,2,4-Trimethylpentane	ND	120	100	B6D0710	04/29/2016	04/29/16 00:18	
2-Butanone	ND	70	100	B6D0710	04/29/2016	04/29/16 00:18	
2-Chloroethyl vinyl ether	ND	110	100	B6D0710	04/29/2016	04/29/16 00:18	
2-Chlorotoluene	ND	130	100	B6D0710	04/29/2016	04/29/16 00:18	
2-Hexanone	ND	100	100	B6D0710	04/29/2016	04/29/16 00:18	
2-Propanol	ND	60	100	B6D0710	04/29/2016	04/29/16 00:18	
4-Chlorotoluene	ND	130	100	B6D0710	04/29/2016	04/29/16 00:18	
4-Ethyl Toluene	ND	120	100	B6D0710	04/29/2016	04/29/16 00:18	
4-Methyl-2-pentanone	ND	100	100	B6D0710	04/29/2016	04/29/16 00:18	
Acetone	**170**	60	100	B6D0710	04/29/2016	04/29/16 00:18	
Acetonitrile	ND	40	100	B6D0710	04/29/2016	04/29/16 00:18	
Acrolein	ND	60	100	B6D0710	04/29/2016	04/29/16 00:18	
Acrylonitrile	ND	50	100	B6D0710	04/29/2016	04/29/16 00:18	
Benzene	ND	80	100	B6D0710	04/29/2016	04/29/16 00:18	
Benzyl chloride	ND	130	100	B6D0710	04/29/2016	04/29/16 00:18	
Bromobenzene	ND	160	100	B6D0710	04/29/2016	04/29/16 00:18	
Bromodichloromethane	ND	170	100	B6D0710	04/29/2016	04/29/16 00:18	

Certificate of Analysis

Hushmand Associates, Inc.	Project Number : Parcel 20 6th St. Bridge, LAC 15-003
250 Goddard	Report To : Naresh Bellana
Irvine , CA 92618	Reported : 03/26/2018

Client Sample ID P-20 VP-8 @ 5'

Lab ID: 1601497-08

Volatile Organic Compounds in AIR by TO-15 (Canister) **Analyst: LT**

Analyte	Result (ug/m³)	PQL (ug/m³)	Dilution	Batch	Prepared	Date/Time Analyzed	Notes
Bromoform	ND	260	100	B6D0710	04/29/2016	04/29/16 00:18	
Bromomethane	ND	100	100	B6D0710	04/29/2016	04/29/16 00:18	
Carbon disulfide	ND	80	100	B6D0710	04/29/2016	04/29/16 00:18	
Carbon tetrachloride	ND	160	100	B6D0710	04/29/2016	04/29/16 00:18	
Chlorobenzene	ND	120	100	B6D0710	04/29/2016	04/29/16 00:18	
Chloroethane	ND	70	100	B6D0710	04/29/2016	04/29/16 00:18	
Chloroform	ND	120	100	B6D0710	04/29/2016	04/29/16 00:18	
Chloromethane	ND	50	100	B6D0710	04/29/2016	04/29/16 00:18	
cis-1,2-Dichloroethene	ND	100	100	B6D0710	04/29/2016	04/29/16 00:18	
cis-1,3-Dichloropropene	ND	110	100	B6D0710	04/29/2016	04/29/16 00:18	
Cyclohexane	**100**	90	100	B6D0710	04/29/2016	04/29/16 00:18	
Dibromochloromethane	ND	210	100	B6D0710	04/29/2016	04/29/16 00:18	
Dibromomethane	ND	180	100	B6D0710	04/29/2016	04/29/16 00:18	
Dichlorodifluoromethane	**610**	120	100	B6D0710	04/29/2016	04/29/16 00:18	
Dichlorotetrafluoroethane	ND	170	100	B6D0710	04/29/2016	04/29/16 00:18	
Ethanol	ND	50	100	B6D0710	04/29/2016	04/29/16 00:18	
Ethylbenzene	ND	110	100	B6D0710	04/29/2016	04/29/16 00:18	
Freon-113	ND	190	100	B6D0710	04/29/2016	04/29/16 00:18	
Hexachlorobutadiene	ND	270	100	B6D0710	04/29/2016	04/29/16 00:18	
Isopropylbenzene	ND	120	100	B6D0710	04/29/2016	04/29/16 00:18	
m,p-Xylene	ND	430	100	B6D0710	04/29/2016	04/29/16 00:18	
Methylene chloride	ND	90	100	B6D0710	04/29/2016	04/29/16 00:18	
MTBE	ND	90	100	B6D0710	04/29/2016	04/29/16 00:18	
n-Butylbenzene	ND	140	100	B6D0710	04/29/2016	04/29/16 00:18	
n-Propylbenzene	ND	120	100	B6D0710	04/29/2016	04/29/16 00:18	
Naphthalene	ND	130	100	B6D0710	04/29/2016	04/29/16 00:18	
o-Xylene	ND	110	100	B6D0710	04/29/2016	04/29/16 00:18	
p-Isopropyltoluene	ND	140	100	B6D0710	04/29/2016	04/29/16 00:18	
sec-Butylbenzene	ND	140	100	B6D0710	04/29/2016	04/29/16 00:18	
Styrene	ND	110	100	B6D0710	04/29/2016	04/29/16 00:18	
tert-Butylbenzene	ND	140	100	B6D0710	04/29/2016	04/29/16 00:18	
Tetrachloroethene	**2600**	170	100	B6D0710	04/29/2016	04/29/16 00:18	
Toluene	ND	90	100	B6D0710	04/29/2016	04/29/16 00:18	
trans-1,2-Dichloroethene	ND	100	100	B6D0710	04/29/2016	04/29/16 00:18	
trans-1,3-Dichloropropene	ND	110	100	B6D0710	04/29/2016	04/29/16 00:18	
Trichloroethene	ND	130	100	B6D0710	04/29/2016	04/29/16 00:18	
Trichlorofluoromethane	**3100**	140	100	B6D0710	04/29/2016	04/29/16 00:18	

Certificate of Analysis

Hushmand Associates, Inc.	Project Number : Parcel 20 6th St. Bridge, LAC 15-003
250 Goddard	Report To : Naresh Bellana
Irvine , CA 92618	Reported : 03/26/2018

Client Sample ID P-20 VP-8 @ 5'

Lab ID: 1601497-08

Volatile Organic Compounds in AIR by TO-15 (Canister) **Analyst: LT**

Analyte		Result (ug/m³)	PQL (ug/m³)	Dilution	Batch	Prepared	Date/Time Analyzed	Notes
Vinyl acetate		ND	90	100	B6D0710	04/29/2016	04/29/16 00:18	
Vinyl chloride		ND	60	100	B6D0710	04/29/2016	04/29/16 00:18	
Surrogate: 4-Bromofluorobenzene	*118 %*		*79.2 - 147*		B6D0710	04/29/2016	*04/29/16 00:18*	

Gasoline Range Organics in Air by TO-3 **Analyst: LT**

Analyte		Result (ug/m³)	PQL (ug/m³)	Dilution	Batch	Prepared	Date/Time Analyzed	Notes
Gasoline Range Organics		**5800**	4100	40	B6E0059	04/29/2016	04/29/16 18:20	
Surrogate: 4-Bromofluorobenzene	*107 %*		*70 - 130*		B6E0059	04/29/2016	*04/29/16 18:20*	

Certificate of Analysis

Hushmand Associates, Inc.	Project Number : Parcel 20 6th St. Bridge, LAC 15-003
250 Goddard	Report To : Naresh Bellana
Irvine , CA 92618	Reported : 03/26/2018

Client Sample ID P-20 VP-9 @ 5'

Lab ID: 1601497-09

Volatile Organic Compounds in AIR by TO-15 (Canister) **Analyst: LT**

Analyte	Result (ug/m³)	PQL (ug/m³)	Dilution	Batch	Prepared	Date/Time Analyzed	Notes
1,1,1,2-Tetrachloroethane	ND	30	20	B6D0710	04/29/2016	04/29/16 07:45	
1,1,1-Trichloroethane	ND	30	20	B6D0710	04/29/2016	04/29/16 07:45	
1,1,2,2-Tetrachloroethane	ND	30	20	B6D0710	04/29/2016	04/29/16 07:45	
1,1,2-Trichloroethane	ND	30	20	B6D0710	04/29/2016	04/29/16 07:45	
1,1-Dichloroethane	ND	20	20	B6D0710	04/29/2016	04/29/16 07:45	
1,1-Dichloroethene	ND	20	20	B6D0710	04/29/2016	04/29/16 07:45	
1,1-Dichloropropene	ND	20	20	B6D0710	04/29/2016	04/29/16 07:45	
1,2,3-Trichloropropane	ND	30	20	B6D0710	04/29/2016	04/29/16 07:45	
1,2,4-Trichlorobenzene	ND	40	20	B6D0710	04/29/2016	04/29/16 07:45	
1,2,4-Trimethylbenzene	ND	20	20	B6D0710	04/29/2016	04/29/16 07:45	
1,2-Dibromo-3-chloropropane	ND	50	20	B6D0710	04/29/2016	04/29/16 07:45	
1,2-Dibromoethane	ND	40	20	B6D0710	04/29/2016	04/29/16 07:45	
1,2-Dichlorobenzene	ND	30	20	B6D0710	04/29/2016	04/29/16 07:45	
1,2-Dichloroethane	ND	20	20	B6D0710	04/29/2016	04/29/16 07:45	
1,2-Dichloropropane	ND	20	20	B6D0710	04/29/2016	04/29/16 07:45	
1,3,5-Trimethylbenzene	ND	20	20	B6D0710	04/29/2016	04/29/16 07:45	
1,3-Butadiene	ND	10	20	B6D0710	04/29/2016	04/29/16 07:45	
1,3-Dichlorobenzene	ND	30	20	B6D0710	04/29/2016	04/29/16 07:45	
1,4-Dichlorobenzene	ND	30	20	B6D0710	04/29/2016	04/29/16 07:45	
1,4-Dioxane	ND	20	20	B6D0710	04/29/2016	04/29/16 07:45	
2,2,4-Trimethylpentane	ND	20	20	B6D0710	04/29/2016	04/29/16 07:45	
2-Butanone	ND	10	20	B6D0710	04/29/2016	04/29/16 07:45	
2-Chloroethyl vinyl ether	ND	20	20	B6D0710	04/29/2016	04/29/16 07:45	
2-Chlorotoluene	ND	30	20	B6D0710	04/29/2016	04/29/16 07:45	
2-Hexanone	ND	20	20	B6D0710	04/29/2016	04/29/16 07:45	
2-Propanol	**120**	10	20	B6D0710	04/29/2016	04/29/16 07:45	
4-Chlorotoluene	ND	30	20	B6D0710	04/29/2016	04/29/16 07:45	
4-Ethyl Toluene	ND	20	20	B6D0710	04/29/2016	04/29/16 07:45	
4-Methyl-2-pentanone	ND	20	20	B6D0710	04/29/2016	04/29/16 07:45	
Acetone	**210**	10	20	B6D0710	04/29/2016	04/29/16 07:45	
Acetonitrile	ND	8	20	B6D0710	04/29/2016	04/29/16 07:45	
Acrolein	ND	10	20	B6D0710	04/29/2016	04/29/16 07:45	
Acrylonitrile	ND	10	20	B6D0710	04/29/2016	04/29/16 07:45	
Benzene	ND	20	20	B6D0710	04/29/2016	04/29/16 07:45	
Benzyl chloride	ND	30	20	B6D0710	04/29/2016	04/29/16 07:45	
Bromobenzene	ND	30	20	B6D0710	04/29/2016	04/29/16 07:45	
Bromodichloromethane	ND	30	20	B6D0710	04/29/2016	04/29/16 07:45	

Certificate of Analysis

Hushmand Associates, Inc.	Project Number : Parcel 20 6th St. Bridge, LAC 15-003
250 Goddard	Report To : Naresh Bellana
Irvine , CA 92618	Reported : 03/26/2018

Client Sample ID P-20 VP-9 @ 5'

Lab ID: 1601497-09

Volatile Organic Compounds in AIR by TO-15 (Canister) **Analyst: LT**

Analyte	Result (ug/m³)	PQL (ug/m³)	Dilution	Batch	Prepared	Date/Time Analyzed	Notes
Bromoform	ND	50	20	B6D0710	04/29/2016	04/29/16 07:45	
Bromomethane	ND	20	20	B6D0710	04/29/2016	04/29/16 07:45	
Carbon disulfide	ND	20	20	B6D0710	04/29/2016	04/29/16 07:45	
Carbon tetrachloride	ND	30	20	B6D0710	04/29/2016	04/29/16 07:45	
Chlorobenzene	ND	20	20	B6D0710	04/29/2016	04/29/16 07:45	
Chloroethane	ND	10	20	B6D0710	04/29/2016	04/29/16 07:45	
Chloroform	ND	20	20	B6D0710	04/29/2016	04/29/16 07:45	
Chloromethane	ND	10	20	B6D0710	04/29/2016	04/29/16 07:45	
cis-1,2-Dichloroethene	ND	20	20	B6D0710	04/29/2016	04/29/16 07:45	
cis-1,3-Dichloropropene	ND	20	20	B6D0710	04/29/2016	04/29/16 07:45	
Cyclohexane	ND	20	20	B6D0710	04/29/2016	04/29/16 07:45	
Dibromochloromethane	ND	40	20	B6D0710	04/29/2016	04/29/16 07:45	
Dibromomethane	ND	40	20	B6D0710	04/29/2016	04/29/16 07:45	
Dichlorodifluoromethane	**40**	20	20	B6D0710	04/29/2016	04/29/16 07:45	
Dichlorotetrafluoroethane	ND	30	20	B6D0710	04/29/2016	04/29/16 07:45	
Ethanol	**210**	9	20	B6D0710	04/29/2016	04/29/16 07:45	
Ethylbenzene	ND	20	20	B6D0710	04/29/2016	04/29/16 07:45	
Freon-113	ND	40	20	B6D0710	04/29/2016	04/29/16 07:45	
Hexachlorobutadiene	ND	50	20	B6D0710	04/29/2016	04/29/16 07:45	
Isopropylbenzene	ND	20	20	B6D0710	04/29/2016	04/29/16 07:45	
m,p-Xylene	ND	90	20	B6D0710	04/29/2016	04/29/16 07:45	
Methylene chloride	**370**	20	20	B6D0710	04/29/2016	04/29/16 07:45	
MTBE	ND	20	20	B6D0710	04/29/2016	04/29/16 07:45	
n-Butylbenzene	ND	30	20	B6D0710	04/29/2016	04/29/16 07:45	
n-Propylbenzene	ND	20	20	B6D0710	04/29/2016	04/29/16 07:45	
Naphthalene	ND	30	20	B6D0710	04/29/2016	04/29/16 07:45	
o-Xylene	ND	20	20	B6D0710	04/29/2016	04/29/16 07:45	
p-Isopropyltoluene	ND	30	20	B6D0710	04/29/2016	04/29/16 07:45	
sec-Butylbenzene	ND	30	20	B6D0710	04/29/2016	04/29/16 07:45	
Styrene	ND	20	20	B6D0710	04/29/2016	04/29/16 07:45	
tert-Butylbenzene	ND	30	20	B6D0710	04/29/2016	04/29/16 07:45	
Tetrachloroethene	**120**	30	20	B6D0710	04/29/2016	04/29/16 07:45	
Toluene	**20**	20	20	B6D0710	04/29/2016	04/29/16 07:45	
trans-1,2-Dichloroethene	ND	20	20	B6D0710	04/29/2016	04/29/16 07:45	
trans-1,3-Dichloropropene	ND	20	20	B6D0710	04/29/2016	04/29/16 07:45	
Trichloroethene	ND	30	20	B6D0710	04/29/2016	04/29/16 07:45	
Trichlorofluoromethane	**480**	30	20	B6D0710	04/29/2016	04/29/16 07:45	

Certificate of Analysis

Hushmand Associates, Inc.	Project Number : Parcel 20 6th St. Bridge, LAC 15-003
250 Goddard	Report To : Naresh Bellana
Irvine , CA 92618	Reported : 03/26/2018

Client Sample ID P-20 VP-9 @ 5'

Lab ID: 1601497-09

Volatile Organic Compounds in AIR by TO-15 (Canister) **Analyst: LT**

Analyte		Result (ug/m³)	PQL (ug/m³)	Dilution	Batch	Prepared	Date/Time Analyzed	Notes
Vinyl acetate		ND	20	20	B6D0710	04/29/2016	04/29/16 07:45	
Vinyl chloride		ND	10	20	B6D0710	04/29/2016	04/29/16 07:45	
Surrogate: 4-Bromofluorobenzene	*110 %*		*79.2 - 147*		B6D0710	04/29/2016	*04/29/16 07:45*	

Gasoline Range Organics in Air by TO-3 **Analyst: LT**

Analyte		Result (ug/m³)	PQL (ug/m³)	Dilution	Batch	Prepared	Date/Time Analyzed	Notes
Gasoline Range Organics		**2800**	1000	10	B6E0080	05/03/2016	05/03/16 16:35	
Surrogate: 4-Bromofluorobenzene	*109 %*		*70 - 130*		B6E0080	05/03/2016	*05/03/16 16:35*	

Certificate of Analysis

Hushmand Associates, Inc.	Project Number : Parcel 20 6th St. Bridge, LAC 15-003
250 Goddard	Report To : Naresh Bellana
Irvine , CA 92618	Reported : 03/26/2018

Client Sample ID P-20 VP-4 @ 5' Dup

Lab ID: 1601497-10

Volatile Organic Compounds in AIR by TO-15 (Canister) **Analyst: LT**

Analyte	Result (ug/m³)	PQL (ug/m³)	Dilution	Batch	Prepared	Date/Time Analyzed	Notes
1,1,1,2-Tetrachloroethane	ND	30	20	B6D0710	04/29/2016	04/29/16 08:27	
1,1,1-Trichloroethane	ND	30	20	B6D0710	04/29/2016	04/29/16 08:27	
1,1,2,2-Tetrachloroethane	ND	30	20	B6D0710	04/29/2016	04/29/16 08:27	
1,1,2-Trichloroethane	**40**	30	20	B6D0710	04/29/2016	04/29/16 08:27	
1,1-Dichloroethane	ND	20	20	B6D0710	04/29/2016	04/29/16 08:27	
1,1-Dichloroethene	ND	20	20	B6D0710	04/29/2016	04/29/16 08:27	
1,1-Dichloropropene	ND	20	20	B6D0710	04/29/2016	04/29/16 08:27	
1,2,3-Trichloropropane	ND	30	20	B6D0710	04/29/2016	04/29/16 08:27	
1,2,4-Trichlorobenzene	ND	40	20	B6D0710	04/29/2016	04/29/16 08:27	
1,2,4-Trimethylbenzene	ND	20	20	B6D0710	04/29/2016	04/29/16 08:27	
1,2-Dibromo-3-chloropropane	ND	50	20	B6D0710	04/29/2016	04/29/16 08:27	
1,2-Dibromoethane	ND	40	20	B6D0710	04/29/2016	04/29/16 08:27	
1,2-Dichlorobenzene	ND	30	20	B6D0710	04/29/2016	04/29/16 08:27	
1,2-Dichloroethane	ND	20	20	B6D0710	04/29/2016	04/29/16 08:27	
1,2-Dichloropropane	ND	20	20	B6D0710	04/29/2016	04/29/16 08:27	
1,3,5-Trimethylbenzene	ND	20	20	B6D0710	04/29/2016	04/29/16 08:27	
1,3-Butadiene	ND	10	20	B6D0710	04/29/2016	04/29/16 08:27	
1,3-Dichlorobenzene	ND	30	20	B6D0710	04/29/2016	04/29/16 08:27	
1,4-Dichlorobenzene	ND	30	20	B6D0710	04/29/2016	04/29/16 08:27	
1,4-Dioxane	ND	20	20	B6D0710	04/29/2016	04/29/16 08:27	
2,2,4-Trimethylpentane	ND	20	20	B6D0710	04/29/2016	04/29/16 08:27	
2-Butanone	ND	10	20	B6D0710	04/29/2016	04/29/16 08:27	
2-Chloroethyl vinyl ether	ND	20	20	B6D0710	04/29/2016	04/29/16 08:27	
2-Chlorotoluene	ND	30	20	B6D0710	04/29/2016	04/29/16 08:27	
2-Hexanone	ND	20	20	B6D0710	04/29/2016	04/29/16 08:27	
2-Propanol	**140**	10	20	B6D0710	04/29/2016	04/29/16 08:27	
4-Chlorotoluene	ND	30	20	B6D0710	04/29/2016	04/29/16 08:27	
4-Ethyl Toluene	ND	20	20	B6D0710	04/29/2016	04/29/16 08:27	
4-Methyl-2-pentanone	ND	20	20	B6D0710	04/29/2016	04/29/16 08:27	
Acetone	**90**	10	20	B6D0710	04/29/2016	04/29/16 08:27	
Acetonitrile	ND	8	20	B6D0710	04/29/2016	04/29/16 08:27	
Acrolein	ND	10	20	B6D0710	04/29/2016	04/29/16 08:27	
Acrylonitrile	ND	10	20	B6D0710	04/29/2016	04/29/16 08:27	
Benzene	ND	20	20	B6D0710	04/29/2016	04/29/16 08:27	
Benzyl chloride	ND	30	20	B6D0710	04/29/2016	04/29/16 08:27	
Bromobenzene	ND	30	20	B6D0710	04/29/2016	04/29/16 08:27	
Bromodichloromethane	ND	30	20	B6D0710	04/29/2016	04/29/16 08:27	

Certificate of Analysis

Hushmand Associates, Inc.		Project Number :	Parcel 20 6th St. Bridge, LAC 15-003
250 Goddard		Report To :	Naresh Bellana
Irvine , CA 92618		Reported :	03/26/2018

Client Sample ID P-20 VP-4 @ 5' Dup

Lab ID: 1601497-10

Volatile Organic Compounds in AIR by TO-15 (Canister) **Analyst: LT**

Analyte	Result (ug/m³)	PQL (ug/m³)	Dilution	Batch	Prepared	Date/Time Analyzed	Notes
Bromoform	ND	50	20	B6D0710	04/29/2016	04/29/16 08:27	
Bromomethane	ND	20	20	B6D0710	04/29/2016	04/29/16 08:27	
Carbon disulfide	ND	20	20	B6D0710	04/29/2016	04/29/16 08:27	
Carbon tetrachloride	ND	30	20	B6D0710	04/29/2016	04/29/16 08:27	
Chlorobenzene	ND	20	20	B6D0710	04/29/2016	04/29/16 08:27	
Chloroethane	ND	10	20	B6D0710	04/29/2016	04/29/16 08:27	
Chloroform	ND	20	20	B6D0710	04/29/2016	04/29/16 08:27	
Chloromethane	ND	10	20	B6D0710	04/29/2016	04/29/16 08:27	
cis-1,2-Dichloroethene	ND	20	20	B6D0710	04/29/2016	04/29/16 08:27	
cis-1,3-Dichloropropene	ND	20	20	B6D0710	04/29/2016	04/29/16 08:27	
Cyclohexane	ND	20	20	B6D0710	04/29/2016	04/29/16 08:27	
Dibromochloromethane	ND	40	20	B6D0710	04/29/2016	04/29/16 08:27	
Dibromomethane	ND	40	20	B6D0710	04/29/2016	04/29/16 08:27	
Dichlorodifluoromethane	ND	20	20	B6D0710	04/29/2016	04/29/16 08:27	
Dichlorotetrafluoroethane	ND	30	20	B6D0710	04/29/2016	04/29/16 08:27	
Ethanol	**20**	9	20	B6D0710	04/29/2016	04/29/16 08:27	
Ethylbenzene	ND	20	20	B6D0710	04/29/2016	04/29/16 08:27	
Freon-113	ND	40	20	B6D0710	04/29/2016	04/29/16 08:27	
Hexachlorobutadiene	ND	50	20	B6D0710	04/29/2016	04/29/16 08:27	
Isopropylbenzene	ND	20	20	B6D0710	04/29/2016	04/29/16 08:27	
m,p-Xylene	ND	90	20	B6D0710	04/29/2016	04/29/16 08:27	
Methylene chloride	ND	20	20	B6D0710	04/29/2016	04/29/16 08:27	
MTBE	ND	20	20	B6D0710	04/29/2016	04/29/16 08:27	
n-Butylbenzene	ND	30	20	B6D0710	04/29/2016	04/29/16 08:27	
n-Propylbenzene	ND	20	20	B6D0710	04/29/2016	04/29/16 08:27	
Naphthalene	ND	30	20	B6D0710	04/29/2016	04/29/16 08:27	
o-Xylene	ND	20	20	B6D0710	04/29/2016	04/29/16 08:27	
p-Isopropyltoluene	ND	30	20	B6D0710	04/29/2016	04/29/16 08:27	
sec-Butylbenzene	ND	30	20	B6D0710	04/29/2016	04/29/16 08:27	
Styrene	ND	20	20	B6D0710	04/29/2016	04/29/16 08:27	
tert-Butylbenzene	ND	30	20	B6D0710	04/29/2016	04/29/16 08:27	
Tetrachloroethene	**480**	30	20	B6D0710	04/29/2016	04/29/16 08:27	
Toluene	ND	20	20	B6D0710	04/29/2016	04/29/16 08:27	
trans-1,2-Dichloroethene	ND	20	20	B6D0710	04/29/2016	04/29/16 08:27	
trans-1,3-Dichloropropene	ND	20	20	B6D0710	04/29/2016	04/29/16 08:27	
Trichloroethene	ND	30	20	B6D0710	04/29/2016	04/29/16 08:27	
Trichlorofluoromethane	**2200**	30	20	B6D0710	04/29/2016	04/29/16 08:27	

Certificate of Analysis

Hushmand Associates, Inc.	Project Number : Parcel 20 6th St. Bridge, LAC 15-003
250 Goddard	Report To : Naresh Bellana
Irvine , CA 92618	Reported : 03/26/2018

Client Sample ID P-20 VP-4 @ 5' Dup

Lab ID: 1601497-10

Volatile Organic Compounds in AIR by TO-15 (Canister) **Analyst: LT**

Analyte		Result (ug/m³)	PQL (ug/m³)	Dilution	Batch	Prepared	Date/Time Analyzed	Notes
Vinyl acetate		ND	20	20	B6D0710	04/29/2016	04/29/16 08:27	
Vinyl chloride		ND	10	20	B6D0710	04/29/2016	04/29/16 08:27	
Surrogate: 4-Bromofluorobenzene	*117 %*		*79.2 - 147*		B6D0710	04/29/2016	*04/29/16 08:27*	

Gasoline Range Organics in Air by TO-3 **Analyst: LT**

Analyte		Result (ug/m³)	PQL (ug/m³)	Dilution	Batch	Prepared	Date/Time Analyzed	Notes
Gasoline Range Organics		**2000**	1000	10	B6E0080	05/03/2016	05/03/16 17:12	
Surrogate: 4-Bromofluorobenzene	*107 %*		*70 - 130*		B6E0080	05/03/2016	*05/03/16 17:12*	

Certificate of Analysis

Hushmand Associates, Inc.		Project Number :	Parcel 20 6th St. Bridge, LAC 15-003
250 Goddard		Report To :	Naresh Bellana
Irvine , CA 92618		Reported :	03/26/2018

Client Sample ID P-20 VP-9 @ 5' Dup

Lab ID: 1601497-11

Volatile Organic Compounds in AIR by TO-15 (Canister) **Analyst: LT**

Analyte	Result (ug/m³)	PQL (ug/m³)	Dilution	Batch	Prepared	Date/Time Analyzed	Notes
1,1,1,2-Tetrachloroethane	ND	170	100	B6D0710	04/29/2016	04/29/16 02:20	
1,1,1-Trichloroethane	ND	140	100	B6D0710	04/29/2016	04/29/16 02:20	
1,1,2,2-Tetrachloroethane	ND	170	100	B6D0710	04/29/2016	04/29/16 02:20	
1,1,2-Trichloroethane	ND	140	100	B6D0710	04/29/2016	04/29/16 02:20	
1,1-Dichloroethane	ND	100	100	B6D0710	04/29/2016	04/29/16 02:20	
1,1-Dichloroethene	ND	100	100	B6D0710	04/29/2016	04/29/16 02:20	
1,1-Dichloropropene	ND	110	100	B6D0710	04/29/2016	04/29/16 02:20	
1,2,3-Trichloropropane	ND	150	100	B6D0710	04/29/2016	04/29/16 02:20	
1,2,4-Trichlorobenzene	ND	190	100	B6D0710	04/29/2016	04/29/16 02:20	
1,2,4-Trimethylbenzene	ND	120	100	B6D0710	04/29/2016	04/29/16 02:20	
1,2-Dibromo-3-chloropropane	ND	240	100	B6D0710	04/29/2016	04/29/16 02:20	
1,2-Dibromoethane	ND	190	100	B6D0710	04/29/2016	04/29/16 02:20	
1,2-Dichlorobenzene	ND	150	100	B6D0710	04/29/2016	04/29/16 02:20	
1,2-Dichloroethane	ND	100	100	B6D0710	04/29/2016	04/29/16 02:20	
1,2-Dichloropropane	ND	120	100	B6D0710	04/29/2016	04/29/16 02:20	
1,3,5-Trimethylbenzene	ND	120	100	B6D0710	04/29/2016	04/29/16 02:20	
1,3-Butadiene	ND	60	100	B6D0710	04/29/2016	04/29/16 02:20	
1,3-Dichlorobenzene	ND	150	100	B6D0710	04/29/2016	04/29/16 02:20	
1,4-Dichlorobenzene	ND	150	100	B6D0710	04/29/2016	04/29/16 02:20	
1,4-Dioxane	ND	90	100	B6D0710	04/29/2016	04/29/16 02:20	
2,2,4-Trimethylpentane	ND	120	100	B6D0710	04/29/2016	04/29/16 02:20	
2-Butanone	ND	70	100	B6D0710	04/29/2016	04/29/16 02:20	
2-Chloroethyl vinyl ether	ND	110	100	B6D0710	04/29/2016	04/29/16 02:20	
2-Chlorotoluene	ND	130	100	B6D0710	04/29/2016	04/29/16 02:20	
2-Hexanone	ND	100	100	B6D0710	04/29/2016	04/29/16 02:20	
2-Propanol	ND	60	100	B6D0710	04/29/2016	04/29/16 02:20	
4-Chlorotoluene	ND	130	100	B6D0710	04/29/2016	04/29/16 02:20	
4-Ethyl Toluene	ND	120	100	B6D0710	04/29/2016	04/29/16 02:20	
4-Methyl-2-pentanone	ND	100	100	B6D0710	04/29/2016	04/29/16 02:20	
Acetone	ND	60	100	B6D0710	04/29/2016	04/29/16 02:20	
Acetonitrile	ND	40	100	B6D0710	04/29/2016	04/29/16 02:20	
Acrolein	ND	60	100	B6D0710	04/29/2016	04/29/16 02:20	
Acrylonitrile	ND	50	100	B6D0710	04/29/2016	04/29/16 02:20	
Benzene	ND	80	100	B6D0710	04/29/2016	04/29/16 02:20	
Benzyl chloride	ND	130	100	B6D0710	04/29/2016	04/29/16 02:20	
Bromobenzene	ND	160	100	B6D0710	04/29/2016	04/29/16 02:20	
Bromodichloromethane	ND	170	100	B6D0710	04/29/2016	04/29/16 02:20	

Certificate of Analysis

Hushmand Associates, Inc.	Project Number : Parcel 20 6th St. Bridge, LAC 15-003
250 Goddard	Report To : Naresh Bellana
Irvine , CA 92618	Reported : 03/26/2018

Client Sample ID P-20 VP-9 @ 5' Dup

Lab ID: 1601497-11

Volatile Organic Compounds in AIR by TO-15 (Canister) **Analyst: LT**

Analyte	Result (ug/m³)	PQL (ug/m³)	Dilution	Batch	Prepared	Date/Time Analyzed	Notes
Bromoform	ND	260	100	B6D0710	04/29/2016	04/29/16 02:20	
Bromomethane	ND	100	100	B6D0710	04/29/2016	04/29/16 02:20	
Carbon disulfide	ND	80	100	B6D0710	04/29/2016	04/29/16 02:20	
Carbon tetrachloride	ND	160	100	B6D0710	04/29/2016	04/29/16 02:20	
Chlorobenzene	ND	120	100	B6D0710	04/29/2016	04/29/16 02:20	
Chloroethane	ND	70	100	B6D0710	04/29/2016	04/29/16 02:20	
Chloroform	ND	120	100	B6D0710	04/29/2016	04/29/16 02:20	
Chloromethane	ND	50	100	B6D0710	04/29/2016	04/29/16 02:20	
cis-1,2-Dichloroethene	ND	100	100	B6D0710	04/29/2016	04/29/16 02:20	
cis-1,3-Dichloropropene	ND	110	100	B6D0710	04/29/2016	04/29/16 02:20	
Cyclohexane	ND	90	100	B6D0710	04/29/2016	04/29/16 02:20	
Dibromochloromethane	ND	210	100	B6D0710	04/29/2016	04/29/16 02:20	
Dibromomethane	ND	180	100	B6D0710	04/29/2016	04/29/16 02:20	
Dichlorodifluoromethane	**300**	120	100	B6D0710	04/29/2016	04/29/16 02:20	
Dichlorotetrafluoroethane	ND	170	100	B6D0710	04/29/2016	04/29/16 02:20	
Ethanol	ND	50	100	B6D0710	04/29/2016	04/29/16 02:20	
Ethylbenzene	ND	110	100	B6D0710	04/29/2016	04/29/16 02:20	
Freon-113	ND	190	100	B6D0710	04/29/2016	04/29/16 02:20	
Hexachlorobutadiene	ND	270	100	B6D0710	04/29/2016	04/29/16 02:20	
Isopropylbenzene	ND	120	100	B6D0710	04/29/2016	04/29/16 02:20	
m,p-Xylene	ND	430	100	B6D0710	04/29/2016	04/29/16 02:20	
Methylene chloride	ND	90	100	B6D0710	04/29/2016	04/29/16 02:20	
MTBE	ND	90	100	B6D0710	04/29/2016	04/29/16 02:20	
n-Butylbenzene	ND	140	100	B6D0710	04/29/2016	04/29/16 02:20	
n-Propylbenzene	ND	120	100	B6D0710	04/29/2016	04/29/16 02:20	
Naphthalene	ND	130	100	B6D0710	04/29/2016	04/29/16 02:20	
o-Xylene	ND	110	100	B6D0710	04/29/2016	04/29/16 02:20	
p-Isopropyltoluene	ND	140	100	B6D0710	04/29/2016	04/29/16 02:20	
sec-Butylbenzene	ND	140	100	B6D0710	04/29/2016	04/29/16 02:20	
Styrene	ND	110	100	B6D0710	04/29/2016	04/29/16 02:20	
tert-Butylbenzene	ND	140	100	B6D0710	04/29/2016	04/29/16 02:20	
Tetrachloroethene	**970**	170	100	B6D0710	04/29/2016	04/29/16 02:20	
Toluene	ND	90	100	B6D0710	04/29/2016	04/29/16 02:20	
trans-1,2-Dichloroethene	ND	100	100	B6D0710	04/29/2016	04/29/16 02:20	
trans-1,3-Dichloropropene	ND	110	100	B6D0710	04/29/2016	04/29/16 02:20	
Trichloroethene	ND	130	100	B6D0710	04/29/2016	04/29/16 02:20	
Trichlorofluoromethane	**2600**	140	100	B6D0710	04/29/2016	04/29/16 02:20	

Certificate of Analysis

Hushmand Associates, Inc.	Project Number : Parcel 20 6th St. Bridge, LAC 15-003
250 Goddard	Report To : Naresh Bellana
Irvine , CA 92618	Reported : 03/26/2018

Client Sample ID P-20 VP-9 @ 5' Dup

Lab ID: 1601497-11

Volatile Organic Compounds in AIR by TO-15 (Canister) **Analyst: LT**

Analyte		Result (ug/m³)	PQL (ug/m³)	Dilution	Batch	Prepared	Date/Time Analyzed	Notes
Vinyl acetate		ND	90	100	B6D0710	04/29/2016	04/29/16 02:20	
Vinyl chloride		ND	60	100	B6D0710	04/29/2016	04/29/16 02:20	
Surrogate: 4-Bromofluorobenzene	*120 %*		*79.2 - 147*		B6D0710	04/29/2016	*04/29/16 02:20*	

Gasoline Range Organics in Air by TO-3 **Analyst: LT**

Analyte		Result (ug/m³)	PQL (ug/m³)	Dilution	Batch	Prepared	Date/Time Analyzed	Notes
Gasoline Range Organics		**4300**	4100	40	B6E0059	04/29/2016	04/29/16 20:58	
Surrogate: 4-Bromofluorobenzene	*107 %*		*70 - 130*		B6E0059	04/29/2016	*04/29/16 20:58*	

Certificate of Analysis

Hushmand Associates, Inc.	Project Number : Parcel 20 6th St. Bridge, LAC 15-003
250 Goddard	Report To : Naresh Bellana
Irvine , CA 92618	Reported : 03/26/2018

QUALITY CONTROL SECTION

Volatile Organic Compounds in AIR by TO-15 (Canister) - Quality Control

Analyte	Result (ug/m³)	PQL (ug/m³)	MDL (ug/m³)	Spike Level	Source Result	% Rec	% Rec Limits	RPD	RPD Limit	Notes
Batch B6D0656 - No_Prep_AIR										
Blank (B6D0656-BLK1)					Prepared: 4/26/2016 Analyzed: 4/26/2016					
1,1,1,2-Tetrachloroethane	ND	2	0.57							
1,1,1-Trichloroethane	ND	1	0.58							
1,1,2,2-Tetrachloroethane	ND	2	0.77							
1,1,2-Trichloroethane	ND	1	0.45							
1,1-Dichloroethane	ND	1	0.37							
1,1-Dichloroethene	ND	0.99	0.34							
1,1-Dichloropropene	ND	1	0.37							
1,2,3-Trichloropropane	ND	2	0.58							
1,2,4-Trichlorobenzene	ND	2	0.73							
1,2,4-Trimethylbenzene	ND	1	0.54							
1,2-Dibromo-3-chloropropane	ND	2	1							
1,2-Dibromoethane	ND	2	0.73							
1,2-Dichlorobenzene	ND	2	0.54							
1,2-Dichloroethane	ND	1	0.34							
1,2-Dichloropropane	ND	1	0.41							
1,3,5-Trimethylbenzene	ND	1	0.51							
1,3-Butadiene	ND	0.55	0.39							
1,3-Dichlorobenzene	ND	2	0.56							
1,4-Dichlorobenzene	ND	2	0.51							
1,4-Dioxane	ND	0.90	0.65							
2,2,4-Trimethylpentane	ND	1	0.35							
2-Butanone	ND	0.74	0.24							
2-Chloroethyl vinyl ether	ND	1	0.22							
2-Chlorotoluene	ND	1	0.50							
2-Hexanone	ND	1	0.43							
2-Propanol	ND	0.61	0.26							
4-Chlorotoluene	ND	1	0.47							
4-Ethyl Toluene	ND	1	0.47							
4-Methyl-2-pentanone	ND	1	0.30							
Acetone	ND	0.59	0.26							
Acetonitrile	ND	0.42	0.14							
Acrolein	ND	0.57	0.22							
Acrylonitrile	ND	0.54	0.18							
Benzene	ND	0.80	0.28							
Benzyl chloride	ND	1	0.37							
Bromobenzene	ND	2	0.59							
Bromodichloromethane	ND	2	0.70							
Bromoform	ND	3	0.90							
Bromomethane	ND	0.97	0.46							

Hushmand Associates, Inc.	Project Number : Parcel 20 6th St. Bridge, LAC 15-003
250 Goddard	Report To : Naresh Bellana
Irvine , CA 92618	Reported : 03/26/2018

Volatile Organic Compounds in AIR by TO-15 (Canister) - Quality Control (cont'd)

Analyte	Result (ug/m³)	PQL (ug/m³)	MDL (ug/m³)	Spike Level	Source Result	% Rec	% Rec Limits	RPD	RPD Limit	Notes
Batch B6D0656 - No_Prep_AIR (continued)										
Blank (B6D0656-BLK1) - Continued					Prepared: 4/26/2016 Analyzed: 4/26/2016					
Carbon disulfide	ND	0.78	0.31							
Carbon tetrachloride	ND	2	0.43							
Chlorobenzene	ND	1	0.41							
Chloroethane	ND	0.66	0.28							
Chloroform	ND	1	0.50							
Chloromethane	ND	0.52	0.22							
cis-1,2-Dichloroethene	ND	0.99	0.28							
cis-1,3-Dichloropropene	ND	1	0.33							
Cyclohexane	ND	0.86	0.25							
Dibromochloromethane	ND	2	0.83							
Dibromomethane	ND	2	0.55							
Dichlorodifluoromethane	ND	1	0.56							
Dichlorotetrafluoroethane	ND	2	0.76							
Ethanol	ND	0.47	0.20							
Ethylbenzene	ND	1	0.35							
Freon-113	ND	2	0.58							
Hexachlorobutadiene	ND	3	1							
Isopropylbenzene	ND	1	0.52							
m,p-Xylene	ND	4	1							
Methylene chloride	ND	0.87	0.31							
MTBE	ND	0.90	0.33							
n-Butylbenzene	ND	1	0.42							
n-Propylbenzene	ND	1	0.41							
Naphthalene	ND	1	0.36							
o-Xylene	ND	1	0.40							
p-Isopropyltoluene	ND	1	0.51							
sec-Butylbenzene	ND	1	0.56							
Styrene	ND	1	0.44							
tert-Butylbenzene	ND	1	0.62							
Tetrachloroethene	ND	2	0.47							
Toluene	ND	0.94	0.28							
trans-1,2-Dichloroethene	ND	0.99	0.34							
trans-1,3-Dichloropropene	ND	1	0.34							
Trichloroethene	ND	1	0.47							
Trichlorofluoromethane	ND	1	0.53							
Vinyl acetate	ND	0.88	0.38							
Vinyl chloride	ND	0.64	0.21							
Surrogate: 4-Bromofluorobenzene	*18.47*			*17.8935*		*103*	*79.2 - 147*			
LCS (B6D0656-BS1)					Prepared: 4/26/2016 Analyzed: 4/26/2016					
1,1,1,2-Tetrachloroethane	13.524	2	0.57	13.7299		98.5	70 - 130			

Hushmand Associates, Inc.	Project Number : Parcel 20 6th St. Bridge, LAC 15-003
250 Goddard	Report To : Naresh Bellana
Irvine , CA 92618	Reported : 03/26/2018

Volatile Organic Compounds in AIR by TO-15 (Canister) - Quality Control (cont'd)

Analyte	Result (ug/m³)	PQL (ug/m³)	MDL (ug/m³)	Spike Level	Source Result	% Rec	% Rec Limits	RPD	RPD Limit	Notes
Batch B6D0656 - No_Prep_AIR (continued)										
LCS (B6D0656-BS1) - Continued					Prepared: 4/26/2016 Analyzed: 4/26/2016					
1,1,1-Trichloroethane	9.603	1	0.58	10.9123		88.0	70 - 130			
1,1,2,2-Tetrachloroethane	13.318	2	0.77	13.7299		97.0	70 - 130			
1,1,2-Trichloroethane	8.402	1	0.45	10.9123		77.0	70 - 130			
1,1-Dichloroethane	7.326	1	0.37	8.09480		90.5	70 - 130			
1,1-Dichloroethene	7.097	0.99	0.34	7.92990		89.5	70 - 130			
1,1-Dichloropropene	8.986	1	0.37	9.07722		99.0	70 - 130			
1,2,3-Trichloropropane	11.276	2	0.58	12.0597		93.5	70 - 130			
1,2,4-Trichlorobenzene	15.213	2	0.73	14.8422		102	70 - 130			
1,2,4-Trimethylbenzene	9.193	1	0.54	9.83166		93.5	70 - 130			
1,2-Dibromo-3-chloropropane	17.689	2	1	19.3319		91.5	70 - 130			
1,2-Dibromoethane	11.756	2	0.73	15.3670		76.5	70 - 130			
1,2-Dichlorobenzene	11.063	2	0.54	12.0246		92.0	70 - 130			
1,2-Dichloroethane	6.435	1	0.34	8.09480		79.5	70 - 130			
1,2-Dichloropropane	7.301	1	0.41	9.24213		79.0	70 - 130			
1,3,5-Trimethylbenzene	9.340	1	0.51	9.83166		95.0	70 - 130			
1,3-Butadiene	3.562	0.55	0.39	4.42454		80.5	70 - 130			
1,3-Dichlorobenzene	11.063	2	0.56	12.0246		92.0	70 - 130			
1,4-Dichlorobenzene	10.942	2	0.51	12.0246		91.0	70 - 130			
1,4-Dioxane	6.090	0.90	0.65	7.20695		84.5	70 - 130			
2,2,4-Trimethylpentane	7.896	1	0.35	9.34388		84.5	70 - 130			
2-Butanone	5.367	0.74	0.24	5.89824		91.0	70 - 130			
2-Chloroethyl vinyl ether	7.583	1	0.22	8.71583		87.0	70 - 130			
2-Chlorotoluene	10.406	1	0.50	10.3544		100	70 - 130			
2-Hexanone	7.333	1	0.43	8.19296		89.5	70 - 130			
2-Propanol	4.153	0.61	0.26	4.91534		84.5	70 - 130			
4-Chlorotoluene	9.837	1	0.47	10.3544		95.0	70 - 130			
4-Ethyl Toluene	9.586	1	0.47	9.83166		97.5	70 - 130			
4-Methyl-2-pentanone	6.677	1	0.30	8.19296		81.5	70 - 130			
Acetone	3.729	0.59	0.26	4.75084		78.5	70 - 130			
Acetonitrile	2.686	0.42	0.14	3.35804		80.0	70 - 130			
Acrolein	4.976	0.57	0.22	4.58593		108	70 - 130			
Acrylonitrile	4.037	0.54	0.18	4.34053		93.0	70 - 130			
Benzene	5.367	0.80	0.28	6.38953		84.0	70 - 130			
Benzyl chloride	9.164	1	0.37	10.3544		88.5	70 - 130			
Bromobenzene	12.458	2	0.59	12.8432		97.0	70 - 130			
Bromodichloromethane	10.654	2	0.70	13.4011		79.5	70 - 130			
Bromoform	19.536	3	0.90	20.6733		94.5	70 - 130			
Bromomethane	6.485	0.97	0.46	7.76597		83.5	70 - 130			
Carbon disulfide	5.356	0.78	0.31	6.22847		86.0	70 - 130			
Carbon tetrachloride	10.506	2	0.43	12.5826		83.5	70 - 130			
Chlorobenzene	8.839	1	0.41	9.20712		96.0	70 - 130			
Chloroethane	4.090	0.66	0.28	5.27722		77.5	70 - 130			

Certificate of Analysis

Hushmand Associates, Inc.	Project Number : Parcel 20 6th St. Bridge, LAC 15-003
250 Goddard	Report To : Naresh Bellana
Irvine , CA 92618	Reported : 03/26/2018

Volatile Organic Compounds in AIR by TO-15 (Canister) - Quality Control (cont'd)

Analyte	Result (ug/m³)	PQL (ug/m³)	MDL (ug/m³)	Spike Level	Source Result	% Rec	% Rec Limits	RPD	RPD Limit	Notes
Batch B6D0656 - No_Prep_AIR (continued)										
LCS (B6D0656-BS1) - Continued					Prepared: 4/26/2016 Analyzed: 4/26/2016					
Chloroform	8.593	1	0.50	9.76499		88.0	70 - 130			
Chloromethane	3.345	0.52	0.22	4.12982		81.0	70 - 130			
cis-1,2-Dichloroethene	6.978	0.99	0.28	7.92990		88.0	70 - 130			
cis-1,3-Dichloropropene	7.307	1	0.33	9.07724		80.5	70 - 130			
Cyclohexane	6.127	0.86	0.25	6.88425		89.0	70 - 130			
Dibromochloromethane	14.482	2	0.83	17.0371		85.0	70 - 130			
Dibromomethane	12.940	2	0.55	14.2196		91.0	70 - 130			
Dichlorodifluoromethane	9.940	1	0.56	9.89063		100	70 - 130			
Dichlorotetrafluoroethane	14.051	2	0.76	13.9812		100	70 - 130			
Ethanol	3.203	0.47	0.20	3.76834		85.0	70 - 130			
Ethylbenzene	8.380	1	0.35	8.68425		96.5	70 - 130			
Freon-113	13.258	2	0.58	15.3272		86.5	70 - 130			
Hexachlorobutadiene	22.077	3	1	21.3300		104	70 - 130			
Isopropylbenzene	9.635	1	0.52	9.83166		98.0	70 - 130			
m,p-Xylene	32.479	4	1	34.7370		93.5	70 - 130			
Methylene chloride	6.670	0.87	0.31	6.94740		96.0	70 - 130			
MTBE	6.958	0.90	0.33	7.21047		96.5	70 - 130			
n-Butylbenzene	10.210	1	0.42	10.9790		93.0	70 - 130			
n-Propylbenzene	9.389	1	0.41	9.83166		95.5	70 - 130			
Naphthalene	8.754	1	0.36	10.4843		83.5	70 - 130			
o-Xylene	8.597	1	0.40	8.68425		99.0	70 - 130			
p-Isopropyltoluene	10.485	1	0.51	10.9790		95.5	70 - 130			
sec-Butylbenzene	10.430	1	0.56	10.9790		95.0	70 - 130			
Styrene	7.327	1	0.44	8.51934		86.0	70 - 130			
tert-Butylbenzene	10.485	1	0.62	10.9790		95.5	70 - 130			
Tetrachloroethene	12.751	2	0.47	13.5650		94.0	70 - 130			
Toluene	5.690	0.94	0.28	7.53688		75.5	70 - 130			
trans-1,2-Dichloroethene	7.137	0.99	0.34	7.92990		90.0	70 - 130			
trans-1,3-Dichloropropene	6.717	1	0.34	9.07722		74.0	70 - 130			
Trichloroethene	8.705	1	0.47	10.7474		81.0	70 - 130			
Trichlorofluoromethane	9.270	1	0.53	11.2366		82.5	70 - 130			
Vinyl acetate	5.422	0.88	0.38	7.04204		77.0	70 - 130			
Vinyl chloride	4.397	0.64	0.21	5.11231		86.0	70 - 130			
Surrogate: 4-Bromofluorobenzene	*19.90*			*17.8935*		*111*	*79.2 - 147*			
LCS Dup (B6D0656-BSD1)					Prepared: 4/26/2016 Analyzed: 4/26/2016					
1,1,1,2-Tetrachloroethane	13.387	2	0.57	13.7299		97.5	70 - 130	1.02	20	
1,1,1-Trichloroethane	9.657	1	0.58	10.9123		88.5	70 - 130	0.567	20	
1,1,2,2-Tetrachloroethane	12.426	2	0.77	13.7299		90.5	70 - 130	6.93	20	
1,1,2-Trichloroethane	8.566	1	0.45	10.9123		78.5	70 - 130	1.93	20	
1,1-Dichloroethane	7.164	1	0.37	8.09480		88.5	70 - 130	2.23	20	

Hushmand Associates, Inc.
250 Goddard
Irvine , CA 92618

Project Number : Parcel 20 6th St. Bridge, LAC 15-003
Report To : Naresh Bellana
Reported : 03/26/2018

Volatile Organic Compounds in AIR by TO-15 (Canister) - Quality Control (cont'd)

Analyte	Result (ug/m³)	PQL (ug/m³)	MDL (ug/m³)	Spike Level	Source Result	% Rec	% Rec Limits	RPD	RPD Limit	Notes
Batch B6D0656 - No_Prep_AIR (continued)										
LCS Dup (B6D0656-BSD1) - Continued					Prepared: 4/26/2016 Analyzed: 4/26/2016					
1,1-Dichloroethene	7.097	0.99	0.34	7.92990		89.5	70 - 130	0.00	20	
1,1-Dichloropropene	8.805	1	0.37	9.07722		97.0	70 - 130	2.04	20	
1,2,3-Trichloropropane	11.095	2	0.58	12.0597		92.0	70 - 130	1.62	20	
1,2,4-Trichlorobenzene	15.213	2	0.73	14.8422		102	70 - 130	0.00	20	
1,2,4-Trimethylbenzene	9.193	1	0.54	9.83166		93.5	70 - 130	0.00	20	
1,2-Dibromo-3-chloropropane	18.172	2	1	19.3319		94.0	70 - 130	2.70	20	
1,2-Dibromoethane	12.217	2	0.73	15.3670		79.5	70 - 130	3.85	20	
1,2-Dichlorobenzene	11.063	2	0.54	12.0246		92.0	70 - 130	0.00	20	
1,2-Dichloroethane	6.516	1	0.34	8.09480		80.5	70 - 130	1.25	20	
1,2-Dichloropropane	7.948	1	0.41	9.24213		86.0	70 - 130	8.48	20	
1,3,5-Trimethylbenzene	9.143	1	0.51	9.83166		93.0	70 - 130	2.13	20	
1,3-Butadiene	3.982	0.55	0.39	4.42454		90.0	70 - 130	11.1	20	
1,3-Dichlorobenzene	10.882	2	0.56	12.0246		90.5	70 - 130	1.64	20	
1,4-Dichlorobenzene	11.303	2	0.51	12.0246		94.0	70 - 130	3.24	20	
1,4-Dioxane	6.919	0.90	0.65	7.20695		96.0	70 - 130	12.7	20	
2,2,4-Trimethylpentane	7.802	1	0.35	9.34388		83.5	70 - 130	1.19	20	
2-Butanone	5.367	0.74	0.24	5.89824		91.0	70 - 130	0.00	20	
2-Chloroethyl vinyl ether	7.408	1	0.22	8.71583		85.0	70 - 130	2.33	20	
2-Chlorotoluene	9.785	1	0.50	10.3544		94.5	70 - 130	6.15	20	
2-Hexanone	6.841	1	0.43	8.19296		83.5	70 - 130	6.94	20	
2-Propanol	4.301	0.61	0.26	4.91534		87.5	70 - 130	3.49	20	
4-Chlorotoluene	9.733	1	0.47	10.3544		94.0	70 - 130	1.06	20	
4-Ethyl Toluene	9.340	1	0.47	9.83166		95.0	70 - 130	2.60	20	
4-Methyl-2-pentanone	6.513	1	0.30	8.19296		79.5	70 - 130	2.48	20	
Acetone	4.014	0.59	0.26	4.75084		84.5	70 - 130	7.36	20	
Acetonitrile	2.737	0.42	0.14	3.35804		81.5	70 - 130	1.86	20	
Acrolein	4.494	0.57	0.22	4.58593		98.0	70 - 130	10.2	20	
Acrylonitrile	4.189	0.54	0.18	4.34053		96.5	70 - 130	3.69	20	
Benzene	5.399	0.80	0.28	6.38953		84.5	70 - 130	0.593	20	
Benzyl chloride	9.371	1	0.37	10.3544		90.5	70 - 130	2.23	20	
Bromobenzene	12.137	2	0.59	12.8432		94.5	70 - 130	2.61	20	
Bromodichloromethane	10.587	2	0.70	13.4011		79.0	70 - 130	0.631	20	
Bromoform	18.916	3	0.90	20.6733		91.5	70 - 130	3.23	20	
Bromomethane	6.756	0.97	0.46	7.76597		87.0	70 - 130	4.11	20	
Carbon disulfide	5.481	0.78	0.31	6.22847		88.0	70 - 130	2.30	20	
Carbon tetrachloride	10.444	2	0.43	12.5826		83.0	70 - 130	0.601	20	
Chlorobenzene	8.056	1	0.41	9.20712		87.5	70 - 130	9.26	20	
Chloroethane	4.512	0.66	0.28	5.27722		85.5	70 - 130	9.82	20	
Chloroform	8.349	1	0.50	9.76499		85.5	70 - 130	2.88	20	
Chloromethane	4.130	0.52	0.22	4.12982		100	70 - 130	21.0	20	R
cis-1,2-Dichloroethene	7.216	0.99	0.28	7.92990		91.0	70 - 130	3.35	20	
cis-1,3-Dichloropropene	7.262	1	0.33	9.07724		80.0	70 - 130	0.623	20	

Certificate of Analysis

Hushmand Associates, Inc.	Project Number : Parcel 20 6th St. Bridge, LAC 15-003
250 Goddard	Report To : Naresh Bellana
Irvine , CA 92618	Reported : 03/26/2018

Volatile Organic Compounds in AIR by TO-15 (Canister) - Quality Control (cont'd)

Analyte	Result (ug/m³)	PQL (ug/m³)	MDL (ug/m³)	Spike Level	Source Result	% Rec	% Rec Limits	RPD	RPD Limit	Notes
Batch B6D0656 - No_Prep_AIR (continued)										
LCS Dup (B6D0656-BSD1) - Continued						Prepared: 4/26/2016 Analyzed: 4/26/2016				
Cyclohexane	5.955	0.86	0.25	6.88425		86.5	70 - 130	2.85	20	
Dibromochloromethane	14.396	2	0.83	17.0371		84.5	70 - 130	0.590	20	
Dibromomethane	12.513	2	0.55	14.2196		88.0	70 - 130	3.35	20	
Dichlorodifluoromethane	10.632	1	0.56	9.89063		108	70 - 130	6.73	20	
Dichlorotetrafluoroethane	15.449	2	0.76	13.9812		110	70 - 130	9.48	20	
Ethanol	3.260	0.47	0.20	3.76834		86.5	70 - 130	1.75	20	
Ethylbenzene	8.163	1	0.35	8.68425		94.0	70 - 130	2.62	20	
Freon-113	13.258	2	0.58	15.3272		86.5	70 - 130	0.00	20	
Hexachlorobutadiene	21.223	3	1	21.3300		99.5	70 - 130	3.94	20	
Isopropylbenzene	9.242	1	0.52	9.83166		94.0	70 - 130	4.17	20	
m,p-Xylene	31.176	4	1	34.7370		89.8	70 - 130	4.09	20	
Methylene chloride	6.148	0.87	0.31	6.94740		88.5	70 - 130	8.13	20	
MTBE	6.778	0.90	0.33	7.21047		94.0	70 - 130	2.62	20	
n-Butylbenzene	10.046	1	0.42	10.9790		91.5	70 - 130	1.63	20	
n-Propylbenzene	9.094	1	0.41	9.83166		92.5	70 - 130	3.19	20	
Naphthalene	8.754	1	0.36	10.4843		83.5	70 - 130	0.00	20	
o-Xylene	8.380	1	0.40	8.68425		96.5	70 - 130	2.56	20	
p-Isopropyltoluene	10.210	1	0.51	10.9790		93.0	70 - 130	2.65	20	
sec-Butylbenzene	10.320	1	0.56	10.9790		94.0	70 - 130	1.06	20	
Styrene	8.008	1	0.44	8.51934		94.0	70 - 130	8.89	20	
tert-Butylbenzene	10.485	1	0.62	10.9790		95.5	70 - 130	0.00	20	
Tetrachloroethene	12.073	2	0.47	13.5650		89.0	70 - 130	5.46	20	
Toluene	6.143	0.94	0.28	7.53688		81.5	70 - 130	7.64	20	
trans-1,2-Dichloroethene	7.216	0.99	0.34	7.92990		91.0	70 - 130	1.10	20	
trans-1,3-Dichloropropene	7.262	1	0.34	9.07722		80.0	70 - 130	7.79	20	
Trichloroethene	8.759	1	0.47	10.7474		81.5	70 - 130	0.615	20	
Trichlorofluoromethane	9.326	1	0.53	11.2366		83.0	70 - 130	0.604	20	
Vinyl acetate	5.422	0.88	0.38	7.04204		77.0	70 - 130	0.00	20	
Vinyl chloride	4.908	0.64	0.21	5.11231		96.0	70 - 130	11.0	20	
Surrogate: 4-Bromofluorobenzene	*19.61*			*17.8935*		*110*	*79.2 - 147*			

Certificate of Analysis

Hushmand Associates, Inc.	Project Number : Parcel 20 6th St. Bridge, LAC 15-003
250 Goddard	Report To : Naresh Bellana
Irvine , CA 92618	Reported : 03/26/2018

Volatile Organic Compounds in AIR by TO-15 (Canister) - Quality Control

Analyte	Result (ug/m³)	PQL (ug/m³)	MDL (ug/m³)	Spike Level	Source Result	% Rec	% Rec Limits	RPD	RPD Limit	Notes
Batch B6D0710 - No_Prep_AIR										
LCS (B6D0710-BS1)					Prepared: 4/28/2016 Analyzed: 4/28/2016					
1,1,1,2-Tetrachloroethane	13.593	2	0.57	13.7299		99.0	70 - 130			
1,1,1-Trichloroethane	11.403	1	0.58	10.9123		104	70 - 130			
1,1,2,2-Tetrachloroethane	15.858	2	0.77	13.7299		116	70 - 130			
1,1,2-Trichloroethane	10.749	1	0.45	10.9123		98.5	70 - 130			
1,1-Dichloroethane	8.419	1	0.37	8.09480		104	70 - 130			
1,1-Dichloroethene	7.811	0.99	0.34	7.92990		98.5	70 - 130			
1,1-Dichloropropene	8.941	1	0.37	9.07722		98.5	70 - 130			
1,2,3-Trichloropropane	11.155	2	0.58	12.0597		92.5	70 - 130			
1,2,4-Trichlorobenzene	14.842	2	0.73	14.8422		100	70 - 130			
1,2,4-Trimethylbenzene	10.913	1	0.54	9.83166		111	70 - 130			
1,2-Dibromo-3-chloropropane	16.335	2	1	19.3319		84.5	70 - 130			
1,2-Dibromoethane	13.600	2	0.73	15.3670		88.5	70 - 130			
1,2-Dichlorobenzene	13.107	2	0.54	12.0246		109	70 - 130			
1,2-Dichloroethane	7.973	1	0.34	8.09480		98.5	70 - 130			
1,2-Dichloropropane	9.473	1	0.41	9.24213		102	70 - 130			
1,3,5-Trimethylbenzene	11.061	1	0.51	9.83166		112	70 - 130			
1,3-Butadiene	4.203	0.55	0.39	4.42454		95.0	70 - 130			
1,3-Dichlorobenzene	13.107	2	0.56	12.0246		109	70 - 130			
1,4-Dichlorobenzene	13.047	2	0.51	12.0246		109	70 - 130			
1,4-Dioxane	8.180	0.90	0.65	7.20695		114	70 - 130			
2,2,4-Trimethylpentane	9.250	1	0.35	9.34388		99.0	70 - 130			
2-Butanone	5.957	0.74	0.24	5.89824		101	70 - 130			
2-Chloroethyl vinyl ether	7.670	1	0.22	8.71583		88.0	70 - 130			
2-Chlorotoluene	12.218	1	0.50	10.3544		118	70 - 130			
2-Hexanone	7.742	1	0.43	8.19296		94.5	70 - 130			
2-Propanol	4.940	0.61	0.26	4.91534		100	70 - 130			
4-Chlorotoluene	9.733	1	0.47	10.3544		94.0	70 - 130			
4-Ethyl Toluene	11.405	1	0.47	9.83166		116	70 - 130			
4-Methyl-2-pentanone	8.439	1	0.30	8.19296		103	70 - 130			
Acetone	4.371	0.59	0.26	4.75084		92.0	70 - 130			
Acetonitrile	3.106	0.42	0.14	3.35804		92.5	70 - 130			
Acrolein	5.090	0.57	0.22	4.58593		111	70 - 130			
Acrylonitrile	4.492	0.54	0.18	4.34053		104	70 - 130			
Benzene	6.549	0.80	0.28	6.38953		102	70 - 130			
Benzyl chloride	10.976	1	0.37	10.3544		106	70 - 130			
Bromobenzene	12.265	2	0.59	12.8432		95.5	70 - 130			
Bromodichloromethane	13.334	2	0.70	13.4011		99.5	70 - 130			
Bromoform	23.051	3	0.90	20.6733		112	70 - 130			
Bromomethane	7.222	0.97	0.46	7.76597		93.0	70 - 130			
Carbon disulfide	6.073	0.78	0.31	6.22847		97.5	70 - 130			
Carbon tetrachloride	12.708	2	0.43	12.5826		101	70 - 130			

Certificate of Analysis

Hushmand Associates, Inc.	Project Number : Parcel 20 6th St. Bridge, LAC 15-003
250 Goddard	Report To : Naresh Bellana
Irvine , CA 92618	Reported : 03/26/2018

Volatile Organic Compounds in AIR by TO-15 (Canister) - Quality Control (cont'd)

Analyte	Result (ug/m³)	PQL (ug/m³)	MDL (ug/m³)	Spike Level	Source Result	% Rec	% Rec Limits	RPD	RPD Limit	Notes
Batch B6D0710 - No_Prep_AIR (continued)										
LCS (B6D0710-BS1) - Continued					Prepared: 4/28/2016 Analyzed: 4/28/2016					
Chlorobenzene	10.358	1	0.41	9.20712		113	70 - 130			
Chloroethane	5.304	0.66	0.28	5.27722		100	70 - 130			
Chloroform	9.716	1	0.50	9.76499		99.5	70 - 130			
Chloromethane	4.336	0.52	0.22	4.12982		105	70 - 130			
cis-1,2-Dichloroethene	8.049	0.99	0.28	7.92990		102	70 - 130			
cis-1,3-Dichloropropene	8.487	1	0.33	9.07724		93.5	70 - 130			
Cyclohexane	6.919	0.86	0.25	6.88425		100	70 - 130			
Dibromochloromethane	19.252	2	0.83	17.0371		113	70 - 130			
Dibromomethane	12.229	2	0.55	14.2196		86.0	70 - 130			
Dichlorodifluoromethane	11.127	1	0.56	9.89063		112	70 - 130			
Dichlorotetrafluoroethane	16.008	2	0.76	13.9812		114	70 - 130			
Ethanol	3.561	0.47	0.20	3.76834		94.5	70 - 130			
Ethylbenzene	10.421	1	0.35	8.68425		120	70 - 130			
Freon-113	15.404	2	0.58	15.3272		100	70 - 130			
Hexachlorobutadiene	21.117	3	1	21.3300		99.0	70 - 130			
Isopropylbenzene	11.159	1	0.52	9.83166		114	70 - 130			
m,p-Xylene	39.427	4	1	34.7370		114	70 - 130			
Methylene chloride	6.774	0.87	0.31	6.94740		97.5	70 - 130			
MTBE	7.535	0.90	0.33	7.21047		104	70 - 130			
n-Butylbenzene	12.406	1	0.42	10.9790		113	70 - 130			
n-Propylbenzene	10.618	1	0.41	9.83166		108	70 - 130			
Naphthalene	11.795	1	0.36	10.4843		112	70 - 130			
o-Xylene	10.030	1	0.40	8.68425		116	70 - 130			
p-Isopropyltoluene	10.156	1	0.51	10.9790		92.5	70 - 130			
sec-Butylbenzene	12.516	1	0.56	10.9790		114	70 - 130			
Styrene	9.925	1	0.44	8.51934		116	70 - 130			
tert-Butylbenzene	12.351	1	0.62	10.9790		112	70 - 130			
Tetrachloroethene	15.600	2	0.47	13.5650		115	70 - 130			
Toluene	7.160	0.94	0.28	7.53688		95.0	70 - 130			
trans-1,2-Dichloroethene	7.771	0.99	0.34	7.92990		98.0	70 - 130			
trans-1,3-Dichloropropene	8.533	1	0.34	9.07722		94.0	70 - 130			
Trichloroethene	10.264	1	0.47	10.7474		95.5	70 - 130			
Trichlorofluoromethane	10.956	1	0.53	11.2366		97.5	70 - 130			
Vinyl acetate	6.549	0.88	0.38	7.04204		93.0	70 - 130			
Vinyl chloride	5.087	0.64	0.21	5.11231		99.5	70 - 130			
Surrogate: 4-Bromofluorobenzene	*20.33*			*17.8935*		*114*	*79.2 - 147*			
LCS Dup (B6D0710-BSD1)					Prepared: 4/28/2016 Analyzed: 4/28/2016					
1,1,1,2-Tetrachloroethane	15.103	2	0.57	13.7299		110	70 - 130	10.5	20	
1,1,1-Trichloroethane	10.640	1	0.58	10.9123		97.5	70 - 130	6.93	20	
1,1,2,2-Tetrachloroethane	15.034	2	0.77	13.7299		110	70 - 130	5.33	20	

Certificate of Analysis

Hushmand Associates, Inc.	Project Number : Parcel 20 6th St. Bridge, LAC 15-003
250 Goddard	Report To : Naresh Bellana
Irvine , CA 92618	Reported : 03/26/2018

Volatile Organic Compounds in AIR by TO-15 (Canister) - Quality Control (cont'd)

Analyte	Result (ug/m³)	PQL (ug/m³)	MDL (ug/m³)	Spike Level	Source Result	% Rec	% Rec Limits	RPD	RPD Limit	Notes
Batch B6D0710 - No_Prep_AIR (continued)										
LCS Dup (B6D0710-BSD1) - Continued					Prepared: 4/28/2016 Analyzed: 4/28/2016					
1,1,2-Trichloroethane	10.367	1	0.45	10.9123		95.0	70 - 130	3.62	20	
1,1-Dichloroethane	7.892	1	0.37	8.09480		97.5	70 - 130	6.45	20	
1,1-Dichloroethene	7.851	0.99	0.34	7.92990		99.0	70 - 130	0.506	20	
1,1-Dichloropropene	8.260	1	0.37	9.07722		91.0	70 - 130	7.92	20	
1,2,3-Trichloropropane	10.974	2	0.58	12.0597		91.0	70 - 130	1.63	20	
1,2,4-Trichlorobenzene	14.471	2	0.73	14.8422		97.5	70 - 130	2.53	20	
1,2,4-Trimethylbenzene	10.274	1	0.54	9.83166		104	70 - 130	6.03	20	
1,2-Dibromo-3-chloropropane	16.915	2	1	19.3319		87.5	70 - 130	3.49	20	
1,2-Dibromoethane	12.601	2	0.73	15.3670		82.0	70 - 130	7.62	20	
1,2-Dichlorobenzene	12.746	2	0.54	12.0246		106	70 - 130	2.79	20	
1,2-Dichloroethane	7.528	1	0.34	8.09480		93.0	70 - 130	5.74	20	
1,2-Dichloropropane	8.965	1	0.41	9.24213		97.0	70 - 130	5.51	20	
1,3,5-Trimethylbenzene	10.520	1	0.51	9.83166		107	70 - 130	5.01	20	
1,3-Butadiene	4.292	0.55	0.39	4.42454		97.0	70 - 130	2.08	20	
1,3-Dichlorobenzene	12.385	2	0.56	12.0246		103	70 - 130	5.66	20	
1,4-Dichlorobenzene	12.265	2	0.51	12.0246		102	70 - 130	6.18	20	
1,4-Dioxane	8.000	0.90	0.65	7.20695		111	70 - 130	2.23	20	
2,2,4-Trimethylpentane	8.737	1	0.35	9.34388		93.5	70 - 130	5.71	20	
2-Butanone	6.016	0.74	0.24	5.89824		102	70 - 130	0.985	20	
2-Chloroethyl vinyl ether	7.191	1	0.22	8.71583		82.5	70 - 130	6.45	20	
2-Chlorotoluene	11.493	1	0.50	10.3544		111	70 - 130	6.11	20	
2-Hexanone	7.947	1	0.43	8.19296		97.0	70 - 130	2.61	20	
2-Propanol	4.817	0.61	0.26	4.91534		98.0	70 - 130	2.52	20	
4-Chlorotoluene	9.215	1	0.47	10.3544		89.0	70 - 130	5.46	20	
4-Ethyl Toluene	10.717	1	0.47	9.83166		109	70 - 130	6.22	20	
4-Methyl-2-pentanone	7.742	1	0.30	8.19296		94.5	70 - 130	8.61	20	
Acetone	4.228	0.59	0.26	4.75084		89.0	70 - 130	3.31	20	
Acetonitrile	3.157	0.42	0.14	3.35804		94.0	70 - 130	1.61	20	
Acrolein	5.664	0.57	0.22	4.58593		124	70 - 130	10.7	20	
Acrylonitrile	4.232	0.54	0.18	4.34053		97.5	70 - 130	5.97	20	
Benzene	6.262	0.80	0.28	6.38953		98.0	70 - 130	4.49	20	
Benzyl chloride	10.458	1	0.37	10.3544		101	70 - 130	4.83	20	
Bromobenzene	11.109	2	0.59	12.8432		86.5	70 - 130	9.89	20	
Bromodichloromethane	12.664	2	0.70	13.4011		94.5	70 - 130	5.15	20	
Bromoform	21.397	3	0.90	20.6733		104	70 - 130	7.44	20	
Bromomethane	7.649	0.97	0.46	7.76597		98.5	70 - 130	5.74	20	
Carbon disulfide	5.979	0.78	0.31	6.22847		96.0	70 - 130	1.55	20	
Carbon tetrachloride	12.142	2	0.43	12.5826		96.5	70 - 130	4.56	20	
Chlorobenzene	8.563	1	0.41	9.20712		93.0	70 - 130	19.0	20	
Chloroethane	5.172	0.66	0.28	5.27722		98.0	70 - 130	2.52	20	
Chloroform	9.472	1	0.50	9.76499		97.0	70 - 130	2.54	20	
Chloromethane	4.336	0.52	0.22	4.12982		105	70 - 130	0.00	20	

Certificate of Analysis

Hushmand Associates, Inc.	Project Number : Parcel 20 6th St. Bridge, LAC 15-003
250 Goddard	Report To : Naresh Bellana
Irvine , CA 92618	Reported : 03/26/2018

Volatile Organic Compounds in AIR by TO-15 (Canister) - Quality Control (cont'd)

Analyte	Result (ug/m³)	PQL (ug/m³)	MDL (ug/m³)	Spike Level	Source Result	% Rec	% Rec Limits	RPD	RPD Limit	Notes
Batch B6D0710 - No_Prep_AIR (continued)										
LCS Dup (B6D0710-BSD1) - Continued					Prepared: 4/28/2016 Analyzed: 4/28/2016					
cis-1,2-Dichloroethene	7.771	0.99	0.28	7.92990		98.0	70 - 130	3.51	20	
cis-1,3-Dichloropropene	8.533	1	0.33	9.07724		94.0	70 - 130	0.533	20	
Cyclohexane	6.712	0.86	0.25	6.88425		97.5	70 - 130	3.03	20	
Dibromochloromethane	16.867	2	0.83	17.0371		99.0	70 - 130	13.2	20	
Dibromomethane	12.584	2	0.55	14.2196		88.5	70 - 130	2.87	20	
Dichlorodifluoromethane	11.325	1	0.56	9.89063		115	70 - 130	1.76	20	
Dichlorotetrafluoroethane	16.568	2	0.76	13.9812		118	70 - 130	3.43	20	
Ethanol	3.429	0.47	0.20	3.76834		91.0	70 - 130	3.77	20	
Ethylbenzene	9.683	1	0.35	8.68425		112	70 - 130	7.34	20	
Freon-113	15.021	2	0.58	15.3272		98.0	70 - 130	2.52	20	
Hexachlorobutadiene	20.690	3	1	21.3300		97.0	70 - 130	2.04	20	
Isopropylbenzene	10.766	1	0.52	9.83166		110	70 - 130	3.59	20	
m,p-Xylene	37.342	4	1	34.7370		108	70 - 130	5.43	20	
Methylene chloride	6.392	0.87	0.31	6.94740		92.0	70 - 130	5.80	20	
MTBE	7.247	0.90	0.33	7.21047		100	70 - 130	3.90	20	
n-Butylbenzene	11.912	1	0.42	10.9790		108	70 - 130	4.06	20	
n-Propylbenzene	10.127	1	0.41	9.83166		103	70 - 130	4.74	20	
Naphthalene	11.061	1	0.36	10.4843		105	70 - 130	6.42	20	
o-Xylene	9.509	1	0.40	8.68425		110	70 - 130	5.33	20	
p-Isopropyltoluene	9.771	1	0.51	10.9790		89.0	70 - 130	3.86	20	
sec-Butylbenzene	11.802	1	0.56	10.9790		108	70 - 130	5.87	20	
Styrene	9.031	1	0.44	8.51934		106	70 - 130	9.44	20	
tert-Butylbenzene	11.967	1	0.62	10.9790		109	70 - 130	3.16	20	
Tetrachloroethene	13.701	2	0.47	13.5650		101	70 - 130	13.0	20	
Toluene	6.557	0.94	0.28	7.53688		87.0	70 - 130	8.79	20	
trans-1,2-Dichloroethene	7.890	0.99	0.34	7.92990		99.5	70 - 130	1.52	20	
trans-1,3-Dichloropropene	8.033	1	0.34	9.07722		88.5	70 - 130	6.03	20	
Trichloroethene	9.619	1	0.47	10.7474		89.5	70 - 130	6.49	20	
Trichlorofluoromethane	10.956	1	0.53	11.2366		97.5	70 - 130	0.00	20	
Vinyl acetate	6.620	0.88	0.38	7.04204		94.0	70 - 130	1.07	20	
Vinyl chloride	5.215	0.64	0.21	5.11231		102	70 - 130	2.48	20	
Surrogate: 4-Bromofluorobenzene	*19.75*			*17.8935*		*110*	*79.2 - 147*			

Certificate of Analysis

Hushmand Associates, Inc.	Project Number : Parcel 20 6th St. Bridge, LAC 15-003
250 Goddard	Report To : Naresh Bellana
Irvine , CA 92618	Reported : 03/26/2018

Gasoline Range Organics in Air by TO-3 - Quality Control

Analyte	Result (ug/m³)	PQL (ug/m³)	MDL (ug/m³)	Spike Level	Source Result	% Rec	% Rec Limits	RPD	RPD Limit	Notes
Batch B6E0059 - No_Prep_AIR										
Blank (B6E0059-BLK1)					Prepared: 4/29/2016 Analyzed: 4/29/2016					
Gasoline Range Organics	ND	100	70							
Surrogate: 4-Bromofluorobenzene	*19.18*			*17.8935*		*107*	*70 - 130*			
LCS (B6E0059-BS1)					Prepared: 4/29/2016 Analyzed: 4/29/2016					
Gasoline Range Organics	687.076	100	70	817.996		84.0	70 - 130			
Surrogate: 4-Bromofluorobenzene	*24.91*			*17.8935*		*139*	*70 - 130*			S10
LCS Dup (B6E0059-BSD1)					Prepared: 4/29/2016 Analyzed: 4/29/2016					
Gasoline Range Organics	674.888	100	70	817.996		82.5	70 - 130	1.79	20	
Surrogate: 4-Bromofluorobenzene	*25.41*			*17.8935*		*142*	*70 - 130*			S10

Certificate of Analysis

Hushmand Associates, Inc.	Project Number : Parcel 20 6th St. Bridge, LAC 15-003
250 Goddard	Report To : Naresh Bellana
Irvine , CA 92618	Reported : 03/26/2018

Gasoline Range Organics in Air by TO-3 - Quality Control

Analyte	Result (ug/m³)	PQL (ug/m³)	MDL (ug/m³)	Spike Level	Source Result	% Rec	% Rec Limits	RPD	RPD Limit	Notes
Batch B6E0080 - No_Prep_AIR										
Blank (B6E0080-BLK1)					Prepared: 5/3/2016 Analyzed: 5/3/2016					
Gasoline Range Organics	ND	100	70							
Surrogate: 4-Bromofluorobenzene	*18.54*			*17.8935*		*104*	*70 - 130*			
LCS (B6E0080-BS1)					Prepared: 5/3/2016 Analyzed: 5/3/2016					
Gasoline Range Organics	843.763	100	70	817.996		103	70 - 130			
Surrogate: 4-Bromofluorobenzene	*24.12*			*17.8935*		*135*	*70 - 130*			S10
LCS Dup (B6E0080-BSD1)					Prepared: 5/3/2016 Analyzed: 5/3/2016					
Gasoline Range Organics	859.836	100	70	817.996		105	70 - 130	1.89	20	
Surrogate: 4-Bromofluorobenzene	*23.12*			*17.8935*		*129*	*70 - 130*			

Certificate of Analysis

Hushmand Associates, Inc.	Project Number : Parcel 20 6th St. Bridge, LAC 15-003
250 Goddard	Report To : Naresh Bellana
Irvine , CA 92618	Reported : 03/26/2018

Notes and Definitions

S10	Surrogate recovery was outside of laboratory acceptance limit due to possible matrix interference.
R	RPD value outside acceptance criteria. Calculation is based on raw values.
ND	Analyte is not detected at or above the Practical Quantitation Limit (PQL). When client requests quantitation against MDL, analyte is not detected at or above the Method Detection Limit (MDL)
PQL	Practical Quantitation Limit
MDL	Method Detection Limit
NR	Not Reported
RPD	Relative Percent Difference
CA2	CA-ELAP (CDPH)
OR1	OR-NELAP (OSPHL)

Notes:
(1) The reported MDL and PQL are based on prep ratio variation and analytical dilution.
(2) The suffix [2C] of specific analytes signifies that the reported result is taken from the instrument's second column.
(3) Results are wet unless otherwise specified.

ADVANCED TECHNOLOGY LABORATORIES

3275 Walnut Ave., Signal Hill, CA 90755
Tel: (562) 989-4045 • Fax: (562) 989-4040

CHAIN OF CUSTODY RECORD

Page 1 of 2

Instruction: Complete all shaded areas.

For Laboratory Use Only					ATLCOC Ver: 20130715
Method of Transport		**Sample Conditions Upon Receipt**			
		Condition	Y	N	Condition	Y	N
☑ Client ☐ ATL		1. CHILLED N/A	☐	☐	5. # OF SAMPLES MATCH COC	☑	☐
☐ FedEx ☐ OnTrac		2. HEADSPACE (VOA)	☐	☐	6. PRESERVED	☐	☑
☐ GSO		3. CONTAINER INTACT	☑	☐	7. COOLER TEMP, deg C:	—	
☐ Other: _____		4. SEALED	☐	☑			

CUSTOMER

Company: Hushmand & Assoc	Address: 250 Goddard St.		Tel: 949-777-1266
	City: Irvine	State: CA Zip: 92618	Fax:

SEND REPORT TO:	SEND INVOICE TO: ☐ same as SEND REPORT TO
Attn: Naresh Bellana Email:	Attn: Same. Email:
Company: Hushmand & Assoc.	Company:
Address:	Address:
City: State: Zip:	City: State: Zip:

PROJECT SAMPLES

Project Name: Parcel 20 6th St. Bridge	Quote No: E15G161	Special Instructions/Comments: 2propanol used for Leak Testing
Project No.: LAC 15-003	PO #:	
Sampler: Don Terres		

ITEM	Lab No.	Sample Description: Sample ID / Location	Date	Time	8260 / 624 (Volatiles)	8015(GRO) TPH-G	8015(DRO)	8270(Semi-volatiles)	8081(Organochlorine Pesticides)	8082(PCBs)	6010 / 7000(Title 22 Metals)	TO-15	Encircle Sample Matrix: SOIL / SEDIMENT / SLUDGE	SOLIDS / WIPE / FILTER	WATER - DRINKING / GROUND	WATER - STORM / WASTE	AQUEOUS / LAYERED - OIL	Vapor	TAT	Container: #	Type	Material	Preservative	REMARKS
1	160/497 -1	P-20 VP-1 @ 5'	4/26	11:59		X						X						X		1	7	3	N/A	
2	-2	P-20 VP-2 @ 5'		12:02		X						X						X		1	7			
3	-3	P-20 VP-3 @ 5'		12:05		X						X						X		1	7			
4	-4	P-20 VP-4 @ 5'		12:11		X						X						X		1	7			
5	-5	P-20 VP-5 @ 3'		12:16		X						X						X		1	7			
6	-6	P-20 VP-6 @ 5'		12:20		X						X						X		1	7			
7	-7	P-20 VP-7 @ 3'		12:27		X						X						X		1	7			
8	-8	P-20 VP-8 @ 5'		12:31		X						X						X		1	7			
9	-9	P-00 VP-9 @ 5'		12:36		X						X						X		1	7			
10																				1	7			

QA/QC: ☐ Routine ☐ Caltrans ☐ Legal ☐ RWQCB ☐ Level IV

Container: **Type:** 1=Tube; 2=VOA; 3=Liter; 4=Pint; 5=Jar; 6=Tedlar; 7 = Canister. **Material:** 1=Glass; 2=Plastic; 3=Metal. **Preservative:** 1=HCl; 2=HNO3; 3=H2SO4; 4 = 4C; 5=Zn (Ac)2; 6=NaOH; 7=NA2S2O3

SHIPMENT

1. Sample receiving hours: 7:30 AM to 7:30 PM Monday - Friday; Saturday 8:00 AM to 12:00 PM.
2. Samples Submitted AFTER 3:00 PM, are considered received the following Business day at 8:00 AM.
3. The following turnaround time conditions apply:
   - TAT = 0 : 300% Surcharge SAME BUSINESS DAY if received by 9:00 AM
   - TAT = 1 : 100% Surcharge NEXT BUSINESS DAY (COB 5:00 PM)
   - TAT = 2 : 50% Surcharge 2ND BUSINESS DAY (COB 5:00 PM)
   - TAT = 3 : 30% Surcharge 3RD BUSINESS DAY (COB 5:00 PM)
   - TAT = 4 : 20% Surcharge 4TH BUSINESS DAY (COB 5:00 PM)
   - TAT = 5 : NO SURCHARGE 5th BUSINESS DAY (COB 5:00 PM)
4. Weekend, holiday, after-hours work - ask for quote.
5. Subcontract TAT is 10 - 15 business days. Projects requiring shorter TATs will incur a surcharge respective to the subcontract lab --- ask for quote.
6. Liquid and solid samples will be disposed of after 45 calendar days from receipt of samples; air samples will be disposed of after 14 calendar days after receipt of samples.
7. Electronic records maintained for fi ve (5) years from report date.
8. Hard copy reports will be disposed of after 45 calendar days from report date.
9. Storage and Report Fees:
   - Liquid & solid samples: Complimentary storage for forty-fi ve (45) calendar days from receipt of samples; $2/sample/month if extended storage or hold is requested.
   - Air samples: Complimentary storage for ten (10) calendar days from receipt of samples; $20/ sample/week if extended storage is requested.
   - Hard copy and regenerated reports/EDDs: $17.50 per hard copy report requested; $50.00 per regenerated/reforma? ed report; $35 per reprocessed EDD.
10. Rush TCLP/STLC samples: add 2 days to analysis TAT for extraction on procedure.
11. Unanalyzed samples will incur a disposal fee of $7 per sample.

As the authorized agent of the company above, I hereby purchase laboratory services from ATL as shown above and hereby guarantee payment as quoted.

Don Terres — Submitter Print Name

Signature

Relinquished by: (Signature and Printed Name)	Don Terres	Date: 4/26	Time: 2:00	Received by: (Signature and Printed Name)	Fpaiwn	Date: 4/26/15	Time: 1400
Relinquished by: (Signature and Printed Name)		Date:	Time:	Received by: (Signature and Printed Name)		Date:	Time:
Relinquished by: (Signature and Printed Name)		Date:	Time:	Received by: (Signature and Printed Name)		Date:	Time:

ADVANCED TECHNOLOGY LABORATORIES

3275 Walnut Ave., Signal Hill, CA 90755
Tel: (562) 989-4045 • Fax: (562) 989-4040

CHAIN OF CUSTODY RECORD

Page 2 of 2

Instruction: Complete all shaded areas.

For Laboratory Use Only — ATLCOC Ver: 20130715

Method of Transport	Sample Conditions Upon Receipt					
	Condition	Y	N	Condition	Y	N
☑ Client ☐ ATL	1. CHILLED	☐	☐	5. # OF SAMPLES MATCH COC	☐	☐
☐ FedEx ☐ OnTrac	2. HEADSPACE (VOA)	☐	☐	6. PRESERVED	☐	☐
☐ GSO	3. CONTAINER INTACT	☐	☐	7. COOLER TEMP, deg C:		
☐ Other:	4. SEALED	☐	☐			

CUSTOMER

Company: Hushmand
Address: 250 Goddard St
City: Irvine State: CA Zip: 92618
Tel:
Fax:

SEND REPORT TO:
Attn: Naresh Bellana. Email:
Company:
Address:
City: State: Zip:

SEND INVOICE TO: ☐ same as SEND REPORT TO
Attn: Email:
Company:
Address:
City: State: Zip:

PROJECT SAMPLES

Project Name:
Project No.:
Sampler:
Quote No:
PO #:
Special Instructions/Comments:

Encircle or Write Requested Analysis: 8260 / 624 (Volatiles); 8015(GRO); 8015(DRO); 8270(Semi-volatiles); 8081(Organochlorine Pesticides); 8082(PCBs); 6010 / 7000(Title 22 Metals); TO-15

Encircle Sample Matrix: SOIL / SEDIMENT / SLUDGE; SOLIDS / WIPE / FILTER; WATER - DRINKING / GROUND; WATER - STORM / WASTE; AQUEOUS / LAYERED - OIL; Vapor

TAT

Container: # ; Type: 1=Tube; 2=VOA; 3=Liter; 4=Pint; 5=Jar; 6=Tedlar; 7=Canister; Material: 1=Glass; 2=Plastic; 3=Metal

Preservative: 1=HCl; 2=HNO3; 3=H2SO4; 4 = 4C; 5=Zn (Ac)2; 6=NaOH; 7=NA2S2O3

QA/QC: ☐ Routine ☐ Caltrans ☐ Legal ☐ RWQCB ☐ Level IV

ITEM	Lab No.	Sample Description: Sample ID / Location	Date	Time	8260 / 624 (Volatiles)	8015(GRO)	8015(DRO)	8270(Semi-volatiles)	8081(Organochlorine Pesticides)	8082(PCBs)	6010 / 7000(Title 22 Metals)	TO-15	Vapor	TAT	#	Type	Material	Preservative	REMARKS
1	160497-12	P-20 VP-4 @ 5' Dup.	4/26	12:~~45~~		X						X	X		1	7		NA	
2	1 -11	P-20 VP-9 @ 5' Dup	4/26	12:45		X						X	X		1	7		↓	
3						X													
4																			
5																			
6																			
7																			
8																			
9																			
10																			

TERMS & CONDITIONS

1. Sample receiving hours: 7:30 AM to 7:30 PM Monday - Friday; Saturday 8:00 AM to 12:00 PM.
2. Samples Submitted AFTER 3:00 PM, are considered received the following Business day at 8:00 AM.
3. The following turnaround time conditions apply:
   - TAT = 0 : 300% Surcharge SAME BUSINESS DAY if received by 9:00 AM
   - TAT = 1 : 100% Surcharge NEXT BUSINESS DAY (COB 5:00 PM)
   - TAT = 2 : 50% Surcharge 2ND BUSINESS DAY (COB 5:00 PM)
   - TAT = 3 : 30% Surcharge 3RD BUSINESS DAY (COB 5:00 PM)
   - TAT = 4 : 20% Surcharge 4TH BUSINESS DAY (COB 5:00 PM)
   - TAT = 5 : NO SURCHARGE 5th BUSINESS DAY (COB 5:00 PM)
4. Weekend, holiday, after-hours work - ask for quote.
5. Subcontract TAT is 10 - 15 business days. Projects requiring shorter TATs will incur a surcharge respective to the subcontract lab --- ask for quote.
6. Liquid and solid samples will be disposed of after 45 calendar days from receipt of samples; air samples will be disposed of after 14 calendar days after receipt of samples.
7. Electronic records maintained for five (5) years from report date.
8. Hard copy reports will be disposed of after 45 calendar days from report date.
9. Storage and Report Fees:
   - Liquid & solid samples: Complimentary storage for forty-five (45) calendar days from receipt of samples; $2/sample/month if extended storage or hold is requested.
   - Air samples: Complimentary storage for ten (10) calendar days from receipt of samples; $20/ sample/week if extended storage is requested.
   - Hard copy and regenerated reports/EDDs: $17.50 per hard copy report requested; $50.00 per regenerated/reforma? ed report; $35 per reprocessed EDD.
10. Rush TCLP/STLC samples: add 2 days to analysis TAT for extraction on procedure.
11. Unanalyzed samples will incur a disposal fee of $7 per sample.

As the authorized agent of the company above, I hereby purchase laboratory services from ATL as shown above and hereby guarantee payment as quoted.

Don Terres — Submitter Print Name

Signature

Relinquished by: (Signature and Printed Name)	Date:	Time:	Received by: (Signature and Printed Name)	Date:	Time:
Don Terres	4/26	2:00	Frown	4/26/12	14 00
Relinquished by: (Signature and Printed Name)	Date:	Time:	Received by: (Signature and Printed Name)	Date:	Time:
Relinquished by: (Signature and Printed Name)	Date:	Time:	Received by: (Signature and Printed Name)	Date:	Time:

Fernando Diwa

From: Naresh Bellana [naresh@haieng.com]
Sent: Tuesday, April 26, 2016 5:05 PM
To: Fernando Diwa
Cc: Carmen Aguila; Rachelle Arada
Subject: RE: Parcel 20 6th St., Bridge, LAC 15-003

Fernando,

It should be P-20. It must have been a typo by my geologist. Please correct to P-20 for your records.

Thanking you,

Sincerely,

Naresh Bellana, MS, PE
Senior Staff Engineer

Hushmand Associates, Inc.
250 Goddard
Irvine, CA 92618

p. *(949) 777-1266*
d. *(949) 777-1275*
f. *(949) 777-1276*

From: Fernando Diwa [mailto:fernando@atlglobal.com]
Sent: Tuesday, April 26, 2016 5:04 PM
To: Naresh Bellana
Cc: Carmen Aguila; Rachelle Arada
Subject: Parcel 20 6th St., Bridge, LAC 15-003

Hi Naresh,

The air sample collected @ 12:36 listed on the attached coc as P-00 VP-9 @ 5', but the sample we received labeled as P-20 VP-9 @ 5'

Please advise.

Regards,

Fernando Diwa

Advanced Technology Laboratories
www.atlglobal.com
Tel: (562) 989-4045 ext. 236
Fax: (562) 989-8807

Advanced Technology Laboratories is a full-service environmental lab providing organic and inorganic analyses of soil, water, wastewater, storm water and hazardous waste samples. ATL is accredited by the State of California, NELAP and State of Nevada and holds various SBE, DBE and MBE certificates and a USDA soil permit. ATL takes pride in providing our customers with quick turnaround time, excellent customer service and defensible data while offering very competitive rates. *Advanced Technology Labs - Your Partner for Quality Environmental Testing*

March 26, 2018

Naresh Bellana
Hushmand Associates, Inc.
250 Goddard
Irvine, CA 92618
Tel: (949) 777-1266
Fax:(949) 777-1276

ELAP No.: 1838
CSDLAC No.: 10196
ORELAP No.: CA300003

Re: ATL Work Order Number : 1604252
Client Reference : 6th St. Bridge, 15-003

Enclosed are the results for sample(s) received on November 23, 2016 by Advanced Technology Laboratories. The sample(s) are tested for the parameters as indicated on the enclosed chain of custody in accordance with applicable laboratory certifications. The laboratory results contained in this report specifically pertains to the sample(s) submitted.

Thank you for the opportunity to serve the needs of your company. If you have any questions, please feel free to contact me or your Project Manager.

Sincerely,



Eddie Rodriguez
Laboratory Director

The cover letter and the case narrative are an integral part of this analytical report and its absence renders the report invalid. Test results contained within this data package meet the requirements of applicable state-specific certification programs. The report cannot be reproduced without written permission from the client and Advanced Technology Laboratories.

Certificate of Analysis

Hushmand Associates, Inc.	Project Number : 6th St. Bridge, 15-003
250 Goddard	Report To : Naresh Bellana
Irvine , CA 92618	Reported : 03/26/2018

SUMMARY OF SAMPLES

Sample ID	Laboratory ID	Matrix	Date Sampled	Date Received
VMW-1	1604252-01	Vapor	11/23/16 7:34	11/23/16 9:12
VMW-1 Dup	1604252-02	Vapor	11/23/16 7:45	11/23/16 9:12
VMW-2	1604252-03	Vapor	11/23/16 7:54	11/23/16 9:12
VMW-3	1604252-04	Vapor	11/23/16 8:06	11/23/16 9:12
VMW-4	1604252-05	Vapor	11/23/16 7:07	11/23/16 9:12

Certificate of Analysis

Hushmand Associates, Inc.	Project Number : 6th St. Bridge, 15-003
250 Goddard	Report To : Naresh Bellana
Irvine , CA 92618	Reported : 03/26/2018

Client Sample ID VMW-1

Lab ID: 1604252-01

Volatile Organic Compounds in AIR by TO-15 (Canister) **Analyst: LT**

Analyte	Result (ug/m³)	PQL (ug/m³)	Dilution	Batch	Prepared	Date/Time Analyzed	Notes
1,1,1,2-Tetrachloroethane	ND	9	5	B6L0062	11/30/2016	11/30/16 21:20	
1,1,1-Trichloroethane	ND	7	5	B6L0062	11/30/2016	11/30/16 21:20	
1,1,2,2-Tetrachloroethane	ND	9	5	B6L0062	11/30/2016	11/30/16 21:20	
1,1,2-Trichloroethane	ND	7	5	B6L0062	11/30/2016	11/30/16 21:20	
1,1-Dichloroethane	ND	5	5	B6L0062	11/30/2016	11/30/16 21:20	
1,1-Dichloroethene	ND	5	5	B6L0062	11/30/2016	11/30/16 21:20	
1,1-Dichloropropene	ND	6	5	B6L0062	11/30/2016	11/30/16 21:20	
1,2,3-Trichloropropane	ND	8	5	B6L0062	11/30/2016	11/30/16 21:20	
1,2,4-Trichlorobenzene	ND	9	5	B6L0062	11/30/2016	11/30/16 21:20	
1,2,4-Trimethylbenzene	ND	6	5	B6L0062	11/30/2016	11/30/16 21:20	
1,2-Dibromo-3-chloropropane	ND	10	5	B6L0062	11/30/2016	11/30/16 21:20	
1,2-Dibromoethane	ND	10	5	B6L0062	11/30/2016	11/30/16 21:20	
1,2-Dichlorobenzene	ND	8	5	B6L0062	11/30/2016	11/30/16 21:20	
1,2-Dichloroethane	ND	5	5	B6L0062	11/30/2016	11/30/16 21:20	
1,2-Dichloropropane	ND	6	5	B6L0062	11/30/2016	11/30/16 21:20	
1,3,5-Trimethylbenzene	ND	6	5	B6L0062	11/30/2016	11/30/16 21:20	
1,3-Butadiene	ND	3	5	B6L0062	11/30/2016	11/30/16 21:20	
1,3-Dichlorobenzene	ND	8	5	B6L0062	11/30/2016	11/30/16 21:20	
1,4-Dichlorobenzene	ND	8	5	B6L0062	11/30/2016	11/30/16 21:20	
1,4-Dioxane	ND	5	5	B6L0062	11/30/2016	11/30/16 21:20	
2,2,4-Trimethylpentane	ND	6	5	B6L0062	11/30/2016	11/30/16 21:20	
2-Butanone	ND	4	5	B6L0062	11/30/2016	11/30/16 21:20	
2-Chloroethyl vinyl ether	ND	5	5	B6L0062	11/30/2016	11/30/16 21:20	
2-Chlorotoluene	ND	6	5	B6L0062	11/30/2016	11/30/16 21:20	
2-Hexanone	ND	5	5	B6L0062	11/30/2016	11/30/16 21:20	
2-Propanol	**10**	3	5	B6L0062	11/30/2016	11/30/16 21:20	
4-Chlorotoluene	ND	6	5	B6L0062	11/30/2016	11/30/16 21:20	
4-Ethyl Toluene	ND	6	5	B6L0062	11/30/2016	11/30/16 21:20	
4-Methyl-2-pentanone	ND	5	5	B6L0062	11/30/2016	11/30/16 21:20	
Acetone	**70**	3	5	B6L0062	11/30/2016	11/30/16 21:20	
Acetonitrile	ND	2	5	B6L0062	11/30/2016	11/30/16 21:20	
Acrolein	ND	3	5	B6L0062	11/30/2016	11/30/16 21:20	
Acrylonitrile	ND	3	5	B6L0062	11/30/2016	11/30/16 21:20	
Benzene	ND	4	5	B6L0062	11/30/2016	11/30/16 21:20	
Benzyl chloride	ND	6	5	B6L0062	11/30/2016	11/30/16 21:20	
Bromobenzene	ND	8	5	B6L0062	11/30/2016	11/30/16 21:20	
Bromodichloromethane	ND	8	5	B6L0062	11/30/2016	11/30/16 21:20	

Certificate of Analysis

Hushmand Associates, Inc.	Project Number : 6th St. Bridge, 15-003
250 Goddard	Report To : Naresh Bellana
Irvine , CA 92618	Reported : 03/26/2018

Client Sample ID VMW-1

Lab ID: 1604252-01

Volatile Organic Compounds in AIR by TO-15 (Canister) **Analyst: LT**

Analyte	Result (ug/m³)	PQL (ug/m³)	Dilution	Batch	Prepared	Date/Time Analyzed	Notes
Bromoform	ND	10	5	B6L0062	11/30/2016	11/30/16 21:20	
Bromomethane	ND	5	5	B6L0062	11/30/2016	11/30/16 21:20	
Carbon disulfide	ND	4	5	B6L0062	11/30/2016	11/30/16 21:20	
Carbon tetrachloride	ND	8	5	B6L0062	11/30/2016	11/30/16 21:20	
Chlorobenzene	ND	6	5	B6L0062	11/30/2016	11/30/16 21:20	
Chloroethane	ND	3	5	B6L0062	11/30/2016	11/30/16 21:20	
Chloroform	ND	6	5	B6L0062	11/30/2016	11/30/16 21:20	
Chloromethane	ND	3	5	B6L0062	11/30/2016	11/30/16 21:20	
cis-1,2-Dichloroethene	ND	5	5	B6L0062	11/30/2016	11/30/16 21:20	
cis-1,3-Dichloropropene	ND	6	5	B6L0062	11/30/2016	11/30/16 21:20	
Cyclohexane	ND	4	5	B6L0062	11/30/2016	11/30/16 21:20	
Dibromochloromethane	ND	10	5	B6L0062	11/30/2016	11/30/16 21:20	
Dibromomethane	ND	9	5	B6L0062	11/30/2016	11/30/16 21:20	
Dichlorodifluoromethane	**9**	6	5	B6L0062	11/30/2016	11/30/16 21:20	
Dichlorotetrafluoroethane	ND	9	5	B6L0062	11/30/2016	11/30/16 21:20	
Ethanol	**3**	2	5	B6L0062	11/30/2016	11/30/16 21:20	
Ethylbenzene	ND	5	5	B6L0062	11/30/2016	11/30/16 21:20	
Freon-113	ND	10	5	B6L0062	11/30/2016	11/30/16 21:20	
Hexachlorobutadiene	ND	10	5	B6L0062	11/30/2016	11/30/16 21:20	
Isopropylbenzene	ND	6	5	B6L0062	11/30/2016	11/30/16 21:20	
m,p-Xylene	**20**	20	5	B6L0062	11/30/2016	11/30/16 21:20	
Methylene chloride	ND	4	5	B6L0062	11/30/2016	11/30/16 21:20	
MTBE	ND	5	5	B6L0062	11/30/2016	11/30/16 21:20	
n-Butylbenzene	ND	7	5	B6L0062	11/30/2016	11/30/16 21:20	
n-Propylbenzene	ND	6	5	B6L0062	11/30/2016	11/30/16 21:20	
Naphthalene	ND	7	5	B6L0062	11/30/2016	11/30/16 21:20	
o-Xylene	ND	5	5	B6L0062	11/30/2016	11/30/16 21:20	
p-Isopropyltoluene	ND	7	5	B6L0062	11/30/2016	11/30/16 21:20	
sec-Butylbenzene	ND	7	5	B6L0062	11/30/2016	11/30/16 21:20	
Styrene	ND	5	5	B6L0062	11/30/2016	11/30/16 21:20	
tert-Butylbenzene	ND	7	5	B6L0062	11/30/2016	11/30/16 21:20	
Tetrachloroethene	**10**	8	5	B6L0062	11/30/2016	11/30/16 21:20	
Toluene	**50**	5	5	B6L0062	11/30/2016	11/30/16 21:20	
trans-1,2-Dichloroethene	ND	5	5	B6L0062	11/30/2016	11/30/16 21:20	
trans-1,3-Dichloropropene	ND	6	5	B6L0062	11/30/2016	11/30/16 21:20	
Trichloroethene	ND	7	5	B6L0062	11/30/2016	11/30/16 21:20	
Trichlorofluoromethane	**20**	7	5	B6L0062	11/30/2016	11/30/16 21:20	

Certificate of Analysis

Hushmand Associates, Inc.	Project Number : 6th St. Bridge, 15-003
250 Goddard	Report To : Naresh Bellana
Irvine , CA 92618	Reported : 03/26/2018

Client Sample ID VMW-1

Lab ID: 1604252-01

Volatile Organic Compounds in AIR by TO-15 (Canister)

Analyst: LT

Analyte		Result (ug/m³)	PQL (ug/m³)	Dilution	Batch	Prepared	Date/Time Analyzed	Notes
Vinyl acetate		ND	4	5	B6L0062	11/30/2016	11/30/16 21:20	
Vinyl chloride		ND	3	5	B6L0062	11/30/2016	11/30/16 21:20	
Surrogate: 4-Bromofluorobenzene	*106 %*		*79.2 - 147*		B6L0062	11/30/2016	*11/30/16 21:20*	

Gasoline Range Organics in Air by TO-3

Analyst: LT

Analyte		Result (ug/m³)	PQL (ug/m³)	Dilution	Batch	Prepared	Date/Time Analyzed	Notes
Gasoline Range Organics		**300**	200	2	B6L0163	12/02/2016	12/02/16 11:44	
Surrogate: 4-Bromofluorobenzene	*102 %*		*70 - 130*		B6L0163	12/02/2016	*12/02/16 11:44*	

Certificate of Analysis

Hushmand Associates, Inc.	Project Number : 6th St. Bridge, 15-003
250 Goddard	Report To : Naresh Bellana
Irvine , CA 92618	Reported : 03/26/2018

Client Sample ID VMW-1 Dup

Lab ID: 1604252-02

Volatile Organic Compounds in AIR by TO-15 (Canister) **Analyst: LT**

Analyte	Result (ug/m³)	PQL (ug/m³)	Dilution	Batch	Prepared	Date/Time Analyzed	Notes
1,1,1,2-Tetrachloroethane	ND	9	5	B6L0062	11/30/2016	11/30/16 21:59	
1,1,1-Trichloroethane	ND	7	5	B6L0062	11/30/2016	11/30/16 21:59	
1,1,2,2-Tetrachloroethane	ND	9	5	B6L0062	11/30/2016	11/30/16 21:59	
1,1,2-Trichloroethane	ND	7	5	B6L0062	11/30/2016	11/30/16 21:59	
1,1-Dichloroethane	ND	5	5	B6L0062	11/30/2016	11/30/16 21:59	
1,1-Dichloroethene	ND	5	5	B6L0062	11/30/2016	11/30/16 21:59	
1,1-Dichloropropene	ND	6	5	B6L0062	11/30/2016	11/30/16 21:59	
1,2,3-Trichloropropane	ND	8	5	B6L0062	11/30/2016	11/30/16 21:59	
1,2,4-Trichlorobenzene	ND	9	5	B6L0062	11/30/2016	11/30/16 21:59	
1,2,4-Trimethylbenzene	ND	6	5	B6L0062	11/30/2016	11/30/16 21:59	
1,2-Dibromo-3-chloropropane	ND	10	5	B6L0062	11/30/2016	11/30/16 21:59	
1,2-Dibromoethane	ND	10	5	B6L0062	11/30/2016	11/30/16 21:59	
1,2-Dichlorobenzene	ND	8	5	B6L0062	11/30/2016	11/30/16 21:59	
1,2-Dichloroethane	ND	5	5	B6L0062	11/30/2016	11/30/16 21:59	
1,2-Dichloropropane	ND	6	5	B6L0062	11/30/2016	11/30/16 21:59	
1,3,5-Trimethylbenzene	ND	6	5	B6L0062	11/30/2016	11/30/16 21:59	
1,3-Butadiene	ND	3	5	B6L0062	11/30/2016	11/30/16 21:59	
1,3-Dichlorobenzene	ND	8	5	B6L0062	11/30/2016	11/30/16 21:59	
1,4-Dichlorobenzene	ND	8	5	B6L0062	11/30/2016	11/30/16 21:59	
1,4-Dioxane	ND	5	5	B6L0062	11/30/2016	11/30/16 21:59	
2,2,4-Trimethylpentane	ND	6	5	B6L0062	11/30/2016	11/30/16 21:59	
2-Butanone	ND	4	5	B6L0062	11/30/2016	11/30/16 21:59	
2-Chloroethyl vinyl ether	ND	5	5	B6L0062	11/30/2016	11/30/16 21:59	
2-Chlorotoluene	ND	6	5	B6L0062	11/30/2016	11/30/16 21:59	
2-Hexanone	ND	5	5	B6L0062	11/30/2016	11/30/16 21:59	
2-Propanol	**10**	3	5	B6L0062	11/30/2016	11/30/16 21:59	
4-Chlorotoluene	ND	6	5	B6L0062	11/30/2016	11/30/16 21:59	
4-Ethyl Toluene	ND	6	5	B6L0062	11/30/2016	11/30/16 21:59	
4-Methyl-2-pentanone	ND	5	5	B6L0062	11/30/2016	11/30/16 21:59	
Acetone	**60**	3	5	B6L0062	11/30/2016	11/30/16 21:59	
Acetonitrile	ND	2	5	B6L0062	11/30/2016	11/30/16 21:59	
Acrolein	ND	3	5	B6L0062	11/30/2016	11/30/16 21:59	
Acrylonitrile	ND	3	5	B6L0062	11/30/2016	11/30/16 21:59	
Benzene	ND	4	5	B6L0062	11/30/2016	11/30/16 21:59	
Benzyl chloride	ND	6	5	B6L0062	11/30/2016	11/30/16 21:59	
Bromobenzene	ND	8	5	B6L0062	11/30/2016	11/30/16 21:59	
Bromodichloromethane	ND	8	5	B6L0062	11/30/2016	11/30/16 21:59	

Certificate of Analysis

Hushmand Associates, Inc.	Project Number : 6th St. Bridge, 15-003
250 Goddard	Report To : Naresh Bellana
Irvine , CA 92618	Reported : 03/26/2018

Client Sample ID VMW-1 Dup
Lab ID: 1604252-02

Volatile Organic Compounds in AIR by TO-15 (Canister) **Analyst: LT**

Analyte	Result (ug/m³)	PQL (ug/m³)	Dilution	Batch	Prepared	Date/Time Analyzed	Notes
Bromoform	ND	10	5	B6L0062	11/30/2016	11/30/16 21:59	
Bromomethane	ND	5	5	B6L0062	11/30/2016	11/30/16 21:59	
Carbon disulfide	ND	4	5	B6L0062	11/30/2016	11/30/16 21:59	
Carbon tetrachloride	ND	8	5	B6L0062	11/30/2016	11/30/16 21:59	
Chlorobenzene	ND	6	5	B6L0062	11/30/2016	11/30/16 21:59	
Chloroethane	ND	3	5	B6L0062	11/30/2016	11/30/16 21:59	
Chloroform	**110**	6	5	B6L0062	11/30/2016	11/30/16 21:59	
Chloromethane	ND	3	5	B6L0062	11/30/2016	11/30/16 21:59	
cis-1,2-Dichloroethene	ND	5	5	B6L0062	11/30/2016	11/30/16 21:59	
cis-1,3-Dichloropropene	ND	6	5	B6L0062	11/30/2016	11/30/16 21:59	
Cyclohexane	ND	4	5	B6L0062	11/30/2016	11/30/16 21:59	
Dibromochloromethane	ND	10	5	B6L0062	11/30/2016	11/30/16 21:59	
Dibromomethane	ND	9	5	B6L0062	11/30/2016	11/30/16 21:59	
Dichlorodifluoromethane	**9**	6	5	B6L0062	11/30/2016	11/30/16 21:59	
Dichlorotetrafluoroethane	ND	9	5	B6L0062	11/30/2016	11/30/16 21:59	
Ethanol	**4**	2	5	B6L0062	11/30/2016	11/30/16 21:59	
Ethylbenzene	ND	5	5	B6L0062	11/30/2016	11/30/16 21:59	
Freon-113	ND	10	5	B6L0062	11/30/2016	11/30/16 21:59	
Hexachlorobutadiene	ND	10	5	B6L0062	11/30/2016	11/30/16 21:59	
Isopropylbenzene	ND	6	5	B6L0062	11/30/2016	11/30/16 21:59	
m,p-Xylene	ND	20	5	B6L0062	11/30/2016	11/30/16 21:59	
Methylene chloride	ND	4	5	B6L0062	11/30/2016	11/30/16 21:59	
MTBE	ND	5	5	B6L0062	11/30/2016	11/30/16 21:59	
n-Butylbenzene	ND	7	5	B6L0062	11/30/2016	11/30/16 21:59	
n-Propylbenzene	ND	6	5	B6L0062	11/30/2016	11/30/16 21:59	
Naphthalene	ND	7	5	B6L0062	11/30/2016	11/30/16 21:59	
o-Xylene	ND	5	5	B6L0062	11/30/2016	11/30/16 21:59	
p-Isopropyltoluene	ND	7	5	B6L0062	11/30/2016	11/30/16 21:59	
sec-Butylbenzene	ND	7	5	B6L0062	11/30/2016	11/30/16 21:59	
Styrene	ND	5	5	B6L0062	11/30/2016	11/30/16 21:59	
tert-Butylbenzene	ND	7	5	B6L0062	11/30/2016	11/30/16 21:59	
Tetrachloroethene	**490**	8	5	B6L0062	11/30/2016	11/30/16 21:59	
Toluene	**40**	5	5	B6L0062	11/30/2016	11/30/16 21:59	
trans-1,2-Dichloroethene	ND	5	5	B6L0062	11/30/2016	11/30/16 21:59	
trans-1,3-Dichloropropene	ND	6	5	B6L0062	11/30/2016	11/30/16 21:59	
Trichloroethene	ND	7	5	B6L0062	11/30/2016	11/30/16 21:59	
Trichlorofluoromethane	**20**	7	5	B6L0062	11/30/2016	11/30/16 21:59	

Certificate of Analysis

Hushmand Associates, Inc.	Project Number : 6th St. Bridge, 15-003
250 Goddard	Report To : Naresh Bellana
Irvine , CA 92618	Reported : 03/26/2018

Client Sample ID VMW-1 Dup

Lab ID: 1604252-02

Volatile Organic Compounds in AIR by TO-15 (Canister)

Analyst: LT

Analyte		Result (ug/m³)	PQL (ug/m³)	Dilution	Batch	Prepared	Date/Time Analyzed	Notes
Vinyl acetate		ND	4	5	B6L0062	11/30/2016	11/30/16 21:59	
Vinyl chloride		ND	3	5	B6L0062	11/30/2016	11/30/16 21:59	
Surrogate: 4-Bromofluorobenzene	*106 %*		*79.2 - 147*		B6L0062	11/30/2016	*11/30/16 21:59*	

Gasoline Range Organics in Air by TO-3

Analyst: LT

Analyte		Result (ug/m³)	PQL (ug/m³)	Dilution	Batch	Prepared	Date/Time Analyzed	Notes
Gasoline Range Organics		**780**	200	2	B6L0163	12/02/2016	12/02/16 12:27	
Surrogate: 4-Bromofluorobenzene	*103 %*		*70 - 130*		B6L0163	12/02/2016	*12/02/16 12:27*	

Certificate of Analysis

Hushmand Associates, Inc.	Project Number : 6th St. Bridge, 15-003
250 Goddard	Report To : Naresh Bellana
Irvine , CA 92618	Reported : 03/26/2018

Client Sample ID VMW-2

Lab ID: 1604252-03

Volatile Organic Compounds in AIR by TO-15 (Canister) **Analyst: LT**

Analyte	Result (ug/m³)	PQL (ug/m³)	Dilution	Batch	Prepared	Date/Time Analyzed	Notes
1,1,1,2-Tetrachloroethane	ND	9	5	B6L0062	11/30/2016	11/30/16 22:38	
1,1,1-Trichloroethane	ND	7	5	B6L0062	11/30/2016	11/30/16 22:38	
1,1,2,2-Tetrachloroethane	ND	9	5	B6L0062	11/30/2016	11/30/16 22:38	
1,1,2-Trichloroethane	ND	7	5	B6L0062	11/30/2016	11/30/16 22:38	
1,1-Dichloroethane	ND	5	5	B6L0062	11/30/2016	11/30/16 22:38	
1,1-Dichloroethene	ND	5	5	B6L0062	11/30/2016	11/30/16 22:38	
1,1-Dichloropropene	ND	6	5	B6L0062	11/30/2016	11/30/16 22:38	
1,2,3-Trichloropropane	ND	8	5	B6L0062	11/30/2016	11/30/16 22:38	
1,2,4-Trichlorobenzene	ND	9	5	B6L0062	11/30/2016	11/30/16 22:38	
1,2,4-Trimethylbenzene	ND	6	5	B6L0062	11/30/2016	11/30/16 22:38	
1,2-Dibromo-3-chloropropane	ND	10	5	B6L0062	11/30/2016	11/30/16 22:38	
1,2-Dibromoethane	ND	10	5	B6L0062	11/30/2016	11/30/16 22:38	
1,2-Dichlorobenzene	ND	8	5	B6L0062	11/30/2016	11/30/16 22:38	
1,2-Dichloroethane	ND	5	5	B6L0062	11/30/2016	11/30/16 22:38	
1,2-Dichloropropane	ND	6	5	B6L0062	11/30/2016	11/30/16 22:38	
1,3,5-Trimethylbenzene	ND	6	5	B6L0062	11/30/2016	11/30/16 22:38	
1,3-Butadiene	ND	3	5	B6L0062	11/30/2016	11/30/16 22:38	
1,3-Dichlorobenzene	ND	8	5	B6L0062	11/30/2016	11/30/16 22:38	
1,4-Dichlorobenzene	ND	8	5	B6L0062	11/30/2016	11/30/16 22:38	
1,4-Dioxane	ND	5	5	B6L0062	11/30/2016	11/30/16 22:38	
2,2,4-Trimethylpentane	ND	6	5	B6L0062	11/30/2016	11/30/16 22:38	
2-Butanone	ND	4	5	B6L0062	11/30/2016	11/30/16 22:38	
2-Chloroethyl vinyl ether	ND	5	5	B6L0062	11/30/2016	11/30/16 22:38	
2-Chlorotoluene	ND	6	5	B6L0062	11/30/2016	11/30/16 22:38	
2-Hexanone	ND	5	5	B6L0062	11/30/2016	11/30/16 22:38	
2-Propanol	**6**	3	5	B6L0062	11/30/2016	11/30/16 22:38	
4-Chlorotoluene	ND	6	5	B6L0062	11/30/2016	11/30/16 22:38	
4-Ethyl Toluene	ND	6	5	B6L0062	11/30/2016	11/30/16 22:38	
4-Methyl-2-pentanone	ND	5	5	B6L0062	11/30/2016	11/30/16 22:38	
Acetone	**50**	3	5	B6L0062	11/30/2016	11/30/16 22:38	
Acetonitrile	ND	2	5	B6L0062	11/30/2016	11/30/16 22:38	
Acrolein	ND	3	5	B6L0062	11/30/2016	11/30/16 22:38	
Acrylonitrile	ND	3	5	B6L0062	11/30/2016	11/30/16 22:38	
Benzene	ND	4	5	B6L0062	11/30/2016	11/30/16 22:38	
Benzyl chloride	ND	6	5	B6L0062	11/30/2016	11/30/16 22:38	
Bromobenzene	ND	8	5	B6L0062	11/30/2016	11/30/16 22:38	
Bromodichloromethane	ND	8	5	B6L0062	11/30/2016	11/30/16 22:38	

Certificate of Analysis

Hushmand Associates, Inc.	Project Number : 6th St. Bridge, 15-003
250 Goddard	Report To : Naresh Bellana
Irvine , CA 92618	Reported : 03/26/2018

Client Sample ID VMW-2

Lab ID: 1604252-03

Volatile Organic Compounds in AIR by TO-15 (Canister) **Analyst: LT**

Analyte	Result (ug/m³)	PQL (ug/m³)	Dilution	Batch	Prepared	Date/Time Analyzed	Notes
Bromoform	ND	10	5	B6L0062	11/30/2016	11/30/16 22:38	
Bromomethane	ND	5	5	B6L0062	11/30/2016	11/30/16 22:38	
Carbon disulfide	ND	4	5	B6L0062	11/30/2016	11/30/16 22:38	
Carbon tetrachloride	ND	8	5	B6L0062	11/30/2016	11/30/16 22:38	
Chlorobenzene	ND	6	5	B6L0062	11/30/2016	11/30/16 22:38	
Chloroethane	ND	3	5	B6L0062	11/30/2016	11/30/16 22:38	
Chloroform	ND	6	5	B6L0062	11/30/2016	11/30/16 22:38	
Chloromethane	ND	3	5	B6L0062	11/30/2016	11/30/16 22:38	
cis-1,2-Dichloroethene	ND	5	5	B6L0062	11/30/2016	11/30/16 22:38	
cis-1,3-Dichloropropene	ND	6	5	B6L0062	11/30/2016	11/30/16 22:38	
Cyclohexane	ND	4	5	B6L0062	11/30/2016	11/30/16 22:38	
Dibromochloromethane	ND	10	5	B6L0062	11/30/2016	11/30/16 22:38	
Dibromomethane	ND	9	5	B6L0062	11/30/2016	11/30/16 22:38	
Dichlorodifluoromethane	ND	6	5	B6L0062	11/30/2016	11/30/16 22:38	
Dichlorotetrafluoroethane	ND	9	5	B6L0062	11/30/2016	11/30/16 22:38	
Ethanol	ND	2	5	B6L0062	11/30/2016	11/30/16 22:38	
Ethylbenzene	ND	5	5	B6L0062	11/30/2016	11/30/16 22:38	
Freon-113	ND	10	5	B6L0062	11/30/2016	11/30/16 22:38	
Hexachlorobutadiene	ND	10	5	B6L0062	11/30/2016	11/30/16 22:38	
Isopropylbenzene	ND	6	5	B6L0062	11/30/2016	11/30/16 22:38	
m,p-Xylene	ND	20	5	B6L0062	11/30/2016	11/30/16 22:38	
Methylene chloride	ND	4	5	B6L0062	11/30/2016	11/30/16 22:38	
MTBE	ND	5	5	B6L0062	11/30/2016	11/30/16 22:38	
n-Butylbenzene	ND	7	5	B6L0062	11/30/2016	11/30/16 22:38	
n-Propylbenzene	ND	6	5	B6L0062	11/30/2016	11/30/16 22:38	
Naphthalene	ND	7	5	B6L0062	11/30/2016	11/30/16 22:38	
o-Xylene	ND	5	5	B6L0062	11/30/2016	11/30/16 22:38	
p-Isopropyltoluene	ND	7	5	B6L0062	11/30/2016	11/30/16 22:38	
sec-Butylbenzene	ND	7	5	B6L0062	11/30/2016	11/30/16 22:38	
Styrene	ND	5	5	B6L0062	11/30/2016	11/30/16 22:38	
tert-Butylbenzene	ND	7	5	B6L0062	11/30/2016	11/30/16 22:38	
Tetrachloroethene	ND	8	5	B6L0062	11/30/2016	11/30/16 22:38	
Toluene	**40**	5	5	B6L0062	11/30/2016	11/30/16 22:38	
trans-1,2-Dichloroethene	ND	5	5	B6L0062	11/30/2016	11/30/16 22:38	
trans-1,3-Dichloropropene	ND	6	5	B6L0062	11/30/2016	11/30/16 22:38	
Trichloroethene	ND	7	5	B6L0062	11/30/2016	11/30/16 22:38	
Trichlorofluoromethane	**10**	7	5	B6L0062	11/30/2016	11/30/16 22:38	

Certificate of Analysis

Hushmand Associates, Inc.	Project Number : 6th St. Bridge, 15-003
250 Goddard	Report To : Naresh Bellana
Irvine , CA 92618	Reported : 03/26/2018

Client Sample ID VMW-2

Lab ID: 1604252-03

Volatile Organic Compounds in AIR by TO-15 (Canister)

Analyst: LT

Analyte		Result (ug/m³)	PQL (ug/m³)	Dilution	Batch	Prepared	Date/Time Analyzed	Notes
Vinyl acetate		ND	4	5	B6L0062	11/30/2016	11/30/16 22:38	
Vinyl chloride		ND	3	5	B6L0062	11/30/2016	11/30/16 22:38	
Surrogate: 4-Bromofluorobenzene	*109 %*		*79.2 - 147*		B6L0062	11/30/2016	*11/30/16 22:38*	

Gasoline Range Organics in Air by TO-3

Analyst: LT

Analyte		Result (ug/m³)	PQL (ug/m³)	Dilution	Batch	Prepared	Date/Time Analyzed	Notes
Gasoline Range Organics		**390**	200	2	B6L0163	12/02/2016	12/02/16 13:10	
Surrogate: 4-Bromofluorobenzene	*96.8 %*		*70 - 130*		B6L0163	12/02/2016	*12/02/16 13:10*	

Certificate of Analysis

Hushmand Associates, Inc.	Project Number : 6th St. Bridge, 15-003
250 Goddard	Report To : Naresh Bellana
Irvine , CA 92618	Reported : 03/26/2018

Client Sample ID VMW-3

Lab ID: 1604252-04

Volatile Organic Compounds in AIR by TO-15 (Canister) **Analyst: LT**

Analyte	Result (ug/m³)	PQL (ug/m³)	Dilution	Batch	Prepared	Date/Time Analyzed	Notes
1,1,1,2-Tetrachloroethane	ND	9	5	B6L0062	11/30/2016	11/30/16 23:17	
1,1,1-Trichloroethane	ND	7	5	B6L0062	11/30/2016	11/30/16 23:17	
1,1,2,2-Tetrachloroethane	ND	9	5	B6L0062	11/30/2016	11/30/16 23:17	
1,1,2-Trichloroethane	ND	7	5	B6L0062	11/30/2016	11/30/16 23:17	
1,1-Dichloroethane	ND	5	5	B6L0062	11/30/2016	11/30/16 23:17	
1,1-Dichloroethene	ND	5	5	B6L0062	11/30/2016	11/30/16 23:17	
1,1-Dichloropropene	ND	6	5	B6L0062	11/30/2016	11/30/16 23:17	
1,2,3-Trichloropropane	ND	8	5	B6L0062	11/30/2016	11/30/16 23:17	
1,2,4-Trichlorobenzene	ND	9	5	B6L0062	11/30/2016	11/30/16 23:17	
1,2,4-Trimethylbenzene	ND	6	5	B6L0062	11/30/2016	11/30/16 23:17	
1,2-Dibromo-3-chloropropane	ND	10	5	B6L0062	11/30/2016	11/30/16 23:17	
1,2-Dibromoethane	ND	10	5	B6L0062	11/30/2016	11/30/16 23:17	
1,2-Dichlorobenzene	ND	8	5	B6L0062	11/30/2016	11/30/16 23:17	
1,2-Dichloroethane	ND	5	5	B6L0062	11/30/2016	11/30/16 23:17	
1,2-Dichloropropane	ND	6	5	B6L0062	11/30/2016	11/30/16 23:17	
1,3,5-Trimethylbenzene	ND	6	5	B6L0062	11/30/2016	11/30/16 23:17	
1,3-Butadiene	ND	3	5	B6L0062	11/30/2016	11/30/16 23:17	
1,3-Dichlorobenzene	ND	8	5	B6L0062	11/30/2016	11/30/16 23:17	
1,4-Dichlorobenzene	ND	8	5	B6L0062	11/30/2016	11/30/16 23:17	
1,4-Dioxane	ND	5	5	B6L0062	11/30/2016	11/30/16 23:17	
2,2,4-Trimethylpentane	ND	6	5	B6L0062	11/30/2016	11/30/16 23:17	
2-Butanone	**10**	4	5	B6L0062	11/30/2016	11/30/16 23:17	
2-Chloroethyl vinyl ether	ND	5	5	B6L0062	11/30/2016	11/30/16 23:17	
2-Chlorotoluene	ND	6	5	B6L0062	11/30/2016	11/30/16 23:17	
2-Hexanone	ND	5	5	B6L0062	11/30/2016	11/30/16 23:17	
2-Propanol	**20**	3	5	B6L0062	11/30/2016	11/30/16 23:17	
4-Chlorotoluene	ND	6	5	B6L0062	11/30/2016	11/30/16 23:17	
4-Ethyl Toluene	ND	6	5	B6L0062	11/30/2016	11/30/16 23:17	
4-Methyl-2-pentanone	ND	5	5	B6L0062	11/30/2016	11/30/16 23:17	
Acetone	**270**	6	10	B6L0062	12/01/2016	12/01/16 07:22	
Acetonitrile	**10**	2	5	B6L0062	11/30/2016	11/30/16 23:17	
Acrolein	ND	3	5	B6L0062	11/30/2016	11/30/16 23:17	
Acrylonitrile	ND	3	5	B6L0062	11/30/2016	11/30/16 23:17	
Benzene	**70**	4	5	B6L0062	11/30/2016	11/30/16 23:17	
Benzyl chloride	ND	6	5	B6L0062	11/30/2016	11/30/16 23:17	
Bromobenzene	ND	8	5	B6L0062	11/30/2016	11/30/16 23:17	
Bromodichloromethane	ND	8	5	B6L0062	11/30/2016	11/30/16 23:17	

Certificate of Analysis

Hushmand Associates, Inc.	Project Number : 6th St. Bridge, 15-003
250 Goddard	Report To : Naresh Bellana
Irvine , CA 92618	Reported : 03/26/2018

Client Sample ID VMW-3

Lab ID: 1604252-04

Volatile Organic Compounds in AIR by TO-15 (Canister) **Analyst: LT**

Analyte	Result (ug/m³)	PQL (ug/m³)	Dilution	Batch	Prepared	Date/Time Analyzed	Notes
Bromoform	ND	10	5	B6L0062	11/30/2016	11/30/16 23:17	
Bromomethane	ND	5	5	B6L0062	11/30/2016	11/30/16 23:17	
Carbon disulfide	**10**	4	5	B6L0062	11/30/2016	11/30/16 23:17	
Carbon tetrachloride	ND	8	5	B6L0062	11/30/2016	11/30/16 23:17	
Chlorobenzene	ND	6	5	B6L0062	11/30/2016	11/30/16 23:17	
Chloroethane	ND	3	5	B6L0062	11/30/2016	11/30/16 23:17	
Chloroform	ND	6	5	B6L0062	11/30/2016	11/30/16 23:17	
Chloromethane	ND	3	5	B6L0062	11/30/2016	11/30/16 23:17	
cis-1,2-Dichloroethene	ND	5	5	B6L0062	11/30/2016	11/30/16 23:17	
cis-1,3-Dichloropropene	ND	6	5	B6L0062	11/30/2016	11/30/16 23:17	
Cyclohexane	**4**	4	5	B6L0062	11/30/2016	11/30/16 23:17	
Dibromochloromethane	ND	10	5	B6L0062	11/30/2016	11/30/16 23:17	
Dibromomethane	ND	9	5	B6L0062	11/30/2016	11/30/16 23:17	
Dichlorodifluoromethane	ND	6	5	B6L0062	11/30/2016	11/30/16 23:17	
Dichlorotetrafluoroethane	ND	9	5	B6L0062	11/30/2016	11/30/16 23:17	
Ethanol	**20**	2	5	B6L0062	11/30/2016	11/30/16 23:17	
Ethylbenzene	**8**	5	5	B6L0062	11/30/2016	11/30/16 23:17	
Freon-113	ND	10	5	B6L0062	11/30/2016	11/30/16 23:17	
Hexachlorobutadiene	ND	10	5	B6L0062	11/30/2016	11/30/16 23:17	
Isopropylbenzene	ND	6	5	B6L0062	11/30/2016	11/30/16 23:17	
m,p-Xylene	**40**	20	5	B6L0062	11/30/2016	11/30/16 23:17	
Methylene chloride	ND	4	5	B6L0062	11/30/2016	11/30/16 23:17	
MTBE	ND	5	5	B6L0062	11/30/2016	11/30/16 23:17	
n-Butylbenzene	ND	7	5	B6L0062	11/30/2016	11/30/16 23:17	
n-Propylbenzene	ND	6	5	B6L0062	11/30/2016	11/30/16 23:17	
Naphthalene	ND	7	5	B6L0062	11/30/2016	11/30/16 23:17	
o-Xylene	**5**	5	5	B6L0062	11/30/2016	11/30/16 23:17	
p-Isopropyltoluene	ND	7	5	B6L0062	11/30/2016	11/30/16 23:17	
sec-Butylbenzene	ND	7	5	B6L0062	11/30/2016	11/30/16 23:17	
Styrene	ND	5	5	B6L0062	11/30/2016	11/30/16 23:17	
tert-Butylbenzene	ND	7	5	B6L0062	11/30/2016	11/30/16 23:17	
Tetrachloroethene	**50**	8	5	B6L0062	11/30/2016	11/30/16 23:17	
Toluene	**90**	5	5	B6L0062	11/30/2016	11/30/16 23:17	
trans-1,2-Dichloroethene	ND	5	5	B6L0062	11/30/2016	11/30/16 23:17	
trans-1,3-Dichloropropene	ND	6	5	B6L0062	11/30/2016	11/30/16 23:17	
Trichloroethene	**10**	7	5	B6L0062	11/30/2016	11/30/16 23:17	
Trichlorofluoromethane	ND	7	5	B6L0062	11/30/2016	11/30/16 23:17	

Certificate of Analysis

Hushmand Associates, Inc.	Project Number : 6th St. Bridge, 15-003
250 Goddard	Report To : Naresh Bellana
Irvine , CA 92618	Reported : 03/26/2018

Client Sample ID VMW-3

Lab ID: 1604252-04

Volatile Organic Compounds in AIR by TO-15 (Canister) **Analyst: LT**

Analyte		Result (ug/m³)	PQL (ug/m³)	Dilution	Batch	Prepared	Date/Time Analyzed	Notes
Vinyl acetate		ND	4	5	B6L0062	11/30/2016	11/30/16 23:17	
Vinyl chloride		ND	3	5	B6L0062	11/30/2016	11/30/16 23:17	
Surrogate: 4-Bromofluorobenzene	*105 %*		*79.2 - 147*		B6L0062	12/01/2016	*12/01/16 07:22*	
Surrogate: 4-Bromofluorobenzene	*105 %*		*79.2 - 147*		B6L0062	11/30/2016	*11/30/16 23:17*	

Gasoline Range Organics in Air by TO-3 **Analyst: LT**

Analyte		Result (ug/m³)	PQL (ug/m³)	Dilution	Batch	Prepared	Date/Time Analyzed	Notes
Gasoline Range Organics		**1500**	200	2	B6L0163	12/02/2016	12/02/16 13:54	
Surrogate: 4-Bromofluorobenzene	*81.2 %*		*70 - 130*		B6L0163	12/02/2016	*12/02/16 13:54*	E3, E4

Certificate of Analysis

Hushmand Associates, Inc.	Project Number : 6th St. Bridge, 15-003
250 Goddard	Report To : Naresh Bellana
Irvine , CA 92618	Reported : 03/26/2018

Client Sample ID VMW-4

Lab ID: 1604252-05

Volatile Organic Compounds in AIR by TO-15 (Canister) **Analyst: LT**

Analyte	Result (ug/m³)	PQL (ug/m³)	Dilution	Batch	Prepared	Date/Time Analyzed	Notes
1,1,1,2-Tetrachloroethane	ND	9	5	B6L0062	11/30/2016	11/30/16 23:55	
1,1,1-Trichloroethane	ND	7	5	B6L0062	11/30/2016	11/30/16 23:55	
1,1,2,2-Tetrachloroethane	ND	9	5	B6L0062	11/30/2016	11/30/16 23:55	
1,1,2-Trichloroethane	ND	7	5	B6L0062	11/30/2016	11/30/16 23:55	
1,1-Dichloroethane	ND	5	5	B6L0062	11/30/2016	11/30/16 23:55	
1,1-Dichloroethene	ND	5	5	B6L0062	11/30/2016	11/30/16 23:55	
1,1-Dichloropropene	ND	6	5	B6L0062	11/30/2016	11/30/16 23:55	
1,2,3-Trichloropropane	ND	8	5	B6L0062	11/30/2016	11/30/16 23:55	
1,2,4-Trichlorobenzene	ND	9	5	B6L0062	11/30/2016	11/30/16 23:55	
1,2,4-Trimethylbenzene	ND	6	5	B6L0062	11/30/2016	11/30/16 23:55	
1,2-Dibromo-3-chloropropane	ND	10	5	B6L0062	11/30/2016	11/30/16 23:55	
1,2-Dibromoethane	ND	10	5	B6L0062	11/30/2016	11/30/16 23:55	
1,2-Dichlorobenzene	ND	8	5	B6L0062	11/30/2016	11/30/16 23:55	
1,2-Dichloroethane	ND	5	5	B6L0062	11/30/2016	11/30/16 23:55	
1,2-Dichloropropane	ND	6	5	B6L0062	11/30/2016	11/30/16 23:55	
1,3,5-Trimethylbenzene	ND	6	5	B6L0062	11/30/2016	11/30/16 23:55	
1,3-Butadiene	ND	3	5	B6L0062	11/30/2016	11/30/16 23:55	
1,3-Dichlorobenzene	ND	8	5	B6L0062	11/30/2016	11/30/16 23:55	
1,4-Dichlorobenzene	ND	8	5	B6L0062	11/30/2016	11/30/16 23:55	
1,4-Dioxane	ND	5	5	B6L0062	11/30/2016	11/30/16 23:55	
2,2,4-Trimethylpentane	ND	6	5	B6L0062	11/30/2016	11/30/16 23:55	
2-Butanone	**5**	4	5	B6L0062	11/30/2016	11/30/16 23:55	
2-Chloroethyl vinyl ether	ND	5	5	B6L0062	11/30/2016	11/30/16 23:55	
2-Chlorotoluene	ND	6	5	B6L0062	11/30/2016	11/30/16 23:55	
2-Hexanone	ND	5	5	B6L0062	11/30/2016	11/30/16 23:55	
2-Propanol	**7**	3	5	B6L0062	11/30/2016	11/30/16 23:55	
4-Chlorotoluene	ND	6	5	B6L0062	11/30/2016	11/30/16 23:55	
4-Ethyl Toluene	ND	6	5	B6L0062	11/30/2016	11/30/16 23:55	
4-Methyl-2-pentanone	ND	5	5	B6L0062	11/30/2016	11/30/16 23:55	
Acetone	**200**	6	10	B6L0062	12/01/2016	12/01/16 08:00	
Acetonitrile	ND	2	5	B6L0062	11/30/2016	11/30/16 23:55	
Acrolein	ND	3	5	B6L0062	11/30/2016	11/30/16 23:55	
Acrylonitrile	ND	3	5	B6L0062	11/30/2016	11/30/16 23:55	
Benzene	ND	4	5	B6L0062	11/30/2016	11/30/16 23:55	
Benzyl chloride	ND	6	5	B6L0062	11/30/2016	11/30/16 23:55	
Bromobenzene	ND	8	5	B6L0062	11/30/2016	11/30/16 23:55	
Bromodichloromethane	ND	8	5	B6L0062	11/30/2016	11/30/16 23:55	

Certificate of Analysis

Hushmand Associates, Inc.	Project Number : 6th St. Bridge, 15-003
250 Goddard	Report To : Naresh Bellana
Irvine , CA 92618	Reported : 03/26/2018

Client Sample ID VMW-4

Lab ID: 1604252-05

Volatile Organic Compounds in AIR by TO-15 (Canister) **Analyst: LT**

Analyte	Result (ug/m³)	PQL (ug/m³)	Dilution	Batch	Prepared	Date/Time Analyzed	Notes
Bromoform	ND	10	5	B6L0062	11/30/2016	11/30/16 23:55	
Bromomethane	ND	5	5	B6L0062	11/30/2016	11/30/16 23:55	
Carbon disulfide	**5**	4	5	B6L0062	11/30/2016	11/30/16 23:55	
Carbon tetrachloride	ND	8	5	B6L0062	11/30/2016	11/30/16 23:55	
Chlorobenzene	ND	6	5	B6L0062	11/30/2016	11/30/16 23:55	
Chloroethane	ND	3	5	B6L0062	11/30/2016	11/30/16 23:55	
Chloroform	ND	6	5	B6L0062	11/30/2016	11/30/16 23:55	
Chloromethane	ND	3	5	B6L0062	11/30/2016	11/30/16 23:55	
cis-1,2-Dichloroethene	ND	5	5	B6L0062	11/30/2016	11/30/16 23:55	
cis-1,3-Dichloropropene	ND	6	5	B6L0062	11/30/2016	11/30/16 23:55	
Cyclohexane	ND	4	5	B6L0062	11/30/2016	11/30/16 23:55	
Dibromochloromethane	ND	10	5	B6L0062	11/30/2016	11/30/16 23:55	
Dibromomethane	ND	9	5	B6L0062	11/30/2016	11/30/16 23:55	
Dichlorodifluoromethane	ND	6	5	B6L0062	11/30/2016	11/30/16 23:55	
Dichlorotetrafluoroethane	ND	9	5	B6L0062	11/30/2016	11/30/16 23:55	
Ethanol	**10**	2	5	B6L0062	11/30/2016	11/30/16 23:55	
Ethylbenzene	ND	5	5	B6L0062	11/30/2016	11/30/16 23:55	
Freon-113	ND	10	5	B6L0062	11/30/2016	11/30/16 23:55	
Hexachlorobutadiene	ND	10	5	B6L0062	11/30/2016	11/30/16 23:55	
Isopropylbenzene	ND	6	5	B6L0062	11/30/2016	11/30/16 23:55	
m,p-Xylene	ND	20	5	B6L0062	11/30/2016	11/30/16 23:55	
Methylene chloride	ND	4	5	B6L0062	11/30/2016	11/30/16 23:55	
MTBE	ND	5	5	B6L0062	11/30/2016	11/30/16 23:55	
n-Butylbenzene	ND	7	5	B6L0062	11/30/2016	11/30/16 23:55	
n-Propylbenzene	ND	6	5	B6L0062	11/30/2016	11/30/16 23:55	
Naphthalene	ND	7	5	B6L0062	11/30/2016	11/30/16 23:55	
o-Xylene	ND	5	5	B6L0062	11/30/2016	11/30/16 23:55	
p-Isopropyltoluene	ND	7	5	B6L0062	11/30/2016	11/30/16 23:55	
sec-Butylbenzene	ND	7	5	B6L0062	11/30/2016	11/30/16 23:55	
Styrene	ND	5	5	B6L0062	11/30/2016	11/30/16 23:55	
tert-Butylbenzene	ND	7	5	B6L0062	11/30/2016	11/30/16 23:55	
Tetrachloroethene	ND	8	5	B6L0062	11/30/2016	11/30/16 23:55	
Toluene	**30**	5	5	B6L0062	11/30/2016	11/30/16 23:55	
trans-1,2-Dichloroethene	ND	5	5	B6L0062	11/30/2016	11/30/16 23:55	
trans-1,3-Dichloropropene	ND	6	5	B6L0062	11/30/2016	11/30/16 23:55	
Trichloroethene	ND	7	5	B6L0062	11/30/2016	11/30/16 23:55	
Trichlorofluoromethane	**10**	7	5	B6L0062	11/30/2016	11/30/16 23:55	

Certificate of Analysis

Hushmand Associates, Inc.	Project Number : 6th St. Bridge, 15-003
250 Goddard	Report To : Naresh Bellana
Irvine , CA 92618	Reported : 03/26/2018

Client Sample ID VMW-4

Lab ID: 1604252-05

Volatile Organic Compounds in AIR by TO-15 (Canister)

Analyst: LT

Analyte		Result (ug/m³)	PQL (ug/m³)	Dilution	Batch	Prepared	Date/Time Analyzed	Notes
Vinyl acetate		ND	4	5	B6L0062	11/30/2016	11/30/16 23:55	
Vinyl chloride		ND	3	5	B6L0062	11/30/2016	11/30/16 23:55	
Surrogate: 4-Bromofluorobenzene	*107 %*		*79.2 - 147*		B6L0062	12/01/2016	*12/01/16 08:00*	
Surrogate: 4-Bromofluorobenzene	*106 %*		*79.2 - 147*		B6L0062	11/30/2016	*11/30/16 23:55*	

Gasoline Range Organics in Air by TO-3

Analyst: LT

Analyte		Result (ug/m³)	PQL (ug/m³)	Dilution	Batch	Prepared	Date/Time Analyzed	Notes
Gasoline Range Organics		**370**	200	2	B6L0163	12/02/2016	12/02/16 14:37	
Surrogate: 4-Bromofluorobenzene	*101 %*		*70 - 130*		B6L0163	12/02/2016	*12/02/16 14:37*	

Certificate of Analysis

Hushmand Associates, Inc.	Project Number : 6th St. Bridge, 15-003
250 Goddard	Report To : Naresh Bellana
Irvine , CA 92618	Reported : 03/26/2018

QUALITY CONTROL SECTION

Volatile Organic Compounds in AIR by TO-15 (Canister) - Quality Control

Analyte	Result (ug/m³)	PQL (ug/m³)	MDL (ug/m³)	Spike Level	Source Result	% Rec	% Rec Limits	RPD	RPD Limit	Notes
Batch B6L0062 - No_Prep_AIR										
Blank (B6L0062-BLK1)					Prepared: 11/30/2016 Analyzed: 11/30/2016					
1,1,1,2-Tetrachloroethane	ND	2	0.57							
1,1,1-Trichloroethane	ND	1	0.58							
1,1,2,2-Tetrachloroethane	ND	2	0.77							
1,1,2-Trichloroethane	ND	1	0.45							
1,1-Dichloroethane	ND	1	0.37							
1,1-Dichloroethene	ND	0.99	0.34							
1,1-Dichloropropene	ND	1	0.37							
1,2,3-Trichloropropane	ND	2	0.58							
1,2,4-Trichlorobenzene	ND	2	0.73							
1,2,4-Trimethylbenzene	ND	1	0.54							
1,2-Dibromo-3-chloropropane	ND	2	1							
1,2-Dibromoethane	ND	2	0.73							
1,2-Dichlorobenzene	ND	2	0.54							
1,2-Dichloroethane	ND	1	0.34							
1,2-Dichloropropane	ND	1	0.41							
1,3,5-Trimethylbenzene	ND	1	0.51							
1,3-Butadiene	ND	0.55	0.39							
1,3-Dichlorobenzene	ND	2	0.56							
1,4-Dichlorobenzene	ND	2	0.51							
1,4-Dioxane	ND	0.90	0.65							
2,2,4-Trimethylpentane	ND	1	0.35							
2-Butanone	ND	0.74	0.24							
2-Chloroethyl vinyl ether	ND	1	0.22							
2-Chlorotoluene	ND	1	0.50							
2-Hexanone	ND	1	0.43							
2-Propanol	ND	0.61	0.26							
4-Chlorotoluene	ND	1	0.47							
4-Ethyl Toluene	ND	1	0.47							
4-Methyl-2-pentanone	ND	1	0.30							
Acetone	ND	0.59	0.26							
Acetonitrile	ND	0.42	0.14							
Acrolein	ND	0.57	0.22							
Acrylonitrile	ND	0.54	0.18							
Benzene	ND	0.80	0.28							
Benzyl chloride	ND	1	0.37							
Bromobenzene	ND	2	0.59							
Bromodichloromethane	ND	2	0.70							
Bromoform	ND	3	0.90							
Bromomethane	ND	0.97	0.46							

Certificate of Analysis

Hushmand Associates, Inc.	Project Number : 6th St. Bridge, 15-003
250 Goddard	Report To : Naresh Bellana
Irvine , CA 92618	Reported : 03/26/2018

Volatile Organic Compounds in AIR by TO-15 (Canister) - Quality Control (cont'd)

Analyte	Result (ug/m³)	PQL (ug/m³)	MDL (ug/m³)	Spike Level	Source Result	% Rec	% Rec Limits	RPD	RPD Limit	Notes
Batch B6L0062 - No_Prep_AIR (continued)										
Blank (B6L0062-BLK1) - Continued					Prepared: 11/30/2016 Analyzed: 11/30/2016					
Carbon disulfide	ND	0.78	0.31							
Carbon tetrachloride	ND	2	0.43							
Chlorobenzene	ND	1	0.41							
Chloroethane	ND	0.66	0.28							
Chloroform	ND	1	0.50							
Chloromethane	ND	0.52	0.22							
cis-1,2-Dichloroethene	ND	0.99	0.28							
cis-1,3-Dichloropropene	ND	1	0.33							
Cyclohexane	ND	0.86	0.25							
Dibromochloromethane	ND	2	0.83							
Dibromomethane	ND	2	0.55							
Dichlorodifluoromethane	ND	1	0.56							
Dichlorotetrafluoroethane	ND	2	0.76							
Ethanol	ND	0.47	0.20							
Ethylbenzene	ND	1	0.35							
Freon-113	ND	2	0.58							
Hexachlorobutadiene	ND	3	1							
Isopropylbenzene	ND	1	0.52							
m,p-Xylene	ND	4	1							
Methylene chloride	ND	0.87	0.31							
MTBE	ND	0.90	0.33							
n-Butylbenzene	ND	1	0.42							
n-Propylbenzene	ND	1	0.41							
Naphthalene	ND	1	0.36							
o-Xylene	ND	1	0.40							
p-Isopropyltoluene	ND	1	0.51							
sec-Butylbenzene	ND	1	0.56							
Styrene	ND	1	0.44							
tert-Butylbenzene	ND	1	0.62							
Tetrachloroethene	ND	2	0.47							
Toluene	ND	0.94	0.28							
trans-1,2-Dichloroethene	ND	0.99	0.34							
trans-1,3-Dichloropropene	ND	1	0.34							
Trichloroethene	ND	1	0.47							
Trichlorofluoromethane	ND	1	0.53							
Vinyl acetate	ND	0.88	0.38							
Vinyl chloride	ND	0.64	0.21							
Surrogate: 4-Bromofluorobenzene	*21.76*			*17.8935*		*122*	*79.2 - 147*			
LCS (B6L0062-BS1)					Prepared: 11/30/2016 Analyzed: 11/30/2016					
1,1,1,2-Tetrachloroethane	13.799	2	0.57	13.7299		100	70 - 130			

Hushmand Associates, Inc.
250 Goddard
Irvine , CA 92618

Project Number : 6th St. Bridge, 15-003
Report To : Naresh Bellana
Reported : 03/26/2018

Volatile Organic Compounds in AIR by TO-15 (Canister) - Quality Control (cont'd)

Analyte	Result (ug/m³)	PQL (ug/m³)	MDL (ug/m³)	Spike Level	Source Result	% Rec	% Rec Limits	RPD	RPD Limit	Notes
Batch B6L0062 - No_Prep_AIR (continued)										
LCS (B6L0062-BS1) - Continued					Prepared: 11/30/2016 Analyzed: 11/30/2016					
1,1,1-Trichloroethane	10.530	1	0.58	10.9123		96.5	70 - 130			
1,1,2,2-Tetrachloroethane	12.837	2	0.77	13.7299		93.5	70 - 130			
1,1,2-Trichloroethane	8.675	1	0.45	10.9123		79.5	70 - 130			
1,1-Dichloroethane	7.204	1	0.37	8.09480		89.0	70 - 130			
1,1-Dichloroethene	6.899	0.99	0.34	7.92990		87.0	70 - 130			
1,1-Dichloropropene	8.714	1	0.37	9.07722		96.0	70 - 130			
1,2,3-Trichloropropane	13.447	2	0.58	12.0597		112	70 - 130			
1,2,4-Trichlorobenzene	16.846	2	0.73	14.8422		114	70 - 130			
1,2,4-Trimethylbenzene	9.389	1	0.54	9.83166		95.5	70 - 130			
1,2-Dibromo-3-chloropropane	21.652	2	1	19.3319		112	70 - 130			
1,2-Dibromoethane	13.523	2	0.73	15.3670		88.0	70 - 130			
1,2-Dichlorobenzene	10.942	2	0.54	12.0246		91.0	70 - 130			
1,2-Dichloroethane	7.447	1	0.34	8.09480		92.0	70 - 130			
1,2-Dichloropropane	7.347	1	0.41	9.24213		79.5	70 - 130			
1,3,5-Trimethylbenzene	9.340	1	0.51	9.83166		95.0	70 - 130			
1,3-Butadiene	3.783	0.55	0.39	4.42454		85.5	70 - 130			
1,3-Dichlorobenzene	11.243	2	0.56	12.0246		93.5	70 - 130			
1,4-Dichlorobenzene	10.882	2	0.51	12.0246		90.5	70 - 130			
1,4-Dioxane	7.063	0.90	0.65	7.20695		98.0	70 - 130			
2,2,4-Trimethylpentane	8.036	1	0.35	9.34388		86.0	70 - 130			
2-Butanone	5.249	0.74	0.24	5.89824		89.0	70 - 130			
2-Chloroethyl vinyl ether	7.016	1	0.22	8.71583		80.5	70 - 130			
2-Chlorotoluene	9.474	1	0.50	10.3544		91.5	70 - 130			
2-Hexanone	6.268	1	0.43	8.19296		76.5	70 - 130			
2-Propanol	4.350	0.61	0.26	4.91534		88.5	70 - 130			
4-Chlorotoluene	10.199	1	0.47	10.3544		98.5	70 - 130			
4-Ethyl Toluene	9.193	1	0.47	9.83166		93.5	70 - 130			
4-Methyl-2-pentanone	6.636	1	0.30	8.19296		81.0	70 - 130			
Acetone	4.252	0.59	0.26	4.75084		89.5	70 - 130			
Acetonitrile	2.888	0.42	0.14	3.35804		86.0	70 - 130			
Acrolein	3.371	0.57	0.22	4.58593		73.5	70 - 130			
Acrylonitrile	3.581	0.54	0.18	4.34053		82.5	70 - 130			
Benzene	5.016	0.80	0.28	6.38953		78.5	70 - 130			
Benzyl chloride	9.888	1	0.37	10.3544		95.5	70 - 130			
Bromobenzene	12.651	2	0.59	12.8432		98.5	70 - 130			
Bromodichloromethane	12.128	2	0.70	13.4011		90.5	70 - 130			
Bromoform	19.743	3	0.90	20.6733		95.5	70 - 130			
Bromomethane	6.989	0.97	0.46	7.76597		90.0	70 - 130			
Carbon disulfide	5.543	0.78	0.31	6.22847		89.0	70 - 130			
Carbon tetrachloride	11.639	2	0.43	12.5826		92.5	70 - 130			
Chlorobenzene	8.471	1	0.41	9.20712		92.0	70 - 130			
Chloroethane	4.591	0.66	0.28	5.27722		87.0	70 - 130			

Certificate of Analysis

Hushmand Associates, Inc.	Project Number : 6th St. Bridge, 15-003
250 Goddard	Report To : Naresh Bellana
Irvine , CA 92618	Reported : 03/26/2018

Volatile Organic Compounds in AIR by TO-15 (Canister) - Quality Control (cont'd)

Analyte	Result (ug/m³)	PQL (ug/m³)	MDL (ug/m³)	Spike Level	Source Result	% Rec	% Rec Limits	RPD	RPD Limit	Notes
Batch B6L0062 - No_Prep_AIR (continued)										
LCS (B6L0062-BS1) - Continued					Prepared: 11/30/2016 Analyzed: 11/30/2016					
Chloroform	8.935	1	0.50	9.76499		91.5	70 - 130			
Chloromethane	3.510	0.52	0.22	4.12982		85.0	70 - 130			
cis-1,2-Dichloroethene	7.018	0.99	0.28	7.92990		88.5	70 - 130			
cis-1,3-Dichloropropene	7.126	1	0.33	9.07724		78.5	70 - 130			
Cyclohexane	5.680	0.86	0.25	6.88425		82.5	70 - 130			
Dibromochloromethane	14.652	2	0.83	17.0371		86.0	70 - 130			
Dibromomethane	14.717	2	0.55	14.2196		104	70 - 130			
Dichlorodifluoromethane	9.940	1	0.56	9.89063		100	70 - 130			
Dichlorotetrafluoroethane	14.331	2	0.76	13.9812		102	70 - 130			
Ethanol	3.278	0.47	0.20	3.76834		87.0	70 - 130			
Ethylbenzene	7.990	1	0.35	8.68425		92.0	70 - 130			
Freon-113	14.101	2	0.58	15.3272		92.0	70 - 130			
Hexachlorobutadiene	25.916	3	1	21.3300		122	70 - 130			
Isopropylbenzene	9.094	1	0.52	9.83166		92.5	70 - 130			
m,p-Xylene	32.740	4	1	34.7370		94.3	70 - 130			
Methylene chloride	6.148	0.87	0.31	6.94740		88.5	70 - 130			
MTBE	6.309	0.90	0.33	7.21047		87.5	70 - 130			
n-Butylbenzene	10.265	1	0.42	10.9790		93.5	70 - 130			
n-Propylbenzene	9.094	1	0.41	9.83166		92.5	70 - 130			
Naphthalene	9.331	1	0.36	10.4843		89.0	70 - 130			
o-Xylene	8.293	1	0.40	8.68425		95.5	70 - 130			
p-Isopropyltoluene	11.638	1	0.51	10.9790		106	70 - 130			
sec-Butylbenzene	10.265	1	0.56	10.9790		93.5	70 - 130			
Styrene	7.582	1	0.44	8.51934		89.0	70 - 130			
tert-Butylbenzene	10.814	1	0.62	10.9790		98.5	70 - 130			
Tetrachloroethene	11.462	2	0.47	13.5650		84.5	70 - 130			
Toluene	6.105	0.94	0.28	7.53688		81.0	70 - 130			
trans-1,2-Dichloroethene	6.661	0.99	0.34	7.92990		84.0	70 - 130			
trans-1,3-Dichloropropene	7.489	1	0.34	9.07722		82.5	70 - 130			
Trichloroethene	9.350	1	0.47	10.7474		87.0	70 - 130			
Trichlorofluoromethane	11.124	1	0.53	11.2366		99.0	70 - 130			
Vinyl acetate	6.831	0.88	0.38	7.04204		97.0	70 - 130			
Vinyl chloride	4.320	0.64	0.21	5.11231		84.5	70 - 130			
Surrogate: 4-Bromofluorobenzene	*18.97*			*17.8935*		*106*	*79.2 - 147*			
LCS Dup (B6L0062-BSD1)					Prepared: 11/30/2016 Analyzed: 11/30/2016					
1,1,1,2-Tetrachloroethane	13.318	2	0.57	13.7299		97.0	70 - 130	3.54	20	
1,1,1-Trichloroethane	10.203	1	0.58	10.9123		93.5	70 - 130	3.16	20	
1,1,2,2-Tetrachloroethane	12.837	2	0.77	13.7299		93.5	70 - 130	0.00	20	
1,1,2-Trichloroethane	9.166	1	0.45	10.9123		84.0	70 - 130	5.50	20	
1,1-Dichloroethane	7.326	1	0.37	8.09480		90.5	70 - 130	1.67	20	

Certificate of Analysis

Hushmand Associates, Inc.	Project Number : 6th St. Bridge, 15-003
250 Goddard	Report To : Naresh Bellana
Irvine , CA 92618	Reported : 03/26/2018

Volatile Organic Compounds in AIR by TO-15 (Canister) - Quality Control (cont'd)

Analyte	Result (ug/m³)	PQL (ug/m³)	MDL (ug/m³)	Spike Level	Source Result	% Rec	% Rec Limits	RPD	RPD Limit	Notes
Batch B6L0062 - No_Prep_AIR (continued)										
LCS Dup (B6L0062-BSD1) - Continued					Prepared: 11/30/2016 Analyzed: 11/30/2016					
1,1-Dichloroethene	7.018	0.99	0.34	7.92990		88.5	70 - 130	1.71	20	
1,1-Dichloropropene	8.351	1	0.37	9.07722		92.0	70 - 130	4.26	20	
1,2,3-Trichloropropane	13.808	2	0.58	12.0597		114	70 - 130	2.65	20	
1,2,4-Trichlorobenzene	18.775	2	0.73	14.8422		126	70 - 130	10.8	20	
1,2,4-Trimethylbenzene	9.340	1	0.54	9.83166		95.0	70 - 130	0.525	20	
1,2-Dibromo-3-chloropropane	23.102	2	1	19.3319		120	70 - 130	6.48	20	
1,2-Dibromoethane	12.370	2	0.73	15.3670		80.5	70 - 130	8.90	20	
1,2-Dichlorobenzene	11.303	2	0.54	12.0246		94.0	70 - 130	3.24	20	
1,2-Dichloroethane	7.690	1	0.34	8.09480		95.0	70 - 130	3.21	20	
1,2-Dichloropropane	7.440	1	0.41	9.24213		80.5	70 - 130	1.25	20	
1,3,5-Trimethylbenzene	9.340	1	0.51	9.83166		95.0	70 - 130	0.00	20	
1,3-Butadiene	3.849	0.55	0.39	4.42454		87.0	70 - 130	1.74	20	
1,3-Dichlorobenzene	11.484	2	0.56	12.0246		95.5	70 - 130	2.12	20	
1,4-Dichlorobenzene	11.243	2	0.51	12.0246		93.5	70 - 130	3.26	20	
1,4-Dioxane	7.207	0.90	0.65	7.20695		100	70 - 130	2.02	20	
2,2,4-Trimethylpentane	8.223	1	0.35	9.34388		88.0	70 - 130	2.30	20	
2-Butanone	5.190	0.74	0.24	5.89824		88.0	70 - 130	1.13	20	
2-Chloroethyl vinyl ether	6.145	1	0.22	8.71583		70.5	70 - 130	13.2	20	
2-Chlorotoluene	9.630	1	0.50	10.3544		93.0	70 - 130	1.63	20	
2-Hexanone	7.374	1	0.43	8.19296		90.0	70 - 130	16.2	20	
2-Propanol	4.522	0.61	0.26	4.91534		92.0	70 - 130	3.88	20	
4-Chlorotoluene	10.147	1	0.47	10.3544		98.0	70 - 130	0.509	20	
4-Ethyl Toluene	9.291	1	0.47	9.83166		94.5	70 - 130	1.06	20	
4-Methyl-2-pentanone	6.841	1	0.30	8.19296		83.5	70 - 130	3.04	20	
Acetone	4.276	0.59	0.26	4.75084		90.0	70 - 130	0.557	20	
Acetonitrile	3.123	0.42	0.14	3.35804		93.0	70 - 130	7.82	20	
Acrolein	3.439	0.57	0.22	4.58593		75.0	70 - 130	2.02	20	
Acrylonitrile	3.516	0.54	0.18	4.34053		81.0	70 - 130	1.83	20	
Benzene	5.271	0.80	0.28	6.38953		82.5	70 - 130	4.97	20	
Benzyl chloride	10.044	1	0.37	10.3544		97.0	70 - 130	1.56	20	
Bromobenzene	12.972	2	0.59	12.8432		101	70 - 130	2.51	20	
Bromodichloromethane	12.463	2	0.70	13.4011		93.0	70 - 130	2.72	20	
Bromoform	19.743	3	0.90	20.6733		95.5	70 - 130	0.00	20	
Bromomethane	7.067	0.97	0.46	7.76597		91.0	70 - 130	1.10	20	
Carbon disulfide	5.574	0.78	0.31	6.22847		89.5	70 - 130	0.560	20	
Carbon tetrachloride	12.016	2	0.43	12.5826		95.5	70 - 130	3.19	20	
Chlorobenzene	8.609	1	0.41	9.20712		93.5	70 - 130	1.62	20	
Chloroethane	4.565	0.66	0.28	5.27722		86.5	70 - 130	0.576	20	
Chloroform	8.837	1	0.50	9.76499		90.5	70 - 130	1.10	20	
Chloromethane	3.552	0.52	0.22	4.12982		86.0	70 - 130	1.17	20	
cis-1,2-Dichloroethene	6.978	0.99	0.28	7.92990		88.0	70 - 130	0.567	20	
cis-1,3-Dichloropropene	7.579	1	0.33	9.07724		83.5	70 - 130	6.17	20	

Certificate of Analysis

Hushmand Associates, Inc.	Project Number : 6th St. Bridge, 15-003
250 Goddard	Report To : Naresh Bellana
Irvine , CA 92618	Reported : 03/26/2018

Volatile Organic Compounds in AIR by TO-15 (Canister) - Quality Control (cont'd)

Analyte	Result (ug/m³)	PQL (ug/m³)	MDL (ug/m³)	Spike Level	Source Result	% Rec	% Rec Limits	RPD	RPD Limit	Notes
Batch B6L0062 - No_Prep_AIR (continued)										
LCS Dup (B6L0062-BSD1) - Continued					Prepared: 11/30/2016 Analyzed: 11/30/2016					
Cyclohexane	6.127	0.86	0.25	6.88425		89.0	70 - 130	7.58	20	
Dibromochloromethane	15.589	2	0.83	17.0371		91.5	70 - 130	6.20	20	
Dibromomethane	14.646	2	0.55	14.2196		103	70 - 130	0.484	20	
Dichlorodifluoromethane	10.039	1	0.56	9.89063		102	70 - 130	0.990	20	
Dichlorotetrafluoroethane	14.750	2	0.76	13.9812		106	70 - 130	2.88	20	
Ethanol	3.241	0.47	0.20	3.76834		86.0	70 - 130	1.16	20	
Ethylbenzene	8.163	1	0.35	8.68425		94.0	70 - 130	2.15	20	
Freon-113	13.871	2	0.58	15.3272		90.5	70 - 130	1.64	20	
Hexachlorobutadiene	26.556	3	1	21.3300		124	70 - 130	2.44	20	
Isopropylbenzene	9.242	1	0.52	9.83166		94.0	70 - 130	1.61	20	
m,p-Xylene	33.000	4	1	34.7370		95.0	70 - 130	0.793	20	
Methylene chloride	6.114	0.87	0.31	6.94740		88.0	70 - 130	0.567	20	
MTBE	6.345	0.90	0.33	7.21047		88.0	70 - 130	0.570	20	
n-Butylbenzene	10.320	1	0.42	10.9790		94.0	70 - 130	0.533	20	
n-Propylbenzene	9.488	1	0.41	9.83166		96.5	70 - 130	4.23	20	
Naphthalene	10.065	1	0.36	10.4843		96.0	70 - 130	7.57	20	
o-Xylene	8.337	1	0.40	8.68425		96.0	70 - 130	0.522	20	
p-Isopropyltoluene	11.857	1	0.51	10.9790		108	70 - 130	1.87	20	
sec-Butylbenzene	10.430	1	0.56	10.9790		95.0	70 - 130	1.59	20	
Styrene	7.838	1	0.44	8.51934		92.0	70 - 130	3.31	20	
tert-Butylbenzene	10.759	1	0.62	10.9790		98.0	70 - 130	0.509	20	
Tetrachloroethene	12.005	2	0.47	13.5650		88.5	70 - 130	4.62	20	
Toluene	6.293	0.94	0.28	7.53688		83.5	70 - 130	3.04	20	
trans-1,2-Dichloroethene	6.859	0.99	0.34	7.92990		86.5	70 - 130	2.93	20	
trans-1,3-Dichloropropene	7.716	1	0.34	9.07722		85.0	70 - 130	2.99	20	
Trichloroethene	9.565	1	0.47	10.7474		89.0	70 - 130	2.27	20	
Trichlorofluoromethane	10.843	1	0.53	11.2366		96.5	70 - 130	2.56	20	
Vinyl acetate	6.866	0.88	0.38	7.04204		97.5	70 - 130	0.514	20	
Vinyl chloride	4.422	0.64	0.21	5.11231		86.5	70 - 130	2.34	20	
Surrogate: 4-Bromofluorobenzene	*18.97*			*17.8935*		*106*	*79.2 - 147*			

Certificate of Analysis

Hushmand Associates, Inc.	Project Number : 6th St. Bridge, 15-003
250 Goddard	Report To : Naresh Bellana
Irvine , CA 92618	Reported : 03/26/2018

Gasoline Range Organics in Air by TO-3 - Quality Control

Analyte	Result (ug/m³)	PQL (ug/m³)	MDL (ug/m³)	Spike Level	Source Result	% Rec	% Rec Limits	RPD	RPD Limit	Notes
Batch B6L0163 - No_Prep_AIR										
Blank (B6L0163-BLK1)						Prepared: 12/2/2016 Analyzed: 12/2/2016				
Gasoline Range Organics	ND	100	70							
Surrogate: 4-Bromofluorobenzene	*16.03*			*17.8935*		*89.6*	*70 - 130*			
LCS (B6L0163-BS1)						Prepared: 12/2/2016 Analyzed: 12/2/2016				
Gasoline Range Organics	895.337	100	70	817.996		109	70 - 130			
Surrogate: 4-Bromofluorobenzene	*17.82*			*17.8935*		*99.6*	*70 - 130*			
LCS Dup (B6L0163-BSD1)						Prepared: 12/2/2016 Analyzed: 12/2/2016				
Gasoline Range Organics	804.744	100	70	817.996		98.4	70 - 130	10.7	20	
Surrogate: 4-Bromofluorobenzene	*17.39*			*17.8935*		*97.2*	*70 - 130*			

Certificate of Analysis

Hushmand Associates, Inc.	Project Number : 6th St. Bridge, 15-003
250 Goddard	Report To : Naresh Bellana
Irvine , CA 92618	Reported : 03/26/2018

Notes and Definitions

E4	Result value is estimated.
E3	Internal standard recoveries did not meet method acceptance due to matrix interference. Result value is estimated.
ND	Analyte is not detected at or above the Practical Quantitation Limit (PQL). When client requests quantitation against MDL, analyte is not detected at or above the Method Detection Limit (MDL)
PQL	Practical Quantitation Limit
MDL	Method Detection Limit
NR	Not Reported
RPD	Relative Percent Difference
CA2	CA-ELAP (CDPH)
OR1	OR-NELAP (OSPHL)

Notes:
(1) The reported MDL and PQL are based on prep ratio variation and analytical dilution.
(2) The suffix [2C] of specific analytes signifies that the reported result is taken from the instrument's second column.
(3) Results are wet unless otherwise specified.

ADVANCED TECHNOLOGY LABORATORIES

3275 Walnut Ave., Signal Hill, CA 90755
Tel: (562) 989-4045 • Fax: (562) 989-4040

CHAIN OF CUSTODY RECORD

Page 1 of 1

Instruction: Complete all shaded areas.

For Laboratory Use Only — ATLCOC Ver: 20130715

Method of Transport		Sample Conditions Upon Receipt					
		Condition	Y	N	Condition	Y	N
☐ Client	☑ ATL	1. CHILLED	☐	☑	5. # OF SAMPLES MATCH COC	☐	☐
☐ FedEx	☐ OnTrac	2. HEADSPACE (VOA)	☐	☐	6. PRESERVED	☐	☐
☐ GSO		3. CONTAINER INTACT	☐	☐	7. COOLER TEMP, deg C:		
☐ Other:		4. SEALED	☐	☐			

CUSTOMER

Company: Hushmand

Address:

Tel:

City: State: Zip: Fax:

SEND REPORT TO:

Attn: Naresh Belkina Email:

Company: 949- 777-1275

Address:

City: State: Zip:

SEND INVOICE TO: ☐ same as SEND REPORT TO

Attn: Email:

Company:

Address:

City: State: Zip:

PROJECT SAMPLES

Project Name: 6th St. Bridge

Project No.: 15-003

Sampler: DAT

Quote No: TO15

PO #:

Special Instructions/Comments:

ITEM	Lab No.	Sample Description: Sample ID / Location	Date	Time	8260 / 624 (Volatiles)	TO3 PT	8015(DRO)	8270(Semi-volatiles)	8081(Organochlorine Pesticides)	8082(PCBs)	6010 / 7000(Title 22 Metals)	TO-15	Encircle Sample Matrix: SOIL / SEDIMENT / SLUDGE	SOLIDS / WIPE/ FILTER	WATER - DRINKING / GROUND	WATER - STORM / WASTE	AQUEOUS / LAYERED - OIL	VOC	TAT	Container: #	Type	Material	Preservative	REMARKS
1	1604252-01	VMW-1	11/23	7:34	X						X						/	5	1	1	7	3		
2	-2	VMW-1 Dup		7:45	X						X						/		1	1	7	3		
3	-3	VMW-2		7:54	X						X						/		1	1	7	3		
4	-4	VMW-3		8:06	X						X						/		1	1	7	3		
5	-5	VMW-4		7:07	X						X						/		1	1	7	3		
6					PT																			
7																								
8																								
9																								
10																								

QA/QC: ☐ Routine ☐ Caltrans ☐ Legal ☐ RWQCB ☐ Level IV

Container — Type: 1=Tube; 2=VOA; 3=Liter; 4=Pint; 5=Jar; 6=Tedlar; 7 = Canister. Material: 1=Glass; 2=Plastic; 3=Metal. Preservative: 1=HCl; 2=HNO3; 3=H2SO4; 4 = 4C; 5=Zn ((Ac)2; 6=NaOH; 7=NA2S2O3

TERMS

1. Sample receiving hours: 7:30 AM to 7:30 PM Monday - Friday; Saturday 8:00 AM to 12:00 PM.
2. Samples Submitted AFTER 3:00 PM, are considered received the following Business day at 8:00 AM.
3. The following turnaround time conditions apply:
   - TAT = 0 : 300% Surcharge SAME BUSINESS DAY if received by 9:00 AM
   - TAT = 1 : 100% Surcharge NEXT BUSINESS DAY (COB 5:00 PM)
   - TAT = 2 : 50% Surcharge 2ND BUSINESS DAY (COB 5:00 PM)
   - TAT = 3 : 30% Surcharge 3RD BUSINESS DAY (COB 5:00 PM)
   - TAT = 4 : 20% Surcharge 4TH BUSINESS DAY (COB 5:00 PM)
   - TAT = 5 : NO SURCHARGE 5th BUSINESS DAY (COB 5:00 PM)
4. Weekend, holiday, after-hours work - ask for quote.
5. Subcontract TAT is 10-15 business days. Projects requiring shorter TATs will incur a surcharge respective to the subcontract lab --- ask for quote.
6. Liquid and solid samples will be disposed of after 45 calendar days from receipt of samples; air samples will be disposed of after 14 calendar days after receipt of samples.
7. Electronic records maintained for five (5) years from report date.
8. Hard copy reports will be disposed of after 45 calendar days from report date.
9. Storage and Report Fees:
   - Liquid & solid samples: Complimentary storage for forty-five (45) calendar days from receipt of samples; $2/sample/month if extended storage or hold is requested.
   - Air samples: Complimentary storage for ten (10) calendar days from receipt of samples; $20/ sample/week if extended storage is requested.
   - Hard copy and regenerated reports/EDDs: $17.50 per hard copy report requested; $50.00 per regenerated/reforma? ed report; $35 per reprocessed EDD.
10. Rush TCLP/STLC samples: add 2 days to analysis TAT for extraction on procedure.
11. Unanalyzed samples will incur a disposal fee of $7 per sample.

As the authorized agent of the company above, I hereby purchase laboratory services from ATL as shown above and hereby guarantee payment as quoted.

Don Terres — Submitter Print Name

Signature

CUSTODY

Relinquished by: (Signature and Printed Name)	Date:	Time:	Received by: (Signature and Printed Name)	Date:	Time:
Don Terres	11/23	9:12	C. Aguilera	11/23/12	9:12
Relinquished by: (Signature and Printed Name)	Date:	Time:	Received by: (Signature and Printed Name)	Date:	Time:
Relinquished by: (Signature and Printed Name)	Date:	Time:	Received by: (Signature and Printed Name)	Date:	Time:

March 26, 2018

Naresh Bellana
Hushmand Associates, Inc.
250 Goddard
Irvine, CA 92618
Tel: (949) 777-1266
Fax:(949) 777-1276

ELAP No.: 1838
CSDLAC No.: 10196
ORELAP No.: CA300003

Re: ATL Work Order Number : 1604331
Client Reference : Parcel 32 6th St Bridge, 15-003

Enclosed are the results for sample(s) received on November 28, 2016 by Advanced Technology Laboratories. The sample(s) are tested for the parameters as indicated on the enclosed chain of custody in accordance with applicable laboratory certifications. The laboratory results contained in this report specifically pertains to the sample(s) submitted.

Thank you for the opportunity to serve the needs of your company. If you have any questions, please feel free to contact me or your Project Manager.

Sincerely,

Eddie Rodriguez
Laboratory Director

The cover letter and the case narrative are an integral part of this analytical report and its absence renders the report invalid. Test results contained within this data package meet the requirements of applicable state-specific certification programs. The report cannot be reproduced without written permission from the client and Advanced Technology Laboratories.

Certificate of Analysis

Hushmand Associates, Inc.	Project Number : Parcel 32 6th St Bridge, 15-003
250 Goddard	Report To : Naresh Bellana
Irvine , CA 92618	Reported : 03/26/2018

SUMMARY OF SAMPLES

Sample ID	Laboratory ID	Matrix	Date Sampled	Date Received
VMW-1 10'	1604331-01	Air	11/28/16 7:01	11/28/16 8:42
VMW-2 5'	1604331-02	Air	11/28/16 7:19	11/28/16 8:42
VMW-3 15'	1604331-03	Air	11/28/16 7:35	11/28/16 8:42
VMW-3 Dupl. 15'	1604331-04	Air	11/28/16 7:45	11/28/16 8:42
VMW-4 10'	1604331-05	Air	11/28/16 6:35	11/28/16 8:42

Certificate of Analysis

Hushmand Associates, Inc.	Project Number : Parcel 32 6th St Bridge, 15-003
250 Goddard	Report To : Naresh Bellana
Irvine , CA 92618	Reported : 03/26/2018

Client Sample ID VMW-1 10'

Lab ID: 1604331-01

Volatile Organic Compounds in AIR by TO-15 (Canister) **Analyst: LT**

Analyte	Result (ug/m³)	PQL (ug/m³)	Dilution	Batch	Prepared	Date/Time Analyzed	Notes
1,1,1,2-Tetrachloroethane	ND	4	2.5	B6L0222	12/05/2016	12/05/16 16:04	
1,1,1-Trichloroethane	**5**	3	2.5	B6L0222	12/05/2016	12/05/16 16:04	
1,1,2,2-Tetrachloroethane	ND	4	2.5	B6L0222	12/05/2016	12/05/16 16:04	
1,1,2-Trichloroethane	ND	3	2.5	B6L0222	12/05/2016	12/05/16 16:04	
1,1-Dichloroethane	ND	3	2.5	B6L0222	12/05/2016	12/05/16 16:04	
1,1-Dichloroethene	ND	2	2.5	B6L0222	12/05/2016	12/05/16 16:04	
1,1-Dichloropropene	ND	3	2.5	B6L0222	12/05/2016	12/05/16 16:04	
1,2,3-Trichloropropane	ND	4	2.5	B6L0222	12/05/2016	12/05/16 16:04	
1,2,4-Trichlorobenzene	ND	5	2.5	B6L0222	12/05/2016	12/05/16 16:04	
1,2,4-Trimethylbenzene	ND	3	2.5	B6L0222	12/05/2016	12/05/16 16:04	
1,2-Dibromo-3-chloropropane	ND	6	2.5	B6L0222	12/05/2016	12/05/16 16:04	
1,2-Dibromoethane	ND	5	2.5	B6L0222	12/05/2016	12/05/16 16:04	
1,2-Dichlorobenzene	ND	4	2.5	B6L0222	12/05/2016	12/05/16 16:04	
1,2-Dichloroethane	ND	3	2.5	B6L0222	12/05/2016	12/05/16 16:04	
1,2-Dichloropropane	ND	3	2.5	B6L0222	12/05/2016	12/05/16 16:04	
1,3,5-Trimethylbenzene	ND	3	2.5	B6L0222	12/05/2016	12/05/16 16:04	
1,3-Butadiene	ND	1	2.5	B6L0222	12/05/2016	12/05/16 16:04	
1,3-Dichlorobenzene	ND	4	2.5	B6L0222	12/05/2016	12/05/16 16:04	
1,4-Dichlorobenzene	ND	4	2.5	B6L0222	12/05/2016	12/05/16 16:04	
1,4-Dioxane	ND	2	2.5	B6L0222	12/05/2016	12/05/16 16:04	
2,2,4-Trimethylpentane	ND	3	2.5	B6L0222	12/05/2016	12/05/16 16:04	
2-Butanone	ND	2	2.5	B6L0222	12/05/2016	12/05/16 16:04	
2-Chloroethyl vinyl ether	ND	3	2.5	B6L0222	12/05/2016	12/05/16 16:04	
2-Chlorotoluene	ND	3	2.5	B6L0222	12/05/2016	12/05/16 16:04	
2-Hexanone	ND	3	2.5	B6L0222	12/05/2016	12/05/16 16:04	
2-Propanol	**6000**	120	200	B6L0286	12/06/2016	12/06/16 16:29	
4-Chlorotoluene	ND	3	2.5	B6L0222	12/05/2016	12/05/16 16:04	
4-Ethyl Toluene	ND	3	2.5	B6L0222	12/05/2016	12/05/16 16:04	
4-Methyl-2-pentanone	ND	3	2.5	B6L0222	12/05/2016	12/05/16 16:04	
Acetone	**10**	1	2.5	B6L0222	12/05/2016	12/05/16 16:04	
Acetonitrile	ND	1	2.5	B6L0222	12/05/2016	12/05/16 16:04	
Acrolein	ND	1	2.5	B6L0222	12/05/2016	12/05/16 16:04	
Acrylonitrile	ND	1	2.5	B6L0222	12/05/2016	12/05/16 16:04	
Benzene	ND	2	2.5	B6L0222	12/05/2016	12/05/16 16:04	
Benzyl chloride	ND	3	2.5	B6L0222	12/05/2016	12/05/16 16:04	
Bromobenzene	ND	4	2.5	B6L0222	12/05/2016	12/05/16 16:04	
Bromodichloromethane	ND	4	2.5	B6L0222	12/05/2016	12/05/16 16:04	

Certificate of Analysis

Hushmand Associates, Inc.	Project Number : Parcel 32 6th St Bridge, 15-003
250 Goddard	Report To : Naresh Bellana
Irvine , CA 92618	Reported : 03/26/2018

Client Sample ID VMW-1 10'

Lab ID: 1604331-01

Volatile Organic Compounds in AIR by TO-15 (Canister) **Analyst: LT**

Analyte	Result (ug/m³)	PQL (ug/m³)	Dilution	Batch	Prepared	Date/Time Analyzed	Notes
Bromoform	ND	6	2.5	B6L0222	12/05/2016	12/05/16 16:04	
Bromomethane	ND	2	2.5	B6L0222	12/05/2016	12/05/16 16:04	
Carbon disulfide	ND	2	2.5	B6L0222	12/05/2016	12/05/16 16:04	
Carbon tetrachloride	ND	4	2.5	B6L0222	12/05/2016	12/05/16 16:04	
Chlorobenzene	ND	3	2.5	B6L0222	12/05/2016	12/05/16 16:04	
Chloroethane	ND	2	2.5	B6L0222	12/05/2016	12/05/16 16:04	
Chloroform	ND	3	2.5	B6L0222	12/05/2016	12/05/16 16:04	
Chloromethane	ND	1	2.5	B6L0222	12/05/2016	12/05/16 16:04	
cis-1,2-Dichloroethene	ND	2	2.5	B6L0222	12/05/2016	12/05/16 16:04	
cis-1,3-Dichloropropene	ND	3	2.5	B6L0222	12/05/2016	12/05/16 16:04	
Cyclohexane	ND	2	2.5	B6L0222	12/05/2016	12/05/16 16:04	
Dibromochloromethane	ND	5	2.5	B6L0222	12/05/2016	12/05/16 16:04	
Dibromomethane	ND	4	2.5	B6L0222	12/05/2016	12/05/16 16:04	
Dichlorodifluoromethane	**8**	3	2.5	B6L0222	12/05/2016	12/05/16 16:04	
Dichlorotetrafluoroethane	ND	4	2.5	B6L0222	12/05/2016	12/05/16 16:04	
Ethanol	**2**	1	2.5	B6L0222	12/05/2016	12/05/16 16:04	
Ethylbenzene	ND	3	2.5	B6L0222	12/05/2016	12/05/16 16:04	
Freon-113	ND	5	2.5	B6L0222	12/05/2016	12/05/16 16:04	
Hexachlorobutadiene	ND	7	2.5	B6L0222	12/05/2016	12/05/16 16:04	
Isopropylbenzene	ND	3	2.5	B6L0222	12/05/2016	12/05/16 16:04	
m,p-Xylene	ND	10	2.5	B6L0222	12/05/2016	12/05/16 16:04	
Methylene chloride	ND	2	2.5	B6L0222	12/05/2016	12/05/16 16:04	
MTBE	ND	2	2.5	B6L0222	12/05/2016	12/05/16 16:04	
n-Butylbenzene	ND	3	2.5	B6L0222	12/05/2016	12/05/16 16:04	
n-Propylbenzene	ND	3	2.5	B6L0222	12/05/2016	12/05/16 16:04	
Naphthalene	ND	3	2.5	B6L0222	12/05/2016	12/05/16 16:04	
o-Xylene	ND	3	2.5	B6L0222	12/05/2016	12/05/16 16:04	
p-Isopropyltoluene	ND	3	2.5	B6L0222	12/05/2016	12/05/16 16:04	
sec-Butylbenzene	ND	3	2.5	B6L0222	12/05/2016	12/05/16 16:04	
Styrene	ND	3	2.5	B6L0222	12/05/2016	12/05/16 16:04	
tert-Butylbenzene	ND	3	2.5	B6L0222	12/05/2016	12/05/16 16:04	
Tetrachloroethene	**10**	4	2.5	B6L0222	12/05/2016	12/05/16 16:04	
Toluene	**60**	2	2.5	B6L0222	12/05/2016	12/05/16 16:04	
trans-1,2-Dichloroethene	ND	2	2.5	B6L0222	12/05/2016	12/05/16 16:04	
trans-1,3-Dichloropropene	ND	3	2.5	B6L0222	12/05/2016	12/05/16 16:04	
Trichloroethene	ND	3	2.5	B6L0222	12/05/2016	12/05/16 16:04	
Trichlorofluoromethane	**20**	4	2.5	B6L0222	12/05/2016	12/05/16 16:04	

Certificate of Analysis

Hushmand Associates, Inc.	Project Number : Parcel 32 6th St Bridge, 15-003
250 Goddard	Report To : Naresh Bellana
Irvine , CA 92618	Reported : 03/26/2018

Client Sample ID VMW-1 10'
Lab ID: 1604331-01

Volatile Organic Compounds in AIR by TO-15 (Canister)

Analyst: LT

Analyte		Result (ug/m³)	PQL (ug/m³)	Dilution	Batch	Prepared	Date/Time Analyzed	Notes
Vinyl acetate		ND	2	2.5	B6L0222	12/05/2016	12/05/16 16:04	
Vinyl chloride		ND	2	2.5	B6L0222	12/05/2016	12/05/16 16:04	
Surrogate: 4-Bromofluorobenzene	*98.4 %*		*79.2 - 147*		B6L0286	12/06/2016	*12/06/16 16:29*	
Surrogate: 4-Bromofluorobenzene	*102 %*		*79.2 - 147*		B6L0222	12/05/2016	*12/05/16 16:04*	

Gasoline Range Organics in Air by TO-3

Analyst: LT

Analyte		Result (ug/m³)	PQL (ug/m³)	Dilution	Batch	Prepared	Date/Time Analyzed	Notes
Gasoline Range Organics		ND	260	2.5	B6L0202	12/05/2016	12/05/16 16:04	D1
Surrogate: 4-Bromofluorobenzene	*90.4 %*		*70 - 130*		B6L0202	12/05/2016	*12/05/16 16:04*	

Certificate of Analysis

Hushmand Associates, Inc.	Project Number : Parcel 32 6th St Bridge, 15-003
250 Goddard	Report To : Naresh Bellana
Irvine , CA 92618	Reported : 03/26/2018

Client Sample ID VMW-2 5'

Lab ID: 1604331-02

Volatile Organic Compounds in AIR by TO-15 (Canister) **Analyst: LT**

Analyte	Result (ug/m³)	PQL (ug/m³)	Dilution	Batch	Prepared	Date/Time Analyzed	Notes
1,1,1,2-Tetrachloroethane	ND	4	2.5	B6L0222	12/05/2016	12/05/16 16:47	
1,1,1-Trichloroethane	ND	3	2.5	B6L0222	12/05/2016	12/05/16 16:47	
1,1,2,2-Tetrachloroethane	ND	4	2.5	B6L0222	12/05/2016	12/05/16 16:47	
1,1,2-Trichloroethane	ND	3	2.5	B6L0222	12/05/2016	12/05/16 16:47	
1,1-Dichloroethane	ND	3	2.5	B6L0222	12/05/2016	12/05/16 16:47	
1,1-Dichloroethene	ND	2	2.5	B6L0222	12/05/2016	12/05/16 16:47	
1,1-Dichloropropene	ND	3	2.5	B6L0222	12/05/2016	12/05/16 16:47	
1,2,3-Trichloropropane	ND	4	2.5	B6L0222	12/05/2016	12/05/16 16:47	
1,2,4-Trichlorobenzene	ND	5	2.5	B6L0222	12/05/2016	12/05/16 16:47	
1,2,4-Trimethylbenzene	ND	3	2.5	B6L0222	12/05/2016	12/05/16 16:47	
1,2-Dibromo-3-chloropropane	ND	6	2.5	B6L0222	12/05/2016	12/05/16 16:47	
1,2-Dibromoethane	ND	5	2.5	B6L0222	12/05/2016	12/05/16 16:47	
1,2-Dichlorobenzene	ND	4	2.5	B6L0222	12/05/2016	12/05/16 16:47	
1,2-Dichloroethane	ND	3	2.5	B6L0222	12/05/2016	12/05/16 16:47	
1,2-Dichloropropane	ND	3	2.5	B6L0222	12/05/2016	12/05/16 16:47	
1,3,5-Trimethylbenzene	ND	3	2.5	B6L0222	12/05/2016	12/05/16 16:47	
1,3-Butadiene	ND	1	2.5	B6L0222	12/05/2016	12/05/16 16:47	
1,3-Dichlorobenzene	ND	4	2.5	B6L0222	12/05/2016	12/05/16 16:47	
1,4-Dichlorobenzene	ND	4	2.5	B6L0222	12/05/2016	12/05/16 16:47	
1,4-Dioxane	ND	2	2.5	B6L0222	12/05/2016	12/05/16 16:47	
2,2,4-Trimethylpentane	ND	3	2.5	B6L0222	12/05/2016	12/05/16 16:47	
2-Butanone	ND	2	2.5	B6L0222	12/05/2016	12/05/16 16:47	
2-Chloroethyl vinyl ether	ND	3	2.5	B6L0222	12/05/2016	12/05/16 16:47	
2-Chlorotoluene	ND	3	2.5	B6L0222	12/05/2016	12/05/16 16:47	
2-Hexanone	ND	3	2.5	B6L0222	12/05/2016	12/05/16 16:47	
2-Propanol	**3200**	120	200	B6L0286	12/06/2016	12/06/16 17:07	
4-Chlorotoluene	ND	3	2.5	B6L0222	12/05/2016	12/05/16 16:47	
4-Ethyl Toluene	ND	3	2.5	B6L0222	12/05/2016	12/05/16 16:47	
4-Methyl-2-pentanone	ND	3	2.5	B6L0222	12/05/2016	12/05/16 16:47	
Acetone	**10**	1	2.5	B6L0222	12/05/2016	12/05/16 16:47	
Acetonitrile	ND	1	2.5	B6L0222	12/05/2016	12/05/16 16:47	
Acrolein	ND	1	2.5	B6L0222	12/05/2016	12/05/16 16:47	
Acrylonitrile	ND	1	2.5	B6L0222	12/05/2016	12/05/16 16:47	
Benzene	ND	2	2.5	B6L0222	12/05/2016	12/05/16 16:47	
Benzyl chloride	ND	3	2.5	B6L0222	12/05/2016	12/05/16 16:47	
Bromobenzene	ND	4	2.5	B6L0222	12/05/2016	12/05/16 16:47	
Bromodichloromethane	ND	4	2.5	B6L0222	12/05/2016	12/05/16 16:47	

Certificate of Analysis

Hushmand Associates, Inc.	Project Number : Parcel 32 6th St Bridge, 15-003
250 Goddard	Report To : Naresh Bellana
Irvine , CA 92618	Reported : 03/26/2018

Client Sample ID VMW-2 5'

Lab ID: 1604331-02

Volatile Organic Compounds in AIR by TO-15 (Canister) **Analyst: LT**

Analyte	Result (ug/m³)	PQL (ug/m³)	Dilution	Batch	Prepared	Date/Time Analyzed	Notes
Bromoform	ND	6	2.5	B6L0222	12/05/2016	12/05/16 16:47	
Bromomethane	ND	2	2.5	B6L0222	12/05/2016	12/05/16 16:47	
Carbon disulfide	ND	2	2.5	B6L0222	12/05/2016	12/05/16 16:47	
Carbon tetrachloride	ND	4	2.5	B6L0222	12/05/2016	12/05/16 16:47	
Chlorobenzene	ND	3	2.5	B6L0222	12/05/2016	12/05/16 16:47	
Chloroethane	ND	2	2.5	B6L0222	12/05/2016	12/05/16 16:47	
Chloroform	ND	3	2.5	B6L0222	12/05/2016	12/05/16 16:47	
Chloromethane	ND	1	2.5	B6L0222	12/05/2016	12/05/16 16:47	
cis-1,2-Dichloroethene	ND	2	2.5	B6L0222	12/05/2016	12/05/16 16:47	
cis-1,3-Dichloropropene	ND	3	2.5	B6L0222	12/05/2016	12/05/16 16:47	
Cyclohexane	ND	2	2.5	B6L0222	12/05/2016	12/05/16 16:47	
Dibromochloromethane	ND	5	2.5	B6L0222	12/05/2016	12/05/16 16:47	
Dibromomethane	ND	4	2.5	B6L0222	12/05/2016	12/05/16 16:47	
Dichlorodifluoromethane	**4**	3	2.5	B6L0222	12/05/2016	12/05/16 16:47	
Dichlorotetrafluoroethane	ND	4	2.5	B6L0222	12/05/2016	12/05/16 16:47	
Ethanol	**2**	1	2.5	B6L0222	12/05/2016	12/05/16 16:47	
Ethylbenzene	ND	3	2.5	B6L0222	12/05/2016	12/05/16 16:47	
Freon-113	ND	5	2.5	B6L0222	12/05/2016	12/05/16 16:47	
Hexachlorobutadiene	ND	7	2.5	B6L0222	12/05/2016	12/05/16 16:47	
Isopropylbenzene	ND	3	2.5	B6L0222	12/05/2016	12/05/16 16:47	
m,p-Xylene	ND	10	2.5	B6L0222	12/05/2016	12/05/16 16:47	
Methylene chloride	ND	2	2.5	B6L0222	12/05/2016	12/05/16 16:47	
MTBE	ND	2	2.5	B6L0222	12/05/2016	12/05/16 16:47	
n-Butylbenzene	ND	3	2.5	B6L0222	12/05/2016	12/05/16 16:47	
n-Propylbenzene	ND	3	2.5	B6L0222	12/05/2016	12/05/16 16:47	
Naphthalene	ND	3	2.5	B6L0222	12/05/2016	12/05/16 16:47	
o-Xylene	ND	3	2.5	B6L0222	12/05/2016	12/05/16 16:47	
p-Isopropyltoluene	ND	3	2.5	B6L0222	12/05/2016	12/05/16 16:47	
sec-Butylbenzene	ND	3	2.5	B6L0222	12/05/2016	12/05/16 16:47	
Styrene	ND	3	2.5	B6L0222	12/05/2016	12/05/16 16:47	
tert-Butylbenzene	ND	3	2.5	B6L0222	12/05/2016	12/05/16 16:47	
Tetrachloroethene	**9**	4	2.5	B6L0222	12/05/2016	12/05/16 16:47	
Toluene	**60**	2	2.5	B6L0222	12/05/2016	12/05/16 16:47	
trans-1,2-Dichloroethene	ND	2	2.5	B6L0222	12/05/2016	12/05/16 16:47	
trans-1,3-Dichloropropene	ND	3	2.5	B6L0222	12/05/2016	12/05/16 16:47	
Trichloroethene	ND	3	2.5	B6L0222	12/05/2016	12/05/16 16:47	
Trichlorofluoromethane	**20**	4	2.5	B6L0222	12/05/2016	12/05/16 16:47	

Certificate of Analysis

Hushmand Associates, Inc.	Project Number : Parcel 32 6th St Bridge, 15-003
250 Goddard	Report To : Naresh Bellana
Irvine , CA 92618	Reported : 03/26/2018

Client Sample ID VMW-2 5'

Lab ID: 1604331-02

Volatile Organic Compounds in AIR by TO-15 (Canister) **Analyst: LT**

Analyte		Result (ug/m³)	PQL (ug/m³)	Dilution	Batch	Prepared	Date/Time Analyzed	Notes
Vinyl acetate		ND	2	2.5	B6L0222	12/05/2016	12/05/16 16:47	
Vinyl chloride		ND	2	2.5	B6L0222	12/05/2016	12/05/16 16:47	
Surrogate: 4-Bromofluorobenzene	*93.6 %*		*79.2 - 147*		B6L0286	12/06/2016	*12/06/16 17:07*	
Surrogate: 4-Bromofluorobenzene	*98.8 %*		*79.2 - 147*		B6L0222	12/05/2016	*12/05/16 16:47*	

Gasoline Range Organics in Air by TO-3 **Analyst: LT**

Analyte		Result (ug/m³)	PQL (ug/m³)	Dilution	Batch	Prepared	Date/Time Analyzed	Notes
Gasoline Range Organics		ND	260	2.5	B6L0202	12/05/2016	12/05/16 16:47	D1
Surrogate: 4-Bromofluorobenzene	*90.4 %*		*70 - 130*		B6L0202	12/05/2016	*12/05/16 16:47*	

Certificate of Analysis

Hushmand Associates, Inc.	Project Number : Parcel 32 6th St Bridge, 15-003
250 Goddard	Report To : Naresh Bellana
Irvine , CA 92618	Reported : 03/26/2018

Client Sample ID VMW-3 15'

Lab ID: 1604331-03

Volatile Organic Compounds in AIR by TO-15 (Canister) **Analyst: LT**

Analyte	Result (ug/m³)	PQL (ug/m³)	Dilution	Batch	Prepared	Date/Time Analyzed	Notes
1,1,1,2-Tetrachloroethane	ND	4	2.5	B6L0222	12/05/2016	12/05/16 17:29	
1,1,1-Trichloroethane	**7**	3	2.5	B6L0222	12/05/2016	12/05/16 17:29	
1,1,2,2-Tetrachloroethane	ND	4	2.5	B6L0222	12/05/2016	12/05/16 17:29	
1,1,2-Trichloroethane	ND	3	2.5	B6L0222	12/05/2016	12/05/16 17:29	
1,1-Dichloroethane	ND	3	2.5	B6L0222	12/05/2016	12/05/16 17:29	
1,1-Dichloroethene	ND	2	2.5	B6L0222	12/05/2016	12/05/16 17:29	
1,1-Dichloropropene	ND	3	2.5	B6L0222	12/05/2016	12/05/16 17:29	
1,2,3-Trichloropropane	ND	4	2.5	B6L0222	12/05/2016	12/05/16 17:29	
1,2,4-Trichlorobenzene	ND	5	2.5	B6L0222	12/05/2016	12/05/16 17:29	
1,2,4-Trimethylbenzene	ND	3	2.5	B6L0222	12/05/2016	12/05/16 17:29	
1,2-Dibromo-3-chloropropane	ND	6	2.5	B6L0222	12/05/2016	12/05/16 17:29	
1,2-Dibromoethane	ND	5	2.5	B6L0222	12/05/2016	12/05/16 17:29	
1,2-Dichlorobenzene	ND	4	2.5	B6L0222	12/05/2016	12/05/16 17:29	
1,2-Dichloroethane	ND	3	2.5	B6L0222	12/05/2016	12/05/16 17:29	
1,2-Dichloropropane	ND	3	2.5	B6L0222	12/05/2016	12/05/16 17:29	
1,3,5-Trimethylbenzene	ND	3	2.5	B6L0222	12/05/2016	12/05/16 17:29	
1,3-Butadiene	ND	1	2.5	B6L0222	12/05/2016	12/05/16 17:29	
1,3-Dichlorobenzene	**4**	4	2.5	B6L0222	12/05/2016	12/05/16 17:29	
1,4-Dichlorobenzene	ND	4	2.5	B6L0222	12/05/2016	12/05/16 17:29	
1,4-Dioxane	ND	2	2.5	B6L0222	12/05/2016	12/05/16 17:29	
2,2,4-Trimethylpentane	ND	3	2.5	B6L0222	12/05/2016	12/05/16 17:29	
2-Butanone	**7**	2	2.5	B6L0222	12/05/2016	12/05/16 17:29	
2-Chloroethyl vinyl ether	ND	3	2.5	B6L0222	12/05/2016	12/05/16 17:29	
2-Chlorotoluene	ND	3	2.5	B6L0222	12/05/2016	12/05/16 17:29	
2-Hexanone	ND	3	2.5	B6L0222	12/05/2016	12/05/16 17:29	
2-Propanol	**2000**	120	200	B6L0286	12/06/2016	12/06/16 17:48	
4-Chlorotoluene	ND	3	2.5	B6L0222	12/05/2016	12/05/16 17:29	
4-Ethyl Toluene	ND	3	2.5	B6L0222	12/05/2016	12/05/16 17:29	
4-Methyl-2-pentanone	ND	3	2.5	B6L0222	12/05/2016	12/05/16 17:29	
Acetone	**100**	1	2.5	B6L0222	12/05/2016	12/05/16 17:29	
Acetonitrile	ND	1	2.5	B6L0222	12/05/2016	12/05/16 17:29	
Acrolein	ND	1	2.5	B6L0222	12/05/2016	12/05/16 17:29	
Acrylonitrile	ND	1	2.5	B6L0222	12/05/2016	12/05/16 17:29	
Benzene	**30**	2	2.5	B6L0222	12/05/2016	12/05/16 17:29	
Benzyl chloride	ND	3	2.5	B6L0222	12/05/2016	12/05/16 17:29	
Bromobenzene	ND	4	2.5	B6L0222	12/05/2016	12/05/16 17:29	
Bromodichloromethane	ND	4	2.5	B6L0222	12/05/2016	12/05/16 17:29	

Certificate of Analysis

Hushmand Associates, Inc.	Project Number : Parcel 32 6th St Bridge, 15-003
250 Goddard	Report To : Naresh Bellana
Irvine , CA 92618	Reported : 03/26/2018

Client Sample ID VMW-3 15'

Lab ID: 1604331-03

Volatile Organic Compounds in AIR by TO-15 (Canister) **Analyst: LT**

Analyte	Result (ug/m³)	PQL (ug/m³)	Dilution	Batch	Prepared	Date/Time Analyzed	Notes
Bromoform	ND	6	2.5	B6L0222	12/05/2016	12/05/16 17:29	
Bromomethane	ND	2	2.5	B6L0222	12/05/2016	12/05/16 17:29	
Carbon disulfide	**20**	2	2.5	B6L0222	12/05/2016	12/05/16 17:29	
Carbon tetrachloride	ND	4	2.5	B6L0222	12/05/2016	12/05/16 17:29	
Chlorobenzene	ND	3	2.5	B6L0222	12/05/2016	12/05/16 17:29	
Chloroethane	**5**	2	2.5	B6L0222	12/05/2016	12/05/16 17:29	
Chloroform	ND	3	2.5	B6L0222	12/05/2016	12/05/16 17:29	
Chloromethane	**3**	1	2.5	B6L0222	12/05/2016	12/05/16 17:29	
cis-1,2-Dichloroethene	ND	2	2.5	B6L0222	12/05/2016	12/05/16 17:29	
cis-1,3-Dichloropropene	ND	3	2.5	B6L0222	12/05/2016	12/05/16 17:29	
Cyclohexane	ND	2	2.5	B6L0222	12/05/2016	12/05/16 17:29	
Dibromochloromethane	ND	5	2.5	B6L0222	12/05/2016	12/05/16 17:29	
Dibromomethane	ND	4	2.5	B6L0222	12/05/2016	12/05/16 17:29	
Dichlorodifluoromethane	**4**	3	2.5	B6L0222	12/05/2016	12/05/16 17:29	
Dichlorotetrafluoroethane	ND	4	2.5	B6L0222	12/05/2016	12/05/16 17:29	
Ethanol	**10**	1	2.5	B6L0222	12/05/2016	12/05/16 17:29	
Ethylbenzene	**3**	3	2.5	B6L0222	12/05/2016	12/05/16 17:29	
Freon-113	ND	5	2.5	B6L0222	12/05/2016	12/05/16 17:29	
Hexachlorobutadiene	ND	7	2.5	B6L0222	12/05/2016	12/05/16 17:29	
Isopropylbenzene	ND	3	2.5	B6L0222	12/05/2016	12/05/16 17:29	
m,p-Xylene	**10**	10	2.5	B6L0222	12/05/2016	12/05/16 17:29	
Methylene chloride	ND	2	2.5	B6L0222	12/05/2016	12/05/16 17:29	
MTBE	ND	2	2.5	B6L0222	12/05/2016	12/05/16 17:29	
n-Butylbenzene	ND	3	2.5	B6L0222	12/05/2016	12/05/16 17:29	
n-Propylbenzene	ND	3	2.5	B6L0222	12/05/2016	12/05/16 17:29	
Naphthalene	ND	3	2.5	B6L0222	12/05/2016	12/05/16 17:29	
o-Xylene	ND	3	2.5	B6L0222	12/05/2016	12/05/16 17:29	
p-Isopropyltoluene	ND	3	2.5	B6L0222	12/05/2016	12/05/16 17:29	
sec-Butylbenzene	ND	3	2.5	B6L0222	12/05/2016	12/05/16 17:29	
Styrene	ND	3	2.5	B6L0222	12/05/2016	12/05/16 17:29	
tert-Butylbenzene	ND	3	2.5	B6L0222	12/05/2016	12/05/16 17:29	
Tetrachloroethene	**9**	4	2.5	B6L0222	12/05/2016	12/05/16 17:29	
Toluene	**70**	2	2.5	B6L0222	12/05/2016	12/05/16 17:29	
trans-1,2-Dichloroethene	ND	2	2.5	B6L0222	12/05/2016	12/05/16 17:29	
trans-1,3-Dichloropropene	ND	3	2.5	B6L0222	12/05/2016	12/05/16 17:29	
Trichloroethene	ND	3	2.5	B6L0222	12/05/2016	12/05/16 17:29	
Trichlorofluoromethane	**10**	4	2.5	B6L0222	12/05/2016	12/05/16 17:29	

Certificate of Analysis

Hushmand Associates, Inc.	Project Number : Parcel 32 6th St Bridge, 15-003
250 Goddard	Report To : Naresh Bellana
Irvine , CA 92618	Reported : 03/26/2018

Client Sample ID VMW-3 15'
Lab ID: 1604331-03

Volatile Organic Compounds in AIR by TO-15 (Canister)

Analyst: LT

Analyte		Result (ug/m³)	PQL (ug/m³)	Dilution	Batch	Prepared	Date/Time Analyzed	Notes
Vinyl acetate		ND	2	2.5	B6L0222	12/05/2016	12/05/16 17:29	
Vinyl chloride		ND	2	2.5	B6L0222	12/05/2016	12/05/16 17:29	
Surrogate: 4-Bromofluorobenzene	*118 %*		*79.2 - 147*		B6L0222	12/05/2016	*12/05/16 17:29*	
Surrogate: 4-Bromofluorobenzene	*99.2 %*		*79.2 - 147*		B6L0286	12/06/2016	*12/06/16 17:48*	

Gasoline Range Organics in Air by TO-3

Analyst: LT

Analyte		Result (ug/m³)	PQL (ug/m³)	Dilution	Batch	Prepared	Date/Time Analyzed	Notes
Gasoline Range Organics		**450**	260	2.5	B6L0202	12/05/2016	12/05/16 17:29	
Surrogate: 4-Bromofluorobenzene	*80.0 %*		*70 - 130*		B6L0202	12/05/2016	*12/05/16 17:29*	

Certificate of Analysis

Hushmand Associates, Inc.	Project Number : Parcel 32 6th St Bridge, 15-003
250 Goddard	Report To : Naresh Bellana
Irvine , CA 92618	Reported : 03/26/2018

Client Sample ID VMW-3 Dupl. 15'
Lab ID: 1604331-04

Volatile Organic Compounds in AIR by TO-15 (Canister) **Analyst: LT**

Analyte	Result (ug/m³)	PQL (ug/m³)	Dilution	Batch	Prepared	Date/Time Analyzed	Notes
1,1,1,2-Tetrachloroethane	ND	4	2.5	B6L0222	12/05/2016	12/05/16 18:12	
1,1,1-Trichloroethane	**6**	3	2.5	B6L0222	12/05/2016	12/05/16 18:12	
1,1,2,2-Tetrachloroethane	ND	4	2.5	B6L0222	12/05/2016	12/05/16 18:12	
1,1,2-Trichloroethane	ND	3	2.5	B6L0222	12/05/2016	12/05/16 18:12	
1,1-Dichloroethane	ND	3	2.5	B6L0222	12/05/2016	12/05/16 18:12	
1,1-Dichloroethene	ND	2	2.5	B6L0222	12/05/2016	12/05/16 18:12	
1,1-Dichloropropene	ND	3	2.5	B6L0222	12/05/2016	12/05/16 18:12	
1,2,3-Trichloropropane	ND	4	2.5	B6L0222	12/05/2016	12/05/16 18:12	
1,2,4-Trichlorobenzene	ND	5	2.5	B6L0222	12/05/2016	12/05/16 18:12	
1,2,4-Trimethylbenzene	ND	3	2.5	B6L0222	12/05/2016	12/05/16 18:12	
1,2-Dibromo-3-chloropropane	ND	6	2.5	B6L0222	12/05/2016	12/05/16 18:12	
1,2-Dibromoethane	ND	5	2.5	B6L0222	12/05/2016	12/05/16 18:12	
1,2-Dichlorobenzene	ND	4	2.5	B6L0222	12/05/2016	12/05/16 18:12	
1,2-Dichloroethane	ND	3	2.5	B6L0222	12/05/2016	12/05/16 18:12	
1,2-Dichloropropane	ND	3	2.5	B6L0222	12/05/2016	12/05/16 18:12	
1,3,5-Trimethylbenzene	ND	3	2.5	B6L0222	12/05/2016	12/05/16 18:12	
1,3-Butadiene	ND	1	2.5	B6L0222	12/05/2016	12/05/16 18:12	
1,3-Dichlorobenzene	**7**	4	2.5	B6L0222	12/05/2016	12/05/16 18:12	
1,4-Dichlorobenzene	ND	4	2.5	B6L0222	12/05/2016	12/05/16 18:12	
1,4-Dioxane	ND	2	2.5	B6L0222	12/05/2016	12/05/16 18:12	
2,2,4-Trimethylpentane	ND	3	2.5	B6L0222	12/05/2016	12/05/16 18:12	
2-Butanone	**6**	2	2.5	B6L0222	12/05/2016	12/05/16 18:12	
2-Chloroethyl vinyl ether	ND	3	2.5	B6L0222	12/05/2016	12/05/16 18:12	
2-Chlorotoluene	ND	3	2.5	B6L0222	12/05/2016	12/05/16 18:12	
2-Hexanone	ND	3	2.5	B6L0222	12/05/2016	12/05/16 18:12	
2-Propanol	**12000**	180	300	B6L0286	12/06/2016	12/06/16 18:28	
4-Chlorotoluene	ND	3	2.5	B6L0222	12/05/2016	12/05/16 18:12	
4-Ethyl Toluene	ND	3	2.5	B6L0222	12/05/2016	12/05/16 18:12	
4-Methyl-2-pentanone	ND	3	2.5	B6L0222	12/05/2016	12/05/16 18:12	
Acetone	**100**	1	2.5	B6L0222	12/05/2016	12/05/16 18:12	
Acetonitrile	**5**	1	2.5	B6L0222	12/05/2016	12/05/16 18:12	
Acrolein	ND	1	2.5	B6L0222	12/05/2016	12/05/16 18:12	
Acrylonitrile	ND	1	2.5	B6L0222	12/05/2016	12/05/16 18:12	
Benzene	**20**	2	2.5	B6L0222	12/05/2016	12/05/16 18:12	
Benzyl chloride	ND	3	2.5	B6L0222	12/05/2016	12/05/16 18:12	
Bromobenzene	ND	4	2.5	B6L0222	12/05/2016	12/05/16 18:12	
Bromodichloromethane	ND	4	2.5	B6L0222	12/05/2016	12/05/16 18:12	

Certificate of Analysis

Hushmand Associates, Inc.	Project Number : Parcel 32 6th St Bridge, 15-003
250 Goddard	Report To : Naresh Bellana
Irvine , CA 92618	Reported : 03/26/2018

Client Sample ID VMW-3 Dupl. 15'
Lab ID: 1604331-04

Volatile Organic Compounds in AIR by TO-15 (Canister) **Analyst: LT**

Analyte	Result (ug/m³)	PQL (ug/m³)	Dilution	Batch	Prepared	Date/Time Analyzed	Notes
Bromoform	ND	6	2.5	B6L0222	12/05/2016	12/05/16 18:12	
Bromomethane	ND	2	2.5	B6L0222	12/05/2016	12/05/16 18:12	
Carbon disulfide	**20**	2	2.5	B6L0222	12/05/2016	12/05/16 18:12	
Carbon tetrachloride	ND	4	2.5	B6L0222	12/05/2016	12/05/16 18:12	
Chlorobenzene	ND	3	2.5	B6L0222	12/05/2016	12/05/16 18:12	
Chloroethane	**4**	2	2.5	B6L0222	12/05/2016	12/05/16 18:12	
Chloroform	ND	3	2.5	B6L0222	12/05/2016	12/05/16 18:12	
Chloromethane	**3**	1	2.5	B6L0222	12/05/2016	12/05/16 18:12	
cis-1,2-Dichloroethene	ND	2	2.5	B6L0222	12/05/2016	12/05/16 18:12	
cis-1,3-Dichloropropene	ND	3	2.5	B6L0222	12/05/2016	12/05/16 18:12	
Cyclohexane	ND	2	2.5	B6L0222	12/05/2016	12/05/16 18:12	
Dibromochloromethane	ND	5	2.5	B6L0222	12/05/2016	12/05/16 18:12	
Dibromomethane	ND	4	2.5	B6L0222	12/05/2016	12/05/16 18:12	
Dichlorodifluoromethane	**4**	3	2.5	B6L0222	12/05/2016	12/05/16 18:12	
Dichlorotetrafluoroethane	ND	4	2.5	B6L0222	12/05/2016	12/05/16 18:12	
Ethanol	**20**	1	2.5	B6L0222	12/05/2016	12/05/16 18:12	
Ethylbenzene	**3**	3	2.5	B6L0222	12/05/2016	12/05/16 18:12	
Freon-113	ND	5	2.5	B6L0222	12/05/2016	12/05/16 18:12	
Hexachlorobutadiene	ND	7	2.5	B6L0222	12/05/2016	12/05/16 18:12	
Isopropylbenzene	ND	3	2.5	B6L0222	12/05/2016	12/05/16 18:12	
m,p-Xylene	**20**	10	2.5	B6L0222	12/05/2016	12/05/16 18:12	
Methylene chloride	ND	2	2.5	B6L0222	12/05/2016	12/05/16 18:12	
MTBE	ND	2	2.5	B6L0222	12/05/2016	12/05/16 18:12	
n-Butylbenzene	ND	3	2.5	B6L0222	12/05/2016	12/05/16 18:12	
n-Propylbenzene	ND	3	2.5	B6L0222	12/05/2016	12/05/16 18:12	
Naphthalene	ND	3	2.5	B6L0222	12/05/2016	12/05/16 18:12	
o-Xylene	ND	3	2.5	B6L0222	12/05/2016	12/05/16 18:12	
p-Isopropyltoluene	ND	3	2.5	B6L0222	12/05/2016	12/05/16 18:12	
sec-Butylbenzene	ND	3	2.5	B6L0222	12/05/2016	12/05/16 18:12	
Styrene	ND	3	2.5	B6L0222	12/05/2016	12/05/16 18:12	
tert-Butylbenzene	ND	3	2.5	B6L0222	12/05/2016	12/05/16 18:12	
Tetrachloroethene	**7**	4	2.5	B6L0222	12/05/2016	12/05/16 18:12	
Toluene	**190**	9	10	B6L0222	12/05/2016	12/05/16 22:20	
trans-1,2-Dichloroethene	ND	2	2.5	B6L0222	12/05/2016	12/05/16 18:12	
trans-1,3-Dichloropropene	ND	3	2.5	B6L0222	12/05/2016	12/05/16 18:12	
Trichloroethene	ND	3	2.5	B6L0222	12/05/2016	12/05/16 18:12	
Trichlorofluoromethane	**10**	4	2.5	B6L0222	12/05/2016	12/05/16 18:12	

Certificate of Analysis

Hushmand Associates, Inc.	Project Number : Parcel 32 6th St Bridge, 15-003
250 Goddard	Report To : Naresh Bellana
Irvine , CA 92618	Reported : 03/26/2018

Client Sample ID VMW-3 Dupl. 15'
Lab ID: 1604331-04

Volatile Organic Compounds in AIR by TO-15 (Canister)

Analyst: LT

Analyte		Result (ug/m³)	PQL (ug/m³)	Dilution	Batch	Prepared	Date/Time Analyzed	Notes
Vinyl acetate		ND	2	2.5	B6L0222	12/05/2016	12/05/16 18:12	
Vinyl chloride		ND	2	2.5	B6L0222	12/05/2016	12/05/16 18:12	
Surrogate: 4-Bromofluorobenzene	*116 %*		*79.2 - 147*		B6L0222	12/05/2016	*12/05/16 22:20*	
Surrogate: 4-Bromofluorobenzene	*101 %*		*79.2 - 147*		B6L0286	12/06/2016	*12/06/16 18:28*	
Surrogate: 4-Bromofluorobenzene	*102 %*		*79.2 - 147*		B6L0222	12/05/2016	*12/05/16 18:12*	

Gasoline Range Organics in Air by TO-3

Analyst: LT

Analyte		Result (ug/m³)	PQL (ug/m³)	Dilution	Batch	Prepared	Date/Time Analyzed	Notes
Gasoline Range Organics		**850**	260	2.5	B6L0202	12/05/2016	12/05/16 18:12	
Surrogate: 4-Bromofluorobenzene	*82.8 %*		*70 - 130*		B6L0202	12/05/2016	*12/05/16 18:12*	

Certificate of Analysis

Hushmand Associates, Inc.	Project Number : Parcel 32 6th St Bridge, 15-003
250 Goddard	Report To : Naresh Bellana
Irvine , CA 92618	Reported : 03/26/2018

Client Sample ID VMW-4 10'

Lab ID: 1604331-05

Volatile Organic Compounds in AIR by TO-15 (Canister) **Analyst: LT**

Analyte	Result (ug/m³)	PQL (ug/m³)	Dilution	Batch	Prepared	Date/Time Analyzed	Notes
1,1,1,2-Tetrachloroethane	ND	4	2.5	B6L0222	12/05/2016	12/05/16 18:56	
1,1,1-Trichloroethane	ND	3	2.5	B6L0222	12/05/2016	12/05/16 18:56	
1,1,2,2-Tetrachloroethane	ND	4	2.5	B6L0222	12/05/2016	12/05/16 18:56	
1,1,2-Trichloroethane	ND	3	2.5	B6L0222	12/05/2016	12/05/16 18:56	
1,1-Dichloroethane	ND	3	2.5	B6L0222	12/05/2016	12/05/16 18:56	
1,1-Dichloroethene	ND	2	2.5	B6L0222	12/05/2016	12/05/16 18:56	
1,1-Dichloropropene	ND	3	2.5	B6L0222	12/05/2016	12/05/16 18:56	
1,2,3-Trichloropropane	ND	4	2.5	B6L0222	12/05/2016	12/05/16 18:56	
1,2,4-Trichlorobenzene	ND	5	2.5	B6L0222	12/05/2016	12/05/16 18:56	
1,2,4-Trimethylbenzene	ND	3	2.5	B6L0222	12/05/2016	12/05/16 18:56	
1,2-Dibromo-3-chloropropane	ND	6	2.5	B6L0222	12/05/2016	12/05/16 18:56	
1,2-Dibromoethane	ND	5	2.5	B6L0222	12/05/2016	12/05/16 18:56	
1,2-Dichlorobenzene	ND	4	2.5	B6L0222	12/05/2016	12/05/16 18:56	
1,2-Dichloroethane	ND	3	2.5	B6L0222	12/05/2016	12/05/16 18:56	
1,2-Dichloropropane	ND	3	2.5	B6L0222	12/05/2016	12/05/16 18:56	
1,3,5-Trimethylbenzene	ND	3	2.5	B6L0222	12/05/2016	12/05/16 18:56	
1,3-Butadiene	ND	1	2.5	B6L0222	12/05/2016	12/05/16 18:56	
1,3-Dichlorobenzene	ND	4	2.5	B6L0222	12/05/2016	12/05/16 18:56	
1,4-Dichlorobenzene	ND	4	2.5	B6L0222	12/05/2016	12/05/16 18:56	
1,4-Dioxane	ND	2	2.5	B6L0222	12/05/2016	12/05/16 18:56	
2,2,4-Trimethylpentane	ND	3	2.5	B6L0222	12/05/2016	12/05/16 18:56	
2-Butanone	ND	2	2.5	B6L0222	12/05/2016	12/05/16 18:56	
2-Chloroethyl vinyl ether	ND	3	2.5	B6L0222	12/05/2016	12/05/16 18:56	
2-Chlorotoluene	ND	3	2.5	B6L0222	12/05/2016	12/05/16 18:56	
2-Hexanone	ND	3	2.5	B6L0222	12/05/2016	12/05/16 18:56	
2-Propanol	**4800**	120	200	B6L0286	12/06/2016	12/06/16 19:06	
4-Chlorotoluene	ND	3	2.5	B6L0222	12/05/2016	12/05/16 18:56	
4-Ethyl Toluene	ND	3	2.5	B6L0222	12/05/2016	12/05/16 18:56	
4-Methyl-2-pentanone	ND	3	2.5	B6L0222	12/05/2016	12/05/16 18:56	
Acetone	**30**	1	2.5	B6L0222	12/05/2016	12/05/16 18:56	
Acetonitrile	ND	1	2.5	B6L0222	12/05/2016	12/05/16 18:56	
Acrolein	ND	1	2.5	B6L0222	12/05/2016	12/05/16 18:56	
Acrylonitrile	ND	1	2.5	B6L0222	12/05/2016	12/05/16 18:56	
Benzene	ND	2	2.5	B6L0222	12/05/2016	12/05/16 18:56	
Benzyl chloride	ND	3	2.5	B6L0222	12/05/2016	12/05/16 18:56	
Bromobenzene	ND	4	2.5	B6L0222	12/05/2016	12/05/16 18:56	
Bromodichloromethane	ND	4	2.5	B6L0222	12/05/2016	12/05/16 18:56	

Certificate of Analysis

Hushmand Associates, Inc.	Project Number : Parcel 32 6th St Bridge, 15-003
250 Goddard	Report To : Naresh Bellana
Irvine , CA 92618	Reported : 03/26/2018

Client Sample ID VMW-4 10'

Lab ID: 1604331-05

Volatile Organic Compounds in AIR by TO-15 (Canister) **Analyst: LT**

Analyte	Result (ug/m³)	PQL (ug/m³)	Dilution	Batch	Prepared	Date/Time Analyzed	Notes
Bromoform	ND	6	2.5	B6L0222	12/05/2016	12/05/16 18:56	
Bromomethane	ND	2	2.5	B6L0222	12/05/2016	12/05/16 18:56	
Carbon disulfide	ND	2	2.5	B6L0222	12/05/2016	12/05/16 18:56	
Carbon tetrachloride	ND	4	2.5	B6L0222	12/05/2016	12/05/16 18:56	
Chlorobenzene	ND	3	2.5	B6L0222	12/05/2016	12/05/16 18:56	
Chloroethane	ND	2	2.5	B6L0222	12/05/2016	12/05/16 18:56	
Chloroform	ND	3	2.5	B6L0222	12/05/2016	12/05/16 18:56	
Chloromethane	ND	1	2.5	B6L0222	12/05/2016	12/05/16 18:56	
cis-1,2-Dichloroethene	ND	2	2.5	B6L0222	12/05/2016	12/05/16 18:56	
cis-1,3-Dichloropropene	ND	3	2.5	B6L0222	12/05/2016	12/05/16 18:56	
Cyclohexane	ND	2	2.5	B6L0222	12/05/2016	12/05/16 18:56	
Dibromochloromethane	ND	5	2.5	B6L0222	12/05/2016	12/05/16 18:56	
Dibromomethane	ND	4	2.5	B6L0222	12/05/2016	12/05/16 18:56	
Dichlorodifluoromethane	ND	3	2.5	B6L0222	12/05/2016	12/05/16 18:56	
Dichlorotetrafluoroethane	ND	4	2.5	B6L0222	12/05/2016	12/05/16 18:56	
Ethanol	ND	1	2.5	B6L0222	12/05/2016	12/05/16 18:56	
Ethylbenzene	ND	3	2.5	B6L0222	12/05/2016	12/05/16 18:56	
Freon-113	ND	5	2.5	B6L0222	12/05/2016	12/05/16 18:56	
Hexachlorobutadiene	ND	7	2.5	B6L0222	12/05/2016	12/05/16 18:56	
Isopropylbenzene	ND	3	2.5	B6L0222	12/05/2016	12/05/16 18:56	
m,p-Xylene	ND	10	2.5	B6L0222	12/05/2016	12/05/16 18:56	
Methylene chloride	ND	2	2.5	B6L0222	12/05/2016	12/05/16 18:56	
MTBE	ND	2	2.5	B6L0222	12/05/2016	12/05/16 18:56	
n-Butylbenzene	ND	3	2.5	B6L0222	12/05/2016	12/05/16 18:56	
n-Propylbenzene	ND	3	2.5	B6L0222	12/05/2016	12/05/16 18:56	
Naphthalene	ND	3	2.5	B6L0222	12/05/2016	12/05/16 18:56	
o-Xylene	ND	3	2.5	B6L0222	12/05/2016	12/05/16 18:56	
p-Isopropyltoluene	ND	3	2.5	B6L0222	12/05/2016	12/05/16 18:56	
sec-Butylbenzene	ND	3	2.5	B6L0222	12/05/2016	12/05/16 18:56	
Styrene	ND	3	2.5	B6L0222	12/05/2016	12/05/16 18:56	
tert-Butylbenzene	ND	3	2.5	B6L0222	12/05/2016	12/05/16 18:56	
Tetrachloroethene	ND	4	2.5	B6L0222	12/05/2016	12/05/16 18:56	
Toluene	**90**	2	2.5	B6L0222	12/05/2016	12/05/16 18:56	
trans-1,2-Dichloroethene	ND	2	2.5	B6L0222	12/05/2016	12/05/16 18:56	
trans-1,3-Dichloropropene	ND	3	2.5	B6L0222	12/05/2016	12/05/16 18:56	
Trichloroethene	ND	3	2.5	B6L0222	12/05/2016	12/05/16 18:56	
Trichlorofluoromethane	**10**	4	2.5	B6L0222	12/05/2016	12/05/16 18:56	

Certificate of Analysis

Hushmand Associates, Inc.	Project Number : Parcel 32 6th St Bridge, 15-003
250 Goddard	Report To : Naresh Bellana
Irvine , CA 92618	Reported : 03/26/2018

Client Sample ID VMW-4 10'

Lab ID: 1604331-05

Volatile Organic Compounds in AIR by TO-15 (Canister)

Analyst: LT

Analyte		Result (ug/m³)	PQL (ug/m³)	Dilution	Batch	Prepared	Date/Time Analyzed	Notes
Vinyl acetate		ND	2	2.5	B6L0222	12/05/2016	12/05/16 18:56	
Vinyl chloride		ND	2	2.5	B6L0222	12/05/2016	12/05/16 18:56	
Surrogate: 4-Bromofluorobenzene	*92.0 %*		*79.2 - 147*		B6L0286	12/06/2016	*12/06/16 19:06*	
Surrogate: 4-Bromofluorobenzene	*104 %*		*79.2 - 147*		B6L0222	12/05/2016	*12/05/16 18:56*	

Gasoline Range Organics in Air by TO-3

Analyst: LT

Analyte		Result (ug/m³)	PQL (ug/m³)	Dilution	Batch	Prepared	Date/Time Analyzed	Notes
Gasoline Range Organics		**360**	260	2.5	B6L0202	12/05/2016	12/05/16 18:56	
Surrogate: 4-Bromofluorobenzene	*86.8 %*		*70 - 130*		B6L0202	12/05/2016	*12/05/16 18:56*	

Certificate of Analysis

Hushmand Associates, Inc.	Project Number : Parcel 32 6th St Bridge, 15-003
250 Goddard	Report To : Naresh Bellana
Irvine , CA 92618	Reported : 03/26/2018

QUALITY CONTROL SECTION

Volatile Organic Compounds in AIR by TO-15 (Canister) - Quality Control

Analyte	Result (ug/m³)	PQL (ug/m³)	MDL (ug/m³)	Spike Level	Source Result	% Rec	% Rec Limits	RPD	RPD Limit	Notes
Batch B6L0222 - No_Prep_AIR										
Blank (B6L0222-BLK1)					Prepared: 12/5/2016 Analyzed: 12/5/2016					
1,1,1,2-Tetrachloroethane	ND	2	0.57							
1,1,1-Trichloroethane	ND	1	0.58							
1,1,2,2-Tetrachloroethane	ND	2	0.77							
1,1,2-Trichloroethane	ND	1	0.45							
1,1-Dichloroethane	ND	1	0.37							
1,1-Dichloroethene	ND	0.99	0.34							
1,1-Dichloropropene	ND	1	0.37							
1,2,3-Trichloropropane	ND	2	0.58							
1,2,4-Trichlorobenzene	ND	2	0.73							
1,2,4-Trimethylbenzene	ND	1	0.54							
1,2-Dibromo-3-chloropropane	ND	2	1							
1,2-Dibromoethane	ND	2	0.73							
1,2-Dichlorobenzene	ND	2	0.54							
1,2-Dichloroethane	ND	1	0.34							
1,2-Dichloropropane	ND	1	0.41							
1,3,5-Trimethylbenzene	ND	1	0.51							
1,3-Butadiene	ND	0.55	0.39							
1,3-Dichlorobenzene	ND	2	0.56							
1,4-Dichlorobenzene	ND	2	0.51							
1,4-Dioxane	ND	0.90	0.65							
2,2,4-Trimethylpentane	ND	1	0.35							
2-Butanone	ND	0.74	0.24							
2-Chloroethyl vinyl ether	ND	1	0.22							
2-Chlorotoluene	ND	1	0.50							
2-Hexanone	ND	1	0.43							
2-Propanol	ND	0.61	0.26							
4-Chlorotoluene	ND	1	0.47							
4-Ethyl Toluene	ND	1	0.47							
4-Methyl-2-pentanone	ND	1	0.30							
Acetone	ND	0.59	0.26							
Acetonitrile	ND	0.42	0.14							
Acrolein	ND	0.57	0.22							
Acrylonitrile	ND	0.54	0.18							
Benzene	ND	0.80	0.28							
Benzyl chloride	ND	1	0.37							
Bromobenzene	ND	2	0.59							
Bromodichloromethane	ND	2	0.70							
Bromoform	ND	3	0.90							
Bromomethane	ND	0.97	0.46							

Hushmand Associates, Inc.	Project Number : Parcel 32 6th St Bridge, 15-003
250 Goddard	Report To : Naresh Bellana
Irvine , CA 92618	Reported : 03/26/2018

Volatile Organic Compounds in AIR by TO-15 (Canister) - Quality Control (cont'd)

Analyte	Result (ug/m³)	PQL (ug/m³)	MDL (ug/m³)	Spike Level	Source Result	% Rec	% Rec Limits	RPD	RPD Limit	Notes
Batch B6L0222 - No_Prep_AIR (continued)										
Blank (B6L0222-BLK1) - Continued					Prepared: 12/5/2016 Analyzed: 12/5/2016					
Carbon disulfide	ND	0.78	0.31							
Carbon tetrachloride	ND	2	0.43							
Chlorobenzene	ND	1	0.41							
Chloroethane	ND	0.66	0.28							
Chloroform	ND	1	0.50							
Chloromethane	ND	0.52	0.22							
cis-1,2-Dichloroethene	ND	0.99	0.28							
cis-1,3-Dichloropropene	ND	1	0.33							
Cyclohexane	ND	0.86	0.25							
Dibromochloromethane	ND	2	0.83							
Dibromomethane	ND	2	0.55							
Dichlorodifluoromethane	ND	1	0.56							
Dichlorotetrafluoroethane	ND	2	0.76							
Ethanol	ND	0.47	0.20							
Ethylbenzene	ND	1	0.35							
Freon-113	ND	2	0.58							
Hexachlorobutadiene	ND	3	1							
Isopropylbenzene	ND	1	0.52							
m,p-Xylene	ND	4	1							
Methylene chloride	ND	0.87	0.31							
MTBE	ND	0.90	0.33							
n-Butylbenzene	ND	1	0.42							
n-Propylbenzene	ND	1	0.41							
Naphthalene	ND	1	0.36							
o-Xylene	ND	1	0.40							
p-Isopropyltoluene	ND	1	0.51							
sec-Butylbenzene	ND	1	0.56							
Styrene	ND	1	0.44							
tert-Butylbenzene	ND	1	0.62							
Tetrachloroethene	ND	2	0.47							
Toluene	ND	0.94	0.28							
trans-1,2-Dichloroethene	ND	0.99	0.34							
trans-1,3-Dichloropropene	ND	1	0.34							
Trichloroethene	ND	1	0.47							
Trichlorofluoromethane	ND	1	0.53							
Vinyl acetate	ND	0.88	0.38							
Vinyl chloride	ND	0.64	0.21							
Surrogate: 4-Bromofluorobenzene	*17.61*			*17.8935*		*98.4*	*79.2 - 147*			
LCS (B6L0222-BS1)					Prepared: 12/5/2016 Analyzed: 12/5/2016					
1,1,1,2-Tetrachloroethane	14.348	2	0.57	13.7299		104	70 - 130			

Hushmand Associates, Inc.
250 Goddard
Irvine , CA 92618

Project Number : Parcel 32 6th St Bridge, 15-003
Report To : Naresh Bellana
Reported : 03/26/2018

Volatile Organic Compounds in AIR by TO-15 (Canister) - Quality Control (cont'd)

Analyte	Result (ug/m³)	PQL (ug/m³)	MDL (ug/m³)	Spike Level	Source Result	% Rec	% Rec Limits	RPD	RPD Limit	Notes
Batch B6L0222 - No_Prep_AIR (continued)										
LCS (B6L0222-BS1) - Continued					Prepared: 12/5/2016 Analyzed: 12/5/2016					
1,1,1-Trichloroethane	10.203	1	0.58	10.9123		93.5	70 - 130			
1,1,2,2-Tetrachloroethane	13.730	2	0.77	13.7299		100	70 - 130			
1,1,2-Trichloroethane	9.221	1	0.45	10.9123		84.5	70 - 130			
1,1-Dichloroethane	7.123	1	0.37	8.09480		88.0	70 - 130			
1,1-Dichloroethene	6.225	0.99	0.34	7.92990		78.5	70 - 130			
1,1-Dichloropropene	9.168	1	0.37	9.07722		101	70 - 130			
1,2,3-Trichloropropane	22.250	2	0.58	12.0597		184	70 - 130			L5
1,2,4-Trichlorobenzene	35.176	2	0.73	14.8422		237	70 - 130			L5
1,2,4-Trimethylbenzene	10.323	1	0.54	9.83166		105	70 - 130			
1,2-Dibromo-3-chloropropane	42.337	2	1	19.3319		219	70 - 130			L5
1,2-Dibromoethane	13.523	2	0.73	15.3670		88.0	70 - 130			
1,2-Dichlorobenzene	11.423	2	0.54	12.0246		95.0	70 - 130			
1,2-Dichloroethane	8.135	1	0.34	8.09480		100	70 - 130			
1,2-Dichloropropane	7.717	1	0.41	9.24213		83.5	70 - 130			
1,3,5-Trimethylbenzene	9.930	1	0.51	9.83166		101	70 - 130			
1,3-Butadiene	4.026	0.55	0.39	4.42454		91.0	70 - 130			
1,3-Dichlorobenzene	11.964	2	0.56	12.0246		99.5	70 - 130			
1,4-Dichlorobenzene	11.544	2	0.51	12.0246		96.0	70 - 130			
1,4-Dioxane	6.811	0.90	0.65	7.20695		94.5	70 - 130			
2,2,4-Trimethylpentane	8.643	1	0.35	9.34388		92.5	70 - 130			
2-Butanone	5.014	0.74	0.24	5.89824		85.0	70 - 130			
2-Chloroethyl vinyl ether	8.498	1	0.22	8.71583		97.5	70 - 130			
2-Chlorotoluene	10.199	1	0.50	10.3544		98.5	70 - 130			
2-Hexanone	7.619	1	0.43	8.19296		93.0	70 - 130			
2-Propanol	4.399	0.61	0.26	4.91534		89.5	70 - 130			
4-Chlorotoluene	16.878	1	0.47	10.3544		163	70 - 130			L5
4-Ethyl Toluene	9.635	1	0.47	9.83166		98.0	70 - 130			
4-Methyl-2-pentanone	7.128	1	0.30	8.19296		87.0	70 - 130			
Acetone	4.466	0.59	0.26	4.75084		94.0	70 - 130			
Acetonitrile	3.140	0.42	0.14	3.35804		93.5	70 - 130			
Acrolein	3.692	0.57	0.22	4.58593		80.5	70 - 130			
Acrylonitrile	3.299	0.54	0.18	4.34053		76.0	70 - 130			
Benzene	5.207	0.80	0.28	6.38953		81.5	70 - 130			
Benzyl chloride	11.390	1	0.37	10.3544		110	70 - 130			
Bromobenzene	19.714	2	0.59	12.8432		154	70 - 130			L5
Bromodichloromethane	12.932	2	0.70	13.4011		96.5	70 - 130			
Bromoform	20.880	3	0.90	20.6733		101	70 - 130			
Bromomethane	6.989	0.97	0.46	7.76597		90.0	70 - 130			
Carbon disulfide	5.170	0.78	0.31	6.22847		83.0	70 - 130			
Carbon tetrachloride	12.771	2	0.43	12.5826		102	70 - 130			
Chlorobenzene	8.655	1	0.41	9.20712		94.0	70 - 130			
Chloroethane	4.749	0.66	0.28	5.27722		90.0	70 - 130			

Hushmand Associates, Inc.	Project Number : Parcel 32 6th St Bridge, 15-003
250 Goddard	Report To : Naresh Bellana
Irvine , CA 92618	Reported : 03/26/2018

Volatile Organic Compounds in AIR by TO-15 (Canister) - Quality Control (cont'd)

Analyte	Result (ug/m³)	PQL (ug/m³)	MDL (ug/m³)	Spike Level	Source Result	% Rec	% Rec Limits	RPD	RPD Limit	Notes
Batch B6L0222 - No_Prep_AIR (continued)										
LCS (B6L0222-BS1) - Continued					Prepared: 12/5/2016 Analyzed: 12/5/2016					
Chloroform	8.740	1	0.50	9.76499		89.5	70 - 130			
Chloromethane	3.490	0.52	0.22	4.12982		84.5	70 - 130			
cis-1,2-Dichloroethene	6.304	0.99	0.28	7.92990		79.5	70 - 130			
cis-1,3-Dichloropropene	7.670	1	0.33	9.07724		84.5	70 - 130			
Cyclohexane	6.024	0.86	0.25	6.88425		87.5	70 - 130			
Dibromochloromethane	18.315	2	0.83	17.0371		108	70 - 130			
Dibromomethane	17.135	2	0.55	14.2196		120	70 - 130			
Dichlorodifluoromethane	9.396	1	0.56	9.89063		95.0	70 - 130			
Dichlorotetrafluoroethane	14.401	2	0.76	13.9812		103	70 - 130			
Ethanol	3.354	0.47	0.20	3.76834		89.0	70 - 130			
Ethylbenzene	7.946	1	0.35	8.68425		91.5	70 - 130			
Freon-113	13.488	2	0.58	15.3272		88.0	70 - 130			
Hexachlorobutadiene	52.258	3	1	21.3300		245	70 - 130			L5
Isopropylbenzene	9.488	1	0.52	9.83166		96.5	70 - 130			
m,p-Xylene	34.476	4	1	34.7370		99.3	70 - 130			
Methylene chloride	5.975	0.87	0.31	6.94740		86.0	70 - 130			
MTBE	5.913	0.90	0.33	7.21047		82.0	70 - 130			
n-Butylbenzene	11.363	1	0.42	10.9790		104	70 - 130			
n-Propylbenzene	9.635	1	0.41	9.83166		98.0	70 - 130			
Naphthalene	9.646	1	0.36	10.4843		92.0	70 - 130			
o-Xylene	8.684	1	0.40	8.68425		100	70 - 130			
p-Isopropyltoluene	20.146	1	0.51	10.9790		183	70 - 130			L5
sec-Butylbenzene	11.089	1	0.56	10.9790		101	70 - 130			
Styrene	7.625	1	0.44	8.51934		89.5	70 - 130			
tert-Butylbenzene	11.528	1	0.62	10.9790		105	70 - 130			
Tetrachloroethene	12.208	2	0.47	13.5650		90.0	70 - 130			
Toluene	6.180	0.94	0.28	7.53688		82.0	70 - 130			
trans-1,2-Dichloroethene	6.027	0.99	0.34	7.92990		76.0	70 - 130			
trans-1,3-Dichloropropene	8.124	1	0.34	9.07722		89.5	70 - 130			
Trichloroethene	9.404	1	0.47	10.7474		87.5	70 - 130			
Trichlorofluoromethane	11.124	1	0.53	11.2366		99.0	70 - 130			
Vinyl acetate	6.549	0.88	0.38	7.04204		93.0	70 - 130			
Vinyl chloride	4.243	0.64	0.21	5.11231		83.0	70 - 130			
Surrogate: 4-Bromofluorobenzene	*18.82*			*17.8935*		*105*	*79.2 - 147*			
LCS Dup (B6L0222-BSD1)					Prepared: 12/5/2016 Analyzed: 12/5/2016					
1,1,1,2-Tetrachloroethane	13.593	2	0.57	13.7299		99.0	70 - 130	5.41	20	
1,1,1-Trichloroethane	10.148	1	0.58	10.9123		93.0	70 - 130	0.536	20	
1,1,2,2-Tetrachloroethane	15.446	2	0.77	13.7299		112	70 - 130	11.8	20	
1,1,2-Trichloroethane	9.221	1	0.45	10.9123		84.5	70 - 130	0.00	20	
1,1-Dichloroethane	7.002	1	0.37	8.09480		86.5	70 - 130	1.72	20	

Certificate of Analysis

Hushmand Associates, Inc.	Project Number : Parcel 32 6th St Bridge, 15-003
250 Goddard	Report To : Naresh Bellana
Irvine , CA 92618	Reported : 03/26/2018

Volatile Organic Compounds in AIR by TO-15 (Canister) - Quality Control (cont'd)

Analyte	Result (ug/m³)	PQL (ug/m³)	MDL (ug/m³)	Spike Level	Source Result	% Rec	% Rec Limits	RPD	RPD Limit	Notes
Batch B6L0222 - No_Prep_AIR (continued)										
LCS Dup (B6L0222-BSD1) - Continued					Prepared: 12/5/2016 Analyzed: 12/5/2016					
1,1-Dichloroethene	6.225	0.99	0.34	7.92990		78.5	70 - 130	0.00	20	
1,1-Dichloropropene	8.714	1	0.37	9.07722		96.0	70 - 130	5.08	20	
1,2,3-Trichloropropane	22.552	2	0.58	12.0597		187	70 - 130	1.35	20	L5
1,2,4-Trichlorobenzene	36.438	2	0.73	14.8422		246	70 - 130	3.52	20	L5
1,2,4-Trimethylbenzene	11.257	1	0.54	9.83166		114	70 - 130	8.66	20	
1,2-Dibromo-3-chloropropane	44.077	2	1	19.3319		228	70 - 130	4.03	20	L5
1,2-Dibromoethane	12.755	2	0.73	15.3670		83.0	70 - 130	5.85	20	
1,2-Dichlorobenzene	12.746	2	0.54	12.0246		106	70 - 130	10.9	20	
1,2-Dichloroethane	8.257	1	0.34	8.09480		102	70 - 130	1.48	20	
1,2-Dichloropropane	8.041	1	0.41	9.24213		87.0	70 - 130	4.11	20	
1,3,5-Trimethylbenzene	10.815	1	0.51	9.83166		110	70 - 130	8.53	20	
1,3-Butadiene	3.871	0.55	0.39	4.42454		87.5	70 - 130	3.92	20	
1,3-Dichlorobenzene	12.987	2	0.56	12.0246		108	70 - 130	8.19	20	
1,4-Dichlorobenzene	12.987	2	0.51	12.0246		108	70 - 130	11.8	20	
1,4-Dioxane	7.135	0.90	0.65	7.20695		99.0	70 - 130	4.65	20	
2,2,4-Trimethylpentane	8.783	1	0.35	9.34388		94.0	70 - 130	1.61	20	
2-Butanone	5.249	0.74	0.24	5.89824		89.0	70 - 130	4.60	20	
2-Chloroethyl vinyl ether	8.498	1	0.22	8.71583		97.5	70 - 130	0.00	20	
2-Chlorotoluene	10.510	1	0.50	10.3544		101	70 - 130	3.00	20	
2-Hexanone	8.029	1	0.43	8.19296		98.0	70 - 130	5.24	20	
2-Propanol	4.276	0.61	0.26	4.91534		87.0	70 - 130	2.83	20	
4-Chlorotoluene	17.188	1	0.47	10.3544		166	70 - 130	1.82	20	L5
4-Ethyl Toluene	10.913	1	0.47	9.83166		111	70 - 130	12.4	20	
4-Methyl-2-pentanone	7.169	1	0.30	8.19296		87.5	70 - 130	0.573	20	
Acetone	4.086	0.59	0.26	4.75084		86.0	70 - 130	8.89	20	
Acetonitrile	2.905	0.42	0.14	3.35804		86.5	70 - 130	7.78	20	
Acrolein	3.806	0.57	0.22	4.58593		83.0	70 - 130	3.06	20	
Acrylonitrile	3.451	0.54	0.18	4.34053		79.5	70 - 130	4.50	20	
Benzene	5.207	0.80	0.28	6.38953		81.5	70 - 130	0.00	20	
Benzyl chloride	12.632	1	0.37	10.3544		122	70 - 130	10.3	20	
Bromobenzene	20.356	2	0.59	12.8432		158	70 - 130	3.21	20	L5
Bromodichloromethane	13.133	2	0.70	13.4011		98.0	70 - 130	1.54	20	
Bromoform	23.464	3	0.90	20.6733		114	70 - 130	11.7	20	
Bromomethane	6.679	0.97	0.46	7.76597		86.0	70 - 130	4.55	20	
Carbon disulfide	5.232	0.78	0.31	6.22847		84.0	70 - 130	1.20	20	
Carbon tetrachloride	12.708	2	0.43	12.5826		101	70 - 130	0.494	20	
Chlorobenzene	9.667	1	0.41	9.20712		105	70 - 130	11.1	20	
Chloroethane	4.327	0.66	0.28	5.27722		82.0	70 - 130	9.30	20	
Chloroform	8.740	1	0.50	9.76499		89.5	70 - 130	0.00	20	
Chloromethane	3.407	0.52	0.22	4.12982		82.5	70 - 130	2.40	20	
cis-1,2-Dichloroethene	6.304	0.99	0.28	7.92990		79.5	70 - 130	0.00	20	
cis-1,3-Dichloropropene	7.534	1	0.33	9.07724		83.0	70 - 130	1.79	20	

Certificate of Analysis

Hushmand Associates, Inc.	Project Number : Parcel 32 6th St Bridge, 15-003
250 Goddard	Report To : Naresh Bellana
Irvine , CA 92618	Reported : 03/26/2018

Volatile Organic Compounds in AIR by TO-15 (Canister) - Quality Control (cont'd)

Analyte	Result (ug/m³)	PQL (ug/m³)	MDL (ug/m³)	Spike Level	Source Result	% Rec	% Rec Limits	RPD	RPD Limit	Notes
Batch B6L0222 - No_Prep_AIR (continued)										
LCS Dup (B6L0222-BSD1) - Continued					Prepared: 12/5/2016 Analyzed: 12/5/2016					
Cyclohexane	5.989	0.86	0.25	6.88425		87.0	70 - 130	0.573	20	
Dibromochloromethane	18.570	2	0.83	17.0371		109	70 - 130	1.39	20	
Dibromomethane	17.561	2	0.55	14.2196		124	70 - 130	2.46	20	
Dichlorodifluoromethane	9.495	1	0.56	9.89063		96.0	70 - 130	1.05	20	
Dichlorotetrafluoroethane	13.841	2	0.76	13.9812		99.0	70 - 130	3.96	20	
Ethanol	3.222	0.47	0.20	3.76834		85.5	70 - 130	4.01	20	
Ethylbenzene	9.075	1	0.35	8.68425		104	70 - 130	13.3	20	
Freon-113	13.258	2	0.58	15.3272		86.5	70 - 130	1.72	20	
Hexachlorobutadiene	53.645	3	1	21.3300		252	70 - 130	2.62	20	L5
Isopropylbenzene	10.618	1	0.52	9.83166		108	70 - 130	11.2	20	
m,p-Xylene	38.732	4	1	34.7370		112	70 - 130	11.6	20	
Methylene chloride	5.975	0.87	0.31	6.94740		86.0	70 - 130	0.00	20	
MTBE	6.057	0.90	0.33	7.21047		84.0	70 - 130	2.41	20	
n-Butylbenzene	12.351	1	0.42	10.9790		112	70 - 130	8.33	20	
n-Propylbenzene	10.667	1	0.41	9.83166		108	70 - 130	10.2	20	
Naphthalene	11.218	1	0.36	10.4843		107	70 - 130	15.1	20	
o-Xylene	9.683	1	0.40	8.68425		112	70 - 130	10.9	20	
p-Isopropyltoluene	20.915	1	0.51	10.9790		190	70 - 130	3.74	20	L5
sec-Butylbenzene	12.187	1	0.56	10.9790		111	70 - 130	9.43	20	
Styrene	8.647	1	0.44	8.51934		102	70 - 130	12.6	20	
tert-Butylbenzene	12.791	1	0.62	10.9790		116	70 - 130	10.4	20	
Tetrachloroethene	12.887	2	0.47	13.5650		95.0	70 - 130	5.41	20	
Toluene	6.482	0.94	0.28	7.53688		86.0	70 - 130	4.76	20	
trans-1,2-Dichloroethene	6.225	0.99	0.34	7.92990		78.5	70 - 130	3.24	20	
trans-1,3-Dichloropropene	8.306	1	0.34	9.07722		91.5	70 - 130	2.21	20	
Trichloroethene	9.350	1	0.47	10.7474		87.0	70 - 130	0.573	20	
Trichlorofluoromethane	10.787	1	0.53	11.2366		96.0	70 - 130	3.08	20	
Vinyl acetate	6.831	0.88	0.38	7.04204		97.0	70 - 130	4.21	20	
Vinyl chloride	4.192	0.64	0.21	5.11231		82.0	70 - 130	1.21	20	
Surrogate: 4-Bromofluorobenzene	*21.26*			*17.8935*		*119*	*79.2 - 147*			

Certificate of Analysis

Hushmand Associates, Inc.	Project Number : Parcel 32 6th St Bridge, 15-003
250 Goddard	Report To : Naresh Bellana
Irvine , CA 92618	Reported : 03/26/2018

Volatile Organic Compounds in AIR by TO-15 (Canister) - Quality Control

Analyte	Result (ug/m³)	PQL (ug/m³)	MDL (ug/m³)	Spike Level	Source Result	% Rec	% Rec Limits	RPD	RPD Limit	Notes
Batch B6L0286 - No_Prep_AIR										
Blank (B6L0286-BLK1)					Prepared: 12/6/2016 Analyzed: 12/6/2016					
1,1,1,2-Tetrachloroethane	ND	2	0.57							
1,1,1-Trichloroethane	ND	1	0.58							
1,1,2,2-Tetrachloroethane	ND	2	0.77							
1,1,2-Trichloroethane	ND	1	0.45							
1,1-Dichloroethane	ND	1	0.37							
1,1-Dichloroethene	ND	0.99	0.34							
1,1-Dichloropropene	ND	1	0.37							
1,2,3-Trichloropropane	ND	2	0.58							
1,2,4-Trichlorobenzene	ND	2	0.73							
1,2,4-Trimethylbenzene	ND	1	0.54							
1,2-Dibromo-3-chloropropane	ND	2	1							
1,2-Dibromoethane	ND	2	0.73							
1,2-Dichlorobenzene	ND	2	0.54							
1,2-Dichloroethane	ND	1	0.34							
1,2-Dichloropropane	ND	1	0.41							
1,3,5-Trimethylbenzene	ND	1	0.51							
1,3-Butadiene	ND	0.55	0.39							
1,3-Dichlorobenzene	ND	2	0.56							
1,4-Dichlorobenzene	ND	2	0.51							
1,4-Dioxane	ND	0.90	0.65							
2,2,4-Trimethylpentane	ND	1	0.35							
2-Butanone	ND	0.74	0.24							
2-Chloroethyl vinyl ether	ND	1	0.22							
2-Chlorotoluene	ND	1	0.50							
2-Hexanone	ND	1	0.43							
2-Propanol	ND	0.61	0.26							
4-Chlorotoluene	ND	1	0.47							
4-Ethyl Toluene	ND	1	0.47							
4-Methyl-2-pentanone	ND	1	0.30							
Acetone	ND	0.59	0.26							
Acetonitrile	ND	0.42	0.14							
Acrolein	ND	0.57	0.22							
Acrylonitrile	ND	0.54	0.18							
Benzene	ND	0.80	0.28							
Benzyl chloride	ND	1	0.37							
Bromobenzene	ND	2	0.59							
Bromodichloromethane	ND	2	0.70							
Bromoform	ND	3	0.90							
Bromomethane	ND	0.97	0.46							
Carbon disulfide	ND	0.78	0.31							
Carbon tetrachloride	ND	2	0.43							

Certificate of Analysis

Hushmand Associates, Inc.	Project Number : Parcel 32 6th St Bridge, 15-003
250 Goddard	Report To : Naresh Bellana
Irvine , CA 92618	Reported : 03/26/2018

Volatile Organic Compounds in AIR by TO-15 (Canister) - Quality Control (cont'd)

Analyte	Result (ug/m³)	PQL (ug/m³)	MDL (ug/m³)	Spike Level	Source Result	% Rec	% Rec Limits	RPD	RPD Limit	Notes
Batch B6L0286 - No_Prep_AIR (continued)										
Blank (B6L0286-BLK1) - Continued					Prepared: 12/6/2016 Analyzed: 12/6/2016					
Chlorobenzene	ND	1	0.41							
Chloroethane	ND	0.66	0.28							
Chloroform	ND	1	0.50							
Chloromethane	ND	0.52	0.22							
cis-1,2-Dichloroethene	ND	0.99	0.28							
cis-1,3-Dichloropropene	ND	1	0.33							
Cyclohexane	ND	0.86	0.25							
Dibromochloromethane	ND	2	0.83							
Dibromomethane	ND	2	0.55							
Dichlorodifluoromethane	ND	1	0.56							
Dichlorotetrafluoroethane	ND	2	0.76							
Ethanol	ND	0.47	0.20							
Ethylbenzene	ND	1	0.35							
Freon-113	ND	2	0.58							
Hexachlorobutadiene	ND	3	1							
Isopropylbenzene	ND	1	0.52							
m,p-Xylene	ND	4	1							
Methylene chloride	ND	0.87	0.31							
MTBE	ND	0.90	0.33							
n-Butylbenzene	ND	1	0.42							
n-Propylbenzene	ND	1	0.41							
Naphthalene	ND	1	0.36							
o-Xylene	ND	1	0.40							
p-Isopropyltoluene	ND	1	0.51							
sec-Butylbenzene	ND	1	0.56							
Styrene	ND	1	0.44							
tert-Butylbenzene	ND	1	0.62							
Tetrachloroethene	ND	2	0.47							
Toluene	ND	0.94	0.28							
trans-1,2-Dichloroethene	ND	0.99	0.34							
trans-1,3-Dichloropropene	ND	1	0.34							
Trichloroethene	ND	1	0.47							
Trichlorofluoromethane	ND	1	0.53							
Vinyl acetate	ND	0.88	0.38							
Vinyl chloride	ND	0.64	0.21							
Surrogate: 4-Bromofluorobenzene	*19.54*			*17.8935*		*109*	*79.2 - 147*			
LCS (B6L0286-BS1)					Prepared: 12/6/2016 Analyzed: 12/6/2016					
1,1,1,2-Tetrachloroethane	12.700	2	0.57	13.7299		92.5	70 - 130			
1,1,1-Trichloroethane	10.367	1	0.58	10.9123		95.0	70 - 130			
1,1,2,2-Tetrachloroethane	14.279	2	0.77	13.7299		104	70 - 130			

Certificate of Analysis

Hushmand Associates, Inc.	Project Number : Parcel 32 6th St Bridge, 15-003
250 Goddard	Report To : Naresh Bellana
Irvine , CA 92618	Reported : 03/26/2018

Volatile Organic Compounds in AIR by TO-15 (Canister) - Quality Control (cont'd)

Analyte	Result (ug/m³)	PQL (ug/m³)	MDL (ug/m³)	Spike Level	Source Result	% Rec	% Rec Limits	RPD	RPD Limit	Notes
Batch B6L0286 - No_Prep_AIR (continued)										
LCS (B6L0286-BS1) - Continued					Prepared: 12/6/2016 Analyzed: 12/6/2016					
1,1,2-Trichloroethane	9.330	1	0.45	10.9123		85.5	70 - 130			
1,1-Dichloroethane	7.245	1	0.37	8.09480		89.5	70 - 130			
1,1-Dichloroethene	6.463	0.99	0.34	7.92990		81.5	70 - 130			
1,1-Dichloropropene	9.259	1	0.37	9.07722		102	70 - 130			
1,2,3-Trichloropropane	22.069	2	0.58	12.0597		183	70 - 130			L5
1,2,4-Trichlorobenzene	32.875	2	0.73	14.8422		222	70 - 130			L5
1,2,4-Trimethylbenzene	10.372	1	0.54	9.83166		106	70 - 130			
1,2-Dibromo-3-chloropropane	41.370	2	1	19.3319		214	70 - 130			L5
1,2-Dibromoethane	13.446	2	0.73	15.3670		87.5	70 - 130			
1,2-Dichlorobenzene	11.183	2	0.54	12.0246		93.0	70 - 130			
1,2-Dichloroethane	8.783	1	0.34	8.09480		108	70 - 130			
1,2-Dichloropropane	8.457	1	0.41	9.24213		91.5	70 - 130			
1,3,5-Trimethylbenzene	10.323	1	0.51	9.83166		105	70 - 130			
1,3-Butadiene	4.225	0.55	0.39	4.42454		95.5	70 - 130			
1,3-Dichlorobenzene	11.784	2	0.56	12.0246		98.0	70 - 130			
1,4-Dichlorobenzene	11.604	2	0.51	12.0246		96.5	70 - 130			
1,4-Dioxane	7.315	0.90	0.65	7.20695		102	70 - 130			
2,2,4-Trimethylpentane	9.344	1	0.35	9.34388		100	70 - 130			
2-Butanone	5.485	0.74	0.24	5.89824		93.0	70 - 130			
2-Chloroethyl vinyl ether	9.239	1	0.22	8.71583		106	70 - 130			
2-Chlorotoluene	10.613	1	0.50	10.3544		102	70 - 130			
2-Hexanone	7.660	1	0.43	8.19296		93.5	70 - 130			
2-Propanol	5.186	0.61	0.26	4.91534		106	70 - 130			
4-Chlorotoluene	16.774	1	0.47	10.3544		162	70 - 130			L5
4-Ethyl Toluene	9.832	1	0.47	9.83166		100	70 - 130			
4-Methyl-2-pentanone	8.439	1	0.30	8.19296		103	70 - 130			
Acetone	4.870	0.59	0.26	4.75084		102	70 - 130			
Acetonitrile	3.241	0.42	0.14	3.35804		96.5	70 - 130			
Acrolein	4.013	0.57	0.22	4.58593		87.5	70 - 130			
Acrylonitrile	3.581	0.54	0.18	4.34053		82.5	70 - 130			
Benzene	5.687	0.80	0.28	6.38953		89.0	70 - 130			
Benzyl chloride	11.338	1	0.37	10.3544		110	70 - 130			
Bromobenzene	19.201	2	0.59	12.8432		150	70 - 130			L5
Bromodichloromethane	13.535	2	0.70	13.4011		101	70 - 130			
Bromoform	20.983	3	0.90	20.6733		102	70 - 130			
Bromomethane	6.989	0.97	0.46	7.76597		90.0	70 - 130			
Carbon disulfide	5.356	0.78	0.31	6.22847		86.0	70 - 130			
Carbon tetrachloride	13.023	2	0.43	12.5826		104	70 - 130			
Chlorobenzene	8.931	1	0.41	9.20712		97.0	70 - 130			
Chloroethane	4.776	0.66	0.28	5.27722		90.5	70 - 130			
Chloroform	9.130	1	0.50	9.76499		93.5	70 - 130			
Chloromethane	3.676	0.52	0.22	4.12982		89.0	70 - 130			

Certificate of Analysis

Hushmand Associates, Inc.	Project Number : Parcel 32 6th St Bridge, 15-003
250 Goddard	Report To : Naresh Bellana
Irvine , CA 92618	Reported : 03/26/2018

Volatile Organic Compounds in AIR by TO-15 (Canister) - Quality Control (cont'd)

Analyte	Result (ug/m³)	PQL (ug/m³)	MDL (ug/m³)	Spike Level	Source Result	% Rec	% Rec Limits	RPD	RPD Limit	Notes
Batch B6L0286 - No_Prep_AIR (continued)										
LCS (B6L0286-BS1) - Continued					Prepared: 12/6/2016 Analyzed: 12/6/2016					
cis-1,2-Dichloroethene	6.384	0.99	0.28	7.92990		80.5	70 - 130			
cis-1,3-Dichloropropene	7.670	1	0.33	9.07724		84.5	70 - 130			
Cyclohexane	6.574	0.86	0.25	6.88425		95.5	70 - 130			
Dibromochloromethane	17.378	2	0.83	17.0371		102	70 - 130			
Dibromomethane	16.068	2	0.55	14.2196		113	70 - 130			
Dichlorodifluoromethane	8.803	1	0.56	9.89063		89.0	70 - 130			
Dichlorotetrafluoroethane	14.331	2	0.76	13.9812		102	70 - 130			
Ethanol	3.542	0.47	0.20	3.76834		94.0	70 - 130			
Ethylbenzene	8.337	1	0.35	8.68425		96.0	70 - 130			
Freon-113	13.488	2	0.58	15.3272		88.0	70 - 130			
Hexachlorobutadiene	48.206	3	1	21.3300		226	70 - 130			L5
Isopropylbenzene	9.635	1	0.52	9.83166		98.0	70 - 130			
m,p-Xylene	35.866	4	1	34.7370		103	70 - 130			
Methylene chloride	6.079	0.87	0.31	6.94740		87.5	70 - 130			
MTBE	6.201	0.90	0.33	7.21047		86.0	70 - 130			
n-Butylbenzene	11.473	1	0.42	10.9790		104	70 - 130			
n-Propylbenzene	9.684	1	0.41	9.83166		98.5	70 - 130			
Naphthalene	9.698	1	0.36	10.4843		92.5	70 - 130			
o-Xylene	9.162	1	0.40	8.68425		106	70 - 130			
p-Isopropyltoluene	19.652	1	0.51	10.9790		179	70 - 130			L5
sec-Butylbenzene	11.308	1	0.56	10.9790		103	70 - 130			
Styrene	7.966	1	0.44	8.51934		93.5	70 - 130			
tert-Butylbenzene	11.748	1	0.62	10.9790		107	70 - 130			
Tetrachloroethene	12.751	2	0.47	13.5650		94.0	70 - 130			
Toluene	6.595	0.94	0.28	7.53688		87.5	70 - 130			
trans-1,2-Dichloroethene	6.344	0.99	0.34	7.92990		80.0	70 - 130			
trans-1,3-Dichloropropene	8.760	1	0.34	9.07722		96.5	70 - 130			
Trichloroethene	9.458	1	0.47	10.7474		88.0	70 - 130			
Trichlorofluoromethane	11.574	1	0.53	11.2366		103	70 - 130			
Vinyl acetate	6.901	0.88	0.38	7.04204		98.0	70 - 130			
Vinyl chloride	4.601	0.64	0.21	5.11231		90.0	70 - 130			
Surrogate: 4-Bromofluorobenzene	*18.32*			*17.8935*		*102*	*79.2 - 147*			
LCS Dup (B6L0286-BSD1)					Prepared: 12/6/2016 Analyzed: 12/6/2016					
1,1,1,2-Tetrachloroethane	13.387	2	0.57	13.7299		97.5	70 - 130	5.26	20	
1,1,1-Trichloroethane	10.803	1	0.58	10.9123		99.0	70 - 130	4.12	20	
1,1,2,2-Tetrachloroethane	15.583	2	0.77	13.7299		114	70 - 130	8.74	20	
1,1,2-Trichloroethane	10.367	1	0.45	10.9123		95.0	70 - 130	10.5	20	
1,1-Dichloroethane	7.650	1	0.37	8.09480		94.5	70 - 130	5.43	20	
1,1-Dichloroethene	6.859	0.99	0.34	7.92990		86.5	70 - 130	5.95	20	
1,1-Dichloropropene	8.714	1	0.37	9.07722		96.0	70 - 130	6.06	20	

Certificate of Analysis

Hushmand Associates, Inc.	Project Number : Parcel 32 6th St Bridge, 15-003
250 Goddard	Report To : Naresh Bellana
Irvine , CA 92618	Reported : 03/26/2018

Volatile Organic Compounds in AIR by TO-15 (Canister) - Quality Control (cont'd)

Analyte	Result (ug/m³)	PQL (ug/m³)	MDL (ug/m³)	Spike Level	Source Result	% Rec	% Rec Limits	RPD	RPD Limit	Notes
Batch B6L0286 - No_Prep_AIR (continued)										
LCS Dup (B6L0286-BSD1) - Continued					Prepared: 12/6/2016 Analyzed: 12/6/2016					
1,2,3-Trichloropropane	22.853	2	0.58	12.0597		190	70 - 130	3.49	20	L5
1,2,4-Trichlorobenzene	33.840	2	0.73	14.8422		228	70 - 130	2.89	20	L5
1,2,4-Trimethylbenzene	11.454	1	0.54	9.83166		116	70 - 130	9.91	20	
1,2-Dibromo-3-chloropropane	44.270	2	1	19.3319		229	70 - 130	6.77	20	L5
1,2-Dibromoethane	15.828	2	0.73	15.3670		103	70 - 130	16.3	20	
1,2-Dichlorobenzene	12.926	2	0.54	12.0246		108	70 - 130	14.5	20	
1,2-Dichloroethane	9.066	1	0.34	8.09480		112	70 - 130	3.17	20	
1,2-Dichloropropane	8.688	1	0.41	9.24213		94.0	70 - 130	2.70	20	
1,3,5-Trimethylbenzene	11.208	1	0.51	9.83166		114	70 - 130	8.22	20	
1,3-Butadiene	4.535	0.55	0.39	4.42454		102	70 - 130	7.07	20	
1,3-Dichlorobenzene	13.287	2	0.56	12.0246		110	70 - 130	12.0	20	
1,4-Dichlorobenzene	13.107	2	0.51	12.0246		109	70 - 130	12.2	20	
1,4-Dioxane	7.928	0.90	0.65	7.20695		110	70 - 130	8.04	20	
2,2,4-Trimethylpentane	9.811	1	0.35	9.34388		105	70 - 130	4.88	20	
2-Butanone	5.692	0.74	0.24	5.89824		96.5	70 - 130	3.69	20	
2-Chloroethyl vinyl ether	7.888	1	0.22	8.71583		90.5	70 - 130	15.8	20	
2-Chlorotoluene	11.752	1	0.50	10.3544		114	70 - 130	10.2	20	
2-Hexanone	8.766	1	0.43	8.19296		107	70 - 130	13.5	20	
2-Propanol	5.554	0.61	0.26	4.91534		113	70 - 130	6.86	20	
4-Chlorotoluene	16.878	1	0.47	10.3544		163	70 - 130	0.615	20	L5
4-Ethyl Toluene	10.913	1	0.47	9.83166		111	70 - 130	10.4	20	
4-Methyl-2-pentanone	8.234	1	0.30	8.19296		100	70 - 130	2.46	20	
Acetone	5.083	0.59	0.26	4.75084		107	70 - 130	4.30	20	
Acetonitrile	3.358	0.42	0.14	3.35804		100	70 - 130	3.56	20	
Acrolein	3.394	0.57	0.22	4.58593		74.0	70 - 130	16.7	20	
Acrylonitrile	3.841	0.54	0.18	4.34053		88.5	70 - 130	7.02	20	
Benzene	5.910	0.80	0.28	6.38953		92.5	70 - 130	3.86	20	
Benzyl chloride	12.736	1	0.37	10.3544		123	70 - 130	11.6	20	
Bromobenzene	20.164	2	0.59	12.8432		157	70 - 130	4.89	20	L5
Bromodichloromethane	14.473	2	0.70	13.4011		108	70 - 130	6.70	20	
Bromoform	23.361	3	0.90	20.6733		113	70 - 130	10.7	20	
Bromomethane	7.417	0.97	0.46	7.76597		95.5	70 - 130	5.93	20	
Carbon disulfide	5.637	0.78	0.31	6.22847		90.5	70 - 130	5.10	20	
Carbon tetrachloride	13.463	2	0.43	12.5826		107	70 - 130	3.33	20	
Chlorobenzene	9.760	1	0.41	9.20712		106	70 - 130	8.87	20	
Chloroethane	5.040	0.66	0.28	5.27722		95.5	70 - 130	5.38	20	
Chloroform	9.277	1	0.50	9.76499		95.0	70 - 130	1.59	20	
Chloromethane	3.944	0.52	0.22	4.12982		95.5	70 - 130	7.05	20	
cis-1,2-Dichloroethene	6.701	0.99	0.28	7.92990		84.5	70 - 130	4.85	20	
cis-1,3-Dichloropropene	8.442	1	0.33	9.07724		93.0	70 - 130	9.58	20	
Cyclohexane	7.125	0.86	0.25	6.88425		104	70 - 130	8.04	20	
Dibromochloromethane	18.911	2	0.83	17.0371		111	70 - 130	8.45	20	

Certificate of Analysis

Hushmand Associates, Inc.	Project Number : Parcel 32 6th St Bridge, 15-003
250 Goddard	Report To : Naresh Bellana
Irvine , CA 92618	Reported : 03/26/2018

Volatile Organic Compounds in AIR by TO-15 (Canister) - Quality Control (cont'd)

Analyte	Result (ug/m³)	PQL (ug/m³)	MDL (ug/m³)	Spike Level	Source Result	% Rec	% Rec Limits	RPD	RPD Limit	Notes
Batch B6L0286 - No_Prep_AIR (continued)										
LCS Dup (B6L0286-BSD1) - Continued					Prepared: 12/6/2016 Analyzed: 12/6/2016					
Dibromomethane	16.708	2	0.55	14.2196		118	70 - 130	3.90	20	
Dichlorodifluoromethane	11.374	1	0.56	9.89063		115	70 - 130	25.5	20	R
Dichlorotetrafluoroethane	15.239	2	0.76	13.9812		109	70 - 130	6.15	20	
Ethanol	3.881	0.47	0.20	3.76834		103	70 - 130	9.14	20	
Ethylbenzene	9.553	1	0.35	8.68425		110	70 - 130	13.6	20	
Freon-113	13.871	2	0.58	15.3272		90.5	70 - 130	2.80	20	
Hexachlorobutadiene	52.898	3	1	21.3300		248	70 - 130	9.28	20	L5
Isopropylbenzene	10.815	1	0.52	9.83166		110	70 - 130	11.5	20	
m,p-Xylene	39.600	4	1	34.7370		114	70 - 130	9.90	20	
Methylene chloride	6.148	0.87	0.31	6.94740		88.5	70 - 130	1.14	20	
MTBE	6.598	0.90	0.33	7.21047		91.5	70 - 130	6.20	20	
n-Butylbenzene	12.736	1	0.42	10.9790		116	70 - 130	10.4	20	
n-Propylbenzene	10.766	1	0.41	9.83166		110	70 - 130	10.6	20	
Naphthalene	12.109	1	0.36	10.4843		116	70 - 130	22.1	20	R
o-Xylene	9.770	1	0.40	8.68425		112	70 - 130	6.42	20	
p-Isopropyltoluene	20.366	1	0.51	10.9790		185	70 - 130	3.57	20	L5
sec-Butylbenzene	12.516	1	0.56	10.9790		114	70 - 130	10.1	20	
Styrene	8.903	1	0.44	8.51934		104	70 - 130	11.1	20	
tert-Butylbenzene	12.900	1	0.62	10.9790		118	70 - 130	9.35	20	
Tetrachloroethene	14.040	2	0.47	13.5650		104	70 - 130	9.62	20	
Toluene	7.009	0.94	0.28	7.53688		93.0	70 - 130	6.09	20	
trans-1,2-Dichloroethene	6.859	0.99	0.34	7.92990		86.5	70 - 130	7.81	20	
trans-1,3-Dichloropropene	8.623	1	0.34	9.07722		95.0	70 - 130	1.57	20	
Trichloroethene	10.156	1	0.47	10.7474		94.5	70 - 130	7.12	20	
Trichlorofluoromethane	11.686	1	0.53	11.2366		104	70 - 130	0.966	20	
Vinyl acetate	7.676	0.88	0.38	7.04204		109	70 - 130	10.6	20	
Vinyl chloride	4.831	0.64	0.21	5.11231		94.5	70 - 130	4.88	20	
Surrogate: 4-Bromofluorobenzene	*19.83*			*17.8935*		*111*	*79.2 - 147*			

Certificate of Analysis

Hushmand Associates, Inc.	Project Number : Parcel 32 6th St Bridge, 15-003
250 Goddard	Report To : Naresh Bellana
Irvine , CA 92618	Reported : 03/26/2018

Gasoline Range Organics in Air by TO-3 - Quality Control

Analyte	Result (ug/m³)	PQL (ug/m³)	MDL (ug/m³)	Spike Level	Source Result	% Rec	% Rec Limits	RPD	RPD Limit	Notes
Batch B6L0202 - No_Prep_AIR										
Blank (B6L0202-BLK1)						Prepared: 12/5/2016 Analyzed: 12/5/2016				
Gasoline Range Organics	ND	100	70							
Surrogate: 4-Bromofluorobenzene	*15.46*			*17.8935*		*86.4*	*70 - 130*			
LCS (B6L0202-BS1)						Prepared: 12/5/2016 Analyzed: 12/5/2016				
Gasoline Range Organics	817.710	100	70	817.996		100	70 - 130			
Surrogate: 4-Bromofluorobenzene	*16.53*			*17.8935*		*92.4*	*70 - 130*			
LCS Dup (B6L0202-BSD1)						Prepared: 12/5/2016 Analyzed: 12/5/2016				
Gasoline Range Organics	791.411	100	70	817.996		96.8	70 - 130	3.27	20	
Surrogate: 4-Bromofluorobenzene	*17.61*			*17.8935*		*98.4*	*70 - 130*			

Certificate of Analysis

Hushmand Associates, Inc.	Project Number : Parcel 32 6th St Bridge, 15-003
250 Goddard	Report To : Naresh Bellana
Irvine , CA 92618	Reported : 03/26/2018

Notes and Definitions

R	RPD value outside acceptance criteria. Calculation is based on raw values.
L5	Laboratory Control Sample high biased. Sample result/s was non-detect (ND) for the target analyte; therefore reanalysis was not necessary.
D1	Sample required dilution due to possible matrix interference.
ND	Analyte is not detected at or above the Practical Quantitation Limit (PQL). When client requests quantitation against MDL, analyte is not detected at or above the Method Detection Limit (MDL)
PQL	Practical Quantitation Limit
MDL	Method Detection Limit
NR	Not Reported
RPD	Relative Percent Difference
CA2	CA-ELAP (CDPH)
OR1	OR-NELAP (OSPHL)

Notes:
(1) The reported MDL and PQL are based on prep ratio variation and analytical dilution.
(2) The suffix [2C] of specific analytes signifies that the reported result is taken from the instrument's second column.
(3) Results are wet unless otherwise specified.

ADVANCED TECHNOLOGY LABORATORIES

3275 Walnut Ave., Signal Hill, CA 90755
Tel: (562) 989-4045 • Fax: (562) 989-4040

CHAIN OF CUSTODY RECORD

Page 1 of 1

Instruction: Complete all shaded areas.

For Laboratory Use Only — ATLCOC Ver: 20130715

Method of Transport	Sample Conditions Upon Receipt					
	Condition	Y	N	Condition	Y	N
☒ Client ☐ ATL	1. CHILLED	☐	☒	5. # OF SAMPLES MATCH COC	☐	☐
☐ FedEx ☐ OnTrac	2. HEADSPACE (VOA)	☐	☐	6. PRESERVED	☐	☐
☐ GSO	3. CONTAINER INTACT	☐	☐	7. COOLER TEMP, deg C:		
☐ Other:	4. SEALED	☐	☐			

CUSTOMER

Company: Hushmand
Address:
City: State: Zip:
Tel:
Fax:

SEND REPORT TO:
Attn: Naresh Belana Email:
Company:
Address: 949-777-1275
City: State: Zip:

SEND INVOICE TO: ☐ same as SEND REPORT TO
Attn: Email:
Company:
Address:
City: State: Zip:

PROJECT SAMPLES

Project Name: Parcel 32 6th St. Bridge
Project No.: 15-003
Sampler: Don Terres
Quote No:
PO #:
Special Instructions/Comments:

ITEM	Lab No.	Sample Description: Sample ID / Location		Date	Time	8260 / 624 (Volatiles)	8015(GRO) TO3 of	8015(DRO)	8270(Semi-volatiles)	8081(Organochlorine Pesticides)	8082(PCBs)	6010 / 7000(Title 22 Metals)	TO-15	SOIL / SEDIMENT / SLUDGE	SOLIDS / WIPE / FILTER	WATER - DRINKING / GROUND	WATER - STORM / WASTE	AQUEOUS / LAYERED - OIL	TAT	Container #	Container Type	Container Material	Preservative	REMARKS
1	1604331 - 1	VMW - 1	10'	11/28	7:01		X						X						5	1	7	3	Y/A	
2	- 2	VMW - 2	5'		7:19		X						X						5	1	7	3		
3	- 3	VMW - 3	15'		7:35		X						X						5	1	7	3		
4	- 4	VMW - 3 Dupl.	15'		7:45		X						X						5	1	7	3		
5	- 5	VMW - 4	10'		6:35		X						X						5	1	7	3		
6																								
7																								
8																								
9																								
10																								

QA/QC: ☐ Routine ☐ Caltrans ☐ Legal ☐ RWQCB ☐ Level IV

Container Type: 1=Tube; 2=VOA; 3=Liter; 4=Pint; 5=Jar; 6=Tedlar; 7 = Canister
Material: 1=Glass; 2=Plastic; 3=Metal
Preservative: 1=HCl; 2=HNO3; 3=H2SO4; 4 = 4C; 5=Zn ((Ac)2; 6=NaOH; 7=NA2S2O3

CUSTODY TERMS

1. Sample receiving hours: 7:30 AM to 7:30 PM Monday - Friday; Saturday 8:00 AM to 12:00 PM.
2. Samples Submitted AFTER 3:00 PM, are considered received the following Business day at 8:00 AM.
3. The following turnaround time conditions apply:
   TAT = 0 : 300% Surcharge SAME BUSINESS DAY if received by 9:00 AM
   TAT = 1 : 100% Surcharge NEXT BUSINESS DAY (COB 5:00 PM)
   TAT = 2 : 50% Surcharge 2ND BUSINESS DAY (COB 5:00 PM)
   TAT = 3 : 30% Surcharge 3RD BUSINESS DAY (COB 5:00 PM)
   TAT = 4 : 20% Surcharge 4TH BUSINESS DAY (COB 5:00 PM)
   TAT = 5 : NO SURCHARGE 5th BUSINESS DAY (COB 5:00 PM)
4. Weekend, holiday, after-hours work - ask for quote.
5. Subcontract TAT is 10 - 15 business days. Projects requiring shorter TATs will incur a surcharge respective to the subcontract lab --- ask for quote.
6. Liquid and solid samples will be disposed of after 45 calendar days from receipt of samples; air samples will be disposed of after 14 calendar days after receipt of samples.
7. Electronic records maintained for fi ve (5) years from report date.
8. Hard copy reports will be disposed of after 45 calendar days from report date.
9. Storage and Report Fees:
   - Liquid & solid samples: Complimentary storage for forty-fi ve (45) calendar days from receipt of samples; $2/sample/month if extended storage or hold is requested.
   - Air samples: Complimentary storage for ten (10) calendar days from receipt of samples; $20/ sample/week if extended storage is requested.
   - Hard copy and regenerated reports/EDDs: $17.50 per hard copy report requested; $50.00 per regenerated/reforma? ed report; $35 per reprocessed EDD.
10. Rush TCLP/STLC samples: add 2 days to analysis TAT for extraction on procedure.
11. Unanalyzed samples will incur a disposal fee of $7 per sample.

As the authorized agent of the company above, I hereby purchase laboratory services from ATL as shown above and hereby guarantee payment as quoted.

Don Terres — Submitter Print Name
Signature

Relinquished by: (Signature and Printed Name)	Date:	Time:	Received by: (Signature and Printed Name)	Date:	Time:
Don Terres	11/28/16	8:42		11/28/16	8:42

June 05, 2017

Naresh Bellana
Hushmand Associates, Inc.
250 Goddard
Irvine, CA 92618
Tel: (949) 777-1266
Fax:(949) 777-1276

ELAP No.: 1838
CSDLAC No.: 10196
ORELAP No.: CA300003
TCEQ No. : T104704502

Re: ATL Work Order Number : 1702036
Client Reference : 6th St Bridge, LAC-17-001

Enclosed are the results for sample(s) received on May 16, 2017 by Advanced Technology Laboratories. The sample(s) are tested for the parameters as indicated on the enclosed chain of custody in accordance with applicable laboratory certifications. The laboratory results contained in this report specifically pertains to the sample(s) submitted.

Thank you for the opportunity to serve the needs of your company. If you have any questions, please feel free to contact me or your Project Manager.

Sincerely,

Eddie Rodriguez
Laboratory Director

The cover letter and the case narrative are an integral part of this analytical report and its absence renders the report invalid. Test results contained within this data package meet the requirements of applicable state-specific certification programs. The report cannot be reproduced without written permission from the client and Advanced Technology Laboratories.

Certificate of Analysis

Hushmand Associates, Inc.	Project Number : 6th St Bridge, LAC-17-001
250 Goddard	Report To : Naresh Bellana
Irvine , CA 92618	Reported : 06/05/2017

SUMMARY OF SAMPLES

Sample ID	Laboratory ID	Matrix	Date Sampled	Date Received
1A-1-0.5	1702036-01	Soil	5/15/17 7:28	5/16/17 13:57
1A-1-1.0	1702036-02	Soil	5/15/17 7:28	5/16/17 13:57
1A-1-3.0	1702036-03	Soil	5/15/17 7:32	5/16/17 13:57
1A-1-5.0	1702036-04	Soil	5/15/17 7:32	5/16/17 13:57
1A-2-0.5	1702036-05	Soil	5/15/17 7:47	5/16/17 13:57
1A-2-1.0	1702036-06	Soil	5/15/17 7:47	5/16/17 13:57
1A-2-3.0	1702036-07	Soil	5/15/17 7:52	5/16/17 13:57
1A-2-5.0	1702036-08	Soil	5/15/17 7:52	5/16/17 13:57
1A-3-0.5	1702036-09	Soil	5/15/17 8:00	5/16/17 13:57
1A-3-1.0	1702036-10	Soil	5/15/17 8:00	5/16/17 13:57
1A-3-3.0	1702036-11	Soil	5/15/17 8:02	5/16/17 13:57
1A-3-5.0	1702036-12	Soil	5/15/17 8:02	5/16/17 13:57
1A-4-0.5	1702036-13	Soil	5/15/17 8:15	5/16/17 13:57
1A-4-1.0	1702036-14	Soil	5/15/17 8:15	5/16/17 13:57
1A-4-3.0	1702036-15	Soil	5/15/17 8:19	5/16/17 13:57
1A-4-5.0	1702036-16	Soil	5/15/17 8:19	5/16/17 13:57
1B-1-0.5	1702036-17	Soil	5/15/17 8:32	5/16/17 13:57
1B-1-1.0	1702036-18	Soil	5/15/17 8:32	5/16/17 13:57
1B-1-3.0	1702036-19	Soil	5/15/17 8:37	5/16/17 13:57
1B-1-5.0	1702036-20	Soil	5/15/17 8:37	5/16/17 13:57
2A-1-0.5	1702036-21	Soil	5/15/17 14:08	5/16/17 13:57
2A-1-1.0	1702036-22	Soil	5/15/17 14:08	5/16/17 13:57
2A-1-3.0	1702036-23	Soil	5/15/17 14:13	5/16/17 13:57
2A-1-5.0	1702036-24	Soil	5/15/17 14:13	5/16/17 13:57
2A-2-0.5	1702036-25	Soil	5/15/17 14:34	5/16/17 13:57
2A-2-1.0	1702036-26	Soil	5/15/17 14:34	5/16/17 13:57
2A-2-3.0	1702036-27	Soil	5/15/17 14:38	5/16/17 13:57
2A-2-5.0	1702036-28	Soil	5/15/17 14:38	5/16/17 13:57
5-1-0.5	1702036-29	Soil	5/15/17 9:47	5/16/17 13:57
5-1-1.0	1702036-30	Soil	5/15/17 9:47	5/16/17 13:57
5-1-2.0	1702036-31	Soil	5/15/17 9:47	5/16/17 13:57
5-1-3.0	1702036-32	Soil	5/15/17 9:47	5/16/17 13:57
5-2-0.5	1702036-33	Soil	5/15/17 9:55	5/16/17 13:57
5-2-1.0	1702036-34	Soil	5/15/17 9:55	5/16/17 13:57
5-2-2.0	1702036-35	Soil	5/15/17 9:55	5/16/17 13:57
5-2-3.0	1702036-36	Soil	5/15/17 9:55	5/16/17 13:57
6-1-0.5	1702036-37	Soil	5/15/17 10:07	5/16/17 13:57

Hushmand Associates, Inc.	Project Number :	6th St Bridge, LAC-17-001	
250 Goddard	Report To :	Naresh Bellana	
Irvine , CA 92618	Reported :	06/05/2017	

6-1-1.0	1702036-38	Soil	5/15/17 10:07	5/16/17 13:57
6-1-3.0	1702036-39	Soil	5/15/17 10:25	5/16/17 13:57
6-1-5.0	1702036-40	Soil	5/15/17 10:25	5/16/17 13:57
6-3-0.5	1702036-41	Soil	5/15/17 10:35	5/16/17 13:57
6-3-1.0	1702036-42	Soil	5/15/17 10:35	5/16/17 13:57
6-3-3.0	1702036-43	Soil	5/15/17 10:38	5/16/17 13:57
6-3-5.0	1702036-44	Soil	5/15/17 10:38	5/16/17 13:57
6-4-0.5	1702036-45	Soil	5/15/17 12:07	5/16/17 13:57
6-4-1.0	1702036-46	Soil	5/15/17 12:07	5/16/17 13:57
6-4-3.0	1702036-47	Soil	5/15/17 12:24	5/16/17 13:57
6-4-5.0	1702036-48	Soil	5/15/17 12:24	5/16/17 13:57
6-5-0.5	1702036-49	Soil	5/15/17 12:30	5/16/17 13:57
6-5-1.0	1702036-50	Soil	5/15/17 12:30	5/16/17 13:57
6-5-3.0	1702036-51	Soil	5/15/17 12:33	5/16/17 13:57
6-5-5.0	1702036-52	Soil	5/15/17 12:33	5/16/17 13:57
6-6-1.0	1702036-53	Soil	5/15/17 11:12	5/16/17 13:57
6-6-3.0	1702036-54	Soil	5/15/17 11:12	5/16/17 13:57
6-6-5.0	1702036-55	Soil	5/15/17 11:12	5/16/17 13:57
6-6-7.5	1702036-56	Soil	5/15/17 11:12	5/16/17 13:57
6-7-1.0	1702036-57	Soil	5/15/17 11:19	5/16/17 13:57
6-7-3.0	1702036-58	Soil	5/15/17 11:19	5/16/17 13:57
6-7-5.0	1702036-59	Soil	5/15/17 11:22	5/16/17 13:57
6-7-7.5	1702036-60	Soil	5/15/17 11:22	5/16/17 13:57
6-9-1.0	1702036-61	Soil	5/15/17 10:58	5/16/17 13:57
6-9-3.0	1702036-62	Soil	5/15/17 10:58	5/16/17 13:57
6-9-5.0	1702036-63	Soil	5/15/17 11:00	5/16/17 13:57
6-9-7.5	1702036-64	Soil	5/15/17 11:00	5/16/17 13:57
6-10-1.0	1702036-65	Soil	5/15/17 10:48	5/16/17 13:57
6-10-3.0	1702036-66	Soil	5/15/17 10:48	5/16/17 13:57
6-10-5.0	1702036-67	Soil	5/15/17 10:52	5/16/17 13:57
6-10-7.5	1702036-68	Soil	5/15/17 10:52	5/16/17 13:57
7-2-0.5	1702036-69	Soil	5/15/17 13:45	5/16/17 13:57
7-2-1.0	1702036-70	Soil	5/15/17 13:45	5/16/17 13:57
7-2-3.0	1702036-71	Soil	5/15/17 13:48	5/16/17 13:57
7-2-5.0	1702036-72	Soil	5/15/17 13:48	5/16/17 13:57
7-3-0.5	1702036-73	Soil	5/15/17 13:35	5/16/17 13:57
7-3-1.0	1702036-74	Soil	5/15/17 13:35	5/16/17 13:57
7-3-3.0	1702036-75	Soil	5/15/17 13:38	5/16/17 13:57
7-3-5.0	1702036-76	Soil	5/15/17 13:38	5/16/17 13:57
7-4-0.5	1702036-77	Soil	5/15/17 13:13	5/16/17 13:57
7-4-1.0	1702036-78	Soil	5/15/17 13:13	5/16/17 13:57

Hushmand Associates, Inc.	Project Number : 6th St Bridge, LAC-17-001
250 Goddard	Report To : Naresh Bellana
Irvine , CA 92618	Reported : 06/05/2017

7-4-3.0	1702036-79	Soil	5/15/17 13:15	5/16/17 13:57
7-4-5.0	1702036-80	Soil	5/15/17 13:15	5/16/17 13:57
6-8-1.0	1702036-81	Soil	5/15/17 11:29	5/16/17 13:57
6-8-3.0	1702036-82	Soil	5/15/17 11:29	5/16/17 13:57
6-8-5.0	1702036-83	Soil	5/15/17 11:33	5/16/17 13:57
6-8-7.5	1702036-84	Soil	5/15/17 11:33	5/16/17 13:57
6-2-0.5	1702036-85	Soil	5/16/17 7:17	5/16/17 13:57
6-2-1.0	1702036-86	Soil	5/16/17 7:17	5/16/17 13:57
6-2-3.0	1702036-87	Soil	5/16/17 7:19	5/16/17 13:57
6-2-5.0	1702036-88	Soil	5/16/17 7:19	5/16/17 13:57
7-1-0.5	1702036-89	Soil	5/16/17 7:42	5/16/17 13:57
7-1-1.0	1702036-90	Soil	5/16/17 7:42	5/16/17 13:57
7-5-0.5	1702036-91	Soil	5/16/17 8:11	5/16/17 13:57
7-5-1.0	1702036-92	Soil	5/16/17 8:11	5/16/17 13:57
7-5-3.0	1702036-93	Soil	5/16/17 8:13	5/16/17 13:57
7-5-5.0	1702036-94	Soil	5/16/17 8:13	5/16/17 13:57
7-6-0.5	1702036-95	Soil	5/16/17 8:34	5/16/17 13:57
7-6-1.0	1702036-96	Soil	5/16/17 8:34	5/16/17 13:57
7-6-3.0	1702036-97	Soil	5/16/17 8:36	5/16/17 13:57
7-6-5.0	1702036-98	Soil	5/16/17 8:36	5/16/17 13:57
7-7-0.5	1702036-99	Soil	5/16/17 8:23	5/16/17 13:57
7-7-1.0	1702036-AA	Soil	5/16/17 8:23	5/16/17 13:57
7-7-3.0	1702036-AB	Soil	5/16/17 8:25	5/16/17 13:57
7-7-5.0	1702036-AC	Soil	5/16/17 8:25	5/16/17 13:57
8-1-0.5	1702036-AD	Soil	5/16/17 9:17	5/16/17 13:57
8-1-1.0	1702036-AE	Soil	5/16/17 9:17	5/16/17 13:57
8-1-3.0	1702036-AF	Soil	5/16/17 9:20	5/16/17 13:57
8-1-5.0	1702036-AG	Soil	5/16/17 9:20	5/16/17 13:57
8-2-0.5	1702036-AH	Soil	5/16/17 9:08	5/16/17 13:57
8-2-1.0	1702036-AI	Soil	5/16/17 9:08	5/16/17 13:57
8-2-3.0	1702036-AJ	Soil	5/16/17 9:11	5/16/17 13:57
8-2-5.0	1702036-AK	Soil	5/16/17 9:11	5/16/17 13:57
8-3-0.5	1702036-AL	Soil	5/16/17 8:52	5/16/17 13:57
8-3-1.0	1702036-AM	Soil	5/16/17 8:52	5/16/17 13:57
8-3-3.0	1702036-AN	Soil	5/16/17 8:55	5/16/17 13:57
8-3-5.0	1702036-AO	Soil	5/16/17 8:55	5/16/17 13:57

Certificate of Analysis

Hushmand Associates, Inc.	Project Number : 6th St Bridge, LAC-17-001
250 Goddard	Report To : Naresh Bellana
Irvine , CA 92618	Reported : 06/05/2017

CASE NARRATIVE

The samples for EPA 8151 (Chlorinated Herbicides) analysis were subcontracted to AETL with ELAP Cert.# 1541.

Certificate of Analysis

Hushmand Associates, Inc.	Project Number : 6th St Bridge, LAC-17-001
250 Goddard	Report To : Naresh Bellana
Irvine , CA 92618	Reported : 06/05/2017

Client Sample ID 1A-1-0.5

Lab ID: 1702036-01

Title 22 Metals by ICP-AES EPA 6010B

Analyst: GO

Analyte	Result (mg/kg)	PQL (mg/kg)	Dilution	Batch	Prepared	Date/Time Analyzed	Notes
Antimony	**3.8**	2.0	1	B7E0669	05/20/2017	05/22/17 13:32	
Arsenic	**2.1**	1.0	1	B7E0669	05/20/2017	05/22/17 13:32	
Barium	**200**	1.0	1	B7E0669	05/20/2017	05/22/17 13:32	
Beryllium	ND	1.0	1	B7E0669	05/20/2017	05/22/17 13:32	
Cadmium	**1.9**	1.0	1	B7E0669	05/20/2017	05/22/17 13:32	
Chromium	**17**	1.0	1	B7E0669	05/20/2017	05/22/17 13:32	
Cobalt	**5.6**	1.0	1	B7E0669	05/20/2017	05/22/17 13:32	
Copper	**230**	2.0	1	B7E0669	05/20/2017	05/22/17 13:32	
Lead	**860**	1.0	1	B7E0669	05/20/2017	05/22/17 13:32	
Molybdenum	ND	1.0	1	B7E0669	05/20/2017	05/22/17 13:32	
Nickel	**11**	1.0	1	B7E0669	05/20/2017	05/22/17 13:32	
Selenium	ND	1.0	1	B7E0669	05/20/2017	05/22/17 13:32	
Silver	ND	1.0	1	B7E0669	05/20/2017	05/22/17 13:32	
Thallium	ND	1.0	1	B7E0669	05/20/2017	05/22/17 13:32	
Vanadium	**23**	1.0	1	B7E0669	05/20/2017	05/22/17 13:32	
Zinc	**240**	1.0	1	B7E0669	05/20/2017	05/22/17 13:32	

TCLP Metals by ICP-AES EPA 6010B

Analyst: GO

Analyte	Result (mg/L)	PQL (mg/L)	Dilution	Batch	Prepared	Date/Time Analyzed	Notes
Cadmium	ND	0.25	5	B7F0002	06/01/2017	06/01/17 13:51	D1
Lead	**3.6**	0.25	5	B7F0002	06/01/2017	06/01/17 13:51	D1

STLC Metals by ICP-AES by EPA 6010B

Analyst: GO

Analyte	Result (mg/L)	PQL (mg/L)	Dilution	Batch	Prepared	Date/Time Analyzed	Notes
Cadmium	ND	1.0	20	B7F0043	06/02/2017	06/02/17 15:35	D1
Lead	**51**	1.0	20	B7F0043	06/02/2017	06/02/17 15:35	D1

Certificate of Analysis

Hushmand Associates, Inc.	Project Number : 6th St Bridge, LAC-17-001
250 Goddard	Report To : Naresh Bellana
Irvine , CA 92618	Reported : 06/05/2017

Client Sample ID 1A-1-0.5

Lab ID: 1702036-01

Hexavalent Chromium by EPA 7196A/3060A — **Analyst: SLO**

Analyte	Result (mg/kg)	PQL (mg/kg)	Dilution	Batch	Prepared	Date/Time Analyzed	Notes
Hexavalent Chromium	**2.9**	1.0	1	B7F0053	06/01/2017	06/02/17 11:00	

Mercury by AA (Cold Vapor) EPA 7471A — **Analyst: KEK**

Analyte	Result (mg/kg)	PQL (mg/kg)	Dilution	Batch	Prepared	Date/Time Analyzed	Notes
Mercury	**0.91**	0.10	1	B7E0674	05/20/2017	05/22/17 14:19	

Certificate of Analysis

Hushmand Associates, Inc.	Project Number : 6th St Bridge, LAC-17-001
250 Goddard	Report To : Naresh Bellana
Irvine , CA 92618	Reported : 06/05/2017

Client Sample ID 1A-1-1.0

Lab ID: 1702036-02

Title 22 Metals by ICP-AES EPA 6010B

Analyst: GO

Analyte	Result (mg/kg)	PQL (mg/kg)	Dilution	Batch	Prepared	Date/Time Analyzed	Notes
Antimony	ND	2.0	1	B7E0669	05/20/2017	05/22/17 13:33	
Arsenic	ND	1.0	1	B7E0669	05/20/2017	05/22/17 13:33	
Barium	**99**	1.0	1	B7E0669	05/20/2017	05/22/17 13:33	
Beryllium	ND	1.0	1	B7E0669	05/20/2017	05/22/17 13:33	
Cadmium	ND	1.0	1	B7E0669	05/20/2017	05/22/17 13:33	
Chromium	**9.7**	1.0	1	B7E0669	05/20/2017	05/22/17 13:33	
Cobalt	**5.1**	1.0	1	B7E0669	05/20/2017	05/22/17 13:33	
Copper	**46**	2.0	1	B7E0669	05/20/2017	05/22/17 13:33	
Lead	**230**	1.0	1	B7E0669	05/20/2017	05/22/17 13:33	
Molybdenum	ND	1.0	1	B7E0669	05/20/2017	05/22/17 13:33	
Nickel	**6.8**	1.0	1	B7E0669	05/20/2017	05/22/17 13:33	
Selenium	ND	1.0	1	B7E0669	05/20/2017	05/22/17 13:33	
Silver	ND	1.0	1	B7E0669	05/20/2017	05/22/17 13:33	
Thallium	ND	1.0	1	B7E0669	05/20/2017	05/22/17 13:33	
Vanadium	**20**	1.0	1	B7E0669	05/20/2017	05/22/17 13:33	
Zinc	**130**	1.0	1	B7E0669	05/20/2017	05/22/17 13:33	

TCLP Metals by ICP-AES EPA 6010B

Analyst: GO

Analyte	Result (mg/L)	PQL (mg/L)	Dilution	Batch	Prepared	Date/Time Analyzed	Notes
Lead	ND	0.25	5	B7F0002	06/01/2017	06/01/17 13:55	D1

STLC Metals by ICP-AES by EPA 6010B

Analyst: GO

Analyte	Result (mg/L)	PQL (mg/L)	Dilution	Batch	Prepared	Date/Time Analyzed	Notes
Lead	**9.9**	1.0	20	B7F0043	06/02/2017	06/02/17 15:36	D1

Mercury by AA (Cold Vapor) EPA 7471A

Analyst: KEK

Analyte	Result (mg/kg)	PQL (mg/kg)	Dilution	Batch	Prepared	Date/Time Analyzed	Notes
Mercury	ND	0.10	1	B7E0674	05/20/2017	05/22/17 14:21	

Certificate of Analysis

Hushmand Associates, Inc.	Project Number : 6th St Bridge, LAC-17-001
250 Goddard	Report To : Naresh Bellana
Irvine , CA 92618	Reported : 06/05/2017

Client Sample ID 1A-1-3.0

Lab ID: 1702036-03

Title 22 Metals by ICP-AES EPA 6010B

Analyst: GO

Analyte	Result (mg/kg)	PQL (mg/kg)	Dilution	Batch	Prepared	Date/Time Analyzed	Notes
Antimony	**3.3**	2.0	1	B7E0669	05/20/2017	05/22/17 13:34	
Arsenic	**1.3**	1.0	1	B7E0669	05/20/2017	05/22/17 13:34	
Barium	**97**	1.0	1	B7E0669	05/20/2017	05/22/17 13:34	
Beryllium	ND	1.0	1	B7E0669	05/20/2017	05/22/17 13:34	
Cadmium	ND	1.0	1	B7E0669	05/20/2017	05/22/17 13:34	
Chromium	**19**	1.0	1	B7E0669	05/20/2017	05/22/17 13:34	
Cobalt	**4.8**	1.0	1	B7E0669	05/20/2017	05/22/17 13:34	
Copper	**100**	2.0	1	B7E0669	05/20/2017	05/22/17 13:34	
Lead	**440**	1.0	1	B7E0669	05/20/2017	05/22/17 13:34	
Molybdenum	**1.2**	1.0	1	B7E0669	05/20/2017	05/22/17 13:34	
Nickel	**8.4**	1.0	1	B7E0669	05/20/2017	05/22/17 13:34	
Selenium	ND	1.0	1	B7E0669	05/20/2017	05/22/17 13:34	
Silver	ND	1.0	1	B7E0669	05/20/2017	05/22/17 13:34	
Thallium	ND	1.0	1	B7E0669	05/20/2017	05/22/17 13:34	
Vanadium	**19**	1.0	1	B7E0669	05/20/2017	05/22/17 13:34	
Zinc	**170**	1.0	1	B7E0669	05/20/2017	05/22/17 13:34	

TCLP Metals by ICP-AES EPA 6010B

Analyst: GO

Analyte	Result (mg/L)	PQL (mg/L)	Dilution	Batch	Prepared	Date/Time Analyzed	Notes
Lead	**1.3**	0.25	5	B7F0002	06/01/2017	06/01/17 13:56	D1

STLC Metals by ICP-AES by EPA 6010B

Analyst: GO

Analyte	Result (mg/L)	PQL (mg/L)	Dilution	Batch	Prepared	Date/Time Analyzed	Notes
Lead	**11**	1.0	20	B7F0043	06/02/2017	06/02/17 15:38	D1

Hexavalent Chromium by EPA 7196A/3060A

Analyst: SLO

Analyte	Result (mg/kg)	PQL (mg/kg)	Dilution	Batch	Prepared	Date/Time Analyzed	Notes
Hexavalent Chromium	ND	1.0	1	B7F0053	06/01/2017	06/02/17 11:00	

Certificate of Analysis

Hushmand Associates, Inc.	Project Number : 6th St Bridge, LAC-17-001
250 Goddard	Report To : Naresh Bellana
Irvine , CA 92618	Reported : 06/05/2017

Client Sample ID 1A-1-3.0

Lab ID: 1702036-03

Mercury by AA (Cold Vapor) EPA 7471A **Analyst: KEK**

Analyte	Result (mg/kg)	PQL (mg/kg)	Dilution	Batch	Prepared	Date/Time Analyzed	Notes
Mercury	**0.12**	0.10	1	B7E0674	05/20/2017	05/22/17 14:23	

Certificate of Analysis

Hushmand Associates, Inc.	Project Number : 6th St Bridge, LAC-17-001
250 Goddard	Report To : Naresh Bellana
Irvine , CA 92618	Reported : 06/05/2017

Client Sample ID 1A-1-5.0

Lab ID: 1702036-04

Title 22 Metals by ICP-AES EPA 6010B — **Analyst: GO**

Analyte	Result (mg/kg)	PQL (mg/kg)	Dilution	Batch	Prepared	Date/Time Analyzed	Notes
Antimony	ND	2.0	1	B7E0669	05/20/2017	05/22/17 13:36	
Arsenic	ND	1.0	1	B7E0669	05/20/2017	05/22/17 13:36	
Barium	**33**	1.0	1	B7E0669	05/20/2017	05/22/17 13:36	
Beryllium	ND	1.0	1	B7E0669	05/20/2017	05/22/17 13:36	
Cadmium	ND	1.0	1	B7E0669	05/20/2017	05/22/17 13:36	
Chromium	**4.4**	1.0	1	B7E0669	05/20/2017	05/22/17 13:36	
Cobalt	**3.5**	1.0	1	B7E0669	05/20/2017	05/22/17 13:36	
Copper	**4.5**	2.0	1	B7E0669	05/20/2017	05/22/17 13:36	
Lead	**1.1**	1.0	1	B7E0669	05/20/2017	05/22/17 13:36	
Molybdenum	ND	1.0	1	B7E0669	05/20/2017	05/22/17 13:36	
Nickel	**2.8**	1.0	1	B7E0669	05/20/2017	05/22/17 13:36	
Selenium	ND	1.0	1	B7E0669	05/20/2017	05/22/17 13:36	
Silver	ND	1.0	1	B7E0669	05/20/2017	05/22/17 13:36	
Thallium	ND	1.0	1	B7E0669	05/20/2017	05/22/17 13:36	
Vanadium	**14**	1.0	1	B7E0669	05/20/2017	05/22/17 13:36	
Zinc	**15**	1.0	1	B7E0669	05/20/2017	05/22/17 13:36	

Mercury by AA (Cold Vapor) EPA 7471A — **Analyst: KEK**

Analyte	Result (mg/kg)	PQL (mg/kg)	Dilution	Batch	Prepared	Date/Time Analyzed	Notes
Mercury	ND	0.10	1	B7E0674	05/20/2017	05/22/17 14:25	

Certificate of Analysis

Hushmand Associates, Inc.	Project Number : 6th St Bridge, LAC-17-001
250 Goddard	Report To : Naresh Bellana
Irvine , CA 92618	Reported : 06/05/2017

Client Sample ID 1A-2-0.5

Lab ID: 1702036-05

Title 22 Metals by ICP-AES EPA 6010B

Analyst: GO

Analyte	Result (mg/kg)	PQL (mg/kg)	Dilution	Batch	Prepared	Date/Time Analyzed	Notes
Antimony	ND	2.0	1	B7E0669	05/20/2017	05/22/17 13:37	
Arsenic	**2.3**	1.0	1	B7E0669	05/20/2017	05/22/17 13:37	
Barium	**310**	1.0	1	B7E0669	05/20/2017	05/22/17 13:37	
Beryllium	ND	1.0	1	B7E0669	05/20/2017	05/22/17 13:37	
Cadmium	ND	1.0	1	B7E0669	05/20/2017	05/22/17 13:37	
Chromium	**15**	1.0	1	B7E0669	05/20/2017	05/22/17 13:37	
Cobalt	**6.3**	1.0	1	B7E0669	05/20/2017	05/22/17 13:37	
Copper	**50**	2.0	1	B7E0669	05/20/2017	05/22/17 13:37	
Lead	**310**	1.0	1	B7E0669	05/20/2017	05/22/17 13:37	
Molybdenum	ND	1.0	1	B7E0669	05/20/2017	05/22/17 13:37	
Nickel	**11**	1.0	1	B7E0669	05/20/2017	05/22/17 13:37	
Selenium	ND	1.0	1	B7E0669	05/20/2017	05/22/17 13:37	
Silver	ND	1.0	1	B7E0669	05/20/2017	05/22/17 13:37	
Thallium	ND	1.0	1	B7E0669	05/20/2017	05/22/17 13:37	
Vanadium	**25**	1.0	1	B7E0669	05/20/2017	05/22/17 13:37	
Zinc	**480**	1.0	1	B7E0669	05/20/2017	05/22/17 13:37	

TCLP Metals by ICP-AES EPA 6010B

Analyst: GO

Analyte	Result (mg/L)	PQL (mg/L)	Dilution	Batch	Prepared	Date/Time Analyzed	Notes
Lead	ND	0.25	5	B7F0002	06/01/2017	06/01/17 13:58	D1

STLC Metals by ICP-AES by EPA 6010B

Analyst: GO

Analyte	Result (mg/L)	PQL (mg/L)	Dilution	Batch	Prepared	Date/Time Analyzed	Notes
Lead	**26**	1.0	20	B7F0043	06/02/2017	06/02/17 15:39	D1

Mercury by AA (Cold Vapor) EPA 7471A

Analyst: KEK

Analyte	Result (mg/kg)	PQL (mg/kg)	Dilution	Batch	Prepared	Date/Time Analyzed	Notes
Mercury	**0.45**	0.10	1	B7E0674	05/20/2017	05/22/17 14:27	

Certificate of Analysis

Hushmand Associates, Inc.	Project Number : 6th St Bridge, LAC-17-001
250 Goddard	Report To : Naresh Bellana
Irvine , CA 92618	Reported : 06/05/2017

Client Sample ID 1A-2-1.0

Lab ID: 1702036-06

Title 22 Metals by ICP-AES EPA 6010B **Analyst: GO**

Analyte	Result (mg/kg)	PQL (mg/kg)	Dilution	Batch	Prepared	Date/Time Analyzed	Notes
Antimony	ND	2.0	1	B7E0669	05/20/2017	05/22/17 13:38	
Arsenic	**1.2**	1.0	1	B7E0669	05/20/2017	05/22/17 13:38	
Barium	**63**	1.0	1	B7E0669	05/20/2017	05/22/17 13:38	
Beryllium	ND	1.0	1	B7E0669	05/20/2017	05/22/17 13:38	
Cadmium	ND	1.0	1	B7E0669	05/20/2017	05/22/17 13:38	
Chromium	**7.9**	1.0	1	B7E0669	05/20/2017	05/22/17 13:38	
Cobalt	**5.5**	1.0	1	B7E0669	05/20/2017	05/22/17 13:38	
Copper	**9.2**	2.0	1	B7E0669	05/20/2017	05/22/17 13:38	
Lead	**15**	1.0	1	B7E0669	05/20/2017	05/22/17 13:38	
Molybdenum	ND	1.0	1	B7E0669	05/20/2017	05/22/17 13:38	
Nickel	**5.8**	1.0	1	B7E0669	05/20/2017	05/22/17 13:38	
Selenium	ND	1.0	1	B7E0669	05/20/2017	05/22/17 13:38	
Silver	ND	1.0	1	B7E0669	05/20/2017	05/22/17 13:38	
Thallium	ND	1.0	1	B7E0669	05/20/2017	05/22/17 13:38	
Vanadium	**22**	1.0	1	B7E0669	05/20/2017	05/22/17 13:38	
Zinc	**45**	1.0	1	B7E0669	05/20/2017	05/22/17 13:38	

Mercury by AA (Cold Vapor) EPA 7471A **Analyst: KEK**

Analyte	Result (mg/kg)	PQL (mg/kg)	Dilution	Batch	Prepared	Date/Time Analyzed	Notes
Mercury	**0.20**	0.10	1	B7E0674	05/20/2017	05/22/17 14:29	

Certificate of Analysis

Hushmand Associates, Inc.	Project Number : 6th St Bridge, LAC-17-001
250 Goddard	Report To : Naresh Bellana
Irvine , CA 92618	Reported : 06/05/2017

Client Sample ID 1A-2-3.0

Lab ID: 1702036-07

Title 22 Metals by ICP-AES EPA 6010B **Analyst: GO**

Analyte	Result (mg/kg)	PQL (mg/kg)	Dilution	Batch	Prepared	Date/Time Analyzed	Notes
Antimony	ND	2.0	1	B7E0669	05/20/2017	05/22/17 13:39	
Arsenic	ND	1.0	1	B7E0669	05/20/2017	05/22/17 13:39	
Barium	**39**	1.0	1	B7E0669	05/20/2017	05/22/17 13:39	
Beryllium	ND	1.0	1	B7E0669	05/20/2017	05/22/17 13:39	
Cadmium	ND	1.0	1	B7E0669	05/20/2017	05/22/17 13:39	
Chromium	**4.9**	1.0	1	B7E0669	05/20/2017	05/22/17 13:39	
Cobalt	**3.7**	1.0	1	B7E0669	05/20/2017	05/22/17 13:39	
Copper	**4.2**	2.0	1	B7E0669	05/20/2017	05/22/17 13:39	
Lead	**1.1**	1.0	1	B7E0669	05/20/2017	05/22/17 13:39	
Molybdenum	ND	1.0	1	B7E0669	05/20/2017	05/22/17 13:39	
Nickel	**3.1**	1.0	1	B7E0669	05/20/2017	05/22/17 13:39	
Selenium	ND	1.0	1	B7E0669	05/20/2017	05/22/17 13:39	
Silver	ND	1.0	1	B7E0669	05/20/2017	05/22/17 13:39	
Thallium	ND	1.0	1	B7E0669	05/20/2017	05/22/17 13:39	
Vanadium	**17**	1.0	1	B7E0669	05/20/2017	05/22/17 13:39	
Zinc	**16**	1.0	1	B7E0669	05/20/2017	05/22/17 13:39	

Mercury by AA (Cold Vapor) EPA 7471A **Analyst: KEK**

Analyte	Result (mg/kg)	PQL (mg/kg)	Dilution	Batch	Prepared	Date/Time Analyzed	Notes
Mercury	ND	0.10	1	B7E0674	05/20/2017	05/22/17 14:31	

Certificate of Analysis

Hushmand Associates, Inc.	Project Number : 6th St Bridge, LAC-17-001
250 Goddard	Report To : Naresh Bellana
Irvine , CA 92618	Reported : 06/05/2017

Client Sample ID 1A-2-5.0

Lab ID: 1702036-08

Title 22 Metals by ICP-AES EPA 6010B **Analyst: GO**

Analyte	Result (mg/kg)	PQL (mg/kg)	Dilution	Batch	Prepared	Date/Time Analyzed	Notes
Antimony	ND	2.0	1	B7E0669	05/20/2017	05/22/17 13:42	
Arsenic	**1.7**	1.0	1	B7E0669	05/20/2017	05/22/17 13:42	
Barium	**120**	1.0	1	B7E0669	05/20/2017	05/22/17 13:42	
Beryllium	ND	1.0	1	B7E0669	05/20/2017	05/22/17 13:42	
Cadmium	ND	1.0	1	B7E0669	05/20/2017	05/22/17 13:42	
Chromium	**13**	1.0	1	B7E0669	05/20/2017	05/22/17 13:42	
Cobalt	**9.0**	1.0	1	B7E0669	05/20/2017	05/22/17 13:42	
Copper	**18**	2.0	1	B7E0669	05/20/2017	05/22/17 13:42	
Lead	**3.2**	1.0	1	B7E0669	05/20/2017	05/22/17 13:42	
Molybdenum	ND	1.0	1	B7E0669	05/20/2017	05/22/17 13:42	
Nickel	**9.9**	1.0	1	B7E0669	05/20/2017	05/22/17 13:42	
Selenium	ND	1.0	1	B7E0669	05/20/2017	05/22/17 13:42	
Silver	ND	1.0	1	B7E0669	05/20/2017	05/22/17 13:42	
Thallium	ND	1.0	1	B7E0669	05/20/2017	05/22/17 13:42	
Vanadium	**26**	1.0	1	B7E0669	05/20/2017	05/22/17 13:42	
Zinc	**45**	1.0	1	B7E0669	05/20/2017	05/22/17 13:42	

Mercury by AA (Cold Vapor) EPA 7471A **Analyst: KEK**

Analyte	Result (mg/kg)	PQL (mg/kg)	Dilution	Batch	Prepared	Date/Time Analyzed	Notes
Mercury	**0.17**	0.10	1	B7E0674	05/20/2017	05/22/17 14:37	

Certificate of Analysis

Hushmand Associates, Inc.	Project Number : 6th St Bridge, LAC-17-001
250 Goddard	Report To : Naresh Bellana
Irvine , CA 92618	Reported : 06/05/2017

Client Sample ID 1A-3-0.5

Lab ID: 1702036-09

Title 22 Metals by ICP-AES EPA 6010B

Analyst: GO

Analyte	Result (mg/kg)	PQL (mg/kg)	Dilution	Batch	Prepared	Date/Time Analyzed	Notes
Antimony	ND	2.0	1	B7E0669	05/20/2017	05/22/17 13:44	
Arsenic	**2.2**	1.0	1	B7E0669	05/20/2017	05/22/17 13:44	
Barium	**120**	1.0	1	B7E0669	05/20/2017	05/22/17 13:44	
Beryllium	ND	1.0	1	B7E0669	05/20/2017	05/22/17 13:44	
Cadmium	ND	1.0	1	B7E0669	05/20/2017	05/22/17 13:44	
Chromium	**15**	1.0	1	B7E0669	05/20/2017	05/22/17 13:44	
Cobalt	**6.1**	1.0	1	B7E0669	05/20/2017	05/22/17 13:44	
Copper	**48**	2.0	1	B7E0669	05/20/2017	05/22/17 13:44	
Lead	**140**	1.0	1	B7E0669	05/20/2017	05/22/17 13:44	
Molybdenum	ND	1.0	1	B7E0669	05/20/2017	05/22/17 13:44	
Nickel	**9.2**	1.0	1	B7E0669	05/20/2017	05/22/17 13:44	
Selenium	ND	1.0	1	B7E0669	05/20/2017	05/22/17 13:44	
Silver	ND	1.0	1	B7E0669	05/20/2017	05/22/17 13:44	
Thallium	ND	1.0	1	B7E0669	05/20/2017	05/22/17 13:44	
Vanadium	**23**	1.0	1	B7E0669	05/20/2017	05/22/17 13:44	
Zinc	**130**	1.0	1	B7E0669	05/20/2017	05/22/17 13:44	

TCLP Metals by ICP-AES EPA 6010B

Analyst: GO

Analyte	Result (mg/L)	PQL (mg/L)	Dilution	Batch	Prepared	Date/Time Analyzed	Notes
Lead	ND	0.25	5	B7F0002	06/01/2017	06/01/17 14:03	D1

STLC Metals by ICP-AES by EPA 6010B

Analyst: GO

Analyte	Result (mg/L)	PQL (mg/L)	Dilution	Batch	Prepared	Date/Time Analyzed	Notes
Lead	**5.9**	1.0	20	B7F0043	06/02/2017	06/02/17 15:40	D1

Mercury by AA (Cold Vapor) EPA 7471A

Analyst: KEK

Analyte	Result (mg/kg)	PQL (mg/kg)	Dilution	Batch	Prepared	Date/Time Analyzed	Notes
Mercury	**0.18**	0.10	1	B7E0674	05/20/2017	05/22/17 14:39	

Certificate of Analysis

Hushmand Associates, Inc.	Project Number : 6th St Bridge, LAC-17-001
250 Goddard	Report To : Naresh Bellana
Irvine , CA 92618	Reported : 06/05/2017

Client Sample ID 1A-3-1.0

Lab ID: 1702036-10

Title 22 Metals by ICP-AES EPA 6010B

Analyst: GO

Analyte	Result (mg/kg)	PQL (mg/kg)	Dilution	Batch	Prepared	Date/Time Analyzed	Notes
Antimony	ND	2.0	1	B7E0680	05/20/2017	05/22/17 13:47	
Arsenic	ND	1.0	1	B7E0680	05/20/2017	05/22/17 13:47	
Barium	**130**	1.0	1	B7E0680	05/20/2017	05/22/17 13:47	
Beryllium	ND	1.0	1	B7E0680	05/20/2017	05/22/17 13:47	
Cadmium	ND	1.0	1	B7E0680	05/20/2017	05/22/17 13:47	
Chromium	**11**	1.0	1	B7E0680	05/20/2017	05/22/17 13:47	
Cobalt	**6.5**	1.0	1	B7E0680	05/20/2017	05/22/17 13:47	
Copper	**26**	2.0	1	B7E0680	05/20/2017	05/22/17 13:47	
Lead	**130**	1.0	1	B7E0680	05/20/2017	05/22/17 13:47	
Molybdenum	ND	1.0	1	B7E0680	05/20/2017	05/22/17 13:47	
Nickel	**10**	1.0	1	B7E0680	05/20/2017	05/22/17 13:47	
Selenium	ND	1.0	1	B7E0680	05/20/2017	05/22/17 13:47	
Silver	ND	1.0	1	B7E0680	05/20/2017	05/22/17 13:47	
Thallium	ND	1.0	1	B7E0680	05/20/2017	05/22/17 13:47	
Vanadium	**27**	1.0	1	B7E0680	05/20/2017	05/22/17 13:47	
Zinc	**150**	1.0	1	B7E0680	05/20/2017	05/22/17 13:47	

TCLP Metals by ICP-AES EPA 6010B

Analyst: GO

Analyte	Result (mg/L)	PQL (mg/L)	Dilution	Batch	Prepared	Date/Time Analyzed	Notes
Lead	ND	0.25	5	B7F0002	06/01/2017	06/01/17 14:04	D1

STLC Metals by ICP-AES by EPA 6010B

Analyst: GO

Analyte	Result (mg/L)	PQL (mg/L)	Dilution	Batch	Prepared	Date/Time Analyzed	Notes
Lead	**7.1**	1.0	20	B7F0043	06/02/2017	06/02/17 15:57	D1

Mercury by AA (Cold Vapor) EPA 7471A

Analyst: KEK

Analyte	Result (mg/kg)	PQL (mg/kg)	Dilution	Batch	Prepared	Date/Time Analyzed	Notes
Mercury	**0.20**	0.10	1	B7E0675	05/20/2017	05/22/17 14:45	

Certificate of Analysis

Hushmand Associates, Inc.	Project Number : 6th St Bridge, LAC-17-001
250 Goddard	Report To : Naresh Bellana
Irvine , CA 92618	Reported : 06/05/2017

Client Sample ID 1A-3-3.0

Lab ID: 1702036-11

Title 22 Metals by ICP-AES EPA 6010B **Analyst: GO**

Analyte	Result (mg/kg)	PQL (mg/kg)	Dilution	Batch	Prepared	Date/Time Analyzed	Notes
Antimony	ND	2.0	1	B7E0680	05/20/2017	05/22/17 13:51	
Arsenic	ND	1.0	1	B7E0680	05/20/2017	05/22/17 13:51	
Barium	**68**	1.0	1	B7E0680	05/20/2017	05/22/17 13:51	
Beryllium	ND	1.0	1	B7E0680	05/20/2017	05/22/17 13:51	
Cadmium	ND	1.0	1	B7E0680	05/20/2017	05/22/17 13:51	
Chromium	**7.7**	1.0	1	B7E0680	05/20/2017	05/22/17 13:51	
Cobalt	**5.4**	1.0	1	B7E0680	05/20/2017	05/22/17 13:51	
Copper	**6.9**	2.0	1	B7E0680	05/20/2017	05/22/17 13:51	
Lead	**1.5**	1.0	1	B7E0680	05/20/2017	05/22/17 13:51	
Molybdenum	ND	1.0	1	B7E0680	05/20/2017	05/22/17 13:51	
Nickel	**5.1**	1.0	1	B7E0680	05/20/2017	05/22/17 13:51	
Selenium	ND	1.0	1	B7E0680	05/20/2017	05/22/17 13:51	
Silver	ND	1.0	1	B7E0680	05/20/2017	05/22/17 13:51	
Thallium	ND	1.0	1	B7E0680	05/20/2017	05/22/17 13:51	
Vanadium	**20**	1.0	1	B7E0680	05/20/2017	05/22/17 13:51	
Zinc	**25**	1.0	1	B7E0680	05/20/2017	05/22/17 13:51	

Mercury by AA (Cold Vapor) EPA 7471A **Analyst: KEK**

Analyte	Result (mg/kg)	PQL (mg/kg)	Dilution	Batch	Prepared	Date/Time Analyzed	Notes
Mercury	ND	0.10	1	B7E0675	05/20/2017	05/22/17 14:52	

Certificate of Analysis

Hushmand Associates, Inc.	Project Number : 6th St Bridge, LAC-17-001
250 Goddard	Report To : Naresh Bellana
Irvine , CA 92618	Reported : 06/05/2017

Client Sample ID 1A-3-5.0

Lab ID: 1702036-12

Title 22 Metals by ICP-AES EPA 6010B **Analyst: GO**

Analyte	Result (mg/kg)	PQL (mg/kg)	Dilution	Batch	Prepared	Date/Time Analyzed	Notes
Antimony	ND	2.0	1	B7E0680	05/20/2017	05/22/17 13:52	
Arsenic	ND	1.0	1	B7E0680	05/20/2017	05/22/17 13:52	
Barium	**35**	1.0	1	B7E0680	05/20/2017	05/22/17 13:52	
Beryllium	ND	1.0	1	B7E0680	05/20/2017	05/22/17 13:52	
Cadmium	ND	1.0	1	B7E0680	05/20/2017	05/22/17 13:52	
Chromium	**4.7**	1.0	1	B7E0680	05/20/2017	05/22/17 13:52	
Cobalt	**3.4**	1.0	1	B7E0680	05/20/2017	05/22/17 13:52	
Copper	**3.9**	2.0	1	B7E0680	05/20/2017	05/22/17 13:52	
Lead	ND	1.0	1	B7E0680	05/20/2017	05/22/17 13:52	
Molybdenum	ND	1.0	1	B7E0680	05/20/2017	05/22/17 13:52	
Nickel	**3.1**	1.0	1	B7E0680	05/20/2017	05/22/17 13:52	
Selenium	ND	1.0	1	B7E0680	05/20/2017	05/22/17 13:52	
Silver	ND	1.0	1	B7E0680	05/20/2017	05/22/17 13:52	
Thallium	ND	1.0	1	B7E0680	05/20/2017	05/22/17 13:52	
Vanadium	**14**	1.0	1	B7E0680	05/20/2017	05/22/17 13:52	
Zinc	**17**	1.0	1	B7E0680	05/20/2017	05/22/17 13:52	

Mercury by AA (Cold Vapor) EPA 7471A **Analyst: KEK**

Analyte	Result (mg/kg)	PQL (mg/kg)	Dilution	Batch	Prepared	Date/Time Analyzed	Notes
Mercury	ND	0.10	1	B7E0675	05/20/2017	05/22/17 14:54	

Certificate of Analysis

Hushmand Associates, Inc.	Project Number : 6th St Bridge, LAC-17-001
250 Goddard	Report To : Naresh Bellana
Irvine , CA 92618	Reported : 06/05/2017

Client Sample ID 1A-4-0.5

Lab ID: 1702036-13

Title 22 Metals by ICP-AES EPA 6010B

Analyst: GO

Analyte	Result (mg/kg)	PQL (mg/kg)	Dilution	Batch	Prepared	Date/Time Analyzed	Notes
Antimony	ND	2.0	1	B7E0680	05/20/2017	05/22/17 13:53	
Arsenic	**3.4**	1.0	1	B7E0680	05/20/2017	05/22/17 13:53	
Barium	**100**	1.0	1	B7E0680	05/20/2017	05/22/17 13:53	
Beryllium	ND	1.0	1	B7E0680	05/20/2017	05/22/17 13:53	
Cadmium	ND	1.0	1	B7E0680	05/20/2017	05/22/17 13:53	
Chromium	**15**	1.0	1	B7E0680	05/20/2017	05/22/17 13:53	
Cobalt	**6.8**	1.0	1	B7E0680	05/20/2017	05/22/17 13:53	
Copper	**43**	2.0	1	B7E0680	05/20/2017	05/22/17 13:53	
Lead	**140**	1.0	1	B7E0680	05/20/2017	05/22/17 13:53	
Molybdenum	ND	1.0	1	B7E0680	05/20/2017	05/22/17 13:53	
Nickel	**11**	1.0	1	B7E0680	05/20/2017	05/22/17 13:53	
Selenium	ND	1.0	1	B7E0680	05/20/2017	05/22/17 13:53	
Silver	ND	1.0	1	B7E0680	05/20/2017	05/22/17 13:53	
Thallium	ND	1.0	1	B7E0680	05/20/2017	05/22/17 13:53	
Vanadium	**26**	1.0	1	B7E0680	05/20/2017	05/22/17 13:53	
Zinc	**210**	1.0	1	B7E0680	05/20/2017	05/22/17 13:53	

TCLP Metals by ICP-AES EPA 6010B

Analyst: GO

Analyte	Result (mg/L)	PQL (mg/L)	Dilution	Batch	Prepared	Date/Time Analyzed	Notes
Lead	ND	0.25	5	B7F0002	06/01/2017	06/01/17 14:06	D1

STLC Metals by ICP-AES by EPA 6010B

Analyst: GO

Analyte	Result (mg/L)	PQL (mg/L)	Dilution	Batch	Prepared	Date/Time Analyzed	Notes
Lead	**5.1**	1.0	20	B7F0043	06/02/2017	06/02/17 16:21	D1

Mercury by AA (Cold Vapor) EPA 7471A

Analyst: KEK

Analyte	Result (mg/kg)	PQL (mg/kg)	Dilution	Batch	Prepared	Date/Time Analyzed	Notes
Mercury	**0.22**	0.10	1	B7E0675	05/20/2017	05/22/17 15:00	

Certificate of Analysis

Hushmand Associates, Inc.	Project Number : 6th St Bridge, LAC-17-001
250 Goddard	Report To : Naresh Bellana
Irvine , CA 92618	Reported : 06/05/2017

Client Sample ID 1A-4-1.0

Lab ID: 1702036-14

Title 22 Metals by ICP-AES EPA 6010B **Analyst: GO**

Analyte	Result (mg/kg)	PQL (mg/kg)	Dilution	Batch	Prepared	Date/Time Analyzed	Notes
Antimony	ND	2.0	1	B7E0680	05/20/2017	05/22/17 13:56	
Arsenic	ND	1.0	1	B7E0680	05/20/2017	05/22/17 13:56	
Barium	**83**	1.0	1	B7E0680	05/20/2017	05/22/17 13:56	
Beryllium	ND	1.0	1	B7E0680	05/20/2017	05/22/17 13:56	
Cadmium	ND	1.0	1	B7E0680	05/20/2017	05/22/17 13:56	
Chromium	**14**	1.0	1	B7E0680	05/20/2017	05/22/17 13:56	
Cobalt	**8.0**	1.0	1	B7E0680	05/20/2017	05/22/17 13:56	
Copper	**16**	2.0	1	B7E0680	05/20/2017	05/22/17 13:56	
Lead	**4.2**	1.0	1	B7E0680	05/20/2017	05/22/17 13:56	
Molybdenum	ND	1.0	1	B7E0680	05/20/2017	05/22/17 13:56	
Nickel	**9.0**	1.0	1	B7E0680	05/20/2017	05/22/17 13:56	
Selenium	ND	1.0	1	B7E0680	05/20/2017	05/22/17 13:56	
Silver	ND	1.0	1	B7E0680	05/20/2017	05/22/17 13:56	
Thallium	ND	1.0	1	B7E0680	05/20/2017	05/22/17 13:56	
Vanadium	**29**	1.0	1	B7E0680	05/20/2017	05/22/17 13:56	
Zinc	**39**	1.0	1	B7E0680	05/20/2017	05/22/17 13:56	

Mercury by AA (Cold Vapor) EPA 7471A **Analyst: KEK**

Analyte	Result (mg/kg)	PQL (mg/kg)	Dilution	Batch	Prepared	Date/Time Analyzed	Notes
Mercury	ND	0.10	1	B7E0675	05/20/2017	05/22/17 15:02	

Certificate of Analysis

Hushmand Associates, Inc.	Project Number : 6th St Bridge, LAC-17-001
250 Goddard	Report To : Naresh Bellana
Irvine , CA 92618	Reported : 06/05/2017

Client Sample ID 1A-4-3.0

Lab ID: 1702036-15

Title 22 Metals by ICP-AES EPA 6010B **Analyst: GO**

Analyte	Result (mg/kg)	PQL (mg/kg)	Dilution	Batch	Prepared	Date/Time Analyzed	Notes
Antimony	ND	2.0	1	B7E0680	05/20/2017	05/22/17 13:58	
Arsenic	ND	1.0	1	B7E0680	05/20/2017	05/22/17 13:58	
Barium	**66**	1.0	1	B7E0680	05/20/2017	05/22/17 13:58	
Beryllium	ND	1.0	1	B7E0680	05/20/2017	05/22/17 13:58	
Cadmium	ND	1.0	1	B7E0680	05/20/2017	05/22/17 13:58	
Chromium	**9.0**	1.0	1	B7E0680	05/20/2017	05/22/17 13:58	
Cobalt	**6.6**	1.0	1	B7E0680	05/20/2017	05/22/17 13:58	
Copper	**11**	2.0	1	B7E0680	05/20/2017	05/22/17 13:58	
Lead	**1.9**	1.0	1	B7E0680	05/20/2017	05/22/17 13:58	
Molybdenum	ND	1.0	1	B7E0680	05/20/2017	05/22/17 13:58	
Nickel	**6.3**	1.0	1	B7E0680	05/20/2017	05/22/17 13:58	
Selenium	ND	1.0	1	B7E0680	05/20/2017	05/22/17 13:58	
Silver	ND	1.0	1	B7E0680	05/20/2017	05/22/17 13:58	
Thallium	ND	1.0	1	B7E0680	05/20/2017	05/22/17 13:58	
Vanadium	**24**	1.0	1	B7E0680	05/20/2017	05/22/17 13:58	
Zinc	**29**	1.0	1	B7E0680	05/20/2017	05/22/17 13:58	

Mercury by AA (Cold Vapor) EPA 7471A **Analyst: KEK**

Analyte	Result (mg/kg)	PQL (mg/kg)	Dilution	Batch	Prepared	Date/Time Analyzed	Notes
Mercury	ND	0.10	1	B7E0675	05/20/2017	05/22/17 15:04	

Certificate of Analysis

Hushmand Associates, Inc.	Project Number : 6th St Bridge, LAC-17-001
250 Goddard	Report To : Naresh Bellana
Irvine , CA 92618	Reported : 06/05/2017

Client Sample ID 1A-4-5.0

Lab ID: 1702036-16

Title 22 Metals by ICP-AES EPA 6010B **Analyst: GO**

Analyte	Result (mg/kg)	PQL (mg/kg)	Dilution	Batch	Prepared	Date/Time Analyzed	Notes
Antimony	ND	2.0	1	B7E0680	05/20/2017	05/22/17 13:59	
Arsenic	ND	1.0	1	B7E0680	05/20/2017	05/22/17 13:59	
Barium	**55**	1.0	1	B7E0680	05/20/2017	05/22/17 13:59	
Beryllium	ND	1.0	1	B7E0680	05/20/2017	05/22/17 13:59	
Cadmium	ND	1.0	1	B7E0680	05/20/2017	05/22/17 13:59	
Chromium	**7.7**	1.0	1	B7E0680	05/20/2017	05/22/17 13:59	
Cobalt	**5.7**	1.0	1	B7E0680	05/20/2017	05/22/17 13:59	
Copper	**7.7**	2.0	1	B7E0680	05/20/2017	05/22/17 13:59	
Lead	**1.7**	1.0	1	B7E0680	05/20/2017	05/22/17 13:59	
Molybdenum	ND	1.0	1	B7E0680	05/20/2017	05/22/17 13:59	
Nickel	**5.4**	1.0	1	B7E0680	05/20/2017	05/22/17 13:59	
Selenium	ND	1.0	1	B7E0680	05/20/2017	05/22/17 13:59	
Silver	ND	1.0	1	B7E0680	05/20/2017	05/22/17 13:59	
Thallium	ND	1.0	1	B7E0680	05/20/2017	05/22/17 13:59	
Vanadium	**19**	1.0	1	B7E0680	05/20/2017	05/22/17 13:59	
Zinc	**26**	1.0	1	B7E0680	05/20/2017	05/22/17 13:59	

Mercury by AA (Cold Vapor) EPA 7471A **Analyst: KEK**

Analyte	Result (mg/kg)	PQL (mg/kg)	Dilution	Batch	Prepared	Date/Time Analyzed	Notes
Mercury	ND	0.10	1	B7E0675	05/20/2017	05/22/17 15:06	

Certificate of Analysis

Hushmand Associates, Inc.	Project Number : 6th St Bridge, LAC-17-001
250 Goddard	Report To : Naresh Bellana
Irvine , CA 92618	Reported : 06/05/2017

Client Sample ID 1B-1-0.5

Lab ID: 1702036-17

Title 22 Metals by ICP-AES EPA 6010B — **Analyst: GO**

Analyte	Result (mg/kg)	PQL (mg/kg)	Dilution	Batch	Prepared	Date/Time Analyzed	Notes
Antimony	ND	2.0	1	B7E0680	05/20/2017	05/22/17 14:00	
Arsenic	**1.9**	1.0	1	B7E0680	05/20/2017	05/22/17 14:00	
Barium	**86**	1.0	1	B7E0680	05/20/2017	05/22/17 14:00	
Beryllium	ND	1.0	1	B7E0680	05/20/2017	05/22/17 14:00	
Cadmium	ND	1.0	1	B7E0680	05/20/2017	05/22/17 14:00	
Chromium	**13**	1.0	1	B7E0680	05/20/2017	05/22/17 14:00	
Cobalt	**5.2**	1.0	1	B7E0680	05/20/2017	05/22/17 14:00	
Copper	**8.3**	2.0	1	B7E0680	05/20/2017	05/22/17 14:00	
Lead	**6.6**	1.0	1	B7E0680	05/20/2017	05/22/17 14:00	
Molybdenum	**4.4**	1.0	1	B7E0680	05/20/2017	05/22/17 14:00	
Nickel	**8.4**	1.0	1	B7E0680	05/20/2017	05/22/17 14:00	
Selenium	ND	1.0	1	B7E0680	05/20/2017	05/22/17 14:00	
Silver	ND	1.0	1	B7E0680	05/20/2017	05/22/17 14:00	
Thallium	ND	1.0	1	B7E0680	05/20/2017	05/22/17 14:00	
Vanadium	**25**	1.0	1	B7E0680	05/20/2017	05/22/17 14:00	
Zinc	**29**	1.0	1	B7E0680	05/20/2017	05/22/17 14:00	

Mercury by AA (Cold Vapor) EPA 7471A — **Analyst: KEK**

Analyte	Result (mg/kg)	PQL (mg/kg)	Dilution	Batch	Prepared	Date/Time Analyzed	Notes
Mercury	ND	0.10	1	B7E0675	05/20/2017	05/22/17 15:08	

Certificate of Analysis

Hushmand Associates, Inc.	Project Number : 6th St Bridge, LAC-17-001
250 Goddard	Report To : Naresh Bellana
Irvine , CA 92618	Reported : 06/05/2017

Client Sample ID 1B-1-1.0

Lab ID: 1702036-18

Title 22 Metals by ICP-AES EPA 6010B **Analyst: GO**

Analyte	Result (mg/kg)	PQL (mg/kg)	Dilution	Batch	Prepared	Date/Time Analyzed	Notes
Antimony	ND	2.0	1	B7E0680	05/20/2017	05/22/17 14:01	
Arsenic	**1.9**	1.0	1	B7E0680	05/20/2017	05/22/17 14:01	
Barium	**84**	1.0	1	B7E0680	05/20/2017	05/22/17 14:01	
Beryllium	ND	1.0	1	B7E0680	05/20/2017	05/22/17 14:01	
Cadmium	ND	1.0	1	B7E0680	05/20/2017	05/22/17 14:01	
Chromium	**15**	1.0	1	B7E0680	05/20/2017	05/22/17 14:01	
Cobalt	**7.5**	1.0	1	B7E0680	05/20/2017	05/22/17 14:01	
Copper	**8.8**	2.0	1	B7E0680	05/20/2017	05/22/17 14:01	
Lead	**4.4**	1.0	1	B7E0680	05/20/2017	05/22/17 14:01	
Molybdenum	**3.3**	1.0	1	B7E0680	05/20/2017	05/22/17 14:01	
Nickel	**12**	1.0	1	B7E0680	05/20/2017	05/22/17 14:01	
Selenium	ND	1.0	1	B7E0680	05/20/2017	05/22/17 14:01	
Silver	ND	1.0	1	B7E0680	05/20/2017	05/22/17 14:01	
Thallium	ND	1.0	1	B7E0680	05/20/2017	05/22/17 14:01	
Vanadium	**30**	1.0	1	B7E0680	05/20/2017	05/22/17 14:01	
Zinc	**31**	1.0	1	B7E0680	05/20/2017	05/22/17 14:01	

Mercury by AA (Cold Vapor) EPA 7471A **Analyst: KEK**

Analyte	Result (mg/kg)	PQL (mg/kg)	Dilution	Batch	Prepared	Date/Time Analyzed	Notes
Mercury	ND	0.10	1	B7E0675	05/20/2017	05/22/17 15:10	

Certificate of Analysis

Hushmand Associates, Inc.	Project Number : 6th St Bridge, LAC-17-001
250 Goddard	Report To : Naresh Bellana
Irvine , CA 92618	Reported : 06/05/2017

Client Sample ID 1B-1-3.0

Lab ID: 1702036-19

Title 22 Metals by ICP-AES EPA 6010B — **Analyst: GO**

Analyte	Result (mg/kg)	PQL (mg/kg)	Dilution	Batch	Prepared	Date/Time Analyzed	Notes
Antimony	ND	2.0	1	B7E0680	05/20/2017	05/22/17 14:02	
Arsenic	ND	1.0	1	B7E0680	05/20/2017	05/22/17 14:02	
Barium	**50**	1.0	1	B7E0680	05/20/2017	05/22/17 14:02	
Beryllium	ND	1.0	1	B7E0680	05/20/2017	05/22/17 14:02	
Cadmium	ND	1.0	1	B7E0680	05/20/2017	05/22/17 14:02	
Chromium	**6.3**	1.0	1	B7E0680	05/20/2017	05/22/17 14:02	
Cobalt	**4.0**	1.0	1	B7E0680	05/20/2017	05/22/17 14:02	
Copper	**6.4**	2.0	1	B7E0680	05/20/2017	05/22/17 14:02	
Lead	**4.3**	1.0	1	B7E0680	05/20/2017	05/22/17 14:02	
Molybdenum	ND	1.0	1	B7E0680	05/20/2017	05/22/17 14:02	
Nickel	**3.9**	1.0	1	B7E0680	05/20/2017	05/22/17 14:02	
Selenium	ND	1.0	1	B7E0680	05/20/2017	05/22/17 14:02	
Silver	ND	1.0	1	B7E0680	05/20/2017	05/22/17 14:02	
Thallium	ND	1.0	1	B7E0680	05/20/2017	05/22/17 14:02	
Vanadium	**18**	1.0	1	B7E0680	05/20/2017	05/22/17 14:02	
Zinc	**24**	1.0	1	B7E0680	05/20/2017	05/22/17 14:02	

Mercury by AA (Cold Vapor) EPA 7471A — **Analyst: KEK**

Analyte	Result (mg/kg)	PQL (mg/kg)	Dilution	Batch	Prepared	Date/Time Analyzed	Notes
Mercury	ND	0.10	1	B7E0675	05/20/2017	05/22/17 15:12	

Certificate of Analysis

Hushmand Associates, Inc.	Project Number : 6th St Bridge, LAC-17-001
250 Goddard	Report To : Naresh Bellana
Irvine , CA 92618	Reported : 06/05/2017

Client Sample ID 1B-1-5.0

Lab ID: 1702036-20

Title 22 Metals by ICP-AES EPA 6010B **Analyst: GO**

Analyte	Result (mg/kg)	PQL (mg/kg)	Dilution	Batch	Prepared	Date/Time Analyzed	Notes
Antimony	ND	2.0	1	B7E0680	05/20/2017	05/22/17 14:03	
Arsenic	**1.3**	1.0	1	B7E0680	05/20/2017	05/22/17 14:03	
Barium	**69**	1.0	1	B7E0680	05/20/2017	05/22/17 14:03	
Beryllium	ND	1.0	1	B7E0680	05/20/2017	05/22/17 14:03	
Cadmium	ND	1.0	1	B7E0680	05/20/2017	05/22/17 14:03	
Chromium	**8.4**	1.0	1	B7E0680	05/20/2017	05/22/17 14:03	
Cobalt	**5.5**	1.0	1	B7E0680	05/20/2017	05/22/17 14:03	
Copper	**9.7**	2.0	1	B7E0680	05/20/2017	05/22/17 14:03	
Lead	**19**	1.0	1	B7E0680	05/20/2017	05/22/17 14:03	
Molybdenum	ND	1.0	1	B7E0680	05/20/2017	05/22/17 14:03	
Nickel	**6.0**	1.0	1	B7E0680	05/20/2017	05/22/17 14:03	
Selenium	ND	1.0	1	B7E0680	05/20/2017	05/22/17 14:03	
Silver	ND	1.0	1	B7E0680	05/20/2017	05/22/17 14:03	
Thallium	ND	1.0	1	B7E0680	05/20/2017	05/22/17 14:03	
Vanadium	**21**	1.0	1	B7E0680	05/20/2017	05/22/17 14:03	
Zinc	**32**	1.0	1	B7E0680	05/20/2017	05/22/17 14:03	

Mercury by AA (Cold Vapor) EPA 7471A **Analyst: KEK**

Analyte	Result (mg/kg)	PQL (mg/kg)	Dilution	Batch	Prepared	Date/Time Analyzed	Notes
Mercury	**0.19**	0.10	1	B7E0675	05/20/2017	05/22/17 15:14	

Certificate of Analysis

Hushmand Associates, Inc.	Project Number : 6th St Bridge, LAC-17-001
250 Goddard	Report To : Naresh Bellana
Irvine , CA 92618	Reported : 06/05/2017

Client Sample ID 2A-1-0.5

Lab ID: 1702036-21

Title 22 Metals by ICP-AES EPA 6010B **Analyst: GO**

Analyte	Result (mg/kg)	PQL (mg/kg)	Dilution	Batch	Prepared	Date/Time Analyzed	Notes
Antimony	ND	2.0	1	B7E0680	05/20/2017	05/22/17 14:04	
Arsenic	ND	1.0	1	B7E0680	05/20/2017	05/22/17 14:04	
Barium	**160**	1.0	1	B7E0680	05/20/2017	05/22/17 14:04	
Beryllium	ND	1.0	1	B7E0680	05/20/2017	05/22/17 14:04	
Cadmium	ND	1.0	1	B7E0680	05/20/2017	05/22/17 14:04	
Chromium	**8.8**	1.0	1	B7E0680	05/20/2017	05/22/17 14:04	
Cobalt	**4.2**	1.0	1	B7E0680	05/20/2017	05/22/17 14:04	
Copper	**12**	2.0	1	B7E0680	05/20/2017	05/22/17 14:04	
Lead	**7.6**	1.0	1	B7E0680	05/20/2017	05/22/17 14:04	
Molybdenum	ND	1.0	1	B7E0680	05/20/2017	05/22/17 14:04	
Nickel	**9.4**	1.0	1	B7E0680	05/20/2017	05/22/17 14:04	
Selenium	ND	1.0	1	B7E0680	05/20/2017	05/22/17 14:04	
Silver	ND	1.0	1	B7E0680	05/20/2017	05/22/17 14:04	
Thallium	ND	1.0	1	B7E0680	05/20/2017	05/22/17 14:04	
Vanadium	**19**	1.0	1	B7E0680	05/20/2017	05/22/17 14:04	
Zinc	**46**	1.0	1	B7E0680	05/20/2017	05/22/17 14:04	

Mercury by AA (Cold Vapor) EPA 7471A **Analyst: KEK**

Analyte	Result (mg/kg)	PQL (mg/kg)	Dilution	Batch	Prepared	Date/Time Analyzed	Notes
Mercury	ND	0.10	1	B7E0675	05/20/2017	05/22/17 15:16	

Certificate of Analysis

Hushmand Associates, Inc.	Project Number : 6th St Bridge, LAC-17-001
250 Goddard	Report To : Naresh Bellana
Irvine , CA 92618	Reported : 06/05/2017

Client Sample ID 2A-1-1.0

Lab ID: 1702036-22

Title 22 Metals by ICP-AES EPA 6010B

Analyst: GO

Analyte	Result (mg/kg)	PQL (mg/kg)	Dilution	Batch	Prepared	Date/Time Analyzed	Notes
Antimony	ND	2.0	1	B7E0680	05/20/2017	05/22/17 14:06	
Arsenic	ND	1.0	1	B7E0680	05/20/2017	05/22/17 14:06	
Barium	**84**	1.0	1	B7E0680	05/20/2017	05/22/17 14:06	
Beryllium	ND	1.0	1	B7E0680	05/20/2017	05/22/17 14:06	
Cadmium	ND	1.0	1	B7E0680	05/20/2017	05/22/17 14:06	
Chromium	**11**	1.0	1	B7E0680	05/20/2017	05/22/17 14:06	
Cobalt	**7.3**	1.0	1	B7E0680	05/20/2017	05/22/17 14:06	
Copper	**12**	2.0	1	B7E0680	05/20/2017	05/22/17 14:06	
Lead	**6.3**	1.0	1	B7E0680	05/20/2017	05/22/17 14:06	
Molybdenum	ND	1.0	1	B7E0680	05/20/2017	05/22/17 14:06	
Nickel	**7.8**	1.0	1	B7E0680	05/20/2017	05/22/17 14:06	
Selenium	ND	1.0	1	B7E0680	05/20/2017	05/22/17 14:06	
Silver	ND	1.0	1	B7E0680	05/20/2017	05/22/17 14:06	
Thallium	ND	1.0	1	B7E0680	05/20/2017	05/22/17 14:06	
Vanadium	**27**	1.0	1	B7E0680	05/20/2017	05/22/17 14:06	
Zinc	**36**	1.0	1	B7E0680	05/20/2017	05/22/17 14:06	

Mercury by AA (Cold Vapor) EPA 7471A

Analyst: KEK

Analyte	Result (mg/kg)	PQL (mg/kg)	Dilution	Batch	Prepared	Date/Time Analyzed	Notes
Mercury	ND	0.10	1	B7E0675	05/20/2017	05/22/17 15:18	

Gasoline Range Organics by EPA 8015B (Modified)

Analyst: VW

Analyte	Result (mg/kg)	PQL (mg/kg)	Dilution	Batch	Prepared	Date/Time Analyzed	Notes
Gasoline Range Organics	ND	1.0	1	B7E0718	05/22/2017	05/22/17 10:03	
Surrogate: 4-Bromofluorobenzene *98.1 %*		*36 - 125*		B7E0718	05/22/2017	*05/22/17 10:03*	

Diesel Range Organics by EPA 8015B

Analyst: CR

Analyte	Result (mg/kg)	PQL (mg/kg)	Dilution	Batch	Prepared	Date/Time Analyzed	Notes
DRO	ND	10	1	B7E0785	05/23/2017	05/25/17 01:50	
Surrogate: p-Terphenyl *83.9 %*		*47 - 157*		B7E0785	05/23/2017	*05/25/17 01:50*	

Certificate of Analysis

Hushmand Associates, Inc.	Project Number : 6th St Bridge, LAC-17-001
250 Goddard	Report To : Naresh Bellana
Irvine , CA 92618	Reported : 06/05/2017

Client Sample ID 2A-1-1.0

Lab ID: 1702036-22

Organochlorine Pesticides by EPA 8081 **Analyst: RL/**

Analyte	Result (ug/kg)	PQL (ug/kg)	Dilution	Batch	Prepared	Date/Time Analyzed	Notes
4,4´-DDD	ND	2.0	1	B7E0750	05/22/2017	05/23/17 11:57	
4,4´-DDE	ND	2.0	1	B7E0750	05/22/2017	05/23/17 11:57	
4,4´-DDT	ND	2.0	1	B7E0750	05/22/2017	05/23/17 11:57	
Aldrin	ND	1.0	1	B7E0750	05/22/2017	05/23/17 11:57	
alpha-BHC	ND	1.0	1	B7E0750	05/22/2017	05/23/17 11:57	
alpha-Chlordane	ND	1.0	1	B7E0750	05/22/2017	05/23/17 11:57	
beta-BHC	ND	1.0	1	B7E0750	05/22/2017	05/23/17 11:57	
Chlordane	ND	8.5	1	B7E0750	05/22/2017	05/23/17 11:57	
delta-BHC	ND	1.0	1	B7E0750	05/22/2017	05/23/17 11:57	
Dieldrin	ND	2.0	1	B7E0750	05/22/2017	05/23/17 11:57	
Endosulfan I	ND	1.0	1	B7E0750	05/22/2017	05/23/17 11:57	
Endosulfan II	ND	2.0	1	B7E0750	05/22/2017	05/23/17 11:57	
Endosulfan sulfate	ND	2.0	1	B7E0750	05/22/2017	05/23/17 11:57	
Endrin	ND	2.0	1	B7E0750	05/22/2017	05/23/17 11:57	
Endrin aldehyde	ND	2.0	1	B7E0750	05/22/2017	05/23/17 11:57	
Endrin ketone	ND	2.0	1	B7E0750	05/22/2017	05/23/17 11:57	
gamma-BHC	ND	1.0	1	B7E0750	05/22/2017	05/23/17 11:57	
gamma-Chlordane	ND	1.0	1	B7E0750	05/22/2017	05/23/17 11:57	
Heptachlor	ND	1.0	1	B7E0750	05/22/2017	05/23/17 11:57	
Heptachlor epoxide	ND	1.0	1	B7E0750	05/22/2017	05/23/17 11:57	
Methoxychlor	ND	5.0	1	B7E0750	05/22/2017	05/23/17 11:57	
Toxaphene	ND	50	1	B7E0750	05/22/2017	05/23/17 11:57	
Surrogate: Decachlorobiphenyl	*64.3 %*	*27 - 123*		B7E0750	05/22/2017	*05/23/17 11:57*	
Surrogate: Tetrachloro-m-xylene	*69.7 %*	*26 - 108*		B7E0750	05/22/2017	*05/23/17 11:57*	

Certificate of Analysis

Hushmand Associates, Inc.	Project Number : 6th St Bridge, LAC-17-001
250 Goddard	Report To : Naresh Bellana
Irvine , CA 92618	Reported : 06/05/2017

Client Sample ID 2A-1-1.0

Lab ID: 1702036-22

Polychlorinated Biphenyls by EPA 8082

Analyst: LT

Analyte	Result (ug/kg)	PQL (ug/kg)	Dilution	Batch	Prepared	Date/Time Analyzed	Notes
Aroclor 1016	ND	16	1	B7E0750	05/22/2017	05/22/17 17:31	
Aroclor 1221	ND	16	1	B7E0750	05/22/2017	05/22/17 17:31	
Aroclor 1232	ND	16	1	B7E0750	05/22/2017	05/22/17 17:31	
Aroclor 1242	ND	16	1	B7E0750	05/22/2017	05/22/17 17:31	
Aroclor 1248	ND	16	1	B7E0750	05/22/2017	05/22/17 17:31	
Aroclor 1254	ND	16	1	B7E0750	05/22/2017	05/22/17 17:31	
Aroclor 1260	ND	16	1	B7E0750	05/22/2017	05/22/17 17:31	
Aroclor 1262	ND	16	1	B7E0750	05/22/2017	05/22/17 17:31	
Aroclor 1268	ND	16	1	B7E0750	05/22/2017	05/22/17 17:31	
Surrogate: Decachlorobiphenyl	*90.7 %*	*18 - 136*		B7E0750	05/22/2017	*05/22/17 17:31*	
Surrogate: Tetrachloro-m-xylene	*89.9 %*	*30 - 130*		B7E0750	05/22/2017	*05/22/17 17:31*	

Volatile Organic Compounds by EPA 8260B

Analyst: AG

Analyte	Result (ug/kg)	PQL (ug/kg)	Dilution	Batch	Prepared	Date/Time Analyzed	Notes
1,1,1,2-Tetrachloroethane	ND	5.0	1	B7E0639	05/18/2017	05/18/17 15:26	
1,1,1-Trichloroethane	ND	5.0	1	B7E0639	05/18/2017	05/18/17 15:26	
1,1,2,2-Tetrachloroethane	ND	5.0	1	B7E0639	05/18/2017	05/18/17 15:26	
1,1,2-Trichloroethane	ND	5.0	1	B7E0639	05/18/2017	05/18/17 15:26	
1,1-Dichloroethane	ND	5.0	1	B7E0639	05/18/2017	05/18/17 15:26	
1,1-Dichloroethene	ND	5.0	1	B7E0639	05/18/2017	05/18/17 15:26	
1,1-Dichloropropene	ND	5.0	1	B7E0639	05/18/2017	05/18/17 15:26	
1,2,3-Trichloropropane	ND	5.0	1	B7E0639	05/18/2017	05/18/17 15:26	
1,2,3-Trichlorobenzene	ND	5.0	1	B7E0639	05/18/2017	05/18/17 15:26	
1,2,4-Trichlorobenzene	ND	5.0	1	B7E0639	05/18/2017	05/18/17 15:26	
1,2,4-Trimethylbenzene	ND	5.0	1	B7E0639	05/18/2017	05/18/17 15:26	
1,2-Dibromo-3-chloropropane	ND	10	1	B7E0639	05/18/2017	05/18/17 15:26	
1,2-Dibromoethane	ND	5.0	1	B7E0639	05/18/2017	05/18/17 15:26	
1,2-Dichlorobenzene	ND	5.0	1	B7E0639	05/18/2017	05/18/17 15:26	
1,2-Dichloroethane	ND	5.0	1	B7E0639	05/18/2017	05/18/17 15:26	
1,2-Dichloropropane	ND	5.0	1	B7E0639	05/18/2017	05/18/17 15:26	
1,3,5-Trimethylbenzene	ND	5.0	1	B7E0639	05/18/2017	05/18/17 15:26	
1,3-Dichlorobenzene	ND	5.0	1	B7E0639	05/18/2017	05/18/17 15:26	
1,3-Dichloropropane	ND	5.0	1	B7E0639	05/18/2017	05/18/17 15:26	
1,4-Dichlorobenzene	ND	5.0	1	B7E0639	05/18/2017	05/18/17 15:26	
2,2-Dichloropropane	ND	5.0	1	B7E0639	05/18/2017	05/18/17 15:26	

Certificate of Analysis

Hushmand Associates, Inc.	Project Number : 6th St Bridge, LAC-17-001
250 Goddard	Report To : Naresh Bellana
Irvine , CA 92618	Reported : 06/05/2017

Client Sample ID 2A-1-1.0

Lab ID: 1702036-22

Volatile Organic Compounds by EPA 8260B **Analyst: AG**

Analyte	Result (ug/kg)	PQL (ug/kg)	Dilution	Batch	Prepared	Date/Time Analyzed	Notes
2-Chlorotoluene	ND	5.0	1	B7E0639	05/18/2017	05/18/17 15:26	
4-Chlorotoluene	ND	5.0	1	B7E0639	05/18/2017	05/18/17 15:26	
4-Isopropyltoluene	ND	5.0	1	B7E0639	05/18/2017	05/18/17 15:26	
Benzene	ND	5.0	1	B7E0639	05/18/2017	05/18/17 15:26	
Bromobenzene	ND	5.0	1	B7E0639	05/18/2017	05/18/17 15:26	
Bromochloromethane	ND	5.0	1	B7E0639	05/18/2017	05/18/17 15:26	
Bromodichloromethane	ND	5.0	1	B7E0639	05/18/2017	05/18/17 15:26	
Bromoform	ND	5.0	1	B7E0639	05/18/2017	05/18/17 15:26	
Bromomethane	ND	5.0	1	B7E0639	05/18/2017	05/18/17 15:26	
Carbon disulfide	ND	5.0	1	B7E0639	05/18/2017	05/18/17 15:26	
Carbon tetrachloride	ND	5.0	1	B7E0639	05/18/2017	05/18/17 15:26	
Chlorobenzene	ND	5.0	1	B7E0639	05/18/2017	05/18/17 15:26	
Chloroethane	ND	5.0	1	B7E0639	05/18/2017	05/18/17 15:26	
Chloroform	ND	5.0	1	B7E0639	05/18/2017	05/18/17 15:26	
Chloromethane	ND	5.0	1	B7E0639	05/18/2017	05/18/17 15:26	
cis-1,2-Dichloroethene	ND	5.0	1	B7E0639	05/18/2017	05/18/17 15:26	
cis-1,3-Dichloropropene	ND	5.0	1	B7E0639	05/18/2017	05/18/17 15:26	
Di-isopropyl ether	ND	5.0	1	B7E0639	05/18/2017	05/18/17 15:26	
Dibromochloromethane	ND	5.0	1	B7E0639	05/18/2017	05/18/17 15:26	
Dibromomethane	ND	5.0	1	B7E0639	05/18/2017	05/18/17 15:26	
Dichlorodifluoromethane	ND	5.0	1	B7E0639	05/18/2017	05/18/17 15:26	
Ethyl Acetate	ND	50	1	B7E0639	05/18/2017	05/18/17 15:26	
Ethyl Ether	ND	50	1	B7E0639	05/18/2017	05/18/17 15:26	
Ethyl tert-butyl ether	ND	5.0	1	B7E0639	05/18/2017	05/18/17 15:26	
Ethylbenzene	ND	5.0	1	B7E0639	05/18/2017	05/18/17 15:26	
Freon-113	ND	5.0	1	B7E0639	05/18/2017	05/18/17 15:26	
Hexachlorobutadiene	ND	5.0	1	B7E0639	05/18/2017	05/18/17 15:26	
Isopropylbenzene	ND	5.0	1	B7E0639	05/18/2017	05/18/17 15:26	
m,p-Xylene	ND	10	1	B7E0639	05/18/2017	05/18/17 15:26	
Methylene chloride	ND	5.0	1	B7E0639	05/18/2017	05/18/17 15:26	
MTBE	ND	5.0	1	B7E0639	05/18/2017	05/18/17 15:26	
n-Butylbenzene	ND	5.0	1	B7E0639	05/18/2017	05/18/17 15:26	
n-Propylbenzene	ND	5.0	1	B7E0639	05/18/2017	05/18/17 15:26	
Naphthalene	ND	5.0	1	B7E0639	05/18/2017	05/18/17 15:26	
o-Xylene	ND	5.0	1	B7E0639	05/18/2017	05/18/17 15:26	
sec-Butylbenzene	ND	5.0	1	B7E0639	05/18/2017	05/18/17 15:26	
Styrene	ND	5.0	1	B7E0639	05/18/2017	05/18/17 15:26	

Certificate of Analysis

Hushmand Associates, Inc.	Project Number : 6th St Bridge, LAC-17-001
250 Goddard	Report To : Naresh Bellana
Irvine , CA 92618	Reported : 06/05/2017

Client Sample ID 2A-1-1.0

Lab ID: 1702036-22

Volatile Organic Compounds by EPA 8260B

Analyst: AG

Analyte	Result (ug/kg)	PQL (ug/kg)	Dilution	Batch	Prepared	Date/Time Analyzed	Notes
tert-Amyl methyl ether	ND	5.0	1	B7E0639	05/18/2017	05/18/17 15:26	
tert-Butanol	ND	100	1	B7E0639	05/18/2017	05/18/17 15:26	
tert-Butylbenzene	ND	5.0	1	B7E0639	05/18/2017	05/18/17 15:26	
Tetrachloroethene	ND	5.0	1	B7E0639	05/18/2017	05/18/17 15:26	
Toluene	ND	5.0	1	B7E0639	05/18/2017	05/18/17 15:26	
trans-1,2-Dichloroethene	ND	5.0	1	B7E0639	05/18/2017	05/18/17 15:26	
trans-1,3-Dichloropropene	ND	5.0	1	B7E0639	05/18/2017	05/18/17 15:26	
Trichloroethene	ND	5.0	1	B7E0639	05/18/2017	05/18/17 15:26	
Trichlorofluoromethane	ND	5.0	1	B7E0639	05/18/2017	05/18/17 15:26	
Vinyl acetate	ND	50	1	B7E0639	05/18/2017	05/18/17 15:26	
Vinyl chloride	ND	5.0	1	B7E0639	05/18/2017	05/18/17 15:26	
Surrogate: 1,2-Dichloroethane-d4	*96.6 %*	*12 - 186*		B7E0639	05/18/2017	*05/18/17 15:26*	
Surrogate: 4-Bromofluorobenzene	*100 %*	*23 - 162*		B7E0639	05/18/2017	*05/18/17 15:26*	
Surrogate: Dibromofluoromethane	*98.1 %*	*23 - 179*		B7E0639	05/18/2017	*05/18/17 15:26*	
Surrogate: Toluene-d8	*102 %*	*26 - 164*		B7E0639	05/18/2017	*05/18/17 15:26*	

Semivolatile Organic Compounds by EPA 8270C

Analyst: SP

Analyte	Result (ug/kg)	PQL (ug/kg)	Dilution	Batch	Prepared	Date/Time Analyzed	Notes
1,2,4-Trichlorobenzene	ND	330	1	B7E0747	05/22/2017	05/22/17 18:09	
1,2-Dichlorobenzene	ND	330	1	B7E0747	05/22/2017	05/22/17 18:09	
1,3-Dichlorobenzene	ND	330	1	B7E0747	05/22/2017	05/22/17 18:09	
1,4-Dichlorobenzene	ND	330	1	B7E0747	05/22/2017	05/22/17 18:09	
2,4,5-Trichlorophenol	ND	330	1	B7E0747	05/22/2017	05/22/17 18:09	
2,4,6-Trichlorophenol	ND	330	1	B7E0747	05/22/2017	05/22/17 18:09	
2,4-Dichlorophenol	ND	1600	1	B7E0747	05/22/2017	05/22/17 18:09	
2,4-Dimethylphenol	ND	330	1	B7E0747	05/22/2017	05/22/17 18:09	
2,4-Dinitrophenol	ND	1600	1	B7E0747	05/22/2017	05/22/17 18:09	
2,4-Dinitrotoluene	ND	330	1	B7E0747	05/22/2017	05/22/17 18:09	
2,6-Dinitrotoluene	ND	330	1	B7E0747	05/22/2017	05/22/17 18:09	
2-Chloronaphthalene	ND	330	1	B7E0747	05/22/2017	05/22/17 18:09	
2-Chlorophenol	ND	330	1	B7E0747	05/22/2017	05/22/17 18:09	
2-Methylnaphthalene	ND	330	1	B7E0747	05/22/2017	05/22/17 18:09	
2-Methylphenol	ND	330	1	B7E0747	05/22/2017	05/22/17 18:09	
2-Nitroaniline	ND	1600	1	B7E0747	05/22/2017	05/22/17 18:09	
2-Nitrophenol	ND	330	1	B7E0747	05/22/2017	05/22/17 18:09	

Certificate of Analysis

Hushmand Associates, Inc.	Project Number : 6th St Bridge, LAC-17-001
250 Goddard	Report To : Naresh Bellana
Irvine , CA 92618	Reported : 06/05/2017

Client Sample ID 2A-1-1.0

Lab ID: 1702036-22

Semivolatile Organic Compounds by EPA 8270C **Analyst: SP**

Analyte	Result (ug/kg)	PQL (ug/kg)	Dilution	Batch	Prepared	Date/Time Analyzed	Notes
3,3´-Dichlorobenzidine	ND	660	1	B7E0747	05/22/2017	05/22/17 18:09	
3-Nitroaniline	ND	1600	1	B7E0747	05/22/2017	05/22/17 18:09	
4,6-Dinitro-2-methyphenol	ND	1600	1	B7E0747	05/22/2017	05/22/17 18:09	
4-Bromophenyl-phenylether	ND	330	1	B7E0747	05/22/2017	05/22/17 18:09	
4-Chloro-3-methylphenol	ND	660	1	B7E0747	05/22/2017	05/22/17 18:09	
4-Chloroaniline	ND	660	1	B7E0747	05/22/2017	05/22/17 18:09	
4-Chlorophenyl-phenylether	ND	330	1	B7E0747	05/22/2017	05/22/17 18:09	
4-Methylphenol	ND	330	1	B7E0747	05/22/2017	05/22/17 18:09	
4-Nitroaniline	ND	1600	1	B7E0747	05/22/2017	05/22/17 18:09	
4-Nitrophenol	ND	330	1	B7E0747	05/22/2017	05/22/17 18:09	
Acenaphthene	ND	330	1	B7E0747	05/22/2017	05/22/17 18:09	
Acenaphthylene	ND	330	1	B7E0747	05/22/2017	05/22/17 18:09	
Anthracene	ND	330	1	B7E0747	05/22/2017	05/22/17 18:09	
Benzidine (M)	ND	1600	1	B7E0747	05/22/2017	05/22/17 18:09	
Benzo(a)anthracene	ND	330	1	B7E0747	05/22/2017	05/22/17 18:09	
Benzo(a)pyrene	ND	330	1	B7E0747	05/22/2017	05/22/17 18:09	
Benzo(b)fluoranthene	ND	330	1	B7E0747	05/22/2017	05/22/17 18:09	
Benzo(g,h,i)perylene	ND	330	1	B7E0747	05/22/2017	05/22/17 18:09	
Benzo(k)fluoranthene	ND	330	1	B7E0747	05/22/2017	05/22/17 18:09	
Benzoic acid	ND	1600	1	B7E0747	05/22/2017	05/22/17 18:09	
Benzyl alcohol	ND	660	1	B7E0747	05/22/2017	05/22/17 18:09	
bis(2-chloroethoxy)methane	ND	330	1	B7E0747	05/22/2017	05/22/17 18:09	
bis(2-Chloroethyl)ether	ND	330	1	B7E0747	05/22/2017	05/22/17 18:09	
bis(2-chloroisopropyl)ether	ND	330	1	B7E0747	05/22/2017	05/22/17 18:09	
bis(2-ethylhexyl)phthalate	ND	330	1	B7E0747	05/22/2017	05/22/17 18:09	
Butylbenzylphthalate	ND	330	1	B7E0747	05/22/2017	05/22/17 18:09	
Chrysene	ND	330	1	B7E0747	05/22/2017	05/22/17 18:09	
Di-n-butylphthalate	ND	330	1	B7E0747	05/22/2017	05/22/17 18:09	
Di-n-octylphthalate	ND	330	1	B7E0747	05/22/2017	05/22/17 18:09	
Dibenz(a,h)anthracene	ND	330	1	B7E0747	05/22/2017	05/22/17 18:09	
Dibenzofuran	ND	330	1	B7E0747	05/22/2017	05/22/17 18:09	
Diethyl phthalate	ND	330	1	B7E0747	05/22/2017	05/22/17 18:09	
Dimethyl phthalate	ND	330	1	B7E0747	05/22/2017	05/22/17 18:09	
Fluoranthene	ND	330	1	B7E0747	05/22/2017	05/22/17 18:09	
Fluorene	ND	330	1	B7E0747	05/22/2017	05/22/17 18:09	
Hexachlorobenzene	ND	330	1	B7E0747	05/22/2017	05/22/17 18:09	
Hexachlorobutadiene	ND	660	1	B7E0747	05/22/2017	05/22/17 18:09	

Certificate of Analysis

Hushmand Associates, Inc.	Project Number : 6th St Bridge, LAC-17-001
250 Goddard	Report To : Naresh Bellana
Irvine , CA 92618	Reported : 06/05/2017

Client Sample ID 2A-1-1.0

Lab ID: 1702036-22

Semivolatile Organic Compounds by EPA 8270C **Analyst: SP**

Analyte	Result (ug/kg)	PQL (ug/kg)	Dilution	Batch	Prepared	Date/Time Analyzed	Notes
Hexachlorocyclopentadiene	ND	660	1	B7E0747	05/22/2017	05/22/17 18:09	
Hexachloroethane	ND	330	1	B7E0747	05/22/2017	05/22/17 18:09	
Indeno(1,2,3-cd)pyrene	ND	330	1	B7E0747	05/22/2017	05/22/17 18:09	
Isophorone	ND	330	1	B7E0747	05/22/2017	05/22/17 18:09	
N-Nitroso-di-n propylamine	ND	330	1	B7E0747	05/22/2017	05/22/17 18:09	
N-Nitrosodiphenylamine	ND	330	1	B7E0747	05/22/2017	05/22/17 18:09	
Naphthalene	ND	330	1	B7E0747	05/22/2017	05/22/17 18:09	
Nitrobenzene	ND	330	1	B7E0747	05/22/2017	05/22/17 18:09	
Pentachlorophenol	ND	1600	1	B7E0747	05/22/2017	05/22/17 18:09	
Phenanthrene	ND	330	1	B7E0747	05/22/2017	05/22/17 18:09	
Phenol	ND	330	1	B7E0747	05/22/2017	05/22/17 18:09	
Pyrene	ND	330	1	B7E0747	05/22/2017	05/22/17 18:09	
Pyridine	ND	1600	1	B7E0747	05/22/2017	05/22/17 18:09	
Surrogate: 1,2-Dichlorobenzene-d4	*60.7 %*	*38 - 93*		B7E0747	05/22/2017	*05/22/17 18:09*	
Surrogate: 2,4,6-Tribromophenol	*64.7 %*	*27 - 124*		B7E0747	05/22/2017	*05/22/17 18:09*	
Surrogate: 2-Chlorophenol-d4	*67.3 %*	*36 - 96*		B7E0747	05/22/2017	*05/22/17 18:09*	
Surrogate: 2-Fluorobiphenyl	*71.8 %*	*44 - 100*		B7E0747	05/22/2017	*05/22/17 18:09*	
Surrogate: 2-Fluorophenol	*64.9 %*	*32 - 89*		B7E0747	05/22/2017	*05/22/17 18:09*	
Surrogate: 4-Terphenyl-d14	*76.8 %*	*49 - 123*		B7E0747	05/22/2017	*05/22/17 18:09*	
Surrogate: Nitrobenzene-d5	*69.4 %*	*38 - 104*		B7E0747	05/22/2017	*05/22/17 18:09*	
Surrogate: Phenol-d5	*64.7 %*	*35 - 95*		B7E0747	05/22/2017	*05/22/17 18:09*	

Certificate of Analysis

Hushmand Associates, Inc.	Project Number : 6th St Bridge, LAC-17-001
250 Goddard	Report To : Naresh Bellana
Irvine , CA 92618	Reported : 06/05/2017

Client Sample ID 2A-1-3.0

Lab ID: 1702036-23

Title 22 Metals by ICP-AES EPA 6010B

Analyst: GO

Analyte	Result (mg/kg)	PQL (mg/kg)	Dilution	Batch	Prepared	Date/Time Analyzed	Notes
Antimony	ND	2.0	1	B7E0680	05/20/2017	05/22/17 14:07	
Arsenic	ND	1.0	1	B7E0680	05/20/2017	05/22/17 14:07	
Barium	**42**	1.0	1	B7E0680	05/20/2017	05/22/17 14:07	
Beryllium	ND	1.0	1	B7E0680	05/20/2017	05/22/17 14:07	
Cadmium	ND	1.0	1	B7E0680	05/20/2017	05/22/17 14:07	
Chromium	**5.5**	1.0	1	B7E0680	05/20/2017	05/22/17 14:07	
Cobalt	**4.1**	1.0	1	B7E0680	05/20/2017	05/22/17 14:07	
Copper	**5.7**	2.0	1	B7E0680	05/20/2017	05/22/17 14:07	
Lead	**5.8**	1.0	1	B7E0680	05/20/2017	05/22/17 14:07	
Molybdenum	ND	1.0	1	B7E0680	05/20/2017	05/22/17 14:07	
Nickel	**3.7**	1.0	1	B7E0680	05/20/2017	05/22/17 14:07	
Selenium	ND	1.0	1	B7E0680	05/20/2017	05/22/17 14:07	
Silver	ND	1.0	1	B7E0680	05/20/2017	05/22/17 14:07	
Thallium	ND	1.0	1	B7E0680	05/20/2017	05/22/17 14:07	
Vanadium	**15**	1.0	1	B7E0680	05/20/2017	05/22/17 14:07	
Zinc	**23**	1.0	1	B7E0680	05/20/2017	05/22/17 14:07	

Mercury by AA (Cold Vapor) EPA 7471A

Analyst: KEK

Analyte	Result (mg/kg)	PQL (mg/kg)	Dilution	Batch	Prepared	Date/Time Analyzed	Notes
Mercury	ND	0.10	1	B7E0675	05/20/2017	05/22/17 15:24	

Gasoline Range Organics by EPA 8015B (Modified)

Analyst: VW

Analyte	Result (mg/kg)	PQL (mg/kg)	Dilution	Batch	Prepared	Date/Time Analyzed	Notes
Gasoline Range Organics	ND	1.0	1	B7E0718	05/22/2017	05/22/17 10:21	
Surrogate: 4-Bromofluorobenzene *105 %*		*36 - 125*		B7E0718	05/22/2017	*05/22/17 10:21*	

Diesel Range Organics by EPA 8015B

Analyst: CR

Analyte	Result (mg/kg)	PQL (mg/kg)	Dilution	Batch	Prepared	Date/Time Analyzed	Notes
DRO	ND	10	1	B7E0785	05/23/2017	05/25/17 02:07	
Surrogate: p-Terphenyl *84.4 %*		*47 - 157*		B7E0785	05/23/2017	*05/25/17 02:07*	

Certificate of Analysis

Hushmand Associates, Inc.	Project Number : 6th St Bridge, LAC-17-001
250 Goddard	Report To : Naresh Bellana
Irvine , CA 92618	Reported : 06/05/2017

Client Sample ID 2A-1-3.0

Lab ID: 1702036-23

Volatile Organic Compounds by EPA 8260B **Analyst: AG**

Analyte	Result (ug/kg)	PQL (ug/kg)	Dilution	Batch	Prepared	Date/Time Analyzed	Notes
1,1,1,2-Tetrachloroethane	ND	5.0	1	B7E0639	05/18/2017	05/18/17 15:45	
1,1,1-Trichloroethane	ND	5.0	1	B7E0639	05/18/2017	05/18/17 15:45	
1,1,2,2-Tetrachloroethane	ND	5.0	1	B7E0639	05/18/2017	05/18/17 15:45	
1,1,2-Trichloroethane	ND	5.0	1	B7E0639	05/18/2017	05/18/17 15:45	
1,1-Dichloroethane	ND	5.0	1	B7E0639	05/18/2017	05/18/17 15:45	
1,1-Dichloroethene	ND	5.0	1	B7E0639	05/18/2017	05/18/17 15:45	
1,1-Dichloropropene	ND	5.0	1	B7E0639	05/18/2017	05/18/17 15:45	
1,2,3-Trichloropropane	ND	5.0	1	B7E0639	05/18/2017	05/18/17 15:45	
1,2,3-Trichlorobenzene	ND	5.0	1	B7E0639	05/18/2017	05/18/17 15:45	
1,2,4-Trichlorobenzene	ND	5.0	1	B7E0639	05/18/2017	05/18/17 15:45	
1,2,4-Trimethylbenzene	ND	5.0	1	B7E0639	05/18/2017	05/18/17 15:45	
1,2-Dibromo-3-chloropropane	ND	10	1	B7E0639	05/18/2017	05/18/17 15:45	
1,2-Dibromoethane	ND	5.0	1	B7E0639	05/18/2017	05/18/17 15:45	
1,2-Dichlorobenzene	ND	5.0	1	B7E0639	05/18/2017	05/18/17 15:45	
1,2-Dichloroethane	ND	5.0	1	B7E0639	05/18/2017	05/18/17 15:45	
1,2-Dichloropropane	ND	5.0	1	B7E0639	05/18/2017	05/18/17 15:45	
1,3,5-Trimethylbenzene	ND	5.0	1	B7E0639	05/18/2017	05/18/17 15:45	
1,3-Dichlorobenzene	ND	5.0	1	B7E0639	05/18/2017	05/18/17 15:45	
1,3-Dichloropropane	ND	5.0	1	B7E0639	05/18/2017	05/18/17 15:45	
1,4-Dichlorobenzene	ND	5.0	1	B7E0639	05/18/2017	05/18/17 15:45	
2,2-Dichloropropane	ND	5.0	1	B7E0639	05/18/2017	05/18/17 15:45	
2-Chlorotoluene	ND	5.0	1	B7E0639	05/18/2017	05/18/17 15:45	
4-Chlorotoluene	ND	5.0	1	B7E0639	05/18/2017	05/18/17 15:45	
4-Isopropyltoluene	ND	5.0	1	B7E0639	05/18/2017	05/18/17 15:45	
Benzene	ND	5.0	1	B7E0639	05/18/2017	05/18/17 15:45	
Bromobenzene	ND	5.0	1	B7E0639	05/18/2017	05/18/17 15:45	
Bromochloromethane	ND	5.0	1	B7E0639	05/18/2017	05/18/17 15:45	
Bromodichloromethane	ND	5.0	1	B7E0639	05/18/2017	05/18/17 15:45	
Bromoform	ND	5.0	1	B7E0639	05/18/2017	05/18/17 15:45	
Bromomethane	ND	5.0	1	B7E0639	05/18/2017	05/18/17 15:45	
Carbon disulfide	ND	5.0	1	B7E0639	05/18/2017	05/18/17 15:45	
Carbon tetrachloride	ND	5.0	1	B7E0639	05/18/2017	05/18/17 15:45	
Chlorobenzene	ND	5.0	1	B7E0639	05/18/2017	05/18/17 15:45	
Chloroethane	ND	5.0	1	B7E0639	05/18/2017	05/18/17 15:45	
Chloroform	ND	5.0	1	B7E0639	05/18/2017	05/18/17 15:45	
Chloromethane	ND	5.0	1	B7E0639	05/18/2017	05/18/17 15:45	
cis-1,2-Dichloroethene	ND	5.0	1	B7E0639	05/18/2017	05/18/17 15:45	

Certificate of Analysis

Hushmand Associates, Inc.	Project Number : 6th St Bridge, LAC-17-001
250 Goddard	Report To : Naresh Bellana
Irvine , CA 92618	Reported : 06/05/2017

Client Sample ID 2A-1-3.0

Lab ID: 1702036-23

Volatile Organic Compounds by EPA 8260B **Analyst: AG**

Analyte	Result (ug/kg)	PQL (ug/kg)	Dilution	Batch	Prepared	Date/Time Analyzed	Notes
cis-1,3-Dichloropropene	ND	5.0	1	B7E0639	05/18/2017	05/18/17 15:45	
Di-isopropyl ether	ND	5.0	1	B7E0639	05/18/2017	05/18/17 15:45	
Dibromochloromethane	ND	5.0	1	B7E0639	05/18/2017	05/18/17 15:45	
Dibromomethane	ND	5.0	1	B7E0639	05/18/2017	05/18/17 15:45	
Dichlorodifluoromethane	ND	5.0	1	B7E0639	05/18/2017	05/18/17 15:45	
Ethyl Acetate	ND	50	1	B7E0639	05/18/2017	05/18/17 15:45	
Ethyl Ether	ND	50	1	B7E0639	05/18/2017	05/18/17 15:45	
Ethyl tert-butyl ether	ND	5.0	1	B7E0639	05/18/2017	05/18/17 15:45	
Ethylbenzene	ND	5.0	1	B7E0639	05/18/2017	05/18/17 15:45	
Freon-113	ND	5.0	1	B7E0639	05/18/2017	05/18/17 15:45	
Hexachlorobutadiene	ND	5.0	1	B7E0639	05/18/2017	05/18/17 15:45	
Isopropylbenzene	ND	5.0	1	B7E0639	05/18/2017	05/18/17 15:45	
m,p-Xylene	ND	10	1	B7E0639	05/18/2017	05/18/17 15:45	
Methylene chloride	ND	5.0	1	B7E0639	05/18/2017	05/18/17 15:45	
MTBE	ND	5.0	1	B7E0639	05/18/2017	05/18/17 15:45	
n-Butylbenzene	ND	5.0	1	B7E0639	05/18/2017	05/18/17 15:45	
n-Propylbenzene	ND	5.0	1	B7E0639	05/18/2017	05/18/17 15:45	
Naphthalene	ND	5.0	1	B7E0639	05/18/2017	05/18/17 15:45	
o-Xylene	ND	5.0	1	B7E0639	05/18/2017	05/18/17 15:45	
sec-Butylbenzene	ND	5.0	1	B7E0639	05/18/2017	05/18/17 15:45	
Styrene	ND	5.0	1	B7E0639	05/18/2017	05/18/17 15:45	
tert-Amyl methyl ether	ND	5.0	1	B7E0639	05/18/2017	05/18/17 15:45	
tert-Butanol	ND	100	1	B7E0639	05/18/2017	05/18/17 15:45	
tert-Butylbenzene	ND	5.0	1	B7E0639	05/18/2017	05/18/17 15:45	
Tetrachloroethene	ND	5.0	1	B7E0639	05/18/2017	05/18/17 15:45	
Toluene	ND	5.0	1	B7E0639	05/18/2017	05/18/17 15:45	
trans-1,2-Dichloroethene	ND	5.0	1	B7E0639	05/18/2017	05/18/17 15:45	
trans-1,3-Dichloropropene	ND	5.0	1	B7E0639	05/18/2017	05/18/17 15:45	
Trichloroethene	ND	5.0	1	B7E0639	05/18/2017	05/18/17 15:45	
Trichlorofluoromethane	ND	5.0	1	B7E0639	05/18/2017	05/18/17 15:45	
Vinyl acetate	ND	50	1	B7E0639	05/18/2017	05/18/17 15:45	
Vinyl chloride	ND	5.0	1	B7E0639	05/18/2017	05/18/17 15:45	
Surrogate: 1,2-Dichloroethane-d4	*98.2 %*	*12 - 186*		B7E0639	05/18/2017	*05/18/17 15:45*	
Surrogate: 4-Bromofluorobenzene	*105 %*	*23 - 162*		B7E0639	05/18/2017	*05/18/17 15:45*	
Surrogate: Dibromofluoromethane	*98.8 %*	*23 - 179*		B7E0639	05/18/2017	*05/18/17 15:45*	
Surrogate: Toluene-d8	*101 %*	*26 - 164*		B7E0639	05/18/2017	*05/18/17 15:45*	

Certificate of Analysis

Hushmand Associates, Inc.	Project Number : 6th St Bridge, LAC-17-001
250 Goddard	Report To : Naresh Bellana
Irvine , CA 92618	Reported : 06/05/2017

Client Sample ID 2A-1-3.0

Lab ID: 1702036-23

Semivolatile Organic Compounds by EPA 8270C **Analyst: SP**

Analyte	Result (ug/kg)	PQL (ug/kg)	Dilution	Batch	Prepared	Date/Time Analyzed	Notes
1,2,4-Trichlorobenzene	ND	330	1	B7E0781	05/23/2017	06/01/17 00:54	
1,2-Dichlorobenzene	ND	330	1	B7E0781	05/23/2017	06/01/17 00:54	
1,3-Dichlorobenzene	ND	330	1	B7E0781	05/23/2017	06/01/17 00:54	
1,4-Dichlorobenzene	ND	330	1	B7E0781	05/23/2017	06/01/17 00:54	
2,4,5-Trichlorophenol	ND	330	1	B7E0781	05/23/2017	06/01/17 00:54	
2,4,6-Trichlorophenol	ND	330	1	B7E0781	05/23/2017	06/01/17 00:54	
2,4-Dichlorophenol	ND	1600	1	B7E0781	05/23/2017	06/01/17 00:54	
2,4-Dimethylphenol	ND	330	1	B7E0781	05/23/2017	06/01/17 00:54	
2,4-Dinitrophenol	ND	1600	1	B7E0781	05/23/2017	06/01/17 00:54	
2,4-Dinitrotoluene	ND	330	1	B7E0781	05/23/2017	06/01/17 00:54	
2,6-Dinitrotoluene	ND	330	1	B7E0781	05/23/2017	06/01/17 00:54	
2-Chloronaphthalene	ND	330	1	B7E0781	05/23/2017	06/01/17 00:54	
2-Chlorophenol	ND	330	1	B7E0781	05/23/2017	06/01/17 00:54	
2-Methylnaphthalene	ND	330	1	B7E0781	05/23/2017	06/01/17 00:54	
2-Methylphenol	ND	330	1	B7E0781	05/23/2017	06/01/17 00:54	
2-Nitroaniline	ND	1600	1	B7E0781	05/23/2017	06/01/17 00:54	
2-Nitrophenol	ND	330	1	B7E0781	05/23/2017	06/01/17 00:54	
3,3´-Dichlorobenzidine	ND	660	1	B7E0781	05/23/2017	06/01/17 00:54	
3-Nitroaniline	ND	1600	1	B7E0781	05/23/2017	06/01/17 00:54	
4,6-Dinitro-2-methyphenol	ND	1600	1	B7E0781	05/23/2017	06/01/17 00:54	
4-Bromophenyl-phenylether	ND	330	1	B7E0781	05/23/2017	06/01/17 00:54	
4-Chloro-3-methylphenol	ND	660	1	B7E0781	05/23/2017	06/01/17 00:54	
4-Chloroaniline	ND	660	1	B7E0781	05/23/2017	06/01/17 00:54	
4-Chlorophenyl-phenylether	ND	330	1	B7E0781	05/23/2017	06/01/17 00:54	
4-Methylphenol	ND	330	1	B7E0781	05/23/2017	06/01/17 00:54	
4-Nitroaniline	ND	1600	1	B7E0781	05/23/2017	06/01/17 00:54	
4-Nitrophenol	ND	330	1	B7E0781	05/23/2017	06/01/17 00:54	
Acenaphthene	ND	330	1	B7E0781	05/23/2017	06/01/17 00:54	
Acenaphthylene	ND	330	1	B7E0781	05/23/2017	06/01/17 00:54	
Anthracene	ND	330	1	B7E0781	05/23/2017	06/01/17 00:54	
Benzidine (M)	ND	1600	1	B7E0781	05/23/2017	06/01/17 00:54	
Benzo(a)anthracene	ND	330	1	B7E0781	05/23/2017	06/01/17 00:54	
Benzo(a)pyrene	ND	330	1	B7E0781	05/23/2017	06/01/17 00:54	
Benzo(b)fluoranthene	ND	330	1	B7E0781	05/23/2017	06/01/17 00:54	
Benzo(g,h,i)perylene	ND	330	1	B7E0781	05/23/2017	06/01/17 00:54	
Benzo(k)fluoranthene	ND	330	1	B7E0781	05/23/2017	06/01/17 00:54	
Benzoic acid	ND	1600	1	B7E0781	05/23/2017	06/01/17 00:54	

Certificate of Analysis

Hushmand Associates, Inc.	Project Number : 6th St Bridge, LAC-17-001
250 Goddard	Report To : Naresh Bellana
Irvine , CA 92618	Reported : 06/05/2017

Client Sample ID 2A-1-3.0

Lab ID: 1702036-23

Semivolatile Organic Compounds by EPA 8270C **Analyst: SP**

Analyte	Result (ug/kg)	PQL (ug/kg)	Dilution	Batch	Prepared	Date/Time Analyzed	Notes
Benzyl alcohol	ND	660	1	B7E0781	05/23/2017	06/01/17 00:54	
bis(2-chloroethoxy)methane	ND	330	1	B7E0781	05/23/2017	06/01/17 00:54	
bis(2-Chloroethyl)ether	ND	330	1	B7E0781	05/23/2017	06/01/17 00:54	
bis(2-chloroisopropyl)ether	ND	330	1	B7E0781	05/23/2017	06/01/17 00:54	
bis(2-ethylhexyl)phthalate	ND	330	1	B7E0781	05/23/2017	06/01/17 00:54	
Butylbenzylphthalate	ND	330	1	B7E0781	05/23/2017	06/01/17 00:54	
Chrysene	ND	330	1	B7E0781	05/23/2017	06/01/17 00:54	
Di-n-butylphthalate	ND	330	1	B7E0781	05/23/2017	06/01/17 00:54	
Di-n-octylphthalate	ND	330	1	B7E0781	05/23/2017	06/01/17 00:54	
Dibenz(a,h)anthracene	ND	330	1	B7E0781	05/23/2017	06/01/17 00:54	
Dibenzofuran	ND	330	1	B7E0781	05/23/2017	06/01/17 00:54	
Diethyl phthalate	ND	330	1	B7E0781	05/23/2017	06/01/17 00:54	
Dimethyl phthalate	ND	330	1	B7E0781	05/23/2017	06/01/17 00:54	
Fluoranthene	ND	330	1	B7E0781	05/23/2017	06/01/17 00:54	
Fluorene	ND	330	1	B7E0781	05/23/2017	06/01/17 00:54	
Hexachlorobenzene	ND	330	1	B7E0781	05/23/2017	06/01/17 00:54	
Hexachlorobutadiene	ND	660	1	B7E0781	05/23/2017	06/01/17 00:54	
Hexachlorocyclopentadiene	ND	660	1	B7E0781	05/23/2017	06/01/17 00:54	
Hexachloroethane	ND	330	1	B7E0781	05/23/2017	06/01/17 00:54	
Indeno(1,2,3-cd)pyrene	ND	330	1	B7E0781	05/23/2017	06/01/17 00:54	
Isophorone	ND	330	1	B7E0781	05/23/2017	06/01/17 00:54	
N-Nitroso-di-n propylamine	ND	330	1	B7E0781	05/23/2017	06/01/17 00:54	
N-Nitrosodiphenylamine	ND	330	1	B7E0781	05/23/2017	06/01/17 00:54	
Naphthalene	ND	330	1	B7E0781	05/23/2017	06/01/17 00:54	
Nitrobenzene	ND	330	1	B7E0781	05/23/2017	06/01/17 00:54	
Pentachlorophenol	ND	1600	1	B7E0781	05/23/2017	06/01/17 00:54	
Phenanthrene	ND	330	1	B7E0781	05/23/2017	06/01/17 00:54	
Phenol	ND	330	1	B7E0781	05/23/2017	06/01/17 00:54	
Pyrene	ND	330	1	B7E0781	05/23/2017	06/01/17 00:54	
Pyridine	ND	1600	1	B7E0781	05/23/2017	06/01/17 00:54	
Surrogate: 1,2-Dichlorobenzene-d4	*56.5 %*	*38 - 93*		B7E0781	05/23/2017	*06/01/17 00:54*	
Surrogate: 2,4,6-Tribromophenol	*68.5 %*	*27 - 124*		B7E0781	05/23/2017	*06/01/17 00:54*	
Surrogate: 2-Chlorophenol-d4	*57.4 %*	*36 - 96*		B7E0781	05/23/2017	*06/01/17 00:54*	
Surrogate: 2-Fluorobiphenyl	*68.0 %*	*44 - 100*		B7E0781	05/23/2017	*06/01/17 00:54*	
Surrogate: 2-Fluorophenol	*54.9 %*	*32 - 89*		B7E0781	05/23/2017	*06/01/17 00:54*	
Surrogate: 4-Terphenyl-d14	*64.7 %*	*49 - 123*		B7E0781	05/23/2017	*06/01/17 00:54*	
Surrogate: Nitrobenzene-d5	*62.7 %*	*38 - 104*		B7E0781	05/23/2017	*06/01/17 00:54*	

Certificate of Analysis

Hushmand Associates, Inc.	Project Number : 6th St Bridge, LAC-17-001
250 Goddard	Report To : Naresh Bellana
Irvine , CA 92618	Reported : 06/05/2017

Client Sample ID 2A-1-3.0

Lab ID: 1702036-23

Semivolatile Organic Compounds by EPA 8270C **Analyst: SP**

Analyte	Result (ug/kg)	PQL (ug/kg)	Dilution	Batch	Prepared	Date/Time Analyzed	Notes
Surrogate: Phenol-d5	*56.6 %*	*35 - 95*		B7E0781	05/23/2017	*06/01/17 00:54*	

Certificate of Analysis

Hushmand Associates, Inc.	Project Number : 6th St Bridge, LAC-17-001
250 Goddard	Report To : Naresh Bellana
Irvine , CA 92618	Reported : 06/05/2017

Client Sample ID 2A-1-5.0

Lab ID: 1702036-24

Title 22 Metals by ICP-AES EPA 6010B — **Analyst: GO**

Analyte	Result (mg/kg)	PQL (mg/kg)	Dilution	Batch	Prepared	Date/Time Analyzed	Notes
Antimony	ND	2.0	1	B7E0680	05/20/2017	05/22/17 14:10	
Arsenic	**1.0**	1.0	1	B7E0680	05/20/2017	05/22/17 14:10	
Barium	**90**	1.0	1	B7E0680	05/20/2017	05/22/17 14:10	
Beryllium	ND	1.0	1	B7E0680	05/20/2017	05/22/17 14:10	
Cadmium	ND	1.0	1	B7E0680	05/20/2017	05/22/17 14:10	
Chromium	**7.7**	1.0	1	B7E0680	05/20/2017	05/22/17 14:10	
Cobalt	**2.8**	1.0	1	B7E0680	05/20/2017	05/22/17 14:10	
Copper	**5.5**	2.0	1	B7E0680	05/20/2017	05/22/17 14:10	
Lead	**10**	1.0	1	B7E0680	05/20/2017	05/22/17 14:10	
Molybdenum	ND	1.0	1	B7E0680	05/20/2017	05/22/17 14:10	
Nickel	**4.8**	1.0	1	B7E0680	05/20/2017	05/22/17 14:10	
Selenium	ND	1.0	1	B7E0680	05/20/2017	05/22/17 14:10	
Silver	ND	1.0	1	B7E0680	05/20/2017	05/22/17 14:10	
Thallium	ND	1.0	1	B7E0680	05/20/2017	05/22/17 14:10	
Vanadium	**14**	1.0	1	B7E0680	05/20/2017	05/22/17 14:10	
Zinc	**14**	1.0	1	B7E0680	05/20/2017	05/22/17 14:10	

Mercury by AA (Cold Vapor) EPA 7471A — **Analyst: KEK**

Analyte	Result (mg/kg)	PQL (mg/kg)	Dilution	Batch	Prepared	Date/Time Analyzed	Notes
Mercury	ND	0.10	1	B7E0675	05/20/2017	05/22/17 15:26	

Certificate of Analysis

Hushmand Associates, Inc.	Project Number : 6th St Bridge, LAC-17-001
250 Goddard	Report To : Naresh Bellana
Irvine , CA 92618	Reported : 06/05/2017

Client Sample ID 2A-2-0.5

Lab ID: 1702036-25

Title 22 Metals by ICP-AES EPA 6010B — **Analyst: GO**

Analyte	Result (mg/kg)	PQL (mg/kg)	Dilution	Batch	Prepared	Date/Time Analyzed	Notes
Antimony	ND	2.0	1	B7E0680	05/20/2017	05/22/17 14:12	
Arsenic	**1.9**	1.0	1	B7E0680	05/20/2017	05/22/17 14:12	
Barium	**85**	1.0	1	B7E0680	05/20/2017	05/22/17 14:12	
Beryllium	ND	1.0	1	B7E0680	05/20/2017	05/22/17 14:12	
Cadmium	ND	1.0	1	B7E0680	05/20/2017	05/22/17 14:12	
Chromium	**8.8**	1.0	1	B7E0680	05/20/2017	05/22/17 14:12	
Cobalt	**5.6**	1.0	1	B7E0680	05/20/2017	05/22/17 14:12	
Copper	**18**	2.0	1	B7E0680	05/20/2017	05/22/17 14:12	
Lead	**28**	1.0	1	B7E0680	05/20/2017	05/22/17 14:12	
Molybdenum	ND	1.0	1	B7E0680	05/20/2017	05/22/17 14:12	
Nickel	**7.5**	1.0	1	B7E0680	05/20/2017	05/22/17 14:12	
Selenium	ND	1.0	1	B7E0680	05/20/2017	05/22/17 14:12	
Silver	ND	1.0	1	B7E0680	05/20/2017	05/22/17 14:12	
Thallium	ND	1.0	1	B7E0680	05/20/2017	05/22/17 14:12	
Vanadium	**22**	1.0	1	B7E0680	05/20/2017	05/22/17 14:12	
Zinc	**48**	1.0	1	B7E0680	05/20/2017	05/22/17 14:12	

Mercury by AA (Cold Vapor) EPA 7471A — **Analyst: KEK**

Analyte	Result (mg/kg)	PQL (mg/kg)	Dilution	Batch	Prepared	Date/Time Analyzed	Notes
Mercury	ND	0.10	1	B7E0675	05/20/2017	05/22/17 15:28	

Certificate of Analysis

Hushmand Associates, Inc.	Project Number : 6th St Bridge, LAC-17-001
250 Goddard	Report To : Naresh Bellana
Irvine , CA 92618	Reported : 06/05/2017

Client Sample ID 2A-2-1.0

Lab ID: 1702036-26

Title 22 Metals by ICP-AES EPA 6010B

Analyst: GO

Analyte	Result (mg/kg)	PQL (mg/kg)	Dilution	Batch	Prepared	Date/Time Analyzed	Notes
Antimony	ND	2.0	1	B7E0680	05/20/2017	05/22/17 14:13	
Arsenic	**1.4**	1.0	1	B7E0680	05/20/2017	05/22/17 14:13	
Barium	**59**	1.0	1	B7E0680	05/20/2017	05/22/17 14:13	
Beryllium	ND	1.0	1	B7E0680	05/20/2017	05/22/17 14:13	
Cadmium	ND	1.0	1	B7E0680	05/20/2017	05/22/17 14:13	
Chromium	**8.1**	1.0	1	B7E0680	05/20/2017	05/22/17 14:13	
Cobalt	**5.3**	1.0	1	B7E0680	05/20/2017	05/22/17 14:13	
Copper	**8.4**	2.0	1	B7E0680	05/20/2017	05/22/17 14:13	
Lead	**6.5**	1.0	1	B7E0680	05/20/2017	05/22/17 14:13	
Molybdenum	ND	1.0	1	B7E0680	05/20/2017	05/22/17 14:13	
Nickel	**5.6**	1.0	1	B7E0680	05/20/2017	05/22/17 14:13	
Selenium	ND	1.0	1	B7E0680	05/20/2017	05/22/17 14:13	
Silver	ND	1.0	1	B7E0680	05/20/2017	05/22/17 14:13	
Thallium	ND	1.0	1	B7E0680	05/20/2017	05/22/17 14:13	
Vanadium	**21**	1.0	1	B7E0680	05/20/2017	05/22/17 14:13	
Zinc	**31**	1.0	1	B7E0680	05/20/2017	05/22/17 14:13	

Mercury by AA (Cold Vapor) EPA 7471A

Analyst: KEK

Analyte	Result (mg/kg)	PQL (mg/kg)	Dilution	Batch	Prepared	Date/Time Analyzed	Notes
Mercury	ND	0.10	1	B7E0675	05/20/2017	05/22/17 15:30	

Gasoline Range Organics by EPA 8015B (Modified)

Analyst: VW

Analyte	Result (mg/kg)	PQL (mg/kg)	Dilution	Batch	Prepared	Date/Time Analyzed	Notes
Gasoline Range Organics	ND	1.0	1	B7E0721	05/22/2017	05/22/17 17:12	
Surrogate: 4-Bromofluorobenzene *103 %*		*36 - 125*		B7E0721	05/22/2017	*05/22/17 17:12*	

Diesel Range Organics by EPA 8015B

Analyst: CR

Analyte	Result (mg/kg)	PQL (mg/kg)	Dilution	Batch	Prepared	Date/Time Analyzed	Notes
DRO	**18**	10	1	B7E0785	05/23/2017	05/25/17 03:30	
Surrogate: p-Terphenyl *85.6 %*		*47 - 157*		B7E0785	05/23/2017	*05/25/17 03:30*	

Certificate of Analysis

Hushmand Associates, Inc.	Project Number : 6th St Bridge, LAC-17-001
250 Goddard	Report To : Naresh Bellana
Irvine , CA 92618	Reported : 06/05/2017

Client Sample ID 2A-2-1.0

Lab ID: 1702036-26

Organochlorine Pesticides by EPA 8081 **Analyst: RL/**

Analyte	Result (ug/kg)	PQL (ug/kg)	Dilution	Batch	Prepared	Date/Time Analyzed	Notes
4,4´-DDD	ND	2.0	1	B7E0819	05/24/2017	05/24/17 16:52	
4,4´-DDE	ND	2.0	1	B7E0819	05/24/2017	05/24/17 16:52	
4,4´-DDT	ND	2.0	1	B7E0819	05/24/2017	05/24/17 16:52	
Aldrin	ND	1.0	1	B7E0819	05/24/2017	05/24/17 16:52	
alpha-BHC	ND	1.0	1	B7E0819	05/24/2017	05/24/17 16:52	
alpha-Chlordane	ND	1.0	1	B7E0819	05/24/2017	05/24/17 16:52	
beta-BHC	ND	1.0	1	B7E0819	05/24/2017	05/24/17 16:52	
Chlordane	ND	8.5	1	B7E0819	05/24/2017	05/24/17 16:52	
delta-BHC	ND	1.0	1	B7E0819	05/24/2017	05/24/17 16:52	
Dieldrin	ND	2.0	1	B7E0819	05/24/2017	05/24/17 16:52	
Endosulfan I	ND	1.0	1	B7E0819	05/24/2017	05/24/17 16:52	
Endosulfan II	ND	2.0	1	B7E0819	05/24/2017	05/24/17 16:52	
Endosulfan sulfate	ND	2.0	1	B7E0819	05/24/2017	05/24/17 16:52	
Endrin	ND	2.0	1	B7E0819	05/24/2017	05/24/17 16:52	
Endrin aldehyde	ND	2.0	1	B7E0819	05/24/2017	05/24/17 16:52	
Endrin ketone	ND	2.0	1	B7E0819	05/24/2017	05/24/17 16:52	
gamma-BHC	ND	1.0	1	B7E0819	05/24/2017	05/24/17 16:52	
gamma-Chlordane	ND	1.0	1	B7E0819	05/24/2017	05/24/17 16:52	
Heptachlor	ND	1.0	1	B7E0819	05/24/2017	05/24/17 16:52	
Heptachlor epoxide	ND	1.0	1	B7E0819	05/24/2017	05/24/17 16:52	
Methoxychlor	ND	5.0	1	B7E0819	05/24/2017	05/24/17 16:52	
Toxaphene	ND	50	1	B7E0819	05/24/2017	05/24/17 16:52	
Surrogate: Decachlorobiphenyl	*63.1 %*	*27 - 123*		B7E0819	05/24/2017	*05/24/17 16:52*	
Surrogate: Tetrachloro-m-xylene	*77.9 %*	*26 - 108*		B7E0819	05/24/2017	*05/24/17 16:52*	

Certificate of Analysis

Hushmand Associates, Inc.	Project Number : 6th St Bridge, LAC-17-001
250 Goddard	Report To : Naresh Bellana
Irvine , CA 92618	Reported : 06/05/2017

Client Sample ID 2A-2-1.0

Lab ID: 1702036-26

Polychlorinated Biphenyls by EPA 8082

Analyst: LT

Analyte	Result (ug/kg)	PQL (ug/kg)	Dilution	Batch	Prepared	Date/Time Analyzed	Notes
Aroclor 1016	ND	16	1	B7E0819	05/24/2017	05/24/17 15:45	
Aroclor 1221	ND	16	1	B7E0819	05/24/2017	05/24/17 15:45	
Aroclor 1232	ND	16	1	B7E0819	05/24/2017	05/24/17 15:45	
Aroclor 1242	ND	16	1	B7E0819	05/24/2017	05/24/17 15:45	
Aroclor 1248	ND	16	1	B7E0819	05/24/2017	05/24/17 15:45	
Aroclor 1254	ND	16	1	B7E0819	05/24/2017	05/24/17 15:45	
Aroclor 1260	ND	16	1	B7E0819	05/24/2017	05/24/17 15:45	
Aroclor 1262	ND	16	1	B7E0819	05/24/2017	05/24/17 15:45	
Aroclor 1268	ND	16	1	B7E0819	05/24/2017	05/24/17 15:45	
Surrogate: Decachlorobiphenyl	*70.0 %*	*18 - 136*		B7E0819	05/24/2017	*05/24/17 15:45*	
Surrogate: Tetrachloro-m-xylene	*92.8 %*	*30 - 130*		B7E0819	05/24/2017	*05/24/17 15:45*	

Volatile Organic Compounds by EPA 8260B

Analyst: AG

Analyte	Result (ug/kg)	PQL (ug/kg)	Dilution	Batch	Prepared	Date/Time Analyzed	Notes
1,1,1,2-Tetrachloroethane	ND	5.0	1	B7E0639	05/18/2017	05/18/17 16:03	
1,1,1-Trichloroethane	ND	5.0	1	B7E0639	05/18/2017	05/18/17 16:03	
1,1,2,2-Tetrachloroethane	ND	5.0	1	B7E0639	05/18/2017	05/18/17 16:03	
1,1,2-Trichloroethane	ND	5.0	1	B7E0639	05/18/2017	05/18/17 16:03	
1,1-Dichloroethane	ND	5.0	1	B7E0639	05/18/2017	05/18/17 16:03	
1,1-Dichloroethene	ND	5.0	1	B7E0639	05/18/2017	05/18/17 16:03	
1,1-Dichloropropene	ND	5.0	1	B7E0639	05/18/2017	05/18/17 16:03	
1,2,3-Trichloropropane	ND	5.0	1	B7E0639	05/18/2017	05/18/17 16:03	
1,2,3-Trichlorobenzene	ND	5.0	1	B7E0639	05/18/2017	05/18/17 16:03	
1,2,4-Trichlorobenzene	ND	5.0	1	B7E0639	05/18/2017	05/18/17 16:03	
1,2,4-Trimethylbenzene	ND	5.0	1	B7E0639	05/18/2017	05/18/17 16:03	
1,2-Dibromo-3-chloropropane	ND	10	1	B7E0639	05/18/2017	05/18/17 16:03	
1,2-Dibromoethane	ND	5.0	1	B7E0639	05/18/2017	05/18/17 16:03	
1,2-Dichlorobenzene	ND	5.0	1	B7E0639	05/18/2017	05/18/17 16:03	
1,2-Dichloroethane	ND	5.0	1	B7E0639	05/18/2017	05/18/17 16:03	
1,2-Dichloropropane	ND	5.0	1	B7E0639	05/18/2017	05/18/17 16:03	
1,3,5-Trimethylbenzene	ND	5.0	1	B7E0639	05/18/2017	05/18/17 16:03	
1,3-Dichlorobenzene	ND	5.0	1	B7E0639	05/18/2017	05/18/17 16:03	
1,3-Dichloropropane	ND	5.0	1	B7E0639	05/18/2017	05/18/17 16:03	
1,4-Dichlorobenzene	ND	5.0	1	B7E0639	05/18/2017	05/18/17 16:03	
2,2-Dichloropropane	ND	5.0	1	B7E0639	05/18/2017	05/18/17 16:03	

Certificate of Analysis

Hushmand Associates, Inc.	Project Number : 6th St Bridge, LAC-17-001
250 Goddard	Report To : Naresh Bellana
Irvine , CA 92618	Reported : 06/05/2017

Client Sample ID 2A-2-1.0

Lab ID: 1702036-26

Volatile Organic Compounds by EPA 8260B **Analyst: AG**

Analyte	Result (ug/kg)	PQL (ug/kg)	Dilution	Batch	Prepared	Date/Time Analyzed	Notes
2-Chlorotoluene	ND	5.0	1	B7E0639	05/18/2017	05/18/17 16:03	
4-Chlorotoluene	ND	5.0	1	B7E0639	05/18/2017	05/18/17 16:03	
4-Isopropyltoluene	ND	5.0	1	B7E0639	05/18/2017	05/18/17 16:03	
Benzene	ND	5.0	1	B7E0639	05/18/2017	05/18/17 16:03	
Bromobenzene	ND	5.0	1	B7E0639	05/18/2017	05/18/17 16:03	
Bromochloromethane	ND	5.0	1	B7E0639	05/18/2017	05/18/17 16:03	
Bromodichloromethane	ND	5.0	1	B7E0639	05/18/2017	05/18/17 16:03	
Bromoform	ND	5.0	1	B7E0639	05/18/2017	05/18/17 16:03	
Bromomethane	ND	5.0	1	B7E0639	05/18/2017	05/18/17 16:03	
Carbon disulfide	ND	5.0	1	B7E0639	05/18/2017	05/18/17 16:03	
Carbon tetrachloride	ND	5.0	1	B7E0639	05/18/2017	05/18/17 16:03	
Chlorobenzene	ND	5.0	1	B7E0639	05/18/2017	05/18/17 16:03	
Chloroethane	ND	5.0	1	B7E0639	05/18/2017	05/18/17 16:03	
Chloroform	ND	5.0	1	B7E0639	05/18/2017	05/18/17 16:03	
Chloromethane	ND	5.0	1	B7E0639	05/18/2017	05/18/17 16:03	
cis-1,2-Dichloroethene	ND	5.0	1	B7E0639	05/18/2017	05/18/17 16:03	
cis-1,3-Dichloropropene	ND	5.0	1	B7E0639	05/18/2017	05/18/17 16:03	
Di-isopropyl ether	ND	5.0	1	B7E0639	05/18/2017	05/18/17 16:03	
Dibromochloromethane	ND	5.0	1	B7E0639	05/18/2017	05/18/17 16:03	
Dibromomethane	ND	5.0	1	B7E0639	05/18/2017	05/18/17 16:03	
Dichlorodifluoromethane	ND	5.0	1	B7E0639	05/18/2017	05/18/17 16:03	
Ethyl Acetate	ND	50	1	B7E0639	05/18/2017	05/18/17 16:03	
Ethyl Ether	ND	50	1	B7E0639	05/18/2017	05/18/17 16:03	
Ethyl tert-butyl ether	ND	5.0	1	B7E0639	05/18/2017	05/18/17 16:03	
Ethylbenzene	ND	5.0	1	B7E0639	05/18/2017	05/18/17 16:03	
Freon-113	ND	5.0	1	B7E0639	05/18/2017	05/18/17 16:03	
Hexachlorobutadiene	ND	5.0	1	B7E0639	05/18/2017	05/18/17 16:03	
Isopropylbenzene	ND	5.0	1	B7E0639	05/18/2017	05/18/17 16:03	
m,p-Xylene	ND	10	1	B7E0639	05/18/2017	05/18/17 16:03	
Methylene chloride	ND	5.0	1	B7E0639	05/18/2017	05/18/17 16:03	
MTBE	ND	5.0	1	B7E0639	05/18/2017	05/18/17 16:03	
n-Butylbenzene	ND	5.0	1	B7E0639	05/18/2017	05/18/17 16:03	
n-Propylbenzene	ND	5.0	1	B7E0639	05/18/2017	05/18/17 16:03	
Naphthalene	ND	5.0	1	B7E0639	05/18/2017	05/18/17 16:03	
o-Xylene	ND	5.0	1	B7E0639	05/18/2017	05/18/17 16:03	
sec-Butylbenzene	ND	5.0	1	B7E0639	05/18/2017	05/18/17 16:03	
Styrene	ND	5.0	1	B7E0639	05/18/2017	05/18/17 16:03	

Certificate of Analysis

Hushmand Associates, Inc.	Project Number : 6th St Bridge, LAC-17-001
250 Goddard	Report To : Naresh Bellana
Irvine , CA 92618	Reported : 06/05/2017

Client Sample ID 2A-2-1.0

Lab ID: 1702036-26

Volatile Organic Compounds by EPA 8260B

Analyst: AG

Analyte	Result (ug/kg)	PQL (ug/kg)	Dilution	Batch	Prepared	Date/Time Analyzed	Notes
tert-Amyl methyl ether	ND	5.0	1	B7E0639	05/18/2017	05/18/17 16:03	
tert-Butanol	ND	100	1	B7E0639	05/18/2017	05/18/17 16:03	
tert-Butylbenzene	ND	5.0	1	B7E0639	05/18/2017	05/18/17 16:03	
Tetrachloroethene	ND	5.0	1	B7E0639	05/18/2017	05/18/17 16:03	
Toluene	ND	5.0	1	B7E0639	05/18/2017	05/18/17 16:03	
trans-1,2-Dichloroethene	ND	5.0	1	B7E0639	05/18/2017	05/18/17 16:03	
trans-1,3-Dichloropropene	ND	5.0	1	B7E0639	05/18/2017	05/18/17 16:03	
Trichloroethene	ND	5.0	1	B7E0639	05/18/2017	05/18/17 16:03	
Trichlorofluoromethane	ND	5.0	1	B7E0639	05/18/2017	05/18/17 16:03	
Vinyl acetate	ND	50	1	B7E0639	05/18/2017	05/18/17 16:03	
Vinyl chloride	ND	5.0	1	B7E0639	05/18/2017	05/18/17 16:03	
Surrogate: 1,2-Dichloroethane-d4	*93.8 %*	*12 - 186*		B7E0639	05/18/2017	*05/18/17 16:03*	
Surrogate: 4-Bromofluorobenzene	*105 %*	*23 - 162*		B7E0639	05/18/2017	*05/18/17 16:03*	
Surrogate: Dibromofluoromethane	*94.9 %*	*23 - 179*		B7E0639	05/18/2017	*05/18/17 16:03*	
Surrogate: Toluene-d8	*100 %*	*26 - 164*		B7E0639	05/18/2017	*05/18/17 16:03*	

Semivolatile Organic Compounds by EPA 8270C

Analyst: SP

Analyte	Result (ug/kg)	PQL (ug/kg)	Dilution	Batch	Prepared	Date/Time Analyzed	Notes
1,2,4-Trichlorobenzene	ND	1600	5	B7E0814	05/24/2017	05/31/17 22:45	D1
1,2-Dichlorobenzene	ND	1600	5	B7E0814	05/24/2017	05/31/17 22:45	D1
1,3-Dichlorobenzene	ND	1600	5	B7E0814	05/24/2017	05/31/17 22:45	D1
1,4-Dichlorobenzene	ND	1600	5	B7E0814	05/24/2017	05/31/17 22:45	D1
2,4,5-Trichlorophenol	ND	1600	5	B7E0814	05/24/2017	05/31/17 22:45	D1
2,4,6-Trichlorophenol	ND	1600	5	B7E0814	05/24/2017	05/31/17 22:45	D1
2,4-Dichlorophenol	ND	8200	5	B7E0814	05/24/2017	05/31/17 22:45	D1
2,4-Dimethylphenol	ND	1600	5	B7E0814	05/24/2017	05/31/17 22:45	D1
2,4-Dinitrophenol	ND	8200	5	B7E0814	05/24/2017	05/31/17 22:45	D1
2,4-Dinitrotoluene	ND	1600	5	B7E0814	05/24/2017	05/31/17 22:45	D1
2,6-Dinitrotoluene	ND	1600	5	B7E0814	05/24/2017	05/31/17 22:45	D1
2-Chloronaphthalene	ND	1600	5	B7E0814	05/24/2017	05/31/17 22:45	D1
2-Chlorophenol	ND	1600	5	B7E0814	05/24/2017	05/31/17 22:45	D1
2-Methylnaphthalene	ND	1600	5	B7E0814	05/24/2017	05/31/17 22:45	D1
2-Methylphenol	ND	1600	5	B7E0814	05/24/2017	05/31/17 22:45	D1
2-Nitroaniline	ND	8200	5	B7E0814	05/24/2017	05/31/17 22:45	D1
2-Nitrophenol	ND	1600	5	B7E0814	05/24/2017	05/31/17 22:45	D1

Certificate of Analysis

Hushmand Associates, Inc.	Project Number : 6th St Bridge, LAC-17-001
250 Goddard	Report To : Naresh Bellana
Irvine , CA 92618	Reported : 06/05/2017

Client Sample ID 2A-2-1.0

Lab ID: 1702036-26

Semivolatile Organic Compounds by EPA 8270C **Analyst: SP**

Analyte	Result (ug/kg)	PQL (ug/kg)	Dilution	Batch	Prepared	Date/Time Analyzed	Notes
3,3´-Dichlorobenzidine	ND	3300	5	B7E0814	05/24/2017	05/31/17 22:45	D1
3-Nitroaniline	ND	8200	5	B7E0814	05/24/2017	05/31/17 22:45	D1
4,6-Dinitro-2-methyphenol	ND	8200	5	B7E0814	05/24/2017	05/31/17 22:45	D1
4-Bromophenyl-phenylether	ND	1600	5	B7E0814	05/24/2017	05/31/17 22:45	D1
4-Chloro-3-methylphenol	ND	3300	5	B7E0814	05/24/2017	05/31/17 22:45	D1
4-Chloroaniline	ND	3300	5	B7E0814	05/24/2017	05/31/17 22:45	D1
4-Chlorophenyl-phenylether	ND	1600	5	B7E0814	05/24/2017	05/31/17 22:45	D1
4-Methylphenol	ND	1600	5	B7E0814	05/24/2017	05/31/17 22:45	D1
4-Nitroaniline	ND	8200	5	B7E0814	05/24/2017	05/31/17 22:45	D1
4-Nitrophenol	ND	1600	5	B7E0814	05/24/2017	05/31/17 22:45	D1
Acenaphthene	ND	1600	5	B7E0814	05/24/2017	05/31/17 22:45	D1
Acenaphthylene	ND	1600	5	B7E0814	05/24/2017	05/31/17 22:45	D1
Anthracene	ND	1600	5	B7E0814	05/24/2017	05/31/17 22:45	D1
Benzidine (M)	ND	8200	5	B7E0814	05/24/2017	05/31/17 22:45	D1
Benzo(a)anthracene	ND	1600	5	B7E0814	05/24/2017	05/31/17 22:45	D1
Benzo(a)pyrene	ND	1600	5	B7E0814	05/24/2017	05/31/17 22:45	D1
Benzo(b)fluoranthene	ND	1600	5	B7E0814	05/24/2017	05/31/17 22:45	D1
Benzo(g,h,i)perylene	ND	1600	5	B7E0814	05/24/2017	05/31/17 22:45	D1
Benzo(k)fluoranthene	ND	1600	5	B7E0814	05/24/2017	05/31/17 22:45	D1
Benzoic acid	ND	8200	5	B7E0814	05/24/2017	05/31/17 22:45	D1
Benzyl alcohol	ND	3300	5	B7E0814	05/24/2017	05/31/17 22:45	D1
bis(2-chloroethoxy)methane	ND	1600	5	B7E0814	05/24/2017	05/31/17 22:45	D1
bis(2-Chloroethyl)ether	ND	1600	5	B7E0814	05/24/2017	05/31/17 22:45	D1
bis(2-chloroisopropyl)ether	ND	1600	5	B7E0814	05/24/2017	05/31/17 22:45	D1
bis(2-ethylhexyl)phthalate	ND	1600	5	B7E0814	05/24/2017	05/31/17 22:45	D1
Butylbenzylphthalate	ND	1600	5	B7E0814	05/24/2017	05/31/17 22:45	D1
Chrysene	ND	1600	5	B7E0814	05/24/2017	05/31/17 22:45	D1
Di-n-butylphthalate	ND	1600	5	B7E0814	05/24/2017	05/31/17 22:45	D1
Di-n-octylphthalate	ND	1600	5	B7E0814	05/24/2017	05/31/17 22:45	D1
Dibenz(a,h)anthracene	ND	1600	5	B7E0814	05/24/2017	05/31/17 22:45	D1
Dibenzofuran	ND	1600	5	B7E0814	05/24/2017	05/31/17 22:45	D1
Diethyl phthalate	ND	1600	5	B7E0814	05/24/2017	05/31/17 22:45	D1
Dimethyl phthalate	ND	1600	5	B7E0814	05/24/2017	05/31/17 22:45	D1
Fluoranthene	ND	1600	5	B7E0814	05/24/2017	05/31/17 22:45	D1
Fluorene	ND	1600	5	B7E0814	05/24/2017	05/31/17 22:45	D1
Hexachlorobenzene	ND	1600	5	B7E0814	05/24/2017	05/31/17 22:45	D1
Hexachlorobutadiene	ND	3300	5	B7E0814	05/24/2017	05/31/17 22:45	D1

Certificate of Analysis

Hushmand Associates, Inc.	Project Number : 6th St Bridge, LAC-17-001
250 Goddard	Report To : Naresh Bellana
Irvine , CA 92618	Reported : 06/05/2017

Client Sample ID 2A-2-1.0

Lab ID: 1702036-26

Semivolatile Organic Compounds by EPA 8270C **Analyst: SP**

Analyte		Result (ug/kg)	PQL (ug/kg)	Dilution	Batch	Prepared	Date/Time Analyzed	Notes
Hexachlorocyclopentadiene		ND	3300	5	B7E0814	05/24/2017	05/31/17 22:45	D1
Hexachloroethane		ND	1600	5	B7E0814	05/24/2017	05/31/17 22:45	D1
Indeno(1,2,3-cd)pyrene		ND	1600	5	B7E0814	05/24/2017	05/31/17 22:45	D1
Isophorone		ND	1600	5	B7E0814	05/24/2017	05/31/17 22:45	D1
N-Nitroso-di-n propylamine		ND	1600	5	B7E0814	05/24/2017	05/31/17 22:45	D1
N-Nitrosodiphenylamine		ND	1600	5	B7E0814	05/24/2017	05/31/17 22:45	D1
Naphthalene		ND	1600	5	B7E0814	05/24/2017	05/31/17 22:45	D1
Nitrobenzene		ND	1600	5	B7E0814	05/24/2017	05/31/17 22:45	D1
Pentachlorophenol		ND	8200	5	B7E0814	05/24/2017	05/31/17 22:45	D1
Phenanthrene		ND	1600	5	B7E0814	05/24/2017	05/31/17 22:45	D1
Phenol		ND	1600	5	B7E0814	05/24/2017	05/31/17 22:45	D1
Pyrene		ND	1600	5	B7E0814	05/24/2017	05/31/17 22:45	D1
Pyridine		ND	8200	5	B7E0814	05/24/2017	05/31/17 22:45	D1
Surrogate: 1,2-Dichlorobenzene-d4	*48.8 %*		*38 - 93*		B7E0814	05/24/2017	*05/31/17 22:45*	
Surrogate: 2,4,6-Tribromophenol	*39.7 %*		*27 - 124*		B7E0814	05/24/2017	*05/31/17 22:45*	
Surrogate: 2-Chlorophenol-d4	*45.5 %*		*36 - 96*		B7E0814	05/24/2017	*05/31/17 22:45*	
Surrogate: 2-Fluorobiphenyl	*59.5 %*		*44 - 100*		B7E0814	05/24/2017	*05/31/17 22:45*	
Surrogate: 2-Fluorophenol	*41.9 %*		*32 - 89*		B7E0814	05/24/2017	*05/31/17 22:45*	
Surrogate: 4-Terphenyl-d14	*58.9 %*		*49 - 123*		B7E0814	05/24/2017	*05/31/17 22:45*	
Surrogate: Nitrobenzene-d5	*53.1 %*		*38 - 104*		B7E0814	05/24/2017	*05/31/17 22:45*	
Surrogate: Phenol-d5	*45.9 %*		*35 - 95*		B7E0814	05/24/2017	*05/31/17 22:45*	

Certificate of Analysis

Hushmand Associates, Inc.	Project Number : 6th St Bridge, LAC-17-001
250 Goddard	Report To : Naresh Bellana
Irvine , CA 92618	Reported : 06/05/2017

Client Sample ID 2A-2-3.0

Lab ID: 1702036-27

Title 22 Metals by ICP-AES EPA 6010B — **Analyst: GO**

Analyte	Result (mg/kg)	PQL (mg/kg)	Dilution	Batch	Prepared	Date/Time Analyzed	Notes
Antimony	ND	2.0	1	B7E0680	05/20/2017	05/22/17 14:14	
Arsenic	ND	1.0	1	B7E0680	05/20/2017	05/22/17 14:14	
Barium	**49**	1.0	1	B7E0680	05/20/2017	05/22/17 14:14	
Beryllium	ND	1.0	1	B7E0680	05/20/2017	05/22/17 14:14	
Cadmium	ND	1.0	1	B7E0680	05/20/2017	05/22/17 14:14	
Chromium	**6.6**	1.0	1	B7E0680	05/20/2017	05/22/17 14:14	
Cobalt	**4.5**	1.0	1	B7E0680	05/20/2017	05/22/17 14:14	
Copper	**6.7**	2.0	1	B7E0680	05/20/2017	05/22/17 14:14	
Lead	**2.6**	1.0	1	B7E0680	05/20/2017	05/22/17 14:14	
Molybdenum	ND	1.0	1	B7E0680	05/20/2017	05/22/17 14:14	
Nickel	**4.6**	1.0	1	B7E0680	05/20/2017	05/22/17 14:14	
Selenium	ND	1.0	1	B7E0680	05/20/2017	05/22/17 14:14	
Silver	ND	1.0	1	B7E0680	05/20/2017	05/22/17 14:14	
Thallium	ND	1.0	1	B7E0680	05/20/2017	05/22/17 14:14	
Vanadium	**18**	1.0	1	B7E0680	05/20/2017	05/22/17 14:14	
Zinc	**23**	1.0	1	B7E0680	05/20/2017	05/22/17 14:14	

Mercury by AA (Cold Vapor) EPA 7471A — **Analyst: KEK**

Analyte	Result (mg/kg)	PQL (mg/kg)	Dilution	Batch	Prepared	Date/Time Analyzed	Notes
Mercury	ND	0.10	1	B7E0675	05/20/2017	05/22/17 15:32	

Certificate of Analysis

Hushmand Associates, Inc.	Project Number : 6th St Bridge, LAC-17-001
250 Goddard	Report To : Naresh Bellana
Irvine , CA 92618	Reported : 06/05/2017

Client Sample ID 2A-2-5.0

Lab ID: 1702036-28

Title 22 Metals by ICP-AES EPA 6010B

Analyst: GO

Analyte	Result (mg/kg)	PQL (mg/kg)	Dilution	Batch	Prepared	Date/Time Analyzed	Notes
Antimony	ND	2.0	1	B7E0680	05/20/2017	05/22/17 14:15	
Arsenic	ND	1.0	1	B7E0680	05/20/2017	05/22/17 14:15	
Barium	**58**	1.0	1	B7E0680	05/20/2017	05/22/17 14:15	
Beryllium	ND	1.0	1	B7E0680	05/20/2017	05/22/17 14:15	
Cadmium	ND	1.0	1	B7E0680	05/20/2017	05/22/17 14:15	
Chromium	**8.6**	1.0	1	B7E0680	05/20/2017	05/22/17 14:15	
Cobalt	**5.5**	1.0	1	B7E0680	05/20/2017	05/22/17 14:15	
Copper	**6.9**	2.0	1	B7E0680	05/20/2017	05/22/17 14:15	
Lead	**1.2**	1.0	1	B7E0680	05/20/2017	05/22/17 14:15	
Molybdenum	ND	1.0	1	B7E0680	05/20/2017	05/22/17 14:15	
Nickel	**5.1**	1.0	1	B7E0680	05/20/2017	05/22/17 14:15	
Selenium	ND	1.0	1	B7E0680	05/20/2017	05/22/17 14:15	
Silver	ND	1.0	1	B7E0680	05/20/2017	05/22/17 14:15	
Thallium	ND	1.0	1	B7E0680	05/20/2017	05/22/17 14:15	
Vanadium	**22**	1.0	1	B7E0680	05/20/2017	05/22/17 14:15	
Zinc	**22**	1.0	1	B7E0680	05/20/2017	05/22/17 14:15	

Mercury by AA (Cold Vapor) EPA 7471A

Analyst: KEK

Analyte	Result (mg/kg)	PQL (mg/kg)	Dilution	Batch	Prepared	Date/Time Analyzed	Notes
Mercury	ND	0.10	1	B7E0675	05/20/2017	05/22/17 15:34	

Gasoline Range Organics by EPA 8015B (Modified)

Analyst: VW

Analyte		Result (mg/kg)	PQL (mg/kg)	Dilution	Batch	Prepared	Date/Time Analyzed	Notes
Gasoline Range Organics		ND	1.0	1	B7E0721	05/22/2017	05/22/17 17:30	
Surrogate: 4-Bromofluorobenzene	*102 %*		*36 - 125*		B7E0721	05/22/2017	*05/22/17 17:30*	

Diesel Range Organics by EPA 8015B

Analyst: CR

Analyte		Result (mg/kg)	PQL (mg/kg)	Dilution	Batch	Prepared	Date/Time Analyzed	Notes
DRO		ND	10	1	B7E0785	05/23/2017	05/24/17 23:35	
Surrogate: p-Terphenyl	*80.4 %*		*47 - 157*		B7E0785	05/23/2017	*05/24/17 23:35*	

Certificate of Analysis

Hushmand Associates, Inc.	Project Number : 6th St Bridge, LAC-17-001
250 Goddard	Report To : Naresh Bellana
Irvine , CA 92618	Reported : 06/05/2017

Client Sample ID 2A-2-5.0

Lab ID: 1702036-28

Volatile Organic Compounds by EPA 8260B **Analyst: AG**

Analyte	Result (ug/kg)	PQL (ug/kg)	Dilution	Batch	Prepared	Date/Time Analyzed	Notes
1,1,1,2-Tetrachloroethane	ND	5.0	1	B7E0639	05/18/2017	05/18/17 16:22	
1,1,1-Trichloroethane	ND	5.0	1	B7E0639	05/18/2017	05/18/17 16:22	
1,1,2,2-Tetrachloroethane	ND	5.0	1	B7E0639	05/18/2017	05/18/17 16:22	
1,1,2-Trichloroethane	ND	5.0	1	B7E0639	05/18/2017	05/18/17 16:22	
1,1-Dichloroethane	ND	5.0	1	B7E0639	05/18/2017	05/18/17 16:22	
1,1-Dichloroethene	ND	5.0	1	B7E0639	05/18/2017	05/18/17 16:22	
1,1-Dichloropropene	ND	5.0	1	B7E0639	05/18/2017	05/18/17 16:22	
1,2,3-Trichloropropane	ND	5.0	1	B7E0639	05/18/2017	05/18/17 16:22	
1,2,3-Trichlorobenzene	ND	5.0	1	B7E0639	05/18/2017	05/18/17 16:22	
1,2,4-Trichlorobenzene	ND	5.0	1	B7E0639	05/18/2017	05/18/17 16:22	
1,2,4-Trimethylbenzene	ND	5.0	1	B7E0639	05/18/2017	05/18/17 16:22	
1,2-Dibromo-3-chloropropane	ND	10	1	B7E0639	05/18/2017	05/18/17 16:22	
1,2-Dibromoethane	ND	5.0	1	B7E0639	05/18/2017	05/18/17 16:22	
1,2-Dichlorobenzene	ND	5.0	1	B7E0639	05/18/2017	05/18/17 16:22	
1,2-Dichloroethane	ND	5.0	1	B7E0639	05/18/2017	05/18/17 16:22	
1,2-Dichloropropane	ND	5.0	1	B7E0639	05/18/2017	05/18/17 16:22	
1,3,5-Trimethylbenzene	ND	5.0	1	B7E0639	05/18/2017	05/18/17 16:22	
1,3-Dichlorobenzene	ND	5.0	1	B7E0639	05/18/2017	05/18/17 16:22	
1,3-Dichloropropane	ND	5.0	1	B7E0639	05/18/2017	05/18/17 16:22	
1,4-Dichlorobenzene	ND	5.0	1	B7E0639	05/18/2017	05/18/17 16:22	
2,2-Dichloropropane	ND	5.0	1	B7E0639	05/18/2017	05/18/17 16:22	
2-Chlorotoluene	ND	5.0	1	B7E0639	05/18/2017	05/18/17 16:22	
4-Chlorotoluene	ND	5.0	1	B7E0639	05/18/2017	05/18/17 16:22	
4-Isopropyltoluene	ND	5.0	1	B7E0639	05/18/2017	05/18/17 16:22	
Benzene	ND	5.0	1	B7E0639	05/18/2017	05/18/17 16:22	
Bromobenzene	ND	5.0	1	B7E0639	05/18/2017	05/18/17 16:22	
Bromochloromethane	ND	5.0	1	B7E0639	05/18/2017	05/18/17 16:22	
Bromodichloromethane	ND	5.0	1	B7E0639	05/18/2017	05/18/17 16:22	
Bromoform	ND	5.0	1	B7E0639	05/18/2017	05/18/17 16:22	
Bromomethane	ND	5.0	1	B7E0639	05/18/2017	05/18/17 16:22	
Carbon disulfide	ND	5.0	1	B7E0639	05/18/2017	05/18/17 16:22	
Carbon tetrachloride	ND	5.0	1	B7E0639	05/18/2017	05/18/17 16:22	
Chlorobenzene	ND	5.0	1	B7E0639	05/18/2017	05/18/17 16:22	
Chloroethane	ND	5.0	1	B7E0639	05/18/2017	05/18/17 16:22	
Chloroform	ND	5.0	1	B7E0639	05/18/2017	05/18/17 16:22	
Chloromethane	ND	5.0	1	B7E0639	05/18/2017	05/18/17 16:22	
cis-1,2-Dichloroethene	ND	5.0	1	B7E0639	05/18/2017	05/18/17 16:22	

Certificate of Analysis

Hushmand Associates, Inc.	Project Number : 6th St Bridge, LAC-17-001
250 Goddard	Report To : Naresh Bellana
Irvine , CA 92618	Reported : 06/05/2017

Client Sample ID 2A-2-5.0

Lab ID: 1702036-28

Volatile Organic Compounds by EPA 8260B **Analyst: AG**

Analyte	Result (ug/kg)	PQL (ug/kg)	Dilution	Batch	Prepared	Date/Time Analyzed	Notes
cis-1,3-Dichloropropene	ND	5.0	1	B7E0639	05/18/2017	05/18/17 16:22	
Di-isopropyl ether	ND	5.0	1	B7E0639	05/18/2017	05/18/17 16:22	
Dibromochloromethane	ND	5.0	1	B7E0639	05/18/2017	05/18/17 16:22	
Dibromomethane	ND	5.0	1	B7E0639	05/18/2017	05/18/17 16:22	
Dichlorodifluoromethane	ND	5.0	1	B7E0639	05/18/2017	05/18/17 16:22	
Ethyl Acetate	ND	50	1	B7E0639	05/18/2017	05/18/17 16:22	
Ethyl Ether	ND	50	1	B7E0639	05/18/2017	05/18/17 16:22	
Ethyl tert-butyl ether	ND	5.0	1	B7E0639	05/18/2017	05/18/17 16:22	
Ethylbenzene	ND	5.0	1	B7E0639	05/18/2017	05/18/17 16:22	
Freon-113	ND	5.0	1	B7E0639	05/18/2017	05/18/17 16:22	
Hexachlorobutadiene	ND	5.0	1	B7E0639	05/18/2017	05/18/17 16:22	
Isopropylbenzene	ND	5.0	1	B7E0639	05/18/2017	05/18/17 16:22	
m,p-Xylene	ND	10	1	B7E0639	05/18/2017	05/18/17 16:22	
Methylene chloride	ND	5.0	1	B7E0639	05/18/2017	05/18/17 16:22	
MTBE	ND	5.0	1	B7E0639	05/18/2017	05/18/17 16:22	
n-Butylbenzene	ND	5.0	1	B7E0639	05/18/2017	05/18/17 16:22	
n-Propylbenzene	ND	5.0	1	B7E0639	05/18/2017	05/18/17 16:22	
Naphthalene	ND	5.0	1	B7E0639	05/18/2017	05/18/17 16:22	
o-Xylene	ND	5.0	1	B7E0639	05/18/2017	05/18/17 16:22	
sec-Butylbenzene	ND	5.0	1	B7E0639	05/18/2017	05/18/17 16:22	
Styrene	ND	5.0	1	B7E0639	05/18/2017	05/18/17 16:22	
tert-Amyl methyl ether	ND	5.0	1	B7E0639	05/18/2017	05/18/17 16:22	
tert-Butanol	ND	100	1	B7E0639	05/18/2017	05/18/17 16:22	
tert-Butylbenzene	ND	5.0	1	B7E0639	05/18/2017	05/18/17 16:22	
Tetrachloroethene	ND	5.0	1	B7E0639	05/18/2017	05/18/17 16:22	
Toluene	ND	5.0	1	B7E0639	05/18/2017	05/18/17 16:22	
trans-1,2-Dichloroethene	ND	5.0	1	B7E0639	05/18/2017	05/18/17 16:22	
trans-1,3-Dichloropropene	ND	5.0	1	B7E0639	05/18/2017	05/18/17 16:22	
Trichloroethene	ND	5.0	1	B7E0639	05/18/2017	05/18/17 16:22	
Trichlorofluoromethane	ND	5.0	1	B7E0639	05/18/2017	05/18/17 16:22	
Vinyl acetate	ND	50	1	B7E0639	05/18/2017	05/18/17 16:22	
Vinyl chloride	ND	5.0	1	B7E0639	05/18/2017	05/18/17 16:22	
Surrogate: 1,2-Dichloroethane-d4	*96.0 %*	*12 - 186*		B7E0639	05/18/2017	*05/18/17 16:22*	
Surrogate: 4-Bromofluorobenzene	*106 %*	*23 - 162*		B7E0639	05/18/2017	*05/18/17 16:22*	
Surrogate: Dibromofluoromethane	*97.4 %*	*23 - 179*		B7E0639	05/18/2017	*05/18/17 16:22*	
Surrogate: Toluene-d8	*99.8 %*	*26 - 164*		B7E0639	05/18/2017	*05/18/17 16:22*	

Certificate of Analysis

Hushmand Associates, Inc.	Project Number : 6th St Bridge, LAC-17-001
250 Goddard	Report To : Naresh Bellana
Irvine , CA 92618	Reported : 06/05/2017

Client Sample ID 2A-2-5.0

Lab ID: 1702036-28

Semivolatile Organic Compounds by EPA 8270C **Analyst: SP**

Analyte	Result (ug/kg)	PQL (ug/kg)	Dilution	Batch	Prepared	Date/Time Analyzed	Notes
1,2,4-Trichlorobenzene	ND	330	1	B7E0781	05/23/2017	05/31/17 21:51	
1,2-Dichlorobenzene	ND	330	1	B7E0781	05/23/2017	05/31/17 21:51	
1,3-Dichlorobenzene	ND	330	1	B7E0781	05/23/2017	05/31/17 21:51	
1,4-Dichlorobenzene	ND	330	1	B7E0781	05/23/2017	05/31/17 21:51	
2,4,5-Trichlorophenol	ND	330	1	B7E0781	05/23/2017	05/31/17 21:51	
2,4,6-Trichlorophenol	ND	330	1	B7E0781	05/23/2017	05/31/17 21:51	
2,4-Dichlorophenol	ND	1600	1	B7E0781	05/23/2017	05/31/17 21:51	
2,4-Dimethylphenol	ND	330	1	B7E0781	05/23/2017	05/31/17 21:51	
2,4-Dinitrophenol	ND	1600	1	B7E0781	05/23/2017	05/31/17 21:51	
2,4-Dinitrotoluene	ND	330	1	B7E0781	05/23/2017	05/31/17 21:51	
2,6-Dinitrotoluene	ND	330	1	B7E0781	05/23/2017	05/31/17 21:51	
2-Chloronaphthalene	ND	330	1	B7E0781	05/23/2017	05/31/17 21:51	
2-Chlorophenol	ND	330	1	B7E0781	05/23/2017	05/31/17 21:51	
2-Methylnaphthalene	ND	330	1	B7E0781	05/23/2017	05/31/17 21:51	
2-Methylphenol	ND	330	1	B7E0781	05/23/2017	05/31/17 21:51	
2-Nitroaniline	ND	1600	1	B7E0781	05/23/2017	05/31/17 21:51	
2-Nitrophenol	ND	330	1	B7E0781	05/23/2017	05/31/17 21:51	
3,3´-Dichlorobenzidine	ND	660	1	B7E0781	05/23/2017	05/31/17 21:51	
3-Nitroaniline	ND	1600	1	B7E0781	05/23/2017	05/31/17 21:51	
4,6-Dinitro-2-methyphenol	ND	1600	1	B7E0781	05/23/2017	05/31/17 21:51	
4-Bromophenyl-phenylether	ND	330	1	B7E0781	05/23/2017	05/31/17 21:51	
4-Chloro-3-methylphenol	ND	660	1	B7E0781	05/23/2017	05/31/17 21:51	
4-Chloroaniline	ND	660	1	B7E0781	05/23/2017	05/31/17 21:51	
4-Chlorophenyl-phenylether	ND	330	1	B7E0781	05/23/2017	05/31/17 21:51	
4-Methylphenol	ND	330	1	B7E0781	05/23/2017	05/31/17 21:51	
4-Nitroaniline	ND	1600	1	B7E0781	05/23/2017	05/31/17 21:51	
4-Nitrophenol	ND	330	1	B7E0781	05/23/2017	05/31/17 21:51	
Acenaphthene	ND	330	1	B7E0781	05/23/2017	05/31/17 21:51	
Acenaphthylene	ND	330	1	B7E0781	05/23/2017	05/31/17 21:51	
Anthracene	ND	330	1	B7E0781	05/23/2017	05/31/17 21:51	
Benzidine (M)	ND	1600	1	B7E0781	05/23/2017	05/31/17 21:51	
Benzo(a)anthracene	ND	330	1	B7E0781	05/23/2017	05/31/17 21:51	
Benzo(a)pyrene	ND	330	1	B7E0781	05/23/2017	05/31/17 21:51	
Benzo(b)fluoranthene	ND	330	1	B7E0781	05/23/2017	05/31/17 21:51	
Benzo(g,h,i)perylene	ND	330	1	B7E0781	05/23/2017	05/31/17 21:51	
Benzo(k)fluoranthene	ND	330	1	B7E0781	05/23/2017	05/31/17 21:51	
Benzoic acid	ND	1600	1	B7E0781	05/23/2017	05/31/17 21:51	

Certificate of Analysis

Hushmand Associates, Inc.	Project Number : 6th St Bridge, LAC-17-001
250 Goddard	Report To : Naresh Bellana
Irvine , CA 92618	Reported : 06/05/2017

Client Sample ID 2A-2-5.0

Lab ID: 1702036-28

Semivolatile Organic Compounds by EPA 8270C **Analyst: SP**

Analyte	Result (ug/kg)	PQL (ug/kg)	Dilution	Batch	Prepared	Date/Time Analyzed	Notes
Benzyl alcohol	ND	660	1	B7E0781	05/23/2017	05/31/17 21:51	
bis(2-chloroethoxy)methane	ND	330	1	B7E0781	05/23/2017	05/31/17 21:51	
bis(2-Chloroethyl)ether	ND	330	1	B7E0781	05/23/2017	05/31/17 21:51	
bis(2-chloroisopropyl)ether	ND	330	1	B7E0781	05/23/2017	05/31/17 21:51	
bis(2-ethylhexyl)phthalate	ND	330	1	B7E0781	05/23/2017	05/31/17 21:51	
Butylbenzylphthalate	ND	330	1	B7E0781	05/23/2017	05/31/17 21:51	
Chrysene	ND	330	1	B7E0781	05/23/2017	05/31/17 21:51	
Di-n-butylphthalate	ND	330	1	B7E0781	05/23/2017	05/31/17 21:51	
Di-n-octylphthalate	ND	330	1	B7E0781	05/23/2017	05/31/17 21:51	
Dibenz(a,h)anthracene	ND	330	1	B7E0781	05/23/2017	05/31/17 21:51	
Dibenzofuran	ND	330	1	B7E0781	05/23/2017	05/31/17 21:51	
Diethyl phthalate	ND	330	1	B7E0781	05/23/2017	05/31/17 21:51	
Dimethyl phthalate	ND	330	1	B7E0781	05/23/2017	05/31/17 21:51	
Fluoranthene	ND	330	1	B7E0781	05/23/2017	05/31/17 21:51	
Fluorene	ND	330	1	B7E0781	05/23/2017	05/31/17 21:51	
Hexachlorobenzene	ND	330	1	B7E0781	05/23/2017	05/31/17 21:51	
Hexachlorobutadiene	ND	660	1	B7E0781	05/23/2017	05/31/17 21:51	
Hexachlorocyclopentadiene	ND	660	1	B7E0781	05/23/2017	05/31/17 21:51	
Hexachloroethane	ND	330	1	B7E0781	05/23/2017	05/31/17 21:51	
Indeno(1,2,3-cd)pyrene	ND	330	1	B7E0781	05/23/2017	05/31/17 21:51	
Isophorone	ND	330	1	B7E0781	05/23/2017	05/31/17 21:51	
N-Nitroso-di-n propylamine	ND	330	1	B7E0781	05/23/2017	05/31/17 21:51	
N-Nitrosodiphenylamine	ND	330	1	B7E0781	05/23/2017	05/31/17 21:51	
Naphthalene	ND	330	1	B7E0781	05/23/2017	05/31/17 21:51	
Nitrobenzene	ND	330	1	B7E0781	05/23/2017	05/31/17 21:51	
Pentachlorophenol	ND	1600	1	B7E0781	05/23/2017	05/31/17 21:51	
Phenanthrene	ND	330	1	B7E0781	05/23/2017	05/31/17 21:51	
Phenol	ND	330	1	B7E0781	05/23/2017	05/31/17 21:51	
Pyrene	ND	330	1	B7E0781	05/23/2017	05/31/17 21:51	
Pyridine	ND	1600	1	B7E0781	05/23/2017	05/31/17 21:51	
Surrogate: 1,2-Dichlorobenzene-d4	*54.3 %*	*38 - 93*		B7E0781	05/23/2017	*05/31/17 21:51*	
Surrogate: 2,4,6-Tribromophenol	*64.8 %*	*27 - 124*		B7E0781	05/23/2017	*05/31/17 21:51*	
Surrogate: 2-Chlorophenol-d4	*55.0 %*	*36 - 96*		B7E0781	05/23/2017	*05/31/17 21:51*	
Surrogate: 2-Fluorobiphenyl	*57.1 %*	*44 - 100*		B7E0781	05/23/2017	*05/31/17 21:51*	
Surrogate: 2-Fluorophenol	*51.9 %*	*32 - 89*		B7E0781	05/23/2017	*05/31/17 21:51*	
Surrogate: 4-Terphenyl-d14	*63.3 %*	*49 - 123*		B7E0781	05/23/2017	*05/31/17 21:51*	
Surrogate: Nitrobenzene-d5	*56.4 %*	*38 - 104*		B7E0781	05/23/2017	*05/31/17 21:51*	

Certificate of Analysis

Hushmand Associates, Inc.	Project Number : 6th St Bridge, LAC-17-001
250 Goddard	Report To : Naresh Bellana
Irvine , CA 92618	Reported : 06/05/2017

Client Sample ID 2A-2-5.0

Lab ID: 1702036-28

Semivolatile Organic Compounds by EPA 8270C **Analyst: SP**

Analyte	Result (ug/kg)	PQL (ug/kg)	Dilution	Batch	Prepared	Date/Time Analyzed	Notes
Surrogate: Phenol-d5	*54.3 %*	*35 - 95*		B7E0781	05/23/2017	*05/31/17 21:51*	

Certificate of Analysis

Hushmand Associates, Inc.	Project Number : 6th St Bridge, LAC-17-001
250 Goddard	Report To : Naresh Bellana
Irvine , CA 92618	Reported : 06/05/2017

Client Sample ID 5-1-0.5

Lab ID: 1702036-29

Title 22 Metals by ICP-AES EPA 6010B **Analyst: GO**

Analyte	Result (mg/kg)	PQL (mg/kg)	Dilution	Batch	Prepared	Date/Time Analyzed	Notes
Antimony	ND	2.0	1	B7E0680	05/20/2017	05/22/17 14:16	
Arsenic	**1.5**	1.0	1	B7E0680	05/20/2017	05/22/17 14:16	
Barium	**72**	1.0	1	B7E0680	05/20/2017	05/22/17 14:16	
Beryllium	ND	1.0	1	B7E0680	05/20/2017	05/22/17 14:16	
Cadmium	ND	1.0	1	B7E0680	05/20/2017	05/22/17 14:16	
Chromium	**7.9**	1.0	1	B7E0680	05/20/2017	05/22/17 14:16	
Cobalt	**5.6**	1.0	1	B7E0680	05/20/2017	05/22/17 14:16	
Copper	**12**	2.0	1	B7E0680	05/20/2017	05/22/17 14:16	
Lead	**20**	1.0	1	B7E0680	05/20/2017	05/22/17 14:16	
Molybdenum	ND	1.0	1	B7E0680	05/20/2017	05/22/17 14:16	
Nickel	**6.6**	1.0	1	B7E0680	05/20/2017	05/22/17 14:16	
Selenium	ND	1.0	1	B7E0680	05/20/2017	05/22/17 14:16	
Silver	ND	1.0	1	B7E0680	05/20/2017	05/22/17 14:16	
Thallium	ND	1.0	1	B7E0680	05/20/2017	05/22/17 14:16	
Vanadium	**21**	1.0	1	B7E0680	05/20/2017	05/22/17 14:16	
Zinc	**46**	1.0	1	B7E0680	05/20/2017	05/22/17 14:16	

Mercury by AA (Cold Vapor) EPA 7471A **Analyst: KEK**

Analyte	Result (mg/kg)	PQL (mg/kg)	Dilution	Batch	Prepared	Date/Time Analyzed	Notes
Mercury	ND	0.10	1	B7E0675	05/20/2017	05/22/17 15:36	

Certificate of Analysis

Hushmand Associates, Inc.	Project Number : 6th St Bridge, LAC-17-001
250 Goddard	Report To : Naresh Bellana
Irvine , CA 92618	Reported : 06/05/2017

Client Sample ID 5-1-1.0

Lab ID: 1702036-30

Title 22 Metals by ICP-AES EPA 6010B

Analyst: GO

Analyte	Result (mg/kg)	PQL (mg/kg)	Dilution	Batch	Prepared	Date/Time Analyzed	Notes
Antimony	ND	2.0	1	B7E0681	05/20/2017	05/22/17 14:20	
Arsenic	**2.1**	1.0	1	B7E0681	05/20/2017	05/22/17 14:20	
Barium	**84**	1.0	1	B7E0681	05/20/2017	05/22/17 14:20	
Beryllium	ND	1.0	1	B7E0681	05/20/2017	05/22/17 14:20	
Cadmium	ND	1.0	1	B7E0681	05/20/2017	05/22/17 14:20	
Chromium	**10**	1.0	1	B7E0681	05/20/2017	05/22/17 14:20	
Cobalt	**5.3**	1.0	1	B7E0681	05/20/2017	05/22/17 14:20	
Copper	**19**	2.0	1	B7E0681	05/20/2017	05/22/17 14:20	
Lead	**68**	1.0	1	B7E0681	05/20/2017	05/22/17 14:20	
Molybdenum	ND	1.0	1	B7E0681	05/20/2017	05/22/17 14:20	
Nickel	**7.6**	1.0	1	B7E0681	05/20/2017	05/22/17 14:20	
Selenium	ND	1.0	1	B7E0681	05/20/2017	05/22/17 14:20	
Silver	ND	1.0	1	B7E0681	05/20/2017	05/22/17 14:20	
Thallium	ND	1.0	1	B7E0681	05/20/2017	05/22/17 14:20	
Vanadium	**22**	1.0	1	B7E0681	05/20/2017	05/22/17 14:20	
Zinc	**99**	1.0	1	B7E0681	05/20/2017	05/22/17 14:20	

TCLP Metals by ICP-AES EPA 6010B

Analyst: GO

Analyte	Result (mg/L)	PQL (mg/L)	Dilution	Batch	Prepared	Date/Time Analyzed	Notes
Lead	ND	0.25	5	B7F0002	06/01/2017	06/01/17 14:07	D1

STLC Metals by ICP-AES by EPA 6010B

Analyst: GO

Analyte	Result (mg/L)	PQL (mg/L)	Dilution	Batch	Prepared	Date/Time Analyzed	Notes
Lead	**4.8**	1.0	20	B7F0043	06/02/2017	06/02/17 15:59	D1

Mercury by AA (Cold Vapor) EPA 7471A

Analyst: KEK

Analyte	Result (mg/kg)	PQL (mg/kg)	Dilution	Batch	Prepared	Date/Time Analyzed	Notes
Mercury	ND	0.10	1	B7E0676	05/20/2017	05/22/17 15:09	

Certificate of Analysis

Hushmand Associates, Inc.	Project Number : 6th St Bridge, LAC-17-001
250 Goddard	Report To : Naresh Bellana
Irvine , CA 92618	Reported : 06/05/2017

Client Sample ID 5-1-2.0

Lab ID: 1702036-31

Title 22 Metals by ICP-AES EPA 6010B

Analyst: GO

Analyte	Result (mg/kg)	PQL (mg/kg)	Dilution	Batch	Prepared	Date/Time Analyzed	Notes
Antimony	ND	2.0	1	B7E0681	05/20/2017	05/22/17 14:26	
Arsenic	**4.7**	1.0	1	B7E0681	05/20/2017	05/22/17 14:26	
Barium	**42**	1.0	1	B7E0681	05/20/2017	05/22/17 14:26	
Beryllium	ND	1.0	1	B7E0681	05/20/2017	05/22/17 14:26	
Cadmium	ND	1.0	1	B7E0681	05/20/2017	05/22/17 14:26	
Chromium	**6.0**	1.0	1	B7E0681	05/20/2017	05/22/17 14:26	
Cobalt	**4.9**	1.0	1	B7E0681	05/20/2017	05/22/17 14:26	
Copper	**23**	2.0	1	B7E0681	05/20/2017	05/22/17 14:26	
Lead	**110**	1.0	1	B7E0681	05/20/2017	05/22/17 14:26	
Molybdenum	ND	1.0	1	B7E0681	05/20/2017	05/22/17 14:26	
Nickel	**7.0**	1.0	1	B7E0681	05/20/2017	05/22/17 14:26	
Selenium	ND	1.0	1	B7E0681	05/20/2017	05/22/17 14:26	
Silver	ND	1.0	1	B7E0681	05/20/2017	05/22/17 14:26	
Thallium	ND	1.0	1	B7E0681	05/20/2017	05/22/17 14:26	
Vanadium	**18**	1.0	1	B7E0681	05/20/2017	05/22/17 14:26	
Zinc	**130**	1.0	1	B7E0681	05/20/2017	05/22/17 14:26	

TCLP Metals by ICP-AES EPA 6010B

Analyst: GO

Analyte	Result (mg/L)	PQL (mg/L)	Dilution	Batch	Prepared	Date/Time Analyzed	Notes
Lead	ND	0.25	5	B7F0002	06/01/2017	06/01/17 14:11	D1

STLC Metals by ICP-AES by EPA 6010B

Analyst: GO

Analyte	Result (mg/L)	PQL (mg/L)	Dilution	Batch	Prepared	Date/Time Analyzed	Notes
Lead	**3.7**	1.0	20	B7F0043	06/02/2017	06/02/17 16:22	D1

Mercury by AA (Cold Vapor) EPA 7471A

Analyst: KEK

Analyte	Result (mg/kg)	PQL (mg/kg)	Dilution	Batch	Prepared	Date/Time Analyzed	Notes
Mercury	**0.11**	0.10	1	B7E0676	05/20/2017	05/22/17 15:17	

Certificate of Analysis

Hushmand Associates, Inc.	Project Number : 6th St Bridge, LAC-17-001
250 Goddard	Report To : Naresh Bellana
Irvine , CA 92618	Reported : 06/05/2017

Client Sample ID 5-1-3.0

Lab ID: 1702036-32

Title 22 Metals by ICP-AES EPA 6010B — **Analyst: GO**

Analyte	Result (mg/kg)	PQL (mg/kg)	Dilution	Batch	Prepared	Date/Time Analyzed	Notes
Antimony	ND	2.0	1	B7E0681	05/20/2017	05/22/17 14:28	
Arsenic	ND	1.0	1	B7E0681	05/20/2017	05/22/17 14:28	
Barium	**30**	1.0	1	B7E0681	05/20/2017	05/22/17 14:28	
Beryllium	ND	1.0	1	B7E0681	05/20/2017	05/22/17 14:28	
Cadmium	ND	1.0	1	B7E0681	05/20/2017	05/22/17 14:28	
Chromium	**4.2**	1.0	1	B7E0681	05/20/2017	05/22/17 14:28	
Cobalt	**3.2**	1.0	1	B7E0681	05/20/2017	05/22/17 14:28	
Copper	**3.8**	2.0	1	B7E0681	05/20/2017	05/22/17 14:28	
Lead	**2.2**	1.0	1	B7E0681	05/20/2017	05/22/17 14:28	
Molybdenum	ND	1.0	1	B7E0681	05/20/2017	05/22/17 14:28	
Nickel	**2.7**	1.0	1	B7E0681	05/20/2017	05/22/17 14:28	
Selenium	ND	1.0	1	B7E0681	05/20/2017	05/22/17 14:28	
Silver	ND	1.0	1	B7E0681	05/20/2017	05/22/17 14:28	
Thallium	ND	1.0	1	B7E0681	05/20/2017	05/22/17 14:28	
Vanadium	**14**	1.0	1	B7E0681	05/20/2017	05/22/17 14:28	
Zinc	**16**	1.0	1	B7E0681	05/20/2017	05/22/17 14:28	

Mercury by AA (Cold Vapor) EPA 7471A — **Analyst: KEK**

Analyte	Result (mg/kg)	PQL (mg/kg)	Dilution	Batch	Prepared	Date/Time Analyzed	Notes
Mercury	**0.14**	0.10	1	B7E0676	05/20/2017	05/22/17 15:19	

Certificate of Analysis

Hushmand Associates, Inc.	Project Number : 6th St Bridge, LAC-17-001
250 Goddard	Report To : Naresh Bellana
Irvine , CA 92618	Reported : 06/05/2017

Client Sample ID 5-2-0.5

Lab ID: 1702036-33

Title 22 Metals by ICP-AES EPA 6010B — **Analyst: GO**

Analyte	Result (mg/kg)	PQL (mg/kg)	Dilution	Batch	Prepared	Date/Time Analyzed	Notes
Antimony	ND	2.0	1	B7E0681	05/20/2017	05/22/17 14:29	
Arsenic	**4.1**	1.0	1	B7E0681	05/20/2017	05/22/17 14:29	
Barium	**75**	1.0	1	B7E0681	05/20/2017	05/22/17 14:29	
Beryllium	ND	1.0	1	B7E0681	05/20/2017	05/22/17 14:29	
Cadmium	ND	1.0	1	B7E0681	05/20/2017	05/22/17 14:29	
Chromium	**15**	1.0	1	B7E0681	05/20/2017	05/22/17 14:29	
Cobalt	**8.5**	1.0	1	B7E0681	05/20/2017	05/22/17 14:29	
Copper	**20**	2.0	1	B7E0681	05/20/2017	05/22/17 14:29	
Lead	**48**	1.0	1	B7E0681	05/20/2017	05/22/17 14:29	
Molybdenum	ND	1.0	1	B7E0681	05/20/2017	05/22/17 14:29	
Nickel	**14**	1.0	1	B7E0681	05/20/2017	05/22/17 14:29	
Selenium	ND	1.0	1	B7E0681	05/20/2017	05/22/17 14:29	
Silver	ND	1.0	1	B7E0681	05/20/2017	05/22/17 14:29	
Thallium	ND	1.0	1	B7E0681	05/20/2017	05/22/17 14:29	
Vanadium	**29**	1.0	1	B7E0681	05/20/2017	05/22/17 14:29	
Zinc	**60**	1.0	1	B7E0681	05/20/2017	05/22/17 14:29	

Mercury by AA (Cold Vapor) EPA 7471A — **Analyst: KEK**

Analyte	Result (mg/kg)	PQL (mg/kg)	Dilution	Batch	Prepared	Date/Time Analyzed	Notes
Mercury	ND	0.10	1	B7E0676	05/20/2017	05/22/17 15:21	

Certificate of Analysis

Hushmand Associates, Inc.	Project Number : 6th St Bridge, LAC-17-001
250 Goddard	Report To : Naresh Bellana
Irvine , CA 92618	Reported : 06/05/2017

Client Sample ID 5-2-1.0

Lab ID: 1702036-34

Title 22 Metals by ICP-AES EPA 6010B — **Analyst: GO**

Analyte	Result (mg/kg)	PQL (mg/kg)	Dilution	Batch	Prepared	Date/Time Analyzed	Notes
Antimony	ND	2.0	1	B7E0681	05/20/2017	05/22/17 14:30	
Arsenic	ND	1.0	1	B7E0681	05/20/2017	05/22/17 14:30	
Barium	**52**	1.0	1	B7E0681	05/20/2017	05/22/17 14:30	
Beryllium	ND	1.0	1	B7E0681	05/20/2017	05/22/17 14:30	
Cadmium	ND	1.0	1	B7E0681	05/20/2017	05/22/17 14:30	
Chromium	**5.9**	1.0	1	B7E0681	05/20/2017	05/22/17 14:30	
Cobalt	**4.5**	1.0	1	B7E0681	05/20/2017	05/22/17 14:30	
Copper	**9.6**	2.0	1	B7E0681	05/20/2017	05/22/17 14:30	
Lead	**19**	1.0	1	B7E0681	05/20/2017	05/22/17 14:30	
Molybdenum	ND	1.0	1	B7E0681	05/20/2017	05/22/17 14:30	
Nickel	**5.0**	1.0	1	B7E0681	05/20/2017	05/22/17 14:30	
Selenium	ND	1.0	1	B7E0681	05/20/2017	05/22/17 14:30	
Silver	ND	1.0	1	B7E0681	05/20/2017	05/22/17 14:30	
Thallium	ND	1.0	1	B7E0681	05/20/2017	05/22/17 14:30	
Vanadium	**18**	1.0	1	B7E0681	05/20/2017	05/22/17 14:30	
Zinc	**77**	1.0	1	B7E0681	05/20/2017	05/22/17 14:30	

Mercury by AA (Cold Vapor) EPA 7471A — **Analyst: KEK**

Analyte	Result (mg/kg)	PQL (mg/kg)	Dilution	Batch	Prepared	Date/Time Analyzed	Notes
Mercury	ND	0.10	1	B7E0676	05/20/2017	05/22/17 15:24	

Certificate of Analysis

Hushmand Associates, Inc.	Project Number : 6th St Bridge, LAC-17-001
250 Goddard	Report To : Naresh Bellana
Irvine , CA 92618	Reported : 06/05/2017

Client Sample ID 5-2-2.0

Lab ID: 1702036-35

Title 22 Metals by ICP-AES EPA 6010B — **Analyst: GO**

Analyte	Result (mg/kg)	PQL (mg/kg)	Dilution	Batch	Prepared	Date/Time Analyzed	Notes
Antimony	ND	2.0	1	B7E0681	05/20/2017	05/22/17 14:31	
Arsenic	ND	1.0	1	B7E0681	05/20/2017	05/22/17 14:31	
Barium	**57**	1.0	1	B7E0681	05/20/2017	05/22/17 14:31	
Beryllium	ND	1.0	1	B7E0681	05/20/2017	05/22/17 14:31	
Cadmium	ND	1.0	1	B7E0681	05/20/2017	05/22/17 14:31	
Chromium	**6.1**	1.0	1	B7E0681	05/20/2017	05/22/17 14:31	
Cobalt	**4.8**	1.0	1	B7E0681	05/20/2017	05/22/17 14:31	
Copper	**5.9**	2.0	1	B7E0681	05/20/2017	05/22/17 14:31	
Lead	**2.3**	1.0	1	B7E0681	05/20/2017	05/22/17 14:31	
Molybdenum	ND	1.0	1	B7E0681	05/20/2017	05/22/17 14:31	
Nickel	**4.5**	1.0	1	B7E0681	05/20/2017	05/22/17 14:31	
Selenium	ND	1.0	1	B7E0681	05/20/2017	05/22/17 14:31	
Silver	ND	1.0	1	B7E0681	05/20/2017	05/22/17 14:31	
Thallium	ND	1.0	1	B7E0681	05/20/2017	05/22/17 14:31	
Vanadium	**17**	1.0	1	B7E0681	05/20/2017	05/22/17 14:31	
Zinc	**23**	1.0	1	B7E0681	05/20/2017	05/22/17 14:31	

Mercury by AA (Cold Vapor) EPA 7471A — **Analyst: KEK**

Analyte	Result (mg/kg)	PQL (mg/kg)	Dilution	Batch	Prepared	Date/Time Analyzed	Notes
Mercury	ND	0.10	1	B7E0676	05/20/2017	05/22/17 15:30	

Certificate of Analysis

Hushmand Associates, Inc.	Project Number : 6th St Bridge, LAC-17-001
250 Goddard	Report To : Naresh Bellana
Irvine , CA 92618	Reported : 06/05/2017

Client Sample ID 5-2-3.0

Lab ID: 1702036-36

Title 22 Metals by ICP-AES EPA 6010B

Analyst: GO

Analyte	Result (mg/kg)	PQL (mg/kg)	Dilution	Batch	Prepared	Date/Time Analyzed	Notes
Antimony	ND	2.0	1	B7E0681	05/20/2017	05/22/17 14:32	
Arsenic	**1.1**	1.0	1	B7E0681	05/20/2017	05/22/17 14:32	
Barium	**21**	1.0	1	B7E0681	05/20/2017	05/22/17 14:32	
Beryllium	ND	1.0	1	B7E0681	05/20/2017	05/22/17 14:32	
Cadmium	ND	1.0	1	B7E0681	05/20/2017	05/22/17 14:32	
Chromium	**3.2**	1.0	1	B7E0681	05/20/2017	05/22/17 14:32	
Cobalt	**3.2**	1.0	1	B7E0681	05/20/2017	05/22/17 14:32	
Copper	**4.3**	2.0	1	B7E0681	05/20/2017	05/22/17 14:32	
Lead	**180**	1.0	1	B7E0681	05/20/2017	05/22/17 14:32	
Molybdenum	ND	1.0	1	B7E0681	05/20/2017	05/22/17 14:32	
Nickel	**4.0**	1.0	1	B7E0681	05/20/2017	05/22/17 14:32	
Selenium	ND	1.0	1	B7E0681	05/20/2017	05/22/17 14:32	
Silver	ND	1.0	1	B7E0681	05/20/2017	05/22/17 14:32	
Thallium	ND	1.0	1	B7E0681	05/20/2017	05/22/17 14:32	
Vanadium	**8.5**	1.0	1	B7E0681	05/20/2017	05/22/17 14:32	
Zinc	**10**	1.0	1	B7E0681	05/20/2017	05/22/17 14:32	

TCLP Metals by ICP-AES EPA 6010B

Analyst: GO

Analyte	Result (mg/L)	PQL (mg/L)	Dilution	Batch	Prepared	Date/Time Analyzed	Notes
Lead	ND	0.25	5	B7F0002	06/01/2017	06/01/17 14:13	D1

STLC Metals by ICP-AES by EPA 6010B

Analyst: GO

Analyte	Result (mg/L)	PQL (mg/L)	Dilution	Batch	Prepared	Date/Time Analyzed	Notes
Lead	ND	1.0	20	B7F0043	06/02/2017	06/02/17 16:02	D1

Mercury by AA (Cold Vapor) EPA 7471A

Analyst: KEK

Analyte	Result (mg/kg)	PQL (mg/kg)	Dilution	Batch	Prepared	Date/Time Analyzed	Notes
Mercury	**0.12**	0.10	1	B7E0676	05/20/2017	05/22/17 15:32	

Certificate of Analysis

Hushmand Associates, Inc.	Project Number : 6th St Bridge, LAC-17-001
250 Goddard	Report To : Naresh Bellana
Irvine , CA 92618	Reported : 06/05/2017

Client Sample ID 6-1-0.5

Lab ID: 1702036-37

Title 22 Metals by ICP-AES EPA 6010B — **Analyst: GO**

Analyte	Result (mg/kg)	PQL (mg/kg)	Dilution	Batch	Prepared	Date/Time Analyzed	Notes
Antimony	ND	2.0	1	B7E0681	05/20/2017	05/22/17 14:33	
Arsenic	**1.5**	1.0	1	B7E0681	05/20/2017	05/22/17 14:33	
Barium	**69**	1.0	1	B7E0681	05/20/2017	05/22/17 14:33	
Beryllium	ND	1.0	1	B7E0681	05/20/2017	05/22/17 14:33	
Cadmium	ND	1.0	1	B7E0681	05/20/2017	05/22/17 14:33	
Chromium	**6.0**	1.0	1	B7E0681	05/20/2017	05/22/17 14:33	
Cobalt	**3.3**	1.0	1	B7E0681	05/20/2017	05/22/17 14:33	
Copper	**7.2**	2.0	1	B7E0681	05/20/2017	05/22/17 14:33	
Lead	**11**	1.0	1	B7E0681	05/20/2017	05/22/17 14:33	
Molybdenum	ND	1.0	1	B7E0681	05/20/2017	05/22/17 14:33	
Nickel	**4.3**	1.0	1	B7E0681	05/20/2017	05/22/17 14:33	
Selenium	ND	1.0	1	B7E0681	05/20/2017	05/22/17 14:33	
Silver	ND	1.0	1	B7E0681	05/20/2017	05/22/17 14:33	
Thallium	ND	1.0	1	B7E0681	05/20/2017	05/22/17 14:33	
Vanadium	**14**	1.0	1	B7E0681	05/20/2017	05/22/17 14:33	
Zinc	**28**	1.0	1	B7E0681	05/20/2017	05/22/17 14:33	

Mercury by AA (Cold Vapor) EPA 7471A — **Analyst: KEK**

Analyte	Result (mg/kg)	PQL (mg/kg)	Dilution	Batch	Prepared	Date/Time Analyzed	Notes
Mercury	**0.14**	0.10	1	B7E0676	05/20/2017	05/22/17 15:34	

Certificate of Analysis

Hushmand Associates, Inc.	Project Number : 6th St Bridge, LAC-17-001
250 Goddard	Report To : Naresh Bellana
Irvine , CA 92618	Reported : 06/05/2017

Client Sample ID 6-1-1.0

Lab ID: 1702036-38

Title 22 Metals by ICP-AES EPA 6010B

Analyst: GO

Analyte	Result (mg/kg)	PQL (mg/kg)	Dilution	Batch	Prepared	Date/Time Analyzed	Notes
Antimony	ND	2.0	1	B7E0681	05/20/2017	05/22/17 14:34	
Arsenic	**1.4**	1.0	1	B7E0681	05/20/2017	05/22/17 14:34	
Barium	**77**	1.0	1	B7E0681	05/20/2017	05/22/17 14:34	
Beryllium	ND	1.0	1	B7E0681	05/20/2017	05/22/17 14:34	
Cadmium	ND	1.0	1	B7E0681	05/20/2017	05/22/17 14:34	
Chromium	**6.2**	1.0	1	B7E0681	05/20/2017	05/22/17 14:34	
Cobalt	**3.7**	1.0	1	B7E0681	05/20/2017	05/22/17 14:34	
Copper	**8.5**	2.0	1	B7E0681	05/20/2017	05/22/17 14:34	
Lead	**13**	1.0	1	B7E0681	05/20/2017	05/22/17 14:34	
Molybdenum	ND	1.0	1	B7E0681	05/20/2017	05/22/17 14:34	
Nickel	**6.7**	1.0	1	B7E0681	05/20/2017	05/22/17 14:34	
Selenium	ND	1.0	1	B7E0681	05/20/2017	05/22/17 14:34	
Silver	ND	1.0	1	B7E0681	05/20/2017	05/22/17 14:34	
Thallium	ND	1.0	1	B7E0681	05/20/2017	05/22/17 14:34	
Vanadium	**15**	1.0	1	B7E0681	05/20/2017	05/22/17 14:34	
Zinc	**33**	1.0	1	B7E0681	05/20/2017	05/22/17 14:34	

Mercury by AA (Cold Vapor) EPA 7471A

Analyst: KEK

Analyte	Result (mg/kg)	PQL (mg/kg)	Dilution	Batch	Prepared	Date/Time Analyzed	Notes
Mercury	ND	0.10	1	B7E0676	05/20/2017	05/22/17 15:36	

Gasoline Range Organics by EPA 8015B (Modified)

Analyst: VW

Analyte	Result (mg/kg)	PQL (mg/kg)	Dilution	Batch	Prepared	Date/Time Analyzed	Notes
Gasoline Range Organics	ND	1.0	1	B7E0721	05/22/2017	05/22/17 17:49	
Surrogate: 4-Bromofluorobenzene	*99.3 %*	*36 - 125*		B7E0721	05/22/2017	*05/22/17 17:49*	

Diesel Range Organics by EPA 8015B

Analyst: CR

Analyte	Result (mg/kg)	PQL (mg/kg)	Dilution	Batch	Prepared	Date/Time Analyzed	Notes
DRO	ND	10	1	B7E0785	05/23/2017	05/25/17 02:40	
Surrogate: p-Terphenyl	*82.5 %*	*47 - 157*		B7E0785	05/23/2017	*05/25/17 02:40*	

Certificate of Analysis

Hushmand Associates, Inc.	Project Number : 6th St Bridge, LAC-17-001
250 Goddard	Report To : Naresh Bellana
Irvine , CA 92618	Reported : 06/05/2017

Client Sample ID 6-1-1.0

Lab ID: 1702036-38

Organochlorine Pesticides by EPA 8081 **Analyst: RL/**

Analyte	Result (ug/kg)	PQL (ug/kg)	Dilution	Batch	Prepared	Date/Time Analyzed	Notes
4,4´-DDD	ND	2.0	1	B7E0819	05/24/2017	05/24/17 17:03	
4,4´-DDE	ND	2.0	1	B7E0819	05/24/2017	05/24/17 17:03	
4,4´-DDT	ND	2.0	1	B7E0819	05/24/2017	05/24/17 17:03	
Aldrin	ND	1.0	1	B7E0819	05/24/2017	05/24/17 17:03	
alpha-BHC	ND	1.0	1	B7E0819	05/24/2017	05/24/17 17:03	
alpha-Chlordane	ND	1.0	1	B7E0819	05/24/2017	05/24/17 17:03	
beta-BHC	ND	1.0	1	B7E0819	05/24/2017	05/24/17 17:03	
Chlordane	ND	8.5	1	B7E0819	05/24/2017	05/24/17 17:03	
delta-BHC	ND	1.0	1	B7E0819	05/24/2017	05/24/17 17:03	
Dieldrin	ND	2.0	1	B7E0819	05/24/2017	05/24/17 17:03	
Endosulfan I	ND	1.0	1	B7E0819	05/24/2017	05/24/17 17:03	
Endosulfan II	ND	2.0	1	B7E0819	05/24/2017	05/24/17 17:03	
Endosulfan sulfate	ND	2.0	1	B7E0819	05/24/2017	05/24/17 17:03	
Endrin	ND	2.0	1	B7E0819	05/24/2017	05/24/17 17:03	
Endrin aldehyde	ND	2.0	1	B7E0819	05/24/2017	05/24/17 17:03	
Endrin ketone	ND	2.0	1	B7E0819	05/24/2017	05/24/17 17:03	
gamma-BHC	ND	1.0	1	B7E0819	05/24/2017	05/24/17 17:03	
gamma-Chlordane	ND	1.0	1	B7E0819	05/24/2017	05/24/17 17:03	
Heptachlor	ND	1.0	1	B7E0819	05/24/2017	05/24/17 17:03	
Heptachlor epoxide	ND	1.0	1	B7E0819	05/24/2017	05/24/17 17:03	
Methoxychlor	ND	5.0	1	B7E0819	05/24/2017	05/24/17 17:03	
Toxaphene	ND	50	1	B7E0819	05/24/2017	05/24/17 17:03	
Surrogate: Decachlorobiphenyl	*64.4 %*	*27 - 123*		B7E0819	05/24/2017	*05/24/17 17:03*	
Surrogate: Tetrachloro-m-xylene	*83.7 %*	*26 - 108*		B7E0819	05/24/2017	*05/24/17 17:03*	

Certificate of Analysis

Hushmand Associates, Inc.	Project Number : 6th St Bridge, LAC-17-001
250 Goddard	Report To : Naresh Bellana
Irvine , CA 92618	Reported : 06/05/2017

Client Sample ID 6-1-1.0

Lab ID: 1702036-38

Polychlorinated Biphenyls by EPA 8082

Analyst: LT

Analyte	Result (ug/kg)	PQL (ug/kg)	Dilution	Batch	Prepared	Date/Time Analyzed	Notes
Aroclor 1016	ND	16	1	B7E0819	05/24/2017	05/24/17 16:04	
Aroclor 1221	ND	16	1	B7E0819	05/24/2017	05/24/17 16:04	
Aroclor 1232	ND	16	1	B7E0819	05/24/2017	05/24/17 16:04	
Aroclor 1242	ND	16	1	B7E0819	05/24/2017	05/24/17 16:04	
Aroclor 1248	ND	16	1	B7E0819	05/24/2017	05/24/17 16:04	
Aroclor 1254	ND	16	1	B7E0819	05/24/2017	05/24/17 16:04	
Aroclor 1260	ND	16	1	B7E0819	05/24/2017	05/24/17 16:04	
Aroclor 1262	ND	16	1	B7E0819	05/24/2017	05/24/17 16:04	
Aroclor 1268	ND	16	1	B7E0819	05/24/2017	05/24/17 16:04	
Surrogate: Decachlorobiphenyl	*67.0 %*	*18 - 136*		B7E0819	05/24/2017	*05/24/17 16:04*	
Surrogate: Tetrachloro-m-xylene	*86.2 %*	*30 - 130*		B7E0819	05/24/2017	*05/24/17 16:04*	

Volatile Organic Compounds by EPA 8260B

Analyst: AG

Analyte	Result (ug/kg)	PQL (ug/kg)	Dilution	Batch	Prepared	Date/Time Analyzed	Notes
1,1,1,2-Tetrachloroethane	ND	5.0	1	B7E0639	05/18/2017	05/18/17 16:41	
1,1,1-Trichloroethane	ND	5.0	1	B7E0639	05/18/2017	05/18/17 16:41	
1,1,2,2-Tetrachloroethane	ND	5.0	1	B7E0639	05/18/2017	05/18/17 16:41	
1,1,2-Trichloroethane	ND	5.0	1	B7E0639	05/18/2017	05/18/17 16:41	
1,1-Dichloroethane	ND	5.0	1	B7E0639	05/18/2017	05/18/17 16:41	
1,1-Dichloroethene	ND	5.0	1	B7E0639	05/18/2017	05/18/17 16:41	
1,1-Dichloropropene	ND	5.0	1	B7E0639	05/18/2017	05/18/17 16:41	
1,2,3-Trichloropropane	ND	5.0	1	B7E0639	05/18/2017	05/18/17 16:41	
1,2,3-Trichlorobenzene	ND	5.0	1	B7E0639	05/18/2017	05/18/17 16:41	
1,2,4-Trichlorobenzene	ND	5.0	1	B7E0639	05/18/2017	05/18/17 16:41	
1,2,4-Trimethylbenzene	ND	5.0	1	B7E0639	05/18/2017	05/18/17 16:41	
1,2-Dibromo-3-chloropropane	ND	10	1	B7E0639	05/18/2017	05/18/17 16:41	
1,2-Dibromoethane	ND	5.0	1	B7E0639	05/18/2017	05/18/17 16:41	
1,2-Dichlorobenzene	ND	5.0	1	B7E0639	05/18/2017	05/18/17 16:41	
1,2-Dichloroethane	ND	5.0	1	B7E0639	05/18/2017	05/18/17 16:41	
1,2-Dichloropropane	ND	5.0	1	B7E0639	05/18/2017	05/18/17 16:41	
1,3,5-Trimethylbenzene	ND	5.0	1	B7E0639	05/18/2017	05/18/17 16:41	
1,3-Dichlorobenzene	ND	5.0	1	B7E0639	05/18/2017	05/18/17 16:41	
1,3-Dichloropropane	ND	5.0	1	B7E0639	05/18/2017	05/18/17 16:41	
1,4-Dichlorobenzene	ND	5.0	1	B7E0639	05/18/2017	05/18/17 16:41	
2,2-Dichloropropane	ND	5.0	1	B7E0639	05/18/2017	05/18/17 16:41	

Certificate of Analysis

Hushmand Associates, Inc.	Project Number : 6th St Bridge, LAC-17-001
250 Goddard	Report To : Naresh Bellana
Irvine , CA 92618	Reported : 06/05/2017

Client Sample ID 6-1-1.0

Lab ID: 1702036-38

Volatile Organic Compounds by EPA 8260B **Analyst: AG**

Analyte	Result (ug/kg)	PQL (ug/kg)	Dilution	Batch	Prepared	Date/Time Analyzed	Notes
2-Chlorotoluene	ND	5.0	1	B7E0639	05/18/2017	05/18/17 16:41	
4-Chlorotoluene	ND	5.0	1	B7E0639	05/18/2017	05/18/17 16:41	
4-Isopropyltoluene	ND	5.0	1	B7E0639	05/18/2017	05/18/17 16:41	
Benzene	ND	5.0	1	B7E0639	05/18/2017	05/18/17 16:41	
Bromobenzene	ND	5.0	1	B7E0639	05/18/2017	05/18/17 16:41	
Bromochloromethane	ND	5.0	1	B7E0639	05/18/2017	05/18/17 16:41	
Bromodichloromethane	ND	5.0	1	B7E0639	05/18/2017	05/18/17 16:41	
Bromoform	ND	5.0	1	B7E0639	05/18/2017	05/18/17 16:41	
Bromomethane	ND	5.0	1	B7E0639	05/18/2017	05/18/17 16:41	
Carbon disulfide	ND	5.0	1	B7E0639	05/18/2017	05/18/17 16:41	
Carbon tetrachloride	ND	5.0	1	B7E0639	05/18/2017	05/18/17 16:41	
Chlorobenzene	ND	5.0	1	B7E0639	05/18/2017	05/18/17 16:41	
Chloroethane	ND	5.0	1	B7E0639	05/18/2017	05/18/17 16:41	
Chloroform	ND	5.0	1	B7E0639	05/18/2017	05/18/17 16:41	
Chloromethane	ND	5.0	1	B7E0639	05/18/2017	05/18/17 16:41	
cis-1,2-Dichloroethene	ND	5.0	1	B7E0639	05/18/2017	05/18/17 16:41	
cis-1,3-Dichloropropene	ND	5.0	1	B7E0639	05/18/2017	05/18/17 16:41	
Di-isopropyl ether	ND	5.0	1	B7E0639	05/18/2017	05/18/17 16:41	
Dibromochloromethane	ND	5.0	1	B7E0639	05/18/2017	05/18/17 16:41	
Dibromomethane	ND	5.0	1	B7E0639	05/18/2017	05/18/17 16:41	
Dichlorodifluoromethane	ND	5.0	1	B7E0639	05/18/2017	05/18/17 16:41	
Ethyl Acetate	ND	50	1	B7E0639	05/18/2017	05/18/17 16:41	
Ethyl Ether	ND	50	1	B7E0639	05/18/2017	05/18/17 16:41	
Ethyl tert-butyl ether	ND	5.0	1	B7E0639	05/18/2017	05/18/17 16:41	
Ethylbenzene	ND	5.0	1	B7E0639	05/18/2017	05/18/17 16:41	
Freon-113	ND	5.0	1	B7E0639	05/18/2017	05/18/17 16:41	
Hexachlorobutadiene	ND	5.0	1	B7E0639	05/18/2017	05/18/17 16:41	
Isopropylbenzene	ND	5.0	1	B7E0639	05/18/2017	05/18/17 16:41	
m,p-Xylene	ND	10	1	B7E0639	05/18/2017	05/18/17 16:41	
Methylene chloride	ND	5.0	1	B7E0639	05/18/2017	05/18/17 16:41	
MTBE	ND	5.0	1	B7E0639	05/18/2017	05/18/17 16:41	
n-Butylbenzene	ND	5.0	1	B7E0639	05/18/2017	05/18/17 16:41	
n-Propylbenzene	ND	5.0	1	B7E0639	05/18/2017	05/18/17 16:41	
Naphthalene	ND	5.0	1	B7E0639	05/18/2017	05/18/17 16:41	
o-Xylene	ND	5.0	1	B7E0639	05/18/2017	05/18/17 16:41	
sec-Butylbenzene	ND	5.0	1	B7E0639	05/18/2017	05/18/17 16:41	
Styrene	ND	5.0	1	B7E0639	05/18/2017	05/18/17 16:41	

Certificate of Analysis

Hushmand Associates, Inc.	Project Number : 6th St Bridge, LAC-17-001
250 Goddard	Report To : Naresh Bellana
Irvine , CA 92618	Reported : 06/05/2017

Client Sample ID 6-1-1.0

Lab ID: 1702036-38

Volatile Organic Compounds by EPA 8260B

Analyst: AG

Analyte	Result (ug/kg)	PQL (ug/kg)	Dilution	Batch	Prepared	Date/Time Analyzed	Notes
tert-Amyl methyl ether	ND	5.0	1	B7E0639	05/18/2017	05/18/17 16:41	
tert-Butanol	ND	100	1	B7E0639	05/18/2017	05/18/17 16:41	
tert-Butylbenzene	ND	5.0	1	B7E0639	05/18/2017	05/18/17 16:41	
Tetrachloroethene	ND	5.0	1	B7E0639	05/18/2017	05/18/17 16:41	
Toluene	ND	5.0	1	B7E0639	05/18/2017	05/18/17 16:41	
trans-1,2-Dichloroethene	ND	5.0	1	B7E0639	05/18/2017	05/18/17 16:41	
trans-1,3-Dichloropropene	ND	5.0	1	B7E0639	05/18/2017	05/18/17 16:41	
Trichloroethene	ND	5.0	1	B7E0639	05/18/2017	05/18/17 16:41	
Trichlorofluoromethane	ND	5.0	1	B7E0639	05/18/2017	05/18/17 16:41	
Vinyl acetate	ND	50	1	B7E0639	05/18/2017	05/18/17 16:41	
Vinyl chloride	ND	5.0	1	B7E0639	05/18/2017	05/18/17 16:41	
Surrogate: 1,2-Dichloroethane-d4	*96.0 %*	*12 - 186*		B7E0639	05/18/2017	*05/18/17 16:41*	
Surrogate: 4-Bromofluorobenzene	*102 %*	*23 - 162*		B7E0639	05/18/2017	*05/18/17 16:41*	
Surrogate: Dibromofluoromethane	*99.2 %*	*23 - 179*		B7E0639	05/18/2017	*05/18/17 16:41*	
Surrogate: Toluene-d8	*101 %*	*26 - 164*		B7E0639	05/18/2017	*05/18/17 16:41*	

Semivolatile Organic Compounds by EPA 8270C

Analyst: SP

Analyte	Result (ug/kg)	PQL (ug/kg)	Dilution	Batch	Prepared	Date/Time Analyzed	Notes
1,2,4-Trichlorobenzene	ND	330	1	B7E0781	05/23/2017	06/01/17 01:21	
1,2-Dichlorobenzene	ND	330	1	B7E0781	05/23/2017	06/01/17 01:21	
1,3-Dichlorobenzene	ND	330	1	B7E0781	05/23/2017	06/01/17 01:21	
1,4-Dichlorobenzene	ND	330	1	B7E0781	05/23/2017	06/01/17 01:21	
2,4,5-Trichlorophenol	ND	330	1	B7E0781	05/23/2017	06/01/17 01:21	
2,4,6-Trichlorophenol	ND	330	1	B7E0781	05/23/2017	06/01/17 01:21	
2,4-Dichlorophenol	ND	1600	1	B7E0781	05/23/2017	06/01/17 01:21	
2,4-Dimethylphenol	ND	330	1	B7E0781	05/23/2017	06/01/17 01:21	
2,4-Dinitrophenol	ND	1600	1	B7E0781	05/23/2017	06/01/17 01:21	
2,4-Dinitrotoluene	ND	330	1	B7E0781	05/23/2017	06/01/17 01:21	
2,6-Dinitrotoluene	ND	330	1	B7E0781	05/23/2017	06/01/17 01:21	
2-Chloronaphthalene	ND	330	1	B7E0781	05/23/2017	06/01/17 01:21	
2-Chlorophenol	ND	330	1	B7E0781	05/23/2017	06/01/17 01:21	
2-Methylnaphthalene	ND	330	1	B7E0781	05/23/2017	06/01/17 01:21	
2-Methylphenol	ND	330	1	B7E0781	05/23/2017	06/01/17 01:21	
2-Nitroaniline	ND	1600	1	B7E0781	05/23/2017	06/01/17 01:21	
2-Nitrophenol	ND	330	1	B7E0781	05/23/2017	06/01/17 01:21	

Certificate of Analysis

Hushmand Associates, Inc.	Project Number : 6th St Bridge, LAC-17-001
250 Goddard	Report To : Naresh Bellana
Irvine , CA 92618	Reported : 06/05/2017

Client Sample ID 6-1-1.0

Lab ID: 1702036-38

Semivolatile Organic Compounds by EPA 8270C **Analyst: SP**

Analyte	Result (ug/kg)	PQL (ug/kg)	Dilution	Batch	Prepared	Date/Time Analyzed	Notes
3,3´-Dichlorobenzidine	ND	660	1	B7E0781	05/23/2017	06/01/17 01:21	
3-Nitroaniline	ND	1600	1	B7E0781	05/23/2017	06/01/17 01:21	
4,6-Dinitro-2-methyphenol	ND	1600	1	B7E0781	05/23/2017	06/01/17 01:21	
4-Bromophenyl-phenylether	ND	330	1	B7E0781	05/23/2017	06/01/17 01:21	
4-Chloro-3-methylphenol	ND	660	1	B7E0781	05/23/2017	06/01/17 01:21	
4-Chloroaniline	ND	660	1	B7E0781	05/23/2017	06/01/17 01:21	
4-Chlorophenyl-phenylether	ND	330	1	B7E0781	05/23/2017	06/01/17 01:21	
4-Methylphenol	ND	330	1	B7E0781	05/23/2017	06/01/17 01:21	
4-Nitroaniline	ND	1600	1	B7E0781	05/23/2017	06/01/17 01:21	
4-Nitrophenol	ND	330	1	B7E0781	05/23/2017	06/01/17 01:21	
Acenaphthene	ND	330	1	B7E0781	05/23/2017	06/01/17 01:21	
Acenaphthylene	ND	330	1	B7E0781	05/23/2017	06/01/17 01:21	
Anthracene	ND	330	1	B7E0781	05/23/2017	06/01/17 01:21	
Benzidine (M)	ND	1600	1	B7E0781	05/23/2017	06/01/17 01:21	
Benzo(a)anthracene	ND	330	1	B7E0781	05/23/2017	06/01/17 01:21	
Benzo(a)pyrene	ND	330	1	B7E0781	05/23/2017	06/01/17 01:21	
Benzo(b)fluoranthene	ND	330	1	B7E0781	05/23/2017	06/01/17 01:21	
Benzo(g,h,i)perylene	ND	330	1	B7E0781	05/23/2017	06/01/17 01:21	
Benzo(k)fluoranthene	ND	330	1	B7E0781	05/23/2017	06/01/17 01:21	
Benzoic acid	ND	1600	1	B7E0781	05/23/2017	06/01/17 01:21	
Benzyl alcohol	ND	660	1	B7E0781	05/23/2017	06/01/17 01:21	
bis(2-chloroethoxy)methane	ND	330	1	B7E0781	05/23/2017	06/01/17 01:21	
bis(2-Chloroethyl)ether	ND	330	1	B7E0781	05/23/2017	06/01/17 01:21	
bis(2-chloroisopropyl)ether	ND	330	1	B7E0781	05/23/2017	06/01/17 01:21	
bis(2-ethylhexyl)phthalate	ND	330	1	B7E0781	05/23/2017	06/01/17 01:21	
Butylbenzylphthalate	ND	330	1	B7E0781	05/23/2017	06/01/17 01:21	
Chrysene	ND	330	1	B7E0781	05/23/2017	06/01/17 01:21	
Di-n-butylphthalate	ND	330	1	B7E0781	05/23/2017	06/01/17 01:21	
Di-n-octylphthalate	ND	330	1	B7E0781	05/23/2017	06/01/17 01:21	
Dibenz(a,h)anthracene	ND	330	1	B7E0781	05/23/2017	06/01/17 01:21	
Dibenzofuran	ND	330	1	B7E0781	05/23/2017	06/01/17 01:21	
Diethyl phthalate	ND	330	1	B7E0781	05/23/2017	06/01/17 01:21	
Dimethyl phthalate	ND	330	1	B7E0781	05/23/2017	06/01/17 01:21	
Fluoranthene	ND	330	1	B7E0781	05/23/2017	06/01/17 01:21	
Fluorene	ND	330	1	B7E0781	05/23/2017	06/01/17 01:21	
Hexachlorobenzene	ND	330	1	B7E0781	05/23/2017	06/01/17 01:21	
Hexachlorobutadiene	ND	660	1	B7E0781	05/23/2017	06/01/17 01:21	

Certificate of Analysis

Hushmand Associates, Inc.	Project Number : 6th St Bridge, LAC-17-001
250 Goddard	Report To : Naresh Bellana
Irvine , CA 92618	Reported : 06/05/2017

Client Sample ID 6-1-1.0

Lab ID: 1702036-38

Semivolatile Organic Compounds by EPA 8270C **Analyst: SP**

Analyte		Result (ug/kg)	PQL (ug/kg)	Dilution	Batch	Prepared	Date/Time Analyzed	Notes
Hexachlorocyclopentadiene		ND	660	1	B7E0781	05/23/2017	06/01/17 01:21	
Hexachloroethane		ND	330	1	B7E0781	05/23/2017	06/01/17 01:21	
Indeno(1,2,3-cd)pyrene		ND	330	1	B7E0781	05/23/2017	06/01/17 01:21	
Isophorone		ND	330	1	B7E0781	05/23/2017	06/01/17 01:21	
N-Nitroso-di-n propylamine		ND	330	1	B7E0781	05/23/2017	06/01/17 01:21	
N-Nitrosodiphenylamine		ND	330	1	B7E0781	05/23/2017	06/01/17 01:21	
Naphthalene		ND	330	1	B7E0781	05/23/2017	06/01/17 01:21	
Nitrobenzene		ND	330	1	B7E0781	05/23/2017	06/01/17 01:21	
Pentachlorophenol		ND	1600	1	B7E0781	05/23/2017	06/01/17 01:21	
Phenanthrene		ND	330	1	B7E0781	05/23/2017	06/01/17 01:21	
Phenol		ND	330	1	B7E0781	05/23/2017	06/01/17 01:21	
Pyrene		ND	330	1	B7E0781	05/23/2017	06/01/17 01:21	
Pyridine		ND	1600	1	B7E0781	05/23/2017	06/01/17 01:21	
Surrogate: 1,2-Dichlorobenzene-d4	*48.2 %*		*38 - 93*		B7E0781	05/23/2017	*06/01/17 01:21*	
Surrogate: 2,4,6-Tribromophenol	*61.8 %*		*27 - 124*		B7E0781	05/23/2017	*06/01/17 01:21*	
Surrogate: 2-Chlorophenol-d4	*48.7 %*		*36 - 96*		B7E0781	05/23/2017	*06/01/17 01:21*	
Surrogate: 2-Fluorobiphenyl	*61.7 %*		*44 - 100*		B7E0781	05/23/2017	*06/01/17 01:21*	
Surrogate: 2-Fluorophenol	*47.5 %*		*32 - 89*		B7E0781	05/23/2017	*06/01/17 01:21*	
Surrogate: 4-Terphenyl-d14	*60.2 %*		*49 - 123*		B7E0781	05/23/2017	*06/01/17 01:21*	
Surrogate: Nitrobenzene-d5	*55.4 %*		*38 - 104*		B7E0781	05/23/2017	*06/01/17 01:21*	
Surrogate: Phenol-d5	*48.2 %*		*35 - 95*		B7E0781	05/23/2017	*06/01/17 01:21*	

Certificate of Analysis

Hushmand Associates, Inc.	Project Number : 6th St Bridge, LAC-17-001
250 Goddard	Report To : Naresh Bellana
Irvine , CA 92618	Reported : 06/05/2017

Client Sample ID 6-1-3.0

Lab ID: 1702036-39

Title 22 Metals by ICP-AES EPA 6010B — **Analyst: GO**

Analyte	Result (mg/kg)	PQL (mg/kg)	Dilution	Batch	Prepared	Date/Time Analyzed	Notes
Antimony	ND	2.0	1	B7E0681	05/20/2017	05/22/17 14:35	
Arsenic	ND	1.0	1	B7E0681	05/20/2017	05/22/17 14:35	
Barium	**70**	1.0	1	B7E0681	05/20/2017	05/22/17 14:35	
Beryllium	ND	1.0	1	B7E0681	05/20/2017	05/22/17 14:35	
Cadmium	ND	1.0	1	B7E0681	05/20/2017	05/22/17 14:35	
Chromium	**8.2**	1.0	1	B7E0681	05/20/2017	05/22/17 14:35	
Cobalt	**6.6**	1.0	1	B7E0681	05/20/2017	05/22/17 14:35	
Copper	**7.4**	2.0	1	B7E0681	05/20/2017	05/22/17 14:35	
Lead	**3.3**	1.0	1	B7E0681	05/20/2017	05/22/17 14:35	
Molybdenum	ND	1.0	1	B7E0681	05/20/2017	05/22/17 14:35	
Nickel	**6.1**	1.0	1	B7E0681	05/20/2017	05/22/17 14:35	
Selenium	ND	1.0	1	B7E0681	05/20/2017	05/22/17 14:35	
Silver	ND	1.0	1	B7E0681	05/20/2017	05/22/17 14:35	
Thallium	ND	1.0	1	B7E0681	05/20/2017	05/22/17 14:35	
Vanadium	**23**	1.0	1	B7E0681	05/20/2017	05/22/17 14:35	
Zinc	**32**	1.0	1	B7E0681	05/20/2017	05/22/17 14:35	

Mercury by AA (Cold Vapor) EPA 7471A — **Analyst: KEK**

Analyte	Result (mg/kg)	PQL (mg/kg)	Dilution	Batch	Prepared	Date/Time Analyzed	Notes
Mercury	ND	0.10	1	B7E0676	05/20/2017	05/22/17 15:38	

Certificate of Analysis

Hushmand Associates, Inc.	Project Number : 6th St Bridge, LAC-17-001
250 Goddard	Report To : Naresh Bellana
Irvine , CA 92618	Reported : 06/05/2017

Client Sample ID 6-1-5.0

Lab ID: 1702036-40

Title 22 Metals by ICP-AES EPA 6010B — **Analyst: GO**

Analyte	Result (mg/kg)	PQL (mg/kg)	Dilution	Batch	Prepared	Date/Time Analyzed	Notes
Antimony	ND	2.0	1	B7E0681	05/20/2017	05/22/17 14:39	
Arsenic	ND	1.0	1	B7E0681	05/20/2017	05/22/17 14:39	
Barium	**66**	1.0	1	B7E0681	05/20/2017	05/22/17 14:39	
Beryllium	ND	1.0	1	B7E0681	05/20/2017	05/22/17 14:39	
Cadmium	ND	1.0	1	B7E0681	05/20/2017	05/22/17 14:39	
Chromium	**8.1**	1.0	1	B7E0681	05/20/2017	05/22/17 14:39	
Cobalt	**6.3**	1.0	1	B7E0681	05/20/2017	05/22/17 14:39	
Copper	**6.5**	2.0	1	B7E0681	05/20/2017	05/22/17 14:39	
Lead	**1.2**	1.0	1	B7E0681	05/20/2017	05/22/17 14:39	
Molybdenum	ND	1.0	1	B7E0681	05/20/2017	05/22/17 14:39	
Nickel	**5.6**	1.0	1	B7E0681	05/20/2017	05/22/17 14:39	
Selenium	ND	1.0	1	B7E0681	05/20/2017	05/22/17 14:39	
Silver	ND	1.0	1	B7E0681	05/20/2017	05/22/17 14:39	
Thallium	ND	1.0	1	B7E0681	05/20/2017	05/22/17 14:39	
Vanadium	**24**	1.0	1	B7E0681	05/20/2017	05/22/17 14:39	
Zinc	**28**	1.0	1	B7E0681	05/20/2017	05/22/17 14:39	

Mercury by AA (Cold Vapor) EPA 7471A — **Analyst: KEK**

Analyte	Result (mg/kg)	PQL (mg/kg)	Dilution	Batch	Prepared	Date/Time Analyzed	Notes
Mercury	ND	0.10	1	B7E0676	05/20/2017	05/22/17 15:40	

Certificate of Analysis

Hushmand Associates, Inc.	Project Number : 6th St Bridge, LAC-17-001
250 Goddard	Report To : Naresh Bellana
Irvine , CA 92618	Reported : 06/05/2017

Client Sample ID 6-3-0.5

Lab ID: 1702036-41

Title 22 Metals by ICP-AES EPA 6010B **Analyst: GO**

Analyte	Result (mg/kg)	PQL (mg/kg)	Dilution	Batch	Prepared	Date/Time Analyzed	Notes
Antimony	ND	2.0	1	B7E0681	05/20/2017	05/22/17 14:40	
Arsenic	ND	1.0	1	B7E0681	05/20/2017	05/22/17 14:40	
Barium	**46**	1.0	1	B7E0681	05/20/2017	05/22/17 14:40	
Beryllium	ND	1.0	1	B7E0681	05/20/2017	05/22/17 14:40	
Cadmium	ND	1.0	1	B7E0681	05/20/2017	05/22/17 14:40	
Chromium	**5.8**	1.0	1	B7E0681	05/20/2017	05/22/17 14:40	
Cobalt	**3.5**	1.0	1	B7E0681	05/20/2017	05/22/17 14:40	
Copper	**5.7**	2.0	1	B7E0681	05/20/2017	05/22/17 14:40	
Lead	**9.1**	1.0	1	B7E0681	05/20/2017	05/22/17 14:40	
Molybdenum	ND	1.0	1	B7E0681	05/20/2017	05/22/17 14:40	
Nickel	**3.5**	1.0	1	B7E0681	05/20/2017	05/22/17 14:40	
Selenium	ND	1.0	1	B7E0681	05/20/2017	05/22/17 14:40	
Silver	ND	1.0	1	B7E0681	05/20/2017	05/22/17 14:40	
Thallium	ND	1.0	1	B7E0681	05/20/2017	05/22/17 14:40	
Vanadium	**14**	1.0	1	B7E0681	05/20/2017	05/22/17 14:40	
Zinc	**28**	1.0	1	B7E0681	05/20/2017	05/22/17 14:40	

Mercury by AA (Cold Vapor) EPA 7471A **Analyst: KEK**

Analyte	Result (mg/kg)	PQL (mg/kg)	Dilution	Batch	Prepared	Date/Time Analyzed	Notes
Mercury	ND	0.10	1	B7E0676	05/20/2017	05/22/17 15:42	

Certificate of Analysis

Hushmand Associates, Inc.	Project Number : 6th St Bridge, LAC-17-001
250 Goddard	Report To : Naresh Bellana
Irvine , CA 92618	Reported : 06/05/2017

Client Sample ID 6-3-1.0

Lab ID: 1702036-42

Title 22 Metals by ICP-AES EPA 6010B

Analyst: GO

Analyte	Result (mg/kg)	PQL (mg/kg)	Dilution	Batch	Prepared	Date/Time Analyzed	Notes
Antimony	**8.3**	2.0	1	B7E0681	05/20/2017	05/22/17 14:41	
Arsenic	**11**	1.0	1	B7E0681	05/20/2017	05/22/17 14:41	
Barium	**1900**	10	10	B7E0681	05/20/2017	05/22/17 16:14	D6
Beryllium	ND	1.0	1	B7E0681	05/20/2017	05/22/17 14:41	
Cadmium	**12**	1.0	1	B7E0681	05/20/2017	05/22/17 14:41	
Chromium	**69**	1.0	1	B7E0681	05/20/2017	05/22/17 14:41	
Cobalt	**9.2**	1.0	1	B7E0681	05/20/2017	05/22/17 14:41	
Copper	**250**	2.0	1	B7E0681	05/20/2017	05/22/17 14:41	
Lead	**4300**	10	10	B7E0681	05/20/2017	05/22/17 16:14	D6
Molybdenum	ND	1.0	1	B7E0681	05/20/2017	05/22/17 14:41	
Nickel	**31**	1.0	1	B7E0681	05/20/2017	05/22/17 14:41	
Selenium	**1.0**	1.0	1	B7E0681	05/20/2017	05/22/17 14:41	
Silver	ND	1.0	1	B7E0681	05/20/2017	05/22/17 14:41	
Thallium	ND	1.0	1	B7E0681	05/20/2017	05/22/17 14:41	
Vanadium	**22**	1.0	1	B7E0681	05/20/2017	05/22/17 14:41	
Zinc	**10000**	10	10	B7E0681	05/20/2017	05/22/17 16:14	D6

TCLP Metals by ICP-AES EPA 6010B

Analyst: GO

Analyte	Result (mg/L)	PQL (mg/L)	Dilution	Batch	Prepared	Date/Time Analyzed	Notes
Barium	ND	0.25	5	B7F0002	06/01/2017	06/01/17 14:14	D1
Cadmium	**0.99**	0.25	5	B7F0002	06/01/2017	06/01/17 14:14	D1
Lead	**7.3**	0.25	5	B7F0002	06/01/2017	06/01/17 14:14	D1

STLC Metals by ICP-AES by EPA 6010B

Analyst: GO

Analyte	Result (mg/L)	PQL (mg/L)	Dilution	Batch	Prepared	Date/Time Analyzed	Notes
Barium	**3.2**	1.0	20	B7F0043	06/02/2017	06/02/17 16:04	D1
Cadmium	ND	1.0	20	B7F0043	06/02/2017	06/02/17 16:04	D1
Copper	**33**	1.0	20	B7F0043	06/02/2017	06/02/17 16:04	D1
Lead	**270**	1.0	20	B7F0043	06/02/2017	06/02/17 16:04	D1
Zinc	**1100**	2.5	50	B7F0043	06/02/2017	06/02/17 17:41	D6

Certificate of Analysis

Hushmand Associates, Inc.	Project Number : 6th St Bridge, LAC-17-001
250 Goddard	Report To : Naresh Bellana
Irvine , CA 92618	Reported : 06/05/2017

Client Sample ID 6-3-1.0

Lab ID: 1702036-42

Hexavalent Chromium by EPA 7196A/3060A

Analyst: SLO

Analyte	Result (mg/kg)	PQL (mg/kg)	Dilution	Batch	Prepared	Date/Time Analyzed	Notes
Hexavalent Chromium	**3.0**	1.0	1	B7F0053	06/01/2017	06/02/17 11:00	

Mercury by AA (Cold Vapor) EPA 7471A

Analyst: KEK

Analyte	Result (mg/kg)	PQL (mg/kg)	Dilution	Batch	Prepared	Date/Time Analyzed	Notes
Mercury	**0.44**	0.10	1	B7E0676	05/20/2017	05/22/17 15:44	

Gasoline Range Organics by EPA 8015B (Modified)

Analyst: VW

Analyte		Result (mg/kg)	PQL (mg/kg)	Dilution	Batch	Prepared	Date/Time Analyzed	Notes
Gasoline Range Organics		ND	1.0	1	B7E0721	05/22/2017	05/22/17 18:07	
Surrogate: 4-Bromofluorobenzene	*98.7 %*		*36 - 125*		B7E0721	05/22/2017	*05/22/17 18:07*	

Diesel Range Organics by EPA 8015B

Analyst: CR

Analyte		Result (mg/kg)	PQL (mg/kg)	Dilution	Batch	Prepared	Date/Time Analyzed	Notes
DRO		ND	10	1	B7E0785	05/23/2017	05/25/17 02:24	
Surrogate: p-Terphenyl	*83.9 %*		*47 - 157*		B7E0785	05/23/2017	*05/25/17 02:24*	

Organochlorine Pesticides by EPA 8081

Analyst: RL/

Analyte	Result (ug/kg)	PQL (ug/kg)	Dilution	Batch	Prepared	Date/Time Analyzed	Notes
4,4′-DDD	ND	2.0	1	B7E0819	05/24/2017	05/24/17 17:13	
4,4′-DDE	ND	2.0	1	B7E0819	05/24/2017	05/24/17 17:13	
4,4′-DDT	ND	2.0	1	B7E0819	05/24/2017	05/24/17 17:13	
Aldrin	ND	1.0	1	B7E0819	05/24/2017	05/24/17 17:13	
alpha-BHC	ND	1.0	1	B7E0819	05/24/2017	05/24/17 17:13	
alpha-Chlordane	ND	1.0	1	B7E0819	05/24/2017	05/24/17 17:13	
beta-BHC	ND	1.0	1	B7E0819	05/24/2017	05/24/17 17:13	
Chlordane	ND	8.5	1	B7E0819	05/24/2017	05/24/17 17:13	
delta-BHC	ND	1.0	1	B7E0819	05/24/2017	05/24/17 17:13	
Dieldrin	ND	2.0	1	B7E0819	05/24/2017	05/24/17 17:13	

Certificate of Analysis

Hushmand Associates, Inc.	Project Number : 6th St Bridge, LAC-17-001
250 Goddard	Report To : Naresh Bellana
Irvine , CA 92618	Reported : 06/05/2017

Client Sample ID 6-3-1.0

Lab ID: 1702036-42

Organochlorine Pesticides by EPA 8081

Analyst: RL/

Analyte	Result (ug/kg)	PQL (ug/kg)	Dilution	Batch	Prepared	Date/Time Analyzed	Notes
Endosulfan I	ND	1.0	1	B7E0819	05/24/2017	05/24/17 17:13	
Endosulfan II	ND	2.0	1	B7E0819	05/24/2017	05/24/17 17:13	
Endosulfan sulfate	ND	2.0	1	B7E0819	05/24/2017	05/24/17 17:13	
Endrin	ND	2.0	1	B7E0819	05/24/2017	05/24/17 17:13	
Endrin aldehyde	ND	2.0	1	B7E0819	05/24/2017	05/24/17 17:13	
Endrin ketone	ND	2.0	1	B7E0819	05/24/2017	05/24/17 17:13	
gamma-BHC	ND	1.0	1	B7E0819	05/24/2017	05/24/17 17:13	
gamma-Chlordane	ND	1.0	1	B7E0819	05/24/2017	05/24/17 17:13	
Heptachlor	ND	1.0	1	B7E0819	05/24/2017	05/24/17 17:13	
Heptachlor epoxide	ND	1.0	1	B7E0819	05/24/2017	05/24/17 17:13	
Methoxychlor	ND	5.0	1	B7E0819	05/24/2017	05/24/17 17:13	
Toxaphene	ND	50	1	B7E0819	05/24/2017	05/24/17 17:13	
Surrogate: Decachlorobiphenyl	*38.2 %*	*27 - 123*		B7E0819	05/24/2017	*05/24/17 17:13*	
Surrogate: Tetrachloro-m-xylene	*49.4 %*	*26 - 108*		B7E0819	05/24/2017	*05/24/17 17:13*	

Polychlorinated Biphenyls by EPA 8082

Analyst: LT

Analyte	Result (ug/kg)	PQL (ug/kg)	Dilution	Batch	Prepared	Date/Time Analyzed	Notes
Aroclor 1016	ND	16	1	B7E0819	05/24/2017	05/24/17 16:23	
Aroclor 1221	ND	16	1	B7E0819	05/24/2017	05/24/17 16:23	
Aroclor 1232	ND	16	1	B7E0819	05/24/2017	05/24/17 16:23	
Aroclor 1242	ND	16	1	B7E0819	05/24/2017	05/24/17 16:23	
Aroclor 1248	ND	16	1	B7E0819	05/24/2017	05/24/17 16:23	
Aroclor 1254	ND	16	1	B7E0819	05/24/2017	05/24/17 16:23	
Aroclor 1260	ND	16	1	B7E0819	05/24/2017	05/24/17 16:23	
Aroclor 1262	ND	16	1	B7E0819	05/24/2017	05/24/17 16:23	
Aroclor 1268	ND	16	1	B7E0819	05/24/2017	05/24/17 16:23	
Surrogate: Decachlorobiphenyl	*58.6 %*	*18 - 136*		B7E0819	05/24/2017	*05/24/17 16:23*	
Surrogate: Tetrachloro-m-xylene	*79.9 %*	*30 - 130*		B7E0819	05/24/2017	*05/24/17 16:23*	

Certificate of Analysis

Hushmand Associates, Inc.	Project Number : 6th St Bridge, LAC-17-001
250 Goddard	Report To : Naresh Bellana
Irvine , CA 92618	Reported : 06/05/2017

Client Sample ID 6-3-1.0

Lab ID: 1702036-42

Volatile Organic Compounds by EPA 8260B **Analyst: AG**

Analyte	Result (ug/kg)	PQL (ug/kg)	Dilution	Batch	Prepared	Date/Time Analyzed	Notes
1,1,1,2-Tetrachloroethane	ND	5.0	1	B7E0639	05/18/2017	05/18/17 16:59	
1,1,1-Trichloroethane	ND	5.0	1	B7E0639	05/18/2017	05/18/17 16:59	
1,1,2,2-Tetrachloroethane	ND	5.0	1	B7E0639	05/18/2017	05/18/17 16:59	
1,1,2-Trichloroethane	ND	5.0	1	B7E0639	05/18/2017	05/18/17 16:59	
1,1-Dichloroethane	ND	5.0	1	B7E0639	05/18/2017	05/18/17 16:59	
1,1-Dichloroethene	ND	5.0	1	B7E0639	05/18/2017	05/18/17 16:59	
1,1-Dichloropropene	ND	5.0	1	B7E0639	05/18/2017	05/18/17 16:59	
1,2,3-Trichloropropane	ND	5.0	1	B7E0639	05/18/2017	05/18/17 16:59	
1,2,3-Trichlorobenzene	ND	5.0	1	B7E0639	05/18/2017	05/18/17 16:59	
1,2,4-Trichlorobenzene	ND	5.0	1	B7E0639	05/18/2017	05/18/17 16:59	
1,2,4-Trimethylbenzene	ND	5.0	1	B7E0639	05/18/2017	05/18/17 16:59	
1,2-Dibromo-3-chloropropane	ND	10	1	B7E0639	05/18/2017	05/18/17 16:59	
1,2-Dibromoethane	ND	5.0	1	B7E0639	05/18/2017	05/18/17 16:59	
1,2-Dichlorobenzene	ND	5.0	1	B7E0639	05/18/2017	05/18/17 16:59	
1,2-Dichloroethane	ND	5.0	1	B7E0639	05/18/2017	05/18/17 16:59	
1,2-Dichloropropane	ND	5.0	1	B7E0639	05/18/2017	05/18/17 16:59	
1,3,5-Trimethylbenzene	ND	5.0	1	B7E0639	05/18/2017	05/18/17 16:59	
1,3-Dichlorobenzene	ND	5.0	1	B7E0639	05/18/2017	05/18/17 16:59	
1,3-Dichloropropane	ND	5.0	1	B7E0639	05/18/2017	05/18/17 16:59	
1,4-Dichlorobenzene	ND	5.0	1	B7E0639	05/18/2017	05/18/17 16:59	
2,2-Dichloropropane	ND	5.0	1	B7E0639	05/18/2017	05/18/17 16:59	
2-Chlorotoluene	ND	5.0	1	B7E0639	05/18/2017	05/18/17 16:59	
4-Chlorotoluene	ND	5.0	1	B7E0639	05/18/2017	05/18/17 16:59	
4-Isopropyltoluene	ND	5.0	1	B7E0639	05/18/2017	05/18/17 16:59	
Benzene	ND	5.0	1	B7E0639	05/18/2017	05/18/17 16:59	
Bromobenzene	ND	5.0	1	B7E0639	05/18/2017	05/18/17 16:59	
Bromochloromethane	ND	5.0	1	B7E0639	05/18/2017	05/18/17 16:59	
Bromodichloromethane	ND	5.0	1	B7E0639	05/18/2017	05/18/17 16:59	
Bromoform	ND	5.0	1	B7E0639	05/18/2017	05/18/17 16:59	
Bromomethane	ND	5.0	1	B7E0639	05/18/2017	05/18/17 16:59	
Carbon disulfide	ND	5.0	1	B7E0639	05/18/2017	05/18/17 16:59	
Carbon tetrachloride	ND	5.0	1	B7E0639	05/18/2017	05/18/17 16:59	
Chlorobenzene	ND	5.0	1	B7E0639	05/18/2017	05/18/17 16:59	
Chloroethane	ND	5.0	1	B7E0639	05/18/2017	05/18/17 16:59	
Chloroform	ND	5.0	1	B7E0639	05/18/2017	05/18/17 16:59	
Chloromethane	ND	5.0	1	B7E0639	05/18/2017	05/18/17 16:59	
cis-1,2-Dichloroethene	ND	5.0	1	B7E0639	05/18/2017	05/18/17 16:59	

Certificate of Analysis

Hushmand Associates, Inc.	Project Number : 6th St Bridge, LAC-17-001
250 Goddard	Report To : Naresh Bellana
Irvine , CA 92618	Reported : 06/05/2017

Client Sample ID 6-3-1.0

Lab ID: 1702036-42

Volatile Organic Compounds by EPA 8260B **Analyst: AG**

Analyte	Result (ug/kg)	PQL (ug/kg)	Dilution	Batch	Prepared	Date/Time Analyzed	Notes
cis-1,3-Dichloropropene	ND	5.0	1	B7E0639	05/18/2017	05/18/17 16:59	
Di-isopropyl ether	ND	5.0	1	B7E0639	05/18/2017	05/18/17 16:59	
Dibromochloromethane	ND	5.0	1	B7E0639	05/18/2017	05/18/17 16:59	
Dibromomethane	ND	5.0	1	B7E0639	05/18/2017	05/18/17 16:59	
Dichlorodifluoromethane	ND	5.0	1	B7E0639	05/18/2017	05/18/17 16:59	
Ethyl Acetate	ND	50	1	B7E0639	05/18/2017	05/18/17 16:59	
Ethyl Ether	ND	50	1	B7E0639	05/18/2017	05/18/17 16:59	
Ethyl tert-butyl ether	ND	5.0	1	B7E0639	05/18/2017	05/18/17 16:59	
Ethylbenzene	ND	5.0	1	B7E0639	05/18/2017	05/18/17 16:59	
Freon-113	ND	5.0	1	B7E0639	05/18/2017	05/18/17 16:59	
Hexachlorobutadiene	ND	5.0	1	B7E0639	05/18/2017	05/18/17 16:59	
Isopropylbenzene	ND	5.0	1	B7E0639	05/18/2017	05/18/17 16:59	
m,p-Xylene	ND	10	1	B7E0639	05/18/2017	05/18/17 16:59	
Methylene chloride	ND	5.0	1	B7E0639	05/18/2017	05/18/17 16:59	
MTBE	ND	5.0	1	B7E0639	05/18/2017	05/18/17 16:59	
n-Butylbenzene	ND	5.0	1	B7E0639	05/18/2017	05/18/17 16:59	
n-Propylbenzene	ND	5.0	1	B7E0639	05/18/2017	05/18/17 16:59	
Naphthalene	ND	5.0	1	B7E0639	05/18/2017	05/18/17 16:59	
o-Xylene	ND	5.0	1	B7E0639	05/18/2017	05/18/17 16:59	
sec-Butylbenzene	ND	5.0	1	B7E0639	05/18/2017	05/18/17 16:59	
Styrene	ND	5.0	1	B7E0639	05/18/2017	05/18/17 16:59	
tert-Amyl methyl ether	ND	5.0	1	B7E0639	05/18/2017	05/18/17 16:59	
tert-Butanol	ND	100	1	B7E0639	05/18/2017	05/18/17 16:59	
tert-Butylbenzene	ND	5.0	1	B7E0639	05/18/2017	05/18/17 16:59	
Tetrachloroethene	ND	5.0	1	B7E0639	05/18/2017	05/18/17 16:59	
Toluene	ND	5.0	1	B7E0639	05/18/2017	05/18/17 16:59	
trans-1,2-Dichloroethene	ND	5.0	1	B7E0639	05/18/2017	05/18/17 16:59	
trans-1,3-Dichloropropene	ND	5.0	1	B7E0639	05/18/2017	05/18/17 16:59	
Trichloroethene	ND	5.0	1	B7E0639	05/18/2017	05/18/17 16:59	
Trichlorofluoromethane	ND	5.0	1	B7E0639	05/18/2017	05/18/17 16:59	
Vinyl acetate	ND	50	1	B7E0639	05/18/2017	05/18/17 16:59	
Vinyl chloride	ND	5.0	1	B7E0639	05/18/2017	05/18/17 16:59	
Surrogate: 1,2-Dichloroethane-d4	*104 %*	*12 - 186*		B7E0639	05/18/2017	*05/18/17 16:59*	
Surrogate: 4-Bromofluorobenzene	*108 %*	*23 - 162*		B7E0639	05/18/2017	*05/18/17 16:59*	
Surrogate: Dibromofluoromethane	*96.9 %*	*23 - 179*		B7E0639	05/18/2017	*05/18/17 16:59*	
Surrogate: Toluene-d8	*101 %*	*26 - 164*		B7E0639	05/18/2017	*05/18/17 16:59*	

Certificate of Analysis

Hushmand Associates, Inc.	Project Number : 6th St Bridge, LAC-17-001
250 Goddard	Report To : Naresh Bellana
Irvine , CA 92618	Reported : 06/05/2017

Client Sample ID 6-3-1.0

Lab ID: 1702036-42

Semivolatile Organic Compounds by EPA 8270C **Analyst: SP**

Analyte	Result (ug/kg)	PQL (ug/kg)	Dilution	Batch	Prepared	Date/Time Analyzed	Notes
1,2,4-Trichlorobenzene	ND	330	1	B7E0781	05/23/2017	06/01/17 01:49	
1,2-Dichlorobenzene	ND	330	1	B7E0781	05/23/2017	06/01/17 01:49	
1,3-Dichlorobenzene	ND	330	1	B7E0781	05/23/2017	06/01/17 01:49	
1,4-Dichlorobenzene	ND	330	1	B7E0781	05/23/2017	06/01/17 01:49	
2,4,5-Trichlorophenol	ND	330	1	B7E0781	05/23/2017	06/01/17 01:49	
2,4,6-Trichlorophenol	ND	330	1	B7E0781	05/23/2017	06/01/17 01:49	
2,4-Dichlorophenol	ND	1600	1	B7E0781	05/23/2017	06/01/17 01:49	
2,4-Dimethylphenol	ND	330	1	B7E0781	05/23/2017	06/01/17 01:49	
2,4-Dinitrophenol	ND	1600	1	B7E0781	05/23/2017	06/01/17 01:49	
2,4-Dinitrotoluene	ND	330	1	B7E0781	05/23/2017	06/01/17 01:49	
2,6-Dinitrotoluene	ND	330	1	B7E0781	05/23/2017	06/01/17 01:49	
2-Chloronaphthalene	ND	330	1	B7E0781	05/23/2017	06/01/17 01:49	
2-Chlorophenol	ND	330	1	B7E0781	05/23/2017	06/01/17 01:49	
2-Methylnaphthalene	ND	330	1	B7E0781	05/23/2017	06/01/17 01:49	
2-Methylphenol	ND	330	1	B7E0781	05/23/2017	06/01/17 01:49	
2-Nitroaniline	ND	1600	1	B7E0781	05/23/2017	06/01/17 01:49	
2-Nitrophenol	ND	330	1	B7E0781	05/23/2017	06/01/17 01:49	
3,3´-Dichlorobenzidine	ND	660	1	B7E0781	05/23/2017	06/01/17 01:49	
3-Nitroaniline	ND	1600	1	B7E0781	05/23/2017	06/01/17 01:49	
4,6-Dinitro-2-methyphenol	ND	1600	1	B7E0781	05/23/2017	06/01/17 01:49	
4-Bromophenyl-phenylether	ND	330	1	B7E0781	05/23/2017	06/01/17 01:49	
4-Chloro-3-methylphenol	ND	660	1	B7E0781	05/23/2017	06/01/17 01:49	
4-Chloroaniline	ND	660	1	B7E0781	05/23/2017	06/01/17 01:49	
4-Chlorophenyl-phenylether	ND	330	1	B7E0781	05/23/2017	06/01/17 01:49	
4-Methylphenol	ND	330	1	B7E0781	05/23/2017	06/01/17 01:49	
4-Nitroaniline	ND	1600	1	B7E0781	05/23/2017	06/01/17 01:49	
4-Nitrophenol	ND	330	1	B7E0781	05/23/2017	06/01/17 01:49	
Acenaphthene	ND	330	1	B7E0781	05/23/2017	06/01/17 01:49	
Acenaphthylene	ND	330	1	B7E0781	05/23/2017	06/01/17 01:49	
Anthracene	ND	330	1	B7E0781	05/23/2017	06/01/17 01:49	
Benzidine (M)	ND	1600	1	B7E0781	05/23/2017	06/01/17 01:49	
Benzo(a)anthracene	ND	330	1	B7E0781	05/23/2017	06/01/17 01:49	
Benzo(a)pyrene	ND	330	1	B7E0781	05/23/2017	06/01/17 01:49	
Benzo(b)fluoranthene	ND	330	1	B7E0781	05/23/2017	06/01/17 01:49	
Benzo(g,h,i)perylene	ND	330	1	B7E0781	05/23/2017	06/01/17 01:49	
Benzo(k)fluoranthene	ND	330	1	B7E0781	05/23/2017	06/01/17 01:49	
Benzoic acid	ND	1600	1	B7E0781	05/23/2017	06/01/17 01:49	

Certificate of Analysis

Hushmand Associates, Inc.	Project Number : 6th St Bridge, LAC-17-001
250 Goddard	Report To : Naresh Bellana
Irvine , CA 92618	Reported : 06/05/2017

Client Sample ID 6-3-1.0

Lab ID: 1702036-42

Semivolatile Organic Compounds by EPA 8270C **Analyst: SP**

Analyte	Result (ug/kg)	PQL (ug/kg)	Dilution	Batch	Prepared	Date/Time Analyzed	Notes
Benzyl alcohol	ND	660	1	B7E0781	05/23/2017	06/01/17 01:49	
bis(2-chloroethoxy)methane	ND	330	1	B7E0781	05/23/2017	06/01/17 01:49	
bis(2-Chloroethyl)ether	ND	330	1	B7E0781	05/23/2017	06/01/17 01:49	
bis(2-chloroisopropyl)ether	ND	330	1	B7E0781	05/23/2017	06/01/17 01:49	
bis(2-ethylhexyl)phthalate	ND	330	1	B7E0781	05/23/2017	06/01/17 01:49	
Butylbenzylphthalate	ND	330	1	B7E0781	05/23/2017	06/01/17 01:49	
Chrysene	ND	330	1	B7E0781	05/23/2017	06/01/17 01:49	
Di-n-butylphthalate	ND	330	1	B7E0781	05/23/2017	06/01/17 01:49	
Di-n-octylphthalate	ND	330	1	B7E0781	05/23/2017	06/01/17 01:49	
Dibenz(a,h)anthracene	ND	330	1	B7E0781	05/23/2017	06/01/17 01:49	
Dibenzofuran	ND	330	1	B7E0781	05/23/2017	06/01/17 01:49	
Diethyl phthalate	ND	330	1	B7E0781	05/23/2017	06/01/17 01:49	
Dimethyl phthalate	ND	330	1	B7E0781	05/23/2017	06/01/17 01:49	
Fluoranthene	ND	330	1	B7E0781	05/23/2017	06/01/17 01:49	
Fluorene	ND	330	1	B7E0781	05/23/2017	06/01/17 01:49	
Hexachlorobenzene	ND	330	1	B7E0781	05/23/2017	06/01/17 01:49	
Hexachlorobutadiene	ND	660	1	B7E0781	05/23/2017	06/01/17 01:49	
Hexachlorocyclopentadiene	ND	660	1	B7E0781	05/23/2017	06/01/17 01:49	
Hexachloroethane	ND	330	1	B7E0781	05/23/2017	06/01/17 01:49	
Indeno(1,2,3-cd)pyrene	ND	330	1	B7E0781	05/23/2017	06/01/17 01:49	
Isophorone	ND	330	1	B7E0781	05/23/2017	06/01/17 01:49	
N-Nitroso-di-n propylamine	ND	330	1	B7E0781	05/23/2017	06/01/17 01:49	
N-Nitrosodiphenylamine	ND	330	1	B7E0781	05/23/2017	06/01/17 01:49	
Naphthalene	ND	330	1	B7E0781	05/23/2017	06/01/17 01:49	
Nitrobenzene	ND	330	1	B7E0781	05/23/2017	06/01/17 01:49	
Pentachlorophenol	ND	1600	1	B7E0781	05/23/2017	06/01/17 01:49	
Phenanthrene	ND	330	1	B7E0781	05/23/2017	06/01/17 01:49	
Phenol	ND	330	1	B7E0781	05/23/2017	06/01/17 01:49	
Pyrene	ND	330	1	B7E0781	05/23/2017	06/01/17 01:49	
Pyridine	ND	1600	1	B7E0781	05/23/2017	06/01/17 01:49	
Surrogate: 1,2-Dichlorobenzene-d4	*53.0 %*	*38 - 93*		B7E0781	05/23/2017	*06/01/17 01:49*	
Surrogate: 2,4,6-Tribromophenol	*64.5 %*	*27 - 124*		B7E0781	05/23/2017	*06/01/17 01:49*	
Surrogate: 2-Chlorophenol-d4	*54.1 %*	*36 - 96*		B7E0781	05/23/2017	*06/01/17 01:49*	
Surrogate: 2-Fluorobiphenyl	*64.1 %*	*44 - 100*		B7E0781	05/23/2017	*06/01/17 01:49*	
Surrogate: 2-Fluorophenol	*51.0 %*	*32 - 89*		B7E0781	05/23/2017	*06/01/17 01:49*	
Surrogate: 4-Terphenyl-d14	*66.5 %*	*49 - 123*		B7E0781	05/23/2017	*06/01/17 01:49*	
Surrogate: Nitrobenzene-d5	*58.4 %*	*38 - 104*		B7E0781	05/23/2017	*06/01/17 01:49*	

Certificate of Analysis

Hushmand Associates, Inc.	Project Number : 6th St Bridge, LAC-17-001
250 Goddard	Report To : Naresh Bellana
Irvine , CA 92618	Reported : 06/05/2017

Client Sample ID 6-3-1.0

Lab ID: 1702036-42

Semivolatile Organic Compounds by EPA 8270C **Analyst: SP**

Analyte	Result (ug/kg)	PQL (ug/kg)	Dilution	Batch	Prepared	Date/Time Analyzed	Notes
Surrogate: Phenol-d5	*52.3 %*	*35 - 95*		B7E0781	05/23/2017	*06/01/17 01:49*	

Certificate of Analysis

Hushmand Associates, Inc.	Project Number : 6th St Bridge, LAC-17-001
250 Goddard	Report To : Naresh Bellana
Irvine , CA 92618	Reported : 06/05/2017

Client Sample ID 6-3-3.0

Lab ID: 1702036-43

Title 22 Metals by ICP-AES EPA 6010B

Analyst: GO

Analyte	Result (mg/kg)	PQL (mg/kg)	Dilution	Batch	Prepared	Date/Time Analyzed	Notes
Antimony	ND	2.0	1	B7E0681	05/20/2017	05/22/17 14:43	
Arsenic	**1.6**	1.0	1	B7E0681	05/20/2017	05/22/17 14:43	
Barium	**160**	1.0	1	B7E0681	05/20/2017	05/22/17 14:43	
Beryllium	ND	1.0	1	B7E0681	05/20/2017	05/22/17 14:43	
Cadmium	ND	1.0	1	B7E0681	05/20/2017	05/22/17 14:43	
Chromium	**8.7**	1.0	1	B7E0681	05/20/2017	05/22/17 14:43	
Cobalt	**3.5**	1.0	1	B7E0681	05/20/2017	05/22/17 14:43	
Copper	**21**	2.0	1	B7E0681	05/20/2017	05/22/17 14:43	
Lead	**250**	1.0	1	B7E0681	05/20/2017	05/22/17 14:43	
Molybdenum	ND	1.0	1	B7E0681	05/20/2017	05/22/17 14:43	
Nickel	**5.0**	1.0	1	B7E0681	05/20/2017	05/22/17 14:43	
Selenium	ND	1.0	1	B7E0681	05/20/2017	05/22/17 14:43	
Silver	ND	1.0	1	B7E0681	05/20/2017	05/22/17 14:43	
Thallium	ND	1.0	1	B7E0681	05/20/2017	05/22/17 14:43	
Vanadium	**11**	1.0	1	B7E0681	05/20/2017	05/22/17 14:43	
Zinc	**660**	1.0	1	B7E0681	05/20/2017	05/22/17 14:43	

TCLP Metals by ICP-AES EPA 6010B

Analyst: GO

Analyte	Result (mg/L)	PQL (mg/L)	Dilution	Batch	Prepared	Date/Time Analyzed	Notes
Lead	ND	0.25	5	B7F0002	06/01/2017	06/01/17 14:16	D1

STLC Metals by ICP-AES by EPA 6010B

Analyst: GO

Analyte	Result (mg/L)	PQL (mg/L)	Dilution	Batch	Prepared	Date/Time Analyzed	Notes
Lead	ND	1.0	20	B7F0043	06/02/2017	06/02/17 16:05	D1

Mercury by AA (Cold Vapor) EPA 7471A

Analyst: KEK

Analyte	Result (mg/kg)	PQL (mg/kg)	Dilution	Batch	Prepared	Date/Time Analyzed	Notes
Mercury	ND	0.10	1	B7E0676	05/20/2017	05/22/17 15:46	

Certificate of Analysis

Hushmand Associates, Inc.	Project Number : 6th St Bridge, LAC-17-001
250 Goddard	Report To : Naresh Bellana
Irvine , CA 92618	Reported : 06/05/2017

Client Sample ID 6-3-5.0

Lab ID: 1702036-44

Title 22 Metals by ICP-AES EPA 6010B **Analyst: GO**

Analyte	Result (mg/kg)	PQL (mg/kg)	Dilution	Batch	Prepared	Date/Time Analyzed	Notes
Antimony	ND	2.0	1	B7E0681	05/20/2017	05/22/17 14:44	
Arsenic	ND	1.0	1	B7E0681	05/20/2017	05/22/17 14:44	
Barium	**21**	1.0	1	B7E0681	05/20/2017	05/22/17 14:44	
Beryllium	ND	1.0	1	B7E0681	05/20/2017	05/22/17 14:44	
Cadmium	ND	1.0	1	B7E0681	05/20/2017	05/22/17 14:44	
Chromium	**3.1**	1.0	1	B7E0681	05/20/2017	05/22/17 14:44	
Cobalt	**2.3**	1.0	1	B7E0681	05/20/2017	05/22/17 14:44	
Copper	**2.4**	2.0	1	B7E0681	05/20/2017	05/22/17 14:44	
Lead	**1.1**	1.0	1	B7E0681	05/20/2017	05/22/17 14:44	
Molybdenum	ND	1.0	1	B7E0681	05/20/2017	05/22/17 14:44	
Nickel	**1.9**	1.0	1	B7E0681	05/20/2017	05/22/17 14:44	
Selenium	ND	1.0	1	B7E0681	05/20/2017	05/22/17 14:44	
Silver	ND	1.0	1	B7E0681	05/20/2017	05/22/17 14:44	
Thallium	ND	1.0	1	B7E0681	05/20/2017	05/22/17 14:44	
Vanadium	**12**	1.0	1	B7E0681	05/20/2017	05/22/17 14:44	
Zinc	**13**	1.0	1	B7E0681	05/20/2017	05/22/17 14:44	

Mercury by AA (Cold Vapor) EPA 7471A **Analyst: KEK**

Analyte	Result (mg/kg)	PQL (mg/kg)	Dilution	Batch	Prepared	Date/Time Analyzed	Notes
Mercury	**0.40**	0.10	1	B7E0676	05/20/2017	05/22/17 15:48	

Certificate of Analysis

Hushmand Associates, Inc.	Project Number : 6th St Bridge, LAC-17-001
250 Goddard	Report To : Naresh Bellana
Irvine , CA 92618	Reported : 06/05/2017

Client Sample ID 6-4-0.5

Lab ID: 1702036-45

Title 22 Metals by ICP-AES EPA 6010B — **Analyst: GO**

Analyte	Result (mg/kg)	PQL (mg/kg)	Dilution	Batch	Prepared	Date/Time Analyzed	Notes
Antimony	ND	2.0	1	B7E0681	05/20/2017	05/22/17 14:45	
Arsenic	**2.3**	1.0	1	B7E0681	05/20/2017	05/22/17 14:45	
Barium	**95**	1.0	1	B7E0681	05/20/2017	05/22/17 14:45	
Beryllium	ND	1.0	1	B7E0681	05/20/2017	05/22/17 14:45	
Cadmium	ND	1.0	1	B7E0681	05/20/2017	05/22/17 14:45	
Chromium	**6.2**	1.0	1	B7E0681	05/20/2017	05/22/17 14:45	
Cobalt	**3.2**	1.0	1	B7E0681	05/20/2017	05/22/17 14:45	
Copper	**13**	2.0	1	B7E0681	05/20/2017	05/22/17 14:45	
Lead	**30**	1.0	1	B7E0681	05/20/2017	05/22/17 14:45	
Molybdenum	ND	1.0	1	B7E0681	05/20/2017	05/22/17 14:45	
Nickel	**5.6**	1.0	1	B7E0681	05/20/2017	05/22/17 14:45	
Selenium	ND	1.0	1	B7E0681	05/20/2017	05/22/17 14:45	
Silver	ND	1.0	1	B7E0681	05/20/2017	05/22/17 14:45	
Thallium	ND	1.0	1	B7E0681	05/20/2017	05/22/17 14:45	
Vanadium	**15**	1.0	1	B7E0681	05/20/2017	05/22/17 14:45	
Zinc	**55**	1.0	1	B7E0681	05/20/2017	05/22/17 14:45	

Mercury by AA (Cold Vapor) EPA 7471A — **Analyst: KEK**

Analyte	Result (mg/kg)	PQL (mg/kg)	Dilution	Batch	Prepared	Date/Time Analyzed	Notes
Mercury	**0.17**	0.10	1	B7E0676	05/20/2017	05/22/17 15:54	

Certificate of Analysis

Hushmand Associates, Inc.	Project Number : 6th St Bridge, LAC-17-001
250 Goddard	Report To : Naresh Bellana
Irvine , CA 92618	Reported : 06/05/2017

Client Sample ID 6-4-1.0

Lab ID: 1702036-46

Title 22 Metals by ICP-AES EPA 6010B

Analyst: GO

Analyte	Result (mg/kg)	PQL (mg/kg)	Dilution	Batch	Prepared	Date/Time Analyzed	Notes
Antimony	ND	2.0	1	B7E0681	05/20/2017	05/22/17 14:46	
Arsenic	**26**	1.0	1	B7E0681	05/20/2017	05/22/17 14:46	
Barium	**71**	1.0	1	B7E0681	05/20/2017	05/22/17 14:46	
Beryllium	ND	1.0	1	B7E0681	05/20/2017	05/22/17 14:46	
Cadmium	**1.2**	1.0	1	B7E0681	05/20/2017	05/22/17 14:46	
Chromium	**11**	1.0	1	B7E0681	05/20/2017	05/22/17 14:46	
Cobalt	**4.6**	1.0	1	B7E0681	05/20/2017	05/22/17 14:46	
Copper	**41**	2.0	1	B7E0681	05/20/2017	05/22/17 14:46	
Lead	**94**	1.0	1	B7E0681	05/20/2017	05/22/17 14:46	
Molybdenum	ND	1.0	1	B7E0681	05/20/2017	05/22/17 14:46	
Nickel	**8.4**	1.0	1	B7E0681	05/20/2017	05/22/17 14:46	
Selenium	ND	1.0	1	B7E0681	05/20/2017	05/22/17 14:46	
Silver	ND	1.0	1	B7E0681	05/20/2017	05/22/17 14:46	
Thallium	ND	1.0	1	B7E0681	05/20/2017	05/22/17 14:46	
Vanadium	**19**	1.0	1	B7E0681	05/20/2017	05/22/17 14:46	
Zinc	**960**	1.0	1	B7E0681	05/20/2017	05/22/17 14:46	

TCLP Metals by ICP-AES EPA 6010B

Analyst: GO

Analyte	Result (mg/L)	PQL (mg/L)	Dilution	Batch	Prepared	Date/Time Analyzed	Notes
Arsenic	ND	0.25	5	B7F0002	06/01/2017	06/01/17 14:17	D1
Lead	ND	0.25	5	B7F0002	06/01/2017	06/01/17 14:17	D1

STLC Metals by ICP-AES by EPA 6010B

Analyst: GO

Analyte	Result (mg/L)	PQL (mg/L)	Dilution	Batch	Prepared	Date/Time Analyzed	Notes
Arsenic	**1.1**	1.0	20	B7F0043	06/02/2017	06/02/17 16:09	D1
Lead	**5.4**	1.0	20	B7F0043	06/02/2017	06/02/17 16:09	D1

Certificate of Analysis

Hushmand Associates, Inc.	Project Number : 6th St Bridge, LAC-17-001
250 Goddard	Report To : Naresh Bellana
Irvine , CA 92618	Reported : 06/05/2017

Client Sample ID 6-4-1.0

Lab ID: 1702036-46

Mercury by AA (Cold Vapor) EPA 7471A

Analyst: KEK

Analyte	Result (mg/kg)	PQL (mg/kg)	Dilution	Batch	Prepared	Date/Time Analyzed	Notes
Mercury	ND	0.10	1	B7E0676	05/20/2017	05/22/17 15:56	

Gasoline Range Organics by EPA 8015B (Modified)

Analyst: VW

Analyte	Result (mg/kg)	PQL (mg/kg)	Dilution	Batch	Prepared	Date/Time Analyzed	Notes
Gasoline Range Organics	ND	1.0	1	B7E0657	05/21/2017	05/21/17 14:36	
Surrogate: 4-Bromofluorobenzene	*98.1 %*	*36 - 125*		B7E0657	05/21/2017	*05/21/17 14:36*	

Diesel Range Organics by EPA 8015B

Analyst: CR

Analyte	Result (mg/kg)	PQL (mg/kg)	Dilution	Batch	Prepared	Date/Time Analyzed	Notes
DRO	ND	10	1	B7E0785	05/23/2017	05/25/17 02:57	
Surrogate: p-Terphenyl	*81.1 %*	*47 - 157*		B7E0785	05/23/2017	*05/25/17 02:57*	

Organochlorine Pesticides by EPA 8081

Analyst: RL/

Analyte	Result (ug/kg)	PQL (ug/kg)	Dilution	Batch	Prepared	Date/Time Analyzed	Notes
4,4´-DDD	ND	2.0	1	B7E0819	05/24/2017	05/24/17 17:24	
4,4´-DDE	ND	2.0	1	B7E0819	05/24/2017	05/24/17 17:24	
4,4´-DDT	ND	2.0	1	B7E0819	05/24/2017	05/24/17 17:24	
Aldrin	ND	1.0	1	B7E0819	05/24/2017	05/24/17 17:24	
alpha-BHC	ND	1.0	1	B7E0819	05/24/2017	05/24/17 17:24	
alpha-Chlordane	ND	1.0	1	B7E0819	05/24/2017	05/24/17 17:24	
beta-BHC	ND	1.0	1	B7E0819	05/24/2017	05/24/17 17:24	
Chlordane	ND	8.5	1	B7E0819	05/24/2017	05/24/17 17:24	
delta-BHC	ND	1.0	1	B7E0819	05/24/2017	05/24/17 17:24	
Dieldrin	ND	2.0	1	B7E0819	05/24/2017	05/24/17 17:24	
Endosulfan I	ND	1.0	1	B7E0819	05/24/2017	05/24/17 17:24	
Endosulfan II	ND	2.0	1	B7E0819	05/24/2017	05/24/17 17:24	
Endosulfan sulfate	ND	2.0	1	B7E0819	05/24/2017	05/24/17 17:24	
Endrin	ND	2.0	1	B7E0819	05/24/2017	05/24/17 17:24	
Endrin aldehyde	ND	2.0	1	B7E0819	05/24/2017	05/24/17 17:24	
Endrin ketone	ND	2.0	1	B7E0819	05/24/2017	05/24/17 17:24	
gamma-BHC	ND	1.0	1	B7E0819	05/24/2017	05/24/17 17:24	

Certificate of Analysis

Hushmand Associates, Inc.	Project Number : 6th St Bridge, LAC-17-001
250 Goddard	Report To : Naresh Bellana
Irvine , CA 92618	Reported : 06/05/2017

Client Sample ID 6-4-1.0

Lab ID: 1702036-46

Organochlorine Pesticides by EPA 8081

Analyst: RL/

Analyte	Result (ug/kg)	PQL (ug/kg)	Dilution	Batch	Prepared	Date/Time Analyzed	Notes
gamma-Chlordane	ND	1.0	1	B7E0819	05/24/2017	05/24/17 17:24	
Heptachlor	ND	1.0	1	B7E0819	05/24/2017	05/24/17 17:24	
Heptachlor epoxide	ND	1.0	1	B7E0819	05/24/2017	05/24/17 17:24	
Methoxychlor	ND	5.0	1	B7E0819	05/24/2017	05/24/17 17:24	
Toxaphene	ND	50	1	B7E0819	05/24/2017	05/24/17 17:24	
Surrogate: Decachlorobiphenyl	*73.3 %*	*27 - 123*		B7E0819	05/24/2017	*05/24/17 17:24*	
Surrogate: Tetrachloro-m-xylene	*87.2 %*	*26 - 108*		B7E0819	05/24/2017	*05/24/17 17:24*	

Polychlorinated Biphenyls by EPA 8082

Analyst: LT

Analyte	Result (ug/kg)	PQL (ug/kg)	Dilution	Batch	Prepared	Date/Time Analyzed	Notes
Aroclor 1016	ND	16	1	B7E0819	05/24/2017	05/24/17 16:42	
Aroclor 1221	ND	16	1	B7E0819	05/24/2017	05/24/17 16:42	
Aroclor 1232	ND	16	1	B7E0819	05/24/2017	05/24/17 16:42	
Aroclor 1242	ND	16	1	B7E0819	05/24/2017	05/24/17 16:42	
Aroclor 1248	ND	16	1	B7E0819	05/24/2017	05/24/17 16:42	
Aroclor 1254	ND	16	1	B7E0819	05/24/2017	05/24/17 16:42	
Aroclor 1260	ND	16	1	B7E0819	05/24/2017	05/24/17 16:42	
Aroclor 1262	ND	16	1	B7E0819	05/24/2017	05/24/17 16:42	
Aroclor 1268	ND	16	1	B7E0819	05/24/2017	05/24/17 16:42	
Surrogate: Decachlorobiphenyl	*69.5 %*	*18 - 136*		B7E0819	05/24/2017	*05/24/17 16:42*	
Surrogate: Tetrachloro-m-xylene	*87.0 %*	*30 - 130*		B7E0819	05/24/2017	*05/24/17 16:42*	

Volatile Organic Compounds by EPA 8260B

Analyst: AG

Analyte	Result (ug/kg)	PQL (ug/kg)	Dilution	Batch	Prepared	Date/Time Analyzed	Notes
1,1,1,2-Tetrachloroethane	ND	5.0	1	B7E0639	05/18/2017	05/18/17 17:18	
1,1,1-Trichloroethane	ND	5.0	1	B7E0639	05/18/2017	05/18/17 17:18	
1,1,2,2-Tetrachloroethane	ND	5.0	1	B7E0639	05/18/2017	05/18/17 17:18	
1,1,2-Trichloroethane	ND	5.0	1	B7E0639	05/18/2017	05/18/17 17:18	
1,1-Dichloroethane	ND	5.0	1	B7E0639	05/18/2017	05/18/17 17:18	
1,1-Dichloroethene	ND	5.0	1	B7E0639	05/18/2017	05/18/17 17:18	
1,1-Dichloropropene	ND	5.0	1	B7E0639	05/18/2017	05/18/17 17:18	
1,2,3-Trichloropropane	ND	5.0	1	B7E0639	05/18/2017	05/18/17 17:18	
1,2,3-Trichlorobenzene	ND	5.0	1	B7E0639	05/18/2017	05/18/17 17:18	

Certificate of Analysis

Hushmand Associates, Inc.	Project Number : 6th St Bridge, LAC-17-001
250 Goddard	Report To : Naresh Bellana
Irvine , CA 92618	Reported : 06/05/2017

Client Sample ID 6-4-1.0

Lab ID: 1702036-46

Volatile Organic Compounds by EPA 8260B **Analyst: AG**

Analyte	Result (ug/kg)	PQL (ug/kg)	Dilution	Batch	Prepared	Date/Time Analyzed	Notes
1,2,4-Trichlorobenzene	ND	5.0	1	B7E0639	05/18/2017	05/18/17 17:18	
1,2,4-Trimethylbenzene	ND	5.0	1	B7E0639	05/18/2017	05/18/17 17:18	
1,2-Dibromo-3-chloropropane	ND	10	1	B7E0639	05/18/2017	05/18/17 17:18	
1,2-Dibromoethane	ND	5.0	1	B7E0639	05/18/2017	05/18/17 17:18	
1,2-Dichlorobenzene	ND	5.0	1	B7E0639	05/18/2017	05/18/17 17:18	
1,2-Dichloroethane	ND	5.0	1	B7E0639	05/18/2017	05/18/17 17:18	
1,2-Dichloropropane	ND	5.0	1	B7E0639	05/18/2017	05/18/17 17:18	
1,3,5-Trimethylbenzene	ND	5.0	1	B7E0639	05/18/2017	05/18/17 17:18	
1,3-Dichlorobenzene	ND	5.0	1	B7E0639	05/18/2017	05/18/17 17:18	
1,3-Dichloropropane	ND	5.0	1	B7E0639	05/18/2017	05/18/17 17:18	
1,4-Dichlorobenzene	ND	5.0	1	B7E0639	05/18/2017	05/18/17 17:18	
2,2-Dichloropropane	ND	5.0	1	B7E0639	05/18/2017	05/18/17 17:18	
2-Chlorotoluene	ND	5.0	1	B7E0639	05/18/2017	05/18/17 17:18	
4-Chlorotoluene	ND	5.0	1	B7E0639	05/18/2017	05/18/17 17:18	
4-Isopropyltoluene	ND	5.0	1	B7E0639	05/18/2017	05/18/17 17:18	
Benzene	ND	5.0	1	B7E0639	05/18/2017	05/18/17 17:18	
Bromobenzene	ND	5.0	1	B7E0639	05/18/2017	05/18/17 17:18	
Bromochloromethane	ND	5.0	1	B7E0639	05/18/2017	05/18/17 17:18	
Bromodichloromethane	ND	5.0	1	B7E0639	05/18/2017	05/18/17 17:18	
Bromoform	ND	5.0	1	B7E0639	05/18/2017	05/18/17 17:18	
Bromomethane	ND	5.0	1	B7E0639	05/18/2017	05/18/17 17:18	
Carbon disulfide	ND	5.0	1	B7E0639	05/18/2017	05/18/17 17:18	
Carbon tetrachloride	ND	5.0	1	B7E0639	05/18/2017	05/18/17 17:18	
Chlorobenzene	ND	5.0	1	B7E0639	05/18/2017	05/18/17 17:18	
Chloroethane	ND	5.0	1	B7E0639	05/18/2017	05/18/17 17:18	
Chloroform	ND	5.0	1	B7E0639	05/18/2017	05/18/17 17:18	
Chloromethane	ND	5.0	1	B7E0639	05/18/2017	05/18/17 17:18	
cis-1,2-Dichloroethene	ND	5.0	1	B7E0639	05/18/2017	05/18/17 17:18	
cis-1,3-Dichloropropene	ND	5.0	1	B7E0639	05/18/2017	05/18/17 17:18	
Di-isopropyl ether	ND	5.0	1	B7E0639	05/18/2017	05/18/17 17:18	
Dibromochloromethane	ND	5.0	1	B7E0639	05/18/2017	05/18/17 17:18	
Dibromomethane	ND	5.0	1	B7E0639	05/18/2017	05/18/17 17:18	
Dichlorodifluoromethane	ND	5.0	1	B7E0639	05/18/2017	05/18/17 17:18	
Ethyl Acetate	ND	50	1	B7E0639	05/18/2017	05/18/17 17:18	
Ethyl Ether	ND	50	1	B7E0639	05/18/2017	05/18/17 17:18	
Ethyl tert-butyl ether	ND	5.0	1	B7E0639	05/18/2017	05/18/17 17:18	
Ethylbenzene	ND	5.0	1	B7E0639	05/18/2017	05/18/17 17:18	

Certificate of Analysis

Hushmand Associates, Inc.	Project Number : 6th St Bridge, LAC-17-001
250 Goddard	Report To : Naresh Bellana
Irvine , CA 92618	Reported : 06/05/2017

Client Sample ID 6-4-1.0

Lab ID: 1702036-46

Volatile Organic Compounds by EPA 8260B **Analyst: AG**

Analyte	Result (ug/kg)	PQL (ug/kg)	Dilution	Batch	Prepared	Date/Time Analyzed	Notes
Freon-113	ND	5.0	1	B7E0639	05/18/2017	05/18/17 17:18	
Hexachlorobutadiene	ND	5.0	1	B7E0639	05/18/2017	05/18/17 17:18	
Isopropylbenzene	ND	5.0	1	B7E0639	05/18/2017	05/18/17 17:18	
m,p-Xylene	ND	10	1	B7E0639	05/18/2017	05/18/17 17:18	
Methylene chloride	ND	5.0	1	B7E0639	05/18/2017	05/18/17 17:18	
MTBE	ND	5.0	1	B7E0639	05/18/2017	05/18/17 17:18	
n-Butylbenzene	ND	5.0	1	B7E0639	05/18/2017	05/18/17 17:18	
n-Propylbenzene	ND	5.0	1	B7E0639	05/18/2017	05/18/17 17:18	
Naphthalene	ND	5.0	1	B7E0639	05/18/2017	05/18/17 17:18	
o-Xylene	ND	5.0	1	B7E0639	05/18/2017	05/18/17 17:18	
sec-Butylbenzene	ND	5.0	1	B7E0639	05/18/2017	05/18/17 17:18	
Styrene	ND	5.0	1	B7E0639	05/18/2017	05/18/17 17:18	
tert-Amyl methyl ether	ND	5.0	1	B7E0639	05/18/2017	05/18/17 17:18	
tert-Butanol	ND	100	1	B7E0639	05/18/2017	05/18/17 17:18	
tert-Butylbenzene	ND	5.0	1	B7E0639	05/18/2017	05/18/17 17:18	
Tetrachloroethene	ND	5.0	1	B7E0639	05/18/2017	05/18/17 17:18	
Toluene	ND	5.0	1	B7E0639	05/18/2017	05/18/17 17:18	
trans-1,2-Dichloroethene	ND	5.0	1	B7E0639	05/18/2017	05/18/17 17:18	
trans-1,3-Dichloropropene	ND	5.0	1	B7E0639	05/18/2017	05/18/17 17:18	
Trichloroethene	ND	5.0	1	B7E0639	05/18/2017	05/18/17 17:18	
Trichlorofluoromethane	ND	5.0	1	B7E0639	05/18/2017	05/18/17 17:18	
Vinyl acetate	ND	50	1	B7E0639	05/18/2017	05/18/17 17:18	
Vinyl chloride	ND	5.0	1	B7E0639	05/18/2017	05/18/17 17:18	
Surrogate: 1,2-Dichloroethane-d4	*106 %*	*12 - 186*		B7E0639	05/18/2017	*05/18/17 17:18*	
Surrogate: 4-Bromofluorobenzene	*97.9 %*	*23 - 162*		B7E0639	05/18/2017	*05/18/17 17:18*	
Surrogate: Dibromofluoromethane	*98.9 %*	*23 - 179*		B7E0639	05/18/2017	*05/18/17 17:18*	
Surrogate: Toluene-d8	*98.6 %*	*26 - 164*		B7E0639	05/18/2017	*05/18/17 17:18*	

Certificate of Analysis

Hushmand Associates, Inc.	Project Number : 6th St Bridge, LAC-17-001
250 Goddard	Report To : Naresh Bellana
Irvine , CA 92618	Reported : 06/05/2017

Client Sample ID 6-4-1.0

Lab ID: 1702036-46

Semivolatile Organic Compounds by EPA 8270C **Analyst: SP**

Analyte	Result (ug/kg)	PQL (ug/kg)	Dilution	Batch	Prepared	Date/Time Analyzed	Notes
1,2,4-Trichlorobenzene	ND	330	1	B7E0781	05/23/2017	06/01/17 02:16	
1,2-Dichlorobenzene	ND	330	1	B7E0781	05/23/2017	06/01/17 02:16	
1,3-Dichlorobenzene	ND	330	1	B7E0781	05/23/2017	06/01/17 02:16	
1,4-Dichlorobenzene	ND	330	1	B7E0781	05/23/2017	06/01/17 02:16	
2,4,5-Trichlorophenol	ND	330	1	B7E0781	05/23/2017	06/01/17 02:16	
2,4,6-Trichlorophenol	ND	330	1	B7E0781	05/23/2017	06/01/17 02:16	
2,4-Dichlorophenol	ND	1600	1	B7E0781	05/23/2017	06/01/17 02:16	
2,4-Dimethylphenol	ND	330	1	B7E0781	05/23/2017	06/01/17 02:16	
2,4-Dinitrophenol	ND	1600	1	B7E0781	05/23/2017	06/01/17 02:16	
2,4-Dinitrotoluene	ND	330	1	B7E0781	05/23/2017	06/01/17 02:16	
2,6-Dinitrotoluene	ND	330	1	B7E0781	05/23/2017	06/01/17 02:16	
2-Chloronaphthalene	ND	330	1	B7E0781	05/23/2017	06/01/17 02:16	
2-Chlorophenol	ND	330	1	B7E0781	05/23/2017	06/01/17 02:16	
2-Methylnaphthalene	ND	330	1	B7E0781	05/23/2017	06/01/17 02:16	
2-Methylphenol	ND	330	1	B7E0781	05/23/2017	06/01/17 02:16	
2-Nitroaniline	ND	1600	1	B7E0781	05/23/2017	06/01/17 02:16	
2-Nitrophenol	ND	330	1	B7E0781	05/23/2017	06/01/17 02:16	
3,3´-Dichlorobenzidine	ND	660	1	B7E0781	05/23/2017	06/01/17 02:16	
3-Nitroaniline	ND	1600	1	B7E0781	05/23/2017	06/01/17 02:16	
4,6-Dinitro-2-methyphenol	ND	1600	1	B7E0781	05/23/2017	06/01/17 02:16	
4-Bromophenyl-phenylether	ND	330	1	B7E0781	05/23/2017	06/01/17 02:16	
4-Chloro-3-methylphenol	ND	660	1	B7E0781	05/23/2017	06/01/17 02:16	
4-Chloroaniline	ND	660	1	B7E0781	05/23/2017	06/01/17 02:16	
4-Chlorophenyl-phenylether	ND	330	1	B7E0781	05/23/2017	06/01/17 02:16	
4-Methylphenol	ND	330	1	B7E0781	05/23/2017	06/01/17 02:16	
4-Nitroaniline	ND	1600	1	B7E0781	05/23/2017	06/01/17 02:16	
4-Nitrophenol	ND	330	1	B7E0781	05/23/2017	06/01/17 02:16	
Acenaphthene	ND	330	1	B7E0781	05/23/2017	06/01/17 02:16	
Acenaphthylene	ND	330	1	B7E0781	05/23/2017	06/01/17 02:16	
Anthracene	ND	330	1	B7E0781	05/23/2017	06/01/17 02:16	
Benzidine (M)	ND	1600	1	B7E0781	05/23/2017	06/01/17 02:16	
Benzo(a)anthracene	ND	330	1	B7E0781	05/23/2017	06/01/17 02:16	
Benzo(a)pyrene	ND	330	1	B7E0781	05/23/2017	06/01/17 02:16	
Benzo(b)fluoranthene	ND	330	1	B7E0781	05/23/2017	06/01/17 02:16	
Benzo(g,h,i)perylene	ND	330	1	B7E0781	05/23/2017	06/01/17 02:16	
Benzo(k)fluoranthene	ND	330	1	B7E0781	05/23/2017	06/01/17 02:16	
Benzoic acid	ND	1600	1	B7E0781	05/23/2017	06/01/17 02:16	

Certificate of Analysis

Hushmand Associates, Inc.	Project Number : 6th St Bridge, LAC-17-001
250 Goddard	Report To : Naresh Bellana
Irvine , CA 92618	Reported : 06/05/2017

Client Sample ID 6-4-1.0

Lab ID: 1702036-46

Semivolatile Organic Compounds by EPA 8270C **Analyst: SP**

Analyte	Result (ug/kg)	PQL (ug/kg)	Dilution	Batch	Prepared	Date/Time Analyzed	Notes
Benzyl alcohol	ND	660	1	B7E0781	05/23/2017	06/01/17 02:16	
bis(2-chloroethoxy)methane	ND	330	1	B7E0781	05/23/2017	06/01/17 02:16	
bis(2-Chloroethyl)ether	ND	330	1	B7E0781	05/23/2017	06/01/17 02:16	
bis(2-chloroisopropyl)ether	ND	330	1	B7E0781	05/23/2017	06/01/17 02:16	
bis(2-ethylhexyl)phthalate	ND	330	1	B7E0781	05/23/2017	06/01/17 02:16	
Butylbenzylphthalate	ND	330	1	B7E0781	05/23/2017	06/01/17 02:16	
Chrysene	ND	330	1	B7E0781	05/23/2017	06/01/17 02:16	
Di-n-butylphthalate	ND	330	1	B7E0781	05/23/2017	06/01/17 02:16	
Di-n-octylphthalate	ND	330	1	B7E0781	05/23/2017	06/01/17 02:16	
Dibenz(a,h)anthracene	ND	330	1	B7E0781	05/23/2017	06/01/17 02:16	
Dibenzofuran	ND	330	1	B7E0781	05/23/2017	06/01/17 02:16	
Diethyl phthalate	ND	330	1	B7E0781	05/23/2017	06/01/17 02:16	
Dimethyl phthalate	ND	330	1	B7E0781	05/23/2017	06/01/17 02:16	
Fluoranthene	ND	330	1	B7E0781	05/23/2017	06/01/17 02:16	
Fluorene	ND	330	1	B7E0781	05/23/2017	06/01/17 02:16	
Hexachlorobenzene	ND	330	1	B7E0781	05/23/2017	06/01/17 02:16	
Hexachlorobutadiene	ND	660	1	B7E0781	05/23/2017	06/01/17 02:16	
Hexachlorocyclopentadiene	ND	660	1	B7E0781	05/23/2017	06/01/17 02:16	
Hexachloroethane	ND	330	1	B7E0781	05/23/2017	06/01/17 02:16	
Indeno(1,2,3-cd)pyrene	ND	330	1	B7E0781	05/23/2017	06/01/17 02:16	
Isophorone	ND	330	1	B7E0781	05/23/2017	06/01/17 02:16	
N-Nitroso-di-n propylamine	ND	330	1	B7E0781	05/23/2017	06/01/17 02:16	
N-Nitrosodiphenylamine	ND	330	1	B7E0781	05/23/2017	06/01/17 02:16	
Naphthalene	ND	330	1	B7E0781	05/23/2017	06/01/17 02:16	
Nitrobenzene	ND	330	1	B7E0781	05/23/2017	06/01/17 02:16	
Pentachlorophenol	ND	1600	1	B7E0781	05/23/2017	06/01/17 02:16	
Phenanthrene	ND	330	1	B7E0781	05/23/2017	06/01/17 02:16	
Phenol	ND	330	1	B7E0781	05/23/2017	06/01/17 02:16	
Pyrene	ND	330	1	B7E0781	05/23/2017	06/01/17 02:16	
Pyridine	ND	1600	1	B7E0781	05/23/2017	06/01/17 02:16	
Surrogate: 1,2-Dichlorobenzene-d4	*54.8 %*	*38 - 93*		B7E0781	05/23/2017	*06/01/17 02:16*	
Surrogate: 2,4,6-Tribromophenol	*68.4 %*	*27 - 124*		B7E0781	05/23/2017	*06/01/17 02:16*	
Surrogate: 2-Chlorophenol-d4	*55.3 %*	*36 - 96*		B7E0781	05/23/2017	*06/01/17 02:16*	
Surrogate: 2-Fluorobiphenyl	*65.1 %*	*44 - 100*		B7E0781	05/23/2017	*06/01/17 02:16*	
Surrogate: 2-Fluorophenol	*52.9 %*	*32 - 89*		B7E0781	05/23/2017	*06/01/17 02:16*	
Surrogate: 4-Terphenyl-d14	*69.9 %*	*49 - 123*		B7E0781	05/23/2017	*06/01/17 02:16*	
Surrogate: Nitrobenzene-d5	*60.6 %*	*38 - 104*		B7E0781	05/23/2017	*06/01/17 02:16*	

Certificate of Analysis

Hushmand Associates, Inc.	Project Number : 6th St Bridge, LAC-17-001
250 Goddard	Report To : Naresh Bellana
Irvine , CA 92618	Reported : 06/05/2017

Client Sample ID 6-4-1.0

Lab ID: 1702036-46

Semivolatile Organic Compounds by EPA 8270C **Analyst: SP**

Analyte	Result (ug/kg)	PQL (ug/kg)	Dilution	Batch	Prepared	Date/Time Analyzed	Notes
Surrogate: Phenol-d5	*56.3 %*	*35 - 95*		B7E0781	05/23/2017	*06/01/17 02:16*	

Certificate of Analysis

Hushmand Associates, Inc.	Project Number : 6th St Bridge, LAC-17-001
250 Goddard	Report To : Naresh Bellana
Irvine , CA 92618	Reported : 06/05/2017

Client Sample ID 6-4-3.0

Lab ID: 1702036-47

Title 22 Metals by ICP-AES EPA 6010B — **Analyst: GO**

Analyte	Result (mg/kg)	PQL (mg/kg)	Dilution	Batch	Prepared	Date/Time Analyzed	Notes
Antimony	ND	2.0	1	B7E0681	05/20/2017	05/22/17 14:47	
Arsenic	**11**	1.0	1	B7E0681	05/20/2017	05/22/17 14:47	
Barium	**41**	1.0	1	B7E0681	05/20/2017	05/22/17 14:47	
Beryllium	ND	1.0	1	B7E0681	05/20/2017	05/22/17 14:47	
Cadmium	ND	1.0	1	B7E0681	05/20/2017	05/22/17 14:47	
Chromium	**6.3**	1.0	1	B7E0681	05/20/2017	05/22/17 14:47	
Cobalt	**4.2**	1.0	1	B7E0681	05/20/2017	05/22/17 14:47	
Copper	**7.1**	2.0	1	B7E0681	05/20/2017	05/22/17 14:47	
Lead	**16**	1.0	1	B7E0681	05/20/2017	05/22/17 14:47	
Molybdenum	ND	1.0	1	B7E0681	05/20/2017	05/22/17 14:47	
Nickel	**3.8**	1.0	1	B7E0681	05/20/2017	05/22/17 14:47	
Selenium	ND	1.0	1	B7E0681	05/20/2017	05/22/17 14:47	
Silver	ND	1.0	1	B7E0681	05/20/2017	05/22/17 14:47	
Thallium	ND	1.0	1	B7E0681	05/20/2017	05/22/17 14:47	
Vanadium	**18**	1.0	1	B7E0681	05/20/2017	05/22/17 14:47	
Zinc	**32**	1.0	1	B7E0681	05/20/2017	05/22/17 14:47	

Mercury by AA (Cold Vapor) EPA 7471A — **Analyst: KEK**

Analyte	Result (mg/kg)	PQL (mg/kg)	Dilution	Batch	Prepared	Date/Time Analyzed	Notes
Mercury	ND	0.10	1	B7E0676	05/20/2017	05/22/17 15:58	

Certificate of Analysis

Hushmand Associates, Inc.	Project Number : 6th St Bridge, LAC-17-001
250 Goddard	Report To : Naresh Bellana
Irvine , CA 92618	Reported : 06/05/2017

Client Sample ID 6-4-5.0

Lab ID: 1702036-48

Title 22 Metals by ICP-AES EPA 6010B — **Analyst: GO**

Analyte	Result (mg/kg)	PQL (mg/kg)	Dilution	Batch	Prepared	Date/Time Analyzed	Notes
Antimony	ND	2.0	1	B7E0681	05/20/2017	05/22/17 14:48	
Arsenic	**9.0**	1.0	1	B7E0681	05/20/2017	05/22/17 14:48	
Barium	**69**	1.0	1	B7E0681	05/20/2017	05/22/17 14:48	
Beryllium	ND	1.0	1	B7E0681	05/20/2017	05/22/17 14:48	
Cadmium	ND	1.0	1	B7E0681	05/20/2017	05/22/17 14:48	
Chromium	**11**	1.0	1	B7E0681	05/20/2017	05/22/17 14:48	
Cobalt	**7.5**	1.0	1	B7E0681	05/20/2017	05/22/17 14:48	
Copper	**11**	2.0	1	B7E0681	05/20/2017	05/22/17 14:48	
Lead	**3.2**	1.0	1	B7E0681	05/20/2017	05/22/17 14:48	
Molybdenum	ND	1.0	1	B7E0681	05/20/2017	05/22/17 14:48	
Nickel	**7.0**	1.0	1	B7E0681	05/20/2017	05/22/17 14:48	
Selenium	ND	1.0	1	B7E0681	05/20/2017	05/22/17 14:48	
Silver	ND	1.0	1	B7E0681	05/20/2017	05/22/17 14:48	
Thallium	ND	1.0	1	B7E0681	05/20/2017	05/22/17 14:48	
Vanadium	**29**	1.0	1	B7E0681	05/20/2017	05/22/17 14:48	
Zinc	**59**	1.0	1	B7E0681	05/20/2017	05/22/17 14:48	

Mercury by AA (Cold Vapor) EPA 7471A — **Analyst: KEK**

Analyte	Result (mg/kg)	PQL (mg/kg)	Dilution	Batch	Prepared	Date/Time Analyzed	Notes
Mercury	ND	0.10	1	B7E0676	05/20/2017	05/22/17 16:00	

Certificate of Analysis

Hushmand Associates, Inc.	Project Number : 6th St Bridge, LAC-17-001
250 Goddard	Report To : Naresh Bellana
Irvine , CA 92618	Reported : 06/05/2017

Client Sample ID 6-5-0.5
Lab ID: 1702036-49

Title 22 Metals by ICP-AES EPA 6010B

Analyst: GO

Analyte	Result (mg/kg)	PQL (mg/kg)	Dilution	Batch	Prepared	Date/Time Analyzed	Notes
Antimony	**4.0**	2.0	1	B7E0681	05/20/2017	05/22/17 14:49	
Arsenic	**9.1**	1.0	1	B7E0681	05/20/2017	05/22/17 14:49	
Barium	**95**	1.0	1	B7E0681	05/20/2017	05/22/17 14:49	
Beryllium	ND	1.0	1	B7E0681	05/20/2017	05/22/17 14:49	
Cadmium	**2.3**	1.0	1	B7E0681	05/20/2017	05/22/17 14:49	
Chromium	**19**	1.0	1	B7E0681	05/20/2017	05/22/17 14:49	
Cobalt	**7.6**	1.0	1	B7E0681	05/20/2017	05/22/17 14:49	
Copper	**82**	2.0	1	B7E0681	05/20/2017	05/22/17 14:49	
Lead	**400**	1.0	1	B7E0681	05/20/2017	05/22/17 14:49	
Molybdenum	ND	1.0	1	B7E0681	05/20/2017	05/22/17 14:49	
Nickel	**12**	1.0	1	B7E0681	05/20/2017	05/22/17 14:49	
Selenium	ND	1.0	1	B7E0681	05/20/2017	05/22/17 14:49	
Silver	ND	1.0	1	B7E0681	05/20/2017	05/22/17 14:49	
Thallium	ND	1.0	1	B7E0681	05/20/2017	05/22/17 14:49	
Vanadium	**21**	1.0	1	B7E0681	05/20/2017	05/22/17 14:49	
Zinc	**950**	1.0	1	B7E0681	05/20/2017	05/22/17 14:49	

TCLP Metals by ICP-AES EPA 6010B

Analyst: GO

Analyte	Result (mg/L)	PQL (mg/L)	Dilution	Batch	Prepared	Date/Time Analyzed	Notes
Cadmium	ND	0.25	5	B7F0002	06/01/2017	06/01/17 14:18	D1
Lead	ND	0.25	5	B7F0002	06/01/2017	06/01/17 14:18	D1

STLC Metals by ICP-AES by EPA 6010B

Analyst: GO

Analyte	Result (mg/L)	PQL (mg/L)	Dilution	Batch	Prepared	Date/Time Analyzed	Notes
Cadmium	ND	1.0	20	B7F0043	06/02/2017	06/02/17 16:24	D1
Lead	**1.9**	1.0	20	B7F0043	06/02/2017	06/02/17 16:24	D1

Certificate of Analysis

Hushmand Associates, Inc.	Project Number : 6th St Bridge, LAC-17-001
250 Goddard	Report To : Naresh Bellana
Irvine , CA 92618	Reported : 06/05/2017

Client Sample ID 6-5-0.5

Lab ID: 1702036-49

Hexavalent Chromium by EPA 7196A/3060A — **Analyst: SLO**

Analyte	Result (mg/kg)	PQL (mg/kg)	Dilution	Batch	Prepared	Date/Time Analyzed	Notes
Hexavalent Chromium	**5.0**	1.0	1	B7F0053	06/01/2017	06/02/17 11:00	

Mercury by AA (Cold Vapor) EPA 7471A — **Analyst: KEK**

Analyte	Result (mg/kg)	PQL (mg/kg)	Dilution	Batch	Prepared	Date/Time Analyzed	Notes
Mercury	**0.17**	0.10	1	B7E0676	05/20/2017	05/22/17 16:02	

Certificate of Analysis

Hushmand Associates, Inc.	Project Number : 6th St Bridge, LAC-17-001
250 Goddard	Report To : Naresh Bellana
Irvine , CA 92618	Reported : 06/05/2017

Client Sample ID 6-5-1.0

Lab ID: 1702036-50

Title 22 Metals by ICP-AES EPA 6010B

Analyst: GO

Analyte	Result (mg/kg)	PQL (mg/kg)	Dilution	Batch	Prepared	Date/Time Analyzed	Notes
Antimony	ND	2.0	1	B7E0682	05/20/2017	05/22/17 14:55	
Arsenic	**3.9**	1.0	1	B7E0682	05/20/2017	05/22/17 14:55	
Barium	**75**	1.0	1	B7E0682	05/20/2017	05/22/17 14:55	
Beryllium	ND	1.0	1	B7E0682	05/20/2017	05/22/17 14:55	
Cadmium	ND	1.0	1	B7E0682	05/20/2017	05/22/17 14:55	
Chromium	**10**	1.0	1	B7E0682	05/20/2017	05/22/17 14:55	
Cobalt	**6.7**	1.0	1	B7E0682	05/20/2017	05/22/17 14:55	
Copper	**13**	2.0	1	B7E0682	05/20/2017	05/22/17 14:55	
Lead	**59**	1.0	1	B7E0682	05/20/2017	05/22/17 14:55	
Molybdenum	ND	1.0	1	B7E0682	05/20/2017	05/22/17 14:55	
Nickel	**6.9**	1.0	1	B7E0682	05/20/2017	05/22/17 14:55	
Selenium	ND	1.0	1	B7E0682	05/20/2017	05/22/17 14:55	
Silver	ND	1.0	1	B7E0682	05/20/2017	05/22/17 14:55	
Thallium	ND	1.0	1	B7E0682	05/20/2017	05/22/17 14:55	
Vanadium	**27**	1.0	1	B7E0682	05/20/2017	05/22/17 14:55	
Zinc	**83**	1.0	1	B7E0682	05/20/2017	05/22/17 14:55	

TCLP Metals by ICP-AES EPA 6010B

Analyst: GO

Analyte	Result (mg/L)	PQL (mg/L)	Dilution	Batch	Prepared	Date/Time Analyzed	Notes
Lead	**1.8**	0.25	5	B7F0039	06/02/2017	06/02/17 16:30	D1

STLC Metals by ICP-AES by EPA 6010B

Analyst: GO

Analyte	Result (mg/L)	PQL (mg/L)	Dilution	Batch	Prepared	Date/Time Analyzed	Notes
Lead	**1.9**	1.0	20	B7F0043	06/02/2017	06/02/17 16:12	D1

Mercury by AA (Cold Vapor) EPA 7471A

Analyst: KEK

Analyte	Result (mg/kg)	PQL (mg/kg)	Dilution	Batch	Prepared	Date/Time Analyzed	Notes
Mercury	ND	0.10	1	B7E0677	05/20/2017	05/22/17 15:42	

Certificate of Analysis

Hushmand Associates, Inc.	Project Number : 6th St Bridge, LAC-17-001
250 Goddard	Report To : Naresh Bellana
Irvine , CA 92618	Reported : 06/05/2017

Client Sample ID 6-5-3.0

Lab ID: 1702036-51

Title 22 Metals by ICP-AES EPA 6010B

Analyst: GO

Analyte	Result (mg/kg)	PQL (mg/kg)	Dilution	Batch	Prepared	Date/Time Analyzed	Notes
Antimony	ND	2.0	1	B7E0682	05/20/2017	05/22/17 14:59	
Arsenic	**1.0**	1.0	1	B7E0682	05/20/2017	05/22/17 14:59	
Barium	**31**	1.0	1	B7E0682	05/20/2017	05/22/17 14:59	
Beryllium	ND	1.0	1	B7E0682	05/20/2017	05/22/17 14:59	
Cadmium	ND	1.0	1	B7E0682	05/20/2017	05/22/17 14:59	
Chromium	**4.5**	1.0	1	B7E0682	05/20/2017	05/22/17 14:59	
Cobalt	**3.2**	1.0	1	B7E0682	05/20/2017	05/22/17 14:59	
Copper	**3.8**	2.0	1	B7E0682	05/20/2017	05/22/17 14:59	
Lead	**2.4**	1.0	1	B7E0682	05/20/2017	05/22/17 14:59	
Molybdenum	ND	1.0	1	B7E0682	05/20/2017	05/22/17 14:59	
Nickel	**2.8**	1.0	1	B7E0682	05/20/2017	05/22/17 14:59	
Selenium	ND	1.0	1	B7E0682	05/20/2017	05/22/17 14:59	
Silver	ND	1.0	1	B7E0682	05/20/2017	05/22/17 14:59	
Thallium	ND	1.0	1	B7E0682	05/20/2017	05/22/17 14:59	
Vanadium	**14**	1.0	1	B7E0682	05/20/2017	05/22/17 14:59	
Zinc	**17**	1.0	1	B7E0682	05/20/2017	05/22/17 14:59	

Mercury by AA (Cold Vapor) EPA 7471A

Analyst: KEK

Analyte	Result (mg/kg)	PQL (mg/kg)	Dilution	Batch	Prepared	Date/Time Analyzed	Notes
Mercury	**0.11**	0.10	1	B7E0677	05/20/2017	05/22/17 16:02	

Gasoline Range Organics by EPA 8015B (Modified)

Analyst: VW

Analyte	Result (mg/kg)	PQL (mg/kg)	Dilution	Batch	Prepared	Date/Time Analyzed	Notes
Gasoline Range Organics	ND	1.0	1	B7E0657	05/21/2017	05/21/17 14:54	
Surrogate: 4-Bromofluorobenzene *104 %*		*36 - 125*		B7E0657	05/21/2017	*05/21/17 14:54*	

Diesel Range Organics by EPA 8015B

Analyst: CR

Analyte	Result (mg/kg)	PQL (mg/kg)	Dilution	Batch	Prepared	Date/Time Analyzed	Notes
DRO	ND	10	1	B7E0785	05/23/2017	05/25/17 01:00	
Surrogate: p-Terphenyl *84.0 %*		*47 - 157*		B7E0785	05/23/2017	*05/25/17 01:00*	

Certificate of Analysis

Hushmand Associates, Inc.	Project Number : 6th St Bridge, LAC-17-001
250 Goddard	Report To : Naresh Bellana
Irvine , CA 92618	Reported : 06/05/2017

Client Sample ID 6-5-3.0

Lab ID: 1702036-51

Organochlorine Pesticides by EPA 8081 **Analyst: RL/**

Analyte	Result (ug/kg)	PQL (ug/kg)	Dilution	Batch	Prepared	Date/Time Analyzed	Notes
4,4´-DDD	ND	2.0	1	B7E0819	05/24/2017	05/24/17 17:34	
4,4´-DDE	ND	2.0	1	B7E0819	05/24/2017	05/24/17 17:34	
4,4´-DDT	ND	2.0	1	B7E0819	05/24/2017	05/24/17 17:34	
Aldrin	ND	1.0	1	B7E0819	05/24/2017	05/24/17 17:34	
alpha-BHC	ND	1.0	1	B7E0819	05/24/2017	05/24/17 17:34	
alpha-Chlordane	ND	1.0	1	B7E0819	05/24/2017	05/24/17 17:34	
beta-BHC	ND	1.0	1	B7E0819	05/24/2017	05/24/17 17:34	
Chlordane	ND	8.5	1	B7E0819	05/24/2017	05/24/17 17:34	
delta-BHC	ND	1.0	1	B7E0819	05/24/2017	05/24/17 17:34	
Dieldrin	ND	2.0	1	B7E0819	05/24/2017	05/24/17 17:34	
Endosulfan I	ND	1.0	1	B7E0819	05/24/2017	05/24/17 17:34	
Endosulfan II	ND	2.0	1	B7E0819	05/24/2017	05/24/17 17:34	
Endosulfan sulfate	ND	2.0	1	B7E0819	05/24/2017	05/24/17 17:34	
Endrin	ND	2.0	1	B7E0819	05/24/2017	05/24/17 17:34	
Endrin aldehyde	ND	2.0	1	B7E0819	05/24/2017	05/24/17 17:34	
Endrin ketone	ND	2.0	1	B7E0819	05/24/2017	05/24/17 17:34	
gamma-BHC	ND	1.0	1	B7E0819	05/24/2017	05/24/17 17:34	
gamma-Chlordane	ND	1.0	1	B7E0819	05/24/2017	05/24/17 17:34	
Heptachlor	ND	1.0	1	B7E0819	05/24/2017	05/24/17 17:34	
Heptachlor epoxide	ND	1.0	1	B7E0819	05/24/2017	05/24/17 17:34	
Methoxychlor	ND	5.0	1	B7E0819	05/24/2017	05/24/17 17:34	
Toxaphene	ND	50	1	B7E0819	05/24/2017	05/24/17 17:34	
Surrogate: Decachlorobiphenyl	*64.8 %*	*27 - 123*		B7E0819	05/24/2017	*05/24/17 17:34*	
Surrogate: Tetrachloro-m-xylene	*84.3 %*	*26 - 108*		B7E0819	05/24/2017	*05/24/17 17:34*	

Certificate of Analysis

Hushmand Associates, Inc.	Project Number : 6th St Bridge, LAC-17-001
250 Goddard	Report To : Naresh Bellana
Irvine , CA 92618	Reported : 06/05/2017

Client Sample ID 6-5-3.0

Lab ID: 1702036-51

Polychlorinated Biphenyls by EPA 8082

Analyst: LT

Analyte	Result (ug/kg)	PQL (ug/kg)	Dilution	Batch	Prepared	Date/Time Analyzed	Notes
Aroclor 1016	ND	16	1	B7E0819	05/24/2017	05/24/17 17:00	
Aroclor 1221	ND	16	1	B7E0819	05/24/2017	05/24/17 17:00	
Aroclor 1232	ND	16	1	B7E0819	05/24/2017	05/24/17 17:00	
Aroclor 1242	ND	16	1	B7E0819	05/24/2017	05/24/17 17:00	
Aroclor 1248	ND	16	1	B7E0819	05/24/2017	05/24/17 17:00	
Aroclor 1254	ND	16	1	B7E0819	05/24/2017	05/24/17 17:00	
Aroclor 1260	ND	16	1	B7E0819	05/24/2017	05/24/17 17:00	
Aroclor 1262	ND	16	1	B7E0819	05/24/2017	05/24/17 17:00	
Aroclor 1268	ND	16	1	B7E0819	05/24/2017	05/24/17 17:00	
Surrogate: Decachlorobiphenyl	*71.6 %*	*18 - 136*		B7E0819	05/24/2017	*05/24/17 17:00*	
Surrogate: Tetrachloro-m-xylene	*85.6 %*	*30 - 130*		B7E0819	05/24/2017	*05/24/17 17:00*	

Volatile Organic Compounds by EPA 8260B

Analyst: AG

Analyte	Result (ug/kg)	PQL (ug/kg)	Dilution	Batch	Prepared	Date/Time Analyzed	Notes
1,1,1,2-Tetrachloroethane	ND	5.0	1	B7E0639	05/18/2017	05/18/17 17:37	
1,1,1-Trichloroethane	ND	5.0	1	B7E0639	05/18/2017	05/18/17 17:37	
1,1,2,2-Tetrachloroethane	ND	5.0	1	B7E0639	05/18/2017	05/18/17 17:37	
1,1,2-Trichloroethane	ND	5.0	1	B7E0639	05/18/2017	05/18/17 17:37	
1,1-Dichloroethane	ND	5.0	1	B7E0639	05/18/2017	05/18/17 17:37	
1,1-Dichloroethene	ND	5.0	1	B7E0639	05/18/2017	05/18/17 17:37	
1,1-Dichloropropene	ND	5.0	1	B7E0639	05/18/2017	05/18/17 17:37	
1,2,3-Trichloropropane	ND	5.0	1	B7E0639	05/18/2017	05/18/17 17:37	
1,2,3-Trichlorobenzene	ND	5.0	1	B7E0639	05/18/2017	05/18/17 17:37	
1,2,4-Trichlorobenzene	ND	5.0	1	B7E0639	05/18/2017	05/18/17 17:37	
1,2,4-Trimethylbenzene	ND	5.0	1	B7E0639	05/18/2017	05/18/17 17:37	
1,2-Dibromo-3-chloropropane	ND	10	1	B7E0639	05/18/2017	05/18/17 17:37	
1,2-Dibromoethane	ND	5.0	1	B7E0639	05/18/2017	05/18/17 17:37	
1,2-Dichlorobenzene	ND	5.0	1	B7E0639	05/18/2017	05/18/17 17:37	
1,2-Dichloroethane	ND	5.0	1	B7E0639	05/18/2017	05/18/17 17:37	
1,2-Dichloropropane	ND	5.0	1	B7E0639	05/18/2017	05/18/17 17:37	
1,3,5-Trimethylbenzene	ND	5.0	1	B7E0639	05/18/2017	05/18/17 17:37	
1,3-Dichlorobenzene	ND	5.0	1	B7E0639	05/18/2017	05/18/17 17:37	
1,3-Dichloropropane	ND	5.0	1	B7E0639	05/18/2017	05/18/17 17:37	
1,4-Dichlorobenzene	ND	5.0	1	B7E0639	05/18/2017	05/18/17 17:37	
2,2-Dichloropropane	ND	5.0	1	B7E0639	05/18/2017	05/18/17 17:37	

Certificate of Analysis

Hushmand Associates, Inc.	Project Number : 6th St Bridge, LAC-17-001
250 Goddard	Report To : Naresh Bellana
Irvine , CA 92618	Reported : 06/05/2017

Client Sample ID 6-5-3.0

Lab ID: 1702036-51

Volatile Organic Compounds by EPA 8260B **Analyst: AG**

Analyte	Result (ug/kg)	PQL (ug/kg)	Dilution	Batch	Prepared	Date/Time Analyzed	Notes
2-Chlorotoluene	ND	5.0	1	B7E0639	05/18/2017	05/18/17 17:37	
4-Chlorotoluene	ND	5.0	1	B7E0639	05/18/2017	05/18/17 17:37	
4-Isopropyltoluene	ND	5.0	1	B7E0639	05/18/2017	05/18/17 17:37	
Benzene	ND	5.0	1	B7E0639	05/18/2017	05/18/17 17:37	
Bromobenzene	ND	5.0	1	B7E0639	05/18/2017	05/18/17 17:37	
Bromochloromethane	ND	5.0	1	B7E0639	05/18/2017	05/18/17 17:37	
Bromodichloromethane	ND	5.0	1	B7E0639	05/18/2017	05/18/17 17:37	
Bromoform	ND	5.0	1	B7E0639	05/18/2017	05/18/17 17:37	
Bromomethane	ND	5.0	1	B7E0639	05/18/2017	05/18/17 17:37	
Carbon disulfide	ND	5.0	1	B7E0639	05/18/2017	05/18/17 17:37	
Carbon tetrachloride	ND	5.0	1	B7E0639	05/18/2017	05/18/17 17:37	
Chlorobenzene	ND	5.0	1	B7E0639	05/18/2017	05/18/17 17:37	
Chloroethane	ND	5.0	1	B7E0639	05/18/2017	05/18/17 17:37	
Chloroform	ND	5.0	1	B7E0639	05/18/2017	05/18/17 17:37	
Chloromethane	ND	5.0	1	B7E0639	05/18/2017	05/18/17 17:37	
cis-1,2-Dichloroethene	ND	5.0	1	B7E0639	05/18/2017	05/18/17 17:37	
cis-1,3-Dichloropropene	ND	5.0	1	B7E0639	05/18/2017	05/18/17 17:37	
Di-isopropyl ether	ND	5.0	1	B7E0639	05/18/2017	05/18/17 17:37	
Dibromochloromethane	ND	5.0	1	B7E0639	05/18/2017	05/18/17 17:37	
Dibromomethane	ND	5.0	1	B7E0639	05/18/2017	05/18/17 17:37	
Dichlorodifluoromethane	ND	5.0	1	B7E0639	05/18/2017	05/18/17 17:37	
Ethyl Acetate	ND	50	1	B7E0639	05/18/2017	05/18/17 17:37	
Ethyl Ether	ND	50	1	B7E0639	05/18/2017	05/18/17 17:37	
Ethyl tert-butyl ether	ND	5.0	1	B7E0639	05/18/2017	05/18/17 17:37	
Ethylbenzene	ND	5.0	1	B7E0639	05/18/2017	05/18/17 17:37	
Freon-113	ND	5.0	1	B7E0639	05/18/2017	05/18/17 17:37	
Hexachlorobutadiene	ND	5.0	1	B7E0639	05/18/2017	05/18/17 17:37	
Isopropylbenzene	ND	5.0	1	B7E0639	05/18/2017	05/18/17 17:37	
m,p-Xylene	ND	10	1	B7E0639	05/18/2017	05/18/17 17:37	
Methylene chloride	ND	5.0	1	B7E0639	05/18/2017	05/18/17 17:37	
MTBE	ND	5.0	1	B7E0639	05/18/2017	05/18/17 17:37	
n-Butylbenzene	ND	5.0	1	B7E0639	05/18/2017	05/18/17 17:37	
n-Propylbenzene	ND	5.0	1	B7E0639	05/18/2017	05/18/17 17:37	
Naphthalene	ND	5.0	1	B7E0639	05/18/2017	05/18/17 17:37	
o-Xylene	ND	5.0	1	B7E0639	05/18/2017	05/18/17 17:37	
sec-Butylbenzene	ND	5.0	1	B7E0639	05/18/2017	05/18/17 17:37	
Styrene	ND	5.0	1	B7E0639	05/18/2017	05/18/17 17:37	

Certificate of Analysis

Hushmand Associates, Inc.	Project Number : 6th St Bridge, LAC-17-001
250 Goddard	Report To : Naresh Bellana
Irvine , CA 92618	Reported : 06/05/2017

Client Sample ID 6-5-3.0

Lab ID: 1702036-51

Volatile Organic Compounds by EPA 8260B

Analyst: AG

Analyte	Result (ug/kg)	PQL (ug/kg)	Dilution	Batch	Prepared	Date/Time Analyzed	Notes
tert-Amyl methyl ether	ND	5.0	1	B7E0639	05/18/2017	05/18/17 17:37	
tert-Butanol	ND	100	1	B7E0639	05/18/2017	05/18/17 17:37	
tert-Butylbenzene	ND	5.0	1	B7E0639	05/18/2017	05/18/17 17:37	
Tetrachloroethene	ND	5.0	1	B7E0639	05/18/2017	05/18/17 17:37	
Toluene	ND	5.0	1	B7E0639	05/18/2017	05/18/17 17:37	
trans-1,2-Dichloroethene	ND	5.0	1	B7E0639	05/18/2017	05/18/17 17:37	
trans-1,3-Dichloropropene	ND	5.0	1	B7E0639	05/18/2017	05/18/17 17:37	
Trichloroethene	ND	5.0	1	B7E0639	05/18/2017	05/18/17 17:37	
Trichlorofluoromethane	ND	5.0	1	B7E0639	05/18/2017	05/18/17 17:37	
Vinyl acetate	ND	50	1	B7E0639	05/18/2017	05/18/17 17:37	
Vinyl chloride	ND	5.0	1	B7E0639	05/18/2017	05/18/17 17:37	
Surrogate: 1,2-Dichloroethane-d4	*96.9 %*	*12 - 186*		B7E0639	05/18/2017	*05/18/17 17:37*	
Surrogate: 4-Bromofluorobenzene	*99.9 %*	*23 - 162*		B7E0639	05/18/2017	*05/18/17 17:37*	
Surrogate: Dibromofluoromethane	*96.2 %*	*23 - 179*		B7E0639	05/18/2017	*05/18/17 17:37*	
Surrogate: Toluene-d8	*99.5 %*	*26 - 164*		B7E0639	05/18/2017	*05/18/17 17:37*	

Semivolatile Organic Compounds by EPA 8270C

Analyst: SP

Analyte	Result (ug/kg)	PQL (ug/kg)	Dilution	Batch	Prepared	Date/Time Analyzed	Notes
1,2,4-Trichlorobenzene	ND	330	1	B7E0781	05/23/2017	06/01/17 02:43	
1,2-Dichlorobenzene	ND	330	1	B7E0781	05/23/2017	06/01/17 02:43	
1,3-Dichlorobenzene	ND	330	1	B7E0781	05/23/2017	06/01/17 02:43	
1,4-Dichlorobenzene	ND	330	1	B7E0781	05/23/2017	06/01/17 02:43	
2,4,5-Trichlorophenol	ND	330	1	B7E0781	05/23/2017	06/01/17 02:43	
2,4,6-Trichlorophenol	ND	330	1	B7E0781	05/23/2017	06/01/17 02:43	
2,4-Dichlorophenol	ND	1600	1	B7E0781	05/23/2017	06/01/17 02:43	
2,4-Dimethylphenol	ND	330	1	B7E0781	05/23/2017	06/01/17 02:43	
2,4-Dinitrophenol	ND	1600	1	B7E0781	05/23/2017	06/01/17 02:43	
2,4-Dinitrotoluene	ND	330	1	B7E0781	05/23/2017	06/01/17 02:43	
2,6-Dinitrotoluene	ND	330	1	B7E0781	05/23/2017	06/01/17 02:43	
2-Chloronaphthalene	ND	330	1	B7E0781	05/23/2017	06/01/17 02:43	
2-Chlorophenol	ND	330	1	B7E0781	05/23/2017	06/01/17 02:43	
2-Methylnaphthalene	ND	330	1	B7E0781	05/23/2017	06/01/17 02:43	
2-Methylphenol	ND	330	1	B7E0781	05/23/2017	06/01/17 02:43	
2-Nitroaniline	ND	1600	1	B7E0781	05/23/2017	06/01/17 02:43	
2-Nitrophenol	ND	330	1	B7E0781	05/23/2017	06/01/17 02:43	

Certificate of Analysis

Hushmand Associates, Inc.	Project Number : 6th St Bridge, LAC-17-001
250 Goddard	Report To : Naresh Bellana
Irvine , CA 92618	Reported : 06/05/2017

Client Sample ID 6-5-3.0

Lab ID: 1702036-51

Semivolatile Organic Compounds by EPA 8270C **Analyst: SP**

Analyte	Result (ug/kg)	PQL (ug/kg)	Dilution	Batch	Prepared	Date/Time Analyzed	Notes
3,3´-Dichlorobenzidine	ND	660	1	B7E0781	05/23/2017	06/01/17 02:43	
3-Nitroaniline	ND	1600	1	B7E0781	05/23/2017	06/01/17 02:43	
4,6-Dinitro-2-methyphenol	ND	1600	1	B7E0781	05/23/2017	06/01/17 02:43	
4-Bromophenyl-phenylether	ND	330	1	B7E0781	05/23/2017	06/01/17 02:43	
4-Chloro-3-methylphenol	ND	660	1	B7E0781	05/23/2017	06/01/17 02:43	
4-Chloroaniline	ND	660	1	B7E0781	05/23/2017	06/01/17 02:43	
4-Chlorophenyl-phenylether	ND	330	1	B7E0781	05/23/2017	06/01/17 02:43	
4-Methylphenol	ND	330	1	B7E0781	05/23/2017	06/01/17 02:43	
4-Nitroaniline	ND	1600	1	B7E0781	05/23/2017	06/01/17 02:43	
4-Nitrophenol	ND	330	1	B7E0781	05/23/2017	06/01/17 02:43	
Acenaphthene	ND	330	1	B7E0781	05/23/2017	06/01/17 02:43	
Acenaphthylene	ND	330	1	B7E0781	05/23/2017	06/01/17 02:43	
Anthracene	ND	330	1	B7E0781	05/23/2017	06/01/17 02:43	
Benzidine (M)	ND	1600	1	B7E0781	05/23/2017	06/01/17 02:43	
Benzo(a)anthracene	ND	330	1	B7E0781	05/23/2017	06/01/17 02:43	
Benzo(a)pyrene	ND	330	1	B7E0781	05/23/2017	06/01/17 02:43	
Benzo(b)fluoranthene	ND	330	1	B7E0781	05/23/2017	06/01/17 02:43	
Benzo(g,h,i)perylene	ND	330	1	B7E0781	05/23/2017	06/01/17 02:43	
Benzo(k)fluoranthene	ND	330	1	B7E0781	05/23/2017	06/01/17 02:43	
Benzoic acid	ND	1600	1	B7E0781	05/23/2017	06/01/17 02:43	
Benzyl alcohol	ND	660	1	B7E0781	05/23/2017	06/01/17 02:43	
bis(2-chloroethoxy)methane	ND	330	1	B7E0781	05/23/2017	06/01/17 02:43	
bis(2-Chloroethyl)ether	ND	330	1	B7E0781	05/23/2017	06/01/17 02:43	
bis(2-chloroisopropyl)ether	ND	330	1	B7E0781	05/23/2017	06/01/17 02:43	
bis(2-ethylhexyl)phthalate	ND	330	1	B7E0781	05/23/2017	06/01/17 02:43	
Butylbenzylphthalate	ND	330	1	B7E0781	05/23/2017	06/01/17 02:43	
Chrysene	ND	330	1	B7E0781	05/23/2017	06/01/17 02:43	
Di-n-butylphthalate	ND	330	1	B7E0781	05/23/2017	06/01/17 02:43	
Di-n-octylphthalate	ND	330	1	B7E0781	05/23/2017	06/01/17 02:43	
Dibenz(a,h)anthracene	ND	330	1	B7E0781	05/23/2017	06/01/17 02:43	
Dibenzofuran	ND	330	1	B7E0781	05/23/2017	06/01/17 02:43	
Diethyl phthalate	ND	330	1	B7E0781	05/23/2017	06/01/17 02:43	
Dimethyl phthalate	ND	330	1	B7E0781	05/23/2017	06/01/17 02:43	
Fluoranthene	ND	330	1	B7E0781	05/23/2017	06/01/17 02:43	
Fluorene	ND	330	1	B7E0781	05/23/2017	06/01/17 02:43	
Hexachlorobenzene	ND	330	1	B7E0781	05/23/2017	06/01/17 02:43	
Hexachlorobutadiene	ND	660	1	B7E0781	05/23/2017	06/01/17 02:43	

Certificate of Analysis

Hushmand Associates, Inc.	Project Number : 6th St Bridge, LAC-17-001
250 Goddard	Report To : Naresh Bellana
Irvine , CA 92618	Reported : 06/05/2017

Client Sample ID 6-5-3.0

Lab ID: 1702036-51

Semivolatile Organic Compounds by EPA 8270C **Analyst: SP**

Analyte		Result (ug/kg)	PQL (ug/kg)	Dilution	Batch	Prepared	Date/Time Analyzed	Notes
Hexachlorocyclopentadiene		ND	660	1	B7E0781	05/23/2017	06/01/17 02:43	
Hexachloroethane		ND	330	1	B7E0781	05/23/2017	06/01/17 02:43	
Indeno(1,2,3-cd)pyrene		ND	330	1	B7E0781	05/23/2017	06/01/17 02:43	
Isophorone		ND	330	1	B7E0781	05/23/2017	06/01/17 02:43	
N-Nitroso-di-n propylamine		ND	330	1	B7E0781	05/23/2017	06/01/17 02:43	
N-Nitrosodiphenylamine		ND	330	1	B7E0781	05/23/2017	06/01/17 02:43	
Naphthalene		ND	330	1	B7E0781	05/23/2017	06/01/17 02:43	
Nitrobenzene		ND	330	1	B7E0781	05/23/2017	06/01/17 02:43	
Pentachlorophenol		ND	1600	1	B7E0781	05/23/2017	06/01/17 02:43	
Phenanthrene		ND	330	1	B7E0781	05/23/2017	06/01/17 02:43	
Phenol		ND	330	1	B7E0781	05/23/2017	06/01/17 02:43	
Pyrene		ND	330	1	B7E0781	05/23/2017	06/01/17 02:43	
Pyridine		ND	1600	1	B7E0781	05/23/2017	06/01/17 02:43	
Surrogate: 1,2-Dichlorobenzene-d4	*47.4 %*		*38 - 93*		B7E0781	05/23/2017	*06/01/17 02:43*	
Surrogate: 2,4,6-Tribromophenol	*54.5 %*		*27 - 124*		B7E0781	05/23/2017	*06/01/17 02:43*	
Surrogate: 2-Chlorophenol-d4	*47.6 %*		*36 - 96*		B7E0781	05/23/2017	*06/01/17 02:43*	
Surrogate: 2-Fluorobiphenyl	*53.6 %*		*44 - 100*		B7E0781	05/23/2017	*06/01/17 02:43*	
Surrogate: 2-Fluorophenol	*46.7 %*		*32 - 89*		B7E0781	05/23/2017	*06/01/17 02:43*	
Surrogate: 4-Terphenyl-d14	*55.1 %*		*49 - 123*		B7E0781	05/23/2017	*06/01/17 02:43*	
Surrogate: Nitrobenzene-d5	*50.0 %*		*38 - 104*		B7E0781	05/23/2017	*06/01/17 02:43*	
Surrogate: Phenol-d5	*47.8 %*		*35 - 95*		B7E0781	05/23/2017	*06/01/17 02:43*	

Certificate of Analysis

Hushmand Associates, Inc.	Project Number : 6th St Bridge, LAC-17-001
250 Goddard	Report To : Naresh Bellana
Irvine , CA 92618	Reported : 06/05/2017

Client Sample ID 6-5-5.0

Lab ID: 1702036-52

Title 22 Metals by ICP-AES EPA 6010B — **Analyst: GO**

Analyte	Result (mg/kg)	PQL (mg/kg)	Dilution	Batch	Prepared	Date/Time Analyzed	Notes
Antimony	ND	2.0	1	B7E0682	05/20/2017	05/22/17 15:00	
Arsenic	ND	1.0	1	B7E0682	05/20/2017	05/22/17 15:00	
Barium	**22**	1.0	1	B7E0682	05/20/2017	05/22/17 15:00	
Beryllium	ND	1.0	1	B7E0682	05/20/2017	05/22/17 15:00	
Cadmium	ND	1.0	1	B7E0682	05/20/2017	05/22/17 15:00	
Chromium	**3.3**	1.0	1	B7E0682	05/20/2017	05/22/17 15:00	
Cobalt	**2.3**	1.0	1	B7E0682	05/20/2017	05/22/17 15:00	
Copper	**2.5**	2.0	1	B7E0682	05/20/2017	05/22/17 15:00	
Lead	**1.1**	1.0	1	B7E0682	05/20/2017	05/22/17 15:00	
Molybdenum	ND	1.0	1	B7E0682	05/20/2017	05/22/17 15:00	
Nickel	**2.0**	1.0	1	B7E0682	05/20/2017	05/22/17 15:00	
Selenium	ND	1.0	1	B7E0682	05/20/2017	05/22/17 15:00	
Silver	ND	1.0	1	B7E0682	05/20/2017	05/22/17 15:00	
Thallium	ND	1.0	1	B7E0682	05/20/2017	05/22/17 15:00	
Vanadium	**9.2**	1.0	1	B7E0682	05/20/2017	05/22/17 15:00	
Zinc	**13**	1.0	1	B7E0682	05/20/2017	05/22/17 15:00	

Mercury by AA (Cold Vapor) EPA 7471A — **Analyst: KEK**

Analyte	Result (mg/kg)	PQL (mg/kg)	Dilution	Batch	Prepared	Date/Time Analyzed	Notes
Mercury	**1.5**	0.10	1	B7E0677	05/20/2017	05/22/17 16:04	

Certificate of Analysis

Hushmand Associates, Inc.	Project Number : 6th St Bridge, LAC-17-001
250 Goddard	Report To : Naresh Bellana
Irvine , CA 92618	Reported : 06/05/2017

Client Sample ID 6-6-1.0

Lab ID: 1702036-53

Title 22 Metals by ICP-AES EPA 6010B — **Analyst: GO**

Analyte	Result (mg/kg)	PQL (mg/kg)	Dilution	Batch	Prepared	Date/Time Analyzed	Notes
Antimony	ND	2.0	1	B7E0682	05/20/2017	05/22/17 15:01	
Arsenic	**1.1**	1.0	1	B7E0682	05/20/2017	05/22/17 15:01	
Barium	**120**	1.0	1	B7E0682	05/20/2017	05/22/17 15:01	
Beryllium	ND	1.0	1	B7E0682	05/20/2017	05/22/17 15:01	
Cadmium	ND	1.0	1	B7E0682	05/20/2017	05/22/17 15:01	
Chromium	**15**	1.0	1	B7E0682	05/20/2017	05/22/17 15:01	
Cobalt	**8.3**	1.0	1	B7E0682	05/20/2017	05/22/17 15:01	
Copper	**13**	2.0	1	B7E0682	05/20/2017	05/22/17 15:01	
Lead	**12**	1.0	1	B7E0682	05/20/2017	05/22/17 15:01	
Molybdenum	ND	1.0	1	B7E0682	05/20/2017	05/22/17 15:01	
Nickel	**12**	1.0	1	B7E0682	05/20/2017	05/22/17 15:01	
Selenium	ND	1.0	1	B7E0682	05/20/2017	05/22/17 15:01	
Silver	ND	1.0	1	B7E0682	05/20/2017	05/22/17 15:01	
Thallium	ND	1.0	1	B7E0682	05/20/2017	05/22/17 15:01	
Vanadium	**34**	1.0	1	B7E0682	05/20/2017	05/22/17 15:01	
Zinc	**45**	1.0	1	B7E0682	05/20/2017	05/22/17 15:01	

Mercury by AA (Cold Vapor) EPA 7471A — **Analyst: KEK**

Analyte	Result (mg/kg)	PQL (mg/kg)	Dilution	Batch	Prepared	Date/Time Analyzed	Notes
Mercury	**0.12**	0.10	1	B7E0677	05/20/2017	05/22/17 16:06	

Certificate of Analysis

Hushmand Associates, Inc.	Project Number : 6th St Bridge, LAC-17-001
250 Goddard	Report To : Naresh Bellana
Irvine , CA 92618	Reported : 06/05/2017

Client Sample ID 6-6-3.0

Lab ID: 1702036-54

Title 22 Metals by ICP-AES EPA 6010B **Analyst: GO**

Analyte	Result (mg/kg)	PQL (mg/kg)	Dilution	Batch	Prepared	Date/Time Analyzed	Notes
Antimony	ND	2.0	1	B7E0682	05/20/2017	05/22/17 15:02	
Arsenic	ND	1.0	1	B7E0682	05/20/2017	05/22/17 15:02	
Barium	**30**	1.0	1	B7E0682	05/20/2017	05/22/17 15:02	
Beryllium	ND	1.0	1	B7E0682	05/20/2017	05/22/17 15:02	
Cadmium	ND	1.0	1	B7E0682	05/20/2017	05/22/17 15:02	
Chromium	**3.3**	1.0	1	B7E0682	05/20/2017	05/22/17 15:02	
Cobalt	**2.6**	1.0	1	B7E0682	05/20/2017	05/22/17 15:02	
Copper	**3.0**	2.0	1	B7E0682	05/20/2017	05/22/17 15:02	
Lead	**1.2**	1.0	1	B7E0682	05/20/2017	05/22/17 15:02	
Molybdenum	ND	1.0	1	B7E0682	05/20/2017	05/22/17 15:02	
Nickel	**2.5**	1.0	1	B7E0682	05/20/2017	05/22/17 15:02	
Selenium	ND	1.0	1	B7E0682	05/20/2017	05/22/17 15:02	
Silver	ND	1.0	1	B7E0682	05/20/2017	05/22/17 15:02	
Thallium	ND	1.0	1	B7E0682	05/20/2017	05/22/17 15:02	
Vanadium	**10**	1.0	1	B7E0682	05/20/2017	05/22/17 15:02	
Zinc	**13**	1.0	1	B7E0682	05/20/2017	05/22/17 15:02	

Mercury by AA (Cold Vapor) EPA 7471A **Analyst: KEK**

Analyte	Result (mg/kg)	PQL (mg/kg)	Dilution	Batch	Prepared	Date/Time Analyzed	Notes
Mercury	ND	0.10	1	B7E0677	05/20/2017	05/22/17 16:08	

Certificate of Analysis

Hushmand Associates, Inc.	Project Number : 6th St Bridge, LAC-17-001
250 Goddard	Report To : Naresh Bellana
Irvine , CA 92618	Reported : 06/05/2017

Client Sample ID 6-6-5.0

Lab ID: 1702036-55

Title 22 Metals by ICP-AES EPA 6010B — **Analyst: GO**

Analyte	Result (mg/kg)	PQL (mg/kg)	Dilution	Batch	Prepared	Date/Time Analyzed	Notes
Antimony	ND	2.0	1	B7E0682	05/20/2017	05/22/17 15:03	
Arsenic	ND	1.0	1	B7E0682	05/20/2017	05/22/17 15:03	
Barium	**52**	1.0	1	B7E0682	05/20/2017	05/22/17 15:03	
Beryllium	ND	1.0	1	B7E0682	05/20/2017	05/22/17 15:03	
Cadmium	ND	1.0	1	B7E0682	05/20/2017	05/22/17 15:03	
Chromium	**4.3**	1.0	1	B7E0682	05/20/2017	05/22/17 15:03	
Cobalt	**3.0**	1.0	1	B7E0682	05/20/2017	05/22/17 15:03	
Copper	**4.0**	2.0	1	B7E0682	05/20/2017	05/22/17 15:03	
Lead	**1.1**	1.0	1	B7E0682	05/20/2017	05/22/17 15:03	
Molybdenum	ND	1.0	1	B7E0682	05/20/2017	05/22/17 15:03	
Nickel	**3.0**	1.0	1	B7E0682	05/20/2017	05/22/17 15:03	
Selenium	ND	1.0	1	B7E0682	05/20/2017	05/22/17 15:03	
Silver	ND	1.0	1	B7E0682	05/20/2017	05/22/17 15:03	
Thallium	ND	1.0	1	B7E0682	05/20/2017	05/22/17 15:03	
Vanadium	**14**	1.0	1	B7E0682	05/20/2017	05/22/17 15:03	
Zinc	**14**	1.0	1	B7E0682	05/20/2017	05/22/17 15:03	

Mercury by AA (Cold Vapor) EPA 7471A — **Analyst: KEK**

Analyte	Result (mg/kg)	PQL (mg/kg)	Dilution	Batch	Prepared	Date/Time Analyzed	Notes
Mercury	ND	0.10	1	B7E0677	05/20/2017	05/22/17 16:10	

Certificate of Analysis

Hushmand Associates, Inc.	Project Number : 6th St Bridge, LAC-17-001
250 Goddard	Report To : Naresh Bellana
Irvine , CA 92618	Reported : 06/05/2017

Client Sample ID 6-6-7.5

Lab ID: 1702036-56

Title 22 Metals by ICP-AES EPA 6010B — **Analyst: GO**

Analyte	Result (mg/kg)	PQL (mg/kg)	Dilution	Batch	Prepared	Date/Time Analyzed	Notes
Antimony	ND	2.0	1	B7E0682	05/20/2017	05/22/17 15:07	
Arsenic	ND	1.0	1	B7E0682	05/20/2017	05/22/17 15:07	
Barium	**32**	1.0	1	B7E0682	05/20/2017	05/22/17 15:07	
Beryllium	ND	1.0	1	B7E0682	05/20/2017	05/22/17 15:07	
Cadmium	ND	1.0	1	B7E0682	05/20/2017	05/22/17 15:07	
Chromium	**7.5**	1.0	1	B7E0682	05/20/2017	05/22/17 15:07	
Cobalt	**3.8**	1.0	1	B7E0682	05/20/2017	05/22/17 15:07	
Copper	**4.1**	2.0	1	B7E0682	05/20/2017	05/22/17 15:07	
Lead	**1.2**	1.0	1	B7E0682	05/20/2017	05/22/17 15:07	
Molybdenum	ND	1.0	1	B7E0682	05/20/2017	05/22/17 15:07	
Nickel	**3.8**	1.0	1	B7E0682	05/20/2017	05/22/17 15:07	
Selenium	ND	1.0	1	B7E0682	05/20/2017	05/22/17 15:07	
Silver	ND	1.0	1	B7E0682	05/20/2017	05/22/17 15:07	
Thallium	ND	1.0	1	B7E0682	05/20/2017	05/22/17 15:07	
Vanadium	**21**	1.0	1	B7E0682	05/20/2017	05/22/17 15:07	
Zinc	**17**	1.0	1	B7E0682	05/20/2017	05/22/17 15:07	

Mercury by AA (Cold Vapor) EPA 7471A — **Analyst: KEK**

Analyte	Result (mg/kg)	PQL (mg/kg)	Dilution	Batch	Prepared	Date/Time Analyzed	Notes
Mercury	ND	0.10	1	B7E0677	05/20/2017	05/22/17 16:12	

Certificate of Analysis

Hushmand Associates, Inc.	Project Number : 6th St Bridge, LAC-17-001
250 Goddard	Report To : Naresh Bellana
Irvine , CA 92618	Reported : 06/05/2017

Client Sample ID 6-7-1.0

Lab ID: 1702036-57

Title 22 Metals by ICP-AES EPA 6010B **Analyst: GO**

Analyte	Result (mg/kg)	PQL (mg/kg)	Dilution	Batch	Prepared	Date/Time Analyzed	Notes
Antimony	ND	2.0	1	B7E0682	05/20/2017	05/22/17 15:08	
Arsenic	ND	1.0	1	B7E0682	05/20/2017	05/22/17 15:08	
Barium	**55**	1.0	1	B7E0682	05/20/2017	05/22/17 15:08	
Beryllium	ND	1.0	1	B7E0682	05/20/2017	05/22/17 15:08	
Cadmium	ND	1.0	1	B7E0682	05/20/2017	05/22/17 15:08	
Chromium	**7.5**	1.0	1	B7E0682	05/20/2017	05/22/17 15:08	
Cobalt	**5.3**	1.0	1	B7E0682	05/20/2017	05/22/17 15:08	
Copper	**6.1**	2.0	1	B7E0682	05/20/2017	05/22/17 15:08	
Lead	**3.0**	1.0	1	B7E0682	05/20/2017	05/22/17 15:08	
Molybdenum	ND	1.0	1	B7E0682	05/20/2017	05/22/17 15:08	
Nickel	**5.4**	1.0	1	B7E0682	05/20/2017	05/22/17 15:08	
Selenium	ND	1.0	1	B7E0682	05/20/2017	05/22/17 15:08	
Silver	ND	1.0	1	B7E0682	05/20/2017	05/22/17 15:08	
Thallium	ND	1.0	1	B7E0682	05/20/2017	05/22/17 15:08	
Vanadium	**22**	1.0	1	B7E0682	05/20/2017	05/22/17 15:08	
Zinc	**26**	1.0	1	B7E0682	05/20/2017	05/22/17 15:08	

Mercury by AA (Cold Vapor) EPA 7471A **Analyst: KEK**

Analyte	Result (mg/kg)	PQL (mg/kg)	Dilution	Batch	Prepared	Date/Time Analyzed	Notes
Mercury	ND	0.10	1	B7E0677	05/20/2017	05/22/17 16:14	

Certificate of Analysis

Hushmand Associates, Inc.	Project Number : 6th St Bridge, LAC-17-001
250 Goddard	Report To : Naresh Bellana
Irvine , CA 92618	Reported : 06/05/2017

Client Sample ID 6-7-3.0

Lab ID: 1702036-58

Title 22 Metals by ICP-AES EPA 6010B **Analyst: GO**

Analyte	Result (mg/kg)	PQL (mg/kg)	Dilution	Batch	Prepared	Date/Time Analyzed	Notes
Antimony	ND	2.0	1	B7E0682	05/20/2017	05/22/17 15:09	
Arsenic	ND	1.0	1	B7E0682	05/20/2017	05/22/17 15:09	
Barium	**25**	1.0	1	B7E0682	05/20/2017	05/22/17 15:09	
Beryllium	ND	1.0	1	B7E0682	05/20/2017	05/22/17 15:09	
Cadmium	ND	1.0	1	B7E0682	05/20/2017	05/22/17 15:09	
Chromium	**3.7**	1.0	1	B7E0682	05/20/2017	05/22/17 15:09	
Cobalt	**2.7**	1.0	1	B7E0682	05/20/2017	05/22/17 15:09	
Copper	**3.2**	2.0	1	B7E0682	05/20/2017	05/22/17 15:09	
Lead	**2.0**	1.0	1	B7E0682	05/20/2017	05/22/17 15:09	
Molybdenum	ND	1.0	1	B7E0682	05/20/2017	05/22/17 15:09	
Nickel	**2.3**	1.0	1	B7E0682	05/20/2017	05/22/17 15:09	
Selenium	ND	1.0	1	B7E0682	05/20/2017	05/22/17 15:09	
Silver	ND	1.0	1	B7E0682	05/20/2017	05/22/17 15:09	
Thallium	ND	1.0	1	B7E0682	05/20/2017	05/22/17 15:09	
Vanadium	**12**	1.0	1	B7E0682	05/20/2017	05/22/17 15:09	
Zinc	**14**	1.0	1	B7E0682	05/20/2017	05/22/17 15:09	

Mercury by AA (Cold Vapor) EPA 7471A **Analyst: KEK**

Analyte	Result (mg/kg)	PQL (mg/kg)	Dilution	Batch	Prepared	Date/Time Analyzed	Notes
Mercury	**0.12**	0.10	1	B7E0677	05/20/2017	05/22/17 16:20	

Certificate of Analysis

Hushmand Associates, Inc.	Project Number : 6th St Bridge, LAC-17-001
250 Goddard	Report To : Naresh Bellana
Irvine , CA 92618	Reported : 06/05/2017

Client Sample ID 6-7-5.0

Lab ID: 1702036-59

Title 22 Metals by ICP-AES EPA 6010B **Analyst: GO**

Analyte	Result (mg/kg)	PQL (mg/kg)	Dilution	Batch	Prepared	Date/Time Analyzed	Notes
Antimony	ND	2.0	1	B7E0682	05/20/2017	05/22/17 15:10	
Arsenic	ND	1.0	1	B7E0682	05/20/2017	05/22/17 15:10	
Barium	**24**	1.0	1	B7E0682	05/20/2017	05/22/17 15:10	
Beryllium	ND	1.0	1	B7E0682	05/20/2017	05/22/17 15:10	
Cadmium	ND	1.0	1	B7E0682	05/20/2017	05/22/17 15:10	
Chromium	**4.3**	1.0	1	B7E0682	05/20/2017	05/22/17 15:10	
Cobalt	**2.3**	1.0	1	B7E0682	05/20/2017	05/22/17 15:10	
Copper	**3.6**	2.0	1	B7E0682	05/20/2017	05/22/17 15:10	
Lead	**7.5**	1.0	1	B7E0682	05/20/2017	05/22/17 15:10	
Molybdenum	ND	1.0	1	B7E0682	05/20/2017	05/22/17 15:10	
Nickel	**2.8**	1.0	1	B7E0682	05/20/2017	05/22/17 15:10	
Selenium	ND	1.0	1	B7E0682	05/20/2017	05/22/17 15:10	
Silver	ND	1.0	1	B7E0682	05/20/2017	05/22/17 15:10	
Thallium	ND	1.0	1	B7E0682	05/20/2017	05/22/17 15:10	
Vanadium	**12**	1.0	1	B7E0682	05/20/2017	05/22/17 15:10	
Zinc	**29**	1.0	1	B7E0682	05/20/2017	05/22/17 15:10	

Mercury by AA (Cold Vapor) EPA 7471A **Analyst: KEK**

Analyte	Result (mg/kg)	PQL (mg/kg)	Dilution	Batch	Prepared	Date/Time Analyzed	Notes
Mercury	ND	0.10	1	B7E0677	05/20/2017	05/22/17 16:22	

Certificate of Analysis

Hushmand Associates, Inc.	Project Number : 6th St Bridge, LAC-17-001
250 Goddard	Report To : Naresh Bellana
Irvine , CA 92618	Reported : 06/05/2017

Client Sample ID 6-7-7.5

Lab ID: 1702036-60

Title 22 Metals by ICP-AES EPA 6010B — **Analyst: GO**

Analyte	Result (mg/kg)	PQL (mg/kg)	Dilution	Batch	Prepared	Date/Time Analyzed	Notes
Antimony	ND	2.0	1	B7E0682	05/20/2017	05/22/17 15:12	
Arsenic	ND	1.0	1	B7E0682	05/20/2017	05/22/17 15:12	
Barium	**62**	1.0	1	B7E0682	05/20/2017	05/22/17 15:12	
Beryllium	ND	1.0	1	B7E0682	05/20/2017	05/22/17 15:12	
Cadmium	ND	1.0	1	B7E0682	05/20/2017	05/22/17 15:12	
Chromium	**8.6**	1.0	1	B7E0682	05/20/2017	05/22/17 15:12	
Cobalt	**6.0**	1.0	1	B7E0682	05/20/2017	05/22/17 15:12	
Copper	**7.1**	2.0	1	B7E0682	05/20/2017	05/22/17 15:12	
Lead	**4.3**	1.0	1	B7E0682	05/20/2017	05/22/17 15:12	
Molybdenum	ND	1.0	1	B7E0682	05/20/2017	05/22/17 15:12	
Nickel	**5.6**	1.0	1	B7E0682	05/20/2017	05/22/17 15:12	
Selenium	ND	1.0	1	B7E0682	05/20/2017	05/22/17 15:12	
Silver	ND	1.0	1	B7E0682	05/20/2017	05/22/17 15:12	
Thallium	ND	1.0	1	B7E0682	05/20/2017	05/22/17 15:12	
Vanadium	**25**	1.0	1	B7E0682	05/20/2017	05/22/17 15:12	
Zinc	**33**	1.0	1	B7E0682	05/20/2017	05/22/17 15:12	

Mercury by AA (Cold Vapor) EPA 7471A — **Analyst: KEK**

Analyte	Result (mg/kg)	PQL (mg/kg)	Dilution	Batch	Prepared	Date/Time Analyzed	Notes
Mercury	ND	0.10	1	B7E0677	05/20/2017	05/22/17 16:24	

Certificate of Analysis

Hushmand Associates, Inc.	Project Number : 6th St Bridge, LAC-17-001
250 Goddard	Report To : Naresh Bellana
Irvine , CA 92618	Reported : 06/05/2017

Client Sample ID 6-9-1.0

Lab ID: 1702036-61

Title 22 Metals by ICP-AES EPA 6010B

Analyst: GO

Analyte	Result (mg/kg)	PQL (mg/kg)	Dilution	Batch	Prepared	Date/Time Analyzed	Notes
Antimony	ND	2.0	1	B7E0682	05/20/2017	05/22/17 15:13	
Arsenic	ND	1.0	1	B7E0682	05/20/2017	05/22/17 15:13	
Barium	**79**	1.0	1	B7E0682	05/20/2017	05/22/17 15:13	
Beryllium	ND	1.0	1	B7E0682	05/20/2017	05/22/17 15:13	
Cadmium	ND	1.0	1	B7E0682	05/20/2017	05/22/17 15:13	
Chromium	**10**	1.0	1	B7E0682	05/20/2017	05/22/17 15:13	
Cobalt	**6.4**	1.0	1	B7E0682	05/20/2017	05/22/17 15:13	
Copper	**17**	2.0	1	B7E0682	05/20/2017	05/22/17 15:13	
Lead	**33**	1.0	1	B7E0682	05/20/2017	05/22/17 15:13	
Molybdenum	ND	1.0	1	B7E0682	05/20/2017	05/22/17 15:13	
Nickel	**9.1**	1.0	1	B7E0682	05/20/2017	05/22/17 15:13	
Selenium	ND	1.0	1	B7E0682	05/20/2017	05/22/17 15:13	
Silver	ND	1.0	1	B7E0682	05/20/2017	05/22/17 15:13	
Thallium	ND	1.0	1	B7E0682	05/20/2017	05/22/17 15:13	
Vanadium	**32**	1.0	1	B7E0682	05/20/2017	05/22/17 15:13	
Zinc	**61**	1.0	1	B7E0682	05/20/2017	05/22/17 15:13	

Mercury by AA (Cold Vapor) EPA 7471A

Analyst: KEK

Analyte	Result (mg/kg)	PQL (mg/kg)	Dilution	Batch	Prepared	Date/Time Analyzed	Notes
Mercury	**0.19**	0.10	1	B7E0677	05/20/2017	05/22/17 16:26	

Volatile Organic Compounds by EPA 8260B

Analyst: AG

Analyte	Result (ug/kg)	PQL (ug/kg)	Dilution	Batch	Prepared	Date/Time Analyzed	Notes
1,1,1,2-Tetrachloroethane	ND	5.0	1	B7E0639	05/18/2017	05/18/17 17:55	
1,1,1-Trichloroethane	ND	5.0	1	B7E0639	05/18/2017	05/18/17 17:55	
1,1,2,2-Tetrachloroethane	ND	5.0	1	B7E0639	05/18/2017	05/18/17 17:55	
1,1,2-Trichloroethane	ND	5.0	1	B7E0639	05/18/2017	05/18/17 17:55	
1,1-Dichloroethane	ND	5.0	1	B7E0639	05/18/2017	05/18/17 17:55	
1,1-Dichloroethene	ND	5.0	1	B7E0639	05/18/2017	05/18/17 17:55	
1,1-Dichloropropene	ND	5.0	1	B7E0639	05/18/2017	05/18/17 17:55	
1,2,3-Trichloropropane	ND	5.0	1	B7E0639	05/18/2017	05/18/17 17:55	
1,2,3-Trichlorobenzene	ND	5.0	1	B7E0639	05/18/2017	05/18/17 17:55	
1,2,4-Trichlorobenzene	ND	5.0	1	B7E0639	05/18/2017	05/18/17 17:55	

Certificate of Analysis

Hushmand Associates, Inc.	Project Number : 6th St Bridge, LAC-17-001
250 Goddard	Report To : Naresh Bellana
Irvine , CA 92618	Reported : 06/05/2017

Client Sample ID 6-9-1.0

Lab ID: 1702036-61

Volatile Organic Compounds by EPA 8260B **Analyst: AG**

Analyte	Result (ug/kg)	PQL (ug/kg)	Dilution	Batch	Prepared	Date/Time Analyzed	Notes
1,2,4-Trimethylbenzene	ND	5.0	1	B7E0639	05/18/2017	05/18/17 17:55	
1,2-Dibromo-3-chloropropane	ND	10	1	B7E0639	05/18/2017	05/18/17 17:55	
1,2-Dibromoethane	ND	5.0	1	B7E0639	05/18/2017	05/18/17 17:55	
1,2-Dichlorobenzene	ND	5.0	1	B7E0639	05/18/2017	05/18/17 17:55	
1,2-Dichloroethane	ND	5.0	1	B7E0639	05/18/2017	05/18/17 17:55	
1,2-Dichloropropane	ND	5.0	1	B7E0639	05/18/2017	05/18/17 17:55	
1,3,5-Trimethylbenzene	ND	5.0	1	B7E0639	05/18/2017	05/18/17 17:55	
1,3-Dichlorobenzene	ND	5.0	1	B7E0639	05/18/2017	05/18/17 17:55	
1,3-Dichloropropane	ND	5.0	1	B7E0639	05/18/2017	05/18/17 17:55	
1,4-Dichlorobenzene	ND	5.0	1	B7E0639	05/18/2017	05/18/17 17:55	
2,2-Dichloropropane	ND	5.0	1	B7E0639	05/18/2017	05/18/17 17:55	
2-Chlorotoluene	ND	5.0	1	B7E0639	05/18/2017	05/18/17 17:55	
4-Chlorotoluene	ND	5.0	1	B7E0639	05/18/2017	05/18/17 17:55	
4-Isopropyltoluene	ND	5.0	1	B7E0639	05/18/2017	05/18/17 17:55	
Benzene	ND	5.0	1	B7E0639	05/18/2017	05/18/17 17:55	
Bromobenzene	ND	5.0	1	B7E0639	05/18/2017	05/18/17 17:55	
Bromochloromethane	ND	5.0	1	B7E0639	05/18/2017	05/18/17 17:55	
Bromodichloromethane	ND	5.0	1	B7E0639	05/18/2017	05/18/17 17:55	
Bromoform	ND	5.0	1	B7E0639	05/18/2017	05/18/17 17:55	
Bromomethane	ND	5.0	1	B7E0639	05/18/2017	05/18/17 17:55	
Carbon disulfide	ND	5.0	1	B7E0639	05/18/2017	05/18/17 17:55	
Carbon tetrachloride	ND	5.0	1	B7E0639	05/18/2017	05/18/17 17:55	
Chlorobenzene	ND	5.0	1	B7E0639	05/18/2017	05/18/17 17:55	
Chloroethane	ND	5.0	1	B7E0639	05/18/2017	05/18/17 17:55	
Chloroform	ND	5.0	1	B7E0639	05/18/2017	05/18/17 17:55	
Chloromethane	ND	5.0	1	B7E0639	05/18/2017	05/18/17 17:55	
cis-1,2-Dichloroethene	ND	5.0	1	B7E0639	05/18/2017	05/18/17 17:55	
cis-1,3-Dichloropropene	ND	5.0	1	B7E0639	05/18/2017	05/18/17 17:55	
Di-isopropyl ether	ND	5.0	1	B7E0639	05/18/2017	05/18/17 17:55	
Dibromochloromethane	ND	5.0	1	B7E0639	05/18/2017	05/18/17 17:55	
Dibromomethane	ND	5.0	1	B7E0639	05/18/2017	05/18/17 17:55	
Dichlorodifluoromethane	ND	5.0	1	B7E0639	05/18/2017	05/18/17 17:55	
Ethyl Acetate	ND	50	1	B7E0639	05/18/2017	05/18/17 17:55	
Ethyl Ether	ND	50	1	B7E0639	05/18/2017	05/18/17 17:55	
Ethyl tert-butyl ether	ND	5.0	1	B7E0639	05/18/2017	05/18/17 17:55	
Ethylbenzene	ND	5.0	1	B7E0639	05/18/2017	05/18/17 17:55	
Freon-113	ND	5.0	1	B7E0639	05/18/2017	05/18/17 17:55	

Certificate of Analysis

Hushmand Associates, Inc.	Project Number : 6th St Bridge, LAC-17-001
250 Goddard	Report To : Naresh Bellana
Irvine , CA 92618	Reported : 06/05/2017

Client Sample ID 6-9-1.0

Lab ID: 1702036-61

Volatile Organic Compounds by EPA 8260B **Analyst: AG**

Analyte	Result (ug/kg)	PQL (ug/kg)	Dilution	Batch	Prepared	Date/Time Analyzed	Notes
Hexachlorobutadiene	ND	5.0	1	B7E0639	05/18/2017	05/18/17 17:55	
Isopropylbenzene	ND	5.0	1	B7E0639	05/18/2017	05/18/17 17:55	
m,p-Xylene	ND	10	1	B7E0639	05/18/2017	05/18/17 17:55	
Methylene chloride	ND	5.0	1	B7E0639	05/18/2017	05/18/17 17:55	
MTBE	ND	5.0	1	B7E0639	05/18/2017	05/18/17 17:55	
n-Butylbenzene	ND	5.0	1	B7E0639	05/18/2017	05/18/17 17:55	
n-Propylbenzene	ND	5.0	1	B7E0639	05/18/2017	05/18/17 17:55	
Naphthalene	ND	5.0	1	B7E0639	05/18/2017	05/18/17 17:55	
o-Xylene	ND	5.0	1	B7E0639	05/18/2017	05/18/17 17:55	
sec-Butylbenzene	ND	5.0	1	B7E0639	05/18/2017	05/18/17 17:55	
Styrene	ND	5.0	1	B7E0639	05/18/2017	05/18/17 17:55	
tert-Amyl methyl ether	ND	5.0	1	B7E0639	05/18/2017	05/18/17 17:55	
tert-Butanol	ND	100	1	B7E0639	05/18/2017	05/18/17 17:55	
tert-Butylbenzene	ND	5.0	1	B7E0639	05/18/2017	05/18/17 17:55	
Tetrachloroethene	ND	5.0	1	B7E0639	05/18/2017	05/18/17 17:55	
Toluene	ND	5.0	1	B7E0639	05/18/2017	05/18/17 17:55	
trans-1,2-Dichloroethene	ND	5.0	1	B7E0639	05/18/2017	05/18/17 17:55	
trans-1,3-Dichloropropene	ND	5.0	1	B7E0639	05/18/2017	05/18/17 17:55	
Trichloroethene	ND	5.0	1	B7E0639	05/18/2017	05/18/17 17:55	
Trichlorofluoromethane	ND	5.0	1	B7E0639	05/18/2017	05/18/17 17:55	
Vinyl acetate	ND	50	1	B7E0639	05/18/2017	05/18/17 17:55	
Vinyl chloride	ND	5.0	1	B7E0639	05/18/2017	05/18/17 17:55	
Surrogate: 1,2-Dichloroethane-d4	*94.7 %*	*12 - 186*		B7E0639	05/18/2017	*05/18/17 17:55*	
Surrogate: 4-Bromofluorobenzene	*104 %*	*23 - 162*		B7E0639	05/18/2017	*05/18/17 17:55*	
Surrogate: Dibromofluoromethane	*97.5 %*	*23 - 179*		B7E0639	05/18/2017	*05/18/17 17:55*	
Surrogate: Toluene-d8	*109 %*	*26 - 164*		B7E0639	05/18/2017	*05/18/17 17:55*	

Certificate of Analysis

Hushmand Associates, Inc.	Project Number : 6th St Bridge, LAC-17-001
250 Goddard	Report To : Naresh Bellana
Irvine , CA 92618	Reported : 06/05/2017

Client Sample ID 6-9-3.0

Lab ID: 1702036-62

Title 22 Metals by ICP-AES EPA 6010B

Analyst: GO

Analyte	Result (mg/kg)	PQL (mg/kg)	Dilution	Batch	Prepared	Date/Time Analyzed	Notes
Antimony	**47**	2.0	1	B7E0682	05/20/2017	05/22/17 15:14	
Arsenic	**9.4**	1.0	1	B7E0682	05/20/2017	05/22/17 15:14	
Barium	**110**	1.0	1	B7E0682	05/20/2017	05/22/17 15:14	
Beryllium	ND	1.0	1	B7E0682	05/20/2017	05/22/17 15:14	
Cadmium	**1.1**	1.0	1	B7E0682	05/20/2017	05/22/17 15:14	
Chromium	**10**	1.0	1	B7E0682	05/20/2017	05/22/17 15:14	
Cobalt	**4.6**	1.0	1	B7E0682	05/20/2017	05/22/17 15:14	
Copper	**390**	2.0	1	B7E0682	05/20/2017	05/22/17 15:14	
Lead	**3100**	5.0	5	B7E0682	05/20/2017	05/22/17 16:17	D6
Molybdenum	ND	1.0	1	B7E0682	05/20/2017	05/22/17 15:14	
Nickel	**12**	1.0	1	B7E0682	05/20/2017	05/22/17 15:14	
Selenium	ND	1.0	1	B7E0682	05/20/2017	05/22/17 15:14	
Silver	**1.7**	1.0	1	B7E0682	05/20/2017	05/22/17 15:14	
Thallium	ND	1.0	1	B7E0682	05/20/2017	05/22/17 15:14	
Vanadium	**18**	1.0	1	B7E0682	05/20/2017	05/22/17 15:14	
Zinc	**510**	1.0	1	B7E0682	05/20/2017	05/22/17 15:14	

TCLP Metals by ICP-AES EPA 6010B

Analyst: GO

Analyte	Result (mg/L)	PQL (mg/L)	Dilution	Batch	Prepared	Date/Time Analyzed	Notes
Lead	**6.5**	0.25	5	B7F0039	06/02/2017	06/02/17 16:32	D1

STLC Metals by ICP-AES by EPA 6010B

Analyst: GO

Analyte	Result (mg/L)	PQL (mg/L)	Dilution	Batch	Prepared	Date/Time Analyzed	Notes
Antimony	ND	2.0	20	B7F0044	06/02/2017	06/02/17 13:53	D1
Copper	**31**	1.0	20	B7F0044	06/02/2017	06/02/17 13:53	D1
Lead	**32**	1.0	20	B7F0044	06/02/2017	06/02/17 13:53	D1

Certificate of Analysis

Hushmand Associates, Inc.	Project Number : 6th St Bridge, LAC-17-001
250 Goddard	Report To : Naresh Bellana
Irvine , CA 92618	Reported : 06/05/2017

Client Sample ID 6-9-3.0

Lab ID: 1702036-62

Mercury by AA (Cold Vapor) EPA 7471A

Analyst: KEK

Analyte	Result (mg/kg)	PQL (mg/kg)	Dilution	Batch	Prepared	Date/Time Analyzed	Notes
Mercury	**1.4**	0.10	1	B7E0677	05/20/2017	05/22/17 16:28	

Volatile Organic Compounds by EPA 8260B

Analyst: AG

Analyte	Result (ug/kg)	PQL (ug/kg)	Dilution	Batch	Prepared	Date/Time Analyzed	Notes
1,1,1,2-Tetrachloroethane	ND	5.0	1	B7E0639	05/18/2017	05/18/17 18:14	
1,1,1-Trichloroethane	ND	5.0	1	B7E0639	05/18/2017	05/18/17 18:14	
1,1,2,2-Tetrachloroethane	ND	5.0	1	B7E0639	05/18/2017	05/18/17 18:14	
1,1,2-Trichloroethane	ND	5.0	1	B7E0639	05/18/2017	05/18/17 18:14	
1,1-Dichloroethane	ND	5.0	1	B7E0639	05/18/2017	05/18/17 18:14	
1,1-Dichloroethene	ND	5.0	1	B7E0639	05/18/2017	05/18/17 18:14	
1,1-Dichloropropene	ND	5.0	1	B7E0639	05/18/2017	05/18/17 18:14	
1,2,3-Trichloropropane	ND	5.0	1	B7E0639	05/18/2017	05/18/17 18:14	
1,2,3-Trichlorobenzene	ND	5.0	1	B7E0639	05/18/2017	05/18/17 18:14	
1,2,4-Trichlorobenzene	ND	5.0	1	B7E0639	05/18/2017	05/18/17 18:14	
1,2,4-Trimethylbenzene	ND	5.0	1	B7E0639	05/18/2017	05/18/17 18:14	
1,2-Dibromo-3-chloropropane	ND	10	1	B7E0639	05/18/2017	05/18/17 18:14	
1,2-Dibromoethane	ND	5.0	1	B7E0639	05/18/2017	05/18/17 18:14	
1,2-Dichlorobenzene	ND	5.0	1	B7E0639	05/18/2017	05/18/17 18:14	
1,2-Dichloroethane	ND	5.0	1	B7E0639	05/18/2017	05/18/17 18:14	
1,2-Dichloropropane	ND	5.0	1	B7E0639	05/18/2017	05/18/17 18:14	
1,3,5-Trimethylbenzene	ND	5.0	1	B7E0639	05/18/2017	05/18/17 18:14	
1,3-Dichlorobenzene	ND	5.0	1	B7E0639	05/18/2017	05/18/17 18:14	
1,3-Dichloropropane	ND	5.0	1	B7E0639	05/18/2017	05/18/17 18:14	
1,4-Dichlorobenzene	ND	5.0	1	B7E0639	05/18/2017	05/18/17 18:14	
2,2-Dichloropropane	ND	5.0	1	B7E0639	05/18/2017	05/18/17 18:14	
2-Chlorotoluene	ND	5.0	1	B7E0639	05/18/2017	05/18/17 18:14	
4-Chlorotoluene	ND	5.0	1	B7E0639	05/18/2017	05/18/17 18:14	
4-Isopropyltoluene	ND	5.0	1	B7E0639	05/18/2017	05/18/17 18:14	
Benzene	ND	5.0	1	B7E0639	05/18/2017	05/18/17 18:14	
Bromobenzene	ND	5.0	1	B7E0639	05/18/2017	05/18/17 18:14	
Bromochloromethane	ND	5.0	1	B7E0639	05/18/2017	05/18/17 18:14	
Bromodichloromethane	ND	5.0	1	B7E0639	05/18/2017	05/18/17 18:14	
Bromoform	ND	5.0	1	B7E0639	05/18/2017	05/18/17 18:14	
Bromomethane	ND	5.0	1	B7E0639	05/18/2017	05/18/17 18:14	
Carbon disulfide	ND	5.0	1	B7E0639	05/18/2017	05/18/17 18:14	

Certificate of Analysis

Hushmand Associates, Inc.	Project Number : 6th St Bridge, LAC-17-001
250 Goddard	Report To : Naresh Bellana
Irvine , CA 92618	Reported : 06/05/2017

Client Sample ID 6-9-3.0

Lab ID: 1702036-62

Volatile Organic Compounds by EPA 8260B **Analyst: AG**

Analyte	Result (ug/kg)	PQL (ug/kg)	Dilution	Batch	Prepared	Date/Time Analyzed	Notes
Carbon tetrachloride	ND	5.0	1	B7E0639	05/18/2017	05/18/17 18:14	
Chlorobenzene	ND	5.0	1	B7E0639	05/18/2017	05/18/17 18:14	
Chloroethane	ND	5.0	1	B7E0639	05/18/2017	05/18/17 18:14	
Chloroform	ND	5.0	1	B7E0639	05/18/2017	05/18/17 18:14	
Chloromethane	ND	5.0	1	B7E0639	05/18/2017	05/18/17 18:14	
cis-1,2-Dichloroethene	ND	5.0	1	B7E0639	05/18/2017	05/18/17 18:14	
cis-1,3-Dichloropropene	ND	5.0	1	B7E0639	05/18/2017	05/18/17 18:14	
Di-isopropyl ether	ND	5.0	1	B7E0639	05/18/2017	05/18/17 18:14	
Dibromochloromethane	ND	5.0	1	B7E0639	05/18/2017	05/18/17 18:14	
Dibromomethane	ND	5.0	1	B7E0639	05/18/2017	05/18/17 18:14	
Dichlorodifluoromethane	ND	5.0	1	B7E0639	05/18/2017	05/18/17 18:14	
Ethyl Acetate	ND	50	1	B7E0639	05/18/2017	05/18/17 18:14	
Ethyl Ether	ND	50	1	B7E0639	05/18/2017	05/18/17 18:14	
Ethyl tert-butyl ether	ND	5.0	1	B7E0639	05/18/2017	05/18/17 18:14	
Ethylbenzene	ND	5.0	1	B7E0639	05/18/2017	05/18/17 18:14	
Freon-113	ND	5.0	1	B7E0639	05/18/2017	05/18/17 18:14	
Hexachlorobutadiene	ND	5.0	1	B7E0639	05/18/2017	05/18/17 18:14	
Isopropylbenzene	ND	5.0	1	B7E0639	05/18/2017	05/18/17 18:14	
m,p-Xylene	ND	10	1	B7E0639	05/18/2017	05/18/17 18:14	
Methylene chloride	ND	5.0	1	B7E0639	05/18/2017	05/18/17 18:14	
MTBE	ND	5.0	1	B7E0639	05/18/2017	05/18/17 18:14	
n-Butylbenzene	ND	5.0	1	B7E0639	05/18/2017	05/18/17 18:14	
n-Propylbenzene	ND	5.0	1	B7E0639	05/18/2017	05/18/17 18:14	
Naphthalene	ND	5.0	1	B7E0639	05/18/2017	05/18/17 18:14	
o-Xylene	ND	5.0	1	B7E0639	05/18/2017	05/18/17 18:14	
sec-Butylbenzene	ND	5.0	1	B7E0639	05/18/2017	05/18/17 18:14	
Styrene	ND	5.0	1	B7E0639	05/18/2017	05/18/17 18:14	
tert-Amyl methyl ether	ND	5.0	1	B7E0639	05/18/2017	05/18/17 18:14	
tert-Butanol	ND	100	1	B7E0639	05/18/2017	05/18/17 18:14	
tert-Butylbenzene	ND	5.0	1	B7E0639	05/18/2017	05/18/17 18:14	
Tetrachloroethene	ND	5.0	1	B7E0639	05/18/2017	05/18/17 18:14	
Toluene	ND	5.0	1	B7E0639	05/18/2017	05/18/17 18:14	
trans-1,2-Dichloroethene	ND	5.0	1	B7E0639	05/18/2017	05/18/17 18:14	
trans-1,3-Dichloropropene	ND	5.0	1	B7E0639	05/18/2017	05/18/17 18:14	
Trichloroethene	**7.6**	5.0	1	B7E0639	05/18/2017	05/18/17 18:14	
Trichlorofluoromethane	ND	5.0	1	B7E0639	05/18/2017	05/18/17 18:14	
Vinyl acetate	ND	50	1	B7E0639	05/18/2017	05/18/17 18:14	

Certificate of Analysis

Hushmand Associates, Inc.	Project Number : 6th St Bridge, LAC-17-001
250 Goddard	Report To : Naresh Bellana
Irvine , CA 92618	Reported : 06/05/2017

Client Sample ID 6-9-3.0

Lab ID: 1702036-62

Volatile Organic Compounds by EPA 8260B **Analyst: AG**

Analyte		Result (ug/kg)	PQL (ug/kg)	Dilution	Batch	Prepared	Date/Time Analyzed	Notes
Vinyl chloride		ND	5.0	1	B7E0639	05/18/2017	05/18/17 18:14	
Surrogate: 1,2-Dichloroethane-d4	*108 %*		*12 - 186*		B7E0639	05/18/2017	*05/18/17 18:14*	
Surrogate: 4-Bromofluorobenzene	*102 %*		*23 - 162*		B7E0639	05/18/2017	*05/18/17 18:14*	
Surrogate: Dibromofluoromethane	*102 %*		*23 - 179*		B7E0639	05/18/2017	*05/18/17 18:14*	
Surrogate: Toluene-d8	*94.7 %*		*26 - 164*		B7E0639	05/18/2017	*05/18/17 18:14*	

Certificate of Analysis

Hushmand Associates, Inc.	Project Number : 6th St Bridge, LAC-17-001
250 Goddard	Report To : Naresh Bellana
Irvine , CA 92618	Reported : 06/05/2017

Client Sample ID 6-9-5.0

Lab ID: 1702036-63

Title 22 Metals by ICP-AES EPA 6010B — **Analyst: GO**

Analyte	Result (mg/kg)	PQL (mg/kg)	Dilution	Batch	Prepared	Date/Time Analyzed	Notes
Antimony	ND	2.0	1	B7E0682	05/20/2017	05/22/17 15:15	
Arsenic	ND	1.0	1	B7E0682	05/20/2017	05/22/17 15:15	
Barium	**81**	1.0	1	B7E0682	05/20/2017	05/22/17 15:15	
Beryllium	ND	1.0	1	B7E0682	05/20/2017	05/22/17 15:15	
Cadmium	ND	1.0	1	B7E0682	05/20/2017	05/22/17 15:15	
Chromium	**8.1**	1.0	1	B7E0682	05/20/2017	05/22/17 15:15	
Cobalt	**5.5**	1.0	1	B7E0682	05/20/2017	05/22/17 15:15	
Copper	**41**	2.0	1	B7E0682	05/20/2017	05/22/17 15:15	
Lead	**41**	1.0	1	B7E0682	05/20/2017	05/22/17 15:15	
Molybdenum	ND	1.0	1	B7E0682	05/20/2017	05/22/17 15:15	
Nickel	**8.7**	1.0	1	B7E0682	05/20/2017	05/22/17 15:15	
Selenium	ND	1.0	1	B7E0682	05/20/2017	05/22/17 15:15	
Silver	ND	1.0	1	B7E0682	05/20/2017	05/22/17 15:15	
Thallium	ND	1.0	1	B7E0682	05/20/2017	05/22/17 15:15	
Vanadium	**23**	1.0	1	B7E0682	05/20/2017	05/22/17 15:15	
Zinc	**56**	1.0	1	B7E0682	05/20/2017	05/22/17 15:15	

Mercury by AA (Cold Vapor) EPA 7471A — **Analyst: KEK**

Analyte	Result (mg/kg)	PQL (mg/kg)	Dilution	Batch	Prepared	Date/Time Analyzed	Notes
Mercury	**0.20**	0.10	1	B7E0677	05/20/2017	05/22/17 16:30	

Certificate of Analysis

Hushmand Associates, Inc.	Project Number : 6th St Bridge, LAC-17-001
250 Goddard	Report To : Naresh Bellana
Irvine , CA 92618	Reported : 06/05/2017

Client Sample ID 6-9-7.5

Lab ID: 1702036-64

Title 22 Metals by ICP-AES EPA 6010B — **Analyst: GO**

Analyte	Result (mg/kg)	PQL (mg/kg)	Dilution	Batch	Prepared	Date/Time Analyzed	Notes
Antimony	ND	2.0	1	B7E0682	05/20/2017	05/22/17 15:16	
Arsenic	ND	1.0	1	B7E0682	05/20/2017	05/22/17 15:16	
Barium	**78**	1.0	1	B7E0682	05/20/2017	05/22/17 15:16	
Beryllium	ND	1.0	1	B7E0682	05/20/2017	05/22/17 15:16	
Cadmium	ND	1.0	1	B7E0682	05/20/2017	05/22/17 15:16	
Chromium	**9.9**	1.0	1	B7E0682	05/20/2017	05/22/17 15:16	
Cobalt	**7.7**	1.0	1	B7E0682	05/20/2017	05/22/17 15:16	
Copper	**8.8**	2.0	1	B7E0682	05/20/2017	05/22/17 15:16	
Lead	**3.4**	1.0	1	B7E0682	05/20/2017	05/22/17 15:16	
Molybdenum	ND	1.0	1	B7E0682	05/20/2017	05/22/17 15:16	
Nickel	**7.0**	1.0	1	B7E0682	05/20/2017	05/22/17 15:16	
Selenium	ND	1.0	1	B7E0682	05/20/2017	05/22/17 15:16	
Silver	ND	1.0	1	B7E0682	05/20/2017	05/22/17 15:16	
Thallium	ND	1.0	1	B7E0682	05/20/2017	05/22/17 15:16	
Vanadium	**29**	1.0	1	B7E0682	05/20/2017	05/22/17 15:16	
Zinc	**36**	1.0	1	B7E0682	05/20/2017	05/22/17 15:16	

Mercury by AA (Cold Vapor) EPA 7471A — **Analyst: KEK**

Analyte	Result (mg/kg)	PQL (mg/kg)	Dilution	Batch	Prepared	Date/Time Analyzed	Notes
Mercury	**0.20**	0.10	1	B7E0677	05/20/2017	05/22/17 16:32	

Certificate of Analysis

Hushmand Associates, Inc.	Project Number : 6th St Bridge, LAC-17-001
250 Goddard	Report To : Naresh Bellana
Irvine , CA 92618	Reported : 06/05/2017

Client Sample ID 6-10-1.0

Lab ID: 1702036-65

Title 22 Metals by ICP-AES EPA 6010B

Analyst: GO

Analyte	Result (mg/kg)	PQL (mg/kg)	Dilution	Batch	Prepared	Date/Time Analyzed	Notes
Antimony	ND	2.0	1	B7E0682	05/20/2017	05/22/17 15:17	
Arsenic	ND	1.0	1	B7E0682	05/20/2017	05/22/17 15:17	
Barium	**110**	1.0	1	B7E0682	05/20/2017	05/22/17 15:17	
Beryllium	ND	1.0	1	B7E0682	05/20/2017	05/22/17 15:17	
Cadmium	ND	1.0	1	B7E0682	05/20/2017	05/22/17 15:17	
Chromium	**11**	1.0	1	B7E0682	05/20/2017	05/22/17 15:17	
Cobalt	**6.8**	1.0	1	B7E0682	05/20/2017	05/22/17 15:17	
Copper	**24**	2.0	1	B7E0682	05/20/2017	05/22/17 15:17	
Lead	**99**	1.0	1	B7E0682	05/20/2017	05/22/17 15:17	
Molybdenum	ND	1.0	1	B7E0682	05/20/2017	05/22/17 15:17	
Nickel	**7.5**	1.0	1	B7E0682	05/20/2017	05/22/17 15:17	
Selenium	ND	1.0	1	B7E0682	05/20/2017	05/22/17 15:17	
Silver	ND	1.0	1	B7E0682	05/20/2017	05/22/17 15:17	
Thallium	ND	1.0	1	B7E0682	05/20/2017	05/22/17 15:17	
Vanadium	**27**	1.0	1	B7E0682	05/20/2017	05/22/17 15:17	
Zinc	**92**	1.0	1	B7E0682	05/20/2017	05/22/17 15:17	

TCLP Metals by ICP-AES EPA 6010B

Analyst: GO

Analyte	Result (mg/L)	PQL (mg/L)	Dilution	Batch	Prepared	Date/Time Analyzed	Notes
Lead	ND	0.25	5	B7F0039	06/02/2017	06/02/17 16:33	D1

STLC Metals by ICP-AES by EPA 6010B

Analyst: GO

Analyte	Result (mg/L)	PQL (mg/L)	Dilution	Batch	Prepared	Date/Time Analyzed	Notes
Lead	**14**	1.0	20	B7F0044	06/02/2017	06/02/17 13:54	D1

Mercury by AA (Cold Vapor) EPA 7471A

Analyst: KEK

Analyte	Result (mg/kg)	PQL (mg/kg)	Dilution	Batch	Prepared	Date/Time Analyzed	Notes
Mercury	**0.29**	0.10	1	B7E0677	05/20/2017	05/22/17 16:34	

Certificate of Analysis

Hushmand Associates, Inc.	Project Number : 6th St Bridge, LAC-17-001
250 Goddard	Report To : Naresh Bellana
Irvine , CA 92618	Reported : 06/05/2017

Client Sample ID 6-10-1.0

Lab ID: 1702036-65

Volatile Organic Compounds by EPA 8260B **Analyst: AG**

Analyte	Result (ug/kg)	PQL (ug/kg)	Dilution	Batch	Prepared	Date/Time Analyzed	Notes
1,1,1,2-Tetrachloroethane	ND	5.0	1	B7E0639	05/18/2017	05/18/17 18:33	
1,1,1-Trichloroethane	ND	5.0	1	B7E0639	05/18/2017	05/18/17 18:33	
1,1,2,2-Tetrachloroethane	ND	5.0	1	B7E0639	05/18/2017	05/18/17 18:33	
1,1,2-Trichloroethane	ND	5.0	1	B7E0639	05/18/2017	05/18/17 18:33	
1,1-Dichloroethane	ND	5.0	1	B7E0639	05/18/2017	05/18/17 18:33	
1,1-Dichloroethene	ND	5.0	1	B7E0639	05/18/2017	05/18/17 18:33	
1,1-Dichloropropene	ND	5.0	1	B7E0639	05/18/2017	05/18/17 18:33	
1,2,3-Trichloropropane	ND	5.0	1	B7E0639	05/18/2017	05/18/17 18:33	
1,2,3-Trichlorobenzene	ND	5.0	1	B7E0639	05/18/2017	05/18/17 18:33	
1,2,4-Trichlorobenzene	ND	5.0	1	B7E0639	05/18/2017	05/18/17 18:33	
1,2,4-Trimethylbenzene	ND	5.0	1	B7E0639	05/18/2017	05/18/17 18:33	
1,2-Dibromo-3-chloropropane	ND	10	1	B7E0639	05/18/2017	05/18/17 18:33	
1,2-Dibromoethane	ND	5.0	1	B7E0639	05/18/2017	05/18/17 18:33	
1,2-Dichlorobenzene	ND	5.0	1	B7E0639	05/18/2017	05/18/17 18:33	
1,2-Dichloroethane	ND	5.0	1	B7E0639	05/18/2017	05/18/17 18:33	
1,2-Dichloropropane	ND	5.0	1	B7E0639	05/18/2017	05/18/17 18:33	
1,3,5-Trimethylbenzene	ND	5.0	1	B7E0639	05/18/2017	05/18/17 18:33	
1,3-Dichlorobenzene	ND	5.0	1	B7E0639	05/18/2017	05/18/17 18:33	
1,3-Dichloropropane	ND	5.0	1	B7E0639	05/18/2017	05/18/17 18:33	
1,4-Dichlorobenzene	ND	5.0	1	B7E0639	05/18/2017	05/18/17 18:33	
2,2-Dichloropropane	ND	5.0	1	B7E0639	05/18/2017	05/18/17 18:33	
2-Chlorotoluene	ND	5.0	1	B7E0639	05/18/2017	05/18/17 18:33	
4-Chlorotoluene	ND	5.0	1	B7E0639	05/18/2017	05/18/17 18:33	
4-Isopropyltoluene	ND	5.0	1	B7E0639	05/18/2017	05/18/17 18:33	
Benzene	ND	5.0	1	B7E0639	05/18/2017	05/18/17 18:33	
Bromobenzene	ND	5.0	1	B7E0639	05/18/2017	05/18/17 18:33	
Bromochloromethane	ND	5.0	1	B7E0639	05/18/2017	05/18/17 18:33	
Bromodichloromethane	ND	5.0	1	B7E0639	05/18/2017	05/18/17 18:33	
Bromoform	ND	5.0	1	B7E0639	05/18/2017	05/18/17 18:33	
Bromomethane	ND	5.0	1	B7E0639	05/18/2017	05/18/17 18:33	
Carbon disulfide	ND	5.0	1	B7E0639	05/18/2017	05/18/17 18:33	
Carbon tetrachloride	ND	5.0	1	B7E0639	05/18/2017	05/18/17 18:33	
Chlorobenzene	ND	5.0	1	B7E0639	05/18/2017	05/18/17 18:33	
Chloroethane	ND	5.0	1	B7E0639	05/18/2017	05/18/17 18:33	
Chloroform	ND	5.0	1	B7E0639	05/18/2017	05/18/17 18:33	
Chloromethane	ND	5.0	1	B7E0639	05/18/2017	05/18/17 18:33	
cis-1,2-Dichloroethene	ND	5.0	1	B7E0639	05/18/2017	05/18/17 18:33	

Certificate of Analysis

Hushmand Associates, Inc.	Project Number : 6th St Bridge, LAC-17-001
250 Goddard	Report To : Naresh Bellana
Irvine , CA 92618	Reported : 06/05/2017

Client Sample ID 6-10-1.0

Lab ID: 1702036-65

Volatile Organic Compounds by EPA 8260B **Analyst: AG**

Analyte	Result (ug/kg)	PQL (ug/kg)	Dilution	Batch	Prepared	Date/Time Analyzed	Notes
cis-1,3-Dichloropropene	ND	5.0	1	B7E0639	05/18/2017	05/18/17 18:33	
Di-isopropyl ether	ND	5.0	1	B7E0639	05/18/2017	05/18/17 18:33	
Dibromochloromethane	ND	5.0	1	B7E0639	05/18/2017	05/18/17 18:33	
Dibromomethane	ND	5.0	1	B7E0639	05/18/2017	05/18/17 18:33	
Dichlorodifluoromethane	ND	5.0	1	B7E0639	05/18/2017	05/18/17 18:33	
Ethyl Acetate	ND	50	1	B7E0639	05/18/2017	05/18/17 18:33	
Ethyl Ether	ND	50	1	B7E0639	05/18/2017	05/18/17 18:33	
Ethyl tert-butyl ether	ND	5.0	1	B7E0639	05/18/2017	05/18/17 18:33	
Ethylbenzene	ND	5.0	1	B7E0639	05/18/2017	05/18/17 18:33	
Freon-113	ND	5.0	1	B7E0639	05/18/2017	05/18/17 18:33	
Hexachlorobutadiene	ND	5.0	1	B7E0639	05/18/2017	05/18/17 18:33	
Isopropylbenzene	ND	5.0	1	B7E0639	05/18/2017	05/18/17 18:33	
m,p-Xylene	ND	10	1	B7E0639	05/18/2017	05/18/17 18:33	
Methylene chloride	ND	5.0	1	B7E0639	05/18/2017	05/18/17 18:33	
MTBE	ND	5.0	1	B7E0639	05/18/2017	05/18/17 18:33	
n-Butylbenzene	ND	5.0	1	B7E0639	05/18/2017	05/18/17 18:33	
n-Propylbenzene	ND	5.0	1	B7E0639	05/18/2017	05/18/17 18:33	
Naphthalene	ND	5.0	1	B7E0639	05/18/2017	05/18/17 18:33	
o-Xylene	ND	5.0	1	B7E0639	05/18/2017	05/18/17 18:33	
sec-Butylbenzene	ND	5.0	1	B7E0639	05/18/2017	05/18/17 18:33	
Styrene	ND	5.0	1	B7E0639	05/18/2017	05/18/17 18:33	
tert-Amyl methyl ether	ND	5.0	1	B7E0639	05/18/2017	05/18/17 18:33	
tert-Butanol	ND	100	1	B7E0639	05/18/2017	05/18/17 18:33	
tert-Butylbenzene	ND	5.0	1	B7E0639	05/18/2017	05/18/17 18:33	
Tetrachloroethene	ND	5.0	1	B7E0639	05/18/2017	05/18/17 18:33	
Toluene	ND	5.0	1	B7E0639	05/18/2017	05/18/17 18:33	
trans-1,2-Dichloroethene	ND	5.0	1	B7E0639	05/18/2017	05/18/17 18:33	
trans-1,3-Dichloropropene	ND	5.0	1	B7E0639	05/18/2017	05/18/17 18:33	
Trichloroethene	**7.1**	5.0	1	B7E0639	05/18/2017	05/18/17 18:33	
Trichlorofluoromethane	ND	5.0	1	B7E0639	05/18/2017	05/18/17 18:33	
Vinyl acetate	ND	50	1	B7E0639	05/18/2017	05/18/17 18:33	
Vinyl chloride	ND	5.0	1	B7E0639	05/18/2017	05/18/17 18:33	
Surrogate: 1,2-Dichloroethane-d4	*102 %*	*12 - 186*		B7E0639	05/18/2017	*05/18/17 18:33*	
Surrogate: 4-Bromofluorobenzene	*101 %*	*23 - 162*		B7E0639	05/18/2017	*05/18/17 18:33*	
Surrogate: Dibromofluoromethane	*97.2 %*	*23 - 179*		B7E0639	05/18/2017	*05/18/17 18:33*	
Surrogate: Toluene-d8	*100 %*	*26 - 164*		B7E0639	05/18/2017	*05/18/17 18:33*	

Certificate of Analysis

Hushmand Associates, Inc.	Project Number : 6th St Bridge, LAC-17-001
250 Goddard	Report To : Naresh Bellana
Irvine , CA 92618	Reported : 06/05/2017

Client Sample ID 6-10-3.0

Lab ID: 1702036-66

Title 22 Metals by ICP-AES EPA 6010B

Analyst: GO

Analyte	Result (mg/kg)	PQL (mg/kg)	Dilution	Batch	Prepared	Date/Time Analyzed	Notes
Antimony	**5.5**	2.0	1	B7E0682	05/20/2017	05/22/17 15:21	
Arsenic	**6.5**	1.0	1	B7E0682	05/20/2017	05/22/17 15:21	
Barium	**380**	1.0	1	B7E0682	05/20/2017	05/22/17 15:21	
Beryllium	ND	1.0	1	B7E0682	05/20/2017	05/22/17 15:21	
Cadmium	**1.8**	1.0	1	B7E0682	05/20/2017	05/22/17 15:21	
Chromium	**15**	1.0	1	B7E0682	05/20/2017	05/22/17 15:21	
Cobalt	**3.2**	1.0	1	B7E0682	05/20/2017	05/22/17 15:21	
Copper	**160**	2.0	1	B7E0682	05/20/2017	05/22/17 15:21	
Lead	**800**	1.0	1	B7E0682	05/20/2017	05/22/17 15:21	
Molybdenum	ND	1.0	1	B7E0682	05/20/2017	05/22/17 15:21	
Nickel	**9.4**	1.0	1	B7E0682	05/20/2017	05/22/17 15:21	
Selenium	ND	1.0	1	B7E0682	05/20/2017	05/22/17 15:21	
Silver	ND	1.0	1	B7E0682	05/20/2017	05/22/17 15:21	
Thallium	ND	1.0	1	B7E0682	05/20/2017	05/22/17 15:21	
Vanadium	**14**	1.0	1	B7E0682	05/20/2017	05/22/17 15:21	
Zinc	**2100**	5.0	5	B7E0682	05/20/2017	05/22/17 16:18	D6

TCLP Metals by ICP-AES EPA 6010B

Analyst: GO

Analyte	Result (mg/L)	PQL (mg/L)	Dilution	Batch	Prepared	Date/Time Analyzed	Notes
Cadmium	ND	0.25	5	B7F0039	06/02/2017	06/02/17 16:35	D1
Lead	**410**	1.0	20	B7F0039	06/02/2017	06/05/17 10:52	D6

STLC Metals by ICP-AES by EPA 6010B

Analyst: GO

Analyte	Result (mg/L)	PQL (mg/L)	Dilution	Batch	Prepared	Date/Time Analyzed	Notes
Cadmium	ND	1.0	20	B7F0044	06/02/2017	06/02/17 13:55	D1
Lead	**360**	1.0	20	B7F0044	06/02/2017	06/02/17 13:55	D1

Certificate of Analysis

Hushmand Associates, Inc.	Project Number : 6th St Bridge, LAC-17-001
250 Goddard	Report To : Naresh Bellana
Irvine , CA 92618	Reported : 06/05/2017

Client Sample ID 6-10-3.0

Lab ID: 1702036-66

Mercury by AA (Cold Vapor) EPA 7471A

Analyst: KEK

Analyte	Result (mg/kg)	PQL (mg/kg)	Dilution	Batch	Prepared	Date/Time Analyzed	Notes
Mercury	**0.19**	0.10	1	B7E0677	05/20/2017	05/22/17 16:36	

Volatile Organic Compounds by EPA 8260B

Analyst: AG

Analyte	Result (ug/kg)	PQL (ug/kg)	Dilution	Batch	Prepared	Date/Time Analyzed	Notes
1,1,1,2-Tetrachloroethane	ND	5.0	1	B7E0639	05/18/2017	05/18/17 18:51	
1,1,1-Trichloroethane	ND	5.0	1	B7E0639	05/18/2017	05/18/17 18:51	
1,1,2,2-Tetrachloroethane	ND	5.0	1	B7E0639	05/18/2017	05/18/17 18:51	
1,1,2-Trichloroethane	ND	5.0	1	B7E0639	05/18/2017	05/18/17 18:51	
1,1-Dichloroethane	ND	5.0	1	B7E0639	05/18/2017	05/18/17 18:51	
1,1-Dichloroethene	ND	5.0	1	B7E0639	05/18/2017	05/18/17 18:51	
1,1-Dichloropropene	ND	5.0	1	B7E0639	05/18/2017	05/18/17 18:51	
1,2,3-Trichloropropane	ND	5.0	1	B7E0639	05/18/2017	05/18/17 18:51	
1,2,3-Trichlorobenzene	ND	5.0	1	B7E0639	05/18/2017	05/18/17 18:51	
1,2,4-Trichlorobenzene	ND	5.0	1	B7E0639	05/18/2017	05/18/17 18:51	
1,2,4-Trimethylbenzene	ND	5.0	1	B7E0639	05/18/2017	05/18/17 18:51	
1,2-Dibromo-3-chloropropane	ND	10	1	B7E0639	05/18/2017	05/18/17 18:51	
1,2-Dibromoethane	ND	5.0	1	B7E0639	05/18/2017	05/18/17 18:51	
1,2-Dichlorobenzene	ND	5.0	1	B7E0639	05/18/2017	05/18/17 18:51	
1,2-Dichloroethane	ND	5.0	1	B7E0639	05/18/2017	05/18/17 18:51	
1,2-Dichloropropane	ND	5.0	1	B7E0639	05/18/2017	05/18/17 18:51	
1,3,5-Trimethylbenzene	ND	5.0	1	B7E0639	05/18/2017	05/18/17 18:51	
1,3-Dichlorobenzene	ND	5.0	1	B7E0639	05/18/2017	05/18/17 18:51	
1,3-Dichloropropane	ND	5.0	1	B7E0639	05/18/2017	05/18/17 18:51	
1,4-Dichlorobenzene	ND	5.0	1	B7E0639	05/18/2017	05/18/17 18:51	
2,2-Dichloropropane	ND	5.0	1	B7E0639	05/18/2017	05/18/17 18:51	
2-Chlorotoluene	ND	5.0	1	B7E0639	05/18/2017	05/18/17 18:51	
4-Chlorotoluene	ND	5.0	1	B7E0639	05/18/2017	05/18/17 18:51	
4-Isopropyltoluene	ND	5.0	1	B7E0639	05/18/2017	05/18/17 18:51	
Benzene	ND	5.0	1	B7E0639	05/18/2017	05/18/17 18:51	
Bromobenzene	ND	5.0	1	B7E0639	05/18/2017	05/18/17 18:51	
Bromochloromethane	ND	5.0	1	B7E0639	05/18/2017	05/18/17 18:51	
Bromodichloromethane	ND	5.0	1	B7E0639	05/18/2017	05/18/17 18:51	
Bromoform	ND	5.0	1	B7E0639	05/18/2017	05/18/17 18:51	
Bromomethane	ND	5.0	1	B7E0639	05/18/2017	05/18/17 18:51	
Carbon disulfide	ND	5.0	1	B7E0639	05/18/2017	05/18/17 18:51	

Certificate of Analysis

Hushmand Associates, Inc.	Project Number : 6th St Bridge, LAC-17-001
250 Goddard	Report To : Naresh Bellana
Irvine , CA 92618	Reported : 06/05/2017

Client Sample ID 6-10-3.0

Lab ID: 1702036-66

Volatile Organic Compounds by EPA 8260B **Analyst: AG**

Analyte	Result (ug/kg)	PQL (ug/kg)	Dilution	Batch	Prepared	Date/Time Analyzed	Notes
Carbon tetrachloride	ND	5.0	1	B7E0639	05/18/2017	05/18/17 18:51	
Chlorobenzene	ND	5.0	1	B7E0639	05/18/2017	05/18/17 18:51	
Chloroethane	ND	5.0	1	B7E0639	05/18/2017	05/18/17 18:51	
Chloroform	ND	5.0	1	B7E0639	05/18/2017	05/18/17 18:51	
Chloromethane	ND	5.0	1	B7E0639	05/18/2017	05/18/17 18:51	
cis-1,2-Dichloroethene	ND	5.0	1	B7E0639	05/18/2017	05/18/17 18:51	
cis-1,3-Dichloropropene	ND	5.0	1	B7E0639	05/18/2017	05/18/17 18:51	
Di-isopropyl ether	ND	5.0	1	B7E0639	05/18/2017	05/18/17 18:51	
Dibromochloromethane	ND	5.0	1	B7E0639	05/18/2017	05/18/17 18:51	
Dibromomethane	ND	5.0	1	B7E0639	05/18/2017	05/18/17 18:51	
Dichlorodifluoromethane	ND	5.0	1	B7E0639	05/18/2017	05/18/17 18:51	
Ethyl Acetate	ND	50	1	B7E0639	05/18/2017	05/18/17 18:51	
Ethyl Ether	ND	50	1	B7E0639	05/18/2017	05/18/17 18:51	
Ethyl tert-butyl ether	ND	5.0	1	B7E0639	05/18/2017	05/18/17 18:51	
Ethylbenzene	ND	5.0	1	B7E0639	05/18/2017	05/18/17 18:51	
Freon-113	ND	5.0	1	B7E0639	05/18/2017	05/18/17 18:51	
Hexachlorobutadiene	ND	5.0	1	B7E0639	05/18/2017	05/18/17 18:51	
Isopropylbenzene	ND	5.0	1	B7E0639	05/18/2017	05/18/17 18:51	
m,p-Xylene	ND	10	1	B7E0639	05/18/2017	05/18/17 18:51	
Methylene chloride	ND	5.0	1	B7E0639	05/18/2017	05/18/17 18:51	
MTBE	ND	5.0	1	B7E0639	05/18/2017	05/18/17 18:51	
n-Butylbenzene	ND	5.0	1	B7E0639	05/18/2017	05/18/17 18:51	
n-Propylbenzene	ND	5.0	1	B7E0639	05/18/2017	05/18/17 18:51	
Naphthalene	ND	5.0	1	B7E0639	05/18/2017	05/18/17 18:51	
o-Xylene	ND	5.0	1	B7E0639	05/18/2017	05/18/17 18:51	
sec-Butylbenzene	ND	5.0	1	B7E0639	05/18/2017	05/18/17 18:51	
Styrene	ND	5.0	1	B7E0639	05/18/2017	05/18/17 18:51	
tert-Amyl methyl ether	ND	5.0	1	B7E0639	05/18/2017	05/18/17 18:51	
tert-Butanol	ND	100	1	B7E0639	05/18/2017	05/18/17 18:51	
tert-Butylbenzene	ND	5.0	1	B7E0639	05/18/2017	05/18/17 18:51	
Tetrachloroethene	ND	5.0	1	B7E0639	05/18/2017	05/18/17 18:51	
Toluene	ND	5.0	1	B7E0639	05/18/2017	05/18/17 18:51	
trans-1,2-Dichloroethene	ND	5.0	1	B7E0639	05/18/2017	05/18/17 18:51	
trans-1,3-Dichloropropene	ND	5.0	1	B7E0639	05/18/2017	05/18/17 18:51	
Trichloroethene	**7.2**	5.0	1	B7E0639	05/18/2017	05/18/17 18:51	
Trichlorofluoromethane	ND	5.0	1	B7E0639	05/18/2017	05/18/17 18:51	
Vinyl acetate	ND	50	1	B7E0639	05/18/2017	05/18/17 18:51	

Certificate of Analysis

Hushmand Associates, Inc.	Project Number : 6th St Bridge, LAC-17-001
250 Goddard	Report To : Naresh Bellana
Irvine , CA 92618	Reported : 06/05/2017

Client Sample ID 6-10-3.0

Lab ID: 1702036-66

Volatile Organic Compounds by EPA 8260B **Analyst: AG**

Analyte		Result (ug/kg)	PQL (ug/kg)	Dilution	Batch	Prepared	Date/Time Analyzed	Notes
Vinyl chloride		ND	5.0	1	B7E0639	05/18/2017	05/18/17 18:51	
Surrogate: 1,2-Dichloroethane-d4	*97.6 %*		*12 - 186*		B7E0639	05/18/2017	*05/18/17 18:51*	
Surrogate: 4-Bromofluorobenzene	*103 %*		*23 - 162*		B7E0639	05/18/2017	*05/18/17 18:51*	
Surrogate: Dibromofluoromethane	*101 %*		*23 - 179*		B7E0639	05/18/2017	*05/18/17 18:51*	
Surrogate: Toluene-d8	*99.2 %*		*26 - 164*		B7E0639	05/18/2017	*05/18/17 18:51*	

Certificate of Analysis

Hushmand Associates, Inc.	Project Number : 6th St Bridge, LAC-17-001
250 Goddard	Report To : Naresh Bellana
Irvine , CA 92618	Reported : 06/05/2017

Client Sample ID 6-10-5.0

Lab ID: 1702036-67

Title 22 Metals by ICP-AES EPA 6010B **Analyst: GO**

Analyte	Result (mg/kg)	PQL (mg/kg)	Dilution	Batch	Prepared	Date/Time Analyzed	Notes
Antimony	ND	2.0	1	B7E0682	05/20/2017	05/22/17 15:22	
Arsenic	**8.6**	1.0	1	B7E0682	05/20/2017	05/22/17 15:22	
Barium	**57**	1.0	1	B7E0682	05/20/2017	05/22/17 15:22	
Beryllium	ND	1.0	1	B7E0682	05/20/2017	05/22/17 15:22	
Cadmium	ND	1.0	1	B7E0682	05/20/2017	05/22/17 15:22	
Chromium	**9.0**	1.0	1	B7E0682	05/20/2017	05/22/17 15:22	
Cobalt	**3.5**	1.0	1	B7E0682	05/20/2017	05/22/17 15:22	
Copper	**37**	2.0	1	B7E0682	05/20/2017	05/22/17 15:22	
Lead	**13**	1.0	1	B7E0682	05/20/2017	05/22/17 15:22	
Molybdenum	ND	1.0	1	B7E0682	05/20/2017	05/22/17 15:22	
Nickel	**5.0**	1.0	1	B7E0682	05/20/2017	05/22/17 15:22	
Selenium	ND	1.0	1	B7E0682	05/20/2017	05/22/17 15:22	
Silver	ND	1.0	1	B7E0682	05/20/2017	05/22/17 15:22	
Thallium	ND	1.0	1	B7E0682	05/20/2017	05/22/17 15:22	
Vanadium	**17**	1.0	1	B7E0682	05/20/2017	05/22/17 15:22	
Zinc	**31**	1.0	1	B7E0682	05/20/2017	05/22/17 15:22	

Mercury by AA (Cold Vapor) EPA 7471A **Analyst: KEK**

Analyte	Result (mg/kg)	PQL (mg/kg)	Dilution	Batch	Prepared	Date/Time Analyzed	Notes
Mercury	ND	0.10	1	B7E0677	05/20/2017	05/22/17 16:42	

Certificate of Analysis

Hushmand Associates, Inc.	Project Number : 6th St Bridge, LAC-17-001
250 Goddard	Report To : Naresh Bellana
Irvine , CA 92618	Reported : 06/05/2017

Client Sample ID 6-10-7.5

Lab ID: 1702036-68

Title 22 Metals by ICP-AES EPA 6010B — **Analyst: GO**

Analyte	Result (mg/kg)	PQL (mg/kg)	Dilution	Batch	Prepared	Date/Time Analyzed	Notes
Antimony	ND	2.0	1	B7E0682	05/20/2017	05/22/17 15:23	
Arsenic	ND	1.0	1	B7E0682	05/20/2017	05/22/17 15:23	
Barium	**38**	1.0	1	B7E0682	05/20/2017	05/22/17 15:23	
Beryllium	ND	1.0	1	B7E0682	05/20/2017	05/22/17 15:23	
Cadmium	ND	1.0	1	B7E0682	05/20/2017	05/22/17 15:23	
Chromium	**4.8**	1.0	1	B7E0682	05/20/2017	05/22/17 15:23	
Cobalt	**3.6**	1.0	1	B7E0682	05/20/2017	05/22/17 15:23	
Copper	**3.2**	2.0	1	B7E0682	05/20/2017	05/22/17 15:23	
Lead	**1.2**	1.0	1	B7E0682	05/20/2017	05/22/17 15:23	
Molybdenum	ND	1.0	1	B7E0682	05/20/2017	05/22/17 15:23	
Nickel	**3.2**	1.0	1	B7E0682	05/20/2017	05/22/17 15:23	
Selenium	ND	1.0	1	B7E0682	05/20/2017	05/22/17 15:23	
Silver	ND	1.0	1	B7E0682	05/20/2017	05/22/17 15:23	
Thallium	ND	1.0	1	B7E0682	05/20/2017	05/22/17 15:23	
Vanadium	**16**	1.0	1	B7E0682	05/20/2017	05/22/17 15:23	
Zinc	**17**	1.0	1	B7E0682	05/20/2017	05/22/17 15:23	

Mercury by AA (Cold Vapor) EPA 7471A — **Analyst: KEK**

Analyte	Result (mg/kg)	PQL (mg/kg)	Dilution	Batch	Prepared	Date/Time Analyzed	Notes
Mercury	ND	0.10	1	B7E0677	05/20/2017	05/22/17 16:44	

Certificate of Analysis

Hushmand Associates, Inc.	Project Number : 6th St Bridge, LAC-17-001
250 Goddard	Report To : Naresh Bellana
Irvine , CA 92618	Reported : 06/05/2017

Client Sample ID 7-2-0.5

Lab ID: 1702036-69

Title 22 Metals by ICP-AES EPA 6010B

Analyst: GO

Analyte	Result (mg/kg)	PQL (mg/kg)	Dilution	Batch	Prepared	Date/Time Analyzed	Notes
Antimony	ND	2.0	1	B7E0682	05/20/2017	05/22/17 15:25	
Arsenic	ND	1.0	1	B7E0682	05/20/2017	05/22/17 15:25	
Barium	**93**	1.0	1	B7E0682	05/20/2017	05/22/17 15:25	
Beryllium	ND	1.0	1	B7E0682	05/20/2017	05/22/17 15:25	
Cadmium	ND	1.0	1	B7E0682	05/20/2017	05/22/17 15:25	
Chromium	**6.1**	1.0	1	B7E0682	05/20/2017	05/22/17 15:25	
Cobalt	**4.3**	1.0	1	B7E0682	05/20/2017	05/22/17 15:25	
Copper	**8.3**	2.0	1	B7E0682	05/20/2017	05/22/17 15:25	
Lead	**27**	1.0	1	B7E0682	05/20/2017	05/22/17 15:25	
Molybdenum	ND	1.0	1	B7E0682	05/20/2017	05/22/17 15:25	
Nickel	**4.3**	1.0	1	B7E0682	05/20/2017	05/22/17 15:25	
Selenium	ND	1.0	1	B7E0682	05/20/2017	05/22/17 15:25	
Silver	ND	1.0	1	B7E0682	05/20/2017	05/22/17 15:25	
Thallium	ND	1.0	1	B7E0682	05/20/2017	05/22/17 15:25	
Vanadium	**19**	1.0	1	B7E0682	05/20/2017	05/22/17 15:25	
Zinc	**57**	1.0	1	B7E0682	05/20/2017	05/22/17 15:25	

Mercury by AA (Cold Vapor) EPA 7471A

Analyst: KEK

Analyte	Result (mg/kg)	PQL (mg/kg)	Dilution	Batch	Prepared	Date/Time Analyzed	Notes
Mercury	**0.18**	0.10	1	B7E0677	05/20/2017	05/22/17 16:46	

Gasoline Range Organics by EPA 8015B (Modified)

Analyst: VW

Analyte		Result (mg/kg)	PQL (mg/kg)	Dilution	Batch	Prepared	Date/Time Analyzed	Notes
Gasoline Range Organics		ND	1.0	1	B7E0657	05/21/2017	05/21/17 15:12	
Surrogate: 4-Bromofluorobenzene	*99.1 %*		*36 - 125*		B7E0657	05/21/2017	*05/21/17 15:12*	

Diesel Range Organics by EPA 8015B

Analyst: CR

Analyte		Result (mg/kg)	PQL (mg/kg)	Dilution	Batch	Prepared	Date/Time Analyzed	Notes
DRO		ND	10	1	B7E0785	05/23/2017	05/25/17 01:17	
Surrogate: p-Terphenyl	*81.8 %*		*47 - 157*		B7E0785	05/23/2017	*05/25/17 01:17*	

Certificate of Analysis

Hushmand Associates, Inc.	Project Number : 6th St Bridge, LAC-17-001
250 Goddard	Report To : Naresh Bellana
Irvine , CA 92618	Reported : 06/05/2017

Client Sample ID 7-2-0.5

Lab ID: 1702036-69

Organochlorine Pesticides by EPA 8081 **Analyst: RL/**

Analyte	Result (ug/kg)	PQL (ug/kg)	Dilution	Batch	Prepared	Date/Time Analyzed	Notes
4,4´-DDD	ND	2.0	1	B7E0819	05/24/2017	05/24/17 17:45	
4,4´-DDE	ND	2.0	1	B7E0819	05/24/2017	05/24/17 17:45	
4,4´-DDT	ND	2.0	1	B7E0819	05/24/2017	05/24/17 17:45	
Aldrin	ND	1.0	1	B7E0819	05/24/2017	05/24/17 17:45	
alpha-BHC	ND	1.0	1	B7E0819	05/24/2017	05/24/17 17:45	
alpha-Chlordane	ND	1.0	1	B7E0819	05/24/2017	05/24/17 17:45	
beta-BHC	ND	1.0	1	B7E0819	05/24/2017	05/24/17 17:45	
Chlordane	ND	8.5	1	B7E0819	05/24/2017	05/24/17 17:45	
delta-BHC	ND	1.0	1	B7E0819	05/24/2017	05/24/17 17:45	
Dieldrin	ND	2.0	1	B7E0819	05/24/2017	05/24/17 17:45	
Endosulfan I	ND	1.0	1	B7E0819	05/24/2017	05/24/17 17:45	
Endosulfan II	ND	2.0	1	B7E0819	05/24/2017	05/24/17 17:45	
Endosulfan sulfate	ND	2.0	1	B7E0819	05/24/2017	05/24/17 17:45	
Endrin	ND	2.0	1	B7E0819	05/24/2017	05/24/17 17:45	
Endrin aldehyde	ND	2.0	1	B7E0819	05/24/2017	05/24/17 17:45	
Endrin ketone	ND	2.0	1	B7E0819	05/24/2017	05/24/17 17:45	
gamma-BHC	ND	1.0	1	B7E0819	05/24/2017	05/24/17 17:45	
gamma-Chlordane	ND	1.0	1	B7E0819	05/24/2017	05/24/17 17:45	
Heptachlor	ND	1.0	1	B7E0819	05/24/2017	05/24/17 17:45	
Heptachlor epoxide	ND	1.0	1	B7E0819	05/24/2017	05/24/17 17:45	
Methoxychlor	ND	5.0	1	B7E0819	05/24/2017	05/24/17 17:45	
Toxaphene	ND	50	1	B7E0819	05/24/2017	05/24/17 17:45	
Surrogate: Decachlorobiphenyl	*62.5 %*	*27 - 123*		B7E0819	05/24/2017	*05/24/17 17:45*	
Surrogate: Tetrachloro-m-xylene	*78.3 %*	*26 - 108*		B7E0819	05/24/2017	*05/24/17 17:45*	

Certificate of Analysis

Hushmand Associates, Inc.	Project Number : 6th St Bridge, LAC-17-001
250 Goddard	Report To : Naresh Bellana
Irvine , CA 92618	Reported : 06/05/2017

Client Sample ID 7-2-0.5

Lab ID: 1702036-69

Polychlorinated Biphenyls by EPA 8082

Analyst: LT

Analyte	Result (ug/kg)	PQL (ug/kg)	Dilution	Batch	Prepared	Date/Time Analyzed	Notes
Aroclor 1016	ND	16	1	B7E0819	05/24/2017	05/24/17 17:19	
Aroclor 1221	ND	16	1	B7E0819	05/24/2017	05/24/17 17:19	
Aroclor 1232	ND	16	1	B7E0819	05/24/2017	05/24/17 17:19	
Aroclor 1242	ND	16	1	B7E0819	05/24/2017	05/24/17 17:19	
Aroclor 1248	ND	16	1	B7E0819	05/24/2017	05/24/17 17:19	
Aroclor 1254	ND	16	1	B7E0819	05/24/2017	05/24/17 17:19	
Aroclor 1260	ND	16	1	B7E0819	05/24/2017	05/24/17 17:19	
Aroclor 1262	ND	16	1	B7E0819	05/24/2017	05/24/17 17:19	
Aroclor 1268	ND	16	1	B7E0819	05/24/2017	05/24/17 17:19	
Surrogate: Decachlorobiphenyl	*74.3 %*	*18 - 136*		B7E0819	05/24/2017	*05/24/17 17:19*	
Surrogate: Tetrachloro-m-xylene	*93.4 %*	*30 - 130*		B7E0819	05/24/2017	*05/24/17 17:19*	

Volatile Organic Compounds by EPA 8260B

Analyst: AG

Analyte	Result (ug/kg)	PQL (ug/kg)	Dilution	Batch	Prepared	Date/Time Analyzed	Notes
1,1,1,2-Tetrachloroethane	ND	5.0	1	B7E0639	05/18/2017	05/18/17 19:10	
1,1,1-Trichloroethane	ND	5.0	1	B7E0639	05/18/2017	05/18/17 19:10	
1,1,2,2-Tetrachloroethane	ND	5.0	1	B7E0639	05/18/2017	05/18/17 19:10	
1,1,2-Trichloroethane	ND	5.0	1	B7E0639	05/18/2017	05/18/17 19:10	
1,1-Dichloroethane	ND	5.0	1	B7E0639	05/18/2017	05/18/17 19:10	
1,1-Dichloroethene	ND	5.0	1	B7E0639	05/18/2017	05/18/17 19:10	
1,1-Dichloropropene	ND	5.0	1	B7E0639	05/18/2017	05/18/17 19:10	
1,2,3-Trichloropropane	ND	5.0	1	B7E0639	05/18/2017	05/18/17 19:10	
1,2,3-Trichlorobenzene	ND	5.0	1	B7E0639	05/18/2017	05/18/17 19:10	
1,2,4-Trichlorobenzene	ND	5.0	1	B7E0639	05/18/2017	05/18/17 19:10	
1,2,4-Trimethylbenzene	ND	5.0	1	B7E0639	05/18/2017	05/18/17 19:10	
1,2-Dibromo-3-chloropropane	ND	10	1	B7E0639	05/18/2017	05/18/17 19:10	
1,2-Dibromoethane	ND	5.0	1	B7E0639	05/18/2017	05/18/17 19:10	
1,2-Dichlorobenzene	ND	5.0	1	B7E0639	05/18/2017	05/18/17 19:10	
1,2-Dichloroethane	ND	5.0	1	B7E0639	05/18/2017	05/18/17 19:10	
1,2-Dichloropropane	ND	5.0	1	B7E0639	05/18/2017	05/18/17 19:10	
1,3,5-Trimethylbenzene	ND	5.0	1	B7E0639	05/18/2017	05/18/17 19:10	
1,3-Dichlorobenzene	ND	5.0	1	B7E0639	05/18/2017	05/18/17 19:10	
1,3-Dichloropropane	ND	5.0	1	B7E0639	05/18/2017	05/18/17 19:10	
1,4-Dichlorobenzene	ND	5.0	1	B7E0639	05/18/2017	05/18/17 19:10	
2,2-Dichloropropane	ND	5.0	1	B7E0639	05/18/2017	05/18/17 19:10	

Certificate of Analysis

Hushmand Associates, Inc.	Project Number : 6th St Bridge, LAC-17-001
250 Goddard	Report To : Naresh Bellana
Irvine , CA 92618	Reported : 06/05/2017

Client Sample ID 7-2-0.5

Lab ID: 1702036-69

Volatile Organic Compounds by EPA 8260B **Analyst: AG**

Analyte	Result (ug/kg)	PQL (ug/kg)	Dilution	Batch	Prepared	Date/Time Analyzed	Notes
2-Chlorotoluene	ND	5.0	1	B7E0639	05/18/2017	05/18/17 19:10	
4-Chlorotoluene	ND	5.0	1	B7E0639	05/18/2017	05/18/17 19:10	
4-Isopropyltoluene	ND	5.0	1	B7E0639	05/18/2017	05/18/17 19:10	
Benzene	ND	5.0	1	B7E0639	05/18/2017	05/18/17 19:10	
Bromobenzene	ND	5.0	1	B7E0639	05/18/2017	05/18/17 19:10	
Bromochloromethane	ND	5.0	1	B7E0639	05/18/2017	05/18/17 19:10	
Bromodichloromethane	ND	5.0	1	B7E0639	05/18/2017	05/18/17 19:10	
Bromoform	ND	5.0	1	B7E0639	05/18/2017	05/18/17 19:10	
Bromomethane	ND	5.0	1	B7E0639	05/18/2017	05/18/17 19:10	
Carbon disulfide	ND	5.0	1	B7E0639	05/18/2017	05/18/17 19:10	
Carbon tetrachloride	ND	5.0	1	B7E0639	05/18/2017	05/18/17 19:10	
Chlorobenzene	ND	5.0	1	B7E0639	05/18/2017	05/18/17 19:10	
Chloroethane	ND	5.0	1	B7E0639	05/18/2017	05/18/17 19:10	
Chloroform	ND	5.0	1	B7E0639	05/18/2017	05/18/17 19:10	
Chloromethane	ND	5.0	1	B7E0639	05/18/2017	05/18/17 19:10	
cis-1,2-Dichloroethene	ND	5.0	1	B7E0639	05/18/2017	05/18/17 19:10	
cis-1,3-Dichloropropene	ND	5.0	1	B7E0639	05/18/2017	05/18/17 19:10	
Di-isopropyl ether	ND	5.0	1	B7E0639	05/18/2017	05/18/17 19:10	
Dibromochloromethane	ND	5.0	1	B7E0639	05/18/2017	05/18/17 19:10	
Dibromomethane	ND	5.0	1	B7E0639	05/18/2017	05/18/17 19:10	
Dichlorodifluoromethane	ND	5.0	1	B7E0639	05/18/2017	05/18/17 19:10	
Ethyl Acetate	ND	50	1	B7E0639	05/18/2017	05/18/17 19:10	
Ethyl Ether	ND	50	1	B7E0639	05/18/2017	05/18/17 19:10	
Ethyl tert-butyl ether	ND	5.0	1	B7E0639	05/18/2017	05/18/17 19:10	
Ethylbenzene	ND	5.0	1	B7E0639	05/18/2017	05/18/17 19:10	
Freon-113	ND	5.0	1	B7E0639	05/18/2017	05/18/17 19:10	
Hexachlorobutadiene	ND	5.0	1	B7E0639	05/18/2017	05/18/17 19:10	
Isopropylbenzene	ND	5.0	1	B7E0639	05/18/2017	05/18/17 19:10	
m,p-Xylene	ND	10	1	B7E0639	05/18/2017	05/18/17 19:10	
Methylene chloride	ND	5.0	1	B7E0639	05/18/2017	05/18/17 19:10	
MTBE	ND	5.0	1	B7E0639	05/18/2017	05/18/17 19:10	
n-Butylbenzene	ND	5.0	1	B7E0639	05/18/2017	05/18/17 19:10	
n-Propylbenzene	ND	5.0	1	B7E0639	05/18/2017	05/18/17 19:10	
Naphthalene	ND	5.0	1	B7E0639	05/18/2017	05/18/17 19:10	
o-Xylene	ND	5.0	1	B7E0639	05/18/2017	05/18/17 19:10	
sec-Butylbenzene	ND	5.0	1	B7E0639	05/18/2017	05/18/17 19:10	
Styrene	ND	5.0	1	B7E0639	05/18/2017	05/18/17 19:10	

Certificate of Analysis

Hushmand Associates, Inc.	Project Number : 6th St Bridge, LAC-17-001
250 Goddard	Report To : Naresh Bellana
Irvine , CA 92618	Reported : 06/05/2017

Client Sample ID 7-2-0.5

Lab ID: 1702036-69

Volatile Organic Compounds by EPA 8260B

Analyst: AG

Analyte	Result (ug/kg)	PQL (ug/kg)	Dilution	Batch	Prepared	Date/Time Analyzed	Notes
tert-Amyl methyl ether	ND	5.0	1	B7E0639	05/18/2017	05/18/17 19:10	
tert-Butanol	ND	100	1	B7E0639	05/18/2017	05/18/17 19:10	
tert-Butylbenzene	ND	5.0	1	B7E0639	05/18/2017	05/18/17 19:10	
Tetrachloroethene	ND	5.0	1	B7E0639	05/18/2017	05/18/17 19:10	
Toluene	ND	5.0	1	B7E0639	05/18/2017	05/18/17 19:10	
trans-1,2-Dichloroethene	ND	5.0	1	B7E0639	05/18/2017	05/18/17 19:10	
trans-1,3-Dichloropropene	ND	5.0	1	B7E0639	05/18/2017	05/18/17 19:10	
Trichloroethene	ND	5.0	1	B7E0639	05/18/2017	05/18/17 19:10	
Trichlorofluoromethane	ND	5.0	1	B7E0639	05/18/2017	05/18/17 19:10	
Vinyl acetate	ND	50	1	B7E0639	05/18/2017	05/18/17 19:10	
Vinyl chloride	ND	5.0	1	B7E0639	05/18/2017	05/18/17 19:10	
Surrogate: 1,2-Dichloroethane-d4	*101 %*	*12 - 186*		B7E0639	05/18/2017	*05/18/17 19:10*	
Surrogate: 4-Bromofluorobenzene	*105 %*	*23 - 162*		B7E0639	05/18/2017	*05/18/17 19:10*	
Surrogate: Dibromofluoromethane	*90.7 %*	*23 - 179*		B7E0639	05/18/2017	*05/18/17 19:10*	
Surrogate: Toluene-d8	*102 %*	*26 - 164*		B7E0639	05/18/2017	*05/18/17 19:10*	

Semivolatile Organic Compounds by EPA 8270C

Analyst: SP

Analyte	Result (ug/kg)	PQL (ug/kg)	Dilution	Batch	Prepared	Date/Time Analyzed	Notes
1,2,4-Trichlorobenzene	ND	330	1	B7E0781	05/23/2017	06/01/17 03:10	
1,2-Dichlorobenzene	ND	330	1	B7E0781	05/23/2017	06/01/17 03:10	
1,3-Dichlorobenzene	ND	330	1	B7E0781	05/23/2017	06/01/17 03:10	
1,4-Dichlorobenzene	ND	330	1	B7E0781	05/23/2017	06/01/17 03:10	
2,4,5-Trichlorophenol	ND	330	1	B7E0781	05/23/2017	06/01/17 03:10	
2,4,6-Trichlorophenol	ND	330	1	B7E0781	05/23/2017	06/01/17 03:10	
2,4-Dichlorophenol	ND	1600	1	B7E0781	05/23/2017	06/01/17 03:10	
2,4-Dimethylphenol	ND	330	1	B7E0781	05/23/2017	06/01/17 03:10	
2,4-Dinitrophenol	ND	1600	1	B7E0781	05/23/2017	06/01/17 03:10	
2,4-Dinitrotoluene	ND	330	1	B7E0781	05/23/2017	06/01/17 03:10	
2,6-Dinitrotoluene	ND	330	1	B7E0781	05/23/2017	06/01/17 03:10	
2-Chloronaphthalene	ND	330	1	B7E0781	05/23/2017	06/01/17 03:10	
2-Chlorophenol	ND	330	1	B7E0781	05/23/2017	06/01/17 03:10	
2-Methylnaphthalene	ND	330	1	B7E0781	05/23/2017	06/01/17 03:10	
2-Methylphenol	ND	330	1	B7E0781	05/23/2017	06/01/17 03:10	
2-Nitroaniline	ND	1600	1	B7E0781	05/23/2017	06/01/17 03:10	
2-Nitrophenol	ND	330	1	B7E0781	05/23/2017	06/01/17 03:10	

Certificate of Analysis

Hushmand Associates, Inc.	Project Number : 6th St Bridge, LAC-17-001
250 Goddard	Report To : Naresh Bellana
Irvine , CA 92618	Reported : 06/05/2017

Client Sample ID 7-2-0.5

Lab ID: 1702036-69

Semivolatile Organic Compounds by EPA 8270C **Analyst: SP**

Analyte	Result (ug/kg)	PQL (ug/kg)	Dilution	Batch	Prepared	Date/Time Analyzed	Notes
3,3´-Dichlorobenzidine	ND	660	1	B7E0781	05/23/2017	06/01/17 03:10	
3-Nitroaniline	ND	1600	1	B7E0781	05/23/2017	06/01/17 03:10	
4,6-Dinitro-2-methyphenol	ND	1600	1	B7E0781	05/23/2017	06/01/17 03:10	
4-Bromophenyl-phenylether	ND	330	1	B7E0781	05/23/2017	06/01/17 03:10	
4-Chloro-3-methylphenol	ND	660	1	B7E0781	05/23/2017	06/01/17 03:10	
4-Chloroaniline	ND	660	1	B7E0781	05/23/2017	06/01/17 03:10	
4-Chlorophenyl-phenylether	ND	330	1	B7E0781	05/23/2017	06/01/17 03:10	
4-Methylphenol	ND	330	1	B7E0781	05/23/2017	06/01/17 03:10	
4-Nitroaniline	ND	1600	1	B7E0781	05/23/2017	06/01/17 03:10	
4-Nitrophenol	ND	330	1	B7E0781	05/23/2017	06/01/17 03:10	
Acenaphthene	ND	330	1	B7E0781	05/23/2017	06/01/17 03:10	
Acenaphthylene	ND	330	1	B7E0781	05/23/2017	06/01/17 03:10	
Anthracene	ND	330	1	B7E0781	05/23/2017	06/01/17 03:10	
Benzidine (M)	ND	1600	1	B7E0781	05/23/2017	06/01/17 03:10	
Benzo(a)anthracene	ND	330	1	B7E0781	05/23/2017	06/01/17 03:10	
Benzo(a)pyrene	ND	330	1	B7E0781	05/23/2017	06/01/17 03:10	
Benzo(b)fluoranthene	ND	330	1	B7E0781	05/23/2017	06/01/17 03:10	
Benzo(g,h,i)perylene	ND	330	1	B7E0781	05/23/2017	06/01/17 03:10	
Benzo(k)fluoranthene	ND	330	1	B7E0781	05/23/2017	06/01/17 03:10	
Benzoic acid	ND	1600	1	B7E0781	05/23/2017	06/01/17 03:10	
Benzyl alcohol	ND	660	1	B7E0781	05/23/2017	06/01/17 03:10	
bis(2-chloroethoxy)methane	ND	330	1	B7E0781	05/23/2017	06/01/17 03:10	
bis(2-Chloroethyl)ether	ND	330	1	B7E0781	05/23/2017	06/01/17 03:10	
bis(2-chloroisopropyl)ether	ND	330	1	B7E0781	05/23/2017	06/01/17 03:10	
bis(2-ethylhexyl)phthalate	ND	330	1	B7E0781	05/23/2017	06/01/17 03:10	
Butylbenzylphthalate	ND	330	1	B7E0781	05/23/2017	06/01/17 03:10	
Chrysene	ND	330	1	B7E0781	05/23/2017	06/01/17 03:10	
Di-n-butylphthalate	ND	330	1	B7E0781	05/23/2017	06/01/17 03:10	
Di-n-octylphthalate	ND	330	1	B7E0781	05/23/2017	06/01/17 03:10	
Dibenz(a,h)anthracene	ND	330	1	B7E0781	05/23/2017	06/01/17 03:10	
Dibenzofuran	ND	330	1	B7E0781	05/23/2017	06/01/17 03:10	
Diethyl phthalate	ND	330	1	B7E0781	05/23/2017	06/01/17 03:10	
Dimethyl phthalate	ND	330	1	B7E0781	05/23/2017	06/01/17 03:10	
Fluoranthene	ND	330	1	B7E0781	05/23/2017	06/01/17 03:10	
Fluorene	ND	330	1	B7E0781	05/23/2017	06/01/17 03:10	
Hexachlorobenzene	ND	330	1	B7E0781	05/23/2017	06/01/17 03:10	
Hexachlorobutadiene	ND	660	1	B7E0781	05/23/2017	06/01/17 03:10	

Certificate of Analysis

Hushmand Associates, Inc.	Project Number : 6th St Bridge, LAC-17-001
250 Goddard	Report To : Naresh Bellana
Irvine , CA 92618	Reported : 06/05/2017

Client Sample ID 7-2-0.5

Lab ID: 1702036-69

Semivolatile Organic Compounds by EPA 8270C **Analyst: SP**

Analyte		Result (ug/kg)	PQL (ug/kg)	Dilution	Batch	Prepared	Date/Time Analyzed	Notes
Hexachlorocyclopentadiene		ND	660	1	B7E0781	05/23/2017	06/01/17 03:10	
Hexachloroethane		ND	330	1	B7E0781	05/23/2017	06/01/17 03:10	
Indeno(1,2,3-cd)pyrene		ND	330	1	B7E0781	05/23/2017	06/01/17 03:10	
Isophorone		ND	330	1	B7E0781	05/23/2017	06/01/17 03:10	
N-Nitroso-di-n propylamine		ND	330	1	B7E0781	05/23/2017	06/01/17 03:10	
N-Nitrosodiphenylamine		ND	330	1	B7E0781	05/23/2017	06/01/17 03:10	
Naphthalene		ND	330	1	B7E0781	05/23/2017	06/01/17 03:10	
Nitrobenzene		ND	330	1	B7E0781	05/23/2017	06/01/17 03:10	
Pentachlorophenol		ND	1600	1	B7E0781	05/23/2017	06/01/17 03:10	
Phenanthrene		ND	330	1	B7E0781	05/23/2017	06/01/17 03:10	
Phenol		ND	330	1	B7E0781	05/23/2017	06/01/17 03:10	
Pyrene		ND	330	1	B7E0781	05/23/2017	06/01/17 03:10	
Pyridine		ND	1600	1	B7E0781	05/23/2017	06/01/17 03:10	
Surrogate: 1,2-Dichlorobenzene-d4	*47.0 %*		*38 - 93*		B7E0781	05/23/2017	*06/01/17 03:10*	
Surrogate: 2,4,6-Tribromophenol	*56.3 %*		*27 - 124*		B7E0781	05/23/2017	*06/01/17 03:10*	
Surrogate: 2-Chlorophenol-d4	*47.5 %*		*36 - 96*		B7E0781	05/23/2017	*06/01/17 03:10*	
Surrogate: 2-Fluorobiphenyl	*55.8 %*		*44 - 100*		B7E0781	05/23/2017	*06/01/17 03:10*	
Surrogate: 2-Fluorophenol	*45.1 %*		*32 - 89*		B7E0781	05/23/2017	*06/01/17 03:10*	
Surrogate: 4-Terphenyl-d14	*58.1 %*		*49 - 123*		B7E0781	05/23/2017	*06/01/17 03:10*	
Surrogate: Nitrobenzene-d5	*53.4 %*		*38 - 104*		B7E0781	05/23/2017	*06/01/17 03:10*	
Surrogate: Phenol-d5	*47.3 %*		*35 - 95*		B7E0781	05/23/2017	*06/01/17 03:10*	

Certificate of Analysis

Hushmand Associates, Inc.	Project Number : 6th St Bridge, LAC-17-001
250 Goddard	Report To : Naresh Bellana
Irvine , CA 92618	Reported : 06/05/2017

Client Sample ID 7-2-1.0

Lab ID: 1702036-70

Title 22 Metals by ICP-AES EPA 6010B **Analyst: KEK**

Analyte	Result (mg/kg)	PQL (mg/kg)	Dilution	Batch	Prepared	Date/Time Analyzed	Notes
Antimony	ND	2.0	1	B7E0683	05/20/2017	05/22/17 11:52	
Arsenic	ND	1.0	1	B7E0683	05/20/2017	05/22/17 11:52	
Barium	**35**	1.0	1	B7E0683	05/20/2017	05/22/17 11:52	
Beryllium	ND	1.0	1	B7E0683	05/20/2017	05/22/17 11:52	
Cadmium	ND	1.0	1	B7E0683	05/20/2017	05/22/17 11:52	
Chromium	**4.5**	1.0	1	B7E0683	05/20/2017	05/22/17 11:52	
Cobalt	**3.9**	1.0	1	B7E0683	05/20/2017	05/22/17 11:52	
Copper	**3.1**	2.0	1	B7E0683	05/20/2017	05/22/17 11:52	
Lead	**1.1**	1.0	1	B7E0683	05/20/2017	05/22/17 11:52	
Molybdenum	ND	1.0	1	B7E0683	05/20/2017	05/22/17 11:52	
Nickel	**3.2**	1.0	1	B7E0683	05/20/2017	05/22/17 11:52	
Selenium	ND	1.0	1	B7E0683	05/20/2017	05/22/17 11:52	
Silver	ND	1.0	1	B7E0683	05/20/2017	05/22/17 11:52	
Thallium	ND	1.0	1	B7E0683	05/20/2017	05/22/17 11:52	
Vanadium	**15**	1.0	1	B7E0683	05/20/2017	05/22/17 11:52	
Zinc	**17**	1.0	1	B7E0683	05/20/2017	05/22/17 11:52	

Mercury by AA (Cold Vapor) EPA 7471A **Analyst: KEK**

Analyte	Result (mg/kg)	PQL (mg/kg)	Dilution	Batch	Prepared	Date/Time Analyzed	Notes
Mercury	ND	0.10	1	B7E0678	05/20/2017	05/22/17 16:08	

Certificate of Analysis

Hushmand Associates, Inc.	Project Number : 6th St Bridge, LAC-17-001
250 Goddard	Report To : Naresh Bellana
Irvine , CA 92618	Reported : 06/05/2017

Client Sample ID 7-2-3.0

Lab ID: 1702036-71

Title 22 Metals by ICP-AES EPA 6010B

Analyst: KEK

Analyte	Result (mg/kg)	PQL (mg/kg)	Dilution	Batch	Prepared	Date/Time Analyzed	Notes
Antimony	ND	2.0	1	B7E0683	05/20/2017	05/22/17 12:01	
Arsenic	ND	1.0	1	B7E0683	05/20/2017	05/22/17 12:01	
Barium	**23**	1.0	1	B7E0683	05/20/2017	05/22/17 12:01	
Beryllium	ND	1.0	1	B7E0683	05/20/2017	05/22/17 12:01	
Cadmium	ND	1.0	1	B7E0683	05/20/2017	05/22/17 12:01	
Chromium	**2.9**	1.0	1	B7E0683	05/20/2017	05/22/17 12:01	
Cobalt	**2.5**	1.0	1	B7E0683	05/20/2017	05/22/17 12:01	
Copper	**2.1**	2.0	1	B7E0683	05/20/2017	05/22/17 12:01	
Lead	ND	1.0	1	B7E0683	05/20/2017	05/22/17 12:01	
Molybdenum	ND	1.0	1	B7E0683	05/20/2017	05/22/17 12:01	
Nickel	**2.1**	1.0	1	B7E0683	05/20/2017	05/22/17 12:01	
Selenium	ND	1.0	1	B7E0683	05/20/2017	05/22/17 12:01	
Silver	ND	1.0	1	B7E0683	05/20/2017	05/22/17 12:01	
Thallium	ND	1.0	1	B7E0683	05/20/2017	05/22/17 12:01	
Vanadium	**11**	1.0	1	B7E0683	05/20/2017	05/22/17 12:01	
Zinc	**13**	1.0	1	B7E0683	05/20/2017	05/22/17 12:01	

Mercury by AA (Cold Vapor) EPA 7471A

Analyst: KEK

Analyte	Result (mg/kg)	PQL (mg/kg)	Dilution	Batch	Prepared	Date/Time Analyzed	Notes
Mercury	**0.19**	0.10	1	B7E0678	05/20/2017	05/22/17 16:22	

Gasoline Range Organics by EPA 8015B (Modified)

Analyst: VW

Analyte		Result (mg/kg)	PQL (mg/kg)	Dilution	Batch	Prepared	Date/Time Analyzed	Notes
Gasoline Range Organics		ND	1.0	1	B7E0657	05/21/2017	05/21/17 15:31	
Surrogate: 4-Bromofluorobenzene	*102 %*		*36 - 125*		B7E0657	05/21/2017	*05/21/17 15:31*	

Diesel Range Organics by EPA 8015B

Analyst: CR

Analyte		Result (mg/kg)	PQL (mg/kg)	Dilution	Batch	Prepared	Date/Time Analyzed	Notes
DRO		ND	10	1	B7E0785	05/23/2017	05/25/17 01:34	
Surrogate: p-Terphenyl	*79.5 %*		*47 - 157*		B7E0785	05/23/2017	*05/25/17 01:34*	

Certificate of Analysis

Hushmand Associates, Inc.	Project Number : 6th St Bridge, LAC-17-001
250 Goddard	Report To : Naresh Bellana
Irvine , CA 92618	Reported : 06/05/2017

Client Sample ID 7-2-3.0

Lab ID: 1702036-71

Volatile Organic Compounds by EPA 8260B **Analyst: AG**

Analyte	Result (ug/kg)	PQL (ug/kg)	Dilution	Batch	Prepared	Date/Time Analyzed	Notes
1,1,1,2-Tetrachloroethane	ND	5.0	1	B7E0639	05/18/2017	05/18/17 19:28	
1,1,1-Trichloroethane	ND	5.0	1	B7E0639	05/18/2017	05/18/17 19:28	
1,1,2,2-Tetrachloroethane	ND	5.0	1	B7E0639	05/18/2017	05/18/17 19:28	
1,1,2-Trichloroethane	ND	5.0	1	B7E0639	05/18/2017	05/18/17 19:28	
1,1-Dichloroethane	ND	5.0	1	B7E0639	05/18/2017	05/18/17 19:28	
1,1-Dichloroethene	ND	5.0	1	B7E0639	05/18/2017	05/18/17 19:28	
1,1-Dichloropropene	ND	5.0	1	B7E0639	05/18/2017	05/18/17 19:28	
1,2,3-Trichloropropane	ND	5.0	1	B7E0639	05/18/2017	05/18/17 19:28	
1,2,3-Trichlorobenzene	ND	5.0	1	B7E0639	05/18/2017	05/18/17 19:28	
1,2,4-Trichlorobenzene	ND	5.0	1	B7E0639	05/18/2017	05/18/17 19:28	
1,2,4-Trimethylbenzene	ND	5.0	1	B7E0639	05/18/2017	05/18/17 19:28	
1,2-Dibromo-3-chloropropane	ND	10	1	B7E0639	05/18/2017	05/18/17 19:28	
1,2-Dibromoethane	ND	5.0	1	B7E0639	05/18/2017	05/18/17 19:28	
1,2-Dichlorobenzene	ND	5.0	1	B7E0639	05/18/2017	05/18/17 19:28	
1,2-Dichloroethane	ND	5.0	1	B7E0639	05/18/2017	05/18/17 19:28	
1,2-Dichloropropane	ND	5.0	1	B7E0639	05/18/2017	05/18/17 19:28	
1,3,5-Trimethylbenzene	ND	5.0	1	B7E0639	05/18/2017	05/18/17 19:28	
1,3-Dichlorobenzene	ND	5.0	1	B7E0639	05/18/2017	05/18/17 19:28	
1,3-Dichloropropane	ND	5.0	1	B7E0639	05/18/2017	05/18/17 19:28	
1,4-Dichlorobenzene	ND	5.0	1	B7E0639	05/18/2017	05/18/17 19:28	
2,2-Dichloropropane	ND	5.0	1	B7E0639	05/18/2017	05/18/17 19:28	
2-Chlorotoluene	ND	5.0	1	B7E0639	05/18/2017	05/18/17 19:28	
4-Chlorotoluene	ND	5.0	1	B7E0639	05/18/2017	05/18/17 19:28	
4-Isopropyltoluene	ND	5.0	1	B7E0639	05/18/2017	05/18/17 19:28	
Benzene	ND	5.0	1	B7E0639	05/18/2017	05/18/17 19:28	
Bromobenzene	ND	5.0	1	B7E0639	05/18/2017	05/18/17 19:28	
Bromochloromethane	ND	5.0	1	B7E0639	05/18/2017	05/18/17 19:28	
Bromodichloromethane	ND	5.0	1	B7E0639	05/18/2017	05/18/17 19:28	
Bromoform	ND	5.0	1	B7E0639	05/18/2017	05/18/17 19:28	
Bromomethane	ND	5.0	1	B7E0639	05/18/2017	05/18/17 19:28	
Carbon disulfide	ND	5.0	1	B7E0639	05/18/2017	05/18/17 19:28	
Carbon tetrachloride	ND	5.0	1	B7E0639	05/18/2017	05/18/17 19:28	
Chlorobenzene	ND	5.0	1	B7E0639	05/18/2017	05/18/17 19:28	
Chloroethane	ND	5.0	1	B7E0639	05/18/2017	05/18/17 19:28	
Chloroform	ND	5.0	1	B7E0639	05/18/2017	05/18/17 19:28	
Chloromethane	ND	5.0	1	B7E0639	05/18/2017	05/18/17 19:28	
cis-1,2-Dichloroethene	ND	5.0	1	B7E0639	05/18/2017	05/18/17 19:28	

Certificate of Analysis

Hushmand Associates, Inc.	Project Number : 6th St Bridge, LAC-17-001
250 Goddard	Report To : Naresh Bellana
Irvine , CA 92618	Reported : 06/05/2017

Client Sample ID 7-2-3.0

Lab ID: 1702036-71

Volatile Organic Compounds by EPA 8260B **Analyst: AG**

Analyte	Result (ug/kg)	PQL (ug/kg)	Dilution	Batch	Prepared	Date/Time Analyzed	Notes
cis-1,3-Dichloropropene	ND	5.0	1	B7E0639	05/18/2017	05/18/17 19:28	
Di-isopropyl ether	ND	5.0	1	B7E0639	05/18/2017	05/18/17 19:28	
Dibromochloromethane	ND	5.0	1	B7E0639	05/18/2017	05/18/17 19:28	
Dibromomethane	ND	5.0	1	B7E0639	05/18/2017	05/18/17 19:28	
Dichlorodifluoromethane	ND	5.0	1	B7E0639	05/18/2017	05/18/17 19:28	
Ethyl Acetate	ND	50	1	B7E0639	05/18/2017	05/18/17 19:28	
Ethyl Ether	ND	50	1	B7E0639	05/18/2017	05/18/17 19:28	
Ethyl tert-butyl ether	ND	5.0	1	B7E0639	05/18/2017	05/18/17 19:28	
Ethylbenzene	ND	5.0	1	B7E0639	05/18/2017	05/18/17 19:28	
Freon-113	ND	5.0	1	B7E0639	05/18/2017	05/18/17 19:28	
Hexachlorobutadiene	ND	5.0	1	B7E0639	05/18/2017	05/18/17 19:28	
Isopropylbenzene	ND	5.0	1	B7E0639	05/18/2017	05/18/17 19:28	
m,p-Xylene	ND	10	1	B7E0639	05/18/2017	05/18/17 19:28	
Methylene chloride	ND	5.0	1	B7E0639	05/18/2017	05/18/17 19:28	
MTBE	ND	5.0	1	B7E0639	05/18/2017	05/18/17 19:28	
n-Butylbenzene	ND	5.0	1	B7E0639	05/18/2017	05/18/17 19:28	
n-Propylbenzene	ND	5.0	1	B7E0639	05/18/2017	05/18/17 19:28	
Naphthalene	ND	5.0	1	B7E0639	05/18/2017	05/18/17 19:28	
o-Xylene	ND	5.0	1	B7E0639	05/18/2017	05/18/17 19:28	
sec-Butylbenzene	ND	5.0	1	B7E0639	05/18/2017	05/18/17 19:28	
Styrene	ND	5.0	1	B7E0639	05/18/2017	05/18/17 19:28	
tert-Amyl methyl ether	ND	5.0	1	B7E0639	05/18/2017	05/18/17 19:28	
tert-Butanol	ND	100	1	B7E0639	05/18/2017	05/18/17 19:28	
tert-Butylbenzene	ND	5.0	1	B7E0639	05/18/2017	05/18/17 19:28	
Tetrachloroethene	ND	5.0	1	B7E0639	05/18/2017	05/18/17 19:28	
Toluene	ND	5.0	1	B7E0639	05/18/2017	05/18/17 19:28	
trans-1,2-Dichloroethene	ND	5.0	1	B7E0639	05/18/2017	05/18/17 19:28	
trans-1,3-Dichloropropene	ND	5.0	1	B7E0639	05/18/2017	05/18/17 19:28	
Trichloroethene	ND	5.0	1	B7E0639	05/18/2017	05/18/17 19:28	
Trichlorofluoromethane	ND	5.0	1	B7E0639	05/18/2017	05/18/17 19:28	
Vinyl acetate	ND	50	1	B7E0639	05/18/2017	05/18/17 19:28	
Vinyl chloride	ND	5.0	1	B7E0639	05/18/2017	05/18/17 19:28	
Surrogate: 1,2-Dichloroethane-d4	*102 %*	*12 - 186*		B7E0639	05/18/2017	*05/18/17 19:28*	
Surrogate: 4-Bromofluorobenzene	*104 %*	*23 - 162*		B7E0639	05/18/2017	*05/18/17 19:28*	
Surrogate: Dibromofluoromethane	*98.9 %*	*23 - 179*		B7E0639	05/18/2017	*05/18/17 19:28*	
Surrogate: Toluene-d8	*102 %*	*26 - 164*		B7E0639	05/18/2017	*05/18/17 19:28*	

Certificate of Analysis

Hushmand Associates, Inc.	Project Number : 6th St Bridge, LAC-17-001
250 Goddard	Report To : Naresh Bellana
Irvine , CA 92618	Reported : 06/05/2017

Client Sample ID 7-2-3.0

Lab ID: 1702036-71

Semivolatile Organic Compounds by EPA 8270C **Analyst: SP**

Analyte	Result (ug/kg)	PQL (ug/kg)	Dilution	Batch	Prepared	Date/Time Analyzed	Notes
1,2,4-Trichlorobenzene	ND	330	1	B7E0781	05/23/2017	06/01/17 03:37	
1,2-Dichlorobenzene	ND	330	1	B7E0781	05/23/2017	06/01/17 03:37	
1,3-Dichlorobenzene	ND	330	1	B7E0781	05/23/2017	06/01/17 03:37	
1,4-Dichlorobenzene	ND	330	1	B7E0781	05/23/2017	06/01/17 03:37	
2,4,5-Trichlorophenol	ND	330	1	B7E0781	05/23/2017	06/01/17 03:37	
2,4,6-Trichlorophenol	ND	330	1	B7E0781	05/23/2017	06/01/17 03:37	
2,4-Dichlorophenol	ND	1600	1	B7E0781	05/23/2017	06/01/17 03:37	
2,4-Dimethylphenol	ND	330	1	B7E0781	05/23/2017	06/01/17 03:37	
2,4-Dinitrophenol	ND	1600	1	B7E0781	05/23/2017	06/01/17 03:37	
2,4-Dinitrotoluene	ND	330	1	B7E0781	05/23/2017	06/01/17 03:37	
2,6-Dinitrotoluene	ND	330	1	B7E0781	05/23/2017	06/01/17 03:37	
2-Chloronaphthalene	ND	330	1	B7E0781	05/23/2017	06/01/17 03:37	
2-Chlorophenol	ND	330	1	B7E0781	05/23/2017	06/01/17 03:37	
2-Methylnaphthalene	ND	330	1	B7E0781	05/23/2017	06/01/17 03:37	
2-Methylphenol	ND	330	1	B7E0781	05/23/2017	06/01/17 03:37	
2-Nitroaniline	ND	1600	1	B7E0781	05/23/2017	06/01/17 03:37	
2-Nitrophenol	ND	330	1	B7E0781	05/23/2017	06/01/17 03:37	
3,3´-Dichlorobenzidine	ND	660	1	B7E0781	05/23/2017	06/01/17 03:37	
3-Nitroaniline	ND	1600	1	B7E0781	05/23/2017	06/01/17 03:37	
4,6-Dinitro-2-methyphenol	ND	1600	1	B7E0781	05/23/2017	06/01/17 03:37	
4-Bromophenyl-phenylether	ND	330	1	B7E0781	05/23/2017	06/01/17 03:37	
4-Chloro-3-methylphenol	ND	660	1	B7E0781	05/23/2017	06/01/17 03:37	
4-Chloroaniline	ND	660	1	B7E0781	05/23/2017	06/01/17 03:37	
4-Chlorophenyl-phenylether	ND	330	1	B7E0781	05/23/2017	06/01/17 03:37	
4-Methylphenol	ND	330	1	B7E0781	05/23/2017	06/01/17 03:37	
4-Nitroaniline	ND	1600	1	B7E0781	05/23/2017	06/01/17 03:37	
4-Nitrophenol	ND	330	1	B7E0781	05/23/2017	06/01/17 03:37	
Acenaphthene	ND	330	1	B7E0781	05/23/2017	06/01/17 03:37	
Acenaphthylene	ND	330	1	B7E0781	05/23/2017	06/01/17 03:37	
Anthracene	ND	330	1	B7E0781	05/23/2017	06/01/17 03:37	
Benzidine (M)	ND	1600	1	B7E0781	05/23/2017	06/01/17 03:37	
Benzo(a)anthracene	ND	330	1	B7E0781	05/23/2017	06/01/17 03:37	
Benzo(a)pyrene	ND	330	1	B7E0781	05/23/2017	06/01/17 03:37	
Benzo(b)fluoranthene	ND	330	1	B7E0781	05/23/2017	06/01/17 03:37	
Benzo(g,h,i)perylene	ND	330	1	B7E0781	05/23/2017	06/01/17 03:37	
Benzo(k)fluoranthene	ND	330	1	B7E0781	05/23/2017	06/01/17 03:37	
Benzoic acid	ND	1600	1	B7E0781	05/23/2017	06/01/17 03:37	

Certificate of Analysis

Hushmand Associates, Inc.	Project Number : 6th St Bridge, LAC-17-001
250 Goddard	Report To : Naresh Bellana
Irvine , CA 92618	Reported : 06/05/2017

Client Sample ID 7-2-3.0

Lab ID: 1702036-71

Semivolatile Organic Compounds by EPA 8270C **Analyst: SP**

Analyte	Result (ug/kg)	PQL (ug/kg)	Dilution	Batch	Prepared	Date/Time Analyzed	Notes
Benzyl alcohol	ND	660	1	B7E0781	05/23/2017	06/01/17 03:37	
bis(2-chloroethoxy)methane	ND	330	1	B7E0781	05/23/2017	06/01/17 03:37	
bis(2-Chloroethyl)ether	ND	330	1	B7E0781	05/23/2017	06/01/17 03:37	
bis(2-chloroisopropyl)ether	ND	330	1	B7E0781	05/23/2017	06/01/17 03:37	
bis(2-ethylhexyl)phthalate	ND	330	1	B7E0781	05/23/2017	06/01/17 03:37	
Butylbenzylphthalate	ND	330	1	B7E0781	05/23/2017	06/01/17 03:37	
Chrysene	ND	330	1	B7E0781	05/23/2017	06/01/17 03:37	
Di-n-butylphthalate	ND	330	1	B7E0781	05/23/2017	06/01/17 03:37	
Di-n-octylphthalate	ND	330	1	B7E0781	05/23/2017	06/01/17 03:37	
Dibenz(a,h)anthracene	ND	330	1	B7E0781	05/23/2017	06/01/17 03:37	
Dibenzofuran	ND	330	1	B7E0781	05/23/2017	06/01/17 03:37	
Diethyl phthalate	ND	330	1	B7E0781	05/23/2017	06/01/17 03:37	
Dimethyl phthalate	ND	330	1	B7E0781	05/23/2017	06/01/17 03:37	
Fluoranthene	ND	330	1	B7E0781	05/23/2017	06/01/17 03:37	
Fluorene	ND	330	1	B7E0781	05/23/2017	06/01/17 03:37	
Hexachlorobenzene	ND	330	1	B7E0781	05/23/2017	06/01/17 03:37	
Hexachlorobutadiene	ND	660	1	B7E0781	05/23/2017	06/01/17 03:37	
Hexachlorocyclopentadiene	ND	660	1	B7E0781	05/23/2017	06/01/17 03:37	
Hexachloroethane	ND	330	1	B7E0781	05/23/2017	06/01/17 03:37	
Indeno(1,2,3-cd)pyrene	ND	330	1	B7E0781	05/23/2017	06/01/17 03:37	
Isophorone	ND	330	1	B7E0781	05/23/2017	06/01/17 03:37	
N-Nitroso-di-n propylamine	ND	330	1	B7E0781	05/23/2017	06/01/17 03:37	
N-Nitrosodiphenylamine	ND	330	1	B7E0781	05/23/2017	06/01/17 03:37	
Naphthalene	ND	330	1	B7E0781	05/23/2017	06/01/17 03:37	
Nitrobenzene	ND	330	1	B7E0781	05/23/2017	06/01/17 03:37	
Pentachlorophenol	ND	1600	1	B7E0781	05/23/2017	06/01/17 03:37	
Phenanthrene	ND	330	1	B7E0781	05/23/2017	06/01/17 03:37	
Phenol	ND	330	1	B7E0781	05/23/2017	06/01/17 03:37	
Pyrene	ND	330	1	B7E0781	05/23/2017	06/01/17 03:37	
Pyridine	ND	1600	1	B7E0781	05/23/2017	06/01/17 03:37	
Surrogate: 1,2-Dichlorobenzene-d4	*48.4 %*	*38 - 93*		B7E0781	05/23/2017	*06/01/17 03:37*	
Surrogate: 2,4,6-Tribromophenol	*54.3 %*	*27 - 124*		B7E0781	05/23/2017	*06/01/17 03:37*	
Surrogate: 2-Chlorophenol-d4	*49.1 %*	*36 - 96*		B7E0781	05/23/2017	*06/01/17 03:37*	
Surrogate: 2-Fluorobiphenyl	*55.9 %*	*44 - 100*		B7E0781	05/23/2017	*06/01/17 03:37*	
Surrogate: 2-Fluorophenol	*47.5 %*	*32 - 89*		B7E0781	05/23/2017	*06/01/17 03:37*	
Surrogate: 4-Terphenyl-d14	*55.3 %*	*49 - 123*		B7E0781	05/23/2017	*06/01/17 03:37*	
Surrogate: Nitrobenzene-d5	*52.1 %*	*38 - 104*		B7E0781	05/23/2017	*06/01/17 03:37*	

Certificate of Analysis

Hushmand Associates, Inc.	Project Number : 6th St Bridge, LAC-17-001
250 Goddard	Report To : Naresh Bellana
Irvine , CA 92618	Reported : 06/05/2017

Client Sample ID 7-2-3.0

Lab ID: 1702036-71

Semivolatile Organic Compounds by EPA 8270C

Analyst: SP

Analyte	Result (ug/kg)	PQL (ug/kg)	Dilution	Batch	Prepared	Date/Time Analyzed	Notes
Surrogate: Phenol-d5	*47.1 %*	*35 - 95*		B7E0781	05/23/2017	*06/01/17 03:37*	

Certificate of Analysis

Hushmand Associates, Inc.	Project Number : 6th St Bridge, LAC-17-001
250 Goddard	Report To : Naresh Bellana
Irvine , CA 92618	Reported : 06/05/2017

Client Sample ID 7-2-5.0

Lab ID: 1702036-72

Title 22 Metals by ICP-AES EPA 6010B **Analyst: KEK**

Analyte	Result (mg/kg)	PQL (mg/kg)	Dilution	Batch	Prepared	Date/Time Analyzed	Notes
Antimony	ND	2.0	1	B7E0683	05/20/2017	05/22/17 12:05	
Arsenic	ND	1.0	1	B7E0683	05/20/2017	05/22/17 12:05	
Barium	**24**	1.0	1	B7E0683	05/20/2017	05/22/17 12:05	
Beryllium	ND	1.0	1	B7E0683	05/20/2017	05/22/17 12:05	
Cadmium	ND	1.0	1	B7E0683	05/20/2017	05/22/17 12:05	
Chromium	**2.7**	1.0	1	B7E0683	05/20/2017	05/22/17 12:05	
Cobalt	**2.2**	1.0	1	B7E0683	05/20/2017	05/22/17 12:05	
Copper	ND	2.0	1	B7E0683	05/20/2017	05/22/17 12:05	
Lead	ND	1.0	1	B7E0683	05/20/2017	05/22/17 12:05	
Molybdenum	ND	1.0	1	B7E0683	05/20/2017	05/22/17 12:05	
Nickel	**1.9**	1.0	1	B7E0683	05/20/2017	05/22/17 12:05	
Selenium	ND	1.0	1	B7E0683	05/20/2017	05/22/17 12:05	
Silver	ND	1.0	1	B7E0683	05/20/2017	05/22/17 12:05	
Thallium	ND	1.0	1	B7E0683	05/20/2017	05/22/17 12:05	
Vanadium	**10**	1.0	1	B7E0683	05/20/2017	05/22/17 12:05	
Zinc	**11**	1.0	1	B7E0683	05/20/2017	05/22/17 12:05	

Mercury by AA (Cold Vapor) EPA 7471A **Analyst: KEK**

Analyte	Result (mg/kg)	PQL (mg/kg)	Dilution	Batch	Prepared	Date/Time Analyzed	Notes
Mercury	ND	0.10	1	B7E0678	05/20/2017	05/22/17 16:24	

Certificate of Analysis

Hushmand Associates, Inc.	Project Number : 6th St Bridge, LAC-17-001
250 Goddard	Report To : Naresh Bellana
Irvine , CA 92618	Reported : 06/05/2017

Client Sample ID 7-3-0.5

Lab ID: 1702036-73

Title 22 Metals by ICP-AES EPA 6010B

Analyst: KEK

Analyte	Result (mg/kg)	PQL (mg/kg)	Dilution	Batch	Prepared	Date/Time Analyzed	Notes
Antimony	ND	2.0	1	B7E0683	05/20/2017	05/22/17 12:08	
Arsenic	**2.5**	1.0	1	B7E0683	05/20/2017	05/22/17 12:08	
Barium	**110**	1.0	1	B7E0683	05/20/2017	05/22/17 12:08	
Beryllium	ND	1.0	1	B7E0683	05/20/2017	05/22/17 12:08	
Cadmium	ND	1.0	1	B7E0683	05/20/2017	05/22/17 12:08	
Chromium	**13**	1.0	1	B7E0683	05/20/2017	05/22/17 12:08	
Cobalt	**7.8**	1.0	1	B7E0683	05/20/2017	05/22/17 12:08	
Copper	**39**	2.0	1	B7E0683	05/20/2017	05/22/17 12:08	
Lead	**51**	1.0	1	B7E0683	05/20/2017	05/22/17 12:08	
Molybdenum	ND	1.0	1	B7E0683	05/20/2017	05/22/17 12:08	
Nickel	**11**	1.0	1	B7E0683	05/20/2017	05/22/17 12:08	
Selenium	ND	1.0	1	B7E0683	05/20/2017	05/22/17 12:08	
Silver	ND	1.0	1	B7E0683	05/20/2017	05/22/17 12:08	
Thallium	ND	1.0	1	B7E0683	05/20/2017	05/22/17 12:08	
Vanadium	**28**	1.0	1	B7E0683	05/20/2017	05/22/17 12:08	
Zinc	**93**	1.0	1	B7E0683	05/20/2017	05/22/17 12:08	

STLC Metals by ICP-AES by EPA 6010B

Analyst: GO

Analyte	Result (mg/L)	PQL (mg/L)	Dilution	Batch	Prepared	Date/Time Analyzed	Notes
Lead	**4.5**	1.0	20	B7F0044	06/02/2017	06/02/17 13:57	D1

Mercury by AA (Cold Vapor) EPA 7471A

Analyst: KEK

Analyte	Result (mg/kg)	PQL (mg/kg)	Dilution	Batch	Prepared	Date/Time Analyzed	Notes
Mercury	**0.17**	0.10	1	B7E0678	05/20/2017	05/22/17 16:26	

Certificate of Analysis

Hushmand Associates, Inc.	Project Number : 6th St Bridge, LAC-17-001
250 Goddard	Report To : Naresh Bellana
Irvine , CA 92618	Reported : 06/05/2017

Client Sample ID 7-3-1.0

Lab ID: 1702036-74

Title 22 Metals by ICP-AES EPA 6010B

Analyst: KEK

Analyte	Result (mg/kg)	PQL (mg/kg)	Dilution	Batch	Prepared	Date/Time Analyzed	Notes
Antimony	ND	2.0	1	B7E0683	05/20/2017	05/22/17 12:11	
Arsenic	**1.1**	1.0	1	B7E0683	05/20/2017	05/22/17 12:11	
Barium	**77**	1.0	1	B7E0683	05/20/2017	05/22/17 12:11	
Beryllium	ND	1.0	1	B7E0683	05/20/2017	05/22/17 12:11	
Cadmium	ND	1.0	1	B7E0683	05/20/2017	05/22/17 12:11	
Chromium	**8.3**	1.0	1	B7E0683	05/20/2017	05/22/17 12:11	
Cobalt	**6.1**	1.0	1	B7E0683	05/20/2017	05/22/17 12:11	
Copper	**11**	2.0	1	B7E0683	05/20/2017	05/22/17 12:11	
Lead	**33**	1.0	1	B7E0683	05/20/2017	05/22/17 12:11	
Molybdenum	ND	1.0	1	B7E0683	05/20/2017	05/22/17 12:11	
Nickel	**5.9**	1.0	1	B7E0683	05/20/2017	05/22/17 12:11	
Selenium	ND	1.0	1	B7E0683	05/20/2017	05/22/17 12:11	
Silver	ND	1.0	1	B7E0683	05/20/2017	05/22/17 12:11	
Thallium	ND	1.0	1	B7E0683	05/20/2017	05/22/17 12:11	
Vanadium	**26**	1.0	1	B7E0683	05/20/2017	05/22/17 12:11	
Zinc	**44**	1.0	1	B7E0683	05/20/2017	05/22/17 12:11	

Mercury by AA (Cold Vapor) EPA 7471A

Analyst: KEK

Analyte	Result (mg/kg)	PQL (mg/kg)	Dilution	Batch	Prepared	Date/Time Analyzed	Notes
Mercury	**0.11**	0.10	1	B7E0678	05/20/2017	05/22/17 16:28	

Gasoline Range Organics by EPA 8015B (Modified)

Analyst: VW

Analyte		Result (mg/kg)	PQL (mg/kg)	Dilution	Batch	Prepared	Date/Time Analyzed	Notes
Gasoline Range Organics		ND	1.0	1	B7E0657	05/21/2017	05/21/17 15:49	
Surrogate: 4-Bromofluorobenzene	*106 %*		*36 - 125*		B7E0657	05/21/2017	*05/21/17 15:49*	

Diesel Range Organics by EPA 8015B

Analyst: CR

Analyte		Result (mg/kg)	PQL (mg/kg)	Dilution	Batch	Prepared	Date/Time Analyzed	Notes
DRO		ND	10	1	B7E0785	05/23/2017	05/25/17 03:14	
Surrogate: p-Terphenyl	*82.5 %*		*47 - 157*		B7E0785	05/23/2017	*05/25/17 03:14*	

Certificate of Analysis

Hushmand Associates, Inc.	Project Number : 6th St Bridge, LAC-17-001
250 Goddard	Report To : Naresh Bellana
Irvine , CA 92618	Reported : 06/05/2017

Client Sample ID 7-3-1.0

Lab ID: 1702036-74

Organochlorine Pesticides by EPA 8081 **Analyst: RL/**

Analyte	Result (ug/kg)	PQL (ug/kg)	Dilution	Batch	Prepared	Date/Time Analyzed	Notes
4,4´-DDD	ND	2.0	1	B7E0819	05/24/2017	05/24/17 17:55	
4,4´-DDE [2C]	ND	2.0	1	B7E0819	05/24/2017	05/24/17 17:55	
4,4´-DDT	ND	2.0	1	B7E0819	05/24/2017	05/24/17 17:55	
Aldrin	ND	1.0	1	B7E0819	05/24/2017	05/24/17 17:55	
alpha-BHC	ND	1.0	1	B7E0819	05/24/2017	05/24/17 17:55	
alpha-Chlordane	ND	1.0	1	B7E0819	05/24/2017	05/24/17 17:55	
beta-BHC	ND	1.0	1	B7E0819	05/24/2017	05/24/17 17:55	
Chlordane	ND	8.5	1	B7E0819	05/24/2017	05/24/17 17:55	
delta-BHC	ND	1.0	1	B7E0819	05/24/2017	05/24/17 17:55	
Dieldrin	ND	2.0	1	B7E0819	05/24/2017	05/24/17 17:55	
Endosulfan I	ND	1.0	1	B7E0819	05/24/2017	05/24/17 17:55	
Endosulfan II	ND	2.0	1	B7E0819	05/24/2017	05/24/17 17:55	
Endosulfan sulfate	ND	2.0	1	B7E0819	05/24/2017	05/24/17 17:55	
Endrin	ND	2.0	1	B7E0819	05/24/2017	05/24/17 17:55	
Endrin aldehyde	ND	2.0	1	B7E0819	05/24/2017	05/24/17 17:55	
Endrin ketone	ND	2.0	1	B7E0819	05/24/2017	05/24/17 17:55	
gamma-BHC	ND	1.0	1	B7E0819	05/24/2017	05/24/17 17:55	
gamma-Chlordane	ND	1.0	1	B7E0819	05/24/2017	05/24/17 17:55	
Heptachlor	ND	1.0	1	B7E0819	05/24/2017	05/24/17 17:55	
Heptachlor epoxide	ND	1.0	1	B7E0819	05/24/2017	05/24/17 17:55	
Methoxychlor	ND	5.0	1	B7E0819	05/24/2017	05/24/17 17:55	
Toxaphene	ND	50	1	B7E0819	05/24/2017	05/24/17 17:55	
Surrogate: Decachlorobiphenyl	*55.8 %*	*27 - 123*		B7E0819	05/24/2017	*05/24/17 17:55*	
Surrogate: Tetrachloro-m-xylene	*77.4 %*	*26 - 108*		B7E0819	05/24/2017	*05/24/17 17:55*	

Certificate of Analysis

Hushmand Associates, Inc.	Project Number : 6th St Bridge, LAC-17-001
250 Goddard	Report To : Naresh Bellana
Irvine , CA 92618	Reported : 06/05/2017

Client Sample ID 7-3-1.0

Lab ID: 1702036-74

Polychlorinated Biphenyls by EPA 8082

Analyst: LT

Analyte	Result (ug/kg)	PQL (ug/kg)	Dilution	Batch	Prepared	Date/Time Analyzed	Notes
Aroclor 1016	ND	16	1	B7E0819	05/24/2017	05/24/17 17:37	
Aroclor 1221	ND	16	1	B7E0819	05/24/2017	05/24/17 17:37	
Aroclor 1232	ND	16	1	B7E0819	05/24/2017	05/24/17 17:37	
Aroclor 1242	ND	16	1	B7E0819	05/24/2017	05/24/17 17:37	
Aroclor 1248	ND	16	1	B7E0819	05/24/2017	05/24/17 17:37	
Aroclor 1254	ND	16	1	B7E0819	05/24/2017	05/24/17 17:37	
Aroclor 1260	ND	16	1	B7E0819	05/24/2017	05/24/17 17:37	
Aroclor 1262	ND	16	1	B7E0819	05/24/2017	05/24/17 17:37	
Aroclor 1268	ND	16	1	B7E0819	05/24/2017	05/24/17 17:37	
Surrogate: Decachlorobiphenyl	*77.1 %*	*18 - 136*		B7E0819	05/24/2017	*05/24/17 17:37*	
Surrogate: Tetrachloro-m-xylene	*99.5 %*	*30 - 130*		B7E0819	05/24/2017	*05/24/17 17:37*	

Volatile Organic Compounds by EPA 8260B

Analyst: AG

Analyte	Result (ug/kg)	PQL (ug/kg)	Dilution	Batch	Prepared	Date/Time Analyzed	Notes
1,1,1,2-Tetrachloroethane	ND	5.0	1	B7E0639	05/18/2017	05/18/17 19:47	
1,1,1-Trichloroethane	ND	5.0	1	B7E0639	05/18/2017	05/18/17 19:47	
1,1,2,2-Tetrachloroethane	ND	5.0	1	B7E0639	05/18/2017	05/18/17 19:47	
1,1,2-Trichloroethane	ND	5.0	1	B7E0639	05/18/2017	05/18/17 19:47	
1,1-Dichloroethane	ND	5.0	1	B7E0639	05/18/2017	05/18/17 19:47	
1,1-Dichloroethene	ND	5.0	1	B7E0639	05/18/2017	05/18/17 19:47	
1,1-Dichloropropene	ND	5.0	1	B7E0639	05/18/2017	05/18/17 19:47	
1,2,3-Trichloropropane	ND	5.0	1	B7E0639	05/18/2017	05/18/17 19:47	
1,2,3-Trichlorobenzene	ND	5.0	1	B7E0639	05/18/2017	05/18/17 19:47	
1,2,4-Trichlorobenzene	ND	5.0	1	B7E0639	05/18/2017	05/18/17 19:47	
1,2,4-Trimethylbenzene	ND	5.0	1	B7E0639	05/18/2017	05/18/17 19:47	
1,2-Dibromo-3-chloropropane	ND	10	1	B7E0639	05/18/2017	05/18/17 19:47	
1,2-Dibromoethane	ND	5.0	1	B7E0639	05/18/2017	05/18/17 19:47	
1,2-Dichlorobenzene	ND	5.0	1	B7E0639	05/18/2017	05/18/17 19:47	
1,2-Dichloroethane	ND	5.0	1	B7E0639	05/18/2017	05/18/17 19:47	
1,2-Dichloropropane	ND	5.0	1	B7E0639	05/18/2017	05/18/17 19:47	
1,3,5-Trimethylbenzene	ND	5.0	1	B7E0639	05/18/2017	05/18/17 19:47	
1,3-Dichlorobenzene	ND	5.0	1	B7E0639	05/18/2017	05/18/17 19:47	
1,3-Dichloropropane	ND	5.0	1	B7E0639	05/18/2017	05/18/17 19:47	
1,4-Dichlorobenzene	ND	5.0	1	B7E0639	05/18/2017	05/18/17 19:47	
2,2-Dichloropropane	ND	5.0	1	B7E0639	05/18/2017	05/18/17 19:47	

Certificate of Analysis

Hushmand Associates, Inc.	Project Number : 6th St Bridge, LAC-17-001
250 Goddard	Report To : Naresh Bellana
Irvine , CA 92618	Reported : 06/05/2017

Client Sample ID 7-3-1.0

Lab ID: 1702036-74

Volatile Organic Compounds by EPA 8260B **Analyst: AG**

Analyte	Result (ug/kg)	PQL (ug/kg)	Dilution	Batch	Prepared	Date/Time Analyzed	Notes
2-Chlorotoluene	ND	5.0	1	B7E0639	05/18/2017	05/18/17 19:47	
4-Chlorotoluene	ND	5.0	1	B7E0639	05/18/2017	05/18/17 19:47	
4-Isopropyltoluene	ND	5.0	1	B7E0639	05/18/2017	05/18/17 19:47	
Benzene	ND	5.0	1	B7E0639	05/18/2017	05/18/17 19:47	
Bromobenzene	ND	5.0	1	B7E0639	05/18/2017	05/18/17 19:47	
Bromochloromethane	ND	5.0	1	B7E0639	05/18/2017	05/18/17 19:47	
Bromodichloromethane	ND	5.0	1	B7E0639	05/18/2017	05/18/17 19:47	
Bromoform	ND	5.0	1	B7E0639	05/18/2017	05/18/17 19:47	
Bromomethane	ND	5.0	1	B7E0639	05/18/2017	05/18/17 19:47	
Carbon disulfide	ND	5.0	1	B7E0639	05/18/2017	05/18/17 19:47	
Carbon tetrachloride	ND	5.0	1	B7E0639	05/18/2017	05/18/17 19:47	
Chlorobenzene	ND	5.0	1	B7E0639	05/18/2017	05/18/17 19:47	
Chloroethane	ND	5.0	1	B7E0639	05/18/2017	05/18/17 19:47	
Chloroform	ND	5.0	1	B7E0639	05/18/2017	05/18/17 19:47	
Chloromethane	ND	5.0	1	B7E0639	05/18/2017	05/18/17 19:47	
cis-1,2-Dichloroethene	ND	5.0	1	B7E0639	05/18/2017	05/18/17 19:47	
cis-1,3-Dichloropropene	ND	5.0	1	B7E0639	05/18/2017	05/18/17 19:47	
Di-isopropyl ether	ND	5.0	1	B7E0639	05/18/2017	05/18/17 19:47	
Dibromochloromethane	ND	5.0	1	B7E0639	05/18/2017	05/18/17 19:47	
Dibromomethane	ND	5.0	1	B7E0639	05/18/2017	05/18/17 19:47	
Dichlorodifluoromethane	ND	5.0	1	B7E0639	05/18/2017	05/18/17 19:47	
Ethyl Acetate	ND	50	1	B7E0639	05/18/2017	05/18/17 19:47	
Ethyl Ether	ND	50	1	B7E0639	05/18/2017	05/18/17 19:47	
Ethyl tert-butyl ether	ND	5.0	1	B7E0639	05/18/2017	05/18/17 19:47	
Ethylbenzene	ND	5.0	1	B7E0639	05/18/2017	05/18/17 19:47	
Freon-113	ND	5.0	1	B7E0639	05/18/2017	05/18/17 19:47	
Hexachlorobutadiene	ND	5.0	1	B7E0639	05/18/2017	05/18/17 19:47	
Isopropylbenzene	ND	5.0	1	B7E0639	05/18/2017	05/18/17 19:47	
m,p-Xylene	ND	10	1	B7E0639	05/18/2017	05/18/17 19:47	
Methylene chloride	ND	5.0	1	B7E0639	05/18/2017	05/18/17 19:47	
MTBE	ND	5.0	1	B7E0639	05/18/2017	05/18/17 19:47	
n-Butylbenzene	ND	5.0	1	B7E0639	05/18/2017	05/18/17 19:47	
n-Propylbenzene	ND	5.0	1	B7E0639	05/18/2017	05/18/17 19:47	
Naphthalene	ND	5.0	1	B7E0639	05/18/2017	05/18/17 19:47	
o-Xylene	ND	5.0	1	B7E0639	05/18/2017	05/18/17 19:47	
sec-Butylbenzene	ND	5.0	1	B7E0639	05/18/2017	05/18/17 19:47	
Styrene	ND	5.0	1	B7E0639	05/18/2017	05/18/17 19:47	

Certificate of Analysis

Hushmand Associates, Inc.	Project Number : 6th St Bridge, LAC-17-001
250 Goddard	Report To : Naresh Bellana
Irvine , CA 92618	Reported : 06/05/2017

Client Sample ID 7-3-1.0

Lab ID: 1702036-74

Volatile Organic Compounds by EPA 8260B

Analyst: AG

Analyte	Result (ug/kg)	PQL (ug/kg)	Dilution	Batch	Prepared	Date/Time Analyzed	Notes
tert-Amyl methyl ether	ND	5.0	1	B7E0639	05/18/2017	05/18/17 19:47	
tert-Butanol	ND	100	1	B7E0639	05/18/2017	05/18/17 19:47	
tert-Butylbenzene	ND	5.0	1	B7E0639	05/18/2017	05/18/17 19:47	
Tetrachloroethene	ND	5.0	1	B7E0639	05/18/2017	05/18/17 19:47	
Toluene	ND	5.0	1	B7E0639	05/18/2017	05/18/17 19:47	
trans-1,2-Dichloroethene	ND	5.0	1	B7E0639	05/18/2017	05/18/17 19:47	
trans-1,3-Dichloropropene	ND	5.0	1	B7E0639	05/18/2017	05/18/17 19:47	
Trichloroethene	ND	5.0	1	B7E0639	05/18/2017	05/18/17 19:47	
Trichlorofluoromethane	ND	5.0	1	B7E0639	05/18/2017	05/18/17 19:47	
Vinyl acetate	ND	50	1	B7E0639	05/18/2017	05/18/17 19:47	
Vinyl chloride	ND	5.0	1	B7E0639	05/18/2017	05/18/17 19:47	
Surrogate: 1,2-Dichloroethane-d4	*103 %*	*12 - 186*		B7E0639	05/18/2017	*05/18/17 19:47*	
Surrogate: 4-Bromofluorobenzene	*105 %*	*23 - 162*		B7E0639	05/18/2017	*05/18/17 19:47*	
Surrogate: Dibromofluoromethane	*96.9 %*	*23 - 179*		B7E0639	05/18/2017	*05/18/17 19:47*	
Surrogate: Toluene-d8	*98.0 %*	*26 - 164*		B7E0639	05/18/2017	*05/18/17 19:47*	

Semivolatile Organic Compounds by EPA 8270C

Analyst: SP

Analyte	Result (ug/kg)	PQL (ug/kg)	Dilution	Batch	Prepared	Date/Time Analyzed	Notes
1,2,4-Trichlorobenzene	ND	1600	5	B7E0781	05/23/2017	06/01/17 05:52	D1
1,2-Dichlorobenzene	ND	1600	5	B7E0781	05/23/2017	06/01/17 05:52	D1
1,3-Dichlorobenzene	ND	1600	5	B7E0781	05/23/2017	06/01/17 05:52	D1
1,4-Dichlorobenzene	ND	1600	5	B7E0781	05/23/2017	06/01/17 05:52	D1
2,4,5-Trichlorophenol	ND	1600	5	B7E0781	05/23/2017	06/01/17 05:52	D1
2,4,6-Trichlorophenol	ND	1600	5	B7E0781	05/23/2017	06/01/17 05:52	D1
2,4-Dichlorophenol	ND	8200	5	B7E0781	05/23/2017	06/01/17 05:52	D1
2,4-Dimethylphenol	ND	1600	5	B7E0781	05/23/2017	06/01/17 05:52	D1
2,4-Dinitrophenol	ND	8200	5	B7E0781	05/23/2017	06/01/17 05:52	D1
2,4-Dinitrotoluene	ND	1600	5	B7E0781	05/23/2017	06/01/17 05:52	D1
2,6-Dinitrotoluene	ND	1600	5	B7E0781	05/23/2017	06/01/17 05:52	D1
2-Chloronaphthalene	ND	1600	5	B7E0781	05/23/2017	06/01/17 05:52	D1
2-Chlorophenol	ND	1600	5	B7E0781	05/23/2017	06/01/17 05:52	D1
2-Methylnaphthalene	ND	1600	5	B7E0781	05/23/2017	06/01/17 05:52	D1
2-Methylphenol	ND	1600	5	B7E0781	05/23/2017	06/01/17 05:52	D1
2-Nitroaniline	ND	8200	5	B7E0781	05/23/2017	06/01/17 05:52	D1
2-Nitrophenol	ND	1600	5	B7E0781	05/23/2017	06/01/17 05:52	D1

Certificate of Analysis

Hushmand Associates, Inc.	Project Number : 6th St Bridge, LAC-17-001
250 Goddard	Report To : Naresh Bellana
Irvine , CA 92618	Reported : 06/05/2017

Client Sample ID 7-3-1.0

Lab ID: 1702036-74

Semivolatile Organic Compounds by EPA 8270C **Analyst: SP**

Analyte	Result (ug/kg)	PQL (ug/kg)	Dilution	Batch	Prepared	Date/Time Analyzed	Notes
3,3´-Dichlorobenzidine	ND	3300	5	B7E0781	05/23/2017	06/01/17 05:52	D1
3-Nitroaniline	ND	8200	5	B7E0781	05/23/2017	06/01/17 05:52	D1
4,6-Dinitro-2-methyphenol	ND	8200	5	B7E0781	05/23/2017	06/01/17 05:52	D1
4-Bromophenyl-phenylether	ND	1600	5	B7E0781	05/23/2017	06/01/17 05:52	D1
4-Chloro-3-methylphenol	ND	3300	5	B7E0781	05/23/2017	06/01/17 05:52	D1
4-Chloroaniline	ND	3300	5	B7E0781	05/23/2017	06/01/17 05:52	D1
4-Chlorophenyl-phenylether	ND	1600	5	B7E0781	05/23/2017	06/01/17 05:52	D1
4-Methylphenol	ND	1600	5	B7E0781	05/23/2017	06/01/17 05:52	D1
4-Nitroaniline	ND	8200	5	B7E0781	05/23/2017	06/01/17 05:52	D1
4-Nitrophenol	ND	1600	5	B7E0781	05/23/2017	06/01/17 05:52	D1
Acenaphthene	ND	1600	5	B7E0781	05/23/2017	06/01/17 05:52	D1
Acenaphthylene	ND	1600	5	B7E0781	05/23/2017	06/01/17 05:52	D1
Anthracene	ND	1600	5	B7E0781	05/23/2017	06/01/17 05:52	D1
Benzidine (M)	ND	8200	5	B7E0781	05/23/2017	06/01/17 05:52	D1
Benzo(a)anthracene	ND	1600	5	B7E0781	05/23/2017	06/01/17 05:52	D1
Benzo(a)pyrene	ND	1600	5	B7E0781	05/23/2017	06/01/17 05:52	D1
Benzo(b)fluoranthene	ND	1600	5	B7E0781	05/23/2017	06/01/17 05:52	D1
Benzo(g,h,i)perylene	ND	1600	5	B7E0781	05/23/2017	06/01/17 05:52	D1
Benzo(k)fluoranthene	ND	1600	5	B7E0781	05/23/2017	06/01/17 05:52	D1
Benzoic acid	ND	8200	5	B7E0781	05/23/2017	06/01/17 05:52	D1
Benzyl alcohol	ND	3300	5	B7E0781	05/23/2017	06/01/17 05:52	D1
bis(2-chloroethoxy)methane	ND	1600	5	B7E0781	05/23/2017	06/01/17 05:52	D1
bis(2-Chloroethyl)ether	ND	1600	5	B7E0781	05/23/2017	06/01/17 05:52	D1
bis(2-chloroisopropyl)ether	ND	1600	5	B7E0781	05/23/2017	06/01/17 05:52	D1
bis(2-ethylhexyl)phthalate	ND	1600	5	B7E0781	05/23/2017	06/01/17 05:52	D1
Butylbenzylphthalate	ND	1600	5	B7E0781	05/23/2017	06/01/17 05:52	D1
Chrysene	ND	1600	5	B7E0781	05/23/2017	06/01/17 05:52	D1
Di-n-butylphthalate	ND	1600	5	B7E0781	05/23/2017	06/01/17 05:52	D1
Di-n-octylphthalate	ND	1600	5	B7E0781	05/23/2017	06/01/17 05:52	D1
Dibenz(a,h)anthracene	ND	1600	5	B7E0781	05/23/2017	06/01/17 05:52	D1
Dibenzofuran	ND	1600	5	B7E0781	05/23/2017	06/01/17 05:52	D1
Diethyl phthalate	ND	1600	5	B7E0781	05/23/2017	06/01/17 05:52	D1
Dimethyl phthalate	ND	1600	5	B7E0781	05/23/2017	06/01/17 05:52	D1
Fluoranthene	ND	1600	5	B7E0781	05/23/2017	06/01/17 05:52	D1
Fluorene	ND	1600	5	B7E0781	05/23/2017	06/01/17 05:52	D1
Hexachlorobenzene	ND	1600	5	B7E0781	05/23/2017	06/01/17 05:52	D1
Hexachlorobutadiene	ND	3300	5	B7E0781	05/23/2017	06/01/17 05:52	D1

Certificate of Analysis

Hushmand Associates, Inc.	Project Number : 6th St Bridge, LAC-17-001
250 Goddard	Report To : Naresh Bellana
Irvine , CA 92618	Reported : 06/05/2017

Client Sample ID 7-3-1.0

Lab ID: 1702036-74

Semivolatile Organic Compounds by EPA 8270C **Analyst: SP**

Analyte		Result (ug/kg)	PQL (ug/kg)	Dilution	Batch	Prepared	Date/Time Analyzed	Notes
Hexachlorocyclopentadiene		ND	3300	5	B7E0781	05/23/2017	06/01/17 05:52	D1
Hexachloroethane		ND	1600	5	B7E0781	05/23/2017	06/01/17 05:52	D1
Indeno(1,2,3-cd)pyrene		ND	1600	5	B7E0781	05/23/2017	06/01/17 05:52	D1
Isophorone		ND	1600	5	B7E0781	05/23/2017	06/01/17 05:52	D1
N-Nitroso-di-n propylamine		ND	1600	5	B7E0781	05/23/2017	06/01/17 05:52	D1
N-Nitrosodiphenylamine		ND	1600	5	B7E0781	05/23/2017	06/01/17 05:52	D1
Naphthalene		ND	1600	5	B7E0781	05/23/2017	06/01/17 05:52	D1
Nitrobenzene		ND	1600	5	B7E0781	05/23/2017	06/01/17 05:52	D1
Pentachlorophenol		ND	8200	5	B7E0781	05/23/2017	06/01/17 05:52	D1
Phenanthrene		ND	1600	5	B7E0781	05/23/2017	06/01/17 05:52	D1
Phenol		ND	1600	5	B7E0781	05/23/2017	06/01/17 05:52	D1
Pyrene		ND	1600	5	B7E0781	05/23/2017	06/01/17 05:52	D1
Pyridine		ND	8200	5	B7E0781	05/23/2017	06/01/17 05:52	D1
Surrogate: 1,2-Dichlorobenzene-d4	*42.4 %*		*38 - 93*		B7E0781	05/23/2017	*06/01/17 05:52*	
Surrogate: 2,4,6-Tribromophenol	*38.0 %*		*27 - 124*		B7E0781	05/23/2017	*06/01/17 05:52*	
Surrogate: 2-Chlorophenol-d4	*38.8 %*		*36 - 96*		B7E0781	05/23/2017	*06/01/17 05:52*	
Surrogate: 2-Fluorobiphenyl	*49.9 %*		*44 - 100*		B7E0781	05/23/2017	*06/01/17 05:52*	
Surrogate: 2-Fluorophenol	*37.8 %*		*32 - 89*		B7E0781	05/23/2017	*06/01/17 05:52*	
Surrogate: 4-Terphenyl-d14	*49.9 %*		*49 - 123*		B7E0781	05/23/2017	*06/01/17 05:52*	
Surrogate: Nitrobenzene-d5	*40.6 %*		*38 - 104*		B7E0781	05/23/2017	*06/01/17 05:52*	
Surrogate: Phenol-d5	*38.0 %*		*35 - 95*		B7E0781	05/23/2017	*06/01/17 05:52*	

Certificate of Analysis

Hushmand Associates, Inc.	Project Number : 6th St Bridge, LAC-17-001
250 Goddard	Report To : Naresh Bellana
Irvine , CA 92618	Reported : 06/05/2017

Client Sample ID 7-3-3.0

Lab ID: 1702036-75

Title 22 Metals by ICP-AES EPA 6010B **Analyst: KEK**

Analyte	Result (mg/kg)	PQL (mg/kg)	Dilution	Batch	Prepared	Date/Time Analyzed	Notes
Antimony	ND	2.0	1	B7E0683	05/20/2017	05/22/17 12:14	
Arsenic	ND	1.0	1	B7E0683	05/20/2017	05/22/17 12:14	
Barium	**61**	1.0	1	B7E0683	05/20/2017	05/22/17 12:14	
Beryllium	ND	1.0	1	B7E0683	05/20/2017	05/22/17 12:14	
Cadmium	ND	1.0	1	B7E0683	05/20/2017	05/22/17 12:14	
Chromium	**7.1**	1.0	1	B7E0683	05/20/2017	05/22/17 12:14	
Cobalt	**5.3**	1.0	1	B7E0683	05/20/2017	05/22/17 12:14	
Copper	**6.8**	2.0	1	B7E0683	05/20/2017	05/22/17 12:14	
Lead	**7.0**	1.0	1	B7E0683	05/20/2017	05/22/17 12:14	
Molybdenum	ND	1.0	1	B7E0683	05/20/2017	05/22/17 12:14	
Nickel	**4.8**	1.0	1	B7E0683	05/20/2017	05/22/17 12:14	
Selenium	ND	1.0	1	B7E0683	05/20/2017	05/22/17 12:14	
Silver	ND	1.0	1	B7E0683	05/20/2017	05/22/17 12:14	
Thallium	ND	1.0	1	B7E0683	05/20/2017	05/22/17 12:14	
Vanadium	**23**	1.0	1	B7E0683	05/20/2017	05/22/17 12:14	
Zinc	**32**	1.0	1	B7E0683	05/20/2017	05/22/17 12:14	

Mercury by AA (Cold Vapor) EPA 7471A **Analyst: KEK**

Analyte	Result (mg/kg)	PQL (mg/kg)	Dilution	Batch	Prepared	Date/Time Analyzed	Notes
Mercury	ND	0.10	1	B7E0678	05/20/2017	05/22/17 16:30	

Certificate of Analysis

Hushmand Associates, Inc.	Project Number : 6th St Bridge, LAC-17-001
250 Goddard	Report To : Naresh Bellana
Irvine , CA 92618	Reported : 06/05/2017

Client Sample ID 7-3-5.0

Lab ID: 1702036-76

Title 22 Metals by ICP-AES EPA 6010B

Analyst: KEK

Analyte	Result (mg/kg)	PQL (mg/kg)	Dilution	Batch	Prepared	Date/Time Analyzed	Notes
Antimony	ND	2.0	1	B7E0683	05/20/2017	05/22/17 12:24	
Arsenic	ND	1.0	1	B7E0683	05/20/2017	05/22/17 12:24	
Barium	**34**	1.0	1	B7E0683	05/20/2017	05/22/17 12:24	
Beryllium	ND	1.0	1	B7E0683	05/20/2017	05/22/17 12:24	
Cadmium	ND	1.0	1	B7E0683	05/20/2017	05/22/17 12:24	
Chromium	**4.6**	1.0	1	B7E0683	05/20/2017	05/22/17 12:24	
Cobalt	**3.3**	1.0	1	B7E0683	05/20/2017	05/22/17 12:24	
Copper	**3.1**	2.0	1	B7E0683	05/20/2017	05/22/17 12:24	
Lead	ND	1.0	1	B7E0683	05/20/2017	05/22/17 12:24	
Molybdenum	ND	1.0	1	B7E0683	05/20/2017	05/22/17 12:24	
Nickel	**2.9**	1.0	1	B7E0683	05/20/2017	05/22/17 12:24	
Selenium	ND	1.0	1	B7E0683	05/20/2017	05/22/17 12:24	
Silver	ND	1.0	1	B7E0683	05/20/2017	05/22/17 12:24	
Thallium	ND	1.0	1	B7E0683	05/20/2017	05/22/17 12:24	
Vanadium	**18**	1.0	1	B7E0683	05/20/2017	05/22/17 12:24	
Zinc	**15**	1.0	1	B7E0683	05/20/2017	05/22/17 12:24	

Mercury by AA (Cold Vapor) EPA 7471A

Analyst: KEK

Analyte	Result (mg/kg)	PQL (mg/kg)	Dilution	Batch	Prepared	Date/Time Analyzed	Notes
Mercury	ND	0.10	1	B7E0678	05/20/2017	05/22/17 16:32	

Gasoline Range Organics by EPA 8015B (Modified)

Analyst: VW

Analyte		Result (mg/kg)	PQL (mg/kg)	Dilution	Batch	Prepared	Date/Time Analyzed	Notes
Gasoline Range Organics		ND	1.0	1	B7E0657	05/21/2017	05/21/17 16:08	
Surrogate: 4-Bromofluorobenzene	*106 %*		*36 - 125*		B7E0657	05/21/2017	*05/21/17 16:08*	

Diesel Range Organics by EPA 8015B

Analyst: CR

Analyte		Result (mg/kg)	PQL (mg/kg)	Dilution	Batch	Prepared	Date/Time Analyzed	Notes
DRO		ND	10	1	B7E0785	05/23/2017	05/24/17 23:52	
Surrogate: p-Terphenyl	*70.8 %*		*47 - 157*		B7E0785	05/23/2017	*05/24/17 23:52*	

Certificate of Analysis

Hushmand Associates, Inc.	Project Number : 6th St Bridge, LAC-17-001
250 Goddard	Report To : Naresh Bellana
Irvine , CA 92618	Reported : 06/05/2017

Client Sample ID 7-3-5.0

Lab ID: 1702036-76

Volatile Organic Compounds by EPA 8260B **Analyst: AG**

Analyte	Result (ug/kg)	PQL (ug/kg)	Dilution	Batch	Prepared	Date/Time Analyzed	Notes
1,1,1,2-Tetrachloroethane	ND	5.0	1	B7E0639	05/18/2017	05/18/17 20:06	
1,1,1-Trichloroethane	ND	5.0	1	B7E0639	05/18/2017	05/18/17 20:06	
1,1,2,2-Tetrachloroethane	ND	5.0	1	B7E0639	05/18/2017	05/18/17 20:06	
1,1,2-Trichloroethane	ND	5.0	1	B7E0639	05/18/2017	05/18/17 20:06	
1,1-Dichloroethane	ND	5.0	1	B7E0639	05/18/2017	05/18/17 20:06	
1,1-Dichloroethene	ND	5.0	1	B7E0639	05/18/2017	05/18/17 20:06	
1,1-Dichloropropene	ND	5.0	1	B7E0639	05/18/2017	05/18/17 20:06	
1,2,3-Trichloropropane	ND	5.0	1	B7E0639	05/18/2017	05/18/17 20:06	
1,2,3-Trichlorobenzene	ND	5.0	1	B7E0639	05/18/2017	05/18/17 20:06	
1,2,4-Trichlorobenzene	ND	5.0	1	B7E0639	05/18/2017	05/18/17 20:06	
1,2,4-Trimethylbenzene	ND	5.0	1	B7E0639	05/18/2017	05/18/17 20:06	
1,2-Dibromo-3-chloropropane	ND	10	1	B7E0639	05/18/2017	05/18/17 20:06	
1,2-Dibromoethane	ND	5.0	1	B7E0639	05/18/2017	05/18/17 20:06	
1,2-Dichlorobenzene	ND	5.0	1	B7E0639	05/18/2017	05/18/17 20:06	
1,2-Dichloroethane	ND	5.0	1	B7E0639	05/18/2017	05/18/17 20:06	
1,2-Dichloropropane	ND	5.0	1	B7E0639	05/18/2017	05/18/17 20:06	
1,3,5-Trimethylbenzene	ND	5.0	1	B7E0639	05/18/2017	05/18/17 20:06	
1,3-Dichlorobenzene	ND	5.0	1	B7E0639	05/18/2017	05/18/17 20:06	
1,3-Dichloropropane	ND	5.0	1	B7E0639	05/18/2017	05/18/17 20:06	
1,4-Dichlorobenzene	ND	5.0	1	B7E0639	05/18/2017	05/18/17 20:06	
2,2-Dichloropropane	ND	5.0	1	B7E0639	05/18/2017	05/18/17 20:06	
2-Chlorotoluene	ND	5.0	1	B7E0639	05/18/2017	05/18/17 20:06	
4-Chlorotoluene	ND	5.0	1	B7E0639	05/18/2017	05/18/17 20:06	
4-Isopropyltoluene	ND	5.0	1	B7E0639	05/18/2017	05/18/17 20:06	
Benzene	ND	5.0	1	B7E0639	05/18/2017	05/18/17 20:06	
Bromobenzene	ND	5.0	1	B7E0639	05/18/2017	05/18/17 20:06	
Bromochloromethane	ND	5.0	1	B7E0639	05/18/2017	05/18/17 20:06	
Bromodichloromethane	ND	5.0	1	B7E0639	05/18/2017	05/18/17 20:06	
Bromoform	ND	5.0	1	B7E0639	05/18/2017	05/18/17 20:06	
Bromomethane	ND	5.0	1	B7E0639	05/18/2017	05/18/17 20:06	
Carbon disulfide	ND	5.0	1	B7E0639	05/18/2017	05/18/17 20:06	
Carbon tetrachloride	ND	5.0	1	B7E0639	05/18/2017	05/18/17 20:06	
Chlorobenzene	ND	5.0	1	B7E0639	05/18/2017	05/18/17 20:06	
Chloroethane	ND	5.0	1	B7E0639	05/18/2017	05/18/17 20:06	
Chloroform	ND	5.0	1	B7E0639	05/18/2017	05/18/17 20:06	
Chloromethane	ND	5.0	1	B7E0639	05/18/2017	05/18/17 20:06	
cis-1,2-Dichloroethene	ND	5.0	1	B7E0639	05/18/2017	05/18/17 20:06	

Certificate of Analysis

Hushmand Associates, Inc.	Project Number : 6th St Bridge, LAC-17-001
250 Goddard	Report To : Naresh Bellana
Irvine , CA 92618	Reported : 06/05/2017

Client Sample ID 7-3-5.0

Lab ID: 1702036-76

Volatile Organic Compounds by EPA 8260B **Analyst: AG**

Analyte	Result (ug/kg)	PQL (ug/kg)	Dilution	Batch	Prepared	Date/Time Analyzed	Notes
cis-1,3-Dichloropropene	ND	5.0	1	B7E0639	05/18/2017	05/18/17 20:06	
Di-isopropyl ether	ND	5.0	1	B7E0639	05/18/2017	05/18/17 20:06	
Dibromochloromethane	ND	5.0	1	B7E0639	05/18/2017	05/18/17 20:06	
Dibromomethane	ND	5.0	1	B7E0639	05/18/2017	05/18/17 20:06	
Dichlorodifluoromethane	ND	5.0	1	B7E0639	05/18/2017	05/18/17 20:06	
Ethyl Acetate	ND	50	1	B7E0639	05/18/2017	05/18/17 20:06	
Ethyl Ether	ND	50	1	B7E0639	05/18/2017	05/18/17 20:06	
Ethyl tert-butyl ether	ND	5.0	1	B7E0639	05/18/2017	05/18/17 20:06	
Ethylbenzene	ND	5.0	1	B7E0639	05/18/2017	05/18/17 20:06	
Freon-113	ND	5.0	1	B7E0639	05/18/2017	05/18/17 20:06	
Hexachlorobutadiene	ND	5.0	1	B7E0639	05/18/2017	05/18/17 20:06	
Isopropylbenzene	ND	5.0	1	B7E0639	05/18/2017	05/18/17 20:06	
m,p-Xylene	ND	10	1	B7E0639	05/18/2017	05/18/17 20:06	
Methylene chloride	ND	5.0	1	B7E0639	05/18/2017	05/18/17 20:06	
MTBE	ND	5.0	1	B7E0639	05/18/2017	05/18/17 20:06	
n-Butylbenzene	ND	5.0	1	B7E0639	05/18/2017	05/18/17 20:06	
n-Propylbenzene	ND	5.0	1	B7E0639	05/18/2017	05/18/17 20:06	
Naphthalene	ND	5.0	1	B7E0639	05/18/2017	05/18/17 20:06	
o-Xylene	ND	5.0	1	B7E0639	05/18/2017	05/18/17 20:06	
sec-Butylbenzene	ND	5.0	1	B7E0639	05/18/2017	05/18/17 20:06	
Styrene	ND	5.0	1	B7E0639	05/18/2017	05/18/17 20:06	
tert-Amyl methyl ether	ND	5.0	1	B7E0639	05/18/2017	05/18/17 20:06	
tert-Butanol	ND	100	1	B7E0639	05/18/2017	05/18/17 20:06	
tert-Butylbenzene	ND	5.0	1	B7E0639	05/18/2017	05/18/17 20:06	
Tetrachloroethene	ND	5.0	1	B7E0639	05/18/2017	05/18/17 20:06	
Toluene	ND	5.0	1	B7E0639	05/18/2017	05/18/17 20:06	
trans-1,2-Dichloroethene	ND	5.0	1	B7E0639	05/18/2017	05/18/17 20:06	
trans-1,3-Dichloropropene	ND	5.0	1	B7E0639	05/18/2017	05/18/17 20:06	
Trichloroethene	ND	5.0	1	B7E0639	05/18/2017	05/18/17 20:06	
Trichlorofluoromethane	ND	5.0	1	B7E0639	05/18/2017	05/18/17 20:06	
Vinyl acetate	ND	50	1	B7E0639	05/18/2017	05/18/17 20:06	
Vinyl chloride	ND	5.0	1	B7E0639	05/18/2017	05/18/17 20:06	
Surrogate: 1,2-Dichloroethane-d4	*105 %*	*12 - 186*		B7E0639	05/18/2017	*05/18/17 20:06*	
Surrogate: 4-Bromofluorobenzene	*99.8 %*	*23 - 162*		B7E0639	05/18/2017	*05/18/17 20:06*	
Surrogate: Dibromofluoromethane	*95.9 %*	*23 - 179*		B7E0639	05/18/2017	*05/18/17 20:06*	
Surrogate: Toluene-d8	*98.0 %*	*26 - 164*		B7E0639	05/18/2017	*05/18/17 20:06*	

Certificate of Analysis

Hushmand Associates, Inc.	Project Number : 6th St Bridge, LAC-17-001
250 Goddard	Report To : Naresh Bellana
Irvine , CA 92618	Reported : 06/05/2017

Client Sample ID 7-3-5.0

Lab ID: 1702036-76

Semivolatile Organic Compounds by EPA 8270C **Analyst: SP**

Analyte	Result (ug/kg)	PQL (ug/kg)	Dilution	Batch	Prepared	Date/Time Analyzed	Notes
1,2,4-Trichlorobenzene	ND	330	1	B7E0781	05/23/2017	06/01/17 04:04	
1,2-Dichlorobenzene	ND	330	1	B7E0781	05/23/2017	06/01/17 04:04	
1,3-Dichlorobenzene	ND	330	1	B7E0781	05/23/2017	06/01/17 04:04	
1,4-Dichlorobenzene	ND	330	1	B7E0781	05/23/2017	06/01/17 04:04	
2,4,5-Trichlorophenol	ND	330	1	B7E0781	05/23/2017	06/01/17 04:04	
2,4,6-Trichlorophenol	ND	330	1	B7E0781	05/23/2017	06/01/17 04:04	
2,4-Dichlorophenol	ND	1600	1	B7E0781	05/23/2017	06/01/17 04:04	
2,4-Dimethylphenol	ND	330	1	B7E0781	05/23/2017	06/01/17 04:04	
2,4-Dinitrophenol	ND	1600	1	B7E0781	05/23/2017	06/01/17 04:04	
2,4-Dinitrotoluene	ND	330	1	B7E0781	05/23/2017	06/01/17 04:04	
2,6-Dinitrotoluene	ND	330	1	B7E0781	05/23/2017	06/01/17 04:04	
2-Chloronaphthalene	ND	330	1	B7E0781	05/23/2017	06/01/17 04:04	
2-Chlorophenol	ND	330	1	B7E0781	05/23/2017	06/01/17 04:04	
2-Methylnaphthalene	ND	330	1	B7E0781	05/23/2017	06/01/17 04:04	
2-Methylphenol	ND	330	1	B7E0781	05/23/2017	06/01/17 04:04	
2-Nitroaniline	ND	1600	1	B7E0781	05/23/2017	06/01/17 04:04	
2-Nitrophenol	ND	330	1	B7E0781	05/23/2017	06/01/17 04:04	
3,3´-Dichlorobenzidine	ND	660	1	B7E0781	05/23/2017	06/01/17 04:04	
3-Nitroaniline	ND	1600	1	B7E0781	05/23/2017	06/01/17 04:04	
4,6-Dinitro-2-methyphenol	ND	1600	1	B7E0781	05/23/2017	06/01/17 04:04	
4-Bromophenyl-phenylether	ND	330	1	B7E0781	05/23/2017	06/01/17 04:04	
4-Chloro-3-methylphenol	ND	660	1	B7E0781	05/23/2017	06/01/17 04:04	
4-Chloroaniline	ND	660	1	B7E0781	05/23/2017	06/01/17 04:04	
4-Chlorophenyl-phenylether	ND	330	1	B7E0781	05/23/2017	06/01/17 04:04	
4-Methylphenol	ND	330	1	B7E0781	05/23/2017	06/01/17 04:04	
4-Nitroaniline	ND	1600	1	B7E0781	05/23/2017	06/01/17 04:04	
4-Nitrophenol	ND	330	1	B7E0781	05/23/2017	06/01/17 04:04	
Acenaphthene	ND	330	1	B7E0781	05/23/2017	06/01/17 04:04	
Acenaphthylene	ND	330	1	B7E0781	05/23/2017	06/01/17 04:04	
Anthracene	ND	330	1	B7E0781	05/23/2017	06/01/17 04:04	
Benzidine (M)	ND	1600	1	B7E0781	05/23/2017	06/01/17 04:04	
Benzo(a)anthracene	ND	330	1	B7E0781	05/23/2017	06/01/17 04:04	
Benzo(a)pyrene	ND	330	1	B7E0781	05/23/2017	06/01/17 04:04	
Benzo(b)fluoranthene	ND	330	1	B7E0781	05/23/2017	06/01/17 04:04	
Benzo(g,h,i)perylene	ND	330	1	B7E0781	05/23/2017	06/01/17 04:04	
Benzo(k)fluoranthene	ND	330	1	B7E0781	05/23/2017	06/01/17 04:04	
Benzoic acid	ND	1600	1	B7E0781	05/23/2017	06/01/17 04:04	

Certificate of Analysis

Hushmand Associates, Inc.	Project Number : 6th St Bridge, LAC-17-001
250 Goddard	Report To : Naresh Bellana
Irvine , CA 92618	Reported : 06/05/2017

Client Sample ID 7-3-5.0

Lab ID: 1702036-76

Semivolatile Organic Compounds by EPA 8270C **Analyst: SP**

Analyte	Result (ug/kg)	PQL (ug/kg)	Dilution	Batch	Prepared	Date/Time Analyzed	Notes
Benzyl alcohol	ND	660	1	B7E0781	05/23/2017	06/01/17 04:04	
bis(2-chloroethoxy)methane	ND	330	1	B7E0781	05/23/2017	06/01/17 04:04	
bis(2-Chloroethyl)ether	ND	330	1	B7E0781	05/23/2017	06/01/17 04:04	
bis(2-chloroisopropyl)ether	ND	330	1	B7E0781	05/23/2017	06/01/17 04:04	
bis(2-ethylhexyl)phthalate	ND	330	1	B7E0781	05/23/2017	06/01/17 04:04	
Butylbenzylphthalate	ND	330	1	B7E0781	05/23/2017	06/01/17 04:04	
Chrysene	ND	330	1	B7E0781	05/23/2017	06/01/17 04:04	
Di-n-butylphthalate	ND	330	1	B7E0781	05/23/2017	06/01/17 04:04	
Di-n-octylphthalate	ND	330	1	B7E0781	05/23/2017	06/01/17 04:04	
Dibenz(a,h)anthracene	ND	330	1	B7E0781	05/23/2017	06/01/17 04:04	
Dibenzofuran	ND	330	1	B7E0781	05/23/2017	06/01/17 04:04	
Diethyl phthalate	ND	330	1	B7E0781	05/23/2017	06/01/17 04:04	
Dimethyl phthalate	ND	330	1	B7E0781	05/23/2017	06/01/17 04:04	
Fluoranthene	ND	330	1	B7E0781	05/23/2017	06/01/17 04:04	
Fluorene	ND	330	1	B7E0781	05/23/2017	06/01/17 04:04	
Hexachlorobenzene	ND	330	1	B7E0781	05/23/2017	06/01/17 04:04	
Hexachlorobutadiene	ND	660	1	B7E0781	05/23/2017	06/01/17 04:04	
Hexachlorocyclopentadiene	ND	660	1	B7E0781	05/23/2017	06/01/17 04:04	
Hexachloroethane	ND	330	1	B7E0781	05/23/2017	06/01/17 04:04	
Indeno(1,2,3-cd)pyrene	ND	330	1	B7E0781	05/23/2017	06/01/17 04:04	
Isophorone	ND	330	1	B7E0781	05/23/2017	06/01/17 04:04	
N-Nitroso-di-n propylamine	ND	330	1	B7E0781	05/23/2017	06/01/17 04:04	
N-Nitrosodiphenylamine	ND	330	1	B7E0781	05/23/2017	06/01/17 04:04	
Naphthalene	ND	330	1	B7E0781	05/23/2017	06/01/17 04:04	
Nitrobenzene	ND	330	1	B7E0781	05/23/2017	06/01/17 04:04	
Pentachlorophenol	ND	1600	1	B7E0781	05/23/2017	06/01/17 04:04	
Phenanthrene	ND	330	1	B7E0781	05/23/2017	06/01/17 04:04	
Phenol	ND	330	1	B7E0781	05/23/2017	06/01/17 04:04	
Pyrene	ND	330	1	B7E0781	05/23/2017	06/01/17 04:04	
Pyridine	ND	1600	1	B7E0781	05/23/2017	06/01/17 04:04	
Surrogate: 1,2-Dichlorobenzene-d4	*44.1 %*	*38 - 93*		B7E0781	05/23/2017	*06/01/17 04:04*	
Surrogate: 2,4,6-Tribromophenol	*50.5 %*	*27 - 124*		B7E0781	05/23/2017	*06/01/17 04:04*	
Surrogate: 2-Chlorophenol-d4	*43.7 %*	*36 - 96*		B7E0781	05/23/2017	*06/01/17 04:04*	
Surrogate: 2-Fluorobiphenyl	*51.1 %*	*44 - 100*		B7E0781	05/23/2017	*06/01/17 04:04*	
Surrogate: 2-Fluorophenol	*42.3 %*	*32 - 89*		B7E0781	05/23/2017	*06/01/17 04:04*	
Surrogate: 4-Terphenyl-d14	*57.6 %*	*49 - 123*		B7E0781	05/23/2017	*06/01/17 04:04*	
Surrogate: Nitrobenzene-d5	*46.9 %*	*38 - 104*		B7E0781	05/23/2017	*06/01/17 04:04*	

Certificate of Analysis

Hushmand Associates, Inc.	Project Number : 6th St Bridge, LAC-17-001
250 Goddard	Report To : Naresh Bellana
Irvine , CA 92618	Reported : 06/05/2017

Client Sample ID 7-3-5.0

Lab ID: 1702036-76

Semivolatile Organic Compounds by EPA 8270C **Analyst: SP**

Analyte	Result (ug/kg)	PQL (ug/kg)	Dilution	Batch	Prepared	Date/Time Analyzed	Notes
Surrogate: Phenol-d5	*43.4 %*	*35 - 95*		B7E0781	05/23/2017	*06/01/17 04:04*	

Certificate of Analysis

Hushmand Associates, Inc.	Project Number : 6th St Bridge, LAC-17-001
250 Goddard	Report To : Naresh Bellana
Irvine , CA 92618	Reported : 06/05/2017

Client Sample ID 7-4-0.5

Lab ID: 1702036-77

Title 22 Metals by ICP-AES EPA 6010B

Analyst: KEK

Analyte	Result (mg/kg)	PQL (mg/kg)	Dilution	Batch	Prepared	Date/Time Analyzed	Notes
Antimony	ND	2.0	1	B7E0683	05/20/2017	05/22/17 12:27	
Arsenic	**1.1**	1.0	1	B7E0683	05/20/2017	05/22/17 12:27	
Barium	**130**	1.0	1	B7E0683	05/20/2017	05/22/17 12:27	
Beryllium	ND	1.0	1	B7E0683	05/20/2017	05/22/17 12:27	
Cadmium	ND	1.0	1	B7E0683	05/20/2017	05/22/17 12:27	
Chromium	**12**	1.0	1	B7E0683	05/20/2017	05/22/17 12:27	
Cobalt	**8.2**	1.0	1	B7E0683	05/20/2017	05/22/17 12:27	
Copper	**36**	2.0	1	B7E0683	05/20/2017	05/22/17 12:27	
Lead	**70**	1.0	1	B7E0683	05/20/2017	05/22/17 12:27	
Molybdenum	ND	1.0	1	B7E0683	05/20/2017	05/22/17 12:27	
Nickel	**9.3**	1.0	1	B7E0683	05/20/2017	05/22/17 12:27	
Selenium	**1.2**	1.0	1	B7E0683	05/20/2017	05/22/17 12:27	
Silver	ND	1.0	1	B7E0683	05/20/2017	05/22/17 12:27	
Thallium	ND	1.0	1	B7E0683	05/20/2017	05/22/17 12:27	
Vanadium	**32**	1.0	1	B7E0683	05/20/2017	05/22/17 12:27	
Zinc	**150**	1.0	1	B7E0683	05/20/2017	05/22/17 12:27	

STLC Metals by ICP-AES by EPA 6010B

Analyst: GO

Analyte	Result (mg/L)	PQL (mg/L)	Dilution	Batch	Prepared	Date/Time Analyzed	Notes
Lead	**5.5**	1.0	20	B7F0044	06/02/2017	06/02/17 13:58	D1

Mercury by AA (Cold Vapor) EPA 7471A

Analyst: KEK

Analyte	Result (mg/kg)	PQL (mg/kg)	Dilution	Batch	Prepared	Date/Time Analyzed	Notes
Mercury	**0.11**	0.10	1	B7E0678	05/20/2017	05/22/17 16:34	

Gasoline Range Organics by EPA 8015B (Modified)

Analyst: VW

Analyte	Result (mg/kg)	PQL (mg/kg)	Dilution	Batch	Prepared	Date/Time Analyzed	Notes
Gasoline Range Organics	ND	1.0	1	B7E0657	05/21/2017	05/21/17 16:26	
Surrogate: 4-Bromofluorobenzene	*105 %*	*36 - 125*		B7E0657	05/21/2017	*05/21/17 16:26*	

Certificate of Analysis

Hushmand Associates, Inc.	Project Number : 6th St Bridge, LAC-17-001
250 Goddard	Report To : Naresh Bellana
Irvine , CA 92618	Reported : 06/05/2017

Client Sample ID 7-4-0.5

Lab ID: 1702036-77

Diesel Range Organics by EPA 8015B

Analyst: CR

Analyte		Result (mg/kg)	PQL (mg/kg)	Dilution	Batch	Prepared	Date/Time Analyzed	Notes
DRO		**26**	10	1	B7E0785	05/23/2017	05/25/17 03:47	
Surrogate: p-Terphenyl	*92.0 %*		*47 - 157*		B7E0785	05/23/2017	*05/25/17 03:47*	

Organochlorine Pesticides by EPA 8081

Analyst: RL/

Analyte		Result (ug/kg)	PQL (ug/kg)	Dilution	Batch	Prepared	Date/Time Analyzed	Notes
4,4´-DDD		ND	2.0	1	B7E0819	05/24/2017	05/24/17 18:05	
4,4´-DDE		ND	2.0	1	B7E0819	05/24/2017	05/24/17 18:05	
4,4´-DDT		ND	2.0	1	B7E0819	05/24/2017	05/24/17 18:05	
Aldrin		ND	1.0	1	B7E0819	05/24/2017	05/24/17 18:05	
alpha-BHC		ND	1.0	1	B7E0819	05/24/2017	05/24/17 18:05	
alpha-Chlordane		ND	1.0	1	B7E0819	05/24/2017	05/24/17 18:05	
beta-BHC		ND	1.0	1	B7E0819	05/24/2017	05/24/17 18:05	
Chlordane		ND	8.5	1	B7E0819	05/24/2017	05/24/17 18:05	
delta-BHC		ND	1.0	1	B7E0819	05/24/2017	05/24/17 18:05	
Dieldrin		ND	2.0	1	B7E0819	05/24/2017	05/24/17 18:05	
Endosulfan I		ND	1.0	1	B7E0819	05/24/2017	05/24/17 18:05	
Endosulfan II		ND	2.0	1	B7E0819	05/24/2017	05/24/17 18:05	
Endosulfan sulfate		ND	2.0	1	B7E0819	05/24/2017	05/24/17 18:05	
Endrin		ND	2.0	1	B7E0819	05/24/2017	05/24/17 18:05	
Endrin aldehyde		ND	2.0	1	B7E0819	05/24/2017	05/24/17 18:05	
Endrin ketone		ND	2.0	1	B7E0819	05/24/2017	05/24/17 18:05	
gamma-BHC		ND	1.0	1	B7E0819	05/24/2017	05/24/17 18:05	
gamma-Chlordane		ND	1.0	1	B7E0819	05/24/2017	05/24/17 18:05	
Heptachlor		ND	1.0	1	B7E0819	05/24/2017	05/24/17 18:05	
Heptachlor epoxide		ND	1.0	1	B7E0819	05/24/2017	05/24/17 18:05	
Methoxychlor		ND	5.0	1	B7E0819	05/24/2017	05/24/17 18:05	
Toxaphene		ND	50	1	B7E0819	05/24/2017	05/24/17 18:05	
Surrogate: Decachlorobiphenyl	*70.2 %*		*27 - 123*		B7E0819	05/24/2017	*05/24/17 18:05*	
Surrogate: Tetrachloro-m-xylene	*78.4 %*		*26 - 108*		B7E0819	05/24/2017	*05/24/17 18:05*	

Certificate of Analysis

Hushmand Associates, Inc.	Project Number : 6th St Bridge, LAC-17-001
250 Goddard	Report To : Naresh Bellana
Irvine , CA 92618	Reported : 06/05/2017

Client Sample ID 7-4-0.5

Lab ID: 1702036-77

Polychlorinated Biphenyls by EPA 8082

Analyst: LT

Analyte	Result (ug/kg)	PQL (ug/kg)	Dilution	Batch	Prepared	Date/Time Analyzed	Notes
Aroclor 1016	ND	16	1	B7E0819	05/24/2017	05/24/17 17:56	
Aroclor 1221	ND	16	1	B7E0819	05/24/2017	05/24/17 17:56	
Aroclor 1232	ND	16	1	B7E0819	05/24/2017	05/24/17 17:56	
Aroclor 1242	ND	16	1	B7E0819	05/24/2017	05/24/17 17:56	
Aroclor 1248	ND	16	1	B7E0819	05/24/2017	05/24/17 17:56	
Aroclor 1254	ND	16	1	B7E0819	05/24/2017	05/24/17 17:56	
Aroclor 1260	ND	16	1	B7E0819	05/24/2017	05/24/17 17:56	
Aroclor 1262	ND	16	1	B7E0819	05/24/2017	05/24/17 17:56	
Aroclor 1268	ND	16	1	B7E0819	05/24/2017	05/24/17 17:56	
Surrogate: Decachlorobiphenyl	*67.2 %*	*18 - 136*		B7E0819	05/24/2017	*05/24/17 17:56*	
Surrogate: Tetrachloro-m-xylene	*91.8 %*	*30 - 130*		B7E0819	05/24/2017	*05/24/17 17:56*	

Volatile Organic Compounds by EPA 8260B

Analyst: AG

Analyte	Result (ug/kg)	PQL (ug/kg)	Dilution	Batch	Prepared	Date/Time Analyzed	Notes
1,1,1,2-Tetrachloroethane	ND	5.0	1	B7E0639	05/18/2017	05/18/17 20:24	
1,1,1-Trichloroethane	ND	5.0	1	B7E0639	05/18/2017	05/18/17 20:24	
1,1,2,2-Tetrachloroethane	ND	5.0	1	B7E0639	05/18/2017	05/18/17 20:24	
1,1,2-Trichloroethane	ND	5.0	1	B7E0639	05/18/2017	05/18/17 20:24	
1,1-Dichloroethane	ND	5.0	1	B7E0639	05/18/2017	05/18/17 20:24	
1,1-Dichloroethene	ND	5.0	1	B7E0639	05/18/2017	05/18/17 20:24	
1,1-Dichloropropene	ND	5.0	1	B7E0639	05/18/2017	05/18/17 20:24	
1,2,3-Trichloropropane	ND	5.0	1	B7E0639	05/18/2017	05/18/17 20:24	
1,2,3-Trichlorobenzene	ND	5.0	1	B7E0639	05/18/2017	05/18/17 20:24	
1,2,4-Trichlorobenzene	ND	5.0	1	B7E0639	05/18/2017	05/18/17 20:24	
1,2,4-Trimethylbenzene	ND	5.0	1	B7E0639	05/18/2017	05/18/17 20:24	
1,2-Dibromo-3-chloropropane	ND	10	1	B7E0639	05/18/2017	05/18/17 20:24	
1,2-Dibromoethane	ND	5.0	1	B7E0639	05/18/2017	05/18/17 20:24	
1,2-Dichlorobenzene	ND	5.0	1	B7E0639	05/18/2017	05/18/17 20:24	
1,2-Dichloroethane	ND	5.0	1	B7E0639	05/18/2017	05/18/17 20:24	
1,2-Dichloropropane	ND	5.0	1	B7E0639	05/18/2017	05/18/17 20:24	
1,3,5-Trimethylbenzene	ND	5.0	1	B7E0639	05/18/2017	05/18/17 20:24	
1,3-Dichlorobenzene	ND	5.0	1	B7E0639	05/18/2017	05/18/17 20:24	
1,3-Dichloropropane	ND	5.0	1	B7E0639	05/18/2017	05/18/17 20:24	
1,4-Dichlorobenzene	ND	5.0	1	B7E0639	05/18/2017	05/18/17 20:24	
2,2-Dichloropropane	ND	5.0	1	B7E0639	05/18/2017	05/18/17 20:24	

Certificate of Analysis

Hushmand Associates, Inc.	Project Number : 6th St Bridge, LAC-17-001
250 Goddard	Report To : Naresh Bellana
Irvine , CA 92618	Reported : 06/05/2017

Client Sample ID 7-4-0.5

Lab ID: 1702036-77

Volatile Organic Compounds by EPA 8260B **Analyst: AG**

Analyte	Result (ug/kg)	PQL (ug/kg)	Dilution	Batch	Prepared	Date/Time Analyzed	Notes
2-Chlorotoluene	ND	5.0	1	B7E0639	05/18/2017	05/18/17 20:24	
4-Chlorotoluene	ND	5.0	1	B7E0639	05/18/2017	05/18/17 20:24	
4-Isopropyltoluene	ND	5.0	1	B7E0639	05/18/2017	05/18/17 20:24	
Benzene	ND	5.0	1	B7E0639	05/18/2017	05/18/17 20:24	
Bromobenzene	ND	5.0	1	B7E0639	05/18/2017	05/18/17 20:24	
Bromochloromethane	ND	5.0	1	B7E0639	05/18/2017	05/18/17 20:24	
Bromodichloromethane	ND	5.0	1	B7E0639	05/18/2017	05/18/17 20:24	
Bromoform	ND	5.0	1	B7E0639	05/18/2017	05/18/17 20:24	
Bromomethane	ND	5.0	1	B7E0639	05/18/2017	05/18/17 20:24	
Carbon disulfide	ND	5.0	1	B7E0639	05/18/2017	05/18/17 20:24	
Carbon tetrachloride	ND	5.0	1	B7E0639	05/18/2017	05/18/17 20:24	
Chlorobenzene	ND	5.0	1	B7E0639	05/18/2017	05/18/17 20:24	
Chloroethane	ND	5.0	1	B7E0639	05/18/2017	05/18/17 20:24	
Chloroform	ND	5.0	1	B7E0639	05/18/2017	05/18/17 20:24	
Chloromethane	ND	5.0	1	B7E0639	05/18/2017	05/18/17 20:24	
cis-1,2-Dichloroethene	ND	5.0	1	B7E0639	05/18/2017	05/18/17 20:24	
cis-1,3-Dichloropropene	ND	5.0	1	B7E0639	05/18/2017	05/18/17 20:24	
Di-isopropyl ether	ND	5.0	1	B7E0639	05/18/2017	05/18/17 20:24	
Dibromochloromethane	ND	5.0	1	B7E0639	05/18/2017	05/18/17 20:24	
Dibromomethane	ND	5.0	1	B7E0639	05/18/2017	05/18/17 20:24	
Dichlorodifluoromethane	ND	5.0	1	B7E0639	05/18/2017	05/18/17 20:24	
Ethyl Acetate	ND	50	1	B7E0639	05/18/2017	05/18/17 20:24	
Ethyl Ether	ND	50	1	B7E0639	05/18/2017	05/18/17 20:24	
Ethyl tert-butyl ether	ND	5.0	1	B7E0639	05/18/2017	05/18/17 20:24	
Ethylbenzene	ND	5.0	1	B7E0639	05/18/2017	05/18/17 20:24	
Freon-113	ND	5.0	1	B7E0639	05/18/2017	05/18/17 20:24	
Hexachlorobutadiene	ND	5.0	1	B7E0639	05/18/2017	05/18/17 20:24	
Isopropylbenzene	ND	5.0	1	B7E0639	05/18/2017	05/18/17 20:24	
m,p-Xylene	ND	10	1	B7E0639	05/18/2017	05/18/17 20:24	
Methylene chloride	ND	5.0	1	B7E0639	05/18/2017	05/18/17 20:24	
MTBE	ND	5.0	1	B7E0639	05/18/2017	05/18/17 20:24	
n-Butylbenzene	ND	5.0	1	B7E0639	05/18/2017	05/18/17 20:24	
n-Propylbenzene	ND	5.0	1	B7E0639	05/18/2017	05/18/17 20:24	
Naphthalene	ND	5.0	1	B7E0639	05/18/2017	05/18/17 20:24	
o-Xylene	ND	5.0	1	B7E0639	05/18/2017	05/18/17 20:24	
sec-Butylbenzene	ND	5.0	1	B7E0639	05/18/2017	05/18/17 20:24	
Styrene	ND	5.0	1	B7E0639	05/18/2017	05/18/17 20:24	

Certificate of Analysis

Hushmand Associates, Inc.	Project Number : 6th St Bridge, LAC-17-001
250 Goddard	Report To : Naresh Bellana
Irvine , CA 92618	Reported : 06/05/2017

Client Sample ID 7-4-0.5

Lab ID: 1702036-77

Volatile Organic Compounds by EPA 8260B

Analyst: AG

Analyte	Result (ug/kg)	PQL (ug/kg)	Dilution	Batch	Prepared	Date/Time Analyzed	Notes
tert-Amyl methyl ether	ND	5.0	1	B7E0639	05/18/2017	05/18/17 20:24	
tert-Butanol	ND	100	1	B7E0639	05/18/2017	05/18/17 20:24	
tert-Butylbenzene	ND	5.0	1	B7E0639	05/18/2017	05/18/17 20:24	
Tetrachloroethene	ND	5.0	1	B7E0639	05/18/2017	05/18/17 20:24	
Toluene	ND	5.0	1	B7E0639	05/18/2017	05/18/17 20:24	
trans-1,2-Dichloroethene	ND	5.0	1	B7E0639	05/18/2017	05/18/17 20:24	
trans-1,3-Dichloropropene	ND	5.0	1	B7E0639	05/18/2017	05/18/17 20:24	
Trichloroethene	ND	5.0	1	B7E0639	05/18/2017	05/18/17 20:24	
Trichlorofluoromethane	ND	5.0	1	B7E0639	05/18/2017	05/18/17 20:24	
Vinyl acetate	ND	50	1	B7E0639	05/18/2017	05/18/17 20:24	
Vinyl chloride	ND	5.0	1	B7E0639	05/18/2017	05/18/17 20:24	
Surrogate: 1,2-Dichloroethane-d4	*104 %*	*12 - 186*		B7E0639	05/18/2017	*05/18/17 20:24*	
Surrogate: 4-Bromofluorobenzene	*101 %*	*23 - 162*		B7E0639	05/18/2017	*05/18/17 20:24*	
Surrogate: Dibromofluoromethane	*99.0 %*	*23 - 179*		B7E0639	05/18/2017	*05/18/17 20:24*	
Surrogate: Toluene-d8	*101 %*	*26 - 164*		B7E0639	05/18/2017	*05/18/17 20:24*	

Semivolatile Organic Compounds by EPA 8270C

Analyst: SP

Analyte	Result (ug/kg)	PQL (ug/kg)	Dilution	Batch	Prepared	Date/Time Analyzed	Notes
1,2,4-Trichlorobenzene	ND	33000	100	B7E0781	05/23/2017	06/01/17 06:19	D1
1,2-Dichlorobenzene	ND	33000	100	B7E0781	05/23/2017	06/01/17 06:19	D1
1,3-Dichlorobenzene	ND	33000	100	B7E0781	05/23/2017	06/01/17 06:19	D1
1,4-Dichlorobenzene	ND	33000	100	B7E0781	05/23/2017	06/01/17 06:19	D1
2,4,5-Trichlorophenol	ND	33000	100	B7E0781	05/23/2017	06/01/17 06:19	D1
2,4,6-Trichlorophenol	ND	33000	100	B7E0781	05/23/2017	06/01/17 06:19	D1
2,4-Dichlorophenol	ND	160000	100	B7E0781	05/23/2017	06/01/17 06:19	D1
2,4-Dimethylphenol	ND	33000	100	B7E0781	05/23/2017	06/01/17 06:19	D1
2,4-Dinitrophenol	ND	160000	100	B7E0781	05/23/2017	06/01/17 06:19	D1
2,4-Dinitrotoluene	ND	33000	100	B7E0781	05/23/2017	06/01/17 06:19	D1
2,6-Dinitrotoluene	ND	33000	100	B7E0781	05/23/2017	06/01/17 06:19	D1
2-Chloronaphthalene	ND	33000	100	B7E0781	05/23/2017	06/01/17 06:19	D1
2-Chlorophenol	ND	33000	100	B7E0781	05/23/2017	06/01/17 06:19	D1
2-Methylnaphthalene	ND	33000	100	B7E0781	05/23/2017	06/01/17 06:19	D1
2-Methylphenol	ND	33000	100	B7E0781	05/23/2017	06/01/17 06:19	D1
2-Nitroaniline	ND	160000	100	B7E0781	05/23/2017	06/01/17 06:19	D1
2-Nitrophenol	ND	33000	100	B7E0781	05/23/2017	06/01/17 06:19	D1

Certificate of Analysis

Hushmand Associates, Inc.	Project Number : 6th St Bridge, LAC-17-001
250 Goddard	Report To : Naresh Bellana
Irvine , CA 92618	Reported : 06/05/2017

Client Sample ID 7-4-0.5

Lab ID: 1702036-77

Semivolatile Organic Compounds by EPA 8270C **Analyst: SP**

Analyte	Result (ug/kg)	PQL (ug/kg)	Dilution	Batch	Prepared	Date/Time Analyzed	Notes
3,3´-Dichlorobenzidine	ND	66000	100	B7E0781	05/23/2017	06/01/17 06:19	D1
3-Nitroaniline	ND	160000	100	B7E0781	05/23/2017	06/01/17 06:19	D1
4,6-Dinitro-2-methyphenol	ND	160000	100	B7E0781	05/23/2017	06/01/17 06:19	D1
4-Bromophenyl-phenylether	ND	33000	100	B7E0781	05/23/2017	06/01/17 06:19	D1
4-Chloro-3-methylphenol	ND	66000	100	B7E0781	05/23/2017	06/01/17 06:19	D1
4-Chloroaniline	ND	66000	100	B7E0781	05/23/2017	06/01/17 06:19	D1
4-Chlorophenyl-phenylether	ND	33000	100	B7E0781	05/23/2017	06/01/17 06:19	D1
4-Methylphenol	ND	33000	100	B7E0781	05/23/2017	06/01/17 06:19	D1
4-Nitroaniline	ND	160000	100	B7E0781	05/23/2017	06/01/17 06:19	D1
4-Nitrophenol	ND	33000	100	B7E0781	05/23/2017	06/01/17 06:19	D1
Acenaphthene	ND	33000	100	B7E0781	05/23/2017	06/01/17 06:19	D1
Acenaphthylene	ND	33000	100	B7E0781	05/23/2017	06/01/17 06:19	D1
Anthracene	ND	33000	100	B7E0781	05/23/2017	06/01/17 06:19	D1
Benzidine (M)	ND	160000	100	B7E0781	05/23/2017	06/01/17 06:19	D1
Benzo(a)anthracene	ND	33000	100	B7E0781	05/23/2017	06/01/17 06:19	D1
Benzo(a)pyrene	ND	33000	100	B7E0781	05/23/2017	06/01/17 06:19	D1
Benzo(b)fluoranthene	ND	33000	100	B7E0781	05/23/2017	06/01/17 06:19	D1
Benzo(g,h,i)perylene	ND	33000	100	B7E0781	05/23/2017	06/01/17 06:19	D1
Benzo(k)fluoranthene	ND	33000	100	B7E0781	05/23/2017	06/01/17 06:19	D1
Benzoic acid	ND	160000	100	B7E0781	05/23/2017	06/01/17 06:19	D1
Benzyl alcohol	ND	66000	100	B7E0781	05/23/2017	06/01/17 06:19	D1
bis(2-chloroethoxy)methane	ND	33000	100	B7E0781	05/23/2017	06/01/17 06:19	D1
bis(2-Chloroethyl)ether	ND	33000	100	B7E0781	05/23/2017	06/01/17 06:19	D1
bis(2-chloroisopropyl)ether	ND	33000	100	B7E0781	05/23/2017	06/01/17 06:19	D1
bis(2-ethylhexyl)phthalate	ND	33000	100	B7E0781	05/23/2017	06/01/17 06:19	D1
Butylbenzylphthalate	ND	33000	100	B7E0781	05/23/2017	06/01/17 06:19	D1
Chrysene	ND	33000	100	B7E0781	05/23/2017	06/01/17 06:19	D1
Di-n-butylphthalate	ND	33000	100	B7E0781	05/23/2017	06/01/17 06:19	D1
Di-n-octylphthalate	ND	33000	100	B7E0781	05/23/2017	06/01/17 06:19	D1
Dibenz(a,h)anthracene	ND	33000	100	B7E0781	05/23/2017	06/01/17 06:19	D1
Dibenzofuran	ND	33000	100	B7E0781	05/23/2017	06/01/17 06:19	D1
Diethyl phthalate	ND	33000	100	B7E0781	05/23/2017	06/01/17 06:19	D1
Dimethyl phthalate	ND	33000	100	B7E0781	05/23/2017	06/01/17 06:19	D1
Fluoranthene	ND	33000	100	B7E0781	05/23/2017	06/01/17 06:19	D1
Fluorene	ND	33000	100	B7E0781	05/23/2017	06/01/17 06:19	D1
Hexachlorobenzene	ND	33000	100	B7E0781	05/23/2017	06/01/17 06:19	D1
Hexachlorobutadiene	ND	66000	100	B7E0781	05/23/2017	06/01/17 06:19	D1

Certificate of Analysis

Hushmand Associates, Inc.	Project Number : 6th St Bridge, LAC-17-001
250 Goddard	Report To : Naresh Bellana
Irvine , CA 92618	Reported : 06/05/2017

Client Sample ID 7-4-0.5

Lab ID: 1702036-77

Semivolatile Organic Compounds by EPA 8270C **Analyst: SP**

Analyte		Result (ug/kg)	PQL (ug/kg)	Dilution	Batch	Prepared	Date/Time Analyzed	Notes
Hexachlorocyclopentadiene		ND	66000	100	B7E0781	05/23/2017	06/01/17 06:19	D1
Hexachloroethane		ND	33000	100	B7E0781	05/23/2017	06/01/17 06:19	D1
Indeno(1,2,3-cd)pyrene		ND	33000	100	B7E0781	05/23/2017	06/01/17 06:19	D1
Isophorone		ND	33000	100	B7E0781	05/23/2017	06/01/17 06:19	D1
N-Nitroso-di-n propylamine		ND	33000	100	B7E0781	05/23/2017	06/01/17 06:19	D1
N-Nitrosodiphenylamine		ND	33000	100	B7E0781	05/23/2017	06/01/17 06:19	D1
Naphthalene		ND	33000	100	B7E0781	05/23/2017	06/01/17 06:19	D1
Nitrobenzene		ND	33000	100	B7E0781	05/23/2017	06/01/17 06:19	D1
Pentachlorophenol		ND	160000	100	B7E0781	05/23/2017	06/01/17 06:19	D1
Phenanthrene		ND	33000	100	B7E0781	05/23/2017	06/01/17 06:19	D1
Phenol		ND	33000	100	B7E0781	05/23/2017	06/01/17 06:19	D1
Pyrene		ND	33000	100	B7E0781	05/23/2017	06/01/17 06:19	D1
Pyridine		ND	160000	100	B7E0781	05/23/2017	06/01/17 06:19	D1
Surrogate: 1,2-Dichlorobenzene-d4	*0%*		*38 - 93*		B7E0781	05/23/2017	*06/01/17 06:19*	S4
Surrogate: 2,4,6-Tribromophenol	*0%*		*27 - 124*		B7E0781	05/23/2017	*06/01/17 06:19*	S4
Surrogate: 2-Chlorophenol-d4	*0%*		*36 - 96*		B7E0781	05/23/2017	*06/01/17 06:19*	S4
Surrogate: 2-Fluorobiphenyl	*0%*		*44 - 100*		B7E0781	05/23/2017	*06/01/17 06:19*	S4
Surrogate: 2-Fluorophenol	*0%*		*32 - 89*		B7E0781	05/23/2017	*06/01/17 06:19*	S4
Surrogate: 4-Terphenyl-d14	*0%*		*49 - 123*		B7E0781	05/23/2017	*06/01/17 06:19*	S4
Surrogate: Nitrobenzene-d5	*0%*		*38 - 104*		B7E0781	05/23/2017	*06/01/17 06:19*	S4
Surrogate: Phenol-d5	*0%*		*35 - 95*		B7E0781	05/23/2017	*06/01/17 06:19*	S4

Certificate of Analysis

Hushmand Associates, Inc.	Project Number : 6th St Bridge, LAC-17-001
250 Goddard	Report To : Naresh Bellana
Irvine , CA 92618	Reported : 06/05/2017

Client Sample ID 7-4-1.0

Lab ID: 1702036-78

Title 22 Metals by ICP-AES EPA 6010B **Analyst: KEK**

Analyte	Result (mg/kg)	PQL (mg/kg)	Dilution	Batch	Prepared	Date/Time Analyzed	Notes
Antimony	ND	2.0	1	B7E0683	05/20/2017	05/22/17 12:30	
Arsenic	ND	1.0	1	B7E0683	05/20/2017	05/22/17 12:30	
Barium	**100**	1.0	1	B7E0683	05/20/2017	05/22/17 12:30	
Beryllium	ND	1.0	1	B7E0683	05/20/2017	05/22/17 12:30	
Cadmium	ND	1.0	1	B7E0683	05/20/2017	05/22/17 12:30	
Chromium	**9.8**	1.0	1	B7E0683	05/20/2017	05/22/17 12:30	
Cobalt	**6.2**	1.0	1	B7E0683	05/20/2017	05/22/17 12:30	
Copper	**44**	2.0	1	B7E0683	05/20/2017	05/22/17 12:30	
Lead	**43**	1.0	1	B7E0683	05/20/2017	05/22/17 12:30	
Molybdenum	ND	1.0	1	B7E0683	05/20/2017	05/22/17 12:30	
Nickel	**9.5**	1.0	1	B7E0683	05/20/2017	05/22/17 12:30	
Selenium	**1.1**	1.0	1	B7E0683	05/20/2017	05/22/17 12:30	
Silver	ND	1.0	1	B7E0683	05/20/2017	05/22/17 12:30	
Thallium	ND	1.0	1	B7E0683	05/20/2017	05/22/17 12:30	
Vanadium	**26**	1.0	1	B7E0683	05/20/2017	05/22/17 12:30	
Zinc	**130**	1.0	1	B7E0683	05/20/2017	05/22/17 12:30	

Mercury by AA (Cold Vapor) EPA 7471A **Analyst: KEK**

Analyte	Result (mg/kg)	PQL (mg/kg)	Dilution	Batch	Prepared	Date/Time Analyzed	Notes
Mercury	**0.12**	0.10	1	B7E0678	05/20/2017	05/22/17 16:36	

Certificate of Analysis

Hushmand Associates, Inc.	Project Number : 6th St Bridge, LAC-17-001
250 Goddard	Report To : Naresh Bellana
Irvine , CA 92618	Reported : 06/05/2017

Client Sample ID 7-4-3.0

Lab ID: 1702036-79

Title 22 Metals by ICP-AES EPA 6010B

Analyst: KEK

Analyte	Result (mg/kg)	PQL (mg/kg)	Dilution	Batch	Prepared	Date/Time Analyzed	Notes
Antimony	ND	2.0	1	B7E0683	05/20/2017	05/22/17 12:34	
Arsenic	ND	1.0	1	B7E0683	05/20/2017	05/22/17 12:34	
Barium	**92**	1.0	1	B7E0683	05/20/2017	05/22/17 12:34	
Beryllium	ND	1.0	1	B7E0683	05/20/2017	05/22/17 12:34	
Cadmium	ND	1.0	1	B7E0683	05/20/2017	05/22/17 12:34	
Chromium	**11**	1.0	1	B7E0683	05/20/2017	05/22/17 12:34	
Cobalt	**7.6**	1.0	1	B7E0683	05/20/2017	05/22/17 12:34	
Copper	**13**	2.0	1	B7E0683	05/20/2017	05/22/17 12:34	
Lead	**31**	1.0	1	B7E0683	05/20/2017	05/22/17 12:34	
Molybdenum	ND	1.0	1	B7E0683	05/20/2017	05/22/17 12:34	
Nickel	**8.4**	1.0	1	B7E0683	05/20/2017	05/22/17 12:34	
Selenium	ND	1.0	1	B7E0683	05/20/2017	05/22/17 12:34	
Silver	ND	1.0	1	B7E0683	05/20/2017	05/22/17 12:34	
Thallium	ND	1.0	1	B7E0683	05/20/2017	05/22/17 12:34	
Vanadium	**29**	1.0	1	B7E0683	05/20/2017	05/22/17 12:34	
Zinc	**80**	1.0	1	B7E0683	05/20/2017	05/22/17 12:34	

Mercury by AA (Cold Vapor) EPA 7471A

Analyst: KEK

Analyte	Result (mg/kg)	PQL (mg/kg)	Dilution	Batch	Prepared	Date/Time Analyzed	Notes
Mercury	**0.64**	0.10	1	B7E0678	05/20/2017	05/22/17 16:38	

Gasoline Range Organics by EPA 8015B (Modified)

Analyst: VW

Analyte		Result (mg/kg)	PQL (mg/kg)	Dilution	Batch	Prepared	Date/Time Analyzed	Notes
Gasoline Range Organics		ND	1.0	1	B7E0657	05/21/2017	05/21/17 16:45	
Surrogate: 4-Bromofluorobenzene	*106 %*		*36 - 125*		B7E0657	05/21/2017	*05/21/17 16:45*	

Diesel Range Organics by EPA 8015B

Analyst: CR

Analyte		Result (mg/kg)	PQL (mg/kg)	Dilution	Batch	Prepared	Date/Time Analyzed	Notes
DRO		**6300**	50	5	B7E0785	05/23/2017	05/25/17 14:19	
Surrogate: p-Terphenyl	*74.7 %*		*47 - 157*		B7E0785	05/23/2017	*05/25/17 14:19*	

Certificate of Analysis

Hushmand Associates, Inc.	Project Number : 6th St Bridge, LAC-17-001
250 Goddard	Report To : Naresh Bellana
Irvine , CA 92618	Reported : 06/05/2017

Client Sample ID 7-4-3.0

Lab ID: 1702036-79

Volatile Organic Compounds by EPA 8260B **Analyst: AG**

Analyte	Result (ug/kg)	PQL (ug/kg)	Dilution	Batch	Prepared	Date/Time Analyzed	Notes
1,1,1,2-Tetrachloroethane	ND	5.0	1	B7E0639	05/18/2017	05/18/17 20:43	
1,1,1-Trichloroethane	ND	5.0	1	B7E0639	05/18/2017	05/18/17 20:43	
1,1,2,2-Tetrachloroethane	ND	5.0	1	B7E0639	05/18/2017	05/18/17 20:43	
1,1,2-Trichloroethane	ND	5.0	1	B7E0639	05/18/2017	05/18/17 20:43	
1,1-Dichloroethane	ND	5.0	1	B7E0639	05/18/2017	05/18/17 20:43	
1,1-Dichloroethene	ND	5.0	1	B7E0639	05/18/2017	05/18/17 20:43	
1,1-Dichloropropene	ND	5.0	1	B7E0639	05/18/2017	05/18/17 20:43	
1,2,3-Trichloropropane	ND	5.0	1	B7E0639	05/18/2017	05/18/17 20:43	
1,2,3-Trichlorobenzene	ND	5.0	1	B7E0639	05/18/2017	05/18/17 20:43	
1,2,4-Trichlorobenzene	ND	5.0	1	B7E0639	05/18/2017	05/18/17 20:43	
1,2,4-Trimethylbenzene	ND	5.0	1	B7E0639	05/18/2017	05/18/17 20:43	
1,2-Dibromo-3-chloropropane	ND	10	1	B7E0639	05/18/2017	05/18/17 20:43	
1,2-Dibromoethane	ND	5.0	1	B7E0639	05/18/2017	05/18/17 20:43	
1,2-Dichlorobenzene	ND	5.0	1	B7E0639	05/18/2017	05/18/17 20:43	
1,2-Dichloroethane	ND	5.0	1	B7E0639	05/18/2017	05/18/17 20:43	
1,2-Dichloropropane	ND	5.0	1	B7E0639	05/18/2017	05/18/17 20:43	
1,3,5-Trimethylbenzene	ND	5.0	1	B7E0639	05/18/2017	05/18/17 20:43	
1,3-Dichlorobenzene	ND	5.0	1	B7E0639	05/18/2017	05/18/17 20:43	
1,3-Dichloropropane	ND	5.0	1	B7E0639	05/18/2017	05/18/17 20:43	
1,4-Dichlorobenzene	ND	5.0	1	B7E0639	05/18/2017	05/18/17 20:43	
2,2-Dichloropropane	ND	5.0	1	B7E0639	05/18/2017	05/18/17 20:43	
2-Chlorotoluene	ND	5.0	1	B7E0639	05/18/2017	05/18/17 20:43	
4-Chlorotoluene	ND	5.0	1	B7E0639	05/18/2017	05/18/17 20:43	
4-Isopropyltoluene	ND	5.0	1	B7E0639	05/18/2017	05/18/17 20:43	
Benzene	ND	5.0	1	B7E0639	05/18/2017	05/18/17 20:43	
Bromobenzene	ND	5.0	1	B7E0639	05/18/2017	05/18/17 20:43	
Bromochloromethane	ND	5.0	1	B7E0639	05/18/2017	05/18/17 20:43	
Bromodichloromethane	ND	5.0	1	B7E0639	05/18/2017	05/18/17 20:43	
Bromoform	ND	5.0	1	B7E0639	05/18/2017	05/18/17 20:43	
Bromomethane	ND	5.0	1	B7E0639	05/18/2017	05/18/17 20:43	
Carbon disulfide	ND	5.0	1	B7E0639	05/18/2017	05/18/17 20:43	
Carbon tetrachloride	ND	5.0	1	B7E0639	05/18/2017	05/18/17 20:43	
Chlorobenzene	ND	5.0	1	B7E0639	05/18/2017	05/18/17 20:43	
Chloroethane	ND	5.0	1	B7E0639	05/18/2017	05/18/17 20:43	
Chloroform	ND	5.0	1	B7E0639	05/18/2017	05/18/17 20:43	
Chloromethane	ND	5.0	1	B7E0639	05/18/2017	05/18/17 20:43	
cis-1,2-Dichloroethene	ND	5.0	1	B7E0639	05/18/2017	05/18/17 20:43	

Certificate of Analysis

Hushmand Associates, Inc.	Project Number : 6th St Bridge, LAC-17-001
250 Goddard	Report To : Naresh Bellana
Irvine , CA 92618	Reported : 06/05/2017

Client Sample ID 7-4-3.0

Lab ID: 1702036-79

Volatile Organic Compounds by EPA 8260B **Analyst: AG**

Analyte	Result (ug/kg)	PQL (ug/kg)	Dilution	Batch	Prepared	Date/Time Analyzed	Notes
cis-1,3-Dichloropropene	ND	5.0	1	B7E0639	05/18/2017	05/18/17 20:43	
Di-isopropyl ether	ND	5.0	1	B7E0639	05/18/2017	05/18/17 20:43	
Dibromochloromethane	ND	5.0	1	B7E0639	05/18/2017	05/18/17 20:43	
Dibromomethane	ND	5.0	1	B7E0639	05/18/2017	05/18/17 20:43	
Dichlorodifluoromethane	ND	5.0	1	B7E0639	05/18/2017	05/18/17 20:43	
Ethyl Acetate	ND	50	1	B7E0639	05/18/2017	05/18/17 20:43	
Ethyl Ether	ND	50	1	B7E0639	05/18/2017	05/18/17 20:43	
Ethyl tert-butyl ether	ND	5.0	1	B7E0639	05/18/2017	05/18/17 20:43	
Ethylbenzene	ND	5.0	1	B7E0639	05/18/2017	05/18/17 20:43	
Freon-113	ND	5.0	1	B7E0639	05/18/2017	05/18/17 20:43	
Hexachlorobutadiene	ND	5.0	1	B7E0639	05/18/2017	05/18/17 20:43	
Isopropylbenzene	ND	5.0	1	B7E0639	05/18/2017	05/18/17 20:43	
m,p-Xylene	ND	10	1	B7E0639	05/18/2017	05/18/17 20:43	
Methylene chloride	ND	5.0	1	B7E0639	05/18/2017	05/18/17 20:43	
MTBE	ND	5.0	1	B7E0639	05/18/2017	05/18/17 20:43	
n-Butylbenzene	ND	5.0	1	B7E0639	05/18/2017	05/18/17 20:43	
n-Propylbenzene	ND	5.0	1	B7E0639	05/18/2017	05/18/17 20:43	
Naphthalene	ND	5.0	1	B7E0639	05/18/2017	05/18/17 20:43	
o-Xylene	ND	5.0	1	B7E0639	05/18/2017	05/18/17 20:43	
sec-Butylbenzene	ND	5.0	1	B7E0639	05/18/2017	05/18/17 20:43	
Styrene	ND	5.0	1	B7E0639	05/18/2017	05/18/17 20:43	
tert-Amyl methyl ether	ND	5.0	1	B7E0639	05/18/2017	05/18/17 20:43	
tert-Butanol	ND	100	1	B7E0639	05/18/2017	05/18/17 20:43	
tert-Butylbenzene	ND	5.0	1	B7E0639	05/18/2017	05/18/17 20:43	
Tetrachloroethene	ND	5.0	1	B7E0639	05/18/2017	05/18/17 20:43	
Toluene	ND	5.0	1	B7E0639	05/18/2017	05/18/17 20:43	
trans-1,2-Dichloroethene	ND	5.0	1	B7E0639	05/18/2017	05/18/17 20:43	
trans-1,3-Dichloropropene	ND	5.0	1	B7E0639	05/18/2017	05/18/17 20:43	
Trichloroethene	ND	5.0	1	B7E0639	05/18/2017	05/18/17 20:43	
Trichlorofluoromethane	ND	5.0	1	B7E0639	05/18/2017	05/18/17 20:43	
Vinyl acetate	ND	50	1	B7E0639	05/18/2017	05/18/17 20:43	
Vinyl chloride	ND	5.0	1	B7E0639	05/18/2017	05/18/17 20:43	
Surrogate: 1,2-Dichloroethane-d4	*99.7 %*	*12 - 186*		B7E0639	05/18/2017	*05/18/17 20:43*	
Surrogate: 4-Bromofluorobenzene	*97.0 %*	*23 - 162*		B7E0639	05/18/2017	*05/18/17 20:43*	
Surrogate: Dibromofluoromethane	*98.5 %*	*23 - 179*		B7E0639	05/18/2017	*05/18/17 20:43*	
Surrogate: Toluene-d8	*94.7 %*	*26 - 164*		B7E0639	05/18/2017	*05/18/17 20:43*	

Certificate of Analysis

Hushmand Associates, Inc.	Project Number : 6th St Bridge, LAC-17-001
250 Goddard	Report To : Naresh Bellana
Irvine , CA 92618	Reported : 06/05/2017

Client Sample ID 7-4-3.0

Lab ID: 1702036-79

Semivolatile Organic Compounds by EPA 8270C **Analyst: SP**

Analyte	Result (ug/kg)	PQL (ug/kg)	Dilution	Batch	Prepared	Date/Time Analyzed	Notes
1,2,4-Trichlorobenzene	ND	33000	100	B7E0781	05/23/2017	06/01/17 06:46	D1
1,2-Dichlorobenzene	ND	33000	100	B7E0781	05/23/2017	06/01/17 06:46	D1
1,3-Dichlorobenzene	ND	33000	100	B7E0781	05/23/2017	06/01/17 06:46	D1
1,4-Dichlorobenzene	ND	33000	100	B7E0781	05/23/2017	06/01/17 06:46	D1
2,4,5-Trichlorophenol	ND	33000	100	B7E0781	05/23/2017	06/01/17 06:46	D1
2,4,6-Trichlorophenol	ND	33000	100	B7E0781	05/23/2017	06/01/17 06:46	D1
2,4-Dichlorophenol	ND	160000	100	B7E0781	05/23/2017	06/01/17 06:46	D1
2,4-Dimethylphenol	ND	33000	100	B7E0781	05/23/2017	06/01/17 06:46	D1
2,4-Dinitrophenol	ND	160000	100	B7E0781	05/23/2017	06/01/17 06:46	D1
2,4-Dinitrotoluene	ND	33000	100	B7E0781	05/23/2017	06/01/17 06:46	D1
2,6-Dinitrotoluene	ND	33000	100	B7E0781	05/23/2017	06/01/17 06:46	D1
2-Chloronaphthalene	ND	33000	100	B7E0781	05/23/2017	06/01/17 06:46	D1
2-Chlorophenol	ND	33000	100	B7E0781	05/23/2017	06/01/17 06:46	D1
2-Methylnaphthalene	ND	33000	100	B7E0781	05/23/2017	06/01/17 06:46	D1
2-Methylphenol	ND	33000	100	B7E0781	05/23/2017	06/01/17 06:46	D1
2-Nitroaniline	ND	160000	100	B7E0781	05/23/2017	06/01/17 06:46	D1
2-Nitrophenol	ND	33000	100	B7E0781	05/23/2017	06/01/17 06:46	D1
3,3´-Dichlorobenzidine	ND	66000	100	B7E0781	05/23/2017	06/01/17 06:46	D1
3-Nitroaniline	ND	160000	100	B7E0781	05/23/2017	06/01/17 06:46	D1
4,6-Dinitro-2-methyphenol	ND	160000	100	B7E0781	05/23/2017	06/01/17 06:46	D1
4-Bromophenyl-phenylether	ND	33000	100	B7E0781	05/23/2017	06/01/17 06:46	D1
4-Chloro-3-methylphenol	ND	66000	100	B7E0781	05/23/2017	06/01/17 06:46	D1
4-Chloroaniline	ND	66000	100	B7E0781	05/23/2017	06/01/17 06:46	D1
4-Chlorophenyl-phenylether	ND	33000	100	B7E0781	05/23/2017	06/01/17 06:46	D1
4-Methylphenol	ND	33000	100	B7E0781	05/23/2017	06/01/17 06:46	D1
4-Nitroaniline	ND	160000	100	B7E0781	05/23/2017	06/01/17 06:46	D1
4-Nitrophenol	ND	33000	100	B7E0781	05/23/2017	06/01/17 06:46	D1
Acenaphthene	ND	33000	100	B7E0781	05/23/2017	06/01/17 06:46	D1
Acenaphthylene	ND	33000	100	B7E0781	05/23/2017	06/01/17 06:46	D1
Anthracene	ND	33000	100	B7E0781	05/23/2017	06/01/17 06:46	D1
Benzidine (M)	ND	160000	100	B7E0781	05/23/2017	06/01/17 06:46	D1
Benzo(a)anthracene	ND	33000	100	B7E0781	05/23/2017	06/01/17 06:46	D1
Benzo(a)pyrene	ND	33000	100	B7E0781	05/23/2017	06/01/17 06:46	D1
Benzo(b)fluoranthene	ND	33000	100	B7E0781	05/23/2017	06/01/17 06:46	D1
Benzo(g,h,i)perylene	ND	33000	100	B7E0781	05/23/2017	06/01/17 06:46	D1
Benzo(k)fluoranthene	ND	33000	100	B7E0781	05/23/2017	06/01/17 06:46	D1
Benzoic acid	ND	160000	100	B7E0781	05/23/2017	06/01/17 06:46	D1

Certificate of Analysis

Hushmand Associates, Inc.	Project Number : 6th St Bridge, LAC-17-001
250 Goddard	Report To : Naresh Bellana
Irvine , CA 92618	Reported : 06/05/2017

Client Sample ID 7-4-3.0

Lab ID: 1702036-79

Semivolatile Organic Compounds by EPA 8270C **Analyst: SP**

Analyte	Result (ug/kg)	PQL (ug/kg)	Dilution	Batch	Prepared	Date/Time Analyzed	Notes
Benzyl alcohol	ND	66000	100	B7E0781	05/23/2017	06/01/17 06:46	D1
bis(2-chloroethoxy)methane	ND	33000	100	B7E0781	05/23/2017	06/01/17 06:46	D1
bis(2-Chloroethyl)ether	ND	33000	100	B7E0781	05/23/2017	06/01/17 06:46	D1
bis(2-chloroisopropyl)ether	ND	33000	100	B7E0781	05/23/2017	06/01/17 06:46	D1
bis(2-ethylhexyl)phthalate	ND	33000	100	B7E0781	05/23/2017	06/01/17 06:46	D1
Butylbenzylphthalate	ND	33000	100	B7E0781	05/23/2017	06/01/17 06:46	D1
Chrysene	ND	33000	100	B7E0781	05/23/2017	06/01/17 06:46	D1
Di-n-butylphthalate	ND	33000	100	B7E0781	05/23/2017	06/01/17 06:46	D1
Di-n-octylphthalate	ND	33000	100	B7E0781	05/23/2017	06/01/17 06:46	D1
Dibenz(a,h)anthracene	ND	33000	100	B7E0781	05/23/2017	06/01/17 06:46	D1
Dibenzofuran	ND	33000	100	B7E0781	05/23/2017	06/01/17 06:46	D1
Diethyl phthalate	ND	33000	100	B7E0781	05/23/2017	06/01/17 06:46	D1
Dimethyl phthalate	ND	33000	100	B7E0781	05/23/2017	06/01/17 06:46	D1
Fluoranthene	ND	33000	100	B7E0781	05/23/2017	06/01/17 06:46	D1
Fluorene	ND	33000	100	B7E0781	05/23/2017	06/01/17 06:46	D1
Hexachlorobenzene	ND	33000	100	B7E0781	05/23/2017	06/01/17 06:46	D1
Hexachlorobutadiene	ND	66000	100	B7E0781	05/23/2017	06/01/17 06:46	D1
Hexachlorocyclopentadiene	ND	66000	100	B7E0781	05/23/2017	06/01/17 06:46	D1
Hexachloroethane	ND	33000	100	B7E0781	05/23/2017	06/01/17 06:46	D1
Indeno(1,2,3-cd)pyrene	ND	33000	100	B7E0781	05/23/2017	06/01/17 06:46	D1
Isophorone	ND	33000	100	B7E0781	05/23/2017	06/01/17 06:46	D1
N-Nitroso-di-n propylamine	ND	33000	100	B7E0781	05/23/2017	06/01/17 06:46	D1
N-Nitrosodiphenylamine	ND	33000	100	B7E0781	05/23/2017	06/01/17 06:46	D1
Naphthalene	ND	33000	100	B7E0781	05/23/2017	06/01/17 06:46	D1
Nitrobenzene	ND	33000	100	B7E0781	05/23/2017	06/01/17 06:46	D1
Pentachlorophenol	ND	160000	100	B7E0781	05/23/2017	06/01/17 06:46	D1
Phenanthrene	ND	33000	100	B7E0781	05/23/2017	06/01/17 06:46	D1
Phenol	ND	33000	100	B7E0781	05/23/2017	06/01/17 06:46	D1
Pyrene	ND	33000	100	B7E0781	05/23/2017	06/01/17 06:46	D1
Pyridine	ND	160000	100	B7E0781	05/23/2017	06/01/17 06:46	D1
Surrogate: 1,2-Dichlorobenzene-d4	*0%*	*38 - 93*		B7E0781	05/23/2017	*06/01/17 06:46*	S4
Surrogate: 2,4,6-Tribromophenol	*0%*	*27 - 124*		B7E0781	05/23/2017	*06/01/17 06:46*	S4
Surrogate: 2-Chlorophenol-d4	*0%*	*36 - 96*		B7E0781	05/23/2017	*06/01/17 06:46*	S4
Surrogate: 2-Fluorobiphenyl	*0%*	*44 - 100*		B7E0781	05/23/2017	*06/01/17 06:46*	S4
Surrogate: 2-Fluorophenol	*0%*	*32 - 89*		B7E0781	05/23/2017	*06/01/17 06:46*	S4
Surrogate: 4-Terphenyl-d14	*0%*	*49 - 123*		B7E0781	05/23/2017	*06/01/17 06:46*	S4
Surrogate: Nitrobenzene-d5	*0%*	*38 - 104*		B7E0781	05/23/2017	*06/01/17 06:46*	S4

Certificate of Analysis

Hushmand Associates, Inc.	Project Number : 6th St Bridge, LAC-17-001
250 Goddard	Report To : Naresh Bellana
Irvine , CA 92618	Reported : 06/05/2017

Client Sample ID 7-4-3.0

Lab ID: 1702036-79

Semivolatile Organic Compounds by EPA 8270C **Analyst: SP**

Analyte	Result (ug/kg)	PQL (ug/kg)	Dilution	Batch	Prepared	Date/Time Analyzed	Notes
Surrogate: Phenol-d5	*0%*	*35 - 95*		B7E0781	05/23/2017	*06/01/17 06:46*	S4

Certificate of Analysis

Hushmand Associates, Inc.	Project Number : 6th St Bridge, LAC-17-001
250 Goddard	Report To : Naresh Bellana
Irvine , CA 92618	Reported : 06/05/2017

Client Sample ID 7-4-5.0

Lab ID: 1702036-80

Title 22 Metals by ICP-AES EPA 6010B **Analyst: KEK**

Analyte	Result (mg/kg)	PQL (mg/kg)	Dilution	Batch	Prepared	Date/Time Analyzed	Notes
Antimony	ND	2.0	1	B7E0683	05/20/2017	05/22/17 12:37	
Arsenic	**2.3**	1.0	1	B7E0683	05/20/2017	05/22/17 12:37	
Barium	**150**	1.0	1	B7E0683	05/20/2017	05/22/17 12:37	
Beryllium	ND	1.0	1	B7E0683	05/20/2017	05/22/17 12:37	
Cadmium	ND	1.0	1	B7E0683	05/20/2017	05/22/17 12:37	
Chromium	**13**	1.0	1	B7E0683	05/20/2017	05/22/17 12:37	
Cobalt	**4.6**	1.0	1	B7E0683	05/20/2017	05/22/17 12:37	
Copper	**35**	2.0	1	B7E0683	05/20/2017	05/22/17 12:37	
Lead	**12**	1.0	1	B7E0683	05/20/2017	05/22/17 12:37	
Molybdenum	ND	1.0	1	B7E0683	05/20/2017	05/22/17 12:37	
Nickel	**22**	1.0	1	B7E0683	05/20/2017	05/22/17 12:37	
Selenium	ND	1.0	1	B7E0683	05/20/2017	05/22/17 12:37	
Silver	ND	1.0	1	B7E0683	05/20/2017	05/22/17 12:37	
Thallium	ND	1.0	1	B7E0683	05/20/2017	05/22/17 12:37	
Vanadium	**23**	1.0	1	B7E0683	05/20/2017	05/22/17 12:37	
Zinc	**890**	1.0	1	B7E0683	05/20/2017	05/22/17 12:37	

Mercury by AA (Cold Vapor) EPA 7471A **Analyst: KEK**

Analyte	Result (mg/kg)	PQL (mg/kg)	Dilution	Batch	Prepared	Date/Time Analyzed	Notes
Mercury	ND	0.10	1	B7E0678	05/20/2017	05/22/17 16:45	

Certificate of Analysis

Hushmand Associates, Inc.	Project Number : 6th St Bridge, LAC-17-001
250 Goddard	Report To : Naresh Bellana
Irvine , CA 92618	Reported : 06/05/2017

Client Sample ID 6-8-1.0

Lab ID: 1702036-81

Title 22 Metals by ICP-AES EPA 6010B

Analyst: KEK

Analyte	Result (mg/kg)	PQL (mg/kg)	Dilution	Batch	Prepared	Date/Time Analyzed	Notes
Antimony	ND	2.0	1	B7E0683	05/20/2017	05/22/17 12:42	
Arsenic	**5.0**	1.0	1	B7E0683	05/20/2017	05/22/17 12:42	
Barium	**100**	1.0	1	B7E0683	05/20/2017	05/22/17 12:42	
Beryllium	ND	1.0	1	B7E0683	05/20/2017	05/22/17 12:42	
Cadmium	ND	1.0	1	B7E0683	05/20/2017	05/22/17 12:42	
Chromium	**7.5**	1.0	1	B7E0683	05/20/2017	05/22/17 12:42	
Cobalt	**4.5**	1.0	1	B7E0683	05/20/2017	05/22/17 12:42	
Copper	**97**	2.0	1	B7E0683	05/20/2017	05/22/17 12:42	
Lead	**140**	1.0	1	B7E0683	05/20/2017	05/22/17 12:42	
Molybdenum	ND	1.0	1	B7E0683	05/20/2017	05/22/17 12:42	
Nickel	**6.1**	1.0	1	B7E0683	05/20/2017	05/22/17 12:42	
Selenium	ND	1.0	1	B7E0683	05/20/2017	05/22/17 12:42	
Silver	ND	1.0	1	B7E0683	05/20/2017	05/22/17 12:42	
Thallium	ND	1.0	1	B7E0683	05/20/2017	05/22/17 12:42	
Vanadium	**21**	1.0	1	B7E0683	05/20/2017	05/22/17 12:42	
Zinc	**210**	1.0	1	B7E0683	05/20/2017	05/22/17 12:42	

TCLP Metals by ICP-AES EPA 6010B

Analyst: GO

Analyte	Result (mg/L)	PQL (mg/L)	Dilution	Batch	Prepared	Date/Time Analyzed	Notes
Lead	**0.28**	0.25	5	B7F0039	06/02/2017	06/02/17 16:36	D1

STLC Metals by ICP-AES by EPA 6010B

Analyst: GO

Analyte	Result (mg/L)	PQL (mg/L)	Dilution	Batch	Prepared	Date/Time Analyzed	Notes
Lead	**3.6**	1.0	20	B7F0044	06/02/2017	06/02/17 14:00	D1

Mercury by AA (Cold Vapor) EPA 7471A

Analyst: KEK

Analyte	Result (mg/kg)	PQL (mg/kg)	Dilution	Batch	Prepared	Date/Time Analyzed	Notes
Mercury	**0.10**	0.10	1	B7E0678	05/20/2017	05/22/17 16:47	

Certificate of Analysis

Hushmand Associates, Inc.	Project Number : 6th St Bridge, LAC-17-001
250 Goddard	Report To : Naresh Bellana
Irvine , CA 92618	Reported : 06/05/2017

Client Sample ID 6-8-3.0

Lab ID: 1702036-82

Title 22 Metals by ICP-AES EPA 6010B **Analyst: KEK**

Analyte	Result (mg/kg)	PQL (mg/kg)	Dilution	Batch	Prepared	Date/Time Analyzed	Notes
Antimony	ND	2.0	1	B7E0683	05/20/2017	05/22/17 12:45	
Arsenic	ND	1.0	1	B7E0683	05/20/2017	05/22/17 12:45	
Barium	**25**	1.0	1	B7E0683	05/20/2017	05/22/17 12:45	
Beryllium	ND	1.0	1	B7E0683	05/20/2017	05/22/17 12:45	
Cadmium	ND	1.0	1	B7E0683	05/20/2017	05/22/17 12:45	
Chromium	**3.9**	1.0	1	B7E0683	05/20/2017	05/22/17 12:45	
Cobalt	**2.7**	1.0	1	B7E0683	05/20/2017	05/22/17 12:45	
Copper	**3.0**	2.0	1	B7E0683	05/20/2017	05/22/17 12:45	
Lead	**1.0**	1.0	1	B7E0683	05/20/2017	05/22/17 12:45	
Molybdenum	ND	1.0	1	B7E0683	05/20/2017	05/22/17 12:45	
Nickel	**2.4**	1.0	1	B7E0683	05/20/2017	05/22/17 12:45	
Selenium	ND	1.0	1	B7E0683	05/20/2017	05/22/17 12:45	
Silver	ND	1.0	1	B7E0683	05/20/2017	05/22/17 12:45	
Thallium	ND	1.0	1	B7E0683	05/20/2017	05/22/17 12:45	
Vanadium	**15**	1.0	1	B7E0683	05/20/2017	05/22/17 12:45	
Zinc	**13**	1.0	1	B7E0683	05/20/2017	05/22/17 12:45	

Mercury by AA (Cold Vapor) EPA 7471A **Analyst: KEK**

Analyte	Result (mg/kg)	PQL (mg/kg)	Dilution	Batch	Prepared	Date/Time Analyzed	Notes
Mercury	ND	0.10	1	B7E0678	05/20/2017	05/22/17 16:49	

Certificate of Analysis

Hushmand Associates, Inc.	Project Number : 6th St Bridge, LAC-17-001
250 Goddard	Report To : Naresh Bellana
Irvine , CA 92618	Reported : 06/05/2017

Client Sample ID 6-8-5.0

Lab ID: 1702036-83

Title 22 Metals by ICP-AES EPA 6010B **Analyst: KEK**

Analyte	Result (mg/kg)	PQL (mg/kg)	Dilution	Batch	Prepared	Date/Time Analyzed	Notes
Antimony	ND	2.0	1	B7E0683	05/20/2017	05/22/17 12:48	
Arsenic	ND	1.0	1	B7E0683	05/20/2017	05/22/17 12:48	
Barium	**47**	1.0	1	B7E0683	05/20/2017	05/22/17 12:48	
Beryllium	ND	1.0	1	B7E0683	05/20/2017	05/22/17 12:48	
Cadmium	ND	1.0	1	B7E0683	05/20/2017	05/22/17 12:48	
Chromium	**6.3**	1.0	1	B7E0683	05/20/2017	05/22/17 12:48	
Cobalt	**4.8**	1.0	1	B7E0683	05/20/2017	05/22/17 12:48	
Copper	**4.3**	2.0	1	B7E0683	05/20/2017	05/22/17 12:48	
Lead	**1.4**	1.0	1	B7E0683	05/20/2017	05/22/17 12:48	
Molybdenum	ND	1.0	1	B7E0683	05/20/2017	05/22/17 12:48	
Nickel	**4.0**	1.0	1	B7E0683	05/20/2017	05/22/17 12:48	
Selenium	ND	1.0	1	B7E0683	05/20/2017	05/22/17 12:48	
Silver	ND	1.0	1	B7E0683	05/20/2017	05/22/17 12:48	
Thallium	ND	1.0	1	B7E0683	05/20/2017	05/22/17 12:48	
Vanadium	**23**	1.0	1	B7E0683	05/20/2017	05/22/17 12:48	
Zinc	**21**	1.0	1	B7E0683	05/20/2017	05/22/17 12:48	

Mercury by AA (Cold Vapor) EPA 7471A **Analyst: KEK**

Analyte	Result (mg/kg)	PQL (mg/kg)	Dilution	Batch	Prepared	Date/Time Analyzed	Notes
Mercury	ND	0.10	1	B7E0678	05/20/2017	05/22/17 16:51	

Certificate of Analysis

Hushmand Associates, Inc.	Project Number : 6th St Bridge, LAC-17-001
250 Goddard	Report To : Naresh Bellana
Irvine , CA 92618	Reported : 06/05/2017

Client Sample ID 6-8-7.5

Lab ID: 1702036-84

Title 22 Metals by ICP-AES EPA 6010B — **Analyst: KEK**

Analyte	Result (mg/kg)	PQL (mg/kg)	Dilution	Batch	Prepared	Date/Time Analyzed	Notes
Antimony	ND	2.0	1	B7E0683	05/20/2017	05/22/17 12:51	
Arsenic	ND	1.0	1	B7E0683	05/20/2017	05/22/17 12:51	
Barium	**17**	1.0	1	B7E0683	05/20/2017	05/22/17 12:51	
Beryllium	ND	1.0	1	B7E0683	05/20/2017	05/22/17 12:51	
Cadmium	ND	1.0	1	B7E0683	05/20/2017	05/22/17 12:51	
Chromium	**1.7**	1.0	1	B7E0683	05/20/2017	05/22/17 12:51	
Cobalt	**1.8**	1.0	1	B7E0683	05/20/2017	05/22/17 12:51	
Copper	ND	2.0	1	B7E0683	05/20/2017	05/22/17 12:51	
Lead	ND	1.0	1	B7E0683	05/20/2017	05/22/17 12:51	
Molybdenum	ND	1.0	1	B7E0683	05/20/2017	05/22/17 12:51	
Nickel	**1.3**	1.0	1	B7E0683	05/20/2017	05/22/17 12:51	
Selenium	ND	1.0	1	B7E0683	05/20/2017	05/22/17 12:51	
Silver	ND	1.0	1	B7E0683	05/20/2017	05/22/17 12:51	
Thallium	ND	1.0	1	B7E0683	05/20/2017	05/22/17 12:51	
Vanadium	**7.2**	1.0	1	B7E0683	05/20/2017	05/22/17 12:51	
Zinc	**10**	1.0	1	B7E0683	05/20/2017	05/22/17 12:51	

Mercury by AA (Cold Vapor) EPA 7471A — **Analyst: KEK**

Analyte	Result (mg/kg)	PQL (mg/kg)	Dilution	Batch	Prepared	Date/Time Analyzed	Notes
Mercury	**4.6**	0.50	5	B7E0678	05/20/2017	05/22/17 17:54	

STLC Mercury by AA (Cold Vapor) EPA 7470A — **Analyst: KEK**

Analyte	Result (ug/L)	PQL (ug/L)	Dilution	Batch	Prepared	Date/Time Analyzed	Notes
Mercury	ND	1.0	1	B7F0046	06/02/2017	06/02/17 16:02	

TCLP Mercury by AA (Cold Vapor) by EPA 7470A — **Analyst: KEK**

Analyte	Result (ug/L)	PQL (ug/L)	Dilution	Batch	Prepared	Date/Time Analyzed	Notes
Mercury	ND	0.20	1	B7F0049	06/02/2017	06/02/17 16:02	

Certificate of Analysis

Hushmand Associates, Inc.	Project Number : 6th St Bridge, LAC-17-001
250 Goddard	Report To : Naresh Bellana
Irvine , CA 92618	Reported : 06/05/2017

Client Sample ID 6-2-0.5

Lab ID: 1702036-85

Title 22 Metals by ICP-AES EPA 6010B

Analyst: KEK

Analyte	Result (mg/kg)	PQL (mg/kg)	Dilution	Batch	Prepared	Date/Time Analyzed	Notes
Antimony	ND	2.0	1	B7E0683	05/20/2017	05/22/17 12:54	
Arsenic	**2.9**	1.0	1	B7E0683	05/20/2017	05/22/17 12:54	
Barium	**110**	1.0	1	B7E0683	05/20/2017	05/22/17 12:54	
Beryllium	ND	1.0	1	B7E0683	05/20/2017	05/22/17 12:54	
Cadmium	ND	1.0	1	B7E0683	05/20/2017	05/22/17 12:54	
Chromium	**5.5**	1.0	1	B7E0683	05/20/2017	05/22/17 12:54	
Cobalt	**2.7**	1.0	1	B7E0683	05/20/2017	05/22/17 12:54	
Copper	**6.8**	2.0	1	B7E0683	05/20/2017	05/22/17 12:54	
Lead	**90**	1.0	1	B7E0683	05/20/2017	05/22/17 12:54	
Molybdenum	ND	1.0	1	B7E0683	05/20/2017	05/22/17 12:54	
Nickel	**3.2**	1.0	1	B7E0683	05/20/2017	05/22/17 12:54	
Selenium	ND	1.0	1	B7E0683	05/20/2017	05/22/17 12:54	
Silver	ND	1.0	1	B7E0683	05/20/2017	05/22/17 12:54	
Thallium	ND	1.0	1	B7E0683	05/20/2017	05/22/17 12:54	
Vanadium	**15**	1.0	1	B7E0683	05/20/2017	05/22/17 12:54	
Zinc	**62**	1.0	1	B7E0683	05/20/2017	05/22/17 12:54	

TCLP Metals by ICP-AES EPA 6010B

Analyst: GO

Analyte	Result (mg/L)	PQL (mg/L)	Dilution	Batch	Prepared	Date/Time Analyzed	Notes
Lead	ND	0.25	5	B7F0039	06/02/2017	06/02/17 16:37	D1

STLC Metals by ICP-AES by EPA 6010B

Analyst: GO

Analyte	Result (mg/L)	PQL (mg/L)	Dilution	Batch	Prepared	Date/Time Analyzed	Notes
Lead	ND	1.0	20	B7F0044	06/02/2017	06/02/17 14:01	D1

Mercury by AA (Cold Vapor) EPA 7471A

Analyst: KEK

Analyte	Result (mg/kg)	PQL (mg/kg)	Dilution	Batch	Prepared	Date/Time Analyzed	Notes
Mercury	**0.33**	0.10	1	B7E0678	05/20/2017	05/22/17 16:55	

Certificate of Analysis

Hushmand Associates, Inc.	Project Number : 6th St Bridge, LAC-17-001
250 Goddard	Report To : Naresh Bellana
Irvine , CA 92618	Reported : 06/05/2017

Client Sample ID 6-2-0.5

Lab ID: 1702036-85

Organochlorine Pesticides by EPA 8081 **Analyst: RL/**

Analyte	Result (ug/kg)	PQL (ug/kg)	Dilution	Batch	Prepared	Date/Time Analyzed	Notes
4,4´-DDD	ND	2.0	1	B7E0819	05/24/2017	05/24/17 18:16	
4,4´-DDE	ND	2.0	1	B7E0819	05/24/2017	05/24/17 18:16	
4,4´-DDT	ND	2.0	1	B7E0819	05/24/2017	05/24/17 18:16	
Aldrin	ND	1.0	1	B7E0819	05/24/2017	05/24/17 18:16	
alpha-BHC	ND	1.0	1	B7E0819	05/24/2017	05/24/17 18:16	
alpha-Chlordane	ND	1.0	1	B7E0819	05/24/2017	05/24/17 18:16	
beta-BHC	ND	1.0	1	B7E0819	05/24/2017	05/24/17 18:16	
Chlordane	ND	8.5	1	B7E0819	05/24/2017	05/24/17 18:16	
delta-BHC	ND	1.0	1	B7E0819	05/24/2017	05/24/17 18:16	
Dieldrin	ND	2.0	1	B7E0819	05/24/2017	05/24/17 18:16	
Endosulfan I	ND	1.0	1	B7E0819	05/24/2017	05/24/17 18:16	
Endosulfan II	ND	2.0	1	B7E0819	05/24/2017	05/24/17 18:16	
Endosulfan sulfate	ND	2.0	1	B7E0819	05/24/2017	05/24/17 18:16	
Endrin	ND	2.0	1	B7E0819	05/24/2017	05/24/17 18:16	
Endrin aldehyde	ND	2.0	1	B7E0819	05/24/2017	05/24/17 18:16	
Endrin ketone	ND	2.0	1	B7E0819	05/24/2017	05/24/17 18:16	
gamma-BHC	ND	1.0	1	B7E0819	05/24/2017	05/24/17 18:16	
gamma-Chlordane	ND	1.0	1	B7E0819	05/24/2017	05/24/17 18:16	
Heptachlor	ND	1.0	1	B7E0819	05/24/2017	05/24/17 18:16	
Heptachlor epoxide	ND	1.0	1	B7E0819	05/24/2017	05/24/17 18:16	
Methoxychlor	ND	5.0	1	B7E0819	05/24/2017	05/24/17 18:16	
Toxaphene	ND	50	1	B7E0819	05/24/2017	05/24/17 18:16	
Surrogate: Decachlorobiphenyl	*32.1 %*	*27 - 123*		B7E0819	05/24/2017	*05/24/17 18:16*	
Surrogate: Tetrachloro-m-xylene	*33.7 %*	*26 - 108*		B7E0819	05/24/2017	*05/24/17 18:16*	

Certificate of Analysis

Hushmand Associates, Inc.	Project Number : 6th St Bridge, LAC-17-001
250 Goddard	Report To : Naresh Bellana
Irvine , CA 92618	Reported : 06/05/2017

Client Sample ID 6-2-0.5

Lab ID: 1702036-85

Polychlorinated Biphenyls by EPA 8082 **Analyst: LT**

Analyte		Result (ug/kg)	PQL (ug/kg)	Dilution	Batch	Prepared	Date/Time Analyzed	Notes
Aroclor 1016		ND	16	1	B7E0819	05/24/2017	05/24/17 18:15	
Aroclor 1221		ND	16	1	B7E0819	05/24/2017	05/24/17 18:15	
Aroclor 1232		ND	16	1	B7E0819	05/24/2017	05/24/17 18:15	
Aroclor 1242		ND	16	1	B7E0819	05/24/2017	05/24/17 18:15	
Aroclor 1248		ND	16	1	B7E0819	05/24/2017	05/24/17 18:15	
Aroclor 1254		ND	16	1	B7E0819	05/24/2017	05/24/17 18:15	
Aroclor 1260		ND	16	1	B7E0819	05/24/2017	05/24/17 18:15	
Aroclor 1262		ND	16	1	B7E0819	05/24/2017	05/24/17 18:15	
Aroclor 1268		ND	16	1	B7E0819	05/24/2017	05/24/17 18:15	
Surrogate: Decachlorobiphenyl	*42.5 %*		*18 - 136*		B7E0819	05/24/2017	*05/24/17 18:15*	
Surrogate: Tetrachloro-m-xylene	*59.5 %*		*30 - 130*		B7E0819	05/24/2017	*05/24/17 18:15*	

Certificate of Analysis

Hushmand Associates, Inc.	Project Number : 6th St Bridge, LAC-17-001
250 Goddard	Report To : Naresh Bellana
Irvine , CA 92618	Reported : 06/05/2017

Client Sample ID 6-2-1.0

Lab ID: 1702036-86

Title 22 Metals by ICP-AES EPA 6010B **Analyst: KEK**

Analyte	Result (mg/kg)	PQL (mg/kg)	Dilution	Batch	Prepared	Date/Time Analyzed	Notes
Antimony	ND	2.0	1	B7E0683	05/20/2017	05/22/17 12:58	
Arsenic	**1.2**	1.0	1	B7E0683	05/20/2017	05/22/17 12:58	
Barium	**87**	1.0	1	B7E0683	05/20/2017	05/22/17 12:58	
Beryllium	ND	1.0	1	B7E0683	05/20/2017	05/22/17 12:58	
Cadmium	ND	1.0	1	B7E0683	05/20/2017	05/22/17 12:58	
Chromium	**8.2**	1.0	1	B7E0683	05/20/2017	05/22/17 12:58	
Cobalt	**5.7**	1.0	1	B7E0683	05/20/2017	05/22/17 12:58	
Copper	**15**	2.0	1	B7E0683	05/20/2017	05/22/17 12:58	
Lead	**38**	1.0	1	B7E0683	05/20/2017	05/22/17 12:58	
Molybdenum	ND	1.0	1	B7E0683	05/20/2017	05/22/17 12:58	
Nickel	**8.0**	1.0	1	B7E0683	05/20/2017	05/22/17 12:58	
Selenium	ND	1.0	1	B7E0683	05/20/2017	05/22/17 12:58	
Silver	ND	1.0	1	B7E0683	05/20/2017	05/22/17 12:58	
Thallium	ND	1.0	1	B7E0683	05/20/2017	05/22/17 12:58	
Vanadium	**26**	1.0	1	B7E0683	05/20/2017	05/22/17 12:58	
Zinc	**89**	1.0	1	B7E0683	05/20/2017	05/22/17 12:58	

Mercury by AA (Cold Vapor) EPA 7471A **Analyst: KEK**

Analyte	Result (mg/kg)	PQL (mg/kg)	Dilution	Batch	Prepared	Date/Time Analyzed	Notes
Mercury	**0.78**	0.10	1	B7E0678	05/20/2017	05/22/17 16:57	

Certificate of Analysis

Hushmand Associates, Inc.	Project Number : 6th St Bridge, LAC-17-001
250 Goddard	Report To : Naresh Bellana
Irvine , CA 92618	Reported : 06/05/2017

Client Sample ID 6-2-3.0

Lab ID: 1702036-87

Title 22 Metals by ICP-AES EPA 6010B

Analyst: KEK

Analyte	Result (mg/kg)	PQL (mg/kg)	Dilution	Batch	Prepared	Date/Time Analyzed	Notes
Antimony	ND	2.0	1	B7E0683	05/20/2017	05/22/17 13:08	
Arsenic	ND	1.0	1	B7E0683	05/20/2017	05/22/17 13:08	
Barium	**29**	1.0	1	B7E0683	05/20/2017	05/22/17 13:08	
Beryllium	ND	1.0	1	B7E0683	05/20/2017	05/22/17 13:08	
Cadmium	ND	1.0	1	B7E0683	05/20/2017	05/22/17 13:08	
Chromium	**3.7**	1.0	1	B7E0683	05/20/2017	05/22/17 13:08	
Cobalt	**2.6**	1.0	1	B7E0683	05/20/2017	05/22/17 13:08	
Copper	**2.5**	2.0	1	B7E0683	05/20/2017	05/22/17 13:08	
Lead	**1.2**	1.0	1	B7E0683	05/20/2017	05/22/17 13:08	
Molybdenum	ND	1.0	1	B7E0683	05/20/2017	05/22/17 13:08	
Nickel	**2.4**	1.0	1	B7E0683	05/20/2017	05/22/17 13:08	
Selenium	ND	1.0	1	B7E0683	05/20/2017	05/22/17 13:08	
Silver	ND	1.0	1	B7E0683	05/20/2017	05/22/17 13:08	
Thallium	ND	1.0	1	B7E0683	05/20/2017	05/22/17 13:08	
Vanadium	**11**	1.0	1	B7E0683	05/20/2017	05/22/17 13:08	
Zinc	**13**	1.0	1	B7E0683	05/20/2017	05/22/17 13:08	

Mercury by AA (Cold Vapor) EPA 7471A

Analyst: KEK

Analyte	Result (mg/kg)	PQL (mg/kg)	Dilution	Batch	Prepared	Date/Time Analyzed	Notes
Mercury	ND	0.10	1	B7E0679	05/20/2017	05/22/17 16:52	

Gasoline Range Organics by EPA 8015B (Modified)

Analyst: VW

Analyte		Result (mg/kg)	PQL (mg/kg)	Dilution	Batch	Prepared	Date/Time Analyzed	Notes
Gasoline Range Organics		ND	1.0	1	B7E0657	05/21/2017	05/21/17 17:03	
Surrogate: 4-Bromofluorobenzene	*106 %*		*36 - 125*		B7E0657	05/21/2017	*05/21/17 17:03*	

Diesel Range Organics by EPA 8015B

Analyst: CR

Analyte		Result (mg/kg)	PQL (mg/kg)	Dilution	Batch	Prepared	Date/Time Analyzed	Notes
DRO		ND	10	1	B7E0785	05/23/2017	05/25/17 00:09	
Surrogate: p-Terphenyl	*82.0 %*		*47 - 157*		B7E0785	05/23/2017	*05/25/17 00:09*	

Certificate of Analysis

Hushmand Associates, Inc.	Project Number : 6th St Bridge, LAC-17-001
250 Goddard	Report To : Naresh Bellana
Irvine , CA 92618	Reported : 06/05/2017

Client Sample ID 6-2-3.0

Lab ID: 1702036-87

Volatile Organic Compounds by EPA 8260B **Analyst: AG**

Analyte	Result (ug/kg)	PQL (ug/kg)	Dilution	Batch	Prepared	Date/Time Analyzed	Notes
1,1,1,2-Tetrachloroethane	ND	5.0	1	B7E0639	05/18/2017	05/18/17 21:01	
1,1,1-Trichloroethane	ND	5.0	1	B7E0639	05/18/2017	05/18/17 21:01	
1,1,2,2-Tetrachloroethane	ND	5.0	1	B7E0639	05/18/2017	05/18/17 21:01	
1,1,2-Trichloroethane	ND	5.0	1	B7E0639	05/18/2017	05/18/17 21:01	
1,1-Dichloroethane	ND	5.0	1	B7E0639	05/18/2017	05/18/17 21:01	
1,1-Dichloroethene	ND	5.0	1	B7E0639	05/18/2017	05/18/17 21:01	
1,1-Dichloropropene	ND	5.0	1	B7E0639	05/18/2017	05/18/17 21:01	
1,2,3-Trichloropropane	ND	5.0	1	B7E0639	05/18/2017	05/18/17 21:01	
1,2,3-Trichlorobenzene	ND	5.0	1	B7E0639	05/18/2017	05/18/17 21:01	
1,2,4-Trichlorobenzene	ND	5.0	1	B7E0639	05/18/2017	05/18/17 21:01	
1,2,4-Trimethylbenzene	ND	5.0	1	B7E0639	05/18/2017	05/18/17 21:01	
1,2-Dibromo-3-chloropropane	ND	10	1	B7E0639	05/18/2017	05/18/17 21:01	
1,2-Dibromoethane	ND	5.0	1	B7E0639	05/18/2017	05/18/17 21:01	
1,2-Dichlorobenzene	ND	5.0	1	B7E0639	05/18/2017	05/18/17 21:01	
1,2-Dichloroethane	ND	5.0	1	B7E0639	05/18/2017	05/18/17 21:01	
1,2-Dichloropropane	ND	5.0	1	B7E0639	05/18/2017	05/18/17 21:01	
1,3,5-Trimethylbenzene	ND	5.0	1	B7E0639	05/18/2017	05/18/17 21:01	
1,3-Dichlorobenzene	ND	5.0	1	B7E0639	05/18/2017	05/18/17 21:01	
1,3-Dichloropropane	ND	5.0	1	B7E0639	05/18/2017	05/18/17 21:01	
1,4-Dichlorobenzene	ND	5.0	1	B7E0639	05/18/2017	05/18/17 21:01	
2,2-Dichloropropane	ND	5.0	1	B7E0639	05/18/2017	05/18/17 21:01	
2-Chlorotoluene	ND	5.0	1	B7E0639	05/18/2017	05/18/17 21:01	
4-Chlorotoluene	ND	5.0	1	B7E0639	05/18/2017	05/18/17 21:01	
4-Isopropyltoluene	ND	5.0	1	B7E0639	05/18/2017	05/18/17 21:01	
Benzene	ND	5.0	1	B7E0639	05/18/2017	05/18/17 21:01	
Bromobenzene	ND	5.0	1	B7E0639	05/18/2017	05/18/17 21:01	
Bromochloromethane	ND	5.0	1	B7E0639	05/18/2017	05/18/17 21:01	
Bromodichloromethane	ND	5.0	1	B7E0639	05/18/2017	05/18/17 21:01	
Bromoform	ND	5.0	1	B7E0639	05/18/2017	05/18/17 21:01	
Bromomethane	ND	5.0	1	B7E0639	05/18/2017	05/18/17 21:01	
Carbon disulfide	ND	5.0	1	B7E0639	05/18/2017	05/18/17 21:01	
Carbon tetrachloride	ND	5.0	1	B7E0639	05/18/2017	05/18/17 21:01	
Chlorobenzene	ND	5.0	1	B7E0639	05/18/2017	05/18/17 21:01	
Chloroethane	ND	5.0	1	B7E0639	05/18/2017	05/18/17 21:01	
Chloroform	ND	5.0	1	B7E0639	05/18/2017	05/18/17 21:01	
Chloromethane	ND	5.0	1	B7E0639	05/18/2017	05/18/17 21:01	
cis-1,2-Dichloroethene	ND	5.0	1	B7E0639	05/18/2017	05/18/17 21:01	

Certificate of Analysis

Hushmand Associates, Inc.	Project Number : 6th St Bridge, LAC-17-001
250 Goddard	Report To : Naresh Bellana
Irvine , CA 92618	Reported : 06/05/2017

Client Sample ID 6-2-3.0

Lab ID: 1702036-87

Volatile Organic Compounds by EPA 8260B **Analyst: AG**

Analyte	Result (ug/kg)	PQL (ug/kg)	Dilution	Batch	Prepared	Date/Time Analyzed	Notes
cis-1,3-Dichloropropene	ND	5.0	1	B7E0639	05/18/2017	05/18/17 21:01	
Di-isopropyl ether	ND	5.0	1	B7E0639	05/18/2017	05/18/17 21:01	
Dibromochloromethane	ND	5.0	1	B7E0639	05/18/2017	05/18/17 21:01	
Dibromomethane	ND	5.0	1	B7E0639	05/18/2017	05/18/17 21:01	
Dichlorodifluoromethane	ND	5.0	1	B7E0639	05/18/2017	05/18/17 21:01	
Ethyl Acetate	ND	50	1	B7E0639	05/18/2017	05/18/17 21:01	
Ethyl Ether	ND	50	1	B7E0639	05/18/2017	05/18/17 21:01	
Ethyl tert-butyl ether	ND	5.0	1	B7E0639	05/18/2017	05/18/17 21:01	
Ethylbenzene	ND	5.0	1	B7E0639	05/18/2017	05/18/17 21:01	
Freon-113	ND	5.0	1	B7E0639	05/18/2017	05/18/17 21:01	
Hexachlorobutadiene	ND	5.0	1	B7E0639	05/18/2017	05/18/17 21:01	
Isopropylbenzene	ND	5.0	1	B7E0639	05/18/2017	05/18/17 21:01	
m,p-Xylene	ND	10	1	B7E0639	05/18/2017	05/18/17 21:01	
Methylene chloride	ND	5.0	1	B7E0639	05/18/2017	05/18/17 21:01	
MTBE	ND	5.0	1	B7E0639	05/18/2017	05/18/17 21:01	
n-Butylbenzene	ND	5.0	1	B7E0639	05/18/2017	05/18/17 21:01	
n-Propylbenzene	ND	5.0	1	B7E0639	05/18/2017	05/18/17 21:01	
Naphthalene	ND	5.0	1	B7E0639	05/18/2017	05/18/17 21:01	
o-Xylene	ND	5.0	1	B7E0639	05/18/2017	05/18/17 21:01	
sec-Butylbenzene	ND	5.0	1	B7E0639	05/18/2017	05/18/17 21:01	
Styrene	ND	5.0	1	B7E0639	05/18/2017	05/18/17 21:01	
tert-Amyl methyl ether	ND	5.0	1	B7E0639	05/18/2017	05/18/17 21:01	
tert-Butanol	ND	100	1	B7E0639	05/18/2017	05/18/17 21:01	
tert-Butylbenzene	ND	5.0	1	B7E0639	05/18/2017	05/18/17 21:01	
Tetrachloroethene	ND	5.0	1	B7E0639	05/18/2017	05/18/17 21:01	
Toluene	ND	5.0	1	B7E0639	05/18/2017	05/18/17 21:01	
trans-1,2-Dichloroethene	ND	5.0	1	B7E0639	05/18/2017	05/18/17 21:01	
trans-1,3-Dichloropropene	ND	5.0	1	B7E0639	05/18/2017	05/18/17 21:01	
Trichloroethene	ND	5.0	1	B7E0639	05/18/2017	05/18/17 21:01	
Trichlorofluoromethane	ND	5.0	1	B7E0639	05/18/2017	05/18/17 21:01	
Vinyl acetate	ND	50	1	B7E0639	05/18/2017	05/18/17 21:01	
Vinyl chloride	ND	5.0	1	B7E0639	05/18/2017	05/18/17 21:01	
Surrogate: 1,2-Dichloroethane-d4	*107 %*	*12 - 186*		B7E0639	05/18/2017	*05/18/17 21:01*	
Surrogate: 4-Bromofluorobenzene	*103 %*	*23 - 162*		B7E0639	05/18/2017	*05/18/17 21:01*	
Surrogate: Dibromofluoromethane	*100 %*	*23 - 179*		B7E0639	05/18/2017	*05/18/17 21:01*	
Surrogate: Toluene-d8	*104 %*	*26 - 164*		B7E0639	05/18/2017	*05/18/17 21:01*	

Certificate of Analysis

Hushmand Associates, Inc.	Project Number : 6th St Bridge, LAC-17-001
250 Goddard	Report To : Naresh Bellana
Irvine , CA 92618	Reported : 06/05/2017

Client Sample ID 6-2-3.0

Lab ID: 1702036-87

Semivolatile Organic Compounds by EPA 8270C **Analyst: SP**

Analyte	Result (ug/kg)	PQL (ug/kg)	Dilution	Batch	Prepared	Date/Time Analyzed	Notes
1,2,4-Trichlorobenzene	ND	330	1	B7E0781	05/23/2017	05/31/17 21:23	
1,2-Dichlorobenzene	ND	330	1	B7E0781	05/23/2017	05/31/17 21:23	
1,3-Dichlorobenzene	ND	330	1	B7E0781	05/23/2017	05/31/17 21:23	
1,4-Dichlorobenzene	ND	330	1	B7E0781	05/23/2017	05/31/17 21:23	
2,4,5-Trichlorophenol	ND	330	1	B7E0781	05/23/2017	05/31/17 21:23	
2,4,6-Trichlorophenol	ND	330	1	B7E0781	05/23/2017	05/31/17 21:23	
2,4-Dichlorophenol	ND	1600	1	B7E0781	05/23/2017	05/31/17 21:23	
2,4-Dimethylphenol	ND	330	1	B7E0781	05/23/2017	05/31/17 21:23	
2,4-Dinitrophenol	ND	1600	1	B7E0781	05/23/2017	05/31/17 21:23	
2,4-Dinitrotoluene	ND	330	1	B7E0781	05/23/2017	05/31/17 21:23	
2,6-Dinitrotoluene	ND	330	1	B7E0781	05/23/2017	05/31/17 21:23	
2-Chloronaphthalene	ND	330	1	B7E0781	05/23/2017	05/31/17 21:23	
2-Chlorophenol	ND	330	1	B7E0781	05/23/2017	05/31/17 21:23	
2-Methylnaphthalene	ND	330	1	B7E0781	05/23/2017	05/31/17 21:23	
2-Methylphenol	ND	330	1	B7E0781	05/23/2017	05/31/17 21:23	
2-Nitroaniline	ND	1600	1	B7E0781	05/23/2017	05/31/17 21:23	
2-Nitrophenol	ND	330	1	B7E0781	05/23/2017	05/31/17 21:23	
3,3´-Dichlorobenzidine	ND	660	1	B7E0781	05/23/2017	05/31/17 21:23	
3-Nitroaniline	ND	1600	1	B7E0781	05/23/2017	05/31/17 21:23	
4,6-Dinitro-2-methyphenol	ND	1600	1	B7E0781	05/23/2017	05/31/17 21:23	
4-Bromophenyl-phenylether	ND	330	1	B7E0781	05/23/2017	05/31/17 21:23	
4-Chloro-3-methylphenol	ND	660	1	B7E0781	05/23/2017	05/31/17 21:23	
4-Chloroaniline	ND	660	1	B7E0781	05/23/2017	05/31/17 21:23	
4-Chlorophenyl-phenylether	ND	330	1	B7E0781	05/23/2017	05/31/17 21:23	
4-Methylphenol	ND	330	1	B7E0781	05/23/2017	05/31/17 21:23	
4-Nitroaniline	ND	1600	1	B7E0781	05/23/2017	05/31/17 21:23	
4-Nitrophenol	ND	330	1	B7E0781	05/23/2017	05/31/17 21:23	
Acenaphthene	ND	330	1	B7E0781	05/23/2017	05/31/17 21:23	
Acenaphthylene	ND	330	1	B7E0781	05/23/2017	05/31/17 21:23	
Anthracene	ND	330	1	B7E0781	05/23/2017	05/31/17 21:23	
Benzidine (M)	ND	1600	1	B7E0781	05/23/2017	05/31/17 21:23	
Benzo(a)anthracene	ND	330	1	B7E0781	05/23/2017	05/31/17 21:23	
Benzo(a)pyrene	ND	330	1	B7E0781	05/23/2017	05/31/17 21:23	
Benzo(b)fluoranthene	ND	330	1	B7E0781	05/23/2017	05/31/17 21:23	
Benzo(g,h,i)perylene	ND	330	1	B7E0781	05/23/2017	05/31/17 21:23	
Benzo(k)fluoranthene	ND	330	1	B7E0781	05/23/2017	05/31/17 21:23	
Benzoic acid	ND	1600	1	B7E0781	05/23/2017	05/31/17 21:23	

Certificate of Analysis

Hushmand Associates, Inc.	Project Number : 6th St Bridge, LAC-17-001
250 Goddard	Report To : Naresh Bellana
Irvine , CA 92618	Reported : 06/05/2017

Client Sample ID 6-2-3.0

Lab ID: 1702036-87

Semivolatile Organic Compounds by EPA 8270C **Analyst: SP**

Analyte	Result (ug/kg)	PQL (ug/kg)	Dilution	Batch	Prepared	Date/Time Analyzed	Notes
Benzyl alcohol	ND	660	1	B7E0781	05/23/2017	05/31/17 21:23	
bis(2-chloroethoxy)methane	ND	330	1	B7E0781	05/23/2017	05/31/17 21:23	
bis(2-Chloroethyl)ether	ND	330	1	B7E0781	05/23/2017	05/31/17 21:23	
bis(2-chloroisopropyl)ether	ND	330	1	B7E0781	05/23/2017	05/31/17 21:23	
bis(2-ethylhexyl)phthalate	ND	330	1	B7E0781	05/23/2017	05/31/17 21:23	
Butylbenzylphthalate	ND	330	1	B7E0781	05/23/2017	05/31/17 21:23	
Chrysene	ND	330	1	B7E0781	05/23/2017	05/31/17 21:23	
Di-n-butylphthalate	ND	330	1	B7E0781	05/23/2017	05/31/17 21:23	
Di-n-octylphthalate	ND	330	1	B7E0781	05/23/2017	05/31/17 21:23	
Dibenz(a,h)anthracene	ND	330	1	B7E0781	05/23/2017	05/31/17 21:23	
Dibenzofuran	ND	330	1	B7E0781	05/23/2017	05/31/17 21:23	
Diethyl phthalate	ND	330	1	B7E0781	05/23/2017	05/31/17 21:23	
Dimethyl phthalate	ND	330	1	B7E0781	05/23/2017	05/31/17 21:23	
Fluoranthene	ND	330	1	B7E0781	05/23/2017	05/31/17 21:23	
Fluorene	ND	330	1	B7E0781	05/23/2017	05/31/17 21:23	
Hexachlorobenzene	ND	330	1	B7E0781	05/23/2017	05/31/17 21:23	
Hexachlorobutadiene	ND	660	1	B7E0781	05/23/2017	05/31/17 21:23	
Hexachlorocyclopentadiene	ND	660	1	B7E0781	05/23/2017	05/31/17 21:23	
Hexachloroethane	ND	330	1	B7E0781	05/23/2017	05/31/17 21:23	
Indeno(1,2,3-cd)pyrene	ND	330	1	B7E0781	05/23/2017	05/31/17 21:23	
Isophorone	ND	330	1	B7E0781	05/23/2017	05/31/17 21:23	
N-Nitroso-di-n propylamine	ND	330	1	B7E0781	05/23/2017	05/31/17 21:23	
N-Nitrosodiphenylamine	ND	330	1	B7E0781	05/23/2017	05/31/17 21:23	
Naphthalene	ND	330	1	B7E0781	05/23/2017	05/31/17 21:23	
Nitrobenzene	ND	330	1	B7E0781	05/23/2017	05/31/17 21:23	
Pentachlorophenol	ND	1600	1	B7E0781	05/23/2017	05/31/17 21:23	
Phenanthrene	ND	330	1	B7E0781	05/23/2017	05/31/17 21:23	
Phenol	ND	330	1	B7E0781	05/23/2017	05/31/17 21:23	
Pyrene	ND	330	1	B7E0781	05/23/2017	05/31/17 21:23	
Pyridine	ND	1600	1	B7E0781	05/23/2017	05/31/17 21:23	
Surrogate: 1,2-Dichlorobenzene-d4	*57.5 %*	*38 - 93*		B7E0781	05/23/2017	*05/31/17 21:23*	
Surrogate: 2,4,6-Tribromophenol	*69.1 %*	*27 - 124*		B7E0781	05/23/2017	*05/31/17 21:23*	
Surrogate: 2-Chlorophenol-d4	*58.3 %*	*36 - 96*		B7E0781	05/23/2017	*05/31/17 21:23*	
Surrogate: 2-Fluorobiphenyl	*67.2 %*	*44 - 100*		B7E0781	05/23/2017	*05/31/17 21:23*	
Surrogate: 2-Fluorophenol	*55.4 %*	*32 - 89*		B7E0781	05/23/2017	*05/31/17 21:23*	
Surrogate: 4-Terphenyl-d14	*69.7 %*	*49 - 123*		B7E0781	05/23/2017	*05/31/17 21:23*	
Surrogate: Nitrobenzene-d5	*63.5 %*	*38 - 104*		B7E0781	05/23/2017	*05/31/17 21:23*	

Certificate of Analysis

Hushmand Associates, Inc.	Project Number : 6th St Bridge, LAC-17-001
250 Goddard	Report To : Naresh Bellana
Irvine , CA 92618	Reported : 06/05/2017

Client Sample ID 6-2-3.0

Lab ID: 1702036-87

Semivolatile Organic Compounds by EPA 8270C **Analyst: SP**

Analyte	Result (ug/kg)	PQL (ug/kg)	Dilution	Batch	Prepared	Date/Time Analyzed	Notes
Surrogate: Phenol-d5	*57.6 %*	*35 - 95*		B7E0781	05/23/2017	*05/31/17 21:23*	

Certificate of Analysis

Hushmand Associates, Inc.	Project Number : 6th St Bridge, LAC-17-001
250 Goddard	Report To : Naresh Bellana
Irvine , CA 92618	Reported : 06/05/2017

Client Sample ID 6-2-5.0

Lab ID: 1702036-88

Title 22 Metals by ICP-AES EPA 6010B **Analyst: KEK**

Analyte	Result (mg/kg)	PQL (mg/kg)	Dilution	Batch	Prepared	Date/Time Analyzed	Notes
Antimony	ND	2.0	1	B7E0683	05/20/2017	05/22/17 13:11	
Arsenic	ND	1.0	1	B7E0683	05/20/2017	05/22/17 13:11	
Barium	**34**	1.0	1	B7E0683	05/20/2017	05/22/17 13:11	
Beryllium	ND	1.0	1	B7E0683	05/20/2017	05/22/17 13:11	
Cadmium	ND	1.0	1	B7E0683	05/20/2017	05/22/17 13:11	
Chromium	**2.9**	1.0	1	B7E0683	05/20/2017	05/22/17 13:11	
Cobalt	**2.8**	1.0	1	B7E0683	05/20/2017	05/22/17 13:11	
Copper	**3.0**	2.0	1	B7E0683	05/20/2017	05/22/17 13:11	
Lead	**1.2**	1.0	1	B7E0683	05/20/2017	05/22/17 13:11	
Molybdenum	ND	1.0	1	B7E0683	05/20/2017	05/22/17 13:11	
Nickel	**2.4**	1.0	1	B7E0683	05/20/2017	05/22/17 13:11	
Selenium	ND	1.0	1	B7E0683	05/20/2017	05/22/17 13:11	
Silver	ND	1.0	1	B7E0683	05/20/2017	05/22/17 13:11	
Thallium	ND	1.0	1	B7E0683	05/20/2017	05/22/17 13:11	
Vanadium	**10**	1.0	1	B7E0683	05/20/2017	05/22/17 13:11	
Zinc	**14**	1.0	1	B7E0683	05/20/2017	05/22/17 13:11	

Mercury by AA (Cold Vapor) EPA 7471A **Analyst: KEK**

Analyte	Result (mg/kg)	PQL (mg/kg)	Dilution	Batch	Prepared	Date/Time Analyzed	Notes
Mercury	ND	0.10	1	B7E0678	05/20/2017	05/22/17 16:59	

Certificate of Analysis

Hushmand Associates, Inc.	Project Number : 6th St Bridge, LAC-17-001
250 Goddard	Report To : Naresh Bellana
Irvine , CA 92618	Reported : 06/05/2017

Client Sample ID 7-1-0.5

Lab ID: 1702036-89

Title 22 Metals by ICP-AES EPA 6010B

Analyst: KEK

Analyte	Result (mg/kg)	PQL (mg/kg)	Dilution	Batch	Prepared	Date/Time Analyzed	Notes
Antimony	ND	2.0	1	B7E0683	05/20/2017	05/22/17 13:13	
Arsenic	**2.7**	1.0	1	B7E0683	05/20/2017	05/22/17 13:13	
Barium	**110**	1.0	1	B7E0683	05/20/2017	05/22/17 13:13	
Beryllium	ND	1.0	1	B7E0683	05/20/2017	05/22/17 13:13	
Cadmium	ND	1.0	1	B7E0683	05/20/2017	05/22/17 13:13	
Chromium	**14**	1.0	1	B7E0683	05/20/2017	05/22/17 13:13	
Cobalt	**6.8**	1.0	1	B7E0683	05/20/2017	05/22/17 13:13	
Copper	**4500**	10	5	B7E0683	05/20/2017	05/22/17 18:02	D6
Lead	**45**	1.0	1	B7E0683	05/20/2017	05/22/17 13:13	
Molybdenum	ND	1.0	1	B7E0683	05/20/2017	05/22/17 13:13	
Nickel	**12**	1.0	1	B7E0683	05/20/2017	05/22/17 13:13	
Selenium	ND	1.0	1	B7E0683	05/20/2017	05/22/17 13:13	
Silver	ND	1.0	1	B7E0683	05/20/2017	05/22/17 13:13	
Thallium	ND	1.0	1	B7E0683	05/20/2017	05/22/17 13:13	
Vanadium	**30**	1.0	1	B7E0683	05/20/2017	05/22/17 13:13	
Zinc	**100**	1.0	1	B7E0683	05/20/2017	05/22/17 13:13	

STLC Metals by ICP-AES by EPA 6010B

Analyst: GO

Analyte	Result (mg/L)	PQL (mg/L)	Dilution	Batch	Prepared	Date/Time Analyzed	Notes
Copper	**12**	1.0	20	B7F0044	06/02/2017	06/02/17 14:03	D1

Mercury by AA (Cold Vapor) EPA 7471A

Analyst: KEK

Analyte	Result (mg/kg)	PQL (mg/kg)	Dilution	Batch	Prepared	Date/Time Analyzed	Notes
Mercury	**0.13**	0.10	1	B7E0678	05/20/2017	05/22/17 17:01	

Gasoline Range Organics by EPA 8015B (Modified)

Analyst: VW

Analyte	Result (mg/kg)	PQL (mg/kg)	Dilution	Batch	Prepared	Date/Time Analyzed	Notes
Gasoline Range Organics	ND	1.0	1	B7E0657	05/21/2017	05/21/17 17:21	
Surrogate: 4-Bromofluorobenzene	*106 %*	*36 - 125*		B7E0657	05/21/2017	*05/21/17 17:21*	

Certificate of Analysis

Hushmand Associates, Inc.	Project Number : 6th St Bridge, LAC-17-001
250 Goddard	Report To : Naresh Bellana
Irvine , CA 92618	Reported : 06/05/2017

Client Sample ID 7-1-0.5

Lab ID: 1702036-89

Diesel Range Organics by EPA 8015B

Analyst: CR

Analyte	Result (mg/kg)	PQL (mg/kg)	Dilution	Batch	Prepared	Date/Time Analyzed	Notes
DRO	**62**	10	1	B7E0785	05/23/2017	05/25/17 04:04	
Surrogate: p-Terphenyl	*90.2 %*	*47 - 157*		B7E0785	05/23/2017	*05/25/17 04:04*	

Volatile Organic Compounds by EPA 8260B

Analyst: AG

Analyte	Result (ug/kg)	PQL (ug/kg)	Dilution	Batch	Prepared	Date/Time Analyzed	Notes
1,1,1,2-Tetrachloroethane	ND	5.0	1	B7E0639	05/18/2017	05/18/17 21:20	
1,1,1-Trichloroethane	ND	5.0	1	B7E0639	05/18/2017	05/18/17 21:20	
1,1,2,2-Tetrachloroethane	ND	5.0	1	B7E0639	05/18/2017	05/18/17 21:20	
1,1,2-Trichloroethane	ND	5.0	1	B7E0639	05/18/2017	05/18/17 21:20	
1,1-Dichloroethane	ND	5.0	1	B7E0639	05/18/2017	05/18/17 21:20	
1,1-Dichloroethene	ND	5.0	1	B7E0639	05/18/2017	05/18/17 21:20	
1,1-Dichloropropene	ND	5.0	1	B7E0639	05/18/2017	05/18/17 21:20	
1,2,3-Trichloropropane	ND	5.0	1	B7E0639	05/18/2017	05/18/17 21:20	
1,2,3-Trichlorobenzene	ND	5.0	1	B7E0639	05/18/2017	05/18/17 21:20	
1,2,4-Trichlorobenzene	ND	5.0	1	B7E0639	05/18/2017	05/18/17 21:20	
1,2,4-Trimethylbenzene	ND	5.0	1	B7E0639	05/18/2017	05/18/17 21:20	
1,2-Dibromo-3-chloropropane	ND	10	1	B7E0639	05/18/2017	05/18/17 21:20	
1,2-Dibromoethane	ND	5.0	1	B7E0639	05/18/2017	05/18/17 21:20	
1,2-Dichlorobenzene	ND	5.0	1	B7E0639	05/18/2017	05/18/17 21:20	
1,2-Dichloroethane	ND	5.0	1	B7E0639	05/18/2017	05/18/17 21:20	
1,2-Dichloropropane	ND	5.0	1	B7E0639	05/18/2017	05/18/17 21:20	
1,3,5-Trimethylbenzene	ND	5.0	1	B7E0639	05/18/2017	05/18/17 21:20	
1,3-Dichlorobenzene	ND	5.0	1	B7E0639	05/18/2017	05/18/17 21:20	
1,3-Dichloropropane	ND	5.0	1	B7E0639	05/18/2017	05/18/17 21:20	
1,4-Dichlorobenzene	ND	5.0	1	B7E0639	05/18/2017	05/18/17 21:20	
2,2-Dichloropropane	ND	5.0	1	B7E0639	05/18/2017	05/18/17 21:20	
2-Chlorotoluene	ND	5.0	1	B7E0639	05/18/2017	05/18/17 21:20	
4-Chlorotoluene	ND	5.0	1	B7E0639	05/18/2017	05/18/17 21:20	
4-Isopropyltoluene	ND	5.0	1	B7E0639	05/18/2017	05/18/17 21:20	
Benzene	ND	5.0	1	B7E0639	05/18/2017	05/18/17 21:20	
Bromobenzene	ND	5.0	1	B7E0639	05/18/2017	05/18/17 21:20	
Bromochloromethane	ND	5.0	1	B7E0639	05/18/2017	05/18/17 21:20	
Bromodichloromethane	ND	5.0	1	B7E0639	05/18/2017	05/18/17 21:20	
Bromoform	ND	5.0	1	B7E0639	05/18/2017	05/18/17 21:20	
Bromomethane	ND	5.0	1	B7E0639	05/18/2017	05/18/17 21:20	

Certificate of Analysis

Hushmand Associates, Inc.	Project Number : 6th St Bridge, LAC-17-001
250 Goddard	Report To : Naresh Bellana
Irvine , CA 92618	Reported : 06/05/2017

Client Sample ID 7-1-0.5

Lab ID: 1702036-89

Volatile Organic Compounds by EPA 8260B **Analyst: AG**

Analyte	Result (ug/kg)	PQL (ug/kg)	Dilution	Batch	Prepared	Date/Time Analyzed	Notes
Carbon disulfide	ND	5.0	1	B7E0639	05/18/2017	05/18/17 21:20	
Carbon tetrachloride	ND	5.0	1	B7E0639	05/18/2017	05/18/17 21:20	
Chlorobenzene	ND	5.0	1	B7E0639	05/18/2017	05/18/17 21:20	
Chloroethane	ND	5.0	1	B7E0639	05/18/2017	05/18/17 21:20	
Chloroform	ND	5.0	1	B7E0639	05/18/2017	05/18/17 21:20	
Chloromethane	ND	5.0	1	B7E0639	05/18/2017	05/18/17 21:20	
cis-1,2-Dichloroethene	ND	5.0	1	B7E0639	05/18/2017	05/18/17 21:20	
cis-1,3-Dichloropropene	ND	5.0	1	B7E0639	05/18/2017	05/18/17 21:20	
Di-isopropyl ether	ND	5.0	1	B7E0639	05/18/2017	05/18/17 21:20	
Dibromochloromethane	ND	5.0	1	B7E0639	05/18/2017	05/18/17 21:20	
Dibromomethane	ND	5.0	1	B7E0639	05/18/2017	05/18/17 21:20	
Dichlorodifluoromethane	ND	5.0	1	B7E0639	05/18/2017	05/18/17 21:20	
Ethyl Acetate	ND	50	1	B7E0639	05/18/2017	05/18/17 21:20	
Ethyl Ether	ND	50	1	B7E0639	05/18/2017	05/18/17 21:20	
Ethyl tert-butyl ether	ND	5.0	1	B7E0639	05/18/2017	05/18/17 21:20	
Ethylbenzene	ND	5.0	1	B7E0639	05/18/2017	05/18/17 21:20	
Freon-113	ND	5.0	1	B7E0639	05/18/2017	05/18/17 21:20	
Hexachlorobutadiene	ND	5.0	1	B7E0639	05/18/2017	05/18/17 21:20	
Isopropylbenzene	ND	5.0	1	B7E0639	05/18/2017	05/18/17 21:20	
m,p-Xylene	ND	10	1	B7E0639	05/18/2017	05/18/17 21:20	
Methylene chloride	ND	5.0	1	B7E0639	05/18/2017	05/18/17 21:20	
MTBE	ND	5.0	1	B7E0639	05/18/2017	05/18/17 21:20	
n-Butylbenzene	ND	5.0	1	B7E0639	05/18/2017	05/18/17 21:20	
n-Propylbenzene	ND	5.0	1	B7E0639	05/18/2017	05/18/17 21:20	
Naphthalene	ND	5.0	1	B7E0639	05/18/2017	05/18/17 21:20	
o-Xylene	ND	5.0	1	B7E0639	05/18/2017	05/18/17 21:20	
sec-Butylbenzene	ND	5.0	1	B7E0639	05/18/2017	05/18/17 21:20	
Styrene	ND	5.0	1	B7E0639	05/18/2017	05/18/17 21:20	
tert-Amyl methyl ether	ND	5.0	1	B7E0639	05/18/2017	05/18/17 21:20	
tert-Butanol	ND	100	1	B7E0639	05/18/2017	05/18/17 21:20	
tert-Butylbenzene	ND	5.0	1	B7E0639	05/18/2017	05/18/17 21:20	
Tetrachloroethene	ND	5.0	1	B7E0639	05/18/2017	05/18/17 21:20	
Toluene	ND	5.0	1	B7E0639	05/18/2017	05/18/17 21:20	
trans-1,2-Dichloroethene	ND	5.0	1	B7E0639	05/18/2017	05/18/17 21:20	
trans-1,3-Dichloropropene	ND	5.0	1	B7E0639	05/18/2017	05/18/17 21:20	
Trichloroethene	ND	5.0	1	B7E0639	05/18/2017	05/18/17 21:20	
Trichlorofluoromethane	ND	5.0	1	B7E0639	05/18/2017	05/18/17 21:20	

Certificate of Analysis

Hushmand Associates, Inc.	Project Number : 6th St Bridge, LAC-17-001
250 Goddard	Report To : Naresh Bellana
Irvine , CA 92618	Reported : 06/05/2017

Client Sample ID 7-1-0.5

Lab ID: 1702036-89

Volatile Organic Compounds by EPA 8260B

Analyst: AG

Analyte	Result (ug/kg)	PQL (ug/kg)	Dilution	Batch	Prepared	Date/Time Analyzed	Notes
Vinyl acetate	ND	50	1	B7E0639	05/18/2017	05/18/17 21:20	
Vinyl chloride	ND	5.0	1	B7E0639	05/18/2017	05/18/17 21:20	
Surrogate: 1,2-Dichloroethane-d4	*108 %*	*12 - 186*		B7E0639	05/18/2017	*05/18/17 21:20*	
Surrogate: 4-Bromofluorobenzene	*106 %*	*23 - 162*		B7E0639	05/18/2017	*05/18/17 21:20*	
Surrogate: Dibromofluoromethane	*94.8 %*	*23 - 179*		B7E0639	05/18/2017	*05/18/17 21:20*	
Surrogate: Toluene-d8	*101 %*	*26 - 164*		B7E0639	05/18/2017	*05/18/17 21:20*	

Semivolatile Organic Compounds by EPA 8270C

Analyst: SP

Analyte	Result (ug/kg)	PQL (ug/kg)	Dilution	Batch	Prepared	Date/Time Analyzed	Notes
1,2,4-Trichlorobenzene	ND	1600	5	B7E0781	05/23/2017	06/01/17 07:13	D1
1,2-Dichlorobenzene	ND	1600	5	B7E0781	05/23/2017	06/01/17 07:13	D1
1,3-Dichlorobenzene	ND	1600	5	B7E0781	05/23/2017	06/01/17 07:13	D1
1,4-Dichlorobenzene	ND	1600	5	B7E0781	05/23/2017	06/01/17 07:13	D1
2,4,5-Trichlorophenol	ND	1600	5	B7E0781	05/23/2017	06/01/17 07:13	D1
2,4,6-Trichlorophenol	ND	1600	5	B7E0781	05/23/2017	06/01/17 07:13	D1
2,4-Dichlorophenol	ND	8200	5	B7E0781	05/23/2017	06/01/17 07:13	D1
2,4-Dimethylphenol	ND	1600	5	B7E0781	05/23/2017	06/01/17 07:13	D1
2,4-Dinitrophenol	ND	8200	5	B7E0781	05/23/2017	06/01/17 07:13	D1
2,4-Dinitrotoluene	ND	1600	5	B7E0781	05/23/2017	06/01/17 07:13	D1
2,6-Dinitrotoluene	ND	1600	5	B7E0781	05/23/2017	06/01/17 07:13	D1
2-Chloronaphthalene	ND	1600	5	B7E0781	05/23/2017	06/01/17 07:13	D1
2-Chlorophenol	ND	1600	5	B7E0781	05/23/2017	06/01/17 07:13	D1
2-Methylnaphthalene	ND	1600	5	B7E0781	05/23/2017	06/01/17 07:13	D1
2-Methylphenol	ND	1600	5	B7E0781	05/23/2017	06/01/17 07:13	D1
2-Nitroaniline	ND	8200	5	B7E0781	05/23/2017	06/01/17 07:13	D1
2-Nitrophenol	ND	1600	5	B7E0781	05/23/2017	06/01/17 07:13	D1
3,3´-Dichlorobenzidine	ND	3300	5	B7E0781	05/23/2017	06/01/17 07:13	D1
3-Nitroaniline	ND	8200	5	B7E0781	05/23/2017	06/01/17 07:13	D1
4,6-Dinitro-2-methyphenol	ND	8200	5	B7E0781	05/23/2017	06/01/17 07:13	D1
4-Bromophenyl-phenylether	ND	1600	5	B7E0781	05/23/2017	06/01/17 07:13	D1
4-Chloro-3-methylphenol	ND	3300	5	B7E0781	05/23/2017	06/01/17 07:13	D1
4-Chloroaniline	ND	3300	5	B7E0781	05/23/2017	06/01/17 07:13	D1
4-Chlorophenyl-phenylether	ND	1600	5	B7E0781	05/23/2017	06/01/17 07:13	D1
4-Methylphenol	ND	1600	5	B7E0781	05/23/2017	06/01/17 07:13	D1
4-Nitroaniline	ND	8200	5	B7E0781	05/23/2017	06/01/17 07:13	D1

Certificate of Analysis

Hushmand Associates, Inc.	Project Number : 6th St Bridge, LAC-17-001
250 Goddard	Report To : Naresh Bellana
Irvine , CA 92618	Reported : 06/05/2017

Client Sample ID 7-1-0.5

Lab ID: 1702036-89

Semivolatile Organic Compounds by EPA 8270C **Analyst: SP**

Analyte	Result (ug/kg)	PQL (ug/kg)	Dilution	Batch	Prepared	Date/Time Analyzed	Notes
4-Nitrophenol	ND	1600	5	B7E0781	05/23/2017	06/01/17 07:13	D1
Acenaphthene	ND	1600	5	B7E0781	05/23/2017	06/01/17 07:13	D1
Acenaphthylene	ND	1600	5	B7E0781	05/23/2017	06/01/17 07:13	D1
Anthracene	ND	1600	5	B7E0781	05/23/2017	06/01/17 07:13	D1
Benzidine (M)	ND	8200	5	B7E0781	05/23/2017	06/01/17 07:13	D1
Benzo(a)anthracene	ND	1600	5	B7E0781	05/23/2017	06/01/17 07:13	D1
Benzo(a)pyrene	ND	1600	5	B7E0781	05/23/2017	06/01/17 07:13	D1
Benzo(b)fluoranthene	ND	1600	5	B7E0781	05/23/2017	06/01/17 07:13	D1
Benzo(g,h,i)perylene	ND	1600	5	B7E0781	05/23/2017	06/01/17 07:13	D1
Benzo(k)fluoranthene	ND	1600	5	B7E0781	05/23/2017	06/01/17 07:13	D1
Benzoic acid	ND	8200	5	B7E0781	05/23/2017	06/01/17 07:13	D1
Benzyl alcohol	ND	3300	5	B7E0781	05/23/2017	06/01/17 07:13	D1
bis(2-chloroethoxy)methane	ND	1600	5	B7E0781	05/23/2017	06/01/17 07:13	D1
bis(2-Chloroethyl)ether	ND	1600	5	B7E0781	05/23/2017	06/01/17 07:13	D1
bis(2-chloroisopropyl)ether	ND	1600	5	B7E0781	05/23/2017	06/01/17 07:13	D1
bis(2-ethylhexyl)phthalate	ND	1600	5	B7E0781	05/23/2017	06/01/17 07:13	D1
Butylbenzylphthalate	ND	1600	5	B7E0781	05/23/2017	06/01/17 07:13	D1
Chrysene	ND	1600	5	B7E0781	05/23/2017	06/01/17 07:13	D1
Di-n-butylphthalate	ND	1600	5	B7E0781	05/23/2017	06/01/17 07:13	D1
Di-n-octylphthalate	ND	1600	5	B7E0781	05/23/2017	06/01/17 07:13	D1
Dibenz(a,h)anthracene	ND	1600	5	B7E0781	05/23/2017	06/01/17 07:13	D1
Dibenzofuran	ND	1600	5	B7E0781	05/23/2017	06/01/17 07:13	D1
Diethyl phthalate	ND	1600	5	B7E0781	05/23/2017	06/01/17 07:13	D1
Dimethyl phthalate	ND	1600	5	B7E0781	05/23/2017	06/01/17 07:13	D1
Fluoranthene	ND	1600	5	B7E0781	05/23/2017	06/01/17 07:13	D1
Fluorene	ND	1600	5	B7E0781	05/23/2017	06/01/17 07:13	D1
Hexachlorobenzene	ND	1600	5	B7E0781	05/23/2017	06/01/17 07:13	D1
Hexachlorobutadiene	ND	3300	5	B7E0781	05/23/2017	06/01/17 07:13	D1
Hexachlorocyclopentadiene	ND	3300	5	B7E0781	05/23/2017	06/01/17 07:13	D1
Hexachloroethane	ND	1600	5	B7E0781	05/23/2017	06/01/17 07:13	D1
Indeno(1,2,3-cd)pyrene	ND	1600	5	B7E0781	05/23/2017	06/01/17 07:13	D1
Isophorone	ND	1600	5	B7E0781	05/23/2017	06/01/17 07:13	D1
N-Nitroso-di-n propylamine	ND	1600	5	B7E0781	05/23/2017	06/01/17 07:13	D1
N-Nitrosodiphenylamine	ND	1600	5	B7E0781	05/23/2017	06/01/17 07:13	D1
Naphthalene	ND	1600	5	B7E0781	05/23/2017	06/01/17 07:13	D1
Nitrobenzene	ND	1600	5	B7E0781	05/23/2017	06/01/17 07:13	D1
Pentachlorophenol	ND	8200	5	B7E0781	05/23/2017	06/01/17 07:13	D1

Certificate of Analysis

Hushmand Associates, Inc.	Project Number : 6th St Bridge, LAC-17-001
250 Goddard	Report To : Naresh Bellana
Irvine , CA 92618	Reported : 06/05/2017

Client Sample ID 7-1-0.5

Lab ID: 1702036-89

Semivolatile Organic Compounds by EPA 8270C **Analyst: SP**

Analyte	Result (ug/kg)	PQL (ug/kg)	Dilution	Batch	Prepared	Date/Time Analyzed	Notes
Phenanthrene	ND	1600	5	B7E0781	05/23/2017	06/01/17 07:13	D1
Phenol	ND	1600	5	B7E0781	05/23/2017	06/01/17 07:13	D1
Pyrene	ND	1600	5	B7E0781	05/23/2017	06/01/17 07:13	D1
Pyridine	ND	8200	5	B7E0781	05/23/2017	06/01/17 07:13	D1
Surrogate: 1,2-Dichlorobenzene-d4	*46.4 %*	*38 - 93*		B7E0781	05/23/2017	*06/01/17 07:13*	
Surrogate: 2,4,6-Tribromophenol	*43.3 %*	*27 - 124*		B7E0781	05/23/2017	*06/01/17 07:13*	
Surrogate: 2-Chlorophenol-d4	*44.7 %*	*36 - 96*		B7E0781	05/23/2017	*06/01/17 07:13*	
Surrogate: 2-Fluorobiphenyl	*55.4 %*	*44 - 100*		B7E0781	05/23/2017	*06/01/17 07:13*	
Surrogate: 2-Fluorophenol	*39.5 %*	*32 - 89*		B7E0781	05/23/2017	*06/01/17 07:13*	
Surrogate: 4-Terphenyl-d14	*54.2 %*	*49 - 123*		B7E0781	05/23/2017	*06/01/17 07:13*	
Surrogate: Nitrobenzene-d5	*50.2 %*	*38 - 104*		B7E0781	05/23/2017	*06/01/17 07:13*	
Surrogate: Phenol-d5	*41.8 %*	*35 - 95*		B7E0781	05/23/2017	*06/01/17 07:13*	

Certificate of Analysis

Hushmand Associates, Inc.	Project Number : 6th St Bridge, LAC-17-001
250 Goddard	Report To : Naresh Bellana
Irvine , CA 92618	Reported : 06/05/2017

Client Sample ID 7-1-1.0

Lab ID: 1702036-90

Title 22 Metals by ICP-AES EPA 6010B

Analyst: KEK

Analyte	Result (mg/kg)	PQL (mg/kg)	Dilution	Batch	Prepared	Date/Time Analyzed	Notes
Antimony	ND	2.0	1	B7E0684	05/20/2017	05/22/17 13:24	
Arsenic	**1.2**	1.0	1	B7E0684	05/20/2017	05/22/17 13:24	
Barium	**120**	1.0	1	B7E0684	05/20/2017	05/22/17 13:24	
Beryllium	ND	1.0	1	B7E0684	05/20/2017	05/22/17 13:24	
Cadmium	ND	1.0	1	B7E0684	05/20/2017	05/22/17 13:24	
Chromium	**8.8**	1.0	1	B7E0684	05/20/2017	05/22/17 13:24	
Cobalt	**4.8**	1.0	1	B7E0684	05/20/2017	05/22/17 13:24	
Copper	**700**	2.0	1	B7E0684	05/20/2017	05/22/17 13:24	
Lead	**69**	1.0	1	B7E0684	05/20/2017	05/22/17 13:24	
Molybdenum	ND	1.0	1	B7E0684	05/20/2017	05/22/17 13:24	
Nickel	**13**	1.0	1	B7E0684	05/20/2017	05/22/17 13:24	
Selenium	ND	1.0	1	B7E0684	05/20/2017	05/22/17 13:24	
Silver	ND	1.0	1	B7E0684	05/20/2017	05/22/17 13:24	
Thallium	ND	1.0	1	B7E0684	05/20/2017	05/22/17 13:24	
Vanadium	**24**	1.0	1	B7E0684	05/20/2017	05/22/17 13:24	
Zinc	**270**	1.0	1	B7E0684	05/20/2017	05/22/17 13:24	

STLC Metals by ICP-AES by EPA 6010B

Analyst: GO

Analyte	Result (mg/L)	PQL (mg/L)	Dilution	Batch	Prepared	Date/Time Analyzed	Notes
Copper	**140**	1.0	20	B7F0044	06/02/2017	06/02/17 14:04	D1
Lead	**6.4**	1.0	20	B7F0044	06/02/2017	06/02/17 14:04	D1

Mercury by AA (Cold Vapor) EPA 7471A

Analyst: KEK

Analyte	Result (mg/kg)	PQL (mg/kg)	Dilution	Batch	Prepared	Date/Time Analyzed	Notes
Mercury	**0.22**	0.10	1	B7E0678	05/20/2017	05/22/17 17:03	

Gasoline Range Organics by EPA 8015B (Modified)

Analyst: VW

Analyte	Result (mg/kg)	PQL (mg/kg)	Dilution	Batch	Prepared	Date/Time Analyzed	Notes
Gasoline Range Organics	ND	1.0	1	B7E0657	05/21/2017	05/21/17 17:40	
Surrogate: 4-Bromofluorobenzene	*104 %*	*36 - 125*		B7E0657	05/21/2017	*05/21/17 17:40*	

Certificate of Analysis

Hushmand Associates, Inc.	Project Number : 6th St Bridge, LAC-17-001
250 Goddard	Report To : Naresh Bellana
Irvine , CA 92618	Reported : 06/05/2017

Client Sample ID 7-1-1.0

Lab ID: 1702036-90

Diesel Range Organics by EPA 8015B

Analyst: CR

Analyte		Result (mg/kg)	PQL (mg/kg)	Dilution	Batch	Prepared	Date/Time Analyzed	Notes
DRO		**120**	10	1	B7E0785	05/23/2017	05/25/17 04:21	
Surrogate: p-Terphenyl	*86.6 %*		*47 - 157*		B7E0785	05/23/2017	*05/25/17 04:21*	

Organochlorine Pesticides by EPA 8081

Analyst: RL/

Analyte	Result (ug/kg)	PQL (ug/kg)	Dilution	Batch	Prepared	Date/Time Analyzed	Notes
4,4´-DDD [2C]	**3.4**	2.0	1	B7E0819	05/24/2017	05/24/17 18:26	
4,4´-DDE [2C]	**5.9**	2.0	1	B7E0819	05/24/2017	05/24/17 18:26	
4,4´-DDT [2C]	**6.1**	2.0	1	B7E0819	05/24/2017	05/24/17 18:26	
Aldrin	ND	1.0	1	B7E0819	05/24/2017	05/24/17 18:26	
alpha-BHC [2C]	**2.5**	1.0	1	B7E0819	05/24/2017	05/24/17 18:26	
alpha-Chlordane [2C]	ND	1.0	1	B7E0819	05/24/2017	05/24/17 18:26	
beta-BHC	ND	1.0	1	B7E0819	05/24/2017	05/24/17 18:26	
Chlordane	ND	8.5	1	B7E0819	05/24/2017	05/24/17 18:26	
delta-BHC	ND	1.0	1	B7E0819	05/24/2017	05/24/17 18:26	
Dieldrin	ND	2.0	1	B7E0819	05/24/2017	05/24/17 18:26	
Endosulfan I	ND	1.0	1	B7E0819	05/24/2017	05/24/17 18:26	
Endosulfan II	ND	2.0	1	B7E0819	05/24/2017	05/24/17 18:26	
Endosulfan sulfate	ND	2.0	1	B7E0819	05/24/2017	05/24/17 18:26	
Endrin [2C]	ND	2.0	1	B7E0819	05/24/2017	05/24/17 18:26	
Endrin aldehyde [2C]	ND	2.0	1	B7E0819	05/24/2017	05/24/17 18:26	
Endrin ketone	ND	2.0	1	B7E0819	05/24/2017	05/24/17 18:26	
gamma-BHC	ND	1.0	1	B7E0819	05/24/2017	05/24/17 18:26	
gamma-Chlordane	ND	1.0	1	B7E0819	05/24/2017	05/24/17 18:26	
Heptachlor	ND	1.0	1	B7E0819	05/24/2017	05/24/17 18:26	
Heptachlor epoxide	ND	1.0	1	B7E0819	05/24/2017	05/24/17 18:26	
Methoxychlor	ND	5.0	1	B7E0819	05/24/2017	05/24/17 18:26	
Toxaphene	ND	50	1	B7E0819	05/24/2017	05/24/17 18:26	
Surrogate: Decachlorobiphenyl	*45.0 %*	*27 - 123*		B7E0819	05/24/2017	*05/24/17 18:26*	
Surrogate: Tetrachloro-m-xylene	*47.3 %*	*26 - 108*		B7E0819	05/24/2017	*05/24/17 18:26*	

Certificate of Analysis

Hushmand Associates, Inc.	Project Number : 6th St Bridge, LAC-17-001
250 Goddard	Report To : Naresh Bellana
Irvine , CA 92618	Reported : 06/05/2017

Client Sample ID 7-1-1.0

Lab ID: 1702036-90

Polychlorinated Biphenyls by EPA 8082

Analyst: LT

Analyte	Result (ug/kg)	PQL (ug/kg)	Dilution	Batch	Prepared	Date/Time Analyzed	Notes
Aroclor 1016	ND	16	1	B7E0819	05/24/2017	05/24/17 18:33	
Aroclor 1221	ND	16	1	B7E0819	05/24/2017	05/24/17 18:33	
Aroclor 1232	ND	16	1	B7E0819	05/24/2017	05/24/17 18:33	
Aroclor 1242	ND	16	1	B7E0819	05/24/2017	05/24/17 18:33	
Aroclor 1248	ND	16	1	B7E0819	05/24/2017	05/24/17 18:33	
Aroclor 1254	ND	16	1	B7E0819	05/24/2017	05/24/17 18:33	
Aroclor 1260	ND	16	1	B7E0819	05/24/2017	05/24/17 18:33	
Aroclor 1262	ND	16	1	B7E0819	05/24/2017	05/24/17 18:33	
Aroclor 1268	ND	16	1	B7E0819	05/24/2017	05/24/17 18:33	
Surrogate: Decachlorobiphenyl	*54.8 %*	*18 - 136*		B7E0819	05/24/2017	*05/24/17 18:33*	
Surrogate: Tetrachloro-m-xylene	*70.3 %*	*30 - 130*		B7E0819	05/24/2017	*05/24/17 18:33*	

Volatile Organic Compounds by EPA 8260B

Analyst: AG

Analyte	Result (ug/kg)	PQL (ug/kg)	Dilution	Batch	Prepared	Date/Time Analyzed	Notes
1,1,1,2-Tetrachloroethane	ND	5.0	1	B7E0654	05/19/2017	05/19/17 11:04	
1,1,1-Trichloroethane	ND	5.0	1	B7E0654	05/19/2017	05/19/17 11:04	
1,1,2,2-Tetrachloroethane	ND	5.0	1	B7E0654	05/19/2017	05/19/17 11:04	
1,1,2-Trichloroethane	ND	5.0	1	B7E0654	05/19/2017	05/19/17 11:04	
1,1-Dichloroethane	ND	5.0	1	B7E0654	05/19/2017	05/19/17 11:04	
1,1-Dichloroethene	ND	5.0	1	B7E0654	05/19/2017	05/19/17 11:04	
1,1-Dichloropropene	ND	5.0	1	B7E0654	05/19/2017	05/19/17 11:04	
1,2,3-Trichloropropane	ND	5.0	1	B7E0654	05/19/2017	05/19/17 11:04	
1,2,3-Trichlorobenzene	ND	5.0	1	B7E0654	05/19/2017	05/19/17 11:04	
1,2,4-Trichlorobenzene	ND	5.0	1	B7E0654	05/19/2017	05/19/17 11:04	
1,2,4-Trimethylbenzene	ND	5.0	1	B7E0654	05/19/2017	05/19/17 11:04	
1,2-Dibromo-3-chloropropane	ND	10	1	B7E0654	05/19/2017	05/19/17 11:04	
1,2-Dibromoethane	ND	5.0	1	B7E0654	05/19/2017	05/19/17 11:04	
1,2-Dichlorobenzene	ND	5.0	1	B7E0654	05/19/2017	05/19/17 11:04	
1,2-Dichloroethane	ND	5.0	1	B7E0654	05/19/2017	05/19/17 11:04	
1,2-Dichloropropane	ND	5.0	1	B7E0654	05/19/2017	05/19/17 11:04	
1,3,5-Trimethylbenzene	ND	5.0	1	B7E0654	05/19/2017	05/19/17 11:04	
1,3-Dichlorobenzene	ND	5.0	1	B7E0654	05/19/2017	05/19/17 11:04	
1,3-Dichloropropane	ND	5.0	1	B7E0654	05/19/2017	05/19/17 11:04	
1,4-Dichlorobenzene	ND	5.0	1	B7E0654	05/19/2017	05/19/17 11:04	
2,2-Dichloropropane	ND	5.0	1	B7E0654	05/19/2017	05/19/17 11:04	

Certificate of Analysis

Hushmand Associates, Inc.	Project Number : 6th St Bridge, LAC-17-001
250 Goddard	Report To : Naresh Bellana
Irvine , CA 92618	Reported : 06/05/2017

Client Sample ID 7-1-1.0

Lab ID: 1702036-90

Volatile Organic Compounds by EPA 8260B **Analyst: AG**

Analyte	Result (ug/kg)	PQL (ug/kg)	Dilution	Batch	Prepared	Date/Time Analyzed	Notes
2-Chlorotoluene	ND	5.0	1	B7E0654	05/19/2017	05/19/17 11:04	
4-Chlorotoluene	ND	5.0	1	B7E0654	05/19/2017	05/19/17 11:04	
4-Isopropyltoluene	ND	5.0	1	B7E0654	05/19/2017	05/19/17 11:04	
Benzene	ND	5.0	1	B7E0654	05/19/2017	05/19/17 11:04	
Bromobenzene	ND	5.0	1	B7E0654	05/19/2017	05/19/17 11:04	
Bromochloromethane	ND	5.0	1	B7E0654	05/19/2017	05/19/17 11:04	
Bromodichloromethane	ND	5.0	1	B7E0654	05/19/2017	05/19/17 11:04	
Bromoform	ND	5.0	1	B7E0654	05/19/2017	05/19/17 11:04	
Bromomethane	ND	5.0	1	B7E0654	05/19/2017	05/19/17 11:04	
Carbon disulfide	ND	5.0	1	B7E0654	05/19/2017	05/19/17 11:04	
Carbon tetrachloride	ND	5.0	1	B7E0654	05/19/2017	05/19/17 11:04	
Chlorobenzene	ND	5.0	1	B7E0654	05/19/2017	05/19/17 11:04	
Chloroethane	ND	5.0	1	B7E0654	05/19/2017	05/19/17 11:04	
Chloroform	ND	5.0	1	B7E0654	05/19/2017	05/19/17 11:04	
Chloromethane	ND	5.0	1	B7E0654	05/19/2017	05/19/17 11:04	
cis-1,2-Dichloroethene	ND	5.0	1	B7E0654	05/19/2017	05/19/17 11:04	
cis-1,3-Dichloropropene	ND	5.0	1	B7E0654	05/19/2017	05/19/17 11:04	
Di-isopropyl ether	ND	5.0	1	B7E0654	05/19/2017	05/19/17 11:04	
Dibromochloromethane	ND	5.0	1	B7E0654	05/19/2017	05/19/17 11:04	
Dibromomethane	ND	5.0	1	B7E0654	05/19/2017	05/19/17 11:04	
Dichlorodifluoromethane	ND	5.0	1	B7E0654	05/19/2017	05/19/17 11:04	
Ethyl Acetate	ND	50	1	B7E0654	05/19/2017	05/19/17 11:04	
Ethyl Ether	ND	50	1	B7E0654	05/19/2017	05/19/17 11:04	
Ethyl tert-butyl ether	ND	5.0	1	B7E0654	05/19/2017	05/19/17 11:04	
Ethylbenzene	ND	5.0	1	B7E0654	05/19/2017	05/19/17 11:04	
Freon-113	ND	5.0	1	B7E0654	05/19/2017	05/19/17 11:04	
Hexachlorobutadiene	ND	5.0	1	B7E0654	05/19/2017	05/19/17 11:04	
Isopropylbenzene	ND	5.0	1	B7E0654	05/19/2017	05/19/17 11:04	
m,p-Xylene	ND	10	1	B7E0654	05/19/2017	05/19/17 11:04	
Methylene chloride	ND	5.0	1	B7E0654	05/19/2017	05/19/17 11:04	
MTBE	ND	5.0	1	B7E0654	05/19/2017	05/19/17 11:04	
n-Butylbenzene	ND	5.0	1	B7E0654	05/19/2017	05/19/17 11:04	
n-Propylbenzene	ND	5.0	1	B7E0654	05/19/2017	05/19/17 11:04	
Naphthalene	ND	5.0	1	B7E0654	05/19/2017	05/19/17 11:04	
o-Xylene	ND	5.0	1	B7E0654	05/19/2017	05/19/17 11:04	
sec-Butylbenzene	ND	5.0	1	B7E0654	05/19/2017	05/19/17 11:04	
Styrene	ND	5.0	1	B7E0654	05/19/2017	05/19/17 11:04	

Certificate of Analysis

Hushmand Associates, Inc.	Project Number : 6th St Bridge, LAC-17-001
250 Goddard	Report To : Naresh Bellana
Irvine , CA 92618	Reported : 06/05/2017

Client Sample ID 7-1-1.0

Lab ID: 1702036-90

Volatile Organic Compounds by EPA 8260B

Analyst: AG

Analyte	Result (ug/kg)	PQL (ug/kg)	Dilution	Batch	Prepared	Date/Time Analyzed	Notes
tert-Amyl methyl ether	ND	5.0	1	B7E0654	05/19/2017	05/19/17 11:04	
tert-Butanol	ND	100	1	B7E0654	05/19/2017	05/19/17 11:04	
tert-Butylbenzene	ND	5.0	1	B7E0654	05/19/2017	05/19/17 11:04	
Tetrachloroethene	ND	5.0	1	B7E0654	05/19/2017	05/19/17 11:04	
Toluene	ND	5.0	1	B7E0654	05/19/2017	05/19/17 11:04	
trans-1,2-Dichloroethene	ND	5.0	1	B7E0654	05/19/2017	05/19/17 11:04	
trans-1,3-Dichloropropene	ND	5.0	1	B7E0654	05/19/2017	05/19/17 11:04	
Trichloroethene	ND	5.0	1	B7E0654	05/19/2017	05/19/17 11:04	
Trichlorofluoromethane	ND	5.0	1	B7E0654	05/19/2017	05/19/17 11:04	
Vinyl acetate	ND	50	1	B7E0654	05/19/2017	05/19/17 11:04	
Vinyl chloride	ND	5.0	1	B7E0654	05/19/2017	05/19/17 11:04	
Surrogate: 1,2-Dichloroethane-d4	*104 %*	*12 - 186*		B7E0654	05/19/2017	*05/19/17 11:04*	
Surrogate: 4-Bromofluorobenzene	*103 %*	*23 - 162*		B7E0654	05/19/2017	*05/19/17 11:04*	
Surrogate: Dibromofluoromethane	*97.4 %*	*23 - 179*		B7E0654	05/19/2017	*05/19/17 11:04*	
Surrogate: Toluene-d8	*102 %*	*26 - 164*		B7E0654	05/19/2017	*05/19/17 11:04*	

Semivolatile Organic Compounds by EPA 8270C

Analyst: SP

Analyte	Result (ug/kg)	PQL (ug/kg)	Dilution	Batch	Prepared	Date/Time Analyzed	Notes
1,2,4-Trichlorobenzene	ND	6600	20	B7E0781	05/23/2017	06/01/17 07:40	D1
1,2-Dichlorobenzene	ND	6600	20	B7E0781	05/23/2017	06/01/17 07:40	D1
1,3-Dichlorobenzene	ND	6600	20	B7E0781	05/23/2017	06/01/17 07:40	D1
1,4-Dichlorobenzene	ND	6600	20	B7E0781	05/23/2017	06/01/17 07:40	D1
2,4,5-Trichlorophenol	ND	6600	20	B7E0781	05/23/2017	06/01/17 07:40	D1
2,4,6-Trichlorophenol	ND	6600	20	B7E0781	05/23/2017	06/01/17 07:40	D1
2,4-Dichlorophenol	ND	33000	20	B7E0781	05/23/2017	06/01/17 07:40	D1
2,4-Dimethylphenol	ND	6600	20	B7E0781	05/23/2017	06/01/17 07:40	D1
2,4-Dinitrophenol	ND	33000	20	B7E0781	05/23/2017	06/01/17 07:40	D1
2,4-Dinitrotoluene	ND	6600	20	B7E0781	05/23/2017	06/01/17 07:40	D1
2,6-Dinitrotoluene	ND	6600	20	B7E0781	05/23/2017	06/01/17 07:40	D1
2-Chloronaphthalene	ND	6600	20	B7E0781	05/23/2017	06/01/17 07:40	D1
2-Chlorophenol	ND	6600	20	B7E0781	05/23/2017	06/01/17 07:40	D1
2-Methylnaphthalene	ND	6600	20	B7E0781	05/23/2017	06/01/17 07:40	D1
2-Methylphenol	ND	6600	20	B7E0781	05/23/2017	06/01/17 07:40	D1
2-Nitroaniline	ND	33000	20	B7E0781	05/23/2017	06/01/17 07:40	D1
2-Nitrophenol	ND	6600	20	B7E0781	05/23/2017	06/01/17 07:40	D1

Certificate of Analysis

Hushmand Associates, Inc.	Project Number : 6th St Bridge, LAC-17-001
250 Goddard	Report To : Naresh Bellana
Irvine , CA 92618	Reported : 06/05/2017

Client Sample ID 7-1-1.0

Lab ID: 1702036-90

Semivolatile Organic Compounds by EPA 8270C **Analyst: SP**

Analyte	Result (ug/kg)	PQL (ug/kg)	Dilution	Batch	Prepared	Date/Time Analyzed	Notes
3,3´-Dichlorobenzidine	ND	13000	20	B7E0781	05/23/2017	06/01/17 07:40	D1
3-Nitroaniline	ND	33000	20	B7E0781	05/23/2017	06/01/17 07:40	D1
4,6-Dinitro-2-methyphenol	ND	33000	20	B7E0781	05/23/2017	06/01/17 07:40	D1
4-Bromophenyl-phenylether	ND	6600	20	B7E0781	05/23/2017	06/01/17 07:40	D1
4-Chloro-3-methylphenol	ND	13000	20	B7E0781	05/23/2017	06/01/17 07:40	D1
4-Chloroaniline	ND	13000	20	B7E0781	05/23/2017	06/01/17 07:40	D1
4-Chlorophenyl-phenylether	ND	6600	20	B7E0781	05/23/2017	06/01/17 07:40	D1
4-Methylphenol	ND	6600	20	B7E0781	05/23/2017	06/01/17 07:40	D1
4-Nitroaniline	ND	33000	20	B7E0781	05/23/2017	06/01/17 07:40	D1
4-Nitrophenol	ND	6600	20	B7E0781	05/23/2017	06/01/17 07:40	D1
Acenaphthene	ND	6600	20	B7E0781	05/23/2017	06/01/17 07:40	D1
Acenaphthylene	ND	6600	20	B7E0781	05/23/2017	06/01/17 07:40	D1
Anthracene	ND	6600	20	B7E0781	05/23/2017	06/01/17 07:40	D1
Benzidine (M)	ND	33000	20	B7E0781	05/23/2017	06/01/17 07:40	D1
Benzo(a)anthracene	ND	6600	20	B7E0781	05/23/2017	06/01/17 07:40	D1
Benzo(a)pyrene	ND	6600	20	B7E0781	05/23/2017	06/01/17 07:40	D1
Benzo(b)fluoranthene	ND	6600	20	B7E0781	05/23/2017	06/01/17 07:40	D1
Benzo(g,h,i)perylene	ND	6600	20	B7E0781	05/23/2017	06/01/17 07:40	D1
Benzo(k)fluoranthene	ND	6600	20	B7E0781	05/23/2017	06/01/17 07:40	D1
Benzoic acid	ND	33000	20	B7E0781	05/23/2017	06/01/17 07:40	D1
Benzyl alcohol	ND	13000	20	B7E0781	05/23/2017	06/01/17 07:40	D1
bis(2-chloroethoxy)methane	ND	6600	20	B7E0781	05/23/2017	06/01/17 07:40	D1
bis(2-Chloroethyl)ether	ND	6600	20	B7E0781	05/23/2017	06/01/17 07:40	D1
bis(2-chloroisopropyl)ether	ND	6600	20	B7E0781	05/23/2017	06/01/17 07:40	D1
bis(2-ethylhexyl)phthalate	ND	6600	20	B7E0781	05/23/2017	06/01/17 07:40	D1
Butylbenzylphthalate	ND	6600	20	B7E0781	05/23/2017	06/01/17 07:40	D1
Chrysene	ND	6600	20	B7E0781	05/23/2017	06/01/17 07:40	D1
Di-n-butylphthalate	ND	6600	20	B7E0781	05/23/2017	06/01/17 07:40	D1
Di-n-octylphthalate	ND	6600	20	B7E0781	05/23/2017	06/01/17 07:40	D1
Dibenz(a,h)anthracene	ND	6600	20	B7E0781	05/23/2017	06/01/17 07:40	D1
Dibenzofuran	ND	6600	20	B7E0781	05/23/2017	06/01/17 07:40	D1
Diethyl phthalate	ND	6600	20	B7E0781	05/23/2017	06/01/17 07:40	D1
Dimethyl phthalate	ND	6600	20	B7E0781	05/23/2017	06/01/17 07:40	D1
Fluoranthene	ND	6600	20	B7E0781	05/23/2017	06/01/17 07:40	D1
Fluorene	ND	6600	20	B7E0781	05/23/2017	06/01/17 07:40	D1
Hexachlorobenzene	ND	6600	20	B7E0781	05/23/2017	06/01/17 07:40	D1
Hexachlorobutadiene	ND	13000	20	B7E0781	05/23/2017	06/01/17 07:40	D1

Certificate of Analysis

Hushmand Associates, Inc.	Project Number : 6th St Bridge, LAC-17-001
250 Goddard	Report To : Naresh Bellana
Irvine , CA 92618	Reported : 06/05/2017

Client Sample ID 7-1-1.0

Lab ID: 1702036-90

Semivolatile Organic Compounds by EPA 8270C **Analyst: SP**

Analyte		Result (ug/kg)	PQL (ug/kg)	Dilution	Batch	Prepared	Date/Time Analyzed	Notes
Hexachlorocyclopentadiene		ND	13000	20	B7E0781	05/23/2017	06/01/17 07:40	D1
Hexachloroethane		ND	6600	20	B7E0781	05/23/2017	06/01/17 07:40	D1
Indeno(1,2,3-cd)pyrene		ND	6600	20	B7E0781	05/23/2017	06/01/17 07:40	D1
Isophorone		ND	6600	20	B7E0781	05/23/2017	06/01/17 07:40	D1
N-Nitroso-di-n propylamine		ND	6600	20	B7E0781	05/23/2017	06/01/17 07:40	D1
N-Nitrosodiphenylamine		ND	6600	20	B7E0781	05/23/2017	06/01/17 07:40	D1
Naphthalene		ND	6600	20	B7E0781	05/23/2017	06/01/17 07:40	D1
Nitrobenzene		ND	6600	20	B7E0781	05/23/2017	06/01/17 07:40	D1
Pentachlorophenol		ND	33000	20	B7E0781	05/23/2017	06/01/17 07:40	D1
Phenanthrene		ND	6600	20	B7E0781	05/23/2017	06/01/17 07:40	D1
Phenol		ND	6600	20	B7E0781	05/23/2017	06/01/17 07:40	D1
Pyrene		ND	6600	20	B7E0781	05/23/2017	06/01/17 07:40	D1
Pyridine		ND	33000	20	B7E0781	05/23/2017	06/01/17 07:40	D1
Surrogate: 1,2-Dichlorobenzene-d4	*0%*		*38 - 93*		B7E0781	05/23/2017	*06/01/17 07:40*	S4
Surrogate: 2,4,6-Tribromophenol	*0%*		*27 - 124*		B7E0781	05/23/2017	*06/01/17 07:40*	S4
Surrogate: 2-Chlorophenol-d4	*0%*		*36 - 96*		B7E0781	05/23/2017	*06/01/17 07:40*	S4
Surrogate: 2-Fluorobiphenyl	*0%*		*44 - 100*		B7E0781	05/23/2017	*06/01/17 07:40*	S4
Surrogate: 2-Fluorophenol	*0%*		*32 - 89*		B7E0781	05/23/2017	*06/01/17 07:40*	S4
Surrogate: 4-Terphenyl-d14	*0%*		*49 - 123*		B7E0781	05/23/2017	*06/01/17 07:40*	S4
Surrogate: Nitrobenzene-d5	*0%*		*38 - 104*		B7E0781	05/23/2017	*06/01/17 07:40*	S4
Surrogate: Phenol-d5	*0%*		*35 - 95*		B7E0781	05/23/2017	*06/01/17 07:40*	S4

Certificate of Analysis

Hushmand Associates, Inc.	Project Number : 6th St Bridge, LAC-17-001
250 Goddard	Report To : Naresh Bellana
Irvine , CA 92618	Reported : 06/05/2017

Client Sample ID 7-5-0.5

Lab ID: 1702036-91

Title 22 Metals by ICP-AES EPA 6010B — **Analyst: KEK**

Analyte	Result (mg/kg)	PQL (mg/kg)	Dilution	Batch	Prepared	Date/Time Analyzed	Notes
Antimony	ND	2.0	1	B7E0684	05/20/2017	05/22/17 13:33	
Arsenic	ND	1.0	1	B7E0684	05/20/2017	05/22/17 13:33	
Barium	**95**	1.0	1	B7E0684	05/20/2017	05/22/17 13:33	
Beryllium	ND	1.0	1	B7E0684	05/20/2017	05/22/17 13:33	
Cadmium	ND	1.0	1	B7E0684	05/20/2017	05/22/17 13:33	
Chromium	**12**	1.0	1	B7E0684	05/20/2017	05/22/17 13:33	
Cobalt	**8.0**	1.0	1	B7E0684	05/20/2017	05/22/17 13:33	
Copper	**9.7**	2.0	1	B7E0684	05/20/2017	05/22/17 13:33	
Lead	**4.5**	1.0	1	B7E0684	05/20/2017	05/22/17 13:33	
Molybdenum	ND	1.0	1	B7E0684	05/20/2017	05/22/17 13:33	
Nickel	**8.3**	1.0	1	B7E0684	05/20/2017	05/22/17 13:33	
Selenium	ND	1.0	1	B7E0684	05/20/2017	05/22/17 13:33	
Silver	ND	1.0	1	B7E0684	05/20/2017	05/22/17 13:33	
Thallium	ND	1.0	1	B7E0684	05/20/2017	05/22/17 13:33	
Vanadium	**32**	1.0	1	B7E0684	05/20/2017	05/22/17 13:33	
Zinc	**39**	1.0	1	B7E0684	05/20/2017	05/22/17 13:33	

Mercury by AA (Cold Vapor) EPA 7471A — **Analyst: KEK**

Analyte	Result (mg/kg)	PQL (mg/kg)	Dilution	Batch	Prepared	Date/Time Analyzed	Notes
Mercury	ND	0.10	1	B7E0679	05/20/2017	05/22/17 17:00	

Certificate of Analysis

Hushmand Associates, Inc.	Project Number : 6th St Bridge, LAC-17-001
250 Goddard	Report To : Naresh Bellana
Irvine , CA 92618	Reported : 06/05/2017

Client Sample ID 7-5-1.0

Lab ID: 1702036-92

Title 22 Metals by ICP-AES EPA 6010B

Analyst: KEK

Analyte	Result (mg/kg)	PQL (mg/kg)	Dilution	Batch	Prepared	Date/Time Analyzed	Notes
Antimony	ND	2.0	1	B7E0684	05/20/2017	05/22/17 13:36	
Arsenic	ND	1.0	1	B7E0684	05/20/2017	05/22/17 13:36	
Barium	**95**	1.0	1	B7E0684	05/20/2017	05/22/17 13:36	
Beryllium	ND	1.0	1	B7E0684	05/20/2017	05/22/17 13:36	
Cadmium	ND	1.0	1	B7E0684	05/20/2017	05/22/17 13:36	
Chromium	**12**	1.0	1	B7E0684	05/20/2017	05/22/17 13:36	
Cobalt	**8.2**	1.0	1	B7E0684	05/20/2017	05/22/17 13:36	
Copper	**10**	2.0	1	B7E0684	05/20/2017	05/22/17 13:36	
Lead	**3.0**	1.0	1	B7E0684	05/20/2017	05/22/17 13:36	
Molybdenum	ND	1.0	1	B7E0684	05/20/2017	05/22/17 13:36	
Nickel	**8.6**	1.0	1	B7E0684	05/20/2017	05/22/17 13:36	
Selenium	**1.0**	1.0	1	B7E0684	05/20/2017	05/22/17 13:36	
Silver	ND	1.0	1	B7E0684	05/20/2017	05/22/17 13:36	
Thallium	ND	1.0	1	B7E0684	05/20/2017	05/22/17 13:36	
Vanadium	**34**	1.0	1	B7E0684	05/20/2017	05/22/17 13:36	
Zinc	**38**	1.0	1	B7E0684	05/20/2017	05/22/17 13:36	

Mercury by AA (Cold Vapor) EPA 7471A

Analyst: KEK

Analyte	Result (mg/kg)	PQL (mg/kg)	Dilution	Batch	Prepared	Date/Time Analyzed	Notes
Mercury	ND	0.10	1	B7E0679	05/20/2017	05/22/17 17:06	

Gasoline Range Organics by EPA 8015B (Modified)

Analyst: VW

Analyte		Result (mg/kg)	PQL (mg/kg)	Dilution	Batch	Prepared	Date/Time Analyzed	Notes
Gasoline Range Organics		ND	1.0	1	B7E0657	05/21/2017	05/21/17 17:58	
Surrogate: 4-Bromofluorobenzene	*105 %*		*36 - 125*		B7E0657	05/21/2017	*05/21/17 17:58*	

Diesel Range Organics by EPA 8015B

Analyst: CR

Analyte		Result (mg/kg)	PQL (mg/kg)	Dilution	Batch	Prepared	Date/Time Analyzed	Notes
DRO		ND	10	1	B7E0785	05/23/2017	05/25/17 00:26	
Surrogate: p-Terphenyl	*88.0 %*		*47 - 157*		B7E0785	05/23/2017	*05/25/17 00:26*	

Certificate of Analysis

Hushmand Associates, Inc.	Project Number : 6th St Bridge, LAC-17-001
250 Goddard	Report To : Naresh Bellana
Irvine , CA 92618	Reported : 06/05/2017

Client Sample ID 7-5-1.0

Lab ID: 1702036-92

Organochlorine Pesticides by EPA 8081 **Analyst: RL/**

Analyte	Result (ug/kg)	PQL (ug/kg)	Dilution	Batch	Prepared	Date/Time Analyzed	Notes
4,4´-DDD	ND	2.0	1	B7E0819	05/24/2017	05/24/17 18:37	
4,4´-DDE	ND	2.0	1	B7E0819	05/24/2017	05/24/17 18:37	
4,4´-DDT	ND	2.0	1	B7E0819	05/24/2017	05/24/17 18:37	
Aldrin	ND	1.0	1	B7E0819	05/24/2017	05/24/17 18:37	
alpha-BHC	ND	1.0	1	B7E0819	05/24/2017	05/24/17 18:37	
alpha-Chlordane	ND	1.0	1	B7E0819	05/24/2017	05/24/17 18:37	
beta-BHC	ND	1.0	1	B7E0819	05/24/2017	05/24/17 18:37	
Chlordane	ND	8.5	1	B7E0819	05/24/2017	05/24/17 18:37	
delta-BHC	ND	1.0	1	B7E0819	05/24/2017	05/24/17 18:37	
Dieldrin	ND	2.0	1	B7E0819	05/24/2017	05/24/17 18:37	
Endosulfan I	ND	1.0	1	B7E0819	05/24/2017	05/24/17 18:37	
Endosulfan II	ND	2.0	1	B7E0819	05/24/2017	05/24/17 18:37	
Endosulfan sulfate	ND	2.0	1	B7E0819	05/24/2017	05/24/17 18:37	
Endrin	ND	2.0	1	B7E0819	05/24/2017	05/24/17 18:37	
Endrin aldehyde	ND	2.0	1	B7E0819	05/24/2017	05/24/17 18:37	
Endrin ketone	ND	2.0	1	B7E0819	05/24/2017	05/24/17 18:37	
gamma-BHC	ND	1.0	1	B7E0819	05/24/2017	05/24/17 18:37	
gamma-Chlordane	ND	1.0	1	B7E0819	05/24/2017	05/24/17 18:37	
Heptachlor	ND	1.0	1	B7E0819	05/24/2017	05/24/17 18:37	
Heptachlor epoxide	ND	1.0	1	B7E0819	05/24/2017	05/24/17 18:37	
Methoxychlor	ND	5.0	1	B7E0819	05/24/2017	05/24/17 18:37	
Toxaphene	ND	50	1	B7E0819	05/24/2017	05/24/17 18:37	
Surrogate: Decachlorobiphenyl	*48.3 %*	*27 - 123*		B7E0819	05/24/2017	*05/24/17 18:37*	
Surrogate: Tetrachloro-m-xylene	*60.8 %*	*26 - 108*		B7E0819	05/24/2017	*05/24/17 18:37*	

Certificate of Analysis

Hushmand Associates, Inc.	Project Number : 6th St Bridge, LAC-17-001
250 Goddard	Report To : Naresh Bellana
Irvine , CA 92618	Reported : 06/05/2017

Client Sample ID 7-5-1.0

Lab ID: 1702036-92

Polychlorinated Biphenyls by EPA 8082

Analyst: LT

Analyte	Result (ug/kg)	PQL (ug/kg)	Dilution	Batch	Prepared	Date/Time Analyzed	Notes
Aroclor 1016	ND	16	1	B7E0819	05/24/2017	05/24/17 18:52	
Aroclor 1221	ND	16	1	B7E0819	05/24/2017	05/24/17 18:52	
Aroclor 1232	ND	16	1	B7E0819	05/24/2017	05/24/17 18:52	
Aroclor 1242	ND	16	1	B7E0819	05/24/2017	05/24/17 18:52	
Aroclor 1248	ND	16	1	B7E0819	05/24/2017	05/24/17 18:52	
Aroclor 1254	ND	16	1	B7E0819	05/24/2017	05/24/17 18:52	
Aroclor 1260	ND	16	1	B7E0819	05/24/2017	05/24/17 18:52	
Aroclor 1262	ND	16	1	B7E0819	05/24/2017	05/24/17 18:52	
Aroclor 1268	ND	16	1	B7E0819	05/24/2017	05/24/17 18:52	
Surrogate: Decachlorobiphenyl	*67.4 %*	*18 - 136*		B7E0819	05/24/2017	*05/24/17 18:52*	
Surrogate: Tetrachloro-m-xylene	*82.1 %*	*30 - 130*		B7E0819	05/24/2017	*05/24/17 18:52*	

Volatile Organic Compounds by EPA 8260B

Analyst: AG

Analyte	Result (ug/kg)	PQL (ug/kg)	Dilution	Batch	Prepared	Date/Time Analyzed	Notes
1,1,1,2-Tetrachloroethane	ND	5.0	1	B7E0654	05/19/2017	05/19/17 11:24	
1,1,1-Trichloroethane	ND	5.0	1	B7E0654	05/19/2017	05/19/17 11:24	
1,1,2,2-Tetrachloroethane	ND	5.0	1	B7E0654	05/19/2017	05/19/17 11:24	
1,1,2-Trichloroethane	ND	5.0	1	B7E0654	05/19/2017	05/19/17 11:24	
1,1-Dichloroethane	ND	5.0	1	B7E0654	05/19/2017	05/19/17 11:24	
1,1-Dichloroethene	ND	5.0	1	B7E0654	05/19/2017	05/19/17 11:24	
1,1-Dichloropropene	ND	5.0	1	B7E0654	05/19/2017	05/19/17 11:24	
1,2,3-Trichloropropane	ND	5.0	1	B7E0654	05/19/2017	05/19/17 11:24	
1,2,3-Trichlorobenzene	ND	5.0	1	B7E0654	05/19/2017	05/19/17 11:24	
1,2,4-Trichlorobenzene	ND	5.0	1	B7E0654	05/19/2017	05/19/17 11:24	
1,2,4-Trimethylbenzene	ND	5.0	1	B7E0654	05/19/2017	05/19/17 11:24	
1,2-Dibromo-3-chloropropane	ND	10	1	B7E0654	05/19/2017	05/19/17 11:24	
1,2-Dibromoethane	ND	5.0	1	B7E0654	05/19/2017	05/19/17 11:24	
1,2-Dichlorobenzene	ND	5.0	1	B7E0654	05/19/2017	05/19/17 11:24	
1,2-Dichloroethane	ND	5.0	1	B7E0654	05/19/2017	05/19/17 11:24	
1,2-Dichloropropane	ND	5.0	1	B7E0654	05/19/2017	05/19/17 11:24	
1,3,5-Trimethylbenzene	ND	5.0	1	B7E0654	05/19/2017	05/19/17 11:24	
1,3-Dichlorobenzene	ND	5.0	1	B7E0654	05/19/2017	05/19/17 11:24	
1,3-Dichloropropane	ND	5.0	1	B7E0654	05/19/2017	05/19/17 11:24	
1,4-Dichlorobenzene	ND	5.0	1	B7E0654	05/19/2017	05/19/17 11:24	
2,2-Dichloropropane	ND	5.0	1	B7E0654	05/19/2017	05/19/17 11:24	

Certificate of Analysis

Hushmand Associates, Inc.	Project Number : 6th St Bridge, LAC-17-001
250 Goddard	Report To : Naresh Bellana
Irvine , CA 92618	Reported : 06/05/2017

Client Sample ID 7-5-1.0

Lab ID: 1702036-92

Volatile Organic Compounds by EPA 8260B **Analyst: AG**

Analyte	Result (ug/kg)	PQL (ug/kg)	Dilution	Batch	Prepared	Date/Time Analyzed	Notes
2-Chlorotoluene	ND	5.0	1	B7E0654	05/19/2017	05/19/17 11:24	
4-Chlorotoluene	ND	5.0	1	B7E0654	05/19/2017	05/19/17 11:24	
4-Isopropyltoluene	ND	5.0	1	B7E0654	05/19/2017	05/19/17 11:24	
Benzene	ND	5.0	1	B7E0654	05/19/2017	05/19/17 11:24	
Bromobenzene	ND	5.0	1	B7E0654	05/19/2017	05/19/17 11:24	
Bromochloromethane	ND	5.0	1	B7E0654	05/19/2017	05/19/17 11:24	
Bromodichloromethane	ND	5.0	1	B7E0654	05/19/2017	05/19/17 11:24	
Bromoform	ND	5.0	1	B7E0654	05/19/2017	05/19/17 11:24	
Bromomethane	ND	5.0	1	B7E0654	05/19/2017	05/19/17 11:24	
Carbon disulfide	ND	5.0	1	B7E0654	05/19/2017	05/19/17 11:24	
Carbon tetrachloride	ND	5.0	1	B7E0654	05/19/2017	05/19/17 11:24	
Chlorobenzene	ND	5.0	1	B7E0654	05/19/2017	05/19/17 11:24	
Chloroethane	ND	5.0	1	B7E0654	05/19/2017	05/19/17 11:24	
Chloroform	ND	5.0	1	B7E0654	05/19/2017	05/19/17 11:24	
Chloromethane	ND	5.0	1	B7E0654	05/19/2017	05/19/17 11:24	
cis-1,2-Dichloroethene	ND	5.0	1	B7E0654	05/19/2017	05/19/17 11:24	
cis-1,3-Dichloropropene	ND	5.0	1	B7E0654	05/19/2017	05/19/17 11:24	
Di-isopropyl ether	ND	5.0	1	B7E0654	05/19/2017	05/19/17 11:24	
Dibromochloromethane	ND	5.0	1	B7E0654	05/19/2017	05/19/17 11:24	
Dibromomethane	ND	5.0	1	B7E0654	05/19/2017	05/19/17 11:24	
Dichlorodifluoromethane	ND	5.0	1	B7E0654	05/19/2017	05/19/17 11:24	
Ethyl Acetate	ND	50	1	B7E0654	05/19/2017	05/19/17 11:24	
Ethyl Ether	ND	50	1	B7E0654	05/19/2017	05/19/17 11:24	
Ethyl tert-butyl ether	ND	5.0	1	B7E0654	05/19/2017	05/19/17 11:24	
Ethylbenzene	ND	5.0	1	B7E0654	05/19/2017	05/19/17 11:24	
Freon-113	ND	5.0	1	B7E0654	05/19/2017	05/19/17 11:24	
Hexachlorobutadiene	ND	5.0	1	B7E0654	05/19/2017	05/19/17 11:24	
Isopropylbenzene	ND	5.0	1	B7E0654	05/19/2017	05/19/17 11:24	
m,p-Xylene	ND	10	1	B7E0654	05/19/2017	05/19/17 11:24	
Methylene chloride	ND	5.0	1	B7E0654	05/19/2017	05/19/17 11:24	
MTBE	ND	5.0	1	B7E0654	05/19/2017	05/19/17 11:24	
n-Butylbenzene	ND	5.0	1	B7E0654	05/19/2017	05/19/17 11:24	
n-Propylbenzene	ND	5.0	1	B7E0654	05/19/2017	05/19/17 11:24	
Naphthalene	ND	5.0	1	B7E0654	05/19/2017	05/19/17 11:24	
o-Xylene	ND	5.0	1	B7E0654	05/19/2017	05/19/17 11:24	
sec-Butylbenzene	ND	5.0	1	B7E0654	05/19/2017	05/19/17 11:24	
Styrene	ND	5.0	1	B7E0654	05/19/2017	05/19/17 11:24	

Certificate of Analysis

Hushmand Associates, Inc.	Project Number : 6th St Bridge, LAC-17-001
250 Goddard	Report To : Naresh Bellana
Irvine , CA 92618	Reported : 06/05/2017

Client Sample ID 7-5-1.0

Lab ID: 1702036-92

Volatile Organic Compounds by EPA 8260B

Analyst: AG

Analyte	Result (ug/kg)	PQL (ug/kg)	Dilution	Batch	Prepared	Date/Time Analyzed	Notes
tert-Amyl methyl ether	ND	5.0	1	B7E0654	05/19/2017	05/19/17 11:24	
tert-Butanol	ND	100	1	B7E0654	05/19/2017	05/19/17 11:24	
tert-Butylbenzene	ND	5.0	1	B7E0654	05/19/2017	05/19/17 11:24	
Tetrachloroethene	ND	5.0	1	B7E0654	05/19/2017	05/19/17 11:24	
Toluene	ND	5.0	1	B7E0654	05/19/2017	05/19/17 11:24	
trans-1,2-Dichloroethene	ND	5.0	1	B7E0654	05/19/2017	05/19/17 11:24	
trans-1,3-Dichloropropene	ND	5.0	1	B7E0654	05/19/2017	05/19/17 11:24	
Trichloroethene	ND	5.0	1	B7E0654	05/19/2017	05/19/17 11:24	
Trichlorofluoromethane	ND	5.0	1	B7E0654	05/19/2017	05/19/17 11:24	
Vinyl acetate	ND	50	1	B7E0654	05/19/2017	05/19/17 11:24	
Vinyl chloride	ND	5.0	1	B7E0654	05/19/2017	05/19/17 11:24	
Surrogate: 1,2-Dichloroethane-d4	*104 %*	*12 - 186*		B7E0654	05/19/2017	*05/19/17 11:24*	
Surrogate: 4-Bromofluorobenzene	*102 %*	*23 - 162*		B7E0654	05/19/2017	*05/19/17 11:24*	
Surrogate: Dibromofluoromethane	*95.6 %*	*23 - 179*		B7E0654	05/19/2017	*05/19/17 11:24*	
Surrogate: Toluene-d8	*94.9 %*	*26 - 164*		B7E0654	05/19/2017	*05/19/17 11:24*	

Semivolatile Organic Compounds by EPA 8270C

Analyst: SP

Analyte	Result (ug/kg)	PQL (ug/kg)	Dilution	Batch	Prepared	Date/Time Analyzed	Notes
1,2,4-Trichlorobenzene	ND	330	1	B7E0781	05/23/2017	06/01/17 04:31	
1,2-Dichlorobenzene	ND	330	1	B7E0781	05/23/2017	06/01/17 04:31	
1,3-Dichlorobenzene	ND	330	1	B7E0781	05/23/2017	06/01/17 04:31	
1,4-Dichlorobenzene	ND	330	1	B7E0781	05/23/2017	06/01/17 04:31	
2,4,5-Trichlorophenol	ND	330	1	B7E0781	05/23/2017	06/01/17 04:31	
2,4,6-Trichlorophenol	ND	330	1	B7E0781	05/23/2017	06/01/17 04:31	
2,4-Dichlorophenol	ND	1600	1	B7E0781	05/23/2017	06/01/17 04:31	
2,4-Dimethylphenol	ND	330	1	B7E0781	05/23/2017	06/01/17 04:31	
2,4-Dinitrophenol	ND	1600	1	B7E0781	05/23/2017	06/01/17 04:31	
2,4-Dinitrotoluene	ND	330	1	B7E0781	05/23/2017	06/01/17 04:31	
2,6-Dinitrotoluene	ND	330	1	B7E0781	05/23/2017	06/01/17 04:31	
2-Chloronaphthalene	ND	330	1	B7E0781	05/23/2017	06/01/17 04:31	
2-Chlorophenol	ND	330	1	B7E0781	05/23/2017	06/01/17 04:31	
2-Methylnaphthalene	ND	330	1	B7E0781	05/23/2017	06/01/17 04:31	
2-Methylphenol	ND	330	1	B7E0781	05/23/2017	06/01/17 04:31	
2-Nitroaniline	ND	1600	1	B7E0781	05/23/2017	06/01/17 04:31	
2-Nitrophenol	ND	330	1	B7E0781	05/23/2017	06/01/17 04:31	

Certificate of Analysis

Hushmand Associates, Inc.	Project Number : 6th St Bridge, LAC-17-001
250 Goddard	Report To : Naresh Bellana
Irvine , CA 92618	Reported : 06/05/2017

Client Sample ID 7-5-1.0

Lab ID: 1702036-92

Semivolatile Organic Compounds by EPA 8270C **Analyst: SP**

Analyte	Result (ug/kg)	PQL (ug/kg)	Dilution	Batch	Prepared	Date/Time Analyzed	Notes
3,3´-Dichlorobenzidine	ND	660	1	B7E0781	05/23/2017	06/01/17 04:31	
3-Nitroaniline	ND	1600	1	B7E0781	05/23/2017	06/01/17 04:31	
4,6-Dinitro-2-methyphenol	ND	1600	1	B7E0781	05/23/2017	06/01/17 04:31	
4-Bromophenyl-phenylether	ND	330	1	B7E0781	05/23/2017	06/01/17 04:31	
4-Chloro-3-methylphenol	ND	660	1	B7E0781	05/23/2017	06/01/17 04:31	
4-Chloroaniline	ND	660	1	B7E0781	05/23/2017	06/01/17 04:31	
4-Chlorophenyl-phenylether	ND	330	1	B7E0781	05/23/2017	06/01/17 04:31	
4-Methylphenol	ND	330	1	B7E0781	05/23/2017	06/01/17 04:31	
4-Nitroaniline	ND	1600	1	B7E0781	05/23/2017	06/01/17 04:31	
4-Nitrophenol	ND	330	1	B7E0781	05/23/2017	06/01/17 04:31	
Acenaphthene	ND	330	1	B7E0781	05/23/2017	06/01/17 04:31	
Acenaphthylene	ND	330	1	B7E0781	05/23/2017	06/01/17 04:31	
Anthracene	ND	330	1	B7E0781	05/23/2017	06/01/17 04:31	
Benzidine (M)	ND	1600	1	B7E0781	05/23/2017	06/01/17 04:31	
Benzo(a)anthracene	ND	330	1	B7E0781	05/23/2017	06/01/17 04:31	
Benzo(a)pyrene	ND	330	1	B7E0781	05/23/2017	06/01/17 04:31	
Benzo(b)fluoranthene	ND	330	1	B7E0781	05/23/2017	06/01/17 04:31	
Benzo(g,h,i)perylene	ND	330	1	B7E0781	05/23/2017	06/01/17 04:31	
Benzo(k)fluoranthene	ND	330	1	B7E0781	05/23/2017	06/01/17 04:31	
Benzoic acid	ND	1600	1	B7E0781	05/23/2017	06/01/17 04:31	
Benzyl alcohol	ND	660	1	B7E0781	05/23/2017	06/01/17 04:31	
bis(2-chloroethoxy)methane	ND	330	1	B7E0781	05/23/2017	06/01/17 04:31	
bis(2-Chloroethyl)ether	ND	330	1	B7E0781	05/23/2017	06/01/17 04:31	
bis(2-chloroisopropyl)ether	ND	330	1	B7E0781	05/23/2017	06/01/17 04:31	
bis(2-ethylhexyl)phthalate	ND	330	1	B7E0781	05/23/2017	06/01/17 04:31	
Butylbenzylphthalate	ND	330	1	B7E0781	05/23/2017	06/01/17 04:31	
Chrysene	ND	330	1	B7E0781	05/23/2017	06/01/17 04:31	
Di-n-butylphthalate	ND	330	1	B7E0781	05/23/2017	06/01/17 04:31	
Di-n-octylphthalate	ND	330	1	B7E0781	05/23/2017	06/01/17 04:31	
Dibenz(a,h)anthracene	ND	330	1	B7E0781	05/23/2017	06/01/17 04:31	
Dibenzofuran	ND	330	1	B7E0781	05/23/2017	06/01/17 04:31	
Diethyl phthalate	ND	330	1	B7E0781	05/23/2017	06/01/17 04:31	
Dimethyl phthalate	ND	330	1	B7E0781	05/23/2017	06/01/17 04:31	
Fluoranthene	ND	330	1	B7E0781	05/23/2017	06/01/17 04:31	
Fluorene	ND	330	1	B7E0781	05/23/2017	06/01/17 04:31	
Hexachlorobenzene	ND	330	1	B7E0781	05/23/2017	06/01/17 04:31	
Hexachlorobutadiene	ND	660	1	B7E0781	05/23/2017	06/01/17 04:31	

Certificate of Analysis

Hushmand Associates, Inc.	Project Number : 6th St Bridge, LAC-17-001
250 Goddard	Report To : Naresh Bellana
Irvine , CA 92618	Reported : 06/05/2017

Client Sample ID 7-5-1.0

Lab ID: 1702036-92

Semivolatile Organic Compounds by EPA 8270C **Analyst: SP**

Analyte		Result (ug/kg)	PQL (ug/kg)	Dilution	Batch	Prepared	Date/Time Analyzed	Notes
Hexachlorocyclopentadiene		ND	660	1	B7E0781	05/23/2017	06/01/17 04:31	
Hexachloroethane		ND	330	1	B7E0781	05/23/2017	06/01/17 04:31	
Indeno(1,2,3-cd)pyrene		ND	330	1	B7E0781	05/23/2017	06/01/17 04:31	
Isophorone		ND	330	1	B7E0781	05/23/2017	06/01/17 04:31	
N-Nitroso-di-n propylamine		ND	330	1	B7E0781	05/23/2017	06/01/17 04:31	
N-Nitrosodiphenylamine		ND	330	1	B7E0781	05/23/2017	06/01/17 04:31	
Naphthalene		ND	330	1	B7E0781	05/23/2017	06/01/17 04:31	
Nitrobenzene		ND	330	1	B7E0781	05/23/2017	06/01/17 04:31	
Pentachlorophenol		ND	1600	1	B7E0781	05/23/2017	06/01/17 04:31	
Phenanthrene		ND	330	1	B7E0781	05/23/2017	06/01/17 04:31	
Phenol		ND	330	1	B7E0781	05/23/2017	06/01/17 04:31	
Pyrene		ND	330	1	B7E0781	05/23/2017	06/01/17 04:31	
Pyridine		ND	1600	1	B7E0781	05/23/2017	06/01/17 04:31	
Surrogate: 1,2-Dichlorobenzene-d4	*46.9 %*		*38 - 93*		B7E0781	05/23/2017	*06/01/17 04:31*	
Surrogate: 2,4,6-Tribromophenol	*54.9 %*		*27 - 124*		B7E0781	05/23/2017	*06/01/17 04:31*	
Surrogate: 2-Chlorophenol-d4	*49.2 %*		*36 - 96*		B7E0781	05/23/2017	*06/01/17 04:31*	
Surrogate: 2-Fluorobiphenyl	*56.4 %*		*44 - 100*		B7E0781	05/23/2017	*06/01/17 04:31*	
Surrogate: 2-Fluorophenol	*47.0 %*		*32 - 89*		B7E0781	05/23/2017	*06/01/17 04:31*	
Surrogate: 4-Terphenyl-d14	*54.4 %*		*49 - 123*		B7E0781	05/23/2017	*06/01/17 04:31*	
Surrogate: Nitrobenzene-d5	*53.8 %*		*38 - 104*		B7E0781	05/23/2017	*06/01/17 04:31*	
Surrogate: Phenol-d5	*48.1 %*		*35 - 95*		B7E0781	05/23/2017	*06/01/17 04:31*	

Certificate of Analysis

Hushmand Associates, Inc.	Project Number : 6th St Bridge, LAC-17-001
250 Goddard	Report To : Naresh Bellana
Irvine , CA 92618	Reported : 06/05/2017

Client Sample ID 7-5-3.0

Lab ID: 1702036-93

Title 22 Metals by ICP-AES EPA 6010B **Analyst: KEK**

Analyte	Result (mg/kg)	PQL (mg/kg)	Dilution	Batch	Prepared	Date/Time Analyzed	Notes
Antimony	ND	2.0	1	B7E0684	05/20/2017	05/22/17 13:46	
Arsenic	ND	1.0	1	B7E0684	05/20/2017	05/22/17 13:46	
Barium	**120**	1.0	1	B7E0684	05/20/2017	05/22/17 13:46	
Beryllium	ND	1.0	1	B7E0684	05/20/2017	05/22/17 13:46	
Cadmium	ND	1.0	1	B7E0684	05/20/2017	05/22/17 13:46	
Chromium	**14**	1.0	1	B7E0684	05/20/2017	05/22/17 13:46	
Cobalt	**9.9**	1.0	1	B7E0684	05/20/2017	05/22/17 13:46	
Copper	**18**	2.0	1	B7E0684	05/20/2017	05/22/17 13:46	
Lead	**3.5**	1.0	1	B7E0684	05/20/2017	05/22/17 13:46	
Molybdenum	ND	1.0	1	B7E0684	05/20/2017	05/22/17 13:46	
Nickel	**12**	1.0	1	B7E0684	05/20/2017	05/22/17 13:46	
Selenium	**1.1**	1.0	1	B7E0684	05/20/2017	05/22/17 13:46	
Silver	ND	1.0	1	B7E0684	05/20/2017	05/22/17 13:46	
Thallium	ND	1.0	1	B7E0684	05/20/2017	05/22/17 13:46	
Vanadium	**38**	1.0	1	B7E0684	05/20/2017	05/22/17 13:46	
Zinc	**46**	1.0	1	B7E0684	05/20/2017	05/22/17 13:46	

Mercury by AA (Cold Vapor) EPA 7471A **Analyst: KEK**

Analyte	Result (mg/kg)	PQL (mg/kg)	Dilution	Batch	Prepared	Date/Time Analyzed	Notes
Mercury	ND	0.10	1	B7E0679	05/20/2017	05/22/17 17:08	

Certificate of Analysis

Hushmand Associates, Inc.	Project Number : 6th St Bridge, LAC-17-001
250 Goddard	Report To : Naresh Bellana
Irvine , CA 92618	Reported : 06/05/2017

Client Sample ID 7-5-5.0

Lab ID: 1702036-94

Title 22 Metals by ICP-AES EPA 6010B

Analyst: KEK

Analyte	Result (mg/kg)	PQL (mg/kg)	Dilution	Batch	Prepared	Date/Time Analyzed	Notes
Antimony	ND	2.0	1	B7E0684	05/20/2017	05/22/17 13:49	
Arsenic	ND	1.0	1	B7E0684	05/20/2017	05/22/17 13:49	
Barium	**31**	1.0	1	B7E0684	05/20/2017	05/22/17 13:49	
Beryllium	ND	1.0	1	B7E0684	05/20/2017	05/22/17 13:49	
Cadmium	ND	1.0	1	B7E0684	05/20/2017	05/22/17 13:49	
Chromium	**6.7**	1.0	1	B7E0684	05/20/2017	05/22/17 13:49	
Cobalt	**3.6**	1.0	1	B7E0684	05/20/2017	05/22/17 13:49	
Copper	**2.7**	2.0	1	B7E0684	05/20/2017	05/22/17 13:49	
Lead	**1.0**	1.0	1	B7E0684	05/20/2017	05/22/17 13:49	
Molybdenum	ND	1.0	1	B7E0684	05/20/2017	05/22/17 13:49	
Nickel	**3.0**	1.0	1	B7E0684	05/20/2017	05/22/17 13:49	
Selenium	ND	1.0	1	B7E0684	05/20/2017	05/22/17 13:49	
Silver	ND	1.0	1	B7E0684	05/20/2017	05/22/17 13:49	
Thallium	ND	1.0	1	B7E0684	05/20/2017	05/22/17 13:49	
Vanadium	**28**	1.0	1	B7E0684	05/20/2017	05/22/17 13:49	
Zinc	**16**	1.0	1	B7E0684	05/20/2017	05/22/17 13:49	

Mercury by AA (Cold Vapor) EPA 7471A

Analyst: KEK

Analyte	Result (mg/kg)	PQL (mg/kg)	Dilution	Batch	Prepared	Date/Time Analyzed	Notes
Mercury	ND	0.10	1	B7E0679	05/20/2017	05/22/17 17:10	

Gasoline Range Organics by EPA 8015B (Modified)

Analyst: VW

Analyte		Result (mg/kg)	PQL (mg/kg)	Dilution	Batch	Prepared	Date/Time Analyzed	Notes
Gasoline Range Organics		ND	1.0	1	B7E0657	05/21/2017	05/21/17 18:17	
Surrogate: 4-Bromofluorobenzene	*105 %*		*36 - 125*		B7E0657	05/21/2017	*05/21/17 18:17*	

Diesel Range Organics by EPA 8015B

Analyst: CR

Analyte		Result (mg/kg)	PQL (mg/kg)	Dilution	Batch	Prepared	Date/Time Analyzed	Notes
DRO		ND	10	1	B7E0785	05/23/2017	05/25/17 00:43	
Surrogate: p-Terphenyl	*78.4 %*		*47 - 157*		B7E0785	05/23/2017	*05/25/17 00:43*	

Certificate of Analysis

Hushmand Associates, Inc.	Project Number : 6th St Bridge, LAC-17-001
250 Goddard	Report To : Naresh Bellana
Irvine , CA 92618	Reported : 06/05/2017

Client Sample ID 7-5-5.0

Lab ID: 1702036-94

Volatile Organic Compounds by EPA 8260B **Analyst: AG**

Analyte	Result (ug/kg)	PQL (ug/kg)	Dilution	Batch	Prepared	Date/Time Analyzed	Notes
1,1,1,2-Tetrachloroethane	ND	5.0	1	B7E0654	05/19/2017	05/19/17 11:42	
1,1,1-Trichloroethane	ND	5.0	1	B7E0654	05/19/2017	05/19/17 11:42	
1,1,2,2-Tetrachloroethane	ND	5.0	1	B7E0654	05/19/2017	05/19/17 11:42	
1,1,2-Trichloroethane	ND	5.0	1	B7E0654	05/19/2017	05/19/17 11:42	
1,1-Dichloroethane	ND	5.0	1	B7E0654	05/19/2017	05/19/17 11:42	
1,1-Dichloroethene	ND	5.0	1	B7E0654	05/19/2017	05/19/17 11:42	
1,1-Dichloropropene	ND	5.0	1	B7E0654	05/19/2017	05/19/17 11:42	
1,2,3-Trichloropropane	ND	5.0	1	B7E0654	05/19/2017	05/19/17 11:42	
1,2,3-Trichlorobenzene	ND	5.0	1	B7E0654	05/19/2017	05/19/17 11:42	
1,2,4-Trichlorobenzene	ND	5.0	1	B7E0654	05/19/2017	05/19/17 11:42	
1,2,4-Trimethylbenzene	ND	5.0	1	B7E0654	05/19/2017	05/19/17 11:42	
1,2-Dibromo-3-chloropropane	ND	10	1	B7E0654	05/19/2017	05/19/17 11:42	
1,2-Dibromoethane	ND	5.0	1	B7E0654	05/19/2017	05/19/17 11:42	
1,2-Dichlorobenzene	ND	5.0	1	B7E0654	05/19/2017	05/19/17 11:42	
1,2-Dichloroethane	ND	5.0	1	B7E0654	05/19/2017	05/19/17 11:42	
1,2-Dichloropropane	ND	5.0	1	B7E0654	05/19/2017	05/19/17 11:42	
1,3,5-Trimethylbenzene	ND	5.0	1	B7E0654	05/19/2017	05/19/17 11:42	
1,3-Dichlorobenzene	ND	5.0	1	B7E0654	05/19/2017	05/19/17 11:42	
1,3-Dichloropropane	ND	5.0	1	B7E0654	05/19/2017	05/19/17 11:42	
1,4-Dichlorobenzene	ND	5.0	1	B7E0654	05/19/2017	05/19/17 11:42	
2,2-Dichloropropane	ND	5.0	1	B7E0654	05/19/2017	05/19/17 11:42	
2-Chlorotoluene	ND	5.0	1	B7E0654	05/19/2017	05/19/17 11:42	
4-Chlorotoluene	ND	5.0	1	B7E0654	05/19/2017	05/19/17 11:42	
4-Isopropyltoluene	ND	5.0	1	B7E0654	05/19/2017	05/19/17 11:42	
Benzene	ND	5.0	1	B7E0654	05/19/2017	05/19/17 11:42	
Bromobenzene	ND	5.0	1	B7E0654	05/19/2017	05/19/17 11:42	
Bromochloromethane	ND	5.0	1	B7E0654	05/19/2017	05/19/17 11:42	
Bromodichloromethane	ND	5.0	1	B7E0654	05/19/2017	05/19/17 11:42	
Bromoform	ND	5.0	1	B7E0654	05/19/2017	05/19/17 11:42	
Bromomethane	ND	5.0	1	B7E0654	05/19/2017	05/19/17 11:42	
Carbon disulfide	ND	5.0	1	B7E0654	05/19/2017	05/19/17 11:42	
Carbon tetrachloride	ND	5.0	1	B7E0654	05/19/2017	05/19/17 11:42	
Chlorobenzene	ND	5.0	1	B7E0654	05/19/2017	05/19/17 11:42	
Chloroethane	ND	5.0	1	B7E0654	05/19/2017	05/19/17 11:42	
Chloroform	ND	5.0	1	B7E0654	05/19/2017	05/19/17 11:42	
Chloromethane	ND	5.0	1	B7E0654	05/19/2017	05/19/17 11:42	
cis-1,2-Dichloroethene	ND	5.0	1	B7E0654	05/19/2017	05/19/17 11:42	

Certificate of Analysis

Hushmand Associates, Inc.	Project Number : 6th St Bridge, LAC-17-001
250 Goddard	Report To : Naresh Bellana
Irvine , CA 92618	Reported : 06/05/2017

Client Sample ID 7-5-5.0

Lab ID: 1702036-94

Volatile Organic Compounds by EPA 8260B **Analyst: AG**

Analyte	Result (ug/kg)	PQL (ug/kg)	Dilution	Batch	Prepared	Date/Time Analyzed	Notes
cis-1,3-Dichloropropene	ND	5.0	1	B7E0654	05/19/2017	05/19/17 11:42	
Di-isopropyl ether	ND	5.0	1	B7E0654	05/19/2017	05/19/17 11:42	
Dibromochloromethane	ND	5.0	1	B7E0654	05/19/2017	05/19/17 11:42	
Dibromomethane	ND	5.0	1	B7E0654	05/19/2017	05/19/17 11:42	
Dichlorodifluoromethane	ND	5.0	1	B7E0654	05/19/2017	05/19/17 11:42	
Ethyl Acetate	ND	50	1	B7E0654	05/19/2017	05/19/17 11:42	
Ethyl Ether	ND	50	1	B7E0654	05/19/2017	05/19/17 11:42	
Ethyl tert-butyl ether	ND	5.0	1	B7E0654	05/19/2017	05/19/17 11:42	
Ethylbenzene	ND	5.0	1	B7E0654	05/19/2017	05/19/17 11:42	
Freon-113	ND	5.0	1	B7E0654	05/19/2017	05/19/17 11:42	
Hexachlorobutadiene	ND	5.0	1	B7E0654	05/19/2017	05/19/17 11:42	
Isopropylbenzene	ND	5.0	1	B7E0654	05/19/2017	05/19/17 11:42	
m,p-Xylene	ND	10	1	B7E0654	05/19/2017	05/19/17 11:42	
Methylene chloride	ND	5.0	1	B7E0654	05/19/2017	05/19/17 11:42	
MTBE	ND	5.0	1	B7E0654	05/19/2017	05/19/17 11:42	
n-Butylbenzene	ND	5.0	1	B7E0654	05/19/2017	05/19/17 11:42	
n-Propylbenzene	ND	5.0	1	B7E0654	05/19/2017	05/19/17 11:42	
Naphthalene	ND	5.0	1	B7E0654	05/19/2017	05/19/17 11:42	
o-Xylene	ND	5.0	1	B7E0654	05/19/2017	05/19/17 11:42	
sec-Butylbenzene	ND	5.0	1	B7E0654	05/19/2017	05/19/17 11:42	
Styrene	ND	5.0	1	B7E0654	05/19/2017	05/19/17 11:42	
tert-Amyl methyl ether	ND	5.0	1	B7E0654	05/19/2017	05/19/17 11:42	
tert-Butanol	ND	100	1	B7E0654	05/19/2017	05/19/17 11:42	
tert-Butylbenzene	ND	5.0	1	B7E0654	05/19/2017	05/19/17 11:42	
Tetrachloroethene	ND	5.0	1	B7E0654	05/19/2017	05/19/17 11:42	
Toluene	ND	5.0	1	B7E0654	05/19/2017	05/19/17 11:42	
trans-1,2-Dichloroethene	ND	5.0	1	B7E0654	05/19/2017	05/19/17 11:42	
trans-1,3-Dichloropropene	ND	5.0	1	B7E0654	05/19/2017	05/19/17 11:42	
Trichloroethene	ND	5.0	1	B7E0654	05/19/2017	05/19/17 11:42	
Trichlorofluoromethane	ND	5.0	1	B7E0654	05/19/2017	05/19/17 11:42	
Vinyl acetate	ND	50	1	B7E0654	05/19/2017	05/19/17 11:42	
Vinyl chloride	ND	5.0	1	B7E0654	05/19/2017	05/19/17 11:42	
Surrogate: 1,2-Dichloroethane-d4	*102 %*	*12 - 186*		B7E0654	05/19/2017	*05/19/17 11:42*	
Surrogate: 4-Bromofluorobenzene	*92.8 %*	*23 - 162*		B7E0654	05/19/2017	*05/19/17 11:42*	
Surrogate: Dibromofluoromethane	*98.8 %*	*23 - 179*		B7E0654	05/19/2017	*05/19/17 11:42*	
Surrogate: Toluene-d8	*100 %*	*26 - 164*		B7E0654	05/19/2017	*05/19/17 11:42*	

Certificate of Analysis

Hushmand Associates, Inc.	Project Number : 6th St Bridge, LAC-17-001
250 Goddard	Report To : Naresh Bellana
Irvine , CA 92618	Reported : 06/05/2017

Client Sample ID 7-5-5.0

Lab ID: 1702036-94

Semivolatile Organic Compounds by EPA 8270C **Analyst: SP**

Analyte	Result (ug/kg)	PQL (ug/kg)	Dilution	Batch	Prepared	Date/Time Analyzed	Notes
1,2,4-Trichlorobenzene	ND	330	1	B7E0781	05/23/2017	06/01/17 04:58	
1,2-Dichlorobenzene	ND	330	1	B7E0781	05/23/2017	06/01/17 04:58	
1,3-Dichlorobenzene	ND	330	1	B7E0781	05/23/2017	06/01/17 04:58	
1,4-Dichlorobenzene	ND	330	1	B7E0781	05/23/2017	06/01/17 04:58	
2,4,5-Trichlorophenol	ND	330	1	B7E0781	05/23/2017	06/01/17 04:58	
2,4,6-Trichlorophenol	ND	330	1	B7E0781	05/23/2017	06/01/17 04:58	
2,4-Dichlorophenol	ND	1600	1	B7E0781	05/23/2017	06/01/17 04:58	
2,4-Dimethylphenol	ND	330	1	B7E0781	05/23/2017	06/01/17 04:58	
2,4-Dinitrophenol	ND	1600	1	B7E0781	05/23/2017	06/01/17 04:58	
2,4-Dinitrotoluene	ND	330	1	B7E0781	05/23/2017	06/01/17 04:58	
2,6-Dinitrotoluene	ND	330	1	B7E0781	05/23/2017	06/01/17 04:58	
2-Chloronaphthalene	ND	330	1	B7E0781	05/23/2017	06/01/17 04:58	
2-Chlorophenol	ND	330	1	B7E0781	05/23/2017	06/01/17 04:58	
2-Methylnaphthalene	ND	330	1	B7E0781	05/23/2017	06/01/17 04:58	
2-Methylphenol	ND	330	1	B7E0781	05/23/2017	06/01/17 04:58	
2-Nitroaniline	ND	1600	1	B7E0781	05/23/2017	06/01/17 04:58	
2-Nitrophenol	ND	330	1	B7E0781	05/23/2017	06/01/17 04:58	
3,3´-Dichlorobenzidine	ND	660	1	B7E0781	05/23/2017	06/01/17 04:58	
3-Nitroaniline	ND	1600	1	B7E0781	05/23/2017	06/01/17 04:58	
4,6-Dinitro-2-methyphenol	ND	1600	1	B7E0781	05/23/2017	06/01/17 04:58	
4-Bromophenyl-phenylether	ND	330	1	B7E0781	05/23/2017	06/01/17 04:58	
4-Chloro-3-methylphenol	ND	660	1	B7E0781	05/23/2017	06/01/17 04:58	
4-Chloroaniline	ND	660	1	B7E0781	05/23/2017	06/01/17 04:58	
4-Chlorophenyl-phenylether	ND	330	1	B7E0781	05/23/2017	06/01/17 04:58	
4-Methylphenol	ND	330	1	B7E0781	05/23/2017	06/01/17 04:58	
4-Nitroaniline	ND	1600	1	B7E0781	05/23/2017	06/01/17 04:58	
4-Nitrophenol	ND	330	1	B7E0781	05/23/2017	06/01/17 04:58	
Acenaphthene	ND	330	1	B7E0781	05/23/2017	06/01/17 04:58	
Acenaphthylene	ND	330	1	B7E0781	05/23/2017	06/01/17 04:58	
Anthracene	ND	330	1	B7E0781	05/23/2017	06/01/17 04:58	
Benzidine (M)	ND	1600	1	B7E0781	05/23/2017	06/01/17 04:58	
Benzo(a)anthracene	ND	330	1	B7E0781	05/23/2017	06/01/17 04:58	
Benzo(a)pyrene	ND	330	1	B7E0781	05/23/2017	06/01/17 04:58	
Benzo(b)fluoranthene	ND	330	1	B7E0781	05/23/2017	06/01/17 04:58	
Benzo(g,h,i)perylene	ND	330	1	B7E0781	05/23/2017	06/01/17 04:58	
Benzo(k)fluoranthene	ND	330	1	B7E0781	05/23/2017	06/01/17 04:58	
Benzoic acid	ND	1600	1	B7E0781	05/23/2017	06/01/17 04:58	

Certificate of Analysis

Hushmand Associates, Inc.	Project Number : 6th St Bridge, LAC-17-001
250 Goddard	Report To : Naresh Bellana
Irvine , CA 92618	Reported : 06/05/2017

Client Sample ID 7-5-5.0

Lab ID: 1702036-94

Semivolatile Organic Compounds by EPA 8270C **Analyst: SP**

Analyte	Result (ug/kg)	PQL (ug/kg)	Dilution	Batch	Prepared	Date/Time Analyzed	Notes
Benzyl alcohol	ND	660	1	B7E0781	05/23/2017	06/01/17 04:58	
bis(2-chloroethoxy)methane	ND	330	1	B7E0781	05/23/2017	06/01/17 04:58	
bis(2-Chloroethyl)ether	ND	330	1	B7E0781	05/23/2017	06/01/17 04:58	
bis(2-chloroisopropyl)ether	ND	330	1	B7E0781	05/23/2017	06/01/17 04:58	
bis(2-ethylhexyl)phthalate	ND	330	1	B7E0781	05/23/2017	06/01/17 04:58	
Butylbenzylphthalate	ND	330	1	B7E0781	05/23/2017	06/01/17 04:58	
Chrysene	ND	330	1	B7E0781	05/23/2017	06/01/17 04:58	
Di-n-butylphthalate	ND	330	1	B7E0781	05/23/2017	06/01/17 04:58	
Di-n-octylphthalate	ND	330	1	B7E0781	05/23/2017	06/01/17 04:58	
Dibenz(a,h)anthracene	ND	330	1	B7E0781	05/23/2017	06/01/17 04:58	
Dibenzofuran	ND	330	1	B7E0781	05/23/2017	06/01/17 04:58	
Diethyl phthalate	ND	330	1	B7E0781	05/23/2017	06/01/17 04:58	
Dimethyl phthalate	ND	330	1	B7E0781	05/23/2017	06/01/17 04:58	
Fluoranthene	ND	330	1	B7E0781	05/23/2017	06/01/17 04:58	
Fluorene	ND	330	1	B7E0781	05/23/2017	06/01/17 04:58	
Hexachlorobenzene	ND	330	1	B7E0781	05/23/2017	06/01/17 04:58	
Hexachlorobutadiene	ND	660	1	B7E0781	05/23/2017	06/01/17 04:58	
Hexachlorocyclopentadiene	ND	660	1	B7E0781	05/23/2017	06/01/17 04:58	
Hexachloroethane	ND	330	1	B7E0781	05/23/2017	06/01/17 04:58	
Indeno(1,2,3-cd)pyrene	ND	330	1	B7E0781	05/23/2017	06/01/17 04:58	
Isophorone	ND	330	1	B7E0781	05/23/2017	06/01/17 04:58	
N-Nitroso-di-n propylamine	ND	330	1	B7E0781	05/23/2017	06/01/17 04:58	
N-Nitrosodiphenylamine	ND	330	1	B7E0781	05/23/2017	06/01/17 04:58	
Naphthalene	ND	330	1	B7E0781	05/23/2017	06/01/17 04:58	
Nitrobenzene	ND	330	1	B7E0781	05/23/2017	06/01/17 04:58	
Pentachlorophenol	ND	1600	1	B7E0781	05/23/2017	06/01/17 04:58	
Phenanthrene	ND	330	1	B7E0781	05/23/2017	06/01/17 04:58	
Phenol	ND	330	1	B7E0781	05/23/2017	06/01/17 04:58	
Pyrene	ND	330	1	B7E0781	05/23/2017	06/01/17 04:58	
Pyridine	ND	1600	1	B7E0781	05/23/2017	06/01/17 04:58	
Surrogate: 1,2-Dichlorobenzene-d4	*54.2 %*	*38 - 93*		B7E0781	05/23/2017	*06/01/17 04:58*	
Surrogate: 2,4,6-Tribromophenol	*66.8 %*	*27 - 124*		B7E0781	05/23/2017	*06/01/17 04:58*	
Surrogate: 2-Chlorophenol-d4	*53.1 %*	*36 - 96*		B7E0781	05/23/2017	*06/01/17 04:58*	
Surrogate: 2-Fluorobiphenyl	*65.4 %*	*44 - 100*		B7E0781	05/23/2017	*06/01/17 04:58*	
Surrogate: 2-Fluorophenol	*50.1 %*	*32 - 89*		B7E0781	05/23/2017	*06/01/17 04:58*	
Surrogate: 4-Terphenyl-d14	*68.9 %*	*49 - 123*		B7E0781	05/23/2017	*06/01/17 04:58*	
Surrogate: Nitrobenzene-d5	*61.0 %*	*38 - 104*		B7E0781	05/23/2017	*06/01/17 04:58*	

Certificate of Analysis

Hushmand Associates, Inc.	Project Number : 6th St Bridge, LAC-17-001
250 Goddard	Report To : Naresh Bellana
Irvine , CA 92618	Reported : 06/05/2017

Client Sample ID 7-5-5.0

Lab ID: 1702036-94

Semivolatile Organic Compounds by EPA 8270C **Analyst: SP**

Analyte	Result (ug/kg)	PQL (ug/kg)	Dilution	Batch	Prepared	Date/Time Analyzed	Notes
Surrogate: Phenol-d5	*52.5 %*	*35 - 95*		B7E0781	05/23/2017	*06/01/17 04:58*	

Certificate of Analysis

Hushmand Associates, Inc.	Project Number : 6th St Bridge, LAC-17-001
250 Goddard	Report To : Naresh Bellana
Irvine , CA 92618	Reported : 06/05/2017

Client Sample ID 7-6-0.5

Lab ID: 1702036-95

Title 22 Metals by ICP-AES EPA 6010B

Analyst: KEK

Analyte	Result (mg/kg)	PQL (mg/kg)	Dilution	Batch	Prepared	Date/Time Analyzed	Notes
Antimony	ND	2.0	1	B7E0684	05/20/2017	05/22/17 13:52	
Arsenic	**1.2**	1.0	1	B7E0684	05/20/2017	05/22/17 13:52	
Barium	**91**	1.0	1	B7E0684	05/20/2017	05/22/17 13:52	
Beryllium	ND	1.0	1	B7E0684	05/20/2017	05/22/17 13:52	
Cadmium	ND	1.0	1	B7E0684	05/20/2017	05/22/17 13:52	
Chromium	**8.4**	1.0	1	B7E0684	05/20/2017	05/22/17 13:52	
Cobalt	**5.2**	1.0	1	B7E0684	05/20/2017	05/22/17 13:52	
Copper	**28**	2.0	1	B7E0684	05/20/2017	05/22/17 13:52	
Lead	**31**	1.0	1	B7E0684	05/20/2017	05/22/17 13:52	
Molybdenum	ND	1.0	1	B7E0684	05/20/2017	05/22/17 13:52	
Nickel	**7.3**	1.0	1	B7E0684	05/20/2017	05/22/17 13:52	
Selenium	ND	1.0	1	B7E0684	05/20/2017	05/22/17 13:52	
Silver	ND	1.0	1	B7E0684	05/20/2017	05/22/17 13:52	
Thallium	ND	1.0	1	B7E0684	05/20/2017	05/22/17 13:52	
Vanadium	**23**	1.0	1	B7E0684	05/20/2017	05/22/17 13:52	
Zinc	**77**	1.0	1	B7E0684	05/20/2017	05/22/17 13:52	

Mercury by AA (Cold Vapor) EPA 7471A

Analyst: KEK

Analyte	Result (mg/kg)	PQL (mg/kg)	Dilution	Batch	Prepared	Date/Time Analyzed	Notes
Mercury	**0.13**	0.10	1	B7E0679	05/20/2017	05/22/17 17:12	

Gasoline Range Organics by EPA 8015B (Modified)

Analyst: VW

Analyte		Result (mg/kg)	PQL (mg/kg)	Dilution	Batch	Prepared	Date/Time Analyzed	Notes
Gasoline Range Organics		ND	1.0	1	B7E0657	05/21/2017	05/21/17 18:35	
Surrogate: 4-Bromofluorobenzene	*103 %*		*36 - 125*		B7E0657	05/21/2017	*05/21/17 18:35*	

Diesel Range Organics by EPA 8015B

Analyst: CR

Analyte		Result (mg/kg)	PQL (mg/kg)	Dilution	Batch	Prepared	Date/Time Analyzed	Notes
DRO		**200**	10	1	B7E0785	05/23/2017	05/25/17 04:37	
Surrogate: p-Terphenyl	*85.6 %*		*47 - 157*		B7E0785	05/23/2017	*05/25/17 04:37*	

Certificate of Analysis

Hushmand Associates, Inc.	Project Number : 6th St Bridge, LAC-17-001
250 Goddard	Report To : Naresh Bellana
Irvine , CA 92618	Reported : 06/05/2017

Client Sample ID 7-6-0.5

Lab ID: 1702036-95

Organochlorine Pesticides by EPA 8081 **Analyst: RL/**

Analyte	Result (ug/kg)	PQL (ug/kg)	Dilution	Batch	Prepared	Date/Time Analyzed	Notes
4,4´-DDD [2C]	ND	2.0	1	B7E0819	05/24/2017	05/24/17 18:47	
4,4´-DDE [2C]	ND	2.0	1	B7E0819	05/24/2017	05/24/17 18:47	
4,4´-DDT [2C]	ND	2.0	1	B7E0819	05/24/2017	05/24/17 18:47	
Aldrin	ND	1.0	1	B7E0819	05/24/2017	05/24/17 18:47	
alpha-BHC	ND	1.0	1	B7E0819	05/24/2017	05/24/17 18:47	
alpha-Chlordane	ND	1.0	1	B7E0819	05/24/2017	05/24/17 18:47	
beta-BHC	ND	1.0	1	B7E0819	05/24/2017	05/24/17 18:47	
Chlordane	ND	8.5	1	B7E0819	05/24/2017	05/24/17 18:47	
delta-BHC	ND	1.0	1	B7E0819	05/24/2017	05/24/17 18:47	
Dieldrin	ND	2.0	1	B7E0819	05/24/2017	05/24/17 18:47	
Endosulfan I	ND	1.0	1	B7E0819	05/24/2017	05/24/17 18:47	
Endosulfan II	ND	2.0	1	B7E0819	05/24/2017	05/24/17 18:47	
Endosulfan sulfate	ND	2.0	1	B7E0819	05/24/2017	05/24/17 18:47	
Endrin	ND	2.0	1	B7E0819	05/24/2017	05/24/17 18:47	
Endrin aldehyde	ND	2.0	1	B7E0819	05/24/2017	05/24/17 18:47	
Endrin ketone	ND	2.0	1	B7E0819	05/24/2017	05/24/17 18:47	
gamma-BHC	ND	1.0	1	B7E0819	05/24/2017	05/24/17 18:47	
gamma-Chlordane	ND	1.0	1	B7E0819	05/24/2017	05/24/17 18:47	
Heptachlor	ND	1.0	1	B7E0819	05/24/2017	05/24/17 18:47	
Heptachlor epoxide	ND	1.0	1	B7E0819	05/24/2017	05/24/17 18:47	
Methoxychlor	ND	5.0	1	B7E0819	05/24/2017	05/24/17 18:47	
Toxaphene	ND	50	1	B7E0819	05/24/2017	05/24/17 18:47	
Surrogate: Decachlorobiphenyl	*34.0 %*	*27 - 123*		B7E0819	05/24/2017	*05/24/17 18:47*	
Surrogate: Tetrachloro-m-xylene	*42.4 %*	*26 - 108*		B7E0819	05/24/2017	*05/24/17 18:47*	

Certificate of Analysis

Hushmand Associates, Inc.	Project Number : 6th St Bridge, LAC-17-001
250 Goddard	Report To : Naresh Bellana
Irvine , CA 92618	Reported : 06/05/2017

Client Sample ID 7-6-0.5

Lab ID: 1702036-95

Polychlorinated Biphenyls by EPA 8082

Analyst: LT

Analyte	Result (ug/kg)	PQL (ug/kg)	Dilution	Batch	Prepared	Date/Time Analyzed	Notes
Aroclor 1016	ND	16	1	B7E0819	05/24/2017	05/24/17 19:11	
Aroclor 1221	ND	16	1	B7E0819	05/24/2017	05/24/17 19:11	
Aroclor 1232	ND	16	1	B7E0819	05/24/2017	05/24/17 19:11	
Aroclor 1242	ND	16	1	B7E0819	05/24/2017	05/24/17 19:11	
Aroclor 1248	ND	16	1	B7E0819	05/24/2017	05/24/17 19:11	
Aroclor 1254	ND	16	1	B7E0819	05/24/2017	05/24/17 19:11	
Aroclor 1260	ND	16	1	B7E0819	05/24/2017	05/24/17 19:11	
Aroclor 1262	ND	16	1	B7E0819	05/24/2017	05/24/17 19:11	
Aroclor 1268	ND	16	1	B7E0819	05/24/2017	05/24/17 19:11	
Surrogate: Decachlorobiphenyl	*46.0 %*	*18 - 136*		B7E0819	05/24/2017	*05/24/17 19:11*	
Surrogate: Tetrachloro-m-xylene	*63.1 %*	*30 - 130*		B7E0819	05/24/2017	*05/24/17 19:11*	

Volatile Organic Compounds by EPA 8260B

Analyst: AG

Analyte	Result (ug/kg)	PQL (ug/kg)	Dilution	Batch	Prepared	Date/Time Analyzed	Notes
1,1,1,2-Tetrachloroethane	ND	5.0	1	B7E0654	05/19/2017	05/19/17 12:01	
1,1,1-Trichloroethane	ND	5.0	1	B7E0654	05/19/2017	05/19/17 12:01	
1,1,2,2-Tetrachloroethane	ND	5.0	1	B7E0654	05/19/2017	05/19/17 12:01	
1,1,2-Trichloroethane	ND	5.0	1	B7E0654	05/19/2017	05/19/17 12:01	
1,1-Dichloroethane	ND	5.0	1	B7E0654	05/19/2017	05/19/17 12:01	
1,1-Dichloroethene	ND	5.0	1	B7E0654	05/19/2017	05/19/17 12:01	
1,1-Dichloropropene	ND	5.0	1	B7E0654	05/19/2017	05/19/17 12:01	
1,2,3-Trichloropropane	ND	5.0	1	B7E0654	05/19/2017	05/19/17 12:01	
1,2,3-Trichlorobenzene	ND	5.0	1	B7E0654	05/19/2017	05/19/17 12:01	
1,2,4-Trichlorobenzene	ND	5.0	1	B7E0654	05/19/2017	05/19/17 12:01	
1,2,4-Trimethylbenzene	ND	5.0	1	B7E0654	05/19/2017	05/19/17 12:01	
1,2-Dibromo-3-chloropropane	ND	10	1	B7E0654	05/19/2017	05/19/17 12:01	
1,2-Dibromoethane	ND	5.0	1	B7E0654	05/19/2017	05/19/17 12:01	
1,2-Dichlorobenzene	ND	5.0	1	B7E0654	05/19/2017	05/19/17 12:01	
1,2-Dichloroethane	ND	5.0	1	B7E0654	05/19/2017	05/19/17 12:01	
1,2-Dichloropropane	ND	5.0	1	B7E0654	05/19/2017	05/19/17 12:01	
1,3,5-Trimethylbenzene	ND	5.0	1	B7E0654	05/19/2017	05/19/17 12:01	
1,3-Dichlorobenzene	ND	5.0	1	B7E0654	05/19/2017	05/19/17 12:01	
1,3-Dichloropropane	ND	5.0	1	B7E0654	05/19/2017	05/19/17 12:01	
1,4-Dichlorobenzene	ND	5.0	1	B7E0654	05/19/2017	05/19/17 12:01	
2,2-Dichloropropane	ND	5.0	1	B7E0654	05/19/2017	05/19/17 12:01	

Certificate of Analysis

Hushmand Associates, Inc.	Project Number : 6th St Bridge, LAC-17-001
250 Goddard	Report To : Naresh Bellana
Irvine , CA 92618	Reported : 06/05/2017

Client Sample ID 7-6-0.5

Lab ID: 1702036-95

Volatile Organic Compounds by EPA 8260B **Analyst: AG**

Analyte	Result (ug/kg)	PQL (ug/kg)	Dilution	Batch	Prepared	Date/Time Analyzed	Notes
2-Chlorotoluene	ND	5.0	1	B7E0654	05/19/2017	05/19/17 12:01	
4-Chlorotoluene	ND	5.0	1	B7E0654	05/19/2017	05/19/17 12:01	
4-Isopropyltoluene	ND	5.0	1	B7E0654	05/19/2017	05/19/17 12:01	
Benzene	ND	5.0	1	B7E0654	05/19/2017	05/19/17 12:01	
Bromobenzene	ND	5.0	1	B7E0654	05/19/2017	05/19/17 12:01	
Bromochloromethane	ND	5.0	1	B7E0654	05/19/2017	05/19/17 12:01	
Bromodichloromethane	ND	5.0	1	B7E0654	05/19/2017	05/19/17 12:01	
Bromoform	ND	5.0	1	B7E0654	05/19/2017	05/19/17 12:01	
Bromomethane	ND	5.0	1	B7E0654	05/19/2017	05/19/17 12:01	
Carbon disulfide	ND	5.0	1	B7E0654	05/19/2017	05/19/17 12:01	
Carbon tetrachloride	ND	5.0	1	B7E0654	05/19/2017	05/19/17 12:01	
Chlorobenzene	ND	5.0	1	B7E0654	05/19/2017	05/19/17 12:01	
Chloroethane	ND	5.0	1	B7E0654	05/19/2017	05/19/17 12:01	
Chloroform	ND	5.0	1	B7E0654	05/19/2017	05/19/17 12:01	
Chloromethane	ND	5.0	1	B7E0654	05/19/2017	05/19/17 12:01	
cis-1,2-Dichloroethene	ND	5.0	1	B7E0654	05/19/2017	05/19/17 12:01	
cis-1,3-Dichloropropene	ND	5.0	1	B7E0654	05/19/2017	05/19/17 12:01	
Di-isopropyl ether	ND	5.0	1	B7E0654	05/19/2017	05/19/17 12:01	
Dibromochloromethane	ND	5.0	1	B7E0654	05/19/2017	05/19/17 12:01	
Dibromomethane	ND	5.0	1	B7E0654	05/19/2017	05/19/17 12:01	
Dichlorodifluoromethane	ND	5.0	1	B7E0654	05/19/2017	05/19/17 12:01	
Ethyl Acetate	ND	50	1	B7E0654	05/19/2017	05/19/17 12:01	
Ethyl Ether	ND	50	1	B7E0654	05/19/2017	05/19/17 12:01	
Ethyl tert-butyl ether	ND	5.0	1	B7E0654	05/19/2017	05/19/17 12:01	
Ethylbenzene	ND	5.0	1	B7E0654	05/19/2017	05/19/17 12:01	
Freon-113	ND	5.0	1	B7E0654	05/19/2017	05/19/17 12:01	
Hexachlorobutadiene	ND	5.0	1	B7E0654	05/19/2017	05/19/17 12:01	
Isopropylbenzene	ND	5.0	1	B7E0654	05/19/2017	05/19/17 12:01	
m,p-Xylene	ND	10	1	B7E0654	05/19/2017	05/19/17 12:01	
Methylene chloride	ND	5.0	1	B7E0654	05/19/2017	05/19/17 12:01	
MTBE	ND	5.0	1	B7E0654	05/19/2017	05/19/17 12:01	
n-Butylbenzene	ND	5.0	1	B7E0654	05/19/2017	05/19/17 12:01	
n-Propylbenzene	ND	5.0	1	B7E0654	05/19/2017	05/19/17 12:01	
Naphthalene	ND	5.0	1	B7E0654	05/19/2017	05/19/17 12:01	
o-Xylene	ND	5.0	1	B7E0654	05/19/2017	05/19/17 12:01	
sec-Butylbenzene	ND	5.0	1	B7E0654	05/19/2017	05/19/17 12:01	
Styrene	ND	5.0	1	B7E0654	05/19/2017	05/19/17 12:01	

Certificate of Analysis

Hushmand Associates, Inc.	Project Number : 6th St Bridge, LAC-17-001
250 Goddard	Report To : Naresh Bellana
Irvine , CA 92618	Reported : 06/05/2017

Client Sample ID 7-6-0.5

Lab ID: 1702036-95

Volatile Organic Compounds by EPA 8260B

Analyst: AG

Analyte	Result (ug/kg)	PQL (ug/kg)	Dilution	Batch	Prepared	Date/Time Analyzed	Notes
tert-Amyl methyl ether	ND	5.0	1	B7E0654	05/19/2017	05/19/17 12:01	
tert-Butanol	ND	100	1	B7E0654	05/19/2017	05/19/17 12:01	
tert-Butylbenzene	ND	5.0	1	B7E0654	05/19/2017	05/19/17 12:01	
Tetrachloroethene	ND	5.0	1	B7E0654	05/19/2017	05/19/17 12:01	
Toluene	ND	5.0	1	B7E0654	05/19/2017	05/19/17 12:01	
trans-1,2-Dichloroethene	ND	5.0	1	B7E0654	05/19/2017	05/19/17 12:01	
trans-1,3-Dichloropropene	ND	5.0	1	B7E0654	05/19/2017	05/19/17 12:01	
Trichloroethene	ND	5.0	1	B7E0654	05/19/2017	05/19/17 12:01	
Trichlorofluoromethane	ND	5.0	1	B7E0654	05/19/2017	05/19/17 12:01	
Vinyl acetate	ND	50	1	B7E0654	05/19/2017	05/19/17 12:01	
Vinyl chloride	ND	5.0	1	B7E0654	05/19/2017	05/19/17 12:01	
Surrogate: 1,2-Dichloroethane-d4	*110 %*	*12 - 186*		B7E0654	05/19/2017	*05/19/17 12:01*	
Surrogate: 4-Bromofluorobenzene	*105 %*	*23 - 162*		B7E0654	05/19/2017	*05/19/17 12:01*	
Surrogate: Dibromofluoromethane	*94.9 %*	*23 - 179*		B7E0654	05/19/2017	*05/19/17 12:01*	
Surrogate: Toluene-d8	*97.5 %*	*26 - 164*		B7E0654	05/19/2017	*05/19/17 12:01*	

Semivolatile Organic Compounds by EPA 8270C

Analyst: SP

Analyte	Result (ug/kg)	PQL (ug/kg)	Dilution	Batch	Prepared	Date/Time Analyzed	Notes
1,2,4-Trichlorobenzene	ND	33000	100	B7E0781	05/23/2017	06/01/17 08:06	D1
1,2-Dichlorobenzene	ND	33000	100	B7E0781	05/23/2017	06/01/17 08:06	D1
1,3-Dichlorobenzene	ND	33000	100	B7E0781	05/23/2017	06/01/17 08:06	D1
1,4-Dichlorobenzene	ND	33000	100	B7E0781	05/23/2017	06/01/17 08:06	D1
2,4,5-Trichlorophenol	ND	33000	100	B7E0781	05/23/2017	06/01/17 08:06	D1
2,4,6-Trichlorophenol	ND	33000	100	B7E0781	05/23/2017	06/01/17 08:06	D1
2,4-Dichlorophenol	ND	160000	100	B7E0781	05/23/2017	06/01/17 08:06	D1
2,4-Dimethylphenol	ND	33000	100	B7E0781	05/23/2017	06/01/17 08:06	D1
2,4-Dinitrophenol	ND	160000	100	B7E0781	05/23/2017	06/01/17 08:06	D1
2,4-Dinitrotoluene	ND	33000	100	B7E0781	05/23/2017	06/01/17 08:06	D1
2,6-Dinitrotoluene	ND	33000	100	B7E0781	05/23/2017	06/01/17 08:06	D1
2-Chloronaphthalene	ND	33000	100	B7E0781	05/23/2017	06/01/17 08:06	D1
2-Chlorophenol	ND	33000	100	B7E0781	05/23/2017	06/01/17 08:06	D1
2-Methylnaphthalene	ND	33000	100	B7E0781	05/23/2017	06/01/17 08:06	D1
2-Methylphenol	ND	33000	100	B7E0781	05/23/2017	06/01/17 08:06	D1
2-Nitroaniline	ND	160000	100	B7E0781	05/23/2017	06/01/17 08:06	D1
2-Nitrophenol	ND	33000	100	B7E0781	05/23/2017	06/01/17 08:06	D1

Certificate of Analysis

Hushmand Associates, Inc.	Project Number : 6th St Bridge, LAC-17-001
250 Goddard	Report To : Naresh Bellana
Irvine , CA 92618	Reported : 06/05/2017

Client Sample ID 7-6-0.5

Lab ID: 1702036-95

Semivolatile Organic Compounds by EPA 8270C **Analyst: SP**

Analyte	Result (ug/kg)	PQL (ug/kg)	Dilution	Batch	Prepared	Date/Time Analyzed	Notes
3,3´-Dichlorobenzidine	ND	66000	100	B7E0781	05/23/2017	06/01/17 08:06	D1
3-Nitroaniline	ND	160000	100	B7E0781	05/23/2017	06/01/17 08:06	D1
4,6-Dinitro-2-methyphenol	ND	160000	100	B7E0781	05/23/2017	06/01/17 08:06	D1
4-Bromophenyl-phenylether	ND	33000	100	B7E0781	05/23/2017	06/01/17 08:06	D1
4-Chloro-3-methylphenol	ND	66000	100	B7E0781	05/23/2017	06/01/17 08:06	D1
4-Chloroaniline	ND	66000	100	B7E0781	05/23/2017	06/01/17 08:06	D1
4-Chlorophenyl-phenylether	ND	33000	100	B7E0781	05/23/2017	06/01/17 08:06	D1
4-Methylphenol	ND	33000	100	B7E0781	05/23/2017	06/01/17 08:06	D1
4-Nitroaniline	ND	160000	100	B7E0781	05/23/2017	06/01/17 08:06	D1
4-Nitrophenol	ND	33000	100	B7E0781	05/23/2017	06/01/17 08:06	D1
Acenaphthene	ND	33000	100	B7E0781	05/23/2017	06/01/17 08:06	D1
Acenaphthylene	ND	33000	100	B7E0781	05/23/2017	06/01/17 08:06	D1
Anthracene	ND	33000	100	B7E0781	05/23/2017	06/01/17 08:06	D1
Benzidine (M)	ND	160000	100	B7E0781	05/23/2017	06/01/17 08:06	D1
Benzo(a)anthracene	ND	33000	100	B7E0781	05/23/2017	06/01/17 08:06	D1
Benzo(a)pyrene	ND	33000	100	B7E0781	05/23/2017	06/01/17 08:06	D1
Benzo(b)fluoranthene	ND	33000	100	B7E0781	05/23/2017	06/01/17 08:06	D1
Benzo(g,h,i)perylene	ND	33000	100	B7E0781	05/23/2017	06/01/17 08:06	D1
Benzo(k)fluoranthene	ND	33000	100	B7E0781	05/23/2017	06/01/17 08:06	D1
Benzoic acid	ND	160000	100	B7E0781	05/23/2017	06/01/17 08:06	D1
Benzyl alcohol	ND	66000	100	B7E0781	05/23/2017	06/01/17 08:06	D1
bis(2-chloroethoxy)methane	ND	33000	100	B7E0781	05/23/2017	06/01/17 08:06	D1
bis(2-Chloroethyl)ether	ND	33000	100	B7E0781	05/23/2017	06/01/17 08:06	D1
bis(2-chloroisopropyl)ether	ND	33000	100	B7E0781	05/23/2017	06/01/17 08:06	D1
bis(2-ethylhexyl)phthalate	ND	33000	100	B7E0781	05/23/2017	06/01/17 08:06	D1
Butylbenzylphthalate	ND	33000	100	B7E0781	05/23/2017	06/01/17 08:06	D1
Chrysene	ND	33000	100	B7E0781	05/23/2017	06/01/17 08:06	D1
Di-n-butylphthalate	ND	33000	100	B7E0781	05/23/2017	06/01/17 08:06	D1
Di-n-octylphthalate	ND	33000	100	B7E0781	05/23/2017	06/01/17 08:06	D1
Dibenz(a,h)anthracene	ND	33000	100	B7E0781	05/23/2017	06/01/17 08:06	D1
Dibenzofuran	ND	33000	100	B7E0781	05/23/2017	06/01/17 08:06	D1
Diethyl phthalate	ND	33000	100	B7E0781	05/23/2017	06/01/17 08:06	D1
Dimethyl phthalate	ND	33000	100	B7E0781	05/23/2017	06/01/17 08:06	D1
Fluoranthene	ND	33000	100	B7E0781	05/23/2017	06/01/17 08:06	D1
Fluorene	ND	33000	100	B7E0781	05/23/2017	06/01/17 08:06	D1
Hexachlorobenzene	ND	33000	100	B7E0781	05/23/2017	06/01/17 08:06	D1
Hexachlorobutadiene	ND	66000	100	B7E0781	05/23/2017	06/01/17 08:06	D1

Certificate of Analysis

Hushmand Associates, Inc.	Project Number : 6th St Bridge, LAC-17-001
250 Goddard	Report To : Naresh Bellana
Irvine , CA 92618	Reported : 06/05/2017

Client Sample ID 7-6-0.5

Lab ID: 1702036-95

Semivolatile Organic Compounds by EPA 8270C **Analyst: SP**

Analyte	Result (ug/kg)	PQL (ug/kg)	Dilution	Batch	Prepared	Date/Time Analyzed	Notes
Hexachlorocyclopentadiene	ND	66000	100	B7E0781	05/23/2017	06/01/17 08:06	D1
Hexachloroethane	ND	33000	100	B7E0781	05/23/2017	06/01/17 08:06	D1
Indeno(1,2,3-cd)pyrene	ND	33000	100	B7E0781	05/23/2017	06/01/17 08:06	D1
Isophorone	ND	33000	100	B7E0781	05/23/2017	06/01/17 08:06	D1
N-Nitroso-di-n propylamine	ND	33000	100	B7E0781	05/23/2017	06/01/17 08:06	D1
N-Nitrosodiphenylamine	ND	33000	100	B7E0781	05/23/2017	06/01/17 08:06	D1
Naphthalene	ND	33000	100	B7E0781	05/23/2017	06/01/17 08:06	D1
Nitrobenzene	ND	33000	100	B7E0781	05/23/2017	06/01/17 08:06	D1
Pentachlorophenol	ND	160000	100	B7E0781	05/23/2017	06/01/17 08:06	D1
Phenanthrene	ND	33000	100	B7E0781	05/23/2017	06/01/17 08:06	D1
Phenol	ND	33000	100	B7E0781	05/23/2017	06/01/17 08:06	D1
Pyrene	ND	33000	100	B7E0781	05/23/2017	06/01/17 08:06	D1
Pyridine	ND	160000	100	B7E0781	05/23/2017	06/01/17 08:06	D1
Surrogate: 1,2-Dichlorobenzene-d4	*0%*	*38 - 93*		B7E0781	05/23/2017	*06/01/17 08:06*	S4
Surrogate: 2,4,6-Tribromophenol	*0%*	*27 - 124*		B7E0781	05/23/2017	*06/01/17 08:06*	S4
Surrogate: 2-Chlorophenol-d4	*0%*	*36 - 96*		B7E0781	05/23/2017	*06/01/17 08:06*	S4
Surrogate: 2-Fluorobiphenyl	*0%*	*44 - 100*		B7E0781	05/23/2017	*06/01/17 08:06*	S4
Surrogate: 2-Fluorophenol	*0%*	*32 - 89*		B7E0781	05/23/2017	*06/01/17 08:06*	S4
Surrogate: 4-Terphenyl-d14	*0%*	*49 - 123*		B7E0781	05/23/2017	*06/01/17 08:06*	S4
Surrogate: Nitrobenzene-d5	*0%*	*38 - 104*		B7E0781	05/23/2017	*06/01/17 08:06*	S4
Surrogate: Phenol-d5	*0%*	*35 - 95*		B7E0781	05/23/2017	*06/01/17 08:06*	S4

Certificate of Analysis

Hushmand Associates, Inc.	Project Number : 6th St Bridge, LAC-17-001
250 Goddard	Report To : Naresh Bellana
Irvine , CA 92618	Reported : 06/05/2017

Client Sample ID 7-6-1.0

Lab ID: 1702036-96

Title 22 Metals by ICP-AES EPA 6010B **Analyst: KEK**

Analyte	Result (mg/kg)	PQL (mg/kg)	Dilution	Batch	Prepared	Date/Time Analyzed	Notes
Antimony	ND	2.0	1	B7E0684	05/20/2017	05/22/17 13:55	
Arsenic	ND	1.0	1	B7E0684	05/20/2017	05/22/17 13:55	
Barium	**93**	1.0	1	B7E0684	05/20/2017	05/22/17 13:55	
Beryllium	ND	1.0	1	B7E0684	05/20/2017	05/22/17 13:55	
Cadmium	ND	1.0	1	B7E0684	05/20/2017	05/22/17 13:55	
Chromium	**8.7**	1.0	1	B7E0684	05/20/2017	05/22/17 13:55	
Cobalt	**5.7**	1.0	1	B7E0684	05/20/2017	05/22/17 13:55	
Copper	**28**	2.0	1	B7E0684	05/20/2017	05/22/17 13:55	
Lead	**22**	1.0	1	B7E0684	05/20/2017	05/22/17 13:55	
Molybdenum	ND	1.0	1	B7E0684	05/20/2017	05/22/17 13:55	
Nickel	**6.7**	1.0	1	B7E0684	05/20/2017	05/22/17 13:55	
Selenium	ND	1.0	1	B7E0684	05/20/2017	05/22/17 13:55	
Silver	ND	1.0	1	B7E0684	05/20/2017	05/22/17 13:55	
Thallium	ND	1.0	1	B7E0684	05/20/2017	05/22/17 13:55	
Vanadium	**24**	1.0	1	B7E0684	05/20/2017	05/22/17 13:55	
Zinc	**60**	1.0	1	B7E0684	05/20/2017	05/22/17 13:55	

Mercury by AA (Cold Vapor) EPA 7471A **Analyst: KEK**

Analyte	Result (mg/kg)	PQL (mg/kg)	Dilution	Batch	Prepared	Date/Time Analyzed	Notes
Mercury	**0.16**	0.10	1	B7E0679	05/20/2017	05/22/17 17:13	

Certificate of Analysis

Hushmand Associates, Inc.	Project Number : 6th St Bridge, LAC-17-001
250 Goddard	Report To : Naresh Bellana
Irvine , CA 92618	Reported : 06/05/2017

Client Sample ID 7-6-3.0

Lab ID: 1702036-97

Title 22 Metals by ICP-AES EPA 6010B **Analyst: KEK**

Analyte	Result (mg/kg)	PQL (mg/kg)	Dilution	Batch	Prepared	Date/Time Analyzed	Notes
Antimony	ND	2.0	1	B7E0684	05/20/2017	05/22/17 13:58	
Arsenic	ND	1.0	1	B7E0684	05/20/2017	05/22/17 13:58	
Barium	**78**	1.0	1	B7E0684	05/20/2017	05/22/17 13:58	
Beryllium	ND	1.0	1	B7E0684	05/20/2017	05/22/17 13:58	
Cadmium	ND	1.0	1	B7E0684	05/20/2017	05/22/17 13:58	
Chromium	**8.2**	1.0	1	B7E0684	05/20/2017	05/22/17 13:58	
Cobalt	**5.2**	1.0	1	B7E0684	05/20/2017	05/22/17 13:58	
Copper	**12**	2.0	1	B7E0684	05/20/2017	05/22/17 13:58	
Lead	**13**	1.0	1	B7E0684	05/20/2017	05/22/17 13:58	
Molybdenum	ND	1.0	1	B7E0684	05/20/2017	05/22/17 13:58	
Nickel	**6.1**	1.0	1	B7E0684	05/20/2017	05/22/17 13:58	
Selenium	ND	1.0	1	B7E0684	05/20/2017	05/22/17 13:58	
Silver	ND	1.0	1	B7E0684	05/20/2017	05/22/17 13:58	
Thallium	ND	1.0	1	B7E0684	05/20/2017	05/22/17 13:58	
Vanadium	**23**	1.0	1	B7E0684	05/20/2017	05/22/17 13:58	
Zinc	**50**	1.0	1	B7E0684	05/20/2017	05/22/17 13:58	

Mercury by AA (Cold Vapor) EPA 7471A **Analyst: KEK**

Analyte	Result (mg/kg)	PQL (mg/kg)	Dilution	Batch	Prepared	Date/Time Analyzed	Notes
Mercury	ND	0.10	1	B7E0679	05/20/2017	05/22/17 17:15	

Certificate of Analysis

Hushmand Associates, Inc.	Project Number : 6th St Bridge, LAC-17-001
250 Goddard	Report To : Naresh Bellana
Irvine , CA 92618	Reported : 06/05/2017

Client Sample ID 7-6-5.0

Lab ID: 1702036-98

Title 22 Metals by ICP-AES EPA 6010B

Analyst: KEK

Analyte	Result (mg/kg)	PQL (mg/kg)	Dilution	Batch	Prepared	Date/Time Analyzed	Notes
Antimony	ND	2.0	1	B7E0684	05/20/2017	05/22/17 14:02	
Arsenic	ND	1.0	1	B7E0684	05/20/2017	05/22/17 14:02	
Barium	**40**	1.0	1	B7E0684	05/20/2017	05/22/17 14:02	
Beryllium	ND	1.0	1	B7E0684	05/20/2017	05/22/17 14:02	
Cadmium	ND	1.0	1	B7E0684	05/20/2017	05/22/17 14:02	
Chromium	**5.0**	1.0	1	B7E0684	05/20/2017	05/22/17 14:02	
Cobalt	**3.5**	1.0	1	B7E0684	05/20/2017	05/22/17 14:02	
Copper	**4.6**	2.0	1	B7E0684	05/20/2017	05/22/17 14:02	
Lead	**2.7**	1.0	1	B7E0684	05/20/2017	05/22/17 14:02	
Molybdenum	ND	1.0	1	B7E0684	05/20/2017	05/22/17 14:02	
Nickel	**3.4**	1.0	1	B7E0684	05/20/2017	05/22/17 14:02	
Selenium	ND	1.0	1	B7E0684	05/20/2017	05/22/17 14:02	
Silver	ND	1.0	1	B7E0684	05/20/2017	05/22/17 14:02	
Thallium	ND	1.0	1	B7E0684	05/20/2017	05/22/17 14:02	
Vanadium	**16**	1.0	1	B7E0684	05/20/2017	05/22/17 14:02	
Zinc	**19**	1.0	1	B7E0684	05/20/2017	05/22/17 14:02	

Mercury by AA (Cold Vapor) EPA 7471A

Analyst: KEK

Analyte	Result (mg/kg)	PQL (mg/kg)	Dilution	Batch	Prepared	Date/Time Analyzed	Notes
Mercury	ND	0.10	1	B7E0679	05/20/2017	05/22/17 17:17	

Gasoline Range Organics by EPA 8015B (Modified)

Analyst: VW

Analyte		Result (mg/kg)	PQL (mg/kg)	Dilution	Batch	Prepared	Date/Time Analyzed	Notes
Gasoline Range Organics		ND	1.0	1	B7E0622	05/19/2017	05/19/17 14:32	
Surrogate: 4-Bromofluorobenzene	*103 %*		*36 - 125*		B7E0622	05/19/2017	*05/19/17 14:32*	

Diesel Range Organics by EPA 8015B

Analyst: CR

Analyte		Result (mg/kg)	PQL (mg/kg)	Dilution	Batch	Prepared	Date/Time Analyzed	Notes
DRO		ND	10	1	B7E0786	05/23/2017	05/24/17 19:42	
Surrogate: p-Terphenyl	*80.3 %*		*47 - 157*		B7E0786	05/23/2017	*05/24/17 19:42*	

Certificate of Analysis

Hushmand Associates, Inc.	Project Number : 6th St Bridge, LAC-17-001
250 Goddard	Report To : Naresh Bellana
Irvine , CA 92618	Reported : 06/05/2017

Client Sample ID 7-6-5.0

Lab ID: 1702036-98

Volatile Organic Compounds by EPA 8260B **Analyst: AG**

Analyte	Result (ug/kg)	PQL (ug/kg)	Dilution	Batch	Prepared	Date/Time Analyzed	Notes
1,1,1,2-Tetrachloroethane	ND	5.0	1	B7E0654	05/19/2017	05/19/17 12:19	
1,1,1-Trichloroethane	ND	5.0	1	B7E0654	05/19/2017	05/19/17 12:19	
1,1,2,2-Tetrachloroethane	ND	5.0	1	B7E0654	05/19/2017	05/19/17 12:19	
1,1,2-Trichloroethane	ND	5.0	1	B7E0654	05/19/2017	05/19/17 12:19	
1,1-Dichloroethane	ND	5.0	1	B7E0654	05/19/2017	05/19/17 12:19	
1,1-Dichloroethene	ND	5.0	1	B7E0654	05/19/2017	05/19/17 12:19	
1,1-Dichloropropene	ND	5.0	1	B7E0654	05/19/2017	05/19/17 12:19	
1,2,3-Trichloropropane	ND	5.0	1	B7E0654	05/19/2017	05/19/17 12:19	
1,2,3-Trichlorobenzene	ND	5.0	1	B7E0654	05/19/2017	05/19/17 12:19	
1,2,4-Trichlorobenzene	ND	5.0	1	B7E0654	05/19/2017	05/19/17 12:19	
1,2,4-Trimethylbenzene	ND	5.0	1	B7E0654	05/19/2017	05/19/17 12:19	
1,2-Dibromo-3-chloropropane	ND	10	1	B7E0654	05/19/2017	05/19/17 12:19	
1,2-Dibromoethane	ND	5.0	1	B7E0654	05/19/2017	05/19/17 12:19	
1,2-Dichlorobenzene	ND	5.0	1	B7E0654	05/19/2017	05/19/17 12:19	
1,2-Dichloroethane	ND	5.0	1	B7E0654	05/19/2017	05/19/17 12:19	
1,2-Dichloropropane	ND	5.0	1	B7E0654	05/19/2017	05/19/17 12:19	
1,3,5-Trimethylbenzene	ND	5.0	1	B7E0654	05/19/2017	05/19/17 12:19	
1,3-Dichlorobenzene	ND	5.0	1	B7E0654	05/19/2017	05/19/17 12:19	
1,3-Dichloropropane	ND	5.0	1	B7E0654	05/19/2017	05/19/17 12:19	
1,4-Dichlorobenzene	ND	5.0	1	B7E0654	05/19/2017	05/19/17 12:19	
2,2-Dichloropropane	ND	5.0	1	B7E0654	05/19/2017	05/19/17 12:19	
2-Chlorotoluene	ND	5.0	1	B7E0654	05/19/2017	05/19/17 12:19	
4-Chlorotoluene	ND	5.0	1	B7E0654	05/19/2017	05/19/17 12:19	
4-Isopropyltoluene	ND	5.0	1	B7E0654	05/19/2017	05/19/17 12:19	
Benzene	ND	5.0	1	B7E0654	05/19/2017	05/19/17 12:19	
Bromobenzene	ND	5.0	1	B7E0654	05/19/2017	05/19/17 12:19	
Bromochloromethane	ND	5.0	1	B7E0654	05/19/2017	05/19/17 12:19	
Bromodichloromethane	ND	5.0	1	B7E0654	05/19/2017	05/19/17 12:19	
Bromoform	ND	5.0	1	B7E0654	05/19/2017	05/19/17 12:19	
Bromomethane	ND	5.0	1	B7E0654	05/19/2017	05/19/17 12:19	
Carbon disulfide	ND	5.0	1	B7E0654	05/19/2017	05/19/17 12:19	
Carbon tetrachloride	ND	5.0	1	B7E0654	05/19/2017	05/19/17 12:19	
Chlorobenzene	ND	5.0	1	B7E0654	05/19/2017	05/19/17 12:19	
Chloroethane	ND	5.0	1	B7E0654	05/19/2017	05/19/17 12:19	
Chloroform	ND	5.0	1	B7E0654	05/19/2017	05/19/17 12:19	
Chloromethane	ND	5.0	1	B7E0654	05/19/2017	05/19/17 12:19	
cis-1,2-Dichloroethene	ND	5.0	1	B7E0654	05/19/2017	05/19/17 12:19	

Certificate of Analysis

Hushmand Associates, Inc.	Project Number : 6th St Bridge, LAC-17-001
250 Goddard	Report To : Naresh Bellana
Irvine , CA 92618	Reported : 06/05/2017

Client Sample ID 7-6-5.0

Lab ID: 1702036-98

Volatile Organic Compounds by EPA 8260B **Analyst: AG**

Analyte	Result (ug/kg)	PQL (ug/kg)	Dilution	Batch	Prepared	Date/Time Analyzed	Notes
cis-1,3-Dichloropropene	ND	5.0	1	B7E0654	05/19/2017	05/19/17 12:19	
Di-isopropyl ether	ND	5.0	1	B7E0654	05/19/2017	05/19/17 12:19	
Dibromochloromethane	ND	5.0	1	B7E0654	05/19/2017	05/19/17 12:19	
Dibromomethane	ND	5.0	1	B7E0654	05/19/2017	05/19/17 12:19	
Dichlorodifluoromethane	ND	5.0	1	B7E0654	05/19/2017	05/19/17 12:19	
Ethyl Acetate	ND	50	1	B7E0654	05/19/2017	05/19/17 12:19	
Ethyl Ether	ND	50	1	B7E0654	05/19/2017	05/19/17 12:19	
Ethyl tert-butyl ether	ND	5.0	1	B7E0654	05/19/2017	05/19/17 12:19	
Ethylbenzene	ND	5.0	1	B7E0654	05/19/2017	05/19/17 12:19	
Freon-113	ND	5.0	1	B7E0654	05/19/2017	05/19/17 12:19	
Hexachlorobutadiene	ND	5.0	1	B7E0654	05/19/2017	05/19/17 12:19	
Isopropylbenzene	ND	5.0	1	B7E0654	05/19/2017	05/19/17 12:19	
m,p-Xylene	ND	10	1	B7E0654	05/19/2017	05/19/17 12:19	
Methylene chloride	ND	5.0	1	B7E0654	05/19/2017	05/19/17 12:19	
MTBE	ND	5.0	1	B7E0654	05/19/2017	05/19/17 12:19	
n-Butylbenzene	ND	5.0	1	B7E0654	05/19/2017	05/19/17 12:19	
n-Propylbenzene	ND	5.0	1	B7E0654	05/19/2017	05/19/17 12:19	
Naphthalene	ND	5.0	1	B7E0654	05/19/2017	05/19/17 12:19	
o-Xylene	ND	5.0	1	B7E0654	05/19/2017	05/19/17 12:19	
sec-Butylbenzene	ND	5.0	1	B7E0654	05/19/2017	05/19/17 12:19	
Styrene	ND	5.0	1	B7E0654	05/19/2017	05/19/17 12:19	
tert-Amyl methyl ether	ND	5.0	1	B7E0654	05/19/2017	05/19/17 12:19	
tert-Butanol	ND	100	1	B7E0654	05/19/2017	05/19/17 12:19	
tert-Butylbenzene	ND	5.0	1	B7E0654	05/19/2017	05/19/17 12:19	
Tetrachloroethene	ND	5.0	1	B7E0654	05/19/2017	05/19/17 12:19	
Toluene	ND	5.0	1	B7E0654	05/19/2017	05/19/17 12:19	
trans-1,2-Dichloroethene	ND	5.0	1	B7E0654	05/19/2017	05/19/17 12:19	
trans-1,3-Dichloropropene	ND	5.0	1	B7E0654	05/19/2017	05/19/17 12:19	
Trichloroethene	ND	5.0	1	B7E0654	05/19/2017	05/19/17 12:19	
Trichlorofluoromethane	ND	5.0	1	B7E0654	05/19/2017	05/19/17 12:19	
Vinyl acetate	ND	50	1	B7E0654	05/19/2017	05/19/17 12:19	
Vinyl chloride	ND	5.0	1	B7E0654	05/19/2017	05/19/17 12:19	
Surrogate: 1,2-Dichloroethane-d4	*108 %*	*12 - 186*		B7E0654	05/19/2017	*05/19/17 12:19*	
Surrogate: 4-Bromofluorobenzene	*103 %*	*23 - 162*		B7E0654	05/19/2017	*05/19/17 12:19*	
Surrogate: Dibromofluoromethane	*95.6 %*	*23 - 179*		B7E0654	05/19/2017	*05/19/17 12:19*	
Surrogate: Toluene-d8	*101 %*	*26 - 164*		B7E0654	05/19/2017	*05/19/17 12:19*	

Certificate of Analysis

Hushmand Associates, Inc.	Project Number : 6th St Bridge, LAC-17-001
250 Goddard	Report To : Naresh Bellana
Irvine , CA 92618	Reported : 06/05/2017

Client Sample ID 7-6-5.0

Lab ID: 1702036-98

Semivolatile Organic Compounds by EPA 8270C **Analyst: SP**

Analyte	Result (ug/kg)	PQL (ug/kg)	Dilution	Batch	Prepared	Date/Time Analyzed	Notes
1,2,4-Trichlorobenzene	ND	330	1	B7E0781	05/23/2017	06/01/17 05:25	
1,2-Dichlorobenzene	ND	330	1	B7E0781	05/23/2017	06/01/17 05:25	
1,3-Dichlorobenzene	ND	330	1	B7E0781	05/23/2017	06/01/17 05:25	
1,4-Dichlorobenzene	ND	330	1	B7E0781	05/23/2017	06/01/17 05:25	
2,4,5-Trichlorophenol	ND	330	1	B7E0781	05/23/2017	06/01/17 05:25	
2,4,6-Trichlorophenol	ND	330	1	B7E0781	05/23/2017	06/01/17 05:25	
2,4-Dichlorophenol	ND	1600	1	B7E0781	05/23/2017	06/01/17 05:25	
2,4-Dimethylphenol	ND	330	1	B7E0781	05/23/2017	06/01/17 05:25	
2,4-Dinitrophenol	ND	1600	1	B7E0781	05/23/2017	06/01/17 05:25	
2,4-Dinitrotoluene	ND	330	1	B7E0781	05/23/2017	06/01/17 05:25	
2,6-Dinitrotoluene	ND	330	1	B7E0781	05/23/2017	06/01/17 05:25	
2-Chloronaphthalene	ND	330	1	B7E0781	05/23/2017	06/01/17 05:25	
2-Chlorophenol	ND	330	1	B7E0781	05/23/2017	06/01/17 05:25	
2-Methylnaphthalene	ND	330	1	B7E0781	05/23/2017	06/01/17 05:25	
2-Methylphenol	ND	330	1	B7E0781	05/23/2017	06/01/17 05:25	
2-Nitroaniline	ND	1600	1	B7E0781	05/23/2017	06/01/17 05:25	
2-Nitrophenol	ND	330	1	B7E0781	05/23/2017	06/01/17 05:25	
3,3´-Dichlorobenzidine	ND	660	1	B7E0781	05/23/2017	06/01/17 05:25	
3-Nitroaniline	ND	1600	1	B7E0781	05/23/2017	06/01/17 05:25	
4,6-Dinitro-2-methyphenol	ND	1600	1	B7E0781	05/23/2017	06/01/17 05:25	
4-Bromophenyl-phenylether	ND	330	1	B7E0781	05/23/2017	06/01/17 05:25	
4-Chloro-3-methylphenol	ND	660	1	B7E0781	05/23/2017	06/01/17 05:25	
4-Chloroaniline	ND	660	1	B7E0781	05/23/2017	06/01/17 05:25	
4-Chlorophenyl-phenylether	ND	330	1	B7E0781	05/23/2017	06/01/17 05:25	
4-Methylphenol	ND	330	1	B7E0781	05/23/2017	06/01/17 05:25	
4-Nitroaniline	ND	1600	1	B7E0781	05/23/2017	06/01/17 05:25	
4-Nitrophenol	ND	330	1	B7E0781	05/23/2017	06/01/17 05:25	
Acenaphthene	ND	330	1	B7E0781	05/23/2017	06/01/17 05:25	
Acenaphthylene	ND	330	1	B7E0781	05/23/2017	06/01/17 05:25	
Anthracene	ND	330	1	B7E0781	05/23/2017	06/01/17 05:25	
Benzidine (M)	ND	1600	1	B7E0781	05/23/2017	06/01/17 05:25	
Benzo(a)anthracene	ND	330	1	B7E0781	05/23/2017	06/01/17 05:25	
Benzo(a)pyrene	ND	330	1	B7E0781	05/23/2017	06/01/17 05:25	
Benzo(b)fluoranthene	ND	330	1	B7E0781	05/23/2017	06/01/17 05:25	
Benzo(g,h,i)perylene	ND	330	1	B7E0781	05/23/2017	06/01/17 05:25	
Benzo(k)fluoranthene	ND	330	1	B7E0781	05/23/2017	06/01/17 05:25	
Benzoic acid	ND	1600	1	B7E0781	05/23/2017	06/01/17 05:25	

Certificate of Analysis

Hushmand Associates, Inc.	Project Number : 6th St Bridge, LAC-17-001
250 Goddard	Report To : Naresh Bellana
Irvine , CA 92618	Reported : 06/05/2017

Client Sample ID 7-6-5.0

Lab ID: 1702036-98

Semivolatile Organic Compounds by EPA 8270C **Analyst: SP**

Analyte	Result (ug/kg)	PQL (ug/kg)	Dilution	Batch	Prepared	Date/Time Analyzed	Notes
Benzyl alcohol	ND	660	1	B7E0781	05/23/2017	06/01/17 05:25	
bis(2-chloroethoxy)methane	ND	330	1	B7E0781	05/23/2017	06/01/17 05:25	
bis(2-Chloroethyl)ether	ND	330	1	B7E0781	05/23/2017	06/01/17 05:25	
bis(2-chloroisopropyl)ether	ND	330	1	B7E0781	05/23/2017	06/01/17 05:25	
bis(2-ethylhexyl)phthalate	ND	330	1	B7E0781	05/23/2017	06/01/17 05:25	
Butylbenzylphthalate	ND	330	1	B7E0781	05/23/2017	06/01/17 05:25	
Chrysene	ND	330	1	B7E0781	05/23/2017	06/01/17 05:25	
Di-n-butylphthalate	ND	330	1	B7E0781	05/23/2017	06/01/17 05:25	
Di-n-octylphthalate	ND	330	1	B7E0781	05/23/2017	06/01/17 05:25	
Dibenz(a,h)anthracene	ND	330	1	B7E0781	05/23/2017	06/01/17 05:25	
Dibenzofuran	ND	330	1	B7E0781	05/23/2017	06/01/17 05:25	
Diethyl phthalate	ND	330	1	B7E0781	05/23/2017	06/01/17 05:25	
Dimethyl phthalate	ND	330	1	B7E0781	05/23/2017	06/01/17 05:25	
Fluoranthene	ND	330	1	B7E0781	05/23/2017	06/01/17 05:25	
Fluorene	ND	330	1	B7E0781	05/23/2017	06/01/17 05:25	
Hexachlorobenzene	ND	330	1	B7E0781	05/23/2017	06/01/17 05:25	
Hexachlorobutadiene	ND	660	1	B7E0781	05/23/2017	06/01/17 05:25	
Hexachlorocyclopentadiene	ND	660	1	B7E0781	05/23/2017	06/01/17 05:25	
Hexachloroethane	ND	330	1	B7E0781	05/23/2017	06/01/17 05:25	
Indeno(1,2,3-cd)pyrene	ND	330	1	B7E0781	05/23/2017	06/01/17 05:25	
Isophorone	ND	330	1	B7E0781	05/23/2017	06/01/17 05:25	
N-Nitroso-di-n propylamine	ND	330	1	B7E0781	05/23/2017	06/01/17 05:25	
N-Nitrosodiphenylamine	ND	330	1	B7E0781	05/23/2017	06/01/17 05:25	
Naphthalene	ND	330	1	B7E0781	05/23/2017	06/01/17 05:25	
Nitrobenzene	ND	330	1	B7E0781	05/23/2017	06/01/17 05:25	
Pentachlorophenol	ND	1600	1	B7E0781	05/23/2017	06/01/17 05:25	
Phenanthrene	ND	330	1	B7E0781	05/23/2017	06/01/17 05:25	
Phenol	ND	330	1	B7E0781	05/23/2017	06/01/17 05:25	
Pyrene	ND	330	1	B7E0781	05/23/2017	06/01/17 05:25	
Pyridine	ND	1600	1	B7E0781	05/23/2017	06/01/17 05:25	
Surrogate: 1,2-Dichlorobenzene-d4	*45.0 %*	*38 - 93*		B7E0781	05/23/2017	*06/01/17 05:25*	
Surrogate: 2,4,6-Tribromophenol	*51.2 %*	*27 - 124*		B7E0781	05/23/2017	*06/01/17 05:25*	
Surrogate: 2-Chlorophenol-d4	*46.9 %*	*36 - 96*		B7E0781	05/23/2017	*06/01/17 05:25*	
Surrogate: 2-Fluorobiphenyl	*58.6 %*	*44 - 100*		B7E0781	05/23/2017	*06/01/17 05:25*	
Surrogate: 2-Fluorophenol	*43.1 %*	*32 - 89*		B7E0781	05/23/2017	*06/01/17 05:25*	
Surrogate: 4-Terphenyl-d14	*56.0 %*	*49 - 123*		B7E0781	05/23/2017	*06/01/17 05:25*	
Surrogate: Nitrobenzene-d5	*52.8 %*	*38 - 104*		B7E0781	05/23/2017	*06/01/17 05:25*	

Certificate of Analysis

Hushmand Associates, Inc.	Project Number : 6th St Bridge, LAC-17-001
250 Goddard	Report To : Naresh Bellana
Irvine , CA 92618	Reported : 06/05/2017

Client Sample ID 7-6-5.0

Lab ID: 1702036-98

Semivolatile Organic Compounds by EPA 8270C **Analyst: SP**

Analyte	Result (ug/kg)	PQL (ug/kg)	Dilution	Batch	Prepared	Date/Time Analyzed	Notes
Surrogate: Phenol-d5	*45.1 %*	*35 - 95*		B7E0781	05/23/2017	*06/01/17 05:25*	

Certificate of Analysis

Hushmand Associates, Inc.	Project Number : 6th St Bridge, LAC-17-001
250 Goddard	Report To : Naresh Bellana
Irvine , CA 92618	Reported : 06/05/2017

Client Sample ID 7-7-0.5

Lab ID: 1702036-99

Title 22 Metals by ICP-AES EPA 6010B **Analyst: KEK**

Analyte	Result (mg/kg)	PQL (mg/kg)	Dilution	Batch	Prepared	Date/Time Analyzed	Notes
Antimony	ND	2.0	1	B7E0684	05/20/2017	05/22/17 14:04	
Arsenic	ND	1.0	1	B7E0684	05/20/2017	05/22/17 14:04	
Barium	**110**	1.0	1	B7E0684	05/20/2017	05/22/17 14:04	
Beryllium	ND	1.0	1	B7E0684	05/20/2017	05/22/17 14:04	
Cadmium	ND	1.0	1	B7E0684	05/20/2017	05/22/17 14:04	
Chromium	**14**	1.0	1	B7E0684	05/20/2017	05/22/17 14:04	
Cobalt	**9.3**	1.0	1	B7E0684	05/20/2017	05/22/17 14:04	
Copper	**13**	2.0	1	B7E0684	05/20/2017	05/22/17 14:04	
Lead	**3.7**	1.0	1	B7E0684	05/20/2017	05/22/17 14:04	
Molybdenum	ND	1.0	1	B7E0684	05/20/2017	05/22/17 14:04	
Nickel	**10**	1.0	1	B7E0684	05/20/2017	05/22/17 14:04	
Selenium	ND	1.0	1	B7E0684	05/20/2017	05/22/17 14:04	
Silver	ND	1.0	1	B7E0684	05/20/2017	05/22/17 14:04	
Thallium	ND	1.0	1	B7E0684	05/20/2017	05/22/17 14:04	
Vanadium	**35**	1.0	1	B7E0684	05/20/2017	05/22/17 14:04	
Zinc	**41**	1.0	1	B7E0684	05/20/2017	05/22/17 14:04	

Mercury by AA (Cold Vapor) EPA 7471A **Analyst: KEK**

Analyte	Result (mg/kg)	PQL (mg/kg)	Dilution	Batch	Prepared	Date/Time Analyzed	Notes
Mercury	ND	0.10	1	B7E0679	05/20/2017	05/22/17 17:19	

Certificate of Analysis

Hushmand Associates, Inc.	Project Number : 6th St Bridge, LAC-17-001
250 Goddard	Report To : Naresh Bellana
Irvine , CA 92618	Reported : 06/05/2017

Client Sample ID 7-7-1.0

Lab ID: 1702036-AA

Title 22 Metals by ICP-AES EPA 6010B

Analyst: KEK

Analyte	Result (mg/kg)	PQL (mg/kg)	Dilution	Batch	Prepared	Date/Time Analyzed	Notes
Antimony	ND	2.0	1	B7E0684	05/20/2017	05/22/17 14:08	
Arsenic	ND	1.0	1	B7E0684	05/20/2017	05/22/17 14:08	
Barium	**130**	1.0	1	B7E0684	05/20/2017	05/22/17 14:08	
Beryllium	ND	1.0	1	B7E0684	05/20/2017	05/22/17 14:08	
Cadmium	ND	1.0	1	B7E0684	05/20/2017	05/22/17 14:08	
Chromium	**12**	1.0	1	B7E0684	05/20/2017	05/22/17 14:08	
Cobalt	**11**	1.0	1	B7E0684	05/20/2017	05/22/17 14:08	
Copper	**9.6**	2.0	1	B7E0684	05/20/2017	05/22/17 14:08	
Lead	**2.3**	1.0	1	B7E0684	05/20/2017	05/22/17 14:08	
Molybdenum	ND	1.0	1	B7E0684	05/20/2017	05/22/17 14:08	
Nickel	**9.4**	1.0	1	B7E0684	05/20/2017	05/22/17 14:08	
Selenium	ND	1.0	1	B7E0684	05/20/2017	05/22/17 14:08	
Silver	ND	1.0	1	B7E0684	05/20/2017	05/22/17 14:08	
Thallium	ND	1.0	1	B7E0684	05/20/2017	05/22/17 14:08	
Vanadium	**37**	1.0	1	B7E0684	05/20/2017	05/22/17 14:08	
Zinc	**47**	1.0	1	B7E0684	05/20/2017	05/22/17 14:08	

Mercury by AA (Cold Vapor) EPA 7471A

Analyst: KEK

Analyte	Result (mg/kg)	PQL (mg/kg)	Dilution	Batch	Prepared	Date/Time Analyzed	Notes
Mercury	ND	0.10	1	B7E0679	05/20/2017	05/22/17 17:21	

Organochlorine Pesticides by EPA 8081

Analyst: RL/

Analyte	Result (ug/kg)	PQL (ug/kg)	Dilution	Batch	Prepared	Date/Time Analyzed	Notes
4,4´-DDD	ND	2.0	1	B7E0819	05/24/2017	05/24/17 18:57	
4,4´-DDE	ND	2.0	1	B7E0819	05/24/2017	05/24/17 18:57	
4,4´-DDT	ND	2.0	1	B7E0819	05/24/2017	05/24/17 18:57	
Aldrin	ND	1.0	1	B7E0819	05/24/2017	05/24/17 18:57	
alpha-BHC	ND	1.0	1	B7E0819	05/24/2017	05/24/17 18:57	
alpha-Chlordane	ND	1.0	1	B7E0819	05/24/2017	05/24/17 18:57	
beta-BHC	ND	1.0	1	B7E0819	05/24/2017	05/24/17 18:57	
Chlordane	ND	8.5	1	B7E0819	05/24/2017	05/24/17 18:57	
delta-BHC	ND	1.0	1	B7E0819	05/24/2017	05/24/17 18:57	
Dieldrin	ND	2.0	1	B7E0819	05/24/2017	05/24/17 18:57	

Certificate of Analysis

Hushmand Associates, Inc.	Project Number : 6th St Bridge, LAC-17-001
250 Goddard	Report To : Naresh Bellana
Irvine , CA 92618	Reported : 06/05/2017

Client Sample ID 7-7-1.0

Lab ID: 1702036-AA

Organochlorine Pesticides by EPA 8081

Analyst: RL/

Analyte	Result (ug/kg)	PQL (ug/kg)	Dilution	Batch	Prepared	Date/Time Analyzed	Notes
Endosulfan I	ND	1.0	1	B7E0819	05/24/2017	05/24/17 18:57	
Endosulfan II	ND	2.0	1	B7E0819	05/24/2017	05/24/17 18:57	
Endosulfan sulfate	ND	2.0	1	B7E0819	05/24/2017	05/24/17 18:57	
Endrin	ND	2.0	1	B7E0819	05/24/2017	05/24/17 18:57	
Endrin aldehyde	ND	2.0	1	B7E0819	05/24/2017	05/24/17 18:57	
Endrin ketone	ND	2.0	1	B7E0819	05/24/2017	05/24/17 18:57	
gamma-BHC	ND	1.0	1	B7E0819	05/24/2017	05/24/17 18:57	
gamma-Chlordane	ND	1.0	1	B7E0819	05/24/2017	05/24/17 18:57	
Heptachlor	ND	1.0	1	B7E0819	05/24/2017	05/24/17 18:57	
Heptachlor epoxide	ND	1.0	1	B7E0819	05/24/2017	05/24/17 18:57	
Methoxychlor	ND	5.0	1	B7E0819	05/24/2017	05/24/17 18:57	
Toxaphene	ND	50	1	B7E0819	05/24/2017	05/24/17 18:57	
Surrogate: Decachlorobiphenyl	*53.1 %*	*27 - 123*		B7E0819	05/24/2017	*05/24/17 18:57*	
Surrogate: Tetrachloro-m-xylene	*72.8 %*	*26 - 108*		B7E0819	05/24/2017	*05/24/17 18:57*	

Polychlorinated Biphenyls by EPA 8082

Analyst: LT

Analyte	Result (ug/kg)	PQL (ug/kg)	Dilution	Batch	Prepared	Date/Time Analyzed	Notes
Aroclor 1016	ND	16	1	B7E0819	05/24/2017	05/24/17 19:29	
Aroclor 1221	ND	16	1	B7E0819	05/24/2017	05/24/17 19:29	
Aroclor 1232	ND	16	1	B7E0819	05/24/2017	05/24/17 19:29	
Aroclor 1242	ND	16	1	B7E0819	05/24/2017	05/24/17 19:29	
Aroclor 1248	ND	16	1	B7E0819	05/24/2017	05/24/17 19:29	
Aroclor 1254	ND	16	1	B7E0819	05/24/2017	05/24/17 19:29	
Aroclor 1260	ND	16	1	B7E0819	05/24/2017	05/24/17 19:29	
Aroclor 1262	ND	16	1	B7E0819	05/24/2017	05/24/17 19:29	
Aroclor 1268	ND	16	1	B7E0819	05/24/2017	05/24/17 19:29	
Surrogate: Decachlorobiphenyl	*59.0 %*	*18 - 136*		B7E0819	05/24/2017	*05/24/17 19:29*	
Surrogate: Tetrachloro-m-xylene	*79.5 %*	*30 - 130*		B7E0819	05/24/2017	*05/24/17 19:29*	

Certificate of Analysis

Hushmand Associates, Inc.	Project Number : 6th St Bridge, LAC-17-001
250 Goddard	Report To : Naresh Bellana
Irvine , CA 92618	Reported : 06/05/2017

Client Sample ID 7-7-3.0

Lab ID: 1702036-AB

Title 22 Metals by ICP-AES EPA 6010B

Analyst: KEK

Analyte	Result (mg/kg)	PQL (mg/kg)	Dilution	Batch	Prepared	Date/Time Analyzed	Notes
Antimony	ND	2.0	1	B7E0684	05/20/2017	05/22/17 14:11	
Arsenic	ND	1.0	1	B7E0684	05/20/2017	05/22/17 14:11	
Barium	**26**	1.0	1	B7E0684	05/20/2017	05/22/17 14:11	
Beryllium	ND	1.0	1	B7E0684	05/20/2017	05/22/17 14:11	
Cadmium	ND	1.0	1	B7E0684	05/20/2017	05/22/17 14:11	
Chromium	**5.0**	1.0	1	B7E0684	05/20/2017	05/22/17 14:11	
Cobalt	**2.9**	1.0	1	B7E0684	05/20/2017	05/22/17 14:11	
Copper	**2.2**	2.0	1	B7E0684	05/20/2017	05/22/17 14:11	
Lead	ND	1.0	1	B7E0684	05/20/2017	05/22/17 14:11	
Molybdenum	ND	1.0	1	B7E0684	05/20/2017	05/22/17 14:11	
Nickel	**2.4**	1.0	1	B7E0684	05/20/2017	05/22/17 14:11	
Selenium	ND	1.0	1	B7E0684	05/20/2017	05/22/17 14:11	
Silver	ND	1.0	1	B7E0684	05/20/2017	05/22/17 14:11	
Thallium	ND	1.0	1	B7E0684	05/20/2017	05/22/17 14:11	
Vanadium	**22**	1.0	1	B7E0684	05/20/2017	05/22/17 14:11	
Zinc	**13**	1.0	1	B7E0684	05/20/2017	05/22/17 14:11	

Mercury by AA (Cold Vapor) EPA 7471A

Analyst: KEK

Analyte	Result (mg/kg)	PQL (mg/kg)	Dilution	Batch	Prepared	Date/Time Analyzed	Notes
Mercury	ND	0.10	1	B7E0679	05/20/2017	05/22/17 17:23	

Gasoline Range Organics by EPA 8015B (Modified)

Analyst: VW

Analyte	Result (mg/kg)	PQL (mg/kg)	Dilution	Batch	Prepared	Date/Time Analyzed	Notes
Gasoline Range Organics	ND	1.0	1	B7E0622	05/19/2017	05/19/17 14:51	
Surrogate: 4-Bromofluorobenzene	*101 %*	*36 - 125*		B7E0622	05/19/2017	*05/19/17 14:51*	

Diesel Range Organics by EPA 8015B

Analyst: CR

Analyte	Result (mg/kg)	PQL (mg/kg)	Dilution	Batch	Prepared	Date/Time Analyzed	Notes
DRO	ND	10	1	B7E0786	05/23/2017	05/24/17 19:59	
Surrogate: p-Terphenyl	*84.2 %*	*47 - 157*		B7E0786	05/23/2017	*05/24/17 19:59*	

Certificate of Analysis

Hushmand Associates, Inc.	Project Number : 6th St Bridge, LAC-17-001
250 Goddard	Report To : Naresh Bellana
Irvine , CA 92618	Reported : 06/05/2017

Client Sample ID 7-7-3.0

Lab ID: 1702036-AB

Volatile Organic Compounds by EPA 8260B **Analyst: AG**

Analyte	Result (ug/kg)	PQL (ug/kg)	Dilution	Batch	Prepared	Date/Time Analyzed	Notes
1,1,1,2-Tetrachloroethane	ND	5.0	1	B7E0654	05/19/2017	05/19/17 12:38	
1,1,1-Trichloroethane	ND	5.0	1	B7E0654	05/19/2017	05/19/17 12:38	
1,1,2,2-Tetrachloroethane	ND	5.0	1	B7E0654	05/19/2017	05/19/17 12:38	
1,1,2-Trichloroethane	ND	5.0	1	B7E0654	05/19/2017	05/19/17 12:38	
1,1-Dichloroethane	ND	5.0	1	B7E0654	05/19/2017	05/19/17 12:38	
1,1-Dichloroethene	ND	5.0	1	B7E0654	05/19/2017	05/19/17 12:38	
1,1-Dichloropropene	ND	5.0	1	B7E0654	05/19/2017	05/19/17 12:38	
1,2,3-Trichloropropane	ND	5.0	1	B7E0654	05/19/2017	05/19/17 12:38	
1,2,3-Trichlorobenzene	ND	5.0	1	B7E0654	05/19/2017	05/19/17 12:38	
1,2,4-Trichlorobenzene	ND	5.0	1	B7E0654	05/19/2017	05/19/17 12:38	
1,2,4-Trimethylbenzene	ND	5.0	1	B7E0654	05/19/2017	05/19/17 12:38	
1,2-Dibromo-3-chloropropane	ND	10	1	B7E0654	05/19/2017	05/19/17 12:38	
1,2-Dibromoethane	ND	5.0	1	B7E0654	05/19/2017	05/19/17 12:38	
1,2-Dichlorobenzene	ND	5.0	1	B7E0654	05/19/2017	05/19/17 12:38	
1,2-Dichloroethane	ND	5.0	1	B7E0654	05/19/2017	05/19/17 12:38	
1,2-Dichloropropane	ND	5.0	1	B7E0654	05/19/2017	05/19/17 12:38	
1,3,5-Trimethylbenzene	ND	5.0	1	B7E0654	05/19/2017	05/19/17 12:38	
1,3-Dichlorobenzene	ND	5.0	1	B7E0654	05/19/2017	05/19/17 12:38	
1,3-Dichloropropane	ND	5.0	1	B7E0654	05/19/2017	05/19/17 12:38	
1,4-Dichlorobenzene	ND	5.0	1	B7E0654	05/19/2017	05/19/17 12:38	
2,2-Dichloropropane	ND	5.0	1	B7E0654	05/19/2017	05/19/17 12:38	
2-Chlorotoluene	ND	5.0	1	B7E0654	05/19/2017	05/19/17 12:38	
4-Chlorotoluene	ND	5.0	1	B7E0654	05/19/2017	05/19/17 12:38	
4-Isopropyltoluene	ND	5.0	1	B7E0654	05/19/2017	05/19/17 12:38	
Benzene	ND	5.0	1	B7E0654	05/19/2017	05/19/17 12:38	
Bromobenzene	ND	5.0	1	B7E0654	05/19/2017	05/19/17 12:38	
Bromochloromethane	ND	5.0	1	B7E0654	05/19/2017	05/19/17 12:38	
Bromodichloromethane	ND	5.0	1	B7E0654	05/19/2017	05/19/17 12:38	
Bromoform	ND	5.0	1	B7E0654	05/19/2017	05/19/17 12:38	
Bromomethane	ND	5.0	1	B7E0654	05/19/2017	05/19/17 12:38	
Carbon disulfide	ND	5.0	1	B7E0654	05/19/2017	05/19/17 12:38	
Carbon tetrachloride	ND	5.0	1	B7E0654	05/19/2017	05/19/17 12:38	
Chlorobenzene	ND	5.0	1	B7E0654	05/19/2017	05/19/17 12:38	
Chloroethane	ND	5.0	1	B7E0654	05/19/2017	05/19/17 12:38	
Chloroform	ND	5.0	1	B7E0654	05/19/2017	05/19/17 12:38	
Chloromethane	ND	5.0	1	B7E0654	05/19/2017	05/19/17 12:38	
cis-1,2-Dichloroethene	ND	5.0	1	B7E0654	05/19/2017	05/19/17 12:38	

Certificate of Analysis

Hushmand Associates, Inc.	Project Number : 6th St Bridge, LAC-17-001
250 Goddard	Report To : Naresh Bellana
Irvine , CA 92618	Reported : 06/05/2017

Client Sample ID 7-7-3.0

Lab ID: 1702036-AB

Volatile Organic Compounds by EPA 8260B **Analyst: AG**

Analyte	Result (ug/kg)	PQL (ug/kg)	Dilution	Batch	Prepared	Date/Time Analyzed	Notes
cis-1,3-Dichloropropene	ND	5.0	1	B7E0654	05/19/2017	05/19/17 12:38	
Di-isopropyl ether	ND	5.0	1	B7E0654	05/19/2017	05/19/17 12:38	
Dibromochloromethane	ND	5.0	1	B7E0654	05/19/2017	05/19/17 12:38	
Dibromomethane	ND	5.0	1	B7E0654	05/19/2017	05/19/17 12:38	
Dichlorodifluoromethane	ND	5.0	1	B7E0654	05/19/2017	05/19/17 12:38	
Ethyl Acetate	ND	50	1	B7E0654	05/19/2017	05/19/17 12:38	
Ethyl Ether	ND	50	1	B7E0654	05/19/2017	05/19/17 12:38	
Ethyl tert-butyl ether	ND	5.0	1	B7E0654	05/19/2017	05/19/17 12:38	
Ethylbenzene	ND	5.0	1	B7E0654	05/19/2017	05/19/17 12:38	
Freon-113	ND	5.0	1	B7E0654	05/19/2017	05/19/17 12:38	
Hexachlorobutadiene	ND	5.0	1	B7E0654	05/19/2017	05/19/17 12:38	
Isopropylbenzene	ND	5.0	1	B7E0654	05/19/2017	05/19/17 12:38	
m,p-Xylene	ND	10	1	B7E0654	05/19/2017	05/19/17 12:38	
Methylene chloride	ND	5.0	1	B7E0654	05/19/2017	05/19/17 12:38	
MTBE	ND	5.0	1	B7E0654	05/19/2017	05/19/17 12:38	
n-Butylbenzene	ND	5.0	1	B7E0654	05/19/2017	05/19/17 12:38	
n-Propylbenzene	ND	5.0	1	B7E0654	05/19/2017	05/19/17 12:38	
Naphthalene	ND	5.0	1	B7E0654	05/19/2017	05/19/17 12:38	
o-Xylene	ND	5.0	1	B7E0654	05/19/2017	05/19/17 12:38	
sec-Butylbenzene	ND	5.0	1	B7E0654	05/19/2017	05/19/17 12:38	
Styrene	ND	5.0	1	B7E0654	05/19/2017	05/19/17 12:38	
tert-Amyl methyl ether	ND	5.0	1	B7E0654	05/19/2017	05/19/17 12:38	
tert-Butanol	ND	100	1	B7E0654	05/19/2017	05/19/17 12:38	
tert-Butylbenzene	ND	5.0	1	B7E0654	05/19/2017	05/19/17 12:38	
Tetrachloroethene	ND	5.0	1	B7E0654	05/19/2017	05/19/17 12:38	
Toluene	ND	5.0	1	B7E0654	05/19/2017	05/19/17 12:38	
trans-1,2-Dichloroethene	ND	5.0	1	B7E0654	05/19/2017	05/19/17 12:38	
trans-1,3-Dichloropropene	ND	5.0	1	B7E0654	05/19/2017	05/19/17 12:38	
Trichloroethene	ND	5.0	1	B7E0654	05/19/2017	05/19/17 12:38	
Trichlorofluoromethane	ND	5.0	1	B7E0654	05/19/2017	05/19/17 12:38	
Vinyl acetate	ND	50	1	B7E0654	05/19/2017	05/19/17 12:38	
Vinyl chloride	ND	5.0	1	B7E0654	05/19/2017	05/19/17 12:38	
Surrogate: 1,2-Dichloroethane-d4	*106 %*	*12 - 186*		B7E0654	05/19/2017	*05/19/17 12:38*	
Surrogate: 4-Bromofluorobenzene	*105 %*	*23 - 162*		B7E0654	05/19/2017	*05/19/17 12:38*	
Surrogate: Dibromofluoromethane	*94.6 %*	*23 - 179*		B7E0654	05/19/2017	*05/19/17 12:38*	
Surrogate: Toluene-d8	*98.4 %*	*26 - 164*		B7E0654	05/19/2017	*05/19/17 12:38*	

Certificate of Analysis

Hushmand Associates, Inc.	Project Number : 6th St Bridge, LAC-17-001
250 Goddard	Report To : Naresh Bellana
Irvine , CA 92618	Reported : 06/05/2017

Client Sample ID 7-7-3.0

Lab ID: 1702036-AB

Semivolatile Organic Compounds by EPA 8270C **Analyst: SP**

Analyte	Result (ug/kg)	PQL (ug/kg)	Dilution	Batch	Prepared	Date/Time Analyzed	Notes
1,2,4-Trichlorobenzene	ND	330	1	B7E0814	05/24/2017	05/31/17 15:30	
1,2-Dichlorobenzene	ND	330	1	B7E0814	05/24/2017	05/31/17 15:30	
1,3-Dichlorobenzene	ND	330	1	B7E0814	05/24/2017	05/31/17 15:30	
1,4-Dichlorobenzene	ND	330	1	B7E0814	05/24/2017	05/31/17 15:30	
2,4,5-Trichlorophenol	ND	330	1	B7E0814	05/24/2017	05/31/17 15:30	
2,4,6-Trichlorophenol	ND	330	1	B7E0814	05/24/2017	05/31/17 15:30	
2,4-Dichlorophenol	ND	1600	1	B7E0814	05/24/2017	05/31/17 15:30	
2,4-Dimethylphenol	ND	330	1	B7E0814	05/24/2017	05/31/17 15:30	
2,4-Dinitrophenol	ND	1600	1	B7E0814	05/24/2017	05/31/17 15:30	
2,4-Dinitrotoluene	ND	330	1	B7E0814	05/24/2017	05/31/17 15:30	
2,6-Dinitrotoluene	ND	330	1	B7E0814	05/24/2017	05/31/17 15:30	
2-Chloronaphthalene	ND	330	1	B7E0814	05/24/2017	05/31/17 15:30	
2-Chlorophenol	ND	330	1	B7E0814	05/24/2017	05/31/17 15:30	
2-Methylnaphthalene	ND	330	1	B7E0814	05/24/2017	05/31/17 15:30	
2-Methylphenol	ND	330	1	B7E0814	05/24/2017	05/31/17 15:30	
2-Nitroaniline	ND	1600	1	B7E0814	05/24/2017	05/31/17 15:30	
2-Nitrophenol	ND	330	1	B7E0814	05/24/2017	05/31/17 15:30	
3,3´-Dichlorobenzidine	ND	660	1	B7E0814	05/24/2017	05/31/17 15:30	
3-Nitroaniline	ND	1600	1	B7E0814	05/24/2017	05/31/17 15:30	
4,6-Dinitro-2-methyphenol	ND	1600	1	B7E0814	05/24/2017	05/31/17 15:30	
4-Bromophenyl-phenylether	ND	330	1	B7E0814	05/24/2017	05/31/17 15:30	
4-Chloro-3-methylphenol	ND	660	1	B7E0814	05/24/2017	05/31/17 15:30	
4-Chloroaniline	ND	660	1	B7E0814	05/24/2017	05/31/17 15:30	
4-Chlorophenyl-phenylether	ND	330	1	B7E0814	05/24/2017	05/31/17 15:30	
4-Methylphenol	ND	330	1	B7E0814	05/24/2017	05/31/17 15:30	
4-Nitroaniline	ND	1600	1	B7E0814	05/24/2017	05/31/17 15:30	
4-Nitrophenol	ND	330	1	B7E0814	05/24/2017	05/31/17 15:30	
Acenaphthene	ND	330	1	B7E0814	05/24/2017	05/31/17 15:30	
Acenaphthylene	ND	330	1	B7E0814	05/24/2017	05/31/17 15:30	
Anthracene	ND	330	1	B7E0814	05/24/2017	05/31/17 15:30	
Benzidine (M)	ND	1600	1	B7E0814	05/24/2017	05/31/17 15:30	
Benzo(a)anthracene	ND	330	1	B7E0814	05/24/2017	05/31/17 15:30	
Benzo(a)pyrene	ND	330	1	B7E0814	05/24/2017	05/31/17 15:30	
Benzo(b)fluoranthene	ND	330	1	B7E0814	05/24/2017	05/31/17 15:30	
Benzo(g,h,i)perylene	ND	330	1	B7E0814	05/24/2017	05/31/17 15:30	
Benzo(k)fluoranthene	ND	330	1	B7E0814	05/24/2017	05/31/17 15:30	
Benzoic acid	ND	1600	1	B7E0814	05/24/2017	05/31/17 15:30	

Certificate of Analysis

Hushmand Associates, Inc.	Project Number : 6th St Bridge, LAC-17-001
250 Goddard	Report To : Naresh Bellana
Irvine , CA 92618	Reported : 06/05/2017

Client Sample ID 7-7-3.0

Lab ID: 1702036-AB

Semivolatile Organic Compounds by EPA 8270C **Analyst: SP**

Analyte	Result (ug/kg)	PQL (ug/kg)	Dilution	Batch	Prepared	Date/Time Analyzed	Notes
Benzyl alcohol	ND	660	1	B7E0814	05/24/2017	05/31/17 15:30	
bis(2-chloroethoxy)methane	ND	330	1	B7E0814	05/24/2017	05/31/17 15:30	
bis(2-Chloroethyl)ether	ND	330	1	B7E0814	05/24/2017	05/31/17 15:30	
bis(2-chloroisopropyl)ether	ND	330	1	B7E0814	05/24/2017	05/31/17 15:30	
bis(2-ethylhexyl)phthalate	ND	330	1	B7E0814	05/24/2017	05/31/17 15:30	
Butylbenzylphthalate	ND	330	1	B7E0814	05/24/2017	05/31/17 15:30	
Chrysene	ND	330	1	B7E0814	05/24/2017	05/31/17 15:30	
Di-n-butylphthalate	ND	330	1	B7E0814	05/24/2017	05/31/17 15:30	
Di-n-octylphthalate	ND	330	1	B7E0814	05/24/2017	05/31/17 15:30	
Dibenz(a,h)anthracene	ND	330	1	B7E0814	05/24/2017	05/31/17 15:30	
Dibenzofuran	ND	330	1	B7E0814	05/24/2017	05/31/17 15:30	
Diethyl phthalate	ND	330	1	B7E0814	05/24/2017	05/31/17 15:30	
Dimethyl phthalate	ND	330	1	B7E0814	05/24/2017	05/31/17 15:30	
Fluoranthene	ND	330	1	B7E0814	05/24/2017	05/31/17 15:30	
Fluorene	ND	330	1	B7E0814	05/24/2017	05/31/17 15:30	
Hexachlorobenzene	ND	330	1	B7E0814	05/24/2017	05/31/17 15:30	
Hexachlorobutadiene	ND	660	1	B7E0814	05/24/2017	05/31/17 15:30	
Hexachlorocyclopentadiene	ND	660	1	B7E0814	05/24/2017	05/31/17 15:30	
Hexachloroethane	ND	330	1	B7E0814	05/24/2017	05/31/17 15:30	
Indeno(1,2,3-cd)pyrene	ND	330	1	B7E0814	05/24/2017	05/31/17 15:30	
Isophorone	ND	330	1	B7E0814	05/24/2017	05/31/17 15:30	
N-Nitroso-di-n propylamine	ND	330	1	B7E0814	05/24/2017	05/31/17 15:30	
N-Nitrosodiphenylamine	ND	330	1	B7E0814	05/24/2017	05/31/17 15:30	
Naphthalene	ND	330	1	B7E0814	05/24/2017	05/31/17 15:30	
Nitrobenzene	ND	330	1	B7E0814	05/24/2017	05/31/17 15:30	
Pentachlorophenol	ND	1600	1	B7E0814	05/24/2017	05/31/17 15:30	
Phenanthrene	ND	330	1	B7E0814	05/24/2017	05/31/17 15:30	
Phenol	ND	330	1	B7E0814	05/24/2017	05/31/17 15:30	
Pyrene	ND	330	1	B7E0814	05/24/2017	05/31/17 15:30	
Pyridine	ND	1600	1	B7E0814	05/24/2017	05/31/17 15:30	
Surrogate: 1,2-Dichlorobenzene-d4	*58.3 %*	*38 - 93*		B7E0814	05/24/2017	*05/31/17 15:30*	
Surrogate: 2,4,6-Tribromophenol	*68.7 %*	*27 - 124*		B7E0814	05/24/2017	*05/31/17 15:30*	
Surrogate: 2-Chlorophenol-d4	*58.7 %*	*36 - 96*		B7E0814	05/24/2017	*05/31/17 15:30*	
Surrogate: 2-Fluorobiphenyl	*67.3 %*	*44 - 100*		B7E0814	05/24/2017	*05/31/17 15:30*	
Surrogate: 2-Fluorophenol	*54.2 %*	*32 - 89*		B7E0814	05/24/2017	*05/31/17 15:30*	
Surrogate: 4-Terphenyl-d14	*72.3 %*	*49 - 123*		B7E0814	05/24/2017	*05/31/17 15:30*	
Surrogate: Nitrobenzene-d5	*63.2 %*	*38 - 104*		B7E0814	05/24/2017	*05/31/17 15:30*	

Certificate of Analysis

Hushmand Associates, Inc.	Project Number : 6th St Bridge, LAC-17-001
250 Goddard	Report To : Naresh Bellana
Irvine , CA 92618	Reported : 06/05/2017

Client Sample ID 7-7-3.0

Lab ID: 1702036-AB

Semivolatile Organic Compounds by EPA 8270C **Analyst: SP**

Analyte	Result (ug/kg)	PQL (ug/kg)	Dilution	Batch	Prepared	Date/Time Analyzed	Notes
Surrogate: Phenol-d5	*59.5 %*	*35 - 95*		B7E0814	05/24/2017	*05/31/17 15:30*	

Certificate of Analysis

Hushmand Associates, Inc.	Project Number : 6th St Bridge, LAC-17-001
250 Goddard	Report To : Naresh Bellana
Irvine , CA 92618	Reported : 06/05/2017

Client Sample ID 7-7-5.0

Lab ID: 1702036-AC

Title 22 Metals by ICP-AES EPA 6010B

Analyst: KEK

Analyte	Result (mg/kg)	PQL (mg/kg)	Dilution	Batch	Prepared	Date/Time Analyzed	Notes
Antimony	ND	2.0	1	B7E0684	05/20/2017	05/22/17 14:14	
Arsenic	ND	1.0	1	B7E0684	05/20/2017	05/22/17 14:14	
Barium	**17**	1.0	1	B7E0684	05/20/2017	05/22/17 14:14	
Beryllium	ND	1.0	1	B7E0684	05/20/2017	05/22/17 14:14	
Cadmium	ND	1.0	1	B7E0684	05/20/2017	05/22/17 14:14	
Chromium	**3.2**	1.0	1	B7E0684	05/20/2017	05/22/17 14:14	
Cobalt	**2.1**	1.0	1	B7E0684	05/20/2017	05/22/17 14:14	
Copper	ND	2.0	1	B7E0684	05/20/2017	05/22/17 14:14	
Lead	ND	1.0	1	B7E0684	05/20/2017	05/22/17 14:14	
Molybdenum	ND	1.0	1	B7E0684	05/20/2017	05/22/17 14:14	
Nickel	**1.8**	1.0	1	B7E0684	05/20/2017	05/22/17 14:14	
Selenium	ND	1.0	1	B7E0684	05/20/2017	05/22/17 14:14	
Silver	ND	1.0	1	B7E0684	05/20/2017	05/22/17 14:14	
Thallium	ND	1.0	1	B7E0684	05/20/2017	05/22/17 14:14	
Vanadium	**14**	1.0	1	B7E0684	05/20/2017	05/22/17 14:14	
Zinc	**12**	1.0	1	B7E0684	05/20/2017	05/22/17 14:14	

Mercury by AA (Cold Vapor) EPA 7471A

Analyst: KEK

Analyte	Result (mg/kg)	PQL (mg/kg)	Dilution	Batch	Prepared	Date/Time Analyzed	Notes
Mercury	ND	0.10	1	B7E0679	05/20/2017	05/22/17 17:29	

Gasoline Range Organics by EPA 8015B (Modified)

Analyst: VW

Analyte		Result (mg/kg)	PQL (mg/kg)	Dilution	Batch	Prepared	Date/Time Analyzed	Notes
Gasoline Range Organics		ND	1.0	1	B7E0622	05/19/2017	05/19/17 15:09	
Surrogate: 4-Bromofluorobenzene	*101 %*		*36 - 125*		B7E0622	05/19/2017	*05/19/17 15:09*	

Diesel Range Organics by EPA 8015B

Analyst: CR

Analyte		Result (mg/kg)	PQL (mg/kg)	Dilution	Batch	Prepared	Date/Time Analyzed	Notes
DRO		**470**	10	1	B7E0786	05/23/2017	05/24/17 20:51	
Surrogate: p-Terphenyl	*82.5 %*		*47 - 157*		B7E0786	05/23/2017	*05/24/17 20:51*	

Certificate of Analysis

Hushmand Associates, Inc.	Project Number : 6th St Bridge, LAC-17-001
250 Goddard	Report To : Naresh Bellana
Irvine , CA 92618	Reported : 06/05/2017

Client Sample ID 7-7-5.0

Lab ID: 1702036-AC

Volatile Organic Compounds by EPA 8260B **Analyst: AG**

Analyte	Result (ug/kg)	PQL (ug/kg)	Dilution	Batch	Prepared	Date/Time Analyzed	Notes
1,1,1,2-Tetrachloroethane	ND	5.0	1	B7E0654	05/19/2017	05/19/17 12:57	
1,1,1-Trichloroethane	ND	5.0	1	B7E0654	05/19/2017	05/19/17 12:57	
1,1,2,2-Tetrachloroethane	ND	5.0	1	B7E0654	05/19/2017	05/19/17 12:57	
1,1,2-Trichloroethane	ND	5.0	1	B7E0654	05/19/2017	05/19/17 12:57	
1,1-Dichloroethane	ND	5.0	1	B7E0654	05/19/2017	05/19/17 12:57	
1,1-Dichloroethene	ND	5.0	1	B7E0654	05/19/2017	05/19/17 12:57	
1,1-Dichloropropene	ND	5.0	1	B7E0654	05/19/2017	05/19/17 12:57	
1,2,3-Trichloropropane	ND	5.0	1	B7E0654	05/19/2017	05/19/17 12:57	
1,2,3-Trichlorobenzene	ND	5.0	1	B7E0654	05/19/2017	05/19/17 12:57	
1,2,4-Trichlorobenzene	ND	5.0	1	B7E0654	05/19/2017	05/19/17 12:57	
1,2,4-Trimethylbenzene	ND	5.0	1	B7E0654	05/19/2017	05/19/17 12:57	
1,2-Dibromo-3-chloropropane	ND	10	1	B7E0654	05/19/2017	05/19/17 12:57	
1,2-Dibromoethane	ND	5.0	1	B7E0654	05/19/2017	05/19/17 12:57	
1,2-Dichlorobenzene	ND	5.0	1	B7E0654	05/19/2017	05/19/17 12:57	
1,2-Dichloroethane	ND	5.0	1	B7E0654	05/19/2017	05/19/17 12:57	
1,2-Dichloropropane	ND	5.0	1	B7E0654	05/19/2017	05/19/17 12:57	
1,3,5-Trimethylbenzene	ND	5.0	1	B7E0654	05/19/2017	05/19/17 12:57	
1,3-Dichlorobenzene	ND	5.0	1	B7E0654	05/19/2017	05/19/17 12:57	
1,3-Dichloropropane	ND	5.0	1	B7E0654	05/19/2017	05/19/17 12:57	
1,4-Dichlorobenzene	ND	5.0	1	B7E0654	05/19/2017	05/19/17 12:57	
2,2-Dichloropropane	ND	5.0	1	B7E0654	05/19/2017	05/19/17 12:57	
2-Chlorotoluene	ND	5.0	1	B7E0654	05/19/2017	05/19/17 12:57	
4-Chlorotoluene	ND	5.0	1	B7E0654	05/19/2017	05/19/17 12:57	
4-Isopropyltoluene	ND	5.0	1	B7E0654	05/19/2017	05/19/17 12:57	
Benzene	ND	5.0	1	B7E0654	05/19/2017	05/19/17 12:57	
Bromobenzene	ND	5.0	1	B7E0654	05/19/2017	05/19/17 12:57	
Bromochloromethane	ND	5.0	1	B7E0654	05/19/2017	05/19/17 12:57	
Bromodichloromethane	ND	5.0	1	B7E0654	05/19/2017	05/19/17 12:57	
Bromoform	ND	5.0	1	B7E0654	05/19/2017	05/19/17 12:57	
Bromomethane	ND	5.0	1	B7E0654	05/19/2017	05/19/17 12:57	
Carbon disulfide	ND	5.0	1	B7E0654	05/19/2017	05/19/17 12:57	
Carbon tetrachloride	ND	5.0	1	B7E0654	05/19/2017	05/19/17 12:57	
Chlorobenzene	ND	5.0	1	B7E0654	05/19/2017	05/19/17 12:57	
Chloroethane	ND	5.0	1	B7E0654	05/19/2017	05/19/17 12:57	
Chloroform	ND	5.0	1	B7E0654	05/19/2017	05/19/17 12:57	
Chloromethane	ND	5.0	1	B7E0654	05/19/2017	05/19/17 12:57	
cis-1,2-Dichloroethene	ND	5.0	1	B7E0654	05/19/2017	05/19/17 12:57	

Certificate of Analysis

Hushmand Associates, Inc.	Project Number : 6th St Bridge, LAC-17-001
250 Goddard	Report To : Naresh Bellana
Irvine , CA 92618	Reported : 06/05/2017

Client Sample ID 7-7-5.0

Lab ID: 1702036-AC

Volatile Organic Compounds by EPA 8260B **Analyst: AG**

Analyte	Result (ug/kg)	PQL (ug/kg)	Dilution	Batch	Prepared	Date/Time Analyzed	Notes
cis-1,3-Dichloropropene	ND	5.0	1	B7E0654	05/19/2017	05/19/17 12:57	
Di-isopropyl ether	ND	5.0	1	B7E0654	05/19/2017	05/19/17 12:57	
Dibromochloromethane	ND	5.0	1	B7E0654	05/19/2017	05/19/17 12:57	
Dibromomethane	ND	5.0	1	B7E0654	05/19/2017	05/19/17 12:57	
Dichlorodifluoromethane	ND	5.0	1	B7E0654	05/19/2017	05/19/17 12:57	
Ethyl Acetate	ND	50	1	B7E0654	05/19/2017	05/19/17 12:57	
Ethyl Ether	ND	50	1	B7E0654	05/19/2017	05/19/17 12:57	
Ethyl tert-butyl ether	ND	5.0	1	B7E0654	05/19/2017	05/19/17 12:57	
Ethylbenzene	ND	5.0	1	B7E0654	05/19/2017	05/19/17 12:57	
Freon-113	ND	5.0	1	B7E0654	05/19/2017	05/19/17 12:57	
Hexachlorobutadiene	ND	5.0	1	B7E0654	05/19/2017	05/19/17 12:57	
Isopropylbenzene	ND	5.0	1	B7E0654	05/19/2017	05/19/17 12:57	
m,p-Xylene	ND	10	1	B7E0654	05/19/2017	05/19/17 12:57	
Methylene chloride	ND	5.0	1	B7E0654	05/19/2017	05/19/17 12:57	
MTBE	ND	5.0	1	B7E0654	05/19/2017	05/19/17 12:57	
n-Butylbenzene	ND	5.0	1	B7E0654	05/19/2017	05/19/17 12:57	
n-Propylbenzene	ND	5.0	1	B7E0654	05/19/2017	05/19/17 12:57	
Naphthalene	ND	5.0	1	B7E0654	05/19/2017	05/19/17 12:57	
o-Xylene	ND	5.0	1	B7E0654	05/19/2017	05/19/17 12:57	
sec-Butylbenzene	ND	5.0	1	B7E0654	05/19/2017	05/19/17 12:57	
Styrene	ND	5.0	1	B7E0654	05/19/2017	05/19/17 12:57	
tert-Amyl methyl ether	ND	5.0	1	B7E0654	05/19/2017	05/19/17 12:57	
tert-Butanol	ND	100	1	B7E0654	05/19/2017	05/19/17 12:57	
tert-Butylbenzene	ND	5.0	1	B7E0654	05/19/2017	05/19/17 12:57	
Tetrachloroethene	ND	5.0	1	B7E0654	05/19/2017	05/19/17 12:57	
Toluene	ND	5.0	1	B7E0654	05/19/2017	05/19/17 12:57	
trans-1,2-Dichloroethene	ND	5.0	1	B7E0654	05/19/2017	05/19/17 12:57	
trans-1,3-Dichloropropene	ND	5.0	1	B7E0654	05/19/2017	05/19/17 12:57	
Trichloroethene	ND	5.0	1	B7E0654	05/19/2017	05/19/17 12:57	
Trichlorofluoromethane	ND	5.0	1	B7E0654	05/19/2017	05/19/17 12:57	
Vinyl acetate	ND	50	1	B7E0654	05/19/2017	05/19/17 12:57	
Vinyl chloride	ND	5.0	1	B7E0654	05/19/2017	05/19/17 12:57	
Surrogate: 1,2-Dichloroethane-d4	*99.2 %*	*12 - 186*		B7E0654	05/19/2017	*05/19/17 12:57*	
Surrogate: 4-Bromofluorobenzene	*99.7 %*	*23 - 162*		B7E0654	05/19/2017	*05/19/17 12:57*	
Surrogate: Dibromofluoromethane	*97.4 %*	*23 - 179*		B7E0654	05/19/2017	*05/19/17 12:57*	
Surrogate: Toluene-d8	*99.8 %*	*26 - 164*		B7E0654	05/19/2017	*05/19/17 12:57*	

Certificate of Analysis

Hushmand Associates, Inc.	Project Number : 6th St Bridge, LAC-17-001
250 Goddard	Report To : Naresh Bellana
Irvine , CA 92618	Reported : 06/05/2017

Client Sample ID 7-7-5.0

Lab ID: 1702036-AC

Semivolatile Organic Compounds by EPA 8270C **Analyst: SP**

Analyte	Result (ug/kg)	PQL (ug/kg)	Dilution	Batch	Prepared	Date/Time Analyzed	Notes
1,2,4-Trichlorobenzene	ND	330	1	B7E0814	05/24/2017	05/31/17 16:24	
1,2-Dichlorobenzene	ND	330	1	B7E0814	05/24/2017	05/31/17 16:24	
1,3-Dichlorobenzene	ND	330	1	B7E0814	05/24/2017	05/31/17 16:24	
1,4-Dichlorobenzene	ND	330	1	B7E0814	05/24/2017	05/31/17 16:24	
2,4,5-Trichlorophenol	ND	330	1	B7E0814	05/24/2017	05/31/17 16:24	
2,4,6-Trichlorophenol	ND	330	1	B7E0814	05/24/2017	05/31/17 16:24	
2,4-Dichlorophenol	ND	1600	1	B7E0814	05/24/2017	05/31/17 16:24	
2,4-Dimethylphenol	ND	330	1	B7E0814	05/24/2017	05/31/17 16:24	
2,4-Dinitrophenol	ND	1600	1	B7E0814	05/24/2017	05/31/17 16:24	
2,4-Dinitrotoluene	ND	330	1	B7E0814	05/24/2017	05/31/17 16:24	
2,6-Dinitrotoluene	ND	330	1	B7E0814	05/24/2017	05/31/17 16:24	
2-Chloronaphthalene	ND	330	1	B7E0814	05/24/2017	05/31/17 16:24	
2-Chlorophenol	ND	330	1	B7E0814	05/24/2017	05/31/17 16:24	
2-Methylnaphthalene	ND	330	1	B7E0814	05/24/2017	05/31/17 16:24	
2-Methylphenol	ND	330	1	B7E0814	05/24/2017	05/31/17 16:24	
2-Nitroaniline	ND	1600	1	B7E0814	05/24/2017	05/31/17 16:24	
2-Nitrophenol	ND	330	1	B7E0814	05/24/2017	05/31/17 16:24	
3,3´-Dichlorobenzidine	ND	660	1	B7E0814	05/24/2017	05/31/17 16:24	
3-Nitroaniline	ND	1600	1	B7E0814	05/24/2017	05/31/17 16:24	
4,6-Dinitro-2-methyphenol	ND	1600	1	B7E0814	05/24/2017	05/31/17 16:24	
4-Bromophenyl-phenylether	ND	330	1	B7E0814	05/24/2017	05/31/17 16:24	
4-Chloro-3-methylphenol	ND	660	1	B7E0814	05/24/2017	05/31/17 16:24	
4-Chloroaniline	ND	660	1	B7E0814	05/24/2017	05/31/17 16:24	
4-Chlorophenyl-phenylether	ND	330	1	B7E0814	05/24/2017	05/31/17 16:24	
4-Methylphenol	ND	330	1	B7E0814	05/24/2017	05/31/17 16:24	
4-Nitroaniline	ND	1600	1	B7E0814	05/24/2017	05/31/17 16:24	
4-Nitrophenol	ND	330	1	B7E0814	05/24/2017	05/31/17 16:24	
Acenaphthene	ND	330	1	B7E0814	05/24/2017	05/31/17 16:24	
Acenaphthylene	ND	330	1	B7E0814	05/24/2017	05/31/17 16:24	
Anthracene	ND	330	1	B7E0814	05/24/2017	05/31/17 16:24	
Benzidine (M)	ND	1600	1	B7E0814	05/24/2017	05/31/17 16:24	
Benzo(a)anthracene	ND	330	1	B7E0814	05/24/2017	05/31/17 16:24	
Benzo(a)pyrene	ND	330	1	B7E0814	05/24/2017	05/31/17 16:24	
Benzo(b)fluoranthene	ND	330	1	B7E0814	05/24/2017	05/31/17 16:24	
Benzo(g,h,i)perylene	ND	330	1	B7E0814	05/24/2017	05/31/17 16:24	
Benzo(k)fluoranthene	ND	330	1	B7E0814	05/24/2017	05/31/17 16:24	
Benzoic acid	ND	1600	1	B7E0814	05/24/2017	05/31/17 16:24	

Certificate of Analysis

Hushmand Associates, Inc.	Project Number : 6th St Bridge, LAC-17-001
250 Goddard	Report To : Naresh Bellana
Irvine , CA 92618	Reported : 06/05/2017

Client Sample ID 7-7-5.0

Lab ID: 1702036-AC

Semivolatile Organic Compounds by EPA 8270C **Analyst: SP**

Analyte	Result (ug/kg)	PQL (ug/kg)	Dilution	Batch	Prepared	Date/Time Analyzed	Notes
Benzyl alcohol	ND	660	1	B7E0814	05/24/2017	05/31/17 16:24	
bis(2-chloroethoxy)methane	ND	330	1	B7E0814	05/24/2017	05/31/17 16:24	
bis(2-Chloroethyl)ether	ND	330	1	B7E0814	05/24/2017	05/31/17 16:24	
bis(2-chloroisopropyl)ether	ND	330	1	B7E0814	05/24/2017	05/31/17 16:24	
bis(2-ethylhexyl)phthalate	ND	330	1	B7E0814	05/24/2017	05/31/17 16:24	
Butylbenzylphthalate	ND	330	1	B7E0814	05/24/2017	05/31/17 16:24	
Chrysene	ND	330	1	B7E0814	05/24/2017	05/31/17 16:24	
Di-n-butylphthalate	ND	330	1	B7E0814	05/24/2017	05/31/17 16:24	
Di-n-octylphthalate	ND	330	1	B7E0814	05/24/2017	05/31/17 16:24	
Dibenz(a,h)anthracene	ND	330	1	B7E0814	05/24/2017	05/31/17 16:24	
Dibenzofuran	ND	330	1	B7E0814	05/24/2017	05/31/17 16:24	
Diethyl phthalate	ND	330	1	B7E0814	05/24/2017	05/31/17 16:24	
Dimethyl phthalate	ND	330	1	B7E0814	05/24/2017	05/31/17 16:24	
Fluoranthene	ND	330	1	B7E0814	05/24/2017	05/31/17 16:24	
Fluorene	ND	330	1	B7E0814	05/24/2017	05/31/17 16:24	
Hexachlorobenzene	ND	330	1	B7E0814	05/24/2017	05/31/17 16:24	
Hexachlorobutadiene	ND	660	1	B7E0814	05/24/2017	05/31/17 16:24	
Hexachlorocyclopentadiene	ND	660	1	B7E0814	05/24/2017	05/31/17 16:24	
Hexachloroethane	ND	330	1	B7E0814	05/24/2017	05/31/17 16:24	
Indeno(1,2,3-cd)pyrene	ND	330	1	B7E0814	05/24/2017	05/31/17 16:24	
Isophorone	ND	330	1	B7E0814	05/24/2017	05/31/17 16:24	
N-Nitroso-di-n propylamine	ND	330	1	B7E0814	05/24/2017	05/31/17 16:24	
N-Nitrosodiphenylamine	ND	330	1	B7E0814	05/24/2017	05/31/17 16:24	
Naphthalene	ND	330	1	B7E0814	05/24/2017	05/31/17 16:24	
Nitrobenzene	ND	330	1	B7E0814	05/24/2017	05/31/17 16:24	
Pentachlorophenol	ND	1600	1	B7E0814	05/24/2017	05/31/17 16:24	
Phenanthrene	ND	330	1	B7E0814	05/24/2017	05/31/17 16:24	
Phenol	ND	330	1	B7E0814	05/24/2017	05/31/17 16:24	
Pyrene	ND	330	1	B7E0814	05/24/2017	05/31/17 16:24	
Pyridine	ND	1600	1	B7E0814	05/24/2017	05/31/17 16:24	
Surrogate: 1,2-Dichlorobenzene-d4	*58.1 %*	*38 - 93*		B7E0814	05/24/2017	*05/31/17 16:24*	
Surrogate: 2,4,6-Tribromophenol	*66.5 %*	*27 - 124*		B7E0814	05/24/2017	*05/31/17 16:24*	
Surrogate: 2-Chlorophenol-d4	*59.3 %*	*36 - 96*		B7E0814	05/24/2017	*05/31/17 16:24*	
Surrogate: 2-Fluorobiphenyl	*63.6 %*	*44 - 100*		B7E0814	05/24/2017	*05/31/17 16:24*	
Surrogate: 2-Fluorophenol	*54.9 %*	*32 - 89*		B7E0814	05/24/2017	*05/31/17 16:24*	
Surrogate: 4-Terphenyl-d14	*63.6 %*	*49 - 123*		B7E0814	05/24/2017	*05/31/17 16:24*	
Surrogate: Nitrobenzene-d5	*62.1 %*	*38 - 104*		B7E0814	05/24/2017	*05/31/17 16:24*	

Certificate of Analysis

Hushmand Associates, Inc.	Project Number : 6th St Bridge, LAC-17-001
250 Goddard	Report To : Naresh Bellana
Irvine , CA 92618	Reported : 06/05/2017

Client Sample ID 7-7-5.0

Lab ID: 1702036-AC

Semivolatile Organic Compounds by EPA 8270C **Analyst: SP**

Analyte	Result (ug/kg)	PQL (ug/kg)	Dilution	Batch	Prepared	Date/Time Analyzed	Notes
Surrogate: Phenol-d5	*59.1 %*	*35 - 95*		B7E0814	05/24/2017	*05/31/17 16:24*	

Certificate of Analysis

Hushmand Associates, Inc.	Project Number : 6th St Bridge, LAC-17-001
250 Goddard	Report To : Naresh Bellana
Irvine , CA 92618	Reported : 06/05/2017

Client Sample ID 8-1-0.5

Lab ID: 1702036-AD

Total Metals by ICP-AES EPA 6010B — **Analyst: GO**

Analyte	Result (mg/kg)	PQL (mg/kg)	Dilution	Batch	Prepared	Date/Time Analyzed	Notes
Lead	**250**	1.0	1	B7E0655	05/20/2017	05/22/17 11:49	

STLC Metals by ICP-AES by EPA 6010B — **Analyst: GO**

Analyte	Result (mg/L)	PQL (mg/L)	Dilution	Batch	Prepared	Date/Time Analyzed	Notes
Copper	**9.6**	1.0	20	B7F0044	06/02/2017	06/02/17 14:12	D1
Lead	**14**	1.0	20	B7F0044	06/02/2017	06/02/17 14:12	D1

Certificate of Analysis

Hushmand Associates, Inc.	Project Number : 6th St Bridge, LAC-17-001
250 Goddard	Report To : Naresh Bellana
Irvine , CA 92618	Reported : 06/05/2017

Client Sample ID 8-1-1.0

Lab ID: 1702036-AE

Total Metals by ICP-AES EPA 6010B — **Analyst: GO**

Analyte	Result (mg/kg)	PQL (mg/kg)	Dilution	Batch	Prepared	Date/Time Analyzed	Notes
Lead	**130**	1.0	1	B7E0655	05/20/2017	05/22/17 11:51	

STLC Metals by ICP-AES by EPA 6010B — **Analyst: GO**

Analyte	Result (mg/L)	PQL (mg/L)	Dilution	Batch	Prepared	Date/Time Analyzed	Notes
Copper	**3.4**	1.0	20	B7F0044	06/02/2017	06/02/17 14:14	D1
Lead	**6.0**	1.0	20	B7F0044	06/02/2017	06/02/17 14:14	D1

Certificate of Analysis

Hushmand Associates, Inc.	Project Number : 6th St Bridge, LAC-17-001
250 Goddard	Report To : Naresh Bellana
Irvine , CA 92618	Reported : 06/05/2017

Client Sample ID 8-1-3.0

Lab ID: 1702036-AF

Total Metals by ICP-AES EPA 6010B

Analyst: GO

Analyte	Result (mg/kg)	PQL (mg/kg)	Dilution	Batch	Prepared	Date/Time Analyzed	Notes
Lead	**3.6**	1.0	1	B7E0655	05/20/2017	05/22/17 11:52	

Certificate of Analysis

Hushmand Associates, Inc.	Project Number : 6th St Bridge, LAC-17-001
250 Goddard	Report To : Naresh Bellana
Irvine , CA 92618	Reported : 06/05/2017

Client Sample ID 8-1-5.0

Lab ID: 1702036-AG

Total Metals by ICP-AES EPA 6010B

Analyst: GO

Analyte	Result (mg/kg)	PQL (mg/kg)	Dilution	Batch	Prepared	Date/Time Analyzed	Notes
Lead	**2.8**	1.0	1	B7E0655	05/20/2017	05/22/17 11:53	

Certificate of Analysis

Hushmand Associates, Inc.	Project Number : 6th St Bridge, LAC-17-001
250 Goddard	Report To : Naresh Bellana
Irvine , CA 92618	Reported : 06/05/2017

Client Sample ID 8-2-0.5

Lab ID: 1702036-AH

Total Metals by ICP-AES EPA 6010B

Analyst: GO

Analyte	Result (mg/kg)	PQL (mg/kg)	Dilution	Batch	Prepared	Date/Time Analyzed	Notes
Lead	**44**	1.0	1	B7E0655	05/20/2017	05/22/17 11:54	

Certificate of Analysis

Hushmand Associates, Inc.	Project Number : 6th St Bridge, LAC-17-001
250 Goddard	Report To : Naresh Bellana
Irvine , CA 92618	Reported : 06/05/2017

Client Sample ID 8-2-1.0

Lab ID: 1702036-AI

Total Metals by ICP-AES EPA 6010B

Analyst: GO

Analyte	Result (mg/kg)	PQL (mg/kg)	Dilution	Batch	Prepared	Date/Time Analyzed	Notes
Lead	**3.3**	1.0	1	B7E0655	05/20/2017	05/22/17 11:55	

Certificate of Analysis

Hushmand Associates, Inc.	Project Number : 6th St Bridge, LAC-17-001
250 Goddard	Report To : Naresh Bellana
Irvine , CA 92618	Reported : 06/05/2017

Client Sample ID 8-2-3.0

Lab ID: 1702036-AJ

Total Metals by ICP-AES EPA 6010B

Analyst: GO

Analyte	Result (mg/kg)	PQL (mg/kg)	Dilution	Batch	Prepared	Date/Time Analyzed	Notes
Lead	**9.3**	1.0	1	B7E0655	05/20/2017	05/22/17 11:59	

Certificate of Analysis

Hushmand Associates, Inc.	Project Number : 6th St Bridge, LAC-17-001
250 Goddard	Report To : Naresh Bellana
Irvine , CA 92618	Reported : 06/05/2017

Client Sample ID 8-2-5.0

Lab ID: 1702036-AK

Total Metals by ICP-AES EPA 6010B

Analyst: GO

Analyte	Result (mg/kg)	PQL (mg/kg)	Dilution	Batch	Prepared	Date/Time Analyzed	Notes
Lead	**37**	1.0	1	B7E0655	05/20/2017	05/22/17 12:00	

Certificate of Analysis

Hushmand Associates, Inc.	Project Number : 6th St Bridge, LAC-17-001
250 Goddard	Report To : Naresh Bellana
Irvine , CA 92618	Reported : 06/05/2017

Client Sample ID 8-3-0.5

Lab ID: 1702036-AL

Title 22 Metals by ICP-AES EPA 6010B **Analyst: KEK**

Analyte	Result (mg/kg)	PQL (mg/kg)	Dilution	Batch	Prepared	Date/Time Analyzed	Notes
Antimony	ND	2.0	1	B7E0684	05/20/2017	05/22/17 14:24	
Arsenic	**2.4**	1.0	1	B7E0684	05/20/2017	05/22/17 14:24	
Barium	**110**	1.0	1	B7E0684	05/20/2017	05/22/17 14:24	
Beryllium	ND	1.0	1	B7E0684	05/20/2017	05/22/17 14:24	
Cadmium	ND	1.0	1	B7E0684	05/20/2017	05/22/17 14:24	
Chromium	**12**	1.0	1	B7E0684	05/20/2017	05/22/17 14:24	
Cobalt	**6.9**	1.0	1	B7E0684	05/20/2017	05/22/17 14:24	
Copper	**140**	2.0	1	B7E0684	05/20/2017	05/22/17 14:24	
Lead	**49**	1.0	1	B7E0684	05/20/2017	05/22/17 14:24	
Molybdenum	ND	1.0	1	B7E0684	05/20/2017	05/22/17 14:24	
Nickel	**9.6**	1.0	1	B7E0684	05/20/2017	05/22/17 14:24	
Selenium	ND	1.0	1	B7E0684	05/20/2017	05/22/17 14:24	
Silver	ND	1.0	1	B7E0684	05/20/2017	05/22/17 14:24	
Thallium	ND	1.0	1	B7E0684	05/20/2017	05/22/17 14:24	
Vanadium	**28**	1.0	1	B7E0684	05/20/2017	05/22/17 14:24	
Zinc	**120**	1.0	1	B7E0684	05/20/2017	05/22/17 14:24	

Mercury by AA (Cold Vapor) EPA 7471A **Analyst: KEK**

Analyte	Result (mg/kg)	PQL (mg/kg)	Dilution	Batch	Prepared	Date/Time Analyzed	Notes
Mercury	ND	0.10	1	B7E0679	05/20/2017	05/22/17 17:31	

Certificate of Analysis

Hushmand Associates, Inc.	Project Number : 6th St Bridge, LAC-17-001
250 Goddard	Report To : Naresh Bellana
Irvine , CA 92618	Reported : 06/05/2017

Client Sample ID 8-3-1.0

Lab ID: 1702036-AM

Title 22 Metals by ICP-AES EPA 6010B

Analyst: KEK

Analyte	Result (mg/kg)	PQL (mg/kg)	Dilution	Batch	Prepared	Date/Time Analyzed	Notes
Antimony	ND	2.0	1	B7E0684	05/20/2017	05/22/17 14:27	
Arsenic	**1.5**	1.0	1	B7E0684	05/20/2017	05/22/17 14:27	
Barium	**70**	1.0	1	B7E0684	05/20/2017	05/22/17 14:27	
Beryllium	ND	1.0	1	B7E0684	05/20/2017	05/22/17 14:27	
Cadmium	ND	1.0	1	B7E0684	05/20/2017	05/22/17 14:27	
Chromium	**7.3**	1.0	1	B7E0684	05/20/2017	05/22/17 14:27	
Cobalt	**4.9**	1.0	1	B7E0684	05/20/2017	05/22/17 14:27	
Copper	**34**	2.0	1	B7E0684	05/20/2017	05/22/17 14:27	
Lead	**35**	1.0	1	B7E0684	05/20/2017	05/22/17 14:27	
Molybdenum	ND	1.0	1	B7E0684	05/20/2017	05/22/17 14:27	
Nickel	**7.4**	1.0	1	B7E0684	05/20/2017	05/22/17 14:27	
Selenium	ND	1.0	1	B7E0684	05/20/2017	05/22/17 14:27	
Silver	ND	1.0	1	B7E0684	05/20/2017	05/22/17 14:27	
Thallium	ND	1.0	1	B7E0684	05/20/2017	05/22/17 14:27	
Vanadium	**21**	1.0	1	B7E0684	05/20/2017	05/22/17 14:27	
Zinc	**65**	1.0	1	B7E0684	05/20/2017	05/22/17 14:27	

Mercury by AA (Cold Vapor) EPA 7471A

Analyst: KEK

Analyte	Result (mg/kg)	PQL (mg/kg)	Dilution	Batch	Prepared	Date/Time Analyzed	Notes
Mercury	ND	0.10	1	B7E0679	05/20/2017	05/22/17 17:33	

Gasoline Range Organics by EPA 8015B (Modified)

Analyst: VW

Analyte		Result (mg/kg)	PQL (mg/kg)	Dilution	Batch	Prepared	Date/Time Analyzed	Notes
Gasoline Range Organics		ND	1.0	1	B7E0622	05/19/2017	05/19/17 15:27	
Surrogate: 4-Bromofluorobenzene	*96.1 %*		*36 - 125*		B7E0622	05/19/2017	*05/19/17 15:27*	

Diesel Range Organics by EPA 8015B

Analyst: CR

Analyte		Result (mg/kg)	PQL (mg/kg)	Dilution	Batch	Prepared	Date/Time Analyzed	Notes
DRO		ND	10	1	B7E0786	05/23/2017	05/24/17 20:16	
Surrogate: p-Terphenyl	*85.9 %*		*47 - 157*		B7E0786	05/23/2017	*05/24/17 20:16*	

Certificate of Analysis

Hushmand Associates, Inc.	Project Number : 6th St Bridge, LAC-17-001
250 Goddard	Report To : Naresh Bellana
Irvine , CA 92618	Reported : 06/05/2017

Client Sample ID 8-3-1.0

Lab ID: 1702036-AM

Organochlorine Pesticides by EPA 8081 **Analyst: RL/**

Analyte	Result (ug/kg)	PQL (ug/kg)	Dilution	Batch	Prepared	Date/Time Analyzed	Notes
4,4´-DDD	ND	10	5	B7E0819	05/24/2017	05/24/17 19:08	D1
4,4´-DDE	ND	10	5	B7E0819	05/24/2017	05/24/17 19:08	D1
4,4´-DDT	ND	10	5	B7E0819	05/24/2017	05/24/17 19:08	D1
Aldrin	ND	5.0	5	B7E0819	05/24/2017	05/24/17 19:08	D1
alpha-BHC	ND	5.0	5	B7E0819	05/24/2017	05/24/17 19:08	D1
alpha-Chlordane	ND	5.0	5	B7E0819	05/24/2017	05/24/17 19:08	D1
beta-BHC	ND	5.0	5	B7E0819	05/24/2017	05/24/17 19:08	D1
Chlordane	ND	42	5	B7E0819	05/24/2017	05/24/17 19:08	D1
delta-BHC	ND	5.0	5	B7E0819	05/24/2017	05/24/17 19:08	D1
Dieldrin	ND	10	5	B7E0819	05/24/2017	05/24/17 19:08	D1
Endosulfan I	ND	5.0	5	B7E0819	05/24/2017	05/24/17 19:08	D1
Endosulfan II	ND	10	5	B7E0819	05/24/2017	05/24/17 19:08	D1
Endosulfan sulfate	ND	10	5	B7E0819	05/24/2017	05/24/17 19:08	D1
Endosulfan Sulfate [2C]	ND	10	5	B7E0819	05/24/2017	05/24/17 19:08	D1
Endrin	ND	10	5	B7E0819	05/24/2017	05/24/17 19:08	D1
Endrin aldehyde	ND	10	5	B7E0819	05/24/2017	05/24/17 19:08	D1
Endrin ketone	ND	10	5	B7E0819	05/24/2017	05/24/17 19:08	D1
gamma-BHC	ND	5.0	5	B7E0819	05/24/2017	05/24/17 19:08	D1
gamma-Chlordane	ND	5.0	5	B7E0819	05/24/2017	05/24/17 19:08	D1
Heptachlor	ND	5.0	5	B7E0819	05/24/2017	05/24/17 19:08	D1
Heptachlor epoxide	ND	5.0	5	B7E0819	05/24/2017	05/24/17 19:08	D1
Methoxychlor	ND	25	5	B7E0819	05/24/2017	05/24/17 19:08	D1
Toxaphene	ND	250	5	B7E0819	05/24/2017	05/24/17 19:08	D1
Surrogate: Decachlorobiphenyl	*83.5 %*	*27 - 123*		B7E0819	05/24/2017	*05/24/17 19:08*	
Surrogate: Tetrachloro-m-xylene	*40.3 %*	*26 - 108*		B7E0819	05/24/2017	*05/24/17 19:08*	

Certificate of Analysis

Hushmand Associates, Inc.	Project Number : 6th St Bridge, LAC-17-001
250 Goddard	Report To : Naresh Bellana
Irvine , CA 92618	Reported : 06/05/2017

Client Sample ID 8-3-1.0

Lab ID: 1702036-AM

Polychlorinated Biphenyls by EPA 8082

Analyst: LT

Analyte	Result (ug/kg)	PQL (ug/kg)	Dilution	Batch	Prepared	Date/Time Analyzed	Notes
Aroclor 1016	ND	16	1	B7E0819	05/24/2017	05/24/17 19:48	
Aroclor 1221	ND	16	1	B7E0819	05/24/2017	05/24/17 19:48	
Aroclor 1232	ND	16	1	B7E0819	05/24/2017	05/24/17 19:48	
Aroclor 1242	ND	16	1	B7E0819	05/24/2017	05/24/17 19:48	
Aroclor 1248	ND	16	1	B7E0819	05/24/2017	05/24/17 19:48	
Aroclor 1254	ND	16	1	B7E0819	05/24/2017	05/24/17 19:48	
Aroclor 1260	ND	16	1	B7E0819	05/24/2017	05/24/17 19:48	
Aroclor 1262	ND	16	1	B7E0819	05/24/2017	05/24/17 19:48	
Aroclor 1268	ND	16	1	B7E0819	05/24/2017	05/24/17 19:48	
Surrogate: Decachlorobiphenyl	*41.6 %*	*18 - 136*		B7E0819	05/24/2017	*05/24/17 19:48*	
Surrogate: Tetrachloro-m-xylene	*57.1 %*	*30 - 130*		B7E0819	05/24/2017	*05/24/17 19:48*	

Volatile Organic Compounds by EPA 8260B

Analyst: AG

Analyte	Result (ug/kg)	PQL (ug/kg)	Dilution	Batch	Prepared	Date/Time Analyzed	Notes
1,1,1,2-Tetrachloroethane	ND	5.0	1	B7E0654	05/19/2017	05/19/17 13:15	
1,1,1-Trichloroethane	ND	5.0	1	B7E0654	05/19/2017	05/19/17 13:15	
1,1,2,2-Tetrachloroethane	ND	5.0	1	B7E0654	05/19/2017	05/19/17 13:15	
1,1,2-Trichloroethane	ND	5.0	1	B7E0654	05/19/2017	05/19/17 13:15	
1,1-Dichloroethane	ND	5.0	1	B7E0654	05/19/2017	05/19/17 13:15	
1,1-Dichloroethene	ND	5.0	1	B7E0654	05/19/2017	05/19/17 13:15	
1,1-Dichloropropene	ND	5.0	1	B7E0654	05/19/2017	05/19/17 13:15	
1,2,3-Trichloropropane	ND	5.0	1	B7E0654	05/19/2017	05/19/17 13:15	
1,2,3-Trichlorobenzene	ND	5.0	1	B7E0654	05/19/2017	05/19/17 13:15	
1,2,4-Trichlorobenzene	ND	5.0	1	B7E0654	05/19/2017	05/19/17 13:15	
1,2,4-Trimethylbenzene	ND	5.0	1	B7E0654	05/19/2017	05/19/17 13:15	
1,2-Dibromo-3-chloropropane	ND	10	1	B7E0654	05/19/2017	05/19/17 13:15	
1,2-Dibromoethane	ND	5.0	1	B7E0654	05/19/2017	05/19/17 13:15	
1,2-Dichlorobenzene	ND	5.0	1	B7E0654	05/19/2017	05/19/17 13:15	
1,2-Dichloroethane	ND	5.0	1	B7E0654	05/19/2017	05/19/17 13:15	
1,2-Dichloropropane	ND	5.0	1	B7E0654	05/19/2017	05/19/17 13:15	
1,3,5-Trimethylbenzene	ND	5.0	1	B7E0654	05/19/2017	05/19/17 13:15	
1,3-Dichlorobenzene	ND	5.0	1	B7E0654	05/19/2017	05/19/17 13:15	
1,3-Dichloropropane	ND	5.0	1	B7E0654	05/19/2017	05/19/17 13:15	
1,4-Dichlorobenzene	ND	5.0	1	B7E0654	05/19/2017	05/19/17 13:15	
2,2-Dichloropropane	ND	5.0	1	B7E0654	05/19/2017	05/19/17 13:15	

Certificate of Analysis

Hushmand Associates, Inc.	Project Number : 6th St Bridge, LAC-17-001
250 Goddard	Report To : Naresh Bellana
Irvine , CA 92618	Reported : 06/05/2017

Client Sample ID 8-3-1.0

Lab ID: 1702036-AM

Volatile Organic Compounds by EPA 8260B **Analyst: AG**

Analyte	Result (ug/kg)	PQL (ug/kg)	Dilution	Batch	Prepared	Date/Time Analyzed	Notes
2-Chlorotoluene	ND	5.0	1	B7E0654	05/19/2017	05/19/17 13:15	
4-Chlorotoluene	ND	5.0	1	B7E0654	05/19/2017	05/19/17 13:15	
4-Isopropyltoluene	ND	5.0	1	B7E0654	05/19/2017	05/19/17 13:15	
Benzene	ND	5.0	1	B7E0654	05/19/2017	05/19/17 13:15	
Bromobenzene	ND	5.0	1	B7E0654	05/19/2017	05/19/17 13:15	
Bromochloromethane	ND	5.0	1	B7E0654	05/19/2017	05/19/17 13:15	
Bromodichloromethane	ND	5.0	1	B7E0654	05/19/2017	05/19/17 13:15	
Bromoform	ND	5.0	1	B7E0654	05/19/2017	05/19/17 13:15	
Bromomethane	ND	5.0	1	B7E0654	05/19/2017	05/19/17 13:15	
Carbon disulfide	ND	5.0	1	B7E0654	05/19/2017	05/19/17 13:15	
Carbon tetrachloride	ND	5.0	1	B7E0654	05/19/2017	05/19/17 13:15	
Chlorobenzene	ND	5.0	1	B7E0654	05/19/2017	05/19/17 13:15	
Chloroethane	ND	5.0	1	B7E0654	05/19/2017	05/19/17 13:15	
Chloroform	ND	5.0	1	B7E0654	05/19/2017	05/19/17 13:15	
Chloromethane	ND	5.0	1	B7E0654	05/19/2017	05/19/17 13:15	
cis-1,2-Dichloroethene	ND	5.0	1	B7E0654	05/19/2017	05/19/17 13:15	
cis-1,3-Dichloropropene	ND	5.0	1	B7E0654	05/19/2017	05/19/17 13:15	
Di-isopropyl ether	ND	5.0	1	B7E0654	05/19/2017	05/19/17 13:15	
Dibromochloromethane	ND	5.0	1	B7E0654	05/19/2017	05/19/17 13:15	
Dibromomethane	ND	5.0	1	B7E0654	05/19/2017	05/19/17 13:15	
Dichlorodifluoromethane	ND	5.0	1	B7E0654	05/19/2017	05/19/17 13:15	
Ethyl Acetate	ND	50	1	B7E0654	05/19/2017	05/19/17 13:15	
Ethyl Ether	ND	50	1	B7E0654	05/19/2017	05/19/17 13:15	
Ethyl tert-butyl ether	ND	5.0	1	B7E0654	05/19/2017	05/19/17 13:15	
Ethylbenzene	ND	5.0	1	B7E0654	05/19/2017	05/19/17 13:15	
Freon-113	ND	5.0	1	B7E0654	05/19/2017	05/19/17 13:15	
Hexachlorobutadiene	ND	5.0	1	B7E0654	05/19/2017	05/19/17 13:15	
Isopropylbenzene	ND	5.0	1	B7E0654	05/19/2017	05/19/17 13:15	
m,p-Xylene	ND	10	1	B7E0654	05/19/2017	05/19/17 13:15	
Methylene chloride	ND	5.0	1	B7E0654	05/19/2017	05/19/17 13:15	
MTBE	ND	5.0	1	B7E0654	05/19/2017	05/19/17 13:15	
n-Butylbenzene	ND	5.0	1	B7E0654	05/19/2017	05/19/17 13:15	
n-Propylbenzene	ND	5.0	1	B7E0654	05/19/2017	05/19/17 13:15	
Naphthalene	ND	5.0	1	B7E0654	05/19/2017	05/19/17 13:15	
o-Xylene	ND	5.0	1	B7E0654	05/19/2017	05/19/17 13:15	
sec-Butylbenzene	ND	5.0	1	B7E0654	05/19/2017	05/19/17 13:15	
Styrene	ND	5.0	1	B7E0654	05/19/2017	05/19/17 13:15	

Certificate of Analysis

Hushmand Associates, Inc.	Project Number : 6th St Bridge, LAC-17-001
250 Goddard	Report To : Naresh Bellana
Irvine , CA 92618	Reported : 06/05/2017

Client Sample ID 8-3-1.0

Lab ID: 1702036-AM

Volatile Organic Compounds by EPA 8260B

Analyst: AG

Analyte	Result (ug/kg)	PQL (ug/kg)	Dilution	Batch	Prepared	Date/Time Analyzed	Notes
tert-Amyl methyl ether	ND	5.0	1	B7E0654	05/19/2017	05/19/17 13:15	
tert-Butanol	ND	100	1	B7E0654	05/19/2017	05/19/17 13:15	
tert-Butylbenzene	ND	5.0	1	B7E0654	05/19/2017	05/19/17 13:15	
Tetrachloroethene	ND	5.0	1	B7E0654	05/19/2017	05/19/17 13:15	
Toluene	ND	5.0	1	B7E0654	05/19/2017	05/19/17 13:15	
trans-1,2-Dichloroethene	ND	5.0	1	B7E0654	05/19/2017	05/19/17 13:15	
trans-1,3-Dichloropropene	ND	5.0	1	B7E0654	05/19/2017	05/19/17 13:15	
Trichloroethene	ND	5.0	1	B7E0654	05/19/2017	05/19/17 13:15	
Trichlorofluoromethane	ND	5.0	1	B7E0654	05/19/2017	05/19/17 13:15	
Vinyl acetate	ND	50	1	B7E0654	05/19/2017	05/19/17 13:15	
Vinyl chloride	ND	5.0	1	B7E0654	05/19/2017	05/19/17 13:15	
Surrogate: 1,2-Dichloroethane-d4	*105 %*	*12 - 186*		B7E0654	05/19/2017	*05/19/17 13:15*	
Surrogate: 4-Bromofluorobenzene	*94.8 %*	*23 - 162*		B7E0654	05/19/2017	*05/19/17 13:15*	
Surrogate: Dibromofluoromethane	*92.3 %*	*23 - 179*		B7E0654	05/19/2017	*05/19/17 13:15*	
Surrogate: Toluene-d8	*95.7 %*	*26 - 164*		B7E0654	05/19/2017	*05/19/17 13:15*	

Semivolatile Organic Compounds by EPA 8270C

Analyst: SP

Analyte	Result (ug/kg)	PQL (ug/kg)	Dilution	Batch	Prepared	Date/Time Analyzed	Notes
1,2,4-Trichlorobenzene	ND	6600	20	B7E0814	05/24/2017	05/31/17 22:18	D1
1,2-Dichlorobenzene	ND	6600	20	B7E0814	05/24/2017	05/31/17 22:18	D1
1,3-Dichlorobenzene	ND	6600	20	B7E0814	05/24/2017	05/31/17 22:18	D1
1,4-Dichlorobenzene	ND	6600	20	B7E0814	05/24/2017	05/31/17 22:18	D1
2,4,5-Trichlorophenol	ND	6600	20	B7E0814	05/24/2017	05/31/17 22:18	D1
2,4,6-Trichlorophenol	ND	6600	20	B7E0814	05/24/2017	05/31/17 22:18	D1
2,4-Dichlorophenol	ND	33000	20	B7E0814	05/24/2017	05/31/17 22:18	D1
2,4-Dimethylphenol	ND	6600	20	B7E0814	05/24/2017	05/31/17 22:18	D1
2,4-Dinitrophenol	ND	33000	20	B7E0814	05/24/2017	05/31/17 22:18	D1
2,4-Dinitrotoluene	ND	6600	20	B7E0814	05/24/2017	05/31/17 22:18	D1
2,6-Dinitrotoluene	ND	6600	20	B7E0814	05/24/2017	05/31/17 22:18	D1
2-Chloronaphthalene	ND	6600	20	B7E0814	05/24/2017	05/31/17 22:18	D1
2-Chlorophenol	ND	6600	20	B7E0814	05/24/2017	05/31/17 22:18	D1
2-Methylnaphthalene	ND	6600	20	B7E0814	05/24/2017	05/31/17 22:18	D1
2-Methylphenol	ND	6600	20	B7E0814	05/24/2017	05/31/17 22:18	D1
2-Nitroaniline	ND	33000	20	B7E0814	05/24/2017	05/31/17 22:18	D1
2-Nitrophenol	ND	6600	20	B7E0814	05/24/2017	05/31/17 22:18	D1

Certificate of Analysis

Hushmand Associates, Inc.	Project Number : 6th St Bridge, LAC-17-001
250 Goddard	Report To : Naresh Bellana
Irvine , CA 92618	Reported : 06/05/2017

Client Sample ID 8-3-1.0

Lab ID: 1702036-AM

Semivolatile Organic Compounds by EPA 8270C **Analyst: SP**

Analyte	Result (ug/kg)	PQL (ug/kg)	Dilution	Batch	Prepared	Date/Time Analyzed	Notes
3,3´-Dichlorobenzidine	ND	13000	20	B7E0814	05/24/2017	05/31/17 22:18	D1
3-Nitroaniline	ND	33000	20	B7E0814	05/24/2017	05/31/17 22:18	D1
4,6-Dinitro-2-methyphenol	ND	33000	20	B7E0814	05/24/2017	05/31/17 22:18	D1
4-Bromophenyl-phenylether	ND	6600	20	B7E0814	05/24/2017	05/31/17 22:18	D1
4-Chloro-3-methylphenol	ND	13000	20	B7E0814	05/24/2017	05/31/17 22:18	D1
4-Chloroaniline	ND	13000	20	B7E0814	05/24/2017	05/31/17 22:18	D1
4-Chlorophenyl-phenylether	ND	6600	20	B7E0814	05/24/2017	05/31/17 22:18	D1
4-Methylphenol	ND	6600	20	B7E0814	05/24/2017	05/31/17 22:18	D1
4-Nitroaniline	ND	33000	20	B7E0814	05/24/2017	05/31/17 22:18	D1
4-Nitrophenol	ND	6600	20	B7E0814	05/24/2017	05/31/17 22:18	D1
Acenaphthene	ND	6600	20	B7E0814	05/24/2017	05/31/17 22:18	D1
Acenaphthylene	ND	6600	20	B7E0814	05/24/2017	05/31/17 22:18	D1
Anthracene	ND	6600	20	B7E0814	05/24/2017	05/31/17 22:18	D1
Benzidine (M)	ND	33000	20	B7E0814	05/24/2017	05/31/17 22:18	D1
Benzo(a)anthracene	ND	6600	20	B7E0814	05/24/2017	05/31/17 22:18	D1
Benzo(a)pyrene	ND	6600	20	B7E0814	05/24/2017	05/31/17 22:18	D1
Benzo(b)fluoranthene	ND	6600	20	B7E0814	05/24/2017	05/31/17 22:18	D1
Benzo(g,h,i)perylene	ND	6600	20	B7E0814	05/24/2017	05/31/17 22:18	D1
Benzo(k)fluoranthene	ND	6600	20	B7E0814	05/24/2017	05/31/17 22:18	D1
Benzoic acid	ND	33000	20	B7E0814	05/24/2017	05/31/17 22:18	D1
Benzyl alcohol	ND	13000	20	B7E0814	05/24/2017	05/31/17 22:18	D1
bis(2-chloroethoxy)methane	ND	6600	20	B7E0814	05/24/2017	05/31/17 22:18	D1
bis(2-Chloroethyl)ether	ND	6600	20	B7E0814	05/24/2017	05/31/17 22:18	D1
bis(2-chloroisopropyl)ether	ND	6600	20	B7E0814	05/24/2017	05/31/17 22:18	D1
bis(2-ethylhexyl)phthalate	ND	6600	20	B7E0814	05/24/2017	05/31/17 22:18	D1
Butylbenzylphthalate	ND	6600	20	B7E0814	05/24/2017	05/31/17 22:18	D1
Chrysene	ND	6600	20	B7E0814	05/24/2017	05/31/17 22:18	D1
Di-n-butylphthalate	ND	6600	20	B7E0814	05/24/2017	05/31/17 22:18	D1
Di-n-octylphthalate	ND	6600	20	B7E0814	05/24/2017	05/31/17 22:18	D1
Dibenz(a,h)anthracene	ND	6600	20	B7E0814	05/24/2017	05/31/17 22:18	D1
Dibenzofuran	ND	6600	20	B7E0814	05/24/2017	05/31/17 22:18	D1
Diethyl phthalate	ND	6600	20	B7E0814	05/24/2017	05/31/17 22:18	D1
Dimethyl phthalate	ND	6600	20	B7E0814	05/24/2017	05/31/17 22:18	D1
Fluoranthene	ND	6600	20	B7E0814	05/24/2017	05/31/17 22:18	D1
Fluorene	ND	6600	20	B7E0814	05/24/2017	05/31/17 22:18	D1
Hexachlorobenzene	ND	6600	20	B7E0814	05/24/2017	05/31/17 22:18	D1
Hexachlorobutadiene	ND	13000	20	B7E0814	05/24/2017	05/31/17 22:18	D1

Certificate of Analysis

Hushmand Associates, Inc.	Project Number : 6th St Bridge, LAC-17-001
250 Goddard	Report To : Naresh Bellana
Irvine , CA 92618	Reported : 06/05/2017

Client Sample ID 8-3-1.0

Lab ID: 1702036-AM

Semivolatile Organic Compounds by EPA 8270C **Analyst: SP**

Analyte		Result (ug/kg)	PQL (ug/kg)	Dilution	Batch	Prepared	Date/Time Analyzed	Notes
Hexachlorocyclopentadiene		ND	13000	20	B7E0814	05/24/2017	05/31/17 22:18	D1
Hexachloroethane		ND	6600	20	B7E0814	05/24/2017	05/31/17 22:18	D1
Indeno(1,2,3-cd)pyrene		ND	6600	20	B7E0814	05/24/2017	05/31/17 22:18	D1
Isophorone		ND	6600	20	B7E0814	05/24/2017	05/31/17 22:18	D1
N-Nitroso-di-n propylamine		ND	6600	20	B7E0814	05/24/2017	05/31/17 22:18	D1
N-Nitrosodiphenylamine		ND	6600	20	B7E0814	05/24/2017	05/31/17 22:18	D1
Naphthalene		ND	6600	20	B7E0814	05/24/2017	05/31/17 22:18	D1
Nitrobenzene		ND	6600	20	B7E0814	05/24/2017	05/31/17 22:18	D1
Pentachlorophenol		ND	33000	20	B7E0814	05/24/2017	05/31/17 22:18	D1
Phenanthrene		ND	6600	20	B7E0814	05/24/2017	05/31/17 22:18	D1
Phenol		ND	6600	20	B7E0814	05/24/2017	05/31/17 22:18	D1
Pyrene		ND	6600	20	B7E0814	05/24/2017	05/31/17 22:18	D1
Pyridine		ND	33000	20	B7E0814	05/24/2017	05/31/17 22:18	
Surrogate: 1,2-Dichlorobenzene-d4	*0%*		*38 - 93*		B7E0814	05/24/2017	*05/31/17 22:18*	S4
Surrogate: 2,4,6-Tribromophenol	*0%*		*27 - 124*		B7E0814	05/24/2017	*05/31/17 22:18*	S4
Surrogate: 2-Chlorophenol-d4	*0%*		*36 - 96*		B7E0814	05/24/2017	*05/31/17 22:18*	S4
Surrogate: 2-Fluorobiphenyl	*0%*		*44 - 100*		B7E0814	05/24/2017	*05/31/17 22:18*	S4
Surrogate: 2-Fluorophenol	*0%*		*32 - 89*		B7E0814	05/24/2017	*05/31/17 22:18*	S4
Surrogate: 4-Terphenyl-d14	*0%*		*49 - 123*		B7E0814	05/24/2017	*05/31/17 22:18*	S4
Surrogate: Nitrobenzene-d5	*0%*		*38 - 104*		B7E0814	05/24/2017	*05/31/17 22:18*	S4
Surrogate: Phenol-d5	*0%*		*35 - 95*		B7E0814	05/24/2017	*05/31/17 22:18*	S4

Certificate of Analysis

Hushmand Associates, Inc.	Project Number : 6th St Bridge, LAC-17-001
250 Goddard	Report To : Naresh Bellana
Irvine , CA 92618	Reported : 06/05/2017

Client Sample ID 8-3-3.0

Lab ID: 1702036-AN

Title 22 Metals by ICP-AES EPA 6010B

Analyst: KEK

Analyte	Result (mg/kg)	PQL (mg/kg)	Dilution	Batch	Prepared	Date/Time Analyzed	Notes
Antimony	ND	2.0	1	B7E0684	05/20/2017	05/22/17 14:30	
Arsenic	**2.6**	1.0	1	B7E0684	05/20/2017	05/22/17 14:30	
Barium	**110**	1.0	1	B7E0684	05/20/2017	05/22/17 14:30	
Beryllium	ND	1.0	1	B7E0684	05/20/2017	05/22/17 14:30	
Cadmium	**1.7**	1.0	1	B7E0684	05/20/2017	05/22/17 14:30	
Chromium	**11**	1.0	1	B7E0684	05/20/2017	05/22/17 14:30	
Cobalt	**6.0**	1.0	1	B7E0684	05/20/2017	05/22/17 14:30	
Copper	**41**	2.0	1	B7E0684	05/20/2017	05/22/17 14:30	
Lead	**65**	1.0	1	B7E0684	05/20/2017	05/22/17 14:30	
Molybdenum	ND	1.0	1	B7E0684	05/20/2017	05/22/17 14:30	
Nickel	**12**	1.0	1	B7E0684	05/20/2017	05/22/17 14:30	
Selenium	**1.2**	1.0	1	B7E0684	05/20/2017	05/22/17 14:30	
Silver	ND	1.0	1	B7E0684	05/20/2017	05/22/17 14:30	
Thallium	ND	1.0	1	B7E0684	05/20/2017	05/22/17 14:30	
Vanadium	**23**	1.0	1	B7E0684	05/20/2017	05/22/17 14:30	
Zinc	**210**	1.0	1	B7E0684	05/20/2017	05/22/17 14:30	

TCLP Metals by ICP-AES EPA 6010B

Analyst: GO

Analyte	Result (mg/L)	PQL (mg/L)	Dilution	Batch	Prepared	Date/Time Analyzed	Notes
Cadmium	ND	0.25	5	B7F0039	06/02/2017	06/02/17 16:45	D1

STLC Metals by ICP-AES by EPA 6010B

Analyst: GO

Analyte	Result (mg/L)	PQL (mg/L)	Dilution	Batch	Prepared	Date/Time Analyzed	Notes
Cadmium	ND	1.0	20	B7F0044	06/02/2017	06/02/17 14:15	D1
Lead	**11**	1.0	20	B7F0044	06/02/2017	06/02/17 14:15	D1

Mercury by AA (Cold Vapor) EPA 7471A

Analyst: KEK

Analyte	Result (mg/kg)	PQL (mg/kg)	Dilution	Batch	Prepared	Date/Time Analyzed	Notes
Mercury	**0.11**	0.10	1	B7E0679	05/20/2017	05/22/17 17:35	

Certificate of Analysis

Hushmand Associates, Inc.	Project Number : 6th St Bridge, LAC-17-001
250 Goddard	Report To : Naresh Bellana
Irvine , CA 92618	Reported : 06/05/2017

Client Sample ID 8-3-5.0

Lab ID: 1702036-AO

Title 22 Metals by ICP-AES EPA 6010B

Analyst: KEK

Analyte	Result (mg/kg)	PQL (mg/kg)	Dilution	Batch	Prepared	Date/Time Analyzed	Notes
Antimony	ND	2.0	1	B7E0684	05/20/2017	05/22/17 17:59	
Arsenic	**2.3**	1.0	1	B7E0684	05/20/2017	05/22/17 17:59	
Barium	**68**	1.0	1	B7E0684	05/20/2017	05/22/17 17:59	
Beryllium	ND	1.0	1	B7E0684	05/20/2017	05/22/17 17:59	
Cadmium	ND	1.0	1	B7E0684	05/20/2017	05/22/17 17:59	
Chromium	**22**	1.0	1	B7E0684	05/20/2017	05/22/17 17:59	
Cobalt	**12**	1.0	1	B7E0684	05/20/2017	05/22/17 17:59	
Copper	**23**	2.0	1	B7E0684	05/20/2017	05/22/17 17:59	
Lead	**5.9**	1.0	1	B7E0684	05/20/2017	05/22/17 17:59	
Molybdenum	ND	1.0	1	B7E0684	05/20/2017	05/22/17 17:59	
Nickel	**20**	1.0	1	B7E0684	05/20/2017	05/22/17 17:59	
Selenium	ND	1.0	1	B7E0684	05/20/2017	05/22/17 17:59	
Silver	ND	1.0	1	B7E0684	05/20/2017	05/22/17 17:59	
Thallium	ND	1.0	1	B7E0684	05/20/2017	05/22/17 17:59	
Vanadium	**44**	1.0	1	B7E0684	05/20/2017	05/22/17 17:59	
Zinc	**52**	1.0	1	B7E0684	05/20/2017	05/22/17 17:59	

Hexavalent Chromium by EPA 7196A/3060A

Analyst: SLO

Analyte	Result (mg/kg)	PQL (mg/kg)	Dilution	Batch	Prepared	Date/Time Analyzed	Notes
Hexavalent Chromium	ND	1.0	1	B7F0053	06/01/2017	06/02/17 11:00	

Mercury by AA (Cold Vapor) EPA 7471A

Analyst: KEK

Analyte	Result (mg/kg)	PQL (mg/kg)	Dilution	Batch	Prepared	Date/Time Analyzed	Notes
Mercury	**0.14**	0.10	1	B7E0679	05/20/2017	05/22/17 17:37	

Gasoline Range Organics by EPA 8015B (Modified)

Analyst: VW

Analyte	Result (mg/kg)	PQL (mg/kg)	Dilution	Batch	Prepared	Date/Time Analyzed	Notes
Gasoline Range Organics	ND	1.0	1	B7E0622	05/19/2017	05/19/17 15:46	
Surrogate: 4-Bromofluorobenzene *109 %*		*36 - 125*		B7E0622	05/19/2017	*05/19/17 15:46*	

Certificate of Analysis

Hushmand Associates, Inc.	Project Number : 6th St Bridge, LAC-17-001
250 Goddard	Report To : Naresh Bellana
Irvine , CA 92618	Reported : 06/05/2017

Client Sample ID 8-3-5.0

Lab ID: 1702036-AO

Diesel Range Organics by EPA 8015B

Analyst: CR

Analyte	Result (mg/kg)	PQL (mg/kg)	Dilution	Batch	Prepared	Date/Time Analyzed	Notes
DRO	ND	10	1	B7E0786	05/23/2017	05/24/17 20:33	
Surrogate: p-Terphenyl	*73.7 %*	*47 - 157*		B7E0786	05/23/2017	*05/24/17 20:33*	

Volatile Organic Compounds by EPA 8260B

Analyst: AG

Analyte	Result (ug/kg)	PQL (ug/kg)	Dilution	Batch	Prepared	Date/Time Analyzed	Notes
1,1,1,2-Tetrachloroethane	ND	5.0	1	B7E0654	05/19/2017	05/19/17 10:27	
1,1,1-Trichloroethane	ND	5.0	1	B7E0654	05/19/2017	05/19/17 10:27	
1,1,2,2-Tetrachloroethane	ND	5.0	1	B7E0654	05/19/2017	05/19/17 10:27	
1,1,2-Trichloroethane	ND	5.0	1	B7E0654	05/19/2017	05/19/17 10:27	
1,1-Dichloroethane	ND	5.0	1	B7E0654	05/19/2017	05/19/17 10:27	
1,1-Dichloroethene	ND	5.0	1	B7E0654	05/19/2017	05/19/17 10:27	
1,1-Dichloropropene	ND	5.0	1	B7E0654	05/19/2017	05/19/17 10:27	
1,2,3-Trichloropropane	ND	5.0	1	B7E0654	05/19/2017	05/19/17 10:27	
1,2,3-Trichlorobenzene	ND	5.0	1	B7E0654	05/19/2017	05/19/17 10:27	
1,2,4-Trichlorobenzene	ND	5.0	1	B7E0654	05/19/2017	05/19/17 10:27	
1,2,4-Trimethylbenzene	ND	5.0	1	B7E0654	05/19/2017	05/19/17 10:27	
1,2-Dibromo-3-chloropropane	ND	10	1	B7E0654	05/19/2017	05/19/17 10:27	
1,2-Dibromoethane	ND	5.0	1	B7E0654	05/19/2017	05/19/17 10:27	
1,2-Dichlorobenzene	ND	5.0	1	B7E0654	05/19/2017	05/19/17 10:27	
1,2-Dichloroethane	ND	5.0	1	B7E0654	05/19/2017	05/19/17 10:27	
1,2-Dichloropropane	ND	5.0	1	B7E0654	05/19/2017	05/19/17 10:27	
1,3,5-Trimethylbenzene	ND	5.0	1	B7E0654	05/19/2017	05/19/17 10:27	
1,3-Dichlorobenzene	ND	5.0	1	B7E0654	05/19/2017	05/19/17 10:27	
1,3-Dichloropropane	ND	5.0	1	B7E0654	05/19/2017	05/19/17 10:27	
1,4-Dichlorobenzene	ND	5.0	1	B7E0654	05/19/2017	05/19/17 10:27	
2,2-Dichloropropane	ND	5.0	1	B7E0654	05/19/2017	05/19/17 10:27	
2-Chlorotoluene	ND	5.0	1	B7E0654	05/19/2017	05/19/17 10:27	
4-Chlorotoluene	ND	5.0	1	B7E0654	05/19/2017	05/19/17 10:27	
4-Isopropyltoluene	ND	5.0	1	B7E0654	05/19/2017	05/19/17 10:27	
Benzene	ND	5.0	1	B7E0654	05/19/2017	05/19/17 10:27	
Bromobenzene	ND	5.0	1	B7E0654	05/19/2017	05/19/17 10:27	
Bromochloromethane	ND	5.0	1	B7E0654	05/19/2017	05/19/17 10:27	
Bromodichloromethane	ND	5.0	1	B7E0654	05/19/2017	05/19/17 10:27	
Bromoform	ND	5.0	1	B7E0654	05/19/2017	05/19/17 10:27	
Bromomethane	ND	5.0	1	B7E0654	05/19/2017	05/19/17 10:27	

Certificate of Analysis

Hushmand Associates, Inc.	Project Number : 6th St Bridge, LAC-17-001
250 Goddard	Report To : Naresh Bellana
Irvine , CA 92618	Reported : 06/05/2017

Client Sample ID 8-3-5.0

Lab ID: 1702036-AO

Volatile Organic Compounds by EPA 8260B **Analyst: AG**

Analyte	Result (ug/kg)	PQL (ug/kg)	Dilution	Batch	Prepared	Date/Time Analyzed	Notes
Carbon disulfide	ND	5.0	1	B7E0654	05/19/2017	05/19/17 10:27	
Carbon tetrachloride	ND	5.0	1	B7E0654	05/19/2017	05/19/17 10:27	
Chlorobenzene	ND	5.0	1	B7E0654	05/19/2017	05/19/17 10:27	
Chloroethane	ND	5.0	1	B7E0654	05/19/2017	05/19/17 10:27	
Chloroform	ND	5.0	1	B7E0654	05/19/2017	05/19/17 10:27	
Chloromethane	ND	5.0	1	B7E0654	05/19/2017	05/19/17 10:27	
cis-1,2-Dichloroethene	ND	5.0	1	B7E0654	05/19/2017	05/19/17 10:27	
cis-1,3-Dichloropropene	ND	5.0	1	B7E0654	05/19/2017	05/19/17 10:27	
Di-isopropyl ether	ND	5.0	1	B7E0654	05/19/2017	05/19/17 10:27	
Dibromochloromethane	ND	5.0	1	B7E0654	05/19/2017	05/19/17 10:27	
Dibromomethane	ND	5.0	1	B7E0654	05/19/2017	05/19/17 10:27	
Dichlorodifluoromethane	ND	5.0	1	B7E0654	05/19/2017	05/19/17 10:27	
Ethyl Acetate	ND	50	1	B7E0654	05/19/2017	05/19/17 10:27	
Ethyl Ether	ND	50	1	B7E0654	05/19/2017	05/19/17 10:27	
Ethyl tert-butyl ether	ND	5.0	1	B7E0654	05/19/2017	05/19/17 10:27	
Ethylbenzene	ND	5.0	1	B7E0654	05/19/2017	05/19/17 10:27	
Freon-113	ND	5.0	1	B7E0654	05/19/2017	05/19/17 10:27	
Hexachlorobutadiene	ND	5.0	1	B7E0654	05/19/2017	05/19/17 10:27	
Isopropylbenzene	ND	5.0	1	B7E0654	05/19/2017	05/19/17 10:27	
m,p-Xylene	ND	10	1	B7E0654	05/19/2017	05/19/17 10:27	
Methylene chloride	ND	5.0	1	B7E0654	05/19/2017	05/19/17 10:27	
MTBE	ND	5.0	1	B7E0654	05/19/2017	05/19/17 10:27	
n-Butylbenzene	ND	5.0	1	B7E0654	05/19/2017	05/19/17 10:27	
n-Propylbenzene	ND	5.0	1	B7E0654	05/19/2017	05/19/17 10:27	
Naphthalene	ND	5.0	1	B7E0654	05/19/2017	05/19/17 10:27	
o-Xylene	ND	5.0	1	B7E0654	05/19/2017	05/19/17 10:27	
sec-Butylbenzene	ND	5.0	1	B7E0654	05/19/2017	05/19/17 10:27	
Styrene	ND	5.0	1	B7E0654	05/19/2017	05/19/17 10:27	
tert-Amyl methyl ether	ND	5.0	1	B7E0654	05/19/2017	05/19/17 10:27	
tert-Butanol	ND	100	1	B7E0654	05/19/2017	05/19/17 10:27	
tert-Butylbenzene	ND	5.0	1	B7E0654	05/19/2017	05/19/17 10:27	
Tetrachloroethene	ND	5.0	1	B7E0654	05/19/2017	05/19/17 10:27	
Toluene	ND	5.0	1	B7E0654	05/19/2017	05/19/17 10:27	
trans-1,2-Dichloroethene	ND	5.0	1	B7E0654	05/19/2017	05/19/17 10:27	
trans-1,3-Dichloropropene	ND	5.0	1	B7E0654	05/19/2017	05/19/17 10:27	
Trichloroethene	ND	5.0	1	B7E0654	05/19/2017	05/19/17 10:27	
Trichlorofluoromethane	ND	5.0	1	B7E0654	05/19/2017	05/19/17 10:27	

Certificate of Analysis

Hushmand Associates, Inc.	Project Number : 6th St Bridge, LAC-17-001
250 Goddard	Report To : Naresh Bellana
Irvine , CA 92618	Reported : 06/05/2017

Client Sample ID 8-3-5.0

Lab ID: 1702036-AO

Volatile Organic Compounds by EPA 8260B

Analyst: AG

Analyte	Result (ug/kg)	PQL (ug/kg)	Dilution	Batch	Prepared	Date/Time Analyzed	Notes
Vinyl acetate	ND	50	1	B7E0654	05/19/2017	05/19/17 10:27	
Vinyl chloride	ND	5.0	1	B7E0654	05/19/2017	05/19/17 10:27	
Surrogate: 1,2-Dichloroethane-d4	*105 %*	*12 - 186*		B7E0654	05/19/2017	*05/19/17 10:27*	
Surrogate: 4-Bromofluorobenzene	*106 %*	*23 - 162*		B7E0654	05/19/2017	*05/19/17 10:27*	
Surrogate: Dibromofluoromethane	*94.4 %*	*23 - 179*		B7E0654	05/19/2017	*05/19/17 10:27*	
Surrogate: Toluene-d8	*97.9 %*	*26 - 164*		B7E0654	05/19/2017	*05/19/17 10:27*	

Semivolatile Organic Compounds by EPA 8270C

Analyst: SP

Analyte	Result (ug/kg)	PQL (ug/kg)	Dilution	Batch	Prepared	Date/Time Analyzed	Notes
1,2,4-Trichlorobenzene	ND	330	1	B7E0814	05/24/2017	05/31/17 15:57	
1,2-Dichlorobenzene	ND	330	1	B7E0814	05/24/2017	05/31/17 15:57	
1,3-Dichlorobenzene	ND	330	1	B7E0814	05/24/2017	05/31/17 15:57	
1,4-Dichlorobenzene	ND	330	1	B7E0814	05/24/2017	05/31/17 15:57	
2,4,5-Trichlorophenol	ND	330	1	B7E0814	05/24/2017	05/31/17 15:57	
2,4,6-Trichlorophenol	ND	330	1	B7E0814	05/24/2017	05/31/17 15:57	
2,4-Dichlorophenol	ND	1600	1	B7E0814	05/24/2017	05/31/17 15:57	
2,4-Dimethylphenol	ND	330	1	B7E0814	05/24/2017	05/31/17 15:57	
2,4-Dinitrophenol	ND	1600	1	B7E0814	05/24/2017	05/31/17 15:57	
2,4-Dinitrotoluene	ND	330	1	B7E0814	05/24/2017	05/31/17 15:57	
2,6-Dinitrotoluene	ND	330	1	B7E0814	05/24/2017	05/31/17 15:57	
2-Chloronaphthalene	ND	330	1	B7E0814	05/24/2017	05/31/17 15:57	
2-Chlorophenol	ND	330	1	B7E0814	05/24/2017	05/31/17 15:57	
2-Methylnaphthalene	ND	330	1	B7E0814	05/24/2017	05/31/17 15:57	
2-Methylphenol	ND	330	1	B7E0814	05/24/2017	05/31/17 15:57	
2-Nitroaniline	ND	1600	1	B7E0814	05/24/2017	05/31/17 15:57	
2-Nitrophenol	ND	330	1	B7E0814	05/24/2017	05/31/17 15:57	
3,3´-Dichlorobenzidine	ND	660	1	B7E0814	05/24/2017	05/31/17 15:57	
3-Nitroaniline	ND	1600	1	B7E0814	05/24/2017	05/31/17 15:57	
4,6-Dinitro-2-methyphenol	ND	1600	1	B7E0814	05/24/2017	05/31/17 15:57	
4-Bromophenyl-phenylether	ND	330	1	B7E0814	05/24/2017	05/31/17 15:57	
4-Chloro-3-methylphenol	ND	660	1	B7E0814	05/24/2017	05/31/17 15:57	
4-Chloroaniline	ND	660	1	B7E0814	05/24/2017	05/31/17 15:57	
4-Chlorophenyl-phenylether	ND	330	1	B7E0814	05/24/2017	05/31/17 15:57	
4-Methylphenol	ND	330	1	B7E0814	05/24/2017	05/31/17 15:57	
4-Nitroaniline	ND	1600	1	B7E0814	05/24/2017	05/31/17 15:57	

Certificate of Analysis

Hushmand Associates, Inc.	Project Number : 6th St Bridge, LAC-17-001
250 Goddard	Report To : Naresh Bellana
Irvine , CA 92618	Reported : 06/05/2017

Client Sample ID 8-3-5.0

Lab ID: 1702036-AO

Semivolatile Organic Compounds by EPA 8270C **Analyst: SP**

Analyte	Result (ug/kg)	PQL (ug/kg)	Dilution	Batch	Prepared	Date/Time Analyzed	Notes
4-Nitrophenol	ND	330	1	B7E0814	05/24/2017	05/31/17 15:57	
Acenaphthene	ND	330	1	B7E0814	05/24/2017	05/31/17 15:57	
Acenaphthylene	ND	330	1	B7E0814	05/24/2017	05/31/17 15:57	
Anthracene	ND	330	1	B7E0814	05/24/2017	05/31/17 15:57	
Benzidine (M)	ND	1600	1	B7E0814	05/24/2017	05/31/17 15:57	
Benzo(a)anthracene	ND	330	1	B7E0814	05/24/2017	05/31/17 15:57	
Benzo(a)pyrene	ND	330	1	B7E0814	05/24/2017	05/31/17 15:57	
Benzo(b)fluoranthene	ND	330	1	B7E0814	05/24/2017	05/31/17 15:57	
Benzo(g,h,i)perylene	ND	330	1	B7E0814	05/24/2017	05/31/17 15:57	
Benzo(k)fluoranthene	ND	330	1	B7E0814	05/24/2017	05/31/17 15:57	
Benzoic acid	ND	1600	1	B7E0814	05/24/2017	05/31/17 15:57	
Benzyl alcohol	ND	660	1	B7E0814	05/24/2017	05/31/17 15:57	
bis(2-chloroethoxy)methane	ND	330	1	B7E0814	05/24/2017	05/31/17 15:57	
bis(2-Chloroethyl)ether	ND	330	1	B7E0814	05/24/2017	05/31/17 15:57	
bis(2-chloroisopropyl)ether	ND	330	1	B7E0814	05/24/2017	05/31/17 15:57	
bis(2-ethylhexyl)phthalate	ND	330	1	B7E0814	05/24/2017	05/31/17 15:57	
Butylbenzylphthalate	ND	330	1	B7E0814	05/24/2017	05/31/17 15:57	
Chrysene	ND	330	1	B7E0814	05/24/2017	05/31/17 15:57	
Di-n-butylphthalate	ND	330	1	B7E0814	05/24/2017	05/31/17 15:57	
Di-n-octylphthalate	ND	330	1	B7E0814	05/24/2017	05/31/17 15:57	
Dibenz(a,h)anthracene	ND	330	1	B7E0814	05/24/2017	05/31/17 15:57	
Dibenzofuran	ND	330	1	B7E0814	05/24/2017	05/31/17 15:57	
Diethyl phthalate	ND	330	1	B7E0814	05/24/2017	05/31/17 15:57	
Dimethyl phthalate	ND	330	1	B7E0814	05/24/2017	05/31/17 15:57	
Fluoranthene	ND	330	1	B7E0814	05/24/2017	05/31/17 15:57	
Fluorene	ND	330	1	B7E0814	05/24/2017	05/31/17 15:57	
Hexachlorobenzene	ND	330	1	B7E0814	05/24/2017	05/31/17 15:57	
Hexachlorobutadiene	ND	660	1	B7E0814	05/24/2017	05/31/17 15:57	
Hexachlorocyclopentadiene	ND	660	1	B7E0814	05/24/2017	05/31/17 15:57	
Hexachloroethane	ND	330	1	B7E0814	05/24/2017	05/31/17 15:57	
Indeno(1,2,3-cd)pyrene	ND	330	1	B7E0814	05/24/2017	05/31/17 15:57	
Isophorone	ND	330	1	B7E0814	05/24/2017	05/31/17 15:57	
N-Nitroso-di-n propylamine	ND	330	1	B7E0814	05/24/2017	05/31/17 15:57	
N-Nitrosodiphenylamine	ND	330	1	B7E0814	05/24/2017	05/31/17 15:57	
Naphthalene	ND	330	1	B7E0814	05/24/2017	05/31/17 15:57	
Nitrobenzene	ND	330	1	B7E0814	05/24/2017	05/31/17 15:57	
Pentachlorophenol	ND	1600	1	B7E0814	05/24/2017	05/31/17 15:57	

Certificate of Analysis

Hushmand Associates, Inc.	Project Number : 6th St Bridge, LAC-17-001
250 Goddard	Report To : Naresh Bellana
Irvine , CA 92618	Reported : 06/05/2017

Client Sample ID 8-3-5.0

Lab ID: 1702036-AO

Semivolatile Organic Compounds by EPA 8270C **Analyst: SP**

Analyte	Result (ug/kg)	PQL (ug/kg)	Dilution	Batch	Prepared	Date/Time Analyzed	Notes
Phenanthrene	ND	330	1	B7E0814	05/24/2017	05/31/17 15:57	
Phenol	ND	330	1	B7E0814	05/24/2017	05/31/17 15:57	
Pyrene	ND	330	1	B7E0814	05/24/2017	05/31/17 15:57	
Pyridine	ND	1600	1	B7E0814	05/24/2017	05/31/17 15:57	
Surrogate: 1,2-Dichlorobenzene-d4	*47.2 %*	*38 - 93*		B7E0814	05/24/2017	*05/31/17 15:57*	
Surrogate: 2,4,6-Tribromophenol	*55.1 %*	*27 - 124*		B7E0814	05/24/2017	*05/31/17 15:57*	
Surrogate: 2-Chlorophenol-d4	*49.2 %*	*36 - 96*		B7E0814	05/24/2017	*05/31/17 15:57*	
Surrogate: 2-Fluorobiphenyl	*55.4 %*	*44 - 100*		B7E0814	05/24/2017	*05/31/17 15:57*	
Surrogate: 2-Fluorophenol	*46.6 %*	*32 - 89*		B7E0814	05/24/2017	*05/31/17 15:57*	
Surrogate: 4-Terphenyl-d14	*65.3 %*	*49 - 123*		B7E0814	05/24/2017	*05/31/17 15:57*	
Surrogate: Nitrobenzene-d5	*52.1 %*	*38 - 104*		B7E0814	05/24/2017	*05/31/17 15:57*	
Surrogate: Phenol-d5	*50.6 %*	*35 - 95*		B7E0814	05/24/2017	*05/31/17 15:57*	

Certificate of Analysis

Hushmand Associates, Inc.	Project Number : 6th St Bridge, LAC-17-001
250 Goddard	Report To : Naresh Bellana
Irvine , CA 92618	Reported : 06/05/2017

QUALITY CONTROL SECTION

Total Metals by ICP-AES EPA 6010B - Quality Control

Analyte	Result (mg/kg)	PQL (mg/kg)	MDL (mg/kg)	Spike Level	Source Result	% Rec	% Rec Limits	RPD	RPD Limit	Notes
Batch B7E0655 - EPA 3050B_S										
Blank (B7E0655-BLK1)					Prepared: 5/20/2017 Analyzed: 5/22/2017					
Lead	ND	1.0	0.19							
LCS (B7E0655-BS1)					Prepared: 5/20/2017 Analyzed: 5/22/2017					
Lead	46.0863	1.0	0.19	50.0000		92.2	80 - 120			
Matrix Spike (B7E0655-MS1)			**Source: 1702055-01**		Prepared: 5/20/2017 Analyzed: 5/22/2017					
Lead	82.4062	1.0	0.19	125.000	6.92486	60.4	34 - 129			
Matrix Spike Dup (B7E0655-MSD1)			**Source: 1702055-01**		Prepared: 5/20/2017 Analyzed: 5/22/2017					
Lead	93.4371	1.0	0.19	125.000	6.92486	69.2	34 - 129	12.5	20	

Certificate of Analysis

Hushmand Associates, Inc.	Project Number : 6th St Bridge, LAC-17-001
250 Goddard	Report To : Naresh Bellana
Irvine , CA 92618	Reported : 06/05/2017

Title 22 Metals by ICP-AES EPA 6010B - Quality Control

Analyte	Result (mg/kg)	PQL (mg/kg)	MDL (mg/kg)	Spike Level	Source Result	% Rec	% Rec Limits	RPD	RPD Limit	Notes
Batch B7E0669 - EPA 3050B_S										
Blank (B7E0669-BLK1)					Prepared: 5/20/2017 Analyzed: 5/22/2017					
Antimony	ND	2.0	0.44							
Arsenic	ND	1.0	0.70							
Barium	ND	1.0	0.10							
Beryllium	ND	1.0	0.04							
Cadmium	ND	1.0	0.09							
Chromium	ND	1.0	0.12							
Cobalt	ND	1.0	0.10							
Copper	ND	2.0	0.11							
Lead	ND	1.0	0.19							
Molybdenum	ND	1.0	0.13							
Nickel	ND	1.0	0.10							
Selenium	ND	1.0	0.88							
Silver	ND	1.0	0.07							
Thallium	ND	1.0	0.42							
Vanadium	ND	1.0	0.19							
Zinc	ND	1.0	0.18							
LCS (B7E0669-BS1)					Prepared: 5/20/2017 Analyzed: 5/22/2017					
Antimony	48.1300	2.0	0.44	50.0000		96.3	80 - 120			
Arsenic	44.5354	1.0	0.70	50.0000		89.1	80 - 120			
Barium	49.2158	1.0	0.10	50.0000		98.4	80 - 120			
Beryllium	46.1623	1.0	0.04	50.0000		92.3	80 - 120			
Cadmium	46.0922	1.0	0.09	50.0000		92.2	80 - 120			
Chromium	49.1984	1.0	0.12	50.0000		98.4	80 - 120			
Cobalt	48.0067	1.0	0.10	50.0000		96.0	80 - 120			
Copper	48.3954	2.0	0.11	50.0000		96.8	80 - 120			
Lead	46.5985	1.0	0.19	50.0000		93.2	80 - 120			
Molybdenum	46.5292	1.0	0.13	50.0000		93.1	80 - 120			
Nickel	46.7901	1.0	0.10	50.0000		93.6	80 - 120			
Selenium	42.9070	1.0	0.88	50.0000		85.8	80 - 120			
Silver	45.6082	1.0	0.07	50.0000		91.2	80 - 120			
Thallium	47.6197	1.0	0.42	50.0000		95.2	80 - 120			
Vanadium	48.4400	1.0	0.19	50.0000		96.9	80 - 120			
Zinc	44.7520	1.0	0.18	50.0000		89.5	80 - 120			
Duplicate (B7E0669-DUP1)				**Source: 1702018-85**	Prepared: 5/20/2017 Analyzed: 5/22/2017					
Antimony	ND	2.0	0.44		0.753624			NR	20	
Arsenic	1.41506	1.0	0.70		0.902766			44.2	20	R
Barium	40.2379	1.0	0.10		59.3570			38.4	20	R
Beryllium	ND	1.0	0.04		ND			NR	20	
Cadmium	ND	1.0	0.09		ND			NR	20	
Chromium	26.9042	1.0	0.12		40.5312			40.4	20	R

Certificate of Analysis

Hushmand Associates, Inc.	Project Number : 6th St Bridge, LAC-17-001
250 Goddard	Report To : Naresh Bellana
Irvine , CA 92618	Reported : 06/05/2017

Title 22 Metals by ICP-AES EPA 6010B - Quality Control (cont'd)

Analyte	Result (mg/kg)	PQL (mg/kg)	MDL (mg/kg)	Spike Level	Source Result	% Rec	% Rec Limits	RPD	RPD Limit	Notes
Batch B7E0669 - EPA 3050B_S (continued)										
Duplicate (B7E0669-DUP1) - Continued			**Source: 1702018-85**		Prepared: 5/20/2017 Analyzed: 5/22/2017					
Cobalt	11.4744	1.0	0.10		11.6221			1.28	20	
Copper	14.0148	2.0	0.11		15.0233			6.95	20	
Lead	14.8485	1.0	0.19		18.2077			20.3	20	R
Molybdenum	ND	1.0	0.13		ND			NR	20	
Nickel	35.2828	1.0	0.10		31.9466			9.92	20	
Selenium	ND	1.0	0.88		1.21525			NR	20	
Silver	ND	1.0	0.07		ND			NR	20	
Thallium	ND	1.0	0.42		ND			NR	20	
Vanadium	53.7270	1.0	0.19		73.5864			31.2	20	R
Zinc	23.7289	1.0	0.18		23.4294			1.27	20	
Matrix Spike (B7E0669-MS1)			**Source: 1702018-85**		Prepared: 5/20/2017 Analyzed: 5/22/2017					
Antimony	80.5920	2.0	0.44	125.000	0.753624	63.9	34 - 103			
Arsenic	90.4464	1.0	0.70	125.000	0.902766	71.6	59 - 103			
Barium	168.668	1.0	0.10	125.000	59.3570	87.4	30 - 134			
Beryllium	98.4693	1.0	0.04	125.000	ND	78.8	62 - 105			
Cadmium	96.4720	1.0	0.09	125.000	ND	77.2	53 - 102			
Chromium	146.976	1.0	0.12	125.000	40.5312	85.2	51 - 111			
Cobalt	107.139	1.0	0.10	125.000	11.6221	76.4	55 - 105			
Copper	127.556	2.0	0.11	125.000	15.0233	90.0	53 - 126			
Lead	110.556	1.0	0.19	125.000	18.2077	73.9	34 - 129			
Molybdenum	93.5890	1.0	0.13	125.000	ND	74.9	57 - 105			
Nickel	122.249	1.0	0.10	125.000	31.9466	72.2	49 - 109			
Selenium	88.3522	1.0	0.88	125.000	1.21525	69.7	57 - 99			
Silver	103.067	1.0	0.07	125.000	ND	82.5	64 - 105			
Thallium	82.9882	1.0	0.42	125.000	ND	66.4	46 - 105			
Vanadium	191.620	1.0	0.19	125.000	73.5864	94.4	60 - 109			
Zinc	114.004	1.0	0.18	125.000	23.4294	72.5	29 - 122			
Matrix Spike Dup (B7E0669-MSD1)			**Source: 1702018-85**		Prepared: 5/20/2017 Analyzed: 5/22/2017					
Antimony	80.2187	2.0	0.44	125.000	0.753624	63.6	34 - 103	0.464	20	
Arsenic	91.9758	1.0	0.70	125.000	0.902766	72.9	59 - 103	1.68	20	
Barium	140.373	1.0	0.10	125.000	59.3570	64.8	30 - 134	18.3	20	
Beryllium	98.2005	1.0	0.04	125.000	ND	78.6	62 - 105	0.273	20	
Cadmium	92.2885	1.0	0.09	125.000	ND	73.8	53 - 102	4.43	20	
Chromium	122.228	1.0	0.12	125.000	40.5312	65.4	51 - 111	18.4	20	
Cobalt	104.551	1.0	0.10	125.000	11.6221	74.3	55 - 105	2.45	20	
Copper	116.646	2.0	0.11	125.000	15.0233	81.3	53 - 126	8.94	20	
Lead	102.037	1.0	0.19	125.000	18.2077	67.1	34 - 129	8.01	20	
Molybdenum	93.5026	1.0	0.13	125.000	ND	74.8	57 - 105	0.0924	20	
Nickel	126.852	1.0	0.10	125.000	31.9466	75.9	49 - 109	3.70	20	
Selenium	87.8392	1.0	0.88	125.000	1.21525	69.3	57 - 99	0.582	20	

Certificate of Analysis

Hushmand Associates, Inc.	Project Number : 6th St Bridge, LAC-17-001
250 Goddard	Report To : Naresh Bellana
Irvine , CA 92618	Reported : 06/05/2017

Title 22 Metals by ICP-AES EPA 6010B - Quality Control (cont'd)

Analyte	Result (mg/kg)	PQL (mg/kg)	MDL (mg/kg)	Spike Level	Source Result	% Rec	% Rec Limits	RPD	RPD Limit	Notes
Batch B7E0669 - EPA 3050B_S (continued)										
Matrix Spike Dup (B7E0669-MSD1) - Continued			**Source: 1702018-85**		Prepared: 5/20/2017 Analyzed: 5/22/2017					
Silver	96.6332	1.0	0.07	125.000	ND	77.3	64 - 105	6.44	20	
Thallium	85.1528	1.0	0.42	125.000	ND	68.1	46 - 105	2.57	20	
Vanadium	147.037	1.0	0.19	125.000	73.5864	58.8	60 - 109	26.3	20	M1, R
Zinc	109.636	1.0	0.18	125.000	23.4294	69.0	29 - 122	3.91	20	

Certificate of Analysis

Hushmand Associates, Inc.	Project Number : 6th St Bridge, LAC-17-001
250 Goddard	Report To : Naresh Bellana
Irvine , CA 92618	Reported : 06/05/2017

Title 22 Metals by ICP-AES EPA 6010B - Quality Control

Analyte	Result (mg/kg)	PQL (mg/kg)	MDL (mg/kg)	Spike Level	Source Result	% Rec	% Rec Limits	RPD	RPD Limit	Notes
Batch B7E0680 - EPA 3050B_S										
Blank (B7E0680-BLK1)						Prepared: 5/20/2017 Analyzed: 5/22/2017				
Antimony	ND	2.0	0.44							
Arsenic	ND	1.0	0.70							
Barium	ND	1.0	0.10							
Beryllium	ND	1.0	0.04							
Cadmium	ND	1.0	0.09							
Chromium	ND	1.0	0.12							
Cobalt	ND	1.0	0.10							
Copper	ND	2.0	0.11							
Lead	ND	1.0	0.19							
Molybdenum	ND	1.0	0.13							
Nickel	ND	1.0	0.10							
Selenium	ND	1.0	0.88							
Silver	ND	1.0	0.07							
Thallium	ND	1.0	0.42							
Vanadium	ND	1.0	0.19							
Zinc	ND	1.0	0.18							
LCS (B7E0680-BS1)						Prepared: 5/20/2017 Analyzed: 5/22/2017				
Antimony	48.1492	2.0	0.44	50.0000		96.3	80 - 120			
Arsenic	45.1386	1.0	0.70	50.0000		90.3	80 - 120			
Barium	49.3993	1.0	0.10	50.0000		98.8	80 - 120			
Beryllium	45.6704	1.0	0.04	50.0000		91.3	80 - 120			
Cadmium	46.1636	1.0	0.09	50.0000		92.3	80 - 120			
Chromium	49.1350	1.0	0.12	50.0000		98.3	80 - 120			
Cobalt	48.4948	1.0	0.10	50.0000		97.0	80 - 120			
Copper	48.4942	2.0	0.11	50.0000		97.0	80 - 120			
Lead	46.6505	1.0	0.19	50.0000		93.3	80 - 120			
Molybdenum	46.6602	1.0	0.13	50.0000		93.3	80 - 120			
Nickel	46.9446	1.0	0.10	50.0000		93.9	80 - 120			
Selenium	42.8242	1.0	0.88	50.0000		85.6	80 - 120			
Silver	45.6022	1.0	0.07	50.0000		91.2	80 - 120			
Thallium	47.4812	1.0	0.42	50.0000		95.0	80 - 120			
Vanadium	48.4848	1.0	0.19	50.0000		97.0	80 - 120			
Zinc	44.5922	1.0	0.18	50.0000		89.2	80 - 120			
Matrix Spike (B7E0680-MS1)				**Source: 1702036-10**		Prepared: 5/20/2017 Analyzed: 5/22/2017				
Antimony	81.3363	2.0	0.44	125.000	ND	65.1	34 - 103			
Arsenic	95.2716	1.0	0.70	125.000	0.834842	75.5	59 - 103			
Barium	217.647	1.0	0.10	125.000	131.719	68.7	30 - 134			
Beryllium	96.7535	1.0	0.04	125.000	ND	77.4	62 - 105			
Cadmium	91.9876	1.0	0.09	125.000	0.590169	73.1	53 - 102			
Chromium	107.897	1.0	0.12	125.000	11.1326	77.4	51 - 111			

Certificate of Analysis

Hushmand Associates, Inc.	Project Number : 6th St Bridge, LAC-17-001
250 Goddard	Report To : Naresh Bellana
Irvine , CA 92618	Reported : 06/05/2017

Title 22 Metals by ICP-AES EPA 6010B - Quality Control (cont'd)

Analyte	Result (mg/kg)	PQL (mg/kg)	MDL (mg/kg)	Spike Level	Source Result	% Rec	% Rec Limits	RPD	RPD Limit	Notes
Batch B7E0680 - EPA 3050B_S (continued)										
Matrix Spike (B7E0680-MS1) - Continued			**Source: 1702036-10**			Prepared: 5/20/2017 Analyzed: 5/22/2017				
Cobalt	99.3906	1.0	0.10	125.000	6.51811	74.3	55 - 105			
Copper	140.942	2.0	0.11	125.000	25.8576	92.1	53 - 126			
Lead	235.454	1.0	0.19	125.000	128.953	85.2	34 - 129			
Molybdenum	94.1353	1.0	0.13	125.000	ND	75.3	57 - 105			
Nickel	103.206	1.0	0.10	125.000	10.2359	74.4	49 - 109			
Selenium	89.8338	1.0	0.88	125.000	ND	71.9	57 - 99			
Silver	95.7218	1.0	0.07	125.000	ND	76.6	64 - 105			
Thallium	83.6303	1.0	0.42	125.000	ND	66.9	46 - 105			
Vanadium	120.435	1.0	0.19	125.000	26.9997	74.7	60 - 109			
Zinc	243.145	1.0	0.18	125.000	153.219	71.9	29 - 122			
Matrix Spike Dup (B7E0680-MSD1)			**Source: 1702036-10**			Prepared: 5/20/2017 Analyzed: 5/22/2017				
Antimony	79.4896	2.0	0.44	125.000	ND	63.6	34 - 103	2.30	20	
Arsenic	94.1084	1.0	0.70	125.000	0.834842	74.6	59 - 103	1.23	20	
Barium	214.267	1.0	0.10	125.000	131.719	66.0	30 - 134	1.57	20	
Beryllium	94.6004	1.0	0.04	125.000	ND	75.7	62 - 105	2.25	20	
Cadmium	93.5058	1.0	0.09	125.000	0.590169	74.3	53 - 102	1.64	20	
Chromium	104.732	1.0	0.12	125.000	11.1326	74.9	51 - 111	2.98	20	
Cobalt	95.8508	1.0	0.10	125.000	6.51811	71.5	55 - 105	3.63	20	
Copper	120.770	2.0	0.11	125.000	25.8576	75.9	53 - 126	15.4	20	
Lead	255.513	1.0	0.19	125.000	128.953	101	34 - 129	8.17	20	
Molybdenum	93.4982	1.0	0.13	125.000	ND	74.8	57 - 105	0.679	20	
Nickel	98.6401	1.0	0.10	125.000	10.2359	70.7	49 - 109	4.52	20	
Selenium	89.1178	1.0	0.88	125.000	ND	71.3	57 - 99	0.800	20	
Silver	98.9142	1.0	0.07	125.000	ND	79.1	64 - 105	3.28	20	
Thallium	84.9448	1.0	0.42	125.000	ND	68.0	46 - 105	1.56	20	
Vanadium	119.650	1.0	0.19	125.000	26.9997	74.1	60 - 109	0.653	20	
Zinc	218.704	1.0	0.18	125.000	153.219	52.4	29 - 122	10.6	20	

Certificate of Analysis

Hushmand Associates, Inc.	Project Number : 6th St Bridge, LAC-17-001
250 Goddard	Report To : Naresh Bellana
Irvine , CA 92618	Reported : 06/05/2017

Title 22 Metals by ICP-AES EPA 6010B - Quality Control

Analyte	Result (mg/kg)	PQL (mg/kg)	MDL (mg/kg)	Spike Level	Source Result	% Rec	% Rec Limits	RPD	RPD Limit	Notes
Batch B7E0681 - EPA 3050B_S										
Blank (B7E0681-BLK1)						Prepared: 5/20/2017 Analyzed: 5/22/2017				
Antimony	ND	2.0	0.44							
Arsenic	ND	1.0	0.70							
Barium	ND	1.0	0.10							
Beryllium	ND	1.0	0.04							
Cadmium	ND	1.0	0.09							
Chromium	ND	1.0	0.12							
Cobalt	ND	1.0	0.10							
Copper	ND	2.0	0.11							
Lead	ND	1.0	0.19							
Molybdenum	ND	1.0	0.13							
Nickel	ND	1.0	0.10							
Selenium	ND	1.0	0.88							
Silver	ND	1.0	0.07							
Thallium	ND	1.0	0.42							
Vanadium	ND	1.0	0.19							
Zinc	ND	1.0	0.18							
LCS (B7E0681-BS1)						Prepared: 5/20/2017 Analyzed: 5/22/2017				
Antimony	47.7136	2.0	0.44	50.0000		95.4	80 - 120			
Arsenic	45.0253	1.0	0.70	50.0000		90.1	80 - 120			
Barium	49.6152	1.0	0.10	50.0000		99.2	80 - 120			
Beryllium	47.1233	1.0	0.04	50.0000		94.2	80 - 120			
Cadmium	46.2546	1.0	0.09	50.0000		92.5	80 - 120			
Chromium	49.4074	1.0	0.12	50.0000		98.8	80 - 120			
Cobalt	48.4099	1.0	0.10	50.0000		96.8	80 - 120			
Copper	48.6985	2.0	0.11	50.0000		97.4	80 - 120			
Lead	47.0584	1.0	0.19	50.0000		94.1	80 - 120			
Molybdenum	46.7895	1.0	0.13	50.0000		93.6	80 - 120			
Nickel	46.9410	1.0	0.10	50.0000		93.9	80 - 120			
Selenium	42.5626	1.0	0.88	50.0000		85.1	80 - 120			
Silver	46.9045	1.0	0.07	50.0000		93.8	80 - 120			
Thallium	47.6864	1.0	0.42	50.0000		95.4	80 - 120			
Vanadium	48.7992	1.0	0.19	50.0000		97.6	80 - 120			
Zinc	44.3126	1.0	0.18	50.0000		88.6	80 - 120			
Matrix Spike (B7E0681-MS1)				**Source: 1702036-30**		Prepared: 5/20/2017 Analyzed: 5/22/2017				
Antimony	83.7971	2.0	0.44	125.000	1.03701	66.2	34 - 103			
Arsenic	97.3360	1.0	0.70	125.000	2.09585	76.2	59 - 103			
Barium	209.747	1.0	0.10	125.000	83.8022	101	30 - 134			
Beryllium	100.171	1.0	0.04	125.000	ND	80.1	62 - 105			
Cadmium	95.1932	1.0	0.09	125.000	0.242475	76.0	53 - 102			
Chromium	111.953	1.0	0.12	125.000	10.0157	81.5	51 - 111			

Certificate of Analysis

Hushmand Associates, Inc.	Project Number : 6th St Bridge, LAC-17-001
250 Goddard	Report To : Naresh Bellana
Irvine , CA 92618	Reported : 06/05/2017

Title 22 Metals by ICP-AES EPA 6010B - Quality Control (cont'd)

Analyte	Result (mg/kg)	PQL (mg/kg)	MDL (mg/kg)	Spike Level	Source Result	% Rec	% Rec Limits	RPD	RPD Limit	Notes
Batch B7E0681 - EPA 3050B_S (continued)										
Matrix Spike (B7E0681-MS1) - Continued			**Source: 1702036-30**		Prepared: 5/20/2017 Analyzed: 5/22/2017					
Cobalt	101.857	1.0	0.10	125.000	5.28542	77.3	55 - 105			
Copper	124.320	2.0	0.11	125.000	19.1014	84.2	53 - 126			
Lead	190.147	1.0	0.19	125.000	68.4512	97.4	34 - 129			
Molybdenum	97.5718	1.0	0.13	125.000	ND	78.1	57 - 105			
Nickel	104.680	1.0	0.10	125.000	7.60932	77.7	49 - 109			
Selenium	91.2228	1.0	0.88	125.000	ND	73.0	57 - 99			
Silver	97.7980	1.0	0.07	125.000	ND	78.2	64 - 105			
Thallium	90.3912	1.0	0.42	125.000	ND	72.3	46 - 105			
Vanadium	123.418	1.0	0.19	125.000	21.8243	81.3	60 - 109			
Zinc	192.747	1.0	0.18	125.000	98.8063	75.2	29 - 122			
Matrix Spike Dup (B7E0681-MSD1)			**Source: 1702036-30**		Prepared: 5/20/2017 Analyzed: 5/22/2017					
Antimony	83.9100	2.0	0.44	125.000	1.03701	66.3	34 - 103	0.135	20	
Arsenic	97.7128	1.0	0.70	125.000	2.09585	76.5	59 - 103	0.386	20	
Barium	228.264	1.0	0.10	125.000	83.8022	116	30 - 134	8.46	20	
Beryllium	100.695	1.0	0.04	125.000	ND	80.6	62 - 105	0.521	20	
Cadmium	97.7646	1.0	0.09	125.000	0.242475	78.0	53 - 102	2.67	20	
Chromium	114.369	1.0	0.12	125.000	10.0157	83.5	51 - 111	2.13	20	
Cobalt	104.317	1.0	0.10	125.000	5.28542	79.2	55 - 105	2.39	20	
Copper	127.596	2.0	0.11	125.000	19.1014	86.8	53 - 126	2.60	20	
Lead	199.376	1.0	0.19	125.000	68.4512	105	34 - 129	4.74	20	
Molybdenum	98.1036	1.0	0.13	125.000	ND	78.5	57 - 105	0.544	20	
Nickel	108.370	1.0	0.10	125.000	7.60932	80.6	49 - 109	3.46	20	
Selenium	92.4668	1.0	0.88	125.000	ND	74.0	57 - 99	1.35	20	
Silver	99.1930	1.0	0.07	125.000	ND	79.4	64 - 105	1.42	20	
Thallium	89.8745	1.0	0.42	125.000	ND	71.9	46 - 105	0.573	20	
Vanadium	126.954	1.0	0.19	125.000	21.8243	84.1	60 - 109	2.82	20	
Zinc	206.000	1.0	0.18	125.000	98.8063	85.8	29 - 122	6.65	20	

Certificate of Analysis

Hushmand Associates, Inc.	Project Number : 6th St Bridge, LAC-17-001
250 Goddard	Report To : Naresh Bellana
Irvine , CA 92618	Reported : 06/05/2017

Title 22 Metals by ICP-AES EPA 6010B - Quality Control

Analyte	Result (mg/kg)	PQL (mg/kg)	MDL (mg/kg)	Spike Level	Source Result	% Rec	% Rec Limits	RPD	RPD Limit	Notes
Batch B7E0682 - EPA 3050B_S										
Blank (B7E0682-BLK1)						Prepared: 5/20/2017 Analyzed: 5/22/2017				
Antimony	ND	2.0	0.44							
Arsenic	ND	1.0	0.70							
Barium	ND	1.0	0.10							
Beryllium	ND	1.0	0.04							
Cadmium	ND	1.0	0.09							
Chromium	ND	1.0	0.12							
Cobalt	ND	1.0	0.10							
Copper	ND	2.0	0.11							
Lead	ND	1.0	0.19							
Molybdenum	ND	1.0	0.13							
Nickel	ND	1.0	0.10							
Selenium	ND	1.0	0.88							
Silver	ND	1.0	0.07							
Thallium	ND	1.0	0.42							
Vanadium	ND	1.0	0.19							
Zinc	ND	1.0	0.18							
LCS (B7E0682-BS1)						Prepared: 5/20/2017 Analyzed: 5/22/2017				
Antimony	47.4809	2.0	0.44	50.0000		95.0	80 - 120			
Arsenic	44.7524	1.0	0.70	50.0000		89.5	80 - 120			
Barium	49.3941	1.0	0.10	50.0000		98.8	80 - 120			
Beryllium	45.8855	1.0	0.04	50.0000		91.8	80 - 120			
Cadmium	46.2236	1.0	0.09	50.0000		92.4	80 - 120			
Chromium	49.0604	1.0	0.12	50.0000		98.1	80 - 120			
Cobalt	48.2626	1.0	0.10	50.0000		96.5	80 - 120			
Copper	48.3862	2.0	0.11	50.0000		96.8	80 - 120			
Lead	46.9692	1.0	0.19	50.0000		93.9	80 - 120			
Molybdenum	46.5564	1.0	0.13	50.0000		93.1	80 - 120			
Nickel	46.9770	1.0	0.10	50.0000		94.0	80 - 120			
Selenium	42.8216	1.0	0.88	50.0000		85.6	80 - 120			
Silver	46.1722	1.0	0.07	50.0000		92.3	80 - 120			
Thallium	47.3385	1.0	0.42	50.0000		94.7	80 - 120			
Vanadium	48.4747	1.0	0.19	50.0000		96.9	80 - 120			
Zinc	44.5242	1.0	0.18	50.0000		89.0	80 - 120			
Matrix Spike (B7E0682-MS1)				**Source: 1702036-50**		Prepared: 5/20/2017 Analyzed: 5/22/2017				
Antimony	91.5691	2.0	0.44	125.000	ND	73.3	34 - 103			
Arsenic	105.348	1.0	0.70	125.000	3.93645	81.1	59 - 103			
Barium	195.552	1.0	0.10	125.000	75.2534	96.2	30 - 134			
Beryllium	104.243	1.0	0.04	125.000	ND	83.4	62 - 105			
Cadmium	102.228	1.0	0.09	125.000	0.128202	81.7	53 - 102			
Chromium	120.928	1.0	0.12	125.000	9.97620	88.8	51 - 111			

Hushmand Associates, Inc.	Project Number : 6th St Bridge, LAC-17-001
250 Goddard	Report To : Naresh Bellana
Irvine , CA 92618	Reported : 06/05/2017

Title 22 Metals by ICP-AES EPA 6010B - Quality Control (cont'd)

Analyte	Result (mg/kg)	PQL (mg/kg)	MDL (mg/kg)	Spike Level	Source Result	% Rec	% Rec Limits	RPD	RPD Limit	Notes
Batch B7E0682 - EPA 3050B_S (continued)										
Matrix Spike (B7E0682-MS1) - Continued			**Source: 1702036-50**			Prepared: 5/20/2017 Analyzed: 5/22/2017				
Cobalt	109.842	1.0	0.10	125.000	6.65988	82.5	55 - 105			
Copper	129.700	2.0	0.11	125.000	13.0956	93.3	53 - 126			
Lead	157.374	1.0	0.19	125.000	59.2122	78.5	34 - 129			
Molybdenum	104.260	1.0	0.13	125.000	ND	83.4	57 - 105			
Nickel	109.308	1.0	0.10	125.000	6.89510	81.9	49 - 109			
Selenium	98.8142	1.0	0.88	125.000	ND	79.1	57 - 99			
Silver	108.439	1.0	0.07	125.000	ND	86.8	64 - 105			
Thallium	87.6478	1.0	0.42	125.000	ND	70.1	46 - 105			
Vanadium	141.209	1.0	0.19	125.000	27.2890	91.1	60 - 109			
Zinc	182.033	1.0	0.18	125.000	82.8646	79.3	29 - 122			
Matrix Spike Dup (B7E0682-MSD1)			**Source: 1702036-50**			Prepared: 5/20/2017 Analyzed: 5/22/2017				
Antimony	92.3803	2.0	0.44	125.000	ND	73.9	34 - 103	0.882	20	
Arsenic	107.211	1.0	0.70	125.000	3.93645	82.6	59 - 103	1.75	20	
Barium	195.186	1.0	0.10	125.000	75.2534	95.9	30 - 134	0.187	20	
Beryllium	105.672	1.0	0.04	125.000	ND	84.5	62 - 105	1.36	20	
Cadmium	102.596	1.0	0.09	125.000	0.128202	82.0	53 - 102	0.359	20	
Chromium	120.597	1.0	0.12	125.000	9.97620	88.5	51 - 111	0.274	20	
Cobalt	109.993	1.0	0.10	125.000	6.65988	82.7	55 - 105	0.137	20	
Copper	128.858	2.0	0.11	125.000	13.0956	92.6	53 - 126	0.651	20	
Lead	154.326	1.0	0.19	125.000	59.2122	76.1	34 - 129	1.96	20	
Molybdenum	105.718	1.0	0.13	125.000	ND	84.6	57 - 105	1.39	20	
Nickel	109.868	1.0	0.10	125.000	6.89510	82.4	49 - 109	0.510	20	
Selenium	99.4353	1.0	0.88	125.000	ND	79.5	57 - 99	0.627	20	
Silver	108.343	1.0	0.07	125.000	ND	86.7	64 - 105	0.0884	20	
Thallium	90.2642	1.0	0.42	125.000	ND	72.2	46 - 105	2.94	20	
Vanadium	140.123	1.0	0.19	125.000	27.2890	90.3	60 - 109	0.772	20	
Zinc	182.831	1.0	0.18	125.000	82.8646	80.0	29 - 122	0.437	20	

Certificate of Analysis

Hushmand Associates, Inc.	Project Number : 6th St Bridge, LAC-17-001
250 Goddard	Report To : Naresh Bellana
Irvine , CA 92618	Reported : 06/05/2017

Title 22 Metals by ICP-AES EPA 6010B - Quality Control

Analyte	Result (mg/kg)	PQL (mg/kg)	MDL (mg/kg)	Spike Level	Source Result	% Rec	% Rec Limits	RPD	RPD Limit	Notes
Batch B7E0683 - EPA 3050B_S										
Blank (B7E0683-BLK1)						Prepared: 5/20/2017 Analyzed: 5/22/2017				
Antimony	ND	2.0	0.44							
Arsenic	ND	1.0	0.70							
Barium	ND	1.0	0.10							
Beryllium	ND	1.0	0.04							
Cadmium	ND	1.0	0.09							
Chromium	ND	1.0	0.12							
Cobalt	ND	1.0	0.10							
Copper	ND	2.0	0.11							
Lead	ND	1.0	0.19							
Molybdenum	ND	1.0	0.13							
Nickel	ND	1.0	0.10							
Selenium	ND	1.0	0.88							
Silver	ND	1.0	0.07							
Thallium	ND	1.0	0.42							
Vanadium	ND	1.0	0.19							
Zinc	ND	1.0	0.18							
LCS (B7E0683-BS1)						Prepared: 5/20/2017 Analyzed: 5/22/2017				
Antimony	46.1672	2.0	0.44	50.0000		92.3	80 - 120			
Arsenic	44.8515	1.0	0.70	50.0000		89.7	80 - 120			
Barium	48.2434	1.0	0.10	50.0000		96.5	80 - 120			
Beryllium	46.8490	1.0	0.04	50.0000		93.7	80 - 120			
Cadmium	45.0464	1.0	0.09	50.0000		90.1	80 - 120			
Chromium	44.1247	1.0	0.12	50.0000		88.2	80 - 120			
Cobalt	47.0240	1.0	0.10	50.0000		94.0	80 - 120			
Copper	46.1443	2.0	0.11	50.0000		92.3	80 - 120			
Lead	45.7752	1.0	0.19	50.0000		91.6	80 - 120			
Molybdenum	45.3508	1.0	0.13	50.0000		90.7	80 - 120			
Nickel	45.6150	1.0	0.10	50.0000		91.2	80 - 120			
Selenium	43.1928	1.0	0.88	50.0000		86.4	80 - 120			
Silver	44.4009	1.0	0.07	50.0000		88.8	80 - 120			
Thallium	45.0769	1.0	0.42	50.0000		90.2	80 - 120			
Vanadium	46.3882	1.0	0.19	50.0000		92.8	80 - 120			
Zinc	45.0587	1.0	0.18	50.0000		90.1	80 - 120			
Matrix Spike (B7E0683-MS1)				**Source: 1702036-70**		Prepared: 5/20/2017 Analyzed: 5/22/2017				
Antimony	97.7893	2.0	0.44	125.000	ND	78.2	34 - 103			
Arsenic	108.300	1.0	0.70	125.000	ND	86.6	59 - 103			
Barium	149.463	1.0	0.10	125.000	35.2718	91.4	30 - 134			
Beryllium	114.702	1.0	0.04	125.000	0.224850	91.6	62 - 105			
Cadmium	105.886	1.0	0.09	125.000	0.218618	84.5	53 - 102			
Chromium	107.541	1.0	0.12	125.000	4.49867	82.4	51 - 111			

Hushmand Associates, Inc.	Project Number : 6th St Bridge, LAC-17-001
250 Goddard	Report To : Naresh Bellana
Irvine , CA 92618	Reported : 06/05/2017

Title 22 Metals by ICP-AES EPA 6010B - Quality Control (cont'd)

Analyte	Result (mg/kg)	PQL (mg/kg)	MDL (mg/kg)	Spike Level	Source Result	% Rec	% Rec Limits	RPD	RPD Limit	Notes
Batch B7E0683 - EPA 3050B_S (continued)										
Matrix Spike (B7E0683-MS1) - Continued			**Source: 1702036-70**		Prepared: 5/20/2017 Analyzed: 5/22/2017					
Cobalt	110.874	1.0	0.10	125.000	3.88326	85.6	55 - 105			
Copper	117.206	2.0	0.11	125.000	3.12230	91.3	53 - 126			
Lead	109.995	1.0	0.19	125.000	1.05199	87.2	34 - 129			
Molybdenum	108.367	1.0	0.13	125.000	ND	86.7	57 - 105			
Nickel	109.493	1.0	0.10	125.000	3.21165	85.0	49 - 109			
Selenium	105.060	1.0	0.88	125.000	ND	84.0	57 - 99			
Silver	107.105	1.0	0.07	125.000	ND	85.7	64 - 105			
Thallium	102.287	1.0	0.42	125.000	ND	81.8	46 - 105			
Vanadium	126.205	1.0	0.19	125.000	15.2134	88.8	60 - 109			
Zinc	122.546	1.0	0.18	125.000	17.1384	84.3	29 - 122			
Matrix Spike Dup (B7E0683-MSD1)			**Source: 1702036-70**		Prepared: 5/20/2017 Analyzed: 5/22/2017					
Antimony	97.3526	2.0	0.44	125.000	ND	77.9	34 - 103	0.448	20	
Arsenic	107.886	1.0	0.70	125.000	ND	86.3	59 - 103	0.383	20	
Barium	146.634	1.0	0.10	125.000	35.2718	89.1	30 - 134	1.91	20	
Beryllium	111.669	1.0	0.04	125.000	0.224850	89.2	62 - 105	2.68	20	
Cadmium	104.944	1.0	0.09	125.000	0.218618	83.8	53 - 102	0.894	20	
Chromium	105.859	1.0	0.12	125.000	4.49867	81.1	51 - 111	1.58	20	
Cobalt	109.160	1.0	0.10	125.000	3.88326	84.2	55 - 105	1.56	20	
Copper	115.852	2.0	0.11	125.000	3.12230	90.2	53 - 126	1.16	20	
Lead	108.009	1.0	0.19	125.000	1.05199	85.6	34 - 129	1.82	20	
Molybdenum	107.772	1.0	0.13	125.000	ND	86.2	57 - 105	0.550	20	
Nickel	108.120	1.0	0.10	125.000	3.21165	83.9	49 - 109	1.26	20	
Selenium	104.591	1.0	0.88	125.000	ND	83.7	57 - 99	0.447	20	
Silver	106.649	1.0	0.07	125.000	ND	85.3	64 - 105	0.426	20	
Thallium	102.604	1.0	0.42	125.000	ND	82.1	46 - 105	0.310	20	
Vanadium	124.706	1.0	0.19	125.000	15.2134	87.6	60 - 109	1.19	20	

Certificate of Analysis

Hushmand Associates, Inc.	Project Number : 6th St Bridge, LAC-17-001
250 Goddard	Report To : Naresh Bellana
Irvine , CA 92618	Reported : 06/05/2017

Title 22 Metals by ICP-AES EPA 6010B - Quality Control

Analyte	Result (mg/kg)	PQL (mg/kg)	MDL (mg/kg)	Spike Level	Source Result	% Rec	% Rec Limits	RPD	RPD Limit	Notes
Batch B7E0684 - EPA 3050B_S										
Blank (B7E0684-BLK1)					Prepared: 5/20/2017 Analyzed: 5/22/2017					
Antimony	ND	2.0	0.44							
Arsenic	ND	1.0	0.70							
Barium	ND	1.0	0.10							
Beryllium	ND	1.0	0.04							
Cadmium	ND	1.0	0.09							
Chromium	ND	1.0	0.12							
Cobalt	ND	1.0	0.10							
Copper	ND	2.0	0.11							
Lead	ND	1.0	0.19							
Molybdenum	ND	1.0	0.13							
Nickel	ND	1.0	0.10							
Selenium	ND	1.0	0.88							
Silver	ND	1.0	0.07							
Thallium	ND	1.0	0.42							
Vanadium	ND	1.0	0.19							
Zinc	ND	1.0	0.18							
LCS (B7E0684-BS1)					Prepared: 5/20/2017 Analyzed: 5/22/2017					
Antimony	45.8950	2.0	0.44	50.0000		91.8	80 - 120			
Arsenic	45.1677	1.0	0.70	50.0000		90.3	80 - 120			
Barium	48.0854	1.0	0.10	50.0000		96.2	80 - 120			
Beryllium	47.1006	1.0	0.04	50.0000		94.2	80 - 120			
Cadmium	44.3690	1.0	0.09	50.0000		88.7	80 - 120			
Chromium	44.3926	1.0	0.12	50.0000		88.8	80 - 120			
Cobalt	46.9228	1.0	0.10	50.0000		93.8	80 - 120			
Copper	45.9486	2.0	0.11	50.0000		91.9	80 - 120			
Lead	45.7562	1.0	0.19	50.0000		91.5	80 - 120			
Molybdenum	45.1958	1.0	0.13	50.0000		90.4	80 - 120			
Nickel	45.5473	1.0	0.10	50.0000		91.1	80 - 120			
Selenium	42.8758	1.0	0.88	50.0000		85.8	80 - 120			
Silver	41.9287	1.0	0.07	50.0000		83.9	80 - 120			
Thallium	44.4387	1.0	0.42	50.0000		88.9	80 - 120			
Vanadium	45.7443	1.0	0.19	50.0000		91.5	80 - 120			
Zinc	45.1195	1.0	0.18	50.0000		90.2	80 - 120			
Matrix Spike (B7E0684-MS1)				**Source: 1702036-90**	Prepared: 5/20/2017 Analyzed: 5/22/2017					
Antimony	66.2610	2.0	0.44	125.000	ND	53.0	34 - 103			
Arsenic	83.4215	1.0	0.70	125.000	1.19669	65.8	59 - 103			
Barium	159.766	1.0	0.10	125.000	124.230	28.4	30 - 134			M1
Beryllium	81.4490	1.0	0.04	125.000	0.280898	64.9	62 - 105			
Cadmium	87.9645	1.0	0.09	125.000	0.970588	69.6	53 - 102			
Chromium	80.3621	1.0	0.12	125.000	8.79547	57.3	51 - 111			

Certificate of Analysis

Hushmand Associates, Inc.	Project Number : 6th St Bridge, LAC-17-001
250 Goddard	Report To : Naresh Bellana
Irvine , CA 92618	Reported : 06/05/2017

Title 22 Metals by ICP-AES EPA 6010B - Quality Control (cont'd)

Analyte	Result (mg/kg)	PQL (mg/kg)	MDL (mg/kg)	Spike Level	Source Result	% Rec	% Rec Limits	RPD	RPD Limit	Notes
Batch B7E0684 - EPA 3050B_S (continued)										
Matrix Spike (B7E0684-MS1) - Continued			**Source: 1702036-90**		Prepared: 5/20/2017 Analyzed: 5/22/2017					
Cobalt	80.1506	1.0	0.10	125.000	4.77392	60.3	55 - 105			
Copper	306.243	2.0	0.11	125.000	699.583	-315	53 - 126			M1
Lead	131.736	1.0	0.19	125.000	68.8434	50.3	34 - 129			
Molybdenum	80.9205	1.0	0.13	125.000	ND	64.7	57 - 105			
Nickel	83.1694	1.0	0.10	125.000	12.9802	56.2	49 - 109			
Selenium	80.7733	1.0	0.88	125.000	ND	64.6	57 - 99			
Silver	90.6109	1.0	0.07	125.000	ND	72.5	64 - 105			
Thallium	85.0273	1.0	0.42	125.000	ND	68.0	46 - 105			
Vanadium	95.8326	1.0	0.19	125.000	24.3298	57.2	60 - 109			M1
Zinc	245.798	1.0	0.18	125.000	266.734	-16.7	29 - 122			M1
Matrix Spike Dup (B7E0684-MSD1)			**Source: 1702036-90**		Prepared: 5/20/2017 Analyzed: 5/22/2017					
Antimony	60.3833	2.0	0.44	125.000	ND	48.3	34 - 103	9.28	20	
Arsenic	78.5422	1.0	0.70	125.000	1.19669	61.9	59 - 103	6.03	20	
Barium	151.657	1.0	0.10	125.000	124.230	21.9	30 - 134	5.21	20	M1
Beryllium	76.3472	1.0	0.04	125.000	0.280898	60.9	62 - 105	6.47	20	M1
Cadmium	83.0358	1.0	0.09	125.000	0.970588	65.7	53 - 102	5.76	20	
Chromium	75.3526	1.0	0.12	125.000	8.79547	53.2	51 - 111	6.43	20	
Cobalt	74.6237	1.0	0.10	125.000	4.77392	55.9	55 - 105	7.14	20	
Copper	528.396	2.0	0.11	125.000	699.583	-137	53 - 126	53.2	20	M1, R
Lead	135.681	1.0	0.19	125.000	68.8434	53.5	34 - 129	2.95	20	
Molybdenum	75.3647	1.0	0.13	125.000	ND	60.3	57 - 105	7.11	20	
Nickel	85.2942	1.0	0.10	125.000	12.9802	57.9	49 - 109	2.52	20	
Selenium	75.2614	1.0	0.88	125.000	ND	60.2	57 - 99	7.07	20	
Silver	88.1210	1.0	0.07	125.000	ND	70.5	64 - 105	2.79	20	
Thallium	80.4135	1.0	0.42	125.000	ND	64.3	46 - 105	5.58	20	
Vanadium	91.1784	1.0	0.19	125.000	24.3298	53.5	60 - 109	4.98	20	M1
Zinc	325.934	1.0	0.18	125.000	266.734	47.4	29 - 122	28.0	20	R

Certificate of Analysis

Hushmand Associates, Inc.	Project Number : 6th St Bridge, LAC-17-001
250 Goddard	Report To : Naresh Bellana
Irvine , CA 92618	Reported : 06/05/2017

TCLP Metals by ICP-AES EPA 6010B - Quality Control

Analyte	Result (mg/L)	PQL (mg/L)	MDL (mg/L)	Spike Level	Source Result	% Rec	% Rec Limits	RPD	RPD Limit	Notes
Batch B7F0002 - EPA 3010A_S										
Blank (B7F0002-BLK1)					Prepared: 6/1/2017 Analyzed: 6/1/2017					
Arsenic	ND	0.050	0.0067							
Barium	ND	0.050	0.0008							
Cadmium	ND	0.050	0.0002							
Lead	ND	0.050	0.0028							
Blank (B7F0002-BLK2)					Prepared: 6/1/2017 Analyzed: 6/1/2017					
Arsenic	ND	0.050	0.0067							
Barium	ND	0.050	0.0008							
Cadmium	ND	0.050	0.0002							
Lead	ND	0.050	0.0028							
LCS (B7F0002-BS1)					Prepared: 6/1/2017 Analyzed: 6/1/2017					
Arsenic	0.981408	0.050	0.0067	1.00000		98.1	80 - 120			
Barium	1.05672	0.050	0.0008	1.00000		106	80 - 120			
Cadmium	1.01051	0.050	0.0002	1.00000		101	80 - 120			
Lead	0.986376	0.050	0.0028	1.00000		98.6	80 - 120			
Duplicate (B7F0002-DUP1)			**Source: 1702036-05**		Prepared: 6/1/2017 Analyzed: 6/1/2017					
Arsenic	ND	0.25	0.033		ND			NR	20	
Barium	0.761870	0.25	0.0040		0.779528			2.29	20	
Cadmium	0.010112	0.25	0.0008		0.010752			6.14	20	
Lead	0.245185	0.25	0.014		0.234670			4.38	20	
Duplicate (B7F0002-DUP2)			**Source: 1702036-49**		Prepared: 6/1/2017 Analyzed: 6/1/2017					
Arsenic	ND	0.25	0.033		ND			NR	20	
Barium	0.414386	0.25	0.0040		0.449907			8.22	20	
Cadmium	0.017842	0.25	0.0008		0.019097			6.79	20	
Lead	0.212850	0.25	0.014		0.227137			6.49	20	
Matrix Spike (B7F0002-MS1)			**Source: 1702036-05**		Prepared: 6/1/2017 Analyzed: 6/1/2017					
Arsenic	2.68881	0.25	0.033	2.50000	ND	108	74 - 123			
Barium	3.39916	0.25	0.0040	2.50000	0.779528	105	76 - 117			
Cadmium	2.59972	0.25	0.0008	2.50000	0.010752	104	73 - 115			
Lead	2.82214	0.25	0.014	2.50000	0.234670	103	78 - 109			
Matrix Spike (B7F0002-MS2)			**Source: 1702036-49**		Prepared: 6/1/2017 Analyzed: 6/1/2017					
Arsenic	2.52402	0.25	0.033	2.50000	ND	101	74 - 123			
Barium	2.92497	0.25	0.0040	2.50000	0.449907	99.0	76 - 117			
Cadmium	2.51975	0.25	0.0008	2.50000	0.019097	100	73 - 115			
Lead	2.69674	0.25	0.014	2.50000	0.227137	98.8	78 - 109			
Matrix Spike Dup (B7F0002-MSD1)			**Source: 1702036-05**		Prepared: 6/1/2017 Analyzed: 6/1/2017					

Certificate of Analysis

Hushmand Associates, Inc.	Project Number : 6th St Bridge, LAC-17-001
250 Goddard	Report To : Naresh Bellana
Irvine , CA 92618	Reported : 06/05/2017

TCLP Metals by ICP-AES EPA 6010B - Quality Control (cont'd)

Analyte	Result (mg/L)	PQL (mg/L)	MDL (mg/L)	Spike Level	Source Result	% Rec	% Rec Limits	RPD	RPD Limit	Notes
Batch B7F0002 - EPA 3010A_S (continued)										
Matrix Spike Dup (B7F0002-MSD1) - Continued			**Source: 1702036-05**		Prepared: 6/1/2017 Analyzed: 6/1/2017					
Arsenic	2.58049	0.25	0.033	2.50000	ND	103	74 - 123	4.11	20	
Barium	3.29171	0.25	0.0040	2.50000	0.779528	100	76 - 117	3.21	20	
Cadmium	2.52911	0.25	0.0008	2.50000	0.010752	101	73 - 115	2.75	20	
Lead	2.70506	0.25	0.014	2.50000	0.234670	98.8	78 - 109	4.24	20	

Certificate of Analysis

Hushmand Associates, Inc.	Project Number : 6th St Bridge, LAC-17-001
250 Goddard	Report To : Naresh Bellana
Irvine , CA 92618	Reported : 06/05/2017

TCLP Metals by ICP-AES EPA 6010B - Quality Control

Analyte	Result (mg/L)	PQL (mg/L)	MDL (mg/L)	Spike Level	Source Result	% Rec	% Rec Limits	RPD	RPD Limit	Notes
Batch B7F0039 - EPA 3010A_S										
Blank (B7F0039-BLK1)					Prepared: 6/2/2017 Analyzed: 6/2/2017					
Arsenic	ND	0.050	0.0067							
Barium	ND	0.050	0.0008							
Cadmium	ND	0.050	0.0002							
Lead	ND	0.050	0.0028							
Blank (B7F0039-BLK2)					Prepared: 6/2/2017 Analyzed: 6/2/2017					
Arsenic	ND	0.050	0.0067							
Barium	ND	0.050	0.0008							
Cadmium	ND	0.050	0.0002							
Lead	ND	0.050	0.0028							
LCS (B7F0039-BS1)					Prepared: 6/2/2017 Analyzed: 6/2/2017					
Arsenic	0.977571	0.050	0.0067	1.00000		97.8	80 - 120			
Barium	1.01658	0.050	0.0008	1.00000		102	80 - 120			
Cadmium	0.962616	0.050	0.0002	1.00000		96.3	80 - 120			
Lead	1.01106	0.050	0.0028	1.00000		101	80 - 120			
Duplicate (B7F0039-DUP1)			**Source: 1702036-85**		Prepared: 6/2/2017 Analyzed: 6/2/2017					
Arsenic	ND	0.25	0.033		0.036402			NR	20	
Barium	0.149775	0.25	0.0040		0.153491			2.45	20	
Cadmium	0.001654	0.25	0.0008		0.000933			55.7	20	R
Lead	ND	0.25	0.014		ND			NR	20	
Duplicate (B7F0039-DUP2)			**Source: 1702042-07**		Prepared: 6/2/2017 Analyzed: 6/2/2017					
Arsenic	0.057904	0.25	0.033		0.042137			31.5	20	
Barium	0.846218	0.25	0.0040		0.873311			3.15	20	
Cadmium	0.001558	0.25	0.0008		1.3244E-3			16.2	20	
Lead	ND	0.25	0.014		ND			NR	20	
Matrix Spike (B7F0039-MS1)			**Source: 1702036-85**		Prepared: 6/2/2017 Analyzed: 6/2/2017					
Arsenic	2.45172	0.25	0.033	2.50000	0.036402	96.6	74 - 123			
Barium	2.54620	0.25	0.0040	2.50000	0.153491	95.7	76 - 117			
Cadmium	2.32535	0.25	0.0008	2.50000	0.000933	93.0	73 - 115			
Lead	14.7721	0.25	0.014	2.50000	ND	591	78 - 109			M1
Matrix Spike (B7F0039-MS2)			**Source: 1702042-07**		Prepared: 6/2/2017 Analyzed: 6/2/2017					
Arsenic	2.57287	0.25	0.033	2.50000	0.042137	101	74 - 123			
Barium	3.38545	0.25	0.0040	2.50000	0.873311	100	76 - 117			
Cadmium	2.47920	0.25	0.0008	2.50000	1.3244E-3	99.1	73 - 115			
Lead	2.45343	0.25	0.014	2.50000	ND	98.1	78 - 109			
Matrix Spike Dup (B7F0039-MSD1)			**Source: 1702036-85**		Prepared: 6/2/2017 Analyzed: 6/2/2017					

Certificate of Analysis

Hushmand Associates, Inc.	Project Number : 6th St Bridge, LAC-17-001
250 Goddard	Report To : Naresh Bellana
Irvine , CA 92618	Reported : 06/05/2017

TCLP Metals by ICP-AES EPA 6010B - Quality Control (cont'd)

Analyte	Result (mg/L)	PQL (mg/L)	MDL (mg/L)	Spike Level	Source Result	% Rec	% Rec Limits	RPD	RPD Limit	Notes
Batch B7F0039 - EPA 3010A_S (continued)										
Matrix Spike Dup (B7F0039-MSD1) - Continued			**Source: 1702036-85**		Prepared: 6/2/2017 Analyzed: 6/2/2017					
Arsenic	2.49366	0.25	0.033	2.50000	0.036402	98.3	74 - 123	1.70	20	
Barium	2.51892	0.25	0.0040	2.50000	0.153491	94.6	76 - 117	1.08	20	
Cadmium	2.32480	0.25	0.0008	2.50000	0.000933	93.0	73 - 115	0.0239	20	
Lead	2.35424	0.25	0.014	2.50000	ND	94.2	78 - 109	145	20	R

Certificate of Analysis

Hushmand Associates, Inc.	Project Number : 6th St Bridge, LAC-17-001
250 Goddard	Report To : Naresh Bellana
Irvine , CA 92618	Reported : 06/05/2017

STLC Metals by ICP-AES by EPA 6010B - Quality Control

Analyte	Result (mg/L)	PQL (mg/L)	MDL (mg/L)	Spike Level	Source Result	% Rec	% Rec Limits	RPD	RPD Limit	Notes
Batch B7F0043 - STLC_S Extraction										
Blank (B7F0043-BLK1)					Prepared: 6/2/2017 Analyzed: 6/2/2017					
Antimony	ND	2.0	0.043							
Arsenic	ND	1.0	0.13							
Barium	ND	1.0	0.016							
Cadmium	ND	1.0	0.0030							
Copper	ND	1.0	0.046							
Lead	ND	1.0	0.057							
Zinc	ND	1.0	0.041							
Blank (B7F0043-BLK2)					Prepared: 6/2/2017 Analyzed: 6/2/2017					
Antimony	ND	2.0	0.043							
Arsenic	ND	1.0	0.13							
Barium	ND	1.0	0.016							
Cadmium	ND	1.0	0.0030							
Copper	ND	1.0	0.046							
Lead	ND	1.0	0.057							
Zinc	ND	1.0	0.041							
LCS (B7F0043-BS1)					Prepared: 6/2/2017 Analyzed: 6/2/2017					
Antimony	1.93962			2.00000		97.0	80 - 120			
Arsenic	2.19164			2.00000		110	80 - 120			
Barium	2.01550			2.00000		101	80 - 120			
Cadmium	2.00092			2.00000		100	80 - 120			
Copper	1.90129			2.00000		95.1	80 - 120			
Lead	2.03806			2.00000		102	80 - 120			
Zinc	2.10080			2.00000		105	80 - 120			
Duplicate (B7F0043-DUP1)				**Source: 1702036-09**	Prepared: 6/2/2017 Analyzed: 6/2/2017					
Antimony	0.058601	2.0	0.043		0.043631			29.3	20	
Arsenic	0.265385	1.0	0.13		ND			NR	20	
Barium	4.11426	1.0	0.016		4.18302			1.66	20	
Cadmium	0.049047	1.0	0.0030		0.046537			5.25	20	
Copper	1.19828	1.0	0.046		1.23080			2.68	20	
Lead	5.78253	1.0	0.057		5.88356			1.73	20	
Zinc	3.95814	1.0	0.041		4.02034			1.56	20	
Duplicate (B7F0043-DUP2)				**Source: 1702036-50**	Prepared: 6/2/2017 Analyzed: 6/2/2017					
Antimony	ND	2.0	0.043		ND			NR	20	
Arsenic	0.159382	1.0	0.13		ND			NR	20	
Barium	1.94212	1.0	0.016		1.92973			0.640	20	
Cadmium	0.011333	1.0	0.0030		0.011059			2.44	20	
Copper	0.278968	1.0	0.046		0.277451			0.545	20	
Lead	1.86839	1.0	0.057		1.90078			1.72	20	

Certificate of Analysis

Hushmand Associates, Inc.	Project Number : 6th St Bridge, LAC-17-001
250 Goddard	Report To : Naresh Bellana
Irvine , CA 92618	Reported : 06/05/2017

STLC Metals by ICP-AES by EPA 6010B - Quality Control (cont'd)

Analyte	Result (mg/L)	PQL (mg/L)	MDL (mg/L)	Spike Level	Source Result	% Rec	% Rec Limits	RPD	RPD Limit	Notes
Batch B7F0043 - STLC_S Extraction (continued)										
Duplicate (B7F0043-DUP2) - Continued			**Source: 1702036-50**		Prepared: 6/2/2017 Analyzed: 6/2/2017					
Zinc	1.62638	1.0	0.041		1.64292			1.01	20	
Matrix Spike (B7F0043-MS1)			**Source: 1702036-09**		Prepared: 6/2/2017 Analyzed: 6/2/2017					
Antimony	2.36785			2.50000	0.043631	93.0	88 - 107			
Arsenic	2.48822			2.50000	0.131413	94.3	90 - 110			
Barium	6.33491			2.50000	4.18302	86.1	62 - 113			
Cadmium	2.41463			2.50000	0.046537	94.7	74 - 121			
Copper	3.48219			2.50000	1.23080	90.1	62 - 129			
Lead	7.89341			2.50000	5.88356	80.4	44 - 130			
Zinc	5.89735			2.50000	4.02034	75.1	34 - 149			
Matrix Spike (B7F0043-MS2)			**Source: 1702036-50**		Prepared: 6/2/2017 Analyzed: 6/2/2017					
Antimony	2.32275			2.50000	-0.301999	92.9	88 - 107			
Arsenic	2.72956			2.50000	0.115911	105	90 - 110			
Barium	4.40770			2.50000	1.92973	99.1	62 - 113			
Cadmium	2.50645			2.50000	0.011059	99.8	74 - 121			
Copper	2.70344			2.50000	0.277451	97.0	62 - 129			
Lead	4.31962			2.50000	1.90078	96.8	44 - 130			
Zinc	4.24318			2.50000	1.64292	104	34 - 149			
Matrix Spike Dup (B7F0043-MSD1)			**Source: 1702036-09**		Prepared: 6/2/2017 Analyzed: 6/2/2017					
Antimony	2.26108			2.50000	0.043631	88.7	88 - 107	4.61	20	
Arsenic	2.46448			2.50000	0.131413	93.3	90 - 110	0.959	20	
Barium	6.09402			2.50000	4.18302	76.4	62 - 113	3.88	20	
Cadmium	2.34968			2.50000	0.046537	92.1	74 - 121	2.73	20	
Copper	3.35946			2.50000	1.23080	85.1	62 - 129	3.59	20	
Lead	7.54750			2.50000	5.88356	66.6	44 - 130	4.48	20	
Zinc	5.63211			2.50000	4.02034	64.5	34 - 149	4.60	20	

Certificate of Analysis

Hushmand Associates, Inc.	Project Number : 6th St Bridge, LAC-17-001
250 Goddard	Report To : Naresh Bellana
Irvine , CA 92618	Reported : 06/05/2017

STLC Metals by ICP-AES by EPA 6010B - Quality Control

Analyte	Result (mg/L)	PQL (mg/L)	MDL (mg/L)	Spike Level	Source Result	% Rec	% Rec Limits	RPD	RPD Limit	Notes
Batch B7F0044 - STLC_S Extraction										
Blank (B7F0044-BLK1)					Prepared: 6/2/2017 Analyzed: 6/2/2017					
Antimony	ND	2.0	0.043							
Arsenic	ND	1.0	0.13							
Barium	ND	1.0	0.016							
Cadmium	ND	1.0	0.0030							
Copper	ND	1.0	0.046							
Lead	ND	1.0	0.057							
Zinc	ND	1.0	0.041							
Blank (B7F0044-BLK2)					Prepared: 6/2/2017 Analyzed: 6/2/2017					
Antimony	ND	2.0	0.043							
Arsenic	ND	1.0	0.13							
Barium	ND	1.0	0.016							
Cadmium	ND	1.0	0.0030							
Copper	ND	1.0	0.046							
Lead	ND	1.0	0.057							
Zinc	ND	1.0	0.041							
LCS (B7F0044-BS1)					Prepared: 6/2/2017 Analyzed: 6/2/2017					
Antimony	1.92359			2.00000		96.2	80 - 120			
Arsenic	2.27389			2.00000		114	80 - 120			
Barium	2.08652			2.00000		104	80 - 120			
Cadmium	2.02226			2.00000		101	80 - 120			
Copper	1.97424			2.00000		98.7	80 - 120			
Lead	2.01514			2.00000		101	80 - 120			
Zinc	2.19691			2.00000		110	80 - 120			
Duplicate (B7F0044-DUP1)			**Source: 1702036-90**		Prepared: 6/2/2017 Analyzed: 6/2/2017					
Antimony	ND	2.0	0.043		ND			NR	20	
Arsenic	0.182426	1.0	0.13		0.159525			13.4	20	
Barium	1.85356	1.0	0.016		1.85388			0.0174	20	
Cadmium	0.068198	1.0	0.0030		0.068729			0.775	20	
Copper	143.189	1.0	0.046		144.207			0.708	20	
Lead	6.47783	1.0	0.057		6.40643			1.11	20	
Zinc	58.1395	1.0	0.041		58.8438			1.20	20	
Duplicate (B7F0044-DUP2)			**Source: 1702042-07**		Prepared: 6/2/2017 Analyzed: 6/2/2017					
Antimony	ND	2.0	0.043		ND			NR	20	
Arsenic	0.160625	1.0	0.13		ND			NR	20	
Barium	8.96012	1.0	0.016		10.5356			16.2	20	
Cadmium	0.012736	1.0	0.0030		0.015005			16.4	20	
Copper	0.230261	1.0	0.046		0.306079			28.3	20	R
Lead	0.914441	1.0	0.057		1.04848			13.7	20	

Certificate of Analysis

Hushmand Associates, Inc.	Project Number : 6th St Bridge, LAC-17-001
250 Goddard	Report To : Naresh Bellana
Irvine , CA 92618	Reported : 06/05/2017

STLC Metals by ICP-AES by EPA 6010B - Quality Control (cont'd)

Analyte	Result (mg/L)	PQL (mg/L)	MDL (mg/L)	Spike Level	Source Result	% Rec	% Rec Limits	RPD	RPD Limit	Notes
Batch B7F0044 - STLC_S Extraction (continued)										
Duplicate (B7F0044-DUP2) - Continued			**Source: 1702042-07**		Prepared: 6/2/2017 Analyzed: 6/2/2017					
Zinc	0.465377	1.0	0.041		0.547340			16.2	20	
Matrix Spike (B7F0044-MS1)			**Source: 1702036-90**		Prepared: 6/2/2017 Analyzed: 6/2/2017					
Antimony	2.45530			2.50000	-0.054738	98.2	88 - 107			
Arsenic	2.77419			2.50000	0.159525	105	90 - 110			
Barium	4.14656			2.50000	1.85388	91.7	62 - 113			
Cadmium	2.44374			2.50000	0.068729	95.0	74 - 121			
Copper	132.861			2.50000	144.207	-454	62 - 129			M1
Lead	8.22113			2.50000	6.40643	72.6	44 - 130			
Zinc	56.2382			2.50000	58.8438	-104	34 - 149			
Matrix Spike (B7F0044-MS2)			**Source: 1702042-07**		Prepared: 6/2/2017 Analyzed: 6/2/2017					
Antimony	2.11574			2.50000	-0.055379	84.6	88 - 107			M1
Arsenic	2.25087			2.50000	0.127676	84.9	90 - 110			
Barium	10.5416			2.50000	10.5356	0.239	62 - 113			
Cadmium	2.22380			2.50000	0.015005	88.4	74 - 121			
Copper	2.33211			2.50000	0.306079	81.0	62 - 129			
Lead	3.05398			2.50000	1.04848	80.2	44 - 130			
Zinc	2.69638			2.50000	0.547340	86.0	34 - 149			
Matrix Spike Dup (B7F0044-MSD1)			**Source: 1702036-90**		Prepared: 6/2/2017 Analyzed: 6/2/2017					
Antimony	2.59215			2.50000	-0.054738	104	88 - 107	5.42	20	
Arsenic	2.83846			2.50000	0.159525	107	90 - 110	2.29	20	
Barium	4.36922			2.50000	1.85388	101	62 - 113	5.23	20	
Cadmium	2.60559			2.50000	0.068729	101	74 - 121	6.41	20	
Copper	145.896			2.50000	144.207	67.5	62 - 129	9.35	20	
Lead	8.86890			2.50000	6.40643	98.5	44 - 130	7.58	20	
Zinc	60.2816			2.50000	58.8438	57.5	34 - 149	6.94	20	

Certificate of Analysis

Hushmand Associates, Inc.	Project Number : 6th St Bridge, LAC-17-001
250 Goddard	Report To : Naresh Bellana
Irvine , CA 92618	Reported : 06/05/2017

Hexavalent Chromium by EPA 7196A/3060A - Quality Control

Analyte	Result (mg/kg)	PQL (mg/kg)	MDL (mg/kg)	Spike Level	Source Result	% Rec	% Rec Limits	RPD	RPD Limit	Notes
Batch B7F0053 - EPA 3060A_S (WC)										
Blank (B7F0053-BLK1)					Prepared: 6/1/2017 Analyzed: 6/2/2017					
Hexavalent Chromium	ND	1.0	0.30							
LCS (B7F0053-BS1)					Prepared: 6/1/2017 Analyzed: 6/2/2017					
Hexavalent Chromium	45.8000	1.0	0.30	50.0000		91.6	80 - 120			
Matrix Spike (B7F0053-MS1)			**Source: 1702036-03**		Prepared: 6/1/2017 Analyzed: 6/2/2017					
Hexavalent Chromium	46.7000	1.0	0.30	50.0000	ND	93.4	75 - 125			
Matrix Spike (B7F0053-MS2)			**Source: 1702036-03**		Prepared: 6/1/2017 Analyzed: 6/2/2017					
Hexavalent Chromium	2275.00	50	15	1608.00	ND	141	75 - 125			M2
Matrix Spike Dup (B7F0053-MSD1)			**Source: 1702036-03**		Prepared: 6/1/2017 Analyzed: 6/2/2017					
Hexavalent Chromium	45.2000	1.0	0.30	50.0000	ND	90.4	75 - 125	3.26	20	

Certificate of Analysis

Hushmand Associates, Inc.	Project Number : 6th St Bridge, LAC-17-001
250 Goddard	Report To : Naresh Bellana
Irvine , CA 92618	Reported : 06/05/2017

Mercury by AA (Cold Vapor) EPA 7471A - Quality Control

Analyte	Result (mg/kg)	PQL (mg/kg)	MDL (mg/kg)	Spike Level	Source Result	% Rec	% Rec Limits	RPD	RPD Limit	Notes
Batch B7E0674 - EPA 7471_S										
Blank (B7E0674-BLK1)					Prepared: 5/20/2017 Analyzed: 5/22/2017					
Mercury	ND	0.10	0.005							
LCS (B7E0674-BS1)					Prepared: 5/20/2017 Analyzed: 5/22/2017					
Mercury	0.837335	0.10	0.005	0.833333		100	80 - 120			
Duplicate (B7E0674-DUP1)			**Source: 1702018-85**		Prepared: 5/20/2017 Analyzed: 5/22/2017					
Mercury	0.046820	0.10	0.005		0.042672			9.27	20	
Matrix Spike (B7E0674-MS1)			**Source: 1702018-85**		Prepared: 5/20/2017 Analyzed: 5/22/2017					
Mercury	0.909317	0.10	0.005	0.833333	0.042672	104	70 - 130			
Matrix Spike Dup (B7E0674-MSD1)			**Source: 1702018-85**		Prepared: 5/20/2017 Analyzed: 5/22/2017					
Mercury	0.917531	0.10	0.005	0.833333	0.042672	105	70 - 130	0.899	20	
Post Spike (B7E0674-PS1)			**Source: 1702018-85**		Prepared: 5/20/2017 Analyzed: 5/22/2017					
Mercury	0.005690			5.00000E-3	0.000512	104	85 - 115			

Certificate of Analysis

Hushmand Associates, Inc.	Project Number : 6th St Bridge, LAC-17-001
250 Goddard	Report To : Naresh Bellana
Irvine , CA 92618	Reported : 06/05/2017

Mercury by AA (Cold Vapor) EPA 7471A - Quality Control

Analyte	Result (mg/kg)	PQL (mg/kg)	MDL (mg/kg)	Spike Level	Source Result	% Rec	% Rec Limits	RPD	RPD Limit	Notes
Batch B7E0675 - EPA 7471_S										
Blank (B7E0675-BLK1)					Prepared: 5/20/2017 Analyzed: 5/22/2017					
Mercury	ND	0.10	0.005							
LCS (B7E0675-BS1)					Prepared: 5/20/2017 Analyzed: 5/22/2017					
Mercury	0.882702	0.10	0.005	0.833333		106	80 - 120			
Matrix Spike (B7E0675-MS1)			**Source: 1702036-10**		Prepared: 5/20/2017 Analyzed: 5/22/2017					
Mercury	1.13338	0.10	0.005	0.833333	0.201663	112	70 - 130			
Matrix Spike Dup (B7E0675-MSD1)			**Source: 1702036-10**		Prepared: 5/20/2017 Analyzed: 5/22/2017					
Mercury	1.26230	0.10	0.005	0.833333	0.201663	127	70 - 130	10.8	20	
Post Spike (B7E0675-PS1)			**Source: 1702036-10**		Prepared: 5/20/2017 Analyzed: 5/22/2017					
Mercury	0.008451			5.00000E-3	0.002420	121	85 - 115			M1

Certificate of Analysis

Hushmand Associates, Inc.	Project Number : 6th St Bridge, LAC-17-001
250 Goddard	Report To : Naresh Bellana
Irvine , CA 92618	Reported : 06/05/2017

Mercury by AA (Cold Vapor) EPA 7471A - Quality Control

Analyte	Result (mg/kg)	PQL (mg/kg)	MDL (mg/kg)	Spike Level	Source Result	% Rec	% Rec Limits	RPD	RPD Limit	Notes
Batch B7E0676 - EPA 7471_S										
Blank (B7E0676-BLK1)					Prepared: 5/20/2017 Analyzed: 5/22/2017					
Mercury	ND	0.10	0.005							
LCS (B7E0676-BS1)					Prepared: 5/20/2017 Analyzed: 5/22/2017					
Mercury	0.814870	0.10	0.005	0.833333		97.8	80 - 120			
Matrix Spike (B7E0676-MS1)			**Source: 1702036-30**		Prepared: 5/20/2017 Analyzed: 5/22/2017					
Mercury	0.985742	0.10	0.005	0.833333	0.076126	109	70 - 130			
Matrix Spike Dup (B7E0676-MSD1)			**Source: 1702036-30**		Prepared: 5/20/2017 Analyzed: 5/22/2017					
Mercury	0.913099	0.10	0.005	0.833333	0.076126	100	70 - 130	7.65	20	
Post Spike (B7E0676-PS1)			**Source: 1702036-30**		Prepared: 5/20/2017 Analyzed: 5/22/2017					
Mercury	0.006353			5.00000E-3	0.000914	109	85 - 115			

Certificate of Analysis

Hushmand Associates, Inc.	Project Number : 6th St Bridge, LAC-17-001
250 Goddard	Report To : Naresh Bellana
Irvine , CA 92618	Reported : 06/05/2017

Mercury by AA (Cold Vapor) EPA 7471A - Quality Control

Analyte	Result (mg/kg)	PQL (mg/kg)	MDL (mg/kg)	Spike Level	Source Result	% Rec	% Rec Limits	RPD	RPD Limit	Notes
Batch B7E0677 - EPA 7471_S										
Blank (B7E0677-BLK1)					Prepared: 5/20/2017 Analyzed: 5/22/2017					
Mercury	ND	0.10	0.005							
LCS (B7E0677-BS1)					Prepared: 5/20/2017 Analyzed: 5/22/2017					
Mercury	0.968587	0.10	0.005	0.833333		116	80 - 120			
Matrix Spike (B7E0677-MS1)			**Source: 1702036-50**		Prepared: 5/20/2017 Analyzed: 5/22/2017					
Mercury	1.04892	0.10	0.005	0.833333	0.059099	119	70 - 130			
Matrix Spike Dup (B7E0677-MSD1)			**Source: 1702036-50**		Prepared: 5/20/2017 Analyzed: 5/22/2017					
Mercury	1.01616	0.10	0.005	0.833333	0.059099	115	70 - 130	3.17	20	
Post Spike (B7E0677-PS1)			**Source: 1702036-50**		Prepared: 5/20/2017 Analyzed: 5/22/2017					
Mercury	0.007350			5.00000E-3	0.000709	133	85 - 115			M1

Certificate of Analysis

Hushmand Associates, Inc.	Project Number : 6th St Bridge, LAC-17-001
250 Goddard	Report To : Naresh Bellana
Irvine , CA 92618	Reported : 06/05/2017

Mercury by AA (Cold Vapor) EPA 7471A - Quality Control

Analyte	Result (mg/kg)	PQL (mg/kg)	MDL (mg/kg)	Spike Level	Source Result	% Rec	% Rec Limits	RPD	RPD Limit	Notes
Batch B7E0678 - EPA 7471_S										
Blank (B7E0678-BLK1)					Prepared: 5/20/2017 Analyzed: 5/22/2017					
Mercury	ND	0.10	0.005							
LCS (B7E0678-BS1)					Prepared: 5/20/2017 Analyzed: 5/22/2017					
Mercury	0.825445	0.10	0.005	0.833333		99.1	80 - 120			
Matrix Spike (B7E0678-MS1)			**Source: 1702036-70**		Prepared: 5/20/2017 Analyzed: 5/22/2017					
Mercury	0.878832	0.10	0.005	0.833333	0.038678	101	70 - 130			
Matrix Spike Dup (B7E0678-MSD1)			**Source: 1702036-70**		Prepared: 5/20/2017 Analyzed: 5/22/2017					
Mercury	0.881392	0.10	0.005	0.833333	0.038678	101	70 - 130	0.291	20	

Certificate of Analysis

Hushmand Associates, Inc.	Project Number : 6th St Bridge, LAC-17-001
250 Goddard	Report To : Naresh Bellana
Irvine , CA 92618	Reported : 06/05/2017

Mercury by AA (Cold Vapor) EPA 7471A - Quality Control

Analyte	Result (mg/kg)	PQL (mg/kg)	MDL (mg/kg)	Spike Level	Source Result	% Rec	% Rec Limits	RPD	RPD Limit	Notes
Batch B7E0679 - EPA 7471_S										
Blank (B7E0679-BLK1)					Prepared: 5/20/2017 Analyzed: 5/22/2017					
Mercury	ND	0.10	0.005							
LCS (B7E0679-BS1)					Prepared: 5/20/2017 Analyzed: 5/22/2017					
Mercury	0.906104	0.10	0.005	0.833333		109	80 - 120			
Matrix Spike (B7E0679-MS1)			**Source: 1702036-87**		Prepared: 5/20/2017 Analyzed: 5/22/2017					
Mercury	0.978608	0.10	0.005	0.833333	0.090695	107	70 - 130			
Matrix Spike Dup (B7E0679-MSD1)			**Source: 1702036-87**		Prepared: 5/20/2017 Analyzed: 5/22/2017					
Mercury	1.13385	0.10	0.005	0.833333	0.090695	125	70 - 130	14.7	20	
Post Spike (B7E0679-PS1)			**Source: 1702036-87**		Prepared: 5/20/2017 Analyzed: 5/22/2017					
Mercury	0.007250			5.00000E-3	0.001088	123	85 - 115			M1

Certificate of Analysis

Hushmand Associates, Inc.	Project Number : 6th St Bridge, LAC-17-001
250 Goddard	Report To : Naresh Bellana
Irvine , CA 92618	Reported : 06/05/2017

STLC Mercury by AA (Cold Vapor) EPA 7470A - Quality Control

Analyte	Result (ug/L)	PQL (ug/L)	MDL (ug/L)	Spike Level	Source Result	% Rec	% Rec Limits	RPD	RPD Limit	Notes
Batch B7F0046 - EPA 245.1/7470_S										
Blank (B7F0046-BLK1)					Prepared: 6/2/2017 Analyzed: 6/2/2017					
Mercury	ND	0.20	0.05							
LCS (B7F0046-BS1)					Prepared: 6/2/2017 Analyzed: 6/2/2017					
Mercury	10.0501	0.20	0.05	10.0000		101	80 - 120			
Duplicate (B7F0046-DUP1)			**Source: 1702036-84**		Prepared: 6/2/2017 Analyzed: 6/2/2017					
Mercury	ND	1.0	0.23		ND			NR	20	
Matrix Spike (B7F0046-MS1)			**Source: 1702036-84**		Prepared: 6/2/2017 Analyzed: 6/2/2017					
Mercury	41.3768	1.0	0.23	50.0000	ND	82.8	70 - 130			
Matrix Spike Dup (B7F0046-MSD1)			**Source: 1702036-84**		Prepared: 6/2/2017 Analyzed: 6/2/2017					
Mercury	42.3072	1.0	0.23	50.0000	ND	84.6	70 - 130	2.22	20	
Post Spike (B7F0046-PS1)			**Source: 1702036-84**		Prepared: 6/2/2017 Analyzed: 6/2/2017					
Mercury	5.16692			5.00000	0.004793	103	85 - 115			

Certificate of Analysis

Hushmand Associates, Inc.	Project Number : 6th St Bridge, LAC-17-001
250 Goddard	Report To : Naresh Bellana
Irvine , CA 92618	Reported : 06/05/2017

TCLP Mercury by AA (Cold Vapor) by EPA 7470A - Quality Control

Analyte	Result (ug/L)	PQL (ug/L)	MDL (ug/L)	Spike Level	Source Result	% Rec	% Rec Limits	RPD	RPD Limit	Notes
Batch B7F0049 - EPA 245.1/7470_S										
Blank (B7F0049-BLK1)					Prepared: 6/2/2017 Analyzed: 6/2/2017					
Mercury	ND	0.20	0.05							
LCS (B7F0049-BS1)					Prepared: 6/2/2017 Analyzed: 6/2/2017					
Mercury	10.4711	0.20	0.05	10.0000		105	80 - 120			
Duplicate (B7F0049-DUP1)			**Source: 1702036-84**		Prepared: 6/2/2017 Analyzed: 6/2/2017					
Mercury	ND	0.20	0.05		ND			NR	20	
Matrix Spike (B7F0049-MS1)			**Source: 1702036-84**		Prepared: 6/2/2017 Analyzed: 6/2/2017					
Mercury	10.7772	0.20	0.05	10.0000	ND	108	70 - 130			
Matrix Spike Dup (B7F0049-MSD1)			**Source: 1702036-84**		Prepared: 6/2/2017 Analyzed: 6/2/2017					
Mercury	10.3981	0.20	0.05	10.0000	ND	104	70 - 130	3.58	20	
Post Spike (B7F0049-PS1)			**Source: 1702036-84**		Prepared: 6/2/2017 Analyzed: 6/2/2017					
Mercury	5.49955			5.00000	0.004793	110	85 - 115			

Certificate of Analysis

Hushmand Associates, Inc.	Project Number : 6th St Bridge, LAC-17-001
250 Goddard	Report To : Naresh Bellana
Irvine , CA 92618	Reported : 06/05/2017

Gasoline Range Organics by EPA 8015B (Modified) - Quality Control

Analyte	Result (mg/kg)	PQL (mg/kg)	MDL (mg/kg)	Spike Level	Source Result	% Rec	% Rec Limits	RPD	RPD Limit	Notes
Batch B7E0622 - GCVOA_S										
Blank (B7E0622-BLK1)					Prepared: 5/19/2017 Analyzed: 5/19/2017					
Gasoline Range Organics	ND	1.0	0.20							
Surrogate: 4-Bromofluorobenzene	*0.1925*			*0.200000*		*96.3*	*36 - 125*			
LCS (B7E0622-BS1)					Prepared: 5/19/2017 Analyzed: 5/19/2017					
Gasoline Range Organics	5.03600	1.0	0.20	5.00000		101	70 - 130			
Surrogate: 4-Bromofluorobenzene	*0.1895*			*0.200000*		*94.8*	*36 - 125*			
Matrix Spike (B7E0622-MS1)			**Source: 1702063-04**		Prepared: 5/19/2017 Analyzed: 5/19/2017					
Gasoline Range Organics	4.76300	1.0	0.20	5.00000	ND	95.3	32 - 161			
Surrogate: 4-Bromofluorobenzene	*0.2039*			*0.200000*		*102*	*36 - 125*			
Matrix Spike Dup (B7E0622-MSD1)			**Source: 1702063-04**		Prepared: 5/19/2017 Analyzed: 5/19/2017					
Gasoline Range Organics	4.54900	1.0	0.20	5.00000	ND	91.0	32 - 161	4.60	20	
Surrogate: 4-Bromofluorobenzene	*0.2024*			*0.200000*		*101*	*36 - 125*			

Certificate of Analysis

Hushmand Associates, Inc.	Project Number : 6th St Bridge, LAC-17-001
250 Goddard	Report To : Naresh Bellana
Irvine , CA 92618	Reported : 06/05/2017

Gasoline Range Organics by EPA 8015B (Modified) - Quality Control

Analyte	Result (mg/kg)	PQL (mg/kg)	MDL (mg/kg)	Spike Level	Source Result	% Rec	% Rec Limits	RPD	RPD Limit	Notes
Batch B7E0657 - GCVOA_S										
Blank (B7E0657-BLK1)					Prepared: 5/21/2017 Analyzed: 5/21/2017					
Gasoline Range Organics	ND	1.0	0.20							
Surrogate: 4-Bromofluorobenzene	*0.1961*			*0.200000*		*98.0*	*36 - 125*			
LCS (B7E0657-BS1)					Prepared: 5/21/2017 Analyzed: 5/21/2017					
Gasoline Range Organics	5.04800	1.0	0.20	5.00000		101	70 - 130			
Surrogate: 4-Bromofluorobenzene	*0.1997*			*0.200000*		*99.8*	*36 - 125*			
Duplicate (B7E0657-DUP1)			**Source: 1701999-01**		Prepared: 5/21/2017 Analyzed: 5/21/2017					
Gasoline Range Organics	ND	1.0	0.20		ND			NR	20	
Surrogate: 4-Bromofluorobenzene	*0.2096*			*0.200000*		*105*	*36 - 125*			
Matrix Spike (B7E0657-MS1)			**Source: 1701999-01**		Prepared: 5/21/2017 Analyzed: 5/21/2017					
Gasoline Range Organics	4.50100	1.0	0.20	5.00000	ND	90.0	32 - 161			
Surrogate: 4-Bromofluorobenzene	*0.2103*			*0.200000*		*105*	*36 - 125*			
Matrix Spike Dup (B7E0657-MSD1)			**Source: 1701999-01**		Prepared: 5/21/2017 Analyzed: 5/21/2017					
Gasoline Range Organics	4.36600	1.0	0.20	5.00000	ND	87.3	32 - 161	3.04	20	
Surrogate: 4-Bromofluorobenzene	*0.2064*			*0.200000*		*103*	*36 - 125*			

Certificate of Analysis

Hushmand Associates, Inc.	Project Number : 6th St Bridge, LAC-17-001
250 Goddard	Report To : Naresh Bellana
Irvine , CA 92618	Reported : 06/05/2017

Gasoline Range Organics by EPA 8015B (Modified) - Quality Control

Analyte	Result (mg/kg)	PQL (mg/kg)	MDL (mg/kg)	Spike Level	Source Result	% Rec	% Rec Limits	RPD	RPD Limit	Notes
Batch B7E0718 - GCVOA_S										
Blank (B7E0718-BLK1)						Prepared: 5/22/2017 Analyzed: 5/22/2017				
Gasoline Range Organics	ND	1.0	0.20							
Surrogate: 4-Bromofluorobenzene	*0.1977*			*0.200000*		*98.9*	*36 - 125*			
LCS (B7E0718-BS1)						Prepared: 5/22/2017 Analyzed: 5/22/2017				
Gasoline Range Organics	5.23100	1.0	0.20	5.00000		105	70 - 130			
Surrogate: 4-Bromofluorobenzene	*0.1996*			*0.200000*		*99.8*	*36 - 125*			
Matrix Spike (B7E0718-MS1)			**Source: 1702036-22**			Prepared: 5/22/2017 Analyzed: 5/22/2017				
Gasoline Range Organics	4.52300	1.0	0.20	5.00000	ND	90.5	32 - 161			
Surrogate: 4-Bromofluorobenzene	*0.2036*			*0.200000*		*102*	*36 - 125*			
Matrix Spike Dup (B7E0718-MSD1)			**Source: 1702036-22**			Prepared: 5/22/2017 Analyzed: 5/22/2017				
Gasoline Range Organics	4.72900	1.0	0.20	5.00000	ND	94.6	32 - 161	4.45	20	
Surrogate: 4-Bromofluorobenzene	*0.2002*			*0.200000*		*100*	*36 - 125*			

Certificate of Analysis

Hushmand Associates, Inc.	Project Number : 6th St Bridge, LAC-17-001
250 Goddard	Report To : Naresh Bellana
Irvine , CA 92618	Reported : 06/05/2017

Gasoline Range Organics by EPA 8015B (Modified) - Quality Control

Analyte	Result (mg/kg)	PQL (mg/kg)	MDL (mg/kg)	Spike Level	Source Result	% Rec	% Rec Limits	RPD	RPD Limit	Notes
Batch B7E0721 - GCVOA_S										
Blank (B7E0721-BLK1)						Prepared: 5/22/2017 Analyzed: 5/22/2017				
Gasoline Range Organics	ND	1.0	0.20							
Surrogate: 4-Bromofluorobenzene	*0.2009*			*0.200000*		*100*	*36 - 125*			
LCS (B7E0721-BS1)						Prepared: 5/22/2017 Analyzed: 5/22/2017				
Gasoline Range Organics	4.93400	1.0	0.20	5.00000		98.7	70 - 130			
Surrogate: 4-Bromofluorobenzene	*0.1897*			*0.200000*		*94.8*	*36 - 125*			
Matrix Spike (B7E0721-MS1)			**Source: 1702096-01**			Prepared: 5/22/2017 Analyzed: 5/22/2017				
Gasoline Range Organics	4.65500	1.0	0.20	5.00000	ND	93.1	32 - 161			
Surrogate: 4-Bromofluorobenzene	*0.2097*			*0.200000*		*105*	*36 - 125*			
Matrix Spike Dup (B7E0721-MSD1)			**Source: 1702096-01**			Prepared: 5/22/2017 Analyzed: 5/22/2017				
Gasoline Range Organics	4.71700	1.0	0.20	5.00000	ND	94.3	32 - 161	1.32	20	
Surrogate: 4-Bromofluorobenzene	*0.2089*			*0.200000*		*104*	*36 - 125*			

Certificate of Analysis

Hushmand Associates, Inc.	Project Number : 6th St Bridge, LAC-17-001
250 Goddard	Report To : Naresh Bellana
Irvine , CA 92618	Reported : 06/05/2017

Diesel Range Organics by EPA 8015B - Quality Control

Analyte	Result (mg/kg)	PQL (mg/kg)	MDL (mg/kg)	Spike Level	Source Result	% Rec	% Rec Limits	RPD	RPD Limit	Notes
Batch B7E0785 - GCSEMI_DRO_S										
Blank (B7E0785-BLK1)						Prepared: 5/23/2017 Analyzed: 5/24/2017				
DRO	ND	10	10							
Surrogate: p-Terphenyl	*61.94*			*80.0000*		*77.4*	*47 - 157*			
LCS (B7E0785-BS1)						Prepared: 5/23/2017 Analyzed: 5/24/2017				
DRO	1056.04	10	10	1000.00		106	36 - 164			
Surrogate: p-Terphenyl	*59.76*			*80.0000*		*74.7*	*47 - 157*			
Matrix Spike (B7E0785-MS1)			**Source: 1702036-71**			Prepared: 5/23/2017 Analyzed: 5/24/2017				
DRO	939.750	10	10	1000.00	ND	94.0	21 - 179			
Surrogate: p-Terphenyl	*59.12*			*80.0000*		*73.9*	*47 - 157*			
Matrix Spike Dup (B7E0785-MSD1)			**Source: 1702036-71**			Prepared: 5/23/2017 Analyzed: 5/24/2017				
DRO	1021.15	10	10	1000.00	ND	102	21 - 179	8.30	20	
Surrogate: p-Terphenyl	*56.85*			*80.0000*		*71.1*	*47 - 157*			

Certificate of Analysis

Hushmand Associates, Inc.	Project Number : 6th St Bridge, LAC-17-001
250 Goddard	Report To : Naresh Bellana
Irvine , CA 92618	Reported : 06/05/2017

Diesel Range Organics by EPA 8015B - Quality Control

Analyte	Result (mg/kg)	PQL (mg/kg)	MDL (mg/kg)	Spike Level	Source Result	% Rec	% Rec Limits	RPD	RPD Limit	Notes
Batch B7E0786 - GCSEMI_DRO_S										
Blank (B7E0786-BLK1)						Prepared: 5/23/2017 Analyzed: 5/24/2017				
DRO	ND	10	10							
Surrogate: p-Terphenyl	*61.08*			*80.0000*		*76.4*	*47 - 157*			
LCS (B7E0786-BS1)						Prepared: 5/23/2017 Analyzed: 5/24/2017				
DRO	1157.65	10	10	1000.00		116	36 - 164			
Surrogate: p-Terphenyl	*63.13*			*80.0000*		*78.9*	*47 - 157*			
Matrix Spike (B7E0786-MS1)			**Source: 1702047-02**			Prepared: 5/23/2017 Analyzed: 5/24/2017				
DRO	997.170	10	10	1000.00		99.7	21 - 179			
Surrogate: p-Terphenyl	*57.11*			*80.0000*		*71.4*	*47 - 157*			
Matrix Spike Dup (B7E0786-MSD1)			**Source: 1702047-02**			Prepared: 5/23/2017 Analyzed: 5/24/2017				
DRO	978.600	10	10	1000.00		97.9	21 - 179	1.88	20	
Surrogate: p-Terphenyl	*62.64*			*80.0000*		*78.3*	*47 - 157*			

Certificate of Analysis

Hushmand Associates, Inc.	Project Number : 6th St Bridge, LAC-17-001
250 Goddard	Report To : Naresh Bellana
Irvine , CA 92618	Reported : 06/05/2017

Organochlorine Pesticides by EPA 8081 - Quality Control

Analyte	Result (ug/kg)	PQL (ug/kg)	MDL (ug/kg)	Spike Level	Source Result	% Rec	% Rec Limits	RPD	RPD Limit	Notes
Batch B7E0750 - GCSEMI_PCB/PEST_S										
Blank (B7E0750-BLK1)										Prepared: 5/22/2017 Analyzed: 5/23/2017
4,4´-DDD	ND	2.0	0.22							
4,4´-DDD [2C]	ND	2.0	0.22							
4,4´-DDE	ND	2.0	0.20							
4,4´-DDE [2C]	ND	2.0	0.20							
4,4´-DDT	ND	2.0	0.13							
4,4´-DDT [2C]	ND	2.0	0.13							
Aldrin	ND	1.0	0.27							
Aldrin [2C]	ND	1.0	0.27							
alpha-BHC	ND	1.0	0.20							
alpha-BHC [2C]	ND	1.0	0.20							
alpha-Chlordane	ND	1.0	0.21							
alpha-Chlordane [2C]	ND	1.0	0.21							
beta-BHC	ND	1.0	0.23							
beta-BHC [2C]	ND	1.0	0.23							
Chlordane	ND	8.5	0.90							
Chlordane [2C]	ND	8.5	0.90							
delta-BHC	ND	1.0	0.21							
delta-BHC [2C]	ND	1.0	0.21							
Dieldrin	ND	2.0	0.25							
Dieldrin [2C]	ND	2.0	0.25							
Endosulfan I	ND	1.0	0.21							
Endosulfan I [2C]	ND	1.0	0.21							
Endosulfan II	ND	2.0	0.22							
Endosulfan II [2C]	ND	2.0	0.22							
Endosulfan sulfate	ND	2.0	0.21							
Endosulfan Sulfate [2C]	ND	2.0	0.21							
Endrin	ND	2.0	0.23							
Endrin [2C]	ND	2.0	0.23							
Endrin aldehyde	ND	2.0	0.28							
Endrin aldehyde [2C]	ND	2.0	0.28							
Endrin ketone	ND	2.0	0.20							
Endrin ketone [2C]	ND	2.0	0.20							
gamma-BHC	ND	1.0	0.20							
gamma-BHC [2C]	ND	1.0	0.20							
gamma-Chlordane	ND	1.0	0.23							
gamma-Chlordane [2C]	ND	1.0	0.23							
Heptachlor	ND	1.0	0.19							
Heptachlor [2C]	ND	1.0	0.19							
Heptachlor epoxide	ND	1.0	0.20							
Heptachlor epoxide [2C]	ND	1.0	0.20							
Methoxychlor	ND	5.0	0.18							

Certificate of Analysis

Hushmand Associates, Inc.	Project Number : 6th St Bridge, LAC-17-001
250 Goddard	Report To : Naresh Bellana
Irvine , CA 92618	Reported : 06/05/2017

Organochlorine Pesticides by EPA 8081 - Quality Control (cont'd)

Analyte	Result (ug/kg)	PQL (ug/kg)	MDL (ug/kg)	Spike Level	Source Result	% Rec	% Rec Limits	RPD	RPD Limit	Notes
Batch B7E0750 - GCSEMI_PCB/PEST_S (continued)										
Blank (B7E0750-BLK1) - Continued					Prepared: 5/22/2017 Analyzed: 5/23/2017					
Methoxychlor [2C]	ND	5.0	0.18							
Toxaphene	ND	50	8.2							
Toxaphene [2C]	ND	50	8.2							
Surrogate: Decachlorobiphenyl	*17.18*			*16.6667*		*103*	*27 - 123*			
Surrogate: Decachlorobiphenyl [	*16.92*			*16.6667*		*102*	*27 - 123*			
Surrogate: Tetrachloro-m-xylene	*20.20*			*16.6667*		*121*	*26 - 108*			S12
Surrogate: Tetrachloro-m-xylene	*20.46*			*16.6667*		*123*	*26 - 108*			S12
LCS (B7E0750-BS1)					Prepared: 5/22/2017 Analyzed: 5/23/2017					
4,4´-DDD	18.3560	2.0	0.22	16.6667		110	53 - 125			
4,4´-DDD [2C]	18.0138	2.0	0.22	16.6667		108	53 - 125			
4,4´-DDE	19.2420	2.0	0.20	16.6667		115	54 - 113			L3
4,4´-DDE [2C]	18.3557	2.0	0.20	16.6667		110	54 - 113			
4,4´-DDT	12.5112	2.0	0.13	16.6667		75.1	25 - 127			
4,4´-DDT [2C]	12.4688	2.0	0.13	16.6667		74.8	25 - 127			
Aldrin	17.5808	1.0	0.27	16.6667		105	59 - 107			
Aldrin [2C]	17.8332	1.0	0.27	16.6667		107	59 - 107			
alpha-BHC	17.9637	1.0	0.20	16.6667		108	59 - 104			L3
alpha-BHC [2C]	17.8773	1.0	0.20	16.6667		107	59 - 104			L3
alpha-Chlordane	18.4937	1.0	0.21	16.6667		111	54 - 110			L3
alpha-Chlordane [2C]	17.9837	1.0	0.21	16.6667		108	54 - 110			
beta-BHC	18.1288	1.0	0.23	16.6667		109	57 - 103			L3
beta-BHC [2C]	18.5023	1.0	0.23	16.6667		111	57 - 103			L3
delta-BHC	16.8458	1.0	0.21	16.6667		101	16 - 120			
delta-BHC [2C]	17.0500	1.0	0.21	16.6667		102	16 - 120			
Dieldrin	17.9055	2.0	0.25	16.6667		107	61 - 109			
Dieldrin [2C]	17.1080	2.0	0.25	16.6667		103	61 - 109			
Endosulfan I	17.8248	1.0	0.21	16.6667		107	60 - 106			L3
Endosulfan I [2C]	17.3892	1.0	0.21	16.6667		104	60 - 106			
Endosulfan II	18.8545	2.0	0.22	16.6667		113	59 - 108			L3
Endosulfan II [2C]	17.6848	2.0	0.22	16.6667		106	59 - 108			
Endosulfan sulfate	17.1075	2.0	0.21	16.6667		103	54 - 110			
Endosulfan Sulfate [2C]	16.2450	2.0	0.21	16.6667		97.5	54 - 110			
Endrin	19.6777	2.0	0.23	16.6667		118	63 - 112			L3
Endrin [2C]	19.6563	2.0	0.23	16.6667		118	63 - 112			L3
Endrin aldehyde	17.4123	2.0	0.28	16.6667		104	64 - 119			
Endrin aldehyde [2C]	17.5048	2.0	0.28	16.6667		105	64 - 119			
Endrin ketone	13.8858	2.0	0.20	16.6667		83.3	54 - 115			
Endrin ketone [2C]	13.1892	2.0	0.20	16.6667		79.1	54 - 115			
gamma-BHC	17.4703	1.0	0.20	16.6667		105	60 - 107			
gamma-BHC [2C]	17.4957	1.0	0.20	16.6667		105	60 - 107			

Certificate of Analysis

Hushmand Associates, Inc.	Project Number : 6th St Bridge, LAC-17-001
250 Goddard	Report To : Naresh Bellana
Irvine , CA 92618	Reported : 06/05/2017

Organochlorine Pesticides by EPA 8081 - Quality Control (cont'd)

Analyte	Result (ug/kg)	PQL (ug/kg)	MDL (ug/kg)	Spike Level	Source Result	% Rec	% Rec Limits	RPD	RPD Limit	Notes
Batch B7E0750 - GCSEMI_PCB/PEST_S (continued)										
LCS (B7E0750-BS1) - Continued						Prepared: 5/22/2017 Analyzed: 5/23/2017				
gamma-Chlordane	17.6033	1.0	0.23	16.6667		106	57 - 106			
gamma-Chlordane [2C]	17.6135	1.0	0.23	16.6667		106	57 - 106			
Heptachlor	15.8130	1.0	0.19	16.6667		94.9	54 - 114			
Heptachlor [2C]	16.1553	1.0	0.19	16.6667		96.9	54 - 114			
Heptachlor epoxide	17.0022	1.0	0.20	16.6667		102	61 - 106			
Heptachlor epoxide [2C]	17.0738	1.0	0.20	16.6667		102	61 - 106			
Methoxychlor	11.4545	5.0	0.18	16.6667		68.7	18 - 138			
Methoxychlor [2C]	12.0663	5.0	0.18	16.6667		72.4	18 - 138			
Surrogate: Decachlorobiphenyl	*15.80*			*16.6667*		*94.8*	*27 - 123*			
Surrogate: Decachlorobiphenyl [	*16.25*			*16.6667*		*97.5*	*27 - 123*			
Surrogate: Tetrachloro-m-xylene	*18.26*			*16.6667*		*110*	*26 - 108*			S12
Surrogate: Tetrachloro-m-xylene	*24.39*			*16.6667*		*146*	*26 - 108*			S5
Matrix Spike (B7E0750-MS1)			**Source: 1702036-22**			Prepared: 5/22/2017 Analyzed: 5/23/2017				
4,4´-DDD	10.4885	2.0	0.22	16.6667	ND	62.9	25 - 141			
4,4´-DDD [2C]	10.9330	2.0	0.22	16.6667	ND	65.6	25 - 141			
4,4´-DDE	19.8625	2.0	0.20	16.6667	ND	119	22 - 141			
4,4´-DDE [2C]	19.4490	2.0	0.20	16.6667	ND	117	22 - 141			
4,4´-DDT	10.4398	2.0	0.13	16.6667	ND	62.6	15 - 136			
4,4´-DDT [2C]	10.9037	2.0	0.13	16.6667	ND	65.4	15 - 136			
Aldrin	9.99083	1.0	0.27	16.6667	ND	59.9	33 - 118			
Aldrin [2C]	10.4717	1.0	0.27	16.6667	ND	62.8	33 - 118			
alpha-BHC	8.29500	1.0	0.20	16.6667	ND	49.8	30 - 116			
alpha-BHC [2C]	8.67100	1.0	0.20	16.6667	ND	52.0	30 - 116			
alpha-Chlordane	9.13067	1.0	0.21	16.6667	ND	54.8	30 - 123			
alpha-Chlordane [2C]	9.29050	1.0	0.21	16.6667	ND	55.7	30 - 123			
beta-BHC	5.58017	1.0	0.23	16.6667	ND	33.5	24 - 121			
beta-BHC [2C]	6.00983	1.0	0.23	16.6667	ND	36.1	24 - 121			
delta-BHC	2.81917	1.0	0.21	16.6667	ND	16.9	7 - 120			
delta-BHC [2C]	3.14383	1.0	0.21	16.6667	ND	18.9	7 - 120			
Dieldrin	4.45417	2.0	0.25	16.6667	ND	26.7	25 - 136			
Dieldrin [2C]	4.47417	2.0	0.25	16.6667	ND	26.8	25 - 136			
Endosulfan I	5.58583	1.0	0.21	16.6667	ND	33.5	18 - 134			
Endosulfan I [2C]	5.72767	1.0	0.21	16.6667	ND	34.4	18 - 134			
Endosulfan II	2.03983	2.0	0.22	16.6667	ND	12.2	28 - 128			M2
Endosulfan II [2C]	1.62050	2.0	0.22	16.6667	ND	9.72	28 - 128			M2
Endosulfan sulfate	1.15150	2.0	0.21	16.6667	ND	6.91	5 - 145			
Endosulfan Sulfate [2C]	1.13217	2.0	0.21	16.6667	ND	6.79	5 - 145			
Endrin	4.94550	2.0	0.23	16.6667	ND	29.7	26 - 142			
Endrin [2C]	5.31117	2.0	0.23	16.6667	ND	31.9	26 - 142			
Endrin aldehyde	1.07917	2.0	0.28	16.6667	ND	6.48	8 - 146			M2

Certificate of Analysis

Hushmand Associates, Inc.	Project Number : 6th St Bridge, LAC-17-001
250 Goddard	Report To : Naresh Bellana
Irvine , CA 92618	Reported : 06/05/2017

Organochlorine Pesticides by EPA 8081 - Quality Control (cont'd)

Analyte	Result (ug/kg)	PQL (ug/kg)	MDL (ug/kg)	Spike Level	Source Result	% Rec	% Rec Limits	RPD	RPD Limit	Notes
Batch B7E0750 - GCSEMI_PCB/PEST_S (continued)										
Matrix Spike (B7E0750-MS1) - Continued			**Source: 1702036-22**		Prepared: 5/22/2017 Analyzed: 5/23/2017					
Endrin aldehyde [2C]	1.22133	2.0	0.28	16.6667	ND	7.33	8 - 146			M2
Endrin ketone	0.996667	2.0	0.20	16.6667	ND	5.98	16 - 139			M2
Endrin ketone [2C]	1.11533	2.0	0.20	16.6667	ND	6.69	16 - 139			M2
gamma-BHC	7.12517	1.0	0.20	16.6667	ND	42.8	30 - 122			
gamma-BHC [2C]	7.57867	1.0	0.20	16.6667	ND	45.5	30 - 122			
gamma-Chlordane	8.48667	1.0	0.23	16.6667	ND	50.9	18 - 132			
gamma-Chlordane [2C]	8.45417	1.0	0.23	16.6667	ND	50.7	18 - 132			
Heptachlor	8.79300	1.0	0.19	16.6667	ND	52.8	34 - 122			
Heptachlor [2C]	9.57100	1.0	0.19	16.6667	ND	57.4	34 - 122			
Heptachlor epoxide	5.79067	1.0	0.20	16.6667	ND	34.7	21 - 135			
Heptachlor epoxide [2C]	6.60067	1.0	0.20	16.6667	ND	39.6	21 - 135			
Methoxychlor	1.65250	5.0	0.18	16.6667	ND	9.91	8 - 162			
Methoxychlor [2C]	2.05733	5.0	0.18	16.6667	ND	12.3	8 - 162			
Surrogate: Decachlorobiphenyl	*9.493*			*16.6667*		*57.0*	*27 - 123*			
Surrogate: Decachlorobiphenyl [	*10.48*			*16.6667*		*62.9*	*27 - 123*			
Surrogate: Tetrachloro-m-xylene	*11.09*			*16.6667*		*66.5*	*26 - 108*			
Surrogate: Tetrachloro-m-xylene	*12.04*			*16.6667*		*72.3*	*26 - 108*			
Matrix Spike Dup (B7E0750-MSD1)			**Source: 1702036-22**		Prepared: 5/22/2017 Analyzed: 5/23/2017					
4,4´-DDD	10.2992	2.0	0.22	16.6667	ND	61.8	25 - 141	1.82	20	
4,4´-DDD [2C]	10.8712	2.0	0.22	16.6667	ND	65.2	25 - 141	0.567	20	
4,4´-DDE	20.6377	2.0	0.20	16.6667	ND	124	22 - 141	3.83	20	
4,4´-DDE [2C]	20.3920	2.0	0.20	16.6667	ND	122	22 - 141	4.73	20	
4,4´-DDT	10.7368	2.0	0.13	16.6667	ND	64.4	15 - 136	2.80	20	
4,4´-DDT [2C]	11.2125	2.0	0.13	16.6667	ND	67.3	15 - 136	2.79	20	
Aldrin	10.4763	1.0	0.27	16.6667	ND	62.9	33 - 118	4.74	20	
Aldrin [2C]	11.0982	1.0	0.27	16.6667	ND	66.6	33 - 118	5.81	20	
alpha-BHC	8.58250	1.0	0.20	16.6667	ND	51.5	30 - 116	3.41	20	
alpha-BHC [2C]	8.89633	1.0	0.20	16.6667	ND	53.4	30 - 116	2.57	20	
alpha-Chlordane	9.20617	1.0	0.21	16.6667	ND	55.2	30 - 123	0.823	20	
alpha-Chlordane [2C]	9.45000	1.0	0.21	16.6667	ND	56.7	30 - 123	1.70	20	
beta-BHC	5.22650	1.0	0.23	16.6667	ND	31.4	24 - 121	6.55	20	
beta-BHC [2C]	5.59967	1.0	0.23	16.6667	ND	33.6	24 - 121	7.07	20	
delta-BHC	2.07767	1.0	0.21	16.6667	ND	12.5	7 - 120	30.3	20	R
delta-BHC [2C]	2.39083	1.0	0.21	16.6667	ND	14.3	7 - 120	27.2	20	
Dieldrin	3.66050	2.0	0.25	16.6667	ND	22.0	25 - 136	19.6	20	M2
Dieldrin [2C]	3.71950	2.0	0.25	16.6667	ND	22.3	25 - 136	18.4	20	M2
Endosulfan I	4.96767	1.0	0.21	16.6667	ND	29.8	18 - 134	11.7	20	
Endosulfan I [2C]	5.13650	1.0	0.21	16.6667	ND	30.8	18 - 134	10.9	20	
Endosulfan II	1.40933	2.0	0.22	16.6667	ND	8.46	28 - 128	36.6	20	M2, R
Endosulfan II [2C]	0.959333	2.0	0.22	16.6667	ND	5.76	28 - 128	51.3	20	M2, R

Certificate of Analysis

Hushmand Associates, Inc.	Project Number : 6th St Bridge, LAC-17-001
250 Goddard	Report To : Naresh Bellana
Irvine , CA 92618	Reported : 06/05/2017

Organochlorine Pesticides by EPA 8081 - Quality Control (cont'd)

Analyte	Result (ug/kg)	PQL (ug/kg)	MDL (ug/kg)	Spike Level	Source Result	% Rec	% Rec Limits	RPD	RPD Limit	Notes
Batch B7E0750 - GCSEMI_PCB/PEST_S (continued)										
Matrix Spike Dup (B7E0750-MSD1) - Continued			**Source: 1702036-22**		Prepared: 5/22/2017 Analyzed: 5/23/2017					
Endosulfan sulfate	0.617333	2.0	0.21	16.6667	ND	3.70	5 - 145	60.4	20	M2, R
Endosulfan Sulfate [2C]	0.623500	2.0	0.21	16.6667	ND	3.74	5 - 145	57.9	20	M2, R
Endrin	4.11617	2.0	0.23	16.6667	ND	24.7	26 - 142	18.3	20	M2
Endrin [2C]	4.50733	2.0	0.23	16.6667	ND	27.0	26 - 142	16.4	20	
Endrin aldehyde	0.614167	2.0	0.28	16.6667	ND	3.68	8 - 146	54.9	20	M2, R
Endrin aldehyde [2C]	0.667000	2.0	0.28	16.6667	ND	4.00	8 - 146	58.7	20	M2, R
Endrin ketone	0.556833	2.0	0.20	16.6667	ND	3.34	16 - 139	56.6	20	M2, R
Endrin ketone [2C]	0.643833	2.0	0.20	16.6667	ND	3.86	16 - 139	53.6	20	M2, R
gamma-BHC	7.01683	1.0	0.20	16.6667	ND	42.1	30 - 122	1.53	20	
gamma-BHC [2C]	7.49283	1.0	0.20	16.6667	ND	45.0	30 - 122	1.14	20	
gamma-Chlordane	8.44667	1.0	0.23	16.6667	ND	50.7	18 - 132	0.472	20	
gamma-Chlordane [2C]	8.45867	1.0	0.23	16.6667	ND	50.8	18 - 132	0.0532	20	
Heptachlor	9.20083	1.0	0.19	16.6667	ND	55.2	34 - 122	4.53	20	
Heptachlor [2C]	10.1585	1.0	0.19	16.6667	ND	61.0	34 - 122	5.96	20	
Heptachlor epoxide	5.27883	1.0	0.20	16.6667	ND	31.7	21 - 135	9.25	20	
Heptachlor epoxide [2C]	6.17433	1.0	0.20	16.6667	ND	37.0	21 - 135	6.67	20	
Methoxychlor	1.04167	5.0	0.18	16.6667	ND	6.25	8 - 162	45.3	20	M2, R
Methoxychlor [2C]	1.39933	5.0	0.18	16.6667	ND	8.40	8 - 162	38.1	20	R
Surrogate: Decachlorobiphenyl	*9.873*			*16.6667*		*59.2*	*27 - 123*			
Surrogate: Decachlorobiphenyl [	*10.97*			*16.6667*		*65.8*	*27 - 123*			
Surrogate: Tetrachloro-m-xylene	*11.86*			*16.6667*		*71.2*	*26 - 108*			
Surrogate: Tetrachloro-m-xylene	*12.84*			*16.6667*		*77.0*	*26 - 108*			

Certificate of Analysis

Hushmand Associates, Inc.	Project Number : 6th St Bridge, LAC-17-001
250 Goddard	Report To : Naresh Bellana
Irvine , CA 92618	Reported : 06/05/2017

Organochlorine Pesticides by EPA 8081 - Quality Control

Analyte	Result (ug/kg)	PQL (ug/kg)	MDL (ug/kg)	Spike Level	Source Result	% Rec	% Rec Limits	RPD	RPD Limit	Notes
Batch B7E0819 - GCSEMI_PCB/PEST_S										
Blank (B7E0819-BLK1)							Prepared: 5/24/2017 Analyzed: 5/24/2017			
4,4´-DDD	ND	2.0	0.22							
4,4´-DDD [2C]	ND	2.0	0.22							
4,4´-DDE	ND	2.0	0.20							
4,4´-DDE [2C]	ND	2.0	0.20							
4,4´-DDT	ND	2.0	0.13							
4,4´-DDT [2C]	ND	2.0	0.13							
Aldrin	ND	1.0	0.27							
Aldrin [2C]	ND	1.0	0.27							
alpha-BHC	ND	1.0	0.20							
alpha-BHC [2C]	ND	1.0	0.20							
alpha-Chlordane	ND	1.0	0.21							
alpha-Chlordane [2C]	ND	1.0	0.21							
beta-BHC	ND	1.0	0.23							
beta-BHC [2C]	ND	1.0	0.23							
Chlordane	ND	8.5	0.90							
Chlordane [2C]	ND	8.5	0.90							
delta-BHC	ND	1.0	0.21							
delta-BHC [2C]	ND	1.0	0.21							
Dieldrin	ND	2.0	0.25							
Dieldrin [2C]	ND	2.0	0.25							
Endosulfan I	ND	1.0	0.21							
Endosulfan I [2C]	ND	1.0	0.21							
Endosulfan II	ND	2.0	0.22							
Endosulfan II [2C]	ND	2.0	0.22							
Endosulfan sulfate	ND	2.0	0.21							
Endosulfan Sulfate [2C]	ND	2.0	0.21							
Endrin	ND	2.0	0.23							
Endrin [2C]	ND	2.0	0.23							
Endrin aldehyde	ND	2.0	0.28							
Endrin aldehyde [2C]	ND	2.0	0.28							
Endrin ketone	ND	2.0	0.20							
Endrin ketone [2C]	ND	2.0	0.20							
gamma-BHC	ND	1.0	0.20							
gamma-BHC [2C]	ND	1.0	0.20							
gamma-Chlordane	ND	1.0	0.23							
gamma-Chlordane [2C]	ND	1.0	0.23							
Heptachlor	ND	1.0	0.19							
Heptachlor [2C]	ND	1.0	0.19							
Heptachlor epoxide	ND	1.0	0.20							
Heptachlor epoxide [2C]	ND	1.0	0.20							
Methoxychlor	ND	5.0	0.18							

Certificate of Analysis

Hushmand Associates, Inc.	Project Number : 6th St Bridge, LAC-17-001
250 Goddard	Report To : Naresh Bellana
Irvine , CA 92618	Reported : 06/05/2017

Organochlorine Pesticides by EPA 8081 - Quality Control (cont'd)

Analyte	Result (ug/kg)	PQL (ug/kg)	MDL (ug/kg)	Spike Level	Source Result	% Rec	% Rec Limits	RPD	RPD Limit	Notes
Batch B7E0819 - GCSEMI_PCB/PEST_S (continued)										
Blank (B7E0819-BLK1) - Continued					Prepared: 5/24/2017 Analyzed: 5/24/2017					
Methoxychlor [2C]	ND	5.0	0.18							
Toxaphene	ND	50	8.2							
Toxaphene [2C]	ND	50	8.2							
Surrogate: Decachlorobiphenyl	*14.00*			*16.6667*		*84.0*	*27 - 123*			
Surrogate: Decachlorobiphenyl [	*15.06*			*16.6667*		*90.3*	*27 - 123*			
Surrogate: Tetrachloro-m-xylene	*17.62*			*16.6667*		*106*	*26 - 108*			
Surrogate: Tetrachloro-m-xylene	*18.04*			*16.6667*		*108*	*26 - 108*			
LCS (B7E0819-BS1)					Prepared: 5/24/2017 Analyzed: 5/24/2017					
4,4´-DDD	14.9642	2.0	0.22	16.6667		89.8	53 - 125			
4,4´-DDD [2C]	15.1600	2.0	0.22	16.6667		91.0	53 - 125			
4,4´-DDE	14.8060	2.0	0.20	16.6667		88.8	54 - 113			
4,4´-DDE [2C]	14.5502	2.0	0.20	16.6667		87.3	54 - 113			
4,4´-DDT	7.05117	2.0	0.13	16.6667		42.3	25 - 127			
4,4´-DDT [2C]	7.30350	2.0	0.13	16.6667		43.8	25 - 127			
Aldrin	14.0788	1.0	0.27	16.6667		84.5	59 - 107			
Aldrin [2C]	14.4073	1.0	0.27	16.6667		86.4	59 - 107			
alpha-BHC	14.3227	1.0	0.20	16.6667		85.9	59 - 104			
alpha-BHC [2C]	14.4075	1.0	0.20	16.6667		86.4	59 - 104			
alpha-Chlordane	14.4215	1.0	0.21	16.6667		86.5	54 - 110			
alpha-Chlordane [2C]	14.3808	1.0	0.21	16.6667		86.3	54 - 110			
beta-BHC	14.1683	1.0	0.23	16.6667		85.0	57 - 103			
beta-BHC [2C]	15.4288	1.0	0.23	16.6667		92.6	57 - 103			
delta-BHC	12.7328	1.0	0.21	16.6667		76.4	16 - 120			
delta-BHC [2C]	12.9925	1.0	0.21	16.6667		78.0	16 - 120			
Dieldrin	14.3892	2.0	0.25	16.6667		86.3	61 - 109			
Dieldrin [2C]	13.9312	2.0	0.25	16.6667		83.6	61 - 109			
Endosulfan I	14.2013	1.0	0.21	16.6667		85.2	60 - 106			
Endosulfan I [2C]	14.0802	1.0	0.21	16.6667		84.5	60 - 106			
Endosulfan II	15.1767	2.0	0.22	16.6667		91.1	59 - 108			
Endosulfan II [2C]	14.4607	2.0	0.22	16.6667		86.8	59 - 108			
Endosulfan sulfate	13.1708	2.0	0.21	16.6667		79.0	54 - 110			
Endosulfan Sulfate [2C]	13.1407	2.0	0.21	16.6667		78.8	54 - 110			
Endrin	15.7118	2.0	0.23	16.6667		94.3	63 - 112			
Endrin [2C]	16.0930	2.0	0.23	16.6667		96.6	63 - 112			
Endrin aldehyde	14.1060	2.0	0.28	16.6667		84.6	64 - 119			
Endrin aldehyde [2C]	14.5288	2.0	0.28	16.6667		87.2	64 - 119			
Endrin ketone	10.5707	2.0	0.20	16.6667		63.4	54 - 115			
Endrin ketone [2C]	10.6800	2.0	0.20	16.6667		64.1	54 - 115			
gamma-BHC	13.6353	1.0	0.20	16.6667		81.8	60 - 107			
gamma-BHC [2C]	13.8883	1.0	0.20	16.6667		83.3	60 - 107			

Certificate of Analysis

Hushmand Associates, Inc.	Project Number : 6th St Bridge, LAC-17-001
250 Goddard	Report To : Naresh Bellana
Irvine , CA 92618	Reported : 06/05/2017

Organochlorine Pesticides by EPA 8081 - Quality Control (cont'd)

Analyte	Result (ug/kg)	PQL (ug/kg)	MDL (ug/kg)	Spike Level	Source Result	% Rec	% Rec Limits	RPD	RPD Limit	Notes
Batch B7E0819 - GCSEMI_PCB/PEST_S (continued)										
LCS (B7E0819-BS1) - Continued						Prepared: 5/24/2017 Analyzed: 5/24/2017				
gamma-Chlordane	13.8768	1.0	0.23	16.6667		83.3	57 - 106			
gamma-Chlordane [2C]	13.8610	1.0	0.23	16.6667		83.2	57 - 106			
Heptachlor	11.7530	1.0	0.19	16.6667		70.5	54 - 114			
Heptachlor [2C]	12.1178	1.0	0.19	16.6667		72.7	54 - 114			
Heptachlor epoxide	13.3178	1.0	0.20	16.6667		79.9	61 - 106			
Heptachlor epoxide [2C]	13.6673	1.0	0.20	16.6667		82.0	61 - 106			
Methoxychlor	7.10350	5.0	0.18	16.6667		42.6	18 - 138			
Methoxychlor [2C]	7.85133	5.0	0.18	16.6667		47.1	18 - 138			
Surrogate: Decachlorobiphenyl	*12.52*			*16.6667*		*75.1*	*27 - 123*			
Surrogate: Decachlorobiphenyl [	*13.48*			*16.6667*		*80.9*	*27 - 123*			
Surrogate: Tetrachloro-m-xylene	*15.36*			*16.6667*		*92.2*	*26 - 108*			
Surrogate: Tetrachloro-m-xylene	*15.99*			*16.6667*		*96.0*	*26 - 108*			
Matrix Spike (B7E0819-MS1)			**Source: 1702036-AA**			Prepared: 5/24/2017 Analyzed: 5/24/2017				
4,4´-DDD	9.38000	2.0	0.22	16.6667	ND	56.3	25 - 141			
4,4´-DDD [2C]	10.0630	2.0	0.22	16.6667	ND	60.4	25 - 141			
4,4´-DDE	9.24233	2.0	0.20	16.6667	ND	55.5	22 - 141			
4,4´-DDE [2C]	9.60733	2.0	0.20	16.6667	ND	57.6	22 - 141			
4,4´-DDT	5.43150	2.0	0.13	16.6667	ND	32.6	15 - 136			
4,4´-DDT [2C]	6.10333	2.0	0.13	16.6667	ND	36.6	15 - 136			
Aldrin	8.77633	1.0	0.27	16.6667	ND	52.7	33 - 118			
Aldrin [2C]	9.44567	1.0	0.27	16.6667	ND	56.7	33 - 118			
alpha-BHC	8.88017	1.0	0.20	16.6667	ND	53.3	30 - 116			
alpha-BHC [2C]	9.40600	1.0	0.20	16.6667	ND	56.4	30 - 116			
alpha-Chlordane	9.24317	1.0	0.21	16.6667	ND	55.5	30 - 123			
alpha-Chlordane [2C]	9.56350	1.0	0.21	16.6667	ND	57.4	30 - 123			
beta-BHC	9.02083	1.0	0.23	16.6667	ND	54.1	24 - 121			
beta-BHC [2C]	9.92233	1.0	0.23	16.6667	ND	59.5	24 - 121			
delta-BHC	8.43767	1.0	0.21	16.6667	ND	50.6	7 - 120			
delta-BHC [2C]	8.75083	1.0	0.21	16.6667	ND	52.5	7 - 120			
Dieldrin	9.01167	2.0	0.25	16.6667	ND	54.1	25 - 136			
Dieldrin [2C]	9.30783	2.0	0.25	16.6667	ND	55.8	25 - 136			
Endosulfan I	9.14433	1.0	0.21	16.6667	ND	54.9	18 - 134			
Endosulfan I [2C]	9.34417	1.0	0.21	16.6667	ND	56.1	18 - 134			
Endosulfan II	9.50367	2.0	0.22	16.6667	ND	57.0	28 - 128			
Endosulfan II [2C]	9.64967	2.0	0.22	16.6667	ND	57.9	28 - 128			
Endosulfan sulfate	8.46333	2.0	0.21	16.6667	ND	50.8	5 - 145			
Endosulfan Sulfate [2C]	8.76600	2.0	0.21	16.6667	ND	52.6	5 - 145			
Endrin	9.88317	2.0	0.23	16.6667	ND	59.3	26 - 142			
Endrin [2C]	11.0022	2.0	0.23	16.6667	ND	66.0	26 - 142			
Endrin aldehyde	9.29700	2.0	0.28	16.6667	ND	55.8	8 - 146			

Hushmand Associates, Inc.	Project Number : 6th St Bridge, LAC-17-001
250 Goddard	Report To : Naresh Bellana
Irvine , CA 92618	Reported : 06/05/2017

Organochlorine Pesticides by EPA 8081 - Quality Control (cont'd)

Analyte	Result (ug/kg)	PQL (ug/kg)	MDL (ug/kg)	Spike Level	Source Result	% Rec	% Rec Limits	RPD	RPD Limit	Notes
Batch B7E0819 - GCSEMI_PCB/PEST_S (continued)										
Matrix Spike (B7E0819-MS1) - Continued			**Source: 1702036-AA**			Prepared: 5/24/2017 Analyzed: 5/24/2017				
Endrin aldehyde [2C]	6.97367	2.0	0.28	16.6667	ND	41.8	8 - 146			
Endrin ketone	7.14133	2.0	0.20	16.6667	ND	42.8	16 - 139			
Endrin ketone [2C]	7.48550	2.0	0.20	16.6667	ND	44.9	16 - 139			
gamma-BHC	8.64750	1.0	0.20	16.6667	ND	51.9	30 - 122			
gamma-BHC [2C]	9.25950	1.0	0.20	16.6667	ND	55.6	30 - 122			
gamma-Chlordane	8.89250	1.0	0.23	16.6667	ND	53.4	18 - 132			
gamma-Chlordane [2C]	9.23333	1.0	0.23	16.6667	ND	55.4	18 - 132			
Heptachlor	7.82083	1.0	0.19	16.6667	ND	46.9	34 - 122			
Heptachlor [2C]	8.46333	1.0	0.19	16.6667	ND	50.8	34 - 122			
Heptachlor epoxide	8.51117	1.0	0.20	16.6667	ND	51.1	21 - 135			
Heptachlor epoxide [2C]	9.18733	1.0	0.20	16.6667	ND	55.1	21 - 135			
Methoxychlor	5.69633	5.0	0.18	16.6667	ND	34.2	8 - 162			
Methoxychlor [2C]	6.30750	5.0	0.18	16.6667	ND	37.8	8 - 162			
Surrogate: Decachlorobiphenyl	*7.702*			*16.6667*		*46.2*	*27 - 123*			
Surrogate: Decachlorobiphenyl [	*9.205*			*16.6667*		*55.2*	*27 - 123*			
Surrogate: Tetrachloro-m-xylene	*9.194*			*16.6667*		*55.2*	*26 - 108*			
Surrogate: Tetrachloro-m-xylene	*9.815*			*16.6667*		*58.9*	*26 - 108*			
Matrix Spike Dup (B7E0819-MSD1)			**Source: 1702036-AA**			Prepared: 5/24/2017 Analyzed: 5/24/2017				
4,4´-DDD	9.36900	2.0	0.22	16.6667	ND	56.2	25 - 141	0.117	20	
4,4´-DDD [2C]	9.98050	2.0	0.22	16.6667	ND	59.9	25 - 141	0.823	20	
4,4´-DDE	9.17733	2.0	0.20	16.6667	ND	55.1	22 - 141	0.706	20	
4,4´-DDE [2C]	9.51700	2.0	0.20	16.6667	ND	57.1	22 - 141	0.945	20	
4,4´-DDT	4.87767	2.0	0.13	16.6667	ND	29.3	15 - 136	10.7	20	
4,4´-DDT [2C]	6.12300	2.0	0.13	16.6667	ND	36.7	15 - 136	0.322	20	
Aldrin	8.63117	1.0	0.27	16.6667	ND	51.8	33 - 118	1.67	20	
Aldrin [2C]	9.34400	1.0	0.27	16.6667	ND	56.1	33 - 118	1.08	20	
alpha-BHC	8.76000	1.0	0.20	16.6667	ND	52.6	30 - 116	1.36	20	
alpha-BHC [2C]	9.28367	1.0	0.20	16.6667	ND	55.7	30 - 116	1.31	20	
alpha-Chlordane	9.19100	1.0	0.21	16.6667	ND	55.1	30 - 123	0.566	20	
alpha-Chlordane [2C]	9.47733	1.0	0.21	16.6667	ND	56.9	30 - 123	0.905	20	
beta-BHC	8.93900	1.0	0.23	16.6667	ND	53.6	24 - 121	0.911	20	
beta-BHC [2C]	9.80400	1.0	0.23	16.6667	ND	58.8	24 - 121	1.20	20	
delta-BHC	8.31267	1.0	0.21	16.6667	ND	49.9	7 - 120	1.49	20	
delta-BHC [2C]	8.67267	1.0	0.21	16.6667	ND	52.0	7 - 120	0.897	20	
Dieldrin	8.96333	2.0	0.25	16.6667	ND	53.8	25 - 136	0.538	20	
Dieldrin [2C]	9.23900	2.0	0.25	16.6667	ND	55.4	25 - 136	0.742	20	
Endosulfan I	9.09250	1.0	0.21	16.6667	ND	54.6	18 - 134	0.568	20	
Endosulfan I [2C]	9.26267	1.0	0.21	16.6667	ND	55.6	18 - 134	0.876	20	
Endosulfan II	9.49133	2.0	0.22	16.6667	ND	56.9	28 - 128	0.130	20	
Endosulfan II [2C]	9.57233	2.0	0.22	16.6667	ND	57.4	28 - 128	0.805	20	

Certificate of Analysis

Hushmand Associates, Inc.	Project Number : 6th St Bridge, LAC-17-001
250 Goddard	Report To : Naresh Bellana
Irvine , CA 92618	Reported : 06/05/2017

Organochlorine Pesticides by EPA 8081 - Quality Control (cont'd)

Analyte	Result (ug/kg)	PQL (ug/kg)	MDL (ug/kg)	Spike Level	Source Result	% Rec	% Rec Limits	RPD	RPD Limit	Notes
Batch B7E0819 - GCSEMI_PCB/PEST_S (continued)										
Matrix Spike Dup (B7E0819-MSD1) - Continued			**Source: 1702036-AA**		Prepared: 5/24/2017 Analyzed: 5/24/2017					
Endosulfan sulfate	8.40433	2.0	0.21	16.6667	ND	50.4	5 - 145	0.700	20	
Endosulfan Sulfate [2C]	8.73317	2.0	0.21	16.6667	ND	52.4	5 - 145	0.375	20	
Endrin	9.84750	2.0	0.23	16.6667	ND	59.1	26 - 142	0.362	20	
Endrin [2C]	10.8925	2.0	0.23	16.6667	ND	65.4	26 - 142	1.00	20	
Endrin aldehyde	8.91967	2.0	0.28	16.6667	ND	53.5	8 - 146	4.14	20	
Endrin aldehyde [2C]	6.82533	2.0	0.28	16.6667	ND	41.0	8 - 146	2.15	20	
Endrin ketone	7.20633	2.0	0.20	16.6667	ND	43.2	16 - 139	0.906	20	
Endrin ketone [2C]	7.50650	2.0	0.20	16.6667	ND	45.0	16 - 139	0.280	20	
gamma-BHC	8.53150	1.0	0.20	16.6667	ND	51.2	30 - 122	1.35	20	
gamma-BHC [2C]	9.15933	1.0	0.20	16.6667	ND	55.0	30 - 122	1.09	20	
gamma-Chlordane	8.83150	1.0	0.23	16.6667	ND	53.0	18 - 132	0.688	20	
gamma-Chlordane [2C]	9.16000	1.0	0.23	16.6667	ND	55.0	18 - 132	0.797	20	
Heptachlor	7.71917	1.0	0.19	16.6667	ND	46.3	34 - 122	1.31	20	
Heptachlor [2C]	8.37083	1.0	0.19	16.6667	ND	50.2	34 - 122	1.10	20	
Heptachlor epoxide	8.45700	1.0	0.20	16.6667	ND	50.7	21 - 135	0.638	20	
Heptachlor epoxide [2C]	9.12267	1.0	0.20	16.6667	ND	54.7	21 - 135	0.706	20	
Methoxychlor	5.75167	5.0	0.18	16.6667	ND	34.5	8 - 162	0.967	20	
Methoxychlor [2C]	6.32900	5.0	0.18	16.6667	ND	38.0	8 - 162	0.340	20	
Surrogate: Decachlorobiphenyl	*8.397*			*16.6667*		*50.4*	*27 - 123*			
Surrogate: Decachlorobiphenyl [	*9.234*			*16.6667*		*55.4*	*27 - 123*			
Surrogate: Tetrachloro-m-xylene	*9.134*			*16.6667*		*54.8*	*26 - 108*			
Surrogate: Tetrachloro-m-xylene	*9.671*			*16.6667*		*58.0*	*26 - 108*			

Certificate of Analysis

Hushmand Associates, Inc.	Project Number : 6th St Bridge, LAC-17-001
250 Goddard	Report To : Naresh Bellana
Irvine , CA 92618	Reported : 06/05/2017

Polychlorinated Biphenyls by EPA 8082 - Quality Control

Analyte	Result (ug/kg)	PQL (ug/kg)	MDL (ug/kg)	Spike Level	Source Result	% Rec	% Rec Limits	RPD	RPD Limit	Notes
Batch B7E0750 - GCSEMI_PCB/PEST_S										
Blank (B7E0750-BLK2)						Prepared: 5/22/2017 Analyzed: 5/22/2017				
Aroclor 1016	ND	16	1.5							
Aroclor 1221	ND	16	1.5							
Aroclor 1232	ND	16	1.5							
Aroclor 1242	ND	16	1.5							
Aroclor 1248	ND	16	1.5							
Aroclor 1254	ND	16	1.5							
Aroclor 1260	ND	16	1.5							
Aroclor 1262	ND	16	1.5							
Aroclor 1268	ND	16	1.5							
Surrogate: Decachlorobiphenyl	*15.44*			*16.6667*		*92.6*	*18 - 136*			
Surrogate: Tetrachloro-m-xylene	*15.30*			*16.6667*		*91.8*	*30 - 130*			
LCS (B7E0750-BS2)						Prepared: 5/22/2017 Analyzed: 5/22/2017				
Aroclor 1016	151.591	16	1.5	166.667		91.0	73 - 111			
Aroclor 1260	170.434	16	1.5	166.667		102	75 - 125			
Surrogate: Decachlorobiphenyl	*15.78*			*16.6667*		*94.7*	*18 - 136*			
Surrogate: Tetrachloro-m-xylene	*15.68*			*16.6667*		*94.1*	*30 - 130*			
Matrix Spike (B7E0750-MS2)			**Source: 1702074-02**			Prepared: 5/22/2017 Analyzed: 5/22/2017				
Aroclor 1016	149.019	16	1.5	166.667	ND	89.4	36 - 127			
Aroclor 1260	159.258	16	1.5	166.667	ND	95.6	31 - 142			
Surrogate: Decachlorobiphenyl	*15.29*			*16.6667*		*91.7*	*18 - 136*			
Surrogate: Tetrachloro-m-xylene	*14.30*			*16.6667*		*85.8*	*30 - 130*			
Matrix Spike Dup (B7E0750-MSD2)			**Source: 1702074-02**			Prepared: 5/22/2017 Analyzed: 5/22/2017				
Aroclor 1016	145.573	16	1.5	166.667	ND	87.3	36 - 127	2.34	20	
Aroclor 1260	154.035	16	1.5	166.667	ND	92.4	31 - 142	3.33	20	
Surrogate: Decachlorobiphenyl	*14.53*			*16.6667*		*87.2*	*18 - 136*			
Surrogate: Tetrachloro-m-xylene	*13.82*			*16.6667*		*82.9*	*30 - 130*			

Certificate of Analysis

Hushmand Associates, Inc.	Project Number : 6th St Bridge, LAC-17-001
250 Goddard	Report To : Naresh Bellana
Irvine , CA 92618	Reported : 06/05/2017

Polychlorinated Biphenyls by EPA 8082 - Quality Control

Analyte	Result (ug/kg)	PQL (ug/kg)	MDL (ug/kg)	Spike Level	Source Result	% Rec	% Rec Limits	RPD	RPD Limit	Notes
Batch B7E0819 - GCSEMI_PCB/PEST_S										
Blank (B7E0819-BLK2)						Prepared: 5/24/2017 Analyzed: 5/24/2017				
Aroclor 1016	ND	16	1.5							
Aroclor 1221	ND	16	1.5							
Aroclor 1232	ND	16	1.5							
Aroclor 1242	ND	16	1.5							
Aroclor 1248	ND	16	1.5							
Aroclor 1254	ND	16	1.5							
Aroclor 1260	ND	16	1.5							
Aroclor 1262	ND	16	1.5							
Aroclor 1268	ND	16	1.5							
Surrogate: Decachlorobiphenyl	*13.58*			*16.6667*		*81.5*	*18 - 136*			
Surrogate: Tetrachloro-m-xylene	*16.38*			*16.6667*		*98.3*	*30 - 130*			
LCS (B7E0819-BS2)						Prepared: 5/24/2017 Analyzed: 5/24/2017				
Aroclor 1016	140.010	16	1.5	166.667		84.0	73 - 111			
Aroclor 1260	144.947	16	1.5	166.667		87.0	75 - 125			
Surrogate: Decachlorobiphenyl	*11.78*			*16.6667*		*70.7*	*18 - 136*			
Surrogate: Tetrachloro-m-xylene	*14.41*			*16.6667*		*86.5*	*30 - 130*			
Matrix Spike (B7E0819-MS2)			**Source: 1702036-AA**			Prepared: 5/24/2017 Analyzed: 5/24/2017				
Aroclor 1016	119.665	16	1.5	166.667	ND	71.8	36 - 127			
Aroclor 1260	113.055	16	1.5	166.667	ND	67.8	31 - 142			
Surrogate: Decachlorobiphenyl	*8.732*			*16.6667*		*52.4*	*18 - 136*			
Surrogate: Tetrachloro-m-xylene	*11.40*			*16.6667*		*68.4*	*30 - 130*			
Matrix Spike Dup (B7E0819-MSD2)			**Source: 1702036-AA**			Prepared: 5/24/2017 Analyzed: 5/24/2017				
Aroclor 1016	128.332	16	1.5	166.667	ND	77.0	36 - 127	6.99	20	
Aroclor 1260	115.243	16	1.5	166.667	ND	69.1	31 - 142	1.92	20	
Surrogate: Decachlorobiphenyl	*8.946*			*16.6667*		*53.7*	*18 - 136*			
Surrogate: Tetrachloro-m-xylene	*12.21*			*16.6667*		*73.3*	*30 - 130*			

Certificate of Analysis

Hushmand Associates, Inc.	Project Number : 6th St Bridge, LAC-17-001
250 Goddard	Report To : Naresh Bellana
Irvine , CA 92618	Reported : 06/05/2017

Volatile Organic Compounds by EPA 8260B - Quality Control

Analyte	Result (ug/kg)	PQL (ug/kg)	MDL (ug/kg)	Spike Level	Source Result	% Rec	% Rec Limits	RPD	RPD Limit	Notes
Batch B7E0639 - MSVOA_S										
Blank (B7E0639-BLK1)					Prepared: 5/18/2017 Analyzed: 5/18/2017					
1,1,1,2-Tetrachloroethane	ND	5.0	0.63							
1,1,1-Trichloroethane	ND	5.0	0.63							
1,1,2,2-Tetrachloroethane	ND	5.0	0.92							
1,1,2-Trichloroethane	ND	5.0	1.4							
1,1-Dichloroethane	ND	5.0	1.5							
1,1-Dichloroethene	ND	5.0	0.69							
1,1-Dichloropropene	ND	5.0	2.4							
1,2,3-Trichloropropane	ND	5.0	1.2							
1,2,3-Trichlorobenzene	ND	5.0	1.1							
1,2,4-Trichlorobenzene	ND	5.0	0.96							
1,2,4-Trimethylbenzene	ND	5.0	0.53							
1,2-Dibromo-3-chloropropane	ND	10	1.1							
1,2-Dibromoethane	ND	5.0	0.80							
1,2-Dichlorobenzene	ND	5.0	0.51							
1,2-Dichloroethane	ND	5.0	0.53							
1,2-Dichloropropane	ND	5.0	0.76							
1,3,5-Trimethylbenzene	ND	5.0	0.58							
1,3-Dichlorobenzene	ND	5.0	0.63							
1,3-Dichloropropane	ND	5.0	0.59							
1,4-Dichlorobenzene	ND	5.0	0.73							
2,2-Dichloropropane	ND	5.0	0.68							
2-Chlorotoluene	ND	5.0	0.68							
4-Chlorotoluene	ND	5.0	0.62							
4-Isopropyltoluene	ND	5.0	0.63							
Benzene	ND	5.0	0.59							
Bromobenzene	ND	5.0	1.9							
Bromochloromethane	ND	5.0	3.1							
Bromodichloromethane	ND	5.0	1.0							
Bromoform	ND	5.0	0.70							
Bromomethane	ND	5.0	4.2							
Carbon disulfide	ND	5.0	1.2							
Carbon tetrachloride	ND	5.0	1.1							
Chlorobenzene	ND	5.0	0.64							
Chloroethane	ND	5.0	1.9							
Chloroform	ND	5.0	1.4							
Chloromethane	ND	5.0	1.9							
cis-1,2-Dichloroethene	ND	5.0	0.87							
cis-1,3-Dichloropropene	ND	5.0	0.79							
Di-isopropyl ether	ND	5.0	0.51							
Dibromochloromethane	ND	5.0	1.0							
Dibromomethane	ND	5.0	0.99							

Certificate of Analysis

Hushmand Associates, Inc.	Project Number : 6th St Bridge, LAC-17-001
250 Goddard	Report To : Naresh Bellana
Irvine , CA 92618	Reported : 06/05/2017

Volatile Organic Compounds by EPA 8260B - Quality Control (cont'd)

Analyte	Result (ug/kg)	PQL (ug/kg)	MDL (ug/kg)	Spike Level	Source Result	% Rec	% Rec Limits	RPD	RPD Limit	Notes
Batch B7E0639 - MSVOA_S (continued)										
Blank (B7E0639-BLK1) - Continued					Prepared: 5/18/2017 Analyzed: 5/18/2017					
Dichlorodifluoromethane	ND	5.0	2.2							
Ethyl Acetate	ND	50	9.7							
Ethyl Ether	ND	50	7.3							
Ethyl tert-butyl ether	ND	5.0	1.4							
Ethylbenzene	ND	5.0	0.65							
Freon-113	ND	5.0	1.0							
Hexachlorobutadiene	ND	5.0	0.78							
Isopropylbenzene	ND	5.0	0.59							
m,p-Xylene	ND	10	1.2							
Methylene chloride	ND	5.0	1.4							
MTBE	ND	5.0	0.50							
n-Butylbenzene	ND	5.0	0.75							
n-Propylbenzene	ND	5.0	0.55							
Naphthalene	ND	5.0	1.2							
o-Xylene	ND	5.0	0.86							
sec-Butylbenzene	ND	5.0	0.79							
Styrene	ND	5.0	0.82							
tert-Amyl methyl ether	ND	5.0	1.5							
tert-Butanol	ND	100	5.9							
tert-Butylbenzene	ND	5.0	0.57							
Tetrachloroethene	ND	5.0	0.65							
Toluene	ND	5.0	0.80							
trans-1,2-Dichloroethene	ND	5.0	1.5							
trans-1,3-Dichloropropene	ND	5.0	0.63							
Trichloroethene	ND	5.0	1.1							
Trichlorofluoromethane	ND	5.0	0.89							
Vinyl acetate	ND	50	5.7							
Vinyl chloride	ND	5.0	2.0							
Surrogate: 1,2-Dichloroethane-d4	*59.51*			*50.0000*		*119*	*12 - 186*			
Surrogate: 4-Bromofluorobenzene	*50.19*			*50.0000*		*100*	*23 - 162*			
Surrogate: Dibromofluoromethan	*50.95*			*50.0000*		*102*	*23 - 179*			
Surrogate: Toluene-d8	*51.07*			*50.0000*		*102*	*26 - 164*			
LCS (B7E0639-BS1)					Prepared: 5/18/2017 Analyzed: 5/18/2017					
1,1,1,2-Tetrachloroethane	50.3000	5.0	0.63	50.0000		101	78 - 119			
1,1,1-Trichloroethane	45.5800	5.0	0.63	50.0000		91.2	75 - 123			
1,1,2,2-Tetrachloroethane	51.3700	5.0	0.92	50.0000		103	65 - 117			
1,1,2-Trichloroethane	55.7900	5.0	1.4	50.0000		112	79 - 108			L5
1,1-Dichloroethane	47.5300	5.0	1.5	50.0000		95.1	69 - 120			
1,1-Dichloroethene	49.4600	5.0	0.69	50.0000		98.9	59 - 126			
1,1-Dichloropropene	45.8600	5.0	2.4	50.0000		91.7	76 - 121			

Certificate of Analysis

Hushmand Associates, Inc.	Project Number : 6th St Bridge, LAC-17-001
250 Goddard	Report To : Naresh Bellana
Irvine , CA 92618	Reported : 06/05/2017

Volatile Organic Compounds by EPA 8260B - Quality Control (cont'd)

Analyte	Result (ug/kg)	PQL (ug/kg)	MDL (ug/kg)	Spike Level	Source Result	% Rec	% Rec Limits	RPD	RPD Limit	Notes
Batch B7E0639 - MSVOA_S (continued)										
LCS (B7E0639-BS1) - Continued					Prepared: 5/18/2017 Analyzed: 5/18/2017					
1,2,3-Trichloropropane	53.4400	5.0	1.2	50.0000		107	66 - 118			
1,2,3-Trichlorobenzene	61.2200	5.0	1.1	50.0000		122	75 - 116			L5
1,2,4-Trichlorobenzene	61.2700	5.0	0.96	50.0000		123	79 - 121			L5
1,2,4-Trimethylbenzene	49.8000	5.0	0.53	50.0000		99.6	80 - 118			
1,2-Dibromo-3-chloropropane	55.0200	10	1.1	50.0000		110	65 - 122			
1,2-Dibromoethane	61.9500	5.0	0.80	50.0000		124	77 - 115			L5
1,2-Dichlorobenzene	52.7200	5.0	0.51	50.0000		105	81 - 115			
1,2-Dichloroethane	56.4100	5.0	0.53	50.0000		113	70 - 122			
1,2-Dichloropropane	53.1700	5.0	0.76	50.0000		106	77 - 110			
1,3,5-Trimethylbenzene	47.2900	5.0	0.58	50.0000		94.6	79 - 119			
1,3-Dichlorobenzene	50.1600	5.0	0.63	50.0000		100	81 - 116			
1,3-Dichloropropane	57.1400	5.0	0.59	50.0000		114	79 - 113			L5
1,4-Dichlorobenzene	51.2400	5.0	0.73	50.0000		102	80 - 117			
2,2-Dichloropropane	46.9900	5.0	0.68	50.0000		94.0	70 - 129			
2-Chlorotoluene	47.4700	5.0	0.68	50.0000		94.9	76 - 119			
4-Chlorotoluene	48.6800	5.0	0.62	50.0000		97.4	79 - 119			
4-Isopropyltoluene	49.0000	5.0	0.63	50.0000		98.0	80 - 122			
Benzene	96.8600	5.0	0.59	100.000		96.9	79 - 111			
Bromobenzene	49.4200	5.0	1.9	50.0000		98.8	77 - 114			
Bromochloromethane	52.1800	5.0	3.1	50.0000		104	69 - 117			
Bromodichloromethane	54.5100	5.0	1.0	50.0000		109	79 - 114			
Bromoform	53.2900	5.0	0.70	50.0000		107	72 - 122			
Bromomethane	51.6300	5.0	4.2	50.0000		103	47 - 176			
Carbon disulfide	54.7000	5.0	1.2	50.0000		109	50 - 133			
Carbon tetrachloride	45.3500	5.0	1.1	50.0000		90.7	68 - 143			
Chlorobenzene	48.2900	5.0	0.64	50.0000		96.6	81 - 113			
Chloroethane	45.9100	5.0	1.9	50.0000		91.8	47 - 148			
Chloroform	48.9600	5.0	1.4	50.0000		97.9	77 - 116			
Chloromethane	66.3700	5.0	1.9	50.0000		133	39 - 141			
cis-1,2-Dichloroethene	47.3000	5.0	0.87	50.0000		94.6	68 - 120			
cis-1,3-Dichloropropene	52.0700	5.0	0.79	50.0000		104	74 - 113			
Di-isopropyl ether	51.2100	5.0	0.51	50.0000		102	62 - 124			
Dibromochloromethane	55.0300	5.0	1.0	50.0000		110	78 - 114			
Dibromomethane	54.0500	5.0	0.99	50.0000		108	74 - 112			
Dichlorodifluoromethane	48.5400	5.0	2.2	50.0000		97.1	49 - 138			
Ethyl Acetate	610.030	50	9.7	500.000		122	63 - 131			
Ethyl Ether	592.910	50	7.3	500.000		119	56 - 123			
Ethyl tert-butyl ether	54.1900	5.0	1.4	50.0000		108	68 - 121			
Ethylbenzene	92.8700	5.0	0.65	100.000		92.9	82 - 112			
Freon-113	50.3800	5.0	1.0	50.0000		101	65 - 133			
Hexachlorobutadiene	54.5300	5.0	0.78	50.0000		109	76 - 131			
Isopropylbenzene	45.2000	5.0	0.59	50.0000		90.4	77 - 122			

Hushmand Associates, Inc.	Project Number : 6th St Bridge, LAC-17-001
250 Goddard	Report To : Naresh Bellana
Irvine , CA 92618	Reported : 06/05/2017

Volatile Organic Compounds by EPA 8260B - Quality Control (cont'd)

Analyte	Result (ug/kg)	PQL (ug/kg)	MDL (ug/kg)	Spike Level	Source Result	% Rec	% Rec Limits	RPD	RPD Limit	Notes
Batch B7E0639 - MSVOA_S (continued)										
LCS (B7E0639-BS1) - Continued						Prepared: 5/18/2017 Analyzed: 5/18/2017				
m,p-Xylene	97.7100	10	1.2	100.000		97.7	80 - 116			
Methylene chloride	47.5000	5.0	1.4	50.0000		95.0	67 - 144			
MTBE	56.1800	5.0	0.50	50.0000		112	62 - 120			
n-Butylbenzene	50.8500	5.0	0.75	50.0000		102	78 - 134			
n-Propylbenzene	46.3100	5.0	0.55	50.0000		92.6	77 - 125			
Naphthalene	59.4400	5.0	1.2	50.0000		119	66 - 125			
o-Xylene	95.0000	5.0	0.86	100.000		95.0	80 - 113			
sec-Butylbenzene	46.0900	5.0	0.79	50.0000		92.2	79 - 124			
Styrene	52.1000	5.0	0.82	50.0000		104	82 - 117			
tert-Amyl methyl ether	53.9900	5.0	1.5	50.0000		108	62 - 118			
tert-Butanol	299.880	100	5.9	250.000		120	35 - 127			
tert-Butylbenzene	46.2700	5.0	0.57	50.0000		92.5	78 - 121			
Tetrachloroethene	46.1900	5.0	0.65	50.0000		92.4	75 - 124			
Toluene	96.2000	5.0	0.80	100.000		96.2	79 - 115			
trans-1,2-Dichloroethene	45.7900	5.0	1.5	50.0000		91.6	65 - 127			
trans-1,3-Dichloropropene	55.0200	5.0	0.63	50.0000		110	73 - 115			
Trichloroethene	48.6600	5.0	1.1	50.0000		97.3	77 - 119			
Trichlorofluoromethane	50.9300	5.0	0.89	50.0000		102	57 - 134			
Vinyl acetate	612.610	50	5.7	500.000		123	62 - 147			
Vinyl chloride	55.3500	5.0	2.0	50.0000		111	53 - 133			
Surrogate: 1,2-Dichloroethane-d4	*57.24*			*50.0000*		*114*	*12 - 186*			
Surrogate: 4-Bromofluorobenzene	*52.63*			*50.0000*		*105*	*23 - 162*			
Surrogate: Dibromofluoromethan	*52.55*			*50.0000*		*105*	*23 - 179*			
Surrogate: Toluene-d8	*53.06*			*50.0000*		*106*	*26 - 164*			
Matrix Spike (B7E0639-MS1)			**Source: 1702036-22**			Prepared: 5/18/2017 Analyzed: 5/18/2017				
1,1,1,2-Tetrachloroethane	47.3100	5.0	0.63	50.0000	ND	94.6	45 - 124			
1,1,1-Trichloroethane	47.0900	5.0	0.63	50.0000	ND	94.2	53 - 125			
1,1,2,2-Tetrachloroethane	50.1900	5.0	0.92	50.0000	ND	100	42 - 117			
1,1,2-Trichloroethane	52.7600	5.0	1.4	50.0000	ND	106	48 - 120			
1,1-Dichloroethane	46.4000	5.0	1.5	50.0000	ND	92.8	54 - 116			
1,1-Dichloroethene	47.6900	5.0	0.69	50.0000	ND	95.4	47 - 123			
1,1-Dichloropropene	46.2000	5.0	2.4	50.0000	ND	92.4	48 - 126			
1,2,3-Trichloropropane	51.1200	5.0	1.2	50.0000	ND	102	46 - 118			
1,2,3-Trichlorobenzene	45.3500	5.0	1.1	50.0000	ND	90.7	1 - 132			
1,2,4-Trichlorobenzene	47.7400	5.0	0.96	50.0000	ND	95.5	2 - 138			
1,2,4-Trimethylbenzene	44.8900	5.0	0.53	50.0000	ND	89.8	32 - 129			
1,2-Dibromo-3-chloropropane	57.4000	10	1.1	50.0000	ND	115	34 - 130			
1,2-Dibromoethane	55.0200	5.0	0.80	50.0000	ND	110	45 - 125			
1,2-Dichlorobenzene	45.7300	5.0	0.51	50.0000	ND	91.5	25 - 130			
1,2-Dichloroethane	52.4100	5.0	0.53	50.0000	ND	105	51 - 119			

Certificate of Analysis

Hushmand Associates, Inc.	Project Number : 6th St Bridge, LAC-17-001
250 Goddard	Report To : Naresh Bellana
Irvine , CA 92618	Reported : 06/05/2017

Volatile Organic Compounds by EPA 8260B - Quality Control (cont'd)

Analyte	Result (ug/kg)	PQL (ug/kg)	MDL (ug/kg)	Spike Level	Source Result	% Rec	% Rec Limits	RPD	RPD Limit	Notes
Batch B7E0639 - MSVOA_S (continued)										
Matrix Spike (B7E0639-MS1) - Continued			**Source: 1702036-22**		Prepared: 5/18/2017 Analyzed: 5/18/2017					
1,2-Dichloropropane	49.0000	5.0	0.76	50.0000	ND	98.0	54 - 113			
1,3,5-Trimethylbenzene	43.0200	5.0	0.58	50.0000	ND	86.0	34 - 128			
1,3-Dichlorobenzene	43.8600	5.0	0.63	50.0000	ND	87.7	26 - 130			
1,3-Dichloropropane	53.3000	5.0	0.59	50.0000	ND	107	53 - 117			
1,4-Dichlorobenzene	44.2400	5.0	0.73	50.0000	ND	88.5	26 - 130			
2,2-Dichloropropane	48.5300	5.0	0.68	50.0000	ND	97.1	52 - 128			
2-Chlorotoluene	43.7800	5.0	0.68	50.0000	ND	87.6	34 - 126			
4-Chlorotoluene	44.0500	5.0	0.62	50.0000	ND	88.1	32 - 128			
4-Isopropyltoluene	43.8900	5.0	0.63	50.0000	ND	87.8	28 - 133			
Benzene	89.7500	5.0	0.59	100.000	ND	89.8	55 - 113			
Bromobenzene	44.9300	5.0	1.9	50.0000	ND	89.9	36 - 122			
Bromochloromethane	49.8300	5.0	3.1	50.0000	ND	99.7	50 - 118			
Bromodichloromethane	49.0400	5.0	1.0	50.0000	ND	98.1	51 - 117			
Bromoform	50.8700	5.0	0.70	50.0000	ND	102	39 - 130			
Bromomethane	48.3800	5.0	4.2	50.0000	ND	96.8	38 - 151			
Carbon disulfide	52.3300	5.0	1.2	50.0000	ND	105	38 - 126			
Carbon tetrachloride	44.4000	5.0	1.1	50.0000	ND	88.8	43 - 141			
Chlorobenzene	45.1900	5.0	0.64	50.0000	ND	90.4	42 - 122			
Chloroethane	43.9800	5.0	1.9	50.0000	ND	88.0	42 - 129			
Chloroform	48.0100	5.0	1.4	50.0000	ND	96.0	56 - 117			
Chloromethane	60.9500	5.0	1.9	50.0000	ND	122	35 - 127			
cis-1,2-Dichloroethene	48.6700	5.0	0.87	50.0000	ND	97.3	50 - 118			
cis-1,3-Dichloropropene	51.9800	5.0	0.79	50.0000	ND	104	45 - 118			
Di-isopropyl ether	48.7600	5.0	0.51	50.0000	ND	97.5	51 - 119			
Dibromochloromethane	52.8100	5.0	1.0	50.0000	ND	106	47 - 120			
Dibromomethane	49.8600	5.0	0.99	50.0000	ND	99.7	48 - 118			
Dichlorodifluoromethane	49.1100	5.0	2.2	50.0000	ND	98.2	43 - 126			
Ethyl Acetate	602.890	50	9.7	500.000	ND	121	22 - 145			
Ethyl Ether	543.200	50	7.3	500.000	ND	109	49 - 114			
Ethyl tert-butyl ether	52.8000	5.0	1.4	50.0000	ND	106	54 - 120			
Ethylbenzene	88.7800	5.0	0.65	100.000	ND	88.8	42 - 123			
Freon-113	51.5200	5.0	1.0	50.0000	ND	103	45 - 132			
Hexachlorobutadiene	40.5800	5.0	0.78	50.0000	ND	81.2	4 - 135			
Isopropylbenzene	43.1400	5.0	0.59	50.0000	ND	86.3	40 - 127			
m,p-Xylene	91.8800	10	1.2	100.000	ND	91.9	39 - 127			
Methylene chloride	44.3500	5.0	1.4	50.0000	ND	88.7	51 - 140			
MTBE	55.3400	5.0	0.50	50.0000	ND	111	52 - 120			
n-Butylbenzene	45.0100	5.0	0.75	50.0000	ND	90.0	19 - 141			
n-Propylbenzene	43.0500	5.0	0.55	50.0000	ND	86.1	34 - 131			
Naphthalene	50.6700	5.0	1.2	50.0000	ND	101	11 - 136			
o-Xylene	88.8500	5.0	0.86	100.000	ND	88.8	40 - 124			
sec-Butylbenzene	41.8300	5.0	0.79	50.0000	ND	83.7	29 - 132			

Certificate of Analysis

Hushmand Associates, Inc.	Project Number : 6th St Bridge, LAC-17-001
250 Goddard	Report To : Naresh Bellana
Irvine , CA 92618	Reported : 06/05/2017

Volatile Organic Compounds by EPA 8260B - Quality Control (cont'd)

Analyte	Result (ug/kg)	PQL (ug/kg)	MDL (ug/kg)	Spike Level	Source Result	% Rec	% Rec Limits	RPD	RPD Limit	Notes
Batch B7E0639 - MSVOA_S (continued)										
Matrix Spike (B7E0639-MS1) - Continued			**Source: 1702036-22**		Prepared: 5/18/2017 Analyzed: 5/18/2017					
Styrene	48.1300	5.0	0.82	50.0000	ND	96.3	36 - 130			
tert-Amyl methyl ether	52.3400	5.0	1.5	50.0000	ND	105	49 - 119			
tert-Butanol	277.760	100	5.9	250.000	ND	111	29 - 138			
tert-Butylbenzene	42.6300	5.0	0.57	50.0000	ND	85.3	34 - 129			
Tetrachloroethene	45.7400	5.0	0.65	50.0000	ND	91.5	37 - 132			
Toluene	87.1800	5.0	0.80	100.000	ND	87.2	48 - 122			
trans-1,2-Dichloroethene	45.0500	5.0	1.5	50.0000	ND	90.1	51 - 123			
trans-1,3-Dichloropropene	49.0900	5.0	0.63	50.0000	ND	98.2	38 - 125			
Trichloroethene	46.3800	5.0	1.1	50.0000	ND	92.8	41 - 136			
Trichlorofluoromethane	51.6200	5.0	0.89	50.0000	ND	103	44 - 126			
Vinyl acetate	514.220	50	5.7	500.000	ND	103	0 - 154			
Vinyl chloride	56.3100	5.0	2.0	50.0000	ND	113	47 - 122			
Surrogate: 1,2-Dichloroethane-d4	*58.87*			*50.0000*		*118*	*12 - 186*			
Surrogate: 4-Bromofluorobenzene	*51.18*			*50.0000*		*102*	*23 - 162*			
Surrogate: Dibromofluoromethan	*52.48*			*50.0000*		*105*	*23 - 179*			
Surrogate: Toluene-d8	*51.22*			*50.0000*		*102*	*26 - 164*			
Matrix Spike Dup (B7E0639-MSD1)			**Source: 1702036-22**		Prepared: 5/18/2017 Analyzed: 5/18/2017					
1,1,1,2-Tetrachloroethane	45.3500	5.0	0.63	50.0000	ND	90.7	45 - 124	4.23	20	
1,1,1-Trichloroethane	44.7800	5.0	0.63	50.0000	ND	89.6	53 - 125	5.03	20	
1,1,2,2-Tetrachloroethane	49.1300	5.0	0.92	50.0000	ND	98.3	42 - 117	2.13	20	
1,1,2-Trichloroethane	50.0900	5.0	1.4	50.0000	ND	100	48 - 120	5.19	20	
1,1-Dichloroethane	45.9200	5.0	1.5	50.0000	ND	91.8	54 - 116	1.04	20	
1,1-Dichloroethene	45.6500	5.0	0.69	50.0000	ND	91.3	47 - 123	4.37	20	
1,1-Dichloropropene	45.1100	5.0	2.4	50.0000	ND	90.2	48 - 126	2.39	20	
1,2,3-Trichloropropane	50.4500	5.0	1.2	50.0000	ND	101	46 - 118	1.32	20	
1,2,3-Trichlorobenzene	39.8800	5.0	1.1	50.0000	ND	79.8	1 - 132	12.8	20	
1,2,4-Trichlorobenzene	41.9500	5.0	0.96	50.0000	ND	83.9	2 - 138	12.9	20	
1,2,4-Trimethylbenzene	42.9100	5.0	0.53	50.0000	ND	85.8	32 - 129	4.51	20	
1,2-Dibromo-3-chloropropane	53.8800	10	1.1	50.0000	ND	108	34 - 130	6.33	20	
1,2-Dibromoethane	55.8700	5.0	0.80	50.0000	ND	112	45 - 125	1.53	20	
1,2-Dichlorobenzene	43.8200	5.0	0.51	50.0000	ND	87.6	25 - 130	4.27	20	
1,2-Dichloroethane	51.5900	5.0	0.53	50.0000	ND	103	51 - 119	1.58	20	
1,2-Dichloropropane	48.5500	5.0	0.76	50.0000	ND	97.1	54 - 113	0.923	20	
1,3,5-Trimethylbenzene	41.2700	5.0	0.58	50.0000	ND	82.5	34 - 128	4.15	20	
1,3-Dichlorobenzene	41.1800	5.0	0.63	50.0000	ND	82.4	26 - 130	6.30	20	
1,3-Dichloropropane	53.4100	5.0	0.59	50.0000	ND	107	53 - 117	0.206	20	
1,4-Dichlorobenzene	42.4100	5.0	0.73	50.0000	ND	84.8	26 - 130	4.22	20	
2,2-Dichloropropane	47.0400	5.0	0.68	50.0000	ND	94.1	52 - 128	3.12	20	
2-Chlorotoluene	41.1300	5.0	0.68	50.0000	ND	82.3	34 - 126	6.24	20	
4-Chlorotoluene	41.7600	5.0	0.62	50.0000	ND	83.5	32 - 128	5.34	20	

Certificate of Analysis

Hushmand Associates, Inc.	Project Number : 6th St Bridge, LAC-17-001
250 Goddard	Report To : Naresh Bellana
Irvine , CA 92618	Reported : 06/05/2017

Volatile Organic Compounds by EPA 8260B - Quality Control (cont'd)

Analyte	Result (ug/kg)	PQL (ug/kg)	MDL (ug/kg)	Spike Level	Source Result	% Rec	% Rec Limits	RPD	RPD Limit	Notes
Batch B7E0639 - MSVOA_S (continued)										
Matrix Spike Dup (B7E0639-MSD1) - Continued			**Source: 1702036-22**		Prepared: 5/18/2017 Analyzed: 5/18/2017					
4-Isopropyltoluene	41.3100	5.0	0.63	50.0000	ND	82.6	28 - 133	6.06	20	
Benzene	88.2300	5.0	0.59	100.000	ND	88.2	55 - 113	1.71	20	
Bromobenzene	43.2600	5.0	1.9	50.0000	ND	86.5	36 - 122	3.79	20	
Bromochloromethane	49.6200	5.0	3.1	50.0000	ND	99.2	50 - 118	0.422	20	
Bromodichloromethane	48.1000	5.0	1.0	50.0000	ND	96.2	51 - 117	1.94	20	
Bromoform	51.5200	5.0	0.70	50.0000	ND	103	39 - 130	1.27	20	
Bromomethane	46.7000	5.0	4.2	50.0000	ND	93.4	38 - 151	3.53	20	
Carbon disulfide	48.0900	5.0	1.2	50.0000	ND	96.2	38 - 126	8.44	20	
Carbon tetrachloride	42.3800	5.0	1.1	50.0000	ND	84.8	43 - 141	4.66	20	
Chlorobenzene	43.8400	5.0	0.64	50.0000	ND	87.7	42 - 122	3.03	20	
Chloroethane	42.1000	5.0	1.9	50.0000	ND	84.2	42 - 129	4.37	20	
Chloroform	46.4300	5.0	1.4	50.0000	ND	92.9	56 - 117	3.35	20	
Chloromethane	58.1300	5.0	1.9	50.0000	ND	116	35 - 127	4.74	20	
cis-1,2-Dichloroethene	47.3100	5.0	0.87	50.0000	ND	94.6	50 - 118	2.83	20	
cis-1,3-Dichloropropene	50.1800	5.0	0.79	50.0000	ND	100	45 - 118	3.52	20	
Di-isopropyl ether	48.9600	5.0	0.51	50.0000	ND	97.9	51 - 119	0.409	20	
Dibromochloromethane	50.4100	5.0	1.0	50.0000	ND	101	47 - 120	4.65	20	
Dibromomethane	49.6300	5.0	0.99	50.0000	ND	99.3	48 - 118	0.462	20	
Dichlorodifluoromethane	48.3600	5.0	2.2	50.0000	ND	96.7	43 - 126	1.54	20	
Ethyl Acetate	586.060	50	9.7	500.000	ND	117	22 - 145	2.83	20	
Ethyl Ether	524.430	50	7.3	500.000	ND	105	49 - 114	3.52	20	
Ethyl tert-butyl ether	52.4300	5.0	1.4	50.0000	ND	105	54 - 120	0.703	20	
Ethylbenzene	84.7300	5.0	0.65	100.000	ND	84.7	42 - 123	4.67	20	
Freon-113	47.0800	5.0	1.0	50.0000	ND	94.2	45 - 132	9.01	20	
Hexachlorobutadiene	36.2300	5.0	0.78	50.0000	ND	72.5	4 - 135	11.3	20	
Isopropylbenzene	40.9600	5.0	0.59	50.0000	ND	81.9	40 - 127	5.18	20	
m,p-Xylene	88.1100	10	1.2	100.000	ND	88.1	39 - 127	4.19	20	
Methylene chloride	45.0600	5.0	1.4	50.0000	ND	90.1	51 - 140	1.59	20	
MTBE	54.8800	5.0	0.50	50.0000	ND	110	52 - 120	0.835	20	
n-Butylbenzene	40.8800	5.0	0.75	50.0000	ND	81.8	19 - 141	9.62	20	
n-Propylbenzene	40.5900	5.0	0.55	50.0000	ND	81.2	34 - 131	5.88	20	
Naphthalene	47.6500	5.0	1.2	50.0000	ND	95.3	11 - 136	6.14	20	
o-Xylene	85.5800	5.0	0.86	100.000	ND	85.6	40 - 124	3.75	20	
sec-Butylbenzene	38.9300	5.0	0.79	50.0000	ND	77.9	29 - 132	7.18	20	
Styrene	45.7300	5.0	0.82	50.0000	ND	91.5	36 - 130	5.11	20	
tert-Amyl methyl ether	52.0100	5.0	1.5	50.0000	ND	104	49 - 119	0.632	20	
tert-Butanol	322.520	100	5.9	250.000	ND	129	29 - 138	14.9	20	
tert-Butylbenzene	40.1300	5.0	0.57	50.0000	ND	80.3	34 - 129	6.04	20	
Tetrachloroethene	44.0900	5.0	0.65	50.0000	ND	88.2	37 - 132	3.67	20	
Toluene	87.0800	5.0	0.80	100.000	ND	87.1	48 - 122	0.115	20	
trans-1,2-Dichloroethene	43.0700	5.0	1.5	50.0000	ND	86.1	51 - 123	4.49	20	
trans-1,3-Dichloropropene	50.5900	5.0	0.63	50.0000	ND	101	38 - 125	3.01	20	

Certificate of Analysis

Hushmand Associates, Inc.	Project Number : 6th St Bridge, LAC-17-001
250 Goddard	Report To : Naresh Bellana
Irvine , CA 92618	Reported : 06/05/2017

Volatile Organic Compounds by EPA 8260B - Quality Control (cont'd)

Analyte	Result (ug/kg)	PQL (ug/kg)	MDL (ug/kg)	Spike Level	Source Result	% Rec	% Rec Limits	RPD	RPD Limit	Notes
Batch B7E0639 - MSVOA_S (continued)										
Matrix Spike Dup (B7E0639-MSD1) - Continued			**Source: 1702036-22**		Prepared: 5/18/2017 Analyzed: 5/18/2017					
Trichloroethene	45.5200	5.0	1.1	50.0000	ND	91.0	41 - 136	1.87	20	
Trichlorofluoromethane	48.3200	5.0	0.89	50.0000	ND	96.6	44 - 126	6.60	20	
Vinyl acetate	412.230	50	5.7	500.000	ND	82.4	0 - 154	22.0	20	R
Vinyl chloride	53.2200	5.0	2.0	50.0000	ND	106	47 - 122	5.64	20	
Surrogate: 1,2-Dichloroethane-d4	*58.57*			*50.0000*		*117*	*12 - 186*			
Surrogate: 4-Bromofluorobenzene	*51.79*			*50.0000*		*104*	*23 - 162*			
Surrogate: Dibromofluoromethan	*52.33*			*50.0000*		*105*	*23 - 179*			
Surrogate: Toluene-d8	*50.82*			*50.0000*		*102*	*26 - 164*			

Certificate of Analysis

Hushmand Associates, Inc.	Project Number : 6th St Bridge, LAC-17-001
250 Goddard	Report To : Naresh Bellana
Irvine , CA 92618	Reported : 06/05/2017

Volatile Organic Compounds by EPA 8260B - Quality Control

Analyte	Result (ug/kg)	PQL (ug/kg)	MDL (ug/kg)	Spike Level	Source Result	% Rec	% Rec Limits	RPD	RPD Limit	Notes
Batch B7E0654 - MSVOA_S										
Blank (B7E0654-BLK1)					Prepared: 5/19/2017 Analyzed: 5/19/2017					
1,1,1,2-Tetrachloroethane	ND	5.0	0.63							
1,1,1-Trichloroethane	ND	5.0	0.63							
1,1,2,2-Tetrachloroethane	ND	5.0	0.92							
1,1,2-Trichloroethane	ND	5.0	1.4							
1,1-Dichloroethane	ND	5.0	1.5							
1,1-Dichloroethene	ND	5.0	0.69							
1,1-Dichloropropene	ND	5.0	2.4							
1,2,3-Trichloropropane	ND	5.0	1.2							
1,2,3-Trichlorobenzene	ND	5.0	1.1							
1,2,4-Trichlorobenzene	ND	5.0	0.96							
1,2,4-Trimethylbenzene	ND	5.0	0.53							
1,2-Dibromo-3-chloropropane	ND	10	1.1							
1,2-Dibromoethane	ND	5.0	0.80							
1,2-Dichlorobenzene	ND	5.0	0.51							
1,2-Dichloroethane	ND	5.0	0.53							
1,2-Dichloropropane	ND	5.0	0.76							
1,3,5-Trimethylbenzene	ND	5.0	0.58							
1,3-Dichlorobenzene	ND	5.0	0.63							
1,3-Dichloropropane	ND	5.0	0.59							
1,4-Dichlorobenzene	ND	5.0	0.73							
2,2-Dichloropropane	ND	5.0	0.68							
2-Chlorotoluene	ND	5.0	0.68							
4-Chlorotoluene	ND	5.0	0.62							
4-Isopropyltoluene	ND	5.0	0.63							
Benzene	ND	5.0	0.59							
Bromobenzene	ND	5.0	1.9							
Bromochloromethane	ND	5.0	3.1							
Bromodichloromethane	ND	5.0	1.0							
Bromoform	ND	5.0	0.70							
Bromomethane	ND	5.0	4.2							
Carbon disulfide	ND	5.0	1.2							
Carbon tetrachloride	ND	5.0	1.1							
Chlorobenzene	ND	5.0	0.64							
Chloroethane	ND	5.0	1.9							
Chloroform	ND	5.0	1.4							
Chloromethane	ND	5.0	1.9							
cis-1,2-Dichloroethene	ND	5.0	0.87							
cis-1,3-Dichloropropene	ND	5.0	0.79							
Di-isopropyl ether	ND	5.0	0.51							
Dibromochloromethane	ND	5.0	1.0							
Dibromomethane	ND	5.0	0.99							

Certificate of Analysis

Hushmand Associates, Inc.	Project Number : 6th St Bridge, LAC-17-001
250 Goddard	Report To : Naresh Bellana
Irvine , CA 92618	Reported : 06/05/2017

Volatile Organic Compounds by EPA 8260B - Quality Control (cont'd)

Analyte	Result (ug/kg)	PQL (ug/kg)	MDL (ug/kg)	Spike Level	Source Result	% Rec	% Rec Limits	RPD	RPD Limit	Notes
Batch B7E0654 - MSVOA_S (continued)										
Blank (B7E0654-BLK1) - Continued					Prepared: 5/19/2017 Analyzed: 5/19/2017					
Dichlorodifluoromethane	ND	5.0	2.2							
Ethyl Acetate	ND	50	9.7							
Ethyl Ether	ND	50	7.3							
Ethyl tert-butyl ether	ND	5.0	1.4							
Ethylbenzene	ND	5.0	0.65							
Freon-113	ND	5.0	1.0							
Hexachlorobutadiene	ND	5.0	0.78							
Isopropylbenzene	ND	5.0	0.59							
m,p-Xylene	ND	10	1.2							
Methylene chloride	ND	5.0	1.4							
MTBE	ND	5.0	0.50							
n-Butylbenzene	ND	5.0	0.75							
n-Propylbenzene	ND	5.0	0.55							
Naphthalene	ND	5.0	1.2							
o-Xylene	ND	5.0	0.86							
sec-Butylbenzene	ND	5.0	0.79							
Styrene	ND	5.0	0.82							
tert-Amyl methyl ether	ND	5.0	1.5							
tert-Butanol	ND	100	5.9							
tert-Butylbenzene	ND	5.0	0.57							
Tetrachloroethene	ND	5.0	0.65							
Toluene	ND	5.0	0.80							
trans-1,2-Dichloroethene	ND	5.0	1.5							
trans-1,3-Dichloropropene	ND	5.0	0.63							
Trichloroethene	ND	5.0	1.1							
Trichlorofluoromethane	ND	5.0	0.89							
Vinyl acetate	ND	50	5.7							
Vinyl chloride	ND	5.0	2.0							
Surrogate: 1,2-Dichloroethane-d4	*57.13*			*50.0000*		*114*	*12 - 186*			
Surrogate: 4-Bromofluorobenzene	*52.53*			*50.0000*		*105*	*23 - 162*			
Surrogate: Dibromofluoromethan	*49.83*			*50.0000*		*99.7*	*23 - 179*			
Surrogate: Toluene-d8	*52.22*			*50.0000*		*104*	*26 - 164*			
LCS (B7E0654-BS1)					Prepared: 5/19/2017 Analyzed: 5/19/2017					
1,1,1,2-Tetrachloroethane	47.9000	5.0	0.63	50.0000		95.8	78 - 119			
1,1,1-Trichloroethane	44.3800	5.0	0.63	50.0000		88.8	75 - 123			
1,1,2,2-Tetrachloroethane	47.8900	5.0	0.92	50.0000		95.8	65 - 117			
1,1,2-Trichloroethane	54.9900	5.0	1.4	50.0000		110	79 - 108			L3
1,1-Dichloroethane	42.7900	5.0	1.5	50.0000		85.6	69 - 120			
1,1-Dichloroethene	41.6100	5.0	0.69	50.0000		83.2	59 - 126			
1,1-Dichloropropene	42.8300	5.0	2.4	50.0000		85.7	76 - 121			

Certificate of Analysis

Hushmand Associates, Inc.	Project Number : 6th St Bridge, LAC-17-001
250 Goddard	Report To : Naresh Bellana
Irvine , CA 92618	Reported : 06/05/2017

Volatile Organic Compounds by EPA 8260B - Quality Control (cont'd)

Analyte	Result (ug/kg)	PQL (ug/kg)	MDL (ug/kg)	Spike Level	Source Result	% Rec	% Rec Limits	RPD	RPD Limit	Notes
Batch B7E0654 - MSVOA_S (continued)										
LCS (B7E0654-BS1) - Continued					Prepared: 5/19/2017 Analyzed: 5/19/2017					
1,2,3-Trichloropropane	49.5000	5.0	1.2	50.0000		99.0	66 - 118			
1,2,3-Trichlorobenzene	53.2700	5.0	1.1	50.0000		107	75 - 116			
1,2,4-Trichlorobenzene	53.8100	5.0	0.96	50.0000		108	79 - 121			
1,2,4-Trimethylbenzene	45.7000	5.0	0.53	50.0000		91.4	80 - 118			
1,2-Dibromo-3-chloropropane	55.6800	10	1.1	50.0000		111	65 - 122			
1,2-Dibromoethane	57.8000	5.0	0.80	50.0000		116	77 - 115			L3
1,2-Dichlorobenzene	48.6700	5.0	0.51	50.0000		97.3	81 - 115			
1,2-Dichloroethane	57.5300	5.0	0.53	50.0000		115	70 - 122			
1,2-Dichloropropane	47.9300	5.0	0.76	50.0000		95.9	77 - 110			
1,3,5-Trimethylbenzene	43.6600	5.0	0.58	50.0000		87.3	79 - 119			
1,3-Dichlorobenzene	46.0000	5.0	0.63	50.0000		92.0	81 - 116			
1,3-Dichloropropane	52.4800	5.0	0.59	50.0000		105	79 - 113			
1,4-Dichlorobenzene	46.5400	5.0	0.73	50.0000		93.1	80 - 117			
2,2-Dichloropropane	44.6100	5.0	0.68	50.0000		89.2	70 - 129			
2-Chlorotoluene	43.4900	5.0	0.68	50.0000		87.0	76 - 119			
4-Chlorotoluene	44.6700	5.0	0.62	50.0000		89.3	79 - 119			
4-Isopropyltoluene	45.0100	5.0	0.63	50.0000		90.0	80 - 122			
Benzene	87.4900	5.0	0.59	100.000		87.5	79 - 111			
Bromobenzene	45.1900	5.0	1.9	50.0000		90.4	77 - 114			
Bromochloromethane	49.5200	5.0	3.1	50.0000		99.0	69 - 117			
Bromodichloromethane	51.9000	5.0	1.0	50.0000		104	79 - 114			
Bromoform	53.8400	5.0	0.70	50.0000		108	72 - 122			
Bromomethane	48.0200	5.0	4.2	50.0000		96.0	47 - 176			
Carbon disulfide	46.9700	5.0	1.2	50.0000		93.9	50 - 133			
Carbon tetrachloride	43.7800	5.0	1.1	50.0000		87.6	68 - 143			
Chlorobenzene	45.1200	5.0	0.64	50.0000		90.2	81 - 113			
Chloroethane	40.9600	5.0	1.9	50.0000		81.9	47 - 148			
Chloroform	46.4000	5.0	1.4	50.0000		92.8	77 - 116			
Chloromethane	64.2800	5.0	1.9	50.0000		129	39 - 141			
cis-1,2-Dichloroethene	45.0800	5.0	0.87	50.0000		90.2	68 - 120			
cis-1,3-Dichloropropene	49.2200	5.0	0.79	50.0000		98.4	74 - 113			
Di-isopropyl ether	46.5200	5.0	0.51	50.0000		93.0	62 - 124			
Dibromochloromethane	53.0400	5.0	1.0	50.0000		106	78 - 114			
Dibromomethane	51.9700	5.0	0.99	50.0000		104	74 - 112			
Dichlorodifluoromethane	46.6300	5.0	2.2	50.0000		93.3	49 - 138			
Ethyl Acetate	585.150	50	9.7	500.000		117	63 - 131			
Ethyl Ether	545.420	50	7.3	500.000		109	56 - 123			
Ethyl tert-butyl ether	50.0700	5.0	1.4	50.0000		100	68 - 121			
Ethylbenzene	88.0200	5.0	0.65	100.000		88.0	82 - 112			
Freon-113	46.0200	5.0	1.0	50.0000		92.0	65 - 133			
Hexachlorobutadiene	47.6700	5.0	0.78	50.0000		95.3	76 - 131			
Isopropylbenzene	41.3200	5.0	0.59	50.0000		82.6	77 - 122			

Certificate of Analysis

Hushmand Associates, Inc.	Project Number : 6th St Bridge, LAC-17-001
250 Goddard	Report To : Naresh Bellana
Irvine , CA 92618	Reported : 06/05/2017

Volatile Organic Compounds by EPA 8260B - Quality Control (cont'd)

Analyte	Result (ug/kg)	PQL (ug/kg)	MDL (ug/kg)	Spike Level	Source Result	% Rec	% Rec Limits	RPD	RPD Limit	Notes
Batch B7E0654 - MSVOA_S (continued)										
LCS (B7E0654-BS1) - Continued					Prepared: 5/19/2017 Analyzed: 5/19/2017					
m,p-Xylene	92.0100	10	1.2	100.000		92.0	80 - 116			
Methylene chloride	43.0500	5.0	1.4	50.0000		86.1	67 - 144			
MTBE	53.8700	5.0	0.50	50.0000		108	62 - 120			
n-Butylbenzene	46.4500	5.0	0.75	50.0000		92.9	78 - 134			
n-Propylbenzene	42.1300	5.0	0.55	50.0000		84.3	77 - 125			
Naphthalene	53.7200	5.0	1.2	50.0000		107	66 - 125			
o-Xylene	91.3100	5.0	0.86	100.000		91.3	80 - 113			
sec-Butylbenzene	41.6300	5.0	0.79	50.0000		83.3	79 - 124			
Styrene	48.0000	5.0	0.82	50.0000		96.0	82 - 117			
tert-Amyl methyl ether	48.9800	5.0	1.5	50.0000		98.0	62 - 118			
tert-Butanol	272.600	100	5.9	250.000		109	35 - 127			
tert-Butylbenzene	42.1600	5.0	0.57	50.0000		84.3	78 - 121			
Tetrachloroethene	43.2600	5.0	0.65	50.0000		86.5	75 - 124			
Toluene	87.9000	5.0	0.80	100.000		87.9	79 - 115			
trans-1,2-Dichloroethene	39.6800	5.0	1.5	50.0000		79.4	65 - 127			
trans-1,3-Dichloropropene	53.7900	5.0	0.63	50.0000		108	73 - 115			
Trichloroethene	44.4100	5.0	1.1	50.0000		88.8	77 - 119			
Trichlorofluoromethane	49.9000	5.0	0.89	50.0000		99.8	57 - 134			
Vinyl acetate	554.620	50	5.7	500.000		111	62 - 147			
Vinyl chloride	50.9900	5.0	2.0	50.0000		102	53 - 133			
Surrogate: 1,2-Dichloroethane-d4	*60.01*			*50.0000*		*120*	*12 - 186*			
Surrogate: 4-Bromofluorobenzene	*53.10*			*50.0000*		*106*	*23 - 162*			
Surrogate: Dibromofluoromethan	*50.75*			*50.0000*		*102*	*23 - 179*			
Surrogate: Toluene-d8	*50.37*			*50.0000*		*101*	*26 - 164*			
Matrix Spike (B7E0654-MS1)			**Source: 1702036-AO**		Prepared: 5/19/2017 Analyzed: 5/19/2017					
1,1,1,2-Tetrachloroethane	37.3500	5.0	0.63	50.0000	ND	74.7	45 - 124			
1,1,1-Trichloroethane	37.9200	5.0	0.63	50.0000	ND	75.8	53 - 125			
1,1,2,2-Tetrachloroethane	37.2700	5.0	0.92	50.0000	ND	74.5	42 - 117			
1,1,2-Trichloroethane	42.0100	5.0	1.4	50.0000	ND	84.0	48 - 120			
1,1-Dichloroethane	35.4500	5.0	1.5	50.0000	ND	70.9	54 - 116			
1,1-Dichloroethene	37.8900	5.0	0.69	50.0000	ND	75.8	47 - 123			
1,1-Dichloropropene	37.6700	5.0	2.4	50.0000	ND	75.3	48 - 126			
1,2,3-Trichloropropane	38.9400	5.0	1.2	50.0000	ND	77.9	46 - 118			
1,2,3-Trichlorobenzene	42.9800	5.0	1.1	50.0000	ND	86.0	1 - 132			
1,2,4-Trichlorobenzene	42.8200	5.0	0.96	50.0000	ND	85.6	2 - 138			
1,2,4-Trimethylbenzene	37.4700	5.0	0.53	50.0000	ND	74.9	32 - 129			
1,2-Dibromo-3-chloropropane	45.8500	10	1.1	50.0000	ND	91.7	34 - 130			
1,2-Dibromoethane	46.1600	5.0	0.80	50.0000	ND	92.3	45 - 125			
1,2-Dichlorobenzene	37.5000	5.0	0.51	50.0000	ND	75.0	25 - 130			
1,2-Dichloroethane	45.3900	5.0	0.53	50.0000	ND	90.8	51 - 119			

Certificate of Analysis

Hushmand Associates, Inc.	Project Number : 6th St Bridge, LAC-17-001
250 Goddard	Report To : Naresh Bellana
Irvine , CA 92618	Reported : 06/05/2017

Volatile Organic Compounds by EPA 8260B - Quality Control (cont'd)

Analyte	Result (ug/kg)	PQL (ug/kg)	MDL (ug/kg)	Spike Level	Source Result	% Rec	% Rec Limits	RPD	RPD Limit	Notes
Batch B7E0654 - MSVOA_S (continued)										
Matrix Spike (B7E0654-MS1) - Continued			**Source: 1702036-AO**			Prepared: 5/19/2017 Analyzed: 5/19/2017				
1,2-Dichloropropane	37.0200	5.0	0.76	50.0000	ND	74.0	54 - 113			
1,3,5-Trimethylbenzene	36.4900	5.0	0.58	50.0000	ND	73.0	34 - 128			
1,3-Dichlorobenzene	36.6200	5.0	0.63	50.0000	ND	73.2	26 - 130			
1,3-Dichloropropane	41.5000	5.0	0.59	50.0000	ND	83.0	53 - 117			
1,4-Dichlorobenzene	37.3700	5.0	0.73	50.0000	ND	74.7	26 - 130			
2,2-Dichloropropane	37.6100	5.0	0.68	50.0000	ND	75.2	52 - 128			
2-Chlorotoluene	35.0500	5.0	0.68	50.0000	ND	70.1	34 - 126			
4-Chlorotoluene	35.7400	5.0	0.62	50.0000	ND	71.5	32 - 128			
4-Isopropyltoluene	37.4600	5.0	0.63	50.0000	ND	74.9	28 - 133			
Benzene	71.4500	5.0	0.59	100.000	ND	71.4	55 - 113			
Bromobenzene	34.6600	5.0	1.9	50.0000	ND	69.3	36 - 122			
Bromochloromethane	37.7900	5.0	3.1	50.0000	ND	75.6	50 - 118			
Bromodichloromethane	41.5500	5.0	1.0	50.0000	ND	83.1	51 - 117			
Bromoform	41.4800	5.0	0.70	50.0000	ND	83.0	39 - 130			
Bromomethane	40.8500	5.0	4.2	50.0000	ND	81.7	38 - 151			
Carbon disulfide	40.5300	5.0	1.2	50.0000	ND	81.1	38 - 126			
Carbon tetrachloride	37.4100	5.0	1.1	50.0000	ND	74.8	43 - 141			
Chlorobenzene	35.3400	5.0	0.64	50.0000	ND	70.7	42 - 122			
Chloroethane	35.2700	5.0	1.9	50.0000	ND	70.5	42 - 129			
Chloroform	37.1300	5.0	1.4	50.0000	ND	74.3	56 - 117			
Chloromethane	51.7000	5.0	1.9	50.0000	ND	103	35 - 127			
cis-1,2-Dichloroethene	34.2700	5.0	0.87	50.0000	ND	68.5	50 - 118			
cis-1,3-Dichloropropene	39.1500	5.0	0.79	50.0000	ND	78.3	45 - 118			
Di-isopropyl ether	36.4900	5.0	0.51	50.0000	ND	73.0	51 - 119			
Dibromochloromethane	41.0700	5.0	1.0	50.0000	ND	82.1	47 - 120			
Dibromomethane	41.0600	5.0	0.99	50.0000	ND	82.1	48 - 118			
Dichlorodifluoromethane	42.3300	5.0	2.2	50.0000	ND	84.7	43 - 126			
Ethyl Acetate	450.740	50	9.7	500.000	ND	90.1	22 - 145			
Ethyl Ether	429.550	50	7.3	500.000	ND	85.9	49 - 114			
Ethyl tert-butyl ether	38.4800	5.0	1.4	50.0000	ND	77.0	54 - 120			
Ethylbenzene	72.3000	5.0	0.65	100.000	ND	72.3	42 - 123			
Freon-113	41.0500	5.0	1.0	50.0000	ND	82.1	45 - 132			
Hexachlorobutadiene	41.2900	5.0	0.78	50.0000	ND	82.6	4 - 135			
Isopropylbenzene	34.8200	5.0	0.59	50.0000	ND	69.6	40 - 127			
m,p-Xylene	75.6600	10	1.2	100.000	ND	75.7	39 - 127			
Methylene chloride	33.9900	5.0	1.4	50.0000	ND	68.0	51 - 140			
MTBE	42.4200	5.0	0.50	50.0000	ND	84.8	52 - 120			
n-Butylbenzene	39.4200	5.0	0.75	50.0000	ND	78.8	19 - 141			
n-Propylbenzene	35.2300	5.0	0.55	50.0000	ND	70.5	34 - 131			
Naphthalene	43.5200	5.0	1.2	50.0000	ND	87.0	11 - 136			
o-Xylene	73.4900	5.0	0.86	100.000	ND	73.5	40 - 124			
sec-Butylbenzene	35.4500	5.0	0.79	50.0000	ND	70.9	29 - 132			

Certificate of Analysis

Hushmand Associates, Inc.	Project Number : 6th St Bridge, LAC-17-001
250 Goddard	Report To : Naresh Bellana
Irvine , CA 92618	Reported : 06/05/2017

Volatile Organic Compounds by EPA 8260B - Quality Control (cont'd)

Analyte	Result (ug/kg)	PQL (ug/kg)	MDL (ug/kg)	Spike Level	Source Result	% Rec	% Rec Limits	RPD	RPD Limit	Notes
Batch B7E0654 - MSVOA_S (continued)										
Matrix Spike (B7E0654-MS1) - Continued			**Source: 1702036-AO**			Prepared: 5/19/2017 Analyzed: 5/19/2017				
Styrene	37.8700	5.0	0.82	50.0000	ND	75.7	36 - 130			
tert-Amyl methyl ether	37.7200	5.0	1.5	50.0000	ND	75.4	49 - 119			
tert-Butanol	236.700	100	5.9	250.000	ND	94.7	29 - 138			
tert-Butylbenzene	35.7000	5.0	0.57	50.0000	ND	71.4	34 - 129			
Tetrachloroethene	36.6400	5.0	0.65	50.0000	ND	73.3	37 - 132			
Toluene	73.4000	5.0	0.80	100.000	ND	73.4	48 - 122			
trans-1,2-Dichloroethene	33.7800	5.0	1.5	50.0000	ND	67.6	51 - 123			
trans-1,3-Dichloropropene	39.5200	5.0	0.63	50.0000	ND	79.0	38 - 125			
Trichloroethene	36.7400	5.0	1.1	50.0000	ND	73.5	41 - 136			
Trichlorofluoromethane	43.1600	5.0	0.89	50.0000	ND	86.3	44 - 126			
Vinyl acetate	436.910	50	5.7	500.000	ND	87.4	0 - 154			
Vinyl chloride	44.9200	5.0	2.0	50.0000	ND	89.8	47 - 122			
Surrogate: 1,2-Dichloroethane-d4	*58.64*			*50.0000*		*117*	*12 - 186*			
Surrogate: 4-Bromofluorobenzene	*53.92*			*50.0000*		*108*	*23 - 162*			
Surrogate: Dibromofluoromethan	*52.45*			*50.0000*		*105*	*23 - 179*			
Surrogate: Toluene-d8	*51.54*			*50.0000*		*103*	*26 - 164*			
Matrix Spike Dup (B7E0654-MSD1)			**Source: 1702036-AO**			Prepared: 5/19/2017 Analyzed: 5/19/2017				
1,1,1,2-Tetrachloroethane	36.8300	5.0	0.63	50.0000	ND	73.7	45 - 124	1.40	20	
1,1,1-Trichloroethane	37.8500	5.0	0.63	50.0000	ND	75.7	53 - 125	0.185	20	
1,1,2,2-Tetrachloroethane	37.2500	5.0	0.92	50.0000	ND	74.5	42 - 117	0.0537	20	
1,1,2-Trichloroethane	40.7400	5.0	1.4	50.0000	ND	81.5	48 - 120	3.07	20	
1,1-Dichloroethane	36.6800	5.0	1.5	50.0000	ND	73.4	54 - 116	3.41	20	
1,1-Dichloroethene	36.8500	5.0	0.69	50.0000	ND	73.7	47 - 123	2.78	20	
1,1-Dichloropropene	36.1900	5.0	2.4	50.0000	ND	72.4	48 - 126	4.01	20	
1,2,3-Trichloropropane	38.9500	5.0	1.2	50.0000	ND	77.9	46 - 118	0.0257	20	
1,2,3-Trichlorobenzene	41.0100	5.0	1.1	50.0000	ND	82.0	1 - 132	4.69	20	
1,2,4-Trichlorobenzene	41.5900	5.0	0.96	50.0000	ND	83.2	2 - 138	2.91	20	
1,2,4-Trimethylbenzene	35.2300	5.0	0.53	50.0000	ND	70.5	32 - 129	6.16	20	
1,2-Dibromo-3-chloropropane	44.3200	10	1.1	50.0000	ND	88.6	34 - 130	3.39	20	
1,2-Dibromoethane	43.1300	5.0	0.80	50.0000	ND	86.3	45 - 125	6.79	20	
1,2-Dichlorobenzene	36.6900	5.0	0.51	50.0000	ND	73.4	25 - 130	2.18	20	
1,2-Dichloroethane	43.3500	5.0	0.53	50.0000	ND	86.7	51 - 119	4.60	20	
1,2-Dichloropropane	37.6500	5.0	0.76	50.0000	ND	75.3	54 - 113	1.69	20	
1,3,5-Trimethylbenzene	34.2900	5.0	0.58	50.0000	ND	68.6	34 - 128	6.22	20	
1,3-Dichlorobenzene	35.2700	5.0	0.63	50.0000	ND	70.5	26 - 130	3.76	20	
1,3-Dichloropropane	41.9000	5.0	0.59	50.0000	ND	83.8	53 - 117	0.959	20	
1,4-Dichlorobenzene	34.7300	5.0	0.73	50.0000	ND	69.5	26 - 130	7.32	20	
2,2-Dichloropropane	38.1600	5.0	0.68	50.0000	ND	76.3	52 - 128	1.45	20	
2-Chlorotoluene	33.5100	5.0	0.68	50.0000	ND	67.0	34 - 126	4.49	20	
4-Chlorotoluene	33.9500	5.0	0.62	50.0000	ND	67.9	32 - 128	5.14	20	

Certificate of Analysis

Hushmand Associates, Inc.	Project Number : 6th St Bridge, LAC-17-001
250 Goddard	Report To : Naresh Bellana
Irvine , CA 92618	Reported : 06/05/2017

Volatile Organic Compounds by EPA 8260B - Quality Control (cont'd)

Analyte	Result (ug/kg)	PQL (ug/kg)	MDL (ug/kg)	Spike Level	Source Result	% Rec	% Rec Limits	RPD	RPD Limit	Notes
Batch B7E0654 - MSVOA_S (continued)										
Matrix Spike Dup (B7E0654-MSD1) - Continued			**Source: 1702036-AO**		Prepared: 5/19/2017 Analyzed: 5/19/2017					
4-Isopropyltoluene	35.1600	5.0	0.63	50.0000	ND	70.3	28 - 133	6.33	20	
Benzene	69.4100	5.0	0.59	100.000	ND	69.4	55 - 113	2.90	20	
Bromobenzene	34.9000	5.0	1.9	50.0000	ND	69.8	36 - 122	0.690	20	
Bromochloromethane	39.6300	5.0	3.1	50.0000	ND	79.3	50 - 118	4.75	20	
Bromodichloromethane	37.9100	5.0	1.0	50.0000	ND	75.8	51 - 117	9.16	20	
Bromoform	41.1000	5.0	0.70	50.0000	ND	82.2	39 - 130	0.920	20	
Bromomethane	40.6000	5.0	4.2	50.0000	ND	81.2	38 - 151	0.614	20	
Carbon disulfide	39.7800	5.0	1.2	50.0000	ND	79.6	38 - 126	1.87	20	
Carbon tetrachloride	35.0600	5.0	1.1	50.0000	ND	70.1	43 - 141	6.49	20	
Chlorobenzene	34.7000	5.0	0.64	50.0000	ND	69.4	42 - 122	1.83	20	
Chloroethane	34.6000	5.0	1.9	50.0000	ND	69.2	42 - 129	1.92	20	
Chloroform	38.0600	5.0	1.4	50.0000	ND	76.1	56 - 117	2.47	20	
Chloromethane	51.7600	5.0	1.9	50.0000	ND	104	35 - 127	0.116	20	
cis-1,2-Dichloroethene	35.6600	5.0	0.87	50.0000	ND	71.3	50 - 118	3.98	20	
cis-1,3-Dichloropropene	39.5800	5.0	0.79	50.0000	ND	79.2	45 - 118	1.09	20	
Di-isopropyl ether	37.8700	5.0	0.51	50.0000	ND	75.7	51 - 119	3.71	20	
Dibromochloromethane	40.4100	5.0	1.0	50.0000	ND	80.8	47 - 120	1.62	20	
Dibromomethane	13.0900	5.0	0.99	50.0000	ND	26.2	48 - 118	103	20	M1, R
Dichlorodifluoromethane	41.8100	5.0	2.2	50.0000	ND	83.6	43 - 126	1.24	20	
Ethyl Acetate	486.350	50	9.7	500.000	ND	97.3	22 - 145	7.60	20	
Ethyl Ether	453.850	50	7.3	500.000	ND	90.8	49 - 114	5.50	20	
Ethyl tert-butyl ether	40.7100	5.0	1.4	50.0000	ND	81.4	54 - 120	5.63	20	
Ethylbenzene	69.4000	5.0	0.65	100.000	ND	69.4	42 - 123	4.09	20	
Freon-113	42.2200	5.0	1.0	50.0000	ND	84.4	45 - 132	2.81	20	
Hexachlorobutadiene	38.9400	5.0	0.78	50.0000	ND	77.9	4 - 135	5.86	20	
Isopropylbenzene	32.4800	5.0	0.59	50.0000	ND	65.0	40 - 127	6.95	20	
m,p-Xylene	71.3100	10	1.2	100.000	ND	71.3	39 - 127	5.92	20	
Methylene chloride	35.6600	5.0	1.4	50.0000	ND	71.3	51 - 140	4.80	20	
MTBE	44.1700	5.0	0.50	50.0000	ND	88.3	52 - 120	4.04	20	
n-Butylbenzene	36.7800	5.0	0.75	50.0000	ND	73.6	19 - 141	6.93	20	
n-Propylbenzene	33.0000	5.0	0.55	50.0000	ND	66.0	34 - 131	6.54	20	
Naphthalene	41.6600	5.0	1.2	50.0000	ND	83.3	11 - 136	4.37	20	
o-Xylene	70.4100	5.0	0.86	100.000	ND	70.4	40 - 124	4.28	20	
sec-Butylbenzene	33.4100	5.0	0.79	50.0000	ND	66.8	29 - 132	5.93	20	
Styrene	36.8000	5.0	0.82	50.0000	ND	73.6	36 - 130	2.87	20	
tert-Amyl methyl ether	40.3800	5.0	1.5	50.0000	ND	80.8	49 - 119	6.81	20	
tert-Butanol	234.550	100	5.9	250.000	ND	93.8	29 - 138	0.912	20	
tert-Butylbenzene	33.3900	5.0	0.57	50.0000	ND	66.8	34 - 129	6.69	20	
Tetrachloroethene	34.9700	5.0	0.65	50.0000	ND	69.9	37 - 132	4.66	20	
Toluene	70.8100	5.0	0.80	100.000	ND	70.8	48 - 122	3.59	20	
trans-1,2-Dichloroethene	35.3900	5.0	1.5	50.0000	ND	70.8	51 - 123	4.66	20	
trans-1,3-Dichloropropene	39.5400	5.0	0.63	50.0000	ND	79.1	38 - 125	0.0506	20	

Certificate of Analysis

Hushmand Associates, Inc.	Project Number : 6th St Bridge, LAC-17-001
250 Goddard	Report To : Naresh Bellana
Irvine , CA 92618	Reported : 06/05/2017

Volatile Organic Compounds by EPA 8260B - Quality Control (cont'd)

Analyte	Result (ug/kg)	PQL (ug/kg)	MDL (ug/kg)	Spike Level	Source Result	% Rec	% Rec Limits	RPD	RPD Limit	Notes
Batch B7E0654 - MSVOA_S (continued)										
Matrix Spike Dup (B7E0654-MSD1) - Continued			**Source: 1702036-AO**		Prepared: 5/19/2017 Analyzed: 5/19/2017					
Trichloroethene	35.5800	5.0	1.1	50.0000	ND	71.2	41 - 136	3.21	20	
Trichlorofluoromethane	42.3700	5.0	0.89	50.0000	ND	84.7	44 - 126	1.85	20	
Vinyl acetate	466.370	50	5.7	500.000	ND	93.3	0 - 154	6.52	20	
Vinyl chloride	44.7300	5.0	2.0	50.0000	ND	89.5	47 - 122	0.424	20	
Surrogate: 1,2-Dichloroethane-d4	*67.21*			*50.0000*		*134*	*12 - 186*			
Surrogate: 4-Bromofluorobenzene	*53.78*			*50.0000*		*108*	*23 - 162*			
Surrogate: Dibromofluoromethan	*55.14*			*50.0000*		*110*	*23 - 179*			
Surrogate: Toluene-d8	*52.05*			*50.0000*		*104*	*26 - 164*			

Certificate of Analysis

Hushmand Associates, Inc.	Project Number : 6th St Bridge, LAC-17-001
250 Goddard	Report To : Naresh Bellana
Irvine , CA 92618	Reported : 06/05/2017

Semivolatile Organic Compounds by EPA 8270C - Quality Control

Analyte	Result (ug/kg)	PQL (ug/kg)	MDL (ug/kg)	Spike Level	Source Result	% Rec	% Rec Limits	RPD	RPD Limit	Notes
Batch B7E0747 - MSSEMI_S										
Blank (B7E0747-BLK1)					Prepared: 5/22/2017 Analyzed: 5/22/2017					
1,2,4-Trichlorobenzene	ND	330	71							
1,2-Dichlorobenzene	ND	330	60							
1,3-Dichlorobenzene	ND	330	65							
1,4-Dichlorobenzene	ND	330	60							
2,4,5-Trichlorophenol	ND	330	61							
2,4,6-Trichlorophenol	ND	330	220							
2,4-Dichlorophenol	ND	1600	120							
2,4-Dimethylphenol	ND	330	120							
2,4-Dinitrophenol	ND	1600	86							
2,4-Dinitrotoluene	ND	330	46							
2,6-Dinitrotoluene	ND	330	49							
2-Chloronaphthalene	ND	330	59							
2-Chlorophenol	ND	330	120							
2-Methylnaphthalene	ND	330	67							
2-Methylphenol	ND	330	67							
2-Nitroaniline	ND	1600	200							
2-Nitrophenol	ND	330	110							
3,3´-Dichlorobenzidine	ND	660	280							
3-Nitroaniline	ND	1600	44							
4,6-Dinitro-2-methyphenol	ND	1600	300							
4-Bromophenyl-phenylether	ND	330	50							
4-Chloro-3-methylphenol	ND	660	110							
4-Chloroaniline	ND	660	53							
4-Chlorophenyl-phenylether	ND	330	48							
4-Methylphenol	ND	330	66							
4-Nitroaniline	ND	1600	290							
4-Nitrophenol	ND	330	150							
Acenaphthene	ND	330	48							
Acenaphthylene	ND	330	51							
Anthracene	ND	330	49							
Benzidine (M)	ND	1600	1400							
Benzo(a)anthracene	ND	330	39							
Benzo(a)pyrene	ND	330	45							
Benzo(b)fluoranthene	ND	330	55							
Benzo(g,h,i)perylene	ND	330	38							
Benzo(k)fluoranthene	ND	330	52							
Benzoic acid	ND	1600	890							
Benzyl alcohol	ND	660	67							
bis(2-chloroethoxy)methane	ND	330	59							
bis(2-Chloroethyl)ether	ND	330	57							
bis(2-chloroisopropyl)ether	ND	330	65							

Certificate of Analysis

Hushmand Associates, Inc.	Project Number : 6th St Bridge, LAC-17-001
250 Goddard	Report To : Naresh Bellana
Irvine , CA 92618	Reported : 06/05/2017

Semivolatile Organic Compounds by EPA 8270C - Quality Control (cont'd)

Analyte	Result (ug/kg)	PQL (ug/kg)	MDL (ug/kg)	Spike Level	Source Result	% Rec	% Rec Limits	RPD	RPD Limit	Notes
Batch B7E0747 - MSSEMI_S (continued)										
Blank (B7E0747-BLK1) - Continued					Prepared: 5/22/2017 Analyzed: 5/22/2017					
bis(2-ethylhexyl)phthalate	ND	330	83							
Butylbenzylphthalate	ND	330	250							
Chrysene	ND	330	43							
Di-n-butylphthalate	ND	330	230							
Di-n-octylphthalate	ND	330	48							
Dibenz(a,h)anthracene	ND	330	43							
Dibenzofuran	ND	330	55							
Diethyl phthalate	ND	330	47							
Dimethyl phthalate	ND	330	46							
Fluoranthene	ND	330	47							
Fluorene	ND	330	49							
Hexachlorobenzene	ND	330	41							
Hexachlorobutadiene	ND	660	61							
Hexachlorocyclopentadiene	ND	660	64							
Hexachloroethane	ND	330	71							
Indeno(1,2,3-cd)pyrene	ND	330	44							
Isophorone	ND	330	57							
N-Nitroso-di-n propylamine	ND	330	65							
N-Nitrosodiphenylamine	ND	330	48							
Naphthalene	ND	330	60							
Nitrobenzene	ND	330	67							
Pentachlorophenol	ND	1600	190							
Phenanthrene	ND	330	46							
Phenol	ND	330	130							
Pyrene	ND	330	53							
Pyridine	ND	1600	270							
Surrogate: 1,2-Dichlorobenzene-d	*2635*			*3333.33*		*79.0*	*38 - 93*			
Surrogate: 2,4,6-Tribromophenol	*2693*			*3333.33*		*80.8*	*27 - 124*			
Surrogate: 2-Chlorophenol-d4	*2753*			*3333.33*		*82.6*	*36 - 96*			
Surrogate: 2-Fluorobiphenyl	*2810*			*3333.33*		*84.3*	*44 - 100*			
Surrogate: 2-Fluorophenol	*2815*			*3333.33*		*84.5*	*32 - 89*			
Surrogate: 4-Terphenyl-d14	*3201*			*3333.33*		*96.0*	*49 - 123*			
Surrogate: Nitrobenzene-d5	*2860*			*3333.33*		*85.8*	*38 - 104*			
Surrogate: Phenol-d5	*2711*			*3333.33*		*81.3*	*35 - 95*			
LCS (B7E0747-BS1)					Prepared: 5/22/2017 Analyzed: 5/22/2017					
1,2,4-Trichlorobenzene	1917.33	330	71	3333.33		57.5	52 - 122			
1,2-Dichlorobenzene	1972.00	330	60	3333.33		59.2	46 - 118			
1,3-Dichlorobenzene	2008.67	330	65	3333.33		60.3	45 - 113			
1,4-Dichlorobenzene	1971.00	330	60	3333.33		59.1	46 - 113			
2,4,5-Trichlorophenol	2468.33	330	61	3333.33		74.0	65 - 126			

Certificate of Analysis

Hushmand Associates, Inc.	Project Number : 6th St Bridge, LAC-17-001
250 Goddard	Report To : Naresh Bellana
Irvine , CA 92618	Reported : 06/05/2017

Semivolatile Organic Compounds by EPA 8270C - Quality Control (cont'd)

Analyte	Result (ug/kg)	PQL (ug/kg)	MDL (ug/kg)	Spike Level	Source Result	% Rec	% Rec Limits	RPD	RPD Limit	Notes
Batch B7E0747 - MSSEMI_S (continued)										
LCS (B7E0747-BS1) - Continued					Prepared: 5/22/2017 Analyzed: 5/22/2017					
2,4,6-Trichlorophenol	2379.00	330	220	3333.33		71.4	61 - 119			
2,4-Dichlorophenol	2033.00	1600	120	3333.33		61.0	55 - 110			
2,4-Dimethylphenol	2282.67	330	120	3333.33		68.5	47 - 100			
2,4-Dinitrophenol	2435.67	1600	86	3333.33		73.1	37 - 186			
2,4-Dinitrotoluene	2891.00	330	46	3333.33		86.7	74 - 155			
2,6-Dinitrotoluene	2733.33	330	49	3333.33		82.0	62 - 169			
2-Chloronaphthalene	2258.67	330	59	3333.33		67.8	58 - 140			
2-Chlorophenol	2097.00	330	120	3333.33		62.9	45 - 96			
2-Methylnaphthalene	2198.00	330	67	3333.33		65.9	54 - 147			
2-Methylphenol	2188.67	330	67	3333.33		65.7	49 - 103			
2-Nitroaniline	3194.00	1600	200	3333.33		95.8	23 - 155			
2-Nitrophenol	2161.33	330	110	3333.33		64.8	54 - 112			
3,3´-Dichlorobenzidine	3520.67	660	280	3333.33		106	62 - 141			
3-Nitroaniline	3151.67	1600	44	3333.33		94.6	30 - 137			
4,6-Dinitro-2-methyphenol	2580.33	1600	300	3333.33		77.4	75 - 145			
4-Bromophenyl-phenylether	2624.67	330	50	3333.33		78.7	68 - 118			
4-Chloro-3-methylphenol	2394.00	660	110	3333.33		71.8	63 - 119			
4-Chloroaniline	2458.33	660	53	3333.33		73.8	19 - 127			
4-Chlorophenyl-phenylether	2278.00	330	48	3333.33		68.3	64 - 113			
4-Methylphenol	2304.33	330	66	3333.33		69.1	54 - 120			
4-Nitroaniline	2954.00	1600	290	3333.33		88.6	35 - 136			
4-Nitrophenol	2933.33	330	150	3333.33		88.0	52 - 160			
Acenaphthene	2451.33	330	48	3333.33		73.5	62 - 113			
Acenaphthylene	2453.00	330	51	3333.33		73.6	62 - 114			
Anthracene	2781.00	330	49	3333.33		83.4	71 - 129			
Benzidine (M)	4491.00	1600	1400	3333.33		135	45 - 184			
Benzo(a)anthracene	2826.33	330	39	3333.33		84.8	66 - 133			
Benzo(a)pyrene	2733.67	330	45	3333.33		82.0	71 - 133			
Benzo(b)fluoranthene	2619.67	330	55	3333.33		78.6	72 - 128			
Benzo(g,h,i)perylene	2642.00	330	38	3333.33		79.3	70 - 126			
Benzo(k)fluoranthene	2539.33	330	52	3333.33		76.2	70 - 136			
Benzoic acid	1755.00	1600	890	3333.33		52.7	11 - 108			
Benzyl alcohol	2326.33	660	67	3333.33		69.8	57 - 143			
bis(2-chloroethoxy)methane	2101.00	330	59	3333.33		63.0	51 - 99			
bis(2-Chloroethyl)ether	2000.33	330	57	3333.33		60.0	46 - 101			
bis(2-chloroisopropyl)ether	1651.33	330	65	3333.33		49.5	28 - 126			
bis(2-ethylhexyl)phthalate	3444.33	330	83	3333.33		103	49 - 134			
Butylbenzylphthalate	3334.00	330	250	3333.33		100	54 - 137			
Chrysene	2783.67	330	43	3333.33		83.5	70 - 125			
Di-n-butylphthalate	3473.33	330	230	3333.33		104	59 - 152			
Di-n-octylphthalate	3200.67	330	48	3333.33		96.0	50 - 146			
Dibenz(a,h)anthracene	2778.33	330	43	3333.33		83.4	59 - 141			

Certificate of Analysis

Hushmand Associates, Inc.	Project Number : 6th St Bridge, LAC-17-001
250 Goddard	Report To : Naresh Bellana
Irvine , CA 92618	Reported : 06/05/2017

Semivolatile Organic Compounds by EPA 8270C - Quality Control (cont'd)

Analyte	Result (ug/kg)	PQL (ug/kg)	MDL (ug/kg)	Spike Level	Source Result	% Rec	% Rec Limits	RPD	RPD Limit	Notes
Batch B7E0747 - MSSEMI_S (continued)										
LCS (B7E0747-BS1) - Continued					Prepared: 5/22/2017 Analyzed: 5/22/2017					
Dibenzofuran	2591.00	330	55	3333.33		77.7	58 - 158			
Diethyl phthalate	2908.67	330	47	3333.33		87.3	68 - 136			
Dimethyl phthalate	2726.33	330	46	3333.33		81.8	69 - 124			
Fluoranthene	2575.33	330	47	3333.33		77.3	72 - 128			
Fluorene	2360.33	330	49	3333.33		70.8	67 - 118			
Hexachlorobenzene	2628.67	330	41	3333.33		78.9	61 - 155			
Hexachlorobutadiene	1870.33	660	61	3333.33		56.1	44 - 111			
Hexachlorocyclopentadiene	2410.67	660	64	3333.33		72.3	46 - 138			
Hexachloroethane	2153.00	330	71	3333.33		64.6	40 - 129			
Indeno(1,2,3-cd)pyrene	2794.33	330	44	3333.33		83.8	63 - 142			
Isophorone	2271.00	330	57	3333.33		68.1	55 - 106			
N-Nitroso-di-n propylamine	2178.00	330	65	3333.33		65.3	50 - 117			
N-Nitrosodiphenylamine	2955.33	330	48	3333.33		88.7	70 - 137			
Naphthalene	2073.33	330	60	3333.33		62.2	54 - 106			
Nitrobenzene	2150.33	330	67	3333.33		64.5	57 - 134			
Pentachlorophenol	2378.33	1600	190	3333.33		71.4	53 - 115			
Phenanthrene	2683.33	330	46	3333.33		80.5	70 - 129			
Phenol	1964.67	330	130	3333.33		58.9	47 - 105			
Pyrene	2552.33	330	53	3333.33		76.6	73 - 131			
Pyridine	2071.00	1600	270	3333.33		62.1	40 - 91			
Surrogate: 1,2-Dichlorobenzene-d	*1917*			*3333.33*		*57.5*	*38 - 93*			
Surrogate: 2,4,6-Tribromophenol	*2394*			*3333.33*		*71.8*	*27 - 124*			
Surrogate: 2-Chlorophenol-d4	*2102*			*3333.33*		*63.1*	*36 - 96*			
Surrogate: 2-Fluorobiphenyl	*2247*			*3333.33*		*67.4*	*44 - 100*			
Surrogate: 2-Fluorophenol	*2044*			*3333.33*		*61.3*	*32 - 89*			
Surrogate: 4-Terphenyl-d14	*2814*			*3333.33*		*84.4*	*49 - 123*			
Surrogate: Nitrobenzene-d5	*2205*			*3333.33*		*66.2*	*38 - 104*			
Surrogate: Phenol-d5	*2051*			*3333.33*		*61.5*	*35 - 95*			
Matrix Spike (B7E0747-MS1)			**Source: 1702036-22**		Prepared: 5/22/2017 Analyzed: 5/22/2017					
1,2,4-Trichlorobenzene	2048.33	330	71	3333.33	ND	61.4	40 - 127			
1,2-Dichlorobenzene	2177.67	330	60	3333.33	ND	65.3	36 - 125			
1,3-Dichlorobenzene	2164.00	330	65	3333.33	ND	64.9	35 - 119			
1,4-Dichlorobenzene	2198.33	330	60	3333.33	ND	66.0	36 - 120			
2,4,5-Trichlorophenol	2612.67	330	61	3333.33	ND	78.4	42 - 135			
2,4,6-Trichlorophenol	2519.33	330	220	3333.33	ND	75.6	46 - 121			
2,4-Dichlorophenol	2237.00	1600	120	3333.33	ND	67.1	43 - 114			
2,4-Dimethylphenol	2491.67	330	120	3333.33	ND	74.8	37 - 105			
2,4-Dinitrophenol	2060.67	1600	86	3333.33	ND	61.8	17 - 177			
2,4-Dinitrotoluene	2876.00	330	46	3333.33	ND	86.3	50 - 166			
2,6-Dinitrotoluene	2716.67	330	49	3333.33	ND	81.5	43 - 169			

Certificate of Analysis

Hushmand Associates, Inc.	Project Number : 6th St Bridge, LAC-17-001
250 Goddard	Report To : Naresh Bellana
Irvine , CA 92618	Reported : 06/05/2017

Semivolatile Organic Compounds by EPA 8270C - Quality Control (cont'd)

Analyte	Result (ug/kg)	PQL (ug/kg)	MDL (ug/kg)	Spike Level	Source Result	% Rec	% Rec Limits	RPD	RPD Limit	Notes
Batch B7E0747 - MSSEMI_S (continued)										
Matrix Spike (B7E0747-MS1) - Continued			**Source: 1702036-22**		Prepared: 5/22/2017 Analyzed: 5/22/2017					
2-Chloronaphthalene	2496.67	330	59	3333.33	ND	74.9	44 - 144			
2-Chlorophenol	2344.33	330	120	3333.33	ND	70.3	38 - 99			
2-Methylnaphthalene	2415.67	330	67	3333.33	ND	72.5	41 - 151			
2-Methylphenol	2438.67	330	67	3333.33	ND	73.2	37 - 108			
2-Nitroaniline	3255.67	1600	200	3333.33	ND	97.7	13 - 155			
2-Nitrophenol	2355.67	330	110	3333.33	ND	70.7	24 - 142			
3,3´-Dichlorobenzidine	3471.00	660	280	3333.33	ND	104	31 - 153			
3-Nitroaniline	3085.00	1600	44	3333.33	ND	92.6	7 - 147			
4,6-Dinitro-2-methyphenol	2490.00	1600	300	3333.33	ND	74.7	45 - 155			
4-Bromophenyl-phenylether	2588.67	330	50	3333.33	ND	77.7	45 - 122			
4-Chloro-3-methylphenol	2491.33	660	110	3333.33	ND	74.7	45 - 124			
4-Chloroaniline	2642.00	660	53	3333.33	ND	79.3	12 - 117			
4-Chlorophenyl-phenylether	2304.67	330	48	3333.33	ND	69.1	45 - 115			
4-Methylphenol	2499.67	330	66	3333.33	ND	75.0	39 - 125			
4-Nitroaniline	2909.67	1600	290	3333.33	ND	87.3	22 - 135			
4-Nitrophenol	2783.00	330	150	3333.33	ND	83.5	27 - 161			
Acenaphthene	2634.00	330	48	3333.33	ND	79.0	47 - 114			
Acenaphthylene	2594.67	330	51	3333.33	ND	77.8	45 - 117			
Anthracene	2730.00	330	49	3333.33	ND	81.9	47 - 130			
Benzidine (M)	3579.33	1600	1400	3333.33	ND	107	8 - 179			
Benzo(a)anthracene	2681.00	330	39	3333.33	ND	80.4	46 - 130			
Benzo(a)pyrene	2707.33	330	45	3333.33	ND	81.2	46 - 131			
Benzo(b)fluoranthene	2622.00	330	55	3333.33	ND	78.7	44 - 130			
Benzo(g,h,i)perylene	2627.67	330	38	3333.33	ND	78.8	48 - 125			
Benzo(k)fluoranthene	2496.00	330	52	3333.33	ND	74.9	46 - 132			
Benzoic acid	990.667	1600	890	3333.33	ND	29.7	0 - 121			
Benzyl alcohol	2562.33	660	67	3333.33	ND	76.9	32 - 156			
bis(2-chloroethoxy)methane	2298.33	330	59	3333.33	ND	69.0	42 - 100			
bis(2-Chloroethyl)ether	2178.67	330	57	3333.33	ND	65.4	39 - 104			
bis(2-chloroisopropyl)ether	1855.33	330	65	3333.33	ND	55.7	26 - 125			
bis(2-ethylhexyl)phthalate	3404.00	330	83	3333.33	ND	102	20 - 159			
Butylbenzylphthalate	3330.00	330	250	3333.33	ND	99.9	19 - 171			
Chrysene	2617.33	330	43	3333.33	ND	78.5	52 - 123			
Di-n-butylphthalate	3634.00	330	230	3333.33	ND	109	40 - 156			
Di-n-octylphthalate	3349.67	330	48	3333.33	ND	100	31 - 156			
Dibenz(a,h)anthracene	2810.67	330	43	3333.33	ND	84.3	31 - 149			
Dibenzofuran	2696.00	330	55	3333.33	ND	80.9	43 - 157			
Diethyl phthalate	2982.67	330	47	3333.33	ND	89.5	42 - 138			
Dimethyl phthalate	2723.33	330	46	3333.33	ND	81.7	44 - 127			
Fluoranthene	2570.67	330	47	3333.33	ND	77.1	46 - 131			
Fluorene	2440.67	330	49	3333.33	ND	73.2	48 - 120			
Hexachlorobenzene	2522.33	330	41	3333.33	ND	75.7	37 - 158			

Certificate of Analysis

Hushmand Associates, Inc.	Project Number : 6th St Bridge, LAC-17-001
250 Goddard	Report To : Naresh Bellana
Irvine , CA 92618	Reported : 06/05/2017

Semivolatile Organic Compounds by EPA 8270C - Quality Control (cont'd)

Analyte	Result (ug/kg)	PQL (ug/kg)	MDL (ug/kg)	Spike Level	Source Result	% Rec	% Rec Limits	RPD	RPD Limit	Notes
Batch B7E0747 - MSSEMI_S (continued)										
Matrix Spike (B7E0747-MS1) - Continued			**Source: 1702036-22**		Prepared: 5/22/2017 Analyzed: 5/22/2017					
Hexachlorobutadiene	2030.00	660	61	3333.33	ND	60.9	37 - 114			
Hexachlorocyclopentadiene	2652.00	660	64	3333.33	ND	79.6	29 - 146			
Hexachloroethane	2329.33	330	71	3333.33	ND	69.9	31 - 135			
Indeno(1,2,3-cd)pyrene	2804.67	330	44	3333.33	ND	84.1	36 - 148			
Isophorone	2417.00	330	57	3333.33	ND	72.5	36 - 112			
N-Nitroso-di-n propylamine	2419.00	330	65	3333.33	ND	72.6	37 - 120			
N-Nitrosodiphenylamine	2884.67	330	48	3333.33	ND	86.5	44 - 141			
Naphthalene	2287.67	330	60	3333.33	ND	68.6	47 - 106			
Nitrobenzene	2308.67	330	67	3333.33	ND	69.3	44 - 139			
Pentachlorophenol	2337.67	1600	190	3333.33	ND	70.1	32 - 128			
Phenanthrene	2626.33	330	46	3333.33	ND	78.8	49 - 129			
Phenol	2162.00	330	130	3333.33	ND	64.9	40 - 107			
Pyrene	2570.67	330	53	3333.33	ND	77.1	47 - 134			
Pyridine	2009.67	1600	270	3333.33	ND	60.3	24 - 99			
Surrogate: 1,2-Dichlorobenzene-d	*2110*			*3333.33*		*63.3*	*38 - 93*			
Surrogate: 2,4,6-Tribromophenol	*2400*			*3333.33*		*72.0*	*27 - 124*			
Surrogate: 2-Chlorophenol-d4	*2331*			*3333.33*		*69.9*	*36 - 96*			
Surrogate: 2-Fluorobiphenyl	*2483*			*3333.33*		*74.5*	*44 - 100*			
Surrogate: 2-Fluorophenol	*2215*			*3333.33*		*66.5*	*32 - 89*			
Surrogate: 4-Terphenyl-d14	*2709*			*3333.33*		*81.3*	*49 - 123*			
Surrogate: Nitrobenzene-d5	*2430*			*3333.33*		*72.9*	*38 - 104*			
Surrogate: Phenol-d5	*2260*			*3333.33*		*67.8*	*35 - 95*			
Matrix Spike Dup (B7E0747-MSD1)			**Source: 1702036-22**		Prepared: 5/22/2017 Analyzed: 5/22/2017					
1,2,4-Trichlorobenzene	1852.33	330	71	3333.33	ND	55.6	40 - 127	10.0	20	
1,2-Dichlorobenzene	1931.00	330	60	3333.33	ND	57.9	36 - 125	12.0	20	
1,3-Dichlorobenzene	1947.00	330	65	3333.33	ND	58.4	35 - 119	10.6	20	
1,4-Dichlorobenzene	1942.67	330	60	3333.33	ND	58.3	36 - 120	12.3	20	
2,4,5-Trichlorophenol	2294.67	330	61	3333.33	ND	68.8	42 - 135	13.0	20	
2,4,6-Trichlorophenol	2192.33	330	220	3333.33	ND	65.8	46 - 121	13.9	20	
2,4-Dichlorophenol	1963.00	1600	120	3333.33	ND	58.9	43 - 114	13.0	20	
2,4-Dimethylphenol	2205.00	330	120	3333.33	ND	66.2	37 - 105	12.2	20	
2,4-Dinitrophenol	1751.67	1600	86	3333.33	ND	52.6	17 - 177	16.2	20	
2,4-Dinitrotoluene	2492.67	330	46	3333.33	ND	74.8	50 - 166	14.3	20	
2,6-Dinitrotoluene	2434.00	330	49	3333.33	ND	73.0	43 - 169	11.0	20	
2-Chloronaphthalene	2176.00	330	59	3333.33	ND	65.3	44 - 144	13.7	20	
2-Chlorophenol	2045.67	330	120	3333.33	ND	61.4	38 - 99	13.6	20	
2-Methylnaphthalene	2164.00	330	67	3333.33	ND	64.9	41 - 151	11.0	20	
2-Methylphenol	2167.00	330	67	3333.33	ND	65.0	37 - 108	11.8	20	
2-Nitroaniline	2919.67	1600	200	3333.33	ND	87.6	13 - 155	10.9	20	
2-Nitrophenol	2138.00	330	110	3333.33	ND	64.1	24 - 142	9.69	20	

Certificate of Analysis

Hushmand Associates, Inc.	Project Number : 6th St Bridge, LAC-17-001
250 Goddard	Report To : Naresh Bellana
Irvine , CA 92618	Reported : 06/05/2017

Semivolatile Organic Compounds by EPA 8270C - Quality Control (cont'd)

Analyte	Result (ug/kg)	PQL (ug/kg)	MDL (ug/kg)	Spike Level	Source Result	% Rec	% Rec Limits	RPD	RPD Limit	Notes
Batch B7E0747 - MSSEMI_S (continued)										
Matrix Spike Dup (B7E0747-MSD1) - Continued			**Source: 1702036-22**		Prepared: 5/22/2017 Analyzed: 5/22/2017					
3,3´-Dichlorobenzidine	3076.33	660	280	3333.33	ND	92.3	31 - 153	12.1	20	
3-Nitroaniline	2751.00	1600	44	3333.33	ND	82.5	7 - 147	11.4	20	
4,6-Dinitro-2-methyphenol	2246.00	1600	300	3333.33	ND	67.4	45 - 155	10.3	20	
4-Bromophenyl-phenylether	2273.33	330	50	3333.33	ND	68.2	45 - 122	13.0	20	
4-Chloro-3-methylphenol	2271.00	660	110	3333.33	ND	68.1	45 - 124	9.25	20	
4-Chloroaniline	2366.33	660	53	3333.33	ND	71.0	12 - 117	11.0	20	
4-Chlorophenyl-phenylether	2030.00	330	48	3333.33	ND	60.9	45 - 115	12.7	20	
4-Methylphenol	2200.67	330	66	3333.33	ND	66.0	39 - 125	12.7	20	
4-Nitroaniline	2634.67	1600	290	3333.33	ND	79.0	22 - 135	9.92	20	
4-Nitrophenol	2520.67	330	150	3333.33	ND	75.6	27 - 161	9.89	20	
Acenaphthene	2280.00	330	48	3333.33	ND	68.4	47 - 114	14.4	20	
Acenaphthylene	2286.00	330	51	3333.33	ND	68.6	45 - 117	12.6	20	
Anthracene	2447.67	330	49	3333.33	ND	73.4	47 - 130	10.9	20	
Benzidine (M)	3081.33	1600	1400	3333.33	ND	92.4	8 - 179	15.0	20	
Benzo(a)anthracene	2445.33	330	39	3333.33	ND	73.4	46 - 130	9.19	20	
Benzo(a)pyrene	2473.33	330	45	3333.33	ND	74.2	46 - 131	9.03	20	
Benzo(b)fluoranthene	2335.33	330	55	3333.33	ND	70.1	44 - 130	11.6	20	
Benzo(g,h,i)perylene	2410.33	330	38	3333.33	ND	72.3	48 - 125	8.63	20	
Benzo(k)fluoranthene	2219.33	330	52	3333.33	ND	66.6	46 - 132	11.7	20	
Benzoic acid	ND	1600	890	3333.33	ND	NR	0 - 121	NR	20	
Benzyl alcohol	2301.33	660	67	3333.33	ND	69.0	32 - 156	10.7	20	
bis(2-chloroethoxy)methane	2040.33	330	59	3333.33	ND	61.2	42 - 100	11.9	20	
bis(2-Chloroethyl)ether	1991.67	330	57	3333.33	ND	59.8	39 - 104	8.97	20	
bis(2-chloroisopropyl)ether	1592.67	330	65	3333.33	ND	47.8	26 - 125	15.2	20	
bis(2-ethylhexyl)phthalate	3061.00	330	83	3333.33	ND	91.8	20 - 159	10.6	20	
Butylbenzylphthalate	2945.00	330	250	3333.33	ND	88.4	19 - 171	12.3	20	
Chrysene	2380.67	330	43	3333.33	ND	71.4	52 - 123	9.47	20	
Di-n-butylphthalate	3231.67	330	230	3333.33	ND	97.0	40 - 156	11.7	20	
Di-n-octylphthalate	2949.33	330	48	3333.33	ND	88.5	31 - 156	12.7	20	
Dibenz(a,h)anthracene	2524.33	330	43	3333.33	ND	75.7	31 - 149	10.7	20	
Dibenzofuran	2382.33	330	55	3333.33	ND	71.5	43 - 157	12.4	20	
Diethyl phthalate	2649.67	330	47	3333.33	ND	79.5	42 - 138	11.8	20	
Dimethyl phthalate	2425.00	330	46	3333.33	ND	72.8	44 - 127	11.6	20	
Fluoranthene	2261.67	330	47	3333.33	ND	67.9	46 - 131	12.8	20	
Fluorene	2136.67	330	49	3333.33	ND	64.1	48 - 120	13.3	20	
Hexachlorobenzene	2183.33	330	41	3333.33	ND	65.5	37 - 158	14.4	20	
Hexachlorobutadiene	1848.67	660	61	3333.33	ND	55.5	37 - 114	9.35	20	
Hexachlorocyclopentadiene	2288.00	660	64	3333.33	ND	68.6	29 - 146	14.7	20	
Hexachloroethane	2162.33	330	71	3333.33	ND	64.9	31 - 135	7.44	20	
Indeno(1,2,3-cd)pyrene	2535.67	330	44	3333.33	ND	76.1	36 - 148	10.1	20	
Isophorone	2189.33	330	57	3333.33	ND	65.7	36 - 112	9.88	20	
N-Nitroso-di-n propylamine	2157.33	330	65	3333.33	ND	64.7	37 - 120	11.4	20	

Certificate of Analysis

Hushmand Associates, Inc.	Project Number : 6th St Bridge, LAC-17-001
250 Goddard	Report To : Naresh Bellana
Irvine , CA 92618	Reported : 06/05/2017

Semivolatile Organic Compounds by EPA 8270C - Quality Control (cont'd)

Analyte	Result (ug/kg)	PQL (ug/kg)	MDL (ug/kg)	Spike Level	Source Result	% Rec	% Rec Limits	RPD	RPD Limit	Notes
Batch B7E0747 - MSSEMI_S (continued)										
Matrix Spike Dup (B7E0747-MSD1) - Continued			**Source: 1702036-22**		Prepared: 5/22/2017 Analyzed: 5/22/2017					
N-Nitrosodiphenylamine	2615.67	330	48	3333.33	ND	78.5	44 - 141	9.78	20	
Naphthalene	2025.67	330	60	3333.33	ND	60.8	47 - 106	12.1	20	
Nitrobenzene	2142.33	330	67	3333.33	ND	64.3	44 - 139	7.47	20	
Pentachlorophenol	2039.33	1600	190	3333.33	ND	61.2	32 - 128	13.6	20	
Phenanthrene	2373.33	330	46	3333.33	ND	71.2	49 - 129	10.1	20	
Phenol	1921.67	330	130	3333.33	ND	57.7	40 - 107	11.8	20	
Pyrene	2292.67	330	53	3333.33	ND	68.8	47 - 134	11.4	20	
Pyridine	1852.00	1600	270	3333.33	ND	55.6	24 - 99	8.17	20	
Surrogate: 1,2-Dichlorobenzene-d	*1885*			*3333.33*		*56.5*	*38 - 93*			
Surrogate: 2,4,6-Tribromophenol	*2113*			*3333.33*		*63.4*	*27 - 124*			
Surrogate: 2-Chlorophenol-d4	*2066*			*3333.33*		*62.0*	*36 - 96*			
Surrogate: 2-Fluorobiphenyl	*2168*			*3333.33*		*65.0*	*44 - 100*			
Surrogate: 2-Fluorophenol	*2003*			*3333.33*		*60.1*	*32 - 89*			
Surrogate: 4-Terphenyl-d14	*2399*			*3333.33*		*72.0*	*49 - 123*			
Surrogate: Nitrobenzene-d5	*2231*			*3333.33*		*66.9*	*38 - 104*			
Surrogate: Phenol-d5	*1995*			*3333.33*		*59.8*	*35 - 95*			

Certificate of Analysis

Hushmand Associates, Inc.	Project Number : 6th St Bridge, LAC-17-001
250 Goddard	Report To : Naresh Bellana
Irvine , CA 92618	Reported : 06/05/2017

Semivolatile Organic Compounds by EPA 8270C - Quality Control

Analyte	Result (ug/kg)	PQL (ug/kg)	MDL (ug/kg)	Spike Level	Source Result	% Rec	% Rec Limits	RPD	RPD Limit	Notes
Batch B7E0781 - MSSEMI_S										
Blank (B7E0781-BLK1)					Prepared: 5/23/2017 Analyzed: 5/31/2017					
1,2,4-Trichlorobenzene	ND	330	71							
1,2-Dichlorobenzene	ND	330	60							
1,3-Dichlorobenzene	ND	330	65							
1,4-Dichlorobenzene	ND	330	60							
2,4,5-Trichlorophenol	ND	330	61							
2,4,6-Trichlorophenol	ND	330	220							
2,4-Dichlorophenol	ND	1600	120							
2,4-Dimethylphenol	ND	330	120							
2,4-Dinitrophenol	ND	1600	86							
2,4-Dinitrotoluene	ND	330	46							
2,6-Dinitrotoluene	ND	330	49							
2-Chloronaphthalene	ND	330	59							
2-Chlorophenol	ND	330	120							
2-Methylnaphthalene	ND	330	67							
2-Methylphenol	ND	330	67							
2-Nitroaniline	ND	1600	200							
2-Nitrophenol	ND	330	110							
3,3´-Dichlorobenzidine	ND	660	280							
3-Nitroaniline	ND	1600	44							
4,6-Dinitro-2-methyphenol	ND	1600	300							
4-Bromophenyl-phenylether	ND	330	50							
4-Chloro-3-methylphenol	ND	660	110							
4-Chloroaniline	ND	660	53							
4-Chlorophenyl-phenylether	ND	330	48							
4-Methylphenol	ND	330	66							
4-Nitroaniline	ND	1600	290							
4-Nitrophenol	ND	330	150							
Acenaphthene	ND	330	48							
Acenaphthylene	ND	330	51							
Anthracene	ND	330	49							
Benzidine (M)	ND	1600	1400							
Benzo(a)anthracene	ND	330	39							
Benzo(a)pyrene	ND	330	45							
Benzo(b)fluoranthene	ND	330	55							
Benzo(g,h,i)perylene	ND	330	38							
Benzo(k)fluoranthene	ND	330	52							
Benzoic acid	ND	1600	890							
Benzyl alcohol	ND	660	67							
bis(2-chloroethoxy)methane	ND	330	59							
bis(2-Chloroethyl)ether	ND	330	57							
bis(2-chloroisopropyl)ether	ND	330	65							

Certificate of Analysis

Hushmand Associates, Inc.	Project Number : 6th St Bridge, LAC-17-001
250 Goddard	Report To : Naresh Bellana
Irvine , CA 92618	Reported : 06/05/2017

Semivolatile Organic Compounds by EPA 8270C - Quality Control (cont'd)

Analyte	Result (ug/kg)	PQL (ug/kg)	MDL (ug/kg)	Spike Level	Source Result	% Rec	% Rec Limits	RPD	RPD Limit	Notes
Batch B7E0781 - MSSEMI_S (continued)										
Blank (B7E0781-BLK1) - Continued					Prepared: 5/23/2017 Analyzed: 5/31/2017					
bis(2-ethylhexyl)phthalate	ND	330	83							
Butylbenzylphthalate	ND	330	250							
Chrysene	ND	330	43							
Di-n-butylphthalate	ND	330	230							
Di-n-octylphthalate	ND	330	48							
Dibenz(a,h)anthracene	ND	330	43							
Dibenzofuran	ND	330	55							
Diethyl phthalate	ND	330	47							
Dimethyl phthalate	ND	330	46							
Fluoranthene	ND	330	47							
Fluorene	ND	330	49							
Hexachlorobenzene	ND	330	41							
Hexachlorobutadiene	ND	660	61							
Hexachlorocyclopentadiene	ND	660	64							
Hexachloroethane	ND	330	71							
Indeno(1,2,3-cd)pyrene	ND	330	44							
Isophorone	ND	330	57							
N-Nitroso-di-n propylamine	ND	330	65							
N-Nitrosodiphenylamine	ND	330	48							
Naphthalene	ND	330	60							
Nitrobenzene	ND	330	67							
Pentachlorophenol	ND	1600	190							
Phenanthrene	ND	330	46							
Phenol	ND	330	130							
Pyrene	ND	330	53							
Pyridine	ND	1600	270							
Surrogate: 1,2-Dichlorobenzene-d	*1904*			*3333.33*		*57.1*	*38 - 93*			
Surrogate: 2,4,6-Tribromophenol	*2309*			*3333.33*		*69.3*	*27 - 124*			
Surrogate: 2-Chlorophenol-d4	*1959*			*3333.33*		*58.8*	*36 - 96*			
Surrogate: 2-Fluorobiphenyl	*2237*			*3333.33*		*67.1*	*44 - 100*			
Surrogate: 2-Fluorophenol	*1881*			*3333.33*		*56.4*	*32 - 89*			
Surrogate: 4-Terphenyl-d14	*2550*			*3333.33*		*76.5*	*49 - 123*			
Surrogate: Nitrobenzene-d5	*2005*			*3333.33*		*60.2*	*38 - 104*			
Surrogate: Phenol-d5	*1957*			*3333.33*		*58.7*	*35 - 95*			
LCS (B7E0781-BS1)					Prepared: 5/23/2017 Analyzed: 5/31/2017					
1,2,4-Trichlorobenzene	2642.00	330	71	3333.33		79.3	52 - 122			
1,2-Dichlorobenzene	2339.33	330	60	3333.33		70.2	46 - 118			
1,3-Dichlorobenzene	2323.33	330	65	3333.33		69.7	45 - 113			
1,4-Dichlorobenzene	2321.00	330	60	3333.33		69.6	46 - 113			
2,4,5-Trichlorophenol	3044.67	330	61	3333.33		91.3	65 - 126			

Hushmand Associates, Inc.	Project Number : 6th St Bridge, LAC-17-001
250 Goddard	Report To : Naresh Bellana
Irvine , CA 92618	Reported : 06/05/2017

Semivolatile Organic Compounds by EPA 8270C - Quality Control (cont'd)

Analyte	Result (ug/kg)	PQL (ug/kg)	MDL (ug/kg)	Spike Level	Source Result	% Rec	% Rec Limits	RPD	RPD Limit	Notes
Batch B7E0781 - MSSEMI_S (continued)										
LCS (B7E0781-BS1) - Continued					Prepared: 5/23/2017 Analyzed: 5/31/2017					
2,4,6-Trichlorophenol	2706.00	330	220	3333.33		81.2	61 - 119			
2,4-Dichlorophenol	2416.33	1600	120	3333.33		72.5	55 - 110			
2,4-Dimethylphenol	1951.33	330	120	3333.33		58.5	47 - 100			
2,4-Dinitrophenol	2672.67	1600	86	3333.33		80.2	37 - 186			
2,4-Dinitrotoluene	3413.33	330	46	3333.33		102	74 - 155			
2,6-Dinitrotoluene	3273.67	330	49	3333.33		98.2	62 - 169			
2-Chloronaphthalene	2887.00	330	59	3333.33		86.6	58 - 140			
2-Chlorophenol	2020.67	330	120	3333.33		60.6	45 - 96			
2-Methylnaphthalene	3203.00	330	67	3333.33		96.1	54 - 147			
2-Methylphenol	2256.33	330	67	3333.33		67.7	49 - 103			
2-Nitroaniline	3160.33	1600	200	3333.33		94.8	23 - 155			
2-Nitrophenol	2387.00	330	110	3333.33		71.6	54 - 112			
3,3´-Dichlorobenzidine	2990.67	660	280	3333.33		89.7	62 - 141			
3-Nitroaniline	2969.00	1600	44	3333.33		89.1	30 - 137			
4,6-Dinitro-2-methyphenol	2819.33	1600	300	3333.33		84.6	75 - 145			
4-Bromophenyl-phenylether	2782.00	330	50	3333.33		83.5	68 - 118			
4-Chloro-3-methylphenol	2709.33	660	110	3333.33		81.3	63 - 119			
4-Chloroaniline	2699.33	660	53	3333.33		81.0	19 - 127			
4-Chlorophenyl-phenylether	2645.00	330	48	3333.33		79.4	64 - 113			
4-Methylphenol	2595.67	330	66	3333.33		77.9	54 - 120			
4-Nitroaniline	2841.33	1600	290	3333.33		85.2	35 - 136			
4-Nitrophenol	2745.33	330	150	3333.33		82.4	52 - 160			
Acenaphthene	2317.00	330	48	3333.33		69.5	62 - 113			
Acenaphthylene	2345.00	330	51	3333.33		70.4	62 - 114			
Anthracene	2590.67	330	49	3333.33		77.7	71 - 129			
Benzidine (M)	1690.00	1600	1400	3333.33		50.7	45 - 184			
Benzo(a)anthracene	2517.00	330	39	3333.33		75.5	66 - 133			
Benzo(a)pyrene	2601.33	330	45	3333.33		78.0	71 - 133			
Benzo(b)fluoranthene	2452.33	330	55	3333.33		73.6	72 - 128			
Benzo(g,h,i)perylene	2534.00	330	38	3333.33		76.0	70 - 126			
Benzo(k)fluoranthene	2479.33	330	52	3333.33		74.4	70 - 136			
Benzoic acid	1930.33	1600	890	3333.33		57.9	11 - 108			
Benzyl alcohol	3109.33	660	67	3333.33		93.3	57 - 143			
bis(2-chloroethoxy)methane	2246.67	330	59	3333.33		67.4	51 - 99			
bis(2-Chloroethyl)ether	2003.00	330	57	3333.33		60.1	46 - 101			
bis(2-chloroisopropyl)ether	1968.33	330	65	3333.33		59.0	28 - 126			
bis(2-ethylhexyl)phthalate	2422.33	330	83	3333.33		72.7	49 - 134			
Butylbenzylphthalate	2728.00	330	250	3333.33		81.8	54 - 137			
Chrysene	2529.67	330	43	3333.33		75.9	70 - 125			
Di-n-butylphthalate	2789.00	330	230	3333.33		83.7	59 - 152			
Di-n-octylphthalate	2659.33	330	48	3333.33		79.8	50 - 146			
Dibenz(a,h)anthracene	2590.67	330	43	3333.33		77.7	59 - 141			

Hushmand Associates, Inc.	Project Number : 6th St Bridge, LAC-17-001
250 Goddard	Report To : Naresh Bellana
Irvine , CA 92618	Reported : 06/05/2017

Semivolatile Organic Compounds by EPA 8270C - Quality Control (cont'd)

Analyte	Result (ug/kg)	PQL (ug/kg)	MDL (ug/kg)	Spike Level	Source Result	% Rec	% Rec Limits	RPD	RPD Limit	Notes
Batch B7E0781 - MSSEMI_S (continued)										
LCS (B7E0781-BS1) - Continued					Prepared: 5/23/2017 Analyzed: 5/31/2017					
Dibenzofuran	3369.00	330	55	3333.33		101	58 - 158			
Diethyl phthalate	2652.33	330	47	3333.33		79.6	68 - 136			
Dimethyl phthalate	2381.33	330	46	3333.33		71.4	69 - 124			
Fluoranthene	2662.33	330	47	3333.33		79.9	72 - 128			
Fluorene	2365.33	330	49	3333.33		71.0	67 - 118			
Hexachlorobenzene	3285.33	330	41	3333.33		98.6	61 - 155			
Hexachlorobutadiene	2428.67	660	61	3333.33		72.9	44 - 111			
Hexachlorocyclopentadiene	3318.67	660	64	3333.33		99.6	46 - 138			
Hexachloroethane	2458.00	330	71	3333.33		73.7	40 - 129			
Indeno(1,2,3-cd)pyrene	2678.33	330	44	3333.33		80.4	63 - 142			
Isophorone	2293.33	330	57	3333.33		68.8	55 - 106			
N-Nitroso-di-n propylamine	2327.67	330	65	3333.33		69.8	50 - 117			
N-Nitrosodiphenylamine	2648.67	330	48	3333.33		79.5	70 - 137			
Naphthalene	2127.67	330	60	3333.33		63.8	54 - 106			
Nitrobenzene	2693.33	330	67	3333.33		80.8	57 - 134			
Pentachlorophenol	2898.67	1600	190	3333.33		87.0	53 - 115			
Phenanthrene	2563.67	330	46	3333.33		76.9	70 - 129			
Phenol	2112.33	330	130	3333.33		63.4	47 - 105			
Pyrene	2658.67	330	53	3333.33		79.8	73 - 131			
Pyridine	1759.00	1600	270	3333.33		52.8	40 - 91			
Surrogate: 1,2-Dichlorobenzene-d	*1884*			*3333.33*		*56.5*	*38 - 93*			
Surrogate: 2,4,6-Tribromophenol	*2551*			*3333.33*		*76.5*	*27 - 124*			
Surrogate: 2-Chlorophenol-d4	*1908*			*3333.33*		*57.2*	*36 - 96*			
Surrogate: 2-Fluorobiphenyl	*2221*			*3333.33*		*66.6*	*44 - 100*			
Surrogate: 2-Fluorophenol	*1801*			*3333.33*		*54.0*	*32 - 89*			
Surrogate: 4-Terphenyl-d14	*2421*			*3333.33*		*72.6*	*49 - 123*			
Surrogate: Nitrobenzene-d5	*2164*			*3333.33*		*64.9*	*38 - 104*			
Surrogate: Phenol-d5	*2013*			*3333.33*		*60.4*	*35 - 95*			
Matrix Spike (B7E0781-MS1)			**Source: 1702036-87**		Prepared: 5/23/2017 Analyzed: 5/31/2017					
1,2,4-Trichlorobenzene	2260.67	330	71	3333.33	ND	67.8	40 - 127			
1,2-Dichlorobenzene	2030.67	330	60	3333.33	ND	60.9	36 - 125			
1,3-Dichlorobenzene	1986.67	330	65	3333.33	ND	59.6	35 - 119			
1,4-Dichlorobenzene	2007.67	330	60	3333.33	ND	60.2	36 - 120			
2,4,5-Trichlorophenol	2522.67	330	61	3333.33	ND	75.7	42 - 135			
2,4,6-Trichlorophenol	2240.33	330	220	3333.33	ND	67.2	46 - 121			
2,4-Dichlorophenol	2080.00	1600	120	3333.33	ND	62.4	43 - 114			
2,4-Dimethylphenol	1713.67	330	120	3333.33	ND	51.4	37 - 105			
2,4-Dinitrophenol	2182.00	1600	86	3333.33	ND	65.5	17 - 177			
2,4-Dinitrotoluene	2833.33	330	46	3333.33	ND	85.0	50 - 166			
2,6-Dinitrotoluene	2712.00	330	49	3333.33	ND	81.4	43 - 169			

Certificate of Analysis

Hushmand Associates, Inc.	Project Number : 6th St Bridge, LAC-17-001
250 Goddard	Report To : Naresh Bellana
Irvine , CA 92618	Reported : 06/05/2017

Semivolatile Organic Compounds by EPA 8270C - Quality Control (cont'd)

Analyte	Result (ug/kg)	PQL (ug/kg)	MDL (ug/kg)	Spike Level	Source Result	% Rec	% Rec Limits	RPD	RPD Limit	Notes
Batch B7E0781 - MSSEMI_S (continued)										
Matrix Spike (B7E0781-MS1) - Continued			**Source: 1702036-87**		Prepared: 5/23/2017 Analyzed: 5/31/2017					
2-Chloronaphthalene	2440.00	330	59	3333.33	ND	73.2	44 - 144			
2-Chlorophenol	1692.33	330	120	3333.33	ND	50.8	38 - 99			
2-Methylnaphthalene	2710.00	330	67	3333.33	ND	81.3	41 - 151			
2-Methylphenol	1912.00	330	67	3333.33	ND	57.4	37 - 108			
2-Nitroaniline	2632.33	1600	200	3333.33	ND	79.0	13 - 155			
2-Nitrophenol	2033.00	330	110	3333.33	ND	61.0	24 - 142			
3,3´-Dichlorobenzidine	2545.67	660	280	3333.33	ND	76.4	31 - 153			
3-Nitroaniline	2416.67	1600	44	3333.33	ND	72.5	7 - 147			
4,6-Dinitro-2-methyphenol	2367.00	1600	300	3333.33	ND	71.0	45 - 155			
4-Bromophenyl-phenylether	2317.00	330	50	3333.33	ND	69.5	45 - 122			
4-Chloro-3-methylphenol	2163.67	660	110	3333.33	ND	64.9	45 - 124			
4-Chloroaniline	2219.33	660	53	3333.33	ND	66.6	12 - 117			
4-Chlorophenyl-phenylether	2230.33	330	48	3333.33	ND	66.9	45 - 115			
4-Methylphenol	2180.67	330	66	3333.33	ND	65.4	39 - 125			
4-Nitroaniline	2377.33	1600	290	3333.33	ND	71.3	22 - 135			
4-Nitrophenol	2262.67	330	150	3333.33	ND	67.9	27 - 161			
Acenaphthene	1945.67	330	48	3333.33	ND	58.4	47 - 114			
Acenaphthylene	1939.67	330	51	3333.33	ND	58.2	45 - 117			
Anthracene	2137.00	330	49	3333.33	ND	64.1	47 - 130			
Benzidine (M)	ND	1600	1400	3333.33	ND	NR	8 - 179			M2
Benzo(a)anthracene	2144.67	330	39	3333.33	ND	64.3	46 - 130			
Benzo(a)pyrene	2134.00	330	45	3333.33	ND	64.0	46 - 131			
Benzo(b)fluoranthene	2054.33	330	55	3333.33	ND	61.6	44 - 130			
Benzo(g,h,i)perylene	2165.33	330	38	3333.33	ND	65.0	48 - 125			
Benzo(k)fluoranthene	2016.00	330	52	3333.33	ND	60.5	46 - 132			
Benzoic acid	1296.33	1600	890	3333.33	ND	38.9	0 - 121			
Benzyl alcohol	2568.33	660	67	3333.33	ND	77.0	32 - 156			
bis(2-chloroethoxy)methane	1852.00	330	59	3333.33	ND	55.6	42 - 100			
bis(2-Chloroethyl)ether	1684.67	330	57	3333.33	ND	50.5	39 - 104			
bis(2-chloroisopropyl)ether	1576.00	330	65	3333.33	ND	47.3	26 - 125			
bis(2-ethylhexyl)phthalate	1992.33	330	83	3333.33	ND	59.8	20 - 159			
Butylbenzylphthalate	2249.33	330	250	3333.33	ND	67.5	19 - 171			
Chrysene	2147.33	330	43	3333.33	ND	64.4	52 - 123			
Di-n-butylphthalate	2309.00	330	230	3333.33	ND	69.3	40 - 156			
Di-n-octylphthalate	2184.00	330	48	3333.33	ND	65.5	31 - 156			
Dibenz(a,h)anthracene	2169.67	330	43	3333.33	ND	65.1	31 - 149			
Dibenzofuran	2795.00	330	55	3333.33	ND	83.9	43 - 157			
Diethyl phthalate	2236.00	330	47	3333.33	ND	67.1	42 - 138			
Dimethyl phthalate	2045.00	330	46	3333.33	ND	61.4	44 - 127			
Fluoranthene	2143.00	330	47	3333.33	ND	64.3	46 - 131			
Fluorene	1995.00	330	49	3333.33	ND	59.9	48 - 120			
Hexachlorobenzene	2696.67	330	41	3333.33	ND	80.9	37 - 158			

Certificate of Analysis

Hushmand Associates, Inc.	Project Number : 6th St Bridge, LAC-17-001
250 Goddard	Report To : Naresh Bellana
Irvine , CA 92618	Reported : 06/05/2017

Semivolatile Organic Compounds by EPA 8270C - Quality Control (cont'd)

Analyte	Result (ug/kg)	PQL (ug/kg)	MDL (ug/kg)	Spike Level	Source Result	% Rec	% Rec Limits	RPD	RPD Limit	Notes
Batch B7E0781 - MSSEMI_S (continued)										
Matrix Spike (B7E0781-MS1) - Continued			**Source: 1702036-87**		Prepared: 5/23/2017 Analyzed: 5/31/2017					
Hexachlorobutadiene	2079.00	660	61	3333.33	ND	62.4	37 - 114			
Hexachlorocyclopentadiene	2892.00	660	64	3333.33	ND	86.8	29 - 146			
Hexachloroethane	2094.33	330	71	3333.33	ND	62.8	31 - 135			
Indeno(1,2,3-cd)pyrene	2234.67	330	44	3333.33	ND	67.0	36 - 148			
Isophorone	1869.67	330	57	3333.33	ND	56.1	36 - 112			
N-Nitroso-di-n propylamine	1923.67	330	65	3333.33	ND	57.7	37 - 120			
N-Nitrosodiphenylamine	2204.00	330	48	3333.33	ND	66.1	44 - 141			
Naphthalene	1823.33	330	60	3333.33	ND	54.7	47 - 106			
Nitrobenzene	2242.67	330	67	3333.33	ND	67.3	44 - 139			
Pentachlorophenol	2305.00	1600	190	3333.33	ND	69.2	32 - 128			
Phenanthrene	2104.00	330	46	3333.33	ND	63.1	49 - 129			
Phenol	1907.00	330	130	3333.33	ND	57.2	40 - 107			
Pyrene	2166.33	330	53	3333.33	ND	65.0	47 - 134			
Pyridine	1406.67	1600	270	3333.33	ND	42.2	24 - 99			
Surrogate: 1,2-Dichlorobenzene-d	*1581*			*3333.33*		*47.4*	*38 - 93*			
Surrogate: 2,4,6-Tribromophenol	*2088*			*3333.33*		*62.6*	*27 - 124*			
Surrogate: 2-Chlorophenol-d4	*1645*			*3333.33*		*49.4*	*36 - 96*			
Surrogate: 2-Fluorobiphenyl	*1861*			*3333.33*		*55.8*	*44 - 100*			
Surrogate: 2-Fluorophenol	*1555*			*3333.33*		*46.7*	*32 - 89*			
Surrogate: 4-Terphenyl-d14	*1965*			*3333.33*		*59.0*	*49 - 123*			
Surrogate: Nitrobenzene-d5	*1806*			*3333.33*		*54.2*	*38 - 104*			
Surrogate: Phenol-d5	*1678*			*3333.33*		*50.3*	*35 - 95*			
Matrix Spike Dup (B7E0781-MSD1)			**Source: 1702036-87**		Prepared: 5/23/2017 Analyzed: 5/31/2017					
1,2,4-Trichlorobenzene	2288.00	330	71	3333.33	ND	68.6	40 - 127	1.20	20	
1,2-Dichlorobenzene	1876.00	330	60	3333.33	ND	56.3	36 - 125	7.92	20	
1,3-Dichlorobenzene	1833.33	330	65	3333.33	ND	55.0	35 - 119	8.03	20	
1,4-Dichlorobenzene	1828.00	330	60	3333.33	ND	54.8	36 - 120	9.37	20	
2,4,5-Trichlorophenol	2679.00	330	61	3333.33	ND	80.4	42 - 135	6.01	20	
2,4,6-Trichlorophenol	2353.33	330	220	3333.33	ND	70.6	46 - 121	4.92	20	
2,4-Dichlorophenol	2114.67	1600	120	3333.33	ND	63.4	43 - 114	1.65	20	
2,4-Dimethylphenol	1745.33	330	120	3333.33	ND	52.4	37 - 105	1.83	20	
2,4-Dinitrophenol	2244.67	1600	86	3333.33	ND	67.3	17 - 177	2.83	20	
2,4-Dinitrotoluene	2974.00	330	46	3333.33	ND	89.2	50 - 166	4.84	20	
2,6-Dinitrotoluene	2761.67	330	49	3333.33	ND	82.9	43 - 169	1.81	20	
2-Chloronaphthalene	2493.67	330	59	3333.33	ND	74.8	44 - 144	2.18	20	
2-Chlorophenol	1588.67	330	120	3333.33	ND	47.7	38 - 99	6.32	20	
2-Methylnaphthalene	2809.00	330	67	3333.33	ND	84.3	41 - 151	3.59	20	
2-Methylphenol	1833.00	330	67	3333.33	ND	55.0	37 - 108	4.22	20	
2-Nitroaniline	2766.33	1600	200	3333.33	ND	83.0	13 - 155	4.96	20	
2-Nitrophenol	2093.00	330	110	3333.33	ND	62.8	24 - 142	2.91	20	

Certificate of Analysis

Hushmand Associates, Inc.	Project Number : 6th St Bridge, LAC-17-001
250 Goddard	Report To : Naresh Bellana
Irvine , CA 92618	Reported : 06/05/2017

Semivolatile Organic Compounds by EPA 8270C - Quality Control (cont'd)

Analyte	Result (ug/kg)	PQL (ug/kg)	MDL (ug/kg)	Spike Level	Source Result	% Rec	% Rec Limits	RPD	RPD Limit	Notes
Batch B7E0781 - MSSEMI_S (continued)										
Matrix Spike Dup (B7E0781-MSD1) - Continued			**Source: 1702036-87**		Prepared: 5/23/2017 Analyzed: 5/31/2017					
3,3´-Dichlorobenzidine	2610.00	660	280	3333.33	ND	78.3	31 - 153	2.50	20	
3-Nitroaniline	2548.67	1600	44	3333.33	ND	76.5	7 - 147	5.32	20	
4,6-Dinitro-2-methyphenol	2425.33	1600	300	3333.33	ND	72.8	45 - 155	2.43	20	
4-Bromophenyl-phenylether	2428.67	330	50	3333.33	ND	72.9	45 - 122	4.71	20	
4-Chloro-3-methylphenol	2248.67	660	110	3333.33	ND	67.5	45 - 124	3.85	20	
4-Chloroaniline	2331.33	660	53	3333.33	ND	69.9	12 - 117	4.92	20	
4-Chlorophenyl-phenylether	2299.67	330	48	3333.33	ND	69.0	45 - 115	3.06	20	
4-Methylphenol	2141.67	330	66	3333.33	ND	64.3	39 - 125	1.80	20	
4-Nitroaniline	2433.67	1600	290	3333.33	ND	73.0	22 - 135	2.34	20	
4-Nitrophenol	2388.00	330	150	3333.33	ND	71.6	27 - 161	5.39	20	
Acenaphthene	2002.33	330	48	3333.33	ND	60.1	47 - 114	2.87	20	
Acenaphthylene	1983.67	330	51	3333.33	ND	59.5	45 - 117	2.24	20	
Anthracene	2224.00	330	49	3333.33	ND	66.7	47 - 130	3.99	20	
Benzidine (M)	ND	1600	1400	3333.33	ND	NR	8 - 179	NR	20	M2
Benzo(a)anthracene	2166.33	330	39	3333.33	ND	65.0	46 - 130	1.01	20	
Benzo(a)pyrene	2248.67	330	45	3333.33	ND	67.5	46 - 131	5.23	20	
Benzo(b)fluoranthene	2112.67	330	55	3333.33	ND	63.4	44 - 130	2.80	20	
Benzo(g,h,i)perylene	2217.00	330	38	3333.33	ND	66.5	48 - 125	2.36	20	
Benzo(k)fluoranthene	2122.00	330	52	3333.33	ND	63.7	46 - 132	5.12	20	
Benzoic acid	1100.33	1600	890	3333.33	ND	33.0	0 - 121	16.4	20	
Benzyl alcohol	2582.00	660	67	3333.33	ND	77.5	32 - 156	0.531	20	
bis(2-chloroethoxy)methane	1900.00	330	59	3333.33	ND	57.0	42 - 100	2.56	20	
bis(2-Chloroethyl)ether	1642.00	330	57	3333.33	ND	49.3	39 - 104	2.57	20	
bis(2-chloroisopropyl)ether	1498.67	330	65	3333.33	ND	45.0	26 - 125	5.03	20	
bis(2-ethylhexyl)phthalate	2093.33	330	83	3333.33	ND	62.8	20 - 159	4.94	20	
Butylbenzylphthalate	2345.00	330	250	3333.33	ND	70.4	19 - 171	4.16	20	
Chrysene	2186.00	330	43	3333.33	ND	65.6	52 - 123	1.78	20	
Di-n-butylphthalate	2448.33	330	230	3333.33	ND	73.4	40 - 156	5.86	20	
Di-n-octylphthalate	2365.33	330	48	3333.33	ND	71.0	31 - 156	7.97	20	
Dibenz(a,h)anthracene	2251.00	330	43	3333.33	ND	67.5	31 - 149	3.68	20	
Dibenzofuran	2925.33	330	55	3333.33	ND	87.8	43 - 157	4.56	20	
Diethyl phthalate	2328.00	330	47	3333.33	ND	69.8	42 - 138	4.03	20	
Dimethyl phthalate	2116.67	330	46	3333.33	ND	63.5	44 - 127	3.44	20	
Fluoranthene	2272.33	330	47	3333.33	ND	68.2	46 - 131	5.86	20	
Fluorene	2062.33	330	49	3333.33	ND	61.9	48 - 120	3.32	20	
Hexachlorobenzene	2806.33	330	41	3333.33	ND	84.2	37 - 158	3.99	20	
Hexachlorobutadiene	2074.33	660	61	3333.33	ND	62.2	37 - 114	0.225	20	
Hexachlorocyclopentadiene	2832.67	660	64	3333.33	ND	85.0	29 - 146	2.07	20	
Hexachloroethane	1956.67	330	71	3333.33	ND	58.7	31 - 135	6.80	20	
Indeno(1,2,3-cd)pyrene	2298.33	330	44	3333.33	ND	69.0	36 - 148	2.81	20	
Isophorone	1957.00	330	57	3333.33	ND	58.7	36 - 112	4.56	20	
N-Nitroso-di-n propylamine	1964.00	330	65	3333.33	ND	58.9	37 - 120	2.07	20	

Certificate of Analysis

Hushmand Associates, Inc.	Project Number : 6th St Bridge, LAC-17-001
250 Goddard	Report To : Naresh Bellana
Irvine , CA 92618	Reported : 06/05/2017

Semivolatile Organic Compounds by EPA 8270C - Quality Control (cont'd)

Analyte	Result (ug/kg)	PQL (ug/kg)	MDL (ug/kg)	Spike Level	Source Result	% Rec	% Rec Limits	RPD	RPD Limit	Notes
Batch B7E0781 - MSSEMI_S (continued)										
Matrix Spike Dup (B7E0781-MSD1) - Continued			**Source: 1702036-87**		Prepared: 5/23/2017 Analyzed: 5/31/2017					
N-Nitrosodiphenylamine	2288.00	330	48	3333.33	ND	68.6	44 - 141	3.74	20	
Naphthalene	1831.67	330	60	3333.33	ND	55.0	47 - 106	0.456	20	
Nitrobenzene	2294.33	330	67	3333.33	ND	68.8	44 - 139	2.28	20	
Pentachlorophenol	2317.00	1600	190	3333.33	ND	69.5	32 - 128	0.519	20	
Phenanthrene	2138.33	330	46	3333.33	ND	64.2	49 - 129	1.62	20	
Phenol	1712.33	330	130	3333.33	ND	51.4	40 - 107	10.8	20	
Pyrene	2279.00	330	53	3333.33	ND	68.4	47 - 134	5.07	20	
Pyridine	1299.67	1600	270	3333.33	ND	39.0	24 - 99	7.91	20	
Surrogate: 1,2-Dichlorobenzene-d	*1469*			*3333.33*		*44.1*	*38 - 93*			
Surrogate: 2,4,6-Tribromophenol	*2156*			*3333.33*		*64.7*	*27 - 124*			
Surrogate: 2-Chlorophenol-d4	*1527*			*3333.33*		*45.8*	*36 - 96*			
Surrogate: 2-Fluorobiphenyl	*1920*			*3333.33*		*57.6*	*44 - 100*			
Surrogate: 2-Fluorophenol	*1419*			*3333.33*		*42.6*	*32 - 89*			
Surrogate: 4-Terphenyl-d14	*2086*			*3333.33*		*62.6*	*49 - 123*			
Surrogate: Nitrobenzene-d5	*1841*			*3333.33*		*55.2*	*38 - 104*			
Surrogate: Phenol-d5	*1558*			*3333.33*		*46.7*	*35 - 95*			

Certificate of Analysis

Hushmand Associates, Inc.	Project Number : 6th St Bridge, LAC-17-001
250 Goddard	Report To : Naresh Bellana
Irvine , CA 92618	Reported : 06/05/2017

Semivolatile Organic Compounds by EPA 8270C - Quality Control

Analyte	Result (ug/kg)	PQL (ug/kg)	MDL (ug/kg)	Spike Level	Source Result	% Rec	% Rec Limits	RPD	RPD Limit	Notes
Batch B7E0814 - MSSEMI_S										
Blank (B7E0814-BLK1)					Prepared: 5/24/2017 Analyzed: 5/31/2017					
1,2,4-Trichlorobenzene	ND	330	71							
1,2-Dichlorobenzene	ND	330	60							
1,3-Dichlorobenzene	ND	330	65							
1,4-Dichlorobenzene	ND	330	60							
2,4,5-Trichlorophenol	ND	330	61							
2,4,6-Trichlorophenol	ND	330	220							
2,4-Dichlorophenol	ND	1600	120							
2,4-Dimethylphenol	ND	330	120							
2,4-Dinitrophenol	ND	1600	86							
2,4-Dinitrotoluene	ND	330	46							
2,6-Dinitrotoluene	ND	330	49							
2-Chloronaphthalene	ND	330	59							
2-Chlorophenol	ND	330	120							
2-Methylnaphthalene	ND	330	67							
2-Methylphenol	ND	330	67							
2-Nitroaniline	ND	1600	200							
2-Nitrophenol	ND	330	110							
3,3´-Dichlorobenzidine	ND	660	280							
3-Nitroaniline	ND	1600	44							
4,6-Dinitro-2-methyphenol	ND	1600	300							
4-Bromophenyl-phenylether	ND	330	50							
4-Chloro-3-methylphenol	ND	660	110							
4-Chloroaniline	ND	660	53							
4-Chlorophenyl-phenylether	ND	330	48							
4-Methylphenol	ND	330	66							
4-Nitroaniline	ND	1600	290							
4-Nitrophenol	ND	330	150							
Acenaphthene	ND	330	48							
Acenaphthylene	ND	330	51							
Anthracene	ND	330	49							
Benzidine (M)	ND	1600	1400							
Benzo(a)anthracene	ND	330	39							
Benzo(a)pyrene	ND	330	45							
Benzo(b)fluoranthene	ND	330	55							
Benzo(g,h,i)perylene	ND	330	38							
Benzo(k)fluoranthene	ND	330	52							
Benzoic acid	ND	1600	890							
Benzyl alcohol	ND	660	67							
bis(2-chloroethoxy)methane	ND	330	59							
bis(2-Chloroethyl)ether	ND	330	57							
bis(2-chloroisopropyl)ether	ND	330	65							

Certificate of Analysis

Hushmand Associates, Inc.	Project Number : 6th St Bridge, LAC-17-001
250 Goddard	Report To : Naresh Bellana
Irvine , CA 92618	Reported : 06/05/2017

Semivolatile Organic Compounds by EPA 8270C - Quality Control (cont'd)

Analyte	Result (ug/kg)	PQL (ug/kg)	MDL (ug/kg)	Spike Level	Source Result	% Rec	% Rec Limits	RPD	RPD Limit	Notes
Batch B7E0814 - MSSEMI_S (continued)										
Blank (B7E0814-BLK1) - Continued						Prepared: 5/24/2017 Analyzed: 5/31/2017				
bis(2-ethylhexyl)phthalate	ND	330	83							
Butylbenzylphthalate	ND	330	250							
Chrysene	ND	330	43							
Di-n-butylphthalate	ND	330	230							
Di-n-octylphthalate	ND	330	48							
Dibenz(a,h)anthracene	ND	330	43							
Dibenzofuran	ND	330	55							
Diethyl phthalate	ND	330	47							
Dimethyl phthalate	ND	330	46							
Fluoranthene	ND	330	47							
Fluorene	ND	330	49							
Hexachlorobenzene	ND	330	41							
Hexachlorobutadiene	ND	660	61							
Hexachlorocyclopentadiene	ND	660	64							
Hexachloroethane	ND	330	71							
Indeno(1,2,3-cd)pyrene	ND	330	44							
Isophorone	ND	330	57							
N-Nitroso-di-n propylamine	ND	330	65							
N-Nitrosodiphenylamine	ND	330	48							
Naphthalene	ND	330	60							
Nitrobenzene	ND	330	67							
Pentachlorophenol	ND	1600	190							
Phenanthrene	ND	330	46							
Phenol	ND	330	130							
Pyrene	ND	330	53							
Pyridine	ND	1600	270							
Surrogate: 1,2-Dichlorobenzene-d	*1729*			*3333.33*		*51.9*	*38 - 93*			
Surrogate: 2,4,6-Tribromophenol	*2460*			*3333.33*		*73.8*	*27 - 124*			
Surrogate: 2-Chlorophenol-d4	*1754*			*3333.33*		*52.6*	*36 - 96*			
Surrogate: 2-Fluorobiphenyl	*2039*			*3333.33*		*61.2*	*44 - 100*			
Surrogate: 2-Fluorophenol	*1709*			*3333.33*		*51.3*	*32 - 89*			
Surrogate: 4-Terphenyl-d14	*3043*			*3333.33*		*91.3*	*49 - 123*			
Surrogate: Nitrobenzene-d5	*1887*			*3333.33*		*56.6*	*38 - 104*			
Surrogate: Phenol-d5	*1829*			*3333.33*		*54.9*	*35 - 95*			
LCS (B7E0814-BS1)						Prepared: 5/24/2017 Analyzed: 5/31/2017				
1,2,4-Trichlorobenzene	2375.33	330	71	3333.33		71.3	52 - 122			
1,2-Dichlorobenzene	2136.00	330	60	3333.33		64.1	46 - 118			
1,3-Dichlorobenzene	2149.33	330	65	3333.33		64.5	45 - 113			
1,4-Dichlorobenzene	2128.33	330	60	3333.33		63.8	46 - 113			
2,4,5-Trichlorophenol	2904.00	330	61	3333.33		87.1	65 - 126			

Hushmand Associates, Inc.
250 Goddard
Irvine , CA 92618

Project Number : 6th St Bridge, LAC-17-001
Report To : Naresh Bellana
Reported : 06/05/2017

Semivolatile Organic Compounds by EPA 8270C - Quality Control (cont'd)

Analyte	Result (ug/kg)	PQL (ug/kg)	MDL (ug/kg)	Spike Level	Source Result	% Rec	% Rec Limits	RPD	RPD Limit	Notes
Batch B7E0814 - MSSEMI_S (continued)										
LCS (B7E0814-BS1) - Continued					Prepared: 5/24/2017 Analyzed: 5/31/2017					
2,4,6-Trichlorophenol	2843.33	330	220	3333.33		85.3	61 - 119			
2,4-Dichlorophenol	2249.33	1600	120	3333.33		67.5	55 - 110			
2,4-Dimethylphenol	2011.00	330	120	3333.33		60.3	47 - 100			
2,4-Dinitrophenol	2766.00	1600	86	3333.33		83.0	37 - 186			
2,4-Dinitrotoluene	3635.33	330	46	3333.33		109	74 - 155			
2,6-Dinitrotoluene	3495.00	330	49	3333.33		105	62 - 169			
2-Chloronaphthalene	2917.33	330	59	3333.33		87.5	58 - 140			
2-Chlorophenol	1816.67	330	120	3333.33		54.5	45 - 96			
2-Methylnaphthalene	2761.67	330	67	3333.33		82.9	54 - 147			
2-Methylphenol	1920.67	330	67	3333.33		57.6	49 - 103			
2-Nitroaniline	3081.67	1600	200	3333.33		92.5	23 - 155			
2-Nitrophenol	2158.33	330	110	3333.33		64.8	54 - 112			
3,3´-Dichlorobenzidine	3100.33	660	280	3333.33		93.0	62 - 141			
3-Nitroaniline	2882.00	1600	44	3333.33		86.5	30 - 137			
4,6-Dinitro-2-methyphenol	3078.33	1600	300	3333.33		92.4	75 - 145			
4-Bromophenyl-phenylether	2978.33	330	50	3333.33		89.4	68 - 118			
4-Chloro-3-methylphenol	2719.33	660	110	3333.33		81.6	63 - 119			
4-Chloroaniline	2385.67	660	53	3333.33		71.6	19 - 127			
4-Chlorophenyl-phenylether	2769.33	330	48	3333.33		83.1	64 - 113			
4-Methylphenol	2240.33	330	66	3333.33		67.2	54 - 120			
4-Nitroaniline	2797.67	1600	290	3333.33		83.9	35 - 136			
4-Nitrophenol	2962.00	330	150	3333.33		88.9	52 - 160			
Acenaphthene	2480.67	330	48	3333.33		74.4	62 - 113			
Acenaphthylene	2491.33	330	51	3333.33		74.7	62 - 114			
Anthracene	2795.00	330	49	3333.33		83.9	71 - 129			
Benzidine (M)	1892.00	1600	1400	3333.33		56.8	45 - 184			
Benzo(a)anthracene	2783.00	330	39	3333.33		83.5	66 - 133			
Benzo(a)pyrene	2812.00	330	45	3333.33		84.4	71 - 133			
Benzo(b)fluoranthene	2716.00	330	55	3333.33		81.5	72 - 128			
Benzo(g,h,i)perylene	2738.33	330	38	3333.33		82.2	70 - 126			
Benzo(k)fluoranthene	2528.33	330	52	3333.33		75.8	70 - 136			
Benzoic acid	1625.33	1600	890	3333.33		48.8	11 - 108			
Benzyl alcohol	2649.00	660	67	3333.33		79.5	57 - 143			
bis(2-chloroethoxy)methane	2067.00	330	59	3333.33		62.0	51 - 99			
bis(2-Chloroethyl)ether	1810.67	330	57	3333.33		54.3	46 - 101			
bis(2-chloroisopropyl)ether	1821.67	330	65	3333.33		54.7	28 - 126			
bis(2-ethylhexyl)phthalate	2671.67	330	83	3333.33		80.2	49 - 134			
Butylbenzylphthalate	3067.67	330	250	3333.33		92.0	54 - 137			
Chrysene	2778.67	330	43	3333.33		83.4	70 - 125			
Di-n-butylphthalate	2851.00	330	230	3333.33		85.5	59 - 152			
Di-n-octylphthalate	2919.33	330	48	3333.33		87.6	50 - 146			
Dibenz(a,h)anthracene	2767.33	330	43	3333.33		83.0	59 - 141			

Certificate of Analysis

Hushmand Associates, Inc.	Project Number : 6th St Bridge, LAC-17-001
250 Goddard	Report To : Naresh Bellana
Irvine , CA 92618	Reported : 06/05/2017

Semivolatile Organic Compounds by EPA 8270C - Quality Control (cont'd)

Analyte	Result (ug/kg)	PQL (ug/kg)	MDL (ug/kg)	Spike Level	Source Result	% Rec	% Rec Limits	RPD	RPD Limit	Notes
Batch B7E0814 - MSSEMI_S (continued)										
LCS (B7E0814-BS1) - Continued						Prepared: 5/24/2017 Analyzed: 5/31/2017				
Dibenzofuran	3264.00	330	55	3333.33		97.9	58 - 158			
Diethyl phthalate	2782.67	330	47	3333.33		83.5	68 - 136			
Dimethyl phthalate	2569.00	330	46	3333.33		77.1	69 - 124			
Fluoranthene	2757.67	330	47	3333.33		82.7	72 - 128			
Fluorene	2559.67	330	49	3333.33		76.8	67 - 118			
Hexachlorobenzene	3472.00	330	41	3333.33		104	61 - 155			
Hexachlorobutadiene	2082.00	660	61	3333.33		62.5	44 - 111			
Hexachlorocyclopentadiene	3114.33	660	64	3333.33		93.4	46 - 138			
Hexachloroethane	2204.33	330	71	3333.33		66.1	40 - 129			
Indeno(1,2,3-cd)pyrene	2828.00	330	44	3333.33		84.8	63 - 142			
Isophorone	2169.33	330	57	3333.33		65.1	55 - 106			
N-Nitroso-di-n propylamine	2199.33	330	65	3333.33		66.0	50 - 117			
N-Nitrosodiphenylamine	2902.67	330	48	3333.33		87.1	70 - 137			
Naphthalene	1959.00	330	60	3333.33		58.8	54 - 106			
Nitrobenzene	2454.67	330	67	3333.33		73.6	57 - 134			
Pentachlorophenol	2888.00	1600	190	3333.33		86.6	53 - 115			
Phenanthrene	2696.00	330	46	3333.33		80.9	70 - 129			
Phenol	1979.67	330	130	3333.33		59.4	47 - 105			
Pyrene	2747.67	330	53	3333.33		82.4	73 - 131			
Pyridine	1564.33	1600	270	3333.33		46.9	40 - 91			
Surrogate: 1,2-Dichlorobenzene-d	*1721*			*3333.33*		*51.6*	*38 - 93*			
Surrogate: 2,4,6-Tribromophenol	*2712*			*3333.33*		*81.4*	*27 - 124*			
Surrogate: 2-Chlorophenol-d4	*1807*			*3333.33*		*54.2*	*36 - 96*			
Surrogate: 2-Fluorobiphenyl	*2241*			*3333.33*		*67.2*	*44 - 100*			
Surrogate: 2-Fluorophenol	*1676*			*3333.33*		*50.3*	*32 - 89*			
Surrogate: 4-Terphenyl-d14	*2730*			*3333.33*		*81.9*	*49 - 123*			
Surrogate: Nitrobenzene-d5	*1970*			*3333.33*		*59.1*	*38 - 104*			
Surrogate: Phenol-d5	*1860*			*3333.33*		*55.8*	*35 - 95*			
Matrix Spike (B7E0814-MS1)			**Source: 1702036-AB**			Prepared: 5/24/2017 Analyzed: 5/31/2017				
1,2,4-Trichlorobenzene	2525.33	330	71	3333.33	ND	75.8	40 - 127			
1,2-Dichlorobenzene	2323.67	330	60	3333.33	ND	69.7	36 - 125			
1,3-Dichlorobenzene	2321.67	330	65	3333.33	ND	69.7	35 - 119			
1,4-Dichlorobenzene	2281.00	330	60	3333.33	ND	68.4	36 - 120			
2,4,5-Trichlorophenol	2649.00	330	61	3333.33	ND	79.5	42 - 135			
2,4,6-Trichlorophenol	2562.00	330	220	3333.33	ND	76.9	46 - 121			
2,4-Dichlorophenol	2344.67	1600	120	3333.33	ND	70.3	43 - 114			
2,4-Dimethylphenol	2093.67	330	120	3333.33	ND	62.8	37 - 105			
2,4-Dinitrophenol	2345.00	1600	86	3333.33	ND	70.4	17 - 177			
2,4-Dinitrotoluene	3045.00	330	46	3333.33	ND	91.4	50 - 166			
2,6-Dinitrotoluene	3068.33	330	49	3333.33	ND	92.0	43 - 169			

Certificate of Analysis

Hushmand Associates, Inc.	Project Number : 6th St Bridge, LAC-17-001
250 Goddard	Report To : Naresh Bellana
Irvine , CA 92618	Reported : 06/05/2017

Semivolatile Organic Compounds by EPA 8270C - Quality Control (cont'd)

Analyte	Result (ug/kg)	PQL (ug/kg)	MDL (ug/kg)	Spike Level	Source Result	% Rec	% Rec Limits	RPD	RPD Limit	Notes
Batch B7E0814 - MSSEMI_S (continued)										
Matrix Spike (B7E0814-MS1) - Continued			**Source: 1702036-AB**		Prepared: 5/24/2017 Analyzed: 5/31/2017					
2-Chloronaphthalene	2773.33	330	59	3333.33	ND	83.2	44 - 144			
2-Chlorophenol	1959.67	330	120	3333.33	ND	58.8	38 - 99			
2-Methylnaphthalene	2781.00	330	67	3333.33	ND	83.4	41 - 151			
2-Methylphenol	1983.00	330	67	3333.33	ND	59.5	37 - 108			
2-Nitroaniline	2745.67	1600	200	3333.33	ND	82.4	13 - 155			
2-Nitrophenol	2373.00	330	110	3333.33	ND	71.2	24 - 142			
3,3´-Dichlorobenzidine	2502.33	660	280	3333.33	ND	75.1	31 - 153			
3-Nitroaniline	2518.33	1600	44	3333.33	ND	75.6	7 - 147			
4,6-Dinitro-2-methyphenol	2749.33	1600	300	3333.33	ND	82.5	45 - 155			
4-Bromophenyl-phenylether	2632.67	330	50	3333.33	ND	79.0	45 - 122			
4-Chloro-3-methylphenol	2442.33	660	110	3333.33	ND	73.3	45 - 124			
4-Chloroaniline	2304.00	660	53	3333.33	ND	69.1	12 - 117			
4-Chlorophenyl-phenylether	2423.00	330	48	3333.33	ND	72.7	45 - 115			
4-Methylphenol	2255.00	330	66	3333.33	ND	67.7	39 - 125			
4-Nitroaniline	2231.00	1600	290	3333.33	ND	66.9	22 - 135			
4-Nitrophenol	2479.33	330	150	3333.33	ND	74.4	27 - 161			
Acenaphthene	2227.67	330	48	3333.33	ND	66.8	47 - 114			
Acenaphthylene	2251.00	330	51	3333.33	ND	67.5	45 - 117			
Anthracene	2432.67	330	49	3333.33	ND	73.0	47 - 130			
Benzidine (M)	ND	1600	1400	3333.33	ND	NR	8 - 179			M2
Benzo(a)anthracene	2332.00	330	39	3333.33	ND	70.0	46 - 130			
Benzo(a)pyrene	2525.67	330	45	3333.33	ND	75.8	46 - 131			
Benzo(b)fluoranthene	2440.00	330	55	3333.33	ND	73.2	44 - 130			
Benzo(g,h,i)perylene	2470.00	330	38	3333.33	ND	74.1	48 - 125			
Benzo(k)fluoranthene	2247.00	330	52	3333.33	ND	67.4	46 - 132			
Benzoic acid	1201.33	1600	890	3333.33	ND	36.0	0 - 121			
Benzyl alcohol	2727.67	660	67	3333.33	ND	81.8	32 - 156			
bis(2-chloroethoxy)methane	2131.67	330	59	3333.33	ND	64.0	42 - 100			
bis(2-Chloroethyl)ether	1977.00	330	57	3333.33	ND	59.3	39 - 104			
bis(2-chloroisopropyl)ether	1941.67	330	65	3333.33	ND	58.3	26 - 125			
bis(2-ethylhexyl)phthalate	2349.00	330	83	3333.33	ND	70.5	20 - 159			
Butylbenzylphthalate	2656.33	330	250	3333.33	ND	79.7	19 - 171			
Chrysene	2427.67	330	43	3333.33	ND	72.8	52 - 123			
Di-n-butylphthalate	2628.33	330	230	3333.33	ND	78.8	40 - 156			
Di-n-octylphthalate	2749.00	330	48	3333.33	ND	82.5	31 - 156			
Dibenz(a,h)anthracene	2480.33	330	43	3333.33	ND	74.4	31 - 149			
Dibenzofuran	2889.00	330	55	3333.33	ND	86.7	43 - 157			
Diethyl phthalate	2455.00	330	47	3333.33	ND	73.7	42 - 138			
Dimethyl phthalate	2242.67	330	46	3333.33	ND	67.3	44 - 127			
Fluoranthene	2306.67	330	47	3333.33	ND	69.2	46 - 131			
Fluorene	2235.67	330	49	3333.33	ND	67.1	48 - 120			
Hexachlorobenzene	2929.33	330	41	3333.33	ND	87.9	37 - 158			

Certificate of Analysis

Hushmand Associates, Inc.	Project Number : 6th St Bridge, LAC-17-001
250 Goddard	Report To : Naresh Bellana
Irvine , CA 92618	Reported : 06/05/2017

Semivolatile Organic Compounds by EPA 8270C - Quality Control (cont'd)

Analyte	Result (ug/kg)	PQL (ug/kg)	MDL (ug/kg)	Spike Level	Source Result	% Rec	% Rec Limits	RPD	RPD Limit	Notes
Batch B7E0814 - MSSEMI_S (continued)										
Matrix Spike (B7E0814-MS1) - Continued			**Source: 1702036-AB**		Prepared: 5/24/2017 Analyzed: 5/31/2017					
Hexachlorobutadiene	2374.33	660	61	3333.33	ND	71.2	37 - 114			
Hexachlorocyclopentadiene	3418.67	660	64	3333.33	ND	103	29 - 146			
Hexachloroethane	2462.67	330	71	3333.33	ND	73.9	31 - 135			
Indeno(1,2,3-cd)pyrene	2564.00	330	44	3333.33	ND	76.9	36 - 148			
Isophorone	2102.67	330	57	3333.33	ND	63.1	36 - 112			
N-Nitroso-di-n propylamine	2235.00	330	65	3333.33	ND	67.1	37 - 120			
N-Nitrosodiphenylamine	2565.67	330	48	3333.33	ND	77.0	44 - 141			
Naphthalene	2092.33	330	60	3333.33	ND	62.8	47 - 106			
Nitrobenzene	2600.67	330	67	3333.33	ND	78.0	44 - 139			
Pentachlorophenol	2515.67	1600	190	3333.33	ND	75.5	32 - 128			
Phenanthrene	2345.67	330	46	3333.33	ND	70.4	49 - 129			
Phenol	2255.67	330	130	3333.33	ND	67.7	40 - 107			
Pyrene	2304.33	330	53	3333.33	ND	69.1	47 - 134			
Pyridine	1610.33	1600	270	3333.33	ND	48.3	24 - 99			
Surrogate: 1,2-Dichlorobenzene-d	*1762*			*3333.33*		*52.9*	*38 - 93*			
Surrogate: 2,4,6-Tribromophenol	*2212*			*3333.33*		*66.4*	*27 - 124*			
Surrogate: 2-Chlorophenol-d4	*1893*			*3333.33*		*56.8*	*36 - 96*			
Surrogate: 2-Fluorobiphenyl	*2158*			*3333.33*		*64.7*	*44 - 100*			
Surrogate: 2-Fluorophenol	*1752*			*3333.33*		*52.6*	*32 - 89*			
Surrogate: 4-Terphenyl-d14	*2375*			*3333.33*		*71.3*	*49 - 123*			
Surrogate: Nitrobenzene-d5	*2084*			*3333.33*		*62.5*	*38 - 104*			
Surrogate: Phenol-d5	*1924*			*3333.33*		*57.7*	*35 - 95*			
Matrix Spike Dup (B7E0814-MSD1)			**Source: 1702036-AB**		Prepared: 5/24/2017 Analyzed: 5/31/2017					
1,2,4-Trichlorobenzene	2821.33	330	71	3333.33	ND	84.6	40 - 127	11.1	20	
1,2-Dichlorobenzene	2565.00	330	60	3333.33	ND	77.0	36 - 125	9.87	20	
1,3-Dichlorobenzene	2543.33	330	65	3333.33	ND	76.3	35 - 119	9.11	20	
1,4-Dichlorobenzene	2502.00	330	60	3333.33	ND	75.1	36 - 120	9.24	20	
2,4,5-Trichlorophenol	2833.00	330	61	3333.33	ND	85.0	42 - 135	6.71	20	
2,4,6-Trichlorophenol	2800.33	330	220	3333.33	ND	84.0	46 - 121	8.89	20	
2,4-Dichlorophenol	2594.33	1600	120	3333.33	ND	77.8	43 - 114	10.1	20	
2,4-Dimethylphenol	2369.67	330	120	3333.33	ND	71.1	37 - 105	12.4	20	
2,4-Dinitrophenol	2618.67	1600	86	3333.33	ND	78.6	17 - 177	11.0	20	
2,4-Dinitrotoluene	3312.33	330	46	3333.33	ND	99.4	50 - 166	8.41	20	
2,6-Dinitrotoluene	3183.33	330	49	3333.33	ND	95.5	43 - 169	3.68	20	
2-Chloronaphthalene	2967.00	330	59	3333.33	ND	89.0	44 - 144	6.75	20	
2-Chlorophenol	2160.67	330	120	3333.33	ND	64.8	38 - 99	9.76	20	
2-Methylnaphthalene	3062.33	330	67	3333.33	ND	91.9	41 - 151	9.63	20	
2-Methylphenol	2201.00	330	67	3333.33	ND	66.0	37 - 108	10.4	20	
2-Nitroaniline	2928.33	1600	200	3333.33	ND	87.8	13 - 155	6.44	20	
2-Nitrophenol	2643.33	330	110	3333.33	ND	79.3	24 - 142	10.8	20	

Certificate of Analysis

Hushmand Associates, Inc.	Project Number : 6th St Bridge, LAC-17-001
250 Goddard	Report To : Naresh Bellana
Irvine , CA 92618	Reported : 06/05/2017

Semivolatile Organic Compounds by EPA 8270C - Quality Control (cont'd)

Analyte	Result (ug/kg)	PQL (ug/kg)	MDL (ug/kg)	Spike Level	Source Result	% Rec	% Rec Limits	RPD	RPD Limit	Notes
Batch B7E0814 - MSSEMI_S (continued)										
Matrix Spike Dup (B7E0814-MSD1) - Continued			**Source: 1702036-AB**		Prepared: 5/24/2017 Analyzed: 5/31/2017					
3,3´-Dichlorobenzidine	2869.67	660	280	3333.33	ND	86.1	31 - 153	13.7	20	
3-Nitroaniline	2647.67	1600	44	3333.33	ND	79.4	7 - 147	5.01	20	
4,6-Dinitro-2-methyphenol	2969.67	1600	300	3333.33	ND	89.1	45 - 155	7.71	20	
4-Bromophenyl-phenylether	2840.33	330	50	3333.33	ND	85.2	45 - 122	7.59	20	
4-Chloro-3-methylphenol	2725.00	660	110	3333.33	ND	81.8	45 - 124	10.9	20	
4-Chloroaniline	2630.67	660	53	3333.33	ND	78.9	12 - 117	13.2	20	
4-Chlorophenyl-phenylether	2658.33	330	48	3333.33	ND	79.8	45 - 115	9.26	20	
4-Methylphenol	2497.33	330	66	3333.33	ND	74.9	39 - 125	10.2	20	
4-Nitroaniline	2443.33	1600	290	3333.33	ND	73.3	22 - 135	9.09	20	
4-Nitrophenol	2671.00	330	150	3333.33	ND	80.1	27 - 161	7.44	20	
Acenaphthene	2374.67	330	48	3333.33	ND	71.2	47 - 114	6.39	20	
Acenaphthylene	2451.33	330	51	3333.33	ND	73.5	45 - 117	8.52	20	
Anthracene	2659.67	330	49	3333.33	ND	79.8	47 - 130	8.92	20	
Benzidine (M)	ND	1600	1400	3333.33	ND	NR	8 - 179	NR	20	M2
Benzo(a)anthracene	2567.33	330	39	3333.33	ND	77.0	46 - 130	9.61	20	
Benzo(a)pyrene	2691.33	330	45	3333.33	ND	80.7	46 - 131	6.35	20	
Benzo(b)fluoranthene	2551.67	330	55	3333.33	ND	76.6	44 - 130	4.47	20	
Benzo(g,h,i)perylene	2689.67	330	38	3333.33	ND	80.7	48 - 125	8.51	20	
Benzo(k)fluoranthene	2442.67	330	52	3333.33	ND	73.3	46 - 132	8.34	20	
Benzoic acid	1299.67	1600	890	3333.33	ND	39.0	0 - 121	7.86	20	
Benzyl alcohol	2953.33	660	67	3333.33	ND	88.6	32 - 156	7.94	20	
bis(2-chloroethoxy)methane	2371.67	330	59	3333.33	ND	71.2	42 - 100	10.7	20	
bis(2-Chloroethyl)ether	2113.33	330	57	3333.33	ND	63.4	39 - 104	6.67	20	
bis(2-chloroisopropyl)ether	2052.33	330	65	3333.33	ND	61.6	26 - 125	5.54	20	
bis(2-ethylhexyl)phthalate	2527.67	330	83	3333.33	ND	75.8	20 - 159	7.33	20	
Butylbenzylphthalate	2875.33	330	250	3333.33	ND	86.3	19 - 171	7.92	20	
Chrysene	2621.33	330	43	3333.33	ND	78.6	52 - 123	7.67	20	
Di-n-butylphthalate	2824.00	330	230	3333.33	ND	84.7	40 - 156	7.18	20	
Di-n-octylphthalate	2859.67	330	48	3333.33	ND	85.8	31 - 156	3.95	20	
Dibenz(a,h)anthracene	2700.67	330	43	3333.33	ND	81.0	31 - 149	8.51	20	
Dibenzofuran	3128.67	330	55	3333.33	ND	93.9	43 - 157	7.97	20	
Diethyl phthalate	2598.00	330	47	3333.33	ND	77.9	42 - 138	5.66	20	
Dimethyl phthalate	2388.33	330	46	3333.33	ND	71.6	44 - 127	6.29	20	
Fluoranthene	2614.33	330	47	3333.33	ND	78.4	46 - 131	12.5	20	
Fluorene	2402.67	330	49	3333.33	ND	72.1	48 - 120	7.20	20	
Hexachlorobenzene	3225.33	330	41	3333.33	ND	96.8	37 - 158	9.62	20	
Hexachlorobutadiene	2618.33	660	61	3333.33	ND	78.6	37 - 114	9.77	20	
Hexachlorocyclopentadiene	3564.67	660	64	3333.33	ND	107	29 - 146	4.18	20	
Hexachloroethane	2630.00	330	71	3333.33	ND	78.9	31 - 135	6.57	20	
Indeno(1,2,3-cd)pyrene	2737.67	330	44	3333.33	ND	82.1	36 - 148	6.55	20	
Isophorone	2342.33	330	57	3333.33	ND	70.3	36 - 112	10.8	20	
N-Nitroso-di-n propylamine	2396.00	330	65	3333.33	ND	71.9	37 - 120	6.95	20	

Certificate of Analysis

Hushmand Associates, Inc.	Project Number : 6th St Bridge, LAC-17-001
250 Goddard	Report To : Naresh Bellana
Irvine , CA 92618	Reported : 06/05/2017

Semivolatile Organic Compounds by EPA 8270C - Quality Control (cont'd)

Analyte	Result (ug/kg)	PQL (ug/kg)	MDL (ug/kg)	Spike Level	Source Result	% Rec	% Rec Limits	RPD	RPD Limit	Notes
Batch B7E0814 - MSSEMI_S (continued)										
Matrix Spike Dup (B7E0814-MSD1) - Continued			**Source: 1702036-AB**		Prepared: 5/24/2017 Analyzed: 5/31/2017					
N-Nitrosodiphenylamine	2781.67	330	48	3333.33	ND	83.5	44 - 141	8.08	20	
Naphthalene	2342.67	330	60	3333.33	ND	70.3	47 - 106	11.3	20	
Nitrobenzene	2844.67	330	67	3333.33	ND	85.3	44 - 139	8.96	20	
Pentachlorophenol	2790.00	1600	190	3333.33	ND	83.7	32 - 128	10.3	20	
Phenanthrene	2596.00	330	46	3333.33	ND	77.9	49 - 129	10.1	20	
Phenol	2351.67	330	130	3333.33	ND	70.6	40 - 107	4.17	20	
Pyrene	2568.33	330	53	3333.33	ND	77.0	47 - 134	10.8	20	
Pyridine	1689.00	1600	270	3333.33	ND	50.7	24 - 99	4.77	20	
Surrogate: 1,2-Dichlorobenzene-d	*1936*			*3333.33*		*58.1*	*38 - 93*			
Surrogate: 2,4,6-Tribromophenol	*2387*			*3333.33*		*71.6*	*27 - 124*			
Surrogate: 2-Chlorophenol-d4	*2061*			*3333.33*		*61.8*	*36 - 96*			
Surrogate: 2-Fluorobiphenyl	*2288*			*3333.33*		*68.6*	*44 - 100*			
Surrogate: 2-Fluorophenol	*1919*			*3333.33*		*57.6*	*32 - 89*			
Surrogate: 4-Terphenyl-d14	*2473*			*3333.33*		*74.2*	*49 - 123*			
Surrogate: Nitrobenzene-d5	*2256*			*3333.33*		*67.7*	*38 - 104*			
Surrogate: Phenol-d5	*2072*			*3333.33*		*62.2*	*35 - 95*			

Certificate of Analysis

Hushmand Associates, Inc.	Project Number : 6th St Bridge, LAC-17-001
250 Goddard	Report To : Naresh Bellana
Irvine , CA 92618	Reported : 06/05/2017

Notes and Definitions

S5	Surrogate recovery was above laboratory acceptance limit. Sample reanalysis showed the same high recovery.
S4	Surrogate was diluted out.
S12	Surrogate recovery outside in-house established limit but within method default criteria.
R	RPD value outside acceptance criteria. Calculation is based on raw values.
M2	Matrix spike recovery outside of acceptance limit due to possible matrix interference. The analytical batch was validated by the laboratory control sample.
M1	Matrix spike recovery outside of acceptance limit. The analytical batch was validated by the laboratory control sample.
L5	Laboratory Control Sample high biased. Sample result/s was non-detect (ND) for the target analyte; therefore reanalysis was not necessary.
L3	Laboratory control sample outside in-house established limits but within method criteria.
D6	Sample required dilution due to high concentration of target analyte.
D1	Sample required dilution due to possible matrix interference.
ND	Analyte is not detected at or above the Practical Quantitation Limit (PQL). When client requests quantitation against MDL, analyte is not detected at or above the Method Detection Limit (MDL)
PQL	Practical Quantitation Limit
MDL	Method Detection Limit
NR	Not Reported
RPD	Relative Percent Difference
CA2	CA-ELAP (CDPH)
OR1	OR-NELAP (OSPHL)
TX1	TX-NELAP (TCEQ)

Notes:
(1) The reported MDL and PQL are based on prep ratio variation and analytical dilution.
(2) The suffix [2C] of specific analytes signifies that the reported result is taken from the instrument's second column.
(3) Results are wet unless otherwise specified.

American Environmental Testing Laboratory Inc.
2834 & 2908 North Naomi Street Burbank, CA 91504 • DOHS NO: 1541, LACSD NO: 10181
Tel: (888) 288-AETL • (818) 845-8200 • Fax: (818) 845-8840 • www.aetlab.com

Ordered By

Advanced Technology Laboratories
3275 Walnut Avenue
Signal Hill, CA 90755-5225

Telephone: (562)989-4045
Attention: Rachelle Arada

Number of Pages 10
Date Received 05/18/2017
Date Reported 05/25/2017

Job Number	Order Date	Client
87764	05/18/2017	ATL

Project ID: 1702036
Project Name: PO# SC11608

Enclosed please find results of analyses of 15 soil samples which were analyzed as specified on the attached chain of custody. If there are any questions, please do not hesitate to call.

Checked By: _____ Approved By: C. Razmara

Cyrus Razmara, Ph.D.
Laboratory Director

American Environmental Testing Laboratory Inc.
2834 & 2908 North Naomi Street Burbank, CA 91504 • DOHS NO: 1541, LACSD NO: 10181
Tel: (888) 288-AETL • (818) 845-8200 • Fax: (818) 845-8840 • www.aetlab.com

Ordered By

Advanced Technology Laboratories
3275 Walnut Avenue
Signal Hill, CA 90755-5225

Telephone: (562)989-4045
Attention: Rachelle Arada

Project ID: 1702036
Date Received 05/18/2017
Date Reported 05/25/2017

Job Number	Order Date	Client
87764	05/18/2017	ATL

CERTIFICATE OF ANALYSIS
CASE NARRATIVE

AETL received 15 samples with the following specification on 05/18/2017.

Lab ID	Sample ID	Sample Date	Matrix	Quantity Of Containers
87764.01	1702036-22	05/15/2017	Soil	1
87764.02	1702036-26	05/15/2017	Soil	1
87764.03	1702036-38	05/15/2017	Soil	1
87764.04	1702036-42	05/15/2017	Soil	1
87764.05	1702036-46	05/15/2017	Soil	1
87764.06	1702036-51	05/15/2017	Soil	1
87764.07	1702036-69	05/15/2017	Soil	1
87764.08	1702036-74	05/15/2017	Soil	1
87764.09	1702036-77	05/15/2017	Soil	1
87764.10	1702036-85	05/16/2017	Soil	1
87764.11	1702036-90	05/16/2017	Soil	1
87764.12	1702036-92	05/16/2017	Soil	1
87764.13	1702036-95	05/16/2017	Soil	1
87764.14	1702036-AA	05/16/2017	Soil	1
87764.15	1702036-AM	05/16/2017	Soil	1

Method ^ Submethod	Req Date	Priority	TAT	Units
(8151A)	05/25/2017	2	Normal	ug/Kg

The samples were analyzed as specified on the enclosed chain of custody.
No analytical non-conformances were encountered.

Unless otherwise noted, all results of soil and solid samples are based on wet weight.

Checked By: _____ Approved By: C. Razmara

Cyrus Razmara, Ph.D.
Laboratory Dire

American Environmental Testing Laboratory Inc.
2834 & 2908 North Naomi Street Burbank, CA 91504 • DOHS NO: 1541, LACSD NO: 10181
Tel: (888) 288-AETL • (818) 845-8200 • Fax: (818) 845-8840 • www.aetlab.com

ANALYTICAL RESULTS

Ordered By

Advanced Technology Laboratories
3275 Walnut Avenue
Signal Hill, CA 90755-5225

Telephone: (562)989-4045
Attn: Rachelle Arada
Page: **2**

Project ID: 1702036
Project Name: PO# SC11608

AETL Job Number	Submitted	Client
87764	05/18/2017	ATL

Method: (8151A), Chlorinated Herbicides by GC/ECD

QC Batch No: 051817

Our Lab I.D.			Method Blank	**87764.01**	**87764.02**		
Client Sample I.D.				1702036-22	1702036-26		
Date Sampled				05/15/2017	05/15/2017		
Date Prepared			05/18/2007	05/18/2007	05/18/2007		
Preparation Method			3550B	3550B	3550B		
Date Analyzed			05/19/2017	05/19/2017	05/19/2017		
Matrix			Soil	Soil	Soil		
Units			ug/Kg	ug/Kg	ug/Kg		
Dilution Factor			1	1	1		
Analytes	**MDL**	**PQL**	**Results**	**Results**	**Results**		
Acifluorfen	20	20	ND	ND	ND		
Bentazon	10	10	ND	ND	ND		
Chloramben	10	10	ND	ND	ND		
2,4-D	10	10	ND	ND	ND		
Dalapon	20	20	ND	ND	ND		
2,4-DB	10	10	ND	ND	ND		
DCPA diacid	20	20	ND	ND	ND		
Dicamba	10	10	ND	ND	ND		
3,5-Dichlorobenzoic acid	10	10	ND	ND	ND		
Dichloroprop	10	10	ND	ND	ND		
Dinoseb (DNBP, 2-sec-Butyl-4, 6-dinitrophenol)	20	20	ND	ND	ND		
MCPA	2000	2000	ND	ND	ND		
MCPP	2000	2000	ND	ND	ND		
4-Nitrophenol	10	10	ND	ND	ND		
Pentachlorophenol (PCP)	10	10	ND	ND	ND		
Picloram	10	10	ND	ND	ND		
2,4,5-T (2,4,5-Trichlorophenoxyacetic acid)	10	10	ND	ND	ND		
2,4,5-TP	10	10	ND	ND	ND		
Our Lab I.D.			Method Blank	**87764.01**	**87764.02**		
Surrogates	**%Rec.Limit**		**% Rec.**	**% Rec.**	**% Rec.**		
DCAA	40-150		52.3	40.5	42.6		

American Environmental Testing Laboratory Inc.
2834 & 2908 North Naomi Street Burbank, CA 91504 • DOHS NO: 1541, LACSD NO: 10181
Tel: (888) 288-AETL • (818) 845-8200 • Fax: (818) 845-8840 • www.aetlab.com

ANALYTICAL RESULTS

Ordered By

Advanced Technology Laboratories
3275 Walnut Avenue
Signal Hill, CA 90755-5225

Telephone: (562)989-4045
Attn: Rachelle Arada
Page: 3

Project ID: 1702036
Project Name: PO# SC11608

AETL Job Number	Submitted	Client
87764	05/18/2017	ATL

Method: (8151A), Chlorinated Herbicides by GC/ECD

QC Batch No: 051817

Our Lab I.D.			87764.03				
Client Sample I.D.			1702036-38				
Date Sampled			05/15/2017				
Date Prepared			05/18/2007				
Preparation Method			3550B				
Date Analyzed			05/19/2017				
Matrix			Soil				
Units			ug/Kg				
Dilution Factor			2				
Analytes	**MDL**	**PQL**	**Results**				
Acifluorfen	40	40	ND				
Bentazon	20	20	ND				
Chloramben	20	20	ND				
2,4-D	20	20	ND				
Dalapon	40	40	ND				
2,4-DB	20	20	ND				
DCPA diacid	40	40	ND				
Dicamba	20	20	ND				
3,5-Dichlorobenzoic acid	20	20	ND				
Dichloroprop	20	20	ND				
Dinoseb (DNBP, 2-sec-Butyl-4, 6-dinitrophenol)	40	40	ND				
MCPA	4000	4000	ND				
MCPP	4000	4000	ND				
4-Nitrophenol	20	20	ND				
Pentachlorophenol (PCP)	20	20	ND				
Picloram	20	20	ND				
2,4,5-T (2,4,5-Trichlorophenoxyacetic acid)	20	20	ND				
2,4,5-TP	20	20	ND				

Comment(s):
87764.03: Analyzed under dilution due to matrix interference

American Environmental Testing Laboratory Inc.
2834 & 2908 North Naomi Street Burbank, CA 91504 • DOHS NO: 1541, LACSD NO: 10181
Tel: (888) 288-AETL • (818) 845-8200 • Fax: (818) 845-8840 • www.aetlab.com

ANALYTICAL RESULTS

Project ID: 1702036
Project Name: PO# SC11608

AETL Job Number	Submitted	Client
87764	05/18/2017	ATL

Method: (8151A), Chlorinated Herbicides by GC/ECD

Our Lab I.D.			**87764.03**				
Surrogates	**%Rec.Limit**		**% Rec.**				
DCAA	40-150		45.1				

American Environmental Testing Laboratory Inc.
2834 & 2908 North Naomi Street Burbank, CA 91504 • DOHS NO: 1541, LACSD NO: 10181
Tel: (888) 288-AETL • (818) 845-8200 • Fax: (818) 845-8840 • www.aetlab.com

ANALYTICAL RESULTS

Ordered By

Advanced Technology Laboratories
3275 Walnut Avenue
Signal Hill, CA 90755-5225

Telephone: (562)989-4045
Attn: Rachelle Arada
Page: 5

Project ID: 1702036
Project Name: PO# SC11608

AETL Job Number	Submitted	Client
87764	05/18/2017	ATL

Method: (8151A), Chlorinated Herbicides by GC/ECD

QC Batch No: 051817

Our Lab I.D.			87764.04	87764.05	87764.06	87764.07	87764.08
Client Sample I.D.			1702036-42	1702036-46	1702036-51	1702036-69	1702036-74
Date Sampled			05/15/2017	05/15/2017	05/15/2017	05/15/2017	05/15/2017
Date Prepared			05/18/2007	05/18/2007	05/18/2007	05/18/2007	05/18/2007
Preparation Method			3550B	3550B	3550B	3550B	3550B
Date Analyzed			05/19/2017	05/19/2017	05/19/2017	05/19/2017	05/19/2017
Matrix			Soil	Soil	Soil	Soil	Soil
Units			ug/Kg	ug/Kg	ug/Kg	ug/Kg	ug/Kg
Dilution Factor			1	1	1	1	1
Analytes	**MDL**	**PQL**	**Results**	**Results**	**Results**	**Results**	**Results**
Acifluorfen	20	20	ND	ND	ND	ND	ND
Bentazon	10	10	ND	ND	ND	ND	ND
Chloramben	10	10	ND	ND	ND	ND	ND
2,4-D	10	10	ND	ND	ND	ND	ND
Dalapon	20	20	ND	ND	ND	ND	ND
2,4-DB	10	10	ND	ND	ND	ND	ND
DCPA diacid	20	20	ND	ND	ND	ND	ND
Dicamba	10	10	ND	ND	ND	ND	ND
3,5-Dichlorobenzoic acid	10	10	ND	ND	ND	ND	ND
Dichloroprop	10	10	ND	ND	ND	ND	ND
Dinoseb (DNBP, 2-sec-Butyl-4, 6-dinitrophenol)	20	20	ND	ND	ND	ND	ND
MCPA	2000	2000	ND	ND	ND	ND	ND
MCPP	2000	2000	ND	ND	ND	ND	ND
4-Nitrophenol	10	10	ND	ND	ND	ND	ND
Pentachlorophenol (PCP)	10	10	ND	ND	ND	ND	ND
Picloram	10	10	ND	ND	ND	ND	ND
2,4,5-T (2,4,5-Trichlorophenoxyacetic acid)	10	10	ND	ND	ND	ND	ND
2,4,5-TP	10	10	ND	ND	ND	ND	ND
Our Lab I.D.			87764.04	87764.05	87764.06	87764.07	87764.08
Surrogates	**%Rec.Limit**		**% Rec.**	**% Rec.**	**% Rec.**	**% Rec.**	**% Rec.**
DCAA	40-150		40.2	42.2	63.7	42.7	50.0

American Environmental Testing Laboratory Inc.
2834 & 2908 North Naomi Street Burbank, CA 91504 • DOHS NO: 1541, LACSD NO: 10181
Tel: (888) 288-AETL • (818) 845-8200 • Fax: (818) 845-8840 • www.aetlab.com

ANALYTICAL RESULTS

Ordered By

Advanced Technology Laboratories
3275 Walnut Avenue
Signal Hill, CA 90755-5225

Telephone: (562)989-4045
Attn: Rachelle Arada
Page: 6

Project ID: 1702036
Project Name: PO# SC11608

AETL Job Number	Submitted	Client
87764	05/18/2017	ATL

Method: (8151A), Chlorinated Herbicides by GC/ECD

QC Batch No: 051817

Our Lab I.D.			87764.09	87764.10	87764.11	87764.12	87764.13
Client Sample I.D.			1702036-77	1702036-85	1702036-90	1702036-92	1702036-95
Date Sampled			05/15/2017	05/16/2017	05/16/2017	05/16/2017	05/16/2017
Date Prepared			05/18/2007	05/18/2007	05/18/2007	05/18/2007	05/18/2007
Preparation Method			3550B	3550B	3550B	3550B	3550B
Date Analyzed			05/19/2017	05/19/2017	05/19/2017	05/19/2017	05/19/2017
Matrix			Soil	Soil	Soil	Soil	Soil
Units			ug/Kg	ug/Kg	ug/Kg	ug/Kg	ug/Kg
Dilution Factor			1	1	1	1	1
Analytes	**MDL**	**PQL**	**Results**	**Results**	**Results**	**Results**	**Results**
Acifluorfen	20	20	ND	ND	ND	ND	ND
Bentazon	10	10	ND	ND	ND	ND	ND
Chloramben	10	10	ND	ND	ND	ND	ND
2,4-D	10	10	ND	ND	ND	ND	ND
Dalapon	20	20	ND	ND	ND	ND	ND
2,4-DB	10	10	ND	ND	ND	ND	ND
DCPA diacid	20	20	ND	ND	ND	ND	ND
Dicamba	10	10	ND	ND	ND	ND	ND
3,5-Dichlorobenzoic acid	10	10	ND	ND	ND	ND	ND
Dichloroprop	10	10	ND	ND	ND	ND	ND
Dinoseb (DNBP, 2-sec-Butyl-4, 6-dinitrophenol)	20	20	ND	ND	ND	ND	ND
MCPA	2000	2000	ND	ND	ND	ND	ND
MCPP	2000	2000	ND	ND	ND	ND	ND
4-Nitrophenol	10	10	ND	ND	ND	ND	ND
Pentachlorophenol (PCP)	10	10	ND	ND	ND	ND	ND
Picloram	10	10	ND	ND	ND	ND	ND
2,4,5-T (2,4,5-Trichlorophenoxyacetic acid)	10	10	ND	ND	ND	ND	ND
2,4,5-TP	10	10	ND	ND	ND	ND	ND
Our Lab I.D.			**87764.09**	**87764.10**	**87764.11**	**87764.12**	**87764.13**
Surrogates	**%Rec.Limit**		**% Rec.**	**% Rec.**	**% Rec.**	**% Rec.**	**% Rec.**
DCAA	40-150		51.2	57.5	48.5	53.2	51.0

American Environmental Testing Laboratory Inc.
2834 & 2908 North Naomi Street Burbank, CA 91504 • DOHS NO: 1541, LACSD NO: 10181
Tel: (888) 288-AETL • (818) 845-8200 • Fax: (818) 845-8840 • www.aetlab.com

ANALYTICAL RESULTS

Ordered By

Advanced Technology Laboratories
3275 Walnut Avenue
Signal Hill, CA 90755-5225

Telephone: (562)989-4045
Attn: Rachelle Arada
Page: **7**

Project ID: 1702036
Project Name: PO# SC11608

AETL Job Number	Submitted	Client
87764	05/18/2017	ATL

Method: (8151A), Chlorinated Herbicides by GC/ECD

QC Batch No: 051817

Our Lab I.D.			**87764.14**				
Client Sample I.D.			1702036-AA				
Date Sampled			05/16/2017				
Date Prepared			05/18/2007				
Preparation Method			3550B				
Date Analyzed			05/19/2017				
Matrix			Soil				
Units			ug/Kg				
Dilution Factor			1				
Analytes	**MDL**	**PQL**	**Results**				
Acifluorfen	20	20	ND				
Bentazon	10	10	ND				
Chloramben	10	10	ND				
2,4-D	10	10	ND				
Dalapon	20	20	ND				
2,4-DB	10	10	ND				
DCPA diacid	20	20	ND				
Dicamba	10	10	ND				
3,5-Dichlorobenzoic acid	10	10	ND				
Dichloroprop	10	10	ND				
Dinoseb (DNBP, 2-sec-Butyl-4, 6-dinitrophenol)	20	20	ND				
MCPA	2000	2000	ND				
MCPP	2000	2000	ND				
4-Nitrophenol	10	10	ND				
Pentachlorophenol (PCP)	10	10	ND				
Picloram	10	10	ND				
2,4,5-T (2,4,5-Trichlorophenoxyacetic acid)	10	10	ND				
2,4,5-TP	10	10	ND				
Our Lab I.D.			**87764.14**				
Surrogates	**%Rec.Limit**		**% Rec.**				
DCAA	40-150		51.4				

American Environmental Testing Laboratory Inc.
2834 & 2908 North Naomi Street Burbank, CA 91504 • DOHS NO: 1541, LACSD NO: 10181
Tel: (888) 288-AETL • (818) 845-8200 • Fax: (818) 845-8840 • www.aetlab.com

ANALYTICAL RESULTS

Ordered By

Advanced Technology Laboratories
3275 Walnut Avenue
Signal Hill, CA 90755-5225

Telephone: (562)989-4045
Attn: Rachelle Arada
Page: 8

Project ID: 1702036
Project Name: PO# SC11608

AETL Job Number	Submitted	Client
87764	05/18/2017	ATL

Method: (8151A), Chlorinated Herbicides by GC/ECD

QC Batch No: 051817

Our Lab I.D.			87764.15				
Client Sample I.D.			1702036-AM				
Date Sampled			05/16/2017				
Date Prepared			05/18/2007				
Preparation Method			3550B				
Date Analyzed			05/19/2017				
Matrix			Soil				
Units			ug/Kg				
Dilution Factor			5				
Analytes	**MDL**	**PQL**	**Results**				
Acifluorfen	100	100	ND				
Bentazon	50	50	ND				
Chloramben	50	50	ND				
2,4-D	50	50	ND				
Dalapon	100	100	ND				
2,4-DB	50	50	ND				
DCPA diacid	100	100	ND				
Dicamba	50	50	ND				
3,5-Dichlorobenzoic acid	50	50	ND				
Dichloroprop	50	50	ND				
Dinoseb (DNBP, 2-sec-Butyl-4, 6-dinitrophenol)	100	100	ND				
MCPA	10000	10000	ND				
MCPP	10000	10000	ND				
4-Nitrophenol	50	50	ND				
Pentachlorophenol (PCP)	50	50	ND				
Picloram	50	50	ND				
2,4,5-T (2,4,5-Trichlorophenoxyacetic acid)	50	50	ND				
2,4,5-TP	50	50	ND				

Comment(s):
87764.15: Analyzed under dilution due to matrix interference

American Environmental Testing Laboratory Inc.
2834 & 2908 North Naomi Street Burbank, CA 91504 • DOHS NO: 1541, LACSD NO: 10181
Tel: (888) 288-AETL • (818) 845-8200 • Fax: (818) 845-8840 • www.aetlab.com

ANALYTICAL RESULTS

Project ID: 1702036
Project Name: PO# SC11608

AETL Job Number	Submitted	Client
87764	05/18/2017	ATL

Method: (8151A), Chlorinated Herbicides by GC/ECD

Our Lab I.D.			87764.15				
Surrogates	%Rec.Limit		% Rec.				
DCAA	40-150		48.5				

American Environmental Testing Laboratory Inc.
2834 & 2908 North Naomi Street Burbank, CA 91504 • DOHS NO: 1541, LACSD NO: 10181
Tel: (888) 288-AETL • (818) 845-8200 • Fax: (818) 845-8840 • www.aetlab.com

QUALITY CONTROL RESULTS

Ordered By

Advanced Technology Laboratories
3275 Walnut Avenue
Signal Hill, CA 90755-5225

Telephone: (562)989-4045
Attn: Rachelle Arada
Page: **10**

Project ID: 1702036
Project Name: PO# SC11608

AETL Job Number	Submitted	Client
87764	05/18/2017	ATL

Method: (8151A), Chlorinated Herbicides by GC/ECD

QC Batch No: 051817; Dup or Spiked Sample: 87763.02; LCS: Clean Sand; QC Prepared: 05/18/2007; QC Analyzed: 05/19/2017; Units: ug/Kg

Analytes	Sample Result	MS Concen	MS Recov	MS % REC	MS DUP Concen	MS DUP Recov	MS DUP % REC	RPD %	MS/MSD % Limit	MS RPD % Limit
2,4-D	0.00	25.0	11.2	44.8	25.0	11.4	45.6	1.8	40-140	<40
Dinoseb (DNBP, 2-sec-Butyl-4, 6-dinitrophenol)	0.00	25.0	17.6	70.4	25.0	17.8	71.2	1.1	40-140	<40
2,4,5-T (2,4,5-Trichlorophenoxyacetic acid)	0.00	25.0	10.3	41.2	25.0	11.3	45.2	9.3	40-140	<40
Surrogates										
DCAA	0.00	50.0	38.9	77.8	50.0	26.4	52.8	38.3	40-140	<40

QC Batch No: 051817; Dup or Spiked Sample: 87763.02; LCS: Clean Sand; QC Prepared: 05/18/2007; QC Analyzed: 05/19/2017; Units: ug/Kg

Analytes	LCS Concen	LCS Recov	LCS % REC	LCS DUP Concen	LCS DUP Recov	LCS DUP % REC	LCS RPD % REC	LCS/LCSD % Limit	LCS RPD % Limit	
2,4-D	25.0	12.7	50.8	25.0	19.2	76.8	40.8	50-140	<40	
Dinoseb (DNBP, 2-sec-Butyl-4, 6-dinitrophenol)	25.0	21.0	84.0	25.0	17.6	70.4	17.6	50-140	<40	
2,4,5-T (2,4,5-Trichlorophenoxyacetic acid)	25.0	19.6	78.4	25.0	12.5	50.0	44.2	50-140	<40	
LCS										
Dalapon	25.0	20.8	83.2	25.0	21.8	87.2	4.7	50-140	<40	
2,4-DB	25.0	29.0	116	25.0	20.4	81.6	34.8	50-140	<40	
Dicamba	25.0	15.6	62.4	25.0	15.9	63.6	1.9	50-140	<40	
Dichloroprop	25.0	21.5	86.0	25.0	15.2	60.8	34.3	50-140	<40	
MCPA	2,500	3,350	134	2,500	2,680	107	22.4	50-140	<40	
MCPP	2,500	3,450	138	2,500	2,170	86.8	45.6	50-140	<40	
2,4,5-TP	25.0	20.5	82.0	25.0	16.9	67.6	19.3	50-140	<40	
Surrogates										
DCAA	50.0	28.3	56.6	50.0	28.8	57.6	1.8	50-140	<40	

American Environmental Testing Laboratory Inc.
2834 & 2908 North Naomi Street, Burbank, CA 91504 • DOHS NO: 1541, LACSD NO: 10181
Tel: (888) 288-AETL • (818) 845-8200 • Fax: (818) 845-8840 • www.aetlab.com

Data Qualifiers and Descriptors

Data Qualifier:

#:	Recovery is not within acceptable control limits.
*:	In the QC section, sample results have been taken directly from the ICP reading. No preparation factor has been applied.
B:	Analyte was present in the Method Blank.
D:	Result is from a diluted analysis.
E:	Result is beyond calibration limits and is estimated.
H:	Analysis was performed over the allowed holding time due to circumstances which were beyond laboratory control.
J:	Analyte was detected . However, the analyte concentration is an estimated value, which is between the Method Detection Limit (MDL) and the Practical Quantitation Limit (PQL).
M:	Matrix spike recovery is outside control limits due to matrix interference. Laboratory Control Sample recovery was acceptable.
MCL:	Maximum Contaminant Level
NS:	No Standard Available
S6:	Surrogate recovery is outside control limits due to matrix interference.
S8:	The analysis of the sample required a dilution such that the surrogate concentration was diluted below the method acceptance criteria.
X:	Results represent LCS and LCSD data.

Definition:

%Limi:	Percent acceptable limits.
%REC:	Percent recovery.
Con.L:	Acceptable Control Limits
Conce:	Added concentration to the sample.
LCS:	Laboratory Control Sample
MDL:	Method Detection Limit is a statistically derived number which is specific for each instrument, each method, and each compound. It indicates a distinctively detectable quantity with 99% probability.

American Environmental Testing Laboratory Inc.
2834 & 2908 North Naomi Street, Burbank, CA 91504 • DOHS NO: 1541, LACSD NO: 10181
Tel: (888) 288-AETL • (818) 845-8200 • Fax: (818) 845-8840 • www.aetlab.com

Data Qualifiers and Descriptors

MS:	Matrix Spike
MS DU:	Matrix Spike Duplicate
ND:	Analyte was not detected in the sample at or above MDL.
PQL:	Practical Quantitation Limit or ML (Minimum Level as per RWQCB) is the minimum concentration that can be quantified with more than 99% confidence. Taking into account all aspects of the entire analytical instrumentation and practice.
Recov:	Recovered concentration in the sample.
RPD:	Relative Percent Difference

ADVANCED TECHNOLOGY LABORATORIES

SUBCONTRACT ORDER

87764

Work Order: 1702036

SENDING LABORATORY:

Advanced Technology Laboratories
3275 Walnut Avenue
Signal Hill, CA 90755
Phone: 562.989.4045
Fax: 562.989.6348
Project Manager: Rachelle Arada (Rachelle@atlglobal.com)
Sampler: DAT

RECEIVING LABORATORY:

AETL
2834 North Naomi Street
Burbank, CA 91504
Phone :(818) 845-8200
Fax: (818) 845-8840
PO#: SC11608- STANDARD TAT (RA)

IMPORTANT : Please include Work Order # and PO # in your invoice.

Analysis	Due	Expires	Sampled	Comments
ATL Lab#: 1702036-22 / 2A-1-1.0 8151_SUB [Chlorinated Herbicides] 1-Glass Jar - 4 oz	**05/25/17 17:00**	**Soil** 05/29/17 14:08	**05/15/17 14:08**	87764.01
ATL Lab#: 1702036-26 / 2A-2-1.0 8151_SUB [Chlorinated Herbicides] 1-Glass Jar - 4 oz	**05/25/17 17:00**	**Soil** 05/29/17 14:34	**05/15/17 14:34**	87764.02
ATL Lab#: 1702036-38 / 6-1-1.0 8151_SUB [Chlorinated Herbicides] 1-Glass Jar - 4 oz	**05/25/17 17:00**	**Soil** 05/29/17 10:07	**05/15/17 10:07**	87764.03
ATL Lab#: 1702036-42 / 6-3-1.0 8151_SUB [Chlorinated Herbicides] 1-Glass Jar - 4 oz	**05/25/17 17:00**	**Soil** 05/29/17 10:35	**05/15/17 10:35**	87764.04

Released By	5/18/17 1038 Date	Received By	5/18/17 1038 Date
Released By	5/18/17 1252 Date	Received By	Jean Claude 05/18/17 1252 Date

ADVANCED TECHNOLOGY LABORATORIES

SUBCONTRACT ORDER

Work Order: 1702036

87764

Analysis	Due	Expires	Sampled	Comments
ATL Lab#: 1702036-46 / 6-4-1.0 8151_SUB [Chlorinated Herbicides] 1-Glass Jar - 4 oz	**05/25/17 17:00**	**Soil** 05/29/17 12:07	**05/15/17 12:07**	87764.05
ATL Lab#: 1702036-51 / 6-5-3.0 8151_SUB [Chlorinated Herbicides] 1-Glass Jar - 4 oz	**05/25/17 17:00**	**Soil** 05/29/17 12:33	**05/15/17 12:33**	87764.06
ATL Lab#: 1702036-69 / 7-2-0.5 8151_SUB [Chlorinated Herbicides] 1-Glass Jar - 4 oz	**05/25/17 17:00**	**Soil** 05/29/17 13:45	**05/15/17 13:45**	87764.07
ATL Lab#: 1702036-74 / 7-3-1.0 8151_SUB [Chlorinated Herbicides] 1-Glass Jar - 4 oz	**05/25/17 17:00**	**Soil** 05/29/17 13:35	**05/15/17 13:35**	87764.08
ATL Lab#: 1702036-77 / 7-4-0.5 8151_SUB [Chlorinated Herbicides] 1-Glass Jar - 4 oz	**05/25/17 17:00**	**Soil** 05/29/17 13:13	**05/15/17 13:13**	87764.09
ATL Lab#: 1702036-85 / 6-2-0.5 8151_SUB [Chlorinated Herbicides] 1-Glass Jar - 4 oz	**05/25/17 17:00**	**Soil** 05/30/17 07:17	**05/16/17 07:17**	87764.10

Released By	Date	Received By	Date
	5/18/17 1038	Agilent Hoyer	5/18/17 1038
	5/18/17 1252	Jean Claude	05/18/17 1252

ADVANCED TECHNOLOGY LABORATORIES

SUBCONTRACT ORDER

Work Order: 1702036

87764

Analysis	Due	Expires	Sampled	Comments
ATL Lab#: 1702036-90 / 7-1-1.0 8151_SUB [Chlorinated Herbicides] 1-Glass Jar - 4 oz	**05/25/17 17:00**	**Soil** 05/30/17 07:42	**05/16/17 07:42**	87764.11
ATL Lab#: 1702036-92 / 7-5-1.0 8151_SUB [Chlorinated Herbicides] 1-Glass Jar - 4 oz	**05/25/17 17:00**	**Soil** 05/30/17 08:11	**05/16/17 08:11**	87764.12
ATL Lab#: 1702036-95 / 7-6-0.5 8151_SUB [Chlorinated Herbicides] 1-Glass Jar - 4 oz	**05/25/17 17:00**	**Soil** 05/30/17 08:34	**05/16/17 08:34**	87764.13
ATL Lab#: 1702036-AA / 7-7-1.0 8151_SUB [Chlorinated Herbicides]	**05/25/17 17:00**	**Soil** 05/30/17 08:23	**05/16/17 08:23**	**1-Glass Jar - 4 oz** 87764.14
ATL Lab#: 1702036-AM / 8-3-1.0 8151_SUB [Chlorinated Herbicides] 1-Glass Jar - 4 oz	**05/25/17 17:00**	**Soil** 05/30/17 08:52	**05/16/17 08:52**	87764.15

Released By	5/18/17 1038 Date	Received By	5/18/17 1038 Date
Released By	5/18/17 1252 Date	Received By	Jean Claude 05/18/17 1252 Date

American Environmental Testing Laboratory Inc.

2834 North Naomi Street Burbank, CA 91504 • DOHS NO: 1541, LACSD NO: 10181
Tel: (888) 288-AETL • (818) 845-8200 • Fax: (818) 845-8840 • www.aetlab.com

COOLER RECEIPT FORM

Client Name: AFL

Project Name:

AETL Job Number: 87764, 87765, 87766, 87767 & 87768

Date Received: 05/18/17 Received by: Jean Claude

Carrier: ☒ AETL Courier ☐ Client ☐ GSO ☐ FedEx ☐ UPS
☐ Others:

Samples were received in: ☒ Cooler (1) ☐ Other (Specify):

Inside temperature of shipping container No 1: 3.6°, No 2: _____, No 3: _____

Type of sample containers: ☐ VOA, ☒ Glass bottles, ☒ Wide mouth jars, ☐ HDPE bottles, ☐ Metal sleeves, ☐ Others (Specify): _____

How are samples preserved: ☐ None, ☐ Ice, ☒ Blue Ice, ☐ Dry Ice
☒ None, _ HNO_3, _ NaOH, _ ZnOAc, _ HCl, _ $Na_2S_2O_3$, _ MeOH
☒ Other (Specify): H_2SO_4

	Yes	No, explain below	Name, if client was notified.
1. Are the COCs Correct?	X		
2. Are the Sample labels legible?	X		
3. Do samples match the COC?	X		
4. Are the required analyses clear?	X		
5. Is there enough samples for required analysis?	X		
6. Are samples sealed with evidence tape?	NA		
7. Are sample containers in good condition?	X		
8. Are samples preserved?	X		
9. Are samples preserved properly for the intended analysis?	X		
10. Are the VOAs free of headspace?	NA		
11. Are the jars free of headspace?	2		

Explain all "No" answers for above questions:

ADVANCED TECHNOLOGY LABORATORIES
3275 Walnut Ave., Signal Hill, CA 90755
Tel: (562) 989-4045 • Fax: (562) 989-4040

CHAIN OF CUSTODY RECORD

Page 1 of 15

Instruction: Complete all shaded areas.

For Laboratory Use Only — ATLCOC Ver. 20170715

Method of Transport	Sample Conditions Upon Receipt					
	Condition	Y	N	Condition	Y	N
☑ Client ☐ ATL ☐ FedEx ☐ OnTrac ☐ GSO ☐ Other:	1. CHILLED	☐	☐	5. # OF SAMPLES MATCH COC	☐	☐
	2. HEADSPACE (VOA)	☐	☐	6. PRESERVED	☐	☑
	3. CONTAINER INTACT	☑	☐	7. COOLER TEMP, deg C	6.0, 5.1	
	4. SEALED	☐	☐			

CUSTOMER

Company: Hushmand & Assoc HAI
Address: 250 GODDARD
City: IRVINE State: CA Zip: 92618
Tel: (949) 777-1266 Fax: (949) 777-1276

SEND REPORT TO:
Attn: Naresh Bellana Email: naresh@haieng.com
Company: HAI
Address:
City: State: Zip:

SEND INVOICE TO: ☐ same as SEND REPORT TO
Attn: SAME Email:
Company:
Address:
City: State: Zip:

PROJECT SAMPLES

Project Name: 6th St. Bridge
Project No.: LAC-17-001
Sampler: DAT
Quote No: E17ES1
PO #:
Special Instructions/Comments:

ITEM	Lab No.	Sample Description: Sample ID / Location	Date	Time	8260 / 624 (Volatiles)	8015(GRO)	8015(DRO)	8270(Semi-volatiles)	8081(Organochlorine Pesticides)	8082(PCBs)	6010 / 7000(Title 22 Metals)	TO-15	SOIL / SEDIMENT / SLUDGE	SOLIDS / WIPE/ FILTER	WATER - DRINKING / GROUND	WATER - STORM / WASTE	AQUEOUS / LAYERED - OIL	TAT	Container: #	Container: Type	Container: Material	Container: Preservative	QA/QC: Routine / Caltrans / Legal / RWQCB / Level IV	REMARKS
1	1703036-1	1A-1 - 0.5	5-15	7:28							X							5	1	1	2	N/A		
2	-2	1A-1 - 1.0		7:28							X								1	1				
3	-3	1A-1 - 3.0		7:32							X								1	1				
4	-4	1A-1 - 5.0		7:32							X								1	1				
5	-5	1A-2 - 0.5		7:47							X								1	1				
6	-6	1A-2 - 1.0		7:47							X								1	1				
7	-7	1A-2 - 3.0		7:52							X								1	1				
8	-8	1A-2 - 5.0		7:52							X								1	1				
9																								
10																								

TERMS

1. Sample receiving hours: 7:30 AM to 7:30 PM Monday - Friday, Saturday 8:00 AM to 12:00 PM.
2. Samples Submitted AFTER 3:00 PM, are considered received the following Business day at 8:00 AM.
3. The following turnaround time conditions apply.
   TAT = 0 : 100% Surcharge SAME BUSINESS DAY if received by 9:00 AM
   TAT = 1 : 100% Surcharge NEXT BUSINESS DAY (COB 5:00 PM)
   TAT = 2 : 50% Surcharge 2ND BUSINESS DAY (COB 5:00 PM)
   TAT = 3 : 30% Surcharge 3RD BUSINESS DAY (COB 5:00 PM)
   TAT = 4 : 20% Surcharge 4TH BUSINESS DAY (COB 5:00 PM)
   TAT = 5 : NO SURCHARGE 5th BUSINESS DAY (COB 5:00 PM)
4. Weekend, holiday, after-hours work - ask for quote.
5. Subcontract TAT is 10 - 15 business days. Projects requiring shorter TATs will incur a surcharge respective to the subcontract lab - - - ask for quote.
6. Liquid and solid samples will be disposed of after 45 calendar days from receipt of samples, un-preserved samples will be disposed of after 14 calendar days after receipt of samples.
7. Electronic records maintained for five (5) years from report date.
8. Hard copy reports will be disposed of after 45 calendar days from report date.
9. Storage and Report Fees:
   - Liquid & solid samples: Complimentary storage for forty-five (45) calendar days from receipt of samples, $2/sample/month if extended storage or hold is requested.
   - Air samples: Complimentary storage for ten (10) calendar days from receipt of samples, $20/ sample/week if extended storage is requested.
   - Hard copy and regenerated reports/EDDs: $17.50 per hard copy report requested, $50.00 per regenerated/reformatted report, $35 per reprocessed EDD.
10. Rush ECLP/STLC samples: add 2 days to analysis TAT for extraction on procedure.
11. Unanalyzed samples will incur a disposal fee of $2 per sample.

As the authorized agent of the company above, I hereby purchase laboratory services from ATL as shown above and hereby guarantee payment as quoted.

Submitter Print Name _____ Signature _____

CUSTODY

Relinquished by: (Signature and Printed Name)	Date	Time	Received by: (Signature and Printed Name)	Date	Time
Don Terrs	5-16-17	1:57		5/16/17	1357

ADVANCED TECHNOLOGY LABORATORIES
3275 Walnut Ave., Signal Hill, CA 90755
Tel: (562) 989-4045 • Fax: (562) 989-4040

CHAIN OF CUSTODY RECORD

Page 2 of 15

Instruction: Complete all shaded areas.

For Laboratory Use Only — ATL COC Ver: 20130715

Method of Transport	Sample Conditions Upon Receipt					
☐ Client ☐ ATL ☐ Fedex ☐ On Trac ☐ GSO ☐ Other	Condition	Y	N	Condition	Y	N
	1. CHILLED	☐	☐	5. # OF SAMPLES MATCH COC	☐	☐
	2. HEADSPACE (VOA)	☐	☐	6. PRESERVED	☐	☐
	3. CONTAINER INTACT	☐	☐	7. COOLER TEMP. deg C:		
	4. SEALED	☐	☐			

CUSTOMER

Company:	Address:			Tel:
	City:	State:	Zip:	Fax:

SEND REPORT TO:	SEND INVOICE TO: ☐ same as SEND REPORT TO
Attn: Email:	Attn: Email:
Company:	Company:
Address:	Address:
City: State: Zip:	City: State: Zip:

PROJECT SAMPLES

Project Name:	Quote No:	Special Instructions/Comments:
Project No.:	PO #:	
Sampler:		

Encircle or Write Requested Analysis: 8260 / 624 (Volatiles); 8015(GRO); 8015(DRO); 8270(Semi-volatiles); 8081(Organochlorine Pesticides); 8082(PCBs); 6010 / 7000(Title 22 Metals); TO-15

Encircle Sample Matrix: SOIL / SEDIMENT / SLUDGE; SOLIDS / WIPE / FILTER; WATER - DRINKING / GROUND; WATER - STORM / WASTE; AQUEOUS / LAYERED - OIL

Container: TAT; # ; Type: 1=Tedlar, 2=VOA, 3=Liter, 4=mL, 5=Jar, 6=Encore, 7=Cassette; Material: 1=Glass, 2=Plastic, 3=Metal; Preservative: 1=HCl, 2=HNO3, 3=H2SO4, 4=NaOH, 5=Zn(Ac)2, 6=NaOH+ZnAc, 7=MeOH, 8=NaHSO4, 9=DI

QA/QC: ☐ Routine ☐ Caltrans ☐ Legal ☐ RWQCB ☐ Level IV

ITEM	Lab No.	Sample Description: Sample ID / Location	Date	Time	REMARKS
1	1702036 - 8	1A-3 - 0.5	5-15	8:00	
2	- 9	1A-3 - 1.0		8:00	
3	- 10	1A-3 - 3.0		8:02	
4	- 11	1A-3 - 5.0		8:02	
5					
6	- 13	1A-4 - 0.5		8:15	
7	- 14	1A-4 - 1.0		8:15	
8	- 15	1A-4 - 3.0		8:19	
9	- 16	1A-4 - 5.0		8:19	
10					

TERMS

1. Sample receiving hours: 7:30 AM to 7:30 PM Monday - Friday; Saturday 8:00 AM to 12:00 PM
2. Samples Submitted AFTER 3:00 PM, are considered received the following Business day at 8:00 AM
3. The following turnaround time conditions apply:
   - TAT = 0 : 300% Surcharge SAME BUSINESS DAY if received by 9:00 AM
   - TAT = 1 : 100% Surcharge NEXT BUSINESS DAY (COB 5:00 PM)
   - TAT = 2 : 50% Surcharge 2ND BUSINESS DAY (COB 5:00 PM)
   - TAT = 3 : 30% Surcharge 3RD BUSINESS DAY (COB 5:00 PM)
   - TAT = 4 : 20% Surcharge 4TH BUSINESS DAY (COB 5:00 PM)
   - TAT = 5 : NO SURCHARGE 5th BUSINESS DAY (COB 5:00 PM)
4. Weekend, holiday after hours work - ask for quote.
5. Subcontract TAT is 10 - 15 business days. Projects requiring shorter TATs will incur a surcharge respective to the subcontract lab — ask for quote.
6. Liquid and solid samples will be disposed of after 45 calendar days from receipt of samples, all samples will be disposed of after 14 calendar days after receipt of samples.
7. Electronic records maintained for five (5) years from report date.
8. Hard copy reports will be disposed of after 45 calendar days from report date.
9. Storage and Report Fees:
   - Liquid & solid samples: Complimentary storage for forty-five (45) calendar days from receipt of samples; $2/sample/month if extended storage or hold is requested.
   - Air samples: Complimentary storage for ten (10) calendar days from receipt of samples; $20/ sample/week if extended storage is requested.
   - Hard copy and regenerated reports/EDDs: $42.50 per hard copy report requested; $50.00 per regenerated/reformatted report; $35 per reprocessed EDD.
10. Rush PCB/PLC samples: add 2 days to analysis TAT for extraction procedure.
11. Unpreserved samples will incur a disposal fee of $7 per sample.

As the authorized agent of the company above, I hereby purchase laboratory services from ATL as shown above and hereby guarantee payment as quoted.

Submitter Print Name _____ Signature _____

CUSTODY

Relinquished by: (Signature and Printed Name)	Date:	Time:	Received by: (Signature and Printed Name)	Date:	Time:
Dan Dow Tenes	5-16-17	1:57		5/16/17	1357
Relinquished by: (Signature and Printed Name)	Date:	Time:	Received by: (Signature and Printed Name)	Date:	Time:
Relinquished by: (Signature and Printed Name)	Date:	Time:	Received by: (Signature and Printed Name)	Date:	Time:

ADVANCED TECHNOLOGY LABORATORIES

3275 Walnut Ave., Signal Hill, CA 90755
Tel: (562) 989-4045 • Fax: (562) 989-4040

CHAIN OF CUSTODY RECORD

Page 3 of 15

Instruction: Complete all shaded areas.

For Laboratory Use Only — ATLEDC Ver: 20150715

Method of Transport		Sample Conditions Upon Receipt					
		Condition	Y	N	Condition	Y	N
☑ Client	☐ ATL	1. CHILLED	☐	☐	5. # OF SAMPLES MATCH COC	☐	☐
☐ Fedex	☐ Dextor	2. HEADSPACE (VOA)	☐	☐	6. PRESERVED	☐	☐
☐ GSO		3. CONTAINER INTACT	☐	☐	7. COOLER TEMP, deg C:		
☐ Other:		4. SEALED	☐	☐			

CUSTOMER

Company:	Address:			Tel:
	City:	State:	Zip:	Fax:

SEND REPORT TO:	SEND INVOICE TO: ☐ same as SEND REPORT TO
Attn: Email:	Attn: Email:
Company:	Company:
Address:	Address:
City: State: Zip:	City: State: Zip:

PROJECT SAMPLES

Project Name:	Quote No:	Special Instructions/Comments:
Project No.:	PO #:	
Sampler:		

Encircle or Write Requested Analysis

| ITEM | Lab No. | Sample Description: Sample ID / Location | Date | Time | 8260 / 624 (Volatiles) | 8015(GRO) | 8015(DRO) | 8270(Semi-volatiles) | [illegible] | [illegible] | 6010 / 7000(Title 22 Metals) | TO-15 | HERBICIDES | 8081 (PESTICIDES) | 8082 (PCBs) | [illegible] | [illegible] | [illegible]

ADVANCED TECHNOLOGY LABORATORIES
3275 Walnut Ave., Signal Hill, CA 90755
Tel: (562) 989-4045 • Fax: (562) 989-4040

CHAIN OF CUSTODY RECORD

Page 4 of 15

Instruction: Complete all shaded areas.

For Laboratory Use Only — ATLCOC Ver. 20130715

Method of Transport: ☐ Client ☐ ATL ☐ FedEx ☐ Contrac ☐ GSO ☐ Other:

Sample Conditions Upon Receipt

Condition	Y	N	Condition	Y	N
1. CHILLED	☐	☐	5. # OF SAMPLES MATCH COC	☐	☐
2. HEADSPACE (VOA)	☐	☐	6. PRESERVED	☐	☐
3. CONTAINER INTACT	☐	☐	7. COOLER TEMP. deg C:		
4. SEALED	☐	☐			

CUSTOMER

Company: | Address: | Tel:
City: | State: | Zip: | Fax:

SEND REPORT TO:
Attn: | Email:
Company:
Address:
City: | State: | Zip:

SEND INVOICE TO: ☐ same as SEND REPORT TO
Attn: | Email:
Company:
Address:
City: | State: | Zip:

PROJECT SAMPLES

Project Name: | Quote No: | Special Instructions/Comments:
Project No.:
Sampler: | PO #:

Encircle or Write Requested Analysis: 8260 / 624 (Volatiles); 8015(GRO); 8015(DRO); 8270(Semi-volatiles); 8081(Organochlorine Pesticides); 8082(PCBs); 6010 / 7000(Title 22 Metals); TO-15; HERBICIDES

Encircle Sample Matrix: SOIL / SEDIMENT / SLUDGE; SOLIDS / WIPE / FILTER; WATER - DRINKING / GROUND; WATER - STORM / WASTE; AQUEOUS / LAYERED - OIL

Container: #; Type: 1=Tube, 2=VOA, 3=Liter, 4=Pint, 5=Jar, 6=Bottle, 7=Canister; Material: 1=Glass, 2=Plastic, 3=Metal; Preservative: 1=HCl, 2=HNO3, 3=H2SO4, 4=NaOH, 5=Zn(Ac)2, 6=NaOH, 7=NaO3S2O3

ITEM	Lab No.	Sample ID / Location	Date	Time	8260	8015(GRO)	8015(DRO)	8270	8081	8082	6010/7000	TO-15	HERB	TAT	#	Type	Material	Preservative	REMARKS
1	1702936 -25	ZA-2 - 0.5	5-15	2:34							X			5	1	1	2	N/A	
2	-26	ZA-2 - 1.0		2:34	X	X	X	X	X	X	X		X	5	1	1	2		
3	-27	ZA-2 - 3.0		2:38							X			5	1	1	2		
4	-28	ZA2 - 5.0		2:38	X	X	X	X			X			5	1	1	2		
5																			
6	-29	5-1 - 0.5		9:47							X				1	1	2		
7	-30	5-1 - 1.0		9:47							X				1	1	2		
8	-31	5-1 - 2.0		9:47							X				1	1	2		
9	-32	5-1 - 3.0		9:47							X				1	1	2		
10																			

QA/QC: ☐ Routine ☐ Caltrans ☐ Legal ☐ RWQCB ☐ Level IV

TERMS

1. Sample receiving hours: 7:30 AM to 7:30 PM Monday - Friday, Saturday 8:00 AM to 12:00 PM.
2. Samples Submitted AFTER 3:00 PM, are considered received the following Business day at 8:00 AM.
3. The following turnaround time conditions apply:
   TAT = 0 : 300% Surcharge SAME BUSINESS DAY if received by 9:00 AM
   TAT = 1 : 100% Surcharge NEXT BUSINESS DAY (COB 5:00 PM)
   TAT = 2 : 50% Surcharge 2ND BUSINESS DAY (COB 5:00 PM)
   TAT = 3 : 35% Surcharge 3RD BUSINESS DAY (COB 5:00 PM)
   TAT = 4 : 20% Surcharge 4TH BUSINESS DAY (COB 5:00 PM)
   TAT = 5 : NO SURCHARGE 5th BUSINESS DAY (COB 5:00 PM)
4. Weekend, holiday, after-hours work - ask for quote.
5. Subcontract TAT is 10 - 15 business days. Projects requiring shorter TATs will incur a surcharge respective to the subcontract lab - ask for quote.
6. Liquid and solid samples will be disposed of after 45 calendar days from receipt of samples, air samples will be disposed of after 14 calendar days after receipt of samples.
7. Electronic records maintained for five (5) years from report date.
8. Hard copy reports will be disposed of after 45 calendar days from report date.
9. Storage and Report Fees:
   - Liquid & solid samples: Complimentary storage for forty-five (45) calendar days from receipt of samples; $2/sample/month if extended storage or hold is requested.
   - Air samples: Complimentary storage for ten (10) calendar days from receipt of samples; $20/ sample/week if extended storage is requested.
   - Hard copy and regenerated reports/EDDs: $17.50 per hard copy report requested; $50.00 per regenerate/reformat ed report; $35 per regenerated EDD.
10. Rush TCLP/STLC samples: add 2 days to analysis TAT for extraction/n procedure.
11. Unpreserved samples will incur a disposal fee of $5 per sample.

As the authorized agent of the company above, I hereby purchase laboratory services from ATL as shown above and hereby guarantee payment as quoted.

Submitter Print Name | Signature

CUSTODY

Relinquished by: (Signature and Printed Name)	Date:	Time:	Received by: (Signature and Printed Name)	Date:	Time:
Dan Terrill	5/16/17	1:57		5/16/17	13:57
Relinquished by: (Signature and Printed Name)	Date:	Time:	Received by: (Signature and Printed Name)	Date:	Time:
Relinquished by: (Signature and Printed Name)	Date:	Time:	Received by: (Signature and Printed Name)	Date:	Time:

ADVANCED TECHNOLOGY LABORATORIES

3275 Walnut Ave., Signal Hill, CA 90755
Tel: (562) 989-4045 • Fax: (562) 989-4040

CHAIN OF CUSTODY RECORD

Page 5 of 15

Instruction: Complete all shaded areas.

For Laboratory Use Only				ATLCOC Ver: 20130715		
Method of Transport	Sample Conditions Upon Receipt					
	Condition	Y	N	Condition	Y	N
☐ Client ☐ ATL ☐ Fedex ☐ OnTrac ☐ GSO ☐ Other	1. CHILLED	☐	☐	5. # OF SAMPLES MATCH COC	☐	☐
	2. HEADSPACE (VOA)	☐	☐	6. PRESERVED	☐	☐
	3. CONTAINER INTACT	☐	☐	7. COOLER TEMP. deg C		
	4. SEALED	☐	☐			

CUSTOMER

Company:	Address:			Tel:
	City:	State:	Zip:	Fax:

SEND REPORT TO:	SEND INVOICE TO: ☐ same as SEND REPORT TO
Attn: Email:	Attn: Email:
Company:	Company:
Address:	Address:
City: State: Zip:	City: State: Zip:

PROJECT SAMPLES

Project Name:	Quote No:	Special Instructions/Comments:
Project No.:	PO #:	
Sampler:		

ITEM	Lab No.	Sample Description: Sample ID / Location	Date	Time	8260 / 624 (Volatiles)	8015(GRO)	8015(DRO)	8270(Semi-volatiles)	8081(Organochlorine Pesticides)	8082(PCBs)	6010 / 7000(Title 22 Metals)	TO-15	HERBICIDES	TAT	#	Type*	Material	Preservative	REMARKS
1	1705238-33	5-2-0.5	5-15	9:55							X			5	1	1	2	N/A	
2	-34	5-2-1.0		9:55							X								
3	-35	5-2-2.0		9:55							X								
4	-36	5-2-3.0		9:55							X								
5																			
6	-37	6-1-0.5		10:07							X								
7	-38	6-1-1.0		10:07	X	X	X	X	X	X	X		X						
8	-39	6-1-3.0		10:25							X								
9	-40	6-1-5.0		10:25							X								
10																			

Encircle or Write Requested Analysis

Encircle Sample Matrix: SOIL / SEDIMENT / SLUDGE; SOLIDS / WIPE/ FILTER; WATER - DRINKING / GROUND; WATER - STORM / WASTE; AQUEOUS / LAYERED - OIL

Container: # | Type* 1-Tube; 2-vOA; 3-Liter; 4-Pint; 5-Jar; 6-Bladder; 7-Canister | Material: 1-Glass, 2-Plastic, 3-Metal | Preservative: 1-HCl; 2-HNO3; 3-H2SO4; 4-4oC; 5-Zn (Ac)2; 6-NaOH; 7-NaHSO4

QA/QC: ☐ Routine ☐ Caltrans ☐ Legal ☐ RWQCB ☐ Level IV

TERMS

1. Sample receiving hours: 7:30 AM to 7:30 PM Monday - Friday, Saturday 8:00 AM to 12:00 PM.
2. Samples Submitted AFTER 3:00 PM, are considered received the following Business day at 8:00 AM.
3. The following turnaround time conditions apply:
   - TAT = 0 : 300% Surcharge SAME BUSINESS DAY if received by 9:00 AM
   - TAT = 1 : 100% Surcharge NEXT BUSINESS DAY (COB 5:00 PM)
   - TAT = 2 : 50% Surcharge 2ND BUSINESS DAY (COB 5:00 PM)
   - TAT = 3 : 30% Surcharge 3RD BUSINESS DAY (COB 5:00 PM)
   - TAT = 4 : 20% Surcharge 4TH BUSINESS DAY (COB 5:00 PM)
   - TAT = 5 : NO SURCHARGE 5th BUSINESS DAY (COB 5:00 PM)
4. Weekend, holiday, after hours work - ask for quote.
5. Subcontract TAT is 10 - 15 business days. Projects requiring shorter TATs will incur a surcharge respective to the subcontract lab - ask for quote.
6. Liquid and solid samples will be disposed of after 45 calendar days from receipt of samples, air samples will be disposed of after 14 calendar days after receipt of samples.
7. Electronic records maintained for five (5) years from report date.
8. Hard copy reports will be disposed of after 45 calendar days from report date.
9. Storage and Report Fees:
   - Liquid & solid samples: Complimentary storage for forty-five (45) calendar days from receipt of samples; $2/sample/month if extended storage or hold is requested.
   - Air samples: Complimentary storage for ten (10) calendar days from receipt of samples; $20/ sample/week if extended storage is requested.
   - Hard copy and regenerated reports/EDDs: $17.50 per hard copy report requested; $50.00 per regenerated/reformatted/edited report $35 per reprocessed EDD.
10. Rush TCLP/STLC samples: add 2 days to analysis TAT for extraction on procedure.
11. Unanalyzed samples will incur a disposal fee of $7 per sample.

As the authorized agent of the company above, I hereby purchase laboratory services from ATL as shown above and hereby guarantee payment as quoted.

Submitter Print Name _____ Signature _____

CUSTODY

Relinquished by: (Signature and Printed Name)	Date:	Time:	Received by: (Signature and Printed Name)	Date:	Time:
Jim DeTerra	5-16-17	1:57		5/16/17	1357
Relinquished by: (Signature and Printed Name)	Date:	Time:	Received by: (Signature and Printed Name)	Date:	Time:
Relinquished by: (Signature and Printed Name)	Date:	Time:	Received by: (Signature and Printed Name)	Date:	Time:

ADVANCED TECHNOLOGY LABORATORIES

3275 Walnut Ave., Signal Hill, CA 90755
Tel: (562) 989-4045 • Fax: (562) 989-4040

CHAIN OF CUSTODY RECORD

Page 6 of 15

Instruction: Complete all shaded areas.

For Laboratory Use Only — ATLCOC Ver. 20130715

Method of Transport	Sample Conditions Upon Accept					
	Condition	Y	N	Condition	Y	N
☐ Client ☐ ATL ☐ FedEx ☐ UPS ☐ GSO ☐ Other	1. CHILLED	☐	☐	5. # OF SAMPLES MATCH COC	☐	☐
	2. HEADSPACE (VOA)	☐	☐	6. PRESERVED	☐	☐
	3. CONTAINER INTACT	☐	☐	7. COOLER TEMP, deg C:		
	4. SEALED	☐	☐			

CUSTOMER

Company:	Address:			Tel:
	City:	State:	Zip:	Fax:

SEND REPORT TO:	SEND INVOICE TO: ☐ same as SEND REPORT TO
Attn: Email:	Attn: Email:
Company:	Company:
Address:	Address:
City: State: Zip:	City: State: Zip:

PROJECT SAMPLES

Project Name:	Quote No:	Special Instructions/Comments:
Project No.:	PO #:	
Sampler:		

ITEM	Lab No.	Sample Description: Sample ID / Location	Date	Time	8260 / 624 (Volatiles)	8015(GRO)	8015(DRO)	8270(Semi-volatiles)	8081(Organochlorine Pesticides)	8082(PCBs)	6010 / 7000(Title 22 Metals)	TO-15	HERBICIDES	SOIL / SEDIMENT / SLUDGE	SOLIDS / WIPE/ FILTER	WATER - DRINKING / GROUND	WATER - STORM / WASTE	AQUEOUS / LAYERED - OIL	TAT	Container: #	Container: Type: 1=Tube, 2=VOA, 3=Liter, 4=Pint, 5=Jar, 6=Petri, 7=Canister	Container: Material: 1=Glass, 2=Plastic, 3=Metal	Preservative: 1=HCl, 2=HNO3, 3=H2SO4, 4=NaOH, 5=ZnAc2(NaOH), 6=NaOH, 7=NaAsO2	REMARKS
1	170-20356-41	6-3-0.5	5-15	10:35							X								5	1	1	2	N/A	
2	-42	6-3-1.0		10:35	X	X	X	X	X	X	X	X												
3	-43	6-3-3.0		10:38							X													
4	-44	6-3-5.0		10:38							X													
5																								
6	-45	6-4-0.5		12:07							X													
7	-46	6-4-1.0		12:07	X	X	X	X	X	X	X	X												
8	-47	6-4-3.0		12:24							X													
9	-48	6-4-5.0		12:24							X													
10																								

TERMS

1. Sample receiving hours: 7:30 AM to 7:30 PM Monday - Friday, Saturday 8:00 AM to 12:00 PM
2. Samples Submitted AFTER 3:00 PM, are considered received the following Business day at 8:00 AM.
3. The following turnaround time conditions apply:
   - TAT = 0 : 300% Surcharge SAME BUSINESS DAY if received by 9:30 AM
   - TAT = 1 : 150% Surcharge NEXT BUSINESS DAY (COB 5:00 PM)
   - TAT = 2 : 50% Surcharge 2ND BUSINESS DAY (COB 5:00 PM)
   - TAT = 3 : 30% Surcharge 3RD BUSINESS DAY (COB 5:00 PM)
   - TAT = 4 : 20% Surcharge 4TH BUSINESS DAY (COB 5:00 PM)
   - TAT = 5 : NO SURCHARGE 5th BUSINESS DAY (COB 5:00 PM)
4. Weekend, holiday, after hours work - ask for quote.
5. Subcontract TAT = 10 - 15 business days. Projects requiring shorter TAT will incur a surcharge respective to the subcontract lab - - ask for quote.
6. Liquid and solid samples will be disposed of After 45 calendar days from receipt of samples; air samples will be disposed of after 14 calendar days after receipt of samples.
7. Electronic records retained for five (5) years from report date.
8. Hard copy reports will be disposed of after 45 calendar days from report date.
9. Storage and Report Fees:
   - Liquid & solid samples: Complimentary storage for forty five (45) calendar days from receipt of samples, $2/sample/month if extended storage or hold is requested.
   - Air samples: Complimentary storage for ten (10) calendar days from receipt of samples, $20/ sample/week if extended storage is requested.
   - Hard copy and regenerated reports/EDDs: $17.50 per hard copy report requested, $50.00 per regenerated/reformatted report; $35 per reprocessed EDD
10. Rush TCLP/STLC samples: add 3 days to analysis TAT for extraction on procedure.
11. Unanalyzed samples will incur a disposal fee of $7 per sample.

As the authorized agent of the company above, I hereby purchase laboratory services from ATL as shown above and hereby guarantee payment as quoted.

Submitter Print Name _____ Signature _____

CUSTODY

Relinquished by: (Signature and Printed Name)	Date:	Time:	Received by: (Signature and Printed Name)	Date:	Time:
Dow Terry	5-16-17	1:57		5/16/17	1357
Relinquished by: (Signature and Printed Name)	Date:	Time:	Received by: (Signature and Printed Name)	Date:	Time:
Relinquished by: (Signature and Printed Name)	Date:	Time:	Received by: (Signature and Printed Name)	Date:	Time:

ADVANCED TECHNOLOGY LABORATORIES
3275 Walnut Ave., Signal Hill, CA 90755
Tel: (562) 989-4045 • Fax: (562) 989-4040

CHAIN OF CUSTODY RECORD

Instruction: Complete all shaded areas.

For Laboratory Use Only — ATLCOC Ver. 20130715

Method of Transport: ☐ Client ☐ ATL ☐ FedEx ☐ OnTrac ☐ GSO ☐ Other

Sample Conditions Upon Receipt

Condition	Y	N	Condition	Y	N
1. CHILLED	☐	☐	5. # OF SAMPLES MATCH COC	☐	☐
2. HEADSPACE (VOA)	☐	☐	6. PRESERVED	☐	☐
3. CONTAINER INTACT	☐	☐	7. COOLER TEMP. deg C:		
4. SEALED	☐	☐			

CUSTOMER

Company: | Address: | Tel:
City: | State: | Zip: | Fax:

SEND REPORT TO:
Attn: | Email:
Company:
Address:
City: | State: | Zip:

SEND INVOICE TO: ☐ same as SEND REPORT TO
Attn: | Email:
Company:
Address:
City: | State: | Zip:

PROJECT SAMPLES

Project Name: | Quote No: | Special Instructions/Comments:
Project No.:
PO #:
Sampler:

ITEM	Lab No.	Sample Description: Sample ID / Location	Date	Time	8260 / 624 (Volatiles)	8015(GRO)	8015(DRO)	8270(Semi-volatiles)	8081(Organochlorine Pesticides)	8082(PCBs)	6010 / 7000(Title 22 Metals)	TO-15	HERBICIDES
1	170 2036 -49	6-5 - 0.5	5-15	12:30							X		
2	-50	6-5-1.0		12:30							X		
3	-51	6.5-3.0		12:33	X	X	X	X	X	X	X		X
4	-52	6-5-5.0		12:33							X		
5													
6	-53	6-6-1.0		11:12							X		
7	-54	6-6-3.0		11:12							X		
8	-55	6-6-5.0		11:12							X		
9	-56	6-6-7.5		11:12							X		
10													

Encircle Sample Matrix: SOIL / SEDIMENT / SLUDGE | SOLIDS / WIPE / FILTER | WATER - DRINKING / GROUND | WATER - STORM / WASTE | AQUEOUS / LAYERED - OIL

TAT	Container #	Container Type: 1=Tube, 2=VOA, 3=Liter, 4=Pint, 5=Jar, 6=Bottle, 7=Canister	Container Material: 1=Glass, 2=Plastic, 3=Metal	Preservative: 1=HCl, 2=HNO3, 3=H2SO4, 4=4°C, 5=Zn(Ac)2 & NaOH, 6=MeOH, 7=NH4Cl, 8=DI	QA/QC: ☐ Routine ☐ Caltrans ☐ Legal ☐ RWQCB ☐ Level IV	REMARKS
5	1	1	2	N/A		
↓	↓	↓	↓	↓		

TERMS

1. Sample receiving hours: 7:30 AM to 7:30 PM Monday - Friday, Saturday 8:00 AM to 12:00 PM
2. Samples Submitted AFTER 5:00 PM, are considered received the following Business day at 8:00 AM
3. The following turnaround time conditions apply:
   - TAT = 0 : 200% Surcharge SAME BUSINESS DAY if received by 9:00 AM
   - TAT = 1 : 100% Surcharge NEXT BUSINESS DAY (COB 5:00 PM)
   - TAT = 2 : 50% Surcharge 2ND BUSINESS DAY (COB 5:00 PM)
   - TAT = 3 : 30% Surcharge 3RD BUSINESS DAY (COB 5:00 PM)
   - TAT = 4 : 20% Surcharge 4TH BUSINESS DAY (COB 5:00 PM)
   - TAT = 5 : NO SURCHARGE 5th BUSINESS DAY (COB 5:00 PM)
4. Weekend, holiday, after-hours work - ask for quote.
5. Subcontract TAT is 10 - 15 business days. Projects requiring shorter TATs will incur a surcharge respective to the subcontract lab --- ask for quote.
6. Liquid and solid samples will be disposed of after 45 calendar days from receipt of samples; air samples will be disposed of after 14 calendar days after receipt of samples.
7. Electronic records maintained for five (5) years from report date.
8. Hard copy reports will be discarded after 45 calendar days from report date.
9. Storage and Report Fees:
   - Liquid & solid samples: Complimentary storage for forty-five (45) calendar days from receipt of samples, $2/sample/month if extended storage or hold is requested.
   - Air samples: Complimentary storage for ten (10) calendar days from receipt of samples, $10/ sample/week if extended storage is requested.
   - Hard copy and regenerated reports/EDDs: $12.50 per hard copy report requested, $50.00 per regenerated/reformatted report, $35 per reprocessed EDD.
10. Rush TCLP/STLC samples: add 2 days to analysis TAT for extraction on procedure.
11. Unanalyzed samples will incur a disposal fee of $7 per sample.

As the authorized agent of the company above, I hereby purchase laboratory services from ATL as shown above and hereby guarantee payment as quoted.

Submitter Print Name | Signature

CUSTODY

Relinquished by: (Signature and Printed Name)	Date:	Time:	Received by: (Signature and Printed Name)	Date:	Time:
Don Jewes	5/15/17	1:57	FEDEX	5/16/17	1357
Relinquished by: (Signature and Printed Name)	Date:	Time:	Received by: (Signature and Printed Name)	Date:	Time:
Relinquished by: (Signature and Printed Name)	Date:	Time:	Received by: (Signature and Printed Name)	Date:	Time:

ADVANCED TECHNOLOGY LABORATORIES
3275 Walnut Ave., Signal Hill, CA 90755
Tel: (562) 989-4045 • Fax: (562) 989-4040

CHAIN OF CUSTODY RECORD

Instruction: Complete all shaded areas.

For Laboratory Use Only — ATLCOC Ver: 20130715

Method of Transport	Sample Conditions Upon Receipt					
☐ Client ☐ ATL ☐ FedEx ☐ OnTrac ☐ GSO ☐ Other	Condition	Y	N	Condition	Y	N
	1. CHILLED	☐	☐	5. # OF SAMPLES MATCH COC	☐	☐
	2. HEADSPACE (VOA)	☐	☐	6. PRESERVED	☐	☐
	3. CONTAINER INTACT	☐	☐	7. COOLER TEMP. (deg C):		
	4. SEALED	☐	☐			

CUSTOMER

Company:	Address:		Tel:
	City:	State: Zip:	Fax:

SEND REPORT TO:	SEND INVOICE TO: ☐ same as SEND REPORT TO
Attn: Email:	Attn: Email:
Company:	Company:
Address:	Address:
City: State: Zip:	City: State: Zip:

PROJECT SAMPLES

Project Name:	Quote No:	Special Instructions/Comments:
Project No.:	PO #:	
Sampler:		

ITEM	Lab No.	Sample Description: Sample ID / Location	Date	Time	8260 / 624 (Volatiles)	8015(GRO)	8015(DRO)	8270(Semi-volatiles)	8081(Organochlorine Pesticides)	8082(PCBs)	6010 / 7000(Title 22 Metals)	TO-15	HERBICIDES	SOIL / SEDIMENT / SLUDGE	SOLIDS / WIPE / FILTER	WATER - DRINKING / GROUND	WATER - STORM / WASTE	AQUEOUS / LAYERED - OIL	TAT	Container: #	Container: Type: 1-Tube; 2-VOA; 3-Liter; 4-Brass; 5-Encore; 6-Terralite; 7-Canister	Container: Material: 1-Glass; 2-Plastic; 3-Metal	Container: Preservative: 1-HCl; 2-HNO3; 3-H2SO4; 4-NaOH; 5-Zn(Ac)2; 6-NaOH+ZnAc; 7-MeOH; 8-NaHSO4; 9-Na2S2O3	REMARKS
1	1702036-57	6-7-1.0	5-15	11:19							X								5	1	1	2	1	N/A
2	-58	6-7-3.0		11:19							X													
3	-59	6-7-5.0		11:22							X													
4	-60	6-7-7.5		11:22							X													
5																								
6	-61	6-9-1.0		10:58	X						X													
7	-62	6-9-3.0		10:58	X						X													
8	-63	6-9-5.0		11:00							X													
9	-64	6-9-7.5		11:00							X													
10																								

Encircle or Write Requested Analysis

Encircle Sample Matrix

QA/QC: ☐ Routine ☐ Caltrans ☐ Legal ☐ RWQCB ☐ Level IV

TERMS

1. Sample receiving hours: 7:30 AM to 7:30 PM Monday - Friday, Saturday 8:00 AM to 12:00 PM.
2. Samples Submitted AFTER 3:00 PM, are considered received the following Business day at 8:00 AM
3. The following turnaround time conditions apply:
   - TAT = 0 : 300% Surcharge SAME BUSINESS DAY (if received by 9:00 AM
   - TAT = 1 : 100% Surcharge NEXT BUSINESS DAY (COB 5:00 PM)
   - TAT = 2 : 50% Surcharge 2ND BUSINESS DAY (COB 5:00 PM)
   - TAT = 3 : 30% Surcharge 3RD BUSINESS DAY (COB 5:00 PM)
   - TAT = 4 : 20% Surcharge 4TH BUSINESS DAY (COB 5:00 PM)
   - TAT = 5 : NO SURCHARGE 5th BUSINESS DAY (COB 5:00 PM)
4. Weekend, holiday, after hours work - ask for quote.
5. Subcontract TAT is 10 – 15 business days. Projects requiring shorter TATs will incur a surcharge respective to the subcontract lab --- ask for quote.
6. Liquid and solid samples will be disposed of after 45 calendar days from receipt of samples; air samples will be disposed of after 14 calendar days after receipt of samples.
7. Electronic records maintained for five (5) years from report date.
8. Hard copy reports will be disposed of after 45 calendar days from report date.
9. Storage and Report Fees:
   - Liquid & solid samples: Complimentary storage for forty-five (45) calendar days from receipt of samples; $2/sample/month if extended storage or RUSH is requested.
   - Air samples: Complimentary storage for ten (10) calendar days from receipt of samples; $20/ sample/week if extended storage is requested.
   - Hard copy and regenerated reports/EDDs: $17.50 per hard copy report requested, $50.00 per regenerated/reformatted report; $35 per reprocessed EDD.
10. Rush TCLP/STLC samples: add 7 days to analysis TAT for extraction on procedure.
11. Unanalyzed samples will incur a disposal fee of $7 per sample.

As the authorized agent of the company above, I hereby purchase laboratory services from ATL as shown above and hereby guarantee payment as quoted.

Submitter Print Name _____ Signature _____

CUSTODY

Relinquished by: (Signature and Printed Name) Don Terrell	Date: 5-16-17	Time: 1:57	Received by: (Signature and Printed Name)	Date: 5/16/17	Time: 1357
Relinquished by: (Signature and Printed Name)	Date:	Time:	Received by: (Signature and Printed Name)	Date:	Time:
Relinquished by: (Signature and Printed Name)	Date:	Time:	Received by: (Signature and Printed Name)	Date:	Time:

ADVANCED TECHNOLOGY LABORATORIES

3275 Walnut Ave., Signal Hill, CA 90755
Tel: (562) 989-4045 • Fax: (562) 989-4040

CHAIN OF CUSTODY RECORD

Page 9 of 15

Instruction: Complete all shaded areas.

For Laboratory Use Only				ATLCOC Ver: 20130715
Method of Transport	Sample Conditions Upon Receipt			
	Condition	Y	N	Condition	Y	N
☐ Client ☐ ATL	1. CHILLED	☐	☐	5. # OF SAMPLES MATCH COC	☐	☐
☐ FedEx ☐ On Trac	2. HEADSPACE (VOA)	☐	☐	6. PRESERVED	☐	☐
☐ GSO	3. CONTAINER INTACT	☐	☐	7. COOLER TEMP, deg C:		
☐ Other	4. SEALED	☐	☐			

CUSTOMER

Company:	Address:			Tel:
	City:	State:	Zip:	Fax:

SEND REPORT TO:	SEND INVOICE TO: ☐ same as SEND REPORT TO
Attn: Email:	Attn: Email:
Company:	Company:
Address:	Address:
City: State: Zip:	City: State: Zip:

PROJECT SAMPLES

Project Name:	Quote No:	Special Instructions/Comments:
Project No.:	PO #:	
Sampler:		

ITEM	Lab No.	Sample Description: Sample ID / Location	Date	Time	8260 / 624 (Volatiles)	8015(GRO)	8015(DRO)	8270(Semi-volatiles)	8081(Organochlorine Pesticides)	8082(PCBs)	6010 / 7000(Title 22 Metals)	TO-15	HERBICIDES	SOIL / SEDIMENT / SLUDGE	SOLIDS / WIPE / FILTER	WATER - DRINKING / GROUND	WATER - STORM / WASTE	AQUEOUS / LAYERED - OIL	TAT	Container: #	Container: Type: 1-1pint, 2-VOA, 3-Liter, 4-8oz, 5-Jar, 6-Tube, 7-Canister	Container: Material: 1-glass, 2-Plastic, 3-Metal	Preservative: 1-HCl, 2-HNO3, 3-H2SO4, 4-NaOH, 5-Zn(Ac)2, 6-Na2S2O3, 7-NaOH+ZnAc	QA/QC: ☐ Routine ☐ Caltrans ☐ Legal ☐ RWQCB ☐ Level IV — REMARKS
1	1702035-05	6-10-1.0	5-15	10:48	X						X								5	1	1	2	MA
2	-06	6-10-3.0		10:48	X						X												
3	-07	6-10-5.0		10:52							X												
4	-08	6-10-7.5		10:52							X												
5																							
6	-09	7-2-0.5		1:45	X	X	X	X	X	X	X		X										
7	-10	7-2-1.0		1:45							X												
8	-11	7-2-3.0		1:48	X	X	X	X			X												
9	-12	7-2-5.0		1:48							X												
10																							

TERMS

1. Sample receiving hours: 7:30 AM to 7:30 PM Monday - Friday; Saturday 8:00 AM to 12:00 PM.
2. Samples Submitted AFTER 3:00 PM, are considered received the following Business day at 8:00 AM.
3. The following turnaround time conditions apply:
   - TAT = 0 : 200% Surcharge SAME BUSINESS DAY if received by 9:00 AM
   - TAT = 1 : 100% Surcharge NEXT BUSINESS DAY (COB 5:00 PM)
   - TAT = 2 : 50% Surcharge 2ND BUSINESS DAY (COB 5:00 PM)
   - TAT = 3 : 30% Surcharge 3RD BUSINESS DAY (COB 5:00 PM)
   - TAT = 4 : 20% Surcharge 4TH BUSINESS DAY (COB 5:00 PM)
   - TAT = 5 : NO SURCHARGE 5th BUSINESS DAY (COB 5:00 PM)
4. Weekend, holiday, after-hours work - ask for quote.
5. Subcontract TAT is 10 - 15 business days. Projects requiring shorter TATs will incur a surcharge respective to the subcontract lab - ask for quote.
6. Aqueous and solid samples will be disposed of after 45 calendar days from receipt of samples, air samples will be disposed of after 14 calendar days after receipt of samples.
7. Electronic records maintained for three (3) years from report date.
8. Hard copy reports will be disposed of after 45 calendar days from report date.
9. Storage and Report Fees:
   - Liquid & solid samples: Complimentary storage for forty five (45) calendar days from receipt of samples, $2/sample/month of extended storage or hold is requested.
   - Air samples: Complimentary storage for ten (10) calendar days from receipt of samples, $20/ sample/week of extended storage is requested.
   - Hard copy and regenerated report/EDDs: $17.50 per hard copy report requested, $50.00 per regenerated/reformatted report, $35 per reprocessed EDD.
10. Rush TCLP/SPLP samples: add 2 days to analysis TAT for extraction on procedure.
11. Unanalyzed samples will incur a disposal fee of $7 per sample.

As the authorized agent of the company above, I hereby purchase laboratory services from ATL as shown above and hereby guarantee payment as quoted.

Submitter Print Name _____ Signature _____

CUSTODY

Relinquished by: (Signature and Printed Name)	Date:	Time:	Received by: (Signature and Printed Name)	Date:	Time:
Doug Terrell	5-16-17	1:57	FED-EX	5/16/17	1357
Relinquished by: (Signature and Printed Name)	Date:	Time:	Received by: (Signature and Printed Name)	Date:	Time:
Relinquished by: (Signature and Printed Name)	Date:	Time:	Received by: (Signature and Printed Name)	Date:	Time:

ADVANCED TECHNOLOGY LABORATORIES
3275 Walnut Ave., Signal Hill, CA 90755
Tel: (562) 989-4045 • Fax: (562) 989-4040

CHAIN OF CUSTODY RECORD

Page 10 of 15

Instruction: Complete all shaded areas.

For Laboratory Use Only — ATLCOC Ver: 20130715

Method of Transport	Sample Conditions Upon Receipt					
☐ Client ☐ ATL	Condition	Y	N	Condition	Y	N
☐ FedEx ☐ OnTrac	1. CHILLED	☐	☐	5. # OF SAMPLES MATCH COC	☐	☐
☐ GSO	2. HEADSPACE (VOA)	☐	☐	6. PRESERVED	☐	☐
☐ Other:	3. CONTAINER INTACT	☐	☐	7. COOLER TEMP, deg C		
	4. SEALED	☐	☐			

CUSTOMER

Company:	Address:			Tel:
	City:	State:	Zip:	Fax:

SEND REPORT TO:	SEND INVOICE TO: ☐ same as SEND REPORT TO
Attn: Email:	Attn: Email:
Company:	Company:
Address:	Address:
City: State: Zip:	City: State: Zip:

PROJECT SAMPLES

Project Name:	Quote No:	Special Instructions/Comments:
Project No.:	PO #:	
Sampler:		

ITEM	Lab No.	Sample Description: Sample ID / Location	Date	Time	8260 / 624 (Volatiles)	8015(GRO)	8015(DRO)	8270(Semi-volatiles)	8081(Organochlorine Pesticides)	8082(PCBs)	6010 / 7000(Title 22 Metals)	TO-15	HERBICIDES	TAT	Container: #	Container: Type	Container: Material	Container: Preservative	REMARKS
1	1702136-73	7-3 -0.5	5-15	1:35							X			5	1	1	2	MA	
2	-74	7-3- 1.0		1:35	X	X	X	X	X	X	X		X						
3	-75	7-3 -3.0		1:38							X								
4	-76	7-3 -5.0		1:38	X	X	X	X			X								
5																			
6	-77	7-4 - 0.5		1:13	X	X	X	X	X	X	X		X						
7	-78	7-4 -1.0		1:13							X								
8	-79	7-4-3.0		1:15	X	X	X	X			X								
9	-80	7-4-5.0		1:15							X								
10																			

Encircle or Write Requested Analysis

Encircle Sample Matrix: SOIL / SEDIMENT / SLUDGE; SOLIDS / WIPE / FILTER; WATER - DRINKING / GROUND; WATER - STORM / WASTE; AQUEOUS / LAYERED - OIL

Container: Type: 1=Tube; 2=VOA; 3=Liter; 4=Pint; 5=4oz; 6=Brass; 7=Canister. Material: 1=Glass; 2=Plastic; 3=Metal. Preservative: 1=HCl; 2=HNO3; 3=H2SO4; 4=4°C; 5=Zn(Ac)2; 6=NaOH; 7=NA2S2O3

QA/QC: ☐ Routine ☐ Caltrans ☐ Legal ☐ RWQCB ☐ Level IV

TERMS

1. Sample receiving hours: 7:30 AM to 7:30 PM Monday - Friday, Saturday 8:00 AM to 12:00 PM
2. Samples Submitted AFTER 3:00 PM, are considered received the following Business day at 8:00 AM
3. The following turnaround time conditions apply:
   - TAT = 0 : 100% Surcharge SAME BUSINESS DAY if received by 9:00 AM
   - TAT = 1 : 100% Surcharge NEXT BUSINESS DAY (COB 5:00 PM)
   - TAT = 2 : 50% Surcharge 2ND BUSINESS DAY (COB 5:00 PM)
   - TAT = 3 : 30% Surcharge 3RD BUSINESS DAY (COB 5:00 PM)
   - TAT = 4 : 20% Surcharge 4TH BUSINESS DAY (COB 5:00 PM)
   - TAT = 5 : NO SURCHARGE 5TH BUSINESS DAY (COB 5:00 PM)
4. Weekends, holiday, after-hours work - ask for quote.
5. Subcontract TAT is 10 - 15 business days. Projects requiring shorter TATs will incur a surcharge respective to the subcontract lab - ask for quote.
6. Liquid and solid samples will be disposed of after 45 calendar days from receipt of samples, air samples will be disposed of after 14 calendar days after receipt of samples.
7. Electronic records maintained for five (5) years from report date.
8. Hard copy reports will be disposed of after 45 calendar days from report date.
9. Storage and Report Fees:
   - Liquid & solid samples: Complimentary storage for forty five (45) calendar days from receipt of samples, $2/sample/month if extended storage or hold is requested.
   - Air samples: Complimentary storage for ten (10) calendar days from receipt of samples, $20/ sample/week if extended storage is requested.
   - Hard copy and regenerated reports/EDDs: $17.50 per hard copy report requested, $50.00 per regenerated/reformatted report, $35 per reprocessed EDD.
10. Rush TCLP/STLC samples: add 2 days to analysis TAT for extraction on prior date.
11. Unanalyzed samples will incur a disposal fee of $7 per sample.

As the authorized agent of the company above, I hereby purchase laboratory services from ATL as shown above and hereby guarantee payment as quoted.

Submitter Print Name _____ Signature _____

CUSTODY

Relinquished by: (Signature and Printed Name)	Date:	Time:	Received by: (Signature and Printed Name)	Date:	Time:
Quan Tran	5-16-17	1:57	FEDEX	5/16/17	1357
Relinquished by: (Signature and Printed Name)	Date:	Time:	Received by: (Signature and Printed Name)	Date:	Time:
Relinquished by: (Signature and Printed Name)	Date:	Time:	Received by: (Signature and Printed Name)	Date:	Time:

ADVANCED TECHNOLOGY LABORATORIES

3275 Walnut Ave., Signal Hill, CA 90755
Tel: (562) 989-4045 • Fax: (562) 989-4040

CHAIN OF CUSTODY RECORD

Page 11 of 15

Instruction: Complete all shaded areas.

For Laboratory Use Only — ATL COC Ver. 20130715

Method of Transport: ☐ Client ☐ ATL ☐ FedEx ☐ OnTrac ☐ GSO ☐ Other

Sample Conditions Upon Receipt

Condition	Y	N	Condition	Y	N
1. CHILLED	☐	☐	5. # OF SAMPLES MATCH COC	☐	☐
2. HEADSPACE (VOA)	☐	☐	6. PRESERVED	☐	☐
3. CONTAINER INTACT	☐	☐	7. COOLER TEMP, deg C:		
4. SEALED	☐	☐			

CUSTOMER

Company: | Address: | Tel:
City: | State: | Zip: | Fax:

SEND REPORT TO:
Attn: | Email:
Company:
Address:
City: | State: | Zip:

SEND INVOICE TO: ☐ same as SEND REPORT TO
Attn: | Email:
Company:
Address:
City: | State: | Zip:

PROJECT SAMPLES

Project Name:
Project No.:
Sampler:
Quote No:
PO #:
Special Instructions/Comments:

ITEM	Lab No.	Sample Description: Sample ID / Location	Date	Time	8260 / 624 (Volatiles)	8015(GRO)	8015(DRO)	8270(Semi-volatiles)	8081(Organochlorine Pesticides)	8082(PCBs)	6010 / 7000(Title 22 Metals)	TO-15	HERBICIDES	SOIL / SEDIMENT / SLUDGE	SOLIDS / WIPE / FILTER	WATER - DRINKING / GROUND	WATER - STORM / WASTE	AQUEOUS / LAYERED - OIL	TAT	Container: #	Container: Type	Container: Material	Preservative	REMARKS
1	1703076-21	6-8-~~05~~ 1.0	5-15	11:29							X								5	1	1	2	N/A	
2	-22	6-8-~~10~~ 3.0		11:29							X									1	1			
3	-23	6-8-~~300~~ 5.0		11:33							X									1	1			
4	-24	6-8-~~507~~ 7.5		11:33							X									1	1			
5																								
6	-25	6-~~2~~-0.5	5-16	7:17					X	X	X		X							1				
7	-26	6-~~2~~-1.0		7:17							X									1				
8	-27	6-~~2~~-3.0		7:19	X	X	X	X			X									1				
9	-28	6-~~2~~-5.0		9:19							X									1				
10																								

Encircle or Write Requested Analysis | Encircle Sample Matrix | Container | QA/QC: ☐ Routine ☐ Caltrans ☐ Legal ☐ RWQCB ☐ Level IV

TERMS

1. Sample receiving hours: 7:30 AM to 7:30 PM Monday - Friday, Saturday 8:00 AM to 12:00 PM.
2. Samples Submitted AFTER 3:00 PM, are considered received the following business day at 8:00 AM.
3. The following turnaround time conditions apply:
   TAT = 0 : 100% Surcharge SAME BUSINESS DAY (if received by 9:00 AM)
   TAT = 1 : 100% Surcharge NEXT BUSINESS DAY (COB 5:00 PM)
   TAT = 2 : 50% Surcharge 2ND BUSINESS DAY (COB 5:00 PM)
   TAT = 3 : 30% Surcharge 3RD BUSINESS DAY (COB 5:00 PM)
   TAT = 4 : 20% Surcharge 4TH BUSINESS DAY (COB 5:00 PM)
   TAT = 5 : NO SURCHARGE 5th BUSINESS DAY (COB 5:00 PM)
4. Weekend, holiday, after-hours work - ask for quote.
5. Subcontract TAT is 10 - 15 business days. Projects requiring shorter TATs will incur a surcharge respective to the subcontract lab - ask for quote.
6. Liquid and solid samples will be disposed of after 45 calendar days from receipt of samples; 10 samples will be disposed of after 14 calendar days after receipt of samples.
7. Electronic records maintained for five (5) years from report date.
8. Hard copy reports will be disposed of after 45 calendar days from report date.
9. Storage and Report Fees:
   - Liquid & solid samples: Complementary storage for forty-five (45) calendar days from receipt of samples; $2/surcharge/month if extended storage or hold is requested.
   - Air samples: Complementary storage for ten (10) calendar days from receipt of samples; $10/ sample/week if extended storage is requested.
   - Hard copy and regenerated reports/EDDs: $17.50 per hard copy report requested; $50.00 per regenerated/reformatted report; $35 per regenerated EDD.
10. Rush TCLP/STLC samples: add 2 days to analysis TAT for extraction on procedure.
11. Unanalyzed samples within or a disposal fee of $7 per sample.

As the authorized agent of the company above, I hereby purchase laboratory services from ATL as shown above and hereby guarantee payment as quoted.

Submitter Print Name | Signature

CUSTODY

Relinquished by: (Signature and Printed Name)	Date:	Time:	Received by: (Signature and Printed Name)	Date:	Time:
Dan Torres	5-16-17	1:57	FEDEX	5/16/17	1357
Relinquished by: (Signature and Printed Name)	Date:	Time:	Received by: (Signature and Printed Name)	Date:	Time:
Relinquished by: (Signature and Printed Name)	Date:	Time:	Received by: (Signature and Printed Name)	Date:	Time:

ADVANCED TECHNOLOGY LABORATORIES
3275 Walnut Ave., Signal Hill, CA 90755
Tel: (562) 989-4045 • Fax: (562) 989-4040

CHAIN OF CUSTODY RECORD

Instruction: Complete all shaded areas.

For Laboratory Use Only — ATLCOC Ver: 20130715

Method of Transport	Sample Conditions Upon Receipt					
☐ Client ☐ ATL	Condition	Y	N	Condition	Y	N
☐ FedEx ☐ Contract	1. CHILLED	☐	☐	5. # OF SAMPLES MATCH COC	☐	☐
☐ GSO	2. HEADSPACE (VOA)	☐	☐	6. PRESERVED	☐	☐
☐ Other	3. CONTAINER INTACT	☐	☐	7. COOLER TEMP. deg C:		
	4. SEALED	☐	☐			

CUSTOMER

Company: | Address: | Tel:
City: | State: | Zip: | Fax:

SEND REPORT TO:
Attn: | Email:
Company:
Address:
City: | State: | Zip:

SEND INVOICE TO: ☐ same as SEND REPORT TO
Attn: | Email:
Company:
Address:
City: | State: | Zip:

PROJECT SAMPLES

Project Name: | Quote No: | Special Instructions/Comments:
Project No.: | PO #:
Sampler:

ITEM	Lab No.	Sample Description: Sample ID / Location	Date	Time	8260 / 624 (Volatiles)	8015(GRO)	8015(DRO)	8270(Semi-volatiles)	8081(Organochlorine Pesticides)	8082(PCBs)	6010 / 7000(Title 22 Metals)	TO-15	HERBICIDES	TAT	Container: #	Type: 1=Tedlar, 2=VOA, 3=Liter, 4=Pint, 5=Liter, 6=Tedlar, 7=Canister	Material: 1=Glass, 2=Plastic, 3=Metal	Preservative: 1=HCl, 2=HNO3, 3=H2SO4, 4=4C, 5=Unpreserved, 6=NaOH, 7=NaHSO4	QA/QC: ☐ Routine ☐ Caltrans ☐ Legal ☐ RWQCB ☐ Level IV	REMARKS
1	1702036-89	7-1-0.5	5/16	7:42	X	X	X	X			X			5	1	1	2	N/A		
2	-90	7-1-1.0		7:42	X	X	X	X	X	X	X		X							
3		7-1-3.0									X									
4		7-1-5.0									X									
5																				
6	-91	7-5-0.5		8:11							X									
7	-92	7-5-1.0		8:11	X	X	X	X	X	X	X		X							
8	-93	7-5-3.0		8:13							X									
9	-94	7.5-5.0		8:13	X	X	X	X			X									
10																				

TERMS

1. Sample receiving hours: 7:30 AM to 7:30 PM Monday - Friday, Saturday 8:00 AM to 12:00 PM
2. Samples Submitted AFTER 5:00 PM, are considered received the following business day at 8:00 AM
3. The following turnaround time conditions apply.
   TAT = 0 : 300% Surcharge SAME BUSINESS DAY if received by 7:00 AM
   TAT = 1 : 100% Surcharge NEXT BUSINESS DAY (COB 5:00 PM)
   TAT = 2 : 50% Surcharge 2ND BUSINESS DAY (COB 5:00 PM)
   TAT = 3 : 30% Surcharge 3RD BUSINESS DAY (COB 5:00 PM)
   TAT = 4 : 20% Surcharge 4TH BUSINESS DAY (COB 5:00 PM)
   TAT = 5 : NO SURCHARGE 5th BUSINESS DAY (COB 5:00 PM)
4. Weekend, holiday, after hours work - ask for quote.
5. Subcontract TAT is 10 - 15 business days. Projects requiring shorter TATs will incur a surcharge respective to the subcontract lab --- ask for quote.
6. Liquid and solid samples will be disposed of after 14 calendar days from receipt of samples, or samples will be disposed of after 14 calendar days after receipt of samples.
7. Electronic records maintained for five (5) years from report date.
8. Hard copy reports will be disposed of after 45 calendar days from report date.
9. Storage and Report Fees:
   - Liquid & solid samples: Complimentary storage for forty five (45) calendar days from receipt of samples. $2/sample/month of extended storage or hold is requested.
   - Air samples: Complimentary storage for ten (10) calendar days from receipt of samples; $30/ sample/week if extended storage is requested.
   Hard copy and regenerated reports/EDDs: $17.50 per hard copy report requested; $50.00 per regenerated/reformat of report; $15 per report issued EDD.
10. Rush TCLP/STLC samples: add 2 days to analysis TAT for extraction to be performed.
11. Unanalyzed samples will incur a disposal fee of $7 per sample.

As the authorized agent of the company above, I hereby purchase laboratory services from ATL as shown above and hereby guarantee payment as quoted.

Submitter Print Name | Signature

CUSTODY

Relinquished by: (Signature and Printed Name)	Date	Time	Received by: (Signature and Printed Name)	Date	Time
Dow Tevis	5-16-17	1:57		5/16/17	1357

ADVANCED TECHNOLOGY LABORATORIES

3275 Walnut Ave., Signal Hill, CA 90755
Tel: (562) 989-4045 • Fax: (562) 989-4040

CHAIN OF CUSTODY RECORD

Page 13 of 15

Instruction: Complete all shaded areas.

For Laboratory Use Only				ATLCOC Ver: 20130715
Method of Transport	Sample Conditions Upon Receipt			
	Condition	Y	N	Condition	Y	N
☐ Client ☐ ATL ☐ Fedex ☐ Contract ☐ GSO ☐ Other:	1. CHILLED	☐	☐	5. # OF SAMPLES MATCH COC	☐	☐
	2. HEADSPACE (VOA)	☐	☐	6. PRESERVED	☐	☐
	3. CONTAINER INTACT	☐	☐	7. COOLER TEMP, deg C		
	4. SEALED	☐	☐			

CUSTOMER

Company:	Address:			Tel:
	City:	State:	Zip:	Fax:

SEND REPORT TO:	SEND INVOICE TO: ☐ same as SEND REPORT TO
Attn: Email:	Attn: Email:
Company:	Company:
Address:	Address:
City: State: Zip:	City: State: Zip:

PROJECT SAMPLES

Project Name:	Quote No:	Special Instructions/Comments:
Project No.:	PO #:	
Sampler:		

ITEM	Lab No.	Sample Description: Sample ID / Location	Date	Time	8260 / 624 (Volatiles)	8015(GRO)	8015(DRO)	8270(Semi-volatiles)	8081(Organochlorine Pesticides)	8082(PCBs)	6010 / 7000(Title 22 Metals)	TO-15	HERBICIDES	SOIL / SEDIMENT / SLUDGE	SOLIDS / WIPE / FILTER	WATER - DRINKING / GROUND	WATER - STORM / WASTE	AQUEOUS / LAYERED - OIL	TAT	Container: #	Container: Type	Container: Material	Preservative	REMARKS
1	1703036 -95	7-6-0.5	5/16	8:34	X	X	X	X	X	X	X		X						5	1	1	2	N/A	
2	-96	7-6-1.0		8:34							X													
3	-97	7-6-3.0		8:36							X													
4	-98	7-6-5.0		8:36	X	X	X	X			X													
5																								
6	-99	7-7-0.5		8:23							X													
7	-AA	7-7-1.0		8:23					X	X	X		X											
8	-AB	7-7-3.0		8:25	X	X	X	X			X													
9	-AC	7-7-5.0		8:25	X	X	X	X			X													
10																								

QA/QC
☐ Routine
☐ Caltrans
☐ Legal
☐ RWQCB
☐ Level IV

TERMS

1. Sample receiving Hours: 7:30 AM to 7:30 PM Monday - Friday, Saturday 8:00 AM to 12:00 PM.
2. Samples Submitted AFTER 3:00 PM, are considered received the following Business day at 8:00 AM.
3. The following turnaround time conditions apply:
   - TAT = 0 : 100% Surcharge SAME BUSINESS DAY if received by 9:00 AM
   - TAT = 1 : 100% Surcharge NEXT BUSINESS DAY (COB 5:00 PM)
   - TAT = 2 : 50% Surcharge 2ND BUSINESS DAY (COB 5:00 PM)
   - TAT = 3 : 30% Surcharge 3RD BUSINESS DAY (COB 5:00 PM)
   - TAT = 4 : 20% Surcharge 4TH BUSINESS DAY (COB 5:00 PM)
   - TAT = 5 : NO SURCHARGE 5th BUSINESS DAY (COB 5:00 PM)
4. Weekend, holiday, after-hours work - ask for quote.
5. Subcontract TAT is 10 - 15 business days. Projects requiring shorter TATs will incur a surcharge respective to the subcontract lab - ask for quote.
6. Liquid and solid samples will be disposed of after 45 calendar days from receipt of samples, no samples will be disposed of after 14 calendar days after receipt of samples.
7. Electronic records maintained for five (5) years from report date.
8. Hard copy reports will be disposed of after 45 calendar days from report date.
9. Storage and Report Fees:
   - Liquid & solid samples: Complimentary storage for forty-five (45) calendar days from receipt of samples; $2/sample/month if extended storage or hold is requested.
   - Air samples: Complimentary storage for ten (10) calendar days from receipt of samples; $20/sample/week if extended storage is requested.
   - Hard copy and regenerated reports/EDDs: $12.50 per hard copy report requested; $50.00 per regenerated/reformatted report; $35 per reprocessed EDD.
10. Rush TCLP/STLC samples: add 2 days to analysis TAT for extraction on procedure.
11. Unanalyzed samples will incur a disposal fee of $7 per sample.

As the authorized agent of the company above, I hereby purchase laboratory services from ATL as shown above and hereby guarantee payment as quoted.

Submitter Print Name _____ Signature _____

CUSTODY

Relinquished by: (Signature and Printed Name)	Date:	Time:	Received by: (Signature and Printed Name)	Date:	Time:
Dan Tevis	5-16-17	1:57	FedEx	5/16/17	1357
Relinquished by: (Signature and Printed Name)	Date:	Time:	Received by: (Signature and Printed Name)	Date	Time
Relinquished by: (Signature and Printed Name)	Date:	Time:	Received by: (Signature and Printed Name)	Date:	Time:

ADVANCED TECHNOLOGY LABORATORIES
3275 Walnut Ave., Signal Hill, CA 90755
Tel: (562) 989-4045 • Fax: (562) 989-4040

CHAIN OF CUSTODY RECORD

Page 14 of 15

Instruction: Complete all shaded areas.

For Laboratory Use Only — ATLCOC Ver: 20130715

Method of Transport	Sample Conditions Upon Receipt					
☐ Client ☐ ATL ☐ Fedex ☐ OnTrac ☐ GSO ☐ Other	Condition	Y	N	Condition	Y	N
	1. CHILLED	☐	☐	5. # OF SAMPLES MATCH COC	☐	☐
	2. HEADSPACE (VOA)	☐	☐	6. PRESERVED	☐	☐
	3. CONTAINER INTACT	☐	☐	7. COOLER TEMP, deg C:		
	4. SEALED	☐	☐			

CUSTOMER

Company: | Address: | Tel:
City: | State: | Zip: | Fax:

SEND REPORT TO:
Attn: | Email:
Company:
Address:
City: | State: | Zip:

SEND INVOICE TO: ☐ same as SEND REPORT TO
Attn: | Email:
Company:
Address:
City: | State: | Zip:

PROJECT SAMPLES

Project Name: | Quote No: | Special Instructions/Comments:
Project No.: | PO #:
Sampler:

Encircle or Write Requested Analysis: 8260 / 624 (Volatiles); 8015(GRO); 8015(DRO); 8270(Semi-volatiles); 8081(Organochlorine Pesticides); 8082(PCBs); 6010 / 7000(Title 22 Metals); TO-15; HERBICIDES; LEAD

Encircle Sample Matrix: SOIL / SEDIMENT / SLUDGE; SOLIDS / WIPE / FILTER; WATER - DRINKING / GROUND; WATER - STORM / WASTE; AQUEOUS / LAYERED - OIL

TAT | Container: # | Type: 1-Tube; 2-VOA; 3-Liter; 4-Pint; 5-Jar; 6-Tedlar; 7-Cylinder | Material: 1-Glass; 2-Plastic; 3-Metal | Preservative: 1-HCl; 2-HNO3; 3-H2SO4; 4-NaOH; 5-Zn (Ac)2; 6-NaOH+ZnAc; 7-NaHSO4 | QA/QC: ☐ Routine ☐ Caltrans ☐ Legal ☐ RWQCB ☐ Level IV | REMARKS

ITEM	Lab No.	Sample ID / Location	Date	Time	8260	8015(GRO)	8015(DRO)	8270	8081	8082	6010	TO-15	HERBICIDES	LEAD	SOIL	SOLIDS	WATER-DRINKING	WATER-STORM	AQUEOUS	TAT	#	Type	Material	Preservative	QA/QC	REMARKS
1	17053[illegible]-AD	8-1-0.5	5/16	9:17										X												
2	-AE	8-1-1.0		9:17										X												
3	-AF	8-1-3.0		9:20										X												
4	-AG	8-1-5.0		9:20										X												
5																										
6	-AH	8-2-0.5		9:08										X												
7	-AI	8-2-1.0		9:08										X												
8	-AJ	8-2-3.0		9:11										X												
9	-AK	8-2-5.0		9:11										X												
10																										

TERMS

1. Sample receiving hours: T-10 AM to 7:30 PM Monday - Friday; Saturday 8:00 AM to 12:00 PM.
2. Samples Submitted AFTER 3:00 PM, are considered received the following Business day at 8:00 AM.
3. The following turnaround time conditions apply:
   - TAT = 0 : 300% Surcharge SAME BUSINESS DAY if received by 9:00 AM
   - TAT = 1 : 100% Surcharge NEXT BUSINESS DAY (COB 5:00 PM)
   - TAT = 2 : 50% Surcharge 2ND BUSINESS DAY (COB 5:00 PM)
   - TAT = 3 : 35% Surcharge 3RD BUSINESS DAY (COB 5:00 PM)
   - TAT = 4 : 25% Surcharge 4TH BUSINESS DAY (COB 5:00 PM)
   - TAT = 5 : NO SURCHARGE 5th BUSINESS DAY (COB 5:00 PM)
4. Weekend, holiday, after-hours work - ask for quote.
5. Subcontract TAT is 10 - 15 business days. Projects requiring shorter TATs will incur a surcharge respective to the subcontract lab -- ask for quote.
6. Liquid and solid samples will be disposed of after 45 calendar days from receipt of samples; air samples will be disposed of after 14 calendar days after receipt of samples.
7. Electronic records maintained for five (5) years from report date.
8. Hard copy reports will be disposed of after 45 calendar days from report date.
9. Storage and Report Fees:
   - Liquid & solid samples: Complimentary storage for forty-five (45) calendar days from receipt of samples; $2/sample/month if extended storage or hold is requested.
   - Air samples: Complimentary storage for ten (10) calendar days from receipt of samples; $30/ sample/week if extended storage is requested.
   - Hard copy and regenerated report/EDDs: $17.50 per hard copy report requested; $50.00 per regenerated/reformatted report, $15 per reprocessed EDD.
10. Rush TCLP/STLC samples: add 2 days to analysis TAT for extraction procedure.
11. Unpreserved samples will incur a disposal fee of $7 per sample.

As the authorized agent of the company above, I hereby purchase laboratory services from ATL as shown above and hereby guarantee payment as quoted.

Submitter Print Name | Signature

CUSTODY

Relinquished by: (Signature and Printed Name)	Date:	Time:	Received by: (Signature and Printed Name)	Date:	Time:
DonTerres	5-16-17	1:57	FEDEX	5/16/17	1357

ADVANCED TECHNOLOGY LABORATORIES

3275 Walnut Ave., Signal Hill, CA 90755
Tel: (562) 989-4045 • Fax: (562) 989-4040

CHAIN OF CUSTODY RECORD

Page 15 of 15

Instruction: Complete all shaded areas.

For Laboratory Use Only — ATLCOC Ver. 20130715

Method of Transport	Sample Conditions Upon Receipt					
☐ Client ☐ ATL	Condition	Y	N	Condition	Y	N
☐ FedEx ☐ Courier	1. CHILLED	☐	☐	5. # OF SAMPLES MATCH COC	☐	☐
☐ GSO	2. HEADSPACE (VOA)	☐	☐	6. PRESERVED	☐	☐
☐ Other:	3. CONTAINER INTACT	☐	☐	7. COOLER TEMP. deg C:		
	4. SEALED	☐	☐			

CUSTOMER

Company: | Address: | Tel:
City: | State: | Zip: | Fax:

SEND REPORT TO:
Attn: | Email:
Company:
Address:
City: | State: | Zip:

SEND INVOICE TO: ☐ same as SEND REPORT TO
Attn: | Email:
Company:
Address:
City: | State: | Zip:

PROJECT SAMPLES

Project Name:
Project No.:
Sampler:
Quote No:
PO #:
Special Instructions/Comments:

ITEM	Lab No.	Sample Description: Sample ID / Location	Date	Time	8260 / 624 (Volatiles)	8015(GRO)	8015(DRO)	8270(Semi-volatiles)	8081(Organochlorine Pesticides)	8082(PCBs)	6010 / 7000(Title 22 Metals)	TO-15	HERBICIDES	SOIL / SEDIMENT / SLUDGE	SOLIDS / WIPE / FILTER	WATER - DRINKING / GROUND	WATER - STORM / WASTE	AQUEOUS / LAYERED - OIL	TAT	Container: #	Type: 1=Tedlar, 2=VOA, 3=Liter, 4=Pint: Sulfur, 6=Teflon, 7=Canister	Material: 1=Glass, 2=Plastic, 3=Metal	Preservative: 1=HCl, 2=HNO3, 3=H2SO4, 4=4C Zn(Ac)2, 6=NaOH, 7=NaAsO2	QA/QC: ☐ Routine ☐ Caltrans ☐ Legal ☐ RWQCB ☐ Level IV — REMARKS
1	1702036 - 01	8-3- 0.5	5/16	8:52							X								5	1	1	2	NA	
2	- 02	8-3- 1.0	↓	8:52	X	X	X	X	X	X	X		X						↓	↓	↓	↓	↓	
3	- 03	8-3- 3.0		8:55							X													
4	- 04	8-3-5.0	↓	8:55	X	X	X	X			X								↓	↓	↓	↓	↓	
5																								
6																								
7																								
8																								
9																								
10																								

TERMS

1. Sample receiving hours: 7:30 AM to 7:30 PM Monday - Friday; Saturday 8:00 AM to 12:00 PM.
2. Samples Submitted AFTER 3:00 PM, are considered received the following Business day at 8:00 AM.
3. The following turnaround time conditions apply:
   TAT = 0 : 300% Surcharge SAME BUSINESS DAY if received by 5:00 AM
   TAT = 1 : 300% Surcharge NEXT BUSINESS DAY (COB 5:00 PM)
   TAT = 2 : 50% Surcharge 2ND BUSINESS DAY (COB 5:00 PM)
   TAT = 3 : 35% Surcharge 3RD BUSINESS DAY (COB 5:00 PM)
   TAT = 4 : 20% Surcharge 4TH BUSINESS DAY (COB 5:00 PM)
   TAT = 5 : NO SURCHARGE 5th BUSINESS DAY (COB 5:00 PM)
4. Weekend, holiday, after hours work - ask for quote.
5. Subcontract TAT is 10 - 15 business days. Projects requiring shorter TATs will incur a surcharge respective to the subcontract lab — ask for quote.
6. Liquid and solid samples will be disposed of after 45 calendar days from receipt of samples; air samples will be disposed of after 14 calendar days after receipt of samples.
7. Electronic records maintained for five (5) years from report date.
8. Hard copy reports will be disposed of after 45 calendar days from report date.
9. Storage and Report Fees:
   Liquid & solid samples: Complimentary storage for thirty five (45) calendar days from receipt of samples. $2/sample/month of extended storage or hold is requested.
   Air samples: Complimentary storage for ten (10) calendar days from receipt of samples; $2/sample/week if extended storage is requested.
   Hard copy and regenerated reports/EDDs: $17.50 per hard copy report requested; $50.00 per regenerated/reformatted report $35 per reprocessed EDD.
10. Rush TCLP/STLC samples: add 2 days to analysis TAT for extraction per procedure.
11. Unanalyzed samples will incur a disposal fee of $7 per sample.

As the authorized agent of the company above, I hereby purchase laboratory services from ATL as shown above and hereby guarantee payment as quoted.

Submitter Print Name | Signature

CUSTODY

Relinquished by: (Signature and Printed Name)	Date:	Time:	Received by: (Signature and Printed Name)	Date:	Time:
Dan Torres	5-16-17	1:57		5/16/17	357
Relinquished by: (Signature and Printed Name)	Date:	Time:	Received by: (Signature and Printed Name)	Date:	Time:
Relinquished by: (Signature and Printed Name)	Date:	Time:	Received by: (Signature and Printed Name)	Date:	Time:

Dominic Mata

From: Naresh Bellana [naresh@haieng.com]
Sent: Friday, May 26, 2017 5:10 PM
To: Rachelle Arada
Cc: Dominic Mata; Michael Leonard
Subject: LAC-17-001, Sixth St PARC - Additional Lab Tests

Hi Rachelle & Dominic,

We would like to assign the additional lab tests as per following table. I highlighted the samples which need attention earlier than others in the table.

HAI Sample ID	ATL Sample ID	Required Lab Testing	Notes
1A-1-0.5	1702036-01	STLC Cadmium TCLP Cadmium Hexavalent Chromium STLC Lead TCLP Lead	
1A-1-1.0	1702036-02	STLC Lead TCLP Lead	
1A-1-3.0	1702036-03	Hexavalent Chromium STLC Lead TCLP Lead	
1A-2-0.5	1702036-05	STLC Lead TCLP Lead	
1A-3-0.5	1702036-09	STLC Lead TCLP Lead	
1A-3-1.0	1702036-10	STLC Lead TCLP Lead	
1A-4-0.5	1702036-13	STLC Lead TCLP Lead	
5-1-1.0	1702036-30	STLC Lead TCLP Lead	
5-1-2.0	1702036-31	STLC Lead TCLP Lead	
5-2-3.0	1702036-36	STLC Lead TCLP Lead	
6-2-0.5	1702036-85	STLC Lead TCLP Lead	HIGHER PRIORITY
6-3-1.0	1702036-42	STLC Barium TCLP Barium STLC Cadmium TCLP Cadmium Hexavalent Chromium STLC Copper STLC Lead TCLP Lead STLC Zinc	HIGHER PRIORITY
6-3-3.0	1702036-43	STLC Lead TCLP Lead	HIGHER PRIORITY
6-4-1.0	1702036-46	STLC Arsenic TCLP Arsenic	

		STLC Lead TCLP Lead	
6-5-0.5	1702036-49	STLC Cadmium TCLP Cadmium Hexavalent Chromium STLC Lead TCLP Lead	
6-5-1.0	1702036-50	STLC Lead TCLP Lead	
6-8-1.0	1702036-81	STLC Lead TCLP Lead	
6-8-7.5	1702036-84	STLC Mercury TCLP Mercury	
6-9-3.0	1702036-62	STLC Antimony STLC Copper STLC Lead TCLP Lead	
6-10-1.0	1702036-65	STLC Lead TCLP Lead	
6-10-3.0	1702036-66	STLC Cadmium TCLP Cadmium STLC Lead TCLP Lead	
7-1-0.5	1702036-89	STLC Copper	
7-1-1.0	1702036-90	STLC Copper STLC Lead	
7-3-0.5	1702036-73	STLC Lead	
7-4-0.5	1702036-77	STLC Lead	
8-1-0.5	1702036-AD	STLC Copper STLC Lead	
8-1-1.0	1702036-AE	STLC Copper STLC Lead	
8-3-3.0	1702036-AN	STLC Cadmium TCLP Cadmium STLC Lead	
8-3-5.0	1702036-AO	Hexavalent Chromium	
9-1-0.5	1702042-01	STLC Lead DI-WET Lead TCLP Lead pH	
9-1-1.0	1702042-02	STLC Lead DI-WET Lead TCLP Lead	
9-2-0.5	1702042-05	STLC Lead DI-WET Lead TCLP Lead	
9-2-1.0	1702042-06	STLC Lead DI-WET Lead TCLP Lead pH	
9-3-0.5	1702042-07	STLC Lead DI-WET Lead	

		TCLP Lead	

Please let us know if you have any questions.

Thanking you,

Sincerely,

Naresh Bellana, MS, PE
Senior Staff Engineer

Hushmand Associates, Inc.
250 Goddard
Irvine, CA 92618

p. (949) 777-1266
d. (949) 777-1275
f. (949) 777-1276

25 Years of Service Excellence

ADVANCED TECHNOLOGY LABORATORIES

June 13, 2017

Naresh Bellana
Hushmand Associates, Inc.
250 Goddard
Irvine, CA 92618
Tel: (949) 777-1266
Fax:(949) 777-1276

ELAP No.: 1838
CSDLAC No.: 10196
ORELAP No.: CA300003
TCEQ No. : T104704502

Re: ATL Work Order Number : 1702036
Client Reference : 6th St Bridge, LAC-17-001

Enclosed are the results for sample(s) received on May 16, 2017 by Advanced Technology Laboratories. The sample(s) are tested for the parameters as indicated on the enclosed chain of custody in accordance with applicable laboratory certifications. The laboratory results contained in this report specifically pertains to the sample(s) submitted.

Thank you for the opportunity to serve the needs of your company. If you have any questions, please feel free to contact me or your Project Manager.

Sincerely,

Eddie Rodriguez
Laboratory Director

The cover letter and the case narrative are an integral part of this analytical report and its absence renders the report invalid. Test results contained within this data package meet the requirements of applicable state-specific certification programs. The report cannot be reproduced without written permission from the client and Advanced Technology Laboratories.

Certificate of Analysis

Hushmand Associates, Inc.	Project Number : 6th St Bridge, LAC-17-001
250 Goddard	Report To : Naresh Bellana
Irvine , CA 92618	Reported : 06/13/2017

SUMMARY OF SAMPLES

Sample ID	Laboratory ID	Matrix	Date Sampled	Date Received
7-4-0.5	1702036-77	Soil	5/15/17 13:13	5/16/17 13:57
7-1-1.0	1702036-90	Soil	5/16/17 7:42	5/16/17 13:57
8-1-0.5	1702036-AD	Soil	5/16/17 9:17	5/16/17 13:57
8-1-1.0	1702036-AE	Soil	5/16/17 9:17	5/16/17 13:57
8-3-3.0	1702036-AN	Soil	5/16/17 8:55	5/16/17 13:57

Certificate of Analysis

Hushmand Associates, Inc.	Project Number : 6th St Bridge, LAC-17-001
250 Goddard	Report To : Naresh Bellana
Irvine , CA 92618	Reported : 06/13/2017

Client Sample ID 7-4-0.5

Lab ID: 1702036-77

TCLP Metals by ICP-AES EPA 6010B **Analyst: GO**

Analyte	Result (mg/L)	PQL (mg/L)	Dilution	Batch	Prepared	Date/Time Analyzed	Notes
Lead	ND	0.25	5	B7F0208	06/10/2017	06/12/17 10:17	D1

Certificate of Analysis

Hushmand Associates, Inc.	Project Number : 6th St Bridge, LAC-17-001
250 Goddard	Report To : Naresh Bellana
Irvine , CA 92618	Reported : 06/13/2017

Client Sample ID 7-1-1.0

Lab ID: 1702036-90

TCLP Metals by ICP-AES EPA 6010B **Analyst: GO**

Analyte	Result (mg/L)	PQL (mg/L)	Dilution	Batch	Prepared	Date/Time Analyzed	Notes
Lead	**0.47**	0.25	5	B7F0191	06/09/2017	06/09/17 13:03	D1

Certificate of Analysis

Hushmand Associates, Inc.	Project Number : 6th St Bridge, LAC-17-001
250 Goddard	Report To : Naresh Bellana
Irvine , CA 92618	Reported : 06/13/2017

Client Sample ID 8-1-0.5

Lab ID: 1702036-AD

TCLP Metals by ICP-AES EPA 6010B **Analyst: GO**

Analyte	Result (mg/L)	PQL (mg/L)	Dilution	Batch	Prepared	Date/Time Analyzed	Notes
Lead	**0.38**	0.25	5	B7F0191	06/09/2017	06/09/17 13:04	D1

Certificate of Analysis

Hushmand Associates, Inc.	Project Number : 6th St Bridge, LAC-17-001
250 Goddard	Report To : Naresh Bellana
Irvine , CA 92618	Reported : 06/13/2017

Client Sample ID 8-1-1.0

Lab ID: 1702036-AE

TCLP Metals by ICP-AES EPA 6010B **Analyst: GO**

Analyte	Result (mg/L)	PQL (mg/L)	Dilution	Batch	Prepared	Date/Time Analyzed	Notes
Lead	**0.33**	0.25	5	B7F0191	06/09/2017	06/09/17 13:05	D1

Certificate of Analysis

Hushmand Associates, Inc.	Project Number : 6th St Bridge, LAC-17-001
250 Goddard	Report To : Naresh Bellana
Irvine , CA 92618	Reported : 06/13/2017

Client Sample ID 8-3-3.0

Lab ID: 1702036-AN

TCLP Metals by ICP-AES EPA 6010B

Analyst: GO

Analyte	Result (mg/L)	PQL (mg/L)	Dilution	Batch	Prepared	Date/Time Analyzed	Notes
Lead	ND	0.25	5	B7F0039	06/02/2017	06/02/17 16:45	

Certificate of Analysis

Hushmand Associates, Inc.	Project Number : 6th St Bridge, LAC-17-001
250 Goddard	Report To : Naresh Bellana
Irvine , CA 92618	Reported : 06/13/2017

QUALITY CONTROL SECTION

TCLP Metals by ICP-AES EPA 6010B - Quality Control

Analyte	Result (mg/L)	PQL (mg/L)	MDL (mg/L)	Spike Level	Source Result	% Rec	% Rec Limits	RPD	RPD Limit	Notes
Batch B7F0039 - EPA 3010A_S										
Blank (B7F0039-BLK1)					Prepared: 6/2/2017 Analyzed: 6/2/2017					
Arsenic	ND	0.050	0.0067							
Barium	ND	0.050	0.0008							
Cadmium	ND	0.050	0.0002							
Lead	ND	0.050	0.0028							
Blank (B7F0039-BLK2)					Prepared: 6/2/2017 Analyzed: 6/2/2017					
Arsenic	ND	0.050	0.0067							
Barium	ND	0.050	0.0008							
Cadmium	ND	0.050	0.0002							
Lead	ND	0.050	0.0028							
LCS (B7F0039-BS1)					Prepared: 6/2/2017 Analyzed: 6/2/2017					
Arsenic	0.977571	0.050	0.0067	1.00000		97.8	80 - 120			
Barium	1.01658	0.050	0.0008	1.00000		102	80 - 120			
Cadmium	0.962616	0.050	0.0002	1.00000		96.3	80 - 120			
Lead	1.01106	0.050	0.0028	1.00000		101	80 - 120			
Duplicate (B7F0039-DUP1)			**Source: 1702036-85**		Prepared: 6/2/2017 Analyzed: 6/2/2017					
Arsenic	ND	0.25	0.033		0.036402			NR	20	
Barium	0.149775	0.25	0.0040		0.153491			2.45	20	
Cadmium	0.001654	0.25	0.0008		0.000933			55.7	20	R
Lead	ND	0.25	0.014		ND			NR	20	
Duplicate (B7F0039-DUP2)			**Source: 1702042-07**		Prepared: 6/2/2017 Analyzed: 6/2/2017					
Arsenic	0.057904	0.25	0.033		0.042137			31.5	20	
Barium	0.846218	0.25	0.0040		0.873311			3.15	20	
Cadmium	0.001558	0.25	0.0008		1.3244E-3			16.2	20	
Lead	ND	0.25	0.014		ND			NR	20	
Matrix Spike (B7F0039-MS1)			**Source: 1702036-85**		Prepared: 6/2/2017 Analyzed: 6/2/2017					
Arsenic	2.45172	0.25	0.033	2.50000	0.036402	96.6	74 - 123			
Barium	2.54620	0.25	0.0040	2.50000	0.153491	95.7	76 - 117			
Cadmium	2.32535	0.25	0.0008	2.50000	0.000933	93.0	73 - 115			
Lead	14.7721	0.25	0.014	2.50000	ND	591	78 - 109			M1
Matrix Spike (B7F0039-MS2)			**Source: 1702042-07**		Prepared: 6/2/2017 Analyzed: 6/2/2017					
Arsenic	2.57287	0.25	0.033	2.50000	0.042137	101	74 - 123			
Barium	3.38545	0.25	0.0040	2.50000	0.873311	100	76 - 117			
Cadmium	2.47920	0.25	0.0008	2.50000	1.3244E-3	99.1	73 - 115			
Lead	2.45343	0.25	0.014	2.50000	ND	98.1	78 - 109			

Certificate of Analysis

Hushmand Associates, Inc.	Project Number : 6th St Bridge, LAC-17-001
250 Goddard	Report To : Naresh Bellana
Irvine , CA 92618	Reported : 06/13/2017

TCLP Metals by ICP-AES EPA 6010B - Quality Control (cont'd)

Analyte	Result (mg/L)	PQL (mg/L)	MDL (mg/L)	Spike Level	Source Result	% Rec	% Rec Limits	RPD	RPD Limit	Notes
Batch B7F0039 - EPA 3010A_S (continued)										
Matrix Spike Dup (B7F0039-MSD1)			**Source: 1702036-85**		Prepared: 6/2/2017 Analyzed: 6/2/2017					
Arsenic	2.49366	0.25	0.033	2.50000	0.036402	98.3	74 - 123	1.70	20	
Barium	2.51892	0.25	0.0040	2.50000	0.153491	94.6	76 - 117	1.08	20	
Cadmium	2.32480	0.25	0.0008	2.50000	0.000933	93.0	73 - 115	0.0239	20	
Lead	2.35424	0.25	0.014	2.50000	ND	94.2	78 - 109	145	20	R

Certificate of Analysis

Hushmand Associates, Inc.	Project Number : 6th St Bridge, LAC-17-001
250 Goddard	Report To : Naresh Bellana
Irvine , CA 92618	Reported : 06/13/2017

TCLP Metals by ICP-AES EPA 6010B - Quality Control

Analyte	Result (mg/L)	PQL (mg/L)	MDL (mg/L)	Spike Level	Source Result	% Rec	% Rec Limits	RPD	RPD Limit	Notes
Batch B7F0191 - EPA 3010A_S										
Blank (B7F0191-BLK1)					Prepared: 6/9/2017 Analyzed: 6/9/2017					
Arsenic	ND	0.050	0.0067							
Barium	ND	0.050	0.0008							
Cadmium	ND	0.050	0.0002							
Lead	ND	0.050	0.0028							
LCS (B7F0191-BS1)					Prepared: 6/9/2017 Analyzed: 6/9/2017					
Arsenic	0.930352	0.050	0.0067	1.00000		93.0	80 - 120			
Barium	0.983390	0.050	0.0008	1.00000		98.3	80 - 120			
Cadmium	0.948554	0.050	0.0002	1.00000		94.9	80 - 120			
Lead	0.942529	0.050	0.0028	1.00000		94.3	80 - 120			
Duplicate (B7F0191-DUP1)			**Source: 1702205-01**		Prepared: 6/9/2017 Analyzed: 6/9/2017					
Arsenic	ND	0.25	0.033		ND			NR	20	
Barium	0.521614	0.25	0.0040		0.470568			10.3	20	
Cadmium	ND	0.25	0.0008		0.000762			NR	20	
Lead	ND	0.25	0.014		0.014590			NR	20	
Matrix Spike (B7F0191-MS1)			**Source: 1702205-01**		Prepared: 6/9/2017 Analyzed: 6/9/2017					
Arsenic	2.43350	0.25	0.033	2.50000	ND	97.3	74 - 123			
Barium	2.87516	0.25	0.0040	2.50000	0.470568	96.2	76 - 117			
Cadmium	2.36058	0.25	0.0008	2.50000	0.000762	94.4	73 - 115			
Lead	2.37502	0.25	0.014	2.50000	0.014590	94.4	78 - 109			
Matrix Spike Dup (B7F0191-MSD1)			**Source: 1702205-01**		Prepared: 6/9/2017 Analyzed: 6/9/2017					
Arsenic	2.28181	0.25	0.033	2.50000	ND	91.3	74 - 123	6.43	20	
Barium	2.79617	0.25	0.0040	2.50000	0.470568	93.0	76 - 117	2.79	20	
Cadmium	2.30293	0.25	0.0008	2.50000	0.000762	92.1	73 - 115	2.47	20	
Lead	2.28449	0.25	0.014	2.50000	0.014590	90.8	78 - 109	3.89	20	

Certificate of Analysis

Hushmand Associates, Inc.	Project Number : 6th St Bridge, LAC-17-001
250 Goddard	Report To : Naresh Bellana
Irvine , CA 92618	Reported : 06/13/2017

TCLP Metals by ICP-AES EPA 6010B - Quality Control

Analyte	Result (mg/L)	PQL (mg/L)	MDL (mg/L)	Spike Level	Source Result	% Rec	% Rec Limits	RPD	RPD Limit	Notes
Batch B7F0208 - EPA 3010A_S										
Blank (B7F0208-BLK1)					Prepared: 6/10/2017 Analyzed: 6/12/2017					
Arsenic	ND	0.050	0.0067							
Barium	ND	0.050	0.0008							
Cadmium	ND	0.050	0.0002							
Lead	ND	0.050	0.0028							
LCS (B7F0208-BS1)					Prepared: 6/10/2017 Analyzed: 6/12/2017					
Arsenic	0.944084	0.050	0.0067	1.00000		94.4	80 - 120			
Barium	0.998103	0.050	0.0008	1.00000		99.8	80 - 120			
Cadmium	0.942086	0.050	0.0002	1.00000		94.2	80 - 120			
Lead	0.974535	0.050	0.0028	1.00000		97.5	80 - 120			
Duplicate (B7F0208-DUP1)			**Source: 1702036-77RE1**		Prepared: 6/10/2017 Analyzed: 6/12/2017					
Arsenic	ND	0.25	0.033		ND			NR	20	
Barium	0.363792	0.25	0.0040		0.377100			3.59	20	
Cadmium	0.008575	0.25	0.0008		0.008645			0.818	20	
Lead	0.032722	0.25	0.014		ND			NR	20	
Matrix Spike (B7F0208-MS1)			**Source: 1702036-77RE1**		Prepared: 6/10/2017 Analyzed: 6/12/2017					
Arsenic	2.56052	0.25	0.033	2.50000	ND	102	74 - 123			
Barium	2.89084	0.25	0.0040	2.50000	0.377100	101	76 - 117			
Cadmium	2.51738	0.25	0.0008	2.50000	0.008645	100	73 - 115			
Lead	2.53775	0.25	0.014	2.50000	ND	102	78 - 109			
Matrix Spike Dup (B7F0208-MSD1)			**Source: 1702036-77RE1**		Prepared: 6/10/2017 Analyzed: 6/12/2017					
Arsenic	2.47015	0.25	0.033	2.50000	ND	98.8	74 - 123	3.59	20	
Barium	2.83853	0.25	0.0040	2.50000	0.377100	98.5	76 - 117	1.83	20	
Cadmium	2.47678	0.25	0.0008	2.50000	0.008645	98.7	73 - 115	1.63	20	
Lead	2.47801	0.25	0.014	2.50000	ND	99.1	78 - 109	2.38	20	

Certificate of Analysis

Hushmand Associates, Inc.	Project Number : 6th St Bridge, LAC-17-001
250 Goddard	Report To : Naresh Bellana
Irvine , CA 92618	Reported : 06/13/2017

Notes and Definitions

R	RPD value outside acceptance criteria. Calculation is based on raw values.
M1	Matrix spike recovery outside of acceptance limit. The analytical batch was validated by the laboratory control sample.
D1	Sample required dilution due to possible matrix interference.
ND	Analyte is not detected at or above the Practical Quantitation Limit (PQL). When client requests quantitation against MDL, analyte is not detected at or above the Method Detection Limit (MDL)
PQL	Practical Quantitation Limit
MDL	Method Detection Limit
NR	Not Reported
RPD	Relative Percent Difference
CA2	CA-ELAP (CDPH)
OR1	OR-NELAP (OSPHL)
TX1	TX-NELAP (TCEQ)

Notes:
(1) The reported MDL and PQL are based on prep ratio variation and analytical dilution.
(2) The suffix [2C] of specific analytes signifies that the reported result is taken from the instrument's second column.
(3) Results are wet unless otherwise specified.

Dominic Mata

From: Naresh Bellana [naresh@haieng.com]
Sent: Tuesday, June 06, 2017 12:18 PM
To: Dominic Mata
Cc: customer.relations@atlglobal.com; Rachelle Arada
Subject: RE: Completed Results/Invoice - 6th St Bridge, LAC 17-001 (ATL# 1702036)

Hi Dominic & Rachelle,

I would like to add few more tests as shown below:

HAI Sample ID	ATL Sample ID	Required Lab Testing
7-1-1.0	1702036-90	TCLP Lead
7-4-0.5	1702036-77	TCLP Lead
8-1-0.5	1702036-AD	TCLP Lead
8-1-1.0	1702036-AE	TCLP Lead
8-3-3.0	1702036-AN	TCLP Lead

Please let us know if you have any questions.

Thanking you,

Sincerely,

Naresh Bellana, MS, PE
Senior Staff Engineer

Hushmand Associates, Inc.
250 Goddard
Irvine, CA 92618

p. (949) 777-1266
d. (949) 777-1275
f. (949) 777-1276

25 Years of Service Excellence

From: Dominic Mata [mailto:dominic@atlglobal.com]
Sent: Monday, June 05, 2017 3:27 PM
To: Naresh Bellana
Cc: customer.relations@atlglobal.com
Subject: Completed Results/Invoice - 6th St Bridge, LAC 17-001 (ATL# 1702036)

Hi Naresh,

Please find your completed results and invoice for the above project attached. If I can further assist, please let me know. Thanks.

Dominic Mata
Project Coordinator

March 27, 2018

Naresh Bellana
Hushmand Associates, Inc.
250 Goddard
Irvine, CA 92618
Tel: (949) 777-1266
Fax:(949) 777-1276

ELAP No.: 1838
CSDLAC No.: 10196
ORELAP No.: CA300003

Re: ATL Work Order Number : 1702039

Client Reference : 6th St. , LAC-17-001

Enclosed are the results for sample(s) received on May 16, 2017 by Advanced Technology Laboratories. The sample(s) are tested for the parameters as indicated on the enclosed chain of custody in accordance with applicable laboratory certifications. The laboratory results contained in this report specifically pertains to the sample(s) submitted.

Thank you for the opportunity to serve the needs of your company. If you have any questions, please feel free to contact me or your Project Manager.

Sincerely,



Eddie Rodriguez

Laboratory Director

The cover letter and the case narrative are an integral part of this analytical report and its absence renders the report invalid. Test results contained within this data package meet the requirements of applicable state-specific certification programs. The report cannot be reproduced without written permission from the client and Advanced Technology Laboratories.

Hushmand Associates, Inc.	Project Number : 6th St. , LAC-17-001
250 Goddard	Report To : Naresh Bellana
Irvine , CA 92618	Reported : 03/27/2018

SUMMARY OF SAMPLES

Sample ID	Laboratory ID	Matrix	Date Sampled	Date Received
2A3-15'	1702039-01	Air	5/16/17 10:17	5/16/17 13:56
2A-3-10'	1702039-02	Air	5/16/17 10:27	5/16/17 13:56
2A-3-5'	1702039-03	Air	5/16/17 10:32	5/16/17 13:56
2A-1-15'	1702039-04	Air	5/16/17 10:50	5/16/17 13:56
2A-1-10'	1702039-05	Air	5/16/17 10:51	5/16/17 13:56
2A-1-5'	1702039-06	Air	5/16/17 10:56	5/16/17 13:56
2A-2-15'	1702039-07	Air	5/16/17 11:17	5/16/17 13:56
2A-2-10'	1702039-08	Air	5/16/17 11:17	5/16/17 13:56
2A-2-5'	1702039-09	Air	5/16/17 11:12	5/16/17 13:56
2A-2-5' Dup	1702039-10	Air	5/16/17 11:21	5/16/17 13:56
2A-AM	1702039-11	Air	5/16/17 11:33	5/16/17 13:56
6-AM	1702039-12	Air	5/16/17 11:53	5/16/17 13:56
7-4-5'	1702039-13	Air	5/16/17 12:12	5/16/17 13:56
7-4-5' Dup	1702039-14	Air	5/16/17 12:24	5/16/17 13:56
7-1-5'	1702039-15	Air	5/16/17 12:13	5/16/17 13:56
7-3-5'	1702039-16	Air	5/16/17 12:20	5/16/17 13:56
7-AM	1702039-17	Air	5/16/17 12:31	5/16/17 13:56
7-AM Dup	1702039-18	Air	5/16/17 12:31	5/16/17 13:56
8-3 Dup	1702039-19	Air	5/16/17 12:51	5/16/17 13:56

CASE NARRATIVE

The samples for TO-15 and Methane analyses were subcontracted to Air Technology Laboratories .

Air TECHNOLOGY Laboratories, Inc.

March 26, 2018

LA Cert #04140
EPA Methods TO3, TO14A, TO15, 25C/3C, RSK-175
TX Cert T104704450-14-6
EPA Methods TO14A, TO15
UT Cert CA0133332015-3
EPA Methods TO3, TO14A, TO15, RSK-175

Advanced Technology Laboratories
ATTN: Rachelle Arada
3275 Walnut Ave.
Signal Hill, CA 90755

LABORATORY TEST RESULTS

Project Reference: 1702039
Lab Number: I052202-01/19

Enclosed are **revised** results for sample(s) received 5/22/17 by Air Technology Laboratories. This revision replaces the report dated 6/05/17 in its entirety. Samples were received intact. Analyses were performed according to specifications on the chain of custody provided with the sample(s).

Report Narrative:

- Report revised to display results in units of ug/m3 for EPA TO15, per client's request.
- Unless otherwise noted in the report, sample analyses were performed within method performance criteria and meet all requirements of the TNI Standards.
- The enclosed results relate only to the sample(s).

ATL appreciates the opportunity to provide testing services to your company. If you have any questions regarding these results, please call me at (626) 964-4032.

Sincerely,

Mark Johnson
Operations Manager
MJohnson@AirTechLabs.com

Enclosures

Note: The cover letter is an integral part of this analytical report.

Client: Advanced Technology Laboratories
Attn: Rachelle Arada
Project Name: NA
Project No.: 1702039
Date Received: 05/22/17
Matrix: Air
Reporting Units: ug/m3

EPA Method TO15

Lab No.:	I052202-01		I052202-02		I052202-03		I052202-04	
Client Sample I.D.:	1702039-01 / 2A-3-15'		1702039-02 / 2A-3-10'		1702039-03 / 2A-3-5'		1702039-04 / 2A-1-15'	
Date/Time Sampled:	5/16/17 10:17		5/16/17 10:27		5/16/17 10:32		5/16/17 10:50	
Date/Time Analyzed:	5/30/17 16:06		5/30/17 16:46		5/30/17 17:26		5/30/17 18:06	
QC Batch No.:	170530MS2A1		170530MS2A1		170530MS2A1		170530MS2A1	
Analyst Initials:	DT		DT		DT		DT	
Dilution Factor:	1.7		1.7		1.7		1.7	
ANALYTE	Result ug/m3	RL ug/m3	Result ug/m3	RL ug/m3	Result ug/m3	RL ug/m3	Result ug/m3	RL ug/m3
Dichlorodifluoromethane (12)	ND	8.3	ND	8.6	ND	8.3	ND	8.3
Chloromethane	ND	7.0	ND	7.2	ND	7.0	ND	7.0
1,2-Cl-1,1,2,2-F ethane (114)	ND	12	ND	12	ND	12	ND	12
Vinyl Chloride	ND	4.3	ND	4.5	ND	4.3	ND	4.3
Bromomethane	ND	6.5	ND	6.8	ND	6.5	ND	6.5
Chloroethane	ND	4.4	ND	4.6	ND	4.4	ND	4.4
Trichlorofluoromethane (11)	21	9.5	27	9.8	25	9.5	ND	9.5
1,1-Dichloroethene	ND	6.7	ND	6.9	ND	6.7	ND	6.7
Carbon Disulfide	ND	26	ND	27	ND	26	300	26
1,1,2-Cl 1,2,2-F ethane (113)	ND	13	ND	13	ND	13	ND	13
Acetone	ND	20	ND	21	ND	20	66	20
Methylene Chloride	ND	5.9	ND	6.1	ND	5.9	ND	5.9
t-1,2-Dichloroethene	ND	6.7	ND	6.9	ND	6.7	ND	6.7
1,1-Dichloroethane	ND	6.8	ND	7.1	ND	6.8	ND	6.8
Vinyl Acetate	ND	30	ND	31	ND	30	ND	30
c-1,2-Dichloroethene	ND	6.7	ND	6.9	ND	6.7	ND	6.7
2-Butanone	ND	5.0	ND	5.1	9.3	5.0	34	5.0
t-Butyl Methyl Ether (MTBE)	ND	6.1	ND	6.3	ND	6.1	ND	6.1
Chloroform	ND	8.2	ND	8.5	ND	8.2	ND	8.2
1,1,1-Trichloroethane	24	9.2	25	9.5	20	9.2	63	9.2
Carbon Tetrachloride	ND	11	ND	11	ND	11	ND	11
Benzene	ND	5.4	ND	5.6	ND	5.4	5.6	5.4
1,2-Dichloroethane	ND	6.8	ND	7.1	ND	6.8	ND	6.8
Trichloroethene	ND	9.1	ND	9.4	ND	9.1	ND	9.1
1,2-Dichloropropane	ND	7.8	ND	8.1	ND	7.8	ND	7.8
Bromodichloromethane	ND	11	ND	12	ND	11	ND	11
c-1,3-Dichloropropene	ND	7.6	ND	7.9	ND	7.6	ND	7.6
4-Methyl-2-Pentanone	ND	6.9	ND	7.1	ND	6.9	ND	6.9
Toluene	9.8	6.3	ND	6.6	ND	6.3	12	6.3
t-1,3-Dichloropropene	ND	7.6	ND	7.9	ND	7.6	ND	7.6

18501 E. Gale Avenue, Suite 130 ♦ City of Industry, CA 91748 ♦ Ph: (626) 964-4032 ♦ Fx: (626) 964-5832

Client: Advanced Technology Laboratories
Attn: Rachelle Arada
Project Name: NA
Project No.: 1702039
Date Received: 05/22/17
Matrix: Air
Reporting Units: ug/m3

EPA Method TO15

Lab No.:	I052202-01		I052202-02		I052202-03		I052202-04	
Client Sample I.D.:	1702039-01 / 2A-3-15'		1702039-02 / 2A-3-10'		1702039-03 / 2A-3-5'		1702039-04 / 2A-1-15'	
Date/Time Sampled:	5/16/17 10:17		5/16/17 10:27		5/16/17 10:32		5/16/17 10:50	
Date/Time Analyzed:	5/30/17 16:06		5/30/17 16:46		5/30/17 17:26		5/30/17 18:06	
QC Batch No.:	170530MS2A1		170530MS2A1		170530MS2A1		170530MS2A1	
Analyst Initials:	DT		DT		DT		DT	
Dilution Factor:	1.7		1.7		1.7		1.7	
ANALYTE	Result ug/m3	RL ug/m3	Result ug/m3	RL ug/m3	Result ug/m3	RL ug/m3	Result ug/m3	RL ug/m3
1,1,2-Trichloroethane	ND	9.2	ND	9.5	ND	9.2	ND	9.2
Tetrachloroethene	29	11	28	12	25	11	360	11
2-Hexanone	ND	6.9	ND	7.1	ND	6.9	ND	6.9
Dibromochloromethane	ND	14	ND	15	ND	14	ND	14
1,2-Dibromoethane	ND	13	ND	13	ND	13	ND	13
Chlorobenzene	ND	7.8	ND	8.0	ND	7.8	ND	7.8
Ethylbenzene	ND	7.3	ND	7.6	ND	7.3	ND	7.3
p,&m-Xylene	13	7.3	ND	7.6	ND	7.3	ND	7.3
o-Xylene	ND	7.3	ND	7.6	8.1	7.3	20	7.3
Styrene	ND	7.2	ND	7.4	ND	7.2	ND	7.2
Bromoform	ND	17	ND	18	ND	17	ND	17
1,1,2,2-Tetrachloroethane	ND	23	ND	24	ND	23	ND	23
Benzyl Chloride	ND	8.7	ND	9.0	ND	8.7	ND	8.7
4-Ethyl Toluene	ND	8.3	ND	8.6	ND	8.3	ND	8.3
1,3,5-Trimethylbenzene	ND	17	ND	17	ND	17	ND	17
1,2,4-Trimethylbenzene	ND	17	ND	17	ND	17	ND	17
1,3-Dichlorobenzene	ND	10	ND	10	ND	10	ND	10
1,4-Dichlorobenzene	ND	10	ND	10	ND	10	ND	10
1,2-Dichlorobenzene	ND	10	ND	10	ND	10	ND	10
1,2,4-Trichlorobenzene	ND	25	ND	26	ND	25	ND	25
Hexachlorobutadiene	ND	18	ND	19	ND	18	ND	18
Naphthalene	ND	44	ND	46	ND	44	ND	44

ND = Not Detected (below RL)
RL = Reporting Limit

Reviewed/Approved By: _____ Date 3/26/18
Mark Johnson
Operations Manager

The cover letter is an integral part of this analytical report

AirTECHNOLOGY Laboratories, Inc.
18501 E. Gale Avenue, Suite 130 ♦ City of Industry, CA 91748 ♦ Ph: (626) 964-4032 ♦ Fx: (626) 964-5832

Client: Advanced Technology Laboratories
Attn: Rachelle Arada
Project Name: NA
Project No.: 1702039
Date Received: 05/22/17
Matrix: Air
Reporting Units: ug/m3

EPA Method TO15

Lab No.:	I052202-05		I052202-06		I052202-07		I052202-08	
Client Sample I.D.:	1702039-05 / 2A-1-10'		1702039-06 / 2A-1-5'		1702039-07 / 2A-2-15'		1702039-08 / 2A-2-10'	
Date/Time Sampled:	5/16/17 10:51		5/16/17 10:56		5/16/17 11:17		5/16/17 11:17	
Date/Time Analyzed:	5/30/17 18:46		6/1/17 17:38		6/1/17 18:19		5/30/17 20:51	
QC Batch No.:	170530MS2A1		170601MS2A1		170601MS2A1		170530MS2A1	
Analyst Initials:	DT		DT		DT		DT	
Dilution Factor:	1.7		1.7		1.7		1.7	
ANALYTE	Result ug/m3	RL ug/m3	Result ug/m3	RL ug/m3	Result ug/m3	RL ug/m3	Result ug/m3	RL ug/m3
Dichlorodifluoromethane (12)	ND	8.3	ND	8.3	ND	8.3	ND	8.3
Chloromethane	ND	7.0	ND	7.0	ND	7.0	ND	7.0
1,2-Cl-1,1,2,2-F ethane (114)	ND	12	ND	12	ND	12	ND	12
Vinyl Chloride	ND	4.3	ND	4.3	ND	4.3	ND	4.3
Bromomethane	ND	6.5	ND	6.5	ND	6.5	ND	6.5
Chloroethane	ND	4.4	ND	4.4	ND	4.4	ND	4.4
Trichlorofluoromethane (11)	ND	9.5	ND	9.5	ND	9.5	ND	9.5
1,1-Dichloroethene	ND	6.7	ND	6.7	ND	6.7	ND	6.7
Carbon Disulfide	120	26	27	26	ND	26	230	26
1,1,2-Cl 1,2,2-F ethane (113)	ND	13	ND	13	ND	13	ND	13
Acetone	50	20	33	20	25	20	50	20
Methylene Chloride	ND	5.9	ND	5.9	ND	5.9	6.3	5.9
t-1,2-Dichloroethene	ND	6.7	ND	6.7	ND	6.7	ND	6.7
1,1-Dichloroethane	ND	6.8	ND	6.8	ND	6.8	ND	6.8
Vinyl Acetate	ND	30	ND	30	ND	30	ND	30
c-1,2-Dichloroethene	ND	6.7	ND	6.7	ND	6.7	ND	6.7
2-Butanone	32	5.0	21	5.0	10	5.0	51	5.0
t-Butyl Methyl Ether (MTBE)	ND	6.1	ND	6.1	ND	6.1	ND	6.1
Chloroform	ND	8.2	ND	8.2	ND	8.2	ND	8.2
1,1,1-Trichloroethane	53	9.2	85	9.2	110	9.2	200	9.2
Carbon Tetrachloride	ND	11	ND	11	ND	11	ND	11
Benzene	ND	5.4	6.4	5.4	ND	5.4	ND	5.4
1,2-Dichloroethane	ND	6.8	ND	6.8	ND	6.8	ND	6.8
Trichloroethene	ND	9.1	ND	9.1	ND	9.1	ND	9.1
1,2-Dichloropropane	ND	7.8	ND	7.8	ND	7.8	ND	7.8
Bromodichloromethane	ND	11	ND	11	ND	11	ND	11
c-1,3-Dichloropropene	ND	7.6	ND	7.6	ND	7.6	ND	7.6
4-Methyl-2-Pentanone	ND	6.9	ND	6.9	ND	6.9	ND	6.9
Toluene	8.5	6.3	28	6.3	9.8	6.3	9.1	6.3
t-1,3-Dichloropropene	ND	7.6	ND	7.6	ND	7.6	ND	7.6

18501 E. Gale Avenue, Suite 130 ♦ City of Industry, CA 91748 ♦ Ph: (626) 964-4032 ♦ Fx: (626) 964-5832

Client: Advanced Technology Laboratories
Attn: Rachelle Arada
Project Name: NA
Project No.: 1702039
Date Received: 05/22/17
Matrix: Air
Reporting Units: ug/m3

EPA Method TO15

Lab No.:	I052202-05		I052202-06		I052202-07		I052202-08	
Client Sample I.D.:	1702039-05 / 2A-1-10'		1702039-06 / 2A-1-5'		1702039-07 / 2A-2-15'		1702039-08 / 2A-2-10'	
Date/Time Sampled:	5/16/17 10:51		5/16/17 10:56		5/16/17 11:17		5/16/17 11:17	
Date/Time Analyzed:	5/30/17 18:46		6/1/17 17:38		6/1/17 18:19		5/30/17 20:51	
QC Batch No.:	170530MS2A1		170601MS2A1		170601MS2A1		170530MS2A1	
Analyst Initials:	DT		DT		DT		DT	
Dilution Factor:	1.7		1.7		1.7		1.7	
ANALYTE	Result ug/m3	RL ug/m3	Result ug/m3	RL ug/m3	Result ug/m3	RL ug/m3	Result ug/m3	RL ug/m3
1,1,2-Trichloroethane	ND	9.2	ND	9.2	ND	9.2	ND	9.2
Tetrachloroethene	460	11	830	11	130	11	280	11
2-Hexanone	ND	6.9	ND	6.9	ND	6.9	ND	6.9
Dibromochloromethane	ND	14	ND	14	ND	14	ND	14
1,2-Dibromoethane	ND	13	ND	13	ND	13	ND	13
Chlorobenzene	ND	7.8	ND	7.8	ND	7.8	ND	7.8
Ethylbenzene	ND	7.3	ND	7.3	ND	7.3	ND	7.3
p,&m-Xylene	ND	7.3	10	7.3	ND	7.3	13	7.3
o-Xylene	ND	7.3	ND	7.3	ND	7.3	8.1	7.3
Styrene	ND	7.2	ND	7.2	ND	7.2	ND	7.2
Bromoform	ND	17	ND	17	ND	17	ND	17
1,1,2,2-Tetrachloroethane	ND	23	ND	23	ND	23	ND	23
Benzyl Chloride	ND	8.7	ND	8.7	ND	8.7	ND	8.7
4-Ethyl Toluene	ND	8.3	ND	8.3	ND	8.3	ND	8.3
1,3,5-Trimethylbenzene	ND	17	ND	17	ND	17	ND	17
1,2,4-Trimethylbenzene	ND	17	ND	17	ND	17	ND	17
1,3-Dichlorobenzene	ND	10	ND	10	ND	10	ND	10
1,4-Dichlorobenzene	ND	10	ND	10	ND	10	ND	10
1,2-Dichlorobenzene	ND	10	ND	10	ND	10	ND	10
1,2,4-Trichlorobenzene	ND	25	ND	25	ND	25	ND	25
Hexachlorobutadiene	ND	18	ND	18	ND	18	ND	18
Naphthalene	ND	44	ND	44	ND	44	ND	44

ND = Not Detected (below RL)
RL = Reporting Limit

Reviewed/Approved By: _____ Date 3/26/18
Mark Johnson
Operations Manager

The cover letter is an integral part of this analytical report

AirTECHNOLOGY Laboratories, Inc.
18501 E. Gale Avenue, Suite 130 ♦ City of Industry, CA 91748 ♦ Ph: (626) 964-4032 ♦ Fx: (626) 964-5832

Client: Advanced Technology Laboratories
Attn: Rachelle Arada
Project Name: NA
Project No.: 1702039
Date Received: 05/22/17
Matrix: Air
Reporting Units: ug/m3

EPA Method TO15

Lab No.:	I052202-09		I052202-10		I052202-11		I052202-12	
Client Sample I.D.:	1702039-09 / 2A-2-5'		1702039-10 / 2A-2-5' Dup		1702039-11 / 2A-AM		1702039-12 / 6-AM	
Date/Time Sampled:	5/16/17 11:12		5/16/17 11:21		5/16/17 11:33		5/16/17 11:53	
Date/Time Analyzed:	6/1/17 18:59		5/30/17 22:15		5/30/17 22:56		5/30/17 23:37	
QC Batch No.:	170601MS2A1		170530MS2A1		170530MS2A1		170530MS2A1	
Analyst Initials:	DT		DT		DT		DT	
Dilution Factor:	1.7		1.7		1.7		1.7	
ANALYTE	Result ug/m3	RL ug/m3	Result ug/m3	RL ug/m3	Result ug/m3	RL ug/m3	Result ug/m3	RL ug/m3
Dichlorodifluoromethane (12)	ND	8.3	ND	8.3	ND	8.3	ND	8.6
Chloromethane	ND	7.0	ND	7.0	ND	7.0	ND	7.2
1,2-Cl-1,1,2,2-F ethane (114)	ND	12	ND	12	ND	12	ND	12
Vinyl Chloride	ND	4.3	ND	4.3	ND	4.3	ND	4.5
Bromomethane	ND	6.5	ND	6.5	ND	6.5	ND	6.8
Chloroethane	ND	4.4	ND	4.4	ND	4.4	ND	4.6
Trichlorofluoromethane (11)	ND	9.5	ND	9.5	ND	9.5	ND	9.8
1,1-Dichloroethene	ND	6.7	ND	6.7	ND	6.7	ND	6.9
Carbon Disulfide	ND	26	300	26	50	26	30	27
1,1,2-Cl 1,2,2-F ethane (113)	ND	13	ND	13	ND	13	ND	13
Acetone	30	20	79	20	54	20	33	21
Methylene Chloride	ND	5.9	ND	5.9	ND	5.9	ND	6.1
t-1,2-Dichloroethene	ND	6.7	ND	6.7	ND	6.7	ND	6.9
1,1-Dichloroethane	ND	6.8	ND	6.8	ND	6.8	ND	7.1
Vinyl Acetate	ND	30	ND	30	ND	30	ND	31
c-1,2-Dichloroethene	ND	6.7	ND	6.7	ND	6.7	ND	6.9
2-Butanone	13	5.0	57	5.0	40	5.0	15	5.1
t-Butyl Methyl Ether (MTBE)	ND	6.1	ND	6.1	ND	6.1	ND	6.3
Chloroform	ND	8.2	ND	8.2	ND	8.2	ND	8.5
1,1,1-Trichloroethane	230	9.2	220	9.2	ND	9.2	ND	9.5
Carbon Tetrachloride	ND	11	ND	11	ND	11	ND	11
Benzene	5.7	5.4	ND	5.4	ND	5.4	ND	5.6
1,2-Dichloroethane	ND	6.8	ND	6.8	ND	6.8	ND	7.1
Trichloroethene	ND	9.1	ND	9.1	ND	9.1	ND	9.4
1,2-Dichloropropane	ND	7.8	ND	7.8	ND	7.8	ND	8.1
Bromodichloromethane	ND	11	ND	11	ND	11	ND	12
c-1,3-Dichloropropene	ND	7.6	ND	7.6	ND	7.6	ND	7.9
4-Methyl-2-Pentanone	ND	6.9	ND	6.9	ND	6.9	ND	7.1
Toluene	16	6.3	14	6.3	ND	6.3	ND	6.6
t-1,3-Dichloropropene	ND	7.6	ND	7.6	ND	7.6	ND	7.9

18501 E. Gale Avenue, Suite 130 ♦ City of Industry, CA 91748 ♦ Ph: (626) 964-4032 ♦ Fx: (626) 964-5832

Client: Advanced Technology Laboratories
Attn: Rachelle Arada
Project Name: NA
Project No.: 1702039
Date Received: 05/22/17
Matrix: Air
Reporting Units: ug/m3

EPA Method TO15

Lab No.:	I052202-09		I052202-10		I052202-11		I052202-12	
Client Sample I.D.:	1702039-09 / 2A-2-5'		1702039-10 / 2A-2-5' Dup		1702039-11 / 2A-AM		1702039-12 / 6-AM	
Date/Time Sampled:	5/16/17 11:12		5/16/17 11:21		5/16/17 11:33		5/16/17 11:53	
Date/Time Analyzed:	6/1/17 18:59		5/30/17 22:15		5/30/17 22:56		5/30/17 23:37	
QC Batch No.:	170601MS2A1		170530MS2A1		170530MS2A1		170530MS2A1	
Analyst Initials:	DT		DT		DT		DT	
Dilution Factor:	1.7		1.7		1.7		1.7	
ANALYTE	Result ug/m3	RL ug/m3	Result ug/m3	RL ug/m3	Result ug/m3	RL ug/m3	Result ug/m3	RL ug/m3
1,1,2-Trichloroethane	ND	9.2	ND	9.2	ND	9.2	ND	9.5
Tetrachloroethene	370	11	380	11	ND	11	ND	12
2-Hexanone	ND	6.9	ND	6.9	ND	6.9	ND	7.1
Dibromochloromethane	ND	14	ND	14	ND	14	ND	15
1,2-Dibromoethane	ND	13	ND	13	ND	13	ND	13
Chlorobenzene	ND	7.8	ND	7.8	ND	7.8	ND	8.0
Ethylbenzene	27	7.3	ND	7.3	ND	7.3	ND	7.6
p,&m-Xylene	61	7.3	19	7.3	ND	7.3	ND	7.6
o-Xylene	39	7.3	8.9	7.3	ND	7.3	ND	7.6
Styrene	ND	7.2	ND	7.2	ND	7.2	ND	7.4
Bromoform	ND	17	ND	17	ND	17	ND	18
1,1,2,2-Tetrachloroethane	ND	23	ND	23	ND	23	ND	24
Benzyl Chloride	ND	8.7	ND	8.7	ND	8.7	ND	9.0
4-Ethyl Toluene	ND	8.3	ND	8.3	ND	8.3	ND	8.6
1,3,5-Trimethylbenzene	ND	17	ND	17	ND	17	ND	17
1,2,4-Trimethylbenzene	ND	17	ND	17	ND	17	ND	17
1,3-Dichlorobenzene	ND	10	ND	10	ND	10	ND	10
1,4-Dichlorobenzene	ND	10	ND	10	ND	10	ND	10
1,2-Dichlorobenzene	ND	10	ND	10	ND	10	ND	10
1,2,4-Trichlorobenzene	ND	25	ND	25	ND	25	ND	26
Hexachlorobutadiene	ND	18	ND	18	ND	18	ND	19
Naphthalene	ND	44	ND	44	ND	44	ND	46

ND = Not Detected (below RL)
RL = Reporting Limit

Reviewed/Approved By: _____ Date 3/26/18
Mark Johnson
Operations Manager

The cover letter is an integral part of this analytical report

18501 E. Gale Avenue, Suite 130 ♦ City of Industry, CA 91748 ♦ Ph: (626) 964-4032 ♦ Fx: (626) 964-5832

Client: Advanced Technology Laboratories
Attn: Rachelle Arada
Project Name: NA
Project No.: 1702039
Date Received: 05/22/17
Matrix: Air
Reporting Units: ug/m3

EPA Method TO15

Lab No.:	I052202-13		I052202-14		I052202-15		I052202-16	
Client Sample I.D.:	1702039-13 / 7-4-5'		1702039-14 / 7-4-5' Dup		1702039-15 / 7-1-5'		1702039-16 / 7-3-5'	
Date/Time Sampled:	5/16/17 12:12		5/16/17 12:24		5/16/17 12:13		5/16/17 12:20	
Date/Time Analyzed:	5/31/17 0:19		5/31/17 1:00		5/31/17 1:41		5/31/17 2:22	
QC Batch No.:	170530MS2A1		170530MS2A1		170530MS2A1		170530MS2A1	
Analyst Initials:	DT		DT		DT		DT	
Dilution Factor:	5.0		5.0		1.7		3.4	
ANALYTE	Result ug/m3	RL ug/m3	Result ug/m3	RL ug/m3	Result ug/m3	RL ug/m3	Result ug/m3	RL ug/m3
Dichlorodifluoromethane (12)	ND	25	ND	25	ND	8.3	ND	17
Chloromethane	ND	21	ND	21	ND	7.0	ND	14
1,2-Cl-1,1,2,2-F ethane (114)	ND	35	ND	35	ND	12	ND	24
Vinyl Chloride	ND	13	ND	13	ND	4.3	ND	8.6
Bromomethane	ND	20	ND	20	ND	6.5	ND	13
Chloroethane	ND	13	ND	13	ND	4.4	ND	8.9
Trichlorofluoromethane (11)	1,400	28	1,100	28	6,400 d	9.5	210,000 d	19
1,1-Dichloroethene	ND	20	ND	20	ND	6.7	120	13
Carbon Disulfide	370	79	340	79	28	26	ND	52
1,1,2-Cl 1,2,2-F ethane (113)	ND	39	ND	39	ND	13	ND	26
Acetone	ND	60	60	60	62	20	ND	40
Methylene Chloride	ND	18	ND	18	ND	5.9	ND	12
t-1,2-Dichloroethene	ND	20	ND	20	ND	6.7	ND	13
1,1-Dichloroethane	ND	20	ND	20	ND	6.8	ND	14
Vinyl Acetate	ND	89	ND	89	ND	30	ND	59
c-1,2-Dichloroethene	ND	20	ND	20	ND	6.7	ND	13
2-Butanone	ND	15	20	15	27	5.0	ND	9.9
t-Butyl Methyl Ether (MTBE)	ND	18	ND	18	ND	6.1	ND	12
Chloroform	26	25	ND	25	ND	8.2	17	16
1,1,1-Trichloroethane	ND	28	ND	28	ND	9.2	ND	18
Carbon Tetrachloride	ND	32	ND	32	ND	11	ND	21
Benzene	ND	16	ND	16	9.0	5.4	ND	11
1,2-Dichloroethane	ND	20	ND	20	ND	6.8	ND	14
Trichloroethene	ND	27	ND	27	ND	9.1	38	18
1,2-Dichloropropane	ND	23	ND	23	ND	7.8	ND	16
Bromodichloromethane	ND	34	ND	34	ND	11	ND	23
c-1,3-Dichloropropene	ND	23	ND	23	ND	7.6	ND	15
4-Methyl-2-Pentanone	ND	21	ND	21	ND	6.9	ND	14
Toluene	23	19	22	19	11	6.3	ND	13
t-1,3-Dichloropropene	ND	23	ND	23	ND	7.6	ND	15

AirTECHNOLOGY Laboratories, Inc.
18501 E. Gale Avenue, Suite 130 ♦ City of Industry, CA 91748 ♦ Ph: (626) 964-4032 ♦ Fx: (626) 964-5832

Client: Advanced Technology Laboratories
Attn: Rachelle Arada
Project Name: NA
Project No.: 1702039
Date Received: 05/22/17
Matrix: Air
Reporting Units: ug/m3

EPA Method TO15

Lab No.:	I052202-13		I052202-14		I052202-15		I052202-16	
Client Sample I.D.:	1702039-13 / 7-4-5'		1702039-14 / 7-4-5' Dup		1702039-15 / 7-1-5'		1702039-16 / 7-3-5'	
Date/Time Sampled:	5/16/17 12:12		5/16/17 12:24		5/16/17 12:13		5/16/17 12:20	
Date/Time Analyzed:	5/31/17 0:19		5/31/17 1:00		5/31/17 1:41		5/31/17 2:22	
QC Batch No.:	170530MS2A1		170530MS2A1		170530MS2A1		170530MS2A1	
Analyst Initials:	DT		DT		DT		DT	
Dilution Factor:	5.0		5.0		1.7		3.4	
ANALYTE	Result ug/m3	RL ug/m3	Result ug/m3	RL ug/m3	Result ug/m3	RL ug/m3	Result ug/m3	RL ug/m3
1,1,2-Trichloroethane	ND	28	ND	28	ND	9.2	40	18
Tetrachloroethene	ND	34	ND	34	430	11	550	23
2-Hexanone	ND	21	ND	21	ND	6.9	ND	14
Dibromochloromethane	ND	43	ND	43	ND	14	ND	29
1,2-Dibromoethane	ND	39	ND	39	ND	13	ND	26
Chlorobenzene	ND	23	ND	23	ND	7.8	ND	16
Ethylbenzene	ND	22	ND	22	ND	7.3	ND	15
p,&m-Xylene	150	22	140	22	ND	7.3	ND	15
o-Xylene	ND	22	ND	22	ND	7.3	ND	15
Styrene	ND	21	ND	21	ND	7.2	ND	14
Bromoform	ND	52	ND	52	ND	17	ND	35
1,1,2,2-Tetrachloroethane	ND	69	ND	69	ND	23	ND	46
Benzyl Chloride	ND	26	ND	26	ND	8.7	ND	17
4-Ethyl Toluene	ND	25	ND	25	ND	8.3	ND	17
1,3,5-Trimethylbenzene	ND	50	ND	50	ND	17	ND	33
1,2,4-Trimethylbenzene	ND	50	ND	50	ND	17	ND	33
1,3-Dichlorobenzene	ND	30	ND	30	ND	10	ND	20
1,4-Dichlorobenzene	ND	30	ND	30	ND	10	ND	20
1,2-Dichlorobenzene	ND	30	ND	30	ND	10	ND	20
1,2,4-Trichlorobenzene	ND	75	ND	75	ND	25	ND	50
Hexachlorobutadiene	ND	54	ND	54	ND	18	ND	36
Naphthalene	ND	130	ND	130	ND	44	ND	88

ND = Not Detected (below RL)
RL = Reporting Limit
d = Analyte reported from secondary dilution. Batch ID: 170531MS2A1

Reviewed/Approved By: _____ Date 3/26/18
Mark Johnson
Operations Manager

The cover letter is an integral part of this analytical report

AirTECHNOLOGY Laboratories, Inc.
18501 E. Gale Avenue, Suite 130 ♦ City of Industry, CA 91748 ♦ Ph: (626) 964-4032 ♦ Fx: (626) 964-5832

Client: Advanced Technology Laboratories
Attn: Rachelle Arada
Project Name: NA
Project No.: 1702039
Date Received: 05/22/17
Matrix: Air
Reporting Units: ug/m3

EPA Method TO15

Lab No.:	I052202-17		I052202-18		I052202-19			
Client Sample I.D.:	1702039-17 / 7-AM		1702039-18 / 7-AM Dup		1702039-19 / 8-3 Dup			
Date/Time Sampled:	5/16/17 12:31		5/16/17 12:31		5/16/17 12:51			
Date/Time Analyzed:	6/1/17 19:40		6/1/17 20:21		5/31/17 4:25			
QC Batch No.:	170601MS2A1		170601MS2A1		170530MS2A1			
Analyst Initials:	DT		DT		DT			
Dilution Factor:	1.7		1.7		1.7			
ANALYTE	Result ug/m3	RL ug/m3	Result ug/m3	RL ug/m3	Result ug/m3	RL ug/m3		
Dichlorodifluoromethane (12)	ND	8.3	ND	8.6	ND	8.3		
Chloromethane	ND	7.0	ND	7.2	ND	7.0		
1,2-Cl-1,1,2,2-F ethane (114)	ND	12	ND	12	ND	12		
Vinyl Chloride	ND	4.3	ND	4.5	ND	4.3		
Bromomethane	ND	6.5	ND	6.8	ND	6.5		
Chloroethane	ND	4.4	ND	4.6	ND	4.4		
Trichlorofluoromethane (11)	ND	9.5	ND	9.8	32	9.5		
1,1-Dichloroethene	ND	6.7	ND	6.9	9.9	6.7		
Carbon Disulfide	ND	26	ND	27	150	26		
1,1,2-Cl 1,2,2-F ethane (113)	ND	13	ND	13	ND	13		
Acetone	21	20	ND	21	67	20		
Methylene Chloride	ND	5.9	ND	6.1	ND	5.9		
t-1,2-Dichloroethene	ND	6.7	ND	6.9	ND	6.7		
1,1-Dichloroethane	ND	6.8	ND	7.1	ND	6.8		
Vinyl Acetate	ND	30	ND	31	ND	30		
c-1,2-Dichloroethene	ND	6.7	ND	6.9	ND	6.7		
2-Butanone	ND	5.0	11	5.1	27	5.0		
t-Butyl Methyl Ether (MTBE)	ND	6.1	ND	6.3	ND	6.1		
Chloroform	ND	8.2	ND	8.5	ND	8.2		
1,1,1-Trichloroethane	ND	9.2	ND	9.5	81	9.2		
Carbon Tetrachloride	ND	11	ND	11	ND	11		
Benzene	ND	5.4	ND	5.6	22	5.4		
1,2-Dichloroethane	ND	6.8	ND	7.1	ND	6.8		
Trichloroethene	ND	9.1	ND	9.4	60	9.1		
1,2-Dichloropropane	ND	7.8	ND	8.1	ND	7.8		
Bromodichloromethane	ND	11	ND	12	ND	11		
c-1,3-Dichloropropene	ND	7.6	ND	7.9	ND	7.6		
4-Methyl-2-Pentanone	ND	6.9	ND	7.1	ND	6.9		
Toluene	ND	6.3	ND	6.6	20	6.3		
t-1,3-Dichloropropene	ND	7.6	ND	7.9	ND	7.6		

AirTECHNOLOGY Laboratories, Inc.
18501 E. Gale Avenue, Suite 130 ♦ City of Industry, CA 91748 ♦ Ph: (626) 964-4032 ♦ Fx: (626) 964-5832

Client: Advanced Technology Laboratories
Attn: Rachelle Arada
Project Name: NA
Project No.: 1702039
Date Received: 05/22/17
Matrix: Air
Reporting Units: ug/m3

EPA Method TO15

Lab No.:	I052202-17		I052202-18		I052202-19			
Client Sample I.D.:	1702039-17 / 7-AM		1702039-18 / 7-AM Dup		1702039-19 / 8-3 Dup			
Date/Time Sampled:	5/16/17 12:31		5/16/17 12:31		5/16/17 12:51			
Date/Time Analyzed:	6/1/17 19:40		6/1/17 20:21		5/31/17 4:25			
QC Batch No.:	170601MS2A1		170601MS2A1		170530MS2A1			
Analyst Initials:	DT		DT		DT			
Dilution Factor:	1.7		1.7		1.7			
ANALYTE	Result ug/m3	RL ug/m3	Result ug/m3	RL ug/m3	Result ug/m3	RL ug/m3		
1,1,2-Trichloroethane	ND	9.2	ND	9.5	ND	9.2		
Tetrachloroethene	ND	11	ND	12	2,000	11		
2-Hexanone	ND	6.9	ND	7.1	ND	6.9		
Dibromochloromethane	ND	14	ND	15	ND	14		
1,2-Dibromoethane	ND	13	ND	13	ND	13		
Chlorobenzene	ND	7.8	ND	8.0	ND	7.8		
Ethylbenzene	ND	7.3	ND	7.6	ND	7.3		
p,&m-Xylene	ND	7.3	ND	7.6	27	7.3		
o-Xylene	ND	7.3	ND	7.6	11	7.3		
Styrene	ND	7.2	ND	7.4	ND	7.2		
Bromoform	ND	17	ND	18	ND	17		
1,1,2,2-Tetrachloroethane	ND	23	ND	24	ND	23		
Benzyl Chloride	ND	8.7	ND	9.0	ND	8.7		
4-Ethyl Toluene	ND	8.3	ND	8.6	ND	8.3		
1,3,5-Trimethylbenzene	ND	17	ND	17	ND	17		
1,2,4-Trimethylbenzene	ND	17	ND	17	ND	17		
1,3-Dichlorobenzene	ND	10	ND	10	ND	10		
1,4-Dichlorobenzene	ND	10	ND	10	ND	10		
1,2-Dichlorobenzene	ND	10	ND	10	ND	10		
1,2,4-Trichlorobenzene	ND	25	ND	26	ND	25		
Hexachlorobutadiene	ND	18	ND	19	ND	18		
Naphthalene	ND	44	ND	46	ND	44		

ND = Not Detected (below RL)
RL = Reporting Limit

Reviewed/Approved By: _____ Date 3/26/18
Mark Johnson
Operations Manager

The cover letter is an integral part of this analytical report

AirTECHNOLOGY Laboratories, Inc.
18501 E. Gale Avenue, Suite 130 ♦ City of Industry, CA 91748 ♦ Ph: (626) 964-4032 ♦ Fx: (626) 964-5832

Client: Advanced Technology Laboratories
Attn: Rachelle Arada
Project Name: NA
Project No.: 1702039
Date Received: 05/22/17
Matrix: Air
Reporting Units: ug/m3

EPA Method TO15

Lab No.:	METHOD BLANK		METHOD BLANK		METHOD BLANK			
Client Sample I.D.:	-		-		-			
Date/Time Sampled:	-		-		-			
Date/Time Analyzed:	5/30/17 13:35		5/31/17 13:37		6/1/17 10:17			
QC Batch No.:	170530MS2A1		170531MS2A1		170601MS2A1			
Analyst Initials:	DT		DT		DT			
Dilution Factor:	0.20		0.20		0.20			
ANALYTE	Result ug/m3	RL ug/m3	Result ug/m3	RL ug/m3	Result ug/m3	RL ug/m3		
Dichlorodifluoromethane (12)	ND	0.99	ND	0.99	ND	0.99		
Chloromethane	ND	0.83	ND	0.83	ND	0.83		
1,2-Cl-1,1,2,2-F ethane (114)	ND	1.4	ND	1.4	ND	1.4		
Vinyl Chloride	ND	0.51	ND	0.51	ND	0.51		
Bromomethane	ND	0.78	ND	0.78	ND	0.78		
Chloroethane	ND	0.53	ND	0.53	ND	0.53		
Trichlorofluoromethane (11)	ND	1.1	ND	1.1	ND	1.1		
1,1-Dichloroethene	ND	0.79	ND	0.79	ND	0.79		
Carbon Disulfide	ND	3.1	ND	3.1	ND	3.1		
1,1,2-Cl 1,2,2-F ethane (113)	ND	1.5	ND	1.5	ND	1.5		
Acetone	2.9	2.4	ND	2.4	ND	2.4		
Methylene Chloride	ND	0.69	ND	0.69	ND	0.69		
t-1,2-Dichloroethene	ND	0.79	ND	0.79	ND	0.79		
1,1-Dichloroethane	ND	0.81	ND	0.81	ND	0.81		
Vinyl Acetate	ND	3.5	ND	3.5	ND	3.5		
c-1,2-Dichloroethene	ND	0.79	ND	0.79	ND	0.79		
2-Butanone	ND	0.59	ND	0.59	ND	0.59		
t-Butyl Methyl Ether (MTBE)	ND	0.72	ND	0.72	ND	0.72		
Chloroform	ND	0.98	ND	0.98	ND	0.98		
1,1,1-Trichloroethane	ND	1.1	ND	1.1	ND	1.1		
Carbon Tetrachloride	ND	1.3	ND	1.3	ND	1.3		
Benzene	ND	0.64	ND	0.64	ND	0.64		
1,2-Dichloroethane	ND	0.81	ND	0.81	ND	0.81		
Trichloroethene	ND	1.1	ND	1.1	ND	1.1		
1,2-Dichloropropane	ND	0.92	ND	0.92	ND	0.92		
Bromodichloromethane	ND	1.3	ND	1.3	ND	1.3		
c-1,3-Dichloropropene	ND	0.91	ND	0.91	ND	0.91		
4-Methyl-2-Pentanone	ND	0.82	ND	0.82	ND	0.82		
Toluene	ND	0.75	ND	0.75	ND	0.75		
t-1,3-Dichloropropene	ND	0.91	ND	0.91	ND	0.91		

18501 E. Gale Avenue, Suite 130 ♦ City of Industry, CA 91748 ♦ Ph: (626) 964-4032 ♦ Fx: (626) 964-5832

Client: Advanced Technology Laboratories
Attn: Rachelle Arada
Project Name: NA
Project No.: 1702039
Date Received: 05/22/17
Matrix: Air
Reporting Units: ug/m3

EPA Method TO15

Lab No.:	METHOD BLANK		METHOD BLANK		METHOD BLANK			
Client Sample I.D.:	-		-		-			
Date/Time Sampled:	-		-		-			
Date/Time Analyzed:	5/30/17 13:35		5/31/17 13:37		6/1/17 10:17			
QC Batch No.:	170530MS2A1		170531MS2A1		170601MS2A1			
Analyst Initials:	DT		DT		DT			
Dilution Factor:	0.20		0.20		0.20			
ANALYTE	Result ug/m3	RL ug/m3	Result ug/m3	RL ug/m3	Result ug/m3	RL ug/m3		
1,1,2-Trichloroethane	ND	1.1	ND	1.1	ND	1.1		
Tetrachloroethene	ND	1.4	ND	1.4	ND	1.4		
2-Hexanone	ND	0.82	ND	0.82	ND	0.82		
Dibromochloromethane	ND	1.7	ND	1.7	ND	1.7		
1,2-Dibromoethane	ND	1.5	ND	1.5	ND	1.5		
Chlorobenzene	ND	0.92	ND	0.92	ND	0.92		
Ethylbenzene	ND	0.87	ND	0.87	ND	0.87		
p,&m-Xylene	ND	0.87	ND	0.87	ND	0.87		
o-Xylene	ND	0.87	ND	0.87	ND	0.87		
Styrene	ND	0.85	ND	0.85	ND	0.85		
Bromoform	ND	2.1	ND	2.1	ND	2.1		
1,1,2,2-Tetrachloroethane	ND	2.7	ND	2.7	ND	2.7		
Benzyl Chloride	ND	1.0	ND	1.0	ND	1.0		
4-Ethyl Toluene	ND	0.98	ND	0.98	ND	0.98		
1,3,5-Trimethylbenzene	ND	2.0	ND	2.0	ND	2.0		
1,2,4-Trimethylbenzene	ND	2.0	ND	2.0	ND	2.0		
1,3-Dichlorobenzene	ND	1.2	ND	1.2	ND	1.2		
1,4-Dichlorobenzene	ND	1.2	ND	1.2	ND	1.2		
1,2-Dichlorobenzene	ND	1.2	ND	1.2	ND	1.2		
1,2,4-Trichlorobenzene	ND	3.0	ND	3.0	ND	3.0		
Hexachlorobutadiene	ND	2.1	ND	2.1	ND	2.1		
Naphthalene	ND	5.2	ND	5.2	ND	5.2		

ND = Not Detected (below RL)
RL = Reporting Limit

Reviewed/Approved By: _____ Date 3/26/18
Mark Johnson
Operations Manager

The cover letter is an integral part of this analytical report

AirTECHNOLOGY Laboratories, Inc.
18501 E. Gale Avenue, Suite 130 ♦ City of Industry, CA 91748 ♦ Ph: (626) 964-4032 ♦ Fx: (626) 964-5832

LCS/LCSD Recovery and RPD Summary Report

QC Batch #: 170530MS2A1

Matrix: Air

EPA Method TO-14/TO-15

Lab No:	Method Blank		LCS		LCSD						
Date/Time Analyzed:	5/30/17 13:35		5/30/17 11:13		5/30/17 11:53						
Data File ID:	30MAY007.D		30MAY004.D		30MAY005.D						
Analyst Initials:	DT		DT		DT						
Dilution Factor:	0.2		1.0		1.0			Limits			
ANALYTE	Result ppbv	Spike Amount	Result ppbv	% Rec	Result ppbv	% Rec	RPD	Low %Rec	High %Rec	Max. RPD	Pass/ Fail
1,1-Dichloroethene	0.0	10.0	10.3	103	10.0	100	3.3	70	130	30	Pass
Methylene Chloride	0.0	10.0	9.9	99	11.4	114	14.2	70	130	30	Pass
Trichloroethene	0.0	10.0	9.6	96	9.7	97	0.4	70	130	30	Pass
Toluene	0.0	10.0	9.3	93	9.3	93	0.1	70	130	30	Pass
1,1,2,2-Tetrachloroethane	0.0	10.0	7.1	71	7.0	70	1.3	70	130	30	Pass

RPD = Relative Percent Difference

Reviewed/Approved By: _____ Date: 6/5/17

Mark Johnson
Operations Manager

The cover letter is an integral part of this analytical report

LCS/LCSD Recovery and RPD Summary Report

QC Batch #: 170531MS2A1

Matrix: Air

EPA Method TO-14/TO-15

Lab No:	Method Blank		LCS		LCSD						
Date/Time Analyzed:	5/31/17 13:37		5/31/17 7:49		5/31/17 8:29						
Data File ID:	31MAY008.D		31MAY005.D		31MAY006.D						
Analyst Initials:	DT		DT		DT						
Dilution Factor:	0.2		1.0		1.0			Limits			
ANALYTE	Result ppbv	Spike Amount	Result ppbv	% Rec	Result ppbv	% Rec	RPD	Low %Rec	High %Rec	Max. RPD	Pass/ Fail
1,1-Dichloroethene	0.0	10.0	10.5	105	10.6	106	1.3	70	130	30	Pass
Methylene Chloride	0.0	10.0	11.4	114	11.1	111	2.9	70	130	30	Pass
Trichloroethene	0.0	10.0	10.1	101	10.3	103	1.8	70	130	30	Pass
Toluene	0.0	10.0	9.7	97	9.9	99	1.9	70	130	30	Pass
1,1,2,2-Tetrachloroethane	0.0	10.0	7.4	74	7.4	74	0.2	70	130	30	Pass

RPD = Relative Percent Difference

Reviewed/Approved By: _____ Date: 6/5/17

Mark Johnson
Operations Manager

The cover letter is an integral part of this analytical report

LCS/LCSD Recovery and RPD Summary Report

QC Batch #: 170601MS2A1

Matrix: Air

EPA Method TO-14/TO-15

Lab No:	Method Blank		LCS		LCSD						
Date/Time Analyzed:	6/1/17 10:17		6/1/17 8:28		6/1/17 9:08						
Data File ID:	01JUN007.D		01JUN005.D		01JUN006.D						
Analyst Initials:	DT		DT		DT						
Dilution Factor:	0.2		1.0		1.0			Limits			
ANALYTE	Result ppbv	Spike Amount	Result ppbv	% Rec	Result ppbv	% Rec	RPD	Low %Rec	High %Rec	Max. RPD	Pass/ Fail
1,1-Dichloroethene	0.0	10.0	10.3	103	10.3	103	0.5	70	130	30	Pass
Methylene Chloride	0.0	10.0	11.0	110	11.3	113	2.1	70	130	30	Pass
Trichloroethene	0.0	10.0	10.4	104	10.2	102	1.9	70	130	30	Pass
Toluene	0.0	10.0	10.1	101	10.1	101	0.6	70	130	30	Pass
1,1,2,2-Tetrachloroethane	0.0	10.0	7.5	75	7.5	75	0.1	70	130	30	Pass

RPD = Relative Percent Difference

Reviewed/Approved By: _____ Date: 6/5/17

Mark Johnson
Operations Manager

The cover letter is an integral part of this analytical report

Client: Advanced Technology Laboratories
Attn: Rachelle Arada
Project Name: NA
Project No.: 1702039
Date Received: 05/22/17
Matrix: Air
Reporting Units: % v/v

ASTM D1946

Lab No.:	I052202-01		I052202-02		I052202-03		I052202-04	
Client Sample I.D.:	1702039-01 / 2A-3-15'		1702039-02 / 2A-3-10'		1702039-03 / 2A-3-5'		1702039-04 / 2A-1-15'	
Date/Time Sampled:	5/16/17 10:17		5/16/17 10:27		5/16/17 10:32		5/16/17 10:50	
Date/Time Analyzed:	6/1/17 20:57		6/1/17 21:11		6/1/17 21:26		6/1/17 21:40	
QC Batch No.:	170601GC8A4		170601GC8A4		170601GC8A4		170601GC8A4	
Analyst Initials:	MJ		MJ		MJ		MJ	
Dilution Factor:	1.7		1.7		1.7		1.7	
ANALYTE	Result % v/v	RL % v/v	Result % v/v	RL % v/v	Result % v/v	RL % v/v	Result % v/v	RL % v/v
Methane	ND	0.0017	ND	0.0017	ND	0.0017	0.0021	0.0017

Results normalized including non-methane hydrocarbons
ND = Not Detected (below RL)
RL = Reporting Limit

Reviewed/Approved By: _____ Date 6/5/17
Mark Johnson
Operations Manager

The cover letter is an integral part of this analytical report

Client: Advanced Technology Laboratories
Attn: Rachelle Arada
Project Name: NA
Project No.: 1702039
Date Received: 05/22/17
Matrix: Air
Reporting Units: % v/v

ASTM D1946

Lab No.:	I052202-05		I052202-06		I052202-07		I052202-08	
Client Sample I.D.:	1702039-05 / 2A-1-10'		1702039-06 / 2A-1-5'		1702039-07 / 2A-2-15'		1702039-08 / 2A-2-10'	
Date/Time Sampled:	5/16/17 10:51		5/16/17 10:56		5/16/17 11:17		5/16/17 11:17	
Date/Time Analyzed:	6/2/17 7:46		6/2/17 8:17		6/1/17 22:25		6/2/17 8:32	
QC Batch No.:	170601GC8A4		170601GC8A4		170601GC8A4		170601GC8A4	
Analyst Initials:	MJ		MJ		MJ		MJ	
Dilution Factor:	1.7		1.7		1.7		2.4	
ANALYTE	Result % v/v	RL % v/v	Result % v/v	RL % v/v	Result % v/v	RL % v/v	Result % v/v	RL % v/v
Methane	ND	0.0017	ND	0.0017	0.026	0.0017	ND	0.0024

Results normalized including non-methane hydrocarbons
ND = Not Detected (below RL)
RL = Reporting Limit

Reviewed/Approved By: _____ Date 6/5/17
Mark Johnson
Operations Manager

The cover letter is an integral part of this analytical report

AirTECHNOLOGY Laboratories, Inc.
18501 E. Gale Avenue, Suite 130 ♦ City of Industry, CA 91748 ♦ Ph: (626) 964-4032 ♦ Fx: (626) 964-5832

Client: Advanced Technology Laboratories
Attn: Rachelle Arada
Project Name: NA
Project No.: 1702039
Date Received: 05/22/17
Matrix: Air
Reporting Units: % v/v

ASTM D1946

Lab No.:	I052202-09		I052202-10		I052202-13		I052202-14	
Client Sample I.D.:	1702039-09 / 2A-2-5'		1702039-10 / 2A-2-5' Dup		1702039-13 / 7-4-5'		1702039-14 / 7-4-5' Dup	
Date/Time Sampled:	5/16/17 11:12		5/16/17 11:21		5/16/17 12:12		5/16/17 12:24	
Date/Time Analyzed:	6/2/17 8:47		6/1/17 23:09		6/1/17 23:24		6/2/17 6:48	
QC Batch No.:	170601GC8A4		170601GC8A4		170601GC8A4		170601GC8A4	
Analyst Initials:	MJ		MJ		MJ		MJ	
Dilution Factor:	1.7		1.7		1.7		1.7	
ANALYTE	Result % v/v	RL % v/v	Result % v/v	RL % v/v	Result % v/v	RL % v/v	Result % v/v	RL % v/v
Methane	ND	0.0017	0.0030	0.0017	ND	0.0017	ND	0.0017

Results normalized including non-methane hydrocarbons
ND = Not Detected (below RL)
RL = Reporting Limit

Reviewed/Approved By: _____ Date 6/5/17
Mark Johnson
Operations Manager

The cover letter is an integral part of this analytical report

AirTECHNOLOGY Laboratories, Inc.
18501 E. Gale Avenue, Suite 130 ♦ City of Industry, CA 91748 ♦ Ph: (626) 964-4032 ♦ Fx: (626) 964-5832

Client: Advanced Technology Laboratories
Attn: Rachelle Arada
Project Name: NA
Project No.: 1702039
Date Received: 05/22/17
Matrix: Air
Reporting Units: % v/v

ASTM D1946

Lab No.:	I052202-15		I052202-16		I052202-19			
Client Sample I.D.:	1702039-15 / 7-1-5'		1702039-16 / 7-3-5'		1702039-19 / 8-3 Dup			
Date/Time Sampled:	5/16/17 12:13		5/16/17 12:20		5/16/17 12:51			
Date/Time Analyzed:	6/2/17 7:02		6/2/17 7:17		6/2/17 7:31			
QC Batch No.:	170601GC8A4		170601GC8A4		170601GC8A4			
Analyst Initials:	MJ		MJ		MJ			
Dilution Factor:	1.7		1.7		2.3			
ANALYTE	Result % v/v	RL % v/v	Result % v/v	RL % v/v	Result % v/v	RL % v/v		
Methane	ND	0.0017	ND	0.0017	ND	0.0023		

Results normalized including non-methane hydrocarbons
ND = Not Detected (below RL)
RL = Reporting Limit

Reviewed/Approved By: Mark Johnson
Operations Manager

Date 6/5/17

The cover letter is an integral part of this analytical report

AirTECHNOLOGY Laboratories, Inc.
18501 E. Gale Avenue, Suite 130 ♦ City of Industry, CA 91748 ♦ Ph: (626) 964-4032 ♦ Fx: (626) 964-5832

QC Batch No: 170601GC8A4
Matrix: Air
Reporting Units: % v/v

ASTM D1946
LABORATORY CONTROL SAMPLE SUMMARY

Lab No.:	METHOD BLANK			LCS		LCSD					
Date Analyzed:	6/1/17 20:42			6/1/17 19:58		6/1/17 20:13					
Analyst Initials:	AS			AS		AS					
Dilution Factor:	1.0			1.0		1.0			Limits		
ANALYTE	Result % v/v	RL % v/v	SPIKE AMT. % v/v	Result % v/v	% Rec.	Result % v/v	% Rec.	RPD %	Low %Rec	High %Rec	Max. RPD
Methane	ND	0.0010	0.10	0.106	106	0.105	105	0.7	70	130	30

ND = Not Detected (below RL)
RL = Reporting Limit

Reviewed/Approved By: _____ Date 6/5/17
Mark Johnson
Operations Manager

The cover letter is an integral part of this analytical report

ADVANCED TECHNOLOGY LABORATORIES

SUBCONTRACT ORDER

Work Order: 1702039

I052202-01/19

SENDING LABORATORY:

Advanced Technology Laboratories
3275 Walnut Avenue
Signal Hill, CA 90755
Phone: 562.989.4045
Fax: 562.989.6348
Project Manager: Rachelle Arada (Rachelle@atlglobal.com)
Sampler: DAT

RECEIVING LABORATORY:

Air Technology Laboratories, Inc.
18501 E. Gale Ave, Suite 130
City of Industry, CA 91748
Phone :(626) 964-4032
Fax: (626) 964-5832
PO#: SC11610- STANDARD TAT (RA)

IMPORTANT : Please include Work Order # and PO # in your invoice.

Analysis	Due	Expires	Sampled	Comments
01 **ATL Lab#: 1702039-01 / 2A3-15'**		**Air**	**05/16/17 10:17**	**D1946 - METHANE only**
D1946_C_SUB [Fixed Gases - Oxygen]	**06/02/17 17:00**	06/15/17 10:17		Please include Naphthalene with TO-15 analysis.
TO15_C [Volatile Organic Compounds in Air] 1- Canister - 1L	**06/02/17 17:00**	06/15/17 10:17		
02 **ATL Lab#: 1702039-02 / 2A-3-10'**		**Air**	**05/16/17 10:27**	
D1946_C_SUB [Fixed Gases - Oxygen]	**06/02/17 17:00**	06/15/17 10:27		
TO15_C [Volatile Organic Compounds in Air] 1- Canister - 1L	**06/02/17 17:00**	06/15/17 10:27		
03 **ATL Lab#: 1702039-03 / 2A-3-5'**		**Air**	**05/16/17 10:32**	
D1946_C_SUB [Fixed Gases - Oxygen]	**06/02/17 17:00**	06/15/17 10:32		
TO15_C [Volatile Organic Compounds in Air] 1- Canister - 1L	**06/02/17 17:00**	06/15/17 10:32		

Released By	Date	Received By	Date
[signature]	5/22/17	[signature]	5/22/17 1617
Released By	Date	Received By	Date

5/18/17

ADVANCED TECHNOLOGY LABORATORIES

SUBCONTRACT ORDER

Work Order: 1702039

I052202-01/19

Analysis	Due	Expires	Sampled	Comments
04 ATL Lab#: 1702039-04 / 2A-1-15'		**Air**	**05/16/17 10:50**	
D1946_C_SUB [Fixed Gases - Oxygen]	**06/02/17 17:00**	06/15/17 10:50		
TO15_C [Volatile Organic Compounds in Air] 1- Canister - 1L	**06/02/17 17:00**	06/15/17 10:50		
05 ATL Lab#: 1702039-05 / 2A-1-10'		**Air**	**05/16/17 10:51**	
D1946_C_SUB [Fixed Gases - Oxygen]	**06/02/17 17:00**	06/15/17 10:51		
TO15_C [Volatile Organic Compounds in Air] 1- Canister - 1L	**06/02/17 17:00**	06/15/17 10:51		
06 ATL Lab#: 1702039-06 / 2A-1-5'		**Air**	**05/16/17 10:56**	
D1946_C_SUB [Fixed Gases - Oxygen]	**06/02/17 17:00**	06/15/17 10:56		
TO15_C [Volatile Organic Compounds in Air] 1- Canister - 1L	**06/02/17 17:00**	06/15/17 10:56		
07 ATL Lab#: 1702039-07 / 2A-2-15'		**Air**	**05/16/17 11:17**	
D1946_C_SUB [Fixed Gases - Oxygen]	**06/02/17 17:00**	06/15/17 11:17		
TO15_C [Volatile Organic Compounds in Air] 1- Canister - 1L	**06/02/17 17:00**	06/15/17 11:17		
08 ATL Lab#: 1702039-08 / 2A-2-10'		**Air**	**05/16/17 11:17**	
D1946_C_SUB [Fixed Gases - Oxygen]	**06/02/17 17:00**	06/15/17 11:17		
TO15_C [Volatile Organic Compounds in Air] 1- Canister - 1L	**06/02/17 17:00**	06/15/17 11:17		

Released By	Date	Received By	Date
	5/22/17		5/22/17 1617
Released By	Date	Received By	Date

ADVANCED TECHNOLOGY LABORATORIES

SUBCONTRACT ORDER

Work Order: 1702039

I052202-09/19

Analysis	Due	Expires	Sampled	Comments
09 **ATL Lab#: 1702039-09 / 2A-2-5'**		**Air**	**05/16/17 11:12**	
D1946_C_SUB [Fixed Gases - Oxygen]	**06/02/17 17:00**	06/15/17 11:12		
TO15_C [Volatile Organic Compounds in Air] 1- Canister - 1L	**06/02/17 17:00**	06/15/17 11:12		
10 **ATL Lab#: 1702039-10 / 2A-2-5' Dup**		**Air**	**05/16/17 11:21**	
D1946_C_SUB [Fixed Gases - Oxygen]	**06/02/17 17:00**	06/15/17 11:21		
TO15_C [Volatile Organic Compounds in Air] 1- Canister - 1L	**06/02/17 17:00**	06/15/17 11:21		
11 **ATL Lab#: 1702039-11 / 2A-AM**		**Air**	**05/16/17 11:33**	
TO15_C [Volatile Organic Compounds in Air] 1- Canister - 1L	**06/02/17 17:00**	06/15/17 11:33		
12 **ATL Lab#: 1702039-12 / 6-AM**		**Air**	**05/16/17 11:53**	
TO15_C [Volatile Organic Compounds in Air] 1- Canister - 1L	**06/02/17 17:00**	06/15/17 11:53		
13 **ATL Lab#: 1702039-13 / 7-4-5'**		**Air**	**05/16/17 12:12**	
D1946_C_SUB [Fixed Gases - Oxygen]	**06/02/17 17:00**	06/15/17 12:12		
TO15_C [Volatile Organic Compounds in Air] 1- Canister - 1L	**06/02/17 17:00**	06/15/17 12:12		

Released By	Date	Received By	Date
[signature]	5/22/17	[signature]	5/22/17 1617
Released By	Date	Received By	Date

5/18/17

ADVANCED TECHNOLOGY LABORATORIES

SUBCONTRACT ORDER

Work Order: 1702039

I052202-01/19

Analysis	Due	Expires	Sampled	Comments
14 **ATL Lab#: 1702039-14 / 7-4-5' Dup**		Air	05/16/17 12:24	
D1946_C_SUB [Fixed Gases - Oxygen]	06/02/17 17:00	06/15/17 12:24		
TO15_C [Volatile Organic Compounds in Air] 1- Canister - 1L	06/02/17 17:00	06/15/17 12:24		
15 **ATL Lab#: 1702039-15 / 7-1-5'**		Air	05/16/17 12:13	
D1946_C_SUB [Fixed Gases - Oxygen]	06/02/17 17:00	06/15/17 12:13		
TO15_C [Volatile Organic Compounds in Air] 1- Canister - 1L	06/02/17 17:00	06/15/17 12:13		
16 **ATL Lab#: 1702039-16 / 7-3-5'**		Air	05/16/17 12:20	
D1946_C_SUB [Fixed Gases - Oxygen]	06/02/17 17:00	06/15/17 12:20		
TO15_C [Volatile Organic Compounds in Air] 1- Canister - 1L	06/02/17 17:00	06/15/17 12:20		
17 **ATL Lab#: 1702039-17 / 7-AM**		Air	05/16/17 12:31	
TO15_C [Volatile Organic Compounds in Air] 1- Canister - 1L	06/02/17 17:00	06/15/17 12:31		
18 **ATL Lab#: 1702039-18 / 7-AM Dup**		Air	05/16/17 12:31	
TO15_C [Volatile Organic Compounds in Air] 1- Canister - 1L	06/02/17 17:00	06/15/17 12:31		

Released By	Date	Received By	Date
	5/22/17	Don Tay	5/24/17 1617
Released By	Date	Received By	Date

5/18/17

ADVANCED TECHNOLOGY LABORATORIES

SUBCONTRACT ORDER

Work Order: 1702039

I052202-01/19

Analysis	Due	Expires	Sampled	Comments
ATL Lab#: 1702039-19 / 8-3 Dup		**Air**	**05/16/17 12:51**	
D1946_C_SUB [Fixed Gases - Oxygen]	**06/02/17 17:00**	06/15/17 12:51		
TO15_C [Volatile Organic Compounds in Air] 1- Canister - 1L	**06/02/17 17:00**	06/15/17 12:51		

Released By	Date	Received By	Date
	5/22/17		5/22/17 1617
Released By	Date	Received By	Date

ADVANCED TECHNOLOGY LABORATORIES

3275 Walnut Ave., Signal Hill, CA 90755
Tel: (562) 989-4045 • Fax: (562) 989-4040

CHAIN OF CUSTODY RECORD

Page 1 of 2

Instruction: Complete all shaded areas.

For Laboratory Use Only — ATLCOC Ver: 20130715

Method of Transport		Sample Conditions Upon Receipt					
		Condition	Y	N	Condition	Y	N
☑ Client	☐ ATL	1. CHILLED	☐	☐	5. # OF SAMPLES MATCH COC	☐	☐
☐ FedEx	☐ OnTrac	2. HEADSPACE (VOA)	☐	☐	6. PRESERVED	☐	☐
☐ GSO		3. CONTAINER INTACT	☐	☐	7. COOLER TEMP. deg C:		
☐ Other:		4. SEALED	☐	☐			

CUSTOMER

Company: Hushmand & Assoc
Address: 250 GODDARD
City: IRVINE State: CA Zip: 92618
Tel: (949) 777-1266 Fax: (949) 777-1276

SEND REPORT TO:
Attn: Naresh BeNama Email: naresh@haieng.com
Company: HAI
Address:
City: State: Zip:

SEND INVOICE TO: ☐ Same as SEND REPORT TO
Attn: Sam Email:
Company:
Address:
City: State: Zip:

PROJECT SAMPLES

Project Name: 6th St
Project No.: LAC-17-001
Sampler: DAT
Quote No: E17E51
PO #:
Special Instructions/Comments:

ITEM	Lab No.	Sample Description: Sample ID / Location	Date	Time	8260 / 624 (Volatiles)	8015(GRO)	8015(DRO)	8270(Semi-volatiles)	8081(Organochlorine Pesticides)	8082(PCBs)	6010 / 7000(Title 22 Metals)	TO-15	METHANE	SOIL / SEDIMENT / SLUDGE	SOLIDS / WIPE / FILTER	WATER - DRINKING / GROUND	WATER - STORM / WASTE	AQUEOUS / LAYERED - OIL	AIR	TAT	Container: #	Container: Type	Container: Material	Preservative	QA/QC: REMARKS
1	1702039-01	2A3-15'	5-16-17	1017								X	X							5	1	T	3	MN	
2	-02	2A-3-10'		10:27								X	X								1	T	3	MN	
3	-03	2A-3-5'		10:32								X	X								1	T	3	MN	
4	-04	2A-1-15'		10:50								X	X								1	T	3	MN	
5	-05	2A-1-10'		10:51								X	X								1	T	3	MN	
6	-06	2A-1-5'		10:56								X	X								1	T	3	MN	
7	-07	2A-2-15'		11:17								X	X								1	T	3	MN	
8	-08	2A-2-10		11:17								X	X								1	T	3	MN	
9	-09	2A-2-5'		11:12								X	X								1	T	3	MN	
10	-10	2A-2-5' Dup		11:21								X	X								1	T	3	MN	

Encircle or Write Requested Analysis
Encircle Sample Matrix
Container: # / Type: 1=Tube; 2=VOA; 3=Liter; 4=Pint; 5=Liter; 6=Teclar; 7=Canister. / Material: 1=Glass; 2=Plastic; 3=Metal
Preservative: 1=HCl; 2=HNO3; 3=H2SO4; 4=4C; 5=Zn (Ac)2; 6=NaOH; 7=NA2S2O3
QA/QC: ☐ Routine ☐ Caltrans ☐ Legal ☐ RWQCB ☐ Level IV

TERMS

1. Sample receiving hours: 7:30 AM to 7:30 PM Monday - Friday; Saturday 8:00 AM to 12:00 PM.
2. Samples Submitted AFTER 3:00 PM, are considered received the following Business day at 8:00 AM.
3. The following turnaround time conditions apply:
   TAT = 0 : 300% Surcharge SAME BUSINESS DAY if received by 9:00 AM
   TAT = 1 : 100% Surcharge NEXT BUSINESS DAY (COB 5:00 PM)
   TAT = 2 : 50% Surcharge 2ND BUSINESS DAY (COB 5:00 PM)
   TAT = 3 : 30% Surcharge 3RD BUSINESS DAY (COB 5:00 PM)
   TAT = 4 : 20% Surcharge 4TH BUSINESS DAY (COB 5:00 PM)
   TAT = 5 : NO SURCHARGE 5th BUSINESS DAY (COB 5:00 PM)
4. Weekend, holiday, after-hours work – ask for quote.
5. Subcontract TAT is 10 - 15 business days. Projects requiring shorter TATs will incur a surcharge respective to the subcontract lab --- ask for quote.
6. Liquid and solid samples will be disposed of after 45 calendar days from receipt of samples, all samples will be disposed of after 14 calendar days after receipt of samples.
7. Electronic records maintained for five (5) years from report date.
8. Hard copy reports will be disposed of after 45 calendar days from report date.
9. Storage and Report Fees:
   - Liquid & solid samples. Complimentary storage for forty-five (45) calendar days from receipt of samples, $2/sample/month if extended storage or hold is requested.
   - Air samples: Complimentary storage for ten (10) calendar days from receipt of samples; $20/ sample/week if extended storage is requested.
   Hard copy and regenerated reports/EDDs: $17.50 per hard copy report requested; $50.00 per regenerated/reformatted report; $35 per reprocessed EDD.
10. Rush TCLP/SFLC samples. add 2 days to analysis TAT for extraction on procedure.
11. Unanalyzed samples will incur a disposal fee of $7 per sample.

As the authorized agent of the company above, I hereby purchase laboratory services from ATL as shown above and hereby guarantee payment as quoted.

Submitter Print Name _____ Signature _____

CUSTODY

Relinquished by: (Signature and Printed Name)	Date	Time	Received by: (Signature and Printed Name)	Date	Time
Don Torres	5-16	1:56	FedEx	5/16/17	1356

ADVANCED TECHNOLOGY LABORATORIES
3275 Walnut Ave., Signal Hill, CA 90755
Tel: (562) 989-4045 • Fax: (562) 989-4040

CHAIN OF CUSTODY RECORD

Page 2 of 2

Instruction: Complete all shaded areas.

For Laboratory Use Only — ATLCOC Ver: 20130715

Method of Transport	Sample Conditions Upon Receipt					
	Condition	Y	N	Condition	Y	N
☑ Client ☐ ATL	1. CHILLED	☐	☐	5. # OF SAMPLES MATCH COC	☐	☐
☐ FedEx ☐ OnTrac	2. HEADSPACE (VOA)	☐	☐	6. PRESERVED	☐	☐
☐ GSO	3. CONTAINER INTACT	☐	☐	7. COOLER TEMP, deg C:		
☐ Other:	4. SEALED	☐	☐			

CUSTOMER

Company: | Address: | Tel:
City: | State: | Zip: | Fax:

SEND REPORT TO: | Attn: | Email: | Company: | Address: | City: | State: | Zip:

SEND INVOICE TO: ☐ same as SEND REPORT TO | Attn: | Email: | Company: | Address: | City: | State: | Zip:

PROJECT SAMPLES

Project Name: | Quote No: | Special Instructions/Comments:
Project No.: | PO #:
Sampler:

Encircle or Write Requested Analysis: 8260 / 624 (Volatiles); 8015(GRO); 8015(DRO); 8270(Semi-volatiles); 8081(Organochlorine Pesticides); 8082(PCBs); 6010 / 7000(Title 22 Metals); TO-15; METHANE

Encircle Sample Matrix: SOIL / SEDIMENT / SLUDGE; SOLIDS / WIPE / FILTER; WATER - DRINKING / GROUND; WATER - STORM / WASTE; AQUEOUS / LAYERED - OIL; AIR

Container: TAT; # ; Type: 1=Tube; 2=VOA; 3=Liter; 4=Pint; 5=Jar; 6=Tedlar; 7=Canister; Material: 1=Glass; 2=Plastic; 3=Metal; Preservative: 1=HCl; 2=HNO3; 3=H2SO4; 4=4C; 5=Zn (Ac)2; 6=NaOH; 7=NA2S2O3

QA/QC: ☐ Routine ☐ Caltrans ☐ Legal ☐ RWQCB ☐ Level IV

ITEM	Lab No.	Sample ID / Location	Date	Time	TO-15	METHANE	AIR	TAT	#	Type	Material	Preservative	REMARKS
1	702059-11	2-A-Am	5/16	11:33	X			5	1	7	3	HCl	
2	-12	6-Am		11:53	X					7			
3	-14	7-4-5' DUP		12:24	X	X				7			
4	-13	7-4-5'		12:12	X	X				7			
5	-15	7-1-5'		12:13	X	X				7			
6	-16	7-3-5'		12:20	X	X				7			
7	-17	7-Am		12:31	X					7			
8	-18	7-Am Dup		12:31	X					7			
9		8-3 - Bad Sample		12:43						7			Don't Test
10	-19	8-3 Dup		12:51	X	X				7			

TERMS

1. Sample receiving hours: 7:30 AM to 7:30 PM Monday - Friday; Saturday 8:00 AM to 12:00 PM.
2. Samples Submitted AFTER 5:00 PM, are considered received the following business day at 8:00 AM.
3. The following turnaround time conditions apply:
   TAT = 0 : 100% Surchatge SAME BUSINESS DAY if received by 9:00 AM
   TAT = 1 : 100% Surcharge NEXT BUSINESS DAY (COB 5:00 PM)
   TAT = 2 : 50% Surcharge 2ND BUSINESS DAY (COB 5:00 PM)
   TAT = 3 : 30% Surcharge 3RD BUSINESS DAY (COB 5:00 PM)
   TAT = 4 : 20% Surcharge 4TH BUSINESS DAY (COB 5:00 PM)
   TAT = 5 : NO SURCHARGE 5th BUSINESS DAY (COB 5:00 PM)
4. Weekend, holiday, after-hours work - ask for quote.
5. Subcontract TAT is 10 - 15 business days. Projects requiring shorter TATs will incur a surcharge respective to the subcontract lab -- ask for quote.
6. Liquid and solid samples will be disposed of after 45 calendar days from receipt of samples; air samples will be disposed of after 14 calendar days after receipt of samples.
7. Electronic records maintained for five (5) years from report date.
8. Hard copy reports will be disposed of after 45 calendar days from report date.
9. Storage and Report Fees:
   - Liquid & solid samples: Complimentary storage for forty five (45) calendar days from receipt of samples; $2/sample/month if extended storage or hold is requested.
   - Air samples: Complimentary storage for ten (10) calendar days from receipt of samples; $20/ sample/week if extended storage is requested.
   - Hard copy and regenerated reports/EDDs: $17.50 per hard copy report requested; $50.00 per regenerated/reformatted report; $35 per reprocessed EDD.
10. Rush TCLP/STLC samples: add 2 days to analysis TAT for extraction on procedure.
11. Unanalyzed samples will incur a disposal fee of $7 per sample

As the authorized agent of the company above, I hereby purchase laboratory services from ATL as shown above and hereby guarantee payment as quoted.

Submitter Print Name | Signature

CUSTODY

Relinquished by: (Signature and Printed Name)	Date:	Time:	Received by: (Signature and Printed Name)	Date:	Time:
Juan Dou Torres	5-16	1:56			
Relinquished by: (Signature and Printed Name)	Date:	Time:	Received by: (Signature and Printed Name)	Date:	Time:
Relinquished by: (Signature and Printed Name)	Date:	Time:	Received by: (Signature and Printed Name)	Date:	Time:

ADVANCED TECHNOLOGY LABORATORIES

May 24, 2017

Naresh Bellana
Hushmand Associates, Inc.
250 Goddard
Irvine, CA 92618
Tel: (949) 777-1266
Fax:(949) 777-1276

ELAP No.: 1838
CSDLAC No.: 10196
ORELAP No.: CA300003
TCEQ No. : T104704502

Re: ATL Work Order Number : 1702042
Client Reference : LAC-6th St., LAC-17-001

Enclosed are the results for sample(s) received on May 17, 2017 by Advanced Technology Laboratories. The sample(s) are tested for the parameters as indicated on the enclosed chain of custody in accordance with applicable laboratory certifications. The laboratory results contained in this report specifically pertains to the sample(s) submitted.

Thank you for the opportunity to serve the needs of your company. If you have any questions, please feel free to contact me or your Project Manager.

Sincerely,

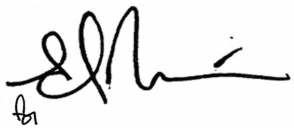

Eddie Rodriguez
Laboratory Director

The cover letter and the case narrative are an integral part of this analytical report and its absence renders the report invalid. Test results contained within this data package meet the requirements of applicable state-specific certification programs. The report cannot be reproduced without written permission from the client and Advanced Technology Laboratories.

Certificate of Analysis

Hushmand Associates, Inc.	Project Number : LAC-6th St., LAC-17-001
250 Goddard	Report To : Naresh Bellana
Irvine , CA 92618	Reported : 05/24/2017

SUMMARY OF SAMPLES

Sample ID	Laboratory ID	Matrix	Date Sampled	Date Received
9-1-0.5	1702042-01	Soil	5/17/17 6:57	5/17/17 8:45
9-1-1.0	1702042-02	Soil	5/17/17 6:59	5/17/17 8:45
9-1-3.0	1702042-03	Soil	5/17/17 7:06	5/17/17 8:45
9-1-5.0	1702042-04	Soil	5/17/17 7:10	5/17/17 8:45
9-2-0.5	1702042-05	Soil	5/17/17 7:25	5/17/17 8:45
9-2-1.0	1702042-06	Soil	5/17/17 7:28	5/17/17 8:45
9-3-0.5	1702042-07	Soil	5/17/17 7:33	5/17/17 8:45
9-3-1.0	1702042-08	Soil	5/17/17 7:35	5/17/17 8:45
9-3-3.0	1702042-09	Soil	5/17/17 7:45	5/17/17 8:45
9-3-5.0	1702042-10	Soil	5/17/17 7:50	5/17/17 8:45

Certificate of Analysis

Hushmand Associates, Inc.	Project Number : LAC-6th St., LAC-17-001
250 Goddard	Report To : Naresh Bellana
Irvine , CA 92618	Reported : 05/24/2017

Client Sample ID 9-1-0.5

Lab ID: 1702042-01

Total Metals by ICP-AES EPA 6010B **Analyst: GO**

Analyte	Result (mg/kg)	PQL (mg/kg)	Dilution	Batch	Prepared	Date/Time Analyzed	Notes
Lead	**740**	1.0	1	B7E0731	05/22/2017	05/22/17 16:55	

Certificate of Analysis

Hushmand Associates, Inc.	Project Number : LAC-6th St., LAC-17-001
250 Goddard	Report To : Naresh Bellana
Irvine , CA 92618	Reported : 05/24/2017

Client Sample ID 9-1-1.0

Lab ID: 1702042-02

Total Metals by ICP-AES EPA 6010B

Analyst: GO

Analyte	Result (mg/kg)	PQL (mg/kg)	Dilution	Batch	Prepared	Date/Time Analyzed	Notes
Lead	**94**	1.0	1	B7E0731	05/22/2017	05/22/17 16:56	

Certificate of Analysis

Hushmand Associates, Inc.	Project Number : LAC-6th St., LAC-17-001
250 Goddard	Report To : Naresh Bellana
Irvine , CA 92618	Reported : 05/24/2017

Client Sample ID 9-1-3.0

Lab ID: 1702042-03

Total Metals by ICP-AES EPA 6010B

Analyst: GO

Analyte	Result (mg/kg)	PQL (mg/kg)	Dilution	Batch	Prepared	Date/Time Analyzed	Notes
Lead	**7.1**	1.0	1	B7E0731	05/22/2017	05/22/17 16:57	

Certificate of Analysis

Hushmand Associates, Inc.	Project Number : LAC-6th St., LAC-17-001
250 Goddard	Report To : Naresh Bellana
Irvine , CA 92618	Reported : 05/24/2017

Client Sample ID 9-1-5.0

Lab ID: 1702042-04

Total Metals by ICP-AES EPA 6010B

Analyst: GO

Analyte	Result (mg/kg)	PQL (mg/kg)	Dilution	Batch	Prepared	Date/Time Analyzed	Notes
Lead	**2.0**	1.0	1	B7E0731	05/22/2017	05/22/17 16:58	

Certificate of Analysis

Hushmand Associates, Inc.	Project Number : LAC-6th St., LAC-17-001
250 Goddard	Report To : Naresh Bellana
Irvine , CA 92618	Reported : 05/24/2017

Client Sample ID 9-2-0.5

Lab ID: 1702042-05

Total Metals by ICP-AES EPA 6010B

Analyst: GO

Analyte	Result (mg/kg)	PQL (mg/kg)	Dilution	Batch	Prepared	Date/Time Analyzed	Notes
Lead	**78**	1.0	1	B7E0731	05/22/2017	05/22/17 16:59	

Certificate of Analysis

Hushmand Associates, Inc.	Project Number : LAC-6th St., LAC-17-001
250 Goddard	Report To : Naresh Bellana
Irvine , CA 92618	Reported : 05/24/2017

Client Sample ID 9-2-1.0

Lab ID: 1702042-06

Total Metals by ICP-AES EPA 6010B

Analyst: GO

Analyte	Result (mg/kg)	PQL (mg/kg)	Dilution	Batch	Prepared	Date/Time Analyzed	Notes
Lead	**630**	1.0	1	B7E0731	05/22/2017	05/22/17 17:00	

Certificate of Analysis

Hushmand Associates, Inc.	Project Number : LAC-6th St., LAC-17-001
250 Goddard	Report To : Naresh Bellana
Irvine , CA 92618	Reported : 05/24/2017

Client Sample ID 9-3-0.5

Lab ID: 1702042-07

Total Metals by ICP-AES EPA 6010B

Analyst: GO

Analyte	Result (mg/kg)	PQL (mg/kg)	Dilution	Batch	Prepared	Date/Time Analyzed	Notes
Lead	**52**	1.0	1	B7E0731	05/22/2017	05/22/17 17:02	

Certificate of Analysis

Hushmand Associates, Inc.	Project Number : LAC-6th St., LAC-17-001
250 Goddard	Report To : Naresh Bellana
Irvine , CA 92618	Reported : 05/24/2017

Client Sample ID 9-3-1.0

Lab ID: 1702042-08

Total Metals by ICP-AES EPA 6010B

Analyst: GO

Analyte	Result (mg/kg)	PQL (mg/kg)	Dilution	Batch	Prepared	Date/Time Analyzed	Notes
Lead	**29**	1.0	1	B7E0731	05/22/2017	05/22/17 17:06	

Certificate of Analysis

Hushmand Associates, Inc.	Project Number : LAC-6th St., LAC-17-001
250 Goddard	Report To : Naresh Bellana
Irvine , CA 92618	Reported : 05/24/2017

Client Sample ID 9-3-3.0

Lab ID: 1702042-09

Total Metals by ICP-AES EPA 6010B

Analyst: GO

Analyte	Result (mg/kg)	PQL (mg/kg)	Dilution	Batch	Prepared	Date/Time Analyzed	Notes
Lead	**1.7**	1.0	1	B7E0731	05/22/2017	05/22/17 17:07	

Certificate of Analysis

Hushmand Associates, Inc.	Project Number : LAC-6th St., LAC-17-001
250 Goddard	Report To : Naresh Bellana
Irvine , CA 92618	Reported : 05/24/2017

Client Sample ID 9-3-5.0

Lab ID: 1702042-10

Total Metals by ICP-AES EPA 6010B

Analyst: GO

Analyte	Result (mg/kg)	PQL (mg/kg)	Dilution	Batch	Prepared	Date/Time Analyzed	Notes
Lead	**5.9**	1.0	1	B7E0731	05/22/2017	05/22/17 17:08	

Certificate of Analysis

Hushmand Associates, Inc.	Project Number : LAC-6th St., LAC-17-001
250 Goddard	Report To : Naresh Bellana
Irvine , CA 92618	Reported : 05/24/2017

QUALITY CONTROL SECTION

Total Metals by ICP-AES EPA 6010B - Quality Control

Analyte	Result (mg/kg)	PQL (mg/kg)	MDL (mg/kg)	Spike Level	Source Result	% Rec	% Rec Limits	RPD	RPD Limit	Notes
Batch B7E0731 - EPA 3050B_S										
Blank (B7E0731-BLK1)					Prepared: 5/22/2017 Analyzed: 5/22/2017					
Lead	ND	1.0	0.19							
LCS (B7E0731-BS1)					Prepared: 5/22/2017 Analyzed: 5/22/2017					
Lead	45.4173	1.0	0.19	50.0000		90.8	80 - 120			
Matrix Spike (B7E0731-MS1)			**Source: 1702042-10**		Prepared: 5/22/2017 Analyzed: 5/22/2017					
Lead	95.5626	1.0	0.19	125.000	5.94357	71.7	34 - 129			
Matrix Spike Dup (B7E0731-MSD1)			**Source: 1702042-10**		Prepared: 5/22/2017 Analyzed: 5/22/2017					
Lead	117.139	1.0	0.19	125.000	5.94357	89.0	34 - 129	20.3	20	R

Certificate of Analysis

Hushmand Associates, Inc.	Project Number : LAC-6th St., LAC-17-001
250 Goddard	Report To : Naresh Bellana
Irvine , CA 92618	Reported : 05/24/2017

Notes and Definitions

R	RPD value outside acceptance criteria. Calculation is based on raw values.
ND	Analyte is not detected at or above the Practical Quantitation Limit (PQL). When client requests quantitation against MDL, analyte is not detected at or above the Method Detection Limit (MDL)
PQL	Practical Quantitation Limit
MDL	Method Detection Limit
NR	Not Reported
RPD	Relative Percent Difference
CA2	CA-ELAP (CDPH)
OR1	OR-NELAP (OSPHL)
TX1	TX-NELAP (TCEQ)

Notes:
(1) The reported MDL and PQL are based on prep ratio variation and analytical dilution.
(2) The suffix [2C] of specific analytes signifies that the reported result is taken from the instrument's second column.
(3) Results are wet unless otherwise specified.

ADVANCED TECHNOLOGY LABORATORIES

3275 Walnut Ave., Signal Hill, CA 90755
Tel: (562) 989-4045 • Fax: (562) 989-4040

CHAIN OF CUSTODY RECORD

Page 1 of 1

Instruction: Complete all shaded areas.

For Laboratory Use Only — ATLCOC Ver: 20130715

Method of Transport	Sample Conditions Upon Receipt					
	Condition	Y	N	Condition	Y	N
☑ Client ☐ ATL	1. CHILLED	☐	☐	5. # OF SAMPLES MATCH COC	☐	☐
☐ FedEx ☐ OnTrac	2. HEADSPACE (V0A)	NA	☐	6. PRESERVED	☐	☑
☐ GSO	3. CONTAINER INTACT	☐	☐	7. COOLER TEMP, deg C:		
☐ Other: _____	4. SEALED	☐	☑	NO COOLER		

CUSTOMER

Company: Hushmand & Assoc	Address:		Tel:
	City:	State:	Zip: Fax:

SEND REPORT TO:	SEND INVOICE TO: ☐ same as SEND REPORT TO
Attn: Naresh Bellamkonda Email:	Attn: Email:
Company: Hushmand & Assoc	Company:
Address: 250 Goddard	Address:
City: Irvine State: Zip:	City: State: Zip:

PROJECT SAMPLES

Project Name: LAC- 6th st.
Project No.: LAC-17-001
Sampler: DAT
Quote No:
PO #:
Special Instructions/Comments:

ITEM	Lab No.	Sample Description: Sample ID / Location	Date	Time
1	702042-01	9-1-0.5	5-17	6:57
2	-02	9-1-1.0		6:59
3	-03	9-1-3.0		7:06
4	-04	9-1-5.0		7:10
5	-05	9-2-0.5		7:25
6	-06	9-2-1.0		7:28
7	-07	9-3-0.5		7:33
8	-08	9-3-1.0		7:35
9	-09	9-3-3.0		7:45
10	-10	9-3-5.0		7:50

Encircle or Write Requested Analysis

8260 / 624 (Volatiles)	8015(GRO)	8015(DRO)	8270(Semi-volatiles)	8081(Organochlorine Pesticides)	8082(PCBs)	6010 / 7000(Title 22 Metals)	TO-15	Lead only
						X		
						X		
						X		
						X		
						X		
						X		
						X		
						X		
						X		
						X		

Encircle Sample Matrix: (SOIL) / SEDIMENT / SLUDGE; SOLIDS / WIPE / FILTER; WATER - DRINKING / GROUND; WATER - STORM / WASTE; AQUEOUS / LAYERED - OIL

TAT	Container #	Container Type: 1=Tube; 2=VOA; 3=Liter; 4=Pint; 5=Jar; 6=Tedlar; 7=Canister	Container Material: 1=Glass; 2=Plastic; 3=Metal	Preservative: 1=HCl; 2=HNO3; 3=H2SO4; 4=NaOH; 5=Zn (Ac)2; 6=NaOH; 7=NA2S2O3	REMARKS
5	1	5	1	MA	Lead only
	1				
	1				
	1				
	1				
	1				
	1				
	1				
	1				
	1				

QA/QC
- ☐ Routine
- ☐ Caltrans
- ☐ Legal
- ☐ RWQCB
- ☐ Level IV

SUBMITTAL

1. Sample receiving hours: 7:30 AM to 7:30 PM Monday - Friday; Saturday 8:00 AM to 12:00 PM.
2. Samples Submitted AFTER 3:00 PM, are considered received the following Business day at 8:00 AM.
3. The following turnaround time conditions apply:
   - TAT = 0 : 300% Surcharge SAME BUSINESS DAY if received by 9:00 AM
   - TAT = 1 : 100% Surcharge NEXT BUSINESS DAY (COB 5:00 PM)
   - TAT = 2 : 50% Surcharge 2ND BUSINESS DAY (COB 5:00 PM)
   - TAT = 3 : 30% Surcharge 3RD BUSINESS DAY (COB 5:00 PM)
   - TAT = 4 : 20% Surcharge 4TH BUSINESS DAY (COB 5:00 PM)
   - TAT = 5 : NO SURCHARGE 5th BUSINESS DAY (COB 5:00 PM)
4. Weekend, holiday, after-hours work - ask for quote.
5. Subcontract TAT is 10 - 15 business days. Projects requiring shorter TATs will incur a surcharge respective to the subcontract lab -- ask for quote.
6. Liquid and solid samples will be disposed of after 45 calendar days from receipt of samples; air samples will be disposed of after 14 calendar days after receipt of samples.
7. Electronic records maintained for fi ve (5) years from report date.
8. Hard copy reports will be disposed of after 45 calendar days from report date.
9. Storage and Report Fees:
   - Liquid & solid samples: Complimentary storage for forty-fi ve (45) calendar days from receipt of samples; $2/sample/month if extended storage or hold is requested.
   - Air samples: Complimentary storage for ten (10) calendar days from receipt of samples; $20/ sample/week if extended storage is requested.
   - Hard copy and regenerated reports/EDDs: $17.50 per hard copy report requested; $50.00 per regenerated/reforma? ed report; $35 per reprocessed EDD.
10. Rush TCLP/STLC samples: add 2 days to analysis TAT for extraction on procedure.
11. Unanalyzed samples will incur a disposal fee of $7 per sample.

As the authorized agent of the company above, I hereby purchase laboratory services from ATL as shown above and hereby guarantee payment as quoted.

Don Torres — Submitter Print Name

Signature

Relinquished by: (Signature and Printed Name)	Date:	Time:	Received by: (Signature and Printed Name)	Date:	Time:
Don Torres	5-17-17	8:45		5/17/17	08:45
Relinquished by: (Signature and Printed Name)	Date:	Time:	Received by: (Signature and Printed Name)	Date:	Time:
Relinquished by: (Signature and Printed Name)	Date:	Time:	Received by: (Signature and Printed Name)	Date:	Time:

ADVANCED TECHNOLOGY LABORATORIES

June 05, 2017

Naresh Bellana
Hushmand Associates, Inc.
250 Goddard
Irvine, CA 92618
Tel: (949) 777-1266
Fax:(949) 777-1276

ELAP No.: 1838
CSDLAC No.: 10196
ORELAP No.: CA300003
TCEQ No. : T104704502

Re: ATL Work Order Number : 1702042
Client Reference : LAC-6th St., LAC-17-001

Enclosed are the results for sample(s) received on May 17, 2017 by Advanced Technology Laboratories. The sample(s) are tested for the parameters as indicated on the enclosed chain of custody in accordance with applicable laboratory certifications. The laboratory results contained in this report specifically pertains to the sample(s) submitted.

Thank you for the opportunity to serve the needs of your company. If you have any questions, please feel free to contact me or your Project Manager.

Sincerely,



Eddie Rodriguez
Laboratory Director

The cover letter and the case narrative are an integral part of this analytical report and its absence renders the report invalid. Test results contained within this data package meet the requirements of applicable state-specific certification programs. The report cannot be reproduced without written permission from the client and Advanced Technology Laboratories.

Certificate of Analysis

Hushmand Associates, Inc.	Project Number : LAC-6th St., LAC-17-001
250 Goddard	Report To : Naresh Bellana
Irvine , CA 92618	Reported : 06/05/2017

SUMMARY OF SAMPLES

Sample ID	Laboratory ID	Matrix	Date Sampled	Date Received
9-1-0.5	1702042-01	Soil	5/17/17 6:57	5/17/17 8:45
9-1-1.0	1702042-02	Soil	5/17/17 6:59	5/17/17 8:45
9-2-0.5	1702042-05	Soil	5/17/17 7:25	5/17/17 8:45
9-2-1.0	1702042-06	Soil	5/17/17 7:28	5/17/17 8:45
9-3-0.5	1702042-07	Soil	5/17/17 7:33	5/17/17 8:45

Certificate of Analysis

Hushmand Associates, Inc.	Project Number : LAC-6th St., LAC-17-001
250 Goddard	Report To : Naresh Bellana
Irvine , CA 92618	Reported : 06/05/2017

Client Sample ID 9-1-0.5

Lab ID: 1702042-01

TCLP Metals by ICP-AES EPA 6010B

Analyst: GO

Analyte	Result (mg/L)	PQL (mg/L)	Dilution	Batch	Prepared	Date/Time Analyzed	Notes
Lead	**0.42**	0.25	5	B7F0039	06/02/2017	06/02/17 16:47	D1

STLC Metals by ICP-AES by EPA 6010B

Analyst: GO

Analyte	Result (mg/L)	PQL (mg/L)	Dilution	Batch	Prepared	Date/Time Analyzed	Notes
Lead	**34**	1.0	20	B7F0044	06/02/2017	06/02/17 14:17	D1

STLC DI Metals by ICP-AES by EPA 6010B

Analyst: GO

Analyte	Result (mg/L)	PQL (mg/L)	Dilution	Batch	Prepared	Date/Time Analyzed	Notes
Lead	ND	1.0	20	B7F0047	06/02/2017	06/02/17 13:39	D1

pH by EPA 9045C

Analyst: SLO

Analyte	Result (pH Units)	PQL (pH Units)	Dilution	Batch	Prepared	Date/Time Analyzed	Notes
pH	**6.8**	0.10	1	B7E0982	05/31/2017	05/31/17 10:00	

Certificate of Analysis

Hushmand Associates, Inc.	Project Number : LAC-6th St., LAC-17-001
250 Goddard	Report To : Naresh Bellana
Irvine , CA 92618	Reported : 06/05/2017

Client Sample ID 9-1-1.0

Lab ID: 1702042-02

TCLP Metals by ICP-AES EPA 6010B — **Analyst: GO**

Analyte	Result (mg/L)	PQL (mg/L)	Dilution	Batch	Prepared	Date/Time Analyzed	Notes
Lead	ND	0.25	5	B7F0039	06/02/2017	06/02/17 16:48	D1

STLC Metals by ICP-AES by EPA 6010B — **Analyst: GO**

Analyte	Result (mg/L)	PQL (mg/L)	Dilution	Batch	Prepared	Date/Time Analyzed	Notes
Lead	**3.2**	1.0	20	B7F0044	06/02/2017	06/02/17 14:18	D1

STLC DI Metals by ICP-AES by EPA 6010B — **Analyst: GO**

Analyte	Result (mg/L)	PQL (mg/L)	Dilution	Batch	Prepared	Date/Time Analyzed	Notes
Lead	ND	1.0	20	B7F0047	06/02/2017	06/02/17 13:40	D1

Certificate of Analysis

Hushmand Associates, Inc.	Project Number : LAC-6th St., LAC-17-001
250 Goddard	Report To : Naresh Bellana
Irvine , CA 92618	Reported : 06/05/2017

Client Sample ID 9-2-0.5

Lab ID: 1702042-05

TCLP Metals by ICP-AES EPA 6010B

Analyst: GO

Analyte	Result (mg/L)	PQL (mg/L)	Dilution	Batch	Prepared	Date/Time Analyzed	Notes
Lead	ND	0.25	5	B7F0039	06/02/2017	06/02/17 16:49	D1

STLC Metals by ICP-AES by EPA 6010B

Analyst: GO

Analyte	Result (mg/L)	PQL (mg/L)	Dilution	Batch	Prepared	Date/Time Analyzed	Notes
Lead	**5.3**	1.0	20	B7F0044	06/02/2017	06/02/17 14:19	D1

STLC DI Metals by ICP-AES by EPA 6010B

Analyst: GO

Analyte	Result (mg/L)	PQL (mg/L)	Dilution	Batch	Prepared	Date/Time Analyzed	Notes
Lead	ND	1.0	20	B7F0047	06/02/2017	06/02/17 13:41	D1

Certificate of Analysis

Hushmand Associates, Inc.	Project Number : LAC-6th St., LAC-17-001
250 Goddard	Report To : Naresh Bellana
Irvine , CA 92618	Reported : 06/05/2017

Client Sample ID 9-2-1.0

Lab ID: 1702042-06

TCLP Metals by ICP-AES EPA 6010B

Analyst: GO

Analyte	Result (mg/L)	PQL (mg/L)	Dilution	Batch	Prepared	Date/Time Analyzed	Notes
Lead	**1.5**	0.25	5	B7F0039	06/02/2017	06/02/17 16:51	D1

STLC Metals by ICP-AES by EPA 6010B

Analyst: GO

Analyte	Result (mg/L)	PQL (mg/L)	Dilution	Batch	Prepared	Date/Time Analyzed	Notes
Lead	**50**	1.0	20	B7F0044	06/02/2017	06/02/17 14:21	D1

STLC DI Metals by ICP-AES by EPA 6010B

Analyst: GO

Analyte	Result (mg/L)	PQL (mg/L)	Dilution	Batch	Prepared	Date/Time Analyzed	Notes
Lead	ND	1.0	20	B7F0047	06/02/2017	06/02/17 13:43	D1

pH by EPA 9045C

Analyst: SLO

Analyte	Result (pH Units)	PQL (pH Units)	Dilution	Batch	Prepared	Date/Time Analyzed	Notes
pH	**7.6**	0.10	1	B7E0982	05/31/2017	05/31/17 10:00	

Certificate of Analysis

Hushmand Associates, Inc.	Project Number : LAC-6th St., LAC-17-001
250 Goddard	Report To : Naresh Bellana
Irvine , CA 92618	Reported : 06/05/2017

Client Sample ID 9-3-0.5

Lab ID: 1702042-07

TCLP Metals by ICP-AES EPA 6010B — **Analyst: GO**

Analyte	Result (mg/L)	PQL (mg/L)	Dilution	Batch	Prepared	Date/Time Analyzed	Notes
Lead	ND	0.25	5	B7F0039	06/02/2017	06/02/17 16:52	D1

STLC Metals by ICP-AES by EPA 6010B — **Analyst: GO**

Analyte	Result (mg/L)	PQL (mg/L)	Dilution	Batch	Prepared	Date/Time Analyzed	Notes
Lead	**1.0**	1.0	20	B7F0044	06/02/2017	06/02/17 14:22	D1

STLC DI Metals by ICP-AES by EPA 6010B — **Analyst: GO**

Analyte	Result (mg/L)	PQL (mg/L)	Dilution	Batch	Prepared	Date/Time Analyzed	Notes
Lead	ND	1.0	20	B7F0047	06/02/2017	06/02/17 13:44	D1

Certificate of Analysis

Hushmand Associates, Inc.	Project Number : LAC-6th St., LAC-17-001
250 Goddard	Report To : Naresh Bellana
Irvine , CA 92618	Reported : 06/05/2017

QUALITY CONTROL SECTION

TCLP Metals by ICP-AES EPA 6010B - Quality Control

Analyte	Result (mg/L)	PQL (mg/L)	MDL (mg/L)	Spike Level	Source Result	% Rec	% Rec Limits	RPD	RPD Limit	Notes
Batch B7F0039 - EPA 3010A_S										
Blank (B7F0039-BLK1)					Prepared: 6/2/2017 Analyzed: 6/2/2017					
Lead	ND	0.050	0.0028							
Blank (B7F0039-BLK2)					Prepared: 6/2/2017 Analyzed: 6/2/2017					
Lead	ND	0.050	0.0028							
LCS (B7F0039-BS1)					Prepared: 6/2/2017 Analyzed: 6/2/2017					
Lead	1.01106	0.050	0.0028	1.00000		101	80 - 120			
Duplicate (B7F0039-DUP1)			**Source: 1702036-85**		Prepared: 6/2/2017 Analyzed: 6/2/2017					
Lead	ND	0.25	0.014		ND			NR	20	
Duplicate (B7F0039-DUP2)			**Source: 1702042-07**		Prepared: 6/2/2017 Analyzed: 6/2/2017					
Lead	ND	0.25	0.014		ND			NR	20	
Matrix Spike (B7F0039-MS1)			**Source: 1702036-85**		Prepared: 6/2/2017 Analyzed: 6/2/2017					
Lead	14.7721	0.25	0.014	2.50000	ND	591	78 - 109			M1
Matrix Spike (B7F0039-MS2)			**Source: 1702042-07**		Prepared: 6/2/2017 Analyzed: 6/2/2017					
Lead	2.45343	0.25	0.014	2.50000	ND	98.1	78 - 109			
Matrix Spike Dup (B7F0039-MSD1)			**Source: 1702036-85**		Prepared: 6/2/2017 Analyzed: 6/2/2017					
Lead	2.35424	0.25	0.014	2.50000	ND	94.2	78 - 109	145	20	R

Certificate of Analysis

Hushmand Associates, Inc.	Project Number : LAC-6th St., LAC-17-001
250 Goddard	Report To : Naresh Bellana
Irvine , CA 92618	Reported : 06/05/2017

STLC Metals by ICP-AES by EPA 6010B - Quality Control

Analyte	Result (mg/L)	PQL (mg/L)	MDL (mg/L)	Spike Level	Source Result	% Rec	% Rec Limits	RPD	RPD Limit	Notes
Batch B7F0044 - STLC_S Extraction										
Blank (B7F0044-BLK1)					Prepared: 6/2/2017 Analyzed: 6/2/2017					
Lead	ND	1.0	0.057							
Blank (B7F0044-BLK2)					Prepared: 6/2/2017 Analyzed: 6/2/2017					
Lead	ND	1.0	0.057							
LCS (B7F0044-BS1)					Prepared: 6/2/2017 Analyzed: 6/2/2017					
Lead	2.01514			2.00000		101	80 - 120			
Duplicate (B7F0044-DUP1)			**Source: 1702036-90**		Prepared: 6/2/2017 Analyzed: 6/2/2017					
Lead	6.47783	1.0	0.057		6.40643			1.11	20	
Duplicate (B7F0044-DUP2)			**Source: 1702042-07**		Prepared: 6/2/2017 Analyzed: 6/2/2017					
Lead	0.914441	1.0	0.057		1.04848			13.7	20	
Matrix Spike (B7F0044-MS1)			**Source: 1702036-90**		Prepared: 6/2/2017 Analyzed: 6/2/2017					
Lead	8.22113			2.50000	6.40643	72.6	44 - 130			
Matrix Spike (B7F0044-MS2)			**Source: 1702042-07**		Prepared: 6/2/2017 Analyzed: 6/2/2017					
Lead	3.05398			2.50000	1.04848	80.2	44 - 130			
Matrix Spike Dup (B7F0044-MSD1)			**Source: 1702036-90**		Prepared: 6/2/2017 Analyzed: 6/2/2017					
Lead	8.86890			2.50000	6.40643	98.5	44 - 130	7.58	20	

Certificate of Analysis

Hushmand Associates, Inc.	Project Number : LAC-6th St., LAC-17-001
250 Goddard	Report To : Naresh Bellana
Irvine , CA 92618	Reported : 06/05/2017

STLC DI Metals by ICP-AES by EPA 6010B - Quality Control

Analyte	Result (mg/L)	PQL (mg/L)	MDL (mg/L)	Spike Level	Source Result	% Rec	% Rec Limits	RPD	RPD Limit	Notes
Batch B7F0047 - STLC DI_S Extraction										
Blank (B7F0047-BLK1)					Prepared: 6/2/2017 Analyzed: 6/2/2017					
Lead	ND	1.0	0.057							
LCS (B7F0047-BS1)					Prepared: 6/2/2017 Analyzed: 6/2/2017					
Lead	2.00572			2.00000		100	80 - 120			
LCS Dup (B7F0047-BSD1)					Prepared: 6/2/2017 Analyzed: 6/2/2017					
Lead	2.06095			2.00000		103	80 - 120	2.72	20	

Certificate of Analysis

Hushmand Associates, Inc.	Project Number : LAC-6th St., LAC-17-001
250 Goddard	Report To : Naresh Bellana
Irvine , CA 92618	Reported : 06/05/2017

pH by EPA 9045C - Quality Control

Analyte	Result (pH Units)	PQL (pH Units)	MDL (pH Units)	Spike Level	Source Result	% Rec	% Rec Limits	RPD	RPD Limit	Notes
Batch B7E0982 - Prep_WC1_S										
Duplicate (B7E0982-DUP1)			**Source: 1702070-21**		Prepared: 5/31/2017 Analyzed: 5/31/2017					
pH	7.92000	0.10	0.10		7.81000			1.40	20	

Certificate of Analysis

Hushmand Associates, Inc.	Project Number : LAC-6th St., LAC-17-001
250 Goddard	Report To : Naresh Bellana
Irvine , CA 92618	Reported : 06/05/2017

Notes and Definitions

R	RPD value outside acceptance criteria. Calculation is based on raw values.
M1	Matrix spike recovery outside of acceptance limit. The analytical batch was validated by the laboratory control sample.
D1	Sample required dilution due to possible matrix interference.
ND	Analyte is not detected at or above the Practical Quantitation Limit (PQL). When client requests quantitation against MDL, analyte is not detected at or above the Method Detection Limit (MDL)
PQL	Practical Quantitation Limit
MDL	Method Detection Limit
NR	Not Reported
RPD	Relative Percent Difference
CA2	CA-ELAP (CDPH)
OR1	OR-NELAP (OSPHL)
TX1	TX-NELAP (TCEQ)

Notes:
(1) The reported MDL and PQL are based on prep ratio variation and analytical dilution.
(2) The suffix [2C] of specific analytes signifies that the reported result is taken from the instrument's second column.
(3) Results are wet unless otherwise specified.

Dominic Mata

From: Naresh Bellana [naresh@haieng.com]
Sent: Friday, May 26, 2017 5:10 PM
To: Rachelle Arada
Cc: Dominic Mata; Michael Leonard
Subject: LAC-17-001, Sixth St PARC - Additional Lab Tests

Hi Rachelle & Dominic,

We would like to assign the additional lab tests as per following table. I highlighted the samples which need attention earlier than others in the table.

HAI Sample ID	ATL Sample ID	Required Lab Testing	Notes
1A-1-0.5	1702036-01	STLC Cadmium TCLP Cadmium Hexavalent Chromium STLC Lead TCLP Lead	
1A-1-1.0	1702036-02	STLC Lead TCLP Lead	
1A-1-3.0	1702036-03	Hexavalent Chromium STLC Lead TCLP Lead	
1A-2-0.5	1702036-05	STLC Lead TCLP Lead	
1A-3-0.5	1702036-09	STLC Lead TCLP Lead	
1A-3-1.0	1702036-10	STLC Lead TCLP Lead	
1A-4-0.5	1702036-13	STLC Lead TCLP Lead	
5-1-1.0	1702036-30	STLC Lead TCLP Lead	
5-1-2.0	1702036-31	STLC Lead TCLP Lead	
5-2-3.0	1702036-36	STLC Lead TCLP Lead	
6-2-0.5	1702036-85	STLC Lead TCLP Lead	HIGHER PRIORITY
6-3-1.0	1702036-42	STLC Barium TCLP Barium STLC Cadmium TCLP Cadmium Hexavalent Chromium STLC Copper STLC Lead TCLP Lead STLC Zinc	HIGHER PRIORITY
6-3-3.0	1702036-43	STLC Lead TCLP Lead	HIGHER PRIORITY
6-4-1.0	1702036-46	STLC Arsenic TCLP Arsenic	

		STLC Lead TCLP Lead	
6-5-0.5	1702036-49	STLC Cadmium TCLP Cadmium Hexavalent Chromium STLC Lead TCLP Lead	
6-5-1.0	1702036-50	STLC Lead TCLP Lead	
6-8-1.0	1702036-81	STLC Lead TCLP Lead	
6-8-7.5	1702036-84	STLC Mercury TCLP Mercury	
6-9-3.0	1702036-62	STLC Antimony STLC Copper STLC Lead TCLP Lead	
6-10-1.0	1702036-65	STLC Lead TCLP Lead	
6-10-3.0	1702036-66	STLC Cadmium TCLP Cadmium STLC Lead TCLP Lead	
7-1-0.5	1702036-89	STLC Copper	
7-1-1.0	1702036-90	STLC Copper STLC Lead	
7-3-0.5	1702036-73	STLC Lead	
7-4-0.5	1702036-77	STLC Lead	
8-1-0.5	1702036-AD	STLC Copper STLC Lead	
8-1-1.0	1702036-AE	STLC Copper STLC Lead	
8-3-3.0	1702036-AN	STLC Cadmium TCLP Cadmium STLC Lead	
8-3-5.0	1702036-AO	Hexavalent Chromium	
9-1-0.5	1702042-01	STLC Lead DI-WET Lead TCLP Lead pH	
9-1-1.0	1702042-02	STLC Lead DI-WET Lead TCLP Lead	
9-2-0.5	1702042-05	STLC Lead DI-WET Lead TCLP Lead	
9-2-1.0	1702042-06	STLC Lead DI-WET Lead TCLP Lead pH	
9-3-0.5	1702042-07	STLC Lead DI-WET Lead	

		TCLP Lead	

Please let us know if you have any questions.

Thanking you,

Sincerely,

Naresh Bellana, MS, PE
Senior Staff Engineer

Hushmand Associates, Inc.
250 Goddard
Irvine, CA 92618

p. *(949) 777-1266*
d. *(949) 777-1275*
f. *(949) 777-1276*

25 Years of Service Excellence

APPENDIX D
CALTRANS AND DTSC
ADL AGREEMENT

STATE OF CALIFORNIA
ENVIRONMENTAL PROTECTION AGENCY
DEPARTMENT OF TOXIC SUBSTANCES CONTROL

In the Matter of: Aerially Deposited Lead Contaminated Soils in State Highway Rights-of-Way Project Proponent: California Department of Transportation Division of Environmental Analysis P.O. Box 94284, MS-27 Sacramento, California 94723-0001	Docket No. ESPO-SMA 15/16-001 Soil Management Agreement for Aerially Deposited Lead-Contaminated Soils Health and Safety Code Section 25187(b)(5)

I. INTRODUCTION

1.1 Parties. The California Environmental Protection Agency, Department of Toxic Substances Control (DTSC) enters into this Soil Management for Aerially Deposited Lead-Contaminated Soils Agreement (Agreement) with the California Department of Transportation (Caltrans).

1.2 Jurisdiction. This Agreement is entered into by DTSC and Caltrans pursuant to Health and Safety Code (H&SC) section 25187(b)(5), as Caltrans may generate ADL-contaminated soil in the course of future activities for State highway projects.

1.3 Purpose. This Agreement applies to the future management of aerially deposited lead (ADL)-contaminated soil generated by Caltrans in the course of State highway projects, in all Caltrans districts, statewide. The future management activities to which this Agreement generally applies are the stockpiling, disposal, tracking, transportation and final placement of ADL-contaminated soil. Subject to Section 3.23, this Agreement is not a corrective action order based on Caltrans' past ADL-contaminated soil management practices.

///

///

II.BACKGROUND

2.1 History. Refiners in the United States started adding lead compounds to gasoline in the 1920s in order to boost octane levels and improve engine performance by reducing engine 'knock' and allowing higher engine compression. Tailpipe emissions from automobiles using leaded gasoline contained lead and resulted in ADL being deposited in and along roadways throughout the State. The phasedown of lead in gasoline began in 1974 when, under the authority of the Clean Air Act Amendments of 1970, the U.S. Environmental Protection Agency (EPA) introduced rules requiring the use of unleaded gasoline in new cars equipped with catalytic converters. The introduction of catalytic converters for control of hydrocarbon (HC), nitrous oxide (NOx) and carbon monoxide (CO) emissions required that motorists use unleaded gasoline because lead destroys the emissions control capacity of catalytic converters. By the early1980s gasoline lead levels had declined about 80% as a result of both the regulations and fleet turnover. Beginning in 1992, lead was banned as a fuel additive in California.

ADL-contaminated soil still exists along roadsides and medians and can also be found underneath some existing road surfaces due to past construction activities. The highest lead concentrations are usually found within 10 feet of the edge of the pavement and within the top six inches of the soil. In some cases, lead is as deep as two to three feet below the surface and can extend 20 feet or more from the edge of pavement. Transportation of such soil to hazardous waste landfills challenges the State's limited hazardous waste landfill capacity and increases air pollution due to trucking. The alternative of transporting the soil out of state for disposal is State-resource-intensive, and contrary to Caltrans policy. Caltrans, by managing the soil in accordance with this Agreement, would be reducing hazards, preserving landfill capacity, and reducing the air quality impacts inherent in transporting the soil many miles to landfills, while still protecting human health and the environment.

///

Various lines of evidence indicate the potential for lead leaching into groundwater is low. Most important are soil data collected from actual sites in California where Caltrans has conducted construction operations. Measurements of Partitioning Coefficients (Kd) from 595 ADL-contaminated soil samples indicate that lead, while prevalent, is so tightly bound to the soil that it does not pose a serious threat of leaching into the groundwater. The calculated mean Kd of 333 liters per kilogram (L/kg) from northern California soils was the lowest of the groups in the dataset but is still far above the recognized threshold of Kd = 20 for chemicals that are considered immobile and not a threat of leaching to groundwater. However, for soil having pH less than 5; the solubility of lead increases greatly.

Surface water is protected through implementation of Caltrans Stormwater Management Plan (SWMP) which addresses stormwater pollution control related to Caltrans activities, including planning, design, construction, maintenance, and operation of roadways and facilities as required in the Caltrans Statewide Storm Water Permit (State Water Resources Control Board Order 2012-0011-DWQ, as amended by Orders WQ 2014-0006-EXEC, WQ 2014-0077-DWQ & WQ 2015-0036-EXEC). Caltrans submitted a proposed SWMP on November 23, 2015, which must be approved by the State Water Resources Control Board, and as specified in the Permit approved terms of the SWMP are fully enforceable by the State Water Board and nine Regional Water Boards. Surface water is afforded additional protections if there are potential impacts from projects that fall under the jurisdiction of the Coastal Commission (or designees) and/or the California Department of Fish and Wildlife (DFW). Caltrans has partnering agreements with these agencies and they are engaged early in the transportation project development process. The Coastal Commission is a Certified Regulatory Program under CEQA and DFW is a trustee agency under CEQA. As regulatory agencies, both are required under CEQA to review projects within their jurisdiction. Whenever a transportation project is proposed within the California Coastal Zone, the California Coastal Act (Section 30600) states that any activity meeting the definition of

development requires a coastal development permit or verification of an exemption or waiver. Sections 30230 - 30232 of the act specifically address water quality and water quality protection requirements may be added to permits. Whenever a project is proposed within the jurisdiction of the DFW, Caltrans coordinates with DFW on project development pursuant to Sections 1600, 2050, and 2081 of the Fish and Game Code. Section 1600 of the Fish and Game Code regulates impacts to lakes and streambeds. Sections 2050 and 2081 (California Endangered Species Act) regulate impacts to endangered species. Caltrans coordinates with DFW throughout the project delivery process to identify impacts to areas within their jurisdiction and address those impacts. Caltrans standard practice on all projects is to protect water quality by incorporating permanent stormwater pollution prevention Best Management Practices (BMPs) in highway drainage design. These site specific permanent BMPs, which are appropriate for the flow rates, prevent erosion and any associated discharge of pollutants.

2.2 Previous Actions Taken.

In 1995, pursuant to Health and Safety Code 25143, DTSC granted certain Caltrans' districts a Variance from the hazardous waste management requirements to obtain a permit for a disposal facility and any other generator requirements that concern the transportation, manifesting, storage and land disposal of hazardous waste for aerially deposited lead-contaminated soils, as defined in the Variance (Variance). The Variance substituted alternative management standards which allowed Caltrans road construction projects to reuse ADL-contaminated soils with hazardous waste levels of lead on project sites while maintaining protection of human health and the environment. Although the level of lead found in some areas is higher than that which is considered to be hazardous waste, it was determined that Caltrans could reuse the soil along the freeways and roads under construction without posing an unacceptable risk to human health or the environment. Keeping these soils in defined areas in which people spend little, if any, time prevents contact with the lead.

///

In addition, Caltrans incorporated specifications in its contracts with construction contractors that require contractors to handle hazardous waste level ADL-contaminated soils consistent with the requirements of the Variance. For example, soil found to contain hazardous waste levels of lead is to be kept separate from non-hazardous soil and the contractor takes dust control and security measures to keep people from coming into contact with the soil until it is reused. The hazardous waste level ADL-contaminated soil would stay in place (beneath the road, highway, freeways, or a layer of clean soil, etc.) for the life of the highway. Additional upgrades and widening are much more likely than abandoning old highways. Therefore, the hazardous waste level ADL-contaminated soil would remain secure, and human health and the environment would remain protected long term.

DTSC has issued new variances incorporating additional and more protective provisions approximately every five years since the first Variance in 1995. Additional Caltrans' districts were also added over time. The current Variance includes all Caltrans' districts and has been in effect since 2009. In June 2015, DTSC made the decision to transition from a Variance to this Agreement. This Agreement is intended to control Caltrans future activities to manage ADL contaminated soil. Subject to 3.23, this Agreement is not a corrective action order based on any specific incidents of Caltrans past ADL-contaminated soil management. Existing projects that have implemented the Variance and have completed the Project Approval and Environmental Document milestone prior to July 1, 2016 shall continue to meet all requirements of the Variance set forth in the Transition Plan.

III. AGREEMENT

3.0 IT IS HEREBY AGREED THAT DTSC shall provide oversight of the activities conducted by Caltrans related to soils containing elevated concentrations of aerially deposited lead from car exhaust in State owned highway rights-of-way. Caltrans shall conduct the activities in the manner specified herein. All work, as appropriate, shall be performed consistent with Health and Safety Code, section 25100

et seq., as amended; the National Contingency Plan (40 Code of Federal Regulations (CFR)) Part 300, as amended; DTSC and U.S. EPA RCRA and Superfund guidance documents regarding site investigation and soil management.

3.1 Definitions

3.1.1 **ADL-Contaminated Soil.** For purposes of this Agreement, ADL-contaminated soil is defined as excavated soil whose only constituent of concern that poses an unacceptable risk to human health or the environment is lead, primarily from exhaust emissions from the operation of motor vehicles, in concentrations greater than considered appropriate for unrestricted use by DTSC (currently 80 milligrams per kilogram [mg/kg] total lead based on a 95 percent upper confidence limit [UCL]) and/or 5 mg/l extractable lead based on a 95 percent UCL, as determined by the CA Waste Extraction Test (CA-WET).

3.1.2 **Clean Soil.** For purposes of this agreement, clean soil is defined as soil not containing total lead over 80 mg/kg based on a 95 percent UCL or soluble lead over 5 mg/l based on a 95 percent UCL as determined by the CA-WET and not containing other constituents at levels that would pose an unacceptable risk to human health or the environment or be unacceptable to the Regional Water Quality Control Board with jurisdiction.

3.1.3 **Project Defined Construction Corridor**. For purposes of this agreement, project defined construction corridor is defined as a specified route restricted to the State highway system that connects a Caltrans project where ADL-contaminated soil is excavated to another Caltrans project that accepts the ADL-contaminated soil for reuse. Project defined construction corridors shall be identified in the Project Notification, if determined at the time of submittal, or in the Start of Construction Notification. A project defined construction corridor shall not exceed 150 miles unless DTSC provides prior approval. DTSC shall respond to a corridor evaluation request within 5 days of submittal.

///

3.1.4 **Shelved.** For purposes of this agreement, a project is considered shelved when funding is not available for the project to proceed and the project has to be put on hold.

3.2 Scope of Work and DTSC Oversight. This Agreement applies to the management of ADL-contaminated soil excavated from or imported to the State highway system in the course of highway projects, in all Caltrans districts statewide. The management activities to which this Agreement applies are the stockpiling, disposal, tracking, transportation and final placement of ADL-contaminated soil. The ADL-contaminated soil management procedures defined in this Agreement may also be used by Caltrans on joint projects between Caltrans and local government entities, provided it is only used within State-owned highway rights-of-way and Caltrans performs quality assurance and oversight of all phases of the project including environmental assessment, design, contracting, and construction, as well as operation, and maintenance of the project segments within Caltrans' right-of-way. For such joint projects, Caltrans and the local government entity shall each retain joint and severable liability for any noncompliance with the provisions of this Agreement. DTSC shall provide oversight of response activities related to ADL-contaminated soil.

3.3 Additional Activities. Additional activities may be conducted and DTSC oversight provided by amendment to this Agreement or Exhibits hereto in accordance with Paragraph 3.15.

3.4 Agreement Managers. Daniel Ward, P.E., Chief, Engineering and Special Projects Office, is designated by DTSC as its Manager for this Agreement. Shaila Chowdhury, P.E., Chief, Hazardous Waste, Air, Noise and Paleontology Office, is assigned by Caltrans as Manager for this Agreement. Each Party to this Agreement shall provide at least ten (10) days advance written notice to the other of any change in its designated manager.

3.5 Notices and Submittals. All notices, documents and communications required to be given under this Agreement, unless otherwise specified herein, shall be

sent to the respective parties at the following addresses in a manner that produces a record of the sending of the notice, document or communication such as certified mail, overnight delivery service, facsimile transmission, electronic mail, or courier hand delivery service:

3.5.1 To DTSC:
Perry Myers, P.E., Project Manager
Department of Toxic Substances Control
Engineering and Special Projects Office
8800 Cal Center Drive
Sacramento, California 95826
ADL@dtsc.ca.gov

3.5.2 To Caltrans:
Kim Christmann, Senior Engineering Geologist (Agreement Coordinator)
California Department of Transportation
Division of Environmental Analysis
PO Box 942874, MS27
Sacramento, California 94271-0001
ADL@dot.ca.gov

3.6 Communications. All of DTSC's approvals and decisions, when required, made regarding submittals and notifications shall be communicated to Caltrans in writing by DTSC's Agreement Manager or his/her designee. No informal advice, guidance, plans, specifications, schedules or any other writings by DTSC shall be constructed to relieve Caltrans of the obligation to obtain such written approvals.

3.7 Endangerment During Implementation. In the event DTSC determines that any activity within their jurisdiction (whether or not pursued in compliance with this Agreement) may pose an imminent or substantial endangerment to public health or to the environment, DTSC may order Caltrans to stop further implementation for such period of time as may be needed to abate the endangerment.

3.8 Payment. Reimbursement for DTSC's costs related to this agreement, not to exceed $150,000 annually (comprised of no more than 1760 hours plus contract support costs) shall be made through the existing interagency agreement (identified as Caltrans 43A0310 and DTSC 12-T0106) and its successors.

3.9 **Coordinators**. Caltrans shall designate an Agreement Coordinator, with expertise in hazardous waste and hazardous substance handling/management to establish policies and procedures consistent with this Agreement. Additionally, Caltrans shall designate at least one District Coordinator for each Caltrans district in the State. These District Coordinators shall be the primary point of contact for information flowing to or received from DTSC, regarding any matter or submission under this Agreement. Caltrans shall submit the names and addresses of the Coordinators to DTSC. Caltrans shall promptly notify DTSC of any change in the identity of the Coordinators.

3.10 **Access.** After scheduling access with the Caltrans project Resident Engineer, Caltrans shall provide DTSC's employees, and its authorized representatives, access to individual project areas to which access is necessary to implement this Agreement. Such access shall be subject to the Caltrans project Resident Engineer's safety requirements. Nothing in this paragraph is intended or shall be construed to limit in any way the right of entry or inspections that DTSC or any other agency may otherwise have by operation of any law. After scheduling access with the Caltrans project Resident Engineer 24 hours prior to arrival, DTSC's employees and its authorized representatives shall have the authority to enter, and move freely about all property associated with a project area in accordance with the Caltrans project Resident Engineer's safety requirements at all reasonable times for purposes including, but not limited to: inspecting records, operations logs, sampling and analytic data, and contracts relating to activities under this Agreement; reviewing the progress of Caltrans in carrying out the terms of this Agreement; conducting such tests as DTSC may deem necessary; and verifying the data submitted to DTSC by Caltrans.

3.11 **Sampling and Analysis.** Caltrans shall submit to DTSC a sampling and analysis summary that describes sampling activities and analytical methods typically used to characterize potential contamination at highway projects within 60 days of the Effective Date of the Agreement.

///

3.12 Sampling, Data and Document Availability. When requested by DTSC, Caltrans shall make available to DTSC and shall provide copies of, all data and information concerning ADL contamination on a project job site, including technical records, ADL sampling and monitoring information and photographs and maps, whether or not such data and information was developed pursuant to this Agreement.

3.13 Notification of Environmental Conditions. Caltrans shall notify DTSC's Agreement Manager immediately upon learning of any condition posing a significant threat to human health or the environment pertaining to ADL-contaminated soil. Within seven (7) days of the onset of such a condition, Caltrans shall furnish a report to DTSC, signed by the Caltrans' Agreement Manager, setting forth the events which occurred and the measures taken in the response thereto.

3.14 Preservation of Documentation. Caltrans shall maintain a repository of the data, reports, and other documents prepared pursuant to Section 4 of this Agreement. All such data, reports and other documents shall be preserved by Caltrans for a minimum of six (6) years after the conclusion of all activities carried out under this Agreement. If DTSC requests that some or all these documents be preserved for a longer period to time, Caltrans shall either comply with that request, deliver the documents to DTSC, or permit DTSC to copy the documents prior to destruction. Caltrans shall notify DTSC in writing at least ninety (90) days prior to the expiration of the six-year minimum retention period before destroying any documents prepared pursuant to this Agreement. If any litigation, claim, negotiation, audit or other actions involving the records have been started before the expiration of the six-year period, the related records shall be retained until the completion and resolution of all issues arising therefrom or until the end of the six-year period, whichever is later.

3.15 Amendments. This Agreement may be amended or modified solely upon written consent of all parties. Such amendments or modifications may be proposed by either party and shall be effective the third business day following the day

///

the last party signing the amendment or modification sends its notification of signing to the other party. The parties may agree to a different effective date. The Parties shall review the Agreement every five (5) years for the purpose of determining whether amendments are warranted.

3.16 Integration. This Agreement constitutes the entire Agreement between the parties and may not be amended, supplemented, or modified, except as provided in this Agreement.

3.17 California Environmental Quality Act (CEQA). Consistent with the California Environmental Quality Act, DTSC shall prepare any necessary CEQA documents related to this Agreement. If required, Caltrans shall submit the information necessary for DTSC to prepare these documents. As required by law, Caltrans will ensure that each individual highway project will comply with CEQA, on a project specific basis. Caltrans will consider the reuse of ADL-contaminated soil during the project-specific CEQA process.

3.18 Dispute Resolution. The Parties agree that the procedures contained in this Section are the required informal administrative procedures for resolving disputes arising under this Agreement. If Caltrans fails to follow the procedures contained in this section, it shall have waived its right to further contest the disputed issue. Parties shall follow sections 3.18.1 through and including 3.18.2 to resolve disputes other than billing and cost recovery issues.

3.18.1 The Parties agree in the first instance to attempt to resolve informally, among the DTSC Project Manager and Caltrans Agreement Coordinator, any disagreement as to Caltrans' compliance with the requirements of this Agreement. The DTSC Project Manager shall memorialize the decision and rationale resulting from these discussions (Initial Informal Administrative Decision) and provide it to Caltrans.

3.18.2 If Caltrans disagrees with the Initial Informal Administrative Decision, it may seek a second level of review. The second level reviewers shall be a DTSC Cleanup Program Division Chief and the Caltrans Environmental Analysis Division

Chief, or their designee(s). Within thirty (30) days of the Initial Informal Administrative Decision Caltrans shall provide to these second level reviewers a written notice stating the reasons why the Initial Informal Administrative Decision is not acceptable and the remedy sought. The notice shall include (a) Caltrans original statement of dispute, (b) supporting documents, including the Initial Informal Administrative Decision, and (c) copies of any responses prepared by the DTSC Project Manager**.** These reviewers shall consider the issues raised in Caltrans' notice, and DTSC shall render a written decision to Caltrans within thirty (30) days of receipt of Caltrans written dispute notice. The Parties may meet and confer prior to the written decision and may mutually agree to extend the days for resolution of the dispute. The decision shall constitute DTSC's Final Informal Administrative Decision on the issues in dispute. Caltrans reserves its legal rights to contest or defend against any final informal administrative decision rendered by DTSC under this section. DTSC reserves its rights as set forth throughout this Agreement. If either party contests the Final Informal Administrative Decision they may elevate the dispute to their respective agency.

3.19 Additional Enforcement Actions. By agreeing to this Agreement, DTSC does not waive the right to take further enforcement actions, except to the extent provided in this Agreement.

3.20 Penalties for Noncompliance. Failure to comply with the terms of this Agreement may subject Caltrans, its local governmental entity partners and its contractors to civil penalties and/or punitive damages for any costs incurred by DTSC or other government agencies as a result of such failure, as provided by applicable provisions of law.

3.21 Exhibits. All exhibits attached to this Agreement are incorporated herein by this reference.

3.22 Time-Periods. Unless otherwise specified, time periods begin from the date this Agreement is fully executed, and "days" means calendar days. "Business days" means all calendar days that are not weekends or official State Holidays.

3.23 Caltrans Liabilities. Nothing in this Agreement shall constitute or be considered a satisfaction or release from liability for any condition or claim arising as a result of Caltrans' past, current, or future operations. Nothing in this Agreement is intended or shall be construed to limit the rights of any of the parties with respect to claims arising out of or relating to the deposit or disposal at any other location of substances removed from the rights-of-way, except to the extent provided in this Agreement as related to ADL-contaminated soil.

3.24 DTSC Liabilities. DTSC shall not be liable for any injuries or damages to persons or property resulting from acts or omissions by Caltrans or by related parties in carrying out activities pursuant to this Agreement, nor shall DTSC be held as a party to any contract entered into by Caltrans or its agents in carrying out the activities pursuant to this Agreement.

3.25 Third Party Actions. In the event that Caltrans is a party to any suit or claim for damages or contribution relating to work done under this Agreement to which DTSC is not a party, Caltrans shall notify DTSC in writing within ten (10) days after service of the complaint in the third-party. Caltrans shall pay all costs incurred by DTSC relating to such third-party actions, including but not limited to responding to subpoenas.

3.26 Reservation of Rights. Nothing in this Agreement is intended or shall be construed to limit or preclude DTSC from taking any action authorized by law or equity to protect human health or the environment and recovering the cost thereof.

3.26.1 By entering into this Agreement, Caltrans does not admit to any fact, fault, or liability under any statue or regulation.

3.27 Compliance with Applicable Laws. Nothing in this Agreement shall relieve Caltrans from complying with all other applicable laws and regulations, and Caltrans shall conform all actions required by this Agreement with all applicable federal, state and local laws and regulations.

3.28 California Law. This Agreement shall be governed, performed and interpreted under the laws under the State of California.

3.29 Severability. If any portion of this Agreement is ultimately determined not to be enforceable, that portion shall be severed from the Agreement and the severability shall not affect the enforceability of the remaining terms of the Agreement.

3.30 Parties Bound. This Agreement applies to and is binding upon Caltrans and any successor agency of the State of California, and upon DTSC and any successor agency of the State of California that may have responsibility for and jurisdiction over the subject matter of this Agreement.

3.31 Effective Date. The effective date of this Agreement is the date when this Agreement is fully executed.

3.32 Representative Authority. Each undersigned representative of the parties to this Agreement certifies that he or she is fully authorized to enter into the terms and conditions of this Agreement and to execute and legally bind the parties to this Agreement.

3.33 Counterparts. This Agreement may be executed and delivered in any number of counterparts, each of which when executed and delivered shall be deemed to be an original, but such counterparts shall together constitute one and the same document.

IV. REQUIREMENTS FOR MANAGING ADL-CONTAMINATED SOILS

4.0 All ADL-contaminated soil excavated or imported during construction activities shall be managed consistent with this Agreement to ensure there is not an unacceptable risk to human health or the environment. ADL-contaminated soil shall be managed by Caltrans, its local government entity partners and its contractors according to this section. Decisions regarding the handling of ADL-contaminated soil will be based on a 95 percent UCL in cases where this information is available. If this type of data analysis has not been performed it will be based on the maximum lead value detected.

4.1 General Requirements. General requirements for all highway projects operating under this Agreement:

///

4.1.1 For all ADL-contaminated soil handling activities conducted under this Agreement, Caltrans and its contractors shall comply with all applicable federal, State and local laws, including but not limited to requirements of the State Water Resources Control Board (SWRCB) and California Regional Water Quality Control Boards (RWQCBs), water quality control plans and waste discharge requirements (including storm water permits), requirements for ADL-contaminated soil in Coastal Zone Permits issued by the Coastal Commission or its designees, requirements for ADL-contaminated soil in DFW permits, and requirements of the appropriate Air Quality Management District (AQMD) and/or Air Pollution Control District (APCD). If non-compliance with the requirements of any of these agencies related to the management of ADL-contaminated soil results in non-compliance with this Agreement, it may result in an enforcement action by DTSC. Any ADL-contaminated soil exceeding hazardous waste concentrations that, for any reason, is moved outside of the original project limits or the project defined construction corridor (in the case of ADL-contaminated soil moved from one Caltrans project to another) is not covered by this Agreement and is fully subject to the hazardous waste management standards of Health and Safety Code, chapter 6.5 (section 25100, et seq) and regulations adopted thereunder.

4.1.2 Any highway project operating under this Agreement shall comply with all provisions of any California Environmental Quality Act (CEQA) documents prepared by DTSC for this Agreement, and with any additional requirements imposed by any project-specific CEQA study prepared by another government or private entity. Reuse of ADL-contaminated soil will be evaluated during the project-specific CEQA process.

4.1.3 For each project that has the potential to excavate ADL-contaminated soil, Caltrans shall conduct sampling and analysis to adequately characterize the soils containing aerially deposited lead in the areas of planned excavation along the project route.

4.1.4 Caltrans shall, pursuant to California Code of Regulations, title 22, section 66262.11, perform hazardous waste characterization of any soil to be disposed

of at a landfill under this Agreement. All sampling and analysis must be conducted in accordance with the appropriate methods specified in U.S. EPA SW-846.

4.1.5 ADL-contaminated soils with any of the following characteristics may not be managed under this Agreement and must be properly disposed of:

4.1.5.1 Soils that are RCRA hazardous waste, including but not limited to soils exceeding the RCRA hazardous waste threshold for lead according to the Toxicity Characteristic Leaching Procedure (TCLP), USEPA Method 1311.

4.1.5.2 Soils that are non-RCRA hazardous waste, except soils whose sole hazardous constituent posing an unacceptable risk to human health or the environment is lead in concentrations not exceeding 3,200 mg/kg of total lead and not exceeding 150 mg/l of extractable lead based on a modified waste extraction test using deionized water as the extractant (DI WET).

4.1.5.3 Soil having a pH less than or equal to 5.0.

4.1.6 Caltrans shall ensure that no hazardous waste, for constituents other than lead, is placed in areas where ADL-contaminated soil is stockpiled or buried in accordance with this Agreement.

4.1.7 ADL-contaminated soil excavated under the authority of this Agreement shall not be stockpiled or buried outside of the project-defined construction corridor from where the soil was excavated, except as provided in section 4.1.7.1. Caltrans may move ADL-contaminated soil from one Caltrans project to another Caltrans project for purposes of stockpiling, placement, or burial only if the soil remains within the project-defined construction corridor except that ADL-contaminated soil shall not be moved from one project to another project and placed on a roadway within the State right-of-way whose original road construction occurred after January 1, 1996, when lead was banned from gasoline nationwide.

4.1.7.1 Soils with concentrations of total lead greater than 80 mg/kg (but not exceeding 320 mg/kg) and extractable lead less than 5 mg/l, as determined by the CA-WET, may be removed from the State highway right of way without disposal in a landfill if they are managed in accordance with section 4.6.

4.1.8 Caltrans shall implement appropriate health and safety procedures to protect its employees and the public, and to prevent or minimize exposure to lead. A project-specific lead compliance plan shall be prepared and implemented. The monitoring and exposure standards for workers shall be based on construction standards for exposure to lead in California Code of Regulations, title 8, section 1532.1.

4.1.9 During all handling of ADL-contaminated soil, including its initial excavation from roadsides, subsequent loading and unloading onto and from vehicles, and all handling related to stockpiling or burial, Caltrans shall implement fugitive dust control measures using water or other palliatives. Caltrans must comply with any additional dust control requirements imposed by the local AQMD or Air Pollution Control District (APCD).

4.1.10 If visible dust migration beyond the project limits occurs during any activity authorized by this Agreement, whether initial excavation, truck loading/unloading, transportation, stockpiling or burying of the soil, the activity must be stopped until remedial actions are taken, or other conditions change, which enable resumption of the activity without dust migration.

4.1.11 ADL-contaminated soil shall not be placed in or covered by soils with a pH less than 5.0.

4.2 Transportation of ADL-Contaminated Soils. In transporting ADL-contaminated soil on a highway open to the public within the project-defined construction corridor and to other locations pursuant to this Agreement, the following sections of California Code of Regulations, title 22, division 4.5, chapter 13 shall be followed:

4.2.1 Section 66263.16, which requires each vehicle and container used to transport hazardous waste to be designed and constructed, and its contents so limited, as to prevent release of hazardous waste to the environment, and to be free from leaks and all discharge openings securely closed during transportation;

///

4.2.2 Section 66263.23, which requires transporters of hazardous waste to use a covered container to transport hazardous wastes that are subject to dispersal by wind;

4.2.3 Sections 66263.30 and 66263.31 which require the transporter, in the case of release of hazardous waste during transportation, to take immediate action to protect human health and the environment including notifying local authorities.

4.3 Stockpiling of ADL-Contaminated Soil Within the State Right-of-Way.

4.3.1 Excavated ADL-contaminated soil designated for burial not placed into the designated burial area by the end of the working day shall be stockpiled on sheets of polyethylene or geomembrane and covered with either sheets of polyethylene or at least one foot of clean soil. The excavated ADL-contaminated soil shall be protected from contacting surface water and from being dislodged or transported by wind or storm water in such a manner that no ADL-contaminated soil is transported beyond the limits of the stockpile while the ADL-contaminated soils are stockpiled. The covers shall be inspected at least once a week and within 24 hours after rainstorms. If the ADL-contaminated soil is stockpiled for more than 4 days from the time of excavation, Caltrans shall restrict public access to the stockpile by using barriers that meet the safety requirements of the construction zone.

4.3.2 Caltrans shall stockpile ADL-contaminated soil only on high ground (i.e. no sump areas or low points) so that stockpiled soil shall not come in contact with surface water run-on or run-off.

4.3.3 Caltrans shall not stockpile ADL-contaminated soil in environmentally or ecologically sensitive areas.

4.4 Placement of Surface Soils Within the State Right-of-Way. ADL-contaminated soil with a concentration of extractable lead not exceeding 5 mg/l, as determined by the CA-WET, and total lead not exceeding 320 mg/kg may be placed without cover. The 320 mg/kg limit is protective of adult workers, including pregnant

women. These soils shall not be placed in areas routinely used by the public (e.g. rest stops). Placement of these soils shall also comply with any requirements specified by the California Regional Water Quality Control Board and other agencies, such as the California Coastal Commission and the DFW, with responsibility for and jurisdiction over the area where the project is located.

4.5 Burial Within State Right-of-Way. ADL-contaminated soil containing lead exceeding 5 mg/L, as determined by the CA-WET, or 320 mg/kg total lead may be reused but shall be buried within the State right-of-way consistent with the following provisions. Placement of these soils shall also comply with any requirements specified by the California Regional Water Quality Control Board with responsibility for the area where the project is located.

4.5.1 ADL-contaminated soil shall be buried at least five (5) feet above the maximum historical water table elevation.

4.5.2 ADL-contaminated soil shall not be buried in locations that may require maintenance activities resulting in soil disturbance. ADL-contaminated soil shall not be buried within ten (10) feet of inlets and outlets of drainage unit/systems, such as culverts, in areas to be used for earthen-based stormwater structural treatment facilities, or in Ecologically Sensitive Habitat Areas (ESHA) as defined by the California Coastal Commission, unless it is demonstrated that doing so will not create unacceptable impacts to water quality.

4.5.3 Buried ADL-contaminated soil shall be adequately covered to prevent erosion and reduce water infiltration, in compliance with the following standards, which are also depicted in Table 1:

1. Soil exceeding 5 mg/L, as determined by the CA-WET, or exceeding 320 mg/kg total lead shall be covered by a minimum of one (1) foot of clean soil or a pavement structure, as long as the DI WET concentration does not exceed 1.5 mg/l and total lead does not exceed 1600 mg/kg. In vegetated areas the soil cover must be thick enough to preclude disturbance by planned plant establishment and irrigation system installation and maintenance.
2. Soil with a concentration of extractable lead by DI-WET exceeding 1.5 mg/l or a concentration of total lead exceeding 1600 mg/kg shall be

covered by a pavement structure, as long as the DI-WET concentration does not exceed 150 mg/l and total lead does not exceed 3200 mg/kg.

3. Soil with a concentration of extractable lead by DI-WET exceeding 150 mg/l or a concentration of total lead exceeding 3200 mg/kg total lead is not eligible for management under this Agreement and is subject to full regulation as hazardous waste.

Table 1. Minimum Cover Requirements for ADL-contaminated Soil Based on Extractable and Total Lead Concentrations (95% UCL)*

Extractable Lead Concentration		Total Lead Concentration	Minimum Cover Requirement
Less than 5 mg/l CA-WET	and	Less than 320 mg/kg	No cover requirement
Greater than 5 mg/l CA-WET and equal to or below 1.5 mg/l DI-WET	or	Greater than 320 mg/kg but equal to or below 1600 mg/kg	One foot of clean soil**
Greater than 1.5 mg/l DI-WET but equal to or below 150 mg/l DI-WET	or	Greater than 1600 mg/kg but equal to or below 3200 mg/kg	Pavement structure
Greater than 150 mg/l DI-WET	or	Greater than 3200 mg/kg	Subject to full regulation as hazardous waste

**** ADL-contaminated soil having a pH less than or equal to 5.0 may not be managed under this Agreement and must be properly disposed of.***

*** This is the minimum requirement. Such soil may alternatively be covered by a pavement structure.*

4.5.4 ADL-contaminated soil shall be buried and covered in a manner that shall prevent accidental breach of the covering soil or pavement. ADL-contaminated soil shall only be placed in locations that are protected from possible erosion by storm water run-on or run-off.

4.5.5 Caltrans shall conduct regular inspections, consistent with Caltrans' Maintenance Division's current Pavement Inspection and Slope Inspection programs, of the locations where ADL-contaminated soils have been buried and covered pursuant to this Agreement. If site inspections reveal deterioration of the cover such that conditions

in the Agreement are not met, Caltrans shall notify DTSC and repair or replace the cover within 30 days.

4.6 ADL-Contaminated Soil Reused Or Temporarily Stockpiled Outside The State Right-of-Way.

ADL-contaminated soil removed from the State right-of-way for reuse elsewhere shall be managed appropriately to ensure it does not pose an unacceptable risk to human health or the environment. Soils with a concentration of extractable lead not exceeding 5 mg/l, as determined by the CA-WET, and total lead not exceeding 320 mg/kg is only appropriate for use at commercial/industrial properties. If ADL-contaminated soil is used at a real property located outside the State right-of-way, Caltrans shall submit to DTSC a completed "Agreement between a contractor working on State facilities and a real property owner for disposing construction-related material on property owner's property" as part of the Completion Report described in section 4.12. ADL-contaminated soils with a concentration of extractable lead not exceeding 5 mg/l, as determined by the CA-WET, and total lead not exceeding 320 mg/kg may be temporarily stockpiled outside the project-defined construction corridor at a commercial facility of a contractor working on the project for Caltrans if the requirements of sections 4.2 and 4.3 are adhered to. All such stockpiles shall be removed from said commercial facility prior to completion of the highway project unless that location is to be the final resting place of the ADL-contaminated soil, in which case the soils will be managed according to all requirements of this section.

4.7 Field Changes.

4.7.1 Changes in location of ADL-contaminated soil placement, quantities or protection measures from the original design (field changes) shall be noted in the Resident Engineer's Diary within five (5) days of the field change.

4.7.2 Caltrans shall ensure that any field changes are in compliance with the requirements of this Agreement.

///

4.8 Land Use Restrictions. For every property where ADL-contaminated soil is buried within State owned highway rights-of-way pursuant to this Agreement, Caltrans shall, pursuant to California Code of Regulations, title 22, section 67391.1, execute a land use covenant imposing appropriate limitations on land use of the property, which shall be binding in perpetuity upon Caltrans or any future owners of the property. The land use covenant, except as provided in section 4.8.1, shall be recorded within the county (or counties) wherein ADL-contaminated soil has been buried.

4.8.1 Properties within State owned highway rights-of-way typically do not have assessor parcel numbers (used to assess taxes) which prevents land use covenants from being properly recorded within the county (or counties) wherein they are located. For any property for which it is not feasible to establish a land use covenant, Caltrans shall meet all the following requirements.

4.8.1.1 Caltrans shall maintain a list, at its statewide office, of all locations where ADL-contaminated soil is placed or buried as part of this Agreement. Prior to any land use change for properties within State highway rights-of-way, the list shall be consulted and steps taken, if necessary, to ensure the land use change does not create an unacceptable risk to human health or the environment related to ADL-contaminated soil.

4.8.1.2 Caltrans shall revise its policy for the relinquishment of property within State highway rights-of-way to ensure that properties with ADL-contaminated soil are properly managed after relinquishment. The revised policy shall require properties relinquished to other government entities to be tracked and managed in a manner equivalent to that required of Caltrans. Properties relinquished to non-governmental entities shall, pursuant to California Code of Regulations, title 22, section 67391.1, execute a land use covenant imposing appropriate limitations on land use of the property, which shall be binding in perpetuity upon the non-governmental entity or any future owners of the property, as part of the relinquishment process. The land use covenant shall be recorded within the county (or counties) wherein ADL-contaminated soil has been buried. DTSC shall provide Caltrans sample land use covenant language upon request.

4.9 Information Available to Public.

4.9.1 Within 30 days of the effective date of this Agreement Caltrans shall post on its public website the URLs of Portable Document Format (PDF) versions of the following documents:

1. this Agreement;
2. the DTSC-prepared fact sheet concerning this Agreement;
3. a list of active projects for which the Agreement is being used to manage ADL-contaminated soil. The list shall be updated with new projects when notification for a specific project is made to DTSC.

4.9.2 Within 30 days of the effective date of this Agreement, DTSC shall post on its public website information regarding the reuse of excavated soils and appropriate land use specific to lead.

4.9.3 Within 30 days of the effective date of this Agreement DTSC and Caltrans will schedule meetings they will both participate in with (1) Caltrans transportation partners (such as cities, counties, and transportation agencies) and (2) the construction industry. The purpose of the meetings will be to explain DTSC's expectations regarding the management of soil containing lead and to explain the need for and implementation of this agreement between DTSC and Caltrans.

4.10 Project Notification. For any highway project for which this Agreement applies or is to be used, Caltrans shall provide written notification to DTSC, within 10 days of when that determination is made, and shall send copies of the notification to the RWQCB, AQMD (or APCD, as applicable), local Certified Uniform Program Agency (CUPA), and the Caltrans Agreement Coordinator. For projects that overlie multiple local agency jurisdictions, all appropriate agencies shall receive a copy of the notification.

4.10.1 The written notification shall include the following information:

1. A statement that the project shall entail excavation, stockpiling and/or burial of ADL-contaminated soil pursuant to this Agreement;
2. Project number;
3. Project description;

4. Project Limits (Route; District - County - Route - Begin Mile Post /End Mile Post);
5. URLs for or Portable Document Format (PDF) versions of the following documents:
   a) the environmental document prepared for the project;
   b) this Agreement; and
   c) the DTSC-prepared fact sheet about this Agreement.
6. Results of laboratory analysis collected during design for the ADL-contaminated soil to be placed within the highway right of way, and the name of the laboratory performing the analyses;
7. Results of laboratory analysis collected during design for the ADL-contaminated soils to be placed at a final destination property other than a landfill and name of the laboratory performing the analyses;
8. Copy of the construction contract specifications which define the management of ADL-contaminated soil; and
9. Definition of the project defined construction corridor if it has already been determined that soil will be moved from one Caltrans project to another and complete project information listed above for both the sending and receiving projects.

4.10.2 The Caltrans-authorized Lead Compliance Plan, authorized Excavation and Transportation Plan, and the contact information for the project resident engineer shall be submitted to DTSC within ten (10) days of document approval or staff identification, respectively.

4.10.3 For purposes of sending a copy of the notification to a local agency that is notified of the project pursuant to separate requirements of that local agency, that separate notification fulfills the requirement of this section only if such notification includes all information listed in 4.10.1 and is sent in advance as required by this subsection.

4.11 <u>Start of Construction Notification.</u> At least five (5) days in advance of initiation of construction on any project for which this Agreement applies or is used, Caltrans shall provide written notification to DTSC containing the following information concerning the project:

1. Project number;
2. Project description;
3. Project Limits (District - County - Route - Begin Postmile /End Postmile);

4. Anticipated start and end dates of the construction phase of the project;
5. Contact information for the project resident engineer;
6. A list of Caltrans contractors to be involved in the construction phase of the project;
7. Definition of the project defined construction corridor if soil will be moved from one Caltrans project to another. Include complete project information listed above for both the sending and receiving projects; and
8. The address and property owner information for the location where the contractor will stockpile or dispose nonhazardous ADL-contaminated soil with a total lead concentration between 80 and 320 mg/kg.

4.12 <u>Completion Report.</u> Within 180 days of completion of the construction phase of any project for which this Agreement applies or is used, provide to DTSC, in writing, the following:

4.12.1

1. Project number;
2. Project description;
3. Project limits (District - County - Route - Begin Postmile /End Postmile);
4. Actual start and end dates of construction; and
5. A list of all USEPA ID numbers (including temporary ID numbers) assigned by DTSC for use on the project.

4.12.2 If ADL-contaminated soil was buried in accordance with section 4.5 of this Agreement within the State right-of-way as part of the project, the following information:

1. All survey data for the placement location, including precise latitude and longitude, elevation (top and bottom in North American Vertical Datum of 1988[NAVD 88]), postmiles and highway number;
2. The approximate volume, in cubic yards, of ADL-contaminated soil buried;
3. The historical maximum elevation of the water table underlying the burial location NAVD 88;
4. The results of laboratory analysis collected during construction, if any, for the ADL-contaminated soil placed, and name of the laboratory performing the analyses;
5. Type of cover (soil or pavement);
6. Thickness of cover used; and
7. Copies of any and all bills of lading used for transporting ADL-contaminated soil to the active construction zone of the project.

4.12.3 For any ADL-contaminated soils that were permanently removed from the highway right of way, the following information:

1. The final destination of the soils (landfill, private property, other);
2. Copies of any and all bills of lading and hazardous waste manifests used to transport the ADL-contaminated soils;
3. The name and contact information for the landfill or property owner of the final destination property;
4. If not a landfill, the zoning for the final destination property;
5. The volume of ADL-contaminated soil moved to a landfill and/or final destination property;
6. If not a landfill, whether the ADL-contaminated soils were stockpiled or used as fill; and
7. For ADL-contaminated soils placed at a final destination property other than a landfill, the results of laboratory analysis collected during construction, if any, and the name of the laboratory performing the analyses.

4.13 Project Documentation Availability. Following construction contract acceptance, Caltrans shall maintain, at its statewide office or appropriate District or Regional office, individual project records containing information regarding all projects for which this Agreement applies or is used, and shall ensure that the information is readily accessible to the public. The project records for each project shall include:

1. A copy of the Agreement and all attachments thereto;
2. Copies of the project-specific information submitted to DTSC pursuant to this Agreement; and
3. A map showing the mappable survey data for each burial location.

4.14 Transition Plan. Transition of existing highway projects to the requirements of this Agreement shall be done according to Exhibit A. All projects that continue to follow the requirements of 2009 Variance No. V09HQSCD006, as described in the transition plan, after the date of this Agreement must be advertised for construction by July 1, 2020.

///

///

4.15 **Public Health.** DTSC retains the right to require Caltrans or any future owner to remove, and properly dispose of ADL-contaminated soil in the event DTSC determines it is necessary for protection of human health or the environment.

Kome Ajise
Chief Deputy Director, Caltrans

Kome Ajise
Caltrans

6/28/16
DATE

Raymond Leclerc, P.E.
Assistant Deputy Director
Brownfields and Environmental Restoration Program

DTSC

6/29/16
DATE

Exhibit A
Transition Plan for existing projects

Exhibit B
2009 Variance

Exhibit C
Transition Plan project list

EXHIBIT A

TRANSITION PLAN
July 2016

Introduction

This plan details how projects will transition from operating under Department of Toxic Substances Control (DTSC) Variance No. V09HQSCD006 (Variance) to operating under the 2016 Soil Management Agreement for Aerially Deposited Lead-Contaminated Soils (Agreement) for specified existing Caltrans projects. For purposes of this transition plan, aerially deposited lead (ADL)-contaminated soil is defined as in section 3.1.1 of the Agreement. Determinations regarding ADL-contaminated soil will be based on the upper 95% UCL in cases where this information is available. If this type of data analysis has not been performed it will be based on the maximum lead value detected. Lead-contaminated soil is defined as in section 6. of the Variance (Exhibit B of the Agreement).

Background – Caltrans Project Development Process

The development of transportation projects is controlled by State and federal laws, regulations, and policies. Projects are first considered and planning begun years in advance of design and construction. Per the Federal Highway Administration, transportation planning is based on a 20 year cycle.
Project development is composed of four major steps:

1. Programming and Project Initiation Document (PID, also identified as the K phase);
2. Project Acceptance & Environmental Document (PA&ED, also identified as the 0 phase);
3. Plans, Specifications and Estimates (PS&E, also identified as the 1 phase); and
4. Construction (also identified as the 3 and 4 phases).

PID
During the PID phase project candidates are identified and project initiation documents prepared. These documents outline the purpose and need of the potential project and a preliminary rough cost scope and schedule is sketched out. Preliminary environmental screening is done. At the end of the PID phase potential projects are programmed, which means that support costs are allocated based on a preliminary budget so that detailed studies may be performed.

PA&ED
During the PA&ED phase detailed studies are performed to meet California Environmental Quality Act (CEQA) and National Environmental Policy Act (NEPA) requirements as well as to support preparation of a Project Report (a preliminary design document). Aerially deposited lead studies are normally performed during this phase.

The budget for these studies is set in the PID phase based on knowledge of the project area.

At the end of PA&ED the project alternative is selected, the cost and schedule is officially identified, and continuing projects are given Project Approval. For most projects the California Transportation Commission (CTC) votes so that the project may proceed. If a project requires additional funding after this point is reached, the budget overrun must be explained and successfully justified to the CTC in order for the project to continue. Budget overruns can result in project termination.

PS&E
PS&E is the design phase of the project. Besides preparation of the plans and specifications, needed right of way is purchased, and necessary permits, licenses, agreements, and certifications are obtained. ADL data is evaluated and shared with design staff at the beginning of PS&E so that appropriate and efficient soil management can be incorporated into the project design. At the end of PS&E the project is advertised and the construction contract is awarded. Depending on the size and complexity of a project PS&E can take as little as a few months or as long as 30 months. A typical length of time for PS&E is 18 months.

Construction
Construction is performed by contractors reporting either directly to Caltrans staff or to a Caltrans partner in the case of some partnered projects. Depending on the size and complexity of the project, construction can take as little as a few months to as long as 10 years. The contingency allowed on Caltrans construction projects is only 5% so budget maintenance is critical.

Transition of existing Caltrans Projects

The requirements of the Agreement, described in sections 3 and 4 of the Agreement, shall be fully applied to all projects that have not completed the Project Approval and Environmental Document (PA&ED) milestone prior to July 1, 2016. PA&ED is defined in Caltrans' "Workplan Standards Guide" which is accessible at: http://www.dot.ca.gov/hq/projmgmt/documents/wsg/WSG_v11.1_2015.pdf.

This transition plan applies to existing projects that have completed the PA&ED milestone prior to July 1, 2016. Those projects for which the transition plan applies or is used shall comply with the requirements listed below in sections 1 through 6. These requirements are the requirements originally set forth in DTSC Variance No. V09HQSCD006 with added reporting requirements for Caltrans.

1. Provided Caltrans meets the terms and conditions described below in section 2, DTSC waives the hazardous waste management requirements of Health and Safety Code, Chapter 6.5 and California Code of Regulations, title 22 for the lead-contaminated soil that Caltrans reuses in projects that would require Caltrans to obtain a permit for a disposal facility and any other generator requirements that

concern the transportation, manifesting, storage and land disposal of hazardous waste.

2. In order for the provisions discussed in section 1 to be waived, lead-contaminated soil must not exceed the contaminant concentrations discussed below and Caltrans management practices must meet all the following conditions:

   a) Caltrans implementation of the transition plan shall comply with all applicable state laws and regulations for water quality control, water quality control plans, waste discharge requirements (including storm water permits), and others issued by the State Water Resources Control Board (SWRCB) and/or a California Regional Water Quality Control Board (RWQCB). Caltrans shall provide written notification to the appropriate RWQCB at least 30 days prior to advertisement for bids of projects for which this transition plan applies or is used, or as otherwise negotiated with the SWRCB or appropriate RWQCB, and as specified in section 2u).

   b) The provisions waived in section 1 shall only be applied to lead-contaminated soil that is not a RCRA hazardous waste and is hazardous primarily because of aerially-deposited lead contamination associated with exhaust emissions from the operation of motor vehicles. The transition plan is not applicable to any other hazardous waste.

   c) Soil containing 1.5 mg/l extractable lead or less (based on a modified waste extraction test using deionized water as the extractant) and 1411 mg/kg or less total lead may be used as fill provided that the lead-contaminated soil is placed a minimum of five (5) feet above the maximum historical water table elevation and covered with at least one (1) foot of nonhazardous soil that will be maintained by Caltrans to prevent future erosion.

   d) Soil containing 150 mg/L extractable lead or less (based on a modified waste extraction test using deionized water as the extractant) and 3397 mg/kg or less total lead may be used as fill provided that the lead-contaminated soils are placed a minimum of five (5) feet above the maximum historical water table elevation and protected from infiltration by a pavement structure which will be maintained by Caltrans.

   e) Lead-contaminated soil with a pH less than 5.5 but greater than 5.0 shall only be used as fill material under the paved portion of the roadway. Lead-contaminated soil with a pH at or less than 5.0 shall be managed as a hazardous waste.

   f) For each project that has the potential to generate waste by disturbing lead-contaminated soil, Caltrans shall conduct sampling and analysis to adequately characterize the soils containing aerially deposited lead in the areas of planned excavation along the project route. Such sampling and analysis shall include the Toxicity Characteristic Leaching Procedure (TCLP) as prescribed by the United

States Environmental Protection Agency to determine whether concentrations of contaminants in soil exceed federal criteria for classification as a hazardous waste.

g) Lead-contaminated soil managed pursuant to this transition plan shall not be moved outside the designated corridor boundaries (see section 2t below). All lead-contaminated soil not buried and covered within the same Caltrans corridor where it originated is not eligible for management under this transition plan and shall be managed as a hazardous waste.

h) Lead-contaminated soil managed pursuant to this transition plan shall not be placed in areas where it would come in contact with groundwater or surface water (such as streams and rivers).

i) Lead-contaminated soil managed pursuant to this transition plan shall be buried and covered only in locations that are protected from erosion that may result from storm water run-on and run-off.

j) The lead-contaminated soil shall be buried and covered in a manner that will prevent accidental or deliberate breach of the asphalt, concrete, and/or cover soil.

k) The presence of lead-contaminated soil shall be incorporated into the projects' as-built drawings. The as-built drawings shall be annotated with the location, representative analytical data, and volume of lead-contaminated soil. The as-built drawings shall also state the depth of the cover. These as-built drawings shall be retained by Caltrans.

l) Caltrans shall ensure that no other hazardous wastes, other than the lead-contaminated hazardous waste soil, are placed in the burial areas.

m) Lead-contaminated soil shall not be buried within ten (10) feet of culverts or locations subject to frequent worker exposure.

n) Excavated lead-contaminated soil not placed into the designated area (fill area, roadbed area) by the end of the working day shall be stockpiled and covered with sheets of polyethylene or at least one foot of non-hazardous soil. The lead-contaminated soil, while stockpiled or under transport, shall be protected from contacting surface water and from being dislodged or transported by wind or storm water. The stockpile covers shall be inspected at least once a week and within 24 hours after rainstorms. If the lead-contaminated soil is stockpiled for more than 4 days from the time of excavation, Caltrans shall restrict public access to the stockpile by using barriers that meet the safety requirements of the construction zone. The lead-contaminated soil shall be stockpiled for no more than 90 days from the time the soil is first excavated. If the contaminated soil is stockpiled beyond the 90 day limit Caltrans shall:

i. Notify DTSC in writing of the 90 day exceedance and expected date of removal;

ii. Perform weekly inspections of the stockpiled material to ensure that there is adequate protection from run-on, runoff, public access, and wind dispersion; and

iii. Notify DTSC on weekly basis of the stockpile status until the stockpile is removed.

The lead-contaminated soil shall be stockpiled for no more than 180 days from the time the soil is first excavated.

o) Caltrans shall ensure that all stockpiling of lead-contaminated soil remains within the project area of the specified corridor. Stockpiling of lead-contaminated soil within the specified corridor, but outside the project area, is prohibited.

p) Caltrans shall conduct confirmatory sampling of any stockpile area in areas not known or expected to contain lead-contaminated soil after removal of the lead-contaminated soil to ensure that contamination has not been left behind or has not migrated from the stockpiled material to the surrounding soils.

q) Caltrans shall stockpile lead-contaminated soil only on high ground (i.e. no sump areas or low points) so that stockpiled soil will not come in contact with surface water run-on or run-off.

r) Caltrans shall not stockpile lead-contaminated soil in environmentally and ecologically sensitive areas.

s) Caltrans shall ensure that storm/rain run-off that has come into contact with stockpiled lead-contaminated soil will not flow to storm drains, inlets, or waters of the State.

t) Caltrans may dispose of the lead-contaminated soil only within the operating right-of-way of an existing highway, as defined in Streets and Highways Code, section 23. Caltrans may move lead-contaminated soil from one Caltrans project to another Caltrans project only if the lead-contaminated soil remains within the same designated corridor.

Caltrans shall record any movement of lead-contaminated soil by using a bill of lading. The bill of lading must contain: 1) the US DOT description including shipping name, hazard class and ID number; 2) handling codes; 3) quantity of material; 4) volume of material; 5) date of shipment; 6) origin and destination of shipment; and 7) any specific handling instructions. The bill of lading shall be referenced in and kept on file with the project's as-built drawings. The lead-contaminated soil must be kept covered during transportation.

u) For each specific project where this transition plan applies or is to be used for the management of lead-contaminated soils all of the following information shall be submitted in writing to DTSC (and others as specified). If the submission date for a particular notification occurred prior to July 1, 2016 then Caltrans shall submit any

required information not included in the original notification with the Completion Report:

i. Project Notification. For any highway project for which this transition plan applies or is to be used to manage lead-contaminated soil, Caltrans shall provide written notification to DTSC within 10 days of when that determination is made, and shall send copies of the notification to the RWQCB, Air Quality Management District (AQMD) (or Air Pollution Control District, as applicable), local Certified Uniform Program Agency (CUPA), and the Caltrans Agreement Coordinator. For projects that overlie multiple local agency jurisdictions, all appropriate agencies shall receive a copy of the notification. The written notification shall include the following information:

1. A statement that the project shall entail excavation, stockpiling and/or burial of lead-contaminated soil pursuant to this Agreement;
2. Project number;
3. Project description;
4. Project Limits (Route; District - County - Route - Begin Post Mile /End Mile Post);
5. URLs for or Portable Document Format (PDF) versions of the following documents:
    a. The environmental document prepared for the project;
    b. This Agreement; and
    c. The DTSC-prepared fact sheet about this Agreement.
6. Results of laboratory analysis collected during design for the lead-contaminated soil to be placed within the highway right of way, and the name of the laboratory performing the analyses;
7. Copy of the construction contract specifications which define the management of lead-contaminated soil; and
8. Definition of the project defined construction corridor if it has already been determined that soil will be moved from one Caltrans project to another. Include complete project information listed above for both the sending and receiving projects.

ii. The Caltrans-authorized Lead Compliance Plan, authorized Excavation and Transportation Plan, and the contact information for the project resident engineer shall be submitted to DTSC within ten (10) days of document approval or staff identification, respectively.

iii. For purposes of sending a copy of the project notification to a local agency that is notified of the project pursuant to separate requirements of that local

agency, that separate notification fulfills this requirement only if such notification includes all information listed above and is sent in advance as required by this section.

iv. Start of Construction Notification. At least five (5) days in advance of initiation of construction on any project for which this transition plan applies or is used, Caltrans shall provide written notification to DTSC containing the following information concerning the project:

1. Project number;

2. Project description;

3. Project Limits (District - County - Route - Begin Post Mile /End Post Mile);

4. Anticipated start and end dates of the construction phase of the project;

5. Contact information for the project resident engineer;

6. A list of Caltrans contractors to be involved in the construction phase of the project; and

7. Definition of the project defined construction corridor if soil will be moved from one Caltrans project to another. Include complete project information listed above for both the sending and receiving projects.

v. Completion Report. Caltrans will provide in writing to DTSC the following information within 180 days of completion of the construction phase for any highway project for which Caltrans managed lead-contaminated soil under this transition plan:

1. Project number;
2. Project description;
3. Project Limits (District - County - Route - Begin Post Mile /End Post Mile);
4. Actual start and end dates of construction; and
5. A list of all USEPA ID numbers (including temporary ID numbers) assigned by DTSC for use on the project.

If lead-contaminated soil was buried within the State right-of-way as part of the project, the following information:

6. All survey data for the placement location, including precise latitude and longitude, elevation (top and bottom in North American Vertical Datum of 1988[NAVD 88]), Post Miles and highway number;

7. The approximate volume, in cubic yards, of lead-contaminated soil buried;
8. The historical maximum elevation of the water table underlying the burial location NAVD 88;
9. the results of laboratory analysis collected during construction, if any, for the lead-contaminated soil placed, and name of the laboratory performing the analyses;
10. type of cover (soil or pavement);
11. thickness of cover used; and
12. copies of any and all bills of lading used for transporting lead-contaminated soil to the active construction zone of the project.

vi. Project Documentation Availability. Following construction contract acceptance, Caltrans shall maintain, at its statewide office or appropriate District or Regional office, individual project records containing information regarding all projects for which this transition plan applies or is used, and shall ensure that the information is readily accessible to the public. The project records for each project shall include:

1. A copy of the Agreement and all attachments thereto;

2. Copies of the project-specific information submitted to DTSC pursuant to this transition plan, and

3. The “as-built” plans for each burial location.

v) Changes in location of lead-contaminated soil placement, quantities or protection measures (field changes) shall be noted in the resident engineer's project log within five (5) days of the field change.

w) Caltrans shall ensure that field changes are in compliance with the requirements of this transition plan.

x) Operational procedures described in the CEQA Initial Study shall be followed by Caltrans for activities conducted under this transition plan.

y) Caltrans shall implement appropriate health and safety procedures to protect its employees and the public, and to prevent or minimize exposure to potentially hazardous wastes. A project-specific health and safety plan must be prepared and implemented. The monitoring and exposure standards shall be based on construction standards for exposure to lead in California Code of Regulations, title 8, section 1532.1.

z) The Coordinators identified in section 3.9 of the Agreement will also be the Coordinators for the transition plan. These Coordinators will be the primary points

of contact for information flowing to, or received from, DTSC regarding any matter or submission under this transition plan.

aa) Caltrans shall conduct regular inspections, consistent with Caltrans' Maintenance Division's current Pavement Inspection and Slope Inspection programs, of the locations where lead-contaminated soil has been buried and/or covered pursuant to this transition plan. If site inspection reveals deterioration of cover so that conditions in the transition plan are not met, Caltrans shall repair or replace the cover.

bb) Caltrans shall develop and implement record keeping mechanisms to record and retain permanent records of all locations where lead-contaminated soil has been buried per this transition plan. The records shall be made available to DTSC.

cc) If areas within the State owned highway rights-of-way subject to the terms of this transition plan are sold, relinquished or abandoned (including roadways), all future property owners shall be notified in writing in advance by Caltrans of the requirements of section 4.8 of the Agreement, and Caltrans shall provide the owner with a copy of the Agreement. A copy of such a notice shall be sent to DTSC and contain the corridor location and project identification information. Caltrans shall also disclose to DTSC and the new owner the location of areas where lead-contaminated soil has been buried. Future property owners shall be subject to the same requirements set forth in the Agreement as Caltrans.

dd) For the purposes of informing the public about instances where the transition plan is implemented, Caltrans shall:

i. Maintain current fact sheets at all Caltrans resident engineer offices and the Caltrans District office. Caltrans shall make the fact sheets available to anyone expressing an interest in work related to soils contaminated with lead.

ii. Maintain copies of all reports submitted to DTSC at the District office. Caltrans shall ensure that the reports are readily accessible to the public.

ee) Lead-contaminated soil may be buried only within the right-of-way in areas where access is limited or where lead-contaminated soil is covered or contained by a pavement structure.

ff) Dust containing lead-contaminated soil must be controlled. Water or dust palliative may be applied to control dust. If visible dust migration occurs, all excavation, stockpiling and truck loading and burying must be stopped. Operating under this transition plan confers no relief on Caltrans from compliance with the laws, regulations and requirements enforced by any local air district or the California Air Resources Board.

gg) Sampling and analysis is required to show the lead-contaminated soil meets the transition plan criteria. All sampling and analysis must be

conducted in accordance with the appropriate methods specified in U.S. EPA SW-846.

hh) DTSC retains the right to require Caltrans or any future owner to remove, and properly dispose of, ADL-contaminated soil in the event DTSC determines it is necessary for protection of public health, safety or the environment.

ii) DTSC finds that some projects involving lead-contaminated soil are joint projects between Caltrans and other government entities. In these joint projects, Caltrans may not be the lead agency implementing the project although Caltrans is still involved if the project occurs on its right-of-way.

Caltrans may use this transition plan for existing joint projects where Caltrans and local government entities are involved provided that 1) the project is within the Caltrans' Right-of-Way and the plan is only implemented on State-owned highway rights-of-way; 2) Caltrans reviews/ oversees all phases of the project including design, contracting, environmental assessment, and construction, as well as operation and maintenance of the project segments within Caltrans' Right-of-Way; and 3) Caltrans oversees the project to verify all transition plan conditions/requirements are complied with. Caltrans will be fully responsible for lead-contaminated soil related notification and implementation in these joint projects.

3. A list of projects involving lead-contaminated soil for which the transition plan applies or is used is attached. Projects involving lead-contaminated soil not on the list must fully comply with the requirements of the Agreement regardless of whether they have been given Project Approval prior to July 1, 2016. If it is discovered after June 30, 2016 that one or more projects that were eligible to use the transition plan have been inadvertently omitted from the list provided to DTSC, Caltrans will request an exception to add those projects. DTSC will respond to Caltrans request within 10 business days. Caltrans may remove projects from the list at their discretion and shall provide DTSC an updated project list within 30 days of such an action.

4. If a shelved highway project that includes management of lead-contaminated soil under the Transition Plan has to be redesigned and Caltrans has to submit a request to the California Transportation Commission for additional capital outlay funding, then the Transition Plan no longer applies and the requirements of the Agreement shall be fully applied.

5. The requirements of the Agreement shall be fully applied to all projects advertised for construction after July 1, 2020.

6. For any ADL-contaminated soils that were permanently removed from the highway right of way after June 30, 2016 as part of a highway project, Caltrans shall provide

the following information in writing to DTSC within 180 days of completion of the construction phase:

a) Project number;

b) Project description;

c) Project limits (District - County - Route - Begin Post Mile /End Post Mile);

d) Actual start and end dates of construction;

e) The destination of the soils (landfill, private property, other);

f) Copies of any and all bills of lading and hazardous waste manifests used to transport the ADL-contaminated soils;

g) The name and contact information for the landfill or property owner/operator of the destination property;

h) If not a landfill, the zoning for the destination property;

i) The volume of ADL-contaminated soil moved to a landfill and/or the destination property;

j) If not a landfill, whether the ADL-contaminated soils were stockpiled or used as fill; and

k) If not a landfill, the results of laboratory analysis for the ADL-contaminated soils collected during construction, if any, and the name of the laboratory performing the analyses.

EXHIBIT B

California Environmental Protection Agency
Department of Toxic Substances Control

VARIANCE

Applicant Names:

State of California
Department of Transportation
(Caltrans)
1120 N Street
Sacramento, California 95814

Variance No. V09HQSCD006

Effective Date: July 1, 2009

Expiration Date: July 1, 2014

Modification History:

Pursuant to California Health and Safety Code, Section 25143, the Department of Toxic Substances Control hereby issues the attached Variance consisting of 9 pages to the Department of Transportation.

Beverly Rikala
Team Leader, Operating Facilities Team
Department of Toxic Substances Control

Date:

1. INTRODUCTION.

a) Pursuant to Health and Safety Code, section 25143, the California Department of Toxic Substances Control (DTSC) grants this variance to the applicant below for waste considered to be hazardous solely because of its lead concentrations and as further specified herein.

b) DTSC hereby grants this variance only from the requirements specified herein and only in accordance with all terms and conditions specified herein.

2. IDENTIFYING INFORMATION.

APPLICANT/OWNER/OPERATOR

State of California
Department of Transportation, (Caltrans)
All Districts

3. TYPE OF VARIANCE.

Generation, Manifest, Transportation, Storage and Disposal.

4. ISSUANCE AND EXPIRATION DATES.

DATE ISSUED: July 1, 2009 EXPIRATION DATE: July 1, 2014

5. APPLICABLE STATUTES AND REGULATIONS. The hazardous waste that is the subject of this variance is fully regulated under Health and Safety Code, section 25100, et seq. and California Code of Regulations, title 22, division 4.5 except as specifically identified in Section 8 of this variance.

6. DEFINITION. For purposes of this variance, “lead-contaminated soil(s)” shall mean soil that meets the criteria for hazardous waste but contains less than 3397 mg/kg total lead and is hazardous primarily because of aerially-deposited lead contamination associated with exhaust emissions from the operation of motor vehicles.

7. FINDINGS/DETERMINATIONS. DTSC has determined that the variance applicant meets the requirements set forth in Health and Safety Code, section 25143 for a variance from specific regulatory requirements as outlined in Section 8 of this variance. The specific determinations and findings made by DTSC are as follows:

a) Caltrans intends to excavate, stockpile, transport, bury and cover large volumes of soil associated with highway construction projects. In the more urbanized highway corridors around the State this soil is contaminated with lead, primarily due to historic emissions from automobile exhausts. In situ sampling and laboratory testing has shown that some of the soil contains concentrations of lead in excess of State regulatory thresholds, and thus any generated waste from disturbance of the soil

would be regulated as hazardous waste. Such soil contains a Total Threshold Limit Concentration (TTLC) of 1000 milligrams per kilogram (mg/kg) or more lead and/or it meets or exceeds the Soluble Threshold Limit Concentration (STLC) for lead of 5 milligrams per liter (mg/l). A Human Health Risk Assessment prepared for this variance concludes that soil contaminated with elevated concentrations of lead can be managed in a way that presents no significant risk to human health.

b) The lead-contaminated soil will be placed only in Caltrans' right-of-way. Depending on concentration levels, the wastes will be covered with a minimum thickness of one (1) foot of non-hazardous soil or asphalt/concrete cover and will always be at least five (5) feet above the highest groundwater elevation. Caltrans will assure that proper health and safety procedures will be followed for workers, including any persons engaged in maintenance work in areas where the waste has been buried and covered.

c) DTSC finds and requires that the lead-contaminated soil excavated, stockpiled, transported, buried and covered pursuant to this variance is a non-RCRA hazardous waste, and that the waste management activity is insignificant as a potential hazard to human health and safety and the environment, when managed in accordance with the conditions, limitations and other requirements specified in this variance.

8. PROVISIONS WAIVED.

Provided Caltrans meets the terms and conditions of this variance, DTSC waives the hazardous waste management requirements of Health and Safety Code, Chapter 6.5 and California Code of Regulations, title 22 for the lead-contaminated soil that Caltrans reuses in projects that would require Caltrans to obtain a permit for a disposal facility and any other generator requirements that concern the transportation, manifesting, storage and land disposal of hazardous waste.

9. SPECIFIC CONDITIONS, LIMITATIONS AND OTHER REQUIREMENTS.

In order for the provisions discussed in section 8 to be waived, lead-contaminated soil must not exceed the contaminant concentrations discussed below and Caltrans management practices must meet all the following conditions:

a) Caltrans implementation of this variance shall comply with all applicable state laws and regulations for water quality control, water quality control plans, waste discharge requirements (including storm water permits), and others issued by the State Water Resources Control Board (SWRCB) and/or a California Regional Water Quality Control Board (RWQCB). Caltrans shall provide written notification to the appropriate RWQCB at least 30 days prior to advertisement for bids of projects that involve invocation of this variance, or as otherwise negotiated with the SWRCB or appropriate RWQCB.

b) The waivers in this variance shall only be applied to lead-contaminated soil that is not a RCRA hazardous waste and is hazardous primarily because of aerially-

deposited lead contamination associated with exhaust emissions from the operation of motor vehicles. The variance is not applicable to any other hazardous waste.

c) Soil containing 1.5 mg/l extractable lead or less (based on a modified waste extraction test using deionized water as the extractant) and 1411 mg/kg or less total lead may be used as fill provided that the lead-contaminated soil is placed a minimum of five (5) feet above the maximum historic water table elevation and covered with at least one (1) foot of nonhazardous soil that will be maintained by Caltrans to prevent future erosion.

d) Soil containing 150 mg/L extractable lead or less (based on a modified waste extraction test using deionized water as the extractant) and 3397 mg/kg or less total lead may be used as fill provided that the lead-contaminated soils are placed a minimum of five (5) feet above the maximum historic water table elevation and protected from infiltration by a pavement structure which will be maintained by Caltrans.

e) Lead-contaminated soil with a pH less than 5.5 but greater than 5.0 shall only be used as fill material under the paved portion of the roadway. Lead-contaminated soil with a pH at or less than 5.0 shall be managed as a hazardous waste.

f) For each project that has the potential to generate waste by disturbing lead-contaminated soil (as defined in 6), Caltrans shall conduct sampling and analysis to adequately characterize the soils containing aerially deposited lead in the areas of planned excavation along the project route. Such sampling and analysis shall include the Toxicity Characteristic Leaching Procedure (TCLP) as prescribed by the United States Environmental Protection Agency to determine whether concentrations of contaminants in soil exceed federal criteria for classification as a hazardous waste.

g) Lead-contaminated soil managed pursuant to this variance shall not be moved outside the designated corridor boundaries (see paragraph t) below. All lead-contaminated soil not buried and covered within the same Caltrans corridor where it originated is not eligible for management under this variance and shall be managed as a hazardous waste.

h) Lead-contaminated soil managed pursuant to this variance shall not be placed in areas where it would become in contact with groundwater or surface water (such as streams and rivers).

i) Lead-contaminated soil managed pursuant to this variance shall be buried and covered only in locations that are protected from erosion that may result from storm water run-on and run-off.

j) The lead-contaminated soil shall be buried and covered in a manner that will prevent accidental or deliberate breach of the asphalt, concrete, and/or cover soil.

k) The presence of lead-contaminated soil shall be incorporated into the projects' as-built drawings. The as-built drawings shall be annotated with the location, representative analytical data, and volume of lead-contaminated soil. The as-built drawings shall also state the depth of the cover. These as-built drawings shall be retained by Caltrans.

l) Caltrans shall ensure that no other hazardous wastes, other than the lead-contaminated hazardous waste soil, are placed in the burial areas.

m) Lead-contaminated soil shall not be buried within ten (10) feet of culverts or locations subject to frequent worker exposure.

n) Excavated lead-contaminated soil not placed into the designated area (fill area, roadbed area) by the end of the working day shall be stockpiled and covered with sheets of polyethylene or at least one foot of non-hazardous soil. The lead-contaminated soil, while stockpiled or under transport, shall be protected from contacting surface water and from being dislodged or transported by wind or storm water. The stockpile covers shall be inspected at least once a week and within 24 hours after rainstorms. If the lead-contaminated soil is stockpiled for more than 4 days from the time of excavation, Caltrans shall restrict public access to the stockpile by using barriers that meet the safety requirements of the construction zone. The lead-contaminated soil shall be stockpiled for no more than 90 days from the time the soil is first excavated. If the contaminated soil is stockpiled beyond the 90 day limit Caltrans shall:

1. notify DTSC in writing of the 90 day exceedance and expected date of removal;
2. perform weekly inspections of the stockpiled material to ensure that there is adequate protection from run-on, runoff, public access, and wind dispersion; and
3. notify DTSC on weekly basis of the stockpile status until the stockpile is removed.

The lead-contaminated soil shall be stockpiled for no more than 180 days from the time the soil is first excavated.

o) Caltrans shall ensure that all stockpiling of lead-contaminated soil remains within the project area of the specified corridor. Stockpiling of lead-contaminated soil within the specified corridor, but outside the project area, is prohibited.

p) Caltrans shall conduct confirmatory sampling of any stockpile area in areas not known or expected to contain lead-contaminated soil after removal of the lead-contaminated soil to ensure that contamination has not been left behind or has not migrated from the stockpiled material to the surrounding soils.

q) Caltrans shall stockpile lead-contaminated soil only on high ground (i.e. no sump areas or low points) so that stockpiled soil will not come in contact with surface

water run-on or run-off.

r) Caltrans shall not stockpile lead-contaminated soil in environmentally and ecologically sensitive areas.

s) Caltrans shall ensure that storm/rain run-off that has come into contact with stockpiled lead-contaminated soil will not flow to storm drains, inlets, or waters of the State.

t) Caltrans may dispose of the lead-contaminated soil only within the operating right-of-way of an existing highway, as defined in Streets and Highways Code, section 23. Caltrans may move lead-contaminated soil from one Caltrans project to another Caltrans project only if the lead-contaminated soil remains within the same designated corridor.

Caltrans shall record any movement of lead-contaminated soil by using a bill of lading. The bill of lading must contain: 1) the US DOT description including shipping name, hazard class and ID number; 2) handling codes; 3) quantity of material; 4) volume of material; 5) date of shipment; 6) origin and destination of shipment; and 7) any specific handling instructions. The bill of lading shall be referenced in and kept on file with the project's as-built drawings. The lead-contaminated soil must be kept covered during transportation.

u) For each specific corridor where this variance is to be implemented, all of the following information shall be submitted in writing to DTSC at least five (5) days before construction of any project begins:

1. plan drawing designating the boundaries of the corridor where lead-contaminated soils will be excavated, stockpiled, buried and covered;

2. a list of the Caltrans projects that the corridor encompasses;

3. a list of Caltrans contractors that will be conducting any phase of work on any project affected by this variance;

4. duration of corridor construction;

5. location where sampling and analytical data used to make lead concentration level determinations are kept (e.g. a particular Caltrans project file);

6. name and phone number (including area code) of project resident engineer and project manager;

7. location where Caltrans and contractor health and safety plan and records are kept;

8. location of project special provisions (including page or section number) for soil excavation, transportation, stockpile, burial and placement of cover material;

9. location of project drawings (including drawing page number) for soil excavation, burial and placement of cover in plan and cross section (for example, "The project plans are located at the resident engineer's office located at 5th and Main Streets, City of Fresno, See pages xxxxx of contract xxxx");

10. updated information if a Caltrans project within the corridor is added, changed or deleted; and

11. type of environmental document prepared for each project, date of adoption, document title, Clearing House number and where the document is available for review. A copy of the Caltrans Categorical Exemption, Categorical Exclusion Form, or if filed, the Notice of Exemption for any project shall be submitted to the DTSC Headquarters Project Manager.

v) Changes in location of lead-contaminated soil placement, quantities or protection measures (field changes) shall be noted in the resident engineer's project log within five (5) days of the field change.

w) Caltrans shall ensure that field changes are in compliance with the requirements of this variance.

x) Operational procedures described in the California Environmental Quality Act (CEQA) Special Initial Study shall be followed by Caltrans for activities conducted under this variance.

y) Caltrans shall implement appropriate health and safety procedures to protect its employees and the public, and to prevent or minimize exposure to potentially hazardous wastes. A project-specific health and safety plan must be prepared and implemented. The monitoring and exposure standards shall be based on construction standards for exposure to lead in California Code of Regulations, title 8, section 1532.1.

z) Caltrans shall provide a district Coordinator for this variance. This Coordinator will be the primary point of contact for information flowing to, or received from, DTSC regarding any matter or submission under this variance. Caltrans shall promptly notify DTSC of the name of Coordinator and any change in the Coordinator.

aa) Caltrans shall conduct regular inspections, consistent with Caltrans' Maintenance Division's current Pavement Inspection and Slope Inspection programs, of the locations where lead-contaminated soil has been buried and/or covered pursuant to this variance. If site inspection reveals deterioration of cover so that conditions in the variance are not met, Caltrans shall repair or replace the cover.

bb) Caltrans shall develop and implement a record keeping mechanisms to record and retain permanent records of all locations where lead-contaminated soil has been buried per this variance. The records shall be made available to DTSC.

cc) If areas subject to the terms of this variance are sold, relinquished or abandoned (including roadways), all future property owners shall be notified in writing in advance by Caltrans of the requirements of this variance, and Caltrans shall provide the owner with a copy of the variance. A copy of such a notice shall be sent to DTSC and contain the corridor location and project. Caltrans shall also disclose to DTSC and the new owner the location of areas where lead-contaminated soil has been buried. Future property owners shall be subject to the same requirements as Caltrans.

dd) For the purposes of informing the public about instances where the variance is implemented, Caltrans shall:

1. maintain current fact sheets at all Caltrans resident engineer offices and the Caltrans District office. Caltrans shall make the fact sheets available to anyone expressing an interest in variance-related work.

2. maintain a binder(s) containing copies of all reports submitted to DTSC at the District office. Caltrans shall ensure that the binders are readily accessible to the public.

3. carry out the following actions when it identifies additional projects:

(A) notify the public via a display advertisement in a newspaper of general circulation in that area.

(B) update and distribute the fact sheet to the mailing list and repository locations.

ee) Lead-contaminated soil may be buried only in areas where access is limited or where lead-contaminated soil is covered and contained by a pavement structure.

ff) Dust containing lead-contaminated soil must be controlled. Water or dust palliative may be applied to control dust. If visible dust migration occurs, all excavation, stockpiling and truck loading and burying must be stopped. The granting of this variance confers no relief on Caltrans from compliance with the laws, regulations and requirements enforced by any local air district or the California Air Resources Board.

gg) Sampling and analysis is required to show the lead-contaminated soil meets the variance criteria. All sampling and analysis must be conducted in accordance with the appropriate methods specified in U.S. EPA SW-846.

hh) DTSC retains the right to require Caltrans or any future owner to remove, and properly dispose of, lead-contaminated soil in the event DTSC determines it is necessary for protection of public health, safety or the environment.

ii) DTSC finds that some projects involving lead-contaminated soil are joint projects between Caltrans and other government entities. In these joint projects, Caltrans may not be the lead agency implementing the project although Caltrans is still involved if the project occurs on its right-of-way.

Caltrans may invoke this variance for joint projects where Caltrans and local government entity are involved provided that 1) the project is within the Caltrans Right-of-Way; 2) Caltrans reviews/ oversees all phases of the project including design, contracting, environmental assessment, construction, operation, and maintenance; and 3) Caltrans oversees the project to verify all variance conditions are complied with. Caltrans will be fully responsible for the variance notification and implementation in these joint projects.

jj) All correspondence shall be directed to the following office:

Hazardous Waste Permitting
Department of Toxic Substances Control
8800 Cal Center Drive
Sacramento, CA 95826

Attn: Caltrans Lead Variance Notification Unit

10. DISCLAIMER.

a) The issuance of this variance does not relieve Caltrans of the responsibility for compliance with Health and Safety Code, chapter 6.5, or the regulations adopted thereunder, and any other laws and regulations other than those specifically identified in Section 8 of this variance. Caltrans is subject to all terms and conditions herein. The granting of this variance confers no relief from compliance with any federal, State or local requirements other than those specifically provided herein.

b) The issuance of this variance does not release Caltrans from any liability associated with the handling of hazardous waste, except as specifically provided herein and subject to all terms and conditions of this variance.

11. VARIANCE MODIFICATION OR REVOCATION. This variance is subject to review at the discretion of DTSC and may be modified or revoked by DTSC upon change of ownership and at any other time pursuant to Health and Safety Code, section 25143.

12. CEQA DETERMINATION. DTSC adopted a Negative Declaration on June 30, 2009.

Approved:

_____ _____

Date

Beverly Rikala
Operating Facilities Team
Department of Toxic Substances Control

EXHIBIT C

CALTRANS PROJECT LIST

District	EA	County	Route(s)	Post Mile Start	Post Mile End	Current Phase (PA&ED, Design, or Construction) as of January 2016	Local Partner Involved in Project (Yes or No)	Performing AAA (Caltrans, LAMTA, OCTA, SANDAG, etc)
District 01								
None								
District 02								
02	4E650	SIS	96	Bridge Rail Improvement - multiple locations		Design	No	CALTRANS
02	4G380	TRI	299	0	8.3	Design	No	CALTRANS
District 03								
03	3F170	SAC	5/50/51/99	City of Sacramento		Construction	No	CALTRANS
03	3F930	SAC	50	5.3	23.1	Design	No	CALTRANS
District 04								
04	15272	CC	242	0	3.4	Construction	No	CALTRANS
			4	8	25			
04	15330	SCL	101	0	26.7	Construction	No	CALTRANS
04	22911	CC	680/4	Interchange		Design	YES	CCCTA
04	23552	SM	82/92	Interchange		Design	Yes: city S. Mateo	CALTRANS
04	23565	SM	101	1.7	2.1	Design	No	CALTRANS
04	23584	SM	101	16.3	16.9	Construction	Yes: SMCoTA	CALTRANS
04	26409	MRN/SON	101	0	0	Bid Open	Yes: SonCoTA	CALTRANS
04	0A185	SON	101	7.1	8	Construction	YES: Petaluma	CALTRANS
04	0A534	SOL	80	2.1	2.8	Construction	Yes: Solano Trans Auth	CALTRANS
04	0A537	SOL	80/680	Interchange		Design	Yes: SolCoTA	CALTRANS
04	1G621	SM	101	8.8	8.6	Design	Yes: San Carlos	CALTRANS
04	1G940	CC	4	27.5	29	Construction	Yes: Contra Costa Trans	CALTRANS
04	2285E	CC	4	26.6	27.5	Construction	Yes: Contra Costa Trans	CALTRANS
04	2640K	SON	101	3.4	4.1	Construction	Yes: SonCoTA	CALTRANS
04	2908V	ALA	580	7.8	13.6	Construction	Yes: Alameda Trans Auth	CALTRANS
04	2908V	ALA	580	7.8	13.6	Construction	Yes: Ala CoTC	CALTRANS
04	2G850	ALA	580	3.9	4.2	Construction	No	CALTRANS
04	3G160	CC	24	5.3	5.5	Construction	No	CALTRANS
04	4G050	Ala&SCL	680	7.5	9.9	Design	Yes: AlaCoTC	CALTRANS
04	4G080	SOL	80	11.2	29.3	Design	Yes: SolCoTA	CALTRANS
04	4G320	SOL	80	7.3	7.3	Design	YES	CITY OF FAIRFIELD
04	4G510	Sol	80	31	32.6	Design	No	CALTRANS
04	4G680	SCL	280	11.2	11.5	Design	Yes: SCCoTA	CALTRANS
04	4H900	SF	280	0.14	1.46	Construction	No	CALTRANS
District 05								
05	31580	MON	101	0	0	Construction	NO	CALTRANS
05	36150	SLO	101	55.7	57.9	Construction	yes	City of El Paso de Robles
05	44782	SB	101	11.4	11.4	Design	YES	SBCAG
05	44800	MON	068	3.8	4.3	Design	yes	Monterey, City of
05	46580	SCR	001	17.5	17.7	Design	YES	CITY OF SANTA CRUZ
05	47450	SLO	101	5	5	Construction	yes	San Luis Obispo County
05	1E050	MON	101	52.4	60.8	Design	NO	CALTRANS
05	0A050	SB	001	15.6	15.6	Design	NO	CALTRANS

05	0C730	SCR	001	7.6	16.1	Design	YES	SCCRTC
05	0F970	MON	101	62.1	63.2	Design	NO	CALTRANS
05	0G070	SB	101	22.3	23	Construction	yes	CALTRANS
05	0H730	SLO	101	25.5	26.3	Construction	yes	San Luis Obispo, City of
05	0H823	MON	068	12.8	13.2	Design	YES	MONTEREY COUNTY
05	0L570	MON	001	72.3	72.9	Design	yes	Monterey County
05	0N700	SB	101	2	12.3	Design	NO	CALTRANS
05	0Q600	SCR	017	0.7	1.4	Design	NO	CALTRANS
05	1A870	SCR	001	17	17.2	Construction	NO	CALTRANS
05	1C080	SLO	101	44.6	59.7	Design	NO	CALTRANS
05	1C100	SCR	001	Multiple locations - safety pull outs		Design	NO	CALTRANS
05	1C120	SB	101	0	12.7	Design	NO	CALTRANS
05	1C820	SB	101	2.6	11.9	Design	NO	CALTRANS
05	1C890	MON	101	87.3	91.6	Design	NO	CALTRANS
05	1C970	SB	101	17.2	45.9	Design	NO	CALTRANS
05	1G380	MON	101	53.9	57.1	Design	NO	CALTRANS
05	4611U	SB	217	1.1	2.2	Design	yes	Goleta, City of
District 06								
06	42471	KER	119	10	13.3	Construction	NO	CALTRANS
06	43401	TUL	65	15.1	18	Design	NO	CALTRANS
06	47150	TUL	99	39.6	41.3	Design	NO	CALTRANS
06	48450	KER	99/204	Interchange		Design	YES	Bakersfield, City of
06	48460	KER	58	31.7	55.6	PA&ED January 2016	YES	Bakersfield, City of
06	49390	KER	178	0	0.4	Design	YES	Bakersfield, City of
06	0F360	KER	58	46.1	51.7	Construction	YES	CALTRANS
06	0H360	FRE	99	28.1	30.9	Design	YES	Fresno, City of
06	0K290	FRE	99	22.7	28.1	PA&ED April 1, 2016	No	CALTRANS
06	0K810	KER	99/178	Interchange		Design	NO	CALTRANS
06	0Q431	TUL	190	13.1	17.3	PA&ED March 2016	YES	Porterville, City of
06	0R050	TUL	193	4.2	8.3	Design	No	CALTRANS
06	0S480	TUL	65	9.4	14	Design	No	CALTRANS
06	0U520	MAD	99	13.1	19.6	PA&ED April 2016	No	CALTRANS
06	2HT00	FRE	099	23.5	26.6	PA&ED Pending	YES	California High Speed Rail Authority
06	2HT10	FRE	99	23.7	26.2	Design	YES - CHSRA	CALTRANS
06	3HT01	FRE/KIN/TUL	43/137/198/	High Speed Rail Interaction with State Highway System		Design	YES	California High Speed Rail Authority
District 07								
07	11707	LA	10	31.2	33.4	Construction	No	CALTRANS
07	12184	LA	5	26.7	36.4	Construction	No	CALTRANS
07	20211	LA	710	17.2	26.4	Construction	No	CALTRANS
07	20212	LA	710	21.9	23.1	Design	No	CALTRANS
07	21593	LA	5	2.7	4	Construction	No	CALTRANS
07	21594	LA	5	4	5.8	Construction	No	CALTRANS
07	21595	LA	5	5.8	6.8	Construction	No	CALTRANS
07	24540	LA	10	31.1	32.3	Construction	No	CALTRANS
07	25902	LA	5/10/91/110/134	Storm Water Improvements at numerous locations		Construction	No	CALTRANS

07	28150	LA	101	29.2	38.1	Design	No	CALTRANS
07	28910	LA	405	11.7	12.2	PAED/Design	No	CALTRANS
07	29100	LA	14	32.1	59.2	Design	No	CALTRANS
07	29110	LA	101	30.9	38.1	PAED	No	CALTRANS
07	29120	LA	57	7.7	12.2	Design	No	CALTRANS
07	29140	LA	1	56.5	56.9	PAED	No	CALTRANS
07	29230	LA	5	25.6	25.6	PA&ED Feb 2016	No	CALTRANS
07	29370	LA	110	8	9	PAED	No	CALTRANS
07	29510	LA	5	38.8	40.5	PAED	No	CALTRANS
07	29530	LA	110	24.1	31.9	PAED	No	CALTRANS
07	29540	VEN	101	30.2	31.4	PAED	No	CALTRANS
07	29580	LA	60	3.7	6.3	PAED	No	CALTRANS
07	29610	LA	405	0.7	6.7	PAED	No	CALTRANS
07	29630	LA	405	21.5	26.3	PA&ED Pending	No	CALTRANS
07	29740	LA	105	6.6	8	Design	No	CALTRANS
07	29850	LA	405	33	35.5	PAED	No	CALTRANS
07	29950	LA	1	3.8	30.8	Design	No	CALTRANS
07	29960	LA	27	0	11.1	Design	No	CALTRANS
07	30520	VEN	33	15.7	15.7	PAED	No	CALTRANS
07	30600	LA	5	44.2	46	Design	No	CALTRANS
07	30720	LA	91	6.3	6.3	Design	No	CALTRANS
07	31220	VEN	126	1	8.2	PAED	No	CALTRANS
07	31230	LA	14	25.5	35	PAED	No	CALTRANS
07	31250	LA	5	81.8	87.8	PAED	No	CALTRANS
07	31260	LA	5	75	81.8	PAED	No	CALTRANS
07	31280	LA	14	35	53.5	PAED	No	CALTRANS
07	1170U	LA	10	33.4	37.5	Construction	No	CALTRANS
07	1193U	LA	10	37.2	42.4	Construction	No	CALTRANS
07	1218W	LA	5	29.4	31.6	Construction	No	CALTRANS
07	1219U	LA	5	36.4	39.4	Construction	No	CALTRANS
07	1952U	VEN	101	0.1	3	Construction	No	CALTRANS
07	2055A	LA	2	14.1	15.1	Construction	No	CALTRANS
07	2159C	LA	5	1.8	3	Construction	No	CALTRANS
07	2159U	LA	5	0	1.5	Design	No	CALTRANS
07	4T730	LA	405	41.7	41.7	Construction	No	CALTRANS
07	4T770	LA	91	12.96	13.76	Design	No	CALTRANS
07	4T800	LA	405	0.6	0.6	Design	No	CALTRANS
District 08								
08	0A020	RIV	215	15.3	15.7	Design	YES	RCTC
08	0F540	RIV	91	0	13	Construction	YES	SANBAG
08	0J070	SBD	215	0.6	1.7	PS&E	YES	SANBAG
08	0J080	RIV	15	36.8	51.4	PA&ED March 2016	Yes - RCTC	RCTC
08	0J400	SBD	10	4.1	6.1	PA&ED March 2016	Yes	SANBAG
08	0M900	RIV	111	18.4	0	Design	Yes - Riverside County	Riverside County
08	0Q760	SBD	10	0	30.9	Construction	No	Caltrans
08	0R460	RIV	91	10.8	12.9	Construction	NO	CALTRANS
08	1A830	SBD	10	17.8	19.3	PS&E	YES	COUNTY OF SBD
08	1C170	SBD	60	1.86	2.86	PS&E	NO	Caltrans
08	1C180	SBD	60	0	1.86	PS&E	NO	Caltrans
08	1E030	SBD	10	20.1	22	Construction	Yes - SANBAG	SANBAG
08	1E710	SBD	10	31.6	31.9	PA&ED Feb 2016	Yes	SANBAG
08	1F980	RIV	215	17.5	17.5	PA&ED Feb 2016	Yes - City of Menifee	City of Menifee
District 09								
None								

District 10								
10	47210	STA	99	21	22.4	Construction	YES	CALTRANS
10	0E613	SJ	99	6.9	15	Construction	YES	CALTRANS
10	0G440	MER	99	19.3	20.9	Construction	YES	CALTRANS
10	0G470	SJ	005	28.5	35.6	Construction	YES - Stockton	CALTRANS
10	0H890	SJ	120	2.2	2.2	Design	YES	CALTRANS
10	0H910	SJ	205	2.6	5.1	Design	YES	CALTRANS
10	0P740	MER	59	21.5	22.5	Design	YES	CALTRANS
10	0Q880	AMA	49	17	17.5	Construction	YES	CALTRANS
10	0S110	SJ	99	14.4	14.8	Construction	YES	CALTRANS
10	0T910	STA	99	4.3	5	Design	YES	CALTRANS
10	0V070	MER	099	0	18.6	Design	YES - HSRA	California High Speed Rail Authority
10	0Y550	SJ	012	14.9	18.1	Design	No	CALTRANS
10	0Y620	STA	099	13.6	15.1	PA&ED 12/2015 overdue	No	CALTRANS
10	1C421	SJ	099	14	23	Design	No	CALTRANS
10	3A130	MER	140	38.1	38.6	Design	YES	CALTRANS
District 11								
11	00270	SD	5	19.9	21.2	Construction	No	CALTRANS
11	08023	IMP	98	31.6	32.1	Design	No	CALTRANS
11	08027	IMP	98	32.2	32.6	Design	No	CALTRANS
11	08578	SD	163	4.1	4.9	Design	YES - City of San Diego	CALTRANS
11	14665	SD	94/125	10	11.8	Design	No	CALTRANS
11	17790	SD	5	32.9	33.4	PA&ED 4/29/16	No	CALTRANS
11	23580	SD	5	28.4	55.4	Design	YES	CALTRANS
11	23796	SD	8	6.1	10.5	Design	No	CALTRANS
11	24151	SD	163	8.2	9.4	Construction	YES - City of San Diego	City of San Diego
11	24400	SD	5	3.9	9.2	Design	No	CALTRANS
11	26220	SD	75	20.2	22.2	Design	No	CALTRANS
11	26331	IMP	8	38.8	39.2	Design	No	CALTRANS
11	26501	SD	163	0.5	3.2	Construction	No	CALTRANS
11	29200	SD	125	9.8	12.4	PA&ED Jan 2016	No	CALTRANS
11	29520	SD	94	59.7	60.2	Design	No	CALTRANS
11	29910	SD	76	22.2	47.1	PA&ED Jan 2016	No	CALTRANS
11	40570	SD	76	32.6	33.2	Design	No	CALTRANS
11	40640	SD	Various	Bridge Rail modifications at multiple locations		Construction	No	CALTRANS
11	40860	SD	8	0.5	0.7	Design	No	CALTRANS
11	40960	SD	54	0	13	Design	No	CALTRANS
11	40970	SD	8	Roadside Safety Improvements at multiple locations		Design	No	CALTRANS
11	41040	IMP	8	36.5	37.5	Design	No	CALTRANS
11	41080	SD	805	15.7	17.5	Design	No	CALTRANS
11	41090	SD	5	0.3	5.4	Design	No	CALTRANS
11	41120	SD	805	0.3	4	PA&ED May 2016	No	CALTRANS
11	41350	SD	8	15.3	21.6	Construction	No	CALTRANS
11	41430	SD	79	31.3	49.9	PA&ED Jan 2016	No	CALTRANS
11	41440	SD	94	5.8	9.3	PA&ED Jan 2016	No	CALTRANS
11	41480	SD	8	0.1	2	PA&ED Over Due as of 12/2015	No	CALTRANS
11	41480	SD	805	0.1	2	PA&ED Over Due as of 12/2015	No	CALTRANS

11	41550	SD	5, 8, 15, 52, 54, et al	Traffic Management System Modifications		Construction	No	CALTRANS
11	41600	SD	5, 7, 8, 15, 52, et al	Traffic Management System Modifications		Construction	No	CALTRANS
11	41680	SD	163	3.6	3.6	Design	No	CALTRANS
11	41851	IMP	8	41.1	65	PA&ED due 1/19/2016	No	CALTRANS
11	41852	IMP	8	83.1	90	PA&ED Feb 2016	No	CALTRANS
11	42160	SD	78	13	14.1	PA&ED Jan 2016	No	CALTRANS
11	2T170	SD	5	37.5	51.4	Design	YES	CALTRANS
11	2T171	SD	5	37.5	51.4	Design	YES	CALTRANS
11	2T172	SD	5	37.5	39.6	Design	YES	CALTRANS
11	2T175	SD	5	28.7	28.7	Design	YES - VAR	CALTRANS
11	2T210	SD	5	38	51.2	Design	YES	CALTRANS
11	2T211	SD	5	43.4	47.5	Design	YES	CALTRANS
11	2T212	SD	5	47.5	51.2	Design	YES	CALTRANS
11	2T215	SD	5	28.4	29.5	Design	YES	CALTRANS
11	2T260	SD	805	4.4	10	Design	No	CALTRANS
11	2T270	SD	805	12.6	15.9	Design	No	CALTRANS
District 12								
12	0C110	ORA	57	19.9	21.5	Design	City of Brea	City of Brea
12	0C560	ORA	91	7.9	9.5	Construction	No	CALTRANS
12	0C571	ORA	91	0.9	5.4	PAED - Feb 2016	OCTA	OCTA
12	0C890	ORA	5	30.3	34	Design	OCTA	CALTRANS
12	0F04A	ORA	57	12.3	15.2	PA&ED April 2016	OCTA	OCTA
12	0F96A	ORA	5	3	3.7	Construction	OCTA	CALTRANS
12	0F96C	ORA	5	3.7	6.2	Construction	OCTA	CALTRANS
12	0F96E	ORA	5	6.2	8.7	Construction	OCTA	CALTRANS
12	0H045	ORA	405	2.4	3.9	PA&ED March 2016	Yes - OCTA	CALTRANS
12	0H100	ORA	405	10.2	24	Design	Yes - OCTA	OCTA
12	0H20U	ORA	55	2	5.9	Construction	No	CALTRANS
12	0H530	ORA	5/1	Interchange		Design	No	CALTRANS
12	0J340	ORA	55	6.2	10.3	Design	Yes - OCTA	CALTRANS
12	0K021	ORA	5	12.4	14.5	Design	Yes - OCTA	CALTRANS
12	0K022	ORA	5	14.5	17.1	Design	Yes - OCTA	CALTRANS
12	0K023	ORA	5	17.1	18.9	Design	Yes - OCTA	CALTRANS
12	0K330	ORA	91	17.8	18.2	Construction	No	CALTRANS
12	0L92U	ORA	5	0	29.6	Construction	NO	CALTRANS
12	0L090	ORA	57	11	22.5	Design	NO	CALTRANS
12	0L720	ORA	74	2.9	5.1	Design	NO	CALTRANS
12	0L74U	ORA	55	2	11.8	Construction	No	CALTRANS
12	0L850	ORA	5	33.9	43.4	Design	Yes - OCTA	CALTRANS
12	0M120	ORA	5	28.4	28.4	Construction	No	CALTRANS
12	0M340	ORA	73	16.5	16.6	Construction	No	CALTRANS
12	0M350	ORA	405	2.6	6.5	Design	No	CALTRANS
12	0M470	ORA	1	22.7	24.6	Design	No	CALTRANS
12	0M490	ORA	5	1.2	2.2	Design	No	CALTRANS
12	0M500	ORA	55	1.2	17.9	Design	No	CALTRANS
12	0M610	ORA	91	8.9	9.4	Design	No	CALTRANS
12	0M960	ORA	73	22.5	25.7	Design	NO	CALTRANS
12	0N040	ORA	91	7.5	18.9	Design	Yes - OCTA	CALTRANS
12	0N080	ORA	5	33.3	34.5	PA&ED Feb 2016	No	CALTRANS
12	0N110	ORA	133	9.5	9.5	Construction	No	CALTRANS

12	0N270	ORA	91	13.8	13.8	PA&ED April 2016	No	CALTRANS
12	0N280	ORA	22	33.7	33.7	Design	NO	CALTRANS
12	0N330	ORA	5	12.8	21.6	Construction	No	CALTRANS
12	0N340	ORA	57	10.8	21.8	Construction	NO	CALTRANS
12	0N360	ORA	91	1	5.4	Design	No	CALTRANS
12	0N480	ORA	1	19.6	19.8	PA&ED April 2016	YES - City of Newport Beach	City of Newport Beach
12	0N540	ORA	405	8.4	8.4	Construction	No	CALTRANS
12	0N580	ORA	57	14.9	15.2	Design	NO	CALTRANS
12	0N590	ORA	39	11.7	12.2	Design	No	CALTRANS
12	0N640	ORA	5	34.5	37.4	PA&ED March 2016	No	CALTRANS
12	0N670	ORA	5	2.1	3	Design	OCTA	CALTRANS
12	0N680	ORA	72	11.9	11.9	Design	No	CALTRANS
12	0N710	ORA	39	5.7	5.7	PA&ED Jan 2016	No	CALTRANS
12	0N821	ORA	VAR	Traffic Management System Installation		Design	No	CALTRANS
12	0N822	ORA	VAR	Traffic Management System Installation		Design	No	CALTRANS
12	0N880	ORA	405	1.1	1.1	Design	NO	CALTRANS
12	0N910	ORA	1	18.2	18.2	PA&ED March 2016	No	CALTRANS
12	0N980	ORA	55	5.7	6	Design	NO	CALTRANS
12	0N990	ORA	39	1.88	1.88	PA&ED May 2016	NO	CALTRANS
12	0P020	ORA	1	24.3	24.3	PA&ED April 2016	No	CALTRANS
12	0P040	ORA	405	7.8	7.8	Design	NO	CALTRANS
12	0P140	ORA	1	19.8	21.5	PA&ED March 2016	YES - City Newport Beach	City of Newport Beach
12	0P190	ORA	5	13.6	13.6	Design	NO	CALTRANS
12	0P200	ORA	133	1.6	3.3	Design	NO	CALTRANS
12	0P210	ORA	5	24.8	24.8	Design	NO	CALTRANS
12	0P260	ORA	5	24.9	24.9	PA&ED Jan 2016	No	CALTRANS
12	0P330	ORA	74	6	6.4	Design	NO	CALTRANS
12	0P340	ORA	1	12.9	25.5	Design	NO	CALTRANS
12	0P460	ORA	39	3.6	7.1	PA&ED Dec 2015 overdue	No	CALTRANS
12	0P540	ORA	1	8.37	8.37	Design	NO	CALTRANS
12	0P710	ORA	1	12.9	33	Design	NO	CALTRANS
12	0P750	ORA	1	5.5	5.5	Design	NO	CALTRANS
12	0P770	ORA	55	11.7	12.1	Design	NO	CALTRANS
12	0P890	ORA	5	25	26.4	Design	NO	CALTRANS

APPENDIX E
REPORT OF HUMAN HEALTH RISK ASSESSMENTS

HUMAN HEALTH RISK ASSESSMENT

PARK, ARTS, AND RIVER CONNECTIVITY IMPROVEMENTS (PARC)
SIXTH STREET VIADUCT REPLACEMENT PROJECT
LOS ANGELES, CALIFORNIA 90023

PREPARED FOR

BLUESCAPE ENVIRONMENTAL

and

HAI HUSHMAND ASSOCIATES, INC.
GEOTECHNICAL AND EARTHQUAKE ENGINEERS

PREPARED BY:

The Fehling Group, LLC

KURT A. FEHLING
HEALTH SCIENTIST

JIM VAN DE WATER, CHG
HYDROGEOLOGIST

APRIL 2, 2019

CONTENTS
HUMAN HEALTH RISK ASSESSMENT
PARC IMPROVEMENTS, 6TH STREET VIADUCT, LOS ANGELES

Section **Page**

List of Tables ii
List of Figures ii
List of Acronyms iii

EXECUTIVE SUMMARY ES-1

RESIDENTIAL SCENARIO ES-2
CONSTRUCTION WORKER SCENARIO ES-2
SUMMARY ES-3

1.0 INTRODUCTION 1

1.1 HHRA METHODOLOGY 2
1.2 HHRA COMPONENTS 3
1.3 REPORT ORGANIZATION 4

2.0 SITE BACKGROUND 5

2.1 REGIONAL GEOLOGY AND SITE SOILS 5
2.2 REGIONAL AND SITE HYDROGEOLOGY 6
2.3 ENVIRONMENTAL CHARACTERIZATION HISTORY 6
2.4 HHRA DATASET 8
2.4.1 Soil 9
2.4.2 Soil Gas 12
2.4.3 Soil Physical Parameters 14

3.0 DATA EVALUATION AND SELECTION OF CHEMICALS OF POTENTIAL CONCERN 16

3.1 DATA USABILITY EVALUATION 16
3.2 SELECTION OF CHEMICALS OF POTENTIAL CONCERN 18
3.2.1 Metals 18
3.2.2 Non-Metals 20

4.0 TOXICITY ASSESSMENT 21

4.1 HIERARCHY OF SOURCES 21
4.2 NONCARCINOGENIC HEALTH EFFECTS 21
4.3 CARCINOGENIC HEALTH EFFECTS 22

5.0 EXPOSURE ASSESSMENT 23

5.1 EXPOSURE SCENARIOS 23
5.2 CONCEPTUAL SITE MODEL AND POTENTIAL EXPOSURE PATHWAYS 24
5.3 RISK-BASED CONCENTRATIONS 25
5.4 EXPOSURE POINT CONCENTRATIONS 25
5.4.1 Soil EPCs 25
5.4.2 Indoor and Outdoor (Construction Trench) Air Attenuation Factors and EPCs 26

6.0 RISK CHARACTERIZATION 28

6.1 CALCULATION OF RISK VALUES 28
6.2 SOIL RISK VALUES 29
6.2.1 PARC Area 1A 29
6.2.2 PARC Area 2A, 2B, and 2C 29
6.2.3 PARC Area 5 30
6.2.4 PARC Area 6 31
6.2.5 PARC Area 7 31
6.2.6 PARC Area 8 31
6.3 SOIL GAS RISK VALUES 32
6.3.1 PARC Area 1A 32
6.3.2 PARC Area 2A, 2B, and 2C 32
6.3.3 PARC Area 5 32
6.3.4 PARC Area 6 32
6.3.5 PARC Area 7 33
6.3.6 PARC Area 8 33
6.4 SUMMARY 34
6.5 UNCERTAINTY ANALYSIS 34
6.5.1 Uncertainty Associated with Site Characterization Data 34
6.5.2 Uncertainty Associated with Risk-Based Concentrations 35
6.5.3 Uncertainty Associated with Exposure-Point Concentrations 36
6.5.4 Uncertainty Associated with Risk Characterization 36

7.0 CONCLUSIONS 38

7.1 RESIDENTIAL SCENARIO 38
7.2 CONSTRUCTION WORKER SCENARIO 38
7.3 SUMMARY 39

8.0 REFERENCES CITED 40

Figures

Figure 1 Site Vicinity Map (from HAI, 2017)
Figure 2 Conceptual Design Plan (from HAI, 2017)
Figure 3 Areas of Concern with Contamination – West Park (from HAI, 2017)
Figure 4 Areas of Concern with Contamination – East Park (from HAI, 2017)
Figure 5 Conceptual Site Model

Tables

Table 1 Summary of Soil Physical Parameter (SPP) Data
Table 2 Summary of Metals COPCs in Soil
Table 3 Summary of Non-Metals COPCs in Soil
Table 4 Summary of Soil Gas COPCs
Table 5 Risk-Based Concentrations (Residential Receptor)
Table 6 Risk-Based Concentrations (Construction Worker Receptor)
Table 7a Indoor Air Attenuation Factors (α_{indoor} values) - Residential Receptor
Table 7b Trench Air Attenuation Factors (α_{trench} values) – Construction Worker Receptor
Table 8 Risk Characterization Summary

Attachments

Attachment A Figures from EMI (2014) and HAI (2017)

Attachment B Figures from Arcadis (2015)
Attachment C Figure from CH2M-Hill, 2013a
Attachment D Figure from CH2M-Hill, 2013b
Attachment E Figure from CH2M-Hill, 2013c
Attachment F Figure from CH2M-Hill, 2012
Attachment G Figure from Kleinfelder, 2015
Attachment H Tables for PARC Area 1A
Attachment I Tables for PARC Area 2A, 2B, and 2C
Attachment J Tables for PARC Area 5
Attachment K Tables for PARC Area 6
Attachment L Tables for PARC Area 7
Attachment M Tables for PARC Area 8
Attachment N Derivation of Air RBCs for Construction Worker Receptor
Attachment O ProUCL Output (USEPA, 2015)
Attachment P VDEQ Trench Model for Soil Gas

LIST OF ACRONYMS

ATSDR	Agency for Toxic Substances and Disease Registry
BTEX	benzene, toluene, ethylbenzene, and xylenes
CalEPA	California Environmental Protection Agency
COPC	chemical of potential concern
CSM	conceptual site model
DTSC	Department of Toxic Substances Control
DU	data usability
EMI	Earth Mechanics, Inc.
EPC	exposure-point concentration
ESL	environmental screening level (RWQCB)
ft bgs	feet below ground surface
HAI	Hushmand Associates, Inc.
HI	hazard index
HQ	hazard quotient
HHRA	human health risk assessment
ILCR	incremental lifetime cancer risk
IRIS	Integrated Risk Information System
IUR	inhalation unit risk
J&E	Johnson & Ettinger
LACFD	Los Angeles County Fire Department
LAFD	Los Angeles Fire Department
LUTS	leaking underground tank site
$\mu g/m^3$	micrograms per cubic meter
mg/m^3	milligrams per cubic meter
mg/kg	milligrams per kilogram
NAPL	non-aqueous phase liquid
ND	non-detect
OCP	organochlorine pesticide
OPP	organophosphorus pesticide
PARC	Park, Arts, and River Connectivity Improvements
PCB	polychlorinated biphenyl
RBC	risk-based concentration
RfC	reference concentration
RfD	reference dose
RME	reasonable maximum exposure
RSL	regional screening level (USEPA)
RWQCB	Regional Water Quality Control Board
SF	slope factor
SL	screening level (CalEPA)
SVOC	semi-volatile organic compound
TPH-GRO	total petroleum hydrocarbon – gasoline range organics
TPH-DRO	total petroleum hydrocarbon – diesel range organics
TPH-ORO	total petroleum hydrocarbon – oil range organics
UCL	upper confidence limit
USEPA	U.S. Environmental Protection Agency
VOC	volatile organic compound

EXECUTIVE SUMMARY

The City of Los Angeles (City) proposes to replace the existing Sixth Street Viaduct over the Los Angeles River and U.S. Route 101 (US 101) (Sixth Street Viaduct Replacement Project; hereafter referred to as "the Project"). Due to alkali-silica reaction effects, the viaduct concrete continues to degrade throughout the main structural elements, which has significantly reduced the bridge's capacity to resist earthquake loads. As part of this replacement project, the City is creating an associated greenscape area. This aspect of the project is referred to as Park, Arts, and River Connectivity Improvements (PARC) as part of the Project (**Figure 1**)[1]. A conceptual site design depicting the PARC improvements is presented in **Figure 2**.

The redevelopment area or "PARC" has been divided into several areas as noted below and are presented in **Figure 3** and **Figure 4 (Note: These figures have not been updated to reflects the findings of this HHRA)**, collectively identified as the "Site":

1. PARC Area 1A
2. PARC Area 1B
3. PARC Area 2A
4. PARC Area 2B
5. PARC Area 2C
6. PARC Area 3
7. PARC Area 4A
8. PARC Area 5
9. PARC Area 6
10. PARC Area 7
11. PARC Area 8
12. PARC Area 9
13. PARC Area 10.

These figures also show four parcels associated with cross streets as follows: 1) Parcel S1 – South Santa Fe Avenue, 2) Parcel S2 – Mission Road, 3) Parcel S3 – Anderson Street, and 4) Parcel S4

[1] Figures 1, 2, 3, and 4 are from Hushmand Associates, Inc. (HAI), 2017.

– Clarence Street. As part of the redevelopment program, this human health risk assessment (HHRA) for the residual chemicals in soil and soil gas for selected PARC areas at the Site has been completed. This HHRA is considered a "baseline" HHRA in that it addresses potential risks to human health in the absence of any mitigation. The objective of this HHRA is to quantify potential health risks for future on-site receptors due to chemicals in soil and soil gas (vapor) and evaluate whether the potential health risks warrant mitigation. The HHRA will also be used to communicate with agencies such as the Los Angeles County Fire Department (LACFD, the designated oversight agency) Site Mitigation Unit, other City of Los Angeles departments, and the public during the environmental impact review process. This HHRA addresses PARC Areas 1A, 2A, 2B, 2C, 5, 6, 7, and 8 as review of environmental data collected over the last several years indicated that these parcels likely pose the greatest potential health risks (hereafter referred to as "the Site").

This HHRA is conducted in accordance with California Environmental Protection Agency (CalEPA) and U.S. Environmental Protection Agency (USEPA) guidance. As advised by the LACFD, potential health risks associated with a residential (e.g., unrestricted land use) scenario and a construction scenario are quantified.

RESIDENTIAL SCENARIO

The incremental lifetime cancer risk (ILCR) values are below the CalEPA and USEPA *de minimis* risk target of 1E-06 or within the commonly-applied risk management range (1E-06 to 1E-04) (CalEPA 2011). Given the actual future planned use for the Site, and assuming soil gas samples anticipated to be required in PARC Area 6 yield ILCR values below the *de minimis* risk target or within the risk management range, it is our opinion that a regulatory agency would consider carcinogenic health impacts to be insignificant such that mitigative and/or remedial actions would not be required.

The noncancer hazard index (HI) exceeds the regulatory benchmark of 1.0 in all areas except PARC Area 8 primarily due to total petroleum hydrocarbons, diesel range organics (TPH-DRO). Lead exceeds its screening level for chronic daily exposure to children in a residential seeting for all areas except PARC Area 2A/2B/2C and 7. The TPH-DRO and lead exceedances are commonly driven by a limited number of samples within limited areas. Absent additional site or risk characterization or – more importantly - consideration of the conservative nature of this HHRA which includes this hypothetical receptor, it has been our experience that a regulatory agency may request mitigative and/or corrective action at these locations.

CONSTRUCTION WORKER SCENARIO

The ILCR in all PARC Areas is below the CalEPA and USEPA *de minimis* risk target of 10^{-6} and below the commonly-applied risk management target ILCR of $1x10^{-5}$. It has been our experience that a regulatory agency would consider carcinogenic health impacts to be insignificant such that mitigative and/or remedial actions would not be required.

The noncancer hazard index (HI) exceeds the regulatory benchmark of 1.0 in PARC Areas 7 and 8 primarily due to TPH-DRO. Lead exceeds its screening level in PARC Areas 1A and 6. As above for the residential receptor, the TPH-DRO and lead exceedances are commonly driven by a

limited number of samples within limited areas. Absent additional site or risk characterization or consideration of the conservative nature of this HHRA, it has been our experience that a regulatory agency may request mitigative and/or corrective action at these locations.

SUMMARY

Absent additional site or risk characterization or consideration of the conservative nature of this HHRA, it has been our experience that a regulatory agency may request mitigative and/or corrective action at a limited number of locations impacted with TPH-DRO and/or lead. It is also likely that a regulatory agency would request soil gas sampling in PARC Area 6. A tabular summary of the ILCRs and HI values are presented below with full details provided in Section 6.2.

RESIDENTIAL RECEPTOR

	ILCR (unitless)		TOTAL ILCR (unitless)	HI (unitless)		TOTAL HI (unitless)	Lead Soil EPC (mg/kg)	Comment
PARC Area	Soil	Soil Gas (Indoor Air)		Soil	Soil Gas (Indoor Air)			
1A	8E-08	-	8E-08	2E+00	-	2E+00	389	Soil HI driven by TPH-DRO; lead exceeds screening level
2A, 2B, and 2C	0E+00	9E-07	9E-07	1E+00	3E-01	2E+00	28	Soil HI driven by TPH-DRO and mercury; target organ assessment indicates no adverse noncancer health effect
5	0E+00	-	0E+00	3E+00	-	3E+00	81	Soil HI driven by TPH-DRO; lead slightly exceeds screening level
6	1E-06	-	1E-06	1E+01	-	1E+01	1839	Soil ILCR driven by Arochlor 1260; soil HI driven by TPH-DRO; lead exceeds screening level
7	2E-08	5E-06	5E-06	2E+01	3E+00	2E+01	58	Soil gas indoor air ILCR driven by PCE; soil HI driven by TPH-DRO; soil gas indoor air HI driven by TPH-DRO
8	0E+00	2E-06	2E-06	9E-02	4E-02	1E-01	130	Soil gas indoor air driven by PCE; lead exceeds screening level

CONSTRUCTION WORKER RECEPTOR

	ILCR (unitless)		TOTAL ILCR (unitless)	HI (unitless)		TOTAL HI (unitless)	Lead Soil EPC (mg/kg)	Comment
PARC Area	Soil	Soil Gas (Trench Air)		Soil	Soil Gas (Trench Air)			
1A	3E-09	-	3E-09	3E-01	-	3E-01	389	Lead exceeds screening level
2A, 2B, and 2C	0E+00	2E-08	2E-08	7E-02	2E-01	3E-01	28	-
5	0E+00	-	0E+00	3E-01	-	3E-01	81	-
6	8E-08	-	8E-08	1E+00	-	1E+00	1839	Soil HI driven by TPH-DRO; lead exceeds screening level
7	2E-10	1E-07	1E-07	2E+00	2E+00	4E+00	58	Soil HI driven by TPH-DRO; soil gas trench air HI driven by TPH-DRO
8	0E+00	2E-08	2E-08	1E-01	1E-02	2E-01	130	-

The soil risk values (which are associated with 95% UCLs for the soil COPCs) and the maximum indoor and trench air risk values (which are associated with sample-specific concentrations for the soil gas COPCs) are summarized for each PARC Area in **Table 8**.

- The ILCR values exceed the risk benchmark level only for the residential receptor in PARC Areas 6, 7, and 8 and then only slightly so. The maximum ILCR value is 5E-06 for PARC Area 7; therefore, the exceedances are within the 1E-04 to 1E-06 risk management range. The risk-driving COPCs are Aroclor 1260 in soil (PARC Area 5) and PCE in soil gas (PARC Areas 7 and 8).
- The HI values exceed the benchmark level for the residential receptor in all PARC Areas except PARC Area 8. The HI values exceed the benchmark level for the construction worker receptor in PARC Area 6 and 7 due to TPH-DRO.

- Lead exceeds the residential screening level in all PARC Areas 1A, 5, 6, and 8; it exceeds the construction worker screening level in PARC Area 1A and 6.
- TPH-DRO and lead are the primary risk-driving COPCs.

1.0 INTRODUCTION

The City of Los Angeles (City) proposes to replace the existing Sixth Street Viaduct over the Los Angeles River and U.S. Route 101 (US 101) (Sixth Street Viaduct Replacement Project; hereafter referred to as "the Project"). Due to alkali-silica reaction effects, the viaduct concrete continues to degrade throughout the main structural elements, which has significantly reduced the bridge's capacity to resist earthquake loads. As part of this replacement project, the City is creating an associated greenscape area. This aspect of the project is referred to as Park, Arts, and River Connectivity Improvements (PARC) as part of the Project (**Figure 1**)[2]. A conceptual site design depicting the PARC improvements is presented in **Figure 2**.

The redevelopment area or "PARC" has been divided into several areas as noted below and are presented in **Figure 3** and **Figure 4** (Note: These figures have not been updated to reflect the findings of this HHRA), collectively identified as the "Site":

14. PARC Area 1A
15. PARC Area 1B
16. PARC Area 2A
17. PARC Area 2B
18. PARC Area 2C
19. PARC Area 3
20. PARC Area 4A
21. PARC Area 5
22. PARC Area 6
23. PARC Area 7
24. PARC Area 8
25. PARC Area 9
26. PARC Area 10.

These figures also show four parcels associated with cross streets as follows: 1) Parcel S1 – South Santa Fe Avenue, 2) Parcel S2 – Mission Road, 3) Parcel S3 – Anderson Street, and 4) Parcel S4

[2] Figures 1, 2, 3, and 4 are from Hushmand Associates, Inc. (HAI), 2017.

– Clarence Street. As part of the redevelopment program, this human health risk assessment (HHRA) for the residual chemicals in soil and soil gas for selected PARC areas at the Site. This HHRA is considered a "baseline" HHRA in that it addresses potential risks to human health in the absence of any mitigation. The objective of this HHRA is to quantify potential health risks for future on-site receptors due to chemicals in soil and soil gas (vapor) and evaluate whether the potential health risks warrant mitigation. The HHRA will also be used to communicate with agencies such as the Los Angeles County Fire Department (LACFD, the designated oversight agency) Site Mitigation Unit, other City of Los Angeles departments, and the public during the environmental impact review process. This HHRA addresses PARC Areas 1A, 2A, 2B, 2C, 5, 6, 7, and 8 as review of environmental data collected over the last several years indicated that these parcels likely pose the greatest potential health risks (hereafter referred to as "the Site").

This HHRA is conducted in accordance with California Environmental Protection Agency (CalEPA) and U.S. Environmental Protection Agency (USEPA) guidance. As advised by the LACFD, potential health risks associated with a residential (e.g., unrestricted land use) scenario and a construction scenario are quantified.

1.1 HHRA METHODOLOGY

Human health risk assessment involves examining issues related to site-related contaminants (chemicals of potential concern [COPCs]), including environmental fate and transport, determining if sampling is sufficient to characterize COPCs and assessing the exposure of human receptors. In addition, the exposure and toxicity parameters of contaminants are evaluated to make sure that the latest scientific knowledge is used in evaluating potential risk. These evaluations are based on sound scientific knowledge and fact, and comply with CalEPA and USEPA risk assessment guidance, and policy as referenced throughout this HHRA.

At properties where no remedial action has been implemented (such as the Site), the HHRA is commonly referred to as a "baseline HHRA" and quantifies the potential risk for current and/or future human receptors using the most recent COPC concentrations available. Conversely, at properties involving remedial action, the HHRA is commonly referred to as a "post-remediation HHRA", which is used to determine the nature and extent of remedial activities, such as establishing preliminary cleanup goals and ensuring that contaminants remaining do not pose a potential risk to current and/or future human receptors.

The receptors evaluated in this HHRA include a residential child and adult and a construction worker. There receptors are assumed to have a reasonable maximum exposure (RME) by applicable exposure routes (CalEPA, 2014). The assumption of potential exposure (by any complete and/or potentially complete exposure pathway) represents a conservative (e.g., health-protective) approach. This approach is recommended by regulatory risk assessment guidance to make the HHRA sufficiently protective of the potential receptors (USEPA, 1989; CalEPA, 2015).

1.2 HHRA COMPONENTS

The HHRA process consists of four primary components as the basis for identifying potential health risks posed to current and/or future receptors at a Site (USEPA, 1989; CalEPA, 2015). These HHRA components are:

- **Data Evaluation/Chemicals of Potential Concern:** Site characterization data are evaluated for risk assessment usability and the COPCs are identified.
- **Exposure Assessment:** The routes through which potential exposure to COPCs may occur are identified. Potential human receptors are also identified and are displayed in a conceptual site model (CSM). The magnitude and duration of the receptor-specific exposures are estimated.
- **Toxicity Assessment:** Relevant toxicity endpoints and dose-response criteria are identified for the COPCs.
- **Risk Characterization:** The results of the toxicity assessment and exposure assessment are employed to estimate the incremental lifetime cancer risk (ILCR) and the noncancer hazard index (HI) for each receptor.

1.3 REPORT ORGANIZATION

The remainder of this report is organized as follows:

- **Section 2.0 — Site Background.** A site background summary, including a description of the physical setting and a summary of site characterization data, is presented.
- **Section 3.0 — Data Evaluation and Selection of Chemicals of Potential Concern.** The site data evaluation for the Site and the COPCs are presented.
- **Section 4.0 — Toxicity Assessment.** The toxicity criteria established by the regulatory agencies are identified for the COPCs along with their sources.
- **Section 5.0 — Exposure Assessment.** The exposure scenarios and pathways, exposure parameters, and exposure-point concentrations (EPCs) for the COPCs are presented
- **Section 6.0 — Risk Characterization.** The methods for estimating the potential and incremental lifetime cancer risks and noncancer hazards for the identified receptors are presented. In addition, a qualitative uncertainty analysis is provided for the major components for the HHRA.
- **Section 7.0 — Summary.** The HHRA is summarized in this section.
- **Section 8.0 — References Cited.** The references cited in the HHRA are presented.

2.0 SITE BACKGROUND

The Site is in a heavily urbanized area just east of downtown Los Angeles, is currently zoned as commercial/industrial, and as such, is surrounded by industrial and commercial properties. Based on historic sources, the Site vicinity has remained the same since the 1980s. The Los Angeles River and the rail lines have been present since the 1890s (EMI, 2014). The Site has an approximate elevation of 240 feet above mean sea level.

Figures from the Earth Mechanics, Inc. (EMI, 2014) and Hushmand Associates, Inc. (HAI, 2017) reports showing the locations of the PARC areas evaluated in this HHRA are included as **Attachment A**. As shown on the HAI figures, the Site is divided roughly in half by the Los Angeles River. The main route associated with the viaduct is named 6th Street west of the river and Whittier Boulevard east of the river. The portion of the Site west of the river contains PARC Areas 1A, 2A, 2B, and 2C whereas the portion east of the river contains PARC Areas 5, 6, 7, and 8. The Site generally runs along 6th Street / Whittier Boulevard and is bounded by Mateo Street to the west and the Santa Ana ("the 5") Freeway and the Hollywood ("the 101") Freeway to the east where they emerge from the East Los Angeles Interchange.

Comparison of the EMI and HAI figures in **Attachment A**, shows that PARC Areas 1A, 2A, 2B are within what EMI (2014) refers to as "AOC 1", PARC Areas 5, 6, and 8 are within "AOC 4", and PARC Area 7 is divided between "AOC 3" and "AOC 4". HAI (2017) further subdivides several PARC Areas into "parcels" as follows:

- Parcel 32 encompasses the eastern portion of Area 2A and all of Area 2B and is located east of Mesquit Street;
- Parcel 33 encompasses that portion of Area 2A south of Sixth Street and Area 2C;
- Parcel 20 is the northwestern portion of Area 7;
- Parcel 22 is the northeastern portion of Area 7; and
- Parcel 23 is the southeastern portion of Area 7.

2.1 REGIONAL GEOLOGY AND SITE SOILS

The Site is located within the Los Angeles Basin, an alluvial lowland bounded by the Peninsular Ranges, the Transverse Ranges, and the Pacific Ocean. The Site lies near the northeastern edge of the Basin, approximately 1.5 miles south of the Elysian Hills and approximately 15 miles east of the ocean (Arcadis, 2015). The site topography is essentially flat, and any surface drainage is

expected to occur towards the concrete-lined channel of the Los Angeles River that subdivides the Site into roughly equal halves as noted earlier.

Site soils consist of natural alluvial soil overlain in some places by up to 5 feet of silty sand/sandy silt (commonly SM soil type). In some places, these cover soils may be artificial fill. Underlying native soil consists of coarser sediments, primarily sand and gravel (commonly SP soil type). At depths starting at approximately 15 feet below ground surface (ft bgs) and ending at 50 to 65 ft bgs, the soil consists of sand, silty sand, and gravel with little fines. A zone of finer-grained sediments, generally consisting of silty sand and sandy silt, occurs at depths from approximately 50 to 65 ft bgs (Arcadis, 2015). Beneath this zone, the soil consists primarily of poorly graded sand (Dames & Moore 1991).

2.2 REGIONAL AND SITE HYDROGEOLOGY

The Site is in the central groundwater basin of the surrounding coastal plain of Los Angeles County, near the northern end of the western branch of the Gaspur aquifer. The Gaspur aquifer is formed from ancestral Los Angeles River deposits and extends approximately 2 miles in width from the Los Angeles Narrows south to about 1 mile east of Compton, where it forms a continuous groundwater conduit from the recharge areas to the ocean (Dames & Moore 1991; Avocet 2013 as cited by McDaniel Lambert, 2014). Groundwater at the neighboring former BASF Inmont facility occurs at depths ranging from 56 and 75 ft bgs, while groundwater flow is to the west in the northern portion of the Site and to the southwest in the southern portion of the Site (Avocet 2008).

2.3 ENVIRONMENTAL CHARACTERIZATION HISTORY

The EMI figure included in **Attachment A** shows blue-bordered areas on either side of Sixth Street to be leaking underground tank sites (LUTS). The LUTS to the north at 590 South Santa Fe Avenue has been the subject of numerous investigations, remedial activities, and an HHRA and is referred to as "BASF Inmont" (Dames & Moore, 1985) – at which paints and lacquer were manufactured, "Former BASF Coatings and Colorants Division Facility" (Dames & Moore, 1991), "Sun Chemical Corporation" (ERM, 1997a and 1997b), and the "Former Butterfield Property" (Arcadis, 2015). Investigations at the 590 South Santa Fe Avenue property documented that past commercial use of the property and surrounding area resulted in groundwater and soil contamination (McDaniel Lambert, 2014 and references cited therein). Contamination at the property is primarily associated with nonaqueous phase liquid (NAPL) at the interface of the saturated and unsaturated zones, which is believed to have resulted from releases from underground storage (UST) areas. The two UST areas included 11 solvent tanks with a combined capacity of approximately 56,000 gallons, and six USTs were removed in 1986 while five were abandoned in place (Avocet 2008 and 2013). While a variety of chemicals were used at the property, the primary contaminants are mostly related to volatile organic compounds (VOCs), especially benzene, toluene, ethylbenzene, and xylenes (BTEX) in groundwater, while benzene and toluene and high molecular weight petroleum hydrocarbons were detected most frequently in soil, and a variety of VOCs including chlorinated compounds, were detected in soil gas (Avocet 2013 and 2014). Hydrogeologic cross-sections and plan-view figures showing the extent of contamination from Arcadis (2015) are included as **Attachment B**. In accordance with the CalEPA-approved workplan (Arcadis, 2015), several USTs and shallow impacted soils were

excavated in 2016 (Arcadis, 2016). This removal resulted in CalEPA approval of the property to be redeveloped for commercial use (CalEPA, 2016). While that workplan also proposed in situ chemical oxidation (ISCO), review of documents posted on the Envirostor website[3] give no indication that ISCO has been implemented.

Given the history of the area along with the known conditions at the 590 Santa Fe Avenue property and the planned redevelopment of the area, Phase I reports were prepared for parcels:

- covering the southern portion of PARC Area 2A and all of PARC Area 2C (600 South Santa Fe Avenue, see figure included as **Attachment C** from CH2M-Hill, 2013a);
- covering all of PARC Area 2B (in addition to an additional area to the south) (658 Mesquit Street, see figure included as **Attachment D** from CH2M-Hill, 2013b);
- covering the easternmost portion of PARC Area 6 (1600 East 6th Street, see figure included as **Attachment E** from CH2M-Hill, 2013c); and
- covering all of PARC Area 8 (650 South Clarence Street, see figure included as **Attachment F** from CH2M-Hill, 2013d).

For the 600 South Santa Fe Avenue parcel, lube oil was stored and a facility immediately to the south had oil drums; therefore, a Phase II investigation at these locations or immediate to these two locations was recommended (CH2M-Hill, 2013a). Because both the 600 South Santa Fe Avenue and 658 Mesquit Street parcels are within 500 feet of the 590 South Santa Fe Avenue property detailed above and associated groundwater impacts, it was recommended that the groundwater impact from that property be considered during future construction activities (CH2M-Hill, 2013a,b). For the 1600 East 6th Street parcel, in addition to the 590 South Santa Fe Avenue property within 0.5 miles to the west, certain portions of the parcel were found to have asbestos-containing material. For the 650 South Clarence Street parcel, in addition to the 590 South Santa Fe Avenue property within 0.5 miles to the west, the nearby Bell Craft Furniture facility was reported to contain a spray booth and therefore the potential for VOCs was noted.

Review of CalEPA's Geotracker and Envirostor website repositories also identified the 590 South Santa Fe parcel. Additionally, the Envirostor website repository identified the property at 555 South Mateo Street immediately east of the Site across Mateo Street and north of 6th Street (see figure included as **Attachment G** from Kleinfelder, 2015). Diesel- and oil-range total petroleum hydrocarbons (TPH-DRO and TPH-ORO, respectively) impacted soil were addressed through a removal action that involved excavation and off-site disposal of 104 cubic yards of impacted soil. Confirmation sampling was acceptable and qualified the Site for unrestricted land use as documented in the 'no further action determination' issued by the CalEPA Department of Toxic Substances Control (DTSC, 2016).

As part of their investigation, EMI (2014) conducted a review of City of Los Angeles Fire Department (LAFD) underground storage tank records. This review revealed six addresses in

[3] http://www.envirostor.dtsc.ca.gov/public/profile_report?global_id=19281223

addition to the 590 South Santa Fe Avenue parcel discussed above. USTs at five of the six properties had been abandoned or otherwise removed with LAFD oversight. The remaining parcel (Superior Trucking, 601 Mission Road) contains one 1,200-gallon waste oil UST and one 1,200-gallon new oil UST. The maximum total petroleum hydrocarbon (TPH) concentration was reported at 5,700 milligrams per kilogram (mg/kg).

Given the findings at the 590 Santa Fe Avenue property, those provided by CH2M-Hill and other investigators at other nearby properties, and the presence of known or suspected features at the various PARC Area parcels, supplemental environmental investigations were conducted by Earth Mechanics, Inc. (EMI, 2014) and HAI (HAI, 2017) throughout the Site. The data provided in these reports are the primary data used in this HHRA and are summarized below.

2.4 HHRA DATASET

This section presents the data reported by EMI (2014) and HAI (2017) that is used as the basis for this HHRA. The HHRA datasets for each PARC Area consist of soil samples, soil gas samples, and/or ambient air samples[4] specific to each PARC Area as warranted based on operational history.

Soil samples were submitted to State-certified laboratories[5] for various analyses as warranted based on operational history including:

- metals using EPA Methods 6010B/7471A;
- TPH-GRO, TPH-DRO, and TPH-ORO[6] using EPA Method 8015 (modified);
- VOCs[7] using EPA Method 8260B;
- SVOCs[8] using EPA Method 8270C;
- PCBs[9] using EPA Method 8082;
- OCPs[10] and OPPs[11] using EPA Method 8081; and
- chlorinated herbicides using EPA Method 8151A.

[4] The EMI investigation data used in this HHRA is limited to soil data whereas the HAI investigation data includes soil, soil gas, and ambient air data.

[5] American Analytics, Chatsworth, California for the EMI investigation and Advanced Technology Laboratories, Signal Hill, California for the HAI investigation.

[6] TPH-GRO = Total petroleum hydrocarbons – gasoline range organics; TPH-DRO = Total petroleum hydrocarbons – diesel range organics; TPH-ORO = Total petroleum hydrocarbons – oil range organics.

[7] VOCs = volatile organic compounds.

[8] SVOCs = semi-volatile organic compounds.

[9] PCBs = polychlorinated biphenyls.

[10] OCPs = organochlorine pesticides.

[11] OPPs = organophosphorus pesticides.

Soil gas and ambient air samples were submitted to a State-certified laboratory (Advanced Technology Laboratories, Signal Hill, California) for analysis as warranted based on operational history as follows:

- VOCs using EPA Method TO-15; and
- TPH-GRO using EPA Method TO-3.

The data summary tables are presented in attachments specific to each PARC Area as follows:

- Attachment H: PARC Area 1A;
- Attachment I: PARC Area 2A, 2B, and 2C;
- Attachment J: PARC Area 5;
- Attachment K: PARC Area 6;
- Attachment L: PARC Area 7; and
- Attachment M: PARC Area 8.

For the sake of uniformity, the chemicals listed in these tables for both the soil and soil gas/ambient air samples are identical for all PARC Areas even though they may not have been tested and/or detected in a given PARC Area.

2.4.1 Soil

This subsection presents the soil data collected in the upper 10 feet for each PARC Area. Although soil samples were collected from depths exceeding 10 feet, only those samples in the upper 10 feet are used as it is assumed that the receptors considered in this HHRA would come into contact only with these shallow soils. Details are provided in the Conceptual Site Model section of this HHRA.

2.4.1.1 PARC Area 1A

Soil samples in this area were collected from borings IA-1 through IA-4, L7, L8, L-11, and L-12. The locations of these eight borings are shown on the figures included in **Attachment A**.

The soil data are summarized in **Attachment H** as follows:

- **Table H-1** (metals, including hexavalent chromium); and
- **Table H-2** (TPH-GRO, TPH-DRO, VOCs, SVOCs, PCBs, and OCPs ['non-metals']).

At least one sample from all borings was analyzed for metals whereas at least one sample from L7, L8, L-11, and L-12 were analyzed for non-metals. No samples from IA-1 through IA-4 were analyzed for non-metals.

As shown in the summary table for metals (**Table H-1**), all metals analyzed were detected in at least one sample except for beryllium, selenium, silver, and thallium. The concentrations for barium, copper, lead, mercury, and zinc suggest the possibility of a release whereas concentrations of the remaining metals appear to be associated with naturally-occurring or otherwise anthropogenic non-site-related background levels as further discussed in **Section 3**.

As shown in the summary table for the non-metals (**Table H-2**), TPH-DRO, the PCB Aroclor 1260, and the OCP 4,4'-DDT[12] were detected in L-12 at 2 ft bgs. TPH-DRO was also detected in L-7 at 1 ft bgs. The remaining tested non-metals (i.e., TPH-GRO, VOCs, and SVOCs) were not detected in any samples.

2.4.1.2 PARC Area 2A, 2B, and 2C

Soil samples in this area were collected from borings R-13-02, R-13-19 through R-13-21, 2A-1, 2A-2, P33-B1 through P33-B4, P32-B1, P32-B2, and RR-B1 through RR-B3. The locations of these fifteen borings – ten of which were in PARC Area 2A, two of which were in PARC Area 2B, one of which was in PARC Area 2C, and two of which were between the three PARC Areas - are shown on the figures included in **Attachment A**.

The soil data are summarized in **Attachment I** as follows:

- **Table I-1** (metals); and
- **Table I-2** (TPH-GRO, TPH-DRO, TPH-ORO, VOCs, SVOCs, PCBs, and OCPs ['non-metals']).

At least one sample from all borings was analyzed for metals and at least one of the non-metals.

As shown in the summary table for metals (**Table I-1**), all metals analyzed were detected in at least one sample except for antimony, molybdenum, selenium, silver, and thallium. The concentrations for barium, copper, lead, mercury, and zinc suggest the possibility of a release whereas concentrations of the remaining metals appear to be associated with naturally-occurring or otherwise anthropogenic non-site-related background levels as further discussed in **Section 3**.

As shown in the summary table for the non-metals (**Table I-2**), TPH-GRO, TPH-DRO, and TPH-ORO were detected in a limited number of samples. The remaining tested non-metals (i.e., VOCs, SVOCs, PCBs, OCPs, OPPs, and chlorinated herbicides) were not detected in any samples.

2.4.1.3 PARC Area 5

Soil samples in this area were collected from borings 5-1, 5-2, L-9, and L-10. The locations of these four borings are shown on the figures included in **Attachment A**.

The soil data are summarized in **Attachment J** as follows:

- **Table J-1** (metals); and
- **Table J-2** (TPH-GRO, TPH-DRO, VOCs, SVOCs, and chlorinated herbicides ['non-metals']).

[12] DDT = Dichlorodiphenyltrichloroethane.

At least one sample from all borings was analyzed for metals and selected samples from L-9 and L-10 were analyzed for the non-metals.

As shown in the summary table for metals (**Table J-1**), all metals analyzed were detected in at least one sample except for beryllium, cadmium, selenium, silver, and thallium. The concentrations for lead and zinc suggest the possibility of a release whereas concentrations of the remaining metals appear to be associated with naturally-occurring or otherwise anthropogenic non-site-related background levels as further discussed in **Section 3**.

As shown in the summary table for the non-metals (**Table J-2**), TPH-DRO was detected in both samples in which it was tested. The remaining tested non-metals (i.e., TPH-GRO, VOCs, SVOCs, and chlorinated herbicides) were not detected in any samples.

2.4.1.4 PARC Area 6

Soil samples in this area were collected from borings 16-1 through 16-10, L-5, L-6, 18.1-GP-1 through 18.1-GP-3, 18.1-1 through 18.1-7, 18.1-4A through 18.1-4D, A-13-08 through A-13-10, and A-13-12. The locations of these thirty borings are shown on the figures included in **Attachment A**.

The soil data are summarized in **Attachment K** as follows:

- **Table K-1** (metals, including hexavalent chromium); and
- **Table K-2** (TPH-GRO, TPH-DRO, TPH-ORO, VOCs, SVOCs, PCBs, OCPs, and chlorinated herbicides ['non-metals']).

At least one sample from all borings was analyzed for metals. At least one sample from all borings, except for 6-6 through 6-8, L5, and 18.1-GP-2, were analyzed for the non-metals. It is noted that, based on information provided by the City, impacted soils at 18.1-7 and 18.1-GP-3 have been excavated to a depth of at least 1 ft bgs.

As shown in the summary table for metals (**Table K-1**), all metals analyzed were detected in at least one sample except for thallium. The concentrations for antimony, arsenic, barium, cadmium, copper, lead, mercury, nickel, selenium, silver, and zinc suggest the possibility of a release whereas concentrations of the remaining metals appear to be associated with naturally-occurring or otherwise anthropogenic non-site-related background levels as further discussed in **Section 3**.

As shown in the summary table for the non-metals (**Table K-2**), TPH-GRO, TPH-DRO, TPH-ORO, and VOCs were detected in numerous samples. The remaining tested non-metals (i.e., SVOCs, PCBs, OCPs, and chlorinated herbicides) were not detected in any samples.

2.4.1.5 PARC Area 7

Soil samples in this area were collected from borings 7-1 through 7-7, L-2 through L-4, 20-1, A-13-14, and A-13-15. The locations of these thirteen borings are shown on the figures included in **Attachment A**.

The soil data are summarized in **Attachment L** as follows:

- **Table L-1** (metals); and
- **Table L-2** (TPH-GRO, TPH-DRO, TPH-ORO, VOCs, SVOCs, PCBs, OCPs, and chlorinated herbicides ['non-metals']).

At least one sample from all borings was analyzed for metals and non-metals.

As shown in the summary table for metals (**Table L-1**), all metals analyzed were detected in at least one sample except for antimony, beryllium, and thallium. The concentrations for barium, copper, lead, mercury, and zinc suggest the possibility of a release whereas concentrations of the remaining metals appear to be associated with naturally-occurring or otherwise anthropogenic non-site-related background levels as further discussed in **Section 3**.

As shown in the summary table for the non-metals (**Table L-2**), TPH-GRO, TPH-DRO, TPH-ORO, and VOCs were detected in at least one sample. The remaining tested non-metals (i.e., SVOCs, PCBs, OCPs, and chlorinated herbicides) were not detected in any samples.

2.4.1.6 PARC Area 8

Soil samples in this area were collected from borings 8-1 through 8-3, L-1, and A-13-17. The locations of these five borings are shown on the figures included in **Attachment A**.

The soil data are summarized in **Attachment M** as follows:

- **Table M-1** (metals, including hexavalent chromium); and
- **Table M-2** (TPH-GRO, TPH-DRO, TPH-ORO, VOCs, SVOCs, PCBs, OCPs, and chlorinated herbicides ['non-metals']).

At least one sample from all borings was analyzed for all metals and non-metals, except 8-1 and 8-2, which were analyzed exclusively for lead.

As shown in the summary table for metals (**Table M-1**), all metals analyzed were detected in at least one sample except for beryllium, hexavalent chromium (analyzed in one sample from 8-3), molybdenum, silver, and thallium. The concentrations for barium, copper, lead, and zinc suggest the possibility of a release whereas concentrations of the remaining metals appear to be associated with naturally-occurring or otherwise anthropogenic non-site-related background levels as further discussed in **Section 3**.

As shown in the summary table for the non-metals (**Table M-2**), TPH-GRO was the only detected compound. The remaining tested non-metals (i.e., TPH-DRO, TPH-ORO, VOCs, SVOCs, PCBs, OCPs, and chlorinated herbicides) were not detected in any samples.

2.4.2 Soil Gas

This subsection presents the soil gas data for each PARC Area. The soil gas data used for this HHRA were obtained by HAI (2017). Soil gas and/or ambient air samples were collected in PARC

Areas 2A, 2B, 2C, 6, 7, and 8. That is, neither soil gas nor ambient air samples were collected in PARC Areas 1A and 5.

2.4.2.1 PARC Area 1A

Neither soil gas nor ambient air samples were collected in this PARC Area.

2.4.2.2 PARC Area 2A, 2B, and 2C

Soil gas samples were collected in August 2015, November 2016, and May 2017 and an ambient air sample in May 2017. As shown on the figure included in **Attachment A**, soil gas samples were collected from 33 probes – twelve of which were in PARC Area 2A, eleven of which were in PARC Area 2B, two of which were in PARC Area 2C, and eight of which were between the three PARC Areas. In addition to the soil gas samples, one ambient air sample was collected in PARC Area 2A.

As shown in the summary table (**Table I-3**), which shows only those analytes that were detected in at least one sample given the extensive number of analytes associated with TO-15, the most frequently detected analytes were as follows:

- 2-Propanol;
- Ethanol;
- TPH-GRO;
- Acetone;
- Toluene;
- Tetrachloroethene (PCE);
- 2-Butanone (MEK);
- 1,1,1-Trichloroethane (1,1,1-TCA);
- m,p-Xylene;
- Trichlorofluoromethane (TCFM, Freon 11);
- o-Xylene;
- Ethylbenzene; and
- Dichlorodifluoromethane (DCDFM, Freon 12).

2.4.2.3 PARC Area 5

Neither soil gas nor ambient air samples were collected in this PARC Area.

2.4.2.4 PARC Area 6

An ambient air sample was collected in May 2017. As shown in the summary table (**Table K-3**), the following compounds were detected in this sample:

- 2-Butanone (MEK);
- Acetone; and
- Carbon disulfide.

2.4.2.5 PARC Area 7

Soil gas samples were collected in November 2013, August 2015, April 2016, and May 2017. An ambient air sample was collected in November 2013 and another was obtained in May 2017. As shown on the figure included in **Attachment A**, soil gas samples were collected from 37 probes.

As shown in the summary table (**Table I-3**), which shows only those analytes that were detected in at least one sample given the extensive number of analytes associated with TO-15, the most frequently detected analytes were as follows:

- Tetrachloroethene (PCE);
- Trichlorofluoromethane (TCFM, Freon 11);
- TPH-GRO;
- Toluene;
- m,p-Xylene;
- 2-Butanone (MEK);
- Acetone; and
- Carbon Disulfide.

2.4.2.6 PARC Area 8

The soil gas sample and associated duplicate sample was collected in May 2017 at the location shown on the figure included in **Attachment A**. Results for the primary sample were not provided; therefore, the results for the duplicate sample are listed in the summary table (**Table M-3**), which shows only those analytes that were detected in at least one sample given the extensive number of analytes associated with TO-15. The detected analytes were as follows:

- Acetone;
- Benzene;
- Carbon disulfide;
- 1,1-Dichloroethene (1,1-DCE);
- Tetrachloroethene (PCE);
- Toluene;
- Trichloroethene (TCE);
- 2-Butanone (MEK);
- 1,1,1-Trichloroethane (1,1,1-TCA);
- m,p-Xylene;
- Trichlorofluoromethane (TCFM, Freon 11); and
- o-Xylene.

2.4.3 Soil Physical Parameters

Soil physical parameters (SPPs), which include dry bulk density, moisture content, and porosity, are used in exposure assessment models used to calculate exposure point concentrations as presented in the Exposure Assessment (**Section 5**). The SPPs for all PARC Areas are listed in **Table 1**. The exposure assessment models are generally most sensitive to moisture content, which

must commonly be converted to water-filled porosity for use in the exposure assessment models. To derive a representative average water-filled porosity, the 95% upper confidence limit (UCL) of the mean air saturation is calculated using USEPA guidance (USEPA, 2015). Given the definition of air saturation as (1 – saturation) / porosity, where saturation = water-filled porosity / porosity, use of the 95% UCL of the air saturation yields a conservative (low) estimate of water-filled porosity. The SPPs used in the exposure assessment models are listed at the bottom of **Table 1** and are as follows:

- Dry bulk density: 1.913 grams per cubic centimeter (g/cm^3);
- Water-filled porosity: 0.075 cm^3/cm^3; and
- Porosity: 0.311 cm^3/cm^3.

3.0 DATA EVALUATION AND SELECTION OF CHEMICALS OF POTENTIAL CONCERN

This section of the HHRA describes how the site characterization data were evaluated for HHRA usability and presents the methods used for the selection of chemicals of potential concern (COPCs). As noted in the previous section, the data used in this HHRA were collected through investigations conducted by EMI (EMI, 2014) and HAI (HAI, 2017). The soil and soil gas data used in this HHRA is provided in **Attachment H** through **Attachment M**. The figures included in **Attachment A** shows the locations of the soil and soil gas samples used in the HHRA.

3.1 DATA USABILITY EVALUATION

The data usability (DU) evaluation was conducted for both the soil matrix and soil vapor data used in the HHRA using the *Guidance for Data Usability in Risk Assessment* (USEPA, 1992). The DU evaluation provides the basis for (1) identifying whether there are site characterization data gaps and (2) supporting the uncertainty analysis portion of the HHRA with respect to the selection of COPCs and exposure point concentrations, both of which are dependent on the site data (USEPA, 1989, 1992).

USEPA has established a specific guidance framework to provide risk assessors a consistent basis for making decisions about the minimum quality and quantity of environmental analytical data that are sufficient to support HHRA-based decisions (USEPA, 1992). The USEPA DU guidance provides an explicit set of data quality criteria that are used to determine the usability of site characterization data in the HHRA process. These USEPA criteria are, and are addressed, as follows:

- **Criterion I — Reports:** ***Confirmation that report(s) relied upon are complete and appropriate for use in the HHRA.*** The soil and soil gas investigation data documented in EMI (2014) and HAI (2017) provide the data necessary for use in this HHRA. The EMI investigation focused on potential source areas identified through review of Phase I reports and review of LAFD UST files. The HAI investigation effectively supplemented the EMI based on a site characterization data gap analysis except for soil gas in PARC Area 6, where only an ambient air sample has been collected and elevated VOC concentrations in soil were measured – notably TCE in sample 18.2-1-1 at 11 mg/kg. It is noted that the laboratory reports for the P20, P22, and P23 soil gas samples for PARC Area 7 were not available; therefore, these data were acquired from summary tables provided in the HAI (2017). As such, with the exception of soil gas in PARC Area 6, Criterion I has been met.

- **Criterion II — Documentation:** ***Confirmation that each analytical result is associated with a specific sample location and that the appropriate sampling procedure is documented.*** Soil and soil gas sample locations used for this HHRA are presented in the figures included in **Attachment A** and the sampling procedures are documented in EMI (2014) and HAI (2017). As such, Criterion II has been met.

- **Criterion III — Data Sources:** ***Confirmation that the analytical methods used are appropriate to identify the COPCs for the media of interest.*** As discussed in the EMI (2014) and HAI (2017) reports and summarized in **Attachment H** through **Attachment M** of this HHRA, a broad analytical suite using EPA methods with extensive analyte lists, including TPH-GRO, TPH-DRO, TPH-ORO, metals, VOCs, SVOCs, PCBs, OCPs, OPPs, and chlorinated herbicides sufficiently captured all potential chemical contaminants at the Site. As such, Criterion III has been met.

- **Criterion IV — Analytical Methods and Detection Limits:** ***Confirmation that analytical methods appropriately identify the chemical form or species and that the sample detection limit is at or below a concentration appropriate for the risk assessment application.*** All detection limits for soil and soil gas samples have been confirmed to be less than applicable human health screening levels (or at low levels consistent with the capabilities of current analytical methods), and appropriate USEPA laboratory methods were employed by California state-certified laboratories. As such, Criterion IV has been met.

- **Criterion V — Data Review:** ***Confirmation that the quality of analytical results is assessed by a professional knowledgeable in field collection procedures and analytical chemistry and that data quality are adequate to estimate exposure concentrations.*** The DU evaluation was conducted by staff scientists of The Fehling Group, LLC, qualified and experienced in the DU process. As such, Criterion V has been met.

- **Criterion VI — Data Quality Indicators:** ***Documentation that sampling and analysis data quality indicators (including precision, accuracy, holding time, representativeness, completeness, and comparability) are evaluated using criteria specific to the risk assessment.*** Results of duplicate samples indicate that precision is acceptable for the HHRA. It is noted that the higher of the concentrations reported for primary and duplicate samples are used and/or both results are evaluated independently as if they were separate samples. The results of internal laboratory standards and quality control samples indicate that accuracy is acceptable for the HHRA. Holding times for all analyses were met in accordance with the EPA method used. The combined dataset obtained by EMI (2014) and HAI (2017) provides an extensive dataset with sufficient lateral and vertical coverage; therefore, the HHRA dataset is representative and complete. The datasets are comparable in that the laboratory methods reported in EMI (2014) and HAI (2017) are sufficiently consistent and a consistent set of concentration units was obtained for the multiple phases of the HAI investigation. As such, Criteria VI has been met.

In summary, the dataset is sufficient with the exception that soil gas data are not available for PARC Area 6.

3.2 SELECTION OF CHEMICALS OF POTENTIAL CONCERN

Chemicals of potential concern (COPCs) were selected to ensure that the risk assessment focuses on those chemicals that are site related and could significantly contribute to overall site risk (USEPA, 1989). All chemicals detected in at least one soil sample were retained as soil COPCs. Similarly, all chemicals detected in at least one soil gas sample were retained as soil gas COPCs. The exception to this approach for selecting COPCs was for naturally-occurring metals which, when detected at concentrations indicative of their respective regional or site background threshold value (BTV) as described in the following subsection, were not retained as COPCs.

3.2.1 Metals

Most metals are naturally occurring and are therefore detected in most soils. Therefore, the presence of metals in soil is not necessarily indicative of a site-related anthropogenic release/operational source. The subsections that follow address the presence of metals in this regard with special consideration given to arsenic and lead.

3.2.1.1 Arsenic

Of all the metals detected at the Site, only arsenic has an established regional BTV for Southern California. The arsenic BTV for Southern California (12 mg/kg) is based on work conducted by DTSC personnel using arsenic concentrations in soil collected from school sites in Los Angeles, Orange, San Bernardino, Riverside, and San Diego counties.[13] The maximum arsenic concentrations in soil for each PARC Area are as follows:

- PARC Area 1A: 8.8 mg/kg;
- PARC Area 2A, 2B, 2C: 6 mg/kg;
- PARC Area 5: 5 mg/kg;
- PARC Area 6: 26 mg/kg;
- PARC Area 7: 3.6 mg/kg; and
- PARC Area 8: 4.3 mg/kg.

Given these maximum concentrations, arsenic is a COPC only in PARC Area 6. More specifically, inspection of **Table K-1** in **Attachment K** shows that the only samples for which arsenic exceeds the 12 mg/kg regional BTV are:

- 6-4 at 1 ft bgs (26 mg/kg);
- L-6 at 2 ft bgs (26 mg/kg);
- L-6 at 3 ft bgs (17 mg/kg);
- 18.1-4B at 1 ft bgs (14 mg/kg);
- 18.1-4C at 1 ft bgs (13 mg/kg);

[13] https://dtsc.ca.gov/upload/Background-Arsenic.pdf (Chernoff, G., Bosan, W., and D. Oudiz [DTSC, undated]. Determination of a Regional Southern California Background Arsenic Concentration in Soil).

- 18.2-1 at 1 ft bgs (16 mg/kg); and
- 18.2-2 at 3.5 ft bgs (17 mg/kg).

These samples are co-located with elevated lead concentrations as discussed in the following subsection.

3.2.1.2 Lead

Lead is unique in risk assessment in that exposure to lead is addressed via an internal marker of exposure; that of a blood lead concentration. That is, it is considered apart from the COPCs and is not included in the calculation of cumulative risk values.

CalEPA guidance indicate that site related exposures should result in no more than 1 microgram per deciliter (µg/dL) at the 90th percentile for the exposed population. To facilitate this, the CalEPA has developed a blood lead model (LeadSpread8), to determine "safe" levels of lead in soil at residential and industrial sites (CalEPA, 2011a). Using this model, the CalEPA has established a screening level for residential soils of 80 mg/kg, respectively (CalEPA, 2009). That is, lead concentrations exceeding 80 mg/kg may pose an adverse health risk to residential receptors.

Inspection of the summary tables in **Attachment H** through **Attachment M** shows that including lead as a COPC is warranted for all PARC Areas considered in this HHRA as the maximum value in each area exceeds 80 mg/kg as follows:

- PARC Area 1A maximum lead concentration: 860 mg/kg;
- PARC Area 2A, 2B, 2C maximum lead concentration: 170 mg/kg;
- PARC Area 5 maximum lead concentration: 180 mg/kg;
- PARC Area 6 maximum lead concentration: 16,100 mg/kg;
- PARC Area 7 maximum lead concentration: 240 mg/kg; and
- PARC Area 8 maximum lead concentration: 310 mg/kg.

3.2.1.3 Other Metals

In addition to arsenic and lead, soil samples were analyzed for 15 other metals and, in limited instances, hexavalent chromium[14]. The remaining metals are addressed using CalEPA guidance (CalEPA, 1997). That is, those metals with a range greater than one order-of-magnitude and/or a coefficient of variation greater than 1 are retained as COPCs. The metals COPCs for each PARC Area are summarized in **Table 2**.

[14] Samples from PARC Areas 1A, 6, and 8 were tested for hexavalent chromium.

3.2.2 Non-Metals

The non-metals COPCs are those detected in at least one soil or soil gas sample as listed in the summary tables in **Attachment H** through **Attachment M**. The non-metals soil COPCs are summarized in **Table 3** whereas the soil gas COPCs are summarized in **Table 4**.

4.0 TOXICITY ASSESSMENT

This step of the HHRA consists of identifying the relevant toxicity endpoints and appropriate toxicity criteria for each COPC. The methods used to establish the toxicity criteria to evaluate potential chronic (long-term) carcinogenic and noncarcinogenic health impacts are discussed separately in the following sections.

Potential acute risks, such as that potentially posed by methane and hydrogen sulfide gas, are not evaluated in this HHRA. Test results for these gases are discussed in EMI (2014) and HAI (2017). Additionally, the potential health risk associated with potential exposure to asbestos-containing materials (ACM; e.g., as reported in CH2M-Hill, 2013c) is not evaluated in this HHRA. Further, ACM has been reported at 590 South Sante Fe Avenue but would be the responsibility of the LA Metropolitan Transit Authority and is not located on PARC property.

4.1 HIERARCHY OF SOURCES

CalEPA / DTSC HERO HHRA Note 3 (CalEPA, 2018) was the primary source of toxicity criteria. In those cases where this source did not provide toxicity criteria, those used by the San Francisco Regional Water Quality Control Board (RWQCB) to develop their Environmental Screening Levels (ESLs) were used (RWQCB, 2016). Finally, in those cases where neither of these sources provided toxicity data, those used by the USEPA to develop their Regional Screening Levels (RSLs) were used (USEPA, 2017a).

4.2 NONCARCINOGENIC HEALTH EFFECTS

The potential for noncancer health effects from chronic exposures (i.e., greater than 7 years) are evaluated by comparing the estimated daily exposure with a reference dose (RfD) for oral and dermal exposure routes, and a reference concentration (RfC) for the inhalation exposure route. Chronic toxicity values represent average daily exposure levels at which no adverse health effects are expected to occur under chronic exposure scenarios and are expressed in units of milligrams per kilogram per day (mg/kg-day) for the RfD, and micrograms per cubic meter ($\mu g/m^3$) for the RfC (CalEPA) or milligrams per cubic meter (mg/m^3) (USEPA). The RfDs and RfCs for the soil COPCs and RfCs for the soil gas COPCs for the vapor intrusion exposure pathway are accounted for through use of risk-based screening levels as presented in the Exposure Assessment (**Section 5**).

4.3 CARCINOGENIC HEALTH EFFECTS

To assess carcinogenic health effects, cancer slope factors (SFs) are used for oral and dermal exposures, while inhalation unit risks (IURs) are used for inhalation exposures for the soil COPCs. SFs and IURs are upper-bound estimates of the carcinogenic potency of chemicals. The SF is expressed as risk per dose $(mg/kg\text{-}day)^{-1}$, and the IUR is expressed as risk per air concentration $(\mu g/m^3)^{-1}$. These toxicity criteria are used to estimate the incremental risk of developing cancer, corresponding to a lifetime of exposure at the concentrations described in the exposure assessment. In standard risk assessment procedures, estimates of carcinogenic potency reflect the conservative assumption that no threshold exists for carcinogenic effects (i.e., that any exposure to a carcinogenic chemical will contribute an incremental amount to an individual's overall risk of developing cancer) (USEPA, 1986, 1989). The SFs and IURs for the soil COPCs and the IURs for the soil gas COPCs for the vapor intrusion exposure pathway are accounted for through use of risk-based screening levels as presented in the Exposure Assessment (**Section 5**).

5.0 EXPOSURE ASSESSMENT

Exposure assessment is the process of measuring or estimating the intensity, frequency, and duration of human exposure. The amount of chemical contacted is termed "potential dose." Potential dose is determined by incorporating assumptions regarding the contact rate with the outer boundary of a human. In the HHRA process, actual exposure cannot be determined; accordingly, a conservative hypothetical exposure is assumed and evaluated based on default regulatory guidance for estimating the potential dose.

This section identifies the exposure scenarios, receptors, and complete and potentially complete exposure pathways and presents them in the form of a conceptual site model (CSM).[15] The COPC-specific risk-based concentrations and media-specific exposure point concentrations are also presented.

5.1 EXPOSURE SCENARIOS

Areas beneath and adjacent to the Sixth Street Viaduct will be redeveloped for use as "greenspace" and as such, may include walking and bike paths as well as recreational areas. It is our understanding that permanent residential or industrial buildings will not be constructed, but restrooms and small outdoor merchant kiosks/concession stands may be present. It is recognized that other receptors may be present at the Site including maintenance workers and commercial workers. However, a residential land use scenario is recognized by most regulatory agencies to be one of the most conservative (e.g., health protective) and consistent with an "unrestricted" land use. Thus, should *de minimis* (e.g., minor or negligible and thus 'acceptable' by regulatory standards) health risks be demonstrated under the residential land use scenario, then it is almost assured that the potential health risks associated with maintenance and commercial workers would be acceptable. This also applies to off-site receptors given that their exposures to on-site chemicals would also be less than an on-site residential receptor.

Given that the intent of the redevelopment is to provide an attractive open space for local residents and workers, adult and child receptors will be evaluated. The potential receptors will also include adult construction workers (those constructing the PARC facilities). It is appropriate to address

[15] The term 'conceptual exposure model' is also commonly used.

construction workers as well as their contact with soil is often greater than that of a residential scenario. In addition, the generation of and subsequent inhalation of dust particulates during construction activities is generally also greater than other land use scenarios.

Both receptors (i.e., residential and construction worker) are assessed using the reasonable maximum exposure (RME) approach. The RME, as defined by USEPA, is the "highest exposure that is reasonably expected to occur" and is estimated by using a combination of upper-bound values and average values for the exposure parameters (USEPA, 1989). The RME approach of assessing exposure relies on conservative assumptions for the exposure parameters, to ensure that the calculated dose is not underestimated.

5.2 CONCEPTUAL SITE MODEL AND POTENTIAL EXPOSURE PATHWAYS

The identification of exposure pathways, environmental media of interest (i.e., exposure points), and chemicals of potential concern (COPCs) as well as the potentially exposed populations is supported by the CSM (USEPA, 1988, 1989). The CSM examines the migration and distribution of potential chemical constituents from release, transport and ultimately to a point of exposure with receptor populations. The CSM for the Site is shown in **Figure 5**. For the CSM, complete and potentially complete exposure pathways were identified based on the following criteria (USEPA, 1989):

- A source and mechanism for chemical release;
- An environmental transport medium (i.e., air, water, soil);
- A point of potential human contact with the medium; and
- A route of exposure (e.g., inhalation, ingestion, dermal contact).

As presented in **Figure 5**, the potential routes of exposure include:

- Inhalation of VOC vapors in indoor air (residential receptor);[16]
- Inhalation of VOC vapors in outdoor air during trenching activities (construction worker only);
- Inhalation of wind-eroded soil particulates in outdoor air (non-VOCs only);
- Dermal contact with soil (non-VOCs only);[17] and
- Incidental ingestion of soil.

Although leaching to groundwater may occur, it is our understanding that groundwater will not be used as a potable water source for the Site; therefore, it is not evaluated in this HHRA.

[16] Outdoor air will be considered for residential receptors only for those PARC areas in which risks associated with indoor air exceed *de minimis* levels.

[17] Dermal absorption of VOCs in soil is an insignificant soil exposure pathway (DTSC, 2014).

5.3 RISK-BASED CONCENTRATIONS

COPC-specific soil and air risk-based concentrations (RBCs), based on regulatory agency-promulgated toxicity criteria, exposure parameters, and dose equations, have been developed by CalEPA ("DTSC-SLs", CalEPA, 2018) and USEPA ("RSLs", USEPA, 2017a) for residential receptors. CalEPA has also developed COPC-specific soil risk-based concentrations for the construction worker receptor ("ESLs", RWQCB, 2016). The risk-based concentrations (**Table 5** for the residential receptor and **Table 6** for the construction worker receptor) are used along with the exposure point concentrations presented in the following the subsection to calculate the risk values presented in the Risk Characterization (**Section 6**). The derivation of the air RBCs listed in **Table 6** for the construction worker receptor is presented in **Attachment N**.

5.4 EXPOSURE POINT CONCENTRATIONS

This section presents the exposure point concentrations (EPCs) for the soil exposure pathways, indoor air (for the residential receptor only), and outdoor air (for the construction worker only).

The EPC is the COPC- and medium-specific concentration used along with the risk-based concentrations in the dose and exposure equations for each exposure pathway. The methods, rationale, and assumptions employed in deriving the EPCs are discussed further below.

5.4.1 Soil EPCs

In accordance with USEPA guidance (USEPA, 1989), soil EPCs were calculated for all direct-contact soil exposure scenarios, and particulate inhalation as the 95% upper confidence limit (UCL) on the mean concentration, using USEPA's ProUCL software (version 5.1; USEPA, 2015). The data for all soil COPC samples for depths between 0 to 10 feet bgs for the residential and construction worker receptors. The resulting EPCs are presented in the PARC Area-specific attachments as follows:

- PARC Area 1A: Attachment H, **Table H-3**;
- PARC Area 2A, 2B, and 2C: Attachment I, **Table I-4**;
- PARC Area 5: Attachment J, **Table J-3**;
- PARC Area 6: Attachment K, **Table K-4**;
- PARC Area 7: Attachment L, **Table L-4**; and
- PARC Area 8: Attachment M, **Table M-4**.

Because the RBCs are on a dry weight basis, the wet weight concentration results as reported by the laboratory were converted to dry weight concentrations as described in the footnote to the attachment tables.

The ProUCL output files are provided in **Attachment O**. For 'non-detect' ('ND') results, the concentration was conservatively assumed to the reporting limit (i.e., the italicized values in the attachment tables). Given the large number of 'ND' results, the UCLs may be strongly affected by laboratory reporting limits more so than the actual presence of some COPCs in some PARC Areas as follows:

- PARC Area 1A: mercury;
- PARC Area 2A, 2B, and 2C: mercury, TPH-GRO, TPH-DRO, and TPH-ORO;
- PARC Area 5: none;
- PARC Area 6: antimony, cadmium, selenium, and silver;
- PARC Area 7: mercury, TPH-GRO, TPH-DRO, 4,4'-DDD, 4,4'-DDE, 4,4'-DDT, and alpha-BHC;
- PARC Area 8: none.

In those cases where there are an insufficient number of samples to calculate a 95% UCL, the maximum concentration is used as the EPC. Also, in some cases, an alternative UCL value was used for the soil EPC due to unstable H-statistic values as noted in the ProUCL output files.

5.4.2 Indoor and Outdoor (Construction Trench) Air Attenuation Factors and EPCs

Indoor air EPCs were calculated as the product of sample-specific soil gas concentrations and model-predicted COPC-specific soil gas-to-indoor air attenuation factors (α_{indoor} values). The sample-specific approach was taken as the comparatively small footprint of a default residential building (10 meters by 10 meters) relative to the lateral spacing of the soil gas samples precludes derivation of a 95% UCL. The COPC-specific α_{indoor} values were calculated using the USEPA implementation of the Johnson & Ettinger (J&E) model (Johnson and Ettinger, 1991 and USEPA, 2017b). The model used in this HHRA was configured consistent with that used by CalEPA (CalEPA, 2005) to derive the default α_{indoor} values listed in Table 2 of CalEPA's Final Vapor Intrusion Guidance (CalEPA, 2011). This is especially appropriate for future redevelopment as the uppermost layer consists of a comparatively dry subslab sand underlain by engineered fill typical for redevelopment as discussed in CalEPA (2005). The third and deepest layer is reserved for the site-specific soils using the soil physical properties (i.e., dry bulk density, porosity, and water-filled porosity) provided in **Table 1**. The α_{indoor} values are listed in **Table 7a**.

Similarly, the outdoor (construction trench) air EPCs were calculated as the product of sample-specific soil gas concentrations and model-predicted COPC-specific soil gas-to-construction trench air attenuation factors (α_{trench} values). The sample-specific approach was taken to be consistent with that used for indoor air. The COPC-specific α_{trench} values calculated using the Virginia Department of Environmental Quality trench attenuation factor (α_{trench}) model (VDEQ, 2018) as provided by CalEPA (CalEPA, 2017c). The trench model spreadsheet is presented in **Attachment P**. The α_{trench} values are listed in that attachment and **Table 7b**.

The indoor air and construction trench air EPCs are calculated as the product of the sample- and COPC-specific soil gas concentrations and the associated attenuation factors and are listed in PARC Area-specific attachments for those areas with soil gas COPCs[18] as follows:

- PARC Area 2A, 2B, and 2C: Attachment I, **Table I-5a,b**;
- PARC Area 7: Attachment L, **Table L-5a,b**; and
- PARC Area 8: Attachment M, **Table M-5a,b**.

[18] As discussed earlier and shown in **Table 4**, the PARC Areas with soil gas COPCs are PARC Area 2A/2B/2C, 7, and 8. That is, there are no soil gas COPCs associated with PARC Areas 1A, 5, and 6.

6.0 RISK CHARACTERIZATION

The risk characterization is the last step of the HHRA and involves estimating the potential risks to human health posed by the assumed exposure to the COPCs.

6.1 CALCULATION OF RISK VALUES

The soil, indoor air, and trench air EPCs are used in conjunction with the RBCs to calculate risk values (i.e., HI and ILCR values) consistent with the ratio approach set forth in CalEPA and USEPA guidance (CalEPA, 2011 and USEPA, 2017c).

Eqn. 1:

$$HI = RHQ \times \left(\frac{EPC_{COPC1}}{RBC_{NC,COPC1}} + \frac{EPC_{COPC2}}{RBC_{NC,COPC2}} + \cdots + \frac{EPC_{COPCn}}{RBC_{NC,COPCn}} \right)$$

Eqn. 2:

$$ILCR = RR \times \left(\frac{EPC_{COPC1}}{RBC_{C,COPC1}} + \frac{EPC_{COPC2}}{RBC_{C,COPC2}} + \cdots + \frac{EPC_{COPCn}}{RBC_{C,COPCn}} \right)$$

where:

HI	hazard index (unitless);
RHQ	reference hazard quotient (1.0; unitless)[19];
ILCR	incremental lifetime cancer risk (unitless);
RR	reference incremental lifetime cancer risk (1E-06; unitless);
EPC_{COPC1}	exposure point concentration for first of "n" COPCs (µg/kg or µg/m^3);
EPC_{COPC2}	exposure point concentration for second of "n" COPCs (µg/kg or µg/m^3);
EPC_{COPCn}	exposure point concentration for last of "n" COPCs (µg/kg or µg/m^3);
$RBC_{NC,COPC1}$	RBC for non-cancer endpoint for first of "n" COPCs (µg/kg or µg/m^3);
$RBC_{NC,COPC2}$	RBC for non-cancer endpoint for second of "n" COPCs (µg/kg or µg/m^3);

[19] The ratios in the parenthetical term of Eq. 1 are referred to as the hazard quotient.

$RBC_{NC,COPCn}$ RBC for non-cancer endpoint for last of "n" COPCs (µg/kg or µg/m^3);
$RBC_{C,COPC1}$ RBC for cancer endpoint for first of "n" COPCs (µg/kg or µg/m^3);
$RBC_{C,COPC2}$ RBC for cancer endpoint for second of "n" COPCs (µg/kg or µg/m^3); and
$RBC_{C,COPCn}$ RBC for cancer endpoint for last of "n" COPCs (µg/kg or µg/m^3).

6.2 SOIL RISK VALUES

Soil risk values are discussed for each PARC Area and summary tables listing the risk values are included in the attachments specific to the areas as discussed in the subsections below.

6.2.1 PARC Area 1A

The soil risk values are listed in **Table H-4**. The ILCR for both receptors are below the *de minimis* level of 1E-06.

The HI for the residential receptor exceeds the benchmark level of 1.0 for the residential receptor whereas the HI for the construction worker receptor is below the benchmark level.

The HI exceedance for the residential receptor is associated with TPH-DRO. The TPH-DRO exceedance is associated with the HQ value for the 2-foot bgs sample collected at L-12. It is possible that collection of additional TPH-DRO samples could decrease the EPC such that the HQ value decreases to a value below 1.0. The mercury HQ (0.8) is such that even if additional TPH-DRO samples were collected and the resulting HQ value decreased to a value below 1.0, a target organ assessment such as that presented below for PARC Area 2A, 2B, and 2C would likely be required.

Lead exceeds its screening level at several locations resulting in an EPC above the screening level for both receptors. Therefore, lead will likely warrant additional site characterization, risk characterization, and/or remediation/mitigation.

6.2.2 PARC Area 2A, 2B, and 2C

The soil risk values are listed in **Table I-6**. The ILCR for both receptors are below the *de minimis* level of 1E-06 as there are no carcinogenic soil COPCs.

The HI for the residential receptor exceeds the benchmark level of 1.0 for the residential receptor whereas the HI for the construction worker receptor is below the benchmark level.

Consistent with CalEPA guidance (CalEPA, 2015), the HI value for the residential receptor is recalculated by only summing exposure to all media for chemicals which have the same toxic manifestation or affect the same target organ. The recalculation focuses on the two risk drivers – mercury and TPH-GRO – and also the lesser risk driver TPH-DRO given its similarity to TPH-GRO.

- Mercury: According to USEPA (2018; Integrated Risk Information System [IRIS]), mercury exposure can result in hand tremor, increases in memory disturbances, slight subjective and objective evidence of autonomic dysfunction[20].
- TPH-GRO and TPH-DRO: USEPA (2018) does not contain information regarding TPH fractions. The Agency for Toxic Substances & Disease Registry (ATSDR, 2018) does not speak to specific TPH fractions but rather to 'TPH compounds' (e.g., VOCs such as benzene, toluene, ethylbenzene, xylenes, and trimethylbenzenes and SVOCs such as naphthalene) and states that "…some TPH compounds can affect the central nervous system. One compound can cause headaches and dizziness at high levels in the air. Another compound can cause a nerve disorder called peripheral neuropathy, consisting of numbness in the feet and legs. Other TPH compounds can cause effects on the blood, immune system, lungs, skin, and eyes. Animal studies have shown effects on the lungs, central nervous system, liver, and kidney from exposure to TPH compounds. Some TPH compounds have also been shown to affect reproduction and the developing fetus in animals." TPH compounds include VOCs and SVOCs - chemical classes that were tested for and not detected in soil.

It appears that the health effects associated with mercury and TPH-GRO / TPH-DRO differ such that noncancer health effects may be evaluated separately. When this approach is taken, the HQ values are less than the benchmark level 1.0 indicating that there is no significant noncancer health effect due to mercury and TPH in soil.

Lead is a COPC solely due to the detection in soil at A-13-21 at 5 ft bgs at a concentration of 170 mg/kg on a wet weight basis and 180 mg/kg on a dry weight basis. The 95% UCL (28 mg/kg on a dry weight basis) is below both the residential and construction screening levels of 80 and 160 mg/kg, respectively. However, consistent with CalEPA guidance (CalEPA, 2018), this single elevated concentration would be considered an outlier or 'hot spot' and therefore, when evaluated individually, this location exceeds the residential and construction screening levels.

6.2.3 PARC Area 5

The soil risk values are listed in **Table J-4**. The ILCR for both receptors are below the *de minimis* level of 1E-06 as there are no carcinogenic soil COPCs.

The HI for the residential receptor exceeds the benchmark level of 1.0 for the residential receptor whereas the HI for the construction worker receptor is below the benchmark level.

The HI exceedance for the residential receptor is associated with TPH-DRO. The TPH-DRO exceedance is associated with the HQ value for the two samples in which it was analyzed. Given

[20] Autonomic dysfunction is a medical condition used to describe the disabling function (or failure) of the autonomic nervous system, which uniquely controls the body's involuntary function such as blood pressure, heart rate, temperature, digestion, and perspiration.

that only two samples were tested for TPH-DRO, it is likely that additional sampling and/or remediation/mitigation will be warranted.

The lead EPC – at 81 mg/kg – slightly exceeds its residential screening level of 80 mg/kg. The EPC is below the construction screening level of 160 mg/kg.

6.2.4 PARC Area 6

The soil risk values are listed in **Table K-5**. The ILCR for the residential receptor – at 1.1E-06 – slightly exceeds the *de minimis* level of 1E-06. The ILCR for the construction worker receptor is below the *de minimis* level.

The HI for both the residential and construction worker receptors exceeds the benchmark level of 1.0.

The HI exceedance for the residential receptor is primarily associated with TPH-DRO. Antimony and mercury are secondary contributors to the HI value. The HI exceedance for the construction worker receptor is also associated with these three COPCs; however, none of the HQ values exceed 1.0 so a target organ assessment such as that presented above for PARC Area 2A, 2B, and 2C may show an acceptable HI value for this receptor.

Lead exceeds its screening level at several locations resulting in an EPC above the screening level for both receptors. Therefore, lead will likely warrant additional site characterization, risk characterization, and/or remediation/mitigation.

Arsenic is not included in the risk characterization as its EPC (6.6 mg/kg) was calculated to be below the regional background value of 12 mg/kg. Several VOCs were detected in soil at several locations, most notably TCE at 12 mg/kg in the 1-foot sample from boring 18.2-1-1, and are not included in the risk calculations as soil gas sampling and possibly additional soil sampling for VOCs will likely be required in this PARC Area.

6.2.5 PARC Area 7

The soil risk values are listed in **Table L-6**. The ILCR for both the residential and construction worker receptors are below the *de minimis* level of 1E-06.

The HI for both the residential and construction worker receptors exceeds the benchmark level of 1.0. The HI exceedance for the residential receptor is primarily associated with TPH-DRO. Mercury and copper are secondary contributors to the residential HI value. The HI exceedance for the construction worker receptor is associated with TPH-DRO.

The lead EPC – at 58 mg/kg - is below its screening level for both receptors.

6.2.6 PARC Area 8

The soil risk values are listed in **Table M-6**. The ILCR for both the residential and construction worker receptors are below the *de minimis* level of 1E-06 as there are no carcinogenic soil COPCs.

Similarly, the HI for both the residential and construction worker receptors are below the benchmark level of 1.0.

The lead EPC – at 130 mg/kg – exceeds its residential screening level but is below the construction worker screening level. The exceedance is associated primarily with the detections in the 0.5-foot and 1-foot samples from boring 8-1 and the 0.5-foot sample from boring L-1.

6.3 SOIL GAS RISK VALUES

Risk values associated vapor intrusion of soil gas into indoor air (for the residential receptor) and a construction trench (for the construction worker receptor) are discussed for each PARC Area and summary tables listing the risk values are included in the attachments specific to the areas.

6.3.1 PARC Area 1A

There are no soil gas COPCs associated with this PARC Area.

6.3.2 PARC Area 2A, 2B, and 2C

The residential indoor air risk values and construction worker trench air risk values for PARC Area 2A, 2B, and 2C are presented in the subsections below.

6.3.2.1 Residential Indoor Air

The residential indoor air ILCR values are tabulated in **Table I-7a** whereas the HQ and HI values are tabulated in **Table I-7b**.

- None of the ILCR values exceed the benchmark level of 1E-06.
- None of the HI values exceed the benchmark level of 1.0.

There are several sample-specific instances in which the ILCR value exceeds 1E-07 and the HI value exceeds 0.1. These values could result in an overall exceedance when added to the soil ILCR and HI values.

6.3.2.2 Construction Trench Air

The construction trench air ILCR values are tabulated in **Table I-7c** whereas the HQ and HI values are tabulated in **Table I-7d**.

- None of the ILCR values exceed the benchmark level of 1E-06.
- None of the HI values exceed the benchmark level of 1.0.

6.3.3 PARC Area 5

There are no soil gas COPCs associated with this PARC Area.

6.3.4 PARC Area 6

There are no soil gas COPCs associated with this PARC Area.

6.3.5 PARC Area 7

The residential indoor air risk values and construction worker trench air risk values for PARC Area 7 are presented in the subsections below.

6.3.5.1 Residential Indoor Air

The residential indoor air ILCR values are tabulated in **Table L-7a** whereas the HQ and HI values are tabulated in **Table L-7b**.

- Five samples exceed the ILCR benchmark level of 1E-06 due primarily to PCE.
- One sample exceeds the HI benchmark level of 1.0 due primarily to TPH-GRO.

There are several sample-specific instances in which the ILCR value exceeds 1E-07 (due primarily to PCE) and the HI value exceeds 0.1 (due primarily to TPH-GRO). These values could result in an overall exceedance when added to the soil ILCR and HI values.

6.3.5.2 Construction Trench Air

The construction trench air ILCR values are tabulated in **Table L-7c** whereas the HQ and HI values are tabulated in **Table L-7d**.

- None of the ILCR values exceed the benchmark level of 1E-06.
- One sample (P20-VP-1) exceeds the HI benchmark level of 1.0 due to TPH-GRO.

There are several sample-specific instances in which the HI value exceeds 0.1 (due primarily to TPH-GRO). These values could result in an overall exceedance when added to the soil HI values.

6.3.6 PARC Area 8

The residential indoor air risk values and construction worker trench air risk values for PARC Area 8 are presented in the subsections below.

6.3.6.1 Residential Indoor Air

The residential indoor air ILCR values are tabulated in **Table M-7a** whereas the HQ and HI values are tabulated in **Table M-7b**.

- The one sample for this area exceeds the ILCR benchmark level of 1E-06 due primarily to PCE.
- The one sample for this area is below the HI benchmark level of 1.0.

Given the ILCR exceedance for the one sample for this area, additional characterization may be warranted.

6.3.6.2 Construction Trench Air

The construction trench air ILCR values are tabulated in **Table M-7c** whereas the HQ and HI values are tabulated in **Table M-7d**.

- The ILCR value for the one sample for this area is below the benchmark level of 1E-06.
- The HI value for the one sample for this area is below the benchmark level of 1.0.

6.4 SUMMARY

The soil risk values (which are associated with 95% UCLs for the soil COPCs) and the maximum indoor and trench air risk values (which are associated with sample-specific concentrations for the soil gas COPCs) are summarized for each PARC Area in **Table 8**.

- The ILCR values exceed the risk benchmark level only for the residential receptor in PARC Areas 6, 7, and 8 and then only slightly so. The maximum ILCR value is 5E-06 for PARC Area 7; therefore, the exceedances are within the 1E-04 to 1E-06 risk management range. The risk-driving COPCs are Aroclor 1260 in soil (PARC Area 5) and PCE in soil gas (PARC Areas 7 and 8).
- The HI values exceed the benchmark level for the residential receptor in all PARC Areas except PARC Area 8. The HI values exceed the benchmark level for the construction worker receptor in PARC Area 6 and 7 due to TPH-DRO.
- Lead exceeds the residential screening level in all PARC Areas 1A, 5, 6, and 8; it exceeds the construction worker screening level in PARC Area 1A and 6.
- TPH-DRO and lead are the primary risk-driving COPCs.

6.5 UNCERTAINTY ANALYSIS

Uncertainty is inherent in many aspects of the risk assessment process. Uncertainty generally arises from a lack of knowledge, as well as variability of (1) site conditions and future site use, (2) toxicity and exposure parameters associated with the RBCs, and/or (3) the extent to which an individual may be exposed (if at all) to the chemicals and an individual's response to the exposure. This lack of knowledge means that assumptions must be made based on information presented in the scientific literature or on professional judgment. Although some assumptions have a significant scientific basis, many do not. The assumptions that introduce the greatest amount of uncertainty, and their effects on the findings of this HHRA, are discussed further below. This discussion is qualitative in nature, reflecting the difficulty of quantifying the uncertainty in specific assumptions. In general, assumptions were selected in a manner that purposely biases the process toward health protection.

6.5.1 Uncertainty Associated with Site Characterization Data

Samples cannot be collected from every possible location; therefore, there is always some uncertainty associated with the representativeness of site characterization data. With the exception of the absence of soil gas samples in Area 6, soil and soil gas samples provided reasonable lateral and vertical coverage of the Site, were generally targeted to known or suspected source areas, and were tested for representative analytical suites given the history of the Site. The soil physical parameter data are consistent with the generally sandy soils encountered at the Site. Accordingly, the relative uncertainty in the site characterization data in terms of sample location and density is low for all areas except for soil gas in Area 6.

6.5.2 Uncertainty Associated with Risk-Based Concentrations

As mentioned earlier, the RBCs are based on toxicity parameters and exposure parameters published by CalEPA and USEPA. A large source of uncertainty in any risk assessment is the limited understanding of toxicity to humans who are exposed to the low concentrations that are generally encountered in the environment. Most toxicity data are from animal studies; these data are extrapolated using mathematical models or multiple uncertainty factors to predict what might occur in humans. Sources of conservatism in the toxicity criteria used in this HHRA include:

- the use of conservative methods and assumptions to extrapolate from high-dose animal studies to predict the possible response in humans at exposure levels far below those administered to animals;
- the assumption that chemicals considered to be carcinogens do not have thresholds (i.e., for all doses greater than zero, some risk is assumed to be present); and
- the fact that epidemiological studies (i.e., human exposure studies) are limited and are not generally considered quantitatively in deriving toxicity values.

In aggregate, these assumptions lead to overestimates of risk, such that the actual risk is unlikely to be higher than the estimated risk, but could be considerably lower and, in fact, could be zero. In addition, there were no toxicity values available for some COPCs (2,2,4-trimethylpentane and ethanol). While the impact of the lack of toxicity values for these two COPCs serves to underestimate risk, the overall impact to the HHRA is considered low.

It is our understanding that the ESLs used for the construction worker soil RBCs will be revised in June or July. Therefore, subsequent HHRA's that may be conducted for other PARC areas and/or future reviewers may rely on a different set of soil RBCs for the constructions worker than those relied upon for this HHRA.

For TPH-GRO, the residential soil RBC is driven by the inhalation exposure pathway based on an outdoor air model. Because TPH-GRO is also assessed using soil gas data and the J&E model – an indoor air model – the cumulative (soil plus soil gas) risk values effectively 'double count' since a receptor cannot be simultaneously present indoors and outdoors. We also note that the soil RBC for TPH-GRO is based on the more conservative of the two low molecular weight fractions (i.e., aromatic is selected over aliphatic as opposed to weighting the two fractions as had previously been allowed by CalEPA).

The exposure assessment in this HHRA is based on a reasonable maximum exposure (RME) scenario, which is defined by USEPA as the highest exposure that could reasonably be expected to occur for a given exposure pathway at a site (USEPA, 1989). To achieve this goal, the RME scenario uses highly conservative exposure assumptions. For example, this HHRA assumes that a future resident receptor is present at home 24 hours per day, 350 days per year, for 26 years. These and other upper-bound, default estimates of exposure most likely overestimate the potential health risks associated with the site. In reality, the Site will not be developed for the residential use considered herein but rather, will be redeveloped as an outdoor greenbelt/park with limited commercial use. Therefore, the likelihood of underestimating potential health risks is considered low.

6.5.3 Uncertainty Associated with Exposure-Point Concentrations

The 95% UCL concentration consistent with USEPA guidance (1989) was used as the EPC for the soil COPCs. The reporting limit was used for non-detect ('ND') results thereby yielding conservative estimates of the EPCs as the actual concentration of 'ND' samples could be zero.

For the soil gas COPCs, the J&E model and VDEQ trench model are both generally considered to be conservative; therefore, the indoor and trench air EPCs are likely to be conservative overestimates leading to overestimated risk values. Perhaps most importantly, no residential dwelling will be constructed at the Site as part of the planned redevelopment; therefore, the only exposure to a residential receptor would be a greenbelt visitor. The exposure frequency, duration, and time for such a greenbelt visitor will be significantly less than that for the default residential receptor considered here. Additionally, it has been our experience that outdoor air models used to quantify EPCs for such a visitor typically yield EPCs ten to one-hundred times lower than those obtained using the J&E model.

6.5.4 Uncertainty Associated with Risk Characterization

The uncertainties associated with risk characterization are generally the result of the combined uncertainties in the site conditions, exposure assumptions, and toxicity criteria. In this HHRA, potential health risks were quantified for future residents and construction workers. Given the highly conservative nature of the exposure parameters used to characterize these scenarios, it is highly unlikely that the same receptor would be exposed at that level over the entire duration of exposure. These conservative estimates of exposure were then combined with even more conservative estimates of acceptable exposure or carcinogenic potency to estimate the magnitude (noncancer) or likelihood (cancer) of potential effects.

One source of uncertainty that is unique to risk characterization is the assumption that the total risk associated with exposure to multiple chemicals is equal to the sum of the individual risks for each chemical (i.e., the risks are additive). Other possible interactions include synergism, where the total risk is higher than the sum of the individual risks, and antagonism, where the total risk is lower than the sum of the individual risks. Relatively few data are available regarding potential chemical interactions following environmental exposure to chemical mixtures. Some studies have been carried out in rodents that were given simultaneous doses of multiple chemicals. The results of these studies indicated that no interactive effects were observed for mixtures of chemicals that affect different target organs (i.e., each chemical acted independently), whereas antagonism was observed for mixtures of chemicals that affect the same target organ, but by different mechanisms (Risk Commission, 1997).

While there are no data on chemical interactions in humans exposed to chemical mixtures at the dose levels typically observed in environmental exposures, animal studies suggest that synergistic effects will not occur at levels of exposure below their individual effect levels (Seed et al., 1995). As exposure levels approach the individual effect levels, a variety of interactions may occur, including additive, synergistic, and antagonistic interactions (Seed et al., 1995).

USEPA guidance for risk assessment of chemical mixtures (USEPA, 1986) recommends assuming an additive effect following exposure to multiple chemicals. Subsequent recommendations by

other parties, such as the National Research Council (1988) and the Presidential/Congressional Commission on Risk Assessment and Risk Management (Risk Commission, 1997) have also advocated a default assumption of additivity. As currently practiced, risk assessments of chemical mixtures generally sum cancer risks regardless of tumor type and sum non-cancer hazard indices regardless of toxic endpoint or mode of action. Given the available experimental data, this approach likely overestimates potential risks associated with simultaneous exposure to multiple chemicals.

In summary, these and other assumptions contribute to the overall uncertainty in the results of the HHRA. However, given that the largest sources of uncertainty generally result in overestimates of exposure or risk, it is believed that the noncarcinogenic and carcinogenic risks presented in this HHRA represent conservative estimates of the risks, if any, posed by residual chemicals at the site.

7.0 CONCLUSIONS

This HHRA addresses PARC Areas 1A, 2A/2B/2C, 5, 6, 7, and 8 associated with redevelopment of the Sixth Street Viaduct located in Los Angeles, California. This HHRA was conducted in accordance CalEPA and USEPA guidance. As directed by the LACFD, potential health risks associated with a residential (e.g., unrestricted land use) scenario and a construction scenario were quantified.

7.1 RESIDENTIAL SCENARIO

The incremental lifetime cancer risk (ILCR) values are below the CalEPA and USEPA *de minimis* risk target of 1E-06 or within the commonly-applied risk management range (1E-06 to 1E-04) (CalEPA 2011). Given that the actual future planned use for the Site, and assuming soil gas samples anticipated to be required in PARC Area 6 yield ILCR values below the *de minimis* risk target or within the risk management range, it is our opinion that a regulatory agency would consider carcinogenic health impacts to be insignificant such that mitigative and/or remedial actions would not be required.

The noncancer hazard index (HI) exceeds the regulatory benchmark of 1.0 in all areas except PARC Area 8 primarily due to TPH-DRO. Lead exceeds its screening level in all areas except PARC Area 2A/2B/2C and 7. The TPH-DRO and lead exceedances are commonly driven by a limited number of samples within limited areas. Absent additional site or risk characterization or – more importantly - consideration of the conservative nature of this HHRA which includes this hypothetical receptor, it has been our experience that a regulatory agency may request mitigative and/or corrective action at these locations.

7.2 CONSTRUCTION WORKER SCENARIO

The ILCR in all PARC Areas is below the CalEPA and USEPA *de minimis* risk target of 10^{-6} and below the commonly-applied risk management target ILCR of $1x10^{-5}$. It has been our experience that a regulatory agency would consider carcinogenic health impacts to be insignificant such that mitigative and/or remedial actions would not be required.

The noncancer hazard index (HI) exceeds the regulatory benchmark of 1.0 in PARC Areas 7 and 8 primarily due to TPH-DRO. Lead exceeds its screening level in PARC Areas 1A and 6. As above for the residential receptor, the TPH-DRO and lead exceedances are commonly driven by a limited number of samples within limited areas. Absent additional site or risk characterization or

consideration of the conservative nature of this HHRA, it has been our experience that a regulatory agency may request mitigative and/or corrective action at these locations.

7.3 SUMMARY

Absent additional site or risk characterization or consideration of the conservative nature of this HHRA, it has been our experience that a regulatory agency may request mitigative and/or corrective action at a limited number of locations impacted with TPH-DRO and/or lead. It is also likely that a regulatory agency would request soil gas sampling in PARC Area 6.

8.0 REFERENCES CITED

Agency for Toxic Substances & Disease Registry, 2018.
https://www.atsdr.cdc.gov/

Arcadis, Inc., 2015. Removal Action Workplan, Butterfield Property, 590 South Santa Fe Avenue, Los Angeles, California. August 28th.

Arcadis, Inc., 2016. Completion Report, Removal of Underground Storage Tanks and Excavation of Shallow Impacted Soil Areas (Excavations A, B, and C), LOC 61S (Former Butterfield Property), 590 South Santa Fe Avenue, Los Angeles, California. March 21st.

Avocet Environmental, Inc., 2008. Groundwater Monitoring Report: First Quarter 2008, 590 South Santa Fe Avenue, Los Angeles, California.

Avocet Environmental, Inc., 2013. Revised Work Plan for Additional Site Characterization: 590 South Santa Fe Avenue, Los Angeles, California. January.

Avocet Environmental, Inc., 2014. Additional Site Characterization: 590 South Santa Fe Avenue, Los Angeles, California. January.

CalEPA, 1997. Selecting Inorganic Constituents as Chemicals Of Potential Concern at Risk Assessments at Hazardous Waste Sites and Permitted Facilities - Final Policy. February.
http://dtsc.ca.gov/AssessingRisk/backgrnd.cfm

CalEPA, 2005. Human-Exposure-Based Screening Numbers Developed to Aid Estimation of Cleanup Costs for Contaminated Soil. Integrated Risk Assessment Section, Office of Environmental Health Hazard Assessment (OEHHA), January.
http://www.oehha.ca.gov/risk/pdf/screenreport010405.pdf.

CalEPA, 2009. Revised California Human Health Screening Level for Lead (Final; September).
https://oehha.ca.gov/media/downloads/crnr/leadchhsl091709.pdf

CalEPA, 2011. Final - Guidance of the Evaluation and Mitigation of Subsurface Vapor Intrusion to Indoor Air (Vapor Intrusion Guidance). Department of Toxic Substances Control (DTSC). October.
http://www.dtsc.ca.gov/SiteCleanup/upload/VIMA_Final_Oct_20111.pdf.

CalEPA/DTSC, 2014. HERO HHRA Note Number 1. Recommended DTSC Default Exposure Factors for Use in Risk Assessment at California Hazardous Waste Sites and Permitted Facilities, September 30th. https://www.dtsc.ca.gov/AssessingRisk/upload/HHRA_Note1-2.pdf

CalEPA/DTSC, 2015. Preliminary Endangerment Assessment Guidance Manual (January 1994, Revised October 2015).
https://www.dtsc.ca.gov/PublicationsForms/upload/PEA_Guidance_Manual.pdf

CalEPA (Department of Toxic Substances Control), 2016. Approval of Completion Report for UST Removal and Shallow Soil Excavation – MTA/Butterfield Site, 590 South Santa Fe Avenue, Los Angeles (Site Code: 301701). March 22nd.
http://www.envirostor.dtsc.ca.gov/public/deliverable_documents/3868163883/2016-03-22-mta%20butterfield-shallow%20soil%20removal-approval%20ltr.pdf

CalEPA, 2017. Memorandum: Human Health Risk Assessment, Former Cragar Wheel Manufacturing Facility Site, Compton, California, SWRCB# R4-16-027, OEHHA #880434-00. November 15th.
https://geotracker.waterboards.ca.gov/regulators/deliverable_documents/2184982776/880434-00%20Crager%20Wheel%2011-17.pdf

CalEPA/DTSC, 2016. Approval of Response Action Completion Report and No Further Action Determination for the AT Mateo Site, 555 Mateo, Los Angeles (Site Code: 301708). April 11th.
file:///C:/Projects/Fehling/BlueScape/HHRA%20for%20Remaining%20Parcels/Geotracker%20-%20Envirostor%20Reports%20for%20Mateo%20Property/At%20Mateo_RACR_DTSC%20Approval%20Letter%20and%20NFA_41116.pdf

CalEPA/DTSC, 2018. Human Health Risk Assessment (HHRA) Note. HERO HHRA Note Number 3, DTSC-modified Screening Levels (DTSC-SLs). January.
https://www.dtsc.ca.gov/AssessingRisk/upload/HHRA-Note-3-January-2018.pdf

CH2M-Hill, 2012. 6th Street Viaduct Replacement Project, Initial Site Assessment, 650 South Clarence Street, Los Angeles, California. November.

CH2M-Hill, 2013a. 6th Street Viaduct Replacement Project, Initial Site Assessment, 600 South Santa Fe Avenue, Los Angeles, California. April.

CH2M-Hill, 2013b. 6th Street Viaduct Replacement Project, Initial Site Assessment, 658 Mesquit Street, Los Angeles, California. July.

CH2M-Hill, 2013c. 6th Street Viaduct Replacement Project, Initial Site Assessment, Parcel 16A - 1600 South 6th Street, Los Angeles, California. July.

Dames & Moore, 1985. Subsurface Contamination Investigation, BASF Inmont Facility, Los Angeles.

Dames & Moore, 1991. Subsurface Contamination Investigation, Former BASF Coatings and Colorants Division Facility, Los Angeles, California.

Environmental Resources Management, 1997a. Supplemental Investigation Report, Sun Chemical Corporation, 590 South Santa Fe Avenue, Los Angeles, California.

Environmental Resources Management, 1997b. Additional Site Activities Report, Sun Chemical Corporation, 590 South Santa Fe Avenue, Los Angeles, California.

Earth Mechanics, Inc., 2014. Phase II Subsurface Environmental Site Assessment, Soil and Groundwater Sampling - Sixth Street Viaduct Replacement Project, City of Los Angeles.

Hushmand Associates, Inc., 2017. Environmental Site Investigations (HAZMAT) Sixth Street Viaduct – PARC Improvements, Los Angeles. September.

Johnson, P.C. and R.A. Ettinger, 1991. Heuristic Model for Predicting the Intrusion Rate of Contaminant Vapors into Buildings. Environ. Sci. Technol., 25(8):1445-1452.

Kleinfelder, Inc., 2015. Supplemental Environmental Soil Assessment Report, 555 Mateo Street, Los Angeles, California 90013. June 1st.

McDaniel Lambert, 2014. Human Health Risk Assessment, 590 South Santa Fe Avenue, Los Angeles, California. February 3rd.

Risk Commission, 1997. Final Report, Volume 2, Risk management in regulatory decision-making. Presidential/Congressional Commission of Risk Assessment and Risk Management, Washington, DC.

Seed, J., R.P. Brown, S.S. Olin, and J.A. Foran, 1995. Chemical mixtures: Current risk assessment methodologies and future directions. Regulatory Toxicol. Pharmacol. 22:76–94.

USEPA, 1986. Guidelines for Carcinogenic Risk Assessment. 51 Federal Register, CFR 2984, No. 185, September 24.
http://www.epa.gov/raf/publications/pdfs/CA%20GUIDELINES_1986.PDF.

USEPA, 1988. Guidance for Conducting Remedial Investigations and Feasibility Studies Under CERCLA. Interim Final, Office of Emergency and Remedial Response. October.
http://nepis.epa.gov/Exe/ZyPURL.cgi?Dockey=10001VGY.txt.

USEPA, 1989. Risk Assessment Guidance for Superfund (RAGS), Volume 1, Human Health Evaluation Manual (Part A), Interim Final. EPA, Office of Emergency and Remedial Response. December.
http://www.epa.gov/oswer/riskassessment/ragsa/pdf/rags-vol1-pta_complete.pdf.

USEPA, 1992. Guidance for Data Usability in Risk Assessment (Part A), Final. Office of Emergency and Remedial Response. April.
https://rais.ornl.gov/documents/USERISKA.pdf

USEPA, 2015 (Ashtok, A.S. and A.K. Singh). ProUCL Version 5.1.002 Technical Guide, Statistical Software for Environmental Applications for Data Sets with and without Nondetect Observations. EPA/600/R-07/041. October.

USEPA, 2017a. Regional Screening Levels (RSLs), Generic Tables. November. https://www.epa.gov/risk/regional-screening-levels-rsls

USEPA, 2017b. Documentation for EPA's Implementation of the Johnson and Ettinger Model to Evaluate Site Specific Vapor Intrusion into Buildings, Version 6.0, September. https://www.epa.gov/vaporintrusion/epa-spreadsheet-modeling-subsurface-vapor-intrusion

USEPA, 2017c. Regional Screening Levels (RSLs), Equations. November. https://www.epa.gov/risk/regional-screening-levels-rsls-equations-november-2017

USEPA, 2018. Integrated Risk Information System (IRIS). https://www.epa.gov/iris

Virginia Department of Environmental Quality (VDEQ), 2018. Virginia Unified Risk Assessment Model (VURAM) User's Guide. Appendix 2. http://www.deq.virginia.gov/Portals/0/DEQ/Land/RemediationPrograms/VRPRisk/VURAMUsersGuide.pdf

FIGURES

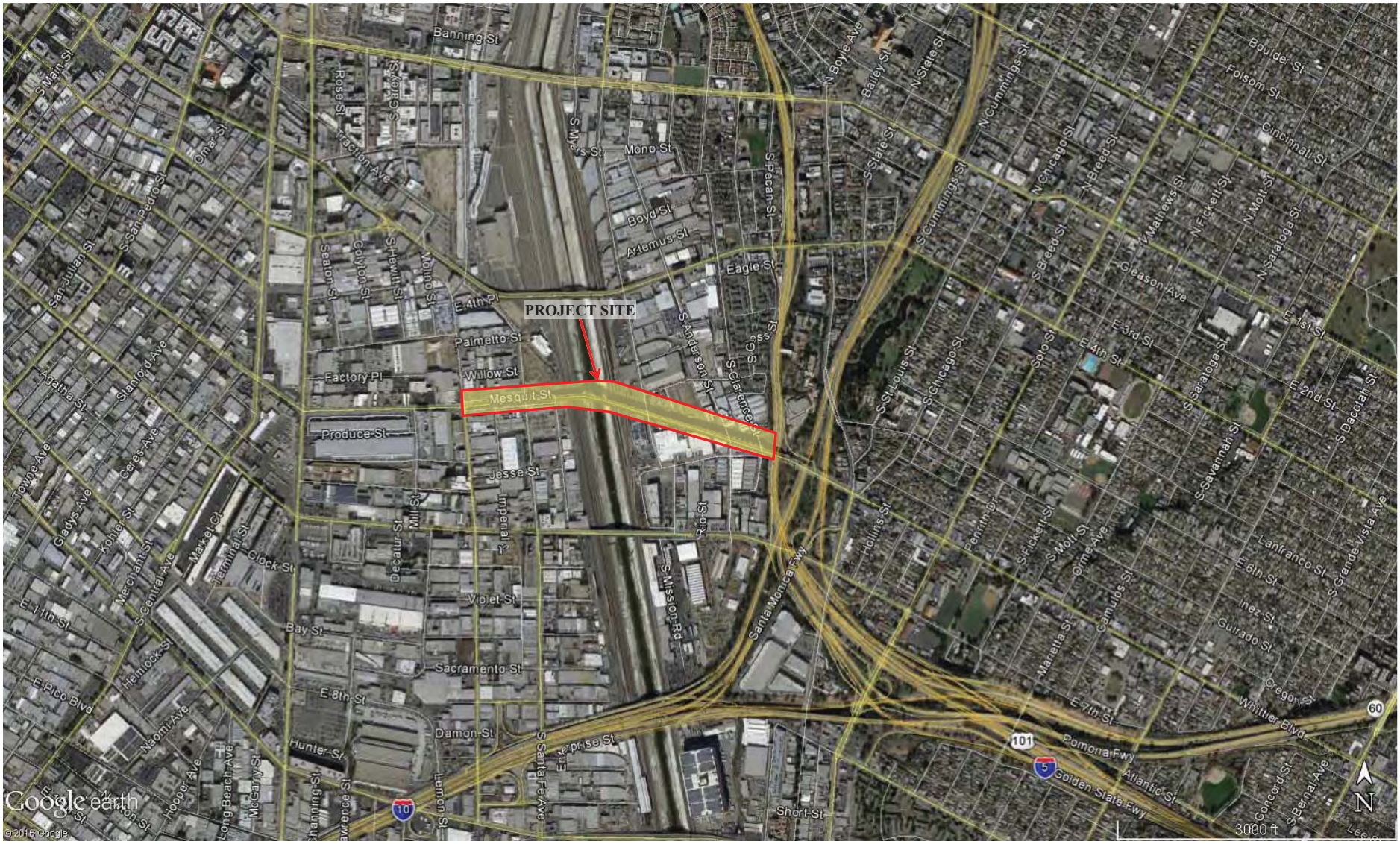

HUSHMAND ASSOCIATES, INC. Geotechnical and Earthquake Engineers	**SIXTH STREET VIADUCT – PARC IMPROVEMENTS** Los Angeles, California	**SITE VICINITY MAP**	Figure **1**

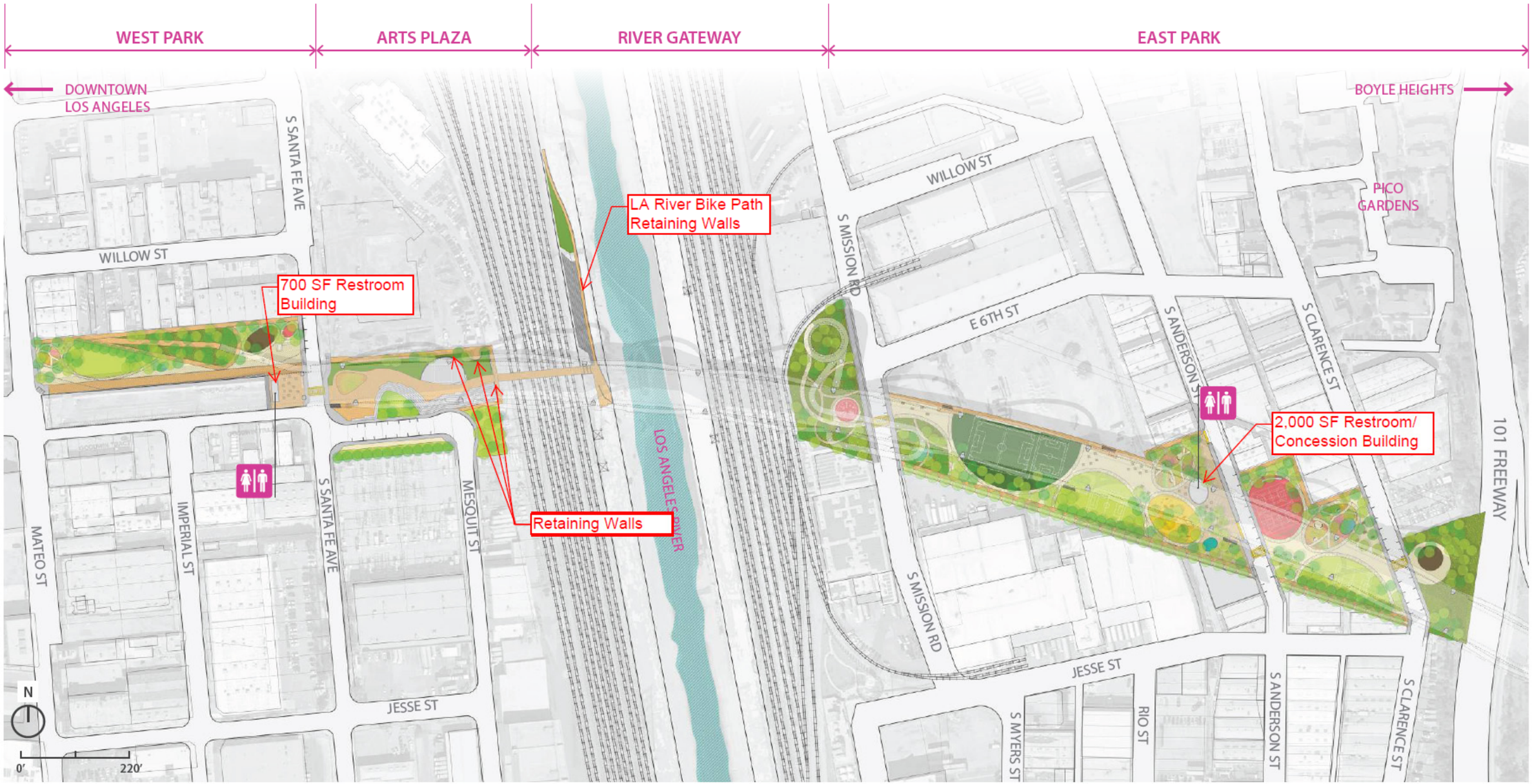

HUSHMAND ASSOCIATES, INC. Geotechnical and Earthquake Engineers	**SIXTH STREET VIADUCT – PARC IMPROVEMENTS** Los Angeles, California	**CONCEPTUAL DESIGN PLAN**	Figure **2**

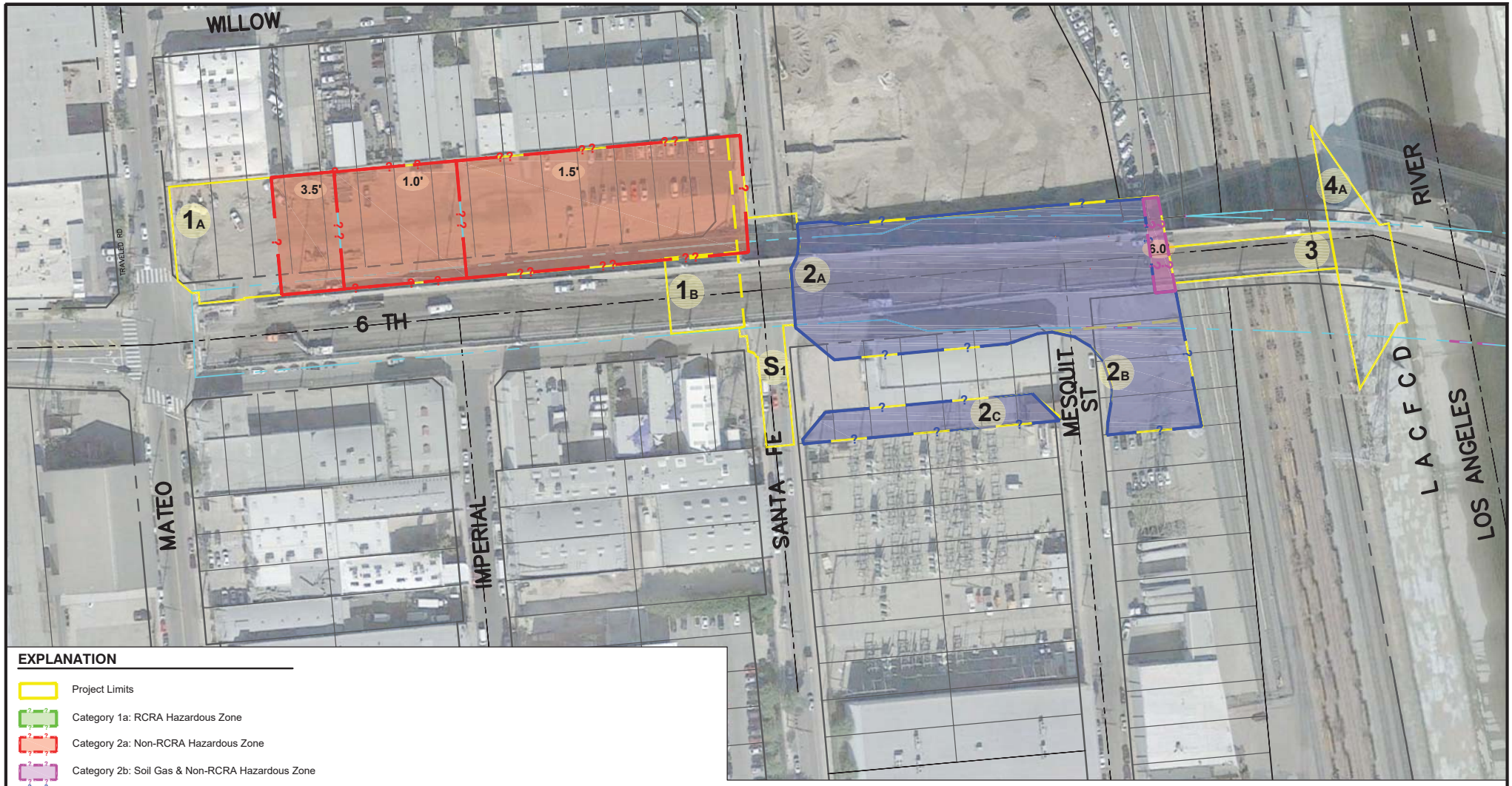

EXPLANATION

- Project Limits
- Category 1a: RCRA Hazardous Zone
- Category 2a: Non-RCRA Hazardous Zone
- Category 2b: Soil Gas & Non-RCRA Hazardous Zone
- Category 3: Soil Gas Only Zone
- Aerially Deposited Lead Zone
- 1A PARC Area Designation
- 0.75' Estimated Soil Removal Depth

0 100 200 FEET
APPROXIMATE SCALE

HUSHMAND ASSOCIATES, INC.
Geotechnical and Earthquake Engineers

SIXTH STREET VIADUCT PARC IMPROVEMENTS
Los Angeles, California
Project No. LAC-17-001

AREAS OF CONCERN WITH CONTAMINATION - WEST PARK

Figure 3



EXPLANATION

- Project Limits
- Category 1a: RCRA Hazardous Zone
- Category 2a: Non-RCRA Hazardous Zone
- Category 2b: Soil Gas & Non-RCRA Hazardous Zone
- Category 3: Soil Gas Only Zone
- Aerially Deposited Lead Zone
- 1A PARC Area Designation
- 0.75' Estimated Soil Removal Depth

0 100 200 FEET
APPROXIMATE SCALE

HUSHMAND ASSOCIATES, INC.
Geotechnical and Earthquake Engineers

SIXTH STREET VIADUCT PARC IMPROVEMENTS
Los Angeles, California
Project No. LAC-17-001

AREAS OF CONCERN WITH CONTAMINATION - EAST PARK

Figure 4

Figure 5. Conceptual Site Model

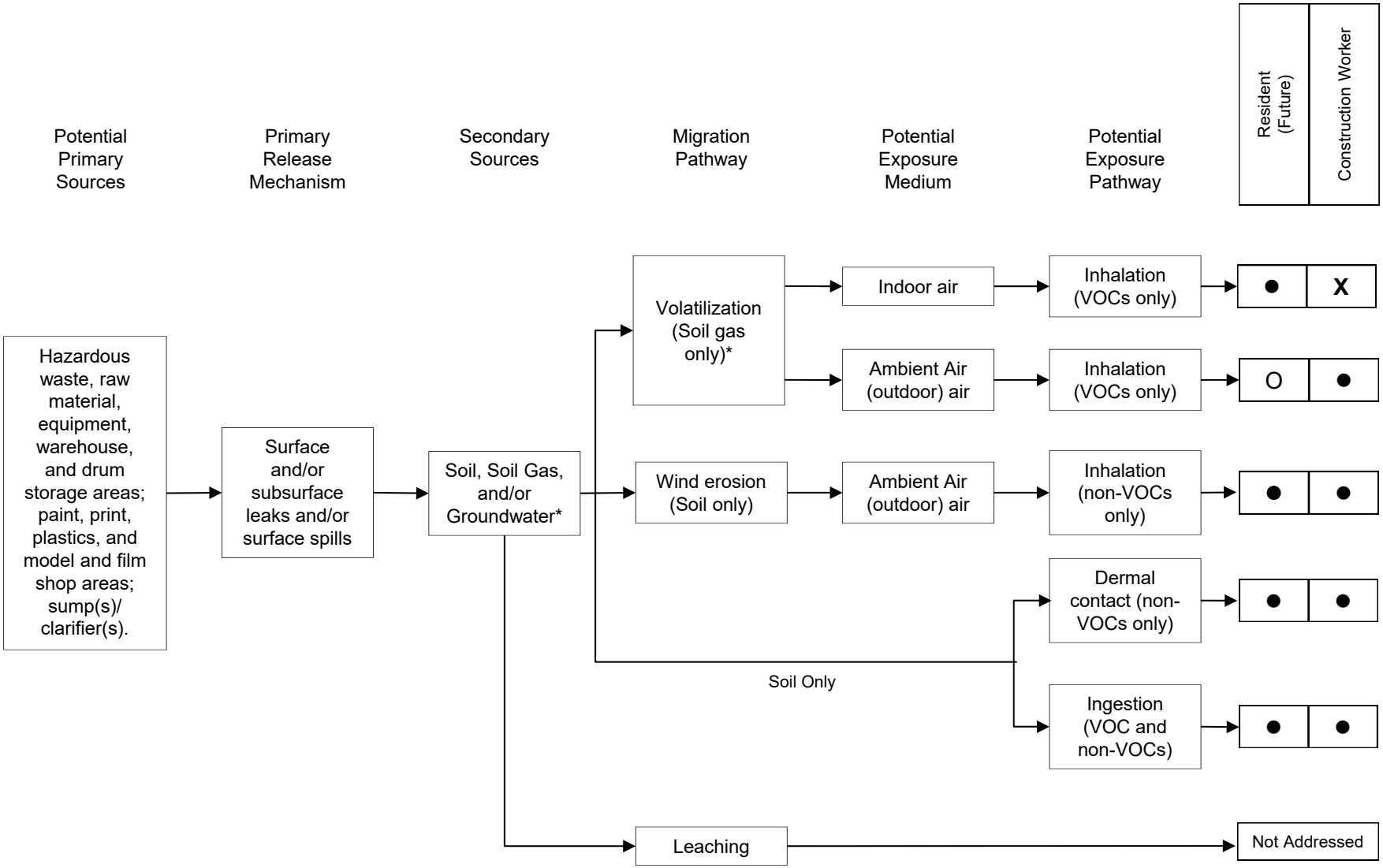

● Potentially complete exposure pathway
O Potentially complete exposure pathway but will only be addressed if indoor air exceeds *de minimis* levels.
X Incomplete exposure pathway
* Volatilization off groundwater (which is at approximately 65 ft bgs) and subsequent upward migration of soil vapors will be addressed using soil gas data.

TABLES

TABLE 1

Summary of Soil Physical Parameter (SPP) Data

~ 0 to 15 ft bgs ~

SPP Boring[Note 1]	HRA AOC	Depth (ft bgs)	Logged Soil Type	Density (lbs/ft^3)	Density (g/cm^3)	Moisture (%)	Porosity (-)*	Water-filled Porosity (-)**	Air Saturation (-)***
GB-1	1A	5	Silt with Sand (ML), Silty Sand (SM), and Sand (SP)	-		-	-	-	-
GB-2	-	5	Silty Sand (SM)	-		-	-	-	-
		10	Sand with Silt and Gravel (SW-SM)	107	1.71	2	0.37	0.03	0.91
		15	Sand with Gravel (SP)	104	1.67	2	0.38	0.03	0.91
GB-3	2C	5	Silty Sand (SM)	-		-	-	-	-
GB-4	2A	5	Silty Sand (SM)	-		-	-	-	-
		10	Silty Sand (SM) and Sand (SP)	-		-	-	-	-
		15	Sand (SP)	107	1.71	9	0.37	0.15	0.58
GB-6	-	5	Silty Sand with Gravel and Sand with Silt and Gravel (SM-SP)	-		-	-	-	-
GB-7	6	5	Silt with Sand (ML) and Silty Sand (SM) and Sand (SP)	-		-	-	-	-
GB-8	6	5	Silty Sand (SM)	-		-	-	-	-
GB-9	6	5	Sand (SP)	101	1.62	3	0.40	0.05	0.88
		10	Sand with Silt and Gravel (SP) and Sand (SP)	118	1.89	3	0.30	0.06	0.81
		15	Sand (SP)	106	1.70	3	0.37	0.05	0.86
GB-10	7 Central and 7 East	5	Sand with Silt (SP-SM), Silty Sand (SM), and Sand (SP)	-		-	-	-	-
A-13-001 (D-2)	1A and 1B	10	Sand with Silt and Gravel (SP-SM)	119.7	1.92	1.7	0.29	0.03	0.89
A-13-002 (D-2)	2A	10	SM	117.9	1.89	6.7	0.30	0.13	0.58
A-13-003 (S-3)	-	15	SP-SM	-		10.3	-	-	-
A-13-008 (D-2)	6	10	SP	112.2	1.80	0.7	0.33	0.01	0.96
A-13-009 (D-2)	6	10	SP-SM	133.6	2.14	5.8	0.21	0.12	0.40

The Fehling Group, LLC

TABLE 1
Summary of Soil Physical Parameter (SPP) Data
~ 0 to 15 ft bgs ~

SPP Boring[Note 1]	HRA AOC	Depth (ft bgs)	Logged Soil Type	Density (lbs/ft^3)	Density (g/cm^3)	Moisture (%)	Porosity (-)*	Water-filled Porosity (-)**	Air Saturation (-)***
A-13-010 (D-2)	6	10	GP-GM	128.0	2.05	6.3	0.24	0.13	0.46
A-13-014 (D-2)	7 Central and 7 East	10	SM	124.4	1.99	11.4	0.26	0.23	0.13
A-13-017 (D-2)	9	10	SM to CL	-		-	-	-	-
A-13-017 (S-3)	9	15	CL	-		-	-	-	-
A-13-018 (D-2)	-	10	SP-SM	117.3	1.88	5.5	0.30	0.10	0.66
A-13-019 (D-2)	2A	10	SP	-		3.2	-	-	-
A-13-020 (D-2)	2A	10	SM	135.4	2.17	11.9	Note 2		
A-13-021 (D-2)	3	10	SP-SM	121.7	1.95	5.0	0.28	0.10	0.65
A-13-023 (D-2)	4A	10	SM	114.1	1.83	4.4	0.32	0.08	0.75
R-13-012 (D-1)	6	5	SP-SM	119.9	1.92	8.2	0.29	0.16	0.45
R-13-012 (D-3)	6	15	SP-SM	159.8	2.56	5.2	Note 2		
R-13-015 (D-2)	7 Central and 7 East	10	SP-SM	122.9	1.97	12.7	0.27	0.25	0.08
			Minimums =>	**101.0**	**1.62**	**0.7**	**0.21**	**0.01**	**0.08**
			Averages =>	**119.5**	**1.91**	**5.8**	**0.31**	**0.10**	**0.65**
			Maximums =>	**159.8**	**2.56**	**12.7**	**0.40**	**0.25**	**0.96**
			95% UCL =>	**-**	**-**	**-**	**-**	**-**	**0.759**
			HHRA model input values =>	**-**	**1.913**	**-**	**0.311**	**0.075**	**-**

Note 1: GB boring data from HAI (January 2018 - draft); A-13 and R-13 boring data from Earth Metrics (June 19, 2015).

Note 2: Values not calculated for these high density samples.

* Porosity = 1 - Density / Grain Density, where Grain Density is assumed to be 2.7 g/cm^3 based on professional judgment.

** Water-filled Porosity = Density x Moisture / Water Density, where Water Density is assumed to be 1.0 g/cm^3.

*** Air Saturation = (1 - Saturation) / Porosity where Saturation = Water-filled Porosity / Porosity.

The Fehling Group, LLC

TABLE 2

Summary of Metals COPCs in Soil

	PARC Area					
Metal	**1A**	**2A, 2B, and 2C**	**5**	**6**	**7**	**8**
Antimony	-	-	-	❍	-	-
Arsenic	-	-	-	❍	-	-
Barium	❍	❍	-	❍	❍	❍
Beryllium	-	-	-	-	-	-
Cadmium	-	-	-	❍	-	-
Chromium	-	-	-	-	-	-
Hexavalent Chromium	-	-	-	-	-	-
Cobalt	-	-	-	-	-	-
Copper	❍	❍	-	❍	❍	❍
Lead	❍	❍	❍	❍	❍	❍
Mercury	❍	❍	-	❍	❍	-
Molybdenum	-	-	-	-	-	-
Nickel	-	-	-	❍	-	-
Selenium	-	-	-	❍	-	-
Silver	-	-	-	❍	-	-
Thallium	-	-	-	-	-	-
Vanadium	-	-	-	-	-	-
Zinc	❍	❍	❍	❍	❍	❍

TABLE 3

Summary of Non-Metals COPCs in Soil

	PARC Area					
Non-Metal	**1A**	**2A, 2B, and 2C**	**5**	**6**	**7**	**8**
TPH-GRO	-	❍	-	❍	❍	❍
TPH-DRO	❍	❍	❍	❍	❍	-
TPH-ORO	-	❍	-	❍	❍	-
VOCs	-	-	-	❍	❍	-
SVOCs	-	-	-	❍	-	-
PCBs	❍	-	-	❍	-	-
OCPs	❍	-	-	-	❍	-
OPPs	-	-	-	-	-	-
Chlorinated Herbicides	-	-	-	-	-	-

The Fehling Group, LLC

TABLE 4

Summary of Soil Gas COPCs

	PARC Area					
Soil Gas Analyte	**1A**	**2A, 2B, and 2C**	**5**	**6***	**7**	**8**
1,1,1-Trichloroethane	-	❍	-	-	❍	❍
1,1-Dichloroethane	-	❍	-	-	-	-
1,2,4-Trichlorobenzene	-	❍	-	-	-	-
1,2,4-Trimethylbenzene	-	❍	-	-	-	-
1,3,5-Trimethylbenzene	-	❍	-	-	-	-
1,3-Dichlorobenzene	-	❍	-	-	-	-
2,2,4-Trimethylpentane	-	❍	-	-	-	-
2-Butanone	-	❍	-	❍	❍	❍
2-Hexanone	-	❍	-	-	-	-
4-Ethyl Toluene	-	❍	-	-	-	-
4-Methyl-2-pentanone	-	❍	-	-	-	-
Acetone	-	❍	-	❍	❍	❍
Acetonitrile	-	❍	-	-	-	-
Benzene	-	❍	-	-	❍	❍
Carbon disulfide	-	❍	-	❍	❍	❍
Chlorobenzene	-	❍	-	-	-	-
Chloroethane	-	❍	-	-	-	-
Chloroform	-	❍	-	-	❍	-
Chloromethane	-	❍	-	-	-	-
Cyclohexane	-	❍	-	-	-	-
Dichlorodifluoromethane	-	❍	-	-	-	-
Ethanol	-	❍	-	-	-	-
Ethylbenzene	-	❍	-	-	❍	-
m,p-Xylene	-	❍	-	-	❍	-
Methylene chloride	-	❍	-	-	-	-
Naphthalene	-	❍	-	-	❍	-
n-Propylbenzene	-	❍	-	-	-	-
o-Xylene	-	❍	-	-	❍	-
p-Isopropyltoluene	-	❍	-	-	-	-
Tetrachloroethene	-	❍	-	-	❍	-
Toluene	-	❍	-	-	❍	-
Trichloroethene	-	❍	-	-	❍	-
Trichlorofluoromethane	-	❍	-	-	❍	-
Vinyl acetate	-	❍	-	-	-	-
Vinyl chloride	-	❍	-	-	-	-
2-Propanol	-	❍	-	-	-	-
Gasoline Range Organics	-	❍	-	-	❍	-
1,1,2-Trichloroethane	-	-	-	-	❍	-
1,1-Dichloroethene	-	-	-	-	❍	❍

* Soil gas samples were not collected in PARC Area 6. The three detected compounds shown were detected in the single ambient air sample collected in this area.

The Fehling Group, LLC

TABLE 5
Risk-Based Concentrations
~ Residential Receptor ~

COPC	Media		CANCER ENDPOINT					NONCANCER ENDPOINT				
			SOIL (mg/kg, dry weight basis)					SOIL (mg/kg, dry weight basis)				
	Soil	Soil Gas	Ingestion	Dermal Contact	Particulate Inhalation	Combined	Air (µg/m^3)	Ingestion	Dermal Contact	Particulate Inhalation	Combined	Air (µg/m^3)
Antimony	❍	-	--	--	--	--	Note 1	3.10E+01	--	--	3.10E+01	Note 1
Arsenic	❍	-	1.22E-01	7.59E-01	1.16E+03	1.05E-01		4.56E-01	3.15E+00	2.13E+04	3.98E-01	
Barium	❍	-	--	--	--	--		1.60E+04	--	7.10E+05	1.50E+04	
Cadmium	❍	-	--	--	9.09E+02	9.09E+02		5.26E+00	1.24E+03	1.42E+04	5.23E+00	
Copper	❍	-	--	--	--	--		3.10E+03	--	--	3.10E+03	
Mercury	❍	-	--	--	--	--		1.25E+01	4.32E+02	1.10E+00	1.01E+00	
Nickel	❍	-	--	--	1.47E+04	1.47E+04		8.60E+02	1.19E+03	1.99E+04	4.87E+02	
Selenium	❍	-	--	--	--	--		3.90E+02	--	2.80E+07	3.90E+02	
Silver	❍	-	--	--	--	--		3.91E+02	5.39E+02	--	2.27E+02	
Zinc	❍	-	--	--	--	--		2.30E+04	--	--	2.30E+04	
TPH-GRO	❍	❍	--	--	--	--	--	3.10E+02	--	1.10E+02	8.20E+01	3.10E+01
TPH-DRO	❍	-	--	--	--	--	Note 1	7.80E+02	--	1.10E+02	9.60E+01	Note 1
TPH-ORO	❍	-	--	--	--	--		3.10E+03	1.30E+04	--	2.50E+03	
PCBs (Arochlor 1260)	❍	-	3.50E-01	8.80E-01	6.50E+00	2.40E-01		--	--	--	--	
alpha-BHC	❍	-	1.10E-01	3.90E-01	2.10E+03	8.60E-02		6.30E+02	2.60E+03	--	5.10E+02	
4,4'-DDD	❍	-	2.90E+00	1.00E+01	5.50E+04	2.30E+00		2.30E+00	9.90E+00	--	1.90E+00	
4,4'-DDE	❍	-	2.00E+00	--	6.10E+01	2.00E+00		2.30E+01	--	--	2.30E+01	
4,4'-DDT	❍	-	2.00E+00	2.40E+01	3.90E+04	1.90E+00		3.90E+01	5.50E+02	--	3.70E+01	
Phenol	❍	-	--	--	--	--		2.30E+04	9.90E+04	2.80E+08	1.90E+04	
1,1,1-Trichloroethane	-	❍	Note 2				--	Note 2				1.04E+03
1,1-Dichloroethane	-	❍					1.75E+00					8.34E+02
1,2,4-Trichlorobenzene	-	❍					3.87E-01					2.09E+00
1,2,4-Trimethylbenzene	-	❍					--					6.30E+01
1,3,5-Trimethylbenzene	-	❍					--					6.30E+01
1,3-Dichlorobenzene	-	❍					--					2.10E+02
2,2,4-Trimethylpentane	-	❍					--					--
2-Butanone	-	❍					--					5.20E+03
2-Hexanone	-	❍					--					3.10E+01
4-Ethyl Toluene	-	❍					--					1.00E+02
4-Methyl-2-pentanone	-	❍					--					3.10E+03
Acetone	-	❍					--					3.20E+04
Acetonitrile	-	❍					--					6.30E+01
Benzene	-	❍					9.68E-02					3.13E+00
Carbon disulfide	-	❍					--					7.30E+02
Chlorobenzene	-	❍					--					5.20E+01
Chloroethane	-	❍					--					1.00E+04
Chloroform	-	❍					1.20E-01					1.00E+02
Chloromethane	-	❍					--					9.40E+01
Cyclohexane	-	❍					--					6.30E+03
Dichlorodifluoromethane	-	❍					--					1.00E+02
Ethanol	-	❍					--					--
Ethylbenzene	-	❍					1.10E+00					1.00E+03
m,p-Xylene	-	❍					--					1.00E+02
Methylene chloride	-	❍					1.01E+00					4.17E+02
Naphthalene	-	❍					8.30E-02					3.10E+00
n-Propylbenzene	-	❍					--					1.00E+03
o-Xylene	-	❍					--					1.00E+02
p-Isopropyltoluene	-	❍					--					1.00E+03
Tetrachloroethene	-	❍					4.60E-01					4.17E+01
Toluene	-	❍					--					3.13E+02
Trichloroethene	-	❍					4.80E-01					2.10E+00
Trichlorofluoromethane	-	❍					--					1.25E+03
Vinyl acetate	-	❍					--					2.10E+02
Vinyl chloride	-	❍					9.45E-03					1.04E+02
2-Propanol	-	❍					--					2.10E+02
1,1,2-Trichloroethane	-	❍					1.80E-01					2.10E-01
1,1-Dichloroethene	-	❍					--					7.30E+01

Note 1: Risk-based concentrations (RBCs) for air exposures via inhalation of vapor phase COPCs are not applicable to those COPCs associated solely with soil for this HHRA. Particulate inhalation is accounted for via the soil RBCs.

Note 2: RBCs for soil exposures (i.e., via ingestion, dermal contact, and particulate inhalation) are not applicable to those COPCs associated solely with soil gas for this HHRA. Various VOCs were detected in soil in PARC Areas 6 and 7. Given the elevated concentrations of non-volatile COPCs in these two areas, the risks associated with VOCs detected in soil are not quantified.

Comments:

Soil RBCs for TPH fractions based on the lower (more stringent) values USEPA RSLs published for aliphatic and aromatic fractions, Soil RBCs for TPH fractions based on low molecular weight values for TPH-GRO, medium molecular weight values for TPH-DRO, and high molecular weight values for TPH-ORO.

Green-shaded RBCs are DTSC-SLs.
Gray-shaded RBCs are USEPA RSLs.

Surrogates:

1,2-Dichlorobenzene for 1,3-Dichlorobenzene
Xylenes for 4-Ethyl Toluene
n-Propylbenzene for p-Isopropyltoluene

The Fehling Group, LLC

TABLE 6
Risk-Based Concentrations
~ Construction Worker Receptor ~

COPC	Media		CANCER ENDPOINT					NONCANCER ENDPOINT				
			SOIL (mg/kg, dry weight basis)					SOIL (mg/kg, dry weight basis)				
	Soil	Soil Gas	Ingestion	Dermal Contact	Particulate Inhalation	Combined	Air (µg/m^3)	Ingestion	Dermal Contact	Particulate Inhalation	Combined	Air (µg/m^3)
Antimony	❍	-	--	--	--	--		1.42E+02	--	--	1.42E+02	
Arsenic	❍	-	2.61E+00	1.02E+01	1.03E+02	2.03E+00		1.24E+00	4.83E+00	9.46E+01	9.76E-01	
Barium	❍	-	--	--	--	--		7.08E+04	--	3.15E+03	3.02E+03	
Cadmium	❍	-	--	--	1.05E+02	1.05E+02		1.77E+02	5.17E+02	6.31E+01	4.27E+01	
Copper	❍	-	--	--	--	--		1.42E+04	--	--	1.42E+04	
Mercury	❍	-	--	--	--	--	Note 1	5.66E+01	--	1.89E+02	4.36E+01	Note 1
Nickel	❍	-	--	--	1.70E+03	1.70E+03		3.89E+03	--	8.83E+01	8.63E+01	
Selenium	❍	-	--	--	--	--		1.77E+03	--	1.26E+05	1.75E+03	
Silver	❍	-	--	--	--	--		1.77E+03	--	--	1.77E+03	
Zinc	❍	-	--	--	--	--		1.06E+05	--	--	1.06E+05	
TPH-GRO	❍	❍	--	--	--	--	--	1.38E+04	1.61E+04	4.40E+03	2.77E+03	1.26E+02
TPH-DRO	❍	-	--	--	--	--		7.08E+03	8.28E+03	1.15E+03	8.85E+02	
TPH-ORO	❍	-	--	--	--	--		6.02E+04	7.04E+04	--	3.24E+04	
PCBs (Arochlor 1260)	❍	-	1.24E+01	1.03E+01	7.75E+02	5.60E+00		--	--	--	--	
alpha-BHC	❍	-	--	--	--	--		--	--	--	--	
4,4'-DDD	❍	-	1.03E+02	4.02E+02	6.40E+03	8.11E+01	Note 1	--	--	--	--	Note 1
4,4'-DDE	❍	-	7.29E+01	2.84E+02	4.55E+03	5.73E+01		--	--	--	--	
4,4'-DDT	❍	-	7.29E+01	2.84E+02	4.55E+03	5.73E+01		1.77E+02	6.90E+02	--	1.41E+02	
Phenol	❍	-	--	--	--	--		1.06E+05	--	1.26E+06	9.79E+04	
1,1,1-Trichloroethane	-	❍					--					4.20E+03
1,1-Dichloroethane	-	❍					1.92E+02					3.36E+03
1,2,4-Trichlorobenzene	-	❍					4.23E+01					8.40E+00
1,2,4-Trimethylbenzene	-	❍					--					2.52E+02
1,3,5-Trimethylbenzene	-	❍					--					2.52E+02
1,3-Dichlorobenzene	-	❍					--					8.40E+02
2,2,4-Trimethylpentane	-	❍					--					--
2-Butanone	-	❍					--					2.10E+04
2-Hexanone	-	❍					--					1.26E+02
4-Ethyl Toluene	-	❍					--					4.20E+02
4-Methyl-2-pentanone	-	❍					--					1.26E+04
Acetone	-	❍					--					1.30E+05
Acetonitrile	-	❍					--					2.52E+02
Benzene	-	❍					1.06E+01					1.26E+01
Carbon disulfide	-	❍					--					2.94E+03
Chlorobenzene	-	❍					--					2.10E+02
Chloroethane	-	❍					--					4.20E+04
Chloroform	-	❍					1.33E+01					4.12E+02
Chloromethane	-	❍					--					3.78E+02
Cyclohexane	-	❍	Note 2				--	Note 2				2.52E+04
Dichlorodifluoromethane	-	❍					--					4.20E+02
Ethanol	-	❍					--					--
Ethylbenzene	-	❍					1.23E+02					4.20E+03
m,p-Xylene	-	❍					--					4.20E+02
Methylene chloride	-	❍					3.07E+02					1.68E+03
Naphthalene	-	❍					9.02E+00					1.26E+01
n-Propylbenzene	-	❍					--					4.20E+03
o-Xylene	-	❍					--					4.20E+02
p-Isopropyltoluene	-	❍					--					4.20E+03
Tetrachloroethene	-	❍					5.03E+01					1.68E+02
Toluene	-	❍					--					1.26E+03
Trichloroethene	-	❍					7.48E+01					8.40E+00
Trichlorofluoromethane	-	❍					--					5.04E+03
Vinyl acetate	-	❍					--					8.40E+02
Vinyl chloride	-	❍					3.93E+00					4.20E+02
2-Propanol	-	❍					--					8.40E+02
1,1,2-Trichloroethane	-	❍					1.92E+01					8.40E-01
1,1-Dichloroethene	-	❍					--					2.94E+02

Note 1: Risk-based concentrations (RBCs) for air exposures via inhalation of vapor phase COPCs are not applicable to those COPCs associated solely with soil for this HHRA. Particulate inhalation is accounted for via the soil RBCs.

Note 2: RBCs for soil exposures (i.e., via ingestion, dermal contact, and particulate inhalation) are not applicable to those COPCs associated solely with soil gas for this HHRA. Various VOCs were detected in soil in PARC Areas 6 and 7. Given the elevated concentrations of non-volatile COPCs in these two areas, the risks associated with VOCs detected in soil are not quantified.

Comments:

Soil RBCs for TPH fractions based on the lower (more stringent) values USEPA RSLs published for aliphatic and aromatic fractions, Soil RBCs for TPH fractions based on low molecular weight values for TPH-GRO, medium molecular weight values for TPH-DRO, and high molecular weight values for TPH-ORO.

Blue-shaded RBCs are RWQCB ESLs.
Green-shaded RBCs are based on IUR and RfC values from DTSC-SL tables (see Attachment N).
Gray-shaded RBCs are based on IUR and RfC values from USEPA RSL tables (see Attachment N).

Surrogates:

1,2-Dichlorobenzene for 1,3-Dichlorobenzene
Xylenes for 4-Ethyl Toluene
n-Propylbenzene for p-Isopropyltoluene

The Fehling Group, LLC

TABLE 7a

Indoor Air Attenuation Factors (α_{indoor} values)

~ Residential Receptor ~

	Residential Indoor Air α_{indoor} Values (unitless)		
Soil Gas COPC	**5 ft bgs**	**10 ft bgs**	**15 ft bgs**
Acetone	8.11E-04	5.59E-04	4.26E-04
Acetonitrile	9.44E-04	6.67E-04	5.15E-04
Benzene	7.03E-04	4.80E-04	3.65E-04
Carbon Disulfide	7.92E-04	5.50E-04	4.22E-04
Chlorobenzene	5.99E-04	4.02E-04	3.02E-04
Chloroform	6.29E-04	4.24E-04	3.20E-04
Chloromethane	8.77E-04	6.18E-04	4.78E-04
Cyclohexane	6.47E-04	4.38E-04	3.31E-04
Dichlorobenzene, 1,2-	4.94E-04	3.25E-04	2.42E-04
Dichlorodifluoromethane	6.23E-04	4.20E-04	3.17E-04
Dichloroethane, 1,1-	6.69E-04	4.54E-04	3.44E-04
Ethyl Chloride (Chloroethane)	7.79E-04	5.40E-04	4.13E-04
Ethylbenzene	5.76E-04	3.85E-04	2.89E-04
Hexanone, 2-	5.96E-04	3.97E-04	2.98E-04
Isopropanol	8.56E-04	5.76E-04	4.34E-04
Methanol	1.15E-03	8.10E-04	6.24E-04
2-Butanone	7.26E-04	4.94E-04	3.75E-04
4-Methyl-2-Pentanone	5.89E-04	3.93E-04	2.95E-04
Methylene Chloride	7.59E-04	5.24E-04	4.00E-04
Naphthalene	5.25E-04	3.47E-04	2.59E-04
Propyl benzene	5.21E-04	3.45E-04	2.57E-04
Tetrachloroethylene	4.52E-04	2.96E-04	2.20E-04
Toluene	6.34E-04	4.28E-04	3.23E-04
Trichlorobenzene, 1,2,4-	3.70E-04	2.38E-04	1.76E-04
Trichloroethane, 1,1,1-	5.52E-04	3.67E-04	2.75E-04
Trichloroethylene	5.77E-04	3.86E-04	2.90E-04
Trichlorofluoromethane	5.56E-04	3.70E-04	2.77E-04
Trimethylbenzene, 1,2,4-	5.24E-04	3.47E-04	2.59E-04
Trimethylbenzene, 1,3,5-	5.21E-04	3.45E-04	2.58E-04
Vinyl Acetate	6.78E-04	4.61E-04	3.49E-04
Vinyl Chloride	7.96E-04	5.53E-04	4.24E-04
Xylene, m-	5.75E-04	3.84E-04	2.88E-04
Xylene, o-	5.79E-04	3.87E-04	2.91E-04
Xylene, p-	5.75E-04	3.84E-04	2.88E-04
Xylenes	5.76E-04	3.85E-04	2.89E-04
TPH-GRO	7.03E-04	4.80E-04	3.65E-04
Trichloroethane, 1,1,2-	5.67E-04	3.78E-04	2.83E-04
Dichloroethene, 1,1-	6.84E-04	4.66E-04	3.53E-04

Surrogates: Benzene = TPH-GRO, Methanol = Ethanol, 1,2-Dichlorobenzene = 1,3-Dichlorobenzene

TABLE 7b

Trench Air Attenuation Factors (α_{trench} values)

~ Construction Worker Receptor ~

	Construction Trench Air α_{trench} Values (unitless)		
Soil Gas COPC	**5 ft bgs**	**10 ft bgs**	**15 ft bgs**
Acetone	2.85E-03	2.72E-05	1.11E-05
Acetonitrile	3.60E-03	3.44E-05	1.40E-05
Benzene	2.41E-03	2.30E-05	9.36E-06
Carbon Disulfide	2.86E-03	2.73E-05	1.11E-05
Chlorobenzene	1.94E-03	1.85E-05	7.54E-06
Chloroform	2.07E-03	1.97E-05	8.04E-06
Chloromethane	3.33E-03	3.18E-05	1.30E-05
Cyclohexane	2.15E-03	2.05E-05	8.36E-06
Dichlorobenzene, 1,2-	1.51E-03	1.44E-05	5.87E-06
Dichlorodifluoromethane	2.04E-03	1.95E-05	7.95E-06
Dichloroethane, 1,1-	2.25E-03	2.15E-05	8.74E-06
Ethyl Chloride (Chloroethane)	2.79E-03	2.66E-05	1.08E-05
Ethylbenzene	1.84E-03	1.76E-05	7.16E-06
Hexanone, 2-	1.89E-03	1.81E-05	7.35E-06
Isopropanol	2.78E-03	2.65E-05	1.08E-05
Methanol	4.26E-03	4.06E-05	1.65E-05
2-Butanone	2.46E-03	2.35E-05	9.56E-06
4-Methyl-2-Pentanone	1.88E-03	1.79E-05	7.29E-06
Methylene Chloride	2.69E-03	2.56E-05	1.04E-05
Naphthalene	1.63E-03	1.55E-05	6.32E-06
Propyl benzene	1.62E-03	1.54E-05	6.29E-06
Tetrachloroethylene	1.36E-03	1.29E-05	5.28E-06
Toluene	2.09E-03	2.00E-05	8.13E-06
Trichlorobenzene, 1,2,4-	1.06E-03	1.02E-05	4.14E-06
Trichloroethane, 1,1,1-	1.74E-03	1.66E-05	6.78E-06
Trichloroethylene	1.85E-03	1.76E-05	7.18E-06
Trichlorofluoromethane	1.76E-03	1.68E-05	6.83E-06
Trimethylbenzene, 1,2,4-	1.63E-03	1.56E-05	6.34E-06
Trimethylbenzene, 1,3,5-	1.62E-03	1.55E-05	6.30E-06
Vinyl Acetate	2.28E-03	2.18E-05	8.88E-06
Vinyl Chloride	2.88E-03	2.75E-05	1.12E-05
Xylene, m-	1.84E-03	1.75E-05	7.15E-06
Xylene, o-	1.85E-03	1.77E-05	7.20E-06
Xylene, p-	1.84E-03	1.75E-05	7.13E-06
Xylenes	1.84E-03	1.76E-05	7.16E-06
TPH-GRO	2.41E-03	2.30E-05	9.36E-06
Trichloroethane, 1,1,2-	1.80E-03	1.72E-05	6.99E-06
Dichloroethene, 1,1-	2.32E-03	2.21E-05	9.02E-06

Surrogates: Benzene = TPH-GRO, Methanol = Ethanol, 1,2-Dichlorobenzene = 1,3-Dichlorobenzene

TABLE 8
Risk Characterization Summary

RESIDENTIAL RECEPTOR

PARC Area	ILCR (unitless)		TOTAL ILCR (unitless)	HI (unitless)		TOTAL HI (unitless)	Lead Soil EPC (mg/kg)	Comment
	Soil	Soil Gas (Indoor Air)		Soil	Soil Gas (Indoor Air)			
1A	8E-08	-	8E-08	2E+00	-	2E+00	389	Soil HI driven by TPH-DRO; lead exceeds screening level
2A, 2B, and 2C	0E+00	9E-07	9E-07	1E+00	3E-01	2E+00	28	Soil HI driven by TPH-DRO and mercury; target organ assessment indicates no adverse noncancer health effect
5	0E+00	-	0E+00	3E+00	-	3E+00	81	Soil HI driven by TPH-DRO; lead slightly exceeds screening level
6	1E-06	-	1E-06	1E+01	-	1E+01	1839	Soil ILCR driven by Arochlor 1260; soil HI driven by TPH-DRO; lead exceeds screening level
7	2E-08	5E-06	5E-06	2E+01	3E+00	2E+01	58	Soil gas indoor air ILCR driven by PCE; soil HI driven by TPH-DRO; soil gas indoor air HI driven by TPH-DRO
8	0E+00	2E-06	2E-06	9E-02	4E-02	1E-01	130	Soil gas indoor air driven by PCE; lead exceeds screening level

CONSTRUCTION WORKER RECEPTOR

PARC Area	ILCR (unitless)		TOTAL ILCR (unitless)	HI (unitless)		TOTAL HI (unitless)	Lead Soil EPC (mg/kg)	Comment
	Soil	Soil Gas (Trench Air)		Soil	Soil Gas (Trench Air)			
1A	3E-09	-	3E-09	3E-01	-	3E-01	389	Lead exceeds screening level
2A, 2B, and 2C	0E+00	2E-08	2E-08	7E-02	2E-01	3E-01	28	-
5	0E+00	-	0E+00	3E-01	-	3E-01	81	-
6	8E-08	-	8E-08	1E+00	-	1E+00	1839	Soil HI driven by TPH-DRO; lead exceeds screening level
7	2E-10	1E-07	1E-07	2E+00	2E+00	4E+00	58	Soil HI driven by TPH-DRO; soil gas trench air HI driven by TPH-DRO
8	0E+00	2E-08	2E-08	1E-01	1E-02	2E-01	130	-

Notes
Soil risk values based on 95% UCL.
Indoor air and trench air risk values based on maximum sample-specific value.

The Fehling Group, LLC

ATTACHMENT A

Figures from EMI (2014) and HAI (2017)

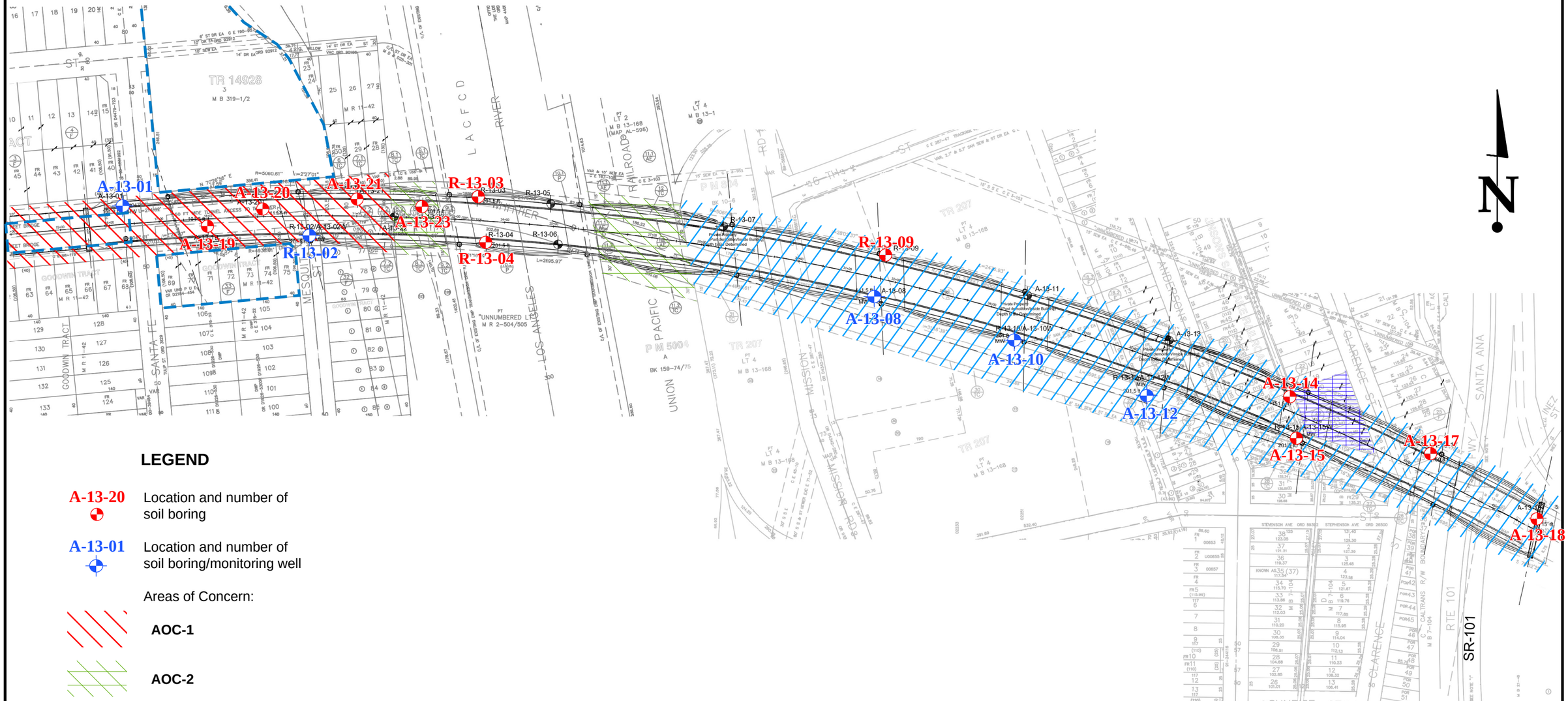

LEGEND

A-13-20	Location and number of soil boring
A-13-01	Location and number of soil boring/monitoring well

Areas of Concern:

- **AOC-1**
- **AOC-2**
- **AOC-3**
- **AOC-4**

Leaking Underground Tank Site

Scale

100 0 100 200 300 400 feet

1 inch = 200 feet

25th Earth Mechanics, Inc.
Geotechnical & Earthquake Engineering

SIXTH STREET VIADUCT REPLACEMENT PROJECT

EMI Project No. 13-102 | Date: March 2014

FIGURE 1

Boring & Well Location Map

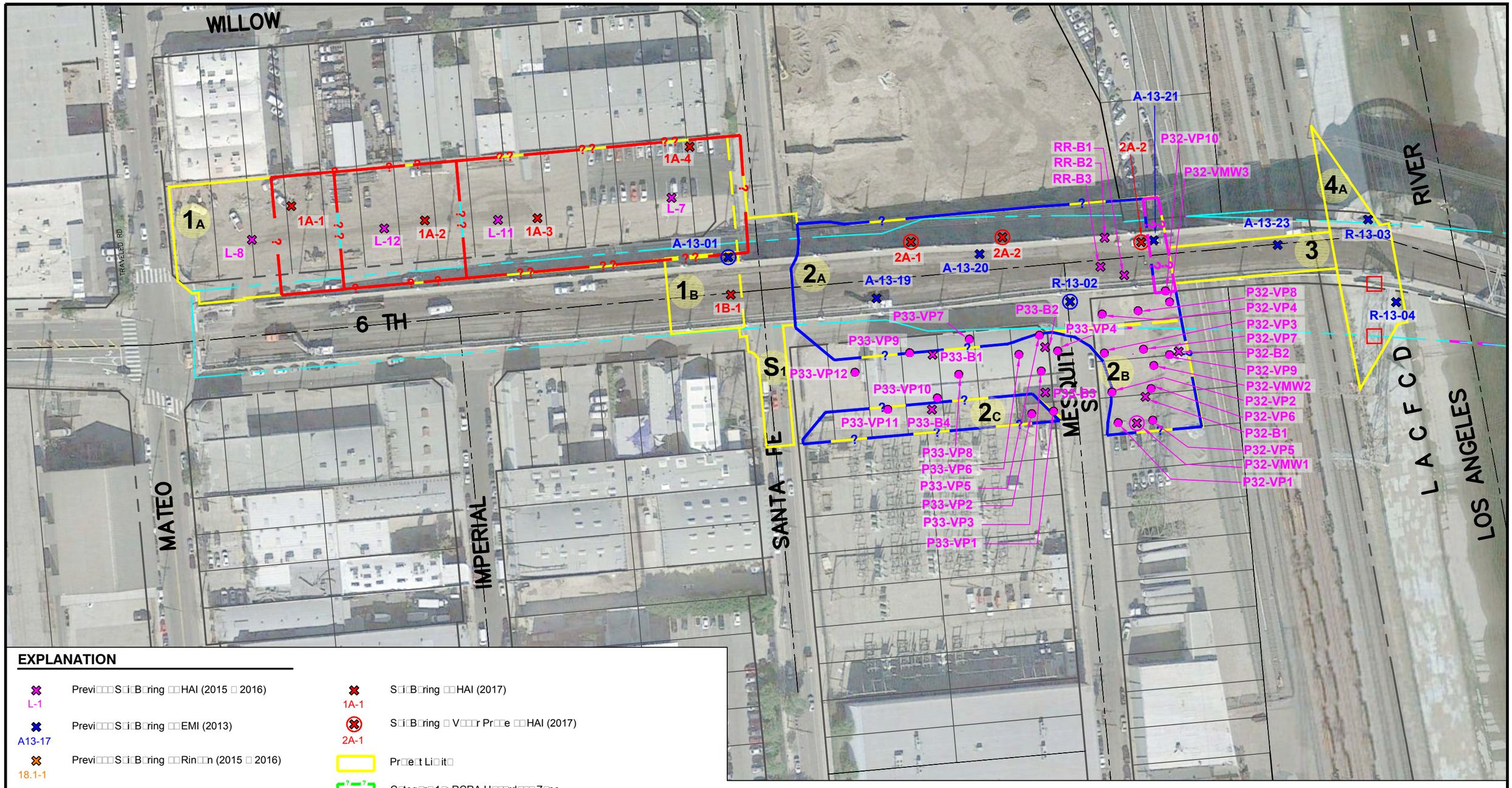

EXPLANATION

L-1	Previ□□□S□i□B□ring □□HAI (2015 □ 2016)
A13-17	Previ□□□S□i□B□ring □□EMI (2013)
18.1-1	Previ□□□S□i□B□ring □□Rin□□n (2015 □ 2016)
P22-VP12	Previ□□□V□□□r Pr□□e □□HAI (2015 □ 2016)
P23-SV13	Previ□□□V□□□r Pr□□e □□EMI (2014)
P32-VMW1	Previ□□□S□i□B□ring □ V□□□r Pr□□e □□HAI (2016)
1A-1	S□i□B□ring □□HAI (2017)
2A-1	S□i□B□ring □ V□□□r Pr□□e □□HAI (2017)
	Pr□e□t Li□it□
	C□teg□r□1□: RCRA H□□□rd□□□Z□ne
	C□teg□r□2□: N□n-RCRA H□□□rd□□□Z□ne
	C□teg□r□2□: S□i□G□□□ N□n-RCRA H□□□rd□□□Z□ne
	C□teg□r□3: S□i□G□□On□□Z□ne
	Aeri□□□De□□□ited Le□d Z□ne
1A	PARC Are□ De□ign□ti□n

HUSHMAND ASSOCIATES, INC.
Geotechnical and Earthquake Engineers

SIXTH STREET VIADUCT PARC IMPROVEMENTS

□□□A□□□□□□□□□□□r□□

□r□□□□□□ □□□A□□1□□□□1

CONTAMINATION CATEGORIES WITH SOIL BORINGS AND VAPOR PROBES - WEST PARK

F□□□r□
7a

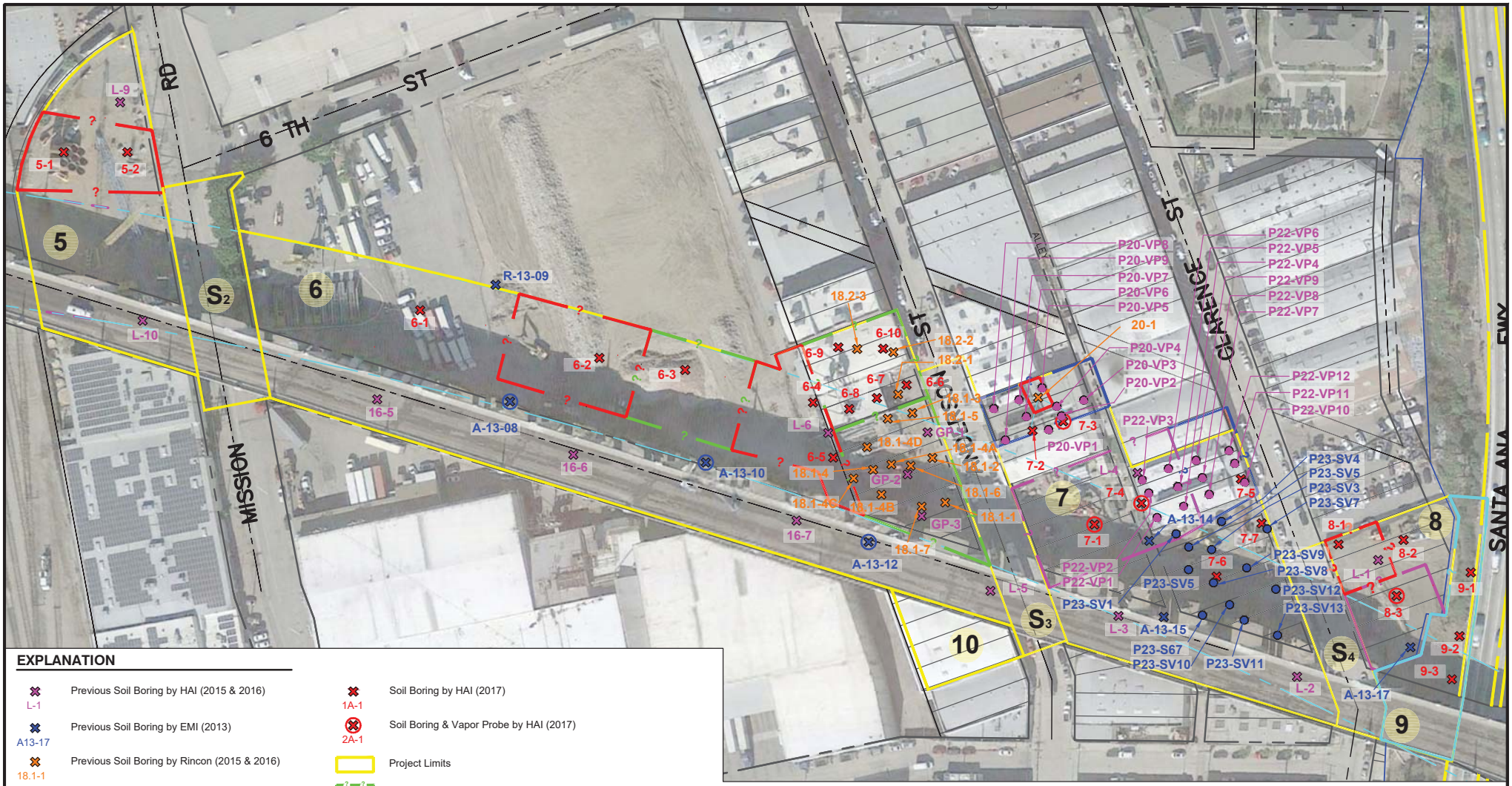

EXPLANATION

- L-1 — Previous Soil Boring by HAI (2015 & 2016)
- A13-17 — Previous Soil Boring by EMI (2013)
- 18.1-1 — Previous Soil Boring by Rincon (2015 & 2016)
- P22-VP12 — Previous Vapor Probe by HAI (2015 & 2016)
- P23-SV13 — Previous Vapor Probe by EMI (2014)
- P32-VMW1 — Previous Soil Boring & Vapor Probe by HAI (2016)
- 1A-1 — Soil Boring by HAI (2017)
- 2A-1 — Soil Boring & Vapor Probe by HAI (2017)
- Project Limits
- Category 1a: RCRA Hazardous Zone
- Category 2a: Non-RCRA Hazardous Zone
- Category 2b: Soil Gas & Non-RCRA Hazardous Zone
- Category 3: Soil Gas Only Zone
- Aerially Deposited Lead Zone
- 1A — PARC Area Designation

0 100 200 FEET
APPROXIMATE SCALE

HUSHMAND ASSOCIATES, INC.
Geotechnical and Earthquake Engineers

SIXTH STREET VIADUCT PARC IMPROVEMENTS
Los Angeles, California
Project No. LAC-17-001

CONTAMINATION CATEGORIES WITH SOIL BORINGS AND VAPOR PROBES - EAST PARK

Figure **7b**

ATTACHMENT B

Figures from Arcadis (2015)

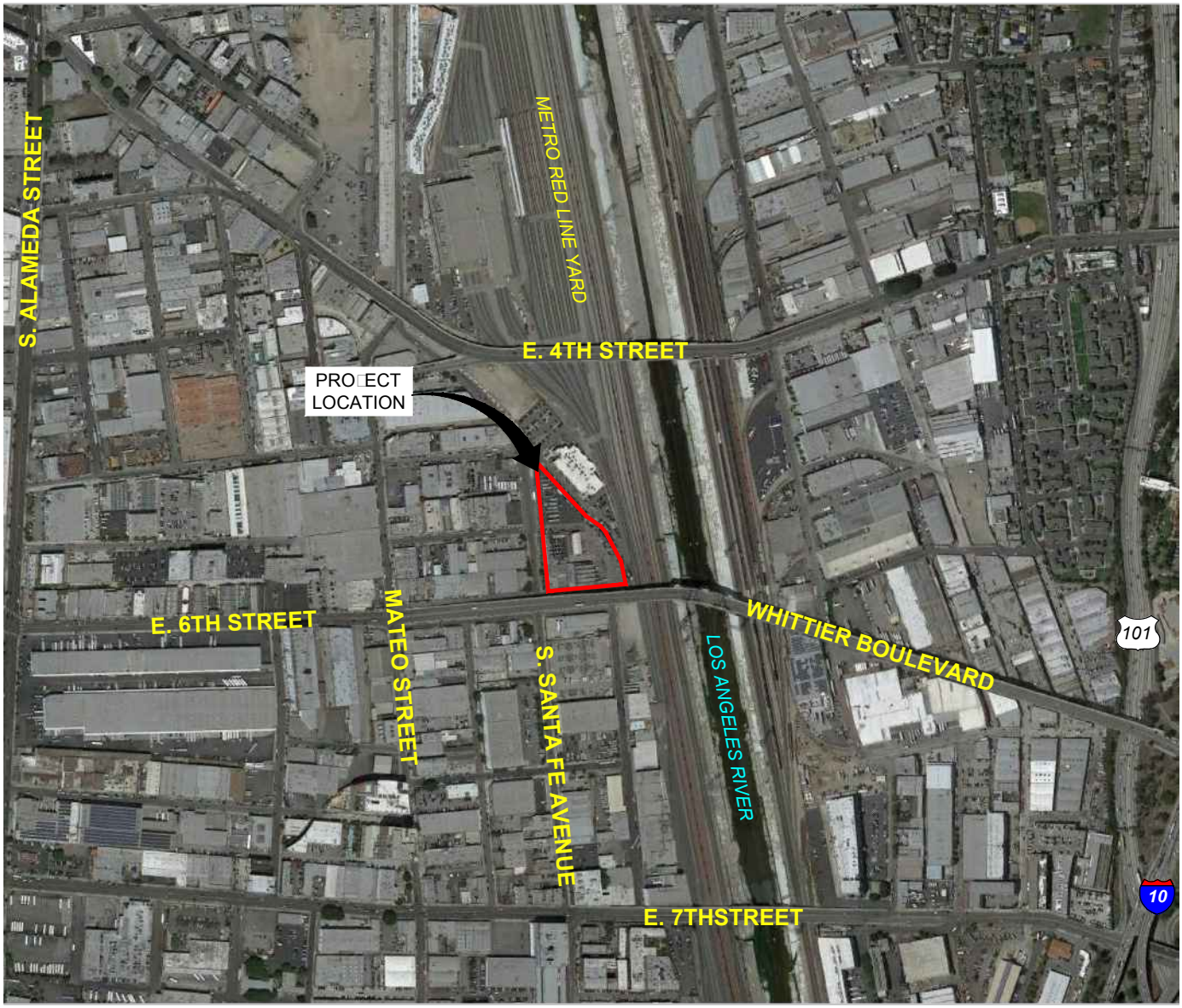

MAP SOURCE: Google Earth Pro™ 2015, 34.040221°N, -118.229973°W



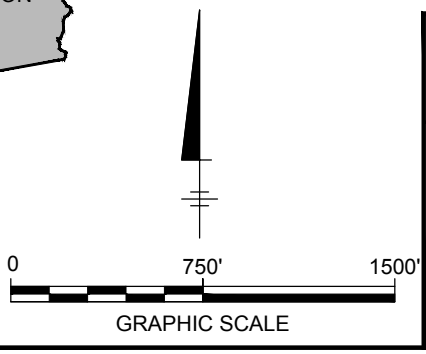

BUTTERFIELD PROPERTY
590 SOUTH SANTA FE AVENUE
LOS ANGELES, CALIFORNIA

SITE LOCATION MAP

ARCADIS

FIGURE
1

CITY:COSTA MESA DIV/GROUP:ENV_CAD DB:CAD G:\ENVCAD\Irvine\ACTIVE\LO493801\0000\00012\LO493801.0000 SLM.dwg LAYOUT: 1 SAVED: 4/27/2015 11:50 AM ACADVER: 18.1S (LMS TECH) PLOTSTYLETABLE: PLTFULL.CTB PLOTTED: 4/27/2015 11:50 AM BY: LOVING, JEFF

C:\TMCONTA MESA DIV/GROUP:ENV_CAD DB:ENV_CAD
G:\ENVCAD\Irvine\ACT\LD493801\0000\00012\LC493801.0000 Site.dwg LAYOUT: 5 SAVED: 4/27/2015 12:02 PM ACADVER: 18.18 (LMS TECH) PAGESETUP: — PLOTSTYLETABLE: — PLOTTED: 4/27/2015 12:12 PM BY: LOVING, JEFF

PALMETTO STREET

SANTA FE AVENUE

LUCKY BRAND, INC.

FORMER BUILDING 32

MW-1B

189

MW-18

NORTH UST AREA

FORMER RAILROAD TRACK

FORMER BUILDING 30

MW-5A

MW-5

MW-8

190

MW-14

RECENTLY IDENTIFIED UST

MW-9

FORMER BUILDING 28

FORMER ABOVEGROUND STORAGE TANK AREA

FORMER UST (POSSIBLE LOCATION)

DTSC-8 (NOV 2013)			
DEPTH	1,1,1-TCA	1,1-DCA	1,1-DCE
5	3.9	0.29	0.045
15	2.4	0.73	0.12
30	1.8	0.39	0.046
45-1PV	0.82	0.28	0.052
45-3PV	0.93	0.25	0.053
45-10PV	1.2	0.29	0.061

WAREHOUSE FACILITY

MW-15

MW-3

MW-2B

SVA-3 (NOV 2013)			
DEPTH	1,1,1-TCA	1,1-DCA	1,1-DCE
5	3.5	0.14	0.031
15	1.5	0.21	0.032

MW-4

MW-10			
DATE	1,1,1-TCA	1,1-DCA	1,1-DCE
DEC 2012	<1	2.9	<1
OCT 2013	<1	1.9	<1

FORMER ELECTRICAL SWITCH GEAR ROOM

FORMER OFFICE

UST

VP-25			
DATE	1,1,1-TCA	1,1-DCA	1,1-DCE
2003	9.5	1200	85

WILLOW STREET

MW-17

BUILDING 34

VP-24			
DATE	1,1,1-TCA	1,1-DCA	1,1-DCE
2003	16	1700	89

WASHING AREA

BUILDING 3 FORMER MIXING AND MANUFACTURING ROOM

VP-25

VP-24

SVA-3

MW-13			
DATE	1,1,1-TCA	1,1-DCA	1,1-DCE
DEC 2012	<1	4.1	<1
OCT 2013	<1	2.9	<1

MW-13

MW-6

DTSC-8

MW-10

VP-23			
DATE	1,1,1-TCA	1,1-DCA	1,1-DCE
2003	610	8.6	16

UST NO. 124

UST NO. 125

BUILDING 4 FORMER STORAGE

VP-23

VP-22

VP-22			
DATE	1,1,1-TCA	1,1-DCA	1,1-DCE
2003	610	8.2	14

FORMER DEVELOPMENT LAB

FORMER LUNCH ROOM

FORMER PIPING

FORMER EMPTY DRUM STORAGE

DTSC-9 (11/25/13)			
DEPTH	1,1,1-TCA	1,1-DCA	1,1-DCE
5	0.69	0.053	<0.02
15	0.92	0.092	<0.02
30	0.83	0.14	0.05
45	1.9	0.47	0.11
45-REP	2.0	0.45	0.12

187

SANTA FE AVENUE

FORMER SHIPPING AND RECEIVING

DTSC-9

MW-12

MW-11

MW-7

FORMER OFFICE

FORMER SOUTH UST AREA

FORMER DOCK LOADING/UNLOADING

186

188

MESQUIT AVENUE

6th STREET VIADUCT

MW-12			
DATE	1,1,1-TCA	1,1-DCA	1,1-DCE
DEC 2012	<1	2.7	<1
OCT 2013	<1	2.7	<1

MW-16			
DATE	1,1,1-TCA	1,1-DCA	1,1-DCE
DEC 2012	<1	2.5	<1
OCT 2013	<1	5.4	<1

185

MW-16

MESQUIT AVENUE

0 75' 150'

GRAPHIC SCALE

LEGEND:

- SITE BOUNDARY
- MW-11 — GROUNDWATER MONITORING WELLS
- MW-7 — ABANDONED GROUNDWATER MONITORING WELLS
- DTSC-4 — SOIL BORING WITH VAPOR PROBE
- DTSC-5 — SOIL BORING WITH GROUNDWATER GRAB SAMPLE
- SVA-3 — SOIL VAPOR PROBE
- VP-24 — VAPOR PROBE
- DIRECTION OF GROUNDWATER FLOW
- 185 — GROUNDWATER ELEVATION CONTOUR (FEET ABOVE MEAN SEA LEVEL)
- EXISTING UST (ABANDONED IN PLACE)
- FORMER BUILDING, UST, OR OTHER SITE FEATURE

ALL SOIL GAS AND GROUNDWATER DATA REPORTED IN MICROGRAMS PER LITER (µg/L)

SOURCE: AVOCET ENVIRONMENTAL, INC.; FIGURE 2, "SITE PLAN SHOWING RECENT BORINGS, SOIL VAPOR PROBES, GEOPHYSICAL SURVEY AREAS, TRENCHES ABS UST LOCATIONS", 2/10/2014

BUTTERFIELD PROPERTY
590 SOUTH SANTA FE AVENUE
LOS ANGELES, CALIFORNIA

SUMMARY OF DETECTED CHLORINATED VOCs IN SOIL GAS AND GROUNDWATER

ARCADIS

FIGURE 5

C:\TMCDATA MESA DIVGROUP:ENV_CAD DB:ENV_CAD
G:\ENVCAD\Irvine\ACT\LD493801\0000\00012\LC493801.0000 Site.dwg LAYOUT: 6 SAVED: 4/27/2015 12:02 PM ACADVER: 18.18 (LMS TECH) PAGESETUP: — PLOTSTYLETABLE: — PLOTTED: 4/27/2015 12:11 PM BY: LOVING, JEFF

PALMETTO STREET

SANTA FE AVENUE

LUCKY BRAND, INC.

FORMER BUILDING 32

SBA-7 (11/21/2013)		
DEPTH	ANALYTE	CONC.
5'	Total TPH	4900
10'	Total TPH	21000
12'	Total TPH	34000
15'	Total TPH	<8

SBA-7

SSA-1

DTSC-1

SBA-2

NORTH UST AREA

FORMER RAILROAD TRACK

FORMER BUILDING 30

SB-1

SVA-1

DTSC-3

DTSC-2A

RECENTLY IDENTIFIED UST

FORMER BUILDING 28

FORMER ABOVEGROUND STORAGE TANK AREA

SVA-8

FORMER UST (POSSIBLE LOCATION)

SVA-7

SSA-3

WAREHOUSE FACILITY

DTSC-4

SSA-5

FORMER ELECTRICAL SWITCH GEAR ROOM

FORMER OFFICE

UST

WILLOW STREET

SSA-7

HA-4 (1/1/1991)		
DEPTH	ANALYTE	CONC.
5'	Lead	650

BUILDING 34

BUILDING 3 FORMER MIXING AND MANUFACTURING ROOM

SVA-10

FORMER MIXING POT WASHING AREA

HA-4

UST NO. 124

UST NO. 125

SSA-13 (12/20/2013)		
DEPTH	ANALYTE	CONC.
3'	Benzene	4.4
3'	Naphthalene	300
3'	Benzo(a)pyrene	370
3'	Benzo(a)anthracene	460
3'	Benzo(k)fluoranthene	320
3'	Chrysene	440
3'	Lead	717
3'	Total TPH	120000

HA-3 (1/1/1991)		
DEPTH	ANALYTE	CONC.
5'	Lead	865

HA-3

BUILDING 4 FORMER STORAGE

SSA-13

FORMER DEVELOPMENT LAB

SBA-14

FORMER PIPING

FORMER EMPTY DRUM STORAGE

FORMER LUNCH ROOM

SBA-14 (11/20/2013)		
DEPTH	ANALYTE	CONC.
5'	Cadmium	179
5'	Lead	4760

SANTA FE AVENUE

FORMER SHIPPING AND RECEIVING

FORMER OFFICE

FORMER DOCK LOADING/UNLOADING

FORMER SOUTH UST AREA

MESQUIT AVENUE

6th STREET VIADUCT

MESQUIT AVENUE

MESQUIT AVENUE

0 75' 150'

GRAPHIC SCALE

LEGEND:

- SITE BOUNDARY
- SBA-1 SHALLOW SOIL BORING
- SSA-2 SOIL BORING
- DTSC-4 SOIL BORING WITH VAPOR PROBE- SHALLOW
- DTSC-5 SOIL BORING WITH GROUNDWATER GRAB SAMPLE
- DTSC-11 SOIL BORING WITH VAPOR PROBE- DEEP
- HA-3 HAND AUGER
- EXISTING UST (ABANDONED IN PLACE)
- FORMER BUILDING, UST, OR OTHER SITE FEATURE
- ALL DATA IS IN MILLIGRAMS PER KILOGRAM (mg/kg)

SOURCE:
AVOCET ENVIRONMENTAL, INC.; FIGURE 2, "SITE PLAN SHOWING RECENT BORINGS, SOIL VAPOR PROBES, GEOPHYSICAL SURVEY AREAS, TRENCHES ABS UST LOCATIONS", 2/10/2014

BUTTERFIELD PROPERTY
590 SOUTH SANTA FE AVENUE
LOS ANGELES, CALIFORNIA

SHALLOW SOIL IMPACTED AREAS (UPPER 15 FEET)

ARCADIS

FIGURE
6

CITY:COSTA MESA DIV/GROUP:ENV_CAD DB:ENV_CAD
G:\ENVCAD\Irvine\ACT\LO493801\0000\00012\LO493801.0000 Site.dwg LAYOUT: 7 SAVED: 7/16/2015 9:23 AM ACADVER: 19.1S (LMS TECH) PAGESETUP: ---- PLOTSTYLETABLE: ---- PLOTTED: 7/16/2015 9:23 AM BY: MURESAN, ELENA

PALMETTO STREET

SANTA FE AVENUE

LUCKY BRAND, INC.

FORMER BUILDING 32

DTSC–1			
ft bgs	T	E	X
55	96,000	6,600	34,000
60	1,100	––	––
55	18,000	––	––

NORTH UST AREA

DTSC-11

DTSC-1

FORMER RAILROAD TRACK

FORMER BUILDING 30

DTSC–2				
ft bgs	TPH	T	E	X
60	––	2,200,000	59,000	315,000
65	8,400,000	13,000,000	290,000	1,610,000
70	––	1,800,000	42,000	235,000

DTSC-2

DTSC-3

DTSC–3				
ft bgs	TPH	T	E	X
55	3,300,000	2,500,000	31,000	195,000
60	––	33,000	––	––
65	––	––	600,000	3,630,000

DTSC-2A

FORMER BUILDING 28

FORMER ABOVEGROUND STORAGE TANK AREA

RECENTLY IDENTIFIED UST

FORMER UST (POSSIBLE LOCATION)

WAREHOUSE FACILITY

DTSC-4

DTSC–4	
ft bgs	T
55	7,500

FORMER ELECTRICAL SWITCH GEAR ROOM

FORMER OFFICE

UST

WILLOW STREET

BUILDING 3 FORMER MIXING AND MANUFACTURING ROOM

BUILDING 34

FORMER MIXING POT WASHING AREA

DTSC-8

UST NO. 124

UST NO. 125

BUILDING 4 FORMER STORAGE

DTSC–5				
ft bgs	B	T	E	N
50	––	––	––	5,200
55	150	1,900	––	8,300
60	––	290,000	2,100	––
65	––	9,900	––	––
70	––	2,400	––	––

FORMER DEVELOPMENT LAB

FORMER PIPING

FORMER EMPTY DRUM STORAGE

FORMER LUNCH ROOM

DTSC-5

DTSC–10			
ft bgs	MIBK	N	T
45	4,900	98,000	1,800

DTSC-7

DTSC-10

FORMER SHIPPING AND RECEIVING

DTSC-9

FORMER OFFICE

FORMER DOCK LOADING/UNLOADING

FORMER SOUTH UST AREA

DTSC-6

DTSC–6	
ft bgs	MIBK
50	15,000
55	1,300

MESQUIT AVENUE

6th STREET VIADUCT

MESQUIT AVENUE

MESQUIT AVENUE

0 75' 150'

GRAPHIC SCALE

LEGEND:

- SITE BOUNDARY
- SSA-2 — SOIL BORING
- DTSC-4 — SOIL BORING WITH VAPOR PROBE- SHALLOW
- DTSC-5 — SOIL BORING WITH GROUNDWATER GRAB SAMPLE
- DTSC-11 — SOIL BORING WITH VAPOR PROBE- DEEP
- EXISTING UST (ABANDONED IN PLACE)
- FORMER BUILDING, UST, OR OTHER SITE FEATURE
- LATERAL EXTENT OF DEEP VOC AND TPH IMPACTED SOIL (WHERE CHEMICALS EXCEED SOIL CLEANUP GOALS)

VOC - VOLATILE ORGANIC COMPOUND
TPH - TOTAL PETROLEUM HYDROCARBON
MIBK - METHYL ISBUTYL KETONE
T - BENZENE
B - TOLUENE
E - ETHYLBENZENE
X - XYLENES
N - NAPHTHALENE

SOURCE:
AVOCET ENVIRONMENTAL, INC.; FIGURE 2, "SITE PLAN SHOWING RECENT BORINGS, SOIL VAPOR PROBES, GEOPHYSICAL SURVEY AREAS, TRENCHES ABS UST LOCATIONS", 2/10/2014

NOTES:
1. CHEMICAL CONCENTRATION DATA ARE ALSO SHOWN ON CROSS-SECTION FIGURES 8-11.
2. ONLY CONCENTRATIONS EXCEEDING CLEANUP GOALS ARE SHOWN ON FIGURE.
3. ALL CONCENTRATIONS IN MICROGRAMS PER LITER (µg/L).

BUTTERFIELD PROPERTY
590 SOUTH SANTA FE AVENUE
LOS ANGELES, CALIFORNIA

ESTIMATED LATERAL EXTENT OF DEEP VOC AND TPH IMPACTED SOIL

ARCADIS

FIGURE 7

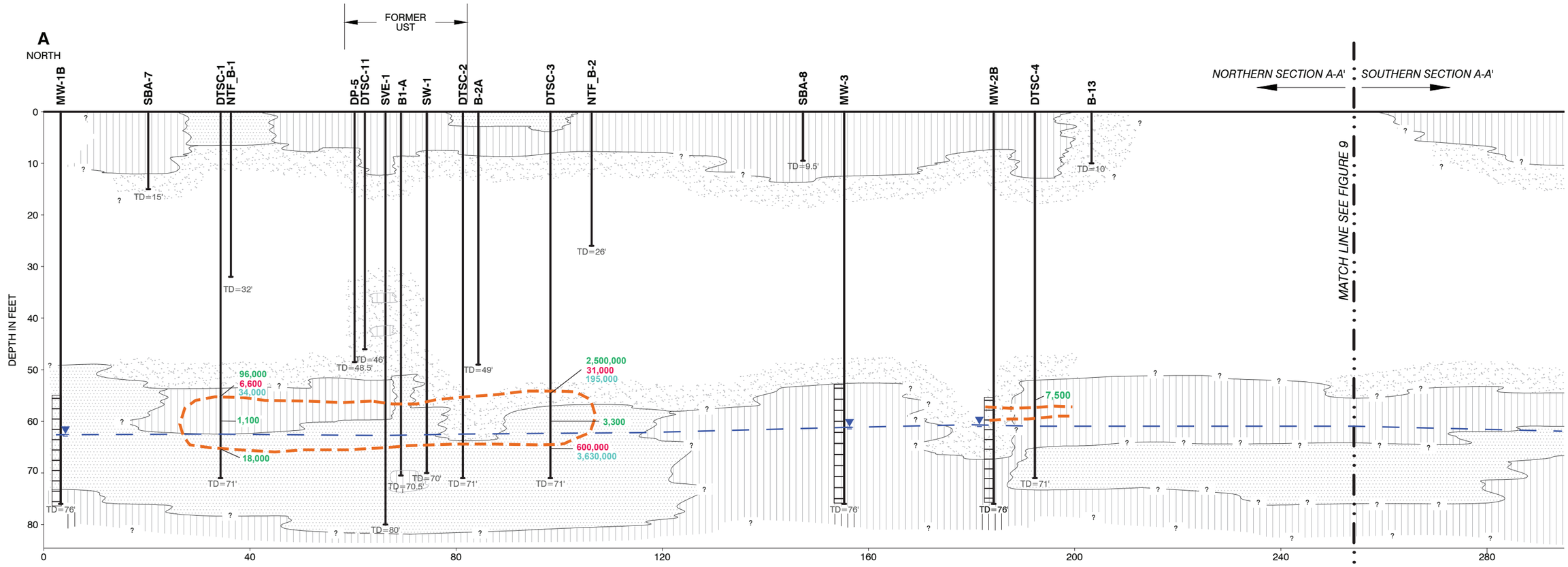

0 20 40 FEET

VERTICAL AND HORIZONTAL SCALE

EXPLANATION

BORING OR GROUNDWATER MONITORING WELL

SCREENED INTERVAL

GROUNDWATER TABLE

TD=71' TD INDICATES TOTAL DEPTH IN FEET

EXTENT OF CHEMICALS OF CONCERN EXCEEDING CLEAN-UP GOALS

SOIL TYPES

SM/ML ML/CL (FINES)

SW/GW SP/GP (GRAVEL AND SAND)

SP (SAND AND GRAVELLY SAND)

B – Benzene
T – Toluene
E – Ethylbenzene
X – Xylenes
MIBK – Methyl isobutylene ketone
N – Naphthalene

ALL RESULTS EXPRESSED IN MICROGRAMS PER KILOGRAM (µg/kg)

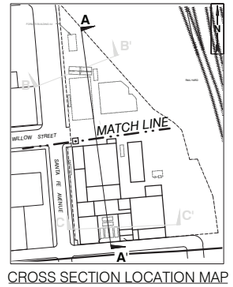

CROSS SECTION LOCATION MAP

SOURCE: AVOCET ENVIRONMENTAL, INC.

BUTTERFIELD PROPERTY
590 SOUTH SANTA FE AVENUE
LOS ANGELES, CALIFORNIA

CROSS SECTION A-A'
(NORTHERN SECTION)

ARCADIS

FIGURE **8**

032615

JDLOVING

G:\ENVCAD\Irvine\ACTIL\O492801\0000\000012LO492801.0000 Greenwald Property Figures.PDF

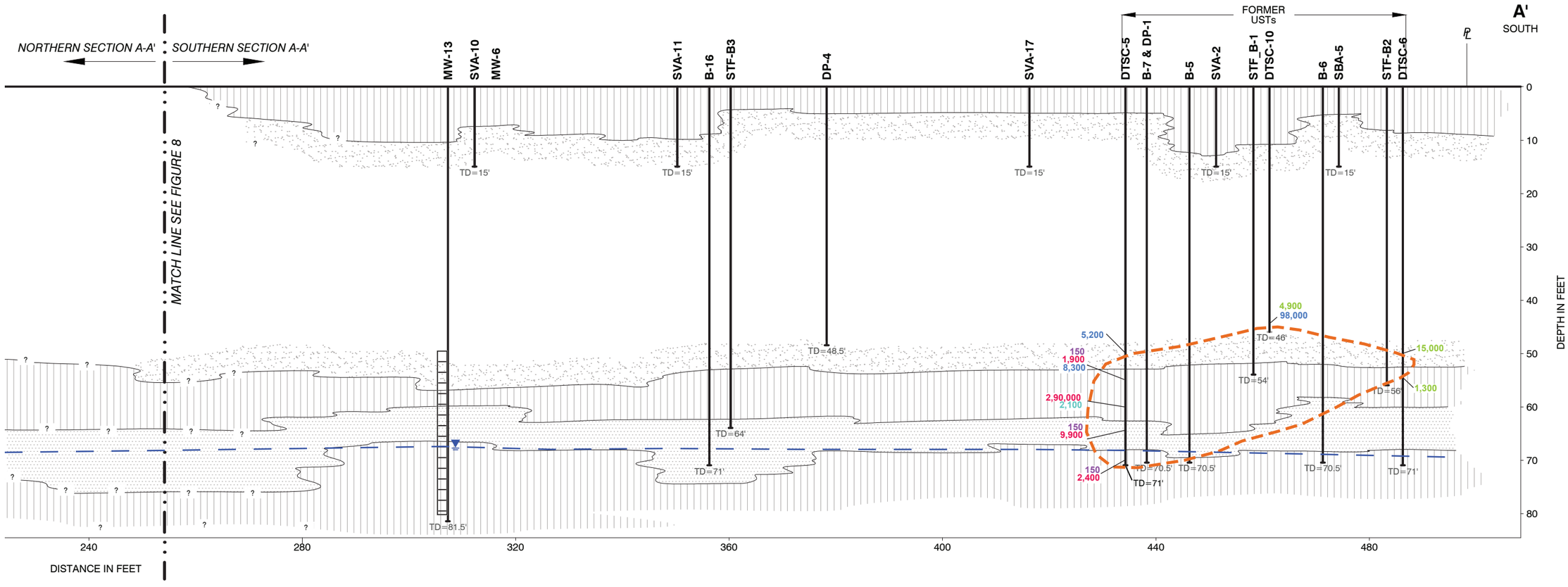

0 20 40 FEET

VERTICAL AND HORIZONTAL SCALE

EXPLANATION

BORING OR GROUNDWATER MONITORING WELL

SCREENED INTERVAL

GROUNDWATER TABLE

TD=71' TD INDICATES TOTAL DEPTH IN FEET

EXTENT OF CHEMICALS OF CONCERN EXCEEDING CLEAN-UP GOALS

SOIL TYPES

SM/ML ML/CL (FINES)

SW/GW SP/GP (GRAVEL AND SAND)

SP (SAND AND GRAVELLY SAND)

B – Benzene
T – Toluene
E – Ethylbenzene
X – Xylenes
MIBK – Methyl isobutylene ketone
N – Naphthalene

ALL RESULTS EXPRESSED IN MICROGRAMS PER KILOGRAM (µg/kg)

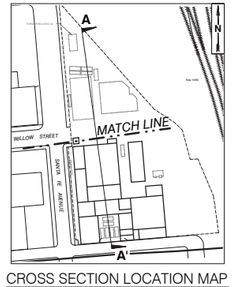

CROSS SECTION LOCATION MAP

SOURCE: AVOCET ENVIRONMENTAL, INC.

BUTTERFIELD PROPERTY
590 SOUTH SANTA FE AVENUE
LOS ANGELES, CALIFORNIA

CROSS SECTION A-A' (SOUTHERN SECTION)

ARCADIS

FIGURE 9

032615

JDLOVING

G:\ENV\CAD\Irvine\ACTLO492801\0000\00012\LO492801.0000 Greenwald Property Figures.PDF

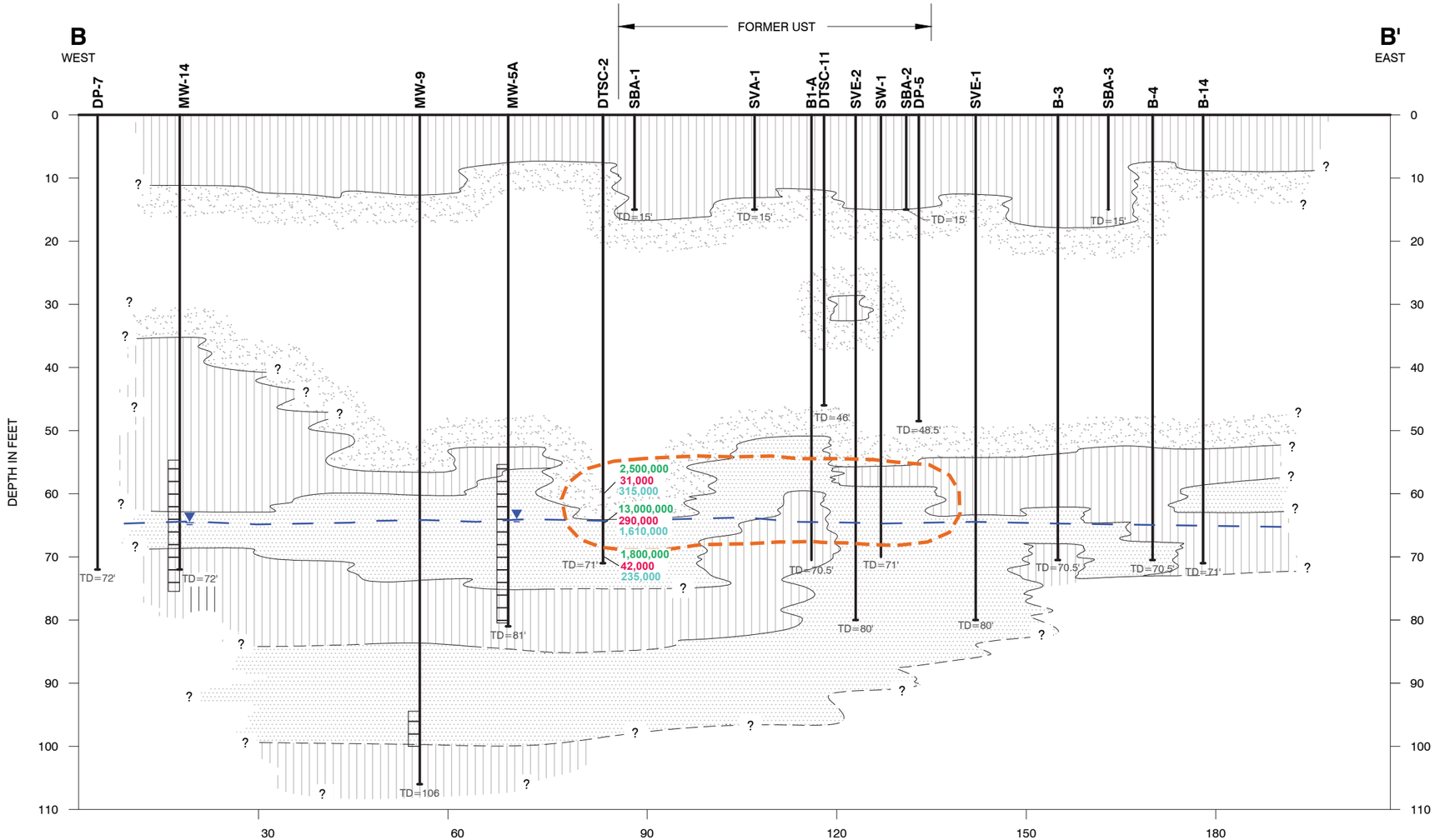

0 20 40 FEET

VERTICAL AND HORIZONTAL SCALE

EXPLANATION

BORING OR GROUNDWATER MONITORING WELL

SCREENED INTERVAL

GROUNDWATER TABLE

TD=71' TD INDICATES TOTAL DEPTH IN FEET

EXTENT OF CHEMICALS OF CONCERN EXCEEDING CLEAN-UP GOALS

SOIL TYPES

SM/ML ML/CL (FINES)

SW/GW SP/GP (GRAVEL AND SAND)

SP (SAND AND GRAVELLY SAND)

B – Benzene
T – Toluene
E – Ethylbenzene
X – Xylenes
MIBK – Methyl isobutylene ketone
N – Naphthalene

ALL RESULTS EXPRESSED IN MICROGRAMS PER KILOGRAM (µg/kg)

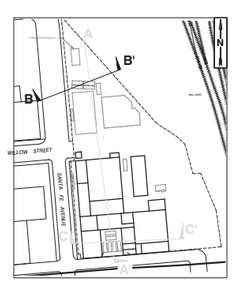

CROSS SECTION LOCATION MAP

SOURCE: AVOCET ENVIRONMENTAL, INC.

BUTTERFIELD PROPERTY
590 SOUTH SANTA FE AVENUE
LOS ANGELES, CALIFORNIA

CROSS SECTION B-B'

ARCADIS

FIGURE 10

032615

JDLOVING

G:\ENVCAD\Irvine\ACTILO492801\0000\00012\LO492801.0000 Greenwald Property Figures.PDF

C
WEST

C'
EAST

BUILDING

FORMER USTs
(APPROXIMATE EXTENTS)

BUILDING

STF_B-4
DTSC-7
SVA-16
B-5
DP-1-GW-1
STF_B-1
DTSC-6
DTSC-10
STF_F-1
DTSC-5
HA-2
HA-18
DTSC-9
SSA-20
MW-12
MW-11

TD=15'
TD=63.5'
TD=71'
TD=70.5'
TD=70'
TD=54'
TD=71'
TD=46'
TD=40'
TD=71'
TD=10'
TD=10'
TD=5
TD=71'
TD=87'
TD=116'

4,900
98,000
15,000
1,300
5,200
150
1,900
8,300
2,90,000
2,100
150
9,900
150
2,400

DEPTH IN FEET

0
10
20
30
40
50
60
70
80
90
100
110
120

0
30
60
90
120
150
180
210
240
270

DISTANCE IN FEET

EXPLANATION

BORING OR GROUNDWATER MONITORING WELL

SCREENED INTERVAL

GROUNDWATER TABLE

TD=71' TD INDICATES TOTAL DEPTH IN FEET

EXTENT OF CHEMICALS OF CONCERN EXCEEDING CLEAN-UP GOALS

SOIL TYPES

SM/ML ML/CL (FINES)

SW/GW SP/GP (GRAVEL AND SAND)

SP (SAND AND GRAVELLY SAND)

B – Benzene
T – Toluene
E – Ethylbenzene
X – Xylenes
MIBK – Methyl isobutylene ketone
N – Naphthalene

ALL RESULTS EXPRESSED IN MICROGRAMS PER KILOGRAM (µg/kg)

0 20 40 FEET

VERTICAL AND HORIZONTAL SCALE

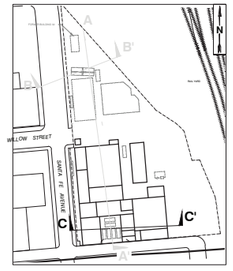

CROSS SECTION LOCATION MAP

SOURCE: AVOCET ENVIRONMENTAL, INC.

BUTTERFIELD PROPERTY
590 SOUTH SANTA FE AVENUE
LOS ANGELES, CALIFORNIA

CROSS SECTION C-C'

ARCADIS

FIGURE 11

032615

JDLOVING

G:\ENVCAD\Irvine\ACTLO492801\000000012\LO492801.0000 Greenwald Property Figures.PDF

C:\TMCONTA MESA DIV/GROUP:ENV_CAD DB:ENV_CAD
G:\ENVCAD\Irvine\ACT\LD493801\0000\00012\LC493801.0000 Site.dwg LAYOUT: 12 SAVED: 7/14/2015 4:24 PM ACADVER: 19.18 (LMS TECH) PAGESETUP: — PLOTSTYLETABLE: — PLOTTED: 7/14/2015 5:21 PM BY: LOVING, JEFF

DTSC–2			
TPH–g	NA	1,1–DCA	<2,000
Benzene	<1,000	1,1–DCE	<2,000
Toluene	**270,000**	1,2,4–TMB	<2,000
Ethylbenz	<2,000	1,3,5–TMB	<2,000
Xylenes	**10,600**	MIBK	<20,000

MW–10			
TPH–g	<50	1,1–DCA	<1
Benzene	<0.5	1,1–DCE	<1
Toluene	<1	1,2,4–TMB	<1
Ethylbenz	<1	1,3,5–TMB	<1
Xylenes	<2	MIBK	<1

DTSC–1			
TPH–g	NA	1,1–DCA	<1,000
Benzene	<500	1,1–DCE	<1,000
Toluene	**170,000**	1,2,4–TMB	<1,000
Ethylbenz	**5,100**	1,3,5–TMB	<1,000
Xylenes	**30,500**	MIBK	<10,000

DTSC–3			
TPH–g	NA	1,1–DCA	<500
Benzene	<250	1,1–DCE	<500
Toluene	**93,000**	1,2,4–TMB	<500
Ethylbenz	**2,500**	1,3,5–TMB	<500
Xylenes	**14,700**	MIBK	<5,000

MW–5A			
TPH–g	**127,000**	1,1–DCA	<100
Benzene	**92**	1,1–DCE	<100
Toluene	**180,000**	1,2,4–TMB	<100
Ethylbenz	**1,000**	1,3,5–TMB	<100
Xylenes	**4,800**	MIBK	<100

MW–5			
TPH–g	<50	1,1–DCA	<1
Benzene	<0.5	1,1–DCE	<1
Toluene	<1	1,2,4–TMB	<1
Ethylbenz	<1	1,3,5–TMB	<1
Xylenes	<2	MIBK	<1

MW–18			
TPH–g	<50	1,1–DCA	<1
Benzene	<0.5	1,1–DCE	<1
Toluene	<1	1,2,4–TMB	<1
Ethylbenz	<1	1,3,5–TMB	<1
Xylenes	<2	MIBK	<2

MW–2B			
TPH–g	<50	1,1–DCA	<1
Benzene	<0.5	1,1–DCE	<1
Toluene	75	1,2,4–TMB	<1
Ethylbenz	1.5	1,3,5–TMB	<1
Xylenes	19.5	MIBK	<1

MW–14			
TPH–g	**25,500**	1,1–DCA	<500
Benzene	<250	1,1–DCE	<500
Toluene	**46,000**	1,2,4–TMB	<500
Ethylbenz	**600**	1,3,5–TMB	<500
Xylenes	**1,930**	MIBK	<500

DTSC–4			
TPH–g	NA	1,1–DCA	<20
Benzene	<10	1,1–DCE	<20
Toluene	**2,200**	1,2,4–TMB	<20
Ethylbenz	210	1,3,5–TMB	<20
Xylenes	1,230	MIBK	<200

MW–9			
TPH–g	<50	1,1–DCA	<1
Benzene	<0.5	1,1–DCE	<1
Toluene	<1	1,2,4–TMB	<1
Ethylbenz	<1	1,3,5–TMB	<1
Xylenes	<2	MIBK	<1

MW–4			
TPH–g	<50	1,1–DCA	<1
Benzene	<0.5	1,1–DCE	<1
Toluene	<1	1,2,4–TMB	<1
Ethylbenz	<1	1,3,5–TMB	<1
Xylenes	<2	MIBK	<1

MW–15			
TPH–g	**470**	1,1–DCA	<5
Benzene	**30**	1,1–DCE	<5
Toluene	**740**	1,2,4–TMB	<5
Ethylbenz	150	1,3,5–TMB	<5
Xylenes	98	MIBK	<5

MW–10			
TPH–g	<50	1,1–DCA	1.9
Benzene	<0.5	1,1–DCE	<1
Toluene	<1	1,2,4–TMB	<1
Ethylbenz	<1	1,3,5–TMB	<1
Xylenes	<2	MIBK	<1

MW–17			
TPH–g	<50	1,1–DCA	<1
Benzene	<0.5	1,1–DCE	<1
Toluene	<1	1,2,4–TMB	<1
Ethylbenz	<1	1,3,5–TMB	<1
Xylenes	<2	MIBK	<1

DTSC–8			
TPH–g	NA	1,1–DCA	3.6
Benzene	<0.5	1,1–DCE	<1
Toluene	84	1,2,4–TMB	1.4
Ethylbenz	2.3	1,3,5–TMB	<1
Xylenes	13.6	MIBK	<10

MW–3			
TPH–g	<50	1,1–DCA	1.2
Benzene	<0.5	1,1–DCE	<1
Toluene	3.3	1,2,4–TMB	<1
Ethylbenz	1.1	1,3,5–TMB	<1
Xylenes	<2	MIBK	<1

DTSC–9			
TPH–g	NA	1,1–DCA	<1
Benzene	<0.5	1,1–DCE	<1
Toluene	7.6	1,2,4–TMB	<1
Ethylbenz	<1	1,3,5–TMB	<1
Xylenes	<2	MIBK	<10

MW–13			
TPH–g	<50	1,1–DCA	2.9
Benzene	<0.5	1,1–DCE	<1
Toluene	<1	1,2,4–TMB	<1
Ethylbenz	<1	1,3,5–TMB	<1
Xylenes	<2	MIBK	<1

MW–5
Not Sampled – Obstructed

DTSC–7			
TPH–g	NA	1,1–DCA	3.9
Benzene	<0.5	1,1–DCE	<1
Toluene	14	1,2,4–TMB	8.9
Ethylbenz	<1	1,3,5–TMB	3.1
Xylenes	1.5	MIBK	<10

DTSC–5			
TPH–g	NA	1,1–DCA	<250
Benzene	<125	1,1–DCE	<250
Toluene	**41,000**	1,2,4–TMB	1,300
Ethylbenz	<250	1,3,5–TMB	340
Xylenes	**1,060**	MIBK	4,500

MW–11			
TPH–g	<50	1,1–DCA	2.7
Benzene	<0.5	1,1–DCE	1.2
Toluene	<1	1,2,4–TMB	<1
Ethylbenz	<1	1,3,5–TMB	<1
Xylenes	<2	MIBK	<1

MW–12			
TPH–g	<50	1,1–DCA	<1
Benzene	<0.5	1,1–DCE	<1
Toluene	<1	1,2,4–TMB	<1
Ethylbenz	<1	1,3,5–TMB	<1
Xylenes	<2	MIBK	<1

MW–16			
TPH–g	<50	1,1–DCA	**7.4**
Benzene	<0.5	1,1–DCE	<1
Toluene	<1	1,2,4–TMB	<1
Ethylbenz	<1	1,3,5–TMB	<1
Xylenes	<2	MIBK	<1

DTSC–6			
TPH–g	NA	1,1–DCA	<200
Benzene	<100	1,1–DCE	<200
Toluene	**8,700**	1,2,4–TMB	25,000
Ethylbenz	**570**	1,3,5–TMB	6,300
Xylenes	**4,100**	MIBK	38,000

SANTA FE AVENUE
LUCKY BRAND, INC.
FORMER BUILDING 28
MW-1B
DTSC-1
NORTH UST AREA
MW-5A
MW-5
DTSC-2
MW-14
RECENTLY IDENTIFIED UST
MW-9
FORMER BUILDING 28
FORMER ABOVEGROUND STORAGE TANK AREA
DTSC-3
MW-8
FORMER UST (POSSIBLE LOCATION)
WAREHOUSE FACILITY
MW-15
MW-3
MW-2B
DTSC-4
MW-4
FORMER ELECTRICAL SWITCH GEAR ROOM
FORMER OFFICE
UST
BUILDING 34
WILLOW STREET
MW-17
BUILDING 3 FORMER MIXING AND MANUFACTURING ROOM
MW-13
MW-6
UST NO. 124
UST NO. 125
MW-10
DTSC-8
BUILDING 4 FORMER STORAGE
FORMER DEVELOPMENT LAB
FORMER PIPING
FORMER EMPTY DRUM STORAGE
FORMER LUNCH ROOM
DTSC-5
FORMER SHIPPING AND RECEIVING
DTSC-9
MW-12
MW-11
DTSC-7
MW-7
FORMER OFFICE
FORMER DOCK LOADING/UNLOADING
DTSC-6
FORMER SOUTH UST AREA
MESQUIT AVENUE
8th STREET VIADUCT
MW-16
MESQUIT AVENUE

0 75' 150'
GRAPHIC SCALE

LEGEND:

- SITE BOUNDARY
- MW-11 GROUNDWATER MONITORING WELLS
- MW-7 ABANDONED GROUNDWATER MONITORING WELLS
- DTSC-5 SOIL BORING WITH GROUNDWATER GRAB SAMPLE
- DTSC-4 SOIL BORING WITH VAPOR PROBE
- EXISTING UST (ABANDONED IN PLACE)
- FORMER BUILDING, UST, OR OTHER SITE FEATURE
- ESTIMATED EXTENT OF PETROLEUM IMPACTED GROUNDWATER

- ETHYLBENZ = ETHYLBENZENE
- ALL DATA PRESENTED IN MICROGRAMS PER LITER (µg/L)
- DATA ARE FROM GROUNDWATER SAMPLES COLLECTED IN OCTOBER AND NOVEMBER, 2013
- **BOLD** CONCENTRATIONS EXCEED STATE MCLs

SOURCE: AVOCET ENVIRONMENTAL, INC.; FIGURE 2, "SITE PLAN SHOWING RECENT BORINGS, SOIL VAPOR PROBES, GEOPHYSICAL SURVEY AREAS, TRENCHES ABS UST LOCATIONS", 2/10/2014

BUTTERFIELD PROPERTY
590 SOUTH SANTA FE AVENUE
LOS ANGELES, CALIFORNIA

ESTIMATED LATERAL EXTENT OF VOC AND TPH IMPACTED GROUNDWATER

ARCADIS

FIGURE 12

ATTACHMENT C

Figure from CH2M-Hill, 2013a

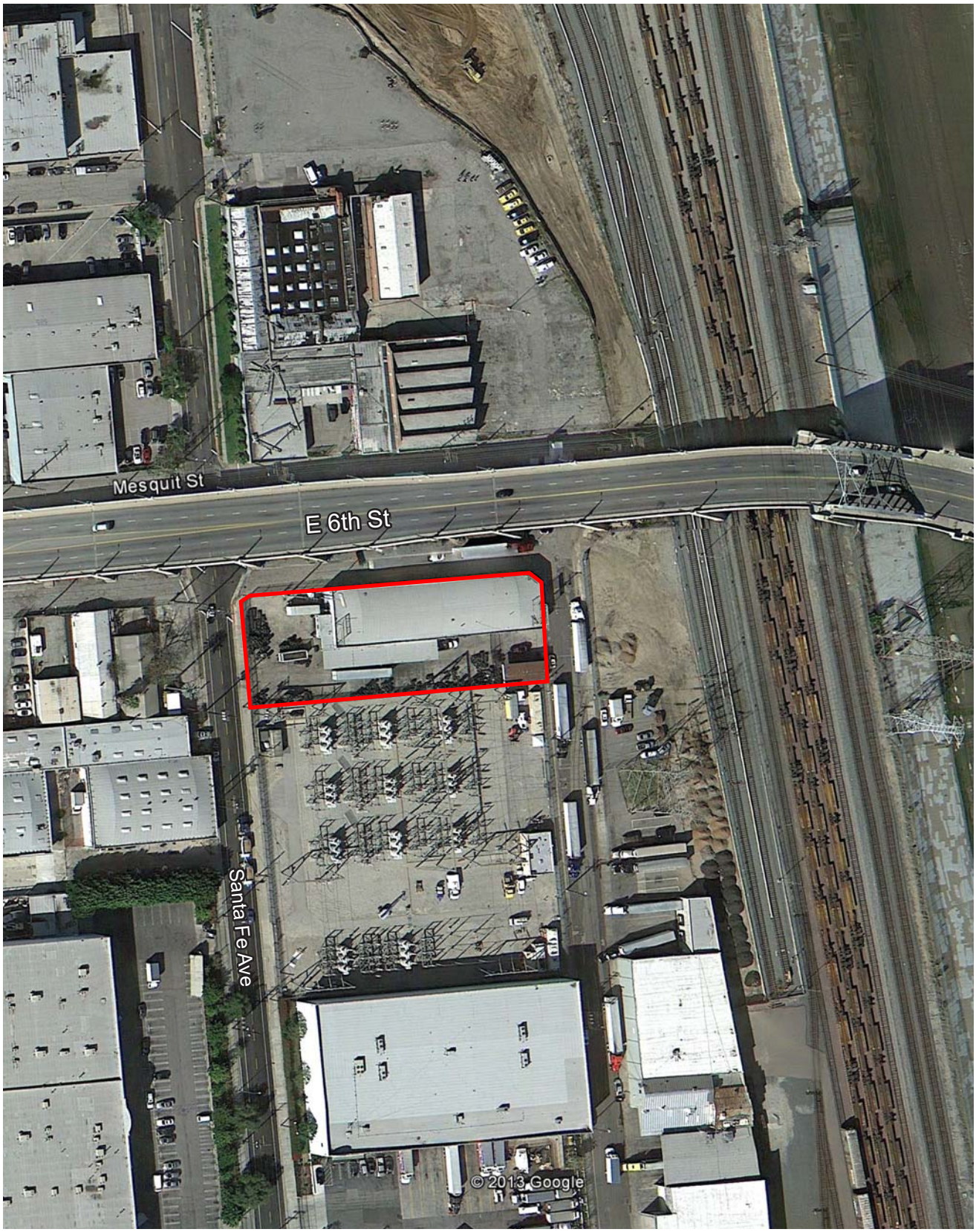

Legend:

Project Site

North

0 300

Approximate scale in feet

FIGURE 2-1
Site Map
Phase I Environmental Site Assessment
Park Property
600 South Sante Fe Avenue, Los Angeles, CA
6th Street Viaduct Replacement Project

Aerial image © Google Earth, 2013. Annotation by CH2M HILL, 2013.

ATTACHMENT D

Figure from CH2M-Hill, 2013b

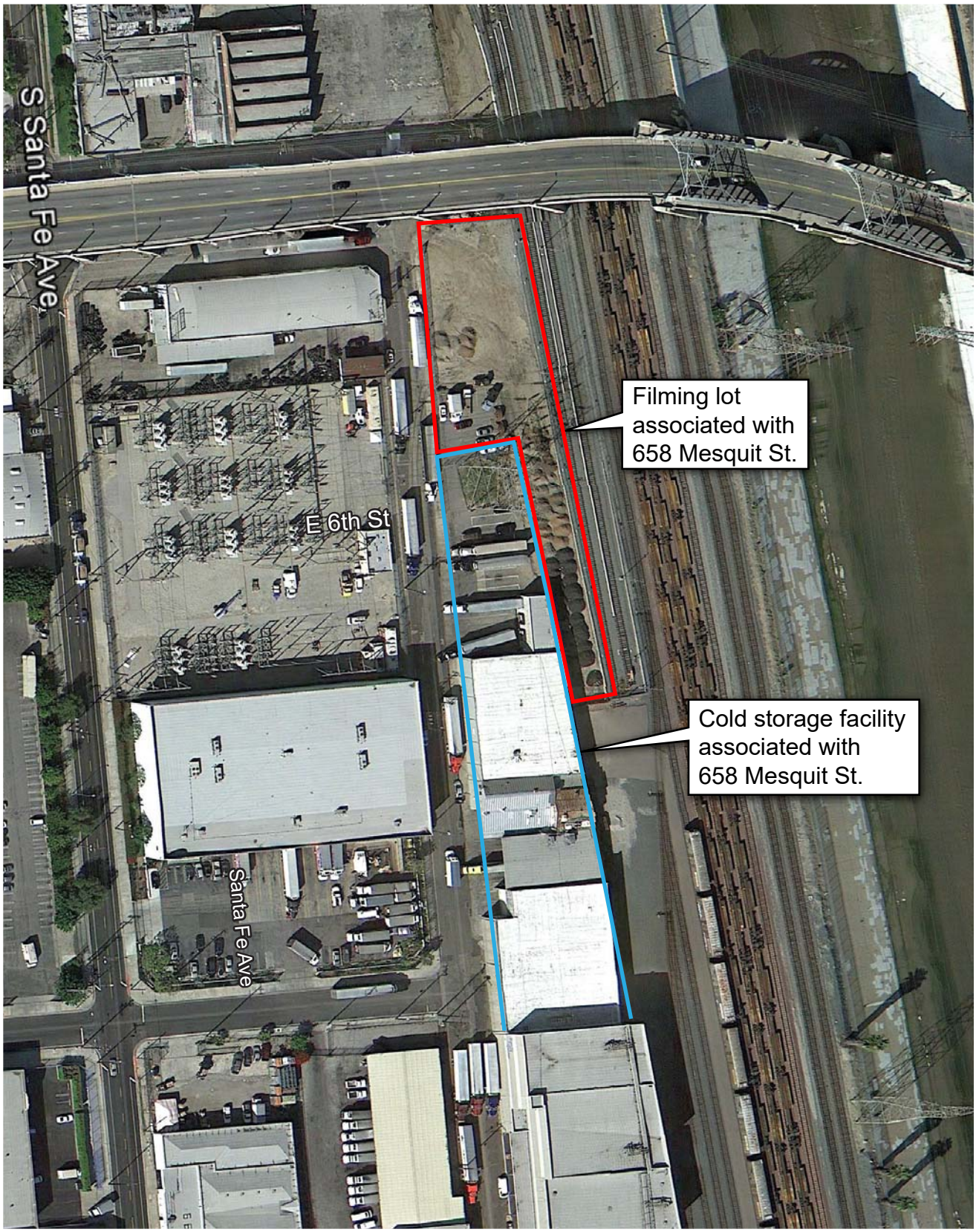

Legend:

Project Site

North

0 300

Approximate scale in feet

FIGURE 2-1
Site Map
Phase I Environmental Site Assessment
Gallo Property
658 Mesquit Street, Los Angeles, CA
6th Street Viaduct Replacement Project

Aerial image © Google Earth, 2013. Annotation by CH2M HILL, 2013.

ATTACHMENT E

Figure from CH2M-Hill, 2013c



Legend:

Project Site

0 300

Approximate scale in feet

North

FIGURE 2-1
Site Map
Phase I Environmental Site Assessment
Parcel 16A
1600 East 6th St., Los Angeles, CA
6th Street Viaduct Replacement Project

Aerial image © Google Earth, 2012. Annotation by CH2M HILL, 2013.

ATTACHMENT F

Figure from CH2M-Hill, 2012

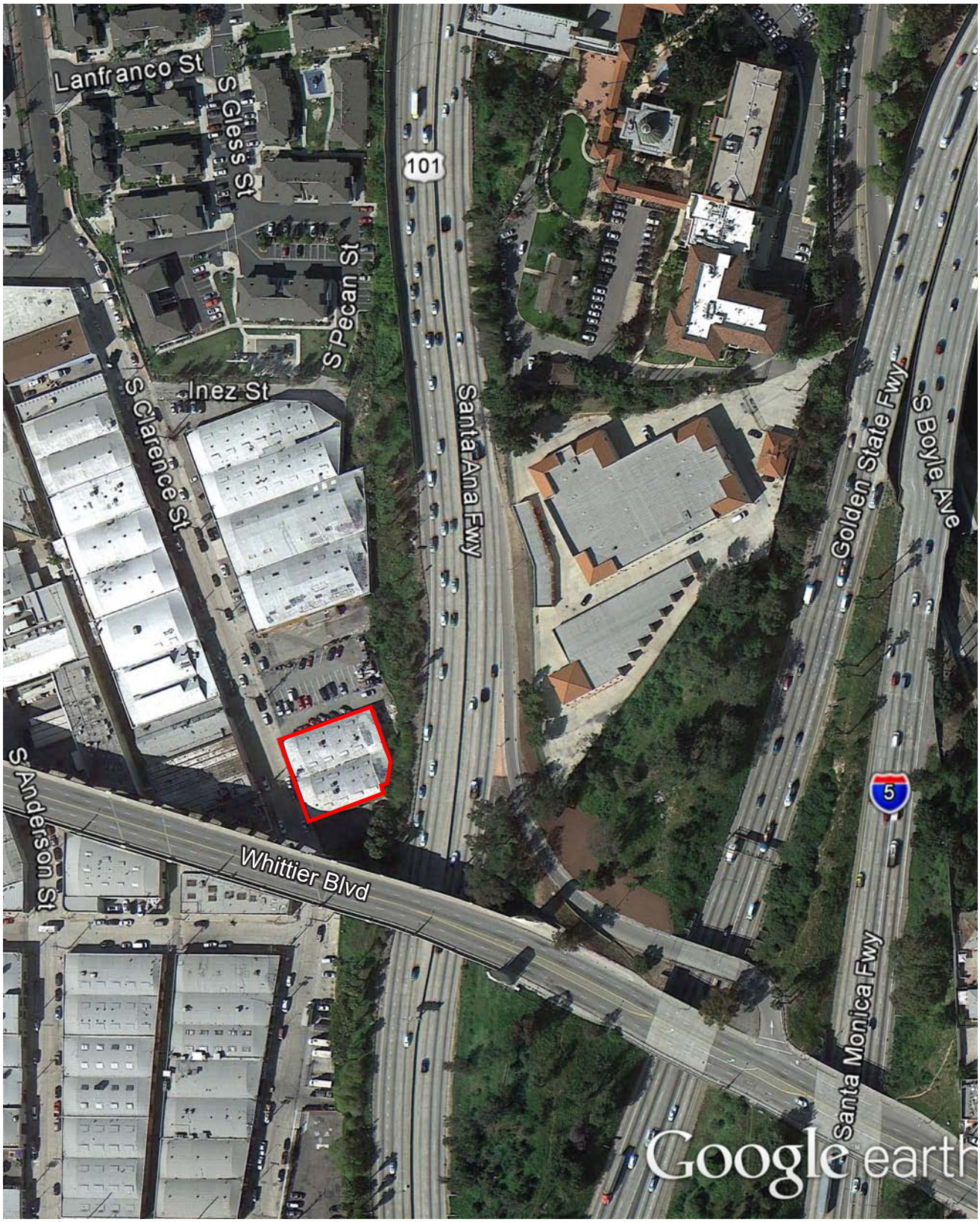

Legend:

Project Site (located beneath Whittier Blvd)

North

0 300

Approximate scale in feet

FIGURE 2-1
Site Map
Phase I Environmental Site Assessment
650 South Clarence Street, Los Angeles, CA
6th Street Viaduct Replacement Project

Aerial image © Google Earth, 2012. Annotation by CH2M HILL, 2012.

ATTACHMENT G

Figure from Kleinfelder, 2015

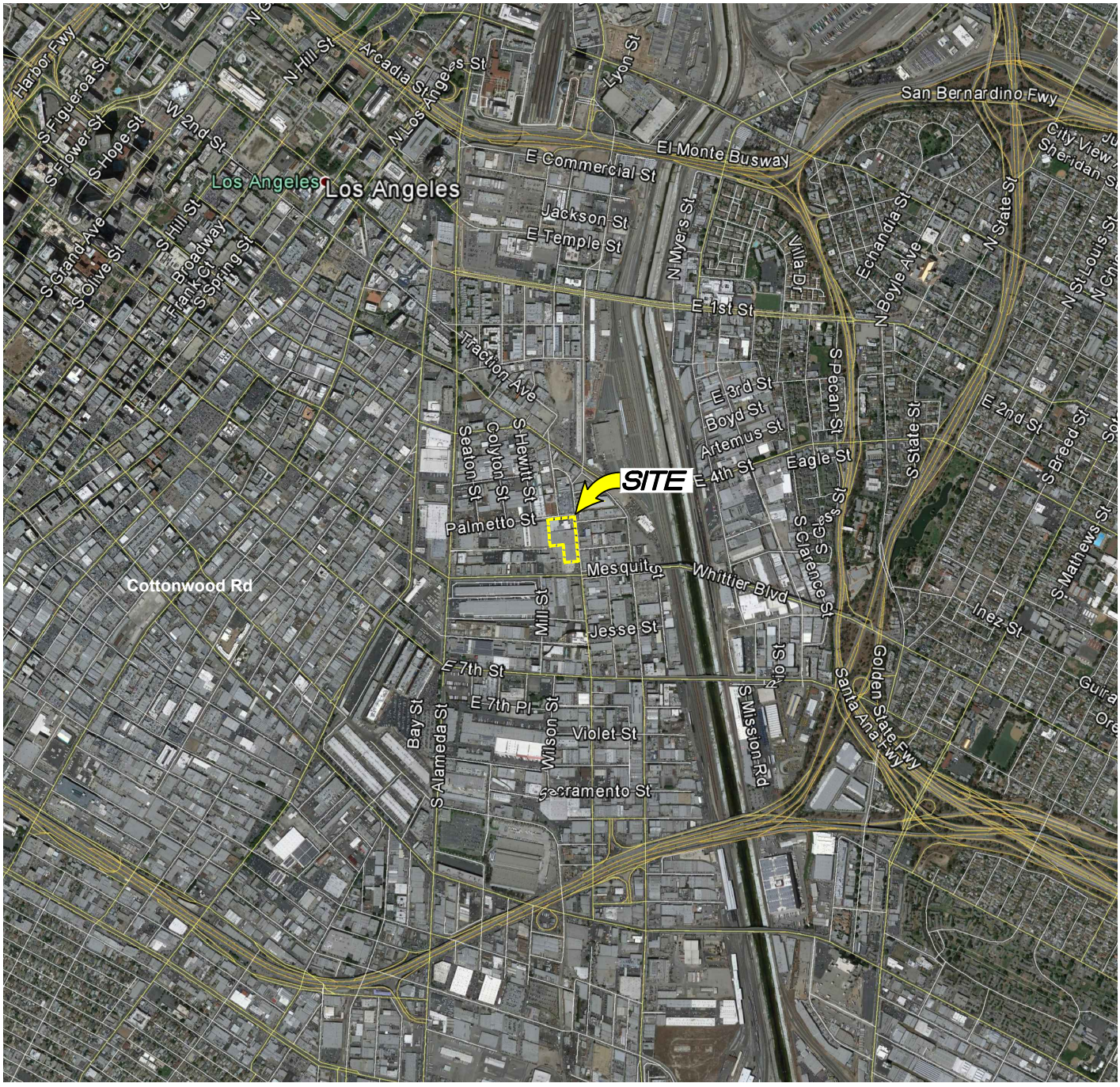

SOURCE: GOOGLE EARTH PRO 2014, IMAGE DATE 4/16/13.

N

2,000 1,000 0 2,000

APPROXIMATE SCALE (feet)

The information included on this graphic representation has been compiled from a variety of sources and is subject to change without notice. Kleinfelder makes no representation or warranties, express or implied, as to accuracy, completeness, timeliness, or rights to the use of such information. This document is not intended for use as a land survey product nor is it designed or intended as a construction design document. The use or misuse of the information contained on this graphic representation is at the use rid of the sort of using or misusing the information.

KLEINFELDER
Bright People. Right Solutions.
www.kleinfelder.com

PROJECT NO.	20154388
DRAWN:	05/2015
DRAWN BY:	DMF
CHECKED BY:	BR
FILE NAME:	20154388_F1.dwg

SITE LOCATION MAP

AT MATEO
555 MATEO STREET
LOS ANGELES, CALIFORNIA

FIGURE
1

PLOTTED: 29 May 2015, 2:29 PM, MGrimin

ATTACHED IMAGES: Image: Aerial-Image_Pattern_Art_3000_4-16-13.jpg
ATTACHED XREFS:
RIVERSIDE, CALIFORNIA CAD FILE: L:\CADD\2015\20154388\ LAYOUT: 1

ATTACHMENT H

Tables for PARC Area 1A

TABLE H-1

Soil Summary for PARC Area 1A - Metals (0 to 10 ft bgs)

~ in units of mg/kg (wet weight basis) ~

Boring ID	Sample ID	Sample Collection Date	Sample Depth (ft bgs)	Antimony	Arsenic	Barium	Beryllium	Cadmium	Chromium	Hexavalent Chromium	Cobalt	Copper	Lead	Mercury	Molybdenum	Nickel	Selenium	Silver	Thallium	Vanadium	Zinc
1A-1	1A-1-0.5	05/15/2017	0.5	3.8	2.1	200	ND	1.9	17	2.9	5.6	230	860	0.91	ND	11	ND	ND	ND	23	240
	1A-1-1.0	05/15/2017	1.0	ND	ND	99	ND	ND	9.7	-	5.1	46	230	ND	ND	6.8	ND	ND	ND	20	130
	1A-1-3.0	05/15/2017	3.0	3.3	1.3	97	ND	ND	19	ND	4.8	100	440	0.12	1.2	8.4	ND	ND	ND	19	170
	1A-1-5.0	05/15/2017	5.0	ND	ND	33	ND	ND	4.4	-	3.5	4.5	1.1	ND	ND	2.8	ND	ND	ND	14	15
1A-2	1A-2-0.5	05/15/2017	0.5	ND	2.3	310	ND	ND	15	-	6.3	50	310	0.45	ND	11	ND	ND	ND	25	480
	1A-2-1.0	05/15/2017	1.0	ND	1.2	63	ND	ND	7.9	-	5.5	9.2	15	0.2	ND	5.8	ND	ND	ND	22	45
	1A-2-3.0	05/15/2017	3.0	ND	ND	39	ND	ND	4.9	-	3.7	4.2	1.1	ND	ND	3.1	ND	ND	ND	17	16
	1A-2-5.0	05/15/2017	5.0	ND	1.7	120	ND	ND	13	-	9.0	18	3.2	0.17	ND	9.9	ND	ND	ND	26	45
1A-3	1A-3-0.5	05/15/2017	0.5	ND	2.2	120	ND	ND	15	-	6.1	48	140	0.18	ND	9.2	ND	ND	ND	23	130
	1A-3-1.0	05/15/2017	1.0	ND	ND	130	ND	ND	11	-	6.5	26	130	0.2	ND	10	ND	ND	ND	27	150
	1A-3-3.0	05/15/2017	3.0	ND	ND	68	ND	ND	7.7	-	5.4	6.9	1.5	ND	ND	5.1	ND	ND	ND	20	25
	1A-3-5.0	05/15/2017	5.0	ND	ND	35	ND	ND	4.7	-	3.4	3.9	ND	ND	ND	3.1	ND	ND	ND	14	17
1A-4	1A-4-0.5	05/15/2017	0.5	ND	3.4	100	ND	ND	15	-	6.8	43	140	0.22	ND	11	ND	ND	ND	26	210
	1A-4-1.0	05/15/2017	1.0	ND	ND	83	ND	ND	14	-	8.0	16	4.2	ND	ND	9.0	ND	ND	ND	29	39
	1A-4-3.0	05/15/2017	3.0	ND	ND	66	ND	ND	9.0	-	6.6	11	1.9	ND	ND	6.3	ND	ND	ND	24	29
	1A-4-5.0	05/15/2017	5.0	ND	ND	55	ND	ND	7.7	-	5.7	7.7	1.7	ND	ND	5.4	ND	ND	ND	19	26
L7	L-7 @ 1'	02/1/2016	1.0	3.5	3.7	150	ND	3.4	17	-	5.4	100	290	0.2	ND	13	ND	ND	ND	24	200
	L-7 @ 3'	02/1/2016	3.0	-	-	-	-	-	-	-	-	-	-	-	-	-	-	-	-	-	-
	L-7 @ 5'	02/1/2016	5.0	-	-	-	-	-	-	-	-	-	-	-	-	-	-	-	-	-	-
L8	L-8 @ 1'	02/1/2016	1.0	ND	2.1	91	ND	ND	9.9	-	5.2	15	32	ND	ND	7.4	ND	ND	ND	25	59
	L-8 @ 3'	02/1/2016	3.0	-	-	-	-	-	-	-	-	-	-	-	-	-	-	-	-	-	-
	L-8 @ 5'	02/1/2016	5.0	-	-	-	-	-	-	-	-	-	-	-	-	-	-	-	-	-	-
L-11	L-11 @ 1'	02/1/2016	1.0	3.9	8.8	600	ND	3.1	25	-	6.6	170	690	3.3	ND	21	ND	ND	ND	27	1500
	L-11 @ 3'	02/1/2016	3.0	ND	1.8	73	ND	ND	8.0	-	4.6	9.8	2.5	0.1	ND	6.1	ND	ND	ND	21	30
	L-11 @ 5'	02/1/2016	5.0	-	-	-	-	-	-	-	-	-	-	-	-	-	-	-	-	-	-
L-12	L-12 @ 1'	02/1/2016	1.0	ND	2.7	85	ND	ND	8.4	-	4.7	15	76	0.13	ND	6.5	ND	ND	ND	22	76
	L-12 @ 3'	02/1/2016	3.0	-	-	-	-	-	-	-	-	-	-	-	-	-	-	-	-	-	-

The Fehling Group, LLC

TABLE H-1

Soil Summary for PARC Area 1A - Metals (0 to 10 ft bgs)

~ in units of mg/kg (wet weight basis) ~

Boring ID	Sample ID	Sample Collection Date	Sample Depth (ft bgs)	Antimony	Arsenic	Barium	Beryllium	Cadmium	Chromium	Hexavalent Chromium	Cobalt	Copper	Lead	Mercury	Molybdenum	Nickel	Selenium	Silver	Thallium	Vanadium	Zinc
L7	L-7 @ 1'	02/26/2016	1.0	-	-	-	-	-	-	-	-	-	-	-	-	-	-	-	-	-	-
	L-7 @ 2'	02/26/2016	2.0	*ND*	3.0	100	*ND*	*ND*	14	-	8.2	19	3.9	0.1	*ND*	10	*ND*	*ND*	*ND*	36	42
	L-7 @ 3'	02/26/2016	3.0	*ND*	1.6	61	*ND*	*ND*	8.3	-	4.8	12	5.4	*ND*	*ND*	6.0	*ND*	*ND*	*ND*	22	29
L8	L-8 @ 1'	02/26/2016	1.0	-	-	-	-	-	-	-	-	-	-	-	-	-	-	-	-	-	-
	L-8 @ 2'	02/26/2016	2.0	*ND*	*ND*	33	*ND*	*ND*	4.1	-	1.9	3.8	1.3	0.19	*ND*	2.5	*ND*	*ND*	*ND*	11	13
	L-8 @ 3'	02/26/2016	3.0	*ND*	*ND*	37	*ND*	*ND*	4.7	-	2.4	3.8	1.2	*ND*	*ND*	2.9	*ND*	*ND*	*ND*	15	15
L-11	L-11 @ 1'	02/26/2016	1.0	-	-	-	-	-	-	-	-	-	-	-	-	-	-	-	-	-	-
	L-11 @ 2'	02/26/2016	2.0	*ND*	*ND*	42	*ND*	*ND*	5.2	-	3.0	4.7	1.4	*ND*	*ND*	4.0	*ND*	*ND*	*ND*	14	19
	L-11 @ 3'	02/26/2016	3.0	*ND*	1.0	48	*ND*	*ND*	5.3	-	3.0	5.6	3.3	*ND*	*ND*	4.1	*ND*	*ND*	*ND*	14	20
L-12	L-12 @ 1'	02/26/2016	1.0	-	-	-	-	-	-	-	-	-	-	-	-	-	-	-	-	-	-
	L-12 @ 2'	02/26/2016	2.0	*ND*	*ND*	45	*ND*	*ND*	4.6	-	2.6	4.5	4.9	*ND*	*ND*	3.3	*ND*	*ND*	*ND*	14	19
	L-12 @ 3'	02/26/2016	3.0	*ND*	*ND*	35	*ND*	*ND*	4.0	-	2.2	3.4	1.0	*ND*	*ND*	2.7	*ND*	*ND*	*ND*	12	14
	# of non-detects =>			**25**	**14**	**0**	**29**	**26**	**0**	**1**	**0**	**0**	**1**	**15**	**28**	**0**	**29**	**29**	**29**	**0**	**0**
	# of detects =>			**4**	**15**	**29**	**0**	**3**	**29**	**1**	**29**	**29**	**28**	**14**	**1**	**29**	**0**	**0**	**0**	**29**	**29**
	# of samples =>			**29**	**29**	**29**	**29**	**29**	**29**	**2**	**29**	**29**	**29**	**29**	**29**	**29**	**29**	**29**	**29**	**29**	**29**
	frequency of detection =>			**14%**	**52%**	**100%**	**0%**	**10%**	**100%**	**50%**	**100%**	**100%**	**97%**	**48%**	**3%**	**100%**	**0%**	**0%**	**0%**	**100%**	**100%**
	minimum detected =>			**3.3**	**1**	**33**	**-**	**1.9**	**4**	**2.9**	**1.9**	**3.4**	**1**	**0.1**	**1.2**	**2.5**	**-**	**-**	**-**	**11**	**13**
	maximum detected =>			**3.9**	**8.8**	**600**	**-**	**3.4**	**25**	**2.9**	**9**	**230**	**860**	**3.3**	**1.2**	**21**	**-**	**-**	**-**	**36**	**1500**

The Fehling Group, LLC

TABLE H-2

Soil Summary for PARC Area 1A - TPH, VOCs, SVOCs, PCBs, OCPs, OPPs, and Chlorinated Herbicides (wet weight basis)

(0 to 10 ft bgs)

Boring ID	Sample ID	Sample Collection Date	Sample Depth (ft bgs)	TPH GRO (mg/kg)	TPH DRO (mg/kg)	TPH ORO (mg/kg)	VOCs (µg/kg)	SVOCs (µg/kg)	PCBs (µg/kg)*	OCPs (µg/kg)**	OPPs (µg/kg)	Chlorinated Herbicides (µg/kg)
1A-1	1A-1-0.5	05/15/2017	0.5	-	-	-	-	-	-	-	-	-
	1A-1-1.0	05/15/2017	1.0	-	-	-	-	-	-	-	-	-
	1A-1-3.0	05/15/2017	3.0	-	-	-	-	-	-	-	-	-
	1A-1-5.0	05/15/2017	5.0	-	-	-	-	-	-	-	-	-
1A-2	1A-2-0.5	05/15/2017	0.5	-	-	-	-	-	-	-	-	-
	1A-2-1.0	05/15/2017	1.0	-	-	-	-	-	-	-	-	-
	1A-2-3.0	05/15/2017	3.0	-	-	-	-	-	-	-	-	-
	1A-2-5.0	05/15/2017	5.0	-	-	-	-	-	-	-	-	-
1A-3	1A-3-0.5	05/15/2017	0.5	-	-	-	-	-	-	-	-	-
	1A-3-1.0	05/15/2017	1.0	-	-	-	-	-	-	-	-	-
	1A-3-3.0	05/15/2017	3.0	-	-	-	-	-	-	-	-	-
	1A-3-5.0	05/15/2017	5.0	-	-	-	-	-	-	-	-	-
1A-4	1A-4-0.5	05/15/2017	0.5	-	-	-	-	-	-	-	-	-
	1A-4-1.0	05/15/2017	1.0	-	-	-	-	-	-	-	-	-
	1A-4-3.0	05/15/2017	3.0	-	-	-	-	-	-	-	-	-
	1A-4-5.0	05/15/2017	5.0	-	-	-	-	-	-	-	-	-
L7	L-7 @ 1'	02/1/2016	1.0	-	-	-	-	-	-	-	-	-
	L-7 @ 3'	02/1/2016	3.0	-	-	-	-	-	-	-	-	-
	L-7 @ 5'	02/1/2016	5.0	-	-	-	-	-	-	-	-	-
L8	L-8 @ 1'	02/1/2016	1.0	-	-	-	-	-	-	-	-	-
	L-8 @ 3'	02/1/2016	3.0	-	-	-	-	-	-	-	-	-
	L-8 @ 5'	02/1/2016	5.0	-	-	-	-	-	-	-	-	-
L-11	L-11 @ 1'	02/1/2016	1.0	-	-	-	-	-	-	-	-	-
	L-11 @ 3'	02/1/2016	3.0	-	-	-	-	-	-	-	-	-
	L-11 @ 5'	02/1/2016	5.0	-	-	-	-	-	-	-	-	-
L-12	L-12 @ 1'	02/1/2016	1.0	-	-	-	-	-	-	-	-	-
	L-12 @ 3'	02/1/2016	3.0	-	-	-	-	-	-	-	-	-

The Fehling Group, LLC

TABLE H-2

Soil Summary for PARC Area 1A - TPH, VOCs, SVOCs, PCBs, OCPs, OPPs, and Chlorinated Herbicides (wet weight basis)

(0 to 10 ft bgs)

Boring ID	Sample ID	Sample Collection Date	Sample Depth (ft bgs)	TPH GRO (mg/kg)	TPH DRO (mg/kg)	TPH ORO (mg/kg)	VOCs (µg/kg)	SVOCs (µg/kg)	PCBs (µg/kg)*	OCPs (µg/kg)**	OPPs (µg/kg)	Chlorinated Herbicides (µg/kg)
L7	L-7 @ 1'	02/26/2016	1.0	ND	**63**	-	ND	ND	ND	ND	-	-
	L-7 @ 2'	02/26/2016	2.0	-	-	-	-	-	-	-	-	-
	L-7 @ 3'	02/26/2016	3.0	-	-	-	-	-	-	-	-	-
L8	L-8 @ 1'	02/26/2016	1.0	ND	ND	-	ND	ND	ND	ND	-	-
	L-8 @ 2'	02/26/2016	2.0	-	-	-	-	-	-	-	-	-
	L-8 @ 3'	02/26/2016	3.0	-	-	-	-	-	-	-	-	-
L-11	L-11 @ 1'	02/26/2016	1.0	ND	ND	-	ND	ND	ND	ND	-	-
	L-11 @ 2'	02/26/2016	2.0	-	-	-	-	-	-	-	-	-
	L-11 @ 3'	02/26/2016	3.0	-	-	-	-	-	-	-	-	-
L-12	L-12 @ 1'	02/26/2016	1.0	ND	ND	-	ND	ND	ND	ND	-	-
	L-12 @ 2'	02/26/2016	2.0	ND	**110**	-	ND	ND	**17**	**2.9**	-	-
	L-12 @ 3'	02/26/2016	3.0	-	-	-	-	-	-	-	-	-
		# of non-detects =>		**5**	**3**	**0**	**5**	**5**	**4**	**4**	**0**	**0**
		# of detects =>		**0**	**2**	**0**	**0**	**0**	**1**	**1**	**0**	**0**
		# of samples =>		**5**	**5**	**0**	**5**	**5**	**5**	**5**	**0**	**0**
		frequency of detection =>		**0%**	**40%**	**-**	**0%**	**0%**	**20%**	**20%**	**-**	**-**
		minimum detected =>		**-**	**63**	**-**	**-**	**-**	**17**	**2.9**	**-**	**-**
		maximum detected =>		**-**	**110**	**-**	**-**	**-**	**17**	**2.9**	**-**	**-**

* Detected PCB is Arochlor 1260.

** Detected OCP is 4,4'-DDT.

The Fehling Group, LLC

TABLE H-3
Soil EPCs (0 to 10 ft bgs)
~ PARC Area 1A ~

				Concentrations in Soil (wet weight basis)*								Concentrations in Soil (dry weight basis)**							
Boring ID	Sample ID	Sample Collection Date	Sample Depth (ft bgs)	Barium (mg/kg)	Copper (mg/kg)	Lead (mg/kg)	Mercury (mg/kg)	Zinc (mg/kg)	TPH-DRO (mg/kg)	Arochlor 1260 (µg/kg)	4,4'-DDT (µg/kg)	Barium (mg/kg)	Copper (mg/kg)	Lead (mg/kg)	Mercury (mg/kg)	Zinc (mg/kg)	TPH-DRO (mg/kg)	Arochlor 1260 (µg/kg)	4,4'-DDT (µg/kg)
1A-1	1A-1-0.5	05/15/2017	0.5	**200**	**230**	**860**	**0.91**	**240**	-	-	-	**212**	**243**	**910**	**0.96**	**254**	-	-	-
	1A-1-1.0	05/15/2017	1.0	**99**	**46**	**230**	*0.1*	**130**	-	-	-	**105**	**49**	**243**	*0.11*	**137**	-	-	-
	1A-1-3.0	05/15/2017	3.0	**97**	**100**	**440**	**0.12**	**170**	-	-	-	**103**	**106**	**465**	**0.13**	**180**	-	-	-
	1A-1-5.0	05/15/2017	5.0	**33**	**4.5**	**1.1**	*0.1*	**15**	-	-	-	**35**	**4.8**	**1.2**	*0.11*	**16**	-	-	-
1A-2	1A-2-0.5	05/15/2017	0.5	**310**	**50**	**310**	**0.45**	**480**	-	-	-	**328**	**53**	**328**	**0.48**	**508**	-	-	-
	1A-2-1.0	05/15/2017	1.0	**63**	**9.2**	**15**	**0.2**	**45**	-	-	-	**67**	**10**	**16**	**0.21**	**48**	-	-	-
	1A-2-3.0	05/15/2017	3.0	**39**	**4.2**	**1.1**	*0.1*	**16**	-	-	-	**41**	**4.4**	**1.2**	*0.11*	**17**	-	-	-
	1A-2-5.0	05/15/2017	5.0	**120**	**18**	**3.2**	**0.17**	**45**	-	-	-	**127**	**19**	**3.4**	**0.18**	**48**	-	-	-
1A-3	1A-3-0.5	05/15/2017	0.5	**120**	**48**	**140**	**0.18**	**130**	-	-	-	**127**	**51**	**148**	**0.19**	**137**	-	-	-
	1A-3-1.0	05/15/2017	1.0	**130**	**26**	**130**	**0.2**	**150**	-	-	-	**137**	**27**	**137**	**0.21**	**159**	-	-	-
	1A-3-3.0	05/15/2017	3.0	**68**	**6.9**	**1.5**	*0.1*	**25**	-	-	-	**72**	**7.3**	**1.6**	*0.11*	**26**	-	-	-
	1A-3-5.0	05/15/2017	5.0	**35**	**3.9**	*1*	*0.1*	**17**	-	-	-	**37**	**4.1**	*1.1*	*0.11*	**18**	-	-	-
1A-4	1A-4-0.5	05/15/2017	0.5	**100**	**43**	**140**	**0.22**	**210**	-	-	-	**106**	**45**	**148**	**0.23**	**222**	-	-	-
	1A-4-1.0	05/15/2017	1.0	**83**	**16**	**4.2**	*0.1*	**39**	-	-	-	**88**	**17**	**4.4**	*0.11*	**41**	-	-	-
	1A-4-3.0	05/15/2017	3.0	**66**	**11**	**1.9**	*0.1*	**29**	-	-	-	**70**	**12**	**2.0**	*0.11*	**31**	-	-	-
	1A-4-5.0	05/15/2017	5.0	**55**	**7.7**	**1.7**	*0.1*	**26**	-	-	-	**58**	**8.1**	**1.8**	*0.11*	**27**	-	-	-
L7	L-7 @ 1'	02/1/2016	1.0	**150**	**100**	**290**	**0.2**	**200**	-	-	-	**159**	**106**	**307**	**0.21**	**212**	-	-	-
	L-7 @ 3'	02/1/2016	3.0	-	-	-	-	-	-	-	-	-	-	-	-	-	-	-	-
	L-7 @ 5'	02/1/2016	5.0	-	-	-	-	-	-	-	-	-	-	-	-	-	-	-	-
L8	L-8 @ 1'	02/1/2016	1.0	**91**	**15**	**32**	*0.1*	**59**	-	-	-	**96**	**16**	**34**	*0.11*	**62**	-	-	-
	L-8 @ 3'	02/1/2016	3.0	-	-	-	-	-	-	-	-	-	-	-	-	-	-	-	-
	L-8 @ 5'	02/1/2016	5.0	-	-	-	-	-	-	-	-	-	-	-	-	-	-	-	-
L-11	L-11 @ 1'	02/1/2016	1.0	**600**	**170**	**690**	**3.3**	**1500**	-	-	-	**635**	**180**	**730**	**3.5**	**1586**	-	-	-
	L-11 @ 3'	02/1/2016	3.0	**73**	**9.8**	**2.5**	**0.1**	**30**	-	-	-	**77**	**10**	**2.6**	**0.11**	**32**	-	-	-
	L-11 @ 5'	02/1/2016	5.0	-	-	-	-	-	-	-	-	-	-	-	-	-	-	-	-
L-12	L-12 @ 1'	02/1/2016	1.0	**85**	**15**	**76**	**0.13**	**76**	-	-	-	**90**	**16**	**80**	**0.14**	**80**	-	-	-
	L-12 @ 3'	02/1/2016	3.0	-	-	-	-	-	-	-	-	-	-	-	-	-	-	-	-

The Fehling Group, LLC

TABLE H-3
Soil EPCs (0 to 10 ft bgs)
~ PARC Area 1A ~

				Concentrations in Soil (wet weight basis)*								Concentrations in Soil (dry weight basis)**							
Boring ID	Sample ID	Sample Collection Date	Sample Depth (ft bgs)	Barium (mg/kg)	Copper (mg/kg)	Lead (mg/kg)	Mercury (mg/kg)	Zinc (mg/kg)	TPH-DRO (mg/kg)	Arochlor 1260 (µg/kg)	4,4'-DDT (µg/kg)	Barium (mg/kg)	Copper (mg/kg)	Lead (mg/kg)	Mercury (mg/kg)	Zinc (mg/kg)	TPH-DRO (mg/kg)	Arochlor 1260 (µg/kg)	4,4'-DDT (µg/kg)
L7	L-7 @ 1'	02/26/2016	1.0	-	-	-	-	-	63	*1*	*1*	-	-	-	-	-	67	*1*	*1*
	L-7 @ 2'	02/26/2016	2.0	**100**	**19**	**3.9**	**0.1**	**42**	-	-	-	**106**	**20**	**4.1**	**0.11**	**44**	-	-	-
	L-7 @ 3'	02/26/2016	3.0	**61**	**12**	**5.4**	*0.1*	**29**	-	-	-	**65**	**13**	**5.7**	*0.11*	**31**	-	-	-
L8	L-8 @ 1'	02/26/2016	1.0	-	-	-	-	-	*10*	*1*	*1*	-	-	-	-	-	*11*	*1*	*1*
	L-8 @ 2'	02/26/2016	2.0	**33**	**3.8**	**1.3**	**0.19**	**13**	-	-	-	**35**	**4.0**	**1.4**	**0.20**	**14**	-	-	-
	L-8 @ 3'	02/26/2016	3.0	**37**	**3.8**	**1.2**	*0.1*	**15**	-	-	-	**39**	**4.0**	**1.3**	*0.11*	**16**	-	-	-
L-11	L-11 @ 1'	02/26/2016	1.0	-	-	-	-	-	*10*	*1*	*1*	-	-	-	-	-	*11*	*1*	*1*
	L-11 @ 2'	02/26/2016	2.0	**42**	**4.7**	**1.4**	*0.1*	**19**	-	-	-	**44**	**5.0**	**1.5**	*0.11*	**20**	-	-	-
	L-11 @ 3'	02/26/2016	3.0	**48**	**5.6**	**3.3**	*0.1*	**20**	-	-	-	**51**	**5.9**	**3.5**	*0.11*	**21**	-	-	-
L-12	L-12 @ 1'	02/26/2016	1.0	-	-	-	-	-	*10*	*1*	*1*	-	-	-	-	-	*11*	*1*	*1*
	L-12 @ 2'	02/26/2016	2.0	**45**	**4.5**	**4.9**	*0.1*	**19**	**110**	**17**	**2.9**	**48**	**4.8**	**5.2**	*0.11*	**20**	**116**	**18**	**3**
	L-12 @ 3'	02/26/2016	3.0	**35**	**3.4**	**1.0**	*0.1*	**14**	-	-	-	**37**	**3.6**	**1.1**	*0.11*	**15**	-	-	-
			95% UCL for 0 to 10 ft bgs (see Attachment O)* =>									**329**	**140**	**389**	**0.81**	**380**	**116**	**18**	**3**

* Italicized value is the reporting limit for 'non-detect' ('ND') result.

* 95% UCL not calculated due to low number of samples; value shown is maximum value

** Dry weight concentration = Wet weight concentration x (1 + average moisture content)
where average moisture content = 0.056 g/g (see **Table 1**).

The Fehling Group, LLC

TABLE H-4
Soil Risk Characterization Summary
~ PARC Area 1A ~

		Soil RBC (mg/kg)*				Risk Values (Incremental Lifetime Cancer Risk [ILCR] and Hazard Quotient [HQ])			
		Residential Receptor		Construction Worker Receptor		Residential Receptor		Construction Worker Receptor	
Soil COPC	**Soil EPC (mg/kg, dry weight basis)**	**Cancer Endpoint**	**Noncancer Endpoint**	**Cancer Endpoint**	**Noncancer Endpoint**	**ILCR (unitless)**	**HQ (unitless)**	**ILCR (unitless)**	**HQ (unitless)**
Barium	329	--	1.50E+04	--	3.02E+03	--	2.2E-02	--	1.1E-01
Copper	140	--	3.10E+03	--	1.42E+04	--	4.5E-02	--	9.9E-03
Lead	389	Not applicable (see Section 3.2.1.2)							
Mercury	0.81	--	1.01E+00	--	4.36E+01	--	8.0E-01	--	1.9E-02
Zinc	380	--	2.30E+04	--	1.06E+05	--	1.7E-02	--	3.6E-03
TPH-DRO	116	--	9.60E+01	--	8.85E+02	--	1.2E+00	--	1.3E-01
Arochlor 1260	0.018	2.40E-01	--	5.60E+00	--	7.5E-08	--	3.2E-09	--
4,4-DDT	0.003	1.90E+00	3.70E+01	5.73E+01	1.41E+02	1.6E-09	8.3E-05	5.4E-11	2.2E-05
		Cumulative Risk Values (ILCR and HI Values) =>				**7.7E-08**	**2.1E+00**	**3.3E-09**	**2.7E-01**

* "Combined" value listed in **Table 5** for the residential receptor and **Table 6** for the construction worker receptor.

The Fehling Group, LLC

ATTACHMENT I

Tables for PARC Area 2A, 2B, and 2C

TABLE I-1

Soil Summary for PARC Area 2A, 2B, and 2C - Metals (0 to 10 ft bgs)

~ in units of mg/kg (wet weight basis) ~

Boring ID	Sample ID	Sample Collection Date	Sample Depth (ft bgs)	Antimony	Arsenic	Barium	Beryllium	Cadmium	Chromium	Cobalt	Copper	Lead	Mercury	Molybdenum	Nickel	Selenium	Silver	Thallium	Vanadium	Zinc
R-13-02	R02@5'	08/21/2013	5.0	ND	1.5	68	ND	1.2	11	5.3	13	ND	0.078	ND	7.5	ND	ND	ND	31	37
A-13-19	A19@5'	08/22/2013	5.0	ND	ND	14	ND	ND	ND	ND	51	ND	0.058	ND	ND	ND	ND	ND	ND	66
A-13-20	A20@5'	09/23/2013	5.0	ND	ND	82	ND	1.7	12	6.8	16	35	0.097	ND	9	ND	ND	ND	33	110
A-13-21	A21@5'	09/20/2013	5.0	ND	6	83	ND	2.7	16	6	250	170	0.12	ND	18	ND	ND	ND	25	160
2A-1	2A-1-0.5	05/15/2017	0.5	ND	ND	160	ND	ND	8.8	4.2	12	7.6	ND	ND	9.4	ND	ND	ND	19	46
	2A-1-1.0	05/15/2017	1.0	ND	ND	84	ND	ND	11	7.3	12	6.3	ND	ND	7.8	ND	ND	ND	27	36
	2A-1-3.0	05/15/2017	3.0	ND	ND	42	ND	ND	5.5	4.1	5.7	5.8	ND	ND	3.7	ND	ND	ND	15	23
	2A-1-5.0	05/15/2017	5.0	ND	1.0	90	ND	ND	7.7	2.8	5.5	10	ND	ND	4.8	ND	ND	ND	14	14
2A-2	2A-2-0.5	05/15/2017	0.5	ND	1.9	85	ND	ND	8.8	5.6	18	28	ND	ND	7.5	ND	ND	ND	22	48
	2A-2-1.0	05/15/2017	1.0	ND	1.4	59	ND	ND	8.1	5.3	8.4	6.5	ND	ND	5.6	ND	ND	ND	21	31
	2A-2-3.0	05/15/2017	3.0	ND	ND	49	ND	ND	6.6	4.5	6.7	2.6	ND	ND	4.6	ND	ND	ND	18	23
	2A-2-5.0	05/15/2017	5.0	ND	ND	58	ND	ND	8.6	5.5	6.9	1.2	ND	ND	5.1	ND	ND	ND	22	22
P33-B1	MC-1	08/15/2015	2.5	ND	ND	71	ND	ND	11	5	11	2.4	ND	ND	7.1	ND	ND	ND	21	33
	MC-2	08/15/2015	5.0	ND	2.1	140	1.3	ND	15	8.5	23	4.7	0.12	ND	11	ND	ND	ND	38	52
	MC-3	08/15/2015	7.5	ND	ND	136	ND	ND	3.3	2.9	3.8	ND	ND	ND	2.7	ND	ND	ND	11	15
P33-B2	MC-1	08/7/2015	2.5	ND	ND	33	ND	ND	4.4	2.4	4.5	1.1	ND	ND	3.2	ND	ND	ND	11	17
	MC-2	08/7/2015	5.0	ND	ND	130	1.4	ND	17	8.6	22	3.9	0.11	ND	12	ND	ND	ND	41	60
	MC-3	08/7/2015	7.5	ND	ND	23	ND	ND	3	2.1	5.3	1	0.9	ND	2.2	ND	ND	ND	10	16
	MC-4	08/7/2015	10.0	ND	ND	40	ND	ND	4.8	2.1	4	ND	ND	ND	2.3	ND	ND	ND	7.6	14
P33-B3	MC-1	08/7/2015	2.5	ND	ND	35	ND	ND	5.1	2.9	5.4	1.3	ND	ND	3.6	ND	ND	ND	14	19
	MC-2	08/7/2015	5.0	ND	1.7	120	1.6	ND	18	8.8	23	4.5	ND	ND	13	ND	ND	ND	41	60
	MC-3	08/7/2015	7.5	ND	ND	27	ND	ND	3.5	2	3.5	ND	ND	ND	2.4	ND	ND	ND	7.5	12
	MC-4	08/7/2015	10.0	ND	ND	54	ND	ND	8.5	4.3	7.8	1.4	ND	ND	5.3	ND	ND	ND	20	26
P33-B4	MC-1	08/7/2015	2.5	ND	1	89	ND	ND	11	5.7	13	3	ND	ND	8.1	ND	ND	ND	25	38
	MC-2	08/7/2015	5.0	ND	ND	58	ND	ND	8	4.1	8.2	1.6	ND	ND	5.5	ND	ND	ND	17	26
	MC-3	08/7/2015	7.5	ND	ND	21	ND	ND	3.1	2	2.6	ND	ND	ND	1.9	ND	ND	ND	5.7	9.3
	MC-4	08/7/2015	10.0	ND	ND	20	ND	ND	2.7	1.5	2.4	ND	3.4	ND	1.7	ND	ND	ND	6.5	11

The Fehling Group, LLC

TABLE I-1

Soil Summary for PARC Area 2A, 2B, and 2C - Metals (0 to 10 ft bgs)

~ in units of mg/kg (wet weight basis) ~

Boring ID	Sample ID	Sample Collection Date	Sample Depth (ft bgs)	Antimony	Arsenic	Barium	Beryllium	Cadmium	Chromium	Cobalt	Copper	Lead	Mercury	Molybdenum	Nickel	Selenium	Silver	Thallium	Vanadium	Zinc
P32-B1	MC-1	08/12/2015	2.5	ND	ND	50	ND	ND	6.3	3.2	6	1.2	ND	ND	4.1	ND	ND	ND	16	21
	MC-2	08/12/2015	5.0	ND	ND	35	ND	ND	5.1	2.5	5.9	1.5	0.12	ND	3.4	ND	ND	ND	14	18
	MC-3	08/12/2015	7.5	ND	ND	23	ND	ND	3.6	2	4.9	1.2	ND	ND	2.4	ND	ND	ND	9.6	14
	MC-4	08/12/2015	10.0	ND	ND	38	ND	ND	5.6	3.7	5.6	1.1	ND	ND	3.8	ND	ND	ND	17	19
P32-B2	MC-1	08/12/2015	2.5	ND	ND	58	ND	ND	8.3	4.1	7.4	1.8	ND	ND	5.3	ND	ND	ND	19	26
	MC-2	08/12/2015	5.0	ND	1.1	52	ND	ND	8	3.9	10	2.5	ND	ND	5.6	ND	ND	ND	18	26
	MC-3	08/12/2015	7.5	ND	ND	32	ND	ND	4.2	2.3	4	1.2	ND	ND	2.7	ND	ND	ND	11	15
	MC-4	08/12/2015	10.0	ND	1.3	55	ND	ND	7.9	4.2	10	2.2	ND	ND	5.6	ND	ND	ND	17	23
RR-B1	MC-1	08/25/2015	2.5	ND	ND	44	ND	ND	6.1	3.4	7.6	2.4	ND	ND	4.4	ND	ND	ND	15	22
	MC-2	08/25/2015	5.0	ND	ND	53	ND	ND	7.7	4.2	10	3.6	ND	ND	5.3	ND	ND	ND	19	27
	MC-3	08/25/2015	7.5	ND	1.2	64	ND	ND	9.4	4.9	12	5.9	ND	ND	6.3	ND	ND	ND	22	33
	MC-4	08/25/2015	10.0	ND	1.1	52	ND	ND	7.9	4	8.9	5.5	ND	ND	5.4	ND	ND	ND	20	28
RR-B2	MC-1	08/25/2015	2.5	ND	ND	46	ND	ND	6	3.5	6.2	1.2	ND	ND	4.3	ND	ND	ND	17	22
	MC-2	08/25/2015	5.0	ND	ND	86	ND	ND	11	6.1	11	2.4	ND	ND	8.2	ND	ND	ND	26	42
	MC-3	08/25/2015	7.5	ND	ND	30	ND	ND	4.2	2.7	4.7	1.2	ND	ND	2.9	ND	ND	ND	10	15
	MC-4	08/25/2015	10.0	ND	ND	21	ND	ND	3.4	1.4	2.9	1	ND	ND	1.7	ND	ND	ND	6.2	12
RR-B3	MC-1	08/25/2015	2.5	ND	2.3	150	ND	ND	12	4.1	14	41	0.18	ND	8.9	ND	ND	ND	19	42
	MC-2	08/25/2015	5.0	ND	3.7	140	ND	ND	16	5.9	24	44	0.23	ND	15	ND	ND	ND	25	93
	MC-3	08/25/2015	7.5	ND	2.5	130	ND	ND	17	6.1	21	24	0.18	ND	13	ND	ND	ND	30	66
	MC-4	08/25/2015	10.0	ND	1.1	55	ND	ND	8.3	3.6	10	7.5	0.12	ND	5.1	ND	ND	ND	15	29
		# of non-detects =>		**47**	**31**	**0**	**44**	**44**	**1**	**1**	**0**	**7**	**34**	**47**	**1**	**47**	**47**	**47**	**1**	**0**
		# of detects =>		**0**	**16**	**47**	**3**	**3**	**46**	**46**	**47**	**40**	**13**	**0**	**46**	**0**	**0**	**0**	**46**	**47**
		# of samples =>		**47**	**47**	**47**	**47**	**47**	**47**	**47**	**47**	**47**	**47**	**47**	**47**	**47**	**47**	**47**	**47**	**47**
		frequency of detection =>		**0%**	**34%**	**100%**	**6%**	**6%**	**98%**	**98%**	**100%**	**85%**	**28%**	**0%**	**98%**	**0%**	**0%**	**0%**	**98%**	**100%**
		minimum detected =>		**-**	**1**	**14**	**1.3**	**1.2**	**2.7**	**1.4**	**2.4**	**1**	**0.058**	**-**	**1.7**	**-**	**-**	**-**	**5.7**	**9.3**
		maximum detected =>		**-**	**6**	**160**	**1.6**	**2.7**	**18**	**8.8**	**250**	**170**	**3.4**	**-**	**18**	**-**	**-**	**-**	**41**	**160**

The Fehling Group, LLC

TABLE I-2

Soil Summary for PARC Area 2A, 2B, and 2C - TPH, VOCs, SVOCs, PCBs, OCPs, OPPs, and Chlorinated Herbicides (wet weight basis) (0 to 10 ft bgs)

Boring ID	Sample ID	Sample Collection Date	Sample Depth (ft bgs)	TPH GRO (mg/kg)	TPH DRO (mg/kg)	TPH ORO (mg/kg)	VOCs (µg/kg)	SVOCs (µg/kg)	PCBs (µg/kg)	OCPs (µg/kg)	OPPs (µg/kg)	Chlorinated Herbicides (µg/kg)
R-13-02	R02@5'	08/21/2013	5.0	*ND*	*ND*	*ND*	*ND*	-	-	-	-	-
A-13-19	A19@5'	08/22/2013	5.0	*ND*	*ND*	*ND*	*ND*	-	-	-	-	-
A-13-20	A20@5'	09/23/2013	5.0	**14**	**2**	*ND*	*ND*	-	-	-	-	-
A-13-21	A21@5'	09/20/2013	5.0	**370**	**50**	**11**	*ND*	-	-	-	-	-
2A-1	2A-1-0.5	05/15/2017	0.5	-	-	-	-	-	-	-	-	-
	2A-1-1.0	05/15/2017	1.0	*ND*	*ND*	-	*ND*	*ND*	*ND*	*ND*	-	*ND*
	2A-1-3.0	05/15/2017	3.0	*ND*	*ND*	-	*ND*	*ND*	-	-	-	-
	2A-1-5.0	05/15/2017	5.0	-	-	-	-	-	-	-	-	-
2A-2	2A-2-0.5	05/15/2017	0.5	-	-	-	-	-	-	-	-	-
	2A-2-1.0	05/15/2017	1.0	*ND*	**18**	-	*ND*	*ND*	*ND*	*ND*	-	*ND*
	2A-2-3.0	05/15/2017	3.0	-	-	-	-	-	-	-	-	-
	2A-2-5.0	05/15/2017	5.0	*ND*	*ND*	-	*ND*	*ND*	-	-	-	-
P33-B1	MC-1	08/15/2015	2.5	*ND*	*ND*	*ND*	*ND*	*ND*	*ND*	*ND*	*ND*	*ND*
	MC-2	08/15/2015	5.0	*ND*	*ND*	*ND*	*ND*	*ND*	-	-	-	-
	MC-3	08/15/2015	7.5	*ND*	*ND*	*ND*	*ND*	*ND*	-	-	-	-
P33-B2	MC-1	08/7/2015	2.5	*ND*	*ND*	*ND*	*ND*	*ND*	-	-	-	-
	MC-2	08/7/2015	5.0	*ND*	*ND*	*ND*	*ND*	*ND*	-	-	-	-
	MC-3	08/7/2015	7.5	*ND*	*ND*	*ND*	*ND*	*ND*	-	-	-	-
	MC-4	08/7/2015	10.0	*ND*	*ND*	*ND*	*ND*	*ND*	-	-	-	-
P33-B3	MC-1	08/7/2015	2.5	*ND*	*ND*	*ND*	*ND*	*ND*	-	-	-	-
	MC-2	08/7/2015	5.0	*ND*	*ND*	*ND*	*ND*	*ND*	-	-	-	-
	MC-3	08/7/2015	7.5	*ND*	*ND*	*ND*	*ND*	*ND*	-	-	-	-
	MC-4	08/7/2015	10.0	*ND*	*ND*	*ND*	*ND*	*ND*	-	-	-	-
P33-B4	MC-1	08/7/2015	2.5	*ND*	*ND*	*ND*	*ND*	*ND*	*ND*	*ND*	*ND*	*ND*
	MC-2	08/7/2015	5.0	*ND*	*ND*	*ND*	*ND*	*ND*	*ND*	-	-	-
	MC-3	08/7/2015	7.5	*ND*	*ND*	*ND*	*ND*	*ND*	*ND*	-	-	-
	MC-4	08/7/2015	10.0	*ND*	*ND*	*ND*	*ND*	*ND*	-	-	-	-
P32-B1	MC-1	08/12/2015	2.5	*ND*	*ND*	*ND*	*ND*	*ND*	*ND*	*ND*	*ND*	*ND*
	MC-2	08/12/2015	5.0	*ND*	*ND*	*ND*	*ND*	*ND*	-	-	-	-
	MC-3	08/12/2015	7.5	*ND*	*ND*	*ND*	*ND*	*ND*	-	-	-	-
	MC-4	08/12/2015	10.0	*ND*	*ND*	*ND*	*ND*	*ND*	-	-	-	-

The Fehling Group, LLC

TABLE I-2

Soil Summary for PARC Area 2A, 2B, and 2C - TPH, VOCs, SVOCs, PCBs, OCPs, OPPs, and Chlorinated Herbicides (wet weight basis) (0 to 10 ft bgs)

Boring ID	Sample ID	Sample Collection Date	Sample Depth (ft bgs)	TPH GRO (mg/kg)	TPH DRO (mg/kg)	TPH ORO (mg/kg)	VOCs (µg/kg)	SVOCs (µg/kg)	PCBs (µg/kg)	OCPs (µg/kg)	OPPs (µg/kg)	Chlorinated Herbicides (µg/kg)
P32-B2	MC-1	08/12/2015	2.5	*ND*	*ND*	*ND*	*ND*	*ND*	-	-	-	-
	MC-2	08/12/2015	5.0	*ND*	*ND*	*ND*	*ND*	*ND*	-	-	-	-
	MC-3	08/12/2015	7.5	*ND*	*ND*	*ND*	*ND*	*ND*	-	-	-	-
	MC-4	08/12/2015	10.0	*ND*	*ND*	*ND*	*ND*	*ND*	-	-	-	-
RR-B1	MC-1	08/25/2015	2.5	*ND*	*ND*	*ND*	*ND*	*ND*	*ND*	*ND*	-	-
	MC-2	08/25/2015	5.0	*ND*	**17**	**43**	*ND*	*ND*	-	-	-	-
	MC-3	08/25/2015	7.5	*ND*	*ND*	*ND*	*ND*	*ND*	-	-	-	-
	MC-4	08/25/2015	10.0	*ND*	*ND*	*ND*	*ND*	*ND*	-	-	-	-
RR-B2	MC-1	08/25/2015	2.5	*ND*	*ND*	*ND*	*ND*	*ND*	*ND*	*ND*	-	-
	MC-2	08/25/2015	5.0	*ND*	*ND*	*ND*	*ND*	*ND*	-	-	-	-
	MC-3	08/25/2015	7.5	*ND*	*ND*	*ND*	*ND*	*ND*	-	-	-	-
	MC-4	08/25/2015	10.0	*ND*	*ND*	*ND*	*ND*	*ND*	-	-	-	-
RR-B3	MC-1	08/25/2015	2.5	*ND*	**13**	**23**	*ND*	*ND*	*ND*	*ND*	-	-
	MC-2	08/25/2015	5.0	*ND*	**12**	**15**	*ND*	*ND*	*ND*	*ND*	-	-
	MC-3	08/25/2015	7.5	*ND*	*ND*	*ND*	*ND*	*ND*	-	-	-	-
	MC-4	08/25/2015	10.0	*ND*	**12**	**31**	*ND*	*ND*	-	-	-	-
		# of non-detects =>		**41**	**36**	**34**	**43**	**39**	**11**	**9**	**3**	**5**
		# of detects =>		**2**	**7**	**5**	**0**	**0**	**0**	**0**	**0**	**0**
		# of samples =>		**43**	**43**	**39**	**43**	**39**	**11**	**9**	**3**	**5**
		frequency of detection =>		**5%**	**16%**	**13%**	**0%**	**0%**	**0%**	**0%**	**0%**	**0%**
		minimum detected =>		**14**	**2.4**	**11**	**-**	**-**	**-**	**-**	**-**	**-**
		maximum detected =>		**370**	**50**	**43**	**-**	**-**	**-**	**-**	**-**	**-**

The Fehling Group, LLC

TABLE I-3

Soil Gas and Ambient Air Summary for PARC Area 2A, 2B, and 2C

VOCs and TPH-GRO (detected analytes only)

Sample ID	Secondary Sample ID	DateCollected	Sample Depth (ft bgs)	1,1,1-Trichloroethane	1,1-Dichloroethane	1,2,4-Trichlorobenzene	1,2,4-Trimethylbenzene	1,3,5-Trimethylbenzene	1,3-Dichlorobenzene	2,2,4-Trimethylpentane	2-Butanone	2-Hexanone	4-Ethyl Toluene	4-Methyl-2-pentanone	Acetone	Acetonitrile	Benzene	Carbon disulfide	Chlorobenzene	Chloroethane	Chloroform	Chloromethane	Cyclohexane	Dichlorodifluoromethane
2A-1-5	-	5/16/2017	5	89	ND	ND	ND	ND	ND	NA	21	ND	ND	ND	34	NA	6	27	ND	ND	ND	ND	NA	ND
2A-1-10	-	5/16/2017	10	54	ND	ND	ND	ND	ND	NA	33	ND	ND	ND	51	NA	ND	117	ND	ND	ND	ND	NA	ND
2A-1-15	-	5/16/2017	15	61	ND	ND	ND	ND	ND	NA	33	ND	ND	ND	68	NA	6	307	ND	ND	ND	ND	NA	ND
2A-2-5	-	5/16/2017	5	238	ND	ND	ND	ND	ND	NA	13	ND	ND	ND	31	NA	6	ND	ND	ND	ND	ND	NA	ND
2A-2-5 (DUP)	-	5/16/2017	5	227	ND	ND	ND	ND	ND	NA	57	ND	ND	ND	80	NA	ND	307	ND	ND	ND	ND	NA	ND
2A-2-10	-	5/16/2017	10	200	ND	ND	ND	ND	ND	NA	51	ND	ND	ND	51	NA	ND	237	ND	ND	ND	ND	NA	ND
2A-2-15	-	5/16/2017	15	105	ND	ND	ND	ND	ND	NA	10	ND	ND	ND	24	NA	ND	ND	ND	ND	ND	ND	NA	ND
2A-3-5	-	5/16/2017	5	21	ND	ND	ND	ND	ND	NA	9	ND	ND	ND	ND	NA	ND	ND	ND	ND	ND	ND	NA	ND
2A-3-10	-	5/16/2017	10	26	ND	ND	ND	ND	ND	NA	ND	ND	ND	ND	ND	NA	ND	ND	ND	ND	ND	ND	NA	ND
2A-3-15	-	5/16/2017	15	24	ND	ND	ND	ND	ND	NA	ND	ND	ND	ND	ND	NA	ND	ND	ND	ND	ND	ND	NA	ND
2A-AM	-	5/16/2017	Ambient	ND	ND	ND	ND	ND	ND	NA	39	ND	ND	ND	56	NA	ND	51	ND	ND	ND	ND	NA	ND
P33-VP-1	VP-1	8/5/2015	5	30	ND	ND	6	1	7	ND	2	ND	ND	3	10	ND	0.86	ND	ND	ND	ND	ND	2	4
P33-VP-2	VP-2	8/5/2015	5	70	ND	ND	3	ND	6	ND	4	ND	ND	2	20	ND	0.89	ND	ND	ND	ND	ND	2	ND
P33-VP-3	VP-3	8/5/2015	5	90	2	ND	4	ND	7	ND	2	ND	ND	3	10	ND	0.89	ND	ND	ND	2	ND	1	3
P33-VP-3 (DUP)	VP-3 (DUP)	8/5/2015	5	160	3	ND	4	ND	8	ND	1	1	ND	2	10	ND	ND	ND	ND	ND	3	ND	1	3
P33-VP-4	VP-4	8/5/2015	5	ND	ND	ND	3	ND	5	ND	2	ND	ND	1	20	ND	0.83	ND	2	ND	ND	0.68	1	ND
P33-VP-5	VP-5	8/5/2015	5	80	2	ND	4	ND	7	1	3	ND	ND	3	10	ND	0.83	ND	ND	ND	ND	ND	1	1
P33-VP-6	VP-6	8/5/2015	5	3	ND	ND	3	ND	7	ND	2	ND	ND	1	10	ND	1	ND	ND	ND	ND	2	1	ND
P33-VP-7	VP-7	8/5/2015	5	40	ND	ND	4	1	9	1	2	ND	2	3	10	ND	0.89	ND	ND	ND	ND	ND	1	3
P32-VP-7 (DUP)	VP-7 (DUP)	8/7/2015	5	6	ND	ND	20	5	ND	2	3	ND	4	ND	20	ND	1	7	ND	ND	ND	0.62	ND	3
P33-VP-8	VP-8	8/5/2015	5	20	ND	ND	5	1	8	2	2	ND	1	4	10	ND	1	ND	ND	ND	2	ND	2	8
P33-VP-9	VP-9	8/5/2015	5	9	ND	ND	6	1	8	1	2	ND	1	3	10	ND	0.89	ND	ND	ND	ND	ND	1	2
P33-VP-9 (DUP)	VP-9 (DUP)	8/5/2015	5	9	ND	ND	5	1	8	2	2	ND	1	3	10	ND	2	ND	ND	ND	ND	ND	2	2
P33-VP-10	VP-10	8/5/2015	5	ND	ND	ND	ND	ND	ND	ND	ND	ND	ND	ND	2	ND	ND	ND	ND	ND	ND	ND	ND	ND
P33-VP-11	VP-11	8/5/2015	5	7	ND	NA	4	ND	7	2	1	ND	ND	4	8	ND	ND	ND	ND	ND	ND	ND	1	ND
P33-VP-12	VP-12	8/5/2015	5	3	ND	ND	3	ND	7	1	1	ND	ND	2	9	ND	ND	ND	ND	ND	ND	ND	1	ND
P32-VP-1	VP-1	8/7/2015	5	5	ND	ND	ND	ND	ND	ND	9	ND	ND	ND	40	0.86	2	1	ND	ND	ND	ND	ND	5
P32-VP-2	VP-2	8/7/2015	5	ND	ND	ND	2	ND	ND	ND	0.97	ND	ND	ND	10	ND	6	ND	ND	ND	ND	0.54	ND	ND
P32-VP-3	VP-3	8/7/2015	5	8	ND	ND	ND	ND	ND	ND	3	ND	ND	ND	20	ND	ND	3	ND	ND	ND	ND	ND	2
P32-VP-4	VP-4	8/7/2015	5	5	ND	3	7	3	ND	ND	1	ND	2	ND	20	ND	ND	ND	ND	ND	ND	0.62	ND	1

The Fehling Group, LLC

TABLE I-3

Soil Gas and Ambient Air Summary for PARC Area 2A, 2B, and 2C

VOCs and TPH-GRO (detected analytes only)

Sample ID	Secondary Sample ID	DateCollected	Sample Depth (ft bgs)	1,1,1-Trichloroethane	1,1-Dichloroethane	1,2,4-Trichlorobenzene	1,2,4-Trimethylbenzene	1,3,5-Trimethylbenzene	1,3-Dichlorobenzene	2,2,4-Trimethylpentane	2-Butanone	2-Hexanone	4-Ethyl Toluene	4-Methyl-2-pentanone	Acetone	Acetonitrile	Benzene	Carbon disulfide	Chlorobenzene	Chloroethane	Chloroform	Chloromethane	Cyclohexane	Dichlorodifluoromethane
P32-VP-5	VP-5	8/7/2015	5	4	ND	ND	1	ND	ND	ND	5	ND	ND	ND	30	ND	1	1	ND	ND	ND	ND	ND	7
P32-VP-6	VP-6	8/7/2015	5	3	ND	ND	10	3	ND	4	1	ND	2	ND	10	ND	2	ND	ND	ND	ND	ND	ND	3
P32-VP-7	VP-7	8/7/2015	5	6	ND	ND	ND	ND	ND	ND	3	ND	ND	ND	20	ND	0.93	7	ND	ND	ND	ND	0.93	3
P32-VP-8	VP-8	8/7/2015	5	7	ND	ND	ND	ND	ND	ND	ND	ND	ND	ND	5	ND	ND	ND	ND	ND	ND	ND	ND	2
P32-VP-9	VP-9	8/7/2015	5	3	ND	ND	20	7	ND	4	7	ND	4	ND	30	0.71	4	2	ND	ND	ND	0.7	1	3
P32-VP-10	VP-10	8/7/2015	5	ND	ND	ND	4	ND	ND	ND	4	ND	1	ND	20	ND	ND	ND	ND	ND	ND	0.74	ND	2
P32-VMW-1	VMW-1	11/23/2016	10	ND	ND	ND	ND	ND	ND	ND	ND	ND	ND	ND	70	ND	ND	ND	ND	ND	ND	ND	ND	9
P32-VMW-1 (DUP)	VMW-1 (DUP)	11/23/2016	10	ND	ND	ND	ND	ND	ND	ND	ND	ND	ND	ND	60	ND	ND	ND	ND	ND	110	ND	ND	9
P32-VMW-1 (10')	VMW-1-10	11/28/2016	10	5	ND	ND	ND	ND	ND	ND	ND	ND	ND	ND	10	ND	ND	ND	ND	ND	ND	ND	ND	8
P32-VWM-2	VMW-2	11/23/2016	5	ND	ND	ND	ND	ND	ND	ND	ND	ND	ND	ND	50	ND	ND	ND	ND	ND	ND	ND	ND	ND
P32-VMW-2 (5')	VMW-2-5	11/28/2016	5	ND	ND	ND	ND	ND	ND	ND	ND	ND	ND	ND	10	ND	ND	ND	ND	ND	ND	ND	ND	4
P32-VWM-3	VWM-3	11/23/2016	15	ND	ND	ND	ND	ND	ND	ND	10	ND	ND	ND	270	10	70	10	ND	ND	ND	ND	4	ND
P32-VMW-3 (15')	VMW-3-15	11/28/2016	15	7	ND	ND	ND	ND	4	ND	7	ND	ND	ND	100	ND	30	20	ND	5	ND	3	ND	4
P32-VMW-3 (15') (DUP)	VMW-3-15 (DUP)	11/28/2016	15	6	ND	ND	ND	ND	7	ND	6	ND	ND	ND	100	5	20	20	ND	4	ND	3	ND	4
P32-VWM-4	VMW-4	11/23/2016	10	ND	ND	ND	ND	ND	ND	ND	5	ND	ND	ND	200	ND	ND	5	ND	ND	ND	ND	ND	ND
P32-VMW-4 (10')	VWM-4-10	11/28/2016	10	ND	ND	ND	ND	ND	ND	ND	ND	ND	ND	ND	30	ND	ND	ND	ND	ND	ND	ND	ND	ND
		# of non-detects =>		12	43	44	26	37	31	25	10	45	37	33	3	31	23	30	45	44	42	37	19	22
		# of detects =>		34	3	1	20	9	15	10	36	1	9	13	43	4	23	16	1	2	4	9	16	24
		# of samples =>		46	46	45	46	46	46	35	46	46	46	46	46	35	46	46	46	46	46	46	35	46
		frequency of detection =>		74%	7%	2%	43%	20%	33%	29%	78%	2%	20%	28%	93%	11%	50%	35%	2%	4%	9%	20%	46%	52%
		minimum detected =>		3	2	3	1	1	4	1	0.97	1	1	1	2	0.71	0.83	1	2	4	2	0.54	0.93	1
		maximum detected =>		238	3	3	20	7	9	4	57	1	4	4	270	10	70	307	2	5	110	3	4	9

The Fehling Group, LLC

TABLE I-3

Soil Gas and Ambient Air Summary for PARC Area 2A, 2B, and 2C

VOCs and TPH-GRO (detected analytes only)

Sample ID	Secondary Sample ID	DateCollected	Sample Depth (ft bgs)	Ethanol	Ethylbenzene	m,p-Xylene	Methylene chloride	Naphthalene	n-Propylbenzene	o-Xylene	p-Isopropyltoluene	Tetrachloroethene	Toluene	Trichloroethene	Trichlorofluoromethane	Vinyl acetate	Vinyl chloride	2-Propanol	Gasoline Range Organics
2A-1-5	-	5/16/2017	5	*NA*	*ND*	**10**	*ND*	*ND*	*NA*	*ND*	*NA*	**830**	**28**	*ND*	*ND*	*ND*	*ND*	*NA*	*NA*
2A-1-10	-	5/16/2017	10	*NA*	*ND*	*ND*	*ND*	*ND*	*NA*	*ND*	*NA*	**460**	**9**	*ND*	*ND*	*ND*	*ND*	*NA*	*NA*
2A-1-15	-	5/16/2017	15	*NA*	*ND*	*ND*	*ND*	*ND*	*NA*	**20**	*NA*	**360**	**12**	*ND*	*ND*	*ND*	*ND*	*NA*	*NA*
2A-2-5	-	5/16/2017	5	*NA*	**27**	**61**	*ND*	*ND*	*NA*	**39**	*NA*	**370**	**16**	*ND*	*ND*	*ND*	*ND*	*NA*	*NA*
2A-2-5 (DUP)	-	5/16/2017	5	*NA*	*ND*	**19**	*ND*	*ND*	*NA*	**9**	*NA*	**380**	**14**	*ND*	*ND*	*ND*	*ND*	*NA*	*NA*
2A-2-10	-	5/16/2017	10	*NA*	*ND*	**13**	**6**	*ND*	*NA*	**8**	*NA*	**280**	**9**	*ND*	*ND*	*ND*	*ND*	*NA*	*NA*
2A-2-15	-	5/16/2017	15	*NA*	*ND*	**10**	*ND*	*ND*	*NA*	*ND*	*NA*	**830**	**28**	*ND*	*ND*	*ND*	*ND*	*NA*	*NA*
2A-3-5	-	5/16/2017	5	*NA*	*ND*	*ND*	*ND*	*ND*	*NA*	**8**	*NA*	**25**	*ND*	*ND*	**26**	*ND*	*ND*	*NA*	*NA*
2A-3-10	-	5/16/2017	10	*NA*	*ND*	*ND*	*ND*	*ND*	*NA*	*ND*	*NA*	**28**	*ND*	*ND*	**27**	*ND*	*ND*	*NA*	*NA*
2A-3-15	-	5/16/2017	15	*NA*	*ND*	**13**	*ND*	*ND*	*NA*	*ND*	*NA*	**29**	**10**	*ND*	**21**	*ND*	*ND*	*NA*	*NA*
2A-AM	-	5/16/2017	Ambient	*NA*	*ND*	*ND*	*ND*	*ND*	*NA*	*ND*	*NA*	*ND*	*ND*	*ND*	*ND*	*ND*	*ND*	*NA*	*NA*
P33-VP-1	VP-1	8/5/2015	5	**110**	**2**	**20**	*ND*	*ND*	*ND*	**3**	**1**	**20**	**30**	**40**	**5**	**1**	*ND*	**60**	**3700**
P33-VP-2	VP-2	8/5/2015	5	**90**	**1**	**10**	*ND*	*ND*	*ND*	**2**	*ND*	**30**	**10**	*NA*	**3**	**1**	*ND*	**40**	**1900**
P33-VP-3	VP-3	8/5/2015	5	**140**	**2**	**20**	*ND*	*ND*	*ND*	**3**	*ND*	**30**	**20**	*NA*	**1**	*ND*	*ND*	*NA*	**2100**
P33-VP-3 (DUP)	VP-3 (DUP)	8/5/2015	5	**90**	**2**	**10**	*ND*	*ND*	*ND*	**3**	*ND*	**40**	**10**	**420**	**2**	**0.95**	*ND*	**120**	**3000**
P33-VP-4	VP-4	8/5/2015	5	**60**	**4**	**30**	**0.94**	**2**	*ND*	**4**	*ND*	**4**	**80**	**2**	*ND*	*ND*	*ND*	**1100**	**2700**
P33-VP-5	VP-5	8/5/2015	5	**200**	**3**	**20**	*ND*	*ND*	*ND*	**4**	*ND*	**20**	**40**	**80**	**2**	**2**	*ND*	**160**	**3700**
P33-VP-6	VP-6	8/5/2015	5	**70**	**2**	**10**	**1**	*ND*	*ND*	**2**	*ND*	**6**	**30**	**10**	*ND*	*ND*	*ND*	**370**	**1700**
P33-VP-7	VP-7	8/5/2015	5	**200**	**3**	**20**	*ND*	*ND*	*ND*	**4**	*ND*	**40**	**20**	*ND*	**2**	*ND*	*ND*	**50**	**1900**
P32-VP-7 (DUP)	VP-7 (DUP)	8/7/2015	5	**60**	**3**	**30**	*ND*	**40**	**2**	**6**	**10**	**9**	**4**	*ND*	**20**	**2**	**1**	**180**	**2100**
P33-VP-8	VP-8	8/5/2015	5	**330**	**3**	**20**	*ND*	*ND*	*ND*	**4**	*ND*	**20**	**10**	*ND*	**2**	**3**	*ND*	**100**	**2200**
P33-VP-9	VP-9	8/5/2015	5	**250**	**3**	**20**	*ND*	*ND*	*ND*	**5**	*ND*	**40**	**40**	**2**	**1**	**2**	*ND*	**80**	**2000**
P33-VP-9 (DUP)	VP-9 (DUP)	8/5/2015	5	**230**	**3**	**20**	*ND*	*ND*	*ND*	**4**	*ND*	**20**	**20**	**2**	*ND*	**2**	*ND*	**110**	**2600**
P33-VP-10	VP-10	8/5/2015	5	**280**	*ND*	*ND*	*ND*	*ND*	*ND*	*ND*	*ND*	**2**	**2**	*ND*	*ND*	*ND*	*ND*	*NA*	**2600**
P33-VP-11	VP-11	8/5/2015	5	**200**	**2**	**20**	*ND*	*ND*	*ND*	**3**	*ND*	**20**	**10**	*ND*	*ND*	**0.88**	*ND*	**40**	**4300**
P33-VP-12	VP-12	8/5/2015	5	**200**	**2**	**10**	*ND*	*ND*	*ND*	**3**	*ND*	**70**	**10**	*ND*	**2**	*ND*	*ND*	**40**	**2900**
P32-VP-1	VP-1	8/7/2015	5	**60**	**1**	**10**	*ND*	*ND*	*ND*	**2**	*ND*	**20**	**2**	*ND*	**10**	**1**	**3**	**210**	**2000**
P32-VP-2	VP-2	8/7/2015	5	**4**	**1**	**10**	*ND*	**6**	*ND*	**2**	*ND*	*ND*	**10**	*ND*	*ND*	*ND*	*ND*	**2200**	**3100**
P32-VP-3	VP-3	8/7/2015	5	**9**	*ND*	*ND*	*ND*	*ND*	*ND*	*ND*	*ND*	**10**	**0.94**	*ND*	**4**	*ND*	*ND*	**1100**	**4200**
P32-VP-4	VP-4	8/7/2015	5	**20**	**10**	**120**	*ND*	**2**	*ND*	**20**	*ND*	**6**	**280**	*ND*	**1**	*ND*	*ND*	**990**	**12000**

The Fehling Group, LLC

TABLE I-3

Soil Gas and Ambient Air Summary for PARC Area 2A, 2B, and 2C

VOCs and TPH-GRO (detected analytes only)

Sample ID	Secondary Sample ID	DateCollected	Sample Depth (ft bgs)	Ethanol	Ethylbenzene	m,p-Xylene	Methylene chloride	Naphthalene	n-Propylbenzene	o-Xylene	p-Isopropyltoluene	Tetrachloroethene	Toluene	Trichloroethene	Trichlorofluoromethane	Vinyl acetate	Vinyl chloride	2-Propanol	Gasoline Range Organics
P32-VP-5	VP-5	8/7/2015	5	40	2	10	*ND*	*ND*	*ND*	2	*ND*	10	4	*ND*	30	*ND*	1	2300	7100
P32-VP-6	VP-6	8/7/2015	5	7	2	20	*ND*	3	*ND*	4	3	7	8	*ND*	30	*ND*	*ND*	70	2400
P32-VP-7	VP-7	8/7/2015	5	20	*ND*	7	*ND*	*ND*	*ND*	1	*ND*	9	2	*ND*	20	*ND*	*ND*	70	2700
P32-VP-8	VP-8	8/7/2015	5	4	*ND*	*ND*	*ND*	1	*ND*	*ND*	*ND*	8	*ND*	*ND*	3	*ND*	*ND*	30	2200
P32-VP-9	VP-9	8/7/2015	5	20	5	70	*ND*	4	*ND*	20	2	5	30	*ND*	9	1	0.87	480	2400
P32-VP-10	VP-10	8/7/2015	5	50	20	150	*ND*	2	*ND*	30	*ND*	2	210	*ND*	2	*ND*	0.69	450	4200
P32-VMW-1	VMW-1	11/23/2016	10	3	*ND*	20	*ND*	*ND*	*ND*	*ND*	*ND*	10	50	*ND*	20	*ND*	*ND*	10	300
P32-VMW-1 (DUP)	VMW-1 (DUP)	11/23/2016	10	4	*ND*	*ND*	*ND*	*ND*	*ND*	*ND*	*ND*	490	40	*ND*	20	*ND*	*ND*	10	780
P32-VMW-1 (10')	VMW-1-10	11/28/2016	10	2	*ND*	*ND*	*ND*	*ND*	*ND*	*ND*	*ND*	10	60	*ND*	20	*ND*	*ND*	6000	*ND*
P32-VWM-2	VMW-2	11/23/2016	5	*ND*	*ND*	*ND*	*ND*	*ND*	*ND*	*ND*	*ND*	*ND*	40	*ND*	10	*ND*	*ND*	6	390
P32-VMW-2 (5')	VMW-2-5	11/28/2016	5	2	*ND*	*ND*	*ND*	*ND*	*ND*	*ND*	*ND*	9	60	*ND*	20	*ND*	*ND*	3200	*ND*
P32-VWM-3	VWM-3	11/23/2016	15	20	8	40	*ND*	*ND*	*ND*	5	*ND*	50	90	10	*ND*	*ND*	*ND*	20	1500
P32-VMW-3 (15')	VMW-3-15	11/28/2016	15	10	3	10	*ND*	*ND*	*ND*	*ND*	*ND*	9	70	*ND*	10	*ND*	*ND*	2000	450
P32-VMW-3 (15') (DUP)	VMW-3-15 (DUP)	11/28/2016	15	20	3	20	*ND*	*ND*	*ND*	*ND*	*ND*	7	190	*ND*	10	*ND*	*ND*	12000	850
P32-VWM-4	VMW-4	11/23/2016	10	10	*ND*	*ND*	*ND*	*ND*	*ND*	*ND*	*ND*	*ND*	30	*ND*	10	*ND*	*ND*	7	370
P32-VMW-4 (10')	VWM-4-10	11/28/2016	10	*ND*	*ND*	*ND*	*ND*	*ND*	*ND*	*ND*	*ND*	*ND*	90	*ND*	10	*ND*	*ND*	4800	360
		# of non-detects =>		2	21	14	43	38	34	18	31	5	4	36	15	35	41	0	2
		# of detects =>		33	25	32	3	8	1	28	4	41	42	8	31	11	5	33	33
		# of samples =>		35	46	46	46	46	35	46	35	46	46	44	46	46	46	33	35
		frequency of detection =>		94%	54%	70%	7%	17%	3%	61%	11%	89%	91%	18%	67%	24%	11%	100%	94%
		minimum detected =>		2	1	7	0.94	1	2	1	1	2	0.94	2	1	0.88	0.69	6	300
		maximum detected =>		330	27	150	6	40	2	39	10	830	280	420	30	3	3	12000	12000

The Fehling Group, LLC

TABLE I-4

Soil EPCs (0 to 10 ft bgs)

				Concentrations in Soil (wet weight basis, mg/kg)*							Concentrations in Soil (dry weight basis, mg/kg)**						
Boring ID	Sample ID	Sample Collection Date	Sample Depth (ft bgs)	Barium	Copper	Lead	Mercury	TPH-GRO	TPH-DRO	TPH-ORO	Barium	Copper	Lead	Mercury	TPH-GRO	TPH-DRO	TPH-ORO
R-13-02	R02@5'	08/21/2013	5.0	68	13	1	0.078	1	10	10	72	14	1.06	0.082	1.1	10.6	10.6
A-13-19	A19@5'	08/22/2013	5.0	14	51	1	0.058	1	10	10	15	54	1.06	0.061	1.1	10.6	10.6
A-13-20	A20@5'	09/23/2013	5.0	82	16	35	0.097	14	2	10	87	17	37	0.103	15	3	10.6
A-13-21	A21@5'	09/20/2013	5.0	83	250	170	0.12	370	50	11	88	264	180	0.13	391	53	12
2A-1	2A-1-0.5	05/15/2017	0.5	160	12	7.6	0.1	-	-	-	169	13	8.0	0.11	-	-	-
	2A-1-1.0	05/15/2017	1.0	84	12	6.3	0.1	1	10	-	89	13	6.7	0.11	1.1	10.6	-
	2A-1-3.0	05/15/2017	3.0	42	5.7	5.8	0.1	1	10	-	44	6.0	6.1	0.11	1.1	10.6	-
	2A-1-5.0	05/15/2017	5.0	90	5.5	10	0.1	-	-	-	95	5.8	11	0.11	-	-	-
2A-2	2A-2-0.5	05/15/2017	0.5	85	18	28	0.1	-	-	-	90	19	30	0.11	-	-	-
	2A-2-1.0	05/15/2017	1.0	59	8.4	6.5	0.1	1	18	-	62	8.9	6.9	0.11	1.1	19	-
	2A-2-3.0	05/15/2017	3.0	49	6.7	2.6	0.1	-	-	-	52	7.1	2.7	0.11	-	-	-
	2A-2-5.0	05/15/2017	5.0	58	6.9	1.2	0.1	1	10	-	61	7.3	1.3	0.11	1.1	10.6	-
P33-B1	MC-1	08/15/2015	2.5	71	11	2.4	0.1	1	10	10	75	12	2.5	0.11	1.1	10.6	10.6
	MC-2	08/15/2015	5.0	140	23	4.7	0.12	1	10	10	148	24	5.0	0.13	1.1	10.6	10.6
	MC-3	08/15/2015	7.5	136	3.8	1	0.1	1	10	10	144	4.0	1.06	0.11	1.1	10.6	10.6
P33-B2	MC-1	08/7/2015	2.5	33	4.5	1.1	0.1	1	10	10	35	4.8	1.2	0.11	1.1	10.6	10.6
	MC-2	08/7/2015	5.0	130	22	3.9	0.11	1	10	10	137	23	4.1	0.12	1.1	10.6	10.6
	MC-3	08/7/2015	7.5	23	5.3	1	0.9	1	10	10	24	5.6	1	1.0	1.1	10.6	10.6
	MC-4	08/7/2015	10.0	40	4	1	0.1	1	10	10	42	4	1.06	0.11	1.1	10.6	10.6
P33-B3	MC-1	08/7/2015	2.5	35	5.4	1.3	0.1	1	10	10	37	5.7	1.4	0.11	1.1	10.6	10.6
	MC-2	08/7/2015	5.0	120	23	4.5	0.1	1	10	10	127	24	4.8	0.11	1.1	10.6	10.6
	MC-3	08/7/2015	7.5	27	3.5	1	0.1	1	10	10	29	3.7	1.06	0.11	1.1	10.6	10.6
	MC-4	08/7/2015	10.0	54	7.8	1.4	0.1	1	10	10	57	8.2	1.5	0.11	1.1	10.6	10.6
P33-B4	MC-1	08/7/2015	2.5	89	13	3	0.1	1	10	10	94	14	3	0.11	1.1	10.6	10.6
	MC-2	08/7/2015	5.0	58	8.2	1.6	0.1	1	10	10	61	8.7	1.7	0.11	1.1	10.6	10.6
	MC-3	08/7/2015	7.5	21	2.6	1	0.1	1	10	10	22	2.7	1.06	0.11	1.1	10.6	10.6
	MC-4	08/7/2015	10.0	20	2.4	1	3.4	1	10	10	21	2.5	1.06	3.6	1.1	10.6	10.6

The Fehling Group, LLC

TABLE I-4

Soil EPCs (0 to 10 ft bgs)

				Concentrations in Soil (wet weight basis, mg/kg)*							Concentrations in Soil (dry weight basis, mg/kg)**						
Boring ID	Sample ID	Sample Collection Date	Sample Depth (ft bgs)	Barium	Copper	Lead	Mercury	TPH-GRO	TPH-DRO	TPH-ORO	Barium	Copper	Lead	Mercury	TPH-GRO	TPH-DRO	TPH-ORO
P32-B1	MC-1	08/12/2015	2.5	50	6	1.2	*0.1*	*1*	*10*	*10*	53	6	1.3	*0.11*	*1.1*	*10.6*	*10.6*
	MC-2	08/12/2015	5.0	35	5.9	1.5	0.12	*1*	*10*	*10*	37	6.2	1.6	0.13	*1.1*	*10.6*	*10.6*
	MC-3	08/12/2015	7.5	23	4.9	1.2	*0.1*	*1*	*10*	*10*	24	5.2	1.3	*0.11*	*1.1*	*10.6*	*10.6*
	MC-4	08/12/2015	10.0	38	5.6	1.1	*0.1*	*1*	*10*	*10*	40	5.9	1.2	*0.11*	*1.1*	*10.6*	*10.6*
P32-B2	MC-1	08/12/2015	2.5	58	7.4	1.8	*0.1*	*1*	*10*	*10*	61	7.8	1.9	*0.11*	*1.1*	*10.6*	*10.6*
	MC-2	08/12/2015	5.0	52	10	2.5	*0.1*	*1*	*10*	*10*	55	11	2.6	*0.11*	*1.1*	*10.6*	*10.6*
	MC-3	08/12/2015	7.5	32	4	1.2	*0.1*	*1*	*10*	*10*	34	4	1.3	*0.11*	*1.1*	*10.6*	*10.6*
	MC-4	08/12/2015	10.0	55	10	2.2	*0.1*	*1*	*10*	*10*	58	11	2.3	*0.11*	*1.1*	*10.6*	*10.6*
RR-B1	MC-1	08/25/2015	2.5	44	7.6	2.4	*0.1*	*1*	*10*	*10*	47	8.0	2.5	*0.11*	*1.1*	*10.6*	*10.6*
	MC-2	08/25/2015	5.0	53	10	3.6	*0.1*	*1*	17	43	56	11	3.8	*0.11*	*1.1*	18	45
	MC-3	08/25/2015	7.5	64	12	5.9	*0.1*	*1*	*10*	*10*	68	13	6.2	*0.11*	*1.1*	*10.6*	*10.6*
	MC-4	08/25/2015	10.0	52	8.9	5.5	*0.1*	*1*	*10*	*10*	55	9.4	5.8	*0.11*	*1.1*	*10.6*	*10.6*
RR-B2	MC-1	08/25/2015	2.5	46	6.2	1.2	*0.1*	*1*	*10*	*10*	49	6.6	1.3	*0.11*	*1.1*	*10.6*	*10.6*
	MC-2	08/25/2015	5.0	86	11	2.4	*0.1*	*1*	*10*	*10*	91	12	2.5	*0.11*	*1.1*	*10.6*	*10.6*
	MC-3	08/25/2015	7.5	30	4.7	1.2	*0.1*	*1*	*10*	*10*	32	5.0	1.3	*0.11*	*1.1*	*10.6*	*10.6*
	MC-4	08/25/2015	10.0	21	2.9	1	*0.1*	*1*	*10*	*10*	22	3.1	1	*0.11*	*1.1*	*10.6*	*10.6*
RR-B3	MC-1	08/25/2015	2.5	150	14	41	0.18	*1*	13	23	159	15	43	0.19	*1.1*	14	24
	MC-2	08/25/2015	5.0	140	24	44	0.23	*1*	12	15	148	25	47	0.24	*1.1*	13	16
	MC-3	08/25/2015	7.5	130	21	24	0.18	*1*	*10*	*10*	137	22	25	0.19	*1.1*	*10.6*	*10.6*
	MC-4	08/25/2015	10.0	55	10	7.5	0.12	*1*	12	31	58	11	7.9	0.13	*1.1*	13	33
			95% UCL for 0 to 10 ft bgs (see Attachment O) =>								81	17	28	0.54	50	14	15

* Italicized value is the reporting limit for 'non-detect' ('ND') result.

** Dry weight concentration = Wet weight concentration x (1 + average moisture content)
where average moisture content = 0.056 g/g (see **Table 1**).

The Fehling Group, LLC

TABLE I-5a
Indoor Air Exposure Point Concentrations and Ambient Air Concentration (at 2A-AM) (in μg/m^3)
~ Residential Receptor ~

Sample ID	Secondary Sample ID	DateCollected	Sample Depth (ft bgs)	1,1,1-Trichloroethane	1,1-Dichloroethane	1,2,4-Trichlorobenzene	1,2,4-Trimethylbenzene	1,3,5-Trimethylbenzene	1,3-Dichlorobenzene	2,2,4-Trimethylpentane	2-Butanone	2-Hexanone	4-Ethyl Toluene	4-Methyl-2-pentanone	Acetone	Acetonitrile	Benzene	Carbon disulfide	Chlorobenzene	Chloroethane	Chloroform	Chloromethane
2A-1-5	-	5/16/2017	5	5E-02	ND	ND	ND	ND	ND	NA	2E-02	ND	ND	ND	3E-02	NA	5E-03	2E-02	ND	ND	ND	ND
2A-1-10	-	5/16/2017	10	2E-02	ND	ND	ND	ND	ND	NA	2E-02	ND	ND	ND	3E-02	NA	ND	6E-02	ND	ND	ND	ND
2A-1-15	-	5/16/2017	15	2E-02	ND	ND	ND	ND	ND	NA	1E-02	ND	ND	ND	3E-02	NA	2E-03	1E-01	ND	ND	ND	ND
2A-2-5	-	5/16/2017	5	1E-01	ND	ND	ND	ND	ND	NA	1E-02	ND	ND	ND	3E-02	NA	4E-03	ND	ND	ND	ND	ND
2A-2-5 (DUP)	-	5/16/2017	5	1E-01	ND	ND	ND	ND	ND	NA	4E-02	ND	ND	ND	6E-02	NA	ND	2E-01	ND	ND	ND	ND
2A-2-10	-	5/16/2017	10	7E-02	ND	ND	ND	ND	ND	NA	3E-02	ND	ND	ND	3E-02	NA	ND	1E-01	ND	ND	ND	ND
2A-2-15	-	5/16/2017	15	3E-02	ND	ND	ND	ND	ND	NA	4E-03	ND	ND	ND	1E-02	NA	ND	ND	ND	ND	ND	ND
2A-3-5	-	5/16/2017	5	1E-02	ND	ND	ND	ND	ND	NA	7E-03	ND	ND	ND	ND	NA	ND	ND	ND	ND	ND	ND
2A-3-10	-	5/16/2017	10	9E-03	ND	ND	ND	ND	ND	NA	ND	ND	ND	ND	ND	NA	ND	ND	ND	ND	ND	ND
2A-3-15	-	5/16/2017	15	7E-03	ND	ND	ND	ND	ND	NA	ND	ND	ND	ND	ND	NA	ND	ND	ND	ND	ND	ND
2A-AM	-	5/16/2017	Ambient	ND	ND	ND	ND	ND	ND	NA	4E+01	ND	ND	ND	6E+01	NA	ND	5E+01	ND	ND	ND	ND
P33-VP-1	VP-1	8/5/2015	5	2E-02	ND	ND	3E-03	5E-04	3E-03	ND	1E-03	ND	ND	2E-03	8E-03	ND	6E-04	ND	ND	ND	ND	ND
P33-VP-2	VP-2	8/5/2015	5	4E-02	ND	ND	2E-03	ND	3E-03	ND	3E-03	ND	ND	1E-03	2E-02	ND	6E-04	ND	ND	ND	ND	ND
P33-VP-3	VP-3	8/5/2015	5	5E-02	1E-03	ND	2E-03	ND	3E-03	ND	1E-03	ND	ND	2E-03	8E-03	ND	6E-04	ND	ND	ND	1E-03	ND
P32-VP-3 (DUP)	VP-3 (DUP)	8/5/2015	5	9E-02	2E-03	ND	2E-03	ND	4E-03	ND	7E-04	6E-04	ND	1E-03	8E-03	ND	ND	ND	ND	ND	2E-03	ND
P33-VP-4	VP-4	8/5/2015	5	ND	ND	ND	2E-03	ND	2E-03	ND	1E-03	ND	ND	6E-04	2E-02	ND	6E-04	ND	1E-03	ND	ND	6E-04
P33-VP-5	VP-5	8/5/2015	5	4E-02	1E-03	ND	2E-03	ND	3E-03	-	2E-03	ND	ND	2E-03	8E-03	ND	6E-04	ND	ND	ND	ND	ND
P33-VP-6	VP-6	8/5/2015	5	2E-03	ND	ND	2E-03	ND	3E-03	ND	1E-03	ND	ND	6E-04	8E-03	ND	7E-04	ND	ND	ND	ND	2E-03
P33-VP-7	VP-7	8/5/2015	5	2E-02	ND	ND	2E-03	5E-04	4E-03	-	1E-03	ND	1E-03	2E-03	8E-03	ND	6E-04	ND	ND	ND	ND	ND
P32-VP-7 (DUP)	VP-7 (DUP)	8/7/2015	5	3E-03	ND	ND	1E-02	3E-03	ND	-	2E-03	ND	2E-03	ND	2E-02	ND	7E-04	6E-03	ND	ND	ND	5E-04
P33-VP-8	VP-8	8/5/2015	5	1E-02	ND	ND	3E-03	5E-04	4E-03	-	1E-03	ND	6E-04	2E-03	8E-03	ND	7E-04	ND	ND	ND	1E-03	ND
P33-VP-9	VP-9	8/5/2015	5	5E-03	ND	ND	3E-03	5E-04	4E-03	-	1E-03	ND	6E-04	2E-03	8E-03	ND	6E-04	ND	ND	ND	ND	ND
P33-VP-9 (DUP)	VP-9 (DUP)	8/5/2015	5	5E-03	ND	ND	3E-03	5E-04	4E-03	-	1E-03	ND	6E-04	2E-03	8E-03	ND	1E-03	ND	ND	ND	ND	ND
P33-VP-10	VP-10	8/5/2015	5	ND	ND	ND	ND	ND	ND	ND	ND	ND	ND	ND	2E-03	ND	ND	ND	ND	ND	ND	ND
P33-VP-11	VP-11	8/5/2015	5	4E-03	ND	NA	2E-03	ND	3E-03	-	7E-04	ND	ND	2E-03	6E-03	ND	ND	ND	ND	ND	ND	ND
P33-VP-12	VP-12	8/5/2015	5	2E-03	ND	ND	2E-03	ND	3E-03	-	7E-04	ND	ND	1E-03	7E-03	ND	ND	ND	ND	ND	ND	ND

The Fehling Group, LLC

TABLE I-5a

Indoor Air Exposure Point Concentrations and Ambient Air Concentration (at 2A-AM) (in μg/m^3)

~ Residential Receptor ~

Sample ID	Secondary Sample ID	DateCollected	Sample Depth (ft bgs)	1,1,1-Trichloroethane	1,1-Dichloroethane	1,2,4-Trichlorobenzene	1,2,4-Trimethylbenzene	1,3,5-Trimethylbenzene	1,3-Dichlorobenzene	2,2,4-Trimethylpentane	2-Butanone	2-Hexanone	4-Ethyl Toluene	4-Methyl-2-pentanone	Acetone	Acetonitrile	Benzene	Carbon disulfide	Chlorobenzene	Chloroethane	Chloroform	Chloromethane
P32-VP-1	VP-1	8/7/2015	5	3E-03	ND	ND	ND	ND	ND	ND	7E-03	ND	ND	ND	3E-02	8E-04	1E-03	8E-04	ND	ND	ND	ND
P32-VP-2	VP-2	8/7/2015	5	ND	ND	ND	1E-03	ND	ND	ND	7E-04	ND	ND	ND	8E-03	ND	4E-03	ND	ND	ND	ND	5E-04
P32-VP-3	VP-3	8/7/2015	5	4E-03	ND	ND	ND	ND	ND	ND	2E-03	ND	ND	ND	2E-02	ND	ND	2E-03	ND	ND	ND	ND
P32-VP-4	VP-4	8/7/2015	5	3E-03	ND	1E-03	4E-03	2E-03	ND	ND	7E-04	ND	1E-03	ND	2E-02	ND	ND	ND	ND	ND	ND	5E-04
P32-VP-5	VP-5	8/7/2015	5	2E-03	ND	ND	5E-04	ND	ND	ND	4E-03	ND	ND	ND	2E-02	ND	7E-04	8E-04	ND	ND	ND	ND
P32-VP-6	VP-6	8/7/2015	5	2E-03	ND	ND	5E-03	2E-03	ND	-	7E-04	ND	1E-03	ND	8E-03	ND	1E-03	ND	ND	ND	ND	ND
P32-VP-7	VP-7	8/7/2015	5	3E-03	ND	ND	ND	ND	ND	ND	2E-03	ND	ND	ND	2E-02	ND	7E-04	6E-03	ND	ND	ND	ND
P32-VP-8	VP-8	8/7/2015	5	4E-03	ND	ND	ND	ND	ND	ND	ND	ND	ND	ND	4E-03	ND	ND	ND	ND	ND	ND	ND
P32-VP-9	VP-9	8/7/2015	5	2E-03	ND	ND	1E-02	4E-03	ND	-	5E-03	ND	2E-03	ND	2E-02	7E-04	3E-03	2E-03	ND	ND	ND	6E-04
P32-VP-10	VP-10	8/7/2015	5	ND	ND	ND	2E-03	ND	ND	ND	3E-03	ND	6E-04	ND	2E-02	ND	ND	ND	ND	ND	ND	6E-04
P32-VMW-1	VMW-1	11/23/2016	10	ND	ND	ND	ND	ND	ND	ND	ND	ND	ND	ND	4E-02	ND	ND	ND	ND	ND	ND	ND
P32-VMW-1 (DUP)	VMW-1 (DUP)	11/23/2016	10	ND	ND	ND	ND	ND	ND	ND	ND	ND	ND	ND	3E-02	ND	ND	ND	ND	ND	5E-02	ND
P32-VMW-1 (10')	VMW-1-10	11/28/2016	10	2E-03	ND	ND	ND	ND	ND	ND	ND	ND	ND	ND	6E-03	ND	ND	ND	ND	ND	ND	ND
P32-VWM-2	VMW-2	11/23/2016	5	ND	ND	ND	ND	ND	ND	ND	ND	ND	ND	ND	4E-02	ND	ND	ND	ND	ND	ND	ND
P32-VMW-2 (5')	VMW-2-5	11/28/2016	5	ND	ND	ND	ND	ND	ND	ND	ND	ND	ND	ND	8E-03	ND	ND	ND	ND	ND	ND	ND
P32-VWM-3	VWM-3	11/23/2016	15	ND	ND	ND	ND	ND	ND	ND	4E-03	ND	ND	ND	1E-01	5E-03	3E-02	4E-03	ND	ND	ND	ND
P32-VMW-3 (15')	VMW-3-15	11/28/2016	15	2E-03	ND	ND	ND	ND	1E-03	ND	3E-03	ND	ND	ND	4E-02	ND	1E-02	8E-03	ND	2E-03	ND	1E-03
P32-VMW-3 (15') (DUP)	VMW-3-15 (DUP)	11/28/2016	15	2E-03	ND	ND	ND	ND	2E-03	ND	2E-03	ND	ND	ND	4E-02	3E-03	7E-03	8E-03	ND	2E-03	ND	1E-03
P32-VWM-4	VMW-4	11/23/2016	10	ND	ND	ND	ND	ND	ND	ND	2E-03	ND	ND	ND	1E-01	ND	ND	3E-03	ND	ND	ND	ND
P32-VMW-4 (10')	VWM-4-10	11/28/2016	10	ND	ND	ND	ND	ND	ND	ND	ND	ND	ND	ND	2E-02	ND	ND	ND	ND	ND	ND	ND

The Fehling Group, LLC

TABLE I-5a
Indoor Air Exposure Point Concentrations and Ambient Air Concentration (at 2A-AM) (in μg/m^3)
~ Residential Receptor ~

Sample ID	Secondary Sample ID	DateCollected	Sample Depth (ft bgs)	Cyclohexane	Dichlorodifluoromethane	Ethanol	Ethylbenzene	m,p-Xylene	Methylene chloride	Naphthalene	n-Propylbenzene	o-Xylene	p-Isopropyltoluene	Tetrachloroethene	Toluene	Trichloroethene	Trichlorofluoromethane	Vinyl acetate	Vinyl chloride	2-Propanol	Gasoline Range Organics
2A-1-5	-	5/16/2017	5	*NA*	*ND*	*NA*	*ND*	6E-03	*ND*	*ND*	*NA*	*ND*	*NA*	4E-01	2E-02	*ND*	*ND*	*ND*	*ND*	*NA*	*NA*
2A-1-10	-	5/16/2017	10	*NA*	*ND*	*NA*	*ND*	*ND*	*ND*	*ND*	*NA*	*ND*	*NA*	1E-01	4E-03	*ND*	*ND*	*ND*	*ND*	*NA*	*NA*
2A-1-15	-	5/16/2017	15	*NA*	*ND*	*NA*	*ND*	*ND*	*ND*	*ND*	*NA*	6E-03	*NA*	8E-02	4E-03	*ND*	*ND*	*ND*	*ND*	*NA*	*NA*
2A-2-5	-	5/16/2017	5	*NA*	*ND*	*NA*	2E-02	4E-02	*ND*	*ND*	*NA*	2E-02	*NA*	2E-01	1E-02	*ND*	*ND*	*ND*	*ND*	*NA*	*NA*
2A-2-5 (DUP)	-	5/16/2017	5	*NA*	*ND*	*NA*	*ND*	1E-02	*ND*	*ND*	*NA*	5E-03	*NA*	2E-01	9E-03	*ND*	*ND*	*ND*	*ND*	*NA*	*NA*
2A-2-10	-	5/16/2017	10	*NA*	*ND*	*NA*	*ND*	5E-03	3E-03	*ND*	*NA*	3E-03	*NA*	8E-02	4E-03	*ND*	*ND*	*ND*	*ND*	*NA*	*NA*
2A-2-15	-	5/16/2017	15	*NA*	*ND*	*NA*	*ND*	3E-03	*ND*	*ND*	*NA*	*ND*	*NA*	2E-01	9E-03	*ND*	*ND*	*ND*	*ND*	*NA*	*NA*
2A-3-5	-	5/16/2017	5	*NA*	*ND*	*NA*	*ND*	*ND*	*ND*	*ND*	*NA*	5E-03	*NA*	1E-02	*ND*	*ND*	1E-02	*ND*	*ND*	*NA*	*NA*
2A-3-10	-	5/16/2017	10	*NA*	*ND*	*NA*	*ND*	*ND*	*ND*	*ND*	*NA*	*ND*	*NA*	8E-03	*ND*	*ND*	1E-02	*ND*	*ND*	*NA*	*NA*
2A-3-15	-	5/16/2017	15	*NA*	*ND*	*NA*	*ND*	4E-03	*ND*	*ND*	*NA*	*ND*	*NA*	6E-03	3E-03	*ND*	6E-03	*ND*	*ND*	*NA*	*NA*
2A-AM	-	5/16/2017	Ambient	*NA*	*ND*	*NA*	*ND*	*ND*	*ND*	*ND*	*NA*	*ND*	*NA*	*ND*	*ND*	*ND*	*ND*	*ND*	*ND*	*NA*	*NA*
P33-VP-1	VP-1	8/5/2015	5	1E-03	2E-03	1E-01	1E-03	1E-02	*ND*	*ND*	*ND*	2E-03	5E-04	9E-03	2E-02	2E-02	3E-03	7E-04	*ND*	5E-02	3E+00
P33-VP-2	VP-2	8/5/2015	5	1E-03	*ND*	1E-01	6E-04	6E-03	*ND*	*ND*	*ND*	1E-03	*ND*	1E-02	6E-03	*NA*	2E-03	7E-04	*ND*	3E-02	1E+00
P33-VP-3	VP-3	8/5/2015	5	6E-04	2E-03	2E-01	1E-03	1E-02	*ND*	*ND*	*ND*	2E-03	*ND*	1E-02	1E-02	NA	6E-04	*ND*	*ND*	*NA*	1E+00
P32-VP-3 (DUP)	VP-3 (DUP)	8/5/2015	5	6E-04	2E-03	1E-01	1E-03	6E-03	*ND*	*ND*	*ND*	2E-03	*ND*	2E-02	6E-03	2E-01	1E-03	6E-04	*ND*	1E-01	2E+00
P33-VP-4	VP-4	8/5/2015	5	6E-04	*ND*	7E-02	2E-03	2E-02	7E-04	1E-03	*ND*	2E-03	*ND*	2E-03	5E-02	1E-03	*ND*	*ND*	*ND*	9E-01	2E+00
P33-VP-5	VP-5	8/5/2015	5	6E-04	6E-04	2E-01	2E-03	1E-02	*ND*	*ND*	*ND*	2E-03	*ND*	9E-03	3E-02	5E-02	1E-03	1E-03	*ND*	1E-01	3E+00
P33-VP-6	VP-6	8/5/2015	5	6E-04	*ND*	8E-02	1E-03	6E-03	8E-04	*ND*	*ND*	1E-03	*ND*	3E-03	2E-02	6E-03	*ND*	*ND*	*ND*	3E-01	1E+00
P33-VP-7	VP-7	8/5/2015	5	6E-04	2E-03	2E-01	2E-03	1E-02	*ND*	*ND*	*ND*	2E-03	*ND*	2E-02	1E-02	*ND*	1E-03	*ND*	*ND*	4E-02	1E+00
P32-VP-7 (DUP)	VP-7 (DUP)	8/7/2015	5	*ND*	2E-03	7E-02	2E-03	2E-02	*ND*	2E-02	1E-03	3E-03	5E-03	4E-03	3E-03	*ND*	1E-02	1E-03	8E-04	2E-01	1E+00
P33-VP-8	VP-8	8/5/2015	5	1E-03	5E-03	4E-01	2E-03	1E-02	*ND*	*ND*	*ND*	2E-03	*ND*	9E-03	6E-03	*ND*	1E-03	2E-03	*ND*	9E-02	2E+00
P33-VP-9	VP-9	8/5/2015	5	6E-04	1E-03	3E-01	2E-03	1E-02	*ND*	*ND*	*ND*	3E-03	*ND*	2E-02	3E-02	1E-03	6E-04	1E-03	*ND*	7E-02	1E+00
P33-VP-9 (DUP)	VP-9 (DUP)	8/5/2015	5	1E-03	1E-03	3E-01	2E-03	1E-02	*ND*	*ND*	*ND*	2E-03	*ND*	9E-03	1E-02	1E-03	*ND*	1E-03	*ND*	9E-02	2E+00
P33-VP-10	VP-10	8/5/2015	5	*ND*	*ND*	3E-01	*ND*	*ND*	*ND*	*ND*	*ND*	*ND*	*ND*	9E-04	1E-03	*ND*	*ND*	*ND*	*ND*	*NA*	2E+00
P33-VP-11	VP-11	8/5/2015	5	6E-04	*ND*	2E-01	1E-03	1E-02	*ND*	*ND*	*ND*	2E-03	*ND*	9E-03	6E-03	*ND*	*ND*	6E-04	*ND*	3E-02	3E+00
P33-VP-12	VP-12	8/5/2015	5	6E-04	*ND*	2E-01	1E-03	6E-03	*ND*	*ND*	*ND*	2E-03	*ND*	3E-02	6E-03	*ND*	1E-03	*ND*	*ND*	3E-02	2E+00

The Fehling Group, LLC

TABLE I-5a

Indoor Air Exposure Point Concentrations and Ambient Air Concentration (at 2A-AM) (in μg/m^3)

~ Residential Receptor ~

Sample ID	Secondary Sample ID	DateCollected	Sample Depth (ft bgs)	Cyclohexane	Dichlorodifluoromethane	Ethanol	Ethylbenzene	m,p-Xylene	Methylene chloride	Naphthalene	n-Propylbenzene	o-Xylene	p-Isopropyltoluene	Tetrachloroethene	Toluene	Trichloroethene	Trichlorofluoromethane	Vinyl acetate	Vinyl chloride	2-Propanol	Gasoline Range Organics
P32-VP-1	VP-1	8/7/2015	5	ND	3E-03	7E-02	6E-04	6E-03	ND	ND	ND	1E-03	ND	9E-03	1E-03	ND	6E-03	7E-04	2E-03	2E-01	1E+00
P32-VP-2	VP-2	8/7/2015	5	ND	ND	5E-03	6E-04	6E-03	ND	3E-03	ND	1E-03	ND	ND	6E-03	ND	ND	ND	ND	2E+00	2E+00
P32-VP-3	VP-3	8/7/2015	5	ND	1E-03	1E-02	ND	ND	ND	ND	ND	ND	ND	5E-03	6E-04	ND	2E-03	ND	ND	9E-01	3E+00
P32-VP-4	VP-4	8/7/2015	5	ND	6E-04	2E-02	6E-03	7E-02	ND	1E-03	ND	1E-02	ND	3E-03	2E-01	ND	6E-04	ND	ND	8E-01	8E+00
P32-VP-5	VP-5	8/7/2015	5	ND	4E-03	5E-02	1E-03	6E-03	ND	ND	ND	1E-03	ND	5E-03	3E-03	ND	2E-02	ND	8E-04	2E+00	5E+00
P32-VP-6	VP-6	8/7/2015	5	ND	2E-03	8E-03	1E-03	1E-02	ND	2E-03	ND	2E-03	2E-03	3E-03	5E-03	ND	2E-02	ND	ND	6E-02	2E+00
P32-VP-7	VP-7	8/7/2015	5	6E-04	2E-03	2E-02	ND	4E-03	ND	ND	ND	6E-04	ND	4E-03	1E-03	ND	1E-02	ND	ND	6E-02	2E+00
P32-VP-8	VP-8	8/7/2015	5	ND	1E-03	5E-03	ND	ND	ND	5E-04	ND	ND	ND	4E-03	ND	ND	2E-03	ND	ND	3E-02	2E+00
P32-VP-9	VP-9	8/7/2015	5	6E-04	2E-03	2E-02	3E-03	4E-02	ND	2E-03	ND	1E-02	1E-03	2E-03	2E-02	ND	5E-03	7E-04	7E-04	4E-01	2E+00
P32-VP-10	VP-10	8/7/2015	5	ND	1E-03	6E-02	1E-02	9E-02	ND	1E-03	ND	2E-02	ND	9E-04	1E-01	ND	1E-03	ND	5E-04	4E-01	3E+00
P32-VMW-1	VMW-1	11/23/2016	10	ND	4E-03	2E-03	ND	8E-03	ND	ND	ND	ND	ND	3E-03	2E-02	ND	7E-03	ND	ND	6E-03	1E-01
P32-VMW-1 (DUP)	VMW-1 (DUP)	11/23/2016	10	ND	4E-03	3E-03	ND	ND	ND	ND	ND	ND	ND	1E-01	2E-02	ND	7E-03	ND	ND	6E-03	4E-01
P32-VMW-1 (10')	VMW-1-10	11/28/2016	10	ND	3E-03	2E-03	ND	ND	ND	ND	ND	ND	ND	3E-03	3E-02	ND	7E-03	ND	ND	3E+00	ND
P32-VWM-2	VMW-2	11/23/2016	5	ND	ND	ND	ND	ND	ND	ND	ND	ND	ND	ND	3E-02	ND	6E-03	ND	ND	5E-03	3E-01
P32-VMW-2 (5')	VMW-2-5	11/28/2016	5	ND	2E-03	2E-03	ND	ND	ND	ND	ND	ND	ND	4E-03	4E-02	ND	1E-02	ND	ND	3E+00	ND
P32-VWM-3	VWM-3	11/23/2016	15	1E-03	ND	1E-02	2E-03	1E-02	ND	ND	ND	1E-03	ND	1E-02	3E-02	3E-03	ND	ND	ND	9E-03	5E-01
P32-VMW-3 (15')	VMW-3-15	11/28/2016	15	ND	1E-03	6E-03	9E-04	3E-03	ND	ND	ND	ND	ND	2E-03	2E-02	ND	3E-03	ND	ND	9E-01	2E-01
P32-VMW-3 (15') (DUP)	VMW-3-15 (DUP)	11/28/2016	15	ND	1E-03	1E-02	9E-04	6E-03	ND	ND	ND	ND	ND	2E-03	6E-02	ND	3E-03	ND	ND	5E+00	3E-01
P32-VWM-4	VMW-4	11/23/2016	10	ND	ND	8E-03	ND	ND	ND	ND	ND	ND	ND	ND	1E-02	ND	4E-03	ND	ND	4E-03	2E-01
P32-VMW-4 (10')	VWM-4-10	11/28/2016	10	ND	ND	ND	ND	ND	ND	ND	ND	ND	ND	ND	4E-02	ND	4E-03	ND	ND	3E+00	2E-01

The Fehling Group, LLC

TABLE I-5b
Trench Air Exposure Point Concentrations and Ambient Air Concentration (at 2A-AM) (in μg/m^3)
~ Construction Worker Receptor ~

Sample ID	Secondary Sample ID	DateCollected	Sample Depth (ft bgs)	1,1,1-Trichloroethane	1,1-Dichloroethane	1,2,4-Trichlorobenzene	1,2,4-Trimethylbenzene	1,3,5-Trimethylbenzene	1,3-Dichlorobenzene	2,2,4-Trimethylpentane	2-Butanone	2-Hexanone	4-Ethyl Toluene	4-Methyl-2-pentanone	Acetone	Acetonitrile	Benzene	Carbon disulfide	Chlorobenzene	Chloroethane	Chloroform	Chloromethane
2A-1-5	-	5/16/2017	5	2E-01	ND	ND	ND	ND	ND	NA	5E-02	ND	ND	ND	1E-01	NA	2E-02	8E-02	ND	ND	ND	ND
2A-1-10	-	5/16/2017	10	9E-04	ND	ND	ND	ND	ND	NA	8E-04	ND	ND	ND	1E-03	NA	ND	3E-03	ND	ND	ND	ND
2A-1-15	-	5/16/2017	15	4E-04	ND	ND	ND	ND	ND	NA	3E-04	ND	ND	ND	7E-04	NA	5E-05	3E-03	ND	ND	ND	ND
2A-2-5	-	5/16/2017	5	4E-01	ND	ND	ND	ND	ND	NA	3E-02	ND	ND	ND	9E-02	NA	1E-02	ND	ND	ND	ND	ND
2A-2-5 (DUP)	-	5/16/2017	5	4E-01	ND	ND	ND	ND	ND	NA	1E-01	ND	ND	ND	2E-01	NA	ND	9E-01	ND	ND	ND	ND
2A-2-10	-	5/16/2017	10	3E-03	ND	ND	ND	ND	ND	NA	1E-03	ND	ND	ND	1E-03	NA	ND	6E-03	ND	ND	ND	ND
2A-2-15	-	5/16/2017	15	7E-04	ND	ND	ND	ND	ND	NA	1E-04	ND	ND	ND	3E-04	NA	ND	ND	ND	ND	ND	ND
2A-3-5	-	5/16/2017	5	4E-02	ND	ND	ND	ND	ND	NA	2E-02	ND	ND	ND	ND	NA	ND	ND	ND	ND	ND	ND
2A-3-10	-	5/16/2017	10	4E-04	ND	ND	ND	ND	ND	NA	ND	ND	ND	ND	ND	NA	ND	ND	ND	ND	ND	ND
2A-3-15	-	5/16/2017	15	2E-04	ND	ND	ND	ND	ND	NA	ND	ND	ND	ND	ND	NA	ND	ND	ND	ND	ND	ND
2A-AM	-	5/16/2017	Ambient	ND	ND	ND	ND	ND	ND	NA	4E+01	ND	ND	ND	6E+01	NA	ND	5E+01	ND	ND	ND	ND
P33-VP-1	VP-1	8/5/2015	5	5E-02	ND	ND	1E-02	2E-03	1E-02	ND	5E-03	ND	ND	6E-03	3E-02	ND	2E-03	ND	ND	ND	ND	ND
P33-VP-2	VP-2	8/5/2015	5	1E-01	ND	ND	5E-03	ND	9E-03	ND	1E-02	ND	ND	4E-03	6E-02	ND	2E-03	ND	ND	ND	ND	ND
P33-VP-3	VP-3	8/5/2015	5	2E-01	4E-03	ND	7E-03	ND	1E-02	ND	5E-03	ND	ND	6E-03	3E-02	ND	2E-03	ND	ND	ND	4E-03	ND
P32-VP-3 (DUP)	VP-3 (DUP)	8/5/2015	5	3E-01	7E-03	ND	7E-03	ND	1E-02	ND	2E-03	2E-03	ND	4E-03	3E-02	ND	ND	ND	ND	ND	6E-03	ND
P33-VP-4	VP-4	8/5/2015	5	ND	ND	ND	5E-03	ND	8E-03	ND	5E-03	ND	ND	2E-03	6E-02	ND	2E-03	ND	4E-03	ND	ND	2E-03
P33-VP-5	VP-5	8/5/2015	5	1E-01	4E-03	ND	7E-03	ND	1E-02	-	7E-03	ND	ND	6E-03	3E-02	ND	2E-03	ND	ND	ND	ND	ND
P33-VP-6	VP-6	8/5/2015	5	5E-03	ND	ND	5E-03	ND	1E-02	ND	5E-03	ND	ND	2E-03	3E-02	ND	2E-03	ND	ND	ND	ND	7E-03
P33-VP-7	VP-7	8/5/2015	5	7E-02	ND	ND	7E-03	2E-03	1E-02	-	5E-03	ND	4E-03	6E-03	3E-02	ND	2E-03	ND	ND	ND	ND	ND
P32-VP-7 (DUP)	VP-7 (DUP)	8/7/2015	5	1E-02	ND	ND	3E-02	8E-03	ND	-	7E-03	ND	7E-03	ND	6E-02	ND	2E-03	2E-02	ND	ND	ND	2E-03
P33-VP-8	VP-8	8/5/2015	5	3E-02	ND	ND	8E-03	2E-03	1E-02	-	5E-03	ND	2E-03	8E-03	3E-02	ND	2E-03	ND	ND	ND	4E-03	ND
P33-VP-9	VP-9	8/5/2015	5	2E-02	ND	ND	1E-02	2E-03	1E-02	-	5E-03	ND	2E-03	6E-03	3E-02	ND	2E-03	ND	ND	ND	ND	ND
P33-VP-9 (DUP)	VP-9 (DUP)	8/5/2015	5	2E-02	ND	ND	8E-03	2E-03	1E-02	-	5E-03	ND	2E-03	6E-03	3E-02	ND	5E-03	ND	ND	ND	ND	ND
P33-VP-10	VP-10	8/5/2015	5	ND	ND	ND	ND	ND	ND	ND	ND	ND	ND	ND	6E-03	ND	ND	ND	ND	ND	ND	ND
P33-VP-11	VP-11	8/5/2015	5	1E-02	ND	NA	7E-03	ND	1E-02	-	2E-03	ND	ND	8E-03	2E-02	ND	ND	ND	ND	ND	ND	ND
P33-VP-12	VP-12	8/5/2015	5	5E-03	ND	ND	5E-03	ND	1E-02	-	2E-03	ND	ND	4E-03	3E-02	ND	ND	ND	ND	ND	ND	ND

The Fehling Group, LLC

TABLE I-5b

Trench Air Exposure Point Concentrations and Ambient Air Concentration (at 2A-AM) (in μg/m^3)

~ Construction Worker Receptor ~

Sample ID	Secondary Sample ID	DateCollected	Sample Depth (ft bgs)	1,1,1-Trichloroethane	1,1-Dichloroethane	1,2,4-Trichlorobenzene	1,2,4-Trimethylbenzene	1,3,5-Trimethylbenzene	1,3-Dichlorobenzene	2,2,4-Trimethylpentane	2-Butanone	2-Hexanone	4-Ethyl Toluene	4-Methyl-2-pentanone	Acetone	Acetonitrile	Benzene	Carbon disulfide	Chlorobenzene	Chloroethane	Chloroform	Chloromethane
P32-VP-1	VP-1	8/7/2015	5	9E-03	ND	ND	ND	ND	ND	ND	2E-02	ND	ND	ND	1E-01	3E-03	5E-03	3E-03	ND	ND	ND	ND
P32-VP-2	VP-2	8/7/2015	5	ND	ND	ND	3E-03	ND	ND	ND	2E-03	ND	ND	ND	3E-02	ND	1E-02	ND	ND	ND	ND	2E-03
P32-VP-3	VP-3	8/7/2015	5	1E-02	ND	ND	ND	ND	ND	ND	7E-03	ND	ND	ND	6E-02	ND	ND	9E-03	ND	ND	ND	ND
P32-VP-4	VP-4	8/7/2015	5	9E-03	ND	3E-03	1E-02	5E-03	ND	ND	2E-03	ND	4E-03	ND	6E-02	ND	ND	ND	ND	ND	ND	2E-03
P32-VP-5	VP-5	8/7/2015	5	7E-03	ND	ND	2E-03	ND	ND	ND	1E-02	ND	ND	ND	9E-02	ND	2E-03	3E-03	ND	ND	ND	ND
P32-VP-6	VP-6	8/7/2015	5	5E-03	ND	ND	2E-02	5E-03	ND	-	2E-03	ND	4E-03	ND	3E-02	ND	5E-03	ND	ND	ND	ND	ND
P32-VP-7	VP-7	8/7/2015	5	1E-02	ND	ND	ND	ND	ND	ND	7E-03	ND	ND	ND	6E-02	ND	2E-03	2E-02	ND	ND	ND	ND
P32-VP-8	VP-8	8/7/2015	5	1E-02	ND	ND	ND	ND	ND	ND	ND	ND	ND	ND	1E-02	ND	ND	ND	ND	ND	ND	ND
P32-VP-9	VP-9	8/7/2015	5	5E-03	ND	ND	3E-02	1E-02	ND	-	2E-02	ND	7E-03	ND	9E-02	3E-03	1E-02	6E-03	ND	ND	ND	2E-03
P32-VP-10	VP-10	8/7/2015	5	ND	ND	ND	7E-03	ND	ND	ND	1E-02	ND	2E-03	ND	6E-02	ND	ND	ND	ND	ND	ND	2E-03
P32-VMW-1	VMW-1	11/23/2016	10	ND	ND	ND	ND	ND	ND	ND	ND	ND	ND	ND	2E-03	ND	ND	ND	ND	ND	ND	ND
P32-VMW-1 (DUP)	VMW-1 (DUP)	11/23/2016	10	ND	ND	ND	ND	ND	ND	ND	ND	ND	ND	ND	2E-03	ND	ND	ND	ND	ND	2E-03	ND
P32-VMW-1 (10')	VMW-1-10	11/28/2016	10	8E-05	ND	ND	ND	ND	ND	ND	ND	ND	ND	ND	3E-04	ND	ND	ND	ND	ND	ND	ND
P32-VWM-2	VMW-2	11/23/2016	5	ND	ND	ND	ND	ND	ND	ND	ND	ND	ND	ND	1E-01	ND	ND	ND	ND	ND	ND	ND
P32-VMW-2 (5')	VMW-2-5	11/28/2016	5	ND	ND	ND	ND	ND	ND	ND	ND	ND	ND	ND	3E-02	ND	ND	ND	ND	ND	ND	ND
P32-VWM-3	VWM-3	11/23/2016	15	ND	ND	ND	ND	ND	ND	ND	1E-04	ND	ND	ND	3E-03	1E-04	7E-04	1E-04	ND	ND	ND	ND
P32-VMW-3 (15')	VMW-3-15	11/28/2016	15	5E-05	ND	ND	ND	ND	2E-05	ND	7E-05	ND	ND	ND	1E-03	ND	3E-04	2E-04	ND	5E-05	ND	4E-05
P32-VMW-3 (15') (DUP)	VMW-3-15 (DUP)	11/28/2016	15	4E-05	ND	ND	ND	ND	4E-05	ND	6E-05	ND	ND	ND	1E-03	7E-05	2E-04	2E-04	ND	4E-05	ND	4E-05
P32-VWM-4	VMW-4	11/23/2016	10	ND	ND	ND	ND	ND	ND	ND	1E-04	ND	ND	ND	5E-03	ND	ND	1E-04	ND	ND	ND	ND
P32-VMW-4 (10')	VWM-4-10	11/28/2016	10	ND	ND	ND	ND	ND	ND	ND	ND	ND	ND	ND	8E-04	ND	ND	ND	ND	ND	ND	ND

The Fehling Group, LLC

TABLE I-5b
Trench Air Exposure Point Concentrations and Ambient Air Concentration (at 2A-AM) (in μg/m^3)
~ Construction Worker Receptor ~

Sample ID	Secondary Sample ID	DateCollected	Sample Depth (ft bgs)	Cyclohexane	Dichlorodifluoromethane	Ethanol	Ethylbenzene	m,p-Xylene	Methylene chloride	Naphthalene	n-Propylbenzene	o-Xylene	p-Isopropyltoluene	Tetrachloroethene	Toluene	Trichloroethene	Trichlorofluoromethane	Vinyl acetate	Vinyl chloride	2-Propanol	Gasoline Range Organics
2A-1-5	-	5/16/2017	5	*NA*	*ND*	*NA*	*ND*	2E-02	*ND*	*ND*	*NA*	*ND*	*NA*	1E+00	6E-02	*ND*	*ND*	*ND*	*ND*	*NA*	*NA*
2A-1-10	-	5/16/2017	10	*NA*	*ND*	*NA*	*ND*	*ND*	*ND*	*ND*	*NA*	*ND*	*NA*	6E-03	2E-04	*ND*	*ND*	*ND*	*ND*	*NA*	*NA*
2A-1-15	-	5/16/2017	15	*NA*	*ND*	*NA*	*ND*	*ND*	*ND*	*ND*	*NA*	1E-04	*NA*	2E-03	1E-04	*ND*	*ND*	*ND*	*ND*	*NA*	*NA*
2A-2-5	-	5/16/2017	5	*NA*	*ND*	*NA*	5E-02	1E-01	*ND*	*ND*	*NA*	7E-02	*NA*	5E-01	3E-02	*ND*	*ND*	*ND*	*ND*	*NA*	*NA*
2A-2-5 (DUP)	-	5/16/2017	5	*NA*	*ND*	*NA*	*ND*	3E-02	*ND*	*ND*	*NA*	2E-02	*NA*	5E-01	3E-02	*ND*	*ND*	*ND*	*ND*	*NA*	*NA*
2A-2-10	-	5/16/2017	10	*NA*	*ND*	*NA*	*ND*	2E-04	2E-04	*ND*	*NA*	1E-04	*NA*	4E-03	2E-04	*ND*	*ND*	*ND*	*ND*	*NA*	*NA*
2A-2-15	-	5/16/2017	15	*NA*	*ND*	*NA*	*ND*	7E-05	*ND*	*ND*	*NA*	*ND*	*NA*	4E-03	2E-04	*ND*	*ND*	*ND*	*ND*	*NA*	*NA*
2A-3-5	-	5/16/2017	5	*NA*	*ND*	*NA*	*ND*	*ND*	*ND*	*ND*	*NA*	2E-02	*NA*	3E-02	*ND*	*ND*	5E-02	*ND*	*ND*	*NA*	*NA*
2A-3-10	-	5/16/2017	10	*NA*	*ND*	*NA*	*ND*	*ND*	*ND*	*ND*	*NA*	*ND*	*NA*	4E-04	*ND*	*ND*	5E-04	*ND*	*ND*	*NA*	*NA*
2A-3-15	-	5/16/2017	15	*NA*	*ND*	*NA*	*ND*	9E-05	*ND*	*ND*	*NA*	*ND*	*NA*	2E-04	8E-05	*ND*	1E-04	*ND*	*ND*	*NA*	*NA*
2A-AM	-	5/16/2017	Ambient	*NA*	*ND*	*NA*	*ND*	*ND*	*ND*	*ND*	*NA*	*ND*	*NA*	*ND*	*ND*	*ND*	*ND*	*ND*	*ND*	*NA*	*NA*
P33-VP-1	VP-1	8/5/2015	5	4E-03	8E-03	5E-01	4E-03	4E-02	*ND*	*ND*	*ND*	6E-03	2E-03	3E-02	6E-02	7E-02	9E-03	2E-03	*ND*	2E-01	9E+00
P33-VP-2	VP-2	8/5/2015	5	4E-03	*ND*	4E-01	2E-03	2E-02	*ND*	*ND*	*ND*	4E-03	*ND*	4E-02	2E-02	*NA*	5E-03	2E-03	*ND*	1E-01	5E+00
P33-VP-3	VP-3	8/5/2015	5	2E-03	6E-03	6E-01	4E-03	4E-02	*ND*	*ND*	*ND*	6E-03	*ND*	4E-02	4E-02	NA	2E-03	*ND*	*ND*	*NA*	5E+00
P32-VP-3 (DUP)	VP-3 (DUP)	8/5/2015	5	2E-03	6E-03	4E-01	4E-03	2E-02	*ND*	*ND*	*ND*	6E-03	*ND*	5E-02	2E-02	8E-01	4E-03	2E-03	*ND*	3E-01	7E+00
P33-VP-4	VP-4	8/5/2015	5	2E-03	*ND*	3E-01	7E-03	6E-02	3E-03	3E-03	*ND*	7E-03	*ND*	5E-03	2E-01	4E-03	*ND*	*ND*	*ND*	3E+00	6E+00
P33-VP-5	VP-5	8/5/2015	5	2E-03	2E-03	9E-01	6E-03	4E-02	*ND*	*ND*	*ND*	7E-03	*ND*	3E-02	8E-02	1E-01	4E-03	5E-03	*ND*	4E-01	9E+00
P33-VP-6	VP-6	8/5/2015	5	2E-03	*ND*	3E-01	4E-03	2E-02	3E-03	*ND*	*ND*	4E-03	*ND*	8E-03	6E-02	2E-02	*ND*	*ND*	*ND*	1E+00	4E+00
P33-VP-7	VP-7	8/5/2015	5	2E-03	6E-03	9E-01	6E-03	4E-02	*ND*	*ND*	*ND*	7E-03	*ND*	5E-02	4E-02	*ND*	4E-03	*ND*	*ND*	1E-01	5E+00
P32-VP-7 (DUP)	VP-7 (DUP)	8/7/2015	5	*ND*	6E-03	3E-01	6E-03	6E-02	*ND*	7E-02	3E-03	1E-02	2E-02	1E-02	8E-03	*ND*	4E-02	5E-03	3E-03	5E-01	5E+00
P33-VP-8	VP-8	8/5/2015	5	4E-03	2E-02	1E+00	6E-03	4E-02	*ND*	*ND*	*ND*	7E-03	*ND*	3E-02	2E-02	*ND*	4E-03	7E-03	*ND*	3E-01	5E+00
P33-VP-9	VP-9	8/5/2015	5	2E-03	4E-03	1E+00	6E-03	4E-02	*ND*	*ND*	*ND*	9E-03	*ND*	5E-02	8E-02	4E-03	2E-03	5E-03	*ND*	2E-01	5E+00
P33-VP-9 (DUP)	VP-9 (DUP)	8/5/2015	5	4E-03	4E-03	1E+00	6E-03	4E-02	*ND*	*ND*	*ND*	7E-03	*ND*	3E-02	4E-02	4E-03	*ND*	5E-03	*ND*	3E-01	6E+00
P33-VP-10	VP-10	8/5/2015	5	*ND*	*ND*	1E+00	*ND*	*ND*	*ND*	*ND*	*ND*	*ND*	*ND*	3E-03	4E-03	*ND*	*ND*	*ND*	*ND*	*NA*	6E+00
P33-VP-11	VP-11	8/5/2015	5	2E-03	*ND*	9E-01	4E-03	4E-02	*ND*	*ND*	*ND*	6E-03	*ND*	3E-02	2E-02	*ND*	*ND*	2E-03	*ND*	1E-01	1E+01
P33-VP-12	VP-12	8/5/2015	5	2E-03	*ND*	9E-01	4E-03	2E-02	*ND*	*ND*	*ND*	6E-03	*ND*	9E-02	2E-02	*ND*	4E-03	*ND*	*ND*	1E-01	7E+00

The Fehling Group, LLC

TABLE I-5b

Trench Air Exposure Point Concentrations and Ambient Air Concentration (at 2A-AM) (in μg/m^3)

~ Construction Worker Receptor ~

Sample ID	Secondary Sample ID	DateCollected	Sample Depth (ft bgs)	Cyclohexane	Dichlorodifluoromethane	Ethanol	Ethylbenzene	m,p-Xylene	Methylene chloride	Naphthalene	n-Propylbenzene	o-Xylene	p-Isopropyltoluene	Tetrachloroethene	Toluene	Trichloroethene	Trichlorofluoromethane	Vinyl acetate	Vinyl chloride	2-Propanol	Gasoline Range Organics
P32-VP-1	VP-1	8/7/2015	5	ND	1E-02	3E-01	2E-03	2E-02	ND	ND	ND	4E-03	ND	3E-02	4E-03	ND	2E-02	2E-03	9E-03	6E-01	5E+00
P32-VP-2	VP-2	8/7/2015	5	ND	ND	2E-02	2E-03	2E-02	ND	1E-02	ND	4E-03	ND	ND	2E-02	ND	ND	ND	ND	6E+00	7E+00
P32-VP-3	VP-3	8/7/2015	5	ND	4E-03	4E-02	ND	ND	ND	ND	ND	ND	ND	1E-02	2E-03	ND	7E-03	ND	ND	3E+00	1E+01
P32-VP-4	VP-4	8/7/2015	5	ND	2E-03	9E-02	2E-02	2E-01	ND	3E-03	ND	4E-02	ND	8E-03	6E-01	ND	2E-03	ND	ND	3E+00	3E+01
P32-VP-5	VP-5	8/7/2015	5	ND	1E-02	2E-01	4E-03	2E-02	ND	ND	ND	4E-03	ND	1E-02	8E-03	ND	5E-02	ND	3E-03	6E+00	2E+01
P32-VP-6	VP-6	8/7/2015	5	ND	6E-03	3E-02	4E-03	4E-02	ND	5E-03	ND	7E-03	5E-03	9E-03	2E-02	ND	5E-02	ND	ND	2E-01	6E+00
P32-VP-7	VP-7	8/7/2015	5	2E-03	6E-03	9E-02	ND	1E-02	ND	ND	ND	2E-03	ND	1E-02	4E-03	ND	4E-02	ND	ND	2E-01	6E+00
P32-VP-8	VP-8	8/7/2015	5	ND	4E-03	2E-02	ND	ND	ND	2E-03	ND	ND	ND	1E-02	ND	ND	5E-03	ND	ND	8E-02	5E+00
P32-VP-9	VP-9	8/7/2015	5	2E-03	6E-03	9E-02	9E-03	1E-01	ND	7E-03	ND	4E-02	3E-03	7E-03	6E-02	ND	2E-02	2E-03	3E-03	1E+00	6E+00
P32-VP-10	VP-10	8/7/2015	5	ND	4E-03	2E-01	4E-02	3E-01	ND	3E-03	ND	6E-02	ND	3E-03	4E-01	ND	4E-03	ND	2E-03	1E+00	1E+01
P32-VMW-1	VMW-1	11/23/2016	10	ND	2E-04	1E-04	ND	4E-04	ND	ND	ND	ND	ND	1E-04	1E-03	ND	3E-04	ND	ND	3E-04	7E-03
P32-VMW-1 (DUP)	VMW-1 (DUP)	11/23/2016	10	ND	2E-04	2E-04	ND	ND	ND	ND	ND	ND	ND	6E-03	8E-04	ND	3E-04	ND	ND	3E-04	2E-02
P32-VMW-1 (10')	VMW-1-10	11/28/2016	10	ND	2E-04	8E-05	ND	ND	ND	ND	ND	ND	ND	1E-04	1E-03	ND	3E-04	ND	ND	2E-01	ND
P32-VWM-2	VMW-2	11/23/2016	5	ND	ND	ND	ND	ND	ND	ND	ND	ND	ND	ND	8E-02	ND	2E-02	ND	ND	2E-02	9E-01
P32-VMW-2 (5')	VMW-2-5	11/28/2016	5	ND	8E-03	9E-03	ND	ND	ND	ND	ND	ND	ND	1E-02	1E-01	ND	4E-02	ND	ND	9E+00	ND
P32-VWM-3	VWM-3	11/23/2016	15	3E-05	ND	3E-04	6E-05	3E-04	ND	ND	ND	4E-05	ND	3E-04	7E-04	7E-05	ND	ND	ND	2E-04	1E-02
P32-VMW-3 (15')	VMW-3-15	11/28/2016	15	ND	3E-05	2E-04	2E-05	7E-05	ND	ND	ND	ND	ND	5E-05	6E-04	ND	7E-05	ND	ND	2E-02	4E-03
P32-VMW-3 (15') (DUP)	VMW-3-15 (DUP)	11/28/2016	15	ND	3E-05	3E-04	2E-05	1E-04	ND	ND	ND	ND	ND	4E-05	2E-03	ND	7E-05	ND	ND	1E-01	8E-03
P32-VWM-4	VMW-4	11/23/2016	10	ND	ND	4E-04	ND	ND	ND	ND	ND	ND	ND	ND	6E-04	ND	2E-04	ND	ND	2E-04	8E-03
P32-VMW-4 (10')	VWM-4-10	11/28/2016	10	ND	ND	ND	ND	ND	ND	ND	ND	ND	ND	ND	2E-03	ND	2E-04	ND	ND	1E-01	8E-03

The Fehling Group, LLC

TABLE I-6
Soil Risk Characterization Summary
~ PARC Area 2A, 2B, and 2C ~

		Soil RBC (mg/kg)*				Risk Values (Incremental Lifetime Cancer Risk [ILCR] and Hazard Quotient [HQ])			
		Residential Receptor		Construction Worker Receptor		Residential Receptor		Construction Worker Receptor	
Soil COPC	**Soil EPC (mg/kg, dry weight basis)**	**Cancer Endpoint**	**Noncancer Endpoint**	**Cancer Endpoint**	**Noncancer Endpoint**	**ILCR (unitless)**	**HQ (unitless)**	**ILCR (unitless)**	**HQ (unitless)**
Barium	81	--	1.50E+04	--	3.02E+03	--	5.4E-03	--	2.7E-02
Copper	17	--	3.10E+03	--	1.42E+04	--	5.6E-03	--	1.2E-03
Lead	28	Not applicable (see Section 3.2.1.2)							
Mercury	0.54	--	1.01E+00	--	4.36E+01	--	5.4E-01	--	1.2E-02
TPH-GRO	50	--	8.20E+01	--	2.77E+03	--	6.1E-01	--	1.8E-02
TPH-DRO	14	--	9.60E+01	--	8.85E+02	--	1.4E-01	--	1.5E-02
THP-ORO	15	--	2.50E+03	--	3.24E+04	--	5.8E-03	--	4.5E-04
		Cumulative Risk Values (ILCR and HI Values) =>				**0.0E+00**	**1.3E+00**	**0.0E+00**	**7.4E-02**

* "Combined" value listed in **Table 5** for the residential receptor and **Table 6** for the construction worker receptor.

The Fehling Group, LLC

TABLE I-7a

Indoor Air Incremental Lifetime Cancer Risk (gray-shaded values)

and Cumulative Incremental Lifetime Cancer Risk Values (blue-shaded values)

~ Residential Receptor ~

Sample ID	Secondary Sample ID	Sample Depth (ft bgs)	1,1,1-Trichloroethane	1,1-Dichloroethane	1,2,4-Trichlorobenzene	1,2,4-Trimethylbenzene	1,3,5-Trimethylbenzene	1,3-Dichlorobenzene	2,2,4-Trimethylpentane	2-Butanone	2-Hexanone	4-Ethyl Toluene	4-Methyl-2-pentanone	Acetone	Acetonitrile	Benzene	Carbon disulfide	Chlorobenzene	Chloroethane	Chloroform	Chloromethane
2A-1-5	-	5		ND	ND				NA							5E-08				ND	
2A-1-10	-	10		ND	ND				NA							ND				ND	
2A-1-15	-	15		ND	ND				NA							2E-08				ND	
2A-2-5	-	5		ND	ND				NA							4E-08				ND	
2A-2-5 (DUP)	-	5		ND	ND				NA							ND				ND	
2A-2-10	-	10		ND	ND				NA							ND				ND	
2A-2-15	-	15		ND	ND				NA							ND				ND	
2A-3-5	-	5		ND	ND				NA							ND				ND	
2A-3-10	-	10		ND	ND				NA							ND				ND	
2A-3-15	-	15		ND	ND				NA							ND				ND	
2A-AM	-	Ambient		ND	ND				NA							ND				ND	
P33-VP-1	VP-1	5		ND	ND				ND							6E-09				ND	
P33-VP-2	VP-2	5		ND	ND				ND							6E-09				ND	
P33-VP-3	VP-3	5		8E-10	ND				ND							6E-09				1E-08	
P33-VP-3 (DUP)	VP-3 (DUP)	5		1E-09	ND				ND							ND				2E-08	
P33-VP-4	VP-4	5		ND	ND				ND							6E-09				ND	
P33-VP-5	VP-5	5		8E-10	ND				-							6E-09				ND	
P33-VP-6	VP-6	5		ND	ND				ND							7E-09				ND	
P33-VP-7	VP-7	5		ND	ND				-							6E-09				ND	
P32-VP-7 (DUP)	VP-7 (DUP)	5		ND	ND				-							7E-09				ND	
P33-VP-8	VP-8	5		ND	ND				-							7E-09				1E-08	
P33-VP-9	VP-9	5		ND	ND				-							6E-09				ND	
P33-VP-9 (DUP)	VP-9 (DUP)	5		ND	ND				-							1E-08				ND	
P33-VP-10	VP-10	5		ND	ND				ND							ND				ND	
P33-VP-11	VP-11	5		ND	NA				-							ND				ND	
P33-VP-12	VP-12	5		ND	ND				-							ND				ND	

NONCARCINOGENIC

The Fehling Group, LLC

TABLE I-7a

Indoor Air Incremental Lifetime Cancer Risk (gray-shaded values)

and Cumulative Incremental Lifetime Cancer Risk Values (blue-shaded values)

~ Residential Receptor ~

Sample ID	Secondary Sample ID	Sample Depth (ft bgs)	1,1,1-Trichloroethane	1,1-Dichloroethane	1,2,4-Trichlorobenzene	1,2,4-Trimethylbenzene	1,3,5-Trimethylbenzene	1,3-Dichlorobenzene	2,2,4-Trimethylpentane	2-Butanone	2-Hexanone	4-Ethyl Toluene	4-Methyl-2-pentanone	Acetone	Acetonitrile	Benzene	Carbon disulfide	Chlorobenzene	Chloroethane	Chloroform	Chloromethane
P32-VP-1	VP-1	5		*ND*	*ND*				*ND*							1E-08				*ND*	
P32-VP-2	VP-2	5		*ND*	*ND*				*ND*							4E-08				*ND*	
P32-VP-3	VP-3	5		*ND*	*ND*				*ND*							*ND*				*ND*	
P32-VP-4	VP-4	5		*ND*	3E-09				*ND*							*ND*				*ND*	
P32-VP-5	VP-5	5	NONCARCINOGENIC	*ND*	*ND*	NONCARCINOGENIC	NONCARCINOGENIC	NONCARCINOGENIC	*ND*	NONCARCINOGENIC	NONCARCINOGENIC	NONCARCINOGENIC	NONCARCINOGENIC	NONCARCINOGENIC	NONCARCINOGENIC	7E-09	NONCARCINOGENIC	NONCARCINOGENIC	NONCARCINOGENIC	*ND*	NONCARCINOGENIC
P32-VP-6	VP-6	5		*ND*	*ND*				-							1E-08				*ND*	
P32-VP-7	VP-7	5		*ND*	*ND*				*ND*							7E-09				*ND*	
P32-VP-8	VP-8	5		*ND*	*ND*				*ND*							*ND*				*ND*	
P32-VP-9	VP-9	5		*ND*	*ND*				-							3E-08				*ND*	
P32-VP-10	VP-10	5		*ND*	*ND*				*ND*							*ND*				*ND*	
P32-VMW-1	VMW-1	10		*ND*	*ND*				*ND*							*ND*				*ND*	
P32-VMW-1 (DUP)	VMW-1 (DUP)	10		*ND*	*ND*				*ND*							*ND*				4E-07	
P32-VMW-1 (10')	VMW-1-10	10		*ND*	*ND*				*ND*							*ND*				*ND*	
P32-VWM-2	VMW-2	5		*ND*	*ND*				*ND*							*ND*				*ND*	
P32-VMW-2 (5')	VMW-2-5	5		*ND*	*ND*				*ND*							*ND*				*ND*	
P32-VWM-3	VWM-3	15		*ND*	*ND*				*ND*							3E-07				*ND*	
P32-VMW-3 (15')	VMW-3-15	15		*ND*	*ND*				*ND*							1E-07				*ND*	
P32-VMW-3 (15') (DUP)	VMW-3-15 (DUP)	15		*ND*	*ND*				*ND*							8E-08				*ND*	
P32-VWM-4	VMW-4	10		*ND*	*ND*				*ND*							*ND*				*ND*	
P32-VMW-4 (10')	VWM-4-10	10		*ND*	*ND*				*ND*							*ND*				*ND*	

The Fehling Group, LLC

TABLE I-7a

Indoor Air Incremental Lifetime Cancer Risk (gray-shaded values)

and Cumulative Incremental Lifetime Cancer Risk Values (blue-shaded values)

~ Residential Receptor ~

Sample ID	Secondary Sample ID	Sample Depth (ft bgs)	Cyclohexane	Dichlorodifluoromethane	Ethanol	Ethylbenzene	m,p-Xylene	Methylene chloride	Naphthalene	n-Propylbenzene	o-Xylene	p-Isopropyltoluene	Tetrachloroethene	Toluene	Trichloroethene	Trichlorofluoromethane	Vinyl acetate	Vinyl chloride	2-Propanol	Gasoline Range Organics	ILCR
2A-1-5	-	5	NONCARCINOGENIC	NONCARCINOGENIC	NONCARCINOGENIC	*ND*	NONCARCINOGENIC	*ND*	*ND*	NONCARCINOGENIC	NONCARCINOGENIC	NONCARCINOGENIC	8E-07	NONCARCINOGENIC	*ND*	NONCARCINOGENIC	NONCARCINOGENIC	*ND*	NONCARCINOGENIC	NONCARCINOGENIC	9E-07
2A-1-10	-	10				*ND*		*ND*	*ND*				3E-07		*ND*			*ND*			3E-07
2A-1-15	-	15				*ND*		*ND*	*ND*				2E-07		*ND*			*ND*			2E-07
2A-2-5	-	5				1E-08		*ND*	*ND*				4E-07		*ND*			*ND*			4E-07
2A-2-5 (DUP)	-	5				*ND*		*ND*	*ND*				4E-07		*ND*			*ND*			4E-07
2A-2-10	-	10				*ND*		3E-09	*ND*				2E-07		*ND*			*ND*			2E-07
2A-2-15	-	15				*ND*		*ND*	*ND*				4E-07		*ND*			*ND*			4E-07
2A-3-5	-	5				*ND*		*ND*	*ND*				2E-08		*ND*			*ND*			2E-08
2A-3-10	-	10				*ND*		*ND*	*ND*				2E-08		*ND*			*ND*			2E-08
2A-3-15	-	15				*ND*		*ND*	*ND*				1E-08		*ND*			*ND*			1E-08
2A-AM	-	Ambient				*ND*		*ND*	*ND*				*ND*		*ND*			*ND*			0E+00
P33-VP-1	VP-1	5				1E-09		*ND*	*ND*				2E-08		5E-08			*ND*			8E-08
P33-VP-2	VP-2	5				5E-10		*ND*	*ND*				3E-08		*NA*			*ND*			4E-08
P33-VP-3	VP-3	5				1E-09		*ND*	*ND*				3E-08		NA			*ND*			5E-08
P33-VP-3 (DUP)	VP-3 (DUP)	5				1E-09		*ND*	*ND*				4E-08		5E-07			*ND*			6E-07
P33-VP-4	VP-4	5				2E-09		7E-10	1E-08				4E-09		2E-09			*ND*			3E-08
P33-VP-5	VP-5	5				2E-09		*ND*	*ND*				2E-08		1E-07			*ND*			1E-07
P33-VP-6	VP-6	5				1E-09		7E-10	*ND*				6E-09		1E-08			*ND*			3E-08
P33-VP-7	VP-7	5				2E-09		*ND*	*ND*				4E-08		*ND*			*ND*			5E-08
P32-VP-7 (DUP)	VP-7 (DUP)	5				2E-09		*ND*	3E-07				9E-09		*ND*			8E-08			4E-07
P33-VP-8	VP-8	5				2E-09		*ND*	*ND*				2E-08		*ND*			*ND*			4E-08
P33-VP-9	VP-9	5				2E-09		*ND*	*ND*				4E-08		2E-09			*ND*			5E-08
P33-VP-9 (DUP)	VP-9 (DUP)	5				2E-09		*ND*	*ND*				2E-08		2E-09			*ND*			4E-08
P33-VP-10	VP-10	5				*ND*		*ND*	*ND*				2E-09		*ND*			*ND*			2E-09
P33-VP-11	VP-11	5				1E-09		*ND*	*ND*				2E-08		*ND*			*ND*			2E-08
P33-VP-12	VP-12	5				1E-09		*ND*	*ND*				7E-08		*ND*			*ND*			7E-08

The Fehling Group, LLC

TABLE I-7a

Indoor Air Incremental Lifetime Cancer Risk (gray-shaded values)

and Cumulative Incremental Lifetime Cancer Risk Values (blue-shaded values)

~ Residential Receptor ~

Sample ID	Secondary Sample ID	Sample Depth (ft bgs)	Cyclohexane	Dichlorodifluoromethane	Ethanol	Ethylbenzene	m,p-Xylene	Methylene chloride	Naphthalene	n-Propylbenzene	o-Xylene	p-Isopropyltoluene	Tetrachloroethene	Toluene	Trichloroethene	Trichlorofluoromethane	Vinyl acetate	Vinyl chloride	2-Propanol	Gasoline Range Organics	ILCR
P32-VP-1	VP-1	5				5E-10		ND	ND				2E-08		ND			3E-07			3E-07
P32-VP-2	VP-2	5				5E-10		ND	4E-08				ND		ND			ND			8E-08
P32-VP-3	VP-3	5				ND		ND	ND				1E-08		ND			ND			1E-08
P32-VP-4	VP-4	5				5E-09		ND	1E-08				6E-09		ND			ND			3E-08
P32-VP-5	VP-5	5	NONCARCINOGENIC	NONCARCINOGENIC	NONCARCINOGENIC	1E-09	NONCARCINOGENIC	ND	ND	NONCARCINOGENIC	NONCARCINOGENIC	NONCARCINOGENIC	1E-08	NONCARCINOGENIC	ND	NONCARCINOGENIC	NONCARCINOGENIC	8E-08	NONCARCINOGENIC	NONCARCINOGENIC	1E-07
P32-VP-6	VP-6	5				1E-09		ND	2E-08				7E-09		ND			ND			4E-08
P32-VP-7	VP-7	5				ND		ND	ND				9E-09		ND			ND			2E-08
P32-VP-8	VP-8	5				ND		ND	6E-09				8E-09		ND			ND			1E-08
P32-VP-9	VP-9	5				3E-09		ND	3E-08				5E-09		ND			7E-08			1E-07
P32-VP-10	VP-10	5				1E-08		ND	1E-08				2E-09		ND			6E-08			8E-08
P32-VMW-1	VMW-1	10				ND		ND	ND				6E-09		ND			ND			6E-09
P32-VMW-1 (DUP)	VMW-1 (DUP)	10				ND		ND	ND				3E-07		ND			ND			7E-07
P32-VMW-1 (10')	VMW-1-10	10				ND		ND	ND				6E-09		ND			ND			6E-09
P32-VWM-2	VMW-2	5				ND		ND	ND				ND		ND			ND			0E+00
P32-VMW-2 (5')	VMW-2-5	5				ND		ND	ND				9E-09		ND			ND			9E-09
P32-VWM-3	VWM-3	15				2E-09		ND	ND				2E-08		6E-09			ND			3E-07
P32-VMW-3 (15')	VMW-3-15	15				8E-10		ND	ND				4E-09		ND			ND			1E-07
P32-VMW-3 (15') (DUP)	VMW-3-15 (DUP)	15				8E-10		ND	ND				3E-09		ND			ND			8E-08
P32-VWM-4	VMW-4	10				ND		ND	ND				ND		ND			ND			0E+00
P32-VMW-4 (10')	VWM-4-10	10				ND		ND	ND				ND		ND			ND			0E+00

The Fehling Group, LLC

TABLE I-7b
Indoor Air Hazard Quotients (gray-shaded values) and Hazard Index Values (blue-shaded values)
~ Residential Receptor ~

Sample ID	Secondary Sample ID	Sample Depth (ft bgs)	1,1,1-Trichloroethane	1,1-Dichloroethane	1,2,4-Trichlorobenzene	1,2,4-Trimethylbenzene	1,3,5-Trimethylbenzene	1,3-Dichlorobenzene	2,2,4-Trimethylpentane	2-Butanone	2-Hexanone	4-Ethyl Toluene	4-Methyl-2-pentanone	Acetone	Acetonitrile	Benzene	Carbon disulfide	Chlorobenzene	Chloroethane	Chloroform	Chloromethane
2A-1-5	-	5	5E-05	ND	ND	ND	ND	ND	NA	3E-06	ND	ND	ND	9E-07	NA	1E-03	3E-05	ND	ND	ND	ND
2A-1-10	-	10	2E-05	ND	ND	ND	ND	ND	NA	3E-06	ND	ND	ND	9E-07	NA	ND	9E-05	ND	ND	ND	ND
2A-1-15	-	15	2E-05	ND	ND	ND	ND	ND	NA	2E-06	ND	ND	ND	9E-07	NA	7E-04	2E-04	ND	ND	ND	ND
2A-2-5	-	5	1E-04	ND	ND	ND	ND	ND	NA	2E-06	ND	ND	ND	8E-07	NA	1E-03	ND	ND	ND	ND	ND
2A-2-5 (DUP)	-	5	1E-04	ND	ND	ND	ND	ND	NA	8E-06	ND	ND	ND	2E-06	NA	ND	3E-04	ND	ND	ND	ND
2A-2-10	-	10	7E-05	ND	ND	ND	ND	ND	NA	5E-06	ND	ND	ND	9E-07	NA	ND	2E-04	ND	ND	ND	ND
2A-2-15	-	15	3E-05	ND	ND	ND	ND	ND	NA	8E-07	ND	ND	ND	3E-07	NA	ND	ND	ND	ND	ND	ND
2A-3-5	-	5	1E-05	ND	ND	ND	ND	ND	NA	1E-06	ND	ND	ND	ND	NA	ND	ND	ND	ND	ND	ND
2A-3-10	-	10	9E-06	ND	ND	ND	ND	ND	NA	ND	ND	ND	ND	ND	NA	ND	ND	ND	ND	ND	ND
2A-3-15	-	15	6E-06	ND	ND	ND	ND	ND	NA	ND	ND	ND	ND	ND	NA	ND	ND	ND	ND	ND	ND
2A-AM	-	Ambient	ND	ND	ND	ND	ND	ND	NA	7E-03	ND	ND	ND	2E-03	NA	ND	7E-02	ND	ND	ND	ND
P33-VP-1	VP-1	5	2E-05	ND	ND	5E-05	8E-06	2E-05	ND	3E-07	ND	ND	6E-07	3E-07	ND	2E-04	ND	ND	ND	ND	ND
P33-VP-2	VP-2	5	4E-05	ND	ND	2E-05	ND	1E-05	ND	6E-07	ND	ND	4E-07	5E-07	ND	2E-04	ND	ND	ND	ND	ND
P33-VP-3	VP-3	5	5E-05	2E-06	ND	3E-05	ND	2E-05	ND	3E-07	ND	ND	6E-07	3E-07	ND	2E-04	ND	ND	ND	1E-05	ND
P33-VP-3 (DUP)	VP-3 (DUP)	5	8E-05	2E-06	ND	3E-05	ND	2E-05	ND	1E-07	2E-05	ND	4E-07	3E-07	ND	ND	ND	ND	ND	2E-05	ND
P33-VP-4	VP-4	5	ND	ND	ND	2E-05	ND	1E-05	ND	3E-07	ND	ND	2E-07	5E-07	ND	2E-04	ND	2E-05	ND	ND	6E-06
P33-VP-5	VP-5	5	4E-05	2E-06	ND	3E-05	ND	2E-05	-	4E-07	ND	ND	6E-07	3E-07	ND	2E-04	ND	ND	ND	ND	ND
P33-VP-6	VP-6	5	2E-06	ND	ND	2E-05	ND	2E-05	ND	3E-07	ND	ND	2E-07	3E-07	ND	2E-04	ND	ND	ND	ND	2E-05
P33-VP-7	VP-7	5	2E-05	ND	ND	3E-05	8E-06	2E-05	-	3E-07	ND	1E-05	6E-07	3E-07	ND	2E-04	ND	ND	ND	ND	ND
P32-VP-7 (DUP)	VP-7 (DUP)	5	3E-06	ND	ND	2E-04	4E-05	ND	-	4E-07	ND	2E-05	ND	5E-07	ND	2E-04	8E-06	ND	ND	ND	6E-06
P33-VP-8	VP-8	5	1E-05	ND	ND	4E-05	8E-06	2E-05	-	3E-07	ND	6E-06	8E-07	3E-07	ND	2E-04	ND	ND	ND	1E-05	ND
P33-VP-9	VP-9	5	5E-06	ND	ND	5E-05	8E-06	2E-05	-	3E-07	ND	6E-06	6E-07	3E-07	ND	2E-04	ND	ND	ND	ND	ND
P33-VP-9 (DUP)	VP-9 (DUP)	5	5E-06	ND	ND	4E-05	8E-06	2E-05	-	3E-07	ND	6E-06	6E-07	3E-07	ND	4E-04	ND	ND	ND	ND	ND
P33-VP-10	VP-10	5	ND	ND	ND	ND	ND	ND	ND	ND	ND	ND	ND	5E-08	ND	ND	ND	ND	ND	ND	ND
P33-VP-11	VP-11	5	4E-06	ND	NA	3E-05	ND	2E-05	-	1E-07	ND	ND	8E-07	2E-07	ND	ND	ND	ND	ND	ND	ND
P33-VP-12	VP-12	5	2E-06	ND	ND	2E-05	ND	2E-05	-	1E-07	ND	ND	4E-07	2E-07	ND	ND	ND	ND	ND	ND	ND

The Fehling Group, LLC

TABLE I-7b
Indoor Air Hazard Quotients (gray-shaded values) and Hazard Index Values (blue-shaded values)
~ Residential Receptor ~

Sample ID	Secondary Sample ID	Sample Depth (ft bgs)	1,1,1-Trichloroethane	1,1-Dichloroethane	1,2,4-Trichlorobenzene	1,2,4-Trimethylbenzene	1,3,5-Trimethylbenzene	1,3-Dichlorobenzene	2,2,4-Trimethylpentane	2-Butanone	2-Hexanone	4-Ethyl Toluene	4-Methyl-2-pentanone	Acetone	Acetonitrile	Benzene	Carbon disulfide	Chlorobenzene	Chloroethane	Chloroform	Chloromethane
P32-VP-1	VP-1	5	3E-06	ND	ND	ND	ND	ND	ND	1E-06	ND	ND	ND	1E-06	1E-05	4E-04	1E-06	ND	ND	ND	ND
P32-VP-2	VP-2	5	ND	ND	ND	2E-05	ND	ND	ND	1E-07	ND	ND	ND	3E-07	ND	1E-03	ND	ND	ND	ND	5E-06
P32-VP-3	VP-3	5	4E-06	ND	ND	ND	ND	ND	ND	4E-07	ND	ND	ND	5E-07	ND	ND	3E-06	ND	ND	ND	ND
P32-VP-4	VP-4	5	3E-06	ND	5E-04	6E-05	2E-05	ND	ND	1E-07	ND	1E-05	ND	5E-07	ND	ND	ND	ND	ND	ND	6E-06
P32-VP-5	VP-5	5	2E-06	ND	ND	8E-06	ND	ND	ND	7E-07	ND	ND	ND	8E-07	ND	2E-04	1E-06	ND	ND	ND	ND
P32-VP-6	VP-6	5	2E-06	ND	ND	8E-05	2E-05	ND	-	1E-07	ND	1E-05	ND	3E-07	ND	4E-04	ND	ND	ND	ND	ND
P32-VP-7	VP-7	5	3E-06	ND	ND	ND	ND	ND	ND	4E-07	ND	ND	ND	5E-07	ND	2E-04	8E-06	ND	ND	ND	ND
P32-VP-8	VP-8	5	4E-06	ND	ND	ND	ND	ND	ND	ND	ND	ND	ND	1E-07	ND	ND	ND	ND	ND	ND	ND
P32-VP-9	VP-9	5	2E-06	ND	ND	2E-04	6E-05	ND	-	1E-06	ND	2E-05	ND	8E-07	1E-05	9E-04	2E-06	ND	ND	ND	7E-06
P32-VP-10	VP-10	5	ND	ND	ND	3E-05	ND	ND	ND	6E-07	ND	6E-06	ND	5E-07	ND	ND	ND	ND	ND	ND	7E-06
P32-VMW-1	VMW-1	10	ND	ND	ND	ND	ND	ND	ND	ND	ND	ND	ND	1E-06	ND	ND	ND	ND	ND	ND	ND
P32-VMW-1 (DUP)	VMW-1 (DUP)	10	ND	ND	ND	ND	ND	ND	ND	ND	ND	ND	ND	1E-06	ND	ND	ND	ND	ND	5E-04	ND
P32-VMW-1 (10')	VMW-1-10	10	2E-06	ND	ND	ND	ND	ND	ND	ND	ND	ND	ND	2E-07	ND	ND	ND	ND	ND	ND	ND
P32-VWM-2	VMW-2	5	ND	ND	ND	ND	ND	ND	ND	ND	ND	ND	ND	1E-06	ND	ND	ND	ND	ND	ND	ND
P32-VMW-2 (5')	VMW-2-5	5	ND	ND	ND	ND	ND	ND	ND	ND	ND	ND	ND	3E-07	ND	ND	ND	ND	ND	ND	ND
P32-VWM-3	VWM-3	15	ND	ND	ND	ND	ND	ND	ND	7E-07	ND	ND	ND	4E-06	8E-05	8E-03	6E-06	ND	ND	ND	ND
P32-VMW-3 (15')	VMW-3-15	15	2E-06	ND	ND	ND	ND	5E-06	ND	5E-07	ND	ND	ND	1E-06	ND	3E-03	1E-05	ND	2E-07	ND	2E-05
P32-VMW-3 (15') (DUP)	VMW-3-15 (DUP)	15	2E-06	ND	ND	ND	ND	8E-06	ND	4E-07	ND	ND	ND	1E-06	4E-05	2E-03	1E-05	ND	2E-07	ND	2E-05
P32-VWM-4	VMW-4	10	ND	ND	ND	ND	ND	ND	ND	5E-07	ND	ND	ND	3E-06	ND	ND	4E-06	ND	ND	ND	ND
P32-VMW-4 (10')	VWM-4-10	10	ND	ND	ND	ND	ND	ND	ND	ND	ND	ND	ND	5E-07	ND	ND	ND	ND	ND	ND	ND

The Fehling Group, LLC

TABLE I-7b
Indoor Air Hazard Quotients (gray-shaded values) and Hazard Index Values (blue-shaded values)
~ Residential Receptor ~

Sample ID	Secondary Sample ID	Sample Depth (ft bgs)	Cyclohexane	Dichlorodifluoromethane	Ethanol	Ethylbenzene	m,p-Xylene	Methylene chloride	Naphthalene	n-Propylbenzene	o-Xylene	p-Isopropyltoluene	Tetrachloroethene	Toluene	Trichloroethene	Trichlorofluoromethane	Vinyl acetate	Vinyl chloride	2-Propanol	Gasoline Range Organics	Σ HQ = HI
2A-1-5	-	5	*NA*	*ND*	*NA*	*ND*	6E-05	*ND*	*ND*	*NA*	*ND*	*NA*	9E-03	6E-05	*ND*	*ND*	*ND*	*ND*	*NA*	*NA*	1E-02
2A-1-10	-	10	*NA*	*ND*	*NA*	*ND*	*ND*	*ND*	*ND*	*NA*	*ND*	*NA*	3E-03	1E-05	*ND*	*ND*	*ND*	*ND*	*NA*	*NA*	3E-03
2A-1-15	-	15	*NA*	*ND*	*NA*	*ND*	*ND*	*ND*	*ND*	*NA*	6E-05	*NA*	2E-03	1E-05	*ND*	*ND*	*ND*	*ND*	*NA*	*NA*	3E-03
2A-2-5	-	5	*NA*	*ND*	*NA*	2E-05	4E-04	*ND*	*ND*	*NA*	2E-04	*NA*	4E-03	3E-05	*ND*	*ND*	*ND*	*ND*	*NA*	*NA*	6E-03
2A-2-5 (DUP)	-	5	*NA*	*ND*	*NA*	*ND*	1E-04	*ND*	*ND*	*NA*	5E-05	*NA*	4E-03	3E-05	*ND*	*ND*	*ND*	*ND*	*NA*	*NA*	5E-03
2A-2-10	-	10	*NA*	*ND*	*NA*	*ND*	5E-05	8E-06	*ND*	*NA*	3E-05	*NA*	2E-03	1E-05	*ND*	*ND*	*ND*	*ND*	*NA*	*NA*	2E-03
2A-2-15	-	15	*NA*	*ND*	*NA*	*ND*	3E-05	*ND*	*ND*	*NA*	*ND*	*NA*	4E-03	3E-05	*ND*	*ND*	*ND*	*ND*	*NA*	*NA*	4E-03
2A-3-5	-	5	*NA*	*ND*	*NA*	*ND*	*ND*	*ND*	*ND*	*NA*	5E-05	*NA*	3E-04	*ND*	*ND*	1E-05	*ND*	*ND*	*NA*	*NA*	3E-04
2A-3-10	-	10	*NA*	*ND*	*NA*	*ND*	*ND*	*ND*	*ND*	*NA*	*ND*	*NA*	2E-04	*ND*	*ND*	8E-06	*ND*	*ND*	*NA*	*NA*	2E-04
2A-3-15	-	15	*NA*	*ND*	*NA*	*ND*	4E-05	*ND*	*ND*	*NA*	*ND*	*NA*	2E-04	1E-05	*ND*	5E-06	*ND*	*ND*	*NA*	*NA*	2E-04
2A-AM	-	Ambient	*NA*	*ND*	*NA*	*ND*	*ND*	*ND*	*ND*	*NA*	*ND*	*NA*	*ND*	*ND*	*ND*	*ND*	*ND*	*ND*	*NA*	*NA*	8E-02
P33-VP-1	VP-1	5	2E-07	2E-05	-	1E-06	1E-04	*ND*	*ND*	*ND*	2E-05	5E-07	2E-04	6E-05	1E-02	2E-06	3E-06	*ND*	2E-04	8E-02	1E-01
P33-VP-2	VP-2	5	2E-07	*ND*	-	6E-07	6E-05	*ND*	*ND*	*ND*	1E-05	*ND*	3E-04	2E-05	*NA*	1E-06	3E-06	*ND*	2E-04	4E-02	4E-02
P33-VP-3	VP-3	5	1E-07	2E-05	-	1E-06	1E-04	*ND*	*ND*	*ND*	2E-05	*ND*	3E-04	4E-05	NA	4E-07	*ND*	*ND*	*NA*	5E-02	5E-02
P33-VP-3 (DUP)	VP-3 (DUP)	5	1E-07	2E-05	-	1E-06	6E-05	*ND*	*ND*	*ND*	2E-05	*ND*	4E-04	2E-05	1E-01	9E-07	3E-06	*ND*	5E-04	7E-02	2E-01
P33-VP-4	VP-4	5	1E-07	*ND*	-	2E-06	2E-04	2E-06	3E-04	*ND*	2E-05	*ND*	4E-05	2E-04	5E-04	*ND*	*ND*	*ND*	4E-03	6E-02	7E-02
P33-VP-5	VP-5	5	1E-07	6E-06	-	2E-06	1E-04	*ND*	*ND*	*ND*	2E-05	*ND*	2E-04	8E-05	2E-02	9E-07	6E-06	*ND*	7E-04	8E-02	1E-01
P33-VP-6	VP-6	5	1E-07	*ND*	-	1E-06	6E-05	2E-06	*ND*	*ND*	1E-05	*ND*	7E-05	6E-05	3E-03	*ND*	*ND*	*ND*	2E-03	4E-02	4E-02
P33-VP-7	VP-7	5	1E-07	2E-05	-	2E-06	1E-04	*ND*	*ND*	*ND*	2E-05	*ND*	4E-04	4E-05	*ND*	9E-07	*ND*	*ND*	2E-04	4E-02	4E-02
P32-VP-7 (DUP)	VP-7 (DUP)	5	*ND*	2E-05	-	2E-06	2E-04	*ND*	7E-03	1E-06	3E-05	5E-06	1E-04	8E-06	*ND*	9E-06	6E-06	8E-06	7E-04	5E-02	6E-02
P33-VP-8	VP-8	5	2E-07	5E-05	-	2E-06	1E-04	*ND*	*ND*	*ND*	2E-05	*ND*	2E-04	2E-05	*ND*	9E-07	1E-05	*ND*	4E-04	5E-02	5E-02
P33-VP-9	VP-9	5	1E-07	1E-05	-	2E-06	1E-04	*ND*	*ND*	*ND*	3E-05	*ND*	4E-04	8E-05	5E-04	4E-07	6E-06	*ND*	3E-04	5E-02	5E-02
P33-VP-9 (DUP)	VP-9 (DUP)	5	2E-07	1E-05	-	2E-06	1E-04	*ND*	*ND*	*ND*	2E-05	*ND*	2E-04	4E-05	5E-04	*ND*	6E-06	*ND*	4E-04	6E-02	6E-02
P33-VP-10	VP-10	5	*ND*	*ND*	-	*ND*	*ND*	*ND*	*ND*	*ND*	*ND*	*ND*	2E-05	4E-06	*ND*	*ND*	*ND*	*ND*	*NA*	6E-02	6E-02
P33-VP-11	VP-11	5	1E-07	*ND*	-	1E-06	1E-04	*ND*	*ND*	*ND*	2E-05	*ND*	2E-04	2E-05	*ND*	*ND*	3E-06	*ND*	2E-04	1E-01	1E-01
P33-VP-12	VP-12	5	1E-07	*ND*	-	1E-06	6E-05	*ND*	*ND*	*ND*	2E-05	*ND*	8E-04	2E-05	*ND*	9E-07	*ND*	*ND*	2E-04	7E-02	7E-02

The Fehling Group, LLC

TABLE I-7b
Indoor Air Hazard Quotients (gray-shaded values) and Hazard Index Values (blue-shaded values)
~ Residential Receptor ~

Sample ID	Secondary Sample ID	Sample Depth (ft bgs)	Cyclohexane	Dichlorodifluoromethane	Ethanol	Ethylbenzene	m,p-Xylene	Methylene chloride	Naphthalene	n-Propylbenzene	o-Xylene	p-Isopropyltoluene	Tetrachloroethene	Toluene	Trichloroethene	Trichlorofluoromethane	Vinyl acetate	Vinyl chloride	2-Propanol	Gasoline Range Organics	Σ HQ = HI
P32-VP-1	VP-1	5	*ND*	3E-05	-	6E-07	6E-05	*ND*	*ND*	*ND*	1E-05	*ND*	2E-04	4E-06	*ND*	4E-06	3E-06	2E-05	9E-04	5E-02	5E-02
P32-VP-2	VP-2	5	*ND*	*ND*	-	6E-07	6E-05	*ND*	1E-03	*ND*	1E-05	*ND*	*ND*	2E-05	*ND*	*ND*	*ND*	*ND*	9E-03	7E-02	8E-02
P32-VP-3	VP-3	5	*ND*	1E-05	-	*ND*	*ND*	*ND*	*ND*	*ND*	*ND*	*ND*	1E-04	2E-06	*ND*	2E-06	*ND*	*ND*	4E-03	1E-01	1E-01
P32-VP-4	VP-4	5	*ND*	6E-06	-	6E-06	7E-04	*ND*	3E-04	*ND*	1E-04	*ND*	7E-05	6E-04	*ND*	4E-07	*ND*	*ND*	4E-03	3E-01	3E-01
P32-VP-5	VP-5	5	*ND*	4E-05	-	1E-06	6E-05	*ND*	*ND*	*ND*	1E-05	*ND*	1E-04	8E-06	*ND*	1E-05	*ND*	8E-06	9E-03	2E-01	2E-01
P32-VP-6	VP-6	5	*ND*	2E-05	-	1E-06	1E-04	*ND*	5E-04	*ND*	2E-05	2E-06	8E-05	2E-05	*ND*	1E-05	*ND*	*ND*	3E-04	5E-02	6E-02
P32-VP-7	VP-7	5	1E-07	2E-05	-	*ND*	4E-05	*ND*	*ND*	*ND*	6E-06	*ND*	1E-04	4E-06	*ND*	9E-06	*ND*	*ND*	3E-04	6E-02	6E-02
P32-VP-8	VP-8	5	*ND*	1E-05	-	*ND*	*ND*	*ND*	2E-04	*ND*	*ND*	*ND*	9E-05	*ND*	*ND*	1E-06	*ND*	*ND*	1E-04	5E-02	5E-02
P32-VP-9	VP-9	5	1E-07	2E-05	-	3E-06	4E-04	*ND*	7E-04	*ND*	1E-04	1E-06	5E-05	6E-05	*ND*	4E-06	3E-06	7E-06	2E-03	5E-02	6E-02
P32-VP-10	VP-10	5	*ND*	1E-05	-	1E-05	9E-04	*ND*	3E-04	*ND*	2E-04	*ND*	2E-05	4E-04	*ND*	9E-07	*ND*	5E-06	2E-03	1E-01	1E-01
P32-VMW-1	VMW-1	10	*ND*	4E-05	-	*ND*	8E-05	*ND*	*ND*	*ND*	*ND*	*ND*	7E-05	7E-05	*ND*	6E-06	*ND*	*ND*	3E-05	5E-03	5E-03
P32-VMW-1 (DUP)	VMW-1 (DUP)	10	*ND*	4E-05	-	*ND*	*ND*	*ND*	*ND*	*ND*	*ND*	*ND*	3E-03	5E-05	*ND*	6E-06	*ND*	*ND*	3E-05	1E-02	2E-02
P32-VMW-1 (10')	VMW-1-10	10	*ND*	3E-05	-	*ND*	*ND*	*ND*	*ND*	*ND*	*ND*	*ND*	7E-05	8E-05	*ND*	6E-06	*ND*	*ND*	2E-02	*ND*	2E-02
P32-VWM-2	VMW-2	5	*ND*	*ND*	*ND*	*ND*	*ND*	*ND*	*ND*	*ND*	*ND*	*ND*	*ND*	8E-05	*ND*	4E-06	*ND*	*ND*	2E-05	9E-03	9E-03
P32-VMW-2 (5')	VMW-2-5	5	*ND*	2E-05	-	*ND*	*ND*	*ND*	*ND*	*ND*	*ND*	*ND*	1E-04	1E-04	*ND*	9E-06	*ND*	*ND*	1E-02	*ND*	1E-02
P32-VWM-3	VWM-3	15	2E-07	*ND*	-	2E-06	1E-04	*ND*	*ND*	*ND*	1E-05	*ND*	3E-04	9E-05	1E-03	*ND*	*ND*	*ND*	4E-05	2E-02	3E-02
P32-VMW-3 (15')	VMW-3-15	15	*ND*	1E-05	-	9E-07	3E-05	*ND*	*ND*	*ND*	*ND*	*ND*	5E-05	7E-05	*ND*	2E-06	*ND*	*ND*	4E-03	5E-03	1E-02
P32-VMW-3 (15') (DUP)	VMW-3-15 (DUP)	15	*ND*	1E-05	-	9E-07	6E-05	*ND*	*ND*	*ND*	*ND*	*ND*	4E-05	2E-04	*ND*	2E-06	*ND*	*ND*	2E-02	1E-02	4E-02
P32-VWM-4	VMW-4	10	*ND*	*ND*	-	*ND*	*ND*	*ND*	*ND*	*ND*	*ND*	*ND*	*ND*	4E-05	*ND*	3E-06	*ND*	*ND*	2E-05	6E-03	6E-03
P32-VWM-4 (10')	VWM-4-10	10	*ND*	*ND*	*ND*	*ND*	*ND*	*ND*	*ND*	*ND*	*ND*	*ND*	*ND*	1E-04	*ND*	3E-06	*ND*	*ND*	1E-02	6E-03	2E-02

The Fehling Group, LLC

TABLE I-7c

Trench Air Incremental Lifetime Cancer Risk (gray-shaded values)

and Cumulative Incremental Lifetime Cancer Risk Values (blue-shaded values)

~ Construction Worker Receptor ~

Sample ID	Secondary Sample ID	Sample Depth (ft bgs)	1,1,1-Trichloroethane	1,1-Dichloroethane	1,2,4-Trichlorobenzene	1,2,4-Trimethylbenzene	1,3,5-Trimethylbenzene	1,3-Dichlorobenzene	2,2,4-Trimethylpentane	2-Butanone	2-Hexanone	4-Ethyl Toluene	4-Methyl-2-pentanone	Acetone	Acetonitrile	Benzene	Carbon disulfide	Chlorobenzene	Chloroethane	Chloroform	Chloromethane
2A-1-5	-	5		ND	ND				NA							1E-09				ND	
2A-1-10	-	10		ND	ND				NA							ND				ND	
2A-1-15	-	15		ND	ND				NA							5E-12				ND	
2A-2-5	-	5		ND	ND				NA							1E-09				ND	
2A-2-5 (DUP)	-	5		ND	ND				NA							ND				ND	
2A-2-10	-	10		ND	ND				NA							ND				ND	
2A-2-15	-	15		ND	ND				NA							ND				ND	
2A-3-5	-	5		ND	ND				NA							ND				ND	
2A-3-10	-	10		ND	ND				NA							ND				ND	
2A-3-15	-	15		ND	ND				NA							ND				ND	
2A-AM	-	Ambient		ND	ND				NA							ND				ND	
P33-VP-1	VP-1	5		ND	ND				ND							2E-10				ND	
P33-VP-2	VP-2	5		ND	ND				ND							2E-10				ND	
P33-VP-3	VP-3	5		2E-11	ND				ND							2E-10				3E-10	
P33-VP-3 (DUP)	VP-3 (DUP)	5		4E-11	ND				ND							ND				5E-10	
P33-VP-4	VP-4	5		ND	ND				ND							2E-10				ND	
P33-VP-5	VP-5	5		2E-11	ND				-							2E-10				ND	
P33-VP-6	VP-6	5		ND	ND				ND							2E-10				ND	
P33-VP-7	VP-7	5		ND	ND				-							2E-10				ND	
P32-VP-7 (DUP)	VP-7 (DUP)	5		ND	ND				-							2E-10				ND	
P33-VP-8	VP-8	5		ND	ND				-							2E-10				3E-10	
P33-VP-9	VP-9	5		ND	ND				-							2E-10				ND	
P33-VP-9 (DUP)	VP-9 (DUP)	5		ND	ND				-							5E-10				ND	
P33-VP-10	VP-10	5		ND	ND				ND							ND				ND	
P33-VP-11	VP-11	5		ND	NA				-							ND				ND	
P33-VP-12	VP-12	5		ND	ND				-							ND				ND	

NONCARCINOGENIC

The Fehling Group, LLC

TABLE I-7c

Trench Air Incremental Lifetime Cancer Risk (gray-shaded values)

and Cumulative Incremental Lifetime Cancer Risk Values (blue-shaded values)

~ Construction Worker Receptor ~

Sample ID	Secondary Sample ID	Sample Depth (ft bgs)	1,1,1-Trichloroethane	1,1-Dichloroethane	1,2,4-Trichlorobenzene	1,2,4-Trimethylbenzene	1,3,5-Trimethylbenzene	1,3-Dichlorobenzene	2,2,4-Trimethylpentane	2-Butanone	2-Hexanone	4-Ethyl Toluene	4-Methyl-2-pentanone	Acetone	Acetonitrile	Benzene	Carbon disulfide	Chlorobenzene	Chloroethane	Chloroform	Chloromethane
P32-VP-1	VP-1	5		*ND*	*ND*				*ND*							**5E-10**				*ND*	
P32-VP-2	VP-2	5		*ND*	*ND*				*ND*							**1E-09**				*ND*	
P32-VP-3	VP-3	5		*ND*	*ND*				*ND*							*ND*				*ND*	
P32-VP-4	VP-4	5		*ND*	**8E-11**				*ND*							*ND*				*ND*	
P32-VP-5	VP-5	5	NONCARCINOGENIC	*ND*	*ND*	NONCARCINOGENIC	NONCARCINOGENIC	NONCARCINOGENIC	*ND*	NONCARCINOGENIC	NONCARCINOGENIC	NONCARCINOGENIC	NONCARCINOGENIC	NONCARCINOGENIC	NONCARCINOGENIC	**2E-10**	NONCARCINOGENIC	NONCARCINOGENIC	NONCARCINOGENIC	*ND*	NONCARCINOGENIC
P32-VP-6	VP-6	5		*ND*	*ND*				-							**5E-10**				*ND*	
P32-VP-7	VP-7	5		*ND*	*ND*				*ND*							**2E-10**				*ND*	
P32-VP-8	VP-8	5		*ND*	*ND*				*ND*							*ND*				*ND*	
P32-VP-9	VP-9	5		*ND*	*ND*				-							**9E-10**				*ND*	
P32-VP-10	VP-10	5		*ND*	*ND*				*ND*							*ND*				*ND*	
P32-VMW-1	VMW-1	10		*ND*	*ND*				*ND*							*ND*				*ND*	
P32-VMW-1 (DUP)	VMW-1 (DUP)	10		*ND*	*ND*				*ND*							*ND*				**2E-10**	
P32-VMW-1 (10')	VMW-1-10	10		*ND*	*ND*				*ND*							*ND*				*ND*	
P32-VWM-2	VMW-2	5		*ND*	*ND*				*ND*							*ND*				*ND*	
P32-VMW-2 (5')	VMW-2-5	5		*ND*	*ND*				*ND*							*ND*				*ND*	
P32-VWM-3	VWM-3	15		*ND*	*ND*				*ND*							**6E-11**				*ND*	
P32-VMW-3 (15')	VMW-3-15	15		*ND*	*ND*				*ND*							**3E-11**				*ND*	
P32-VMW-3 (15') (DUP)	VMW-3-15 (DUP)	15		*ND*	*ND*				*ND*							**2E-11**				*ND*	
P32-VWM-4	VMW-4	10		*ND*	*ND*				*ND*							*ND*				*ND*	
P32-VMW-4 (10')	VWM-4-10	10		*ND*	*ND*				*ND*							*ND*				*ND*	

The Fehling Group, LLC

TABLE I-7c

Trench Air Incremental Lifetime Cancer Risk (gray-shaded values)

and Cumulative Incremental Lifetime Cancer Risk Values (blue-shaded values)

~ Construction Worker Receptor ~

Sample ID	Secondary Sample ID	Sample Depth (ft bgs)	Cyclohexane	Dichlorodifluoromethane	Ethanol	Ethylbenzene	m,p-Xylene	Methylene chloride	Naphthalene	n-Propylbenzene	o-Xylene	p-Isopropyltoluene	Tetrachloroethene	Toluene	Trichloroethene	Trichlorofluoromethane	Vinyl acetate	Vinyl chloride	2-Propanol	Gasoline Range Organics	ILCR
2A-1-5	-	5	NONCARCINOGENIC	NONCARCINOGENIC	NONCARCINOGENIC	*ND*	NONCARCINOGENIC	*ND*	*ND*	NONCARCINOGENIC	NONCARCINOGENIC	NONCARCINOGENIC	2E-08	NONCARCINOGENIC	*ND*	NONCARCINOGENIC	NONCARCINOGENIC	*ND*	NONCARCINOGENIC	NONCARCINOGENIC	2E-08
2A-1-10	-	10				*ND*		*ND*	*ND*				1E-10		*ND*			*ND*			1E-10
2A-1-15	-	15				*ND*		*ND*	*ND*				4E-11		*ND*			*ND*			4E-11
2A-2-5	-	5				4E-10		*ND*	*ND*				1E-08		*ND*			*ND*			1E-08
2A-2-5 (DUP)	-	5				*ND*		*ND*	*ND*				1E-08		*ND*			*ND*			1E-08
2A-2-10	-	10				*ND*		5E-13	*ND*				7E-11		*ND*			*ND*			7E-11
2A-2-15	-	15				*ND*		*ND*	*ND*				9E-11		*ND*			*ND*			9E-11
2A-3-5	-	5				*ND*		*ND*	*ND*				7E-10		*ND*			*ND*			7E-10
2A-3-10	-	10				*ND*		*ND*	*ND*				7E-12		*ND*			*ND*			7E-12
2A-3-15	-	15				*ND*		*ND*	*ND*				3E-12		*ND*			*ND*			3E-12
2A-AM	-	Ambient				*ND*		*ND*	*ND*				*ND*		*ND*			*ND*			0E+00
P33-VP-1	VP-1	5				3E-11		*ND*	*ND*				5E-10		1E-09			*ND*			2E-09
P33-VP-2	VP-2	5				2E-11		*ND*	*ND*				8E-10		*NA*			*ND*			1E-09
P33-VP-3	VP-3	5				3E-11		*ND*	*ND*				8E-10		NA			*ND*			1E-09
P33-VP-3 (DUP)	VP-3 (DUP)	5				3E-11		*ND*	*ND*				1E-09		1E-08			*ND*			1E-08
P33-VP-4	VP-4	5				6E-11		8E-12	4E-10				1E-10		5E-11			*ND*			8E-10
P33-VP-5	VP-5	5				5E-11		*ND*	*ND*				5E-10		2E-09			*ND*			3E-09
P33-VP-6	VP-6	5				3E-11		9E-12	*ND*				2E-10		2E-10			*ND*			7E-10
P33-VP-7	VP-7	5				5E-11		*ND*	*ND*				1E-09		*ND*			*ND*			1E-09
P32-VP-7 (DUP)	VP-7 (DUP)	5				5E-11		*ND*	7E-09				2E-10		*ND*			7E-10			8E-09
P33-VP-8	VP-8	5				5E-11		*ND*	*ND*				5E-10		*ND*			*ND*			1E-09
P33-VP-9	VP-9	5				5E-11		*ND*	*ND*				1E-09		5E-11			*ND*			1E-09
P33-VP-9 (DUP)	VP-9 (DUP)	5				5E-11		*ND*	*ND*				5E-10		5E-11			*ND*			1E-09
P33-VP-10	VP-10	5				*ND*		*ND*	*ND*				5E-11		*ND*			*ND*			5E-11
P33-VP-11	VP-11	5				3E-11		*ND*	*ND*				5E-10		*ND*			*ND*			6E-10
P33-VP-12	VP-12	5				3E-11		*ND*	*ND*				2E-09		*ND*			*ND*			2E-09

The Fehling Group, LLC

TABLE I-7c

Trench Air Incremental Lifetime Cancer Risk (gray-shaded values)

and Cumulative Incremental Lifetime Cancer Risk Values (blue-shaded values)

~ Construction Worker Receptor ~

Sample ID	Secondary Sample ID	Sample Depth (ft bgs)	Cyclohexane	Dichlorodifluoromethane	Ethanol	Ethylbenzene	m,p-Xylene	Methylene chloride	Naphthalene	n-Propylbenzene	o-Xylene	p-Isopropyltoluene	Tetrachloroethene	Toluene	Trichloroethene	Trichlorofluoromethane	Vinyl acetate	Vinyl chloride	2-Propanol	Gasoline Range Organics	ILCR
P32-VP-1	VP-1	5	NONCARCINOGENIC	NONCARCINOGENIC	NONCARCINOGENIC	2E-11	NONCARCINOGENIC	ND	ND	NONCARCINOGENIC	NONCARCINOGENIC	NONCARCINOGENIC	5E-10	NONCARCINOGENIC	ND	NONCARCINOGENIC	NONCARCINOGENIC	2E-09	NONCARCINOGENIC	NONCARCINOGENIC	3E-09
P32-VP-2	VP-2	5				2E-11		ND	1E-09				ND		ND			ND			2E-09
P32-VP-3	VP-3	5				ND		ND	ND				3E-10		ND			ND			3E-10
P32-VP-4	VP-4	5				2E-10		ND	4E-10				2E-10		ND			ND			7E-10
P32-VP-5	VP-5	5				3E-11		ND	ND				3E-10		ND			7E-10			1E-09
P32-VP-6	VP-6	5				3E-11		ND	5E-10				2E-10		ND			ND			1E-09
P32-VP-7	VP-7	5				ND		ND	ND				2E-10		ND			ND			5E-10
P32-VP-8	VP-8	5				ND		ND	2E-10				2E-10		ND			ND			4E-10
P32-VP-9	VP-9	5				8E-11		ND	7E-10				1E-10		ND			6E-10			2E-09
P32-VP-10	VP-10	5				3E-10		ND	4E-10				5E-11		ND			5E-10			1E-09
P32-VMW-1	VMW-1	10				ND		ND	ND				3E-12		ND			ND			3E-12
P32-VMW-1 (DUP)	VMW-1 (DUP)	10				ND		ND	ND				1E-10		ND			ND			3E-10
P32-VMW-1 (10')	VMW-1-10	10				ND		ND	ND				3E-12		ND			ND			3E-12
P32-VWM-2	VMW-2	5				ND		ND	ND				ND		ND			ND			0E+00
P32-VMW-2 (5')	VMW-2-5	5				ND		ND	ND				2E-10		ND			ND			2E-10
P32-VWM-3	VWM-3	15				5E-13		ND	ND				5E-12		1E-12			ND			7E-11
P32-VMW-3 (15')	VMW-3-15	15				2E-13		ND	ND				9E-13		ND			ND			3E-11
P32-VMW-3 (15') (DUP)	VMW-3-15 (DUP)	15				2E-13		ND	ND				7E-13		ND			ND			2E-11
P32-VWM-4	VMW-4	10				ND		ND	ND				ND		ND			ND			0E+00
P32-VMW-4 (10')	VWM-4-10	10				ND		ND	ND				ND		ND			ND			0E+00

The Fehling Group, LLC

TABLE I-7d
Trench Air Hazard Quotients (gray-shaded values) and Hazard Index Values (blue-shaded values)
~ Construction Worker Receptor ~

Sample ID	Secondary Sample ID	Sample Depth (ft bgs)	1,1,1-Trichloroethane	1,1-Dichloroethane	1,2,4-Trichlorobenzene	1,2,4-Trimethylbenzene	1,3,5-Trimethylbenzene	1,3-Dichlorobenzene	2,2,4-Trimethylpentane	2-Butanone	2-Hexanone	4-Ethyl Toluene	4-Methyl-2-pentanone	Acetone	Acetonitrile	Benzene	Carbon disulfide	Chlorobenzene	Chloroethane	Chloroform	Chloromethane
2A-1-5	-	5	4E-05	ND	ND	ND	ND	ND	NA	2E-06	ND	ND	ND	7E-07	NA	1E-03	3E-05	ND	ND	ND	ND
2A-1-10	-	10	2E-07	ND	ND	ND	ND	ND	NA	4E-08	ND	ND	ND	1E-08	NA	ND	1E-06	ND	ND	ND	ND
2A-1-15	-	15	1E-07	ND	ND	ND	ND	ND	NA	2E-08	ND	ND	ND	6E-09	NA	4E-06	1E-06	ND	ND	ND	ND
2A-2-5	-	5	1E-04	ND	ND	ND	ND	ND	NA	2E-06	ND	ND	ND	7E-07	NA	1E-03	ND	ND	ND	ND	ND
2A-2-5 (DUP)	-	5	9E-05	ND	ND	ND	ND	ND	NA	7E-06	ND	ND	ND	2E-06	NA	ND	3E-04	ND	ND	ND	ND
2A-2-10	-	10	8E-07	ND	ND	ND	ND	ND	NA	6E-08	ND	ND	ND	1E-08	NA	ND	2E-06	ND	ND	ND	ND
2A-2-15	-	15	2E-07	ND	ND	ND	ND	ND	NA	5E-09	ND	ND	ND	2E-09	NA	ND	ND	ND	ND	ND	ND
2A-3-5	-	5	9E-06	ND	ND	ND	ND	ND	NA	1E-06	ND	ND	ND	ND	NA	ND	ND	ND	ND	ND	ND
2A-3-10	-	10	1E-07	ND	ND	ND	ND	ND	NA	ND	ND	ND	ND	ND	NA	ND	ND	ND	ND	ND	ND
2A-3-15	-	15	4E-08	ND	ND	ND	ND	ND	NA	ND	ND	ND	ND	ND	NA	ND	ND	ND	ND	ND	ND
2A-AM	-	Ambient	ND	ND	ND	ND	ND	ND	NA	2E-03	ND	ND	ND	4E-04	NA	ND	2E-02	ND	ND	ND	ND
P33-VP-1	VP-1	5	1E-05	ND	ND	4E-05	6E-06	1E-05	ND	2E-07	ND	ND	4E-07	2E-07	ND	2E-04	ND	ND	ND	ND	ND
P33-VP-2	VP-2	5	3E-05	ND	ND	2E-05	ND	1E-05	ND	5E-07	ND	ND	3E-07	4E-07	ND	2E-04	ND	ND	ND	ND	ND
P33-VP-3	VP-3	5	4E-05	1E-06	ND	3E-05	ND	1E-05	ND	2E-07	ND	ND	4E-07	2E-07	ND	2E-04	ND	ND	ND	1E-05	ND
P33-VP-3 (DUP)	VP-3 (DUP)	5	7E-05	2E-06	ND	3E-05	ND	1E-05	ND	1E-07	2E-05	ND	3E-07	2E-07	ND	ND	ND	ND	ND	2E-05	ND
P33-VP-4	VP-4	5	ND	ND	ND	2E-05	ND	9E-06	ND	2E-07	ND	ND	1E-07	4E-07	ND	2E-04	ND	2E-05	ND	ND	6E-06
P33-VP-5	VP-5	5	3E-05	1E-06	ND	3E-05	ND	1E-05	-	4E-07	ND	ND	4E-07	2E-07	ND	2E-04	ND	ND	ND	ND	ND
P33-VP-6	VP-6	5	1E-06	ND	ND	2E-05	ND	1E-05	ND	2E-07	ND	ND	1E-07	2E-07	ND	2E-04	ND	ND	ND	ND	2E-05
P33-VP-7	VP-7	5	2E-05	ND	ND	3E-05	6E-06	2E-05	-	2E-07	ND	9E-06	4E-07	2E-07	ND	2E-04	ND	ND	ND	ND	ND
P32-VP-7 (DUP)	VP-7 (DUP)	5	2E-06	ND	ND	1E-04	3E-05	ND	-	4E-07	ND	2E-05	ND	4E-07	ND	2E-04	7E-06	ND	ND	ND	5E-06
P33-VP-8	VP-8	5	8E-06	ND	ND	3E-05	6E-06	1E-05	-	2E-07	ND	4E-06	6E-07	2E-07	ND	2E-04	ND	ND	ND	1E-05	ND
P33-VP-9	VP-9	5	4E-06	ND	ND	4E-05	6E-06	1E-05	-	2E-07	ND	4E-06	4E-07	2E-07	ND	2E-04	ND	ND	ND	ND	ND
P33-VP-9 (DUP)	VP-9 (DUP)	5	4E-06	ND	ND	3E-05	6E-06	1E-05	-	2E-07	ND	4E-06	4E-07	2E-07	ND	4E-04	ND	ND	ND	ND	ND
P33-VP-10	VP-10	5	ND	ND	ND	ND	ND	ND	ND	ND	ND	ND	ND	4E-08	ND	ND	ND	ND	ND	ND	ND
P33-VP-11	VP-11	5	3E-06	ND	NA	3E-05	ND	1E-05	-	1E-07	ND	ND	6E-07	2E-07	ND	ND	ND	ND	ND	ND	ND
P33-VP-12	VP-12	5	1E-06	ND	ND	2E-05	ND	1E-05	-	1E-07	ND	ND	3E-07	2E-07	ND	ND	ND	ND	ND	ND	ND

The Fehling Group, LLC

TABLE I-7d

Trench Air Hazard Quotients (gray-shaded values) and Hazard Index Values (blue-shaded values)

~ Construction Worker Receptor ~

Sample ID	Secondary Sample ID	Sample Depth (ft bgs)	1,1,1-Trichloroethane	1,1-Dichloroethane	1,2,4-Trichlorobenzene	1,2,4-Trimethylbenzene	1,3,5-Trimethylbenzene	1,3-Dichlorobenzene	2,2,4-Trimethylpentane	2-Butanone	2-Hexanone	4-Ethyl Toluene	4-Methyl-2-pentanone	Acetone	Acetonitrile	Benzene	Carbon disulfide	Chlorobenzene	Chloroethane	Chloroform	Chloromethane
P32-VP-1	VP-1	5	2E-06	ND	ND	ND	ND	ND	ND	1E-06	ND	ND	ND	9E-07	1E-05	4E-04	1E-06	ND	ND	ND	ND
P32-VP-2	VP-2	5	ND	ND	ND	1E-05	ND	ND	ND	1E-07	ND	ND	ND	2E-07	ND	1E-03	ND	ND	ND	ND	5E-06
P32-VP-3	VP-3	5	3E-06	ND	ND	ND	ND	ND	ND	4E-07	ND	ND	ND	4E-07	ND	ND	3E-06	ND	ND	ND	ND
P32-VP-4	VP-4	5	2E-06	ND	4E-04	5E-05	2E-05	ND	ND	1E-07	ND	9E-06	ND	4E-07	ND	ND	ND	ND	ND	ND	5E-06
P32-VP-5	VP-5	5	2E-06	ND	ND	6E-06	ND	ND	ND	6E-07	ND	ND	ND	7E-07	ND	2E-04	1E-06	ND	ND	ND	ND
P32-VP-6	VP-6	5	1E-06	ND	ND	6E-05	2E-05	ND	-	1E-07	ND	9E-06	ND	2E-07	ND	4E-04	ND	ND	ND	ND	ND
P32-VP-7	VP-7	5	2E-06	ND	ND	ND	ND	ND	ND	4E-07	ND	ND	ND	4E-07	ND	2E-04	7E-06	ND	ND	ND	ND
P32-VP-8	VP-8	5	3E-06	ND	ND	ND	ND	ND	ND	ND	ND	ND	ND	1E-07	ND	ND	ND	ND	ND	ND	ND
P32-VP-9	VP-9	5	1E-06	ND	ND	1E-04	4E-05	ND	-	8E-07	ND	2E-05	ND	7E-07	1E-05	8E-04	2E-06	ND	ND	ND	6E-06
P32-VP-10	VP-10	5	ND	ND	ND	3E-05	ND	ND	ND	5E-07	ND	4E-06	ND	4E-07	ND	ND	ND	ND	ND	ND	7E-06
P32-VMW-1	VMW-1	10	ND	ND	ND	ND	ND	ND	ND	ND	ND	ND	ND	1E-08	ND	ND	ND	ND	ND	ND	ND
P32-VMW-1 (DUP)	VMW-1 (DUP)	10	ND	ND	ND	ND	ND	ND	ND	ND	ND	ND	ND	1E-08	ND	ND	ND	ND	ND	5E-06	ND
P32-VMW-1 (10')	VMW-1-10	10	2E-08	ND	ND	ND	ND	ND	ND	ND	ND	ND	ND	2E-09	ND	ND	ND	ND	ND	ND	ND
P32-VWM-2	VMW-2	5	ND	ND	ND	ND	ND	ND	ND	ND	ND	ND	ND	1E-06	ND	ND	ND	ND	ND	ND	ND
P32-VMW-2 (5')	VMW-2-5	5	ND	ND	ND	ND	ND	ND	ND	ND	ND	ND	ND	2E-07	ND	ND	ND	ND	ND	ND	ND
P32-VWM-3	VWM-3	15	ND	ND	ND	ND	ND	ND	ND	5E-09	ND	ND	ND	2E-08	6E-07	5E-05	4E-08	ND	ND	ND	ND
P32-VMW-3 (15')	VMW-3-15	15	1E-08	ND	ND	ND	ND	3E-08	ND	3E-09	ND	ND	ND	9E-09	ND	2E-05	8E-08	ND	1E-09	ND	1E-07
P32-VMW-3 (15') (DUP)	VMW-3-15 (DUP)	15	1E-08	ND	ND	ND	ND	5E-08	ND	3E-09	ND	ND	ND	9E-09	3E-07	1E-05	8E-08	ND	1E-09	ND	1E-07
P32-VWM-4	VMW-4	10	ND	ND	ND	ND	ND	ND	ND	6E-09	ND	ND	ND	4E-08	ND	ND	5E-08	ND	ND	ND	ND
P32-VMW-4 (10')	VWM-4-10	10	ND	ND	ND	ND	ND	ND	ND	ND	ND	ND	ND	6E-09	ND	ND	ND	ND	ND	ND	ND

The Fehling Group, LLC

TABLE I-7d
Trench Air Hazard Quotients (gray-shaded values) and Hazard Index Values (blue-shaded values)
~ Construction Worker Receptor ~

Sample ID	Secondary Sample ID	Sample Depth (ft bgs)	Cyclohexane	Dichlorodifluoromethane	Ethanol	Ethylbenzene	m,p-Xylene	Methylene chloride	Naphthalene	n-Propylbenzene	o-Xylene	p-Isopropyltoluene	Tetrachloroethene	Toluene	Trichloroethene	Trichlorofluoromethane	Vinyl acetate	Vinyl chloride	2-Propanol	Gasoline Range Organics	Σ HQ = HI
2A-1-5	-	5	NA	ND	NA	ND	4E-05	ND	ND	NA	ND	NA	7E-03	5E-05	ND	ND	ND	ND	NA	NA	8E-03
2A-1-10	-	10	NA	ND	NA	ND	ND	ND	ND	NA	ND	NA	4E-05	1E-07	ND	ND	ND	ND	NA	NA	4E-05
2A-1-15	-	15	NA	ND	NA	ND	ND	ND	ND	NA	3E-07	NA	1E-05	8E-08	ND	ND	ND	ND	NA	NA	2E-05
2A-2-5	-	5	NA	ND	NA	1E-05	3E-04	ND	ND	NA	2E-04	NA	3E-03	3E-05	ND	ND	ND	ND	NA	NA	5E-03
2A-2-5 (DUP)	-	5	NA	ND	NA	ND	8E-05	ND	ND	NA	4E-05	NA	3E-03	2E-05	ND	ND	ND	ND	NA	NA	4E-03
2A-2-10	-	10	NA	ND	NA	ND	5E-07	1E-07	ND	NA	3E-07	NA	2E-05	1E-07	ND	ND	ND	ND	NA	NA	3E-05
2A-2-15	-	15	NA	ND	NA	ND	2E-07	ND	ND	NA	ND	NA	3E-05	2E-07	ND	ND	ND	ND	NA	NA	3E-05
2A-3-5	-	5	NA	ND	NA	ND	ND	ND	ND	NA	4E-05	NA	2E-04	ND	ND	9E-06	ND	ND	NA	NA	3E-04
2A-3-10	-	10	NA	ND	NA	ND	ND	ND	ND	NA	ND	NA	2E-06	ND	ND	9E-08	ND	ND	NA	NA	2E-06
2A-3-15	-	15	NA	ND	NA	ND	2E-07	ND	ND	NA	ND	NA	9E-07	6E-08	ND	3E-08	ND	ND	NA	NA	1E-06
2A-AM	-	Ambient	NA	ND	NA	ND	ND	ND	ND	NA	ND	NA	ND	ND	ND	ND	ND	ND	NA	NA	2E-02
P33-VP-1	VP-1	5	2E-07	2E-05	-	9E-07	9E-05	ND	ND	ND	1E-05	4E-07	2E-04	5E-05	9E-03	2E-06	3E-06	ND	2E-04	7E-02	8E-02
P33-VP-2	VP-2	5	2E-07	ND	-	4E-07	4E-05	ND	ND	ND	9E-06	ND	2E-04	2E-05	NA	1E-06	3E-06	ND	1E-04	4E-02	4E-02
P33-VP-3	VP-3	5	9E-08	1E-05	-	9E-07	9E-05	ND	ND	ND	1E-05	ND	2E-04	3E-05	NA	3E-07	ND	ND	NA	4E-02	4E-02
P33-VP-3 (DUP)	VP-3 (DUP)	5	9E-08	1E-05	-	9E-07	4E-05	ND	ND	ND	1E-05	ND	3E-04	2E-05	9E-02	7E-07	3E-06	ND	4E-04	6E-02	2E-01
P33-VP-4	VP-4	5	9E-08	ND	-	2E-06	1E-04	2E-06	3E-04	ND	2E-05	ND	3E-05	1E-04	4E-04	ND	ND	ND	4E-03	5E-02	6E-02
P33-VP-5	VP-5	5	9E-08	5E-06	-	1E-06	9E-05	ND	ND	ND	2E-05	ND	2E-04	7E-05	2E-02	7E-07	5E-06	ND	5E-04	7E-02	9E-02
P33-VP-6	VP-6	5	9E-08	ND	-	9E-07	4E-05	2E-06	ND	ND	9E-06	ND	5E-05	5E-05	2E-03	ND	ND	ND	1E-03	3E-02	4E-02
P33-VP-7	VP-7	5	9E-08	1E-05	-	1E-06	9E-05	ND	ND	ND	2E-05	ND	3E-04	3E-05	ND	7E-07	ND	ND	2E-04	4E-02	4E-02
P32-VP-7 (DUP)	VP-7 (DUP)	5	ND	1E-05	-	1E-06	1E-04	ND	5E-03	8E-07	3E-05	4E-06	7E-05	7E-06	ND	7E-06	5E-06	7E-06	6E-04	4E-02	5E-02
P33-VP-8	VP-8	5	2E-07	4E-05	-	1E-06	9E-05	ND	ND	ND	2E-05	ND	2E-04	2E-05	ND	7E-07	8E-06	ND	3E-04	4E-02	4E-02
P33-VP-9	VP-9	5	9E-08	1E-05	-	1E-06	9E-05	ND	ND	ND	2E-05	ND	3E-04	7E-05	4E-04	3E-07	5E-06	ND	3E-04	4E-02	4E-02
P33-VP-9 (DUP)	VP-9 (DUP)	5	2E-07	1E-05	-	1E-06	9E-05	ND	ND	ND	2E-05	ND	2E-04	3E-05	4E-04	ND	5E-06	ND	4E-04	5E-02	5E-02
P33-VP-10	VP-10	5	ND	ND	-	ND	ND	ND	ND	ND	ND	ND	2E-05	3E-06	ND	ND	ND	ND	NA	5E-02	5E-02
P33-VP-11	VP-11	5	9E-08	ND	-	9E-07	9E-05	ND	ND	ND	1E-05	ND	2E-04	2E-05	ND	ND	2E-06	ND	1E-04	8E-02	8E-02
P33-VP-12	VP-12	5	9E-08	ND	-	9E-07	4E-05	ND	ND	ND	1E-05	ND	6E-04	2E-05	ND	7E-07	ND	ND	1E-04	6E-02	6E-02

The Fehling Group, LLC

TABLE I-7d
Trench Air Hazard Quotients (gray-shaded values) and Hazard Index Values (blue-shaded values)
~ Construction Worker Receptor ~

Sample ID	Secondary Sample ID	Sample Depth (ft bgs)	Cyclohexane	Dichlorodifluoromethane	Ethanol	Ethylbenzene	m,p-Xylene	Methylene chloride	Naphthalene	n-Propylbenzene	o-Xylene	p-Isopropyltoluene	Tetrachloroethene	Toluene	Trichloroethene	Trichlorofluoromethane	Vinyl acetate	Vinyl chloride	2-Propanol	Gasoline Range Organics	Σ HQ = HI
P32-VP-1	VP-1	5	*ND*	2E-05	-	4E-07	4E-05	*ND*	*ND*	*ND*	9E-06	*ND*	2E-04	3E-06	*ND*	3E-06	3E-06	2E-05	7E-04	4E-02	4E-02
P32-VP-2	VP-2	5	*ND*	*ND*	-	4E-07	4E-05	*ND*	8E-04	*ND*	9E-06	*ND*	*ND*	2E-05	*ND*	*ND*	*ND*	*ND*	7E-03	6E-02	7E-02
P32-VP-3	VP-3	5	*ND*	1E-05	-	*ND*	*ND*	*ND*	*ND*	*ND*	*ND*	*ND*	8E-05	2E-06	*ND*	1E-06	*ND*	*ND*	4E-03	8E-02	8E-02
P32-VP-4	VP-4	5	*ND*	5E-06	-	4E-06	5E-04	*ND*	3E-04	*ND*	9E-05	*ND*	5E-05	5E-04	*ND*	3E-07	*ND*	*ND*	3E-03	2E-01	2E-01
P32-VP-5	VP-5	5	*ND*	3E-05	-	9E-07	4E-05	*ND*	*ND*	*ND*	9E-06	*ND*	8E-05	7E-06	*ND*	1E-05	*ND*	7E-06	8E-03	1E-01	1E-01
P32-VP-6	VP-6	5	*ND*	1E-05	-	9E-07	9E-05	*ND*	4E-04	*ND*	2E-05	1E-06	6E-05	1E-05	*ND*	1E-05	*ND*	*ND*	2E-04	5E-02	5E-02
P32-VP-7	VP-7	5	8E-08	1E-05	-	*ND*	3E-05	*ND*	*ND*	*ND*	4E-06	*ND*	7E-05	3E-06	*ND*	7E-06	*ND*	*ND*	2E-04	5E-02	5E-02
P32-VP-8	VP-8	5	*ND*	1E-05	-	*ND*	*ND*	*ND*	1E-04	*ND*	*ND*	*ND*	6E-05	*ND*	*ND*	1E-06	*ND*	*ND*	1E-04	4E-02	4E-02
P32-VP-9	VP-9	5	9E-08	1E-05	-	2E-06	3E-04	*ND*	5E-04	*ND*	9E-05	8E-07	4E-05	5E-05	*ND*	3E-06	3E-06	6E-06	2E-03	5E-02	5E-02
P32-VP-10	VP-10	5	*ND*	1E-05	-	9E-06	7E-04	*ND*	3E-04	*ND*	1E-04	*ND*	2E-05	3E-04	*ND*	7E-07	*ND*	5E-06	1E-03	8E-02	8E-02
P32-VMW-1	VMW-1	10	*ND*	4E-07	-	*ND*	8E-07	*ND*	*ND*	*ND*	*ND*	*ND*	8E-07	8E-07	*ND*	7E-08	*ND*	*ND*	3E-07	5E-05	6E-05
P32-VMW-1 (DUP)	VMW-1 (DUP)	10	*ND*	4E-07	-	*ND*	*ND*	*ND*	*ND*	*ND*	*ND*	*ND*	4E-05	6E-07	*ND*	7E-08	*ND*	*ND*	3E-07	1E-04	2E-04
P32-VMW-1 (10')	VMW-1-10	10	*ND*	4E-07	-	*ND*	*ND*	*ND*	*ND*	*ND*	*ND*	*ND*	8E-07	1E-06	*ND*	7E-08	*ND*	*ND*	2E-04	*ND*	2E-04
P32-VWM-2	VMW-2	5	*ND*	*ND*	*ND*	*ND*	*ND*	*ND*	*ND*	*ND*	*ND*	*ND*	*ND*	7E-05	*ND*	3E-06	*ND*	*ND*	2E-05	7E-03	8E-03
P32-VMW-2 (5')	VMW-2-5	5	*ND*	2E-05	-	*ND*	*ND*	*ND*	*ND*	*ND*	*ND*	*ND*	7E-05	1E-04	*ND*	7E-06	*ND*	*ND*	1E-02	*ND*	1E-02
P32-VWM-3	VWM-3	15	1E-09	*ND*	-	1E-08	7E-07	*ND*	*ND*	*ND*	9E-08	*ND*	2E-06	6E-07	9E-06	*ND*	*ND*	*ND*	3E-07	1E-04	2E-04
P32-VMW-3 (15')	VMW-3-15	15	*ND*	8E-08	-	5E-09	2E-07	*ND*	*ND*	*ND*	*ND*	*ND*	3E-07	5E-07	*ND*	1E-08	*ND*	*ND*	3E-05	3E-05	8E-05
P32-VMW-3 (15') (DUP)	VMW-3-15 (DUP)	15	*ND*	8E-08	-	5E-09	3E-07	*ND*	*ND*	*ND*	*ND*	*ND*	2E-07	1E-06	*ND*	1E-08	*ND*	*ND*	2E-04	6E-05	2E-04
P32-VWM-4	VMW-4	10	*ND*	*ND*	-	*ND*	*ND*	*ND*	*ND*	*ND*	*ND*	*ND*	*ND*	5E-07	*ND*	3E-08	*ND*	*ND*	2E-07	7E-05	7E-05
P32-VWM-4 (10')	VWM-4-10	10	*ND*	*ND*	*ND*	*ND*	*ND*	*ND*	*ND*	*ND*	*ND*	*ND*	*ND*	1E-06	*ND*	3E-08	*ND*	*ND*	2E-04	7E-05	2E-04

The Fehling Group, LLC

ATTACHMENT J

Tables for PARC Area 5

TABLE J-1

Soil Summary for PARC Area 5 - Metals (0 to 10 ft bgs)

~ in units of mg/kg (wet weight basis) ~

Boring ID	Sample ID	Sample Collection Date	Sample Depth (ft bgs)	Antimony	Arsenic	Barium	Beryllium	Cadmium	Chromium	Hexavalent Chromium	Cobalt	Copper	Lead	Mercury	Molybdenum	Nickel	Selenium	Silver	Thallium	Vanadium	Zinc
5-1	5-1-0.5	05/15/2017	0.5	*ND*	1.5	72	*ND*	*ND*	7.9	-	5.6	12	20	*ND*	*ND*	6.6	*ND*	*ND*	*ND*	21	46
	5-1-1.0	05/15/2017	1.0	*ND*	2.1	84	*ND*	*ND*	10	-	5.3	19	68	*ND*	*ND*	7.6	*ND*	*ND*	*ND*	22	99
	5-1-2.0	05/15/2017	2.0	*ND*	4.7	42	*ND*	*ND*	6.0	-	4.9	23	110	0.11	*ND*	7.0	*ND*	*ND*	*ND*	18	130
	5-1-3.0	05/15/2017	3.0	*ND*	*ND*	30	*ND*	*ND*	4.2	-	3.2	3.8	2.2	0.14	*ND*	2.7	*ND*	*ND*	*ND*	14	16
5-2	5-2-0.5	05/15/2017	0.5	*ND*	4.1	75	*ND*	*ND*	15	-	8.5	20	48	*ND*	*ND*	14	*ND*	*ND*	*ND*	29	60
	5-2-1.0	05/15/2017	1.0	*ND*	*ND*	52	*ND*	*ND*	5.9	-	4.5	9.6	19	*ND*	*ND*	5.0	*ND*	*ND*	*ND*	18	77
	5-2-2.0	05/15/2017	2.0	*ND*	*ND*	57	*ND*	*ND*	6.1	-	4.8	5.9	2.3	*ND*	*ND*	4.5	*ND*	*ND*	*ND*	17	23
	5-2-3.0	05/15/2017	3.0	*ND*	1.1	21	*ND*	*ND*	3.2	-	3.2	4.3	180	0.12	*ND*	4.0	*ND*	*ND*	*ND*	8.5	10
L-9	L-9 @ 1'	02/12/2016	1.0	2.3	3.4	72	*ND*	*ND*	7.9	-	4.4	20	64	*ND*	*ND*	7.3	*ND*	*ND*	*ND*	24	75
	L-9 @ 2.5'	02/12/2016	2.5	*ND*	2.2	44	*ND*	*ND*	6.3	-	2.9	7.0	16	*ND*	*ND*	4.3	*ND*	*ND*	*ND*	24	27
L-10	L-10 @ 1'	02/12/2016	1.0	*ND*	5.0	120	*ND*	*ND*	10	-	5.0	19	44	0.25	1.1	9.2	*ND*	*ND*	*ND*	23	68
	L-10 @ 3'	02/12/2016	3.0	*ND*	2.8	58	*ND*	*ND*	8.1	-	3.6	10	20	*ND*	*ND*	6.0	*ND*	*ND*	*ND*	22	47
# of non-detects =>				**11**	**3**	**0**	**12**	**12**	**0**	**0**	**0**	**0**	**0**	**8**	**11**	**0**	**12**	**12**	**12**	**0**	**0**
# of detects =>				**1**	**9**	**12**	**0**	**0**	**12**	**0**	**12**	**12**	**12**	**4**	**1**	**12**	**0**	**0**	**0**	**12**	**12**
# of samples =>				**12**	**12**	**12**	**12**	**12**	**12**	**0**	**12**	**12**	**12**	**12**	**12**	**12**	**12**	**12**	**12**	**12**	**12**
frequency of detection =>				**8%**	**75%**	**100%**	**0%**	**0%**	**100%**	**-**	**100%**	**100%**	**100%**	**33%**	**8%**	**100%**	**0%**	**0%**	**0%**	**100%**	**100%**
minimum detected =>				**2.3**	**1.1**	**21**	**-**	**-**	**3.2**	**-**	**2.9**	**3.8**	**2.2**	**0.11**	**1.1**	**2.7**	**-**	**-**	**-**	**8.5**	**10**
maximum detected =>				**2.3**	**5**	**120**	**-**	**-**	**15**	**-**	**8.5**	**23**	**180**	**0.25**	**1.1**	**14**	**-**	**-**	**-**	**29**	**130**

The Fehling Group, LLC

TABLE J-2

Soil Summary for PARC Area 5 - TPH, VOCs, SVOCs, PCBs, OCPs, OPPs, and Chlorinated Herbicides (wet weight basis)

(0 to 10 ft bgs)

Boring ID	Sample ID	Sample Collection Date	Sample Depth (ft bgs)	TPH GRO (mg/kg)	TPH DRO (mg/kg)	TPH ORO (mg/kg)	VOCs (µg/kg)	SVOCs (µg/kg)	PCBs (µg/kg)	OCPs (µg/kg)	OPPs (µg/kg)	Chlorinated Herbicides (µg/kg)
5-1	5-1-0.5	05/15/2017	0.5	-	-	-	-	-	-	-	-	-
	5-1-1.0	05/15/2017	1.0	-	-	-	-	-	-	-	-	-
	5-1-2.0	05/15/2017	2.0	-	-	-	-	-	-	-	-	-
	5-1-3.0	05/15/2017	3.0	-	-	-	-	-	-	-	-	-
5-2	5-2-0.5	05/15/2017	0.5	-	-	-	-	-	-	-	-	-
	5-2-1.0	05/15/2017	1.0	-	-	-	-	-	-	-	-	-
	5-2-2.0	05/15/2017	2.0	-	-	-	-	-	-	-	-	-
	5-2-3.0	05/15/2017	3.0	-	-	-	-	-	-	-	-	-
L-9	L-9 @ 1'	02/12/2016	1.0	*ND*	**190**	-	*ND*	*ND*	-	-	-	*ND*
	L-9 @ 2.5'	02/12/2016	2.5	-	-	-	*ND*	-	-	-	-	-
L-10	L-10 @ 1'	02/12/2016	1.0	*ND*	**260**	-	*ND*	*ND*	-	-	-	*ND*
	L-10 @ 3'	02/12/2016	3.0	-	-	-	*ND*	-	-	-	-	-
			# of non-detects =>	**2**	**0**	**0**	**4**	**2**	**0**	**0**	**0**	**2**
			# of detects =>	**0**	**2**	**0**	**0**	**0**	**0**	**0**	**0**	**0**
			# of samples =>	**2**	**2**	**0**	**4**	**2**	**0**	**0**	**0**	**2**
			frequency of detection =>	**0%**	**100%**	**-**	**0%**	**0%**	**-**	**-**	**-**	**0%**
			minimum detected =>	**-**	**190**	**-**	**-**	**-**	**-**	**-**	**-**	**-**
			maximum detected =>	**-**	**260**	**-**	**-**	**-**	**-**	**-**	**-**	**-**

The Fehling Group, LLC

TABLE J-3
Soil EPCs (0 to 10 ft bgs)

Boring ID	Sample ID	Sample Collection Date	Sample Depth (ft bgs)	Concentrations in Soil (wet weight basis, mg/kg)*			Concentrations in Soil (dry weight basis, mg/kg)**		
				Lead	Zinc	TPH-DRO	Lead	Zinc	TPH-DRO
5-1	5-1-0.5	05/15/2017	0.5	20	46	-	21	49	-
	5-1-1.0	05/15/2017	1.0	68	99	-	72	105	-
	5-1-2.0	05/15/2017	2.0	110	130	-	116	137	-
	5-1-3.0	05/15/2017	3.0	2.2	16	-	2	17	-
5-2	5-2-0.5	05/15/2017	0.5	48	60	-	51	63	-
	5-2-1.0	05/15/2017	1.0	19	77	-	20	81	-
	5-2-2.0	05/15/2017	2.0	2.3	23	-	2	24	-
	5-2-3.0	05/15/2017	3.0	180	10	-	190	11	-
L-9	L-9 @ 1'	02/12/2016	1.0	64	75	190	68	79	201
	L-9 @ 2.5'	02/12/2016	2.5	16	27	-	17	29	-
L-10	L-10 @ 1'	02/12/2016	1.0	44	68	260	47	72	275
	L-10 @ 3'	02/12/2016	3.0	20	47	-	21	50	-
95% UCL for 0 to 10 ft bgs (see Attachment O)* =>							81	79	275

* 95% UCL not calculated due to low number of samples; value shown is maximum value

* Italicized value is the reporting limit for 'non-detect' ('ND') result.

** Dry weight concentration = Wet weight concentration x (1 + average moisture content)
where average moisture content = 0.056 g/g (see **Table 1**).

The Fehling Group, LLC

TABLE J-4
Soil Risk Characterization Summary
~ PARC Area 5 ~

		Soil RBC (mg/kg)*				Risk Values (Incremental Lifetime Cancer Risk [ILCR] and Hazard Quotient [HQ])			
		Residential Receptor		Construction Worker Receptor		Residential Receptor		Construction Worker Receptor	
Soil COPC	**Soil EPC (mg/kg, dry weight basis)**	**Cancer Endpoint**	**Noncancer Endpoint**	**Cancer Endpoint**	**Noncancer Endpoint**	**ILCR (unitless)**	**HQ (unitless)**	**ILCR (unitless)**	**HQ (unitless)**
Lead	81	Not applicable (see Section 3.2.1.2)							
Zinc	79	--	2.30E+04	--	1.06E+05	--	3.4E-03	--	7.5E-04
TPH-DRO	275	--	9.60E+01	--	8.85E+02	--	2.9E+00	--	3.1E-01
		Cumulative Risk Values (ILCR and HI Values) =>				**0.0E+00**	**2.9E+00**	**0.0E+00**	**3.1E-01**

* "Combined" value listed in **Table 5** for the residential receptor and **Table 6** for the construction worker receptor.

The Fehling Group, LLC

ATTACHMENT K

Tables for PARC Area 6

TABLE K-1

Soil Summary for PARC Area 6 - Metals (0 to 10 ft bgs)

~ in units of mg/kg (wet weight basis) ~

Boring ID	Sample ID	Sample Collection Date	Sample Depth (ft bgs)	Antimony	Arsenic	Barium	Beryllium	Cadmium	Chromium	Hexavalent Chromium	Cobalt	Copper	Lead	Mercury	Molybdenum	Nickel	Selenium	Silver	Thallium	Vanadium	Zinc
6-1	6-1-0.5	05/15/2017	0.5	ND	1.5	69	ND	ND	6.0	-	3.3	7.2	11	0.140	ND	4.3	ND	ND	ND	14	28
	6-1-1.0	05/15/2017	1.0	ND	1.4	77	ND	ND	6.2	-	3.7	8.5	13	ND	ND	6.7	ND	ND	ND	15	33
	6-1-3.0	05/15/2017	3.0	ND	ND	70	ND	ND	8.2	-	6.6	7.4	3.3	ND	ND	6.1	ND	ND	ND	23	32
	6-1-5.0	05/15/2017	5.0	ND	ND	66	ND	ND	8.1	-	6.3	6.5	1.2	ND	ND	5.6	ND	ND	ND	24	28
6-2	6-2-0.5	05/16/2017	0.5	ND	2.9	110	ND	ND	5.5	-	2.7	6.8	90	0.330	ND	3.2	ND	ND	ND	15	62
	6-2-1.0	05/16/2017	1.0	ND	1.2	87	ND	ND	8.2	-	5.7	15	38	0.780	ND	8.0	ND	ND	ND	26	89
	6-2-3.0	05/16/2017	3.0	ND	ND	29	ND	ND	3.7	-	2.6	2.5	1.2	ND	ND	2.4	ND	ND	ND	11	13
	6-2-5.0	05/16/2017	5.0	ND	ND	34	ND	ND	2.9	-	2.8	3.0	1.2	ND	ND	2.4	ND	ND	ND	10	14
6-3	6-3-0.5	05/15/2017	0.5	ND	ND	46	ND	ND	5.8	-	3.5	5.7	9.1	ND	ND	3.5	ND	ND	ND	14	28
	6-3-1.0	05/15/2017	1.0	8.3	11	1900	ND	12	69	3.0	9.2	250	4300	0.440	ND	31	1.0	ND	ND	22	10000
	6-3-3.0	05/15/2017	3.0	ND	1.6	160	ND	ND	8.7	-	3.5	21	250	ND	ND	5.0	ND	ND	ND	11	660
	6-3-5.0	05/15/2017	5.0	ND	ND	21	ND	ND	3.1	-	2.3	2.4	1.1	0.400	ND	1.9	ND	ND	ND	12	13
6-4	6-4-0.5	05/15/2017	0.5	ND	2.3	95	ND	ND	6.2	-	3.2	13	30	0.170	ND	5.6	ND	ND	ND	15	55
	6-4-1.0	05/15/2017	1.0	ND	26	71	ND	1.2	11	-	4.6	41	94	ND	ND	8.4	ND	ND	ND	19	960
	6-4-3.0	05/15/2017	3.0	ND	11	41	ND	ND	6.3	-	4.2	7.1	16	ND	ND	3.8	ND	ND	ND	18	32
	6-4-5.0	05/15/2017	5.0	ND	9.0	69	ND	ND	11	-	7.5	11	3.2	ND	ND	7.0	ND	ND	ND	29	59
6-5	6-5-0.5	05/15/2017	0.5	4.0	9.1	95	ND	2.3	19	5.0	7.6	82	400	0.170	ND	12	ND	ND	ND	21	950
	6-5-1.0	05/15/2017	1.0	ND	3.9	75	ND	ND	10	-	6.7	13	59	ND	ND	6.9	ND	ND	ND	27	83
	6-5-3.0	05/15/2017	3.0	ND	1.0	31	ND	ND	4.5	-	3.2	3.8	2.4	0.110	ND	2.8	ND	ND	ND	14	17
	6-5-5.0	05/15/2017	5.0	ND	ND	22	ND	ND	3.3	-	2.3	2.5	1.1	1.5	ND	2.0	ND	ND	ND	9.2	13
6-6	6-6-1.0	05/15/2017	1.0	ND	1.1	120	ND	ND	15	-	8.3	13	12	0.120	ND	12	ND	ND	ND	34	45
	6-6-3.0	05/15/2017	3.0	ND	ND	30	ND	ND	3.3	-	2.6	3.0	1.2	ND	ND	2.5	ND	ND	ND	10	13
	6-6-5.0	05/15/2017	5.0	ND	ND	52	ND	ND	4.3	-	3.0	4.0	1.1	ND	ND	3.0	ND	ND	ND	14	14
	6-6-7.5	05/15/2017	7.5	ND	ND	32	ND	ND	7.5	-	3.8	4.1	1.2	ND	ND	3.8	ND	ND	ND	21	17
6-7	6-7-1.0	05/15/2017	1.0	ND	ND	55	ND	ND	7.5	-	5.3	6.1	3.0	ND	ND	5.4	ND	ND	ND	22	26
	6-7-3.0	05/15/2017	3.0	ND	ND	25	ND	ND	3.7	-	2.7	3.2	2.0	0.120	ND	2.3	ND	ND	ND	12	14
	6-7-5.0	05/15/2017	5.0	ND	ND	24	ND	ND	4.3	-	2.3	3.6	7.5	ND	ND	2.8	ND	ND	ND	12	29
	6-7-7.5	05/15/2017	7.5	ND	ND	62	ND	ND	8.6	-	6.0	7.1	4.3	ND	ND	5.6	ND	ND	ND	25	33

The Fehling Group, LLC

TABLE K-1

Soil Summary for PARC Area 6 - Metals (0 to 10 ft bgs)

~ in units of mg/kg (wet weight basis) ~

Boring ID	Sample ID	Sample Collection Date	Sample Depth (ft bgs)	Antimony	Arsenic	Barium	Beryllium	Cadmium	Chromium	Hexavalent Chromium	Cobalt	Copper	Lead	Mercury	Molybdenum	Nickel	Selenium	Silver	Thallium	Vanadium	Zinc
6-8	6-8-1.0	05/15/2017	1.0	ND	5.0	100	ND	ND	7.5	-	4.5	97	140	0.100	ND	6.1	ND	ND	ND	21	210
	6-8-3.0	05/15/2017	3.0	ND	ND	25	ND	ND	3.9	-	2.7	3.0	1.0	ND	ND	2.4	ND	ND	ND	15	13
	6-8-5.0	05/15/2017	5.0	ND	ND	47	ND	ND	6.3	-	4.8	4.3	1.4	ND	ND	4.0	ND	ND	ND	23	21
	6-8-7.5	05/15/2017	7.5	ND	ND	17	ND	ND	1.7	-	1.8	ND	ND	4.6	ND	1.3	ND	ND	ND	7.2	10
6-9	6-9-1.0	05/15/2017	1.0	ND	ND	79	ND	ND	10	-	6.4	17	33	0.190	ND	9.1	ND	ND	ND	32	61
	6-9-3.0	05/15/2017	3.0	47	9.4	110	ND	1.1	10	-	4.6	390	3100	1.4	ND	12	ND	1.7	ND	18	510
	6-9-5.0	05/15/2017	5.0	ND	ND	81	ND	ND	8.1	-	5.5	41	41	0.200	ND	8.7	ND	ND	ND	23	56
	6-9-7.5	05/15/2017	7.5	ND	ND	78	ND	ND	10	-	7.7	8.8	3.4	0.200	ND	7.0	ND	ND	ND	29	36
6-10	6-10-1.0	05/15/2017	1.0	ND	ND	110	ND	ND	11	-	6.8	24	99	0.290	ND	7.5	ND	ND	ND	27	92
	6-10-3.0	05/15/2017	3.0	5.5	6.5	380	ND	1.8	15	-	3.2	160	800	0.190	ND	9.4	ND	ND	ND	14	2100
	6-10-5.0	05/15/2017	5.0	ND	8.6	57	ND	ND	9.0	-	3.5	37	13	ND	ND	5.0	ND	ND	ND	17	31
	6-10-7.5	05/15/2017	7.5	ND	ND	38	ND	ND	4.8	-	3.6	3.2	1.2	ND	ND	3.2	ND	ND	ND	16	17
16-5	16-5 @ 1'	02/12/2016	1.0	ND	2.0	56	ND	ND	6.6	-	3.5	8.4	19	ND	ND	4.7	ND	ND	ND	20	40
	16-5 @ 3'	02/12/2016	3.0	ND	2.1	55	ND	ND	7.1	-	3.5	9.4	19	0.150	ND	5.1	ND	ND	ND	21	39
	16-5 @ 4'	02/12/2016	4.0	ND	2.3	59	ND	ND	8.4	-	3.7	8.8	21	ND	ND	5.6	ND	ND	ND	23	42
16-6	16-6 @ 1'	02/1/2016	1.0	ND	2.4	55	ND	ND	6.3	-	3.5	8.0	11	0.100	ND	4.8	ND	ND	ND	21	36
	16-6 @ 3'	02/1/2016	3.0	-	-	-	-	-	-	-	-	-	-	-	-	-	-	-	-	-	-
16-7	16-7 @ 1'	02/1/2016	1.0	ND	1.9	78	ND	ND	10	-	5.1	14	6.1	0.120	ND	8.2	ND	ND	ND	25	38
	16-7 @ 3'	02/1/2016	3.0	ND	1.6	55	ND	ND	6.8	-	4.0	7.3	4.3	ND	ND	5.2	ND	ND	ND	20	26
	16-7 @ 5'	02/1/2016	5.0	-	-	-	-	-	-	-	-	-	-	-	-	-	-	-	-	-	-
L-5	L-5 @ 1'	02/1/2016	1.0	ND	1.8	46	ND	ND	5.5	-	3.2	8.4	25	ND	ND	4.2	ND	ND	ND	17	32
	L-5 @ 3'	02/1/2016	3.0	-	-	-	-	-	-	-	-	-	-	-	-	-	-	-	-	-	-
	L-5 @ 4.5'	02/1/2016	4.5	-	-	-	-	-	-	-	-	-	-	-	-	-	-	-	-	-	-
L-5	L-5 @ 1'	02/26/2016	1.0	-	-	-	-	-	-	-	-	-	-	-	-	-	-	-	-	-	-
	L-5 @ 2'	02/26/2016	2.0	ND	ND	46	ND	ND	5.6	-	3.2	6.9	2.7	ND	ND	3.9	ND	ND	ND	18	23
	L-5 @ 3'	02/26/2016	3.0	ND	ND	30	ND	ND	3.9	-	2.2	2.8	ND	ND	ND	2.5	ND	ND	ND	14	14
L-6	L-6 @ 1'	02/1/2016	1.0	ND	10	130	ND	ND	15	-	5.1	64	200	0.150	ND	12	ND	ND	ND	26	310
	L-6 @ 3'	02/1/2016	3.0	-	-	-	-	-	-	-	-	-	-	-	-	-	-	-	-	-	-
	L-6 @ 5'	02/1/2016	5.0	-	-	-	-	-	-	-	-	-	-	-	-	-	-	-	-	-	-

The Fehling Group, LLC

TABLE K-1

Soil Summary for PARC Area 6 - Metals (0 to 10 ft bgs)

~ in units of mg/kg (wet weight basis) ~

Boring ID	Sample ID	Sample Collection Date	Sample Depth (ft bgs)	Antimony	Arsenic	Barium	Beryllium	Cadmium	Chromium	Hexavalent Chromium	Cobalt	Copper	Lead	Mercury	Molybdenum	Nickel	Selenium	Silver	Thallium	Vanadium	Zinc
L-6	L-6 @ 1'	02/26/2016	1.0	-	-	-	-	-	-	-	-	-	-	-	-	-	-	-	-	-	-
	L-6 @ 2'	02/26/2016	2.0	ND	26	93	ND	ND	10	-	6.0	10	5.8	ND	ND	7.4	ND	ND	ND	28	53
	L-6 @ 3'	02/26/2016	3.0	ND	17	48	ND	ND	5.5	-	3.3	5.0	2.4	ND	ND	3.8	ND	ND	ND	17	24
18.1-GP-1	GP-1 @ 1'	04/1/2016	1.0	ND	1.9	73	ND	ND	11	-	4.5	19	53	0.550	ND	12	ND	ND	ND	19	85
	GP-1 @ 2'	04/1/2016	2.0	ND	2.4	160	ND	1.6	10	-	4.3	23	74	0.750	ND	8.9	ND	ND	ND	22	230
	GP-1 @ 3.5'	04/1/2016	3.5	ND	1.8	70	ND	ND	8.0	-	3.8	15	34	0.120	ND	7.6	ND	ND	ND	22	62
	GP-1 @ 5'	04/1/2016	5.0	ND	1.0	41	ND	ND	5.5	-	3.0	4.7	1.6	ND	ND	3.9	ND	ND	ND	18	20
	GP-1 @ 6.5'	04/1/2016	6.5	7.3	2.2	100	ND	ND	8.8	-	3.5	44	170	1.1	ND	15	ND	ND	ND	19	290
18.1-GP-2	GP-2 @ 1'	04/1/2016	1.0	ND	1.9	69	ND	ND	6.8	-	3.4	12	44	1.3	ND	5.5	ND	ND	ND	19	100
	GP-2 @ 2'	04/1/2016	2.0	ND	ND	2100	ND	ND	38	-	ND	1400	8300	0.670	ND	47	ND	ND	ND	29	8300
	GP-2 @ 3.5'	04/1/2016	3.5	ND	2.0	65	ND	ND	8.3	-	3.8	23	71	0.350	ND	7.6	ND	ND	ND	21	70
	GP-2 @ 5'	04/1/2016	5.0	ND	ND	49	ND	ND	6.2	-	3.6	7.1	1.5	ND	ND	4.2	ND	ND	ND	22	24
18.1-GP-3	GP-3 @ 2'	04/1/2016	2.0	ND	3.3	67	ND	ND	6.4	-	3.4	18	62	0.110	ND	6.1	ND	ND	ND	19	92
	GP-3 @ 3.5'	04/1/2016	3.5	ND	1.2	42	ND	ND	5.8	-	3.1	5.4	1.4	ND	ND	3.7	ND	ND	ND	20	20
	GP-3 @ 5'	04/1/2016	5.0	ND	ND	44	ND	ND	4.6	-	2.8	4.4	1.5	ND	ND	3.2	ND	ND	ND	16	19
18.1-1	18.1-1-1	10/22/2015	1.0	ND	2.0	98	ND	1.8	10	-	6.3	24	61	0.182	0.8	14	ND	ND	ND	20	112
	18.1-1-3.5	10/22/2015	3.5	ND	ND	64	ND	1.0	6.8	-	6.3	8.0	4.7	ND	ND	6.1	ND	ND	ND	19	35
18.1-2	18.1-2-1	10/22/2015	1.0	ND	ND	146	ND	1.1	7.7	-	4.5	12	25	0.108	0.4	8.6	0.870	ND	ND	17	61
	18.1-2-2.0	10/22/2015	2.0	ND	0.82	134	ND	1.4	12	-	5.8	95	293	0.180	0.4	48	ND	ND	ND	19	288
18.1-3	18.1-3-1	10/22/2015	1.0	ND	ND	73	0.286	1.4	10	-	8.7	12	3.5	0.103	0.3	22	ND	ND	ND	21	40
	18.1-3-3.5	10/22/2015	3.5	ND	1.7	202	0.277	2.8	15	-	7.4	64	554	0.862	0.3	19	ND	0.297	ND	27	545
18.1-4	18.1-4-1	10/22/2015	1.0	ND	8.5	443	ND	4.0	28	-	10	312	1010	1.2	ND	40	ND	0.258	ND	42	1400
	18.1-4-3.5	12/9/2015	3.5	ND	3.6	73	ND	0.785	7.9	-	6.8	13	17	ND	ND	7.0	1.0	ND	ND	22	69
18.1-4A	18.1-4A-1	12/9/2015	1.0	452	10.0	486	0.269	5.4	22	-	7.9	531	13900	0.468	ND	22	1.2	13	ND	31	2140
	18.1-4A-3.5	12/9/2015	3.5	ND	4.6	99	ND	0.906	10	-	8.5	18	30	ND	ND	9.3	2.1	ND	ND	27	69
18.1-4B	18.1-4B-1	12/9/2015	1.0	5.1	14	444	0.280	2.7	25	-	9.1	475	1690	0.341	ND	18	1.2	0.710	ND	31	1500
	18.1-4B-3.5	12/9/2015	3.5	ND	3.0	65	ND	0.679	7.1	-	6.0	6.0	2.9	ND	ND	5.9	1.7	ND	ND	22	37
18.1-4C	18.1-4C-1	12/9/2015	1.0	9.5	13	727	0.283	3.2	35	-	8.6	552	1930	0.439	ND	18	1.7	0.547	ND	27	1990
	18.1-4C-3.5	12/9/2015	3.5	ND	3.6	71	ND	0.764	7.3	-	6.5	6.7	8.8	ND	ND	6.7	10	ND	ND	22	56

The Fehling Group, LLC

TABLE K-1

Soil Summary for PARC Area 6 - Metals (0 to 10 ft bgs)

~ in units of mg/kg (wet weight basis) ~

Boring ID	Sample ID	Sample Collection Date	Sample Depth (ft bgs)	Antimony	Arsenic	Barium	Beryllium	Cadmium	Chromium	Hexavalent Chromium	Cobalt	Copper	Lead	Mercury	Molybdenum	Nickel	Selenium	Silver	Thallium	Vanadium	Zinc
18.1-4D	18.1-4D-1	12/9/2015	1.0	*ND*	11	474	0.315	2.9	31	-	8.7	308	1170	0.456	*ND*	25	1.4	0.434	*ND*	30	1550
	18.1-4D-3.5	12/9/2015	3.5	3.5	11	463	0.296	3.2	28	-	8.7	535	2560	0.768	0.3	39	0.847	0.639	*ND*	38	1820
18.1-5	18.1-5-1	12/9/2015	1.0	9.4	7.4	451	0.408	5.0	26	-	12	452	2050	0.374	1.0	37	*ND*	0.622	*ND*	35	1310
	18.1-5-3.5	12/9/2015	3.5	7.5	2.3	208	0.277	2.3	12	-	7.1	232	1020	0.254	0.4	17	*ND*	0.472	*ND*	25	628
18.1-6	18.1-6-1	12/9/2015	1.0	2.7	0.80	153	*ND*	1.5	8.5	-	5.1	86	334	0.120	*ND*	7.5	*ND*	*ND*	*ND*	18	423
	18.1-6-3.5	12/9/2015	3.5	23	2.5	196	0.261	2.5	12	-	7.7	311	1510	0.240	*ND*	12	*ND*	0.397	*ND*	27	597
18.1-7	18.1-7-3.5	12/9/2015	3.5	1.9	1.5	121	0.264	1.7	11	-	7.5	53	122	0.115	*ND*	11	*ND*	*ND*	*ND*	28	178
18.2-1	18.2-1-1	04/20/2016	1.0	*ND*	16	163	0.338	14	45	-	13	132	468	0.125	*ND*	23	*ND*	*ND*	*ND*	34	4910
	18.2-1-3.5	04/20/2016	3.5	*ND*	*ND*	46	*ND*	*ND*	4.2	-	3.9	4.6	1.9	*ND*	*ND*	3.7	*ND*	*ND*	*ND*	13	22
18.2-2	18.2-2-1	04/20/2016	1.0	3.4	2.3	112	0.313	0.519	12	-	10	43	87	0.168	*ND*	10	*ND*	*ND*	*ND*	32	17
	18.2-2-3.5	04/20/2016	3.5	93	17	1450	0.291	8.1	45	-	9.4	2770	16100	1.0	*ND*	33	*ND*	2.7	*ND*	29	8730
18.2-3	18.2-3-1	04/20/2016	1.0	2.4	2.1	152	0.344	0.889	14	-	8.6	107	433	0.284	*ND*	11	*ND*	*ND*	*ND*	31	299
	18.2-3-3.5	04/20/2016	3.5	5.1	4.8	207	0.280	2.0	13	-	7.5	828	1310	0.829	0.3	14	*ND*	0.829	*ND*	27	1260
A-13-08	A08@5'	08/27/2013	5.0	*ND*	2.1	91	*ND*	*ND*	17	-	4.2	15	26	0.062	*ND*	7.5	*ND*	*ND*	*ND*	18	47
R-13-09	R09@10'	08/27/2013	10.0	*ND*	1.1	28	*ND*	*ND*	5.1	-	*ND*	5.2	*ND*	0.060	*ND*	3.3	*ND*	*ND*	*ND*	13	16
A-13-10	R10@5'	08/29/2013	5.0	*ND*	*ND*	52	*ND*	*ND*	5.8	-	4.2	5.6	*ND*	0.070	*ND*	4.2	*ND*	*ND*	*ND*	20	27
A-13-12	R12@5'	09/3/2013	5.0	*ND*	*ND*	39	*ND*	*ND*	7.9	-	3.4	34	480	0.120	*ND*	4.7	*ND*	*ND*	*ND*	19	42
	R12@10'	09/3/2013	10.0	-	-	-	-	-	-	-	-	-	15	-	-	-	-	-	-	-	-
	# of non-detects =>			**77**	**33**	**0**	**79**	**63**	**0**	**0**	**2**	**1**	**4**	**39**	**86**	**0**	**84**	**82**	**95**	**0**	**0**
	# of detects =>			**18**	**62**	**95**	**16**	**32**	**95**	**2**	**93**	**94**	**92**	**56**	**9**	**95**	**11**	**13**	**0**	**95**	**95**
	# of samples =>			**95**	**95**	**95**	**95**	**95**	**95**	**2**	**95**	**95**	**96**	**95**	**95**	**95**	**95**	**95**	**95**	**95**	**95**
	frequency of detection =>			**19%**	**65%**	**100%**	**17%**	**34%**	**100%**	**100%**	**98%**	**99%**	**96%**	**59%**	**9%**	**100%**	**12%**	**14%**	**0%**	**100%**	**100%**
	minimum detected =>			**1.9**	**0.798**	**17**	**0.261**	**0.519**	**1.7**	**3.0**	**1.8**	**2.4**	**1.0**	**0.06**	**0.256**	**1.3**	**0.847**	**0.258**	**-**	**7.2**	**10**
	maximum detected =>			**452**	**26**	**2100**	**0.408**	**14**	**69**	**5.0**	**13**	**2770**	**16100**	**4.6**	**1.0**	**48**	**10**	**13**	**-**	**41.5**	**10000**

The Fehling Group, LLC

TABLE K-2

Soil Summary for PARC Area 6 - TPH, VOCs, SVOCs, PCBs, OCPs, OPPs, and Chlorinated Herbicides (wet weight basis)

(0 to 10 ft bgs)

Boring ID	Sample ID	Sample Collection Date	Sample Depth (ft bgs)	TPH GRO (mg/kg)	TPH DRO (mg/kg)	TPH ORO (mg/kg)	VOCs (µg/kg)	SVOCs (µg/kg)	PCBs (µg/kg)	OCPs (µg/kg)	OPPs (µg/kg)	Chlorinated Herbicides (µg/kg)
6-1	6-1-0.5	05/15/2017	0.5	-	-	-	-	-	-	-	-	-
	6-1-1.0	05/15/2017	1.0	*ND*	*ND*	-	*ND*	*ND*	*ND*	*ND*	-	*ND*
	6-1-3.0	05/15/2017	3.0	-	-	-	-	-	-	-	-	-
	6-1-5.0	05/15/2017	5.0	-	-	-	-	-	-	-	-	-
6-2	6-2-0.5	05/16/2017	0.5	-	-	-	-	-	*ND*	*ND*	-	*ND*
	6-2-1.0	05/16/2017	1.0	-	-	-	-	-	-	-	-	-
	6-2-3.0	05/16/2017	3.0	*ND*	*ND*	-	*ND*	*ND*	-	-	-	-
	6-2-5.0	05/16/2017	5.0	-	-	-	-	-	-	-	-	-
6-3	6-3-0.5	05/15/2017	0.5	-	-	-	-	-	-	-	-	-
	6-3-1.0	05/15/2017	1.0	*ND*	*ND*	-	*ND*	*ND*	*ND*	*ND*	-	*ND*
	6-3-3.0	05/15/2017	3.0	-	-	-	-	-	-	-	-	-
	6-3-5.0	05/15/2017	5.0	-	-	-	-	-	-	-	-	-
6-4	6-4-0.5	05/15/2017	0.5	-	-	-	-	-	-	-	-	-
	6-4-1.0	05/15/2017	1.0	*ND*	*ND*	-	*ND*	*ND*	*ND*	*ND*	-	*ND*
	6-4-3.0	05/15/2017	3.0	-	-	-	-	-	-	-	-	-
	6-4-5.0	05/15/2017	5.0	-	-	-	-	-	-	-	-	-
6-5	6-5-0.5	05/15/2017	0.5	-	-	-	-	-	-	-	-	-
	6-5-1.0	05/15/2017	1.0	-	-	-	-	-	-	-	-	-
	6-5-3.0	05/15/2017	3.0	*ND*	*ND*	-	*ND*	*ND*	*ND*	*ND*	-	*ND*
	6-5-5.0	05/15/2017	5.0	-	-	-	-	-	-	-	-	-
6-6	6-6-1.0	05/15/2017	1.0	-	-	-	-	-	-	-	-	-
	6-6-3.0	05/15/2017	3.0	-	-	-	-	-	-	-	-	-
	6-6-5.0	05/15/2017	5.0	-	-	-	-	-	-	-	-	-
	6-6-7.5	05/15/2017	7.5	-	-	-	-	-	-	-	-	-
6-7	6-7-1.0	05/15/2017	1.0	-	-	-	-	-	-	-	-	-
	6-7-3.0	05/15/2017	3.0	-	-	-	-	-	-	-	-	-
	6-7-5.0	05/15/2017	5.0	-	-	-	-	-	-	-	-	-
	6-7-7.5	05/15/2017	7.5	-	-	-	-	-	-	-	-	-
6-8	6-8-1.0	05/15/2017	1.0	-	-	-	-	-	-	-	-	-
	6-8-3.0	05/15/2017	3.0	-	-	-	-	-	-	-	-	-
	6-8-5.0	05/15/2017	5.0	-	-	-	-	-	-	-	-	-
	6-8-7.5	05/15/2017	7.5	-	-	-	-	-	-	-	-	-

The Fehling Group, LLC

TABLE K-2

Soil Summary for PARC Area 6 - TPH, VOCs, SVOCs, PCBs, OCPs, OPPs, and Chlorinated Herbicides (wet weight basis)

(0 to 10 ft bgs)

Boring ID	Sample ID	Sample Collection Date	Sample Depth (ft bgs)	TPH GRO (mg/kg)	TPH DRO (mg/kg)	TPH ORO (mg/kg)	VOCs (µg/kg)	SVOCs (µg/kg)	PCBs (µg/kg)	OCPs (µg/kg)	OPPs (µg/kg)	Chlorinated Herbicides (µg/kg)
6-9	6-9-1.0	05/15/2017	1.0	-	-	-	*ND*	-	-	-	-	-
	6-9-3.0	05/15/2017	3.0	-	-	-	**7.6 (TCE)**	-	-	-	-	-
	6-9-5.0	05/15/2017	5.0	-	-	-	-	-	-	-	-	-
	6-9-7.5	05/15/2017	7.5	-	-	-	-	-	-	-	-	-
6-10	6-10-1.0	05/15/2017	1.0	-	-	-	**7.1 (TCE)**	-	-	-	-	-
	6-10-3.0	05/15/2017	3.0	-	-	-	**7.2 (TCE)**	-	-	-	-	-
	6-10-5.0	05/15/2017	5.0	-	-	-	-	-	-	-	-	-
	6-10-7.5	05/15/2017	7.5	-	-	-	-	-	-	-	-	-
16-5	16-5 @ 1'	02/12/2016	1.0	*ND*	**18**	-	*ND*	*ND*	-	-	-	*ND*
	16-5 @ 3'	02/12/2016	3.0	-	-	-	*ND*	-	-	-	-	-
	16-5 @ 4'	02/12/2016	4.0	-	-	-	*ND*	-	-	-	-	-
16-6	16-6 @ 1'	02/1/2016	1.0	-	-	-	-	-	-	-	-	-
	16-6 @ 3'	02/1/2016	3.0	-	-	-	-	-	-	-	-	-
16-7	16-7 @ 1'	02/1/2016	1.0	-	-	-	-	-	-	-	-	-
	16-7 @ 3'	02/1/2016	3.0	-	-	-	-	-	-	-	-	-
	16-7 @ 5'	02/1/2016	5.0	-	-	-	-	-	-	-	-	-
L-5	L-5 @ 1'	02/1/2016	1.0	-	-	-	-	-	-	-	-	-
	L-5 @ 3'	02/1/2016	3.0	-	-	-	-	-	-	-	-	-
	L-5 @ 4.5'	02/1/2016	4.5	-	-	-	-	-	-	-	-	-
L-5	L-5 @ 1'	02/26/2016	1.0	*ND*	*ND*	-	*ND*	*ND*	*ND*	*ND*	-	-
	L-5 @ 2'	02/26/2016	2.0	*ND*	*ND*	-	*ND*	**930 (Phenol)**	*ND*	*ND*	-	-
	L-5 @ 3'	02/26/2016	3.0	-	-	-	-	-	-	-	-	-
L-6	L-6 @ 1'	02/1/2016	1.0	-	-	-	-	-	-	-	-	-
	L-6 @ 3'	02/1/2016	3.0	-	-	-	-	-	-	-	-	-
	L-6 @ 5'	02/1/2016	5.0	-	-	-	-	-	-	-	-	-
L-6	L-6 @ 1'	02/26/2016	1.0	*ND*	**6600**	-	*ND*	*ND*	**240 (Arochlor 1260)**	*ND*	-	-
	L-6 @ 2'	02/26/2016	2.0	*ND*	*ND*	-	*ND*	**460 (Phenol)**	*ND*	*ND*	-	-
	L-6 @ 3'	02/26/2016	3.0	-	-	-	-	-	-	-	-	-
18.1-GP-1	GP-1 @ 1'	04/1/2016	1.0	-	-	-	-	-	-	-	-	-
	GP-1 @ 2'	04/1/2016	2.0	-	-	**480**	-	-	-	-	-	-
	GP-1 @ 3.5'	04/1/2016	3.5	-	-	-	-	-	-	-	-	-
	GP-1 @ 5'	04/1/2016	5.0	-	-	-	-	-	-	-	-	-
	GP-1 @ 6.5'	04/1/2016	6.5	-	-	**29**	-	-	-	-	-	-

The Fehling Group, LLC

TABLE K-2

Soil Summary for PARC Area 6 - TPH, VOCs, SVOCs, PCBs, OCPs, OPPs, and Chlorinated Herbicides (wet weight basis)

(0 to 10 ft bgs)

Boring ID	Sample ID	Sample Collection Date	Sample Depth (ft bgs)	TPH GRO (mg/kg)	TPH DRO (mg/kg)	TPH ORO (mg/kg)	VOCs (µg/kg)	SVOCs (µg/kg)	PCBs (µg/kg)	OCPs (µg/kg)	OPPs (µg/kg)	Chlorinated Herbicides (µg/kg)
18.1-GP-2	GP-2 @ 1'	04/1/2016	1.0	-	-	-	-	-	-	-	-	-
	GP-2 @ 2'	04/1/2016	2.0	-	-	-	-	-	-	-	-	-
	GP-2 @ 3.5'	04/1/2016	3.5	-	-	-	-	-	-	-	-	-
	GP-2 @ 5'	04/1/2016	5.0	-	-	-	-	-	-	-	-	-
18.1-GP-3	GP-3 @ 2'	04/1/2016	2.0	-	24	1000	-	-	-	-	-	-
	GP-3 @ 3.5'	04/1/2016	3.5	-	-	-	-	-	-	-	-	-
	GP-3 @ 5'	04/1/2016	5.0	-	-	-	-	-	-	-	-	-
18.1-1	18.1-1-1	10/22/2015	1.0	10	10	162	various	-	-	-	-	-
	18.1-1-3.5	10/22/2015	3.5	5	5.8	43	various	-	-	-	-	-
18.1-2	18.1-2-1	10/22/2015	1.0	5	5	9.6	various	-	-	-	-	-
	18.1-2-2.0	10/22/2015	2.0	25	25	96	various	-	-	-	-	-
18.1-3	18.1-3-1	10/22/2015	1.0	5	5	5	various	-	-	-	-	-
	18.1-3-3.5	10/22/2015	3.5	9.8	9.8	94	various	-	-	-	-	-
18.1-4	18.1-4-1	10/22/2015	1.0	5	5	36	various	-	-	-	-	-
	18.1-4-3.5	12/9/2015	3.5	5	5	5	various	-	-	-	-	-
18.1-4A	18.1-4A-1	12/9/2015	1.0	5	5	77	various	-	-	-	-	-
	18.1-4A-3.5	12/9/2015	3.5	5	5	100	various	-	-	-	-	-
18.1-4B	18.1-4B-1	12/9/2015	1.0	5	5	8.4	various	-	-	-	-	-
	18.1-4B-3.5	12/9/2015	3.5	5	5	5	various	-	-	-	-	-
18.1-4C	18.1-4C-1	12/9/2015	1.0	5	5	21	various	-	-	-	-	-
	18.1-4C-3.5	12/9/2015	3.5	5	5	5	various	-	-	-	-	-
18.1-4D	18.1-4D-1	12/9/2015	1.0	5	5	52	various	-	-	-	-	-
	18.1-4D-3.5	12/9/2015	3.5	5	5	150	various	-	-	-	-	-
18.1-5	18.1-5-1	12/9/2015	1.0	5	5	39	various	-	-	-	-	-
	18.1-5-3.5	12/9/2015	3.5	5	5	369	various	-	-	-	-	-
18.1-6	18.1-6-1	12/9/2015	1.0	5	5	5.7	various	-	-	-	-	-
	18.1-6-3.5	12/9/2015	3.5	5	5	51	various	-	-	-	-	-
18.1-7	18.1-7-3.5	12/9/2015	3.5	5	5	149	various	-	-	-	-	-
18.2-1	18.2-1-1	04/20/2016	1.0	5	5	5.6	11,000 (TCE)	-	-	-	-	-
	18.2-1-3.5	04/20/2016	3.5	5	5	5	various	-	-	-	-	-
18.2-2	18.2-2-1	04/20/2016	1.0	5	5	34	various	-	-	-	-	-
	18.2-2-3.5	04/20/2016	3.5	5	5	160	67 (TCE)	-	-	-	-	-
18.2-3	18.2-3-1	04/20/2016	1.0	5	5	22	8.0 (TCE)	-	-	-	-	-
	18.2-3-3.5	04/20/2016	3.5	5	5	47	53 (TCE)	-	-	-	-	-

The Fehling Group, LLC

TABLE K-2

Soil Summary for PARC Area 6 - TPH, VOCs, SVOCs, PCBs, OCPs, OPPs, and Chlorinated Herbicides (wet weight basis)

(0 to 10 ft bgs)

Boring ID	Sample ID	Sample Collection Date	Sample Depth (ft bgs)	TPH GRO (mg/kg)	TPH DRO (mg/kg)	TPH ORO (mg/kg)	VOCs (µg/kg)	SVOCs (µg/kg)	PCBs (µg/kg)	OCPs (µg/kg)	OPPs (µg/kg)	Chlorinated Herbicides (µg/kg)
A-13-08	A08@5'	08/27/2013	5.0	**300**	**5**	*ND*	*ND*	-	-	-	-	-
R-13-09	R09@10'	08/27/2013	10.0	*ND*	*ND*	*ND*	*ND*	-	-	-	-	-
A-13-10	R10@5'	08/29/2013	5.0	*ND*	*ND*	*ND*	*ND*	-	-	-	-	-
A-13-12	R12@5'	09/3/2013	5.0	*ND*	*ND*	*ND*	*ND*	-	-	-	-	-
	R12@10'	09/3/2013	10.0	-	-	-	-	-	-	-	-	-
			# of non-detects =>	**13**	**11**	**4**	**17**	**8**	**8**	**9**	**0**	**6**
			# of detects =>	**28**	**31**	**30**	**30**	**2**	**1**	**0**	**0**	**0**
			# of samples =>	**41**	**42**	**34**	**47**	**10**	**9**	**9**	**0**	**6**
			frequency of detection =>	**68%**	**74%**	**88%**	**64%**	**20%**	**11%**	**0%**	**-**	**0%**
			minimum detected =>	**5.0**	**5.0**	**5.0**	**various**	**460**	**240**	**-**	**-**	**-**
			maximum detected =>	**300**	**6600**	**1000**	**various**	**930**	**240**	**-**	**-**	**-**

The Fehling Group, LLC

TABLE K-3

Soil Gas and Ambient Air Summary for PARC Area 6

VOCs and TPH-GRO (detected analytes only)

Sample ID	Secondary Sample ID	DateCollected	Sample Depth (ft bgs)	1,1,1-Trichloroethane	1,1-Dichloroethane	1,2,4-Trichlorobenzene	1,2,4-Trimethylbenzene	1,3,5-Trimethylbenzene	1,3-Dichlorobenzene	2,2,4-Trimethylpentane	2-Butanone	2-Hexanone	4-Ethyl Toluene	4-Methyl-2-pentanone	Acetone	Acetonitrile	Benzene	Carbon disulfide	Chlorobenzene	Chloroethane	Chloroform	Chloromethane	Cyclohexane
6-Am	-	5/16/2017	5	*ND*	*ND*	*ND*	*ND*	*ND*	*ND*	*NA*	15	*ND*	*ND*	*ND*	33	*NA*	*ND*	30	*ND*	*ND*	*ND*	*ND*	*NA*
			# of non-detects =>	**1**	**1**	**1**	**1**	**1**	**1**	**0**	**0**	**1**	**1**	**1**	**0**	**0**	**1**	**0**	**1**	**1**	**1**	**1**	**0**
			# of detects =>	**0**	**0**	**0**	**0**	**0**	**0**	**0**	**1**	**0**	**0**	**0**	**1**	**0**	**0**	**1**	**0**	**0**	**0**	**0**	**0**
			# of samples =>	**1**	**1**	**1**	**1**	**1**	**1**	**0**	**1**	**1**	**1**	**1**	**1**	**0**	**1**	**1**	**1**	**1**	**1**	**1**	**0**
			frequency of detection =>	**0%**	**0%**	**0%**	**0%**	**0%**	**0%**	**-**	**100%**	**0%**	**0%**	**0%**	**100%**	**-**	**0%**	**100%**	**0%**	**0%**	**0%**	**0%**	**-**
			minimum detected =>	**-**	**-**	**-**	**-**	**-**	**-**	**-**	**15**	**-**	**-**	**-**	**33**	**-**	**-**	**30**	**-**	**-**	**-**	**-**	**-**
			maximum detected =>	**-**	**-**	**-**	**-**	**-**	**-**	**-**	**15**	**-**	**-**	**-**	**33**	**-**	**-**	**30**	**-**	**-**	**-**	**-**	**-**

The Fehling Group, LLC

TABLE K-3

Soil Gas and Ambient Air Summary for PARC Area 6

VOCs and TPH-GRO (detected analytes only)

Sample ID	Secondary Sample ID	DateCollected	Sample Depth (ft bgs)	Dichlorodifluoromethane	Ethanol	Ethylbenzene	m,p-Xylene	Methylene chloride	Naphthalene	n-Propylbenzene	o-Xylene	p-Isopropyltoluene	Tetrachloroethene	Toluene	Trichloroethene	Trichlorofluoromethane	Vinyl acetate	Vinyl chloride	2-Propanol	Gasoline Range Organics
6-Am	-	5/16/2017	5	*ND*	*NA*	*ND*	*ND*	*ND*	*ND*	*NA*	*ND*	*NA*	*ND*	*ND*	*ND*	*ND*	*ND*	*ND*	*NA*	*NA*
			# of non-detects =>	**1**	**0**	**1**	**1**	**1**	**1**	**0**	**1**	**0**	**1**	**1**	**1**	**1**	**1**	**1**	**0**	**0**
			# of detects =>	**0**	**0**	**0**	**0**	**0**	**0**	**0**	**0**	**0**	**0**	**0**	**0**	**0**	**0**	**0**	**0**	**0**
			# of samples =>	**1**	**0**	**1**	**1**	**1**	**1**	**0**	**1**	**0**	**1**	**1**	**1**	**1**	**1**	**1**	**0**	**0**
			frequency of detection =>	**0%**	**-**	**0%**	**0%**	**0%**	**0%**	**-**	**0%**	**-**	**0%**	**0%**	**0%**	**0%**	**0%**	**0%**	**-**	**-**
			minimum detected =>	**-**	**-**	**-**	**-**	**-**	**-**	**-**	**-**	**-**	**-**	**-**	**-**	**-**	**-**	**-**	**-**	**-**
			maximum detected =>	**-**	**-**	**-**	**-**	**-**	**-**	**-**	**-**	**-**	**-**	**-**	**-**	**-**	**-**	**-**	**-**	**-**

The Fehling Group, LLC

TABLE K-4
Soil EPCs (0 to 10 ft bgs)

				Concentrations in Soil (wet weight basis, mg/kg)*																Concentrations in Soil (dry weight basis, mg/kg)**																	
Boring ID	Sample ID	Sample Collection Date	Sample Depth (ft bgs)	Antimony	Arsenic	Barium	Cadmium	Copper	Lead	Mercury	Nickel	Selenium	Silver	Zinc	TPH-GRO	TPH-DRO	TPH-ORO	VOCs	SVOCs	PCBs	Antimony	Arsenic	Barium	Cadmium	Copper	Lead	Mercury	Nickel	Selenium	Silver	Zinc	TPH-GRO	TPH-DRO	TPH-ORO	VOCs	SVOCs	PCBs
6-1	6-1-0.5	05/15/2017	0.5	1	1.5	69	0.5	7.2	11	0.140	4.3	0.5	0.1	28	-	-	-	-	-	-	1	1.6	73	0.5	7.6	12	0.148	4.5	0.5	0.1	30	-	-	-	-	-	-
	6-1-1.0	05/15/2017	1.0	1	1.4	77	0.5	8.5	13	0.1	6.7	0.5	0.1	33	1	10	-	1	1	1	1	1.5	81	0.5	9.0	14	0.1	7.1	0.5	0.1	35	1.1	11	-	1.1	1.1	1.1
	6-1-3.0	05/15/2017	3.0	1	1	70	0.5	7.4	3.3	0.1	6.1	0.5	0.1	32	-	-	-	-	-	-	1	1	74	0.5	7.8	3.5	0.1	6.5	0.5	0.1	34	-	-	-	-	-	-
	6-1-5.0	05/15/2017	5.0	1	1	66	0.5	6.5	1.2	0.1	5.6	0.5	0.1	28	-	-	-	-	-	-	1	1	70	0.5	6.9	1.3	0.1	5.9	0.5	0.1	30	-	-	-	-	-	-
6-2	6-2-0.5	05/16/2017	0.5	1	2.9	110	0.5	6.8	90	0.330	3.2	0.5	0.1	62	-	-	-	-	-	1	1	3.1	116	0.5	7.2	95	0.349	3.4	0.5	0.1	66	-	-	-	-	-	1.1
	6-2-1.0	05/16/2017	1.0	1	1.2	87	0.5	15	38	0.780	8.0	0.5	0.1	89	-	-	-	-	-	-	1	1.3	92	0.5	16	40	0.825	8.5	0.5	0.1	94	-	-	-	-	-	-
	6-2-3.0	05/16/2017	3.0	1	1	29	0.5	2.5	1.2	0.1	2.4	0.5	0.1	13	1	10	-	1	1	-	1	1	31	0.5	2.6	1.3	0.1	2.5	0.5	0.1	14	1.1	11	-	1.1	1.1	-
	6-2-5.0	05/16/2017	5.0	1	1	34	0.5	3.0	1.2	0.1	2.4	0.5	0.1	14	-	-	-	-	-	-	1	1	36	0.5	3.2	1.3	0.1	2.5	0.5	0.1	15	-	-	-	-	-	-
6-3	6-3-0.5	05/15/2017	0.5	1	1	46	0.5	5.7	9.1	0.1	3.5	0.5	0.1	28	-	-	-	-	-	-	1	1	49	0.5	6.0	9.6	0.1	3.7	0.5	0.1	30	-	-	-	-	-	-
	6-3-1.0	05/15/2017	1.0	8.3	11	1900	12	250	4300	0.440	31	1.0	0.1	10000	1	10	-	1	1	1	8.8	12	2009	13	264	4548	0.465	33	1.1	0.1	10576	1.1	11	-	1.1	1.1	1.1
	6-3-3.0	05/15/2017	3.0	1	1.6	160	0.5	21	250	0.1	5.0	0.5	0.1	660	-	-	-	-	-	-	1	1.7	169	0.5	22	264	0.1	5.3	0.5	0.1	698	-	-	-	-	-	-
	6-3-5.0	05/15/2017	5.0	1	1	21	0.5	2.4	1.1	0.400	1.9	0.5	0.1	13	-	-	-	-	-	-	1	1	22	0.5	2.5	1.2	0.423	2.0	0.5	0.1	14	-	-	-	-	-	-
6-4	6-4-0.5	05/15/2017	0.5	1	2.3	95	0.5	13	30	0.170	5.6	0.5	0.1	55	-	-	-	-	-	-	1	2.4	100	0.5	14	32	0.180	5.9	0.5	0.1	58	-	-	-	-	-	-
	6-4-1.0	05/15/2017	1.0	1	26	71	1.2	41	94	0.1	8.4	0.5	0.1	960	1	10	-	1	1	1	1	27	75	1.3	43	99	0.1	8.9	0.5	0.1	1015	1.1	11	-	1.1	1.1	1.1
	6-4-3.0	05/15/2017	3.0	1	11	41	0.5	7.1	16	0.1	3.8	0.5	0.1	32	-	-	-	-	-	-	1	12	43	0.5	7.5	17	0.1	4.0	0.5	0.1	34	-	-	-	-	-	-
	6-4-5.0	05/15/2017	5.0	1	9.0	69	0.5	11	3.2	0.1	7.0	0.5	0.1	59	-	-	-	-	-	-	1	9.5	73	0.5	12	3.4	0.1	7.4	0.5	0.1	62	-	-	-	-	-	-
6-5	6-5-0.5	05/15/2017	0.5	4.0	9.1	95	2.3	82	400	0.170	12	0.5	0.1	950	-	-	-	-	-	-	4.2	9.6	100	2.4	87	423	0.180	13	0.5	0.1	1005	-	-	-	-	-	-
	6-5-1.0	05/15/2017	1.0	1	3.9	75	0.5	13	59	0.1	6.9	0.5	0.1	83	-	-	-	-	-	-	1	4.1	79	0.5	14	62	0.1	7.3	0.5	0.1	88	-	-	-	-	-	-
	6-5-3.0	05/15/2017	3.0	1	1.0	31	0.5	3.8	2.4	0.110	2.8	0.5	0.1	17	1	10	-	1	1	1	1	1.1	33	0.5	4.0	2.5	0.116	3.0	0.5	0.1	18	1.1	11	-	1.1	1.1	1.1
	6-5-5.0	05/15/2017	5.0	1	1	22	0.5	2.5	1.1	1.5	2.0	0.5	0.1	13	-	-	-	-	-	-	1	1	23	0.5	2.6	1.2	1.6	2.1	0.5	0.1	14	-	-	-	-	-	-
6-6	6-6-1.0	05/15/2017	1.0	1	1.1	120	0.5	13	12	0.120	12	0.5	0.1	45	-	-	-	-	-	-	1	1.2	127	0.5	14	13	0.127	13	0.5	0.1	48	-	-	-	-	-	-
	6-6-3.0	05/15/2017	3.0	1	1	30	0.5	3.0	1.2	0.1	2.5	0.5	0.1	13	-	-	-	-	-	-	1	1	32	0.5	3.2	1.3	0.1	2.6	0.5	0.1	14	-	-	-	-	-	-
	6-6-5.0	05/15/2017	5.0	1	1	52	0.5	4.0	1.1	0.1	3.0	0.5	0.1	14	-	-	-	-	-	-	1	1	55	0.5	4.2	1.2	0.1	3.2	0.5	0.1	15	-	-	-	-	-	-
	6-6-7.5	05/15/2017	7.5	1	1	32	0.5	4.1	1.2	0.1	3.8	0.5	0.1	17	-	-	-	-	-	-	1	1	34	0.5	4.3	1.3	0.1	4.0	0.5	0.1	18	-	-	-	-	-	-
6-7	6-7-1.0	05/15/2017	1.0	1	1	55	0.5	6.1	3.0	0.1	5.4	0.5	0.1	26	-	-	-	-	-	-	1	1	58	0.5	6.5	3.2	0.1	5.7	0.5	0.1	27	-	-	-	-	-	-
	6-7-3.0	05/15/2017	3.0	1	1	25	0.5	3.2	2.0	0.120	2.3	0.5	0.1	14	-	-	-	-	-	-	1	1	26	0.5	3.4	2.1	0.127	2.4	0.5	0.1	15	-	-	-	-	-	-
	6-7-5.0	05/15/2017	5.0	1	1	24	0.5	3.6	7.5	0.1	2.8	0.5	0.1	29	-	-	-	-	-	-	1	1	25	0.5	3.8	7.9	0.1	3.0	0.5	0.1	31	-	-	-	-	-	-
	6-7-7.5	05/15/2017	7.5	1	1	62	0.5	7.1	4.3	0.1	5.6	0.5	0.1	33	-	-	-	-	-	-	1	1	66	0.5	7.5	4.5	0.1	5.9	0.5	0.1	35	-	-	-	-	-	-

The Fehling Group, LLC

TABLE K-4
Soil EPCs (0 to 10 ft bgs)

				Concentrations in Soil (wet weight basis, mg/kg)*																Concentrations in Soil (dry weight basis, mg/kg)**																	
Boring ID	Sample ID	Sample Collection Date	Sample Depth (ft bgs)	Antimony	Arsenic	Barium	Cadmium	Copper	Lead	Mercury	Nickel	Selenium	Silver	Zinc	TPH-GRO	TPH-DRO	TPH-ORO	VOCs	SVOCs	PCBs	Antimony	Arsenic	Barium	Cadmium	Copper	Lead	Mercury	Nickel	Selenium	Silver	Zinc	TPH-GRO	TPH-DRO	TPH-ORO	VOCs	SVOCs	PCBs
6-8	6-8-1.0	05/15/2017	1.0	*1*	**5.0**	**100**	*0.5*	**97**	**140**	**0.100**	**6.1**	*0.5*	*0.1*	**210**	-	-	-	-	-	-	*1*	**5.3**	**106**	*0.5*	**103**	**148**	**0.106**	**6.5**	*0.5*	*0.1*	**222**	-	-	-	-	-	-
	6-8-3.0	05/15/2017	3.0	*1*	*1*	**25**	*0.5*	**3.0**	**1.0**	*0.1*	**2.4**	*0.5*	*0.1*	**13**	-	-	-	-	-	-	*1*	*1*	**26**	*0.5*	**3.2**	**1.1**	*0.1*	**2.5**	*0.5*	*0.1*	**14**	-	-	-	-	-	-
	6-8-5.0	05/15/2017	5.0	*1*	*1*	**47**	*0.5*	**4.3**	**1.4**	*0.1*	**4.0**	*0.5*	*0.1*	**21**	-	-	-	-	-	-	*1*	*1*	**50**	*0.5*	**4.5**	**1.5**	*0.1*	**4.2**	*0.5*	*0.1*	**22**	-	-	-	-	-	-
	6-8-7.5	05/15/2017	7.5	*1*	*1*	**17**	*0.5*	*1*	*1*	**4.6**	**1.3**	*0.5*	*0.1*	**10**	-	-	-	-	-	-	*1*	*1*	**18**	*0.5*	*1*	*1*	**4.9**	**1.4**	*0.5*	*0.1*	**11**	-	-	-	-	-	-
6-9	6-9-1.0	05/15/2017	1.0	*1*	*1*	**79**	*0.5*	**17**	**33**	**0.190**	**9.1**	*0.5*	*0.1*	**61**	-	-	-	*1*	-	-	*1*	*1*	**84**	*0.5*	**18**	**35**	**0.201**	**9.6**	*0.5*	*0.1*	**65**	-	-	-	*1.1*	-	-
	6-9-3.0	05/15/2017	3.0	**47**	**9.4**	**110**	**1.1**	**390**	**3100**	**1.4**	**12**	*0.5*	**1.7**	**510**	-	-	-	**7.6**	-	-	**50**	**9.9**	**116**	**1.2**	**412**	**3279**	**1.5**	**13**	*0.5*	**1.8**	**539**	-	-	-	**8.0**	-	-
	6-9-5.0	05/15/2017	5.0	*1*	*1*	**81**	*0.5*	**41**	**41**	**0.200**	**8.7**	*0.5*	*0.1*	**56**	-	-	-	-	-	-	*1*	*1*	**86**	*0.5*	**43**	**43**	**0.212**	**9.2**	*0.5*	*0.1*	**59**	-	-	-	-	-	-
	6-9-7.5	05/15/2017	7.5	*1*	*1*	**78**	*0.5*	**8.8**	**3.4**	**0.200**	**7.0**	*0.5*	*0.1*	**36**	-	-	-	-	-	-	*1*	*1*	**82**	*0.5*	**9.3**	**3.6**	**0.212**	**7.4**	*0.5*	*0.1*	**38**	-	-	-	-	-	-
6-10	6-10-1.0	05/15/2017	1.0	*1*	*1*	**110**	*0.5*	**24**	**99**	**0.290**	**7.5**	*0.5*	*0.1*	**92**	-	-	-	**7.1**	-	-	*1*	*1*	**116**	*0.5*	**25**	**105**	**0.307**	**7.9**	*0.5*	*0.1*	**97**	-	-	-	**7.5**	-	-
	6-10-3.0	05/15/2017	3.0	**5.5**	**6.5**	**380**	**1.8**	**160**	**800**	**0.190**	**9.4**	*0.5*	*0.1*	**2100**	-	-	-	**7.2**	-	-	**5.8**	**6.9**	**402**	**1.9**	**169**	**846**	**0.201**	**9.9**	*0.5*	*0.1*	**2221**	-	-	-	**7.6**	-	-
	6-10-5.0	05/15/2017	5.0	*1*	**8.6**	**57**	*0.5*	**37**	**13**	*0.1*	**5.0**	*0.5*	*0.1*	**31**	-	-	-	-	-	-	*1*	**9.1**	**60**	*0.5*	**39**	**14**	*0.1*	**5.3**	*0.5*	*0.1*	**33**	-	-	-	-	-	-
	6-10-7.5	05/15/2017	7.5	*1*	*1*	**38**	*0.5*	**3.2**	**1.2**	*0.1*	**3.2**	*0.5*	*0.1*	**17**	-	-	-	-	-	-	*1*	*1*	**40**	*0.5*	**3.4**	**1.3**	*0.1*	**3.4**	*0.5*	*0.1*	**18**	-	-	-	-	-	-
16-5	16-5 @ 1'	02/12/2016	1.0	*1*	**2.0**	**56**	*0.5*	**8.4**	**19**	*0.1*	**4.7**	*0.5*	*0.1*	**40**	*1*	**18**	-	*1*	*1*	-	*1*	**2.1**	**59**	*0.5*	**8.9**	**20**	*0.1*	**5.0**	*0.5*	*0.1*	**42**	*1.1*	**19**	-	*1.1*	*1.1*	-
	16-5 @ 3'	02/12/2016	3.0	*1*	**2.1**	**55**	*0.5*	**9.4**	**19**	**0.150**	**5.1**	*0.5*	*0.1*	**39**	-	-	-	*1*	-	-	*1*	**2.2**	**58**	*0.5*	**9.9**	**20**	**0.159**	**5.4**	*0.5*	*0.1*	**41**	-	-	-	*1.1*	-	-
	16-5 @ 4'	02/12/2016	4.0	*1*	**2.3**	**59**	*0.5*	**8.8**	**21**	*0.1*	**5.6**	*0.5*	*0.1*	**42**	-	-	-	*1*	-	-	*1*	**2.4**	**62**	*0.5*	**9.3**	**22**	*0.1*	**5.9**	*0.5*	*0.1*	**44**	-	-	-	*1.1*	-	-
16-6	16-6 @ 1'	02/1/2016	1.0	*1*	**2.4**	**55**	*0.5*	**8.0**	**11**	**0.100**	**4.8**	*0.5*	*0.1*	**36**	-	-	-	-	-	-	*1*	**2.5**	**58**	*0.5*	**8.5**	**12**	**0.106**	**5.1**	*0.5*	*0.1*	**38**	-	-	-	-	-	-
	16-6 @ 3'	02/1/2016	3.0	-	-	-	-	-	-	-	-	-	-	-	-	-	-	-	-	-	-	-	-	-	-	-	-	-	-	-	-	-	-	-	-	-	-
16-7	16-7 @ 1'	02/1/2016	1.0	*1*	**1.9**	**78**	*0.5*	**14**	**6.1**	**0.120**	**8.2**	*0.5*	*0.1*	**38**	-	-	-	-	-	-	*1*	**2.0**	**82**	*0.5*	**15**	**6.5**	**0.127**	**8.7**	*0.5*	*0.1*	**40**	-	-	-	-	-	-
	16-7 @ 3'	02/1/2016	3.0	*1*	**1.6**	**55**	*0.5*	**7.3**	**4.3**	*0.1*	**5.2**	*0.5*	*0.1*	**26**	-	-	-	-	-	-	*1*	**1.7**	**58**	*0.5*	**7.7**	**4.5**	*0.1*	**5.5**	*0.5*	*0.1*	**27**	-	-	-	-	-	-
	16-7 @ 5'	02/1/2016	5.0	-	-	-	-	-	-	-	-	-	-	-	-	-	-	-	-	-	-	-	-	-	-	-	-	-	-	-	-	-	-	-	-	-
L-5	L-5 @ 1'	02/1/2016	1.0	*1*	**1.8**	**46**	*0.5*	**8.4**	**25**	*0.1*	**4.2**	*0.5*	*0.1*	**32**	-	-	-	-	-	-	*1*	**1.9**	**49**	*0.5*	**8.9**	**26**	*0.1*	**4.4**	*0.5*	*0.1*	**34**	-	-	-	-	-	-
	L-5 @ 3'	02/1/2016	3.0	-	-	-	-	-	-	-	-	-	-	-	-	-	-	-	-	-	-	-	-	-	-	-	-	-	-	-	-	-	-	-	-	-
	L-5 @ 4.5'	02/1/2016	4.5	-	-	-	-	-	-	-	-	-	-	-	-	-	-	-	-	-	-	-	-	-	-	-	-	-	-	-	-	-	-	-	-	-
L-5	L-5 @ 1'	02/26/2016	1.0	-	-	-	-	-	-	-	-	-	-	-	*1*	*10*	-	*1*	*1*	*1*	-	-	-	-	-	-	-	-	-	-	-	*1.1*	*11*	-	*1.1*	*1.1*	*1.1*
	L-5 @ 2'	02/26/2016	2.0	*1*	*1*	**46**	*0.5*	**6.9**	**2.7**	*0.1*	**3.9**	*0.5*	*0.1*	**23**	*1*	*10*	-	*1*	**930**	*1*	*1*	*1*	**49**	*0.5*	**7.3**	**2.9**	*0.1*	**4.1**	*0.5*	*0.1*	**24**	*1.1*	*11*	-	*1.1*	**984**	*1.1*
	L-5 @ 3'	02/26/2016	3.0	*1*	*1*	**30**	*0.5*	**2.8**	*1*	*0.1*	**2.5**	*0.5*	*0.1*	**14**	-	-	-	-	-	-	*1*	*1*	**32**	*0.5*	**3.0**	*1*	*0.1*	**2.6**	*0.5*	*0.1*	**15**	-	-	-	-	-	-

The Fehling Group, LLC

TABLE K-4
Soil EPCs (0 to 10 ft bgs)

				Concentrations in Soil (wet weight basis, mg/kg)*																Concentrations in Soil (dry weight basis, mg/kg)**																	
Boring ID	Sample ID	Sample Collection Date	Sample Depth (ft bgs)	Antimony	Arsenic	Barium	Cadmium	Copper	Lead	Mercury	Nickel	Selenium	Silver	Zinc	TPH-GRO	TPH-DRO	TPH-ORO	VOCs	SVOCs	PCBs	Antimony	Arsenic	Barium	Cadmium	Copper	Lead	Mercury	Nickel	Selenium	Silver	Zinc	TPH-GRO	TPH-DRO	TPH-ORO	VOCs	SVOCs	PCBs
L-6	L-6 @ 1'	02/1/2016	1.0	1	10	130	0.5	64	200	0.150	12	0.5	0.1	310	-	-	-	-	-	-	1	11	137	0.5	68	212	0.159	13	0.5	0.1	328	-	-	-	-	-	-
	L-6 @ 3'	02/1/2016	3.0	-	-	-	-	-	-	-	-	-	-	-	-	-	-	-	-	-	-	-	-	-	-	-	-	-	-	-	-	-	-	-	-	-
	L-6 @ 5'	02/1/2016	5.0	-	-	-	-	-	-	-	-	-	-	-	-	-	-	-	-	-	-	-	-	-	-	-	-	-	-	-	-	-	-	-	-	-
L-6	L-6 @ 1'	02/26/2016	1.0	-	-	-	-	-	-	-	-	-	-	-	1	6600	-	1	1	240	-	-	-	-	-	-	-	-	-	-	1.1	6980	-	1.1	1.1	254
	L-6 @ 2'	02/26/2016	2.0	1	26	93	0.5	10	5.8	0.1	7.4	0.5	0.1	53	1	10	-	1	460	1	1	27	98	0.5	11	6.1	0.1	7.8	0.5	0.1	56	1.1	11	-	1.1	487	1.1
	L-6 @ 3'	02/26/2016	3.0	1	17	48	0.5	5.0	2.4	0.1	3.8	0.5	0.1	24	-	-	-	-	-	-	1	18	51	0.5	5.3	2.5	0.1	4.0	0.5	0.1	25	-	-	-	-	-	-
18.1-GP-1	GP-1 @ 1'	04/1/2016	1.0	1	1.9	73	0.5	19	53	0.550	12	0.5	0.1	85	-	-	-	-	-	-	1	2.0	77	0.5	20	56	0.582	13	0.5	0.1	90	-	-	-	-	-	-
	GP-1 @ 2'	04/1/2016	2.0	1	2.4	160	1.6	23	74	0.750	8.9	0.5	0.1	230	-	-	480	-	-	-	1	2.5	169	1.7	24	78	0.793	9.4	0.5	0.1	243	-	-	508	-	-	-
	GP-1 @ 3.5'	04/1/2016	3.5	1	1.8	70	0.5	15	34	0.120	7.6	0.5	0.1	62	-	-	-	-	-	-	1	1.9	74	0.5	16	36	0.127	8.0	0.5	0.1	66	-	-	-	-	-	-
	GP-1 @ 5'	04/1/2016	5.0	1	1.0	41	0.5	4.7	1.6	0.1	3.9	0.5	0.1	20	-	-	-	-	-	-	1	1.1	43	0.5	5.0	1.7	0.1	4.1	0.5	0.1	21	-	-	-	-	-	-
	GP-1 @ 6.5'	04/1/2016	6.5	7.3	2.2	100	0.5	44	170	1.1	15	0.5	0.1	290	-	-	29	-	-	-	7.7	2.3	106	0.5	47	180	1.2	16	0.5	0.1	307	-	-	31	-	-	-
18.1-GP-2	GP-2 @ 1'	04/1/2016	1.0	1	1.9	69	0.5	12	44	1.3	5.5	0.5	0.1	100	-	-	-	-	-	-	1	2.0	73	0.5	13	47	1.4	5.8	0.5	0.1	106	-	-	-	-	-	-
	GP-2 @ 2'	04/1/2016	2.0	1	1	2100	0.5	1400	8300	0.670	47	0.5	0.1	8300	-	-	-	-	-	-	1	1	2221	0.5	1481	8778	0.709	50	0.5	0.1	8778	-	-	-	-	-	-
	GP-2 @ 3.5'	04/1/2016	3.5	1	2.0	65	0.5	23	71	0.350	7.6	0.5	0.1	70	-	-	-	-	-	-	1	2.1	69	0.5	24	75	0.370	8.0	0.5	0.1	74	-	-	-	-	-	-
	GP-2 @ 5'	04/1/2016	5.0	1	1	49	0.5	7.1	1.5	0.1	4.2	0.5	0.1	24	-	-	-	-	-	-	1	1	52	0.5	7.5	1.6	0.1	4.4	0.5	0.1	25	-	-	-	-	-	-
18.1-GP-3	GP-3 @ 2'	04/1/2016	2.0	1	3.3	67	0.5	18	62	0.110	6.1	0.5	0.1	92	-	24	1000	-	-	-	1	3.5	71	0.5	19	66	0.116	6.5	0.5	0.1	97	-	25	1058	-	-	-
	GP-3 @ 3.5'	04/1/2016	3.5	1	1.2	42	0.5	5.4	1.4	0.1	3.7	0.5	0.1	20	-	-	-	-	-	-	1	1.3	44	0.5	5.7	1.5	0.1	3.9	0.5	0.1	21	-	-	-	-	-	-
	GP-3 @ 5'	04/1/2016	5.0	1	1	44	0.5	4.4	1.5	0.1	3.2	0.5	0.1	19	-	-	-	-	-	-	1	1	47	0.5	4.7	1.6	0.1	3.4	0.5	0.1	20	-	-	-	-	-	-
18.1-1	18.1-1-1	10/22/2015	1.0	1	2.0	98	1.8	24	61	0.182	14	0.5	0.1	112	10	10	162	various	-	-	1	2.1	103	1.9	25	65	0.192	15	0.5	0.1	118	11	11	171	various	-	-
	18.1-1-3.5	10/22/2015	3.5	1	1	64	1.0	8.0	4.7	0.1	6.1	0.5	0.1	35	5	5.8	43	various	-	-	1	1	68	1.0	8.5	4.9	0.1	6.5	0.5	0.1	37	5.3	6.1	45	various	-	-
18.1-2	18.1-2-1	10/22/2015	1.0	1	1	146	1.1	12	25	0.108	8.6	0.870	0.1	61	5	5	9.6	various	-	-	1	1	154	1.2	13	27	0.114	9.1	0.920	0.1	64	5.3	5.3	10	various	-	-
	18.1-2-2.0	10/22/2015	2.0	1	0.82	134	1.4	95	293	0.180	48	0.5	0.1	288	25	25	96	various	-	-	1	0.86	142	1.5	100	310	0.190	51	0.5	0.1	305	26	26	102	various	-	-
18.1-3	18.1-3-1	10/22/2015	1.0	1	1	73	1.4	12	3.5	0.103	22	0.5	0.1	40	5	5	5	various	-	-	1	1	77	1.5	13	3.7	0.109	23	0.5	0.1	42	5.3	5.3	5.3	various	-	-
	18.1-3-3.5	10/22/2015	3.5	1	1.7	202	2.8	64	554	0.862	19	0.5	0.297	545	9.8	9.8	94	various	-	-	1	1.8	214	3.0	68	586	0.912	20	0.5	0.314	576	10	10	99	various	-	-
18.1-4	18.1-4-1	10/22/2015	1.0	1	8.5	443	4.0	312	1010	1.2	40	0.5	0.258	1400	5	5	36	various	-	-	1	9.0	469	4.2	330	1068	1.3	42	0.5	0.273	1481	5.3	5.3	38	various	-	-
	18.1-4-3.5	12/9/2015	3.5	1	3.6	73	0.8	13	17	0.1	7.0	1.0	0.1	69	5	5	5	various	-	-	1	3.8	77	0.8	14	18	0.1	7.4	1.0	0.1	73	5.3	5.3	5.3	various	-	-
18.1-4A	18.1-4A-1	12/9/2015	1.0	452	10.0	486	5.4	531	13900	0.468	22	1.2	13	2140	5	5	77	various	-	-	478	10.5	514	5.8	562	14701	0.495	23	1.2	13	2263	5.3	5.3	81	various	-	-
	18.1-4A-3.5	12/9/2015	3.5	1	4.6	99	0.9	18	30	0.1	9.3	2.1	0.1	69	5	5	100	various	-	-	1	4.8	105	1.0	19	31	0.1	9.8	2.2	0.1	73	5.3	5.3	106	various	-	-

The Fehling Group, LLC

TABLE K-4

Soil EPCs (0 to 10 ft bgs)

				Concentrations in Soil (wet weight basis, mg/kg)*																Concentrations in Soil (dry weight basis, mg/kg)**																	
Boring ID	Sample ID	Sample Collection Date	Sample Depth (ft bgs)	Antimony	Arsenic	Barium	Cadmium	Copper	Lead	Mercury	Nickel	Selenium	Silver	Zinc	TPH-GRO	TPH-DRO	TPH-ORO	VOCs	SVOCs	PCBs	Antimony	Arsenic	Barium	Cadmium	Copper	Lead	Mercury	Nickel	Selenium	Silver	Zinc	TPH-GRO	TPH-DRO	TPH-ORO	VOCs	SVOCs	PCBs
18.1-4B	18.1-4B-1	12/9/2015	1.0	5.1	14	444	2.7	475	1690	0.341	18	1.2	0.710	1500	5	5	8.4	various	-	-	5.4	15	470	2.9	502	1787	0.361	19	1.3	0.751	1586	5.3	5.3	8.9	various	-	-
	18.1-4B-3.5	12/9/2015	3.5	*1*	3.0	65	0.7	6.0	2.9	*0.1*	5.9	1.7	*0.1*	37	5	5	5	various	-	-	*1*	3.2	69	0.7	6.4	3.0	*0.1*	6.2	1.8	*0.1*	39	5.3	5.3	5.3	various	-	-
18.1-4C	18.1-4C-1	12/9/2015	1.0	9.5	13	727	3.2	552	1930	0.439	18	1.7	0.547	1990	5	5	21	various	-	-	10.0	13	769	3.3	584	2041	0.464	19	1.8	0.579	2105	5.3	5.3	22	various	-	-
	18.1-4C-3.5	12/9/2015	3.5	*1*	3.6	71	0.8	6.7	8.8	*0.1*	6.7	10	*0.1*	56	5	5	5	various	-	-	*1*	3.8	75	0.8	7.0	9.3	*0.1*	7.0	11	*0.1*	60	5.3	5.3	5.3	various	-	-
18.1-4D	18.1-4D-1	12/9/2015	1.0	*1*	11	474	2.9	308	1170	0.456	25	1.4	0.434	1550	5	5	52	various	-	-	*1*	11	501	3.1	326	1237	0.482	27	1.5	0.459	1639	5.3	5.3	55	various	-	-
	18.1-4D-3.5	12/9/2015	3.5	3.5	11	463	3.2	535	2560	0.768	39	0.847	0.639	1820	5	5	150	various	-	-	3.7	11	490	3.3	566	2708	0.812	41	0.896	0.676	1925	5.3	5.3	159	various	-	-
18.1-5	18.1-5-1	12/9/2015	1.0	9.4	7.4	451	5.0	452	2050	0.374	37	*0.5*	0.622	1310	5	5	39	various	-	-	9.9	7.8	477	5.2	478	2168	0.396	40	*0.5*	0.658	1385	5.3	5.3	41	various	-	-
	18.1-5-3.5	12/9/2015	3.5	7.5	2.3	208	2.3	232	1020	0.254	17	*0.5*	0.472	628	5	5	369	various	-	-	7.9	2.5	220	2.4	245	1079	0.269	18	*0.5*	0.499	664	5.3	5.3	390	various	-	-
18.1-6	18.1-6-1	12/9/2015	1.0	2.7	0.80	153	1.5	86	334	0.120	7.5	*0.5*	*0.1*	423	5	5	5.7	various	-	-	2.8	0.84	162	1.5	91	353	0.127	7.9	*0.5*	*0.1*	447	5.3	5.3	6.0	various	-	-
	18.1-6-3.5	12/9/2015	3.5	23	2.5	196	2.5	311	1510	0.240	12	*0.5*	0.397	597	5	5	51	various	-	-	24	2.6	207	2.6	329	1597	0.254	12	*0.5*	0.420	631	5.3	5.3	54	various	-	-
18.1-7	18.1-7-3.5	12/9/2015	3.5	1.9	1.5	121	1.7	53	122	0.115	11	*0.5*	*0.1*	178	5	5	149	various	-	-	2.0	1.5	128	1.8	56	129	0.122	12	*0.5*	*0.1*	188	5.3	5.3	158	various	-	-
18.2-1	18.2-1-1	04/20/2016	1.0	*1*	16	163	14	132	468	0.125	23	*0.5*	*0.1*	4910	5	5	5.6	11,000	-	-	*1*	16	172	15	140	495	0.132	24	*0.5*	*0.1*	5193	5.3	5.3	5.9	11634	-	-
	18.2-1-3.5	04/20/2016	3.5	*1*	*1*	46	*0.5*	4.6	1.9	*0.1*	3.7	*0.5*	*0.1*	22	5	5	5	various	-	-	*1*	*1*	48	*0.5*	4.9	2.0	*0.1*	3.9	*0.5*	*0.1*	23	5.3	5.3	5.3	various	-	-
18.2-2	18.2-2-1	04/20/2016	1.0	3.4	2.3	112	0.5	43	87	0.168	10	*0.5*	*0.1*	17	5	5	34	various	-	-	3.6	2.4	118	0.5	46	92	0.178	11	*0.5*	*0.1*	18	5.3	5.3	36	various	-	-
	18.2-2-3.5	04/20/2016	3.5	93	17	1450	8.1	2770	16100	1.0	33	*0.5*	2.7	8730	5	5	160	67	-	-	98	18	1534	8.5	2930	17028	1.0	35	*0.5*	2.9	9233	5.3	5.3	169	71	-	-
18.2-3	18.2-3-1	04/20/2016	1.0	2.4	2.1	152	0.9	107	433	0.284	11	*0.5*	*0.1*	299	5	5	22	8	-	-	2.6	2.2	161	0.9	113	458	0.300	11	*0.5*	*0.1*	316	5.3	5.3	23	8.5	-	-
	18.2-3-3.5	04/20/2016	3.5	5.1	4.8	207	2.0	828	1310	0.829	14	*0.5*	0.829	1260	5	5	47	53	-	-	5.4	5.0	219	2.2	876	1385	0.877	15	*0.5*	0.877	1333	5.3	5.3	50	56	-	-
A-13-08	A08@5'	08/27/2013	5.0	*1*	2.1	91	*0.5*	15	26	0.062	7.5	*0.5*	*0.1*	47	300	5	*10*	*1*	-	-	*1*	2.2	96	*0.5*	16	27	0.066	7.9	*0.5*	*0.1*	50	317	5.3	*11*	*1.1*	-	-
R-13-09	R09@10'	08/27/2013	10.0	*1*	1.1	28	*0.5*	5.2	*1*	0.060	3.3	*0.5*	*0.1*	16	*1*	*10*	*10*	*1*	-	-	*1*	1.2	30	*0.5*	5.5	*1*	0.063	3.5	*0.5*	*0.1*	17	*1.1*	*11*	*11*	*1.1*	-	-
A-13-10	R10@5'	08/29/2013	5.0	*1*	*1*	52	*0.5*	5.6	*1*	0.070	4.2	*0.5*	*0.1*	27	*1*	*10*	*10*	*1*	-	-	*1*	*1*	55	*0.5*	5.9	*1*	0.074	4.4	*0.5*	*0.1*	29	*1.1*	*11*	*11*	*1.1*	-	-
A-13-12	R12@5'	09/3/2013	5.0	*1*	*1*	39	*0.5*	34	480	0.120	4.7	*0.5*	*0.1*	42	*1*	*10*	*10*	*1*	-	-	*1*	*1*	41	*0.5*	36	508	0.127	5.0	*0.5*	*0.1*	44	*1.1*	*11*	*11*	*1.1*	-	-
	R12@10'	09/3/2013	10.0	-	-	-	-	-	15	-	-	-	-	-	-	-	-	-	-	-	-	-	-	-	-	16	-	-	-	-	-	-	-	-	-	-
95% UCL for 0 to 10 ft bgs (see Attachment O)* =>				**31**	**6.6**	**332**	**2.4**	**286**	**1839**	**0.591**	**21**	**0.91**	**0.94**	**1427**	**46**	**898**	**253**	**11634**	**984**	**254**																	

* Italicized value is the reporting limit for 'non-detect' ('ND') result.

* 95% UCL not calculated due to low number of samples; value shown is maximum value. For VOCs, SVOCs, and PCBs, the values shown are for TCE, Phenol, and Arochlor 1260, respectively.

** Dry weight concentration = Wet weight concentration x (1 + average moisture content) where average moisture content = 0.056 g/g (see **Table 1**).

The Fehling Group, LLC

TABLE K-5
Soil Risk Characterization Summary
~ PARC Area 6 ~

		Soil RBC (mg/kg)*				Risk Values (Incremental Lifetime Cancer Risk [ILCR] and Hazard Quotient [HQ])			
		Residential Receptor		Construction Worker Receptor		Residential Receptor		Construction Worker Receptor	
Soil COPC	**Soil EPC (mg/kg, dry weight basis)**	**Cancer Endpoint**	**Noncancer Endpoint**	**Cancer Endpoint**	**Noncancer Endpoint**	**ILCR (unitless)**	**HQ (unitless)**	**ILCR (unitless)**	**HQ (unitless)**
Antimony	31	--	3.10E+01	--	1.42E+02	--	1.0E+00	--	2.2E-01
Arsenic	6.6	**Soil EPC below regional background of 12 mg/kg (no longer a COPC - no risk values calculated)**							
Barium	332	--	1.50E+04	--	3.02E+03	--	2.2E-02	--	1.1E-01
Cadmium	2.4	9.09E+02	5.23E+00	1.05E+02	4.27E+01	2.6E-09	4.5E-01	2.3E-08	5.6E-02
Copper	286	--	3.10E+03	--	1.42E+04	--	9.2E-02	--	2.0E-02
Lead	1839	Not applicable (see Section 3.2.1.2)							
Mercury	0.59	--	1.01E+00	--	4.36E+01	--	5.9E-01	--	1.4E-02
Nickel	21	1.47E+04	4.87E+02	1.70E+03	8.63E+01	1.4E-09	4.4E-02	1.2E-08	2.5E-01
Selenium	0.91	--	3.90E+02	--	1.75E+03	--	2.3E-03	--	5.2E-04
Silver	0.94	--	2.27E+02	--	1.77E+03	--	4.1E-03	--	5.3E-04
Zinc	1427	--	2.30E+04	--	1.06E+05	--	6.2E-02	--	1.3E-02
TPH-GRO	46	--	8.20E+01	--	2.77E+03	--	5.6E-01	--	1.7E-02
TPH-DRO	898	--	9.60E+01	--	8.85E+02	--	9.4E+00	--	1.0E+00
TPH-ORO	253	--	2.50E+03	--	3.24E+04	--	1.0E-01	--	7.8E-03
Phenol	0.98	--	1.90E+04	--	9.79E+04	--	5.2E-05	--	1.0E-05
Arochlor 1260	0.25	2.40E-01	--	5.60E+00	--	1.1E-06	--	4.5E-08	--
		Cumulative Risk Values (ILCR and HI Values) =>				**1.1E-06**	**1.1E+01**	**8.0E-08**	**1.5E+00**

* "Combined" value listed in **Table 5** for the residential receptor and **Table 6** for the construction worker receptor.

The Fehling Group, LLC

ATTACHMENT L

Tables for PARC Area 7

TABLE L-1

Soil Summary for PARC Area 7 - Metals (0 to 10 ft bgs)

~ in units of mg/kg (wet weight basis) ~

Boring ID	Sample ID	Sample Collection Date	Sample Depth (ft bgs)	Antimony	Arsenic	Barium	Beryllium	Cadmium	Chromium	Hexavalent Chromium	Cobalt	Copper	Lead	Mercury	Molybdenum	Nickel	Selenium	Silver	Thallium	Vanadium	Zinc
7-1	7-1-0.5	05/16/2017	0.5	ND	2.7	110	ND	ND	14	-	6.8	4500	45	0.13	ND	12	ND	ND	ND	30	100
	7-1-1.0	05/16/2017	1.0	ND	1.2	120	ND	ND	8.8	-	4.8	700	69	0.22	ND	13	ND	ND	ND	24	270
	7-2-0.5	05/15/2017	0.5	ND	ND	93	ND	ND	6.1	-	4.3	8.3	27	0.18	ND	4.3	ND	ND	ND	19	57
	7-2-1.0	05/15/2017	1.0	ND	ND	35	ND	ND	4.5	-	3.9	3.1	1.1	ND	ND	3.2	ND	ND	ND	15	17
7-2	7-2-3.0	05/15/2017	3.0	ND	ND	23	ND	ND	2.9	-	2.5	2.1	ND	0.19	ND	2.1	ND	ND	ND	11	13
	7-2-5.0	05/15/2017	5.0	ND	ND	24	ND	ND	2.7	-	2.2	ND	ND	ND	ND	1.9	ND	ND	ND	10	11
7-3	7-3-0.5	05/15/2017	0.5	ND	2.5	110	ND	ND	13	-	7.8	39	51	0.17	ND	11	ND	ND	ND	28	93
	7-3-1.0	05/15/2017	1.0	ND	1.1	77	ND	ND	8.3	-	6.1	11	33	0.11	ND	5.9	ND	ND	ND	26	44
	7-3-3.0	05/15/2017	3.0	ND	ND	61	ND	ND	7.1	-	5.3	6.8	7.0	ND	ND	4.8	ND	ND	ND	23	32
	7-3-5.0	05/15/2017	5.0	ND	ND	34	ND	ND	4.6	-	3.3	3.1	ND	ND	ND	2.9	ND	ND	ND	18	15
7-4	7-4-0.5	05/15/2017	0.5	ND	1.1	130	ND	ND	12	-	8.2	36	70	0.11	ND	9.3	1.2	ND	ND	32	150
	7-4-1.0	05/15/2017	1.0	ND	ND	100	ND	ND	9.8	-	6.2	44	43	0.12	ND	9.5	1.1	ND	ND	26	130
	7-4-3.0	05/15/2017	3.0	ND	ND	92	ND	ND	11	-	7.6	13	31	0.64	ND	8.4	ND	ND	ND	29	80
	7-4-5.0	05/15/2017	5.0	ND	2.3	150	ND	ND	13	-	4.6	35	12	ND	ND	22	ND	ND	ND	23	890
7-5	7-5-0.5	05/16/2017	0.5	ND	ND	95	ND	ND	12	-	8.0	9.7	4.5	ND	ND	8.3	ND	ND	ND	32	39
	7-5-1.0	05/16/2017	1.0	ND	ND	95	ND	ND	12	-	8.2	10	3.0	ND	ND	8.6	1.0	ND	ND	34	38
	7-5-3.0	05/16/2017	3.0	ND	ND	120	ND	ND	14	-	9.9	18	3.5	ND	ND	12	1.1	ND	ND	38	46
	7-5-5.0	05/16/2017	5.0	ND	ND	31	ND	ND	6.7	-	3.6	2.7	1.0	ND	ND	3.0	ND	ND	ND	28	16
7-6	7-6-0.5	05/16/2017	0.5	ND	1.2	91	ND	ND	8.4	-	5.2	28	31	0.13	ND	7.3	ND	ND	ND	23	77
	7-6-1.0	05/16/2017	1.0	ND	ND	93	ND	ND	8.7	-	5.7	28	22	0.16	ND	6.7	ND	ND	ND	24	60
	7-6-3.0	05/16/2017	3.0	ND	ND	78	ND	ND	8.2	-	5.2	12	13	ND	ND	6.1	ND	ND	ND	23	50
	7-6-5.0	05/16/2017	5.0	ND	ND	40	ND	ND	5.0	-	3.5	4.6	2.7	ND	ND	3.4	ND	ND	ND	16	19
7-7	7-7-0.5	05/16/2017	0.5	ND	ND	110	ND	ND	14	-	9.3	13	3.7	ND	ND	10	ND	ND	ND	35	41
	7-7-1.0	05/16/2017	1.0	ND	ND	130	ND	ND	12	-	11	9.6	2.3	ND	ND	9.4	ND	ND	ND	37	47
	7-7-3.0	05/16/2017	3.0	ND	ND	26	ND	ND	5.0	-	2.9	2.2	ND	ND	ND	2.4	ND	ND	ND	22	13
	7-7-5.0	05/16/2017	5.0	ND	ND	17	ND	ND	3.2	-	2.1	ND	ND	ND	ND	1.8	ND	ND	ND	14	12
L-2	L-2 @ 1'	02/1/2016	1.0	ND	1.8	97	ND	ND	8.7	-	4.7	11	6.4	ND	ND	6.5	ND	ND	ND	23	37
	L-2 @ 3'	02/1/2016	3.0	-	-	-	-	-	-	-	-	-	-	-	-	-	-	-	-	-	-

The Fehling Group, LLC

TABLE L-1

Soil Summary for PARC Area 7 - Metals (0 to 10 ft bgs)

~ in units of mg/kg (wet weight basis) ~

Boring ID	Sample ID	Sample Collection Date	Sample Depth (ft bgs)	Antimony	Arsenic	Barium	Beryllium	Cadmium	Chromium	Hexavalent Chromium	Cobalt	Copper	Lead	Mercury	Molybdenum	Nickel	Selenium	Silver	Thallium	Vanadium	Zinc
L-3	L-3 @ 1'	02/1/2016	1.0	*ND*	1.6	68	*ND*	*ND*	6.4	-	3.9	21	22	0.10	*ND*	6.1	*ND*	*ND*	*ND*	18	81
	L-3 @ 3'	02/1/2016	3.0	-	-	-	-	-	-	-	-	-	-	-	-	-	-	-	-	-	-
	L-3 @ 5'	02/1/2016	5.0	-	-	-	-	-	-	-	-	-	-	-	-	-	-	-	-	-	-
L-4	L-4 @ 1'	02/1/2016	1.0	*ND*	3.6	250	*ND*	1.5	11	-	5.3	84	98	0.27	*ND*	12	*ND*	*ND*	*ND*	25	290
	L-4 @ 3'	02/1/2016	3.0	*ND*	1.5	86	*ND*	*ND*	9.0	-	5.7	9.6	2.0	*ND*	*ND*	6.9	*ND*	*ND*	*ND*	27	38
	L-4 @ 5'	02/1/2016	5.0	-	-	-	-	-	-	-	-	-	-	-	-	-	-	-	-	-	-
L-2	L-2 @ 1'	02/26/2016	1.0	-	-	-	-	-	-	-	-	-	-	-	-	-	-	-	-	-	-
	L-2 @ 2'	02/26/2016	2.0	*ND*	1.0	33	*ND*	*ND*	4.1	-	2.4	3.7	1.2	*ND*	*ND*	3.1	*ND*	*ND*	*ND*	12	16
	L-2 @ 3'	02/26/2016	3.0	*ND*	1.3	37	*ND*	*ND*	5.2	-	2.9	4.4	1.4	*ND*	*ND*	3.7	*ND*	*ND*	*ND*	17	20
L-3	L-3 @ 1'	02/26/2016	1.0	-	-	-	-	-	-	-	-	-	-	-	-	-	-	-	-	-	-
	L-3 @ 2'	02/26/2016	2.0	*ND*	1.6	88	*ND*	*ND*	9.8	-	6.3	9.5	2.3	*ND*	*ND*	7.2	*ND*	*ND*	*ND*	30	41
	L-3 @ 3'	02/26/2016	3.0	*ND*	1.7	89	*ND*	*ND*	10	-	6.6	9.8	2.4	*ND*	*ND*	7.4	*ND*	*ND*	*ND*	31	41
L-4	L-4 @ 1'	02/26/2016	1.0	-	-	-	-	-	-	-	-	-	-	-	-	-	-	-	-	-	-
	L-4 @ 2'	02/26/2016	2.0	*ND*	2.2	130	*ND*	*ND*	12	-	6.7	26	14	*ND*	*ND*	9.9	*ND*	*ND*	*ND*	31	96
	L-4 @ 3'	02/26/2016	3.0	*ND*	2.6	130	*ND*	*ND*	12	-	5.3	37	67	0.17	*ND*	11	*ND*	*ND*	*ND*	24	150
20-1	20-1-1	04/20/2016	1.0	*ND*	2.7	172	*ND*	1.33	24.8	-	6.7	74	240	1.2	1.0	10	*ND*	0.401	*ND*	25.8	170
A13-14	A14@10'	09/5/2013	10.0	*ND*	*ND*	46	*ND*	1.2	9.1	-	4.4	6.8	*ND*	0.036	*ND*	4.8	*ND*	*ND*	*ND*	33	26
A13-15	R15@5'	08/23/2013	5.0	*ND*	1.4	50	*ND*	*ND*	9.4	-	3.2	34	18	0.074	*ND*	4.7	*ND*	*ND*	*ND*	17	58
		# of non-detects =>		**39**	**20**	**0**	**39**	**36**	**0**	**0**	**0**	**2**	**6**	**22**	**38**	**0**	**35**	**38**	**39**	**0**	**0**
		# of detects =>		**0**	**19**	**39**	**0**	**3**	**39**	**0**	**39**	**37**	**33**	**17**	**1**	**39**	**4**	**1**	**0**	**39**	**39**
		# of samples =>		**39**	**39**	**39**	**39**	**39**	**39**	**0**	**39**	**39**	**39**	**39**	**39**	**39**	**39**	**39**	**39**	**39**	**39**
		frequency of detection =>		**0%**	**49%**	**100%**	**0%**	**8%**	**100%**	**-**	**100%**	**95%**	**85%**	**44%**	**3%**	**100%**	**10%**	**3%**	**0%**	**100%**	**100%**
		minimum detected =>		**-**	**1**	**17**	**-**	**1.2**	**2.7**	**-**	**2.1**	**2.1**	**1**	**0.036**	**1.0**	**1.8**	**1**	**0.401**	**-**	**10**	**11**
		maximum detected =>		**-**	**3.6**	**250**	**-**	**1.5**	**24.8**	**-**	**11**	**4500**	**240**	**1.22**	**1.0**	**22**	**1.2**	**0.401**	**-**	**38**	**890**

The Fehling Group, LLC

TABLE L-2

Soil Summary for PARC Area 7 - TPH, VOCs, SVOCs, PCBs, OCPs, OPPs, and Chlorinated Herbicides (wet weight basis)

(0 to 10 ft bgs)

Boring ID	Sample ID	Sample Collection Date	Sample Depth (ft bgs)	TPH GRO (mg/kg)	TPH DRO (mg/kg)	TPH ORO (mg/kg)	VOCs (µg/kg)	SVOCs (µg/kg)	PCBs (µg/kg)	OCPs (µg/kg)	OPPs (µg/kg)	Chlorinated Herbicides (µg/kg)
7-1	7-1-0.5	05/16/2017	0.5	*ND*	**62**	-	*ND*	*ND*	-	-	-	-
	7-1-1.0	05/16/2017	1.0	*ND*	**120**	-	*ND*	*ND*	*ND*	**3.4 (4,4'-DDD) 5.9 (4,4'-DDE) 6.1 (4,4'-DDT) 2.5 (alpha-BHC)**	-	*ND*
7-2	7-2-0.5	05/15/2017	0.5	*ND*	*ND*	-	*ND*	*ND*	*ND*	*ND*	-	*ND*
	7-2-1.0	05/15/2017	1.0	-	-	-	-	-	-	-	-	-
	7-2-3.0	05/15/2017	3.0	*ND*	*ND*	-	*ND*	*ND*	-	-	-	-
	7-2-5.0	05/15/2017	5.0	-	-	-	-	-	-	-	-	-
7-3	7-3-0.5	05/15/2017	0.5	-	-	-	-	-	-	-	-	-
	7-3-1.0	05/15/2017	1.0	*ND*	*ND*	-	*ND*	*ND*	*ND*	*ND*	-	*ND*
	7-3-3.0	05/15/2017	3.0	-	-	-	-	-	-	-	-	-
	7-3-5.0	05/15/2017	5.0	*ND*	*ND*	-	*ND*	*ND*	-	-	-	-
7-4	7-4-0.5	05/15/2017	0.5	*ND*	**26**	-	*ND*	*ND*	*ND*	*ND*	-	*ND*
	7-4-1.0	05/15/2017	1.0	-	-	-	-	-	-	-	-	-
	7-4-3.0	05/15/2017	3.0	*ND*	**6300**	-	*ND*	*ND*	-	-	-	-
	7-4-5.0	05/15/2017	5.0	-	-	-	-	-	-	-	-	-
7-5	7-5-0.5	05/16/2017	0.5	-	-	-	-	-	-	-	-	-
	7-5-1.0	05/16/2017	1.0	*ND*	*ND*	-	*ND*	*ND*	*ND*	*ND*	-	*ND*
	7-5-3.0	05/16/2017	3.0	-	-	-	-	-	-	-	-	-
	7-5-5.0	05/16/2017	5.0	*ND*	*ND*	-	*ND*	*ND*	-	-	-	-
7-6	7-6-0.5	05/16/2017	0.5	*ND*	**200**	-	*ND*	*ND*	*ND*	*ND*	-	*ND*
	7-6-1.0	05/16/2017	1.0	-	-	-	-	-	-	-	-	-
	7-6-3.0	05/16/2017	3.0	-	-	-	-	-	-	-	-	-
	7-6-5.0	05/16/2017	5.0	*ND*	*ND*	-	*ND*	*ND*	-	-	-	-
7-7	7-7-0.5	05/16/2017	0.5	-	-	-	-	-	-	-	-	-
	7-7-1.0	05/16/2017	1.0	-	-	-	-	-	*ND*	*ND*	-	*ND*
	7-7-3.0	05/16/2017	3.0	*ND*	*ND*	-	*ND*	*ND*	-	-	-	-
	7-7-5.0	05/16/2017	5.0	*ND*	**470**	-	*ND*	*ND*	-	-	-	-
L-2	L-2 @ 1'	02/1/2016	1.0	-	-	-	-	-	-	-	-	-
	L-2 @ 3'	02/1/2016	3.0	-	-	-	-	-	-	-	-	-
L-3	L-3 @ 1'	02/1/2016	1.0	-	-	-	-	-	-	-	-	-
	L-3 @ 3'	02/1/2016	3.0	-	-	-	-	-	-	-	-	-
	L-3 @ 5'	02/1/2016	5.0	-	-	-	-	-	-	-	-	-

The Fehling Group, LLC

TABLE L-2

Soil Summary for PARC Area 7 - TPH, VOCs, SVOCs, PCBs, OCPs, OPPs, and Chlorinated Herbicides (wet weight basis)

(0 to 10 ft bgs)

Boring ID	Sample ID	Sample Collection Date	Sample Depth (ft bgs)	TPH GRO (mg/kg)	TPH DRO (mg/kg)	TPH ORO (mg/kg)	VOCs (µg/kg)	SVOCs (µg/kg)	PCBs (µg/kg)	OCPs (µg/kg)	OPPs (µg/kg)	Chlorinated Herbicides (µg/kg)
L-4	L-4 @ 1'	02/1/2016	1.0	-	-	-	-	-	-	-	-	-
	L-4 @ 3'	02/1/2016	3.0	-	-	-	-	-	-	-	-	-
	L-4 @ 5'	02/1/2016	5.0	-	-	-	-	-	-	-	-	-
L-2	L-2 @ 1'	02/26/2016	1.0	*ND*	*ND*	-	*ND*	*ND*	*ND*	*ND*	-	-
	L-2 @ 2'	02/26/2016	2.0	-	-	-	-	-	-	-	-	-
	L-2 @ 3'	02/26/2016	3.0	-	-	-	-	-	-	-	-	-
L-3	L-3 @ 1'	02/26/2016	1.0	*ND*	**18**	-	*ND*	*ND*	*ND*	**2.9 (4,4'-DDT)**	-	-
	L-3 @ 2'	02/26/2016	2.0	-	-	-	-	-	-	-	-	-
	L-3 @ 3'	02/26/2016	3.0	-	-	-	-	-	-	-	-	-
L-4	L-4 @ 1'	02/26/2016	1.0	*ND*	**20**	-	*ND*	*ND*	*ND*	**2.1 (4,4'-DDT)**	-	-
	L-4 @ 2'	02/26/2016	2.0	-	-	-	-	-	-	-	-	-
	L-4 @ 3'	02/26/2016	3.0	-	-	-	-	-	-	-	-	-
20-1	20-1-1	04/20/2016	1.0	**5**	**5**	**25**	**various**	-	-	-	-	-
A13-14	A14@10'	09/5/2013	10.0	*ND*	*ND*	*ND*	*ND*	-	-	-	-	-
A13-15	R15@5'	08/23/2013	5.0	*ND*	*ND*	*ND*	*ND*	-	-	-	-	-
		# of non-detects =>		**19**	**11**	**2**	**19**	**17**	**10**	**4**	**0**	**7**
		# of detects =>		**1**	**9**	**1**	**1**	**0**	**0**	**3**	**0**	**0**
		# of samples =>		**20**	**20**	**3**	**20**	**17**	**10**	**7**	**0**	**7**
		frequency of detection =>		**5%**	**45%**	**33%**	**5%**	**0%**	**0%**	**43%**	**-**	**0%**
		minimum detected =>		**5**	**5**	**25**	**various**	**-**	**-**	**various**	**-**	**-**
		maximum detected =>		**5**	**6300**	**25**	**various**	**-**	**-**	**various**	**-**	**-**

The Fehling Group, LLC

TABLE L-3

Soil Gas and Ambient Air Summary for PARC Area 7

VOCs and TPH-GRO (detected analytes only)

Sample ID	Secondary Sample ID	DateCollected	Sample Depth (ft bgs)	1,1,1-Trichloroethane	1,1-Dichloroethane	1,1,2-Trichloroethane	1,1-Dichloroethene	1,3,5-Trimethylbenzene	1,3-Dichlorobenzene	2,2,4-Trimethylpentane	2-Butanone	2-Hexanone	4-Ethyl Toluene	4-Methyl-2-pentanone	Acetone	Acetonitrile	Benzene	Carbon disulfide	Chlorobenzene	Chloroethane	Chloroform	Chloromethane	Cyclohexane	Dichlorodifluoromethane	Ethanol
7-1	7-1-5	5/16/2017	5	ND	ND	ND	ND	ND	ND	NA	27	ND	ND	ND	62	NA	9	28	ND	ND	ND	ND	NA	ND	NA
7-3	7-3-5	5/16/2017	5	ND	ND	40	120	ND	ND	NA	ND	ND	ND	ND	ND	NA	ND	ND	ND	ND	17	ND	NA	ND	NA
7-4	7-4-5	5/16/2017	5	ND	ND	ND	ND	ND	ND	NA	ND	ND	ND	ND	ND	NA	ND	370	ND	ND	26	ND	NA	ND	NA
	7-4-5 Dup	5/16/2017	5	ND	ND	ND	ND	ND	ND	NA	20	ND	ND	ND	60	NA	ND	340	ND	ND	ND	ND	NA	ND	NA
7-Am	7-Am	5/16/2017	Ambient	ND	ND	ND	ND	ND	ND	NA	ND	ND	ND	ND	21	NA	ND	ND	ND	ND	ND	ND	NA	ND	NA
7-Am Dup	7-Am Dup	5/16/2017	Ambient	ND	ND	ND	ND	ND	ND	NA	11	ND	ND	ND	ND	NA	ND	ND	ND	ND	ND	ND	NA	ND	NA
P20-VP-1	VP-1	4/26/2016	5	ND	NA	NA	NA	NA	NA	NA	NA	NA	NA	NA	NA	NA	ND	NA	NA	NA	NA	NA	NA	NA	NA
P20-VP-2	VP-2	4/26/2016	5	ND	NA	NA	NA	NA	NA	NA	NA	NA	NA	NA	NA	NA	ND	NA	NA	NA	NA	NA	NA	NA	NA
P20-VP-3	VP-3	4/26/2016	5	ND	NA	NA	NA	NA	NA	NA	NA	NA	NA	NA	NA	NA	ND	NA	NA	NA	NA	NA	NA	NA	NA
P20-VP-4	VP-4	4/26/2016	5	ND	NA	NA	NA	NA	NA	NA	NA	NA	NA	NA	NA	NA	ND	NA	NA	NA	NA	NA	NA	NA	NA
	VP-4 Dup	4/26/2016	5	ND	NA	NA	NA	NA	NA	NA	NA	NA	NA	NA	NA	NA	ND	NA	NA	NA	NA	NA	NA	NA	NA
P20-VP-5	VP-5	4/26/2016	3	ND	NA	NA	NA	NA	NA	NA	NA	NA	NA	NA	NA	NA	ND	NA	NA	NA	NA	NA	NA	NA	NA
P20-VP-6	VP-6	4/26/2016	5	ND	NA	NA	NA	NA	NA	NA	NA	NA	NA	NA	NA	NA	ND	NA	NA	NA	NA	NA	NA	NA	NA
P20-VP-7	VP-7	4/26/2016	3	ND	NA	NA	NA	NA	NA	NA	NA	NA	NA	NA	NA	NA	ND	NA	NA	NA	NA	NA	NA	NA	NA
P20-VP-8	VP-8	4/26/2016	5	ND	NA	NA	NA	NA	NA	NA	NA	NA	NA	NA	NA	NA	ND	NA	NA	NA	NA	NA	NA	NA	NA
P20-VP-9	VP-9	4/26/2016	5	ND	NA	NA	NA	NA	NA	NA	NA	NA	NA	NA	NA	NA	ND	NA	NA	NA	NA	NA	NA	NA	NA
	VP-9 Dup	4/26/2016	5	ND	NA	NA	NA	NA	NA	NA	NA	NA	NA	NA	NA	NA	ND	NA	NA	NA	NA	NA	NA	NA	NA
P22-VP-1	VP-1	8/13/2015	5	ND	NA	NA	NA	NA	NA	NA	NA	NA	NA	NA	NA	NA	2	NA	NA	NA	NA	NA	NA	NA	NA
P22-VP-2	VP-2	8/13/2015	5	3	NA	NA	NA	NA	NA	NA	NA	NA	NA	NA	NA	NA	2	NA	NA	NA	NA	NA	NA	NA	NA
P22-VP-3	VP-3	8/13/2015	5	ND	NA	NA	NA	NA	NA	NA	NA	NA	NA	NA	NA	NA	ND	NA	NA	NA	NA	NA	NA	NA	NA
P22-VP-4	VP-4	8/13/2015	5	3	NA	NA	NA	NA	NA	NA	NA	NA	NA	NA	NA	NA	3	NA	NA	NA	NA	NA	NA	NA	NA
P22-VP-5	VP-5	8/13/2015	5	30	NA	NA	NA	NA	NA	NA	NA	NA	NA	NA	NA	NA	4	NA	NA	NA	NA	NA	NA	NA	NA
P22-VP-6	VP-6	8/13/2015	5	5	NA	NA	NA	NA	NA	NA	NA	NA	NA	NA	NA	NA	ND	NA	NA	NA	NA	NA	NA	NA	NA
	VP-6 Dup	8/13/2015	5	4	NA	NA	NA	NA	NA	NA	NA	NA	NA	NA	NA	NA	ND	NA	NA	NA	NA	NA	NA	NA	NA
P22-VP-7	VP-7	8/13/2015	5	3	NA	NA	NA	NA	NA	NA	NA	NA	NA	NA	NA	NA	ND	NA	NA	NA	NA	NA	NA	NA	NA
P22-VP-8	VP-8	8/13/2015	5	5	NA	NA	NA	NA	NA	NA	NA	NA	NA	NA	NA	NA	2	NA	NA	NA	NA	NA	NA	NA	NA
P22-VP-9	VP-9	8/13/2015	5	4	NA	NA	NA	NA	NA	NA	NA	NA	NA	NA	NA	NA	ND	NA	NA	NA	NA	NA	NA	NA	NA
P22-VP-10	VP-10	8/13/2015	5	ND	NA	NA	NA	NA	NA	NA	NA	NA	NA	NA	NA	NA	4	NA	NA	NA	NA	NA	NA	NA	NA
P22-VP-11	VP-11	8/13/2015	5	3	NA	NA	NA	NA	NA	NA	NA	NA	NA	NA	NA	NA	2	NA	NA	NA	NA	NA	NA	NA	NA
P22-VP-12	VP-12	8/13/2015	5	2	NA	NA	NA	NA	NA	NA	NA	NA	NA	NA	NA	NA	ND	NA	NA	NA	NA	NA	NA	NA	NA

The Fehling Group, LLC

TABLE L-3

Soil Gas and Ambient Air Summary for PARC Area 7

VOCs and TPH-GRO (detected analytes only)

Sample ID	Secondary Sample ID	DateCollected	Sample Depth (ft bgs)	1,1,1-Trichloroethane	1,1-Dichloroethane	1,1,2-Trichloroethane	1,1-Dichloroethene	1,3,5-Trimethylbenzene	1,3-Dichlorobenzene	2,2,4-Trimethylpentane	2-Butanone	2-Hexanone	4-Ethyl Toluene	4-Methyl-2-pentanone	Acetone	Acetonitrile	Benzene	Carbon disulfide	Chlorobenzene	Chloroethane	Chloroform	Chloromethane	Cyclohexane	Dichlorodifluoromethane	Ethanol
P23-SV1	SV1	11/27/2013	5	*NA*	*NA*	*NA*	*NA*	*NA*	*NA*	*NA*	*NA*	*NA*	*NA*	*NA*	*NA*	*NA*	*NA*	*NA*	*NA*	*NA*	*NA*	*NA*	*NA*	*NA*	*NA*
P23-SV2	SV2	11/27/2013	5	*NA*	*NA*	*NA*	*NA*	*NA*	*NA*	*NA*	*NA*	*NA*	*NA*	*NA*	*NA*	*NA*	*NA*	*NA*	*NA*	*NA*	*NA*	*NA*	*NA*	*NA*	*NA*	*NA*
P23-SV3	SV3	11/27/2013	5	*NA*	*NA*	*NA*	*NA*	*NA*	*NA*	*NA*	*NA*	*NA*	*NA*	*NA*	*NA*	*NA*	*NA*	*NA*	*NA*	*NA*	*NA*	*NA*	*NA*	*NA*	*NA*	*NA*
P23-SV4	SV4	11/25/2013	5	*NA*	*NA*	*NA*	*NA*	*NA*	*NA*	*NA*	*NA*	*NA*	*NA*	*NA*	*NA*	*NA*	*NA*	*NA*	*NA*	*NA*	*NA*	*NA*	*NA*	*NA*	*NA*	*NA*
P23-SV5	SV5	11/27/2013	5	*NA*	*NA*	*NA*	*NA*	*NA*	*NA*	*NA*	*NA*	*NA*	*NA*	*NA*	*NA*	*NA*	*NA*	*NA*	*NA*	*NA*	*NA*	*NA*	*NA*	*NA*	*NA*	*NA*
	SV5 Dup	11/27/2013	5	*NA*	*NA*	*NA*	*NA*	*NA*	*NA*	*NA*	*NA*	*NA*	*NA*	*NA*	*NA*	*NA*	*NA*	*NA*	*NA*	*NA*	*NA*	*NA*	*NA*	*NA*	*NA*	*NA*
P23-SV6	SV6	11/25/2013	5	*NA*	*NA*	*NA*	*NA*	*NA*	*NA*	*NA*	*NA*	*NA*	*NA*	*NA*	*NA*	*NA*	*NA*	*NA*	*NA*	*NA*	*NA*	*NA*	*NA*	*NA*	*NA*	*NA*
P23-SV7	SV7	11/25/2013	5	*NA*	*NA*	*NA*	*NA*	*NA*	*NA*	*NA*	*NA*	*NA*	*NA*	*NA*	*NA*	*NA*	*NA*	*NA*	*NA*	*NA*	*NA*	*NA*	*NA*	*NA*	*NA*	*NA*
P23-SV8	SV8	11/25/2013	5	*NA*	*NA*	*NA*	*NA*	*NA*	*NA*	*NA*	*NA*	*NA*	*NA*	*NA*	*NA*	*NA*	*NA*	*NA*	*NA*	*NA*	*NA*	*NA*	*NA*	*NA*	*NA*	*NA*
P23-SV9	SV9	11/25/2013	5	*NA*	*NA*	*NA*	*NA*	*NA*	*NA*	*NA*	*NA*	*NA*	*NA*	*NA*	*NA*	*NA*	*NA*	*NA*	*NA*	*NA*	*NA*	*NA*	*NA*	*NA*	*NA*	*NA*
P23-SV10	SV10	11/25/2013	5	*NA*	*NA*	*NA*	*NA*	*NA*	*NA*	*NA*	*NA*	*NA*	*NA*	*NA*	*NA*	*NA*	*NA*	*NA*	*NA*	*NA*	*NA*	*NA*	*NA*	*NA*	*NA*	*NA*
P23-SV11	SV11	11/25/2013	5	*NA*	*NA*	*NA*	*NA*	*NA*	*NA*	*NA*	*NA*	*NA*	*NA*	*NA*	*NA*	*NA*	*NA*	*NA*	*NA*	*NA*	*NA*	*NA*	*NA*	*NA*	*NA*	*NA*
P23-SV12	SV12	11/25/2013	5	*NA*	*NA*	*NA*	*NA*	*NA*	*NA*	*NA*	*NA*	*NA*	*NA*	*NA*	*NA*	*NA*	*NA*	*NA*	*NA*	*NA*	*NA*	*NA*	*NA*	*NA*	*NA*	*NA*
P23-SV13	SV13	11/25/2013	5	*NA*	*NA*	*NA*	*NA*	*NA*	*NA*	*NA*	*NA*	*NA*	*NA*	*NA*	*NA*	*NA*	*NA*	*NA*	*NA*	*NA*	*NA*	*NA*	*NA*	*NA*	*NA*	*NA*
P23-Am	Ambient Air	11/27/2013	Ambient	*NA*	*NA*	*NA*	*NA*	*NA*	*NA*	*NA*	*NA*	*NA*	*NA*	*NA*	*NA*	*NA*	*NA*	*NA*	*NA*	*NA*	*NA*	*NA*	*NA*	*NA*	*NA*	*NA*
		# of non-detects =>	**20**	**6**	**5**	**5**	**6**	**6**	**0**	**3**	**6**	**6**	**6**	**3**	**0**	**22**	**3**	**6**	**6**	**4**	**6**	**0**	**6**	**0**
		# of detects =>	**10**	**0**	**1**	**1**	**0**	**0**	**0**	**3**	**0**	**0**	**0**	**3**	**0**	**8**	**3**	**0**	**0**	**2**	**0**	**0**	**0**	**0**
		# of samples =>	**30**	**6**	**6**	**6**	**6**	**6**	**0**	**6**	**6**	**6**	**6**	**6**	**0**	**30**	**6**	**6**	**6**	**6**	**6**	**0**	**6**	**0**
		frequency of detection =>	**33%**	**0%**	**17%**	**17%**	**0%**	**0%**	**-**	**50%**	**0%**	**0%**	**0%**	**50%**	**-**	**27%**	**50%**	**0%**	**0%**	**33%**	**0%**	**-**	**0%**	**-**
		minimum detected =>	**2**	**-**	**40**	**120**	**-**	**-**	**-**	**11**	**-**	**-**	**-**	**21**	**-**	**2**	**28**	**-**	**-**	**17**	**-**	**-**	**-**	**-**
		maximum detected =>	**30**	**-**	**40**	**120**	**-**	**-**	**-**	**27**	**-**	**-**	**-**	**62**	**-**	**9**	**370**	**-**	**-**	**26**	**-**	**-**	**-**	**-**

The Fehling Group, LLC

TABLE L-3

Soil Gas and Ambient Air Summary for PARC Area 7

VOCs and TPH-GRO (detected analytes only)

Sample ID	Secondary Sample ID	DateCollected	Sample Depth (ft bgs)	Ethylbenzene	m,p-Xylene	Methylene chloride	Naphthalene	n-Propylbenzene	o-Xylene	p-Isopropyltoluene	Tetrachloroethene	Toluene	Trichloroethene	Trichlorofluoromethane	Vinyl acetate	Vinyl chloride	2-Propanol	Gasoline Range Organics
7-1	7-1-5	5/16/2017	5	ND	ND	ND	ND	NA	ND	NA	430	11	ND	6400	ND	ND	NA	NA
7-3	7-3-5	5/16/2017	5	ND	ND	ND	ND	NA	ND	NA	550	ND	38	210000	ND	ND	NA	NA
7-4	7-4-5	5/16/2017	5	ND	150	ND	ND	NA	ND	NA	ND	23	ND	1400	ND	ND	NA	NA
	7-4-5 Dup	5/16/2017	5	ND	140	ND	ND	NA	ND	NA	ND	22	ND	1100	ND	ND	NA	NA
7-Am	7-Am	5/16/2017	Ambient	ND	ND	ND	ND	NA	ND	NA	ND	ND	ND	ND	ND	ND	NA	NA
7-Am Dup	7-Am Dup	5/16/2017	Ambient	ND	ND	ND	ND	NA	ND	NA	ND	ND	ND	ND	ND	ND	NA	NA
P20-VP-1	VP-1	4/26/2016	5	ND	ND	NA	ND	NA	ND	NA	310	ND	ND	NA	NA	ND	NA	120000
P20-VP-2	VP-2	4/26/2016	5	ND	ND	NA	ND	NA	ND	NA	270	ND	ND	NA	NA	ND	NA	21000
P20-VP-3	VP-3	4/26/2016	5	ND	ND	NA	ND	NA	ND	NA	390	ND	ND	NA	NA	ND	NA	27000
P20-VP-4	VP-4	4/26/2016	5	ND	ND	NA	ND	NA	ND	NA	1000	ND	20	NA	NA	ND	NA	6500
	VP-4 Dup	4/26/2016	5	ND	ND	NA	ND	NA	ND	NA	480	ND	ND	NA	NA	ND	NA	2000
P20-VP-5	VP-5	4/26/2016	3	ND	ND	NA	ND	NA	ND	NA	4700	ND	ND	NA	NA	ND	NA	7600
P20-VP-6	VP-6	4/26/2016	5	ND	ND	NA	ND	NA	ND	NA	1400	ND	ND	NA	NA	ND	NA	6400
P20-VP-7	VP-7	4/26/2016	3	ND	ND	NA	ND	NA	ND	NA	4300	ND	ND	NA	NA	ND	NA	7500
P20-VP-8	VP-8	4/26/2016	5	ND	ND	NA	ND	NA	ND	NA	2600	ND	ND	NA	NA	ND	NA	5800
P20-VP-9	VP-9	4/26/2016	5	ND	ND	NA	ND	NA	ND	NA	120	20	ND	NA	NA	ND	NA	2800
	VP-9 Dup	4/26/2016	5	ND	ND	NA	ND	NA	ND	NA	970	ND	ND	NA	NA	ND	NA	4300
P22-VP-1	VP-1	8/13/2015	5	2	10	NA	2	NA	2	NA	70	7	2	NA	NA	ND	NA	6100
P22-VP-2	VP-2	8/13/2015	5	3	20	NA	10	NA	5	NA	120	8	1	NA	NA	ND	NA	4900
P22-VP-3	VP-3	8/13/2015	5	ND	6	NA	ND	NA	ND	NA	80	3	ND	NA	NA	ND	NA	5600
P22-VP-4	VP-4	8/13/2015	5	3	30	NA	3	NA	6	NA	120	20	ND	NA	NA	ND	NA	5200
P22-VP-5	VP-5	8/13/2015	5	2	20	NA	5	NA	3	NA	6	10	ND	NA	NA	ND	NA	7700
P22-VP-6	VP-6	8/13/2015	5	ND	5	NA	ND	NA	ND	NA	230	3	ND	NA	NA	ND	NA	6500
	VP-6 Dup	8/13/2015	5	ND	5	NA	ND	NA	ND	NA	170	3	ND	NA	NA	ND	NA	5400
P22-VP-7	VP-7	8/13/2015	5	ND	6	NA	ND	NA	ND	NA	180	3	ND	NA	NA	ND	NA	5100
P22-VP-8	VP-8	8/13/2015	5	ND	6	NA	ND	NA	1	NA	160	4	ND	NA	NA	ND	NA	6100
P22-VP-9	VP-9	8/13/2015	5	1	10	NA	3	NA	3	NA	270	3	ND	NA	NA	ND	NA	5800
P22-VP-10	VP-10	8/13/2015	5	2	10	NA	ND	NA	2	NA	2	10	ND	NA	NA	ND	NA	3600
P22-VP-11	VP-11	8/13/2015	5	2	20	NA	ND	NA	4	NA	180	20	ND	NA	NA	ND	NA	9000
P22-VP-12	VP-12	8/13/2015	5	1	20	NA	2	NA	4	NA	120	5	ND	NA	NA	ND	NA	6200

The Fehling Group, LLC

TABLE L-3

Soil Gas and Ambient Air Summary for PARC Area 7

VOCs and TPH-GRO (detected analytes only)

Sample ID	Secondary Sample ID	DateCollected	Sample Depth (ft bgs)	Ethylbenzene	m,p-Xylene	Methylene chloride	Naphthalene	n-Propylbenzene	o-Xylene	p-Isopropyltoluene	Tetrachloroethene	Toluene	Trichloroethene	Trichlorofluoromethane	Vinyl acetate	Vinyl chloride	2-Propanol	Gasoline Range Organics
P23-SV1	SV1	11/27/2013	5	*NA*	*NA*	*NA*	*NA*	*NA*	*NA*	*NA*	*NA*	*NA*	*NA*	*NA*	*NA*	*NA*	*NA*	*ND*
P23-SV2	SV2	11/27/2013	5	*NA*	*NA*	*NA*	*NA*	*NA*	*NA*	*NA*	*NA*	*NA*	*NA*	*NA*	*NA*	*NA*	*NA*	*ND*
P23-SV3	SV3	11/27/2013	5	*NA*	*NA*	*NA*	*NA*	*NA*	*NA*	*NA*	*NA*	*NA*	*NA*	*NA*	*NA*	*NA*	*NA*	*ND*
P23-SV4	SV4	11/25/2013	5	*NA*	*NA*	*NA*	*NA*	*NA*	*NA*	*NA*	*NA*	*NA*	*NA*	*NA*	*NA*	*NA*	*NA*	*ND*
P23-SV5	SV5	11/27/2013	5	*NA*	*NA*	*NA*	*NA*	*NA*	*NA*	*NA*	*NA*	*NA*	*NA*	*NA*	*NA*	*NA*	*NA*	*ND*
	SV5 Dup	11/27/2013	5	*NA*	*NA*	*NA*	*NA*	*NA*	*NA*	*NA*	*NA*	*NA*	*NA*	*NA*	*NA*	*NA*	*NA*	*ND*
P23-SV6	SV6	11/25/2013	5	*NA*	*NA*	*NA*	*NA*	*NA*	*NA*	*NA*	*NA*	*NA*	*NA*	*NA*	*NA*	*NA*	*NA*	*ND*
P23-SV7	SV7	11/25/2013	5	*NA*	*NA*	*NA*	*NA*	*NA*	*NA*	*NA*	*NA*	*NA*	*NA*	*NA*	*NA*	*NA*	*NA*	*ND*
P23-SV8	SV8	11/25/2013	5	*NA*	*NA*	*NA*	*NA*	*NA*	*NA*	*NA*	*NA*	*NA*	*NA*	*NA*	*NA*	*NA*	*NA*	*ND*
P23-SV9	SV9	11/25/2013	5	*NA*	*NA*	*NA*	*NA*	*NA*	*NA*	*NA*	*NA*	*NA*	*NA*	*NA*	*NA*	*NA*	*NA*	*ND*
P23-SV10	SV10	11/25/2013	5	*NA*	*NA*	*NA*	*NA*	*NA*	*NA*	*NA*	*NA*	*NA*	*NA*	*NA*	*NA*	*NA*	*NA*	*ND*
P23-SV11	SV11	11/25/2013	5	*NA*	*NA*	*NA*	*NA*	*NA*	*NA*	*NA*	*NA*	*NA*	*NA*	*NA*	*NA*	*NA*	*NA*	*ND*
P23-SV12	SV12	11/25/2013	5	*NA*	*NA*	*NA*	*NA*	*NA*	*NA*	*NA*	*NA*	*NA*	*NA*	*NA*	*NA*	*NA*	*NA*	*ND*
P23-SV13	SV13	11/25/2013	5	*NA*	*NA*	*NA*	*NA*	*NA*	*NA*	*NA*	*NA*	*NA*	*NA*	*NA*	*NA*	*NA*	*NA*	*ND*
P23-Am	Ambient Air	11/27/2013	Ambient	*NA*	*NA*	*NA*	*NA*	*NA*	*NA*	*NA*	*NA*	*NA*	*NA*	*NA*	*NA*	*NA*	*NA*	*ND*
		# of non-detects =>		**22**	**15**	**6**	**24**	**0**	**21**	**0**	**4**	**13**	**26**	**2**	**6**	**30**	**0**	**15**
		# of detects =>		**8**	**15**	**0**	**6**	**0**	**9**	**0**	**26**	**17**	**4**	**4**	**0**	**0**	**0**	**24**
		# of samples =>		**30**	**30**	**6**	**30**	**0**	**30**	**0**	**30**	**30**	**30**	**6**	**6**	**30**	**0**	**39**
		frequency of detection =>		**27%**	**50%**	**0%**	**20%**	**-**	**30%**	**-**	**87%**	**57%**	**13%**	**67%**	**0%**	**0%**	**-**	**62%**
		minimum detected =>		**1**	**5**	**-**	**2**	**-**	**1**	**-**	**2**	**3**	**1**	**1100**	**-**	**-**	**-**	**2000**
		maximum detected =>		**3**	**150**	**-**	**10**	**-**	**6**	**-**	**4700**	**23**	**38**	**210000**	**-**	**-**	**-**	**120000**

The Fehling Group, LLC

TABLE L-4
Soil EPCs (0 to 10 ft bgs)

				Concentrations in Soil (wet weight basis)*													Concentrations in Soil (dry weight basis)**												
Boring ID	Sample ID	Sample Collection Date	Sample Depth (ft bgs)	Barium (mg/kg)	Copper (mg/kg)	Lead (mg/kg)	Mercury (mg/kg)	Zinc (mg/kg)	TPH-GRO (mg/kg)	TPH-DRO (mg/kg)	TPH-ORO (mg/kg)	VOCs (µg/kg)	4,4'-DDD (µg/kg)	4,4'-DDE (µg/kg)	4,4'-DDT (µg/kg)	alpha-BHC (µg/kg)	Barium (mg/kg)	Copper (mg/kg)	Lead (mg/kg)	Mercury (mg/kg)	Zinc (mg/kg)	TPH-GRO (mg/kg)	TPH-DRO (mg/kg)	TPH-ORO (mg/kg)	VOCs (µg/kg)	4,4'-DDD (µg/kg)	4,4'-DDE (µg/kg)	4,4'-DDT (µg/kg)	alpha-BHC (µg/kg)
7-1	7-1-0.5	05/16/2017	0.5	110	4500	45	0.13	100	1	62	-	1	-	-	-	-	116	4759	48	0.14	106	1.1	66	-	1.1	-	-	-	-
	7-1-1.0	05/16/2017	1.0	120	700	69	0.22	270	1	120	-	1	3.4	5.9	6.1	2.5	127	740	73	0.23	286	1.1	127	-	1.1	3.6	6.2	6.5	2.6
	7-2-0.5	05/15/2017	0.5	93	8.3	27	0.18	57	1	10	-	1	1	1	1	1	98	8.8	29	0.19	60	1.1	11	-	1.1	1.1	1.1	1.1	1.1
	7-2-1.0	05/15/2017	1.0	35	3.1	1.1	0.1	17	-	-	-	-	-	-	-	-	37	3.3	1	0.11	18	-	-	-	-	-	-	-	-
7-2	7-2-3.0	05/15/2017	3.0	23	2.1	1	0.19	13	1	10	-	1	-	-	-	-	24	2.2	1	0.20	14	1.1	11	-	1.1	-	-	-	-
	7-2-5.0	05/15/2017	5.0	24	1	1	0.1	11	-	-	-	-	-	-	-	-	25	1.1	1	0.11	12	-	-	-	-	-	-	-	-
7-3	7-3-0.5	05/15/2017	0.5	110	39	51	0.17	93	-	-	-	-	-	-	-	-	116	41	54	0.18	98	-	-	-	-	-	-	-	-
	7-3-1.0	05/15/2017	1.0	77	11	33	0.11	44	1	10	-	1	1	1	1	1	81	12	35	0.12	47	1.1	11	-	1.1	1.1	1.1	1.1	1.1
	7-3-3.0	05/15/2017	3.0	61	6.8	7.0	0.1	32	-	-	-	-	-	-	-	-	65	7.2	7.4	0.11	34	-	-	-	-	-	-	-	-
	7-3-5.0	05/15/2017	5.0	34	3.1	1	0.1	15	1	10	-	1	-	-	-	-	36	3.3	1.1	0.11	16	1.1	11	-	1.1	-	-	-	-
7-4	7-4-0.5	05/15/2017	0.5	130	36	70	0.11	150	1	26	-	1	1	1	1	1	137	38	74	0.12	159	1.1	27	-	1.1	1.1	1.1	1.1	1.1
	7-4-1.0	05/15/2017	1.0	100	44	43	0.12	130	-	-	-	-	-	-	-	-	106	47	45	0.13	137	-	-	-	-	-	-	-	-
	7-4-3.0	05/15/2017	3.0	92	13	31	0.64	80	1	6300	-	1	-	-	-	-	97	14	33	0.68	85	1.1	6663	-	1.1	-	-	-	-
	7-4-5.0	05/15/2017	5.0	150	35	12	0.1	890	-	-	-	-	-	-	-	-	159	37	13	0.11	941	-	-	-	-	-	-	-	-
7-5	7-5-0.5	05/16/2017	0.5	95	9.7	4.5	0.1	39	-	-	-	-	-	-	-	-	100	10	4.8	0.11	41	-	-	-	-	-	-	-	-
	7-5-1.0	05/16/2017	1.0	95	10	3.0	0.1	38	1	10	-	1	1	1	1	1	100	11	3.2	0.11	40	1.1	11	-	1.1	1.1	1.1	1.1	1.1
	7-5-3.0	05/16/2017	3.0	120	18	3.5	0.1	46	-	-	-	-	-	-	-	-	127	19	3.7	0.11	49	-	-	-	-	-	-	-	-
	7-5-5.0	05/16/2017	5.0	31	2.7	1.0	0.1	16	1	10	-	1	-	-	-	-	33	2.9	1.1	0.11	17	1.1	11	-	1.1	-	-	-	-
7-6	7-6-0.5	05/16/2017	0.5	91	28	31	0.13	77	1	200	-	1	1	1	1	1	96	30	33	0.14	81	1.1	212	-	1.1	1.1	1.1	1.1	1.1
	7-6-1.0	05/16/2017	1.0	93	28	22	0.16	60	-	-	-	-	-	-	-	-	98	30	23	0.17	63	-	-	-	-	-	-	-	-
	7-6-3.0	05/16/2017	3.0	78	12	13	0.1	50	-	-	-	-	-	-	-	-	82	13	14	0.11	53	-	-	-	-	-	-	-	-
	7-6-5.0	05/16/2017	5.0	40	4.6	2.7	0.1	19	1	10	-	1	-	-	-	-	42	4.9	2.9	0.11	20	1.1	11	-	1.1	-	-	-	-
7-7	7-7-0.5	05/16/2017	0.5	110	13	3.7	0.1	41	-	-	-	-	-	-	-	-	116	14	3.9	0.11	43	-	-	-	-	-	-	-	-
	7-7-1.0	05/16/2017	1.0	130	9.6	2.3	0.1	47	-	-	-	-	1	1	1	1	137	10.2	2.4	0.11	50	-	-	-	-	1.1	1.1	1.1	1.1
	7-7-3.0	05/16/2017	3.0	26	2.2	1	0.1	13	1	10	-	1	-	-	-	-	27	2.3	1.1	0.11	14	1.1	11	-	1.1	-	-	-	-
	7-7-5.0	05/16/2017	5.0	17	1	1	0.1	12	1	470	-	1	-	-	-	-	18	1.1	1.1	0.11	13	1.1	497	-	1.1	-	-	-	-
L-2	L-2 @ 1'	02/1/2016	1.0	97	11	6.4	0.1	37	-	-	-	-	-	-	-	-	103	12	6.8	0.11	39	-	-	-	-	-	-	-	-
	L-2 @ 3'	02/1/2016	3.0	-	-	-	-	-	-	-	-	-	-	-	-	-	-	-	-	-	-	-	-	-	-	-	-	-	-

The Fehling Group, LLC

TABLE L-4
Soil EPCs (0 to 10 ft bgs)

				Concentrations in Soil (wet weight basis)*													Concentrations in Soil (dry weight basis)**												
Boring ID	Sample ID	Sample Collection Date	Sample Depth (ft bgs)	Barium (mg/kg)	Copper (mg/kg)	Lead (mg/kg)	Mercury (mg/kg)	Zinc (mg/kg)	TPH-GRO (mg/kg)	TPH-DRO (mg/kg)	TPH-ORO (mg/kg)	VOCs (µg/kg)	4,4'-DDD (µg/kg)	4,4'-DDE (µg/kg)	4,4'-DDT (µg/kg)	alpha-BHC (µg/kg)	Barium (mg/kg)	Copper (mg/kg)	Lead (mg/kg)	Mercury (mg/kg)	Zinc (mg/kg)	TPH-GRO (mg/kg)	TPH-DRO (mg/kg)	TPH-ORO (mg/kg)	VOCs (µg/kg)	4,4'-DDD (µg/kg)	4,4'-DDE (µg/kg)	4,4'-DDT (µg/kg)	alpha-BHC (µg/kg)
L-3	L-3 @ 1'	02/1/2016	1.0	68	21	22	0.10	81	-	-	-	-	-	-	-	-	72	22	23	0.11	86	-	-	-	-	-	-	-	-
	L-3 @ 3'	02/1/2016	3.0	-	-	-	-	-	-	-	-	-	-	-	-	-	-	-	-	-	-	-	-	-	-	-	-	-	-
	L-3 @ 5'	02/1/2016	5.0	-	-	-	-	-	-	-	-	-	-	-	-	-	-	-	-	-	-	-	-	-	-	-	-	-	-
L-4	L-4 @ 1'	02/1/2016	1.0	250	84	98	0.27	290	-	-	-	-	-	-	-	-	264	89	104	0.29	307	-	-	-	-	-	-	-	-
	L-4 @ 3'	02/1/2016	3.0	86	9.6	2.0	*0.1*	38	-	-	-	-	-	-	-	-	91	10.2	2.1	*0.11*	40	-	-	-	-	-	-	-	-
	L-4 @ 5'	02/1/2016	5.0	-	-	-	-	-	-	-	-	-	-	-	-	-	-	-	-	-	-	-	-	-	-	-	-	-	-
L-2	L-2 @ 1'	02/26/2016	1.0	-	-	-	-	-	*1*	*10*	-	*1*	*1*	*1*	*1*	*1*	-	-	-	-	-	*1.1*	*11*	-	*1.1*	*1.1*	*1.1*	*1.1*	*1.1*
	L-2 @ 2'	02/26/2016	2.0	33	3.7	1.2	*0.1*	16	-	-	-	-	-	-	-	-	35	3.9	1.3	*0.11*	17	-	-	-	-	-	-	-	-
	L-2 @ 3'	02/26/2016	3.0	37	4.4	1.4	*0.1*	20	-	-	-	-	-	-	-	-	39	4.7	1.5	*0.11*	21	-	-	-	-	-	-	-	-
L-3	L-3 @ 1'	02/26/2016	1.0	-	-	-	-	-	*1*	18	-	*1*	*1*	*1*	2.9	*1*	-	-	-	-	-	*1.1*	19	-	*1.1*	*1.1*	*1.1*	3.1	*1.1*
	L-3 @ 2'	02/26/2016	2.0	88	9.5	2.3	*0.1*	41	-	-	-	-	-	-	-	-	93	10.0	2.4	*0.11*	43	-	-	-	-	-	-	-	-
	L-3 @ 3'	02/26/2016	3.0	89	9.8	2.4	*0.1*	41	-	-	-	-	-	-	-	-	94	10.4	2.5	*0.11*	43	-	-	-	-	-	-	-	-
L-4	L-4 @ 1'	02/26/2016	1.0	-	-	-	-	-	*1*	20	-	*1*	*1*	*1*	2.1	*1*	-	-	-	-	-	*1.1*	21	-	*1.1*	*1.1*	*1.1*	2.2	*1.1*
	L-4 @ 2'	02/26/2016	2.0	130	26	14	*0.1*	96	-	-	-	-	-	-	-	-	137	27	15	*0.11*	102	-	-	-	-	-	-	-	-
	L-4 @ 3'	02/26/2016	3.0	130	37	67	0.17	150	-	-	-	-	-	-	-	-	137	39	71	0.18	159	-	-	-	-	-	-	-	-
20-1	20-1-1	04/20/2016	1.0	172	74	240	1.2	170	5	5	25	various	-	-	-	-	182	78	254	1.29	180	5.3	5.3	26	various	-	-	-	-
A13-14	A14@10'	09/5/2013	10.0	46	6.8	*1*	0.036	26	*1*	*10*	*10*	*1*	-	-	-	-	49	7.2	*1.1*	0.04	27	*1.1*	*11*	*11*	*1.1*	-	-	-	-
A13-15	R15@5'	08/23/2013	5.0	50	34	18	0.074	58	*1*	*10*	*10*	*1*	-	-	-	-	53	36	19	0.08	61	*1.1*	*11*	*11*	*1.1*	-	-	-	-
			95% UCL for 0 to 10 ft bgs (see Attachment O)* =>														**105**	**693**	**58**	**0.317**	**340**	**1.7**	**1832**	**26**	**-**	**1.8**	**3.8**	**4.3**	**1.5**

* Italicized value is the reporting limit for 'non-detect' ('ND') result.

* 95% UCL not calculated due to low number of samples; value shown is maximum value.
EPCs for various VOCs detected in single sample not established given extensive soil gas dataset.

** Dry weight concentration = Wet weight concentration x (1 + average moisture content)
where average moisture content = 0.056 g/g (see **Table 1**).

The Fehling Group, LLC

TABLE L-5a
Indoor Air Exposure Point Concentrations and Ambient Air Concentrations (in μg/m^3)
~ Residential Receptor ~

Sample ID	Secondary Sample ID	DateCollected	Sample Depth (ft bgs)	1,1,1-Trichloroethane	1,1-Dichloroethane	1,1,2-Trichloroethane	1,1-Dichloroethene	1,3,5-Trimethylbenzene	1,3-Dichlorobenzene	2,2,4-Trimethylpentane	2-Butanone	2-Hexanone	4-Ethyl Toluene	4-Methyl-2-pentanone	Acetone	Acetonitrile	Benzene	Carbon disulfide	Chlorobenzene	Chloroethane	Chloroform	Chloromethane
7-1	7-1-5	5/16/2017	5	ND	ND	ND	ND	ND	ND	NA	2E-02	ND	ND	ND	5E-02	NA	6E-03	2E-02	ND	ND	ND	ND
7-3	7-3-5	5/16/2017	5	ND	ND	2E-02	8E-02	ND	ND	NA	ND	ND	ND	ND	ND	NA	ND	ND	ND	ND	1E-02	ND
7-4	7-4-5	5/16/2017	5	ND	ND	ND	ND	ND	ND	NA	ND	ND	ND	ND	ND	NA	ND	3E-01	ND	ND	2E-02	ND
	7-4-5 Dup	5/16/2017	5	ND	ND	ND	ND	ND	ND	NA	1E-02	ND	ND	ND	5E-02	NA	ND	3E-01	ND	ND	ND	ND
7-Am	7-Am	5/16/2017	Ambient	ND	ND	ND	ND	ND	ND	NA	ND	ND	ND	ND	2E+01	NA	ND	ND	ND	ND	ND	ND
7-Am Dup	7-Am Dup	5/16/2017	Ambient	ND	ND	ND	ND	ND	ND	NA	1E+01	ND	ND	ND	ND	NA	ND	ND	ND	ND	ND	ND
P20-VP-1	VP-1	4/26/2016	5	ND	NA	NA	NA	NA	NA	NA	NA	NA	NA	NA	NA	NA	ND	NA	NA	NA	NA	NA
P20-VP-2	VP-2	4/26/2016	5	ND	NA	NA	NA	NA	NA	NA	NA	NA	NA	NA	NA	NA	ND	NA	NA	NA	NA	NA
P20-VP-3	VP-3	4/26/2016	5	ND	NA	NA	NA	NA	NA	NA	NA	NA	NA	NA	NA	NA	ND	NA	NA	NA	NA	NA
P20-VP-4	VP-4	4/26/2016	5	ND	NA	NA	NA	NA	NA	NA	NA	NA	NA	NA	NA	NA	ND	NA	NA	NA	NA	NA
	VP-4 Dup	4/26/2016	5	ND	NA	NA	NA	NA	NA	NA	NA	NA	NA	NA	NA	NA	ND	NA	NA	NA	NA	NA
P20-VP-5	VP-5	4/26/2016	3	ND	NA	NA	NA	NA	NA	NA	NA	NA	NA	NA	NA	NA	ND	NA	NA	NA	NA	NA
P20-VP-6	VP-6	4/26/2016	5	ND	NA	NA	NA	NA	NA	NA	NA	NA	NA	NA	NA	NA	ND	NA	NA	NA	NA	NA
P20-VP-7	VP-7	4/26/2016	3	ND	NA	NA	NA	NA	NA	NA	NA	NA	NA	NA	NA	NA	ND	NA	NA	NA	NA	NA
P20-VP-8	VP-8	4/26/2016	5	ND	NA	NA	NA	NA	NA	NA	NA	NA	NA	NA	NA	NA	ND	NA	NA	NA	NA	NA
P20-VP-9	VP-9	4/26/2016	5	ND	NA	NA	NA	NA	NA	NA	NA	NA	NA	NA	NA	NA	ND	NA	NA	NA	NA	NA
	VP-9 Dup	4/26/2016	5	ND	NA	NA	NA	NA	NA	NA	NA	NA	NA	NA	NA	NA	ND	NA	NA	NA	NA	NA
P22-VP-1	VP-1	8/13/2015	5	ND	NA	NA	NA	NA	NA	NA	NA	NA	NA	NA	NA	NA	1E-03	NA	NA	NA	NA	NA
P22-VP-2	VP-2	8/13/2015	5	2E-03	NA	NA	NA	NA	NA	NA	NA	NA	NA	NA	NA	NA	1E-03	NA	NA	NA	NA	NA
P22-VP-3	VP-3	8/13/2015	5	ND	NA	NA	NA	NA	NA	NA	NA	NA	NA	NA	NA	NA	ND	NA	NA	NA	NA	NA
P22-VP-4	VP-4	8/13/2015	5	2E-03	NA	NA	NA	NA	NA	NA	NA	NA	NA	NA	NA	NA	2E-03	NA	NA	NA	NA	NA
P22-VP-5	VP-5	8/13/2015	5	2E-02	NA	NA	NA	NA	NA	NA	NA	NA	NA	NA	NA	NA	3E-03	NA	NA	NA	NA	NA
P22-VP-6	VP-6	8/13/2015	5	3E-03	NA	NA	NA	NA	NA	NA	NA	NA	NA	NA	NA	NA	ND	NA	NA	NA	NA	NA
	VP-6 Dup	8/13/2015	5	2E-03	NA	NA	NA	NA	NA	NA	NA	NA	NA	NA	NA	NA	ND	NA	NA	NA	NA	NA
P22-VP-7	VP-7	8/13/2015	5	2E-03	NA	NA	NA	NA	NA	NA	NA	NA	NA	NA	NA	NA	ND	NA	NA	NA	NA	NA
P22-VP-8	VP-8	8/13/2015	5	3E-03	NA	NA	NA	NA	NA	NA	NA	NA	NA	NA	NA	NA	1E-03	NA	NA	NA	NA	NA

The Fehling Group, LLC

TABLE L-5a
Indoor Air Exposure Point Concentrations and Ambient Air Concentrations (in μg/m^3)
~ Residential Receptor ~

Sample ID	Secondary Sample ID	DateCollected	Sample Depth (ft bgs)	1,1,1-Trichloroethane	1,1-Dichloroethane	1,1,2-Trichloroethane	1,1-Dichloroethene	1,3,5-Trimethylbenzene	1,3-Dichlorobenzene	2,2,4-Trimethylpentane	2-Butanone	2-Hexanone	4-Ethyl Toluene	4-Methyl-2-pentanone	Acetone	Acetonitrile	Benzene	Carbon disulfide	Chlorobenzene	Chloroethane	Chloroform	Chloromethane
P22-VP-9	VP-9	8/13/2015	5	**2E-03**	*NA*	*NA*	*NA*	*NA*	*NA*	*NA*	*NA*	*NA*	*NA*	*NA*	*NA*	*NA*	*ND*	*NA*	*NA*	*NA*	*NA*	*NA*
P22-VP-10	VP-10	8/13/2015	5	*ND*	*NA*	*NA*	*NA*	*NA*	*NA*	*NA*	*NA*	*NA*	*NA*	*NA*	*NA*	*NA*	**3E-03**	*NA*	*NA*	*NA*	*NA*	*NA*
P22-VP-11	VP-11	8/13/2015	5	**2E-03**	*NA*	*NA*	*NA*	*NA*	*NA*	*NA*	*NA*	*NA*	*NA*	*NA*	*NA*	*NA*	**1E-03**	*NA*	*NA*	*NA*	*NA*	*NA*
P22-VP-12	VP-12	8/13/2015	5	**1E-03**	*NA*	*NA*	*NA*	*NA*	*NA*	*NA*	*NA*	*NA*	*NA*	*NA*	*NA*	*NA*	*ND*	*NA*	*NA*	*NA*	*NA*	*NA*
P23-SV1	SV1	11/27/2013	5	*NA*	*NA*	*NA*	*NA*	*NA*	*NA*	*NA*	*NA*	*NA*	*NA*	*NA*	*NA*	*NA*	*NA*	*NA*	*NA*	*NA*	*NA*	*NA*
P23-SV2	SV2	11/27/2013	5	*NA*	*NA*	*NA*	*NA*	*NA*	*NA*	*NA*	*NA*	*NA*	*NA*	*NA*	*NA*	*NA*	*NA*	*NA*	*NA*	*NA*	*NA*	*NA*
P23-SV3	SV3	11/27/2013	5	*NA*	*NA*	*NA*	*NA*	*NA*	*NA*	*NA*	*NA*	*NA*	*NA*	*NA*	*NA*	*NA*	*NA*	*NA*	*NA*	*NA*	*NA*	*NA*
P23-SV4	SV4	11/25/2013	5	*NA*	*NA*	*NA*	*NA*	*NA*	*NA*	*NA*	*NA*	*NA*	*NA*	*NA*	*NA*	*NA*	*NA*	*NA*	*NA*	*NA*	*NA*	*NA*
P23-SV5	SV5	11/27/2013	5	*NA*	*NA*	*NA*	*NA*	*NA*	*NA*	*NA*	*NA*	*NA*	*NA*	*NA*	*NA*	*NA*	*NA*	*NA*	*NA*	*NA*	*NA*	*NA*
	SV5 Dup	11/27/2013	5	*NA*	*NA*	*NA*	*NA*	*NA*	*NA*	*NA*	*NA*	*NA*	*NA*	*NA*	*NA*	*NA*	*NA*	*NA*	*NA*	*NA*	*NA*	*NA*
P23-SV6	SV6	11/25/2013	5	*NA*	*NA*	*NA*	*NA*	*NA*	*NA*	*NA*	*NA*	*NA*	*NA*	*NA*	*NA*	*NA*	*NA*	*NA*	*NA*	*NA*	*NA*	*NA*
P23-SV7	SV7	11/25/2013	5	*NA*	*NA*	*NA*	*NA*	*NA*	*NA*	*NA*	*NA*	*NA*	*NA*	*NA*	*NA*	*NA*	*NA*	*NA*	*NA*	*NA*	*NA*	*NA*
P23-SV8	SV8	11/25/2013	5	*NA*	*NA*	*NA*	*NA*	*NA*	*NA*	*NA*	*NA*	*NA*	*NA*	*NA*	*NA*	*NA*	*NA*	*NA*	*NA*	*NA*	*NA*	*NA*
P23-SV9	SV9	11/25/2013	5	*NA*	*NA*	*NA*	*NA*	*NA*	*NA*	*NA*	*NA*	*NA*	*NA*	*NA*	*NA*	*NA*	*NA*	*NA*	*NA*	*NA*	*NA*	*NA*
P23-SV10	SV10	11/25/2013	5	*NA*	*NA*	*NA*	*NA*	*NA*	*NA*	*NA*	*NA*	*NA*	*NA*	*NA*	*NA*	*NA*	*NA*	*NA*	*NA*	*NA*	*NA*	*NA*
P23-SV11	SV11	11/25/2013	5	*NA*	*NA*	*NA*	*NA*	*NA*	*NA*	*NA*	*NA*	*NA*	*NA*	*NA*	*NA*	*NA*	*NA*	*NA*	*NA*	*NA*	*NA*	*NA*
P23-SV12	SV12	11/25/2013	5	*NA*	*NA*	*NA*	*NA*	*NA*	*NA*	*NA*	*NA*	*NA*	*NA*	*NA*	*NA*	*NA*	*NA*	*NA*	*NA*	*NA*	*NA*	*NA*
P23-SV13	SV13	11/25/2013	5	*NA*	*NA*	*NA*	*NA*	*NA*	*NA*	*NA*	*NA*	*NA*	*NA*	*NA*	*NA*	*NA*	*NA*	*NA*	*NA*	*NA*	*NA*	*NA*
P23-Am	Ambient Air	11/27/2013	Ambient	*NA*	*NA*	*NA*	*NA*	*NA*	*NA*	*NA*	*NA*	*NA*	*NA*	*NA*	*NA*	*NA*	*NA*	*NA*	*NA*	*NA*	*NA*	*NA*

The Fehling Group, LLC

TABLE L-5a

Indoor Air Exposure Point Concentrations and Ambient Air Concentrations (in μg/m^3)

~ Residential Receptor ~

Sample ID	Secondary Sample ID	DateCollected	Sample Depth (ft bgs)	Cyclohexane	Dichlorodifluoromethane	Ethanol	Ethylbenzene	m,p-Xylene	Methylene chloride	Naphthalene	n-Propylbenzene	o-Xylene	p-Isopropyltoluene	Tetrachloroethene	Toluene	Trichloroethene	Trichlorofluoromethane	Vinyl acetate	Vinyl chloride	2-Propanol	Gasoline Range Organics
7-1	7-1-5	5/16/2017	5	NA	ND	NA	ND	ND	ND	ND	NA	ND	NA	2E-01	7E-03	ND	4E+00	ND	ND	NA	NA
7-3	7-3-5	5/16/2017	5	NA	ND	NA	ND	ND	ND	ND	NA	ND	NA	2E-01	ND	2E-02	1E+02	ND	ND	NA	NA
7-4	7-4-5	5/16/2017	5	NA	ND	NA	ND	9E-02	ND	ND	NA	ND	NA	ND	1E-02	ND	8E-01	ND	ND	NA	NA
	7-4-5 Dup	5/16/2017	5	NA	ND	NA	ND	8E-02	ND	ND	NA	ND	NA	ND	1E-02	ND	6E-01	ND	ND	NA	NA
7-Am	7-Am	5/16/2017	Ambient	NA	ND	NA	ND	ND	ND	ND	NA	ND	NA	ND	ND	ND	ND	ND	ND	NA	NA
7-Am Dup	7-Am Dup	5/16/2017	Ambient	NA	ND	NA	ND	ND	ND	ND	NA	ND	NA	ND	ND	ND	ND	ND	ND	NA	NA
P20-VP-1	VP-1	4/26/2016	5	NA	NA	NA	ND	ND	NA	ND	NA	ND	NA	1E-01	ND	ND	NA	NA	ND	NA	8E+01
P20-VP-2	VP-2	4/26/2016	5	NA	NA	NA	ND	ND	NA	ND	NA	ND	NA	1E-01	ND	ND	NA	NA	ND	NA	1E+01
P20-VP-3	VP-3	4/26/2016	5	NA	NA	NA	ND	ND	NA	ND	NA	ND	NA	2E-01	ND	ND	NA	NA	ND	NA	2E+01
P20-VP-4	VP-4	4/26/2016	5	NA	NA	NA	ND	ND	NA	ND	NA	ND	NA	5E-01	ND	1E-02	NA	NA	ND	NA	5E+00
	VP-4 Dup	4/26/2016	5	NA	NA	NA	ND	ND	NA	ND	NA	ND	NA	2E-01	ND	ND	NA	NA	ND	NA	1E+00
P20-VP-5	VP-5	4/26/2016	3	NA	NA	NA	ND	ND	NA	ND	NA	ND	NA	2E+00	ND	ND	NA	NA	ND	NA	5E+00
P20-VP-6	VP-6	4/26/2016	5	NA	NA	NA	ND	ND	NA	ND	NA	ND	NA	6E-01	ND	ND	NA	NA	ND	NA	4E+00
P20-VP-7	VP-7	4/26/2016	3	NA	NA	NA	ND	ND	NA	ND	NA	ND	NA	2E+00	ND	ND	NA	NA	ND	NA	5E+00
P20-VP-8	VP-8	4/26/2016	5	NA	NA	NA	ND	ND	NA	ND	NA	ND	NA	1E+00	ND	ND	NA	NA	ND	NA	4E+00
P20-VP-9	VP-9	4/26/2016	5	NA	NA	NA	ND	ND	NA	ND	NA	ND	NA	5E-02	1E-02	ND	NA	NA	ND	NA	2E+00
	VP-9 Dup	4/26/2016	5	NA	NA	NA	ND	ND	NA	ND	NA	ND	NA	4E-01	ND	ND	NA	NA	ND	NA	3E+00
P22-VP-1	VP-1	8/13/2015	5	NA	NA	NA	1E-03	6E-03	NA	1E-03	NA	1E-03	NA	3E-02	4E-03	1E-03	NA	NA	ND	NA	4E+00
P22-VP-2	VP-2	8/13/2015	5	NA	NA	NA	2E-03	1E-02	NA	5E-03	NA	3E-03	NA	5E-02	5E-03	6E-04	NA	NA	ND	NA	3E+00
P22-VP-3	VP-3	8/13/2015	5	NA	NA	NA	ND	3E-03	NA	ND	NA	ND	NA	4E-02	2E-03	ND	NA	NA	ND	NA	4E+00
P22-VP-4	VP-4	8/13/2015	5	NA	NA	NA	2E-03	2E-02	NA	2E-03	NA	3E-03	NA	5E-02	1E-02	ND	NA	NA	ND	NA	4E+00
P22-VP-5	VP-5	8/13/2015	5	NA	NA	NA	1E-03	1E-02	NA	3E-03	NA	2E-03	NA	3E-03	6E-03	ND	NA	NA	ND	NA	5E+00
P22-VP-6	VP-6	8/13/2015	5	NA	NA	NA	ND	3E-03	NA	ND	NA	ND	NA	1E-01	2E-03	ND	NA	NA	ND	NA	5E+00
	VP-6 Dup	8/13/2015	5	NA	NA	NA	ND	3E-03	NA	ND	NA	ND	NA	8E-02	2E-03	ND	NA	NA	ND	NA	4E+00
P22-VP-7	VP-7	8/13/2015	5	NA	NA	NA	ND	3E-03	NA	ND	NA	ND	NA	8E-02	2E-03	ND	NA	NA	ND	NA	4E+00
P22-VP-8	VP-8	8/13/2015	5	NA	NA	NA	ND	3E-03	NA	ND	NA	6E-04	NA	7E-02	3E-03	ND	NA	NA	ND	NA	4E+00

The Fehling Group, LLC

TABLE L-5a

Indoor Air Exposure Point Concentrations and Ambient Air Concentrations (in μg/m^3)

~ Residential Receptor ~

Sample ID	Secondary Sample ID	DateCollected	Sample Depth (ft bgs)	Cyclohexane	Dichlorodifluoromethane	Ethanol	Ethylbenzene	m,p-Xylene	Methylene chloride	Naphthalene	n-Propylbenzene	o-Xylene	p-Isopropyltoluene	Tetrachloroethene	Toluene	Trichloroethene	Trichlorofluoromethane	Vinyl acetate	Vinyl chloride	2-Propanol	Gasoline Range Organics
P22-VP-9	VP-9	8/13/2015	5	*NA*	*NA*	*NA*	**6E-04**	**6E-03**	*NA*	**2E-03**	*NA*	**2E-03**	*NA*	**1E-01**	**2E-03**	*ND*	*NA*	*NA*	*ND*	*NA*	**4E+00**
P22-VP-10	VP-10	8/13/2015	5	*NA*	*NA*	*NA*	**1E-03**	**6E-03**	*NA*	*ND*	*NA*	**1E-03**	*NA*	**9E-04**	**6E-03**	*ND*	*NA*	*NA*	*ND*	*NA*	**3E+00**
P22-VP-11	VP-11	8/13/2015	5	*NA*	*NA*	*NA*	**1E-03**	**1E-02**	*NA*	*ND*	*NA*	**2E-03**	*NA*	**8E-02**	**1E-02**	*ND*	*NA*	*NA*	*ND*	*NA*	**6E+00**
P22-VP-12	VP-12	8/13/2015	5	*NA*	*NA*	*NA*	**6E-04**	**1E-02**	*NA*	**1E-03**	*NA*	**2E-03**	*NA*	**5E-02**	**3E-03**	*ND*	*NA*	*NA*	*ND*	*NA*	**4E+00**
P23-SV1	SV1	11/27/2013	5	*NA*	*NA*	*NA*	*NA*	*NA*	*NA*	*NA*	*NA*	*NA*	*NA*	*NA*	*NA*	*NA*	*NA*	*NA*	*NA*	*NA*	*ND*
P23-SV2	SV2	11/27/2013	5	*NA*	*NA*	*NA*	*NA*	*NA*	*NA*	*NA*	*NA*	*NA*	*NA*	*NA*	*NA*	*NA*	*NA*	*NA*	*NA*	*NA*	*ND*
P23-SV3	SV3	11/27/2013	5	*NA*	*NA*	*NA*	*NA*	*NA*	*NA*	*NA*	*NA*	*NA*	*NA*	*NA*	*NA*	*NA*	*NA*	*NA*	*NA*	*NA*	*ND*
P23-SV4	SV4	11/25/2013	5	*NA*	*NA*	*NA*	*NA*	*NA*	*NA*	*NA*	*NA*	*NA*	*NA*	*NA*	*NA*	*NA*	*NA*	*NA*	*NA*	*NA*	*ND*
P23-SV5	SV5	11/27/2013	5	*NA*	*NA*	*NA*	*NA*	*NA*	*NA*	*NA*	*NA*	*NA*	*NA*	*NA*	*NA*	*NA*	*NA*	*NA*	*NA*	*NA*	*ND*
	SV5 Dup	11/27/2013	5	*NA*	*NA*	*NA*	*NA*	*NA*	*NA*	*NA*	*NA*	*NA*	*NA*	*NA*	*NA*	*NA*	*NA*	*NA*	*NA*	*NA*	*ND*
P23-SV6	SV6	11/25/2013	5	*NA*	*NA*	*NA*	*NA*	*NA*	*NA*	*NA*	*NA*	*NA*	*NA*	*NA*	*NA*	*NA*	*NA*	*NA*	*NA*	*NA*	*ND*
P23-SV7	SV7	11/25/2013	5	*NA*	*NA*	*NA*	*NA*	*NA*	*NA*	*NA*	*NA*	*NA*	*NA*	*NA*	*NA*	*NA*	*NA*	*NA*	*NA*	*NA*	*ND*
P23-SV8	SV8	11/25/2013	5	*NA*	*NA*	*NA*	*NA*	*NA*	*NA*	*NA*	*NA*	*NA*	*NA*	*NA*	*NA*	*NA*	*NA*	*NA*	*NA*	*NA*	*ND*
P23-SV9	SV9	11/25/2013	5	*NA*	*NA*	*NA*	*NA*	*NA*	*NA*	*NA*	*NA*	*NA*	*NA*	*NA*	*NA*	*NA*	*NA*	*NA*	*NA*	*NA*	*ND*
P23-SV10	SV10	11/25/2013	5	*NA*	*NA*	*NA*	*NA*	*NA*	*NA*	*NA*	*NA*	*NA*	*NA*	*NA*	*NA*	*NA*	*NA*	*NA*	*NA*	*NA*	*ND*
P23-SV11	SV11	11/25/2013	5	*NA*	*NA*	*NA*	*NA*	*NA*	*NA*	*NA*	*NA*	*NA*	*NA*	*NA*	*NA*	*NA*	*NA*	*NA*	*NA*	*NA*	*ND*
P23-SV12	SV12	11/25/2013	5	*NA*	*NA*	*NA*	*NA*	*NA*	*NA*	*NA*	*NA*	*NA*	*NA*	*NA*	*NA*	*NA*	*NA*	*NA*	*NA*	*NA*	*ND*
P23-SV13	SV13	11/25/2013	5	*NA*	*NA*	*NA*	*NA*	*NA*	*NA*	*NA*	*NA*	*NA*	*NA*	*NA*	*NA*	*NA*	*NA*	*NA*	*NA*	*NA*	*ND*
P23-Am	Ambient Air	11/27/2013	Ambient	*NA*	*NA*	*NA*	*NA*	*NA*	*NA*	*NA*	*NA*	*NA*	*NA*	*NA*	*NA*	*NA*	*NA*	*NA*	*NA*	*NA*	*ND*

The Fehling Group, LLC

TABLE L-5b
Trench Air Exposure Point Concentrations and Ambient Air Concentrations (in μg/m^3)
~ Construction Worker Receptor ~

Sample ID	Secondary Sample ID	DateCollected	Sample Depth (ft bgs)	1,1,1-Trichloroethane	1,1-Dichloroethane	1,1,2-Trichloroethane	1,1-Dichloroethene	1,3,5-Trimethylbenzene	1,3-Dichlorobenzene	2,2,4-Trimethylpentane	2-Butanone	2-Hexanone	4-Ethyl Toluene	4-Methyl-2-pentanone	Acetone	Acetonitrile	Benzene	Carbon disulfide	Chlorobenzene	Chloroethane	Chloroform	Chloromethane
7-1	7-1-5	5/16/2017	5	ND	ND	ND	ND	ND	ND	NA	7E-02	ND	ND	ND	2E-01	NA	2E-02	8E-02	ND	ND	ND	ND
7-3	7-3-5	5/16/2017	5	ND	ND	7E-02	3E-01	ND	ND	NA	ND	ND	ND	ND	ND	NA	ND	ND	ND	ND	4E-02	ND
7-4	7-4-5	5/16/2017	5	ND	ND	ND	ND	ND	ND	NA	ND	ND	ND	ND	ND	NA	ND	1E+00	ND	ND	5E-02	ND
	7-4-5 Dup	5/16/2017	5	ND	ND	ND	ND	ND	ND	NA	5E-02	ND	ND	ND	2E-01	NA	ND	1E+00	ND	ND	ND	ND
7-Am	7-Am	5/16/2017	Ambient	ND	ND	ND	ND	ND	ND	NA	ND	ND	ND	ND	2E+01	NA	ND	ND	ND	ND	ND	ND
7-Am Dup	7-Am Dup	5/16/2017	Ambient	ND	ND	ND	ND	ND	ND	NA	1E+01	ND	ND	ND	ND	NA	ND	ND	ND	ND	ND	ND
P20-VP-1	VP-1	4/26/2016	5	ND	NA	NA	NA	NA	NA	NA	NA	NA	NA	NA	NA	NA	ND	NA	NA	NA	NA	NA
P20-VP-2	VP-2	4/26/2016	5	ND	NA	NA	NA	NA	NA	NA	NA	NA	NA	NA	NA	NA	ND	NA	NA	NA	NA	NA
P20-VP-3	VP-3	4/26/2016	5	ND	NA	NA	NA	NA	NA	NA	NA	NA	NA	NA	NA	NA	ND	NA	NA	NA	NA	NA
P20-VP-4	VP-4	4/26/2016	5	ND	NA	NA	NA	NA	NA	NA	NA	NA	NA	NA	NA	NA	ND	NA	NA	NA	NA	NA
	VP-4 Dup	4/26/2016	5	ND	NA	NA	NA	NA	NA	NA	NA	NA	NA	NA	NA	NA	ND	NA	NA	NA	NA	NA
P20-VP-5	VP-5	4/26/2016	3	ND	NA	NA	NA	NA	NA	NA	NA	NA	NA	NA	NA	NA	ND	NA	NA	NA	NA	NA
P20-VP-6	VP-6	4/26/2016	5	ND	NA	NA	NA	NA	NA	NA	NA	NA	NA	NA	NA	NA	ND	NA	NA	NA	NA	NA
P20-VP-7	VP-7	4/26/2016	3	ND	NA	NA	NA	NA	NA	NA	NA	NA	NA	NA	NA	NA	ND	NA	NA	NA	NA	NA
P20-VP-8	VP-8	4/26/2016	5	ND	NA	NA	NA	NA	NA	NA	NA	NA	NA	NA	NA	NA	ND	NA	NA	NA	NA	NA
P20-VP-9	VP-9	4/26/2016	5	ND	NA	NA	NA	NA	NA	NA	NA	NA	NA	NA	NA	NA	ND	NA	NA	NA	NA	NA
	VP-9 Dup	4/26/2016	5	ND	NA	NA	NA	NA	NA	NA	NA	NA	NA	NA	NA	NA	ND	NA	NA	NA	NA	NA
P22-VP-1	VP-1	8/13/2015	5	ND	NA	NA	NA	NA	NA	NA	NA	NA	NA	NA	NA	NA	5E-03	NA	NA	NA	NA	NA
P22-VP-2	VP-2	8/13/2015	5	5E-03	NA	NA	NA	NA	NA	NA	NA	NA	NA	NA	NA	NA	5E-03	NA	NA	NA	NA	NA
P22-VP-3	VP-3	8/13/2015	5	ND	NA	NA	NA	NA	NA	NA	NA	NA	NA	NA	NA	NA	ND	NA	NA	NA	NA	NA
P22-VP-4	VP-4	8/13/2015	5	5E-03	NA	NA	NA	NA	NA	NA	NA	NA	NA	NA	NA	NA	7E-03	NA	NA	NA	NA	NA
P22-VP-5	VP-5	8/13/2015	5	5E-02	NA	NA	NA	NA	NA	NA	NA	NA	NA	NA	NA	NA	1E-02	NA	NA	NA	NA	NA
P22-VP-6	VP-6	8/13/2015	5	9E-03	NA	NA	NA	NA	NA	NA	NA	NA	NA	NA	NA	NA	ND	NA	NA	NA	NA	NA
	VP-6 Dup	8/13/2015	5	7E-03	NA	NA	NA	NA	NA	NA	NA	NA	NA	NA	NA	NA	ND	NA	NA	NA	NA	NA
P22-VP-7	VP-7	8/13/2015	5	5E-03	NA	NA	NA	NA	NA	NA	NA	NA	NA	NA	NA	NA	ND	NA	NA	NA	NA	NA
P22-VP-8	VP-8	8/13/2015	5	9E-03	NA	NA	NA	NA	NA	NA	NA	NA	NA	NA	NA	NA	5E-03	NA	NA	NA	NA	NA

The Fehling Group, LLC

TABLE L-5b
Trench Air Exposure Point Concentrations and Ambient Air Concentrations (in μg/m^3)
~ Construction Worker Receptor ~

Sample ID	Secondary Sample ID	DateCollected	Sample Depth (ft bgs)	1,1,1-Trichloroethane	1,1-Dichloroethane	1,1,2-Trichloroethane	1,1-Dichloroethene	1,3,5-Trimethylbenzene	1,3-Dichlorobenzene	2,2,4-Trimethylpentane	2-Butanone	2-Hexanone	4-Ethyl Toluene	4-Methyl-2-pentanone	Acetone	Acetonitrile	Benzene	Carbon disulfide	Chlorobenzene	Chloroethane	Chloroform	Chloromethane
P22-VP-9	VP-9	8/13/2015	5	**7E-03**	*NA*	*NA*	*NA*	*NA*	*NA*	*NA*	*NA*	*NA*	*NA*	*NA*	*NA*	*NA*	*ND*	*NA*	*NA*	*NA*	*NA*	*NA*
P22-VP-10	VP-10	8/13/2015	5	*ND*	*NA*	*NA*	*NA*	*NA*	*NA*	*NA*	*NA*	*NA*	*NA*	*NA*	*NA*	*NA*	**1E-02**	*NA*	*NA*	*NA*	*NA*	*NA*
P22-VP-11	VP-11	8/13/2015	5	**5E-03**	*NA*	*NA*	*NA*	*NA*	*NA*	*NA*	*NA*	*NA*	*NA*	*NA*	*NA*	*NA*	**5E-03**	*NA*	*NA*	*NA*	*NA*	*NA*
P22-VP-12	VP-12	8/13/2015	5	**3E-03**	*NA*	*NA*	*NA*	*NA*	*NA*	*NA*	*NA*	*NA*	*NA*	*NA*	*NA*	*NA*	*ND*	*NA*	*NA*	*NA*	*NA*	*NA*
P23-SV1	SV1	11/27/2013	5	*NA*	*NA*	*NA*	*NA*	*NA*	*NA*	*NA*	*NA*	*NA*	*NA*	*NA*	*NA*	*NA*	*NA*	*NA*	*NA*	*NA*	*NA*	*NA*
P23-SV2	SV2	11/27/2013	5	*NA*	*NA*	*NA*	*NA*	*NA*	*NA*	*NA*	*NA*	*NA*	*NA*	*NA*	*NA*	*NA*	*NA*	*NA*	*NA*	*NA*	*NA*	*NA*
P23-SV3	SV3	11/27/2013	5	*NA*	*NA*	*NA*	*NA*	*NA*	*NA*	*NA*	*NA*	*NA*	*NA*	*NA*	*NA*	*NA*	*NA*	*NA*	*NA*	*NA*	*NA*	*NA*
P23-SV4	SV4	11/25/2013	5	*NA*	*NA*	*NA*	*NA*	*NA*	*NA*	*NA*	*NA*	*NA*	*NA*	*NA*	*NA*	*NA*	*NA*	*NA*	*NA*	*NA*	*NA*	*NA*
P23-SV5	SV5	11/27/2013	5	*NA*	*NA*	*NA*	*NA*	*NA*	*NA*	*NA*	*NA*	*NA*	*NA*	*NA*	*NA*	*NA*	*NA*	*NA*	*NA*	*NA*	*NA*	*NA*
	SV5 Dup	11/27/2013	5	*NA*	*NA*	*NA*	*NA*	*NA*	*NA*	*NA*	*NA*	*NA*	*NA*	*NA*	*NA*	*NA*	*NA*	*NA*	*NA*	*NA*	*NA*	*NA*
P23-SV6	SV6	11/25/2013	5	*NA*	*NA*	*NA*	*NA*	*NA*	*NA*	*NA*	*NA*	*NA*	*NA*	*NA*	*NA*	*NA*	*NA*	*NA*	*NA*	*NA*	*NA*	*NA*
P23-SV7	SV7	11/25/2013	5	*NA*	*NA*	*NA*	*NA*	*NA*	*NA*	*NA*	*NA*	*NA*	*NA*	*NA*	*NA*	*NA*	*NA*	*NA*	*NA*	*NA*	*NA*	*NA*
P23-SV8	SV8	11/25/2013	5	*NA*	*NA*	*NA*	*NA*	*NA*	*NA*	*NA*	*NA*	*NA*	*NA*	*NA*	*NA*	*NA*	*NA*	*NA*	*NA*	*NA*	*NA*	*NA*
P23-SV9	SV9	11/25/2013	5	*NA*	*NA*	*NA*	*NA*	*NA*	*NA*	*NA*	*NA*	*NA*	*NA*	*NA*	*NA*	*NA*	*NA*	*NA*	*NA*	*NA*	*NA*	*NA*
P23-SV10	SV10	11/25/2013	5	*NA*	*NA*	*NA*	*NA*	*NA*	*NA*	*NA*	*NA*	*NA*	*NA*	*NA*	*NA*	*NA*	*NA*	*NA*	*NA*	*NA*	*NA*	*NA*
P23-SV11	SV11	11/25/2013	5	*NA*	*NA*	*NA*	*NA*	*NA*	*NA*	*NA*	*NA*	*NA*	*NA*	*NA*	*NA*	*NA*	*NA*	*NA*	*NA*	*NA*	*NA*	*NA*
P23-SV12	SV12	11/25/2013	5	*NA*	*NA*	*NA*	*NA*	*NA*	*NA*	*NA*	*NA*	*NA*	*NA*	*NA*	*NA*	*NA*	*NA*	*NA*	*NA*	*NA*	*NA*	*NA*
P23-SV13	SV13	11/25/2013	5	*NA*	*NA*	*NA*	*NA*	*NA*	*NA*	*NA*	*NA*	*NA*	*NA*	*NA*	*NA*	*NA*	*NA*	*NA*	*NA*	*NA*	*NA*	*NA*
P23-Am	Ambient Air	11/27/2013	Ambient	*NA*	*NA*	*NA*	*NA*	*NA*	*NA*	*NA*	*NA*	*NA*	*NA*	*NA*	*NA*	*NA*	*NA*	*NA*	*NA*	*NA*	*NA*	*NA*

The Fehling Group, LLC

TABLE L-5b
Trench Air Exposure Point Concentrations and Ambient Air Concentrations (in μg/m^3)
~ Construction Worker Receptor ~

Sample ID	Secondary Sample ID	DateCollected	Sample Depth (ft bgs)	Cyclohexane	Dichlorodifluoromethane	Ethanol	Ethylbenzene	m,p-Xylene	Methylene chloride	Naphthalene	n-Propylbenzene	o-Xylene	p-Isopropyltoluene	Tetrachloroethene	Toluene	Trichloroethene	Trichlorofluoromethane	Vinyl acetate	Vinyl chloride	2-Propanol	Gasoline Range Organics
7-1	7-1-5	5/16/2017	5	NA	ND	NA	ND	ND	ND	ND	NA	ND	NA	6E-01	2E-02	ND	1E+01	ND	ND	NA	NA
7-3	7-3-5	5/16/2017	5	NA	ND	NA	ND	ND	ND	ND	NA	ND	NA	7E-01	ND	7E-02	4E+02	ND	ND	NA	NA
7-4	7-4-5	5/16/2017	5	NA	ND	NA	ND	3E-01	ND	ND	NA	ND	NA	ND	5E-02	ND	2E+00	ND	ND	NA	NA
	7-4-5 Dup	5/16/2017	5	NA	ND	NA	ND	3E-01	ND	ND	NA	ND	NA	ND	5E-02	ND	2E+00	ND	ND	NA	NA
7-Am	7-Am	5/16/2017	Ambient	NA	ND	NA	ND	ND	ND	ND	NA	ND	NA	ND	ND	ND	ND	ND	ND	NA	NA
7-Am Dup	7-Am Dup	5/16/2017	Ambient	NA	ND	NA	ND	ND	ND	ND	NA	ND	NA	ND	ND	ND	ND	ND	ND	NA	NA
P20-VP-1	VP-1	4/26/2016	5	NA	NA	NA	ND	ND	NA	ND	NA	ND	NA	4E-01	ND	ND	NA	NA	ND	NA	3E+02
P20-VP-2	VP-2	4/26/2016	5	NA	NA	NA	ND	ND	NA	ND	NA	ND	NA	4E-01	ND	ND	NA	NA	ND	NA	5E+01
P20-VP-3	VP-3	4/26/2016	5	NA	NA	NA	ND	ND	NA	ND	NA	ND	NA	5E-01	ND	ND	NA	NA	ND	NA	6E+01
P20-VP-4	VP-4	4/26/2016	5	NA	NA	NA	ND	ND	NA	ND	NA	ND	NA	1E+00	ND	4E-02	NA	NA	ND	NA	2E+01
	VP-4 Dup	4/26/2016	5	NA	NA	NA	ND	ND	NA	ND	NA	ND	NA	7E-01	ND	ND	NA	NA	ND	NA	5E+00
P20-VP-5	VP-5	4/26/2016	3	NA	NA	NA	ND	ND	NA	ND	NA	ND	NA	6E+00	ND	ND	NA	NA	ND	NA	2E+01
P20-VP-6	VP-6	4/26/2016	5	NA	NA	NA	ND	ND	NA	ND	NA	ND	NA	2E+00	ND	ND	NA	NA	ND	NA	2E+01
P20-VP-7	VP-7	4/26/2016	3	NA	NA	NA	ND	ND	NA	ND	NA	ND	NA	6E+00	ND	ND	NA	NA	ND	NA	2E+01
P20-VP-8	VP-8	4/26/2016	5	NA	NA	NA	ND	ND	NA	ND	NA	ND	NA	4E+00	ND	ND	NA	NA	ND	NA	1E+01
P20-VP-9	VP-9	4/26/2016	5	NA	NA	NA	ND	ND	NA	ND	NA	ND	NA	2E-01	4E-02	ND	NA	NA	ND	NA	7E+00
	VP-9 Dup	4/26/2016	5	NA	NA	NA	ND	ND	NA	ND	NA	ND	NA	1E+00	ND	ND	NA	NA	ND	NA	1E+01
P22-VP-1	VP-1	8/13/2015	5	NA	NA	NA	4E-03	2E-02	NA	3E-03	NA	4E-03	NA	9E-02	1E-02	4E-03	NA	NA	ND	NA	1E+01
P22-VP-2	VP-2	8/13/2015	5	NA	NA	NA	6E-03	4E-02	NA	2E-02	NA	9E-03	NA	2E-01	2E-02	2E-03	NA	NA	ND	NA	1E+01
P22-VP-3	VP-3	8/13/2015	5	NA	NA	NA	ND	1E-02	NA	ND	NA	ND	NA	1E-01	6E-03	ND	NA	NA	ND	NA	1E+01
P22-VP-4	VP-4	8/13/2015	5	NA	NA	NA	6E-03	6E-02	NA	5E-03	NA	1E-02	NA	2E-01	4E-02	ND	NA	NA	ND	NA	1E+01
P22-VP-5	VP-5	8/13/2015	5	NA	NA	NA	4E-03	4E-02	NA	8E-03	NA	6E-03	NA	8E-03	2E-02	ND	NA	NA	ND	NA	2E+01
P22-VP-6	VP-6	8/13/2015	5	NA	NA	NA	ND	9E-03	NA	ND	NA	ND	NA	3E-01	6E-03	ND	NA	NA	ND	NA	2E+01
	VP-6 Dup	8/13/2015	5	NA	NA	NA	ND	9E-03	NA	ND	NA	ND	NA	2E-01	6E-03	ND	NA	NA	ND	NA	1E+01
P22-VP-7	VP-7	8/13/2015	5	NA	NA	NA	ND	1E-02	NA	ND	NA	ND	NA	2E-01	6E-03	ND	NA	NA	ND	NA	1E+01
P22-VP-8	VP-8	8/13/2015	5	NA	NA	NA	ND	1E-02	NA	ND	NA	2E-03	NA	2E-01	8E-03	ND	NA	NA	ND	NA	1E+01

The Fehling Group, LLC

TABLE L-5b
Trench Air Exposure Point Concentrations and Ambient Air Concentrations (in μg/m^3)
~ Construction Worker Receptor ~

Sample ID	Secondary Sample ID	DateCollected	Sample Depth (ft bgs)	Cyclohexane	Dichlorodifluoromethane	Ethanol	Ethylbenzene	m,p-Xylene	Methylene chloride	Naphthalene	n-Propylbenzene	o-Xylene	p-Isopropyltoluene	Tetrachloroethene	Toluene	Trichloroethene	Trichlorofluoromethane	Vinyl acetate	Vinyl chloride	2-Propanol	Gasoline Range Organics
P22-VP-9	VP-9	8/13/2015	5	*NA*	*NA*	*NA*	**2E-03**	**2E-02**	*NA*	**5E-03**	*NA*	**6E-03**	*NA*	**4E-01**	**6E-03**	*ND*	*NA*	*NA*	*ND*	*NA*	**1E+01**
P22-VP-10	VP-10	8/13/2015	5	*NA*	*NA*	*NA*	**4E-03**	**2E-02**	*NA*	*ND*	*NA*	**4E-03**	*NA*	**3E-03**	**2E-02**	*ND*	*NA*	*NA*	*ND*	*NA*	**9E+00**
P22-VP-11	VP-11	8/13/2015	5	*NA*	*NA*	*NA*	**4E-03**	**4E-02**	*NA*	*ND*	*NA*	**7E-03**	*NA*	**2E-01**	**4E-02**	*ND*	*NA*	*NA*	*ND*	*NA*	**2E+01**
P22-VP-12	VP-12	8/13/2015	5	*NA*	*NA*	*NA*	**2E-03**	**4E-02**	*NA*	**3E-03**	*NA*	**7E-03**	*NA*	**2E-01**	**1E-02**	*ND*	*NA*	*NA*	*ND*	*NA*	**1E+01**
P23-SV1	SV1	11/27/2013	5	*NA*	*NA*	*NA*	*NA*	*NA*	*NA*	*NA*	*NA*	*NA*	*NA*	*NA*	*NA*	*NA*	*NA*	*NA*	*NA*	*NA*	*ND*
P23-SV2	SV2	11/27/2013	5	*NA*	*NA*	*NA*	*NA*	*NA*	*NA*	*NA*	*NA*	*NA*	*NA*	*NA*	*NA*	*NA*	*NA*	*NA*	*NA*	*NA*	*ND*
P23-SV3	SV3	11/27/2013	5	*NA*	*NA*	*NA*	*NA*	*NA*	*NA*	*NA*	*NA*	*NA*	*NA*	*NA*	*NA*	*NA*	*NA*	*NA*	*NA*	*NA*	*ND*
P23-SV4	SV4	11/25/2013	5	*NA*	*NA*	*NA*	*NA*	*NA*	*NA*	*NA*	*NA*	*NA*	*NA*	*NA*	*NA*	*NA*	*NA*	*NA*	*NA*	*NA*	*ND*
P23-SV5	SV5	11/27/2013	5	*NA*	*NA*	*NA*	*NA*	*NA*	*NA*	*NA*	*NA*	*NA*	*NA*	*NA*	*NA*	*NA*	*NA*	*NA*	*NA*	*NA*	*ND*
	SV5 Dup	11/27/2013	5	*NA*	*NA*	*NA*	*NA*	*NA*	*NA*	*NA*	*NA*	*NA*	*NA*	*NA*	*NA*	*NA*	*NA*	*NA*	*NA*	*NA*	*ND*
P23-SV6	SV6	11/25/2013	5	*NA*	*NA*	*NA*	*NA*	*NA*	*NA*	*NA*	*NA*	*NA*	*NA*	*NA*	*NA*	*NA*	*NA*	*NA*	*NA*	*NA*	*ND*
P23-SV7	SV7	11/25/2013	5	*NA*	*NA*	*NA*	*NA*	*NA*	*NA*	*NA*	*NA*	*NA*	*NA*	*NA*	*NA*	*NA*	*NA*	*NA*	*NA*	*NA*	*ND*
P23-SV8	SV8	11/25/2013	5	*NA*	*NA*	*NA*	*NA*	*NA*	*NA*	*NA*	*NA*	*NA*	*NA*	*NA*	*NA*	*NA*	*NA*	*NA*	*NA*	*NA*	*ND*
P23-SV9	SV9	11/25/2013	5	*NA*	*NA*	*NA*	*NA*	*NA*	*NA*	*NA*	*NA*	*NA*	*NA*	*NA*	*NA*	*NA*	*NA*	*NA*	*NA*	*NA*	*ND*
P23-SV10	SV10	11/25/2013	5	*NA*	*NA*	*NA*	*NA*	*NA*	*NA*	*NA*	*NA*	*NA*	*NA*	*NA*	*NA*	*NA*	*NA*	*NA*	*NA*	*NA*	*ND*
P23-SV11	SV11	11/25/2013	5	*NA*	*NA*	*NA*	*NA*	*NA*	*NA*	*NA*	*NA*	*NA*	*NA*	*NA*	*NA*	*NA*	*NA*	*NA*	*NA*	*NA*	*ND*
P23-SV12	SV12	11/25/2013	5	*NA*	*NA*	*NA*	*NA*	*NA*	*NA*	*NA*	*NA*	*NA*	*NA*	*NA*	*NA*	*NA*	*NA*	*NA*	*NA*	*NA*	*ND*
P23-SV13	SV13	11/25/2013	5	*NA*	*NA*	*NA*	*NA*	*NA*	*NA*	*NA*	*NA*	*NA*	*NA*	*NA*	*NA*	*NA*	*NA*	*NA*	*NA*	*NA*	*ND*
P23-Am	Ambient Air	11/27/2013	Ambient	*NA*	*NA*	*NA*	*NA*	*NA*	*NA*	*NA*	*NA*	*NA*	*NA*	*NA*	*NA*	*NA*	*NA*	*NA*	*NA*	*NA*	*ND*

The Fehling Group, LLC

TABLE L-6
Soil Risk Characterization Summary
~ PARC Area 7 ~

		Soil RBC (mg/kg)*				Risk Values (Incremental Lifetime Cancer Risk [ILCR] and Hazard Quotient [HQ])			
		Residential Receptor		Construction Worker Receptor		Residential Receptor		Construction Worker Receptor	
Soil COPC	**Soil EPC (mg/kg, dry weight basis)**	**Cancer Endpoint**	**Noncancer Endpoint**	**Cancer Endpoint**	**Noncancer Endpoint**	**ILCR (unitless)**	**HQ (unitless)**	**ILCR (unitless)**	**HQ (unitless)**
Barium	105	--	1.50E+04	--	3.02E+03	--	7.0E-03	--	3.5E-02
Copper	693	--	3.10E+03	--	1.42E+04	--	2.2E-01	--	4.9E-02
Lead	58	Not applicable (see Section 3.2.1.2)							
Mercury	0.32	--	1.01E+00	--	4.36E+01	--	3.1E-01	--	7.3E-03
Zinc	340	--	2.30E+04	--	1.06E+05	--	1.5E-02	--	3.2E-03
TPH-GRO	1.7	--	8.20E+01	--	2.77E+03	--	2.1E-02	--	6.2E-04
TPH-DRO	1832	--	9.60E+01	--	8.85E+02	--	1.9E+01	--	2.1E+00
TPH-ORO	26	--	2.50E+03	--	3.24E+04	--	1.0E-02	--	8.0E-04
4,4'-DDD	0.002	2.30E+00	1.90E+00	8.11E+01	--	7.9E-10	9.5E-04	2.2E-11	--
4,4'-DDE	0.004	2.00E+00	2.30E+01	5.73E+01	--	1.9E-09	1.7E-04	6.7E-11	--
4,4'-DDT	0.004	1.90E+00	3.70E+01	5.73E+01	1.41E+02	2.3E-09	1.2E-04	7.6E-11	3.1E-05
alpha-BHC	0.002	8.60E-02	5.10E+02	--	--	1.8E-08	3.0E-06	--	--
		Cumulative Risk Values (ILCR and HI Values) =>				**2.3E-08**	**2.0E+01**	**1.7E-10**	**2.2E+00**

* "Combined" value listed in **Table 5** for the residential receptor and **Table 6** for the construction worker receptor.

The Fehling Group, LLC

TABLE L-7a

Indoor Air Incremental Lifetime Cancer Risk (gray-shaded values)

and Cumulative Incremental Lifetime Cancer Risk Values (blue-shaded values)

~ Residential Receptor ~

Sample ID	Secondary Sample ID	Sample Depth (ft bgs)	1,1,1-Trichloroethane	1,1-Dichloroethane	1,1,2-Trichloroethane	1,1-Dichloroethene	1,3,5-Trimethylbenzene	1,3-Dichlorobenzene	2,2,4-Trimethylpentane	2-Butanone	2-Hexanone	4-Ethyl Toluene	4-Methyl-2-pentanone	Acetone	Acetonitrile	Benzene	Carbon disulfide	Chlorobenzene	Chloroethane	Chloroform	Chloromethane
7-1-5	5/16/2017	5		*ND*	*ND*				*NA*							7E-08				*ND*	
7-3-5	5/16/2017	5		*ND*	1E-07				*NA*							*ND*				9E-08	
7-4-5	5/16/2017	5		*ND*	*ND*				*NA*							*ND*				1E-07	
7-4-5 Dup	5/16/2017	5		*ND*	*ND*				*NA*							*ND*				*ND*	
7-Am	5/16/2017	Ambient		*ND*	*ND*				*NA*							*ND*				*ND*	
7-Am Dup	5/16/2017	Ambient		*ND*	*ND*				*NA*							*ND*				*ND*	
VP-1	4/26/2016	5		*NA*	*NA*				*NA*							*ND*				*NA*	
VP-2	4/26/2016	5	NONCARCINOGENIC	*NA*	*NA*	NONCARCINOGENIC	NONCARCINOGENIC	NONCARCINOGENIC	*NA*	NONCARCINOGENIC	NONCARCINOGENIC	NONCARCINOGENIC	NONCARCINOGENIC	NONCARCINOGENIC	NONCARCINOGENIC	*ND*	NONCARCINOGENIC	NONCARCINOGENIC	NONCARCINOGENIC	*NA*	NONCARCINOGENIC
VP-3	4/26/2016	5		*NA*	*NA*				*NA*							*ND*				*NA*	
VP-4	4/26/2016	5		*NA*	*NA*				*NA*							*ND*				*NA*	
VP-4 Dup	4/26/2016	5		*NA*	*NA*				*NA*							*ND*				*NA*	
VP-5	4/26/2016	3		*NA*	*NA*				*NA*							*ND*				*NA*	
VP-6	4/26/2016	5		*NA*	*NA*				*NA*							*ND*				*NA*	
VP-7	4/26/2016	3		*NA*	*NA*				*NA*							*ND*				*NA*	
VP-8	4/26/2016	5		*NA*	*NA*				*NA*							*ND*				*NA*	
VP-9	4/26/2016	5		*NA*	*NA*				*NA*							*ND*				*NA*	
VP-9 Dup	4/26/2016	5		*NA*	*NA*				-							*ND*				*NA*	
VP-1	8/13/2015	5		*NA*	*NA*				*NA*							1E-08				*NA*	
VP-2	8/13/2015	5		*NA*	*NA*				-							1E-08				*NA*	
VP-3	8/13/2015	5		*NA*	*NA*				-							*ND*				*NA*	
VP-4	8/13/2015	5		*NA*	*NA*				-							2E-08				*NA*	
VP-5	8/13/2015	5		*NA*	*NA*				-							3E-08				*NA*	
VP-6	8/13/2015	5		*NA*	*NA*				-							*ND*				*NA*	
VP-6 Dup	8/13/2015	5		*NA*	*NA*				*NA*							*ND*				*NA*	
VP-7	8/13/2015	5		*NA*	*NA*				-							*ND*				*NA*	
VP-8	8/13/2015	5		*NA*	*NA*				-							1E-08				*NA*	

The Fehling Group, LLC

TABLE L-7a

Indoor Air Incremental Lifetime Cancer Risk (gray-shaded values)

and Cumulative Incremental Lifetime Cancer Risk Values (blue-shaded values)

~ Residential Receptor ~

Sample ID	Secondary Sample ID	Sample Depth (ft bgs)	1,1,1-Trichloroethane	1,1-Dichloroethane	1,1,2-Trichloroethane	1,1-Dichloroethene	1,3,5-Trimethylbenzene	1,3-Dichlorobenzene	2,2,4-Trimethylpentane	2-Butanone	2-Hexanone	4-Ethyl Toluene	4-Methyl-2-pentanone	Acetone	Acetonitrile	Benzene	Carbon disulfide	Chlorobenzene	Chloroethane	Chloroform	Chloromethane
VP-9	8/13/2015	5	NONCARCINOGENIC	*NA*	*NA*	NONCARCINOGENIC	NONCARCINOGENIC	NONCARCINOGENIC	*NA*	NONCARCINOGENIC	NONCARCINOGENIC	NONCARCINOGENIC	NONCARCINOGENIC	NONCARCINOGENIC	NONCARCINOGENIC	*ND*	NONCARCINOGENIC	NONCARCINOGENIC	NONCARCINOGENIC	*NA*	NONCARCINOGENIC
VP-10	8/13/2015	5		*NA*	*NA*				*NA*							3E-08				*NA*	
VP-11	8/13/2015	5		*NA*	*NA*				*NA*							1E-08				*NA*	
VP-12	8/13/2015	5		*NA*	*NA*				*NA*							*ND*				*NA*	
SV1	11/27/2013	5		*NA*	*NA*				*NA*							*NA*				*NA*	
SV2	11/27/2013	5		*NA*	*NA*				-							*NA*				*NA*	
SV3	11/27/2013	5		*NA*	*NA*				*NA*							*NA*				*NA*	
SV4	11/25/2013	5		*NA*	*NA*				*NA*							*NA*				*NA*	
SV5	11/27/2013	5		*NA*	*NA*				-							*NA*				*NA*	
SV5 Dup	11/27/2013	5		*NA*	*NA*				*NA*							*NA*				*NA*	
SV6	11/25/2013	5		*NA*	*NA*				*NA*							*NA*				*NA*	
SV7	11/25/2013	5		*NA*	*NA*				*NA*							*NA*				*NA*	
SV8	11/25/2013	5		*NA*	*NA*				*NA*							*NA*				*NA*	
SV9	11/25/2013	5		*NA*	*NA*				*NA*							*NA*				*NA*	
SV10	11/25/2013	5		*NA*	*NA*				*NA*							*NA*				*NA*	
SV11	11/25/2013	5		*NA*	*NA*				*NA*							*NA*				*NA*	
SV12	11/25/2013	5		*NA*	*NA*				*NA*							*NA*				*NA*	
SV13	11/25/2013	5		*NA*	*NA*				*NA*							*NA*				*NA*	
Ambient Air	11/27/2013	Ambient		*NA*	*NA*				*NA*							*NA*				*NA*	

The Fehling Group, LLC

TABLE L-7a

Indoor Air Incremental Lifetime Cancer Risk (gray-shaded values)

and Cumulative Incremental Lifetime Cancer Risk Values (blue-shaded values)

~ Residential Receptor ~

Sample ID	Secondary Sample ID	Sample Depth (ft bgs)	Cyclohexane	Dichlorodifluoromethane	Ethanol	Ethylbenzene	m,p-Xylene	Methylene chloride	Naphthalene	n-Propylbenzene	o-Xylene	p-Isopropyltoluene	Tetrachloroethene	Toluene	Trichloroethene	Trichlorofluoromethane	Vinyl acetate	Vinyl chloride	2-Propanol	Gasoline Range Organics	ILCR
7-1-5	5/16/2017	5				*ND*		*ND*	*ND*				4E-07		*ND*			*ND*			5E-07
7-3-5	5/16/2017	5				*ND*		*ND*	*ND*				5E-07		5E-08			*ND*			8E-07
7-4-5	5/16/2017	5				*ND*		*ND*	*ND*				*ND*		*ND*			*ND*			1E-07
7-4-5 Dup	5/16/2017	5				*ND*		*ND*	*ND*				*ND*		*ND*			*ND*			0E+00
7-Am	5/16/2017	Ambient				*ND*		*ND*	*ND*				*ND*		*ND*			*ND*			0E+00
7-Am Dup	5/16/2017	Ambient				*ND*		*ND*	*ND*				*ND*		*ND*			*ND*			0E+00
VP-1	4/26/2016	5				*ND*		*NA*	*ND*				3E-07		*ND*			*ND*			3E-07
VP-2	4/26/2016	5				*ND*		*NA*	*ND*				3E-07		*ND*			*ND*			3E-07
VP-3	4/26/2016	5				*ND*		*NA*	*ND*				4E-07		*ND*			*ND*			4E-07
VP-4	4/26/2016	5				*ND*		*NA*	*ND*				1E-06		2E-08			*ND*			1E-06
VP-4 Dup	4/26/2016	5				*ND*		*NA*	*ND*				5E-07		*ND*			*ND*			5E-07
VP-5	4/26/2016	3				*ND*		*NA*	*ND*				5E-06		*ND*			*ND*			5E-06
VP-6	4/26/2016	5				*ND*		*NA*	*ND*				1E-06		*ND*			*ND*			1E-06
VP-7	4/26/2016	3				*ND*		*NA*	*ND*				4E-06		*ND*			*ND*			4E-06
VP-8	4/26/2016	5				*ND*		*NA*	*ND*				3E-06		*ND*			*ND*			3E-06
VP-9	4/26/2016	5				*ND*		*NA*	*ND*				1E-07		*ND*			*ND*			1E-07
VP-9 Dup	4/26/2016	5				*ND*		*NA*	*ND*				1E-06		*ND*			*ND*			1E-06
VP-1	8/13/2015	5				1E-09		*NA*	1E-08				7E-08		2E-09			*ND*			1E-07
VP-2	8/13/2015	5				2E-09		*NA*	6E-08				1E-07		1E-09			*ND*			2E-07
VP-3	8/13/2015	5				*ND*		*NA*	*ND*				8E-08		*ND*			*ND*			8E-08
VP-4	8/13/2015	5				2E-09		*NA*	2E-08				1E-07		*ND*			*ND*			2E-07
VP-5	8/13/2015	5				1E-09		*NA*	3E-08				6E-09		*ND*			*ND*			7E-08
VP-6	8/13/2015	5				*ND*		*NA*	*ND*				2E-07		*ND*			*ND*			2E-07
VP-6 Dup	8/13/2015	5				*ND*		*NA*	*ND*				2E-07		*ND*			*ND*			2E-07
VP-7	8/13/2015	5				*ND*		*NA*	*ND*				2E-07		*ND*			*ND*			2E-07
VP-8	8/13/2015	5				*ND*		*NA*	*ND*				2E-07		*ND*			*ND*			2E-07

NONCARCINOGENIC

The Fehling Group, LLC

TABLE L-7a

Indoor Air Incremental Lifetime Cancer Risk (gray-shaded values)

and Cumulative Incremental Lifetime Cancer Risk Values (blue-shaded values)

~ Residential Receptor ~

Sample ID	Secondary Sample ID	Sample Depth (ft bgs)	Cyclohexane	Dichlorodifluoromethane	Ethanol	Ethylbenzene	m,p-Xylene	Methylene chloride	Naphthalene	n-Propylbenzene	o-Xylene	p-Isopropyltoluene	Tetrachloroethene	Toluene	Trichloroethene	Trichlorofluoromethane	Vinyl acetate	Vinyl chloride	2-Propanol	Gasoline Range Organics	ILCR
VP-9	8/13/2015	5	NONCARCINOGENIC	NONCARCINOGENIC	NONCARCINOGENIC	5E-10	NONCARCINOGENIC	*NA*	2E-08	NONCARCINOGENIC	NONCARCINOGENIC	NONCARCINOGENIC	3E-07	NONCARCINOGENIC	*ND*	NONCARCINOGENIC	NONCARCINOGENIC	*ND*	NONCARCINOGENIC	NONCARCINOGENIC	3E-07
VP-10	8/13/2015	5				1E-09		*NA*	*ND*				2E-09		*ND*			*ND*			3E-08
VP-11	8/13/2015	5				1E-09		*NA*	*ND*				2E-07		*ND*			*ND*			2E-07
VP-12	8/13/2015	5				5E-10		*NA*	1E-08				1E-07		*ND*			*ND*			1E-07
SV1	11/27/2013	5				*NA*		*NA*	*NA*				*NA*		*NA*			*NA*			0E+00
SV2	11/27/2013	5				*NA*		*NA*	*NA*				*NA*		*NA*			*NA*			0E+00
SV3	11/27/2013	5				*NA*		*NA*	*NA*				*NA*		*NA*			*NA*			0E+00
SV4	11/25/2013	5				*NA*		*NA*	*NA*				*NA*		*NA*			*NA*			0E+00
SV5	11/27/2013	5				*NA*		*NA*	*NA*				*NA*		*NA*			*NA*			0E+00
SV5 Dup	11/27/2013	5				*NA*		*NA*	*NA*				*NA*		*NA*			*NA*			0E+00
SV6	11/25/2013	5				*NA*		*NA*	*NA*				*NA*		*NA*			*NA*			0E+00
SV7	11/25/2013	5				*NA*		*NA*	*NA*				*NA*		*NA*			*NA*			0E+00
SV8	11/25/2013	5				*NA*		*NA*	*NA*				*NA*		*NA*			*NA*			0E+00
SV9	11/25/2013	5				*NA*		*NA*	*NA*				*NA*		*NA*			*NA*			0E+00
SV10	11/25/2013	5				*NA*		*NA*	*NA*				*NA*		*NA*			*NA*			0E+00
SV11	11/25/2013	5				*NA*		*NA*	*NA*				*NA*		*NA*			*NA*			0E+00
SV12	11/25/2013	5				*NA*		*NA*	*NA*				*NA*		*NA*			*NA*			0E+00
SV13	11/25/2013	5				*NA*		*NA*	*NA*				*NA*		*NA*			*NA*			0E+00
Ambient Air	11/27/2013	Ambient				*NA*		*NA*	*NA*				*NA*		*NA*			*NA*			0E+00

The Fehling Group, LLC

TABLE L-7b
Indoor Air Hazard Quotients (gray-shaded values) and Hazard Index Values (blue-shaded values)
~ Residential Receptor ~

Sample ID	Secondary Sample ID	Sample Depth (ft bgs)	1,1,1-Trichloroethane	1,1-Dichloroethane	1,1,2-Trichloroethane	1,1-Dichloroethene	1,3,5-Trimethylbenzene	1,3-Dichlorobenzene	2,2,4-Trimethylpentane	2-Butanone	2-Hexanone	4-Ethyl Toluene	4-Methyl-2-pentanone	Acetone	Acetonitrile	Benzene	Carbon disulfide	Chlorobenzene	Chloroethane	Chloroform	Chloromethane
7-1-5	5/16/2017	5	ND	ND	ND	ND	ND	ND	NA	4E-06	ND	ND	ND	2E-06	NA	2E-03	3E-05	ND	ND	ND	ND
7-3-5	5/16/2017	5	ND	ND	1E-01	1E-03	ND	ND	NA	ND	ND	ND	ND	ND	NA	ND	ND	ND	ND	1E-04	ND
7-4-5	5/16/2017	5	ND	ND	ND	ND	ND	ND	NA	ND	ND	ND	ND	ND	NA	ND	4E-04	ND	ND	2E-04	ND
7-4-5 Dup	5/16/2017	5	ND	ND	ND	ND	ND	ND	NA	3E-06	ND	ND	ND	2E-06	NA	ND	4E-04	ND	ND	ND	ND
7-Am	5/16/2017	Ambient	ND	ND	ND	ND	ND	ND	NA	ND	ND	ND	ND	7E-04	NA	ND	ND	ND	ND	ND	ND
7-Am Dup	5/16/2017	Ambient	ND	ND	ND	ND	ND	ND	NA	2E-03	ND	ND	ND	ND	NA	ND	ND	ND	ND	ND	ND
VP-1	4/26/2016	5	ND	NA	NA	NA	NA	NA	NA	NA	NA	NA	NA	NA	NA	ND	NA	NA	NA	NA	NA
VP-2	4/26/2016	5	ND	NA	NA	NA	NA	NA	NA	NA	NA	NA	NA	NA	NA	ND	NA	NA	NA	NA	NA
VP-3	4/26/2016	5	ND	NA	NA	NA	NA	NA	NA	NA	NA	NA	NA	NA	NA	ND	NA	NA	NA	NA	NA
VP-4	4/26/2016	5	ND	NA	NA	NA	NA	NA	NA	NA	NA	NA	NA	NA	NA	ND	NA	NA	NA	NA	NA
VP-4 Dup	4/26/2016	5	ND	NA	NA	NA	NA	NA	NA	NA	NA	NA	NA	NA	NA	ND	NA	NA	NA	NA	NA
VP-5	4/26/2016	3	ND	NA	NA	NA	NA	NA	NA	NA	NA	NA	NA	NA	NA	ND	NA	NA	NA	NA	NA
VP-6	4/26/2016	5	ND	NA	NA	NA	NA	NA	NA	NA	NA	NA	NA	NA	NA	ND	NA	NA	NA	NA	NA
VP-7	4/26/2016	3	ND	NA	NA	NA	NA	NA	NA	NA	NA	NA	NA	NA	NA	ND	NA	NA	NA	NA	NA
VP-8	4/26/2016	5	ND	NA	NA	NA	NA	NA	NA	NA	NA	NA	NA	NA	NA	ND	NA	NA	NA	NA	NA
VP-9	4/26/2016	5	ND	NA	NA	NA	NA	NA	NA	NA	NA	NA	NA	NA	NA	ND	NA	NA	NA	NA	NA
VP-9 Dup	4/26/2016	5	ND	NA	NA	NA	NA	NA	-	NA	NA	NA	NA	NA	NA	ND	NA	NA	NA	NA	NA
VP-1	8/13/2015	5	ND	NA	NA	NA	NA	NA	NA	NA	NA	NA	NA	NA	NA	4E-04	NA	NA	NA	NA	NA
VP-2	8/13/2015	5	2E-06	NA	NA	NA	NA	NA	-	NA	NA	NA	NA	NA	NA	4E-04	NA	NA	NA	NA	NA
VP-3	8/13/2015	5	ND	NA	NA	NA	NA	NA	-	NA	NA	NA	NA	NA	NA	ND	NA	NA	NA	NA	NA
VP-4	8/13/2015	5	2E-06	NA	NA	NA	NA	NA	-	NA	NA	NA	NA	NA	NA	7E-04	NA	NA	NA	NA	NA
VP-5	8/13/2015	5	2E-05	NA	NA	NA	NA	NA	-	NA	NA	NA	NA	NA	NA	9E-04	NA	NA	NA	NA	NA
VP-6	8/13/2015	5	3E-06	NA	NA	NA	NA	NA	-	NA	NA	NA	NA	NA	NA	ND	NA	NA	NA	NA	NA
VP-6 Dup	8/13/2015	5	2E-06	NA	NA	NA	NA	NA	NA	NA	NA	NA	NA	NA	NA	ND	NA	NA	NA	NA	NA
VP-7	8/13/2015	5	2E-06	NA	NA	NA	NA	NA	-	NA	NA	NA	NA	NA	NA	ND	NA	NA	NA	NA	NA
VP-8	8/13/2015	5	3E-06	NA	NA	NA	NA	NA	-	NA	NA	NA	NA	NA	NA	4E-04	NA	NA	NA	NA	NA

The Fehling Group, LLC

TABLE L-7b
Indoor Air Hazard Quotients (gray-shaded values) and Hazard Index Values (blue-shaded values)
~ Residential Receptor ~

Sample ID	Secondary Sample ID	Sample Depth (ft bgs)	1,1,1-Trichloroethane	1,1-Dichloroethane	1,1,2-Trichloroethane	1,1-Dichloroethene	1,3,5-Trimethylbenzene	1,3-Dichlorobenzene	2,2,4-Trimethylpentane	2-Butanone	2-Hexanone	4-Ethyl Toluene	4-Methyl-2-pentanone	Acetone	Acetonitrile	Benzene	Carbon disulfide	Chlorobenzene	Chloroethane	Chloroform	Chloromethane
VP-9	8/13/2015	5	2E-06	*NA*	*NA*	*NA*	*NA*	*NA*	*NA*	*NA*	*NA*	*NA*	*NA*	*NA*	*NA*	*ND*	*NA*	*NA*	*NA*	*NA*	*NA*
VP-10	8/13/2015	5	*ND*	*NA*	*NA*	*NA*	*NA*	*NA*	*NA*	*NA*	*NA*	*NA*	*NA*	*NA*	*NA*	9E-04	*NA*	*NA*	*NA*	*NA*	*NA*
VP-11	8/13/2015	5	2E-06	*NA*	*NA*	*NA*	*NA*	*NA*	*NA*	*NA*	*NA*	*NA*	*NA*	*NA*	*NA*	4E-04	*NA*	*NA*	*NA*	*NA*	*NA*
VP-12	8/13/2015	5	1E-06	*NA*	*NA*	*NA*	*NA*	*NA*	*NA*	*NA*	*NA*	*NA*	*NA*	*NA*	*NA*	*ND*	*NA*	*NA*	*NA*	*NA*	*NA*
SV1	11/27/2013	5	*NA*	*NA*	*NA*	*NA*	*NA*	*NA*	*NA*	*NA*	*NA*	*NA*	*NA*	*NA*	*NA*	*NA*	*NA*	*NA*	*NA*	*NA*	*NA*
SV2	11/27/2013	5	*NA*	*NA*	*NA*	*NA*	*NA*	*NA*	-	*NA*	*NA*	*NA*	*NA*	*NA*	*NA*	*NA*	*NA*	*NA*	*NA*	*NA*	*NA*
SV3	11/27/2013	5	*NA*	*NA*	*NA*	*NA*	*NA*	*NA*	*NA*	*NA*	*NA*	*NA*	*NA*	*NA*	*NA*	*NA*	*NA*	*NA*	*NA*	*NA*	*NA*
SV4	11/25/2013	5	*NA*	*NA*	*NA*	*NA*	*NA*	*NA*	*NA*	*NA*	*NA*	*NA*	*NA*	*NA*	*NA*	*NA*	*NA*	*NA*	*NA*	*NA*	*NA*
SV5	11/27/2013	5	*NA*	*NA*	*NA*	*NA*	*NA*	*NA*	-	*NA*	*NA*	*NA*	*NA*	*NA*	*NA*	*NA*	*NA*	*NA*	*NA*	*NA*	*NA*
SV5 Dup	11/27/2013	5	*NA*	*NA*	*NA*	*NA*	*NA*	*NA*	*NA*	*NA*	*NA*	*NA*	*NA*	*NA*	*NA*	*NA*	*NA*	*NA*	*NA*	*NA*	*NA*
SV6	11/25/2013	5	*NA*	*NA*	*NA*	*NA*	*NA*	*NA*	*NA*	*NA*	*NA*	*NA*	*NA*	*NA*	*NA*	*NA*	*NA*	*NA*	*NA*	*NA*	*NA*
SV7	11/25/2013	5	*NA*	*NA*	*NA*	*NA*	*NA*	*NA*	*NA*	*NA*	*NA*	*NA*	*NA*	*NA*	*NA*	*NA*	*NA*	*NA*	*NA*	*NA*	*NA*
SV8	11/25/2013	5	*NA*	*NA*	*NA*	*NA*	*NA*	*NA*	*NA*	*NA*	*NA*	*NA*	*NA*	*NA*	*NA*	*NA*	*NA*	*NA*	*NA*	*NA*	*NA*
SV9	11/25/2013	5	*NA*	*NA*	*NA*	*NA*	*NA*	*NA*	*NA*	*NA*	*NA*	*NA*	*NA*	*NA*	*NA*	*NA*	*NA*	*NA*	*NA*	*NA*	*NA*
SV10	11/25/2013	5	*NA*	*NA*	*NA*	*NA*	*NA*	*NA*	*NA*	*NA*	*NA*	*NA*	*NA*	*NA*	*NA*	*NA*	*NA*	*NA*	*NA*	*NA*	*NA*
SV11	11/25/2013	5	*NA*	*NA*	*NA*	*NA*	*NA*	*NA*	*NA*	*NA*	*NA*	*NA*	*NA*	*NA*	*NA*	*NA*	*NA*	*NA*	*NA*	*NA*	*NA*
SV12	11/25/2013	5	*NA*	*NA*	*NA*	*NA*	*NA*	*NA*	*NA*	*NA*	*NA*	*NA*	*NA*	*NA*	*NA*	*NA*	*NA*	*NA*	*NA*	*NA*	*NA*
SV13	11/25/2013	5	*NA*	*NA*	*NA*	*NA*	*NA*	*NA*	*NA*	*NA*	*NA*	*NA*	*NA*	*NA*	*NA*	*NA*	*NA*	*NA*	*NA*	*NA*	*NA*
Ambient Air	11/27/2013	Ambient	*NA*	*NA*	*NA*	*NA*	*NA*	*NA*	*NA*	*NA*	*NA*	*NA*	*NA*	*NA*	*NA*	*NA*	*NA*	*NA*	*NA*	*NA*	*NA*

The Fehling Group, LLC

TABLE L-7b
Indoor Air Hazard Quotients (gray-shaded values) and Hazard Index Values (blue-shaded values)
~ Residential Receptor ~

Sample ID	Secondary Sample ID	Sample Depth (ft bgs)	Cyclohexane	Dichlorodifluoromethane	Ethanol	Ethylbenzene	m,p-Xylene	Methylene chloride	Naphthalene	n-Propylbenzene	o-Xylene	p-Isopropyltoluene	Tetrachloroethene	Toluene	Trichloroethene	Trichlorofluoromethane	Vinyl acetate	Vinyl chloride	2-Propanol	Gasoline Range Organics	Σ HQ = HI
7-1-5	5/16/2017	5	NA	ND	NA	ND	ND	ND	ND	NA	ND	NA	5E-03	2E-05	ND	3E-03	ND	ND	NA	NA	1E-02
7-3-5	5/16/2017	5	NA	ND	NA	ND	ND	ND	ND	NA	ND	NA	6E-03	ND	1E-02	9E-02	ND	ND	NA	NA	2E-01
7-4-5	5/16/2017	5	NA	ND	NA	ND	9E-04	ND	ND	NA	ND	NA	ND	5E-05	ND	6E-04	ND	ND	NA	NA	2E-03
7-4-5 Dup	5/16/2017	5	NA	ND	NA	ND	8E-04	ND	ND	NA	ND	NA	ND	4E-05	ND	5E-04	ND	ND	NA	NA	2E-03
7-Am	5/16/2017	Ambient	NA	ND	NA	ND	ND	ND	ND	NA	ND	NA	ND	ND	ND	ND	ND	ND	NA	NA	7E-04
7-Am Dup	5/16/2017	Ambient	NA	ND	NA	ND	ND	ND	ND	NA	ND	NA	ND	ND	ND	ND	ND	ND	NA	NA	2E-03
VP-1	4/26/2016	5	NA	NA	NA	ND	ND	NA	ND	NA	ND	NA	3E-03	ND	ND	NA	NA	ND	NA	3E+00	3E+00
VP-2	4/26/2016	5	NA	NA	NA	ND	ND	NA	ND	NA	ND	NA	3E-03	ND	ND	NA	NA	ND	NA	5E-01	5E-01
VP-3	4/26/2016	5	NA	NA	NA	ND	ND	NA	ND	NA	ND	NA	4E-03	ND	ND	NA	NA	ND	NA	6E-01	6E-01
VP-4	4/26/2016	5	NA	NA	NA	ND	ND	NA	ND	NA	ND	NA	1E-02	ND	5E-03	NA	NA	ND	NA	1E-01	2E-01
VP-4 Dup	4/26/2016	5	NA	NA	NA	ND	ND	NA	ND	NA	ND	NA	5E-03	ND	ND	NA	NA	ND	NA	5E-02	5E-02
VP-5	4/26/2016	3	NA	NA	-	ND	ND	NA	ND	NA	ND	NA	5E-02	ND	ND	NA	NA	ND	NA	2E-01	2E-01
VP-6	4/26/2016	5	NA	NA	-	ND	ND	NA	ND	NA	ND	NA	2E-02	ND	ND	NA	NA	ND	NA	1E-01	2E-01
VP-7	4/26/2016	3	NA	NA	-	ND	ND	NA	ND	NA	ND	NA	5E-02	ND	ND	NA	NA	ND	NA	2E-01	2E-01
VP-8	4/26/2016	5	NA	NA	-	ND	ND	NA	ND	NA	ND	NA	3E-02	ND	ND	NA	NA	ND	NA	1E-01	2E-01
VP-9	4/26/2016	5	NA	NA	-	ND	ND	NA	ND	NA	ND	NA	1E-03	4E-05	ND	NA	NA	ND	NA	6E-02	6E-02
VP-9 Dup	4/26/2016	5	NA	NA	-	ND	ND	NA	ND	NA	ND	NA	1E-02	ND	ND	NA	NA	ND	NA	1E-01	1E-01
VP-1	8/13/2015	5	NA	NA	-	1E-06	6E-05	NA	3E-04	NA	1E-05	NA	8E-04	1E-05	5E-04	NA	NA	ND	NA	1E-01	1E-01
VP-2	8/13/2015	5	NA	NA	-	2E-06	1E-04	NA	2E-03	NA	3E-05	NA	1E-03	2E-05	3E-04	NA	NA	ND	NA	1E-01	1E-01
VP-3	8/13/2015	5	NA	NA	-	ND	3E-05	NA	ND	NA	ND	NA	9E-04	6E-06	ND	NA	NA	ND	NA	1E-01	1E-01
VP-4	8/13/2015	5	NA	NA	-	2E-06	2E-04	NA	5E-04	NA	3E-05	NA	1E-03	4E-05	ND	NA	NA	ND	NA	1E-01	1E-01
VP-5	8/13/2015	5	NA	NA	-	1E-06	1E-04	NA	8E-04	NA	2E-05	NA	7E-05	2E-05	ND	NA	NA	ND	NA	2E-01	2E-01
VP-6	8/13/2015	5	NA	NA	-	ND	3E-05	NA	ND	NA	ND	NA	2E-03	6E-06	ND	NA	NA	ND	NA	1E-01	1E-01
VP-6 Dup	8/13/2015	5	NA	NA	-	ND	3E-05	NA	ND	NA	ND	NA	2E-03	6E-06	ND	NA	NA	ND	NA	1E-01	1E-01
VP-7	8/13/2015	5	NA	NA	-	ND	3E-05	NA	ND	NA	ND	NA	2E-03	6E-06	ND	NA	NA	ND	NA	1E-01	1E-01
VP-8	8/13/2015	5	NA	NA	-	ND	3E-05	NA	ND	NA	6E-06	NA	2E-03	8E-06	ND	NA	NA	ND	NA	1E-01	1E-01

The Fehling Group, LLC

TABLE L-7b
Indoor Air Hazard Quotients (gray-shaded values) and Hazard Index Values (blue-shaded values)
~ Residential Receptor ~

Sample ID	Secondary Sample ID	Sample Depth (ft bgs)	Cyclohexane	Dichlorodifluoromethane	Ethanol	Ethylbenzene	m,p-Xylene	Methylene chloride	Naphthalene	n-Propylbenzene	o-Xylene	p-Isopropyltoluene	Tetrachloroethene	Toluene	Trichloroethene	Trichlorofluoromethane	Vinyl acetate	Vinyl chloride	2-Propanol	Gasoline Range Organics	Σ HQ = HI
VP-9	8/13/2015	5	*NA*	*NA*	-	6E-07	6E-05	*NA*	5E-04	*NA*	2E-05	*NA*	3E-03	6E-06	*ND*	*NA*	*NA*	*ND*	*NA*	1E-01	1E-01
VP-10	8/13/2015	5	*NA*	*NA*	-	1E-06	6E-05	*NA*	*ND*	*NA*	1E-05	*NA*	2E-05	2E-05	*ND*	*NA*	*NA*	*ND*	*NA*	8E-02	8E-02
VP-11	8/13/2015	5	*NA*	*NA*	-	1E-06	1E-04	*NA*	*ND*	*NA*	2E-05	*NA*	2E-03	4E-05	*ND*	*NA*	*NA*	*ND*	*NA*	2E-01	2E-01
VP-12	8/13/2015	5	*NA*	*NA*	-	6E-07	1E-04	*NA*	3E-04	*NA*	2E-05	*NA*	1E-03	1E-05	*ND*	*NA*	*NA*	*ND*	*NA*	1E-01	1E-01
SV1	11/27/2013	5	*NA*	*NA*	-	*NA*	*NA*	*NA*	*NA*	*NA*	*NA*	*NA*	*NA*	*NA*	*NA*	*NA*	*NA*	*NA*	*NA*	*ND*	0E+00
SV2	11/27/2013	5	*NA*	*NA*	-	*NA*	*NA*	*NA*	*NA*	*NA*	*NA*	*NA*	*NA*	*NA*	*NA*	*NA*	*NA*	*NA*	*NA*	*ND*	0E+00
SV3	11/27/2013	5	*NA*	*NA*	-	*NA*	*NA*	*NA*	*NA*	*NA*	*NA*	*NA*	*NA*	*NA*	*NA*	*NA*	*NA*	*NA*	*NA*	*ND*	0E+00
SV4	11/25/2013	5	*NA*	*NA*	-	*NA*	*NA*	*NA*	*NA*	*NA*	*NA*	*NA*	*NA*	*NA*	*NA*	*NA*	*NA*	*NA*	*NA*	*ND*	0E+00
SV5	11/27/2013	5	*NA*	*NA*	-	*NA*	*NA*	*NA*	*NA*	*NA*	*NA*	*NA*	*NA*	*NA*	*NA*	*NA*	*NA*	*NA*	*NA*	*ND*	0E+00
SV5 Dup	11/27/2013	5	*NA*	*NA*	-	*NA*	*NA*	*NA*	*NA*	*NA*	*NA*	*NA*	*NA*	*NA*	*NA*	*NA*	*NA*	*NA*	*NA*	*ND*	0E+00
SV6	11/25/2013	5	*NA*	*NA*	-	*NA*	*NA*	*NA*	*NA*	*NA*	*NA*	*NA*	*NA*	*NA*	*NA*	*NA*	*NA*	*NA*	*NA*	*ND*	0E+00
SV7	11/25/2013	5	*NA*	*NA*	-	*NA*	*NA*	*NA*	*NA*	*NA*	*NA*	*NA*	*NA*	*NA*	*NA*	*NA*	*NA*	*NA*	*NA*	*ND*	0E+00
SV8	11/25/2013	5	*NA*	*NA*	-	*NA*	*NA*	*NA*	*NA*	*NA*	*NA*	*NA*	*NA*	*NA*	*NA*	*NA*	*NA*	*NA*	*NA*	*ND*	0E+00
SV9	11/25/2013	5	*NA*	*NA*	*NA*	*NA*	*NA*	*NA*	*NA*	*NA*	*NA*	*NA*	*NA*	*NA*	*NA*	*NA*	*NA*	*NA*	*NA*	*ND*	0E+00
SV10	11/25/2013	5	*NA*	*NA*	-	*NA*	*NA*	*NA*	*NA*	*NA*	*NA*	*NA*	*NA*	*NA*	*NA*	*NA*	*NA*	*NA*	*NA*	*ND*	0E+00
SV11	11/25/2013	5	*NA*	*NA*	-	*NA*	*NA*	*NA*	*NA*	*NA*	*NA*	*NA*	*NA*	*NA*	*NA*	*NA*	*NA*	*NA*	*NA*	*ND*	0E+00
SV12	11/25/2013	5	*NA*	*NA*	-	*NA*	*NA*	*NA*	*NA*	*NA*	*NA*	*NA*	*NA*	*NA*	*NA*	*NA*	*NA*	*NA*	*NA*	*ND*	0E+00
SV13	11/25/2013	5	*NA*	*NA*	-	*NA*	*NA*	*NA*	*NA*	*NA*	*NA*	*NA*	*NA*	*NA*	*NA*	*NA*	*NA*	*NA*	*NA*	*ND*	0E+00
Ambient Air	11/27/2013	Ambient	*NA*	*NA*	-	*NA*	*NA*	*NA*	*NA*	*NA*	*NA*	*NA*	*NA*	*NA*	*NA*	*NA*	*NA*	*NA*	*NA*	*ND*	0E+00

The Fehling Group, LLC

TABLE L-7c

Trench Air Incremental Lifetime Cancer Risk (gray-shaded values)

and Cumulative Incremental Lifetime Cancer Risk Values (blue-shaded values)

~ Construction Worker Receptor ~

Sample ID	Secondary Sample ID	Sample Depth (ft bgs)	1,1,1-Trichloroethane	1,1-Dichloroethane	1,1,2-Trichloroethane	1,1-Dichloroethene	1,3,5-Trimethylbenzene	1,3-Dichlorobenzene	2,2,4-Trimethylpentane	2-Butanone	2-Hexanone	4-Ethyl Toluene	4-Methyl-2-pentanone	Acetone	Acetonitrile	Benzene	Carbon disulfide	Chlorobenzene	Chloroethane	Chloroform	Chloromethane
7-1-5	5/16/2017	5		*ND*	*ND*				*NA*							2E-09				*ND*	
7-3-5	5/16/2017	5		*ND*	4E-09				*NA*							*ND*				3E-09	
7-4-5	5/16/2017	5		*ND*	*ND*				*NA*							*ND*				4E-09	
7-4-5 Dup	5/16/2017	5		*ND*	*ND*				*NA*							*ND*				*ND*	
7-Am	5/16/2017	Ambient		*ND*	*ND*				*NA*							*ND*				*ND*	
7-Am Dup	5/16/2017	Ambient		*ND*	*ND*				*NA*							*ND*				*ND*	
VP-1	4/26/2016	5		*NA*	*NA*				*NA*							*ND*				*NA*	
VP-2	4/26/2016	5		*NA*	*NA*				*NA*							*ND*				*NA*	
VP-3	4/26/2016	5		*NA*	*NA*				*NA*							*ND*				*NA*	
VP-4	4/26/2016	5		*NA*	*NA*				*NA*							*ND*				*NA*	
VP-4 Dup	4/26/2016	5		*NA*	*NA*				*NA*							*ND*				*NA*	
VP-5	4/26/2016	3		*NA*	*NA*				*NA*							*ND*				*NA*	
VP-6	4/26/2016	5		*NA*	*NA*				*NA*							*ND*				*NA*	
VP-7	4/26/2016	3		*NA*	*NA*				*NA*							*ND*				*NA*	
VP-8	4/26/2016	5		*NA*	*NA*				*NA*							*ND*				*NA*	
VP-9	4/26/2016	5		*NA*	*NA*				*NA*							*ND*				*NA*	
VP-9 Dup	4/26/2016	5		*NA*	*NA*				-							*ND*				*NA*	
VP-1	8/13/2015	5		*NA*	*NA*				*NA*							5E-10				*NA*	
VP-2	8/13/2015	5		*NA*	*NA*				-							5E-10				*NA*	
VP-3	8/13/2015	5		*NA*	*NA*				-							*ND*				*NA*	
VP-4	8/13/2015	5		*NA*	*NA*				-							7E-10				*NA*	
VP-5	8/13/2015	5		*NA*	*NA*				-							9E-10				*NA*	
VP-6	8/13/2015	5		*NA*	*NA*				-							*ND*				*NA*	
VP-6 Dup	8/13/2015	5		*NA*	*NA*				*NA*							*ND*				*NA*	
VP-7	8/13/2015	5		*NA*	*NA*				-							*ND*				*NA*	
VP-8	8/13/2015	5		*NA*	*NA*				-							5E-10				*NA*	

NONCARCINOGENIC

The Fehling Group, LLC

TABLE L-7c

Trench Air Incremental Lifetime Cancer Risk (gray-shaded values)

and Cumulative Incremental Lifetime Cancer Risk Values (blue-shaded values)

~ Construction Worker Receptor ~

Sample ID	Secondary Sample ID	Sample Depth (ft bgs)	1,1,1-Trichloroethane	1,1-Dichloroethane	1,1,2-Trichloroethane	1,1-Dichloroethene	1,3,5-Trimethylbenzene	1,3-Dichlorobenzene	2,2,4-Trimethylpentane	2-Butanone	2-Hexanone	4-Ethyl Toluene	4-Methyl-2-pentanone	Acetone	Acetonitrile	Benzene	Carbon disulfide	Chlorobenzene	Chloroethane	Chloroform	Chloromethane
VP-9	8/13/2015	5	NONCARCINOGENIC	*NA*	*NA*	NONCARCINOGENIC	NONCARCINOGENIC	NONCARCINOGENIC	*NA*	NONCARCINOGENIC	NONCARCINOGENIC	NONCARCINOGENIC	NONCARCINOGENIC	NONCARCINOGENIC	NONCARCINOGENIC	*ND*	NONCARCINOGENIC	NONCARCINOGENIC	NONCARCINOGENIC	*NA*	NONCARCINOGENIC
VP-10	8/13/2015	5		*NA*	*NA*				*NA*							9E-10				*NA*	
VP-11	8/13/2015	5		*NA*	*NA*				*NA*							5E-10				*NA*	
VP-12	8/13/2015	5		*NA*	*NA*				*NA*							*ND*				*NA*	
SV1	11/27/2013	5		*NA*	*NA*				*NA*							*NA*				*NA*	
SV2	11/27/2013	5		*NA*	*NA*				-							*NA*				*NA*	
SV3	11/27/2013	5		*NA*	*NA*				*NA*							*NA*				*NA*	
SV4	11/25/2013	5		*NA*	*NA*				*NA*							*NA*				*NA*	
SV5	11/27/2013	5		*NA*	*NA*				-							*NA*				*NA*	
SV5 Dup	11/27/2013	5		*NA*	*NA*				*NA*							*NA*				*NA*	
SV6	11/25/2013	5		*NA*	*NA*				*NA*							*NA*				*NA*	
SV7	11/25/2013	5		*NA*	*NA*				*NA*							*NA*				*NA*	
SV8	11/25/2013	5		*NA*	*NA*				*NA*							*NA*				*NA*	
SV9	11/25/2013	5		*NA*	*NA*				*NA*							*NA*				*NA*	
SV10	11/25/2013	5		*NA*	*NA*				*NA*							*NA*				*NA*	
SV11	11/25/2013	5		*NA*	*NA*				*NA*							*NA*				*NA*	
SV12	11/25/2013	5		*NA*	*NA*				*NA*							*NA*				*NA*	
SV13	11/25/2013	5		*NA*	*NA*				*NA*							*NA*				*NA*	
Ambient Air	11/27/2013	Ambient		*NA*	*NA*				*NA*							*NA*				*NA*	

The Fehling Group, LLC

TABLE L-7c

Trench Air Incremental Lifetime Cancer Risk (gray-shaded values)

and Cumulative Incremental Lifetime Cancer Risk Values (blue-shaded values)

~ Construction Worker Receptor ~

Sample ID	Secondary Sample ID	Sample Depth (ft bgs)	Cyclohexane	Dichlorodifluoromethane	Ethanol	Ethylbenzene	m,p-Xylene	Methylene chloride	Naphthalene	n-Propylbenzene	o-Xylene	p-Isopropyltoluene	Tetrachloroethene	Toluene	Trichloroethene	Trichlorofluoromethane	Vinyl acetate	Vinyl chloride	2-Propanol	Gasoline Range Organics	ILCR
7-1-5	5/16/2017	5				*ND*		*ND*	*ND*				1E-08		*ND*			*ND*			1E-08
7-3-5	5/16/2017	5				*ND*		*ND*	*ND*				1E-08		9E-10			*ND*			2E-08
7-4-5	5/16/2017	5				*ND*		*ND*	*ND*				*ND*		*ND*			*ND*			4E-09
7-4-5 Dup	5/16/2017	5				*ND*		*ND*	*ND*				*ND*		*ND*			*ND*			0E+00
7-Am	5/16/2017	Ambient				*ND*		*ND*	*ND*				*ND*		*ND*			*ND*			0E+00
7-Am Dup	5/16/2017	Ambient				*ND*		*ND*	*ND*				*ND*		*ND*			*ND*			0E+00
VP-1	4/26/2016	5				*ND*		*NA*	*ND*				8E-09		*ND*			*ND*			8E-09
VP-2	4/26/2016	5				*ND*		*NA*	*ND*				7E-09		*ND*			*ND*			7E-09
VP-3	4/26/2016	5				*ND*		*NA*	*ND*				1E-08		*ND*			*ND*			1E-08
VP-4	4/26/2016	5				*ND*		*NA*	*ND*				3E-08		5E-10			*ND*			3E-08
VP-4 Dup	4/26/2016	5				*ND*		*NA*	*ND*				1E-08		*ND*			*ND*			1E-08
VP-5	4/26/2016	3				*ND*		*NA*	*ND*				1E-07		*ND*			*ND*			1E-07
VP-6	4/26/2016	5				*ND*		*NA*	*ND*				4E-08		*ND*			*ND*			4E-08
VP-7	4/26/2016	3				*ND*		*NA*	*ND*				1E-07		*ND*			*ND*			1E-07
VP-8	4/26/2016	5				*ND*		*NA*	*ND*				7E-08		*ND*			*ND*			7E-08
VP-9	4/26/2016	5				*ND*		*NA*	*ND*				3E-09		*ND*			*ND*			3E-09
VP-9 Dup	4/26/2016	5				*ND*		*NA*	*ND*				3E-08		*ND*			*ND*			3E-08
VP-1	8/13/2015	5				3E-11		*NA*	4E-10				2E-09		5E-11			*ND*			3E-09
VP-2	8/13/2015	5				5E-11		*NA*	2E-09				3E-09		2E-11			*ND*			6E-09
VP-3	8/13/2015	5				*ND*		*NA*	*ND*				2E-09		*ND*			*ND*			2E-09
VP-4	8/13/2015	5				5E-11		*NA*	5E-10				3E-09		*ND*			*ND*			5E-09
VP-5	8/13/2015	5				3E-11		*NA*	9E-10				2E-10		*ND*			*ND*			2E-09
VP-6	8/13/2015	5				*ND*		*NA*	*ND*				6E-09		*ND*			*ND*			6E-09
VP-6 Dup	8/13/2015	5				*ND*		*NA*	*ND*				5E-09		*ND*			*ND*			5E-09
VP-7	8/13/2015	5				*ND*		*NA*	*ND*				5E-09		*ND*			*ND*			5E-09
VP-8	8/13/2015	5				*ND*		*NA*	*ND*				4E-09		*ND*			*ND*			5E-09

NONCARCINOGENIC

The Fehling Group, LLC

TABLE L-7c

Trench Air Incremental Lifetime Cancer Risk (gray-shaded values)

and Cumulative Incremental Lifetime Cancer Risk Values (blue-shaded values)

~ Construction Worker Receptor ~

Sample ID	Secondary Sample ID	Sample Depth (ft bgs)	Cyclohexane	Dichlorodifluoromethane	Ethanol	Ethylbenzene	m,p-Xylene	Methylene chloride	Naphthalene	n-Propylbenzene	o-Xylene	p-Isopropyltoluene	Tetrachloroethene	Toluene	Trichloroethene	Trichlorofluoromethane	Vinyl acetate	Vinyl chloride	2-Propanol	Gasoline Range Organics	ILCR
VP-9	8/13/2015	5	NONCARCINOGENIC	NONCARCINOGENIC	NONCARCINOGENIC	2E-11	NONCARCINOGENIC	NA	5E-10	NONCARCINOGENIC	NONCARCINOGENIC	NONCARCINOGENIC	7E-09	NONCARCINOGENIC	ND	NONCARCINOGENIC	NONCARCINOGENIC	ND	NONCARCINOGENIC	NONCARCINOGENIC	8E-09
VP-10	8/13/2015	5				3E-11		NA	ND				5E-11		ND			ND			1E-09
VP-11	8/13/2015	5				3E-11		NA	ND				5E-09		ND			ND			5E-09
VP-12	8/13/2015	5				2E-11		NA	4E-10				3E-09		ND			ND			4E-09
SV1	11/27/2013	5				NA		NA	NA				NA		NA			NA			0E+00
SV2	11/27/2013	5				NA		NA	NA				NA		NA			NA			0E+00
SV3	11/27/2013	5				NA		NA	NA				NA		NA			NA			0E+00
SV4	11/25/2013	5				NA		NA	NA				NA		NA			NA			0E+00
SV5	11/27/2013	5				NA		NA	NA				NA		NA			NA			0E+00
SV5 Dup	11/27/2013	5				NA		NA	NA				NA		NA			NA			0E+00
SV6	11/25/2013	5				NA		NA	NA				NA		NA			NA			0E+00
SV7	11/25/2013	5				NA		NA	NA				NA		NA			NA			0E+00
SV8	11/25/2013	5				NA		NA	NA				NA		NA			NA			0E+00
SV9	11/25/2013	5				NA		NA	NA				NA		NA			NA			0E+00
SV10	11/25/2013	5				NA		NA	NA				NA		NA			NA			0E+00
SV11	11/25/2013	5				NA		NA	NA				NA		NA			NA			0E+00
SV12	11/25/2013	5				NA		NA	NA				NA		NA			NA			0E+00
SV13	11/25/2013	5				NA		NA	NA				NA		NA			NA			0E+00
Ambient Air	11/27/2013	Ambient				NA		NA	NA				NA		NA			NA			0E+00

The Fehling Group, LLC

TABLE L-7d
Trench Air Hazard Quotients (gray-shaded values) and Hazard Index Values (blue-shaded values)
~ Construction Worker Receptor ~

Sample ID	Secondary Sample ID	Sample Depth (ft bgs)	1,1,1-Trichloroethane	1,1-Dichloroethane	1,1,2-Trichloroethane	1,1-Dichloroethene	1,3,5-Trimethylbenzene	1,3-Dichlorobenzene	2,2,4-Trimethylpentane	2-Butanone	2-Hexanone	4-Ethyl Toluene	4-Methyl-2-pentanone	Acetone	Acetonitrile	Benzene	Carbon disulfide	Chlorobenzene	Chloroethane	Chloroform	Chloromethane
7-1-5	5/16/2017	5	ND	ND	ND	ND	ND	ND	NA	3E-06	ND	ND	ND	1E-06	NA	2E-03	3E-05	ND	ND	ND	ND
7-3-5	5/16/2017	5	ND	ND	9E-02	9E-04	ND	ND	NA	ND	ND	ND	ND	ND	NA	ND	ND	ND	ND	9E-05	ND
7-4-5	5/16/2017	5	ND	ND	ND	ND	ND	ND	NA	ND	ND	ND	ND	ND	NA	ND	4E-04	ND	ND	1E-04	ND
7-4-5 Dup	5/16/2017	5	ND	ND	ND	ND	ND	ND	NA	2E-06	ND	ND	ND	1E-06	NA	ND	3E-04	ND	ND	ND	ND
7-Am	5/16/2017	Ambient	ND	ND	ND	ND	ND	ND	NA	ND	ND	ND	ND	2E-04	NA	ND	ND	ND	ND	ND	ND
7-Am Dup	5/16/2017	Ambient	ND	ND	ND	ND	ND	ND	NA	5E-04	ND	ND	ND	ND	NA	ND	ND	ND	ND	ND	ND
VP-1	4/26/2016	5	ND	NA	NA	NA	NA	NA	NA	NA	NA	NA	NA	NA	NA	ND	NA	NA	NA	NA	NA
VP-2	4/26/2016	5	ND	NA	NA	NA	NA	NA	NA	NA	NA	NA	NA	NA	NA	ND	NA	NA	NA	NA	NA
VP-3	4/26/2016	5	ND	NA	NA	NA	NA	NA	NA	NA	NA	NA	NA	NA	NA	ND	NA	NA	NA	NA	NA
VP-4	4/26/2016	5	ND	NA	NA	NA	NA	NA	NA	NA	NA	NA	NA	NA	NA	ND	NA	NA	NA	NA	NA
VP-4 Dup	4/26/2016	5	ND	NA	NA	NA	NA	NA	NA	NA	NA	NA	NA	NA	NA	ND	NA	NA	NA	NA	NA
VP-5	4/26/2016	3	ND	NA	NA	NA	NA	NA	NA	NA	NA	NA	NA	NA	NA	ND	NA	NA	NA	NA	NA
VP-6	4/26/2016	5	ND	NA	NA	NA	NA	NA	NA	NA	NA	NA	NA	NA	NA	ND	NA	NA	NA	NA	NA
VP-7	4/26/2016	3	ND	NA	NA	NA	NA	NA	NA	NA	NA	NA	NA	NA	NA	ND	NA	NA	NA	NA	NA
VP-8	4/26/2016	5	ND	NA	NA	NA	NA	NA	NA	NA	NA	NA	NA	NA	NA	ND	NA	NA	NA	NA	NA
VP-9	4/26/2016	5	ND	NA	NA	NA	NA	NA	NA	NA	NA	NA	NA	NA	NA	ND	NA	NA	NA	NA	NA
VP-9 Dup	4/26/2016	5	ND	NA	NA	NA	NA	NA	-	NA	NA	NA	NA	NA	NA	ND	NA	NA	NA	NA	NA
VP-1	8/13/2015	5	ND	NA	NA	NA	NA	NA	NA	NA	NA	NA	NA	NA	NA	4E-04	NA	NA	NA	NA	NA
VP-2	8/13/2015	5	1E-06	NA	NA	NA	NA	NA	-	NA	NA	NA	NA	NA	NA	4E-04	NA	NA	NA	NA	NA
VP-3	8/13/2015	5	ND	NA	NA	NA	NA	NA	-	NA	NA	NA	NA	NA	NA	ND	NA	NA	NA	NA	NA
VP-4	8/13/2015	5	1E-06	NA	NA	NA	NA	NA	-	NA	NA	NA	NA	NA	NA	6E-04	NA	NA	NA	NA	NA
VP-5	8/13/2015	5	1E-05	NA	NA	NA	NA	NA	-	NA	NA	NA	NA	NA	NA	8E-04	NA	NA	NA	NA	NA
VP-6	8/13/2015	5	2E-06	NA	NA	NA	NA	NA	-	NA	NA	NA	NA	NA	NA	ND	NA	NA	NA	NA	NA
VP-6 Dup	8/13/2015	5	2E-06	NA	NA	NA	NA	NA	NA	NA	NA	NA	NA	NA	NA	ND	NA	NA	NA	NA	NA
VP-7	8/13/2015	5	1E-06	NA	NA	NA	NA	NA	-	NA	NA	NA	NA	NA	NA	ND	NA	NA	NA	NA	NA
VP-8	8/13/2015	5	2E-06	NA	NA	NA	NA	NA	-	NA	NA	NA	NA	NA	NA	4E-04	NA	NA	NA	NA	NA

The Fehling Group, LLC

TABLE L-7d
Trench Air Hazard Quotients (gray-shaded values) and Hazard Index Values (blue-shaded values)
~ Construction Worker Receptor ~

Sample ID	Secondary Sample ID	Sample Depth (ft bgs)	1,1,1-Trichloroethane	1,1-Dichloroethane	1,1,2-Trichloroethane	1,1-Dichloroethene	1,3,5-Trimethylbenzene	1,3-Dichlorobenzene	2,2,4-Trimethylpentane	2-Butanone	2-Hexanone	4-Ethyl Toluene	4-Methyl-2-pentanone	Acetone	Acetonitrile	Benzene	Carbon disulfide	Chlorobenzene	Chloroethane	Chloroform	Chloromethane
VP-9	8/13/2015	5	**2E-06**	*NA*	*NA*	*NA*	*NA*	*NA*	*NA*	*NA*	*NA*	*NA*	*NA*	*NA*	*NA*	*ND*	*NA*	*NA*	*NA*	*NA*	*NA*
VP-10	8/13/2015	5	*ND*	*NA*	*NA*	*NA*	*NA*	*NA*	*NA*	*NA*	*NA*	*NA*	*NA*	*NA*	*NA*	**8E-04**	*NA*	*NA*	*NA*	*NA*	*NA*
VP-11	8/13/2015	5	**1E-06**	*NA*	*NA*	*NA*	*NA*	*NA*	*NA*	*NA*	*NA*	*NA*	*NA*	*NA*	*NA*	**4E-04**	*NA*	*NA*	*NA*	*NA*	*NA*
VP-12	8/13/2015	5	**8E-07**	*NA*	*NA*	*NA*	*NA*	*NA*	*NA*	*NA*	*NA*	*NA*	*NA*	*NA*	*NA*	*ND*	*NA*	*NA*	*NA*	*NA*	*NA*
SV1	11/27/2013	5	*NA*	*NA*	*NA*	*NA*	*NA*	*NA*	*NA*	*NA*	*NA*	*NA*	*NA*	*NA*	*NA*	*NA*	*NA*	*NA*	*NA*	*NA*	*NA*
SV2	11/27/2013	5	*NA*	*NA*	*NA*	*NA*	*NA*	*NA*	-	*NA*	*NA*	*NA*	*NA*	*NA*	*NA*	*NA*	*NA*	*NA*	*NA*	*NA*	*NA*
SV3	11/27/2013	5	*NA*	*NA*	*NA*	*NA*	*NA*	*NA*	*NA*	*NA*	*NA*	*NA*	*NA*	*NA*	*NA*	*NA*	*NA*	*NA*	*NA*	*NA*	*NA*
SV4	11/25/2013	5	*NA*	*NA*	*NA*	*NA*	*NA*	*NA*	*NA*	*NA*	*NA*	*NA*	*NA*	*NA*	*NA*	*NA*	*NA*	*NA*	*NA*	*NA*	*NA*
SV5	11/27/2013	5	*NA*	*NA*	*NA*	*NA*	*NA*	*NA*	-	*NA*	*NA*	*NA*	*NA*	*NA*	*NA*	*NA*	*NA*	*NA*	*NA*	*NA*	*NA*
SV5 Dup	11/27/2013	5	*NA*	*NA*	*NA*	*NA*	*NA*	*NA*	*NA*	*NA*	*NA*	*NA*	*NA*	*NA*	*NA*	*NA*	*NA*	*NA*	*NA*	*NA*	*NA*
SV6	11/25/2013	5	*NA*	*NA*	*NA*	*NA*	*NA*	*NA*	*NA*	*NA*	*NA*	*NA*	*NA*	*NA*	*NA*	*NA*	*NA*	*NA*	*NA*	*NA*	*NA*
SV7	11/25/2013	5	*NA*	*NA*	*NA*	*NA*	*NA*	*NA*	*NA*	*NA*	*NA*	*NA*	*NA*	*NA*	*NA*	*NA*	*NA*	*NA*	*NA*	*NA*	*NA*
SV8	11/25/2013	5	*NA*	*NA*	*NA*	*NA*	*NA*	*NA*	*NA*	*NA*	*NA*	*NA*	*NA*	*NA*	*NA*	*NA*	*NA*	*NA*	*NA*	*NA*	*NA*
SV9	11/25/2013	5	*NA*	*NA*	*NA*	*NA*	*NA*	*NA*	*NA*	*NA*	*NA*	*NA*	*NA*	*NA*	*NA*	*NA*	*NA*	*NA*	*NA*	*NA*	*NA*
SV10	11/25/2013	5	*NA*	*NA*	*NA*	*NA*	*NA*	*NA*	*NA*	*NA*	*NA*	*NA*	*NA*	*NA*	*NA*	*NA*	*NA*	*NA*	*NA*	*NA*	*NA*
SV11	11/25/2013	5	*NA*	*NA*	*NA*	*NA*	*NA*	*NA*	*NA*	*NA*	*NA*	*NA*	*NA*	*NA*	*NA*	*NA*	*NA*	*NA*	*NA*	*NA*	*NA*
SV12	11/25/2013	5	*NA*	*NA*	*NA*	*NA*	*NA*	*NA*	*NA*	*NA*	*NA*	*NA*	*NA*	*NA*	*NA*	*NA*	*NA*	*NA*	*NA*	*NA*	*NA*
SV13	11/25/2013	5	*NA*	*NA*	*NA*	*NA*	*NA*	*NA*	*NA*	*NA*	*NA*	*NA*	*NA*	*NA*	*NA*	*NA*	*NA*	*NA*	*NA*	*NA*	*NA*
Ambient Air	11/27/2013	Ambient	*NA*	*NA*	*NA*	*NA*	*NA*	*NA*	*NA*	*NA*	*NA*	*NA*	*NA*	*NA*	*NA*	*NA*	*NA*	*NA*	*NA*	*NA*	*NA*

The Fehling Group, LLC

TABLE L-7d

Trench Air Hazard Quotients (gray-shaded values) and Hazard Index Values (blue-shaded values)

~ Construction Worker Receptor ~

Sample ID	Secondary Sample ID	Sample Depth (ft bgs)	Cyclohexane	Dichlorodifluoromethane	Ethanol	Ethylbenzene	m,p-Xylene	Methylene chloride	Naphthalene	n-Propylbenzene	o-Xylene	p-Isopropyltoluene	Tetrachloroethene	Toluene	Trichloroethene	Trichlorofluoromethane	Vinyl acetate	Vinyl chloride	2-Propanol	Gasoline Range Organics	Σ HQ = HI
7-1-5	5/16/2017	5	NA	ND	NA	ND	ND	ND	ND	NA	ND	NA	3E-03	2E-05	ND	2E-03	ND	ND	NA	NA	7E-03
7-3-5	5/16/2017	5	NA	ND	NA	ND	ND	ND	ND	NA	ND	NA	4E-03	ND	8E-03	7E-02	ND	ND	NA	NA	2E-01
7-4-5	5/16/2017	5	NA	ND	NA	ND	7E-04	ND	ND	NA	ND	NA	ND	4E-05	ND	5E-04	ND	ND	NA	NA	2E-03
7-4-5 Dup	5/16/2017	5	NA	ND	NA	ND	6E-04	ND	ND	NA	ND	NA	ND	4E-05	ND	4E-04	ND	ND	NA	NA	1E-03
7-Am	5/16/2017	Ambient	NA	ND	NA	ND	ND	ND	ND	NA	ND	NA	ND	ND	ND	ND	ND	ND	NA	NA	2E-04
7-Am Dup	5/16/2017	Ambient	NA	ND	NA	ND	ND	ND	ND	NA	ND	NA	ND	ND	ND	ND	ND	ND	NA	NA	5E-04
VP-1	4/26/2016	5	NA	NA	NA	ND	ND	NA	ND	NA	ND	NA	3E-03	ND	ND	NA	NA	ND	NA	2E+00	2E+00
VP-2	4/26/2016	5	NA	NA	NA	ND	ND	NA	ND	NA	ND	NA	2E-03	ND	ND	NA	NA	ND	NA	4E-01	4E-01
VP-3	4/26/2016	5	NA	NA	NA	ND	ND	NA	ND	NA	ND	NA	3E-03	ND	ND	NA	NA	ND	NA	5E-01	5E-01
VP-4	4/26/2016	5	NA	NA	NA	ND	ND	NA	ND	NA	ND	NA	8E-03	ND	4E-03	NA	NA	ND	NA	1E-01	1E-01
VP-4 Dup	4/26/2016	5	NA	NA	NA	ND	ND	NA	ND	NA	ND	NA	4E-03	ND	ND	NA	NA	ND	NA	4E-02	4E-02
VP-5	4/26/2016	3	NA	NA	-	ND	ND	NA	ND	NA	ND	NA	4E-02	ND	ND	NA	NA	ND	NA	1E-01	2E-01
VP-6	4/26/2016	5	NA	NA	-	ND	ND	NA	ND	NA	ND	NA	1E-02	ND	ND	NA	NA	ND	NA	1E-01	1E-01
VP-7	4/26/2016	3	NA	NA	-	ND	ND	NA	ND	NA	ND	NA	3E-02	ND	ND	NA	NA	ND	NA	1E-01	2E-01
VP-8	4/26/2016	5	NA	NA	-	ND	ND	NA	ND	NA	ND	NA	2E-02	ND	ND	NA	NA	ND	NA	1E-01	1E-01
VP-9	4/26/2016	5	NA	NA	-	ND	ND	NA	ND	NA	ND	NA	1E-03	3E-05	ND	NA	NA	ND	NA	5E-02	5E-02
VP-9 Dup	4/26/2016	5	NA	NA	-	ND	ND	NA	ND	NA	ND	NA	8E-03	ND	ND	NA	NA	ND	NA	8E-02	9E-02
VP-1	8/13/2015	5	NA	NA	-	9E-07	4E-05	NA	3E-04	NA	9E-06	NA	6E-04	1E-05	4E-04	NA	NA	ND	NA	1E-01	1E-01
VP-2	8/13/2015	5	NA	NA	-	1E-06	9E-05	NA	1E-03	NA	2E-05	NA	1E-03	1E-05	2E-04	NA	NA	ND	NA	9E-02	1E-01
VP-3	8/13/2015	5	NA	NA	-	ND	3E-05	NA	ND	NA	ND	NA	6E-04	5E-06	ND	NA	NA	ND	NA	1E-01	1E-01
VP-4	8/13/2015	5	NA	NA	-	1E-06	1E-04	NA	4E-04	NA	3E-05	NA	1E-03	3E-05	ND	NA	NA	ND	NA	1E-01	1E-01
VP-5	8/13/2015	5	NA	NA	-	9E-07	9E-05	NA	6E-04	NA	1E-05	NA	5E-05	2E-05	ND	NA	NA	ND	NA	1E-01	1E-01
VP-6	8/13/2015	5	NA	NA	-	ND	2E-05	NA	ND	NA	ND	NA	2E-03	5E-06	ND	NA	NA	ND	NA	1E-01	1E-01
VP-6 Dup	8/13/2015	5	NA	NA	-	ND	2E-05	NA	ND	NA	ND	NA	1E-03	5E-06	ND	NA	NA	ND	NA	1E-01	1E-01
VP-7	8/13/2015	5	NA	NA	-	ND	3E-05	NA	ND	NA	ND	NA	1E-03	5E-06	ND	NA	NA	ND	NA	1E-01	1E-01
VP-8	8/13/2015	5	NA	NA	-	ND	3E-05	NA	ND	NA	4E-06	NA	1E-03	7E-06	ND	NA	NA	ND	NA	1E-01	1E-01

The Fehling Group, LLC

TABLE L-7d
Trench Air Hazard Quotients (gray-shaded values) and Hazard Index Values (blue-shaded values)
~ Construction Worker Receptor ~

Sample ID	Secondary Sample ID	Sample Depth (ft bgs)	Cyclohexane	Dichlorodifluoromethane	Ethanol	Ethylbenzene	m,p-Xylene	Methylene chloride	Naphthalene	n-Propylbenzene	o-Xylene	p-Isopropyltoluene	Tetrachloroethene	Toluene	Trichloroethene	Trichlorofluoromethane	Vinyl acetate	Vinyl chloride	2-Propanol	Gasoline Range Organics	Σ HQ = HI
VP-9	8/13/2015	5	*NA*	*NA*	-	**4E-07**	**4E-05**	*NA*	**4E-04**	*NA*	**1E-05**	*NA*	**2E-03**	**5E-06**	*ND*	*NA*	*NA*	*ND*	*NA*	**1E-01**	**1E-01**
VP-10	8/13/2015	5	*NA*	*NA*	-	**9E-07**	**4E-05**	*NA*	*ND*	*NA*	**9E-06**	*NA*	**2E-05**	**2E-05**	*ND*	*NA*	*NA*	*ND*	*NA*	**7E-02**	**7E-02**
VP-11	8/13/2015	5	*NA*	*NA*	-	**9E-07**	**9E-05**	*NA*	*ND*	*NA*	**2E-05**	*NA*	**1E-03**	**3E-05**	*ND*	*NA*	*NA*	*ND*	*NA*	**2E-01**	**2E-01**
VP-12	8/13/2015	5	*NA*	*NA*	-	**4E-07**	**9E-05**	*NA*	**3E-04**	*NA*	**2E-05**	*NA*	**1E-03**	**8E-06**	*ND*	*NA*	*NA*	*ND*	*NA*	**1E-01**	**1E-01**
SV1	11/27/2013	5	*NA*	*NA*	-	*NA*	*NA*	*NA*	*NA*	*NA*	*NA*	*NA*	*NA*	*NA*	*NA*	*NA*	*NA*	*NA*	*NA*	*ND*	**0E+00**
SV2	11/27/2013	5	*NA*	*NA*	-	*NA*	*NA*	*NA*	*NA*	*NA*	*NA*	*NA*	*NA*	*NA*	*NA*	*NA*	*NA*	*NA*	*NA*	*ND*	**0E+00**
SV3	11/27/2013	5	*NA*	*NA*	-	*NA*	*NA*	*NA*	*NA*	*NA*	*NA*	*NA*	*NA*	*NA*	*NA*	*NA*	*NA*	*NA*	*NA*	*ND*	**0E+00**
SV4	11/25/2013	5	*NA*	*NA*	-	*NA*	*NA*	*NA*	*NA*	*NA*	*NA*	*NA*	*NA*	*NA*	*NA*	*NA*	*NA*	*NA*	*NA*	*ND*	**0E+00**
SV5	11/27/2013	5	*NA*	*NA*	-	*NA*	*NA*	*NA*	*NA*	*NA*	*NA*	*NA*	*NA*	*NA*	*NA*	*NA*	*NA*	*NA*	*NA*	*ND*	**0E+00**
SV5 Dup	11/27/2013	5	*NA*	*NA*	-	*NA*	*NA*	*NA*	*NA*	*NA*	*NA*	*NA*	*NA*	*NA*	*NA*	*NA*	*NA*	*NA*	*NA*	*ND*	**0E+00**
SV6	11/25/2013	5	*NA*	*NA*	-	*NA*	*NA*	*NA*	*NA*	*NA*	*NA*	*NA*	*NA*	*NA*	*NA*	*NA*	*NA*	*NA*	*NA*	*ND*	**0E+00**
SV7	11/25/2013	5	*NA*	*NA*	-	*NA*	*NA*	*NA*	*NA*	*NA*	*NA*	*NA*	*NA*	*NA*	*NA*	*NA*	*NA*	*NA*	*NA*	*ND*	**0E+00**
SV8	11/25/2013	5	*NA*	*NA*	-	*NA*	*NA*	*NA*	*NA*	*NA*	*NA*	*NA*	*NA*	*NA*	*NA*	*NA*	*NA*	*NA*	*NA*	*ND*	**0E+00**
SV9	11/25/2013	5	*NA*	*NA*	*NA*	*NA*	*NA*	*NA*	*NA*	*NA*	*NA*	*NA*	*NA*	*NA*	*NA*	*NA*	*NA*	*NA*	*NA*	*ND*	**0E+00**
SV10	11/25/2013	5	*NA*	*NA*	-	*NA*	*NA*	*NA*	*NA*	*NA*	*NA*	*NA*	*NA*	*NA*	*NA*	*NA*	*NA*	*NA*	*NA*	*ND*	**0E+00**
SV11	11/25/2013	5	*NA*	*NA*	-	*NA*	*NA*	*NA*	*NA*	*NA*	*NA*	*NA*	*NA*	*NA*	*NA*	*NA*	*NA*	*NA*	*NA*	*ND*	**0E+00**
SV12	11/25/2013	5	*NA*	*NA*	-	*NA*	*NA*	*NA*	*NA*	*NA*	*NA*	*NA*	*NA*	*NA*	*NA*	*NA*	*NA*	*NA*	*NA*	*ND*	**0E+00**
SV13	11/25/2013	5	*NA*	*NA*	-	*NA*	*NA*	*NA*	*NA*	*NA*	*NA*	*NA*	*NA*	*NA*	*NA*	*NA*	*NA*	*NA*	*NA*	*ND*	**0E+00**
Ambient Air	11/27/2013	Ambient	*NA*	*NA*	-	*NA*	*NA*	*NA*	*NA*	*NA*	*NA*	*NA*	*NA*	*NA*	*NA*	*NA*	*NA*	*NA*	*NA*	*ND*	**0E+00**

The Fehling Group, LLC

ATTACHMENT M

Tables for PARC Area 8

TABLE M-1

Soil Summary for PARC Area 8 - Metals (0 to 10 ft bgs)

~ in units of mg/kg (wet weight basis) ~

Boring ID	Sample ID	Sample Collection Date	Sample Depth (ft bgs)	Antimony	Arsenic	Barium	Beryllium	Cadmium	Chromium	Hexavalent Chromium	Cobalt	Copper	Lead	Mercury	Molybdenum	Nickel	Selenium	Silver	Thallium	Vanadium	Zinc
8-1	8-1-0.5	05/16/2017	0.5	-	-	-	-	-	-	-	-	-	250	-	-	-	-	-	-	-	-
	8-1-1.0	05/16/2017	1.0	-	-	-	-	-	-	-	-	-	130	-	-	-	-	-	-	-	-
	8-1-3.0	05/16/2017	3.0	-	-	-	-	-	-	-	-	-	3.6	-	-	-	-	-	-	-	-
	8-1-5.0	05/16/2017	5.0	-	-	-	-	-	-	-	-	-	2.8	-	-	-	-	-	-	-	-
8-2	8-2-0.5	05/16/2017	0.5	-	-	-	-	-	-	-	-	-	44	-	-	-	-	-	-	-	-
	8-2-1.0	05/16/2017	1.0	-	-	-	-	-	-	-	-	-	3.3	-	-	-	-	-	-	-	-
	8-2-3.0	05/16/2017	3.0	-	-	-	-	-	-	-	-	-	9.3	-	-	-	-	-	-	-	-
	8-2-5.0	05/16/2017	5.0	-	-	-	-	-	-	-	-	-	37	-	-	-	-	-	-	-	-
8-3	8-3-0.5	05/16/2017	0.5	*ND*	2.4	110	*ND*	*ND*	12	-	6.9	140	49	*ND*	*ND*	9.6	*ND*	*ND*	*ND*	28	120
	8-3-1.0	05/16/2017	1.0	*ND*	1.5	70	*ND*	*ND*	7.3	-	4.9	34	35	*ND*	*ND*	7.4	*ND*	*ND*	*ND*	21	65
	8-3-3.0	05/16/2017	3.0	*ND*	2.6	110	*ND*	1.70	11	-	6.0	41	65	0.11	*ND*	12	1.2	*ND*	*ND*	23	210
	8-3-5.0	05/16/2017	5.0	*ND*	2.3	68	*ND*	*ND*	22	*ND*	12	23	5.9	0.14	*ND*	20	*ND*	*ND*	*ND*	44	52
L-1	L-1 @ 1'	02/1/2016	1.0	8.9	4.3	530	*ND*	*ND*	15	-	7.4	85	310	*ND*	*ND*	13	*ND*	*ND*	*ND*	32	870
	L-1 @ 3'	02/1/2016	3.0	*ND*	2.9	120	*ND*	*ND*	14	-	7.8	19	4.6	0.20	*ND*	9.6	*ND*	*ND*	*ND*	29	50
	L-1 @ 5'	02/1/2016	5.0	-	-	-	-	-	-	-	-	-	-	-	-	-	-	-	-	-	-
L-1	L-1 @ 1'	02/26/2016	1.0	-	-	-	-	-	-	-	-	-	-	-	-	-	-	-	-	-	-
	L-1 @ 2'	02/26/2016	2.0	*ND*	2.3	140	*ND*	*ND*	12	-	6.8	20	20	*ND*	*ND*	9.6	*ND*	*ND*	*ND*	29	99
	L-1 @ 3'	02/26/2016	3.0	*ND*	2.6	160	*ND*	*ND*	12	-	6.7	20	18	0.11	*ND*	10	*ND*	*ND*	*ND*	28	87
A-13-17	A17@5'	11/16/2013	5.0	*ND*	2.0	84	*ND*	1.4	7.1	-	3.6	7.4	*ND*	0.03	*ND*	5.2	*ND*	*ND*	*ND*	23	27
	A17@10'	11/16/2013	10.0	-	-	-	-	-	-	-	-	-	-	-	-	-	-	-	-	-	-
	# of non-detects =>			**8**	**0**	**0**	**9**	**7**	**0**	**1**	**0**	**0**	**1**	**4**	**9**	**0**	**8**	**9**	**9**	**0**	**0**
	# of detects =>			**1**	**9**	**9**	**0**	**2**	**9**	**0**	**9**	**9**	**16**	**5**	**0**	**9**	**1**	**0**	**0**	**9**	**9**
	# of samples =>			**9**	**9**	**9**	**9**	**9**	**9**	**1**	**9**	**9**	**17**	**9**	**9**	**9**	**9**	**9**	**9**	**9**	**9**
	frequency of detection =>			**11%**	**100%**	**100%**	**0%**	**22%**	**100%**	**0%**	**100%**	**100%**	**94%**	**56%**	**0%**	**100%**	**11%**	**0%**	**0%**	**100%**	**100%**
	minimum detected =>			**8.9**	**1.5**	**68**	**-**	**1.4**	**7.1**	**-**	**3.6**	**7.4**	**2.8**	**0.03**	**-**	**5.2**	**1.2**	**-**	**-**	**21**	**27**
	maximum detected =>			**8.9**	**4.3**	**530**	**-**	**1.7**	**22**	**-**	**12**	**140**	**310**	**0.2**	**-**	**20**	**1.2**	**-**	**-**	**44**	**870**

The Fehling Group, LLC

TABLE M-2

Soil Summary for PARC Area 8 - TPH, VOCs, SVOCs, PCBs, OCPs, OPPs, and Chlorinated Herbicides (wet weight basis)

(0 to 10 ft bgs)

Boring ID	Sample ID	Sample Collection Date	Sample Depth (ft bgs)	TPH GRO (mg/kg)	TPH DRO (mg/kg)	TPH ORO (mg/kg)	VOCs (µg/kg)	SVOCs (µg/kg)	PCBs (µg/kg)	OCPs (µg/kg)	OPPs (µg/kg)	Chlorinated Herbicides (µg/kg)
8-1	8-1-0.5	05/16/2017	0.5	-	-	-	-	-	-	-	-	-
	8-1-1.0	05/16/2017	1.0	-	-	-	-	-	-	-	-	-
	8-1-3.0	05/16/2017	3.0	-	-	-	-	-	-	-	-	-
	8-1-5.0	05/16/2017	5.0	-	-	-	-	-	-	-	-	-
8-2	8-2-0.5	05/16/2017	0.5	-	-	-	-	-	-	-	-	-
	8-2-1.0	05/16/2017	1.0	-	-	-	-	-	-	-	-	-
	8-2-3.0	05/16/2017	3.0	-	-	-	-	-	-	-	-	-
	8-2-5.0	05/16/2017	5.0	-	-	-	-	-	-	-	-	-
8-3	8-3-0.5	05/16/2017	0.5	-	-	-	-	-	-	-	-	-
	8-3-1.0	05/16/2017	1.0	*ND*	*ND*	-	*ND*	*ND*	*ND*	*ND*	-	*ND*
	8-3-3.0	05/16/2017	3.0	-	-	-	-	-	-	-	-	-
	8-3-5.0	05/16/2017	5.0	*ND*	*ND*	-	*ND*	*ND*	-	-	-	-
L-1	L-1 @ 1'	02/1/2016	1.0	-	-	-	-	-	-	-	-	-
	L-1 @ 3'	02/1/2016	3.0	-	-	-	-	-	-	-	-	-
	L-1 @ 5'	02/1/2016	5.0	-	-	-	-	-	-	-	-	-
	L-1 @ 1'	02/26/2016	1.0	*ND*	*ND*	-	*ND*	*ND*	*ND*	*ND*	-	-
L-1	L-1 @ 2'	02/26/2016	2.0	-	-	-	-	-	-	-	-	-
	L-1 @ 3'	02/26/2016	3.0	*ND*	*ND*	-	*ND*	*ND*	*ND*	*ND*	-	-
	A17@5'	11/16/2013	5.0	**1.2**	*ND*	*ND*	*ND*	-	-	-	-	-
A-13-17	A17@10'	11/16/2013	10.0	-	-	-	*ND*	-	-	-	-	-
			# of non-detects =>	**4**	**5**	**1**	**6**	**4**	**3**	**3**	**0**	**1**
			# of detects =>	**1**	**0**	**0**	**0**	**0**	**0**	**0**	**0**	**0**
			# of samples =>	**5**	**5**	**1**	**6**	**4**	**3**	**3**	**0**	**1**
			frequency of detection =>	**20%**	**0%**	**0%**	**0%**	**0%**	**0%**	**0%**	**-**	**0%**
			minimum detected =>	**1.2**	**-**	**-**	**-**	**-**	**-**	**-**	**-**	**-**
			maximum detected =>	**1.2**	**-**	**-**	**-**	**-**	**-**	**-**	**-**	**-**

The Fehling Group, LLC

TABLE M-3

Soil Gas and Ambient Air Summary for PARC Area 8

VOCs and TPH-GRO (detected analytes only)

Sample ID	Secondary Sample ID	DateCollected	Sample Depth (ft bgs)	1,1,1-Trichloroethane	1,1-Dichloroethene	1,2,4-Trichlorobenzene	1,2,4-Trimethylbenzene	1,3,5-Trimethylbenzene	1,3-Dichlorobenzene	2,2,4-Trimethylpentane	2-Butanone	2-Hexanone	4-Ethyl Toluene	4-Methyl-2-pentanone	Acetone	Acetonitrile	Benzene	Carbon disulfide	Chlorobenzene	Chloroethane	Chloroform	Chloromethane
8-3	8-3-5	5/16/2017	5	*NA*	*NA*	*NA*	*NA*	*NA*	*NA*	*NA*	*NA*	*NA*	*NA*	*NA*	*NA*	*NA*	*NA*	*NA*	*NA*	*NA*	*NA*	*NA*
8-3	8-3 Dup	5/16/2017	5	**81**	**9.9**	*ND*	*ND*	*ND*	*ND*	*NA*	**27**	*ND*	*ND*	*ND*	**67**	*NA*	**22**	**150**	*ND*	*ND*	*ND*	*ND*
			# of non-detects =>	**0**	**0**	**1**	**1**	**1**	**1**	**0**	**0**	**1**	**1**	**1**	**0**	**0**	**0**	**0**	**1**	**1**	**1**	**1**
			# of detects =>	**1**	**1**	**0**	**0**	**0**	**0**	**0**	**1**	**0**	**0**	**0**	**1**	**0**	**1**	**1**	**0**	**0**	**0**	**0**
			# of samples =>	**1**	**1**	**1**	**1**	**1**	**1**	**0**	**1**	**1**	**1**	**1**	**1**	**0**	**1**	**1**	**1**	**1**	**1**	**1**
			frequency of detection =>	**100%**	**100%**	**0%**	**0%**	**0%**	**0%**	**-**	**100%**	**0%**	**0%**	**0%**	**100%**	**-**	**100%**	**100%**	**0%**	**0%**	**0%**	**0%**
			minimum detected =>	**81**	**9.9**	**-**	**-**	**-**	**-**	**-**	**27**	**-**	**-**	**-**	**67**	**-**	**22**	**150**	**-**	**-**	**-**	**-**
			maximum detected =>	**81**	**10**	**-**	**-**	**-**	**-**	**-**	**27**	**-**	**-**	**-**	**67**	**-**	**22**	**150**	**-**	**-**	**-**	**-**

The Fehling Group, LLC

TABLE M-3

Soil Gas and Ambient Air Summary for PARC Area 8

VOCs and TPH-GRO (detected analytes only)

Sample ID	Secondary Sample ID	DateCollected	Sample Depth (ft bgs)	Cyclohexane	Dichlorodifluoromethane	Ethanol	Ethylbenzene	m,p-Xylene	Methylene chloride	Naphthalene	n-Propylbenzene	o-Xylene	p-Isopropyltoluene	Tetrachloroethene	Toluene	Trichloroethene	Trichlorofluoromethane	Vinyl acetate	Vinyl chloride	2-Propanol	Gasoline Range Organics
8-3	8-3-5	5/16/2017	5	*NA*	*NA*	*NA*	*NA*	*NA*	*NA*	*NA*	*NA*	*NA*	*NA*	*NA*	*NA*	*NA*	*NA*	*NA*	*NA*	*NA*	*NA*
8-3	8-3 Dup	5/16/2017	5	*NA*	*ND*	*NA*	*ND*	**27**	*ND*	*ND*	*NA*	**11**	*NA*	**2000**	**20**	**60**	**32**	*ND*	*ND*	*NA*	*NA*
			# of non-detects =>	**0**	**1**	**0**	**1**	**0**	**1**	**1**	**0**	**0**	**0**	**0**	**0**	**0**	**0**	**1**	**1**	**0**	**0**
			# of detects =>	**0**	**0**	**0**	**0**	**1**	**0**	**0**	**0**	**1**	**0**	**1**	**1**	**1**	**1**	**0**	**0**	**0**	**0**
			# of samples =>	**0**	**1**	**0**	**1**	**1**	**1**	**1**	**0**	**1**	**0**	**1**	**1**	**1**	**1**	**1**	**1**	**0**	**0**
			frequency of detection =>	**-**	**0%**	**-**	**0%**	**100%**	**0%**	**0%**	**-**	**100%**	**-**	**100%**	**100%**	**100%**	**100%**	**0%**	**0%**	**-**	**-**
			minimum detected =>	**-**	**-**	**-**	**-**	**27**	**-**	**-**	**-**	**11**	**-**	**2000**	**20**	**60**	**32**	**-**	**-**	**-**	**-**
			maximum detected =>	**-**	**-**	**-**	**-**	**27**	**-**	**-**	**-**	**11**	**-**	**2000**	**20**	**60**	**32**	**-**	**-**	**-**	**-**

The Fehling Group, LLC

TABLE M-4
Soil EPCs (0 to 10 ft bgs)

				Concentrations in Soil (wet weight basis, mg/kg)*					Concentrations in Soil (dry weight basis, mg/kg)**				
Boring ID	Sample ID	Sample Collection Date	Sample Depth (ft bgs)	Barium	Copper	Lead	Zinc	TPH-GRO	Barium	Copper	Lead	Zinc	TPH-GRO
8-1	8-1-0.5	05/16/2017	0.5	-	-	250	-	-	-	-	264	-	-
	8-1-1.0	05/16/2017	1.0	-	-	130	-	-	-	-	137	-	-
	8-1-3.0	05/16/2017	3.0	-	-	3.6	-	-	-	-	3.8	-	-
	8-1-5.0	05/16/2017	5.0	-	-	2.8	-	-	-	-	3.0	-	-
8-2	8-2-0.5	05/16/2017	0.5	-	-	44	-	-	-	-	47	-	-
	8-2-1.0	05/16/2017	1.0	-	-	3.3	-	-	-	-	3.5	-	-
	8-2-3.0	05/16/2017	3.0	-	-	9.3	-	-	-	-	10	-	-
	8-2-5.0	05/16/2017	5.0	-	-	37	-	-	-	-	39	-	-
8-3	8-3-0.5	05/16/2017	0.5	110	140	49	120	-	116	148	52	127	-
	8-3-1.0	05/16/2017	1.0	70	34	35	65	*1*	74	36	37	69	*1.1*
	8-3-3.0	05/16/2017	3.0	110	41	65	210	-	116	43	69	222	-
	8-3-5.0	05/16/2017	5.0	68	23	5.9	52	*1*	72	24	6.2	55	*1.1*
L-1	L-1 @ 1'	02/1/2016	1.0	530	85	310	870	-	561	90	328	920	-
	L-1 @ 3'	02/1/2016	3.0	120	19	4.6	50	-	127	20	4.9	53	-
	L-1 @ 5'	02/1/2016	5.0	-	-	-	-	-	-	-	-	-	-
L-1	L-1 @ 1'	02/26/2016	1.0	-	-	-	-	*1*	-	-	-	-	*1.1*
	L-1 @ 2'	02/26/2016	2.0	140	20	20	99	-	148	21	21	105	-
	L-1 @ 3'	02/26/2016	3.0	160	20	18	87	*1*	169	21	19	92	*1.1*
A-13-17	A17@5'	11/16/2013	5.0	84	7.4	*1*	27	1.2	89	7.8	*1.1*	29	1.3
	A17@10'	11/16/2013	10.0	-	-	-	-	-	-	-	-	-	-
			95% UCL for 0 to 10 ft bgs (see Attachment O)* =>						**385**	**97**	**130**	**483**	**1.3**

* Italicized value is the reporting limit for 'non-detect' ('ND') result.

* 95% UCL not calculated due to low number of samples; value shown is maximum value.

** Dry weight concentration = Wet weight concentration x (1 + average moisture content)
where average moisture content = 0.056 g/g (see **Table 1**).

The Fehling Group, LLC

TABLE M-5a

Indoor Air Exposure Point Concentrations (in μg/m^3)

~ Residential Receptor ~

Sample ID	Secondary Sample ID	DateCollected	Sample Depth (ft bgs)	1,1,1-Trichloroethane	1,1-Dichloroethane	1,1,2-Trichloroethane	1,1-Dichloroethene	1,3,5-Trimethylbenzene	1,3-Dichlorobenzene	2,2,4-Trimethylpentane	2-Butanone	2-Hexanone	4-Ethyl Toluene	4-Methyl-2-pentanone	Acetone	Acetonitrile	Benzene	Carbon disulfide	Chlorobenzene	Chloroethane	Chloroform	Chloromethane
8-3	8-3-5	5/16/2017	5	*NA*	*NA*	*NA*	*NA*	*NA*	*NA*	*NA*	*NA*	*NA*	*NA*	*NA*	*NA*	*NA*	*NA*	*NA*	*NA*	*NA*	*NA*	*NA*
8-3	8-3 Dup	5/16/2017	5	**4E-02**	**7E-03**	*ND*	*ND*	*ND*	*ND*	*NA*	**2E-02**	*ND*	*ND*	*ND*	**5E-02**	*NA*	**2E-02**	**1E-01**	*ND*	*ND*	*ND*	*ND*

The Fehling Group, LLC

TABLE M-5a

Indoor Air Exposure Point Concentrations (in μg/m^3)

~ Residential Receptor ~

Sample ID	Secondary Sample ID	DateCollected	Sample Depth (ft bgs)	Cyclohexane	Dichlorodifluoromethane	Ethanol	Ethylbenzene	m,p-Xylene	Methylene chloride	Naphthalene	n-Propylbenzene	o-Xylene	p-Isopropyltoluene	Tetrachloroethene	Toluene	Trichloroethene	Trichlorofluoromethane	Vinyl acetate	Vinyl chloride	2-Propanol	Gasoline Range Organics
8-3	8-3-5	5/16/2017	5	*NA*	*NA*	*NA*	*NA*	*NA*	*NA*	*NA*	*NA*	*NA*	*NA*	*NA*	*NA*	*NA*	*NA*	*NA*	*NA*	*NA*	*NA*
8-3	8-3 Dup	5/16/2017	5	*NA*	*ND*	*NA*	*ND*	**2E-02**	*ND*	*ND*	*NA*	**6E-03**	*NA*	**9E-01**	**1E-02**	**3E-02**	**2E-02**	*ND*	*ND*	*NA*	*NA*

The Fehling Group, LLC

TABLE M-5b

Trench Air Exposure Point Concentrations (in μg/m^3)

~ Construction Worker Receptor ~

Sample ID	Secondary Sample ID	DateCollected	Sample Depth (ft bgs)	1,1,1-Trichloroethane	1,1-Dichloroethane	1,1,2-Trichloroethane	1,1-Dichloroethene	1,3,5-Trimethylbenzene	1,3-Dichlorobenzene	2,2,4-Trimethylpentane	2-Butanone	2-Hexanone	4-Ethyl Toluene	4-Methyl-2-pentanone	Acetone	Acetonitrile	Benzene	Carbon disulfide	Chlorobenzene	Chloroethane	Chloroform	Chloromethane
8-3	8-3-5	5/16/2017	5	*NA*	*NA*	*NA*	*NA*	*NA*	*NA*	*NA*	*NA*	*NA*	*NA*	*NA*	*NA*	*NA*	*NA*	*NA*	*NA*	*NA*	*NA*	*NA*
8-3	8-3 Dup	5/16/2017	5	**4E-02**	**7E-03**	*ND*	*ND*	*ND*	*ND*	*NA*	**2E-02**	*ND*	*ND*	*ND*	**5E-02**	*NA*	**2E-02**	**1E-01**	*ND*	*ND*	*ND*	*ND*

The Fehling Group, LLC

TABLE M-5b

Trench Air Exposure Point Concentrations (in μg/m^3)

~ Construction Worker Receptor ~

Sample ID	Secondary Sample ID	DateCollected	Sample Depth (ft bgs)	Cyclohexane	Dichlorodifluoromethane	Ethanol	Ethylbenzene	m,p-Xylene	Methylene chloride	Naphthalene	n-Propylbenzene	o-Xylene	p-Isopropyltoluene	Tetrachloroethene	Toluene	Trichloroethene	Trichlorofluoromethane	Vinyl acetate	Vinyl chloride	2-Propanol	Gasoline Range Organics
8-3	8-3-5	5/16/2017	5	*NA*	*NA*	*NA*	*NA*	*NA*	*NA*	*NA*	*NA*	*NA*	*NA*	*NA*	*NA*	*NA*	*NA*	*NA*	*NA*	*NA*	*NA*
8-3	8-3 Dup	5/16/2017	5	*NA*	*ND*	*NA*	*ND*	**2E-02**	*ND*	*ND*	*NA*	**6E-03**	*NA*	**9E-01**	**1E-02**	**3E-02**	**2E-02**	*ND*	*ND*	*NA*	*NA*

The Fehling Group, LLC

TABLE M-6
Soil Risk Characterization Summary
~ PARC Area 8 ~

		Soil RBC (mg/kg)*				Risk Values (Incremental Lifetime Cancer Risk [ILCR] and Hazard Quotient [HQ])			
		Residential Receptor		Construction Worker Receptor		Residential Receptor		Construction Worker Receptor	
Soil COPC	**Soil EPC (mg/kg, dry weight basis)**	**Cancer Endpoint**	**Noncancer Endpoint**	**Cancer Endpoint**	**Noncancer Endpoint**	**ILCR (unitless)**	**HQ (unitless)**	**ILCR (unitless)**	**HQ (unitless)**
Barium	385	--	1.50E+04	--	3.02E+03	--	2.6E-02	--	1.3E-01
Copper	97	--	3.10E+03	--	1.42E+04	--	3.1E-02	--	6.8E-03
Lead	130	Not applicable (see Section 3.2.1.2)							
Zinc	483	--	2.30E+04	--	1.06E+05	--	2.1E-02	--	4.6E-03
TPH-GRO	1.3	--	8.20E+01	--	2.77E+03	--	1.5E-02	--	4.6E-04
		Cumulative Risk Values (ILCR and HI Values) =>				**0.0E+00**	**9.3E-02**	**0.0E+00**	**1.4E-01**

* "Combined" value listed in **Table 5** for the residential receptor and **Table 6** for the construction worker receptor.

The Fehling Group, LLC

TABLE M-7a

Indoor Air Incremental Lifetime Cancer Risk (gray-shaded values)

and Cumulative Incremental Lifetime Cancer Risk Values (blue-shaded values)

~ Residential Receptor ~

Sample ID	Secondary Sample ID	Sample Depth (ft bgs)	1,1,1-Trichloroethane	1,1-Dichloroethane	1,1,2-Trichloroethane	1,1-Dichloroethene	1,3,5-Trimethylbenzene	1,3-Dichlorobenzene	2,2,4-Trimethylpentane	2-Butanone	2-Hexanone	4-Ethyl Toluene	4-Methyl-2-pentanone	Acetone	Acetonitrile	Benzene	Carbon disulfide	Chlorobenzene	Chloroethane	Chloroform	Chloromethane
8-3-5	5/16/2017	5	NONCARCINOGENIC	*NA*	*NA*	NONCARCINOGENIC	NONCARCINOGENIC	NONCARCINOGENIC	*NA*	NONCARCINOGENIC	NONCARCINOGENIC	NONCARCINOGENIC	NONCARCINOGENIC	NONCARCINOGENIC	NONCARCINOGENIC	*NA*	NONCARCINOGENIC	NONCARCINOGENIC	NONCARCINOGENIC	*NA*	NONCARCINOGENIC
8-3 Dup	5/16/2017	5		**4E-09**	*ND*				*NA*							**2E-07**				*ND*	

The Fehling Group, LLC

TABLE M-7a

Indoor Air Incremental Lifetime Cancer Risk (gray-shaded values)

and Cumulative Incremental Lifetime Cancer Risk Values (blue-shaded values)

~ Residential Receptor ~

Sample ID	Secondary Sample ID	Sample Depth (ft bgs)	Cyclohexane	Dichlorodifluoromethane	Ethanol	Ethylbenzene	m,p-Xylene	Methylene chloride	Naphthalene	n-Propylbenzene	o-Xylene	p-Isopropyltoluene	Tetrachloroethene	Toluene	Trichloroethene	Trichlorofluoromethane	Vinyl acetate	Vinyl chloride	2-Propanol	Gasoline Range Organics	ILCR
8-3-5	5/16/2017	5	NONCARCINOGENIC	NONCARCINOGENIC	NONCARCINOGENIC	*NA*	NONCARCINOGENIC	*NA*	*NA*	NONCARCINOGENIC	NONCARCINOGENIC	NONCARCINOGENIC	*NA*	NONCARCINOGENIC	*NA*	NONCARCINOGENIC	NONCARCINOGENIC	*NA*	NONCARCINOGENIC	NONCARCINOGENIC	**0E+00**
8-3 Dup	5/16/2017	5				*ND*		*ND*	*ND*				**2E-06**		**7E-08**			*ND*			**2E-06**

The Fehling Group, LLC

TABLE M-7b
Indoor Air Hazard Quotients (gray-shaded values) and Hazard Index Values (blue-shaded values)
~ Residential Receptor ~

Sample ID	Secondary Sample ID	Sample Depth (ft bgs)	1,1,1-Trichloroethane	1,1-Dichloroethane	1,1,2-Trichloroethane	1,1-Dichloroethene	1,3,5-Trimethylbenzene	1,3-Dichlorobenzene	2,2,4-Trimethylpentane	2-Butanone	2-Hexanone	4-Ethyl Toluene	4-Methyl-2-pentanone	Acetone	Acetonitrile	Benzene	Carbon disulfide	Chlorobenzene	Chloroethane	Chloroform	Chloromethane
8-3-5	5/16/2017	5	*NA*	*NA*	*NA*	*NA*	*NA*	*NA*	*NA*	*NA*	*NA*	*NA*	*NA*	*NA*	*NA*	*NA*	*NA*	*NA*	*NA*	*NA*	*NA*
8-3 Dup	5/16/2017	5	**4E-05**	**8E-06**	**ND**	**ND**	*ND*	*ND*	*NA*	**4E-06**	*ND*	*ND*	*ND*	**2E-06**	*NA*	**5E-03**	**2E-04**	*ND*	*ND*	**ND**	*ND*

The Fehling Group, LLC

TABLE M-7b
Indoor Air Hazard Quotients (gray-shaded values) and Hazard Index Values (blue-shaded values)
~ Residential Receptor ~

Sample ID	Secondary Sample ID	Sample Depth (ft bgs)	Cyclohexane	Dichlorodifluoromethane	Ethanol	Ethylbenzene	m,p-Xylene	Methylene chloride	Naphthalene	n-Propylbenzene	o-Xylene	p-Isopropyltoluene	Tetrachloroethene	Toluene	Trichloroethene	Trichlorofluoromethane	Vinyl acetate	Vinyl chloride	2-Propanol	Gasoline Range Organics	Σ HQ = HI
8-3-5	5/16/2017	5	*NA*	*NA*	*NA*	*NA*	*NA*	*NA*	*NA*	*NA*	*NA*	*NA*	*NA*	*NA*	*NA*	*NA*	*NA*	*NA*	*NA*	*NA*	**0E+00**
8-3 Dup	5/16/2017	5	*NA*	*ND*	*NA*	*ND*	**2E-04**	*ND*	*ND*	*NA*	**6E-05**	*NA*	**2E-02**	**4E-05**	**2E-02**	**1E-05**	*ND*	*ND*	*NA*	*NA*	**4E-02**

The Fehling Group, LLC

TABLE M-7c

Trench Air Incremental Lifetime Cancer Risk (gray-shaded values)

and Cumulative Incremental Lifetime Cancer Risk Values (blue-shaded values)

~ Construction Worker Receptor ~

Sample ID	Secondary Sample ID	Sample Depth (ft bgs)	1,1,1-Trichloroethane	1,1-Dichloroethane	1,1,2-Trichloroethane	1,1-Dichloroethene	1,3,5-Trimethylbenzene	1,3-Dichlorobenzene	2,2,4-Trimethylpentane	2-Butanone	2-Hexanone	4-Ethyl Toluene	4-Methyl-2-pentanone	Acetone	Acetonitrile	Benzene	Carbon disulfide	Chlorobenzene	Chloroethane	Chloroform	Chloromethane
8-3-5	5/16/2017	5	NONCARCINOGENIC	*NA*	*NA*	NONCARCINOGENIC	NONCARCINOGENIC	NONCARCINOGENIC	*NA*	NONCARCINOGENIC	NONCARCINOGENIC	NONCARCINOGENIC	NONCARCINOGENIC	NONCARCINOGENIC	NONCARCINOGENIC	*NA*	NONCARCINOGENIC	NONCARCINOGENIC	NONCARCINOGENIC	*NA*	NONCARCINOGENIC
8-3 Dup	5/16/2017	5		**3E-11**	*ND*				*NA*							**1E-09**				*ND*	

The Fehling Group, LLC

TABLE M-7c

Trench Air Incremental Lifetime Cancer Risk (gray-shaded values)

and Cumulative Incremental Lifetime Cancer Risk Values (blue-shaded values)

~ Construction Worker Receptor ~

Sample ID	Secondary Sample ID	Sample Depth (ft bgs)	Cyclohexane	Dichlorodifluoromethane	Ethanol	Ethylbenzene	m,p-Xylene	Methylene chloride	Naphthalene	n-Propylbenzene	o-Xylene	p-Isopropyltoluene	Tetrachloroethene	Toluene	Trichloroethene	Trichlorofluoromethane	Vinyl acetate	Vinyl chloride	2-Propanol	Gasoline Range Organics	ILCR
8-3-5	5/16/2017	5	NONCARCINOGENIC	NONCARCINOGENIC	NONCARCINOGENIC	*NA*	NONCARCINOGENIC	*NA*	*NA*	NONCARCINOGENIC	NONCARCINOGENIC	NONCARCINOGENIC	*NA*	NONCARCINOGENIC	*NA*	NONCARCINOGENIC	NONCARCINOGENIC	*NA*	NONCARCINOGENIC	NONCARCINOGENIC	**0E+00**
8-3 Dup	5/16/2017	5				*ND*		*ND*	*ND*				**2E-08**		**5E-10**			*ND*			**2E-08**

The Fehling Group, LLC

TABLE M-7d
Trench Air Hazard Quotients (gray-shaded values) and Hazard Index Values (blue-shaded values)
~ Construction Worker Receptor ~

Sample ID	Secondary Sample ID	Sample Depth (ft bgs)	1,1,1-Trichloroethane	1,1-Dichloroethane	1,1,2-Trichloroethane	1,1-Dichloroethene	1,3,5-Trimethylbenzene	1,3-Dichlorobenzene	2,2,4-Trimethylpentane	2-Butanone	2-Hexanone	4-Ethyl Toluene	4-Methyl-2-pentanone	Acetone	Acetonitrile	Benzene	Carbon disulfide	Chlorobenzene	Chloroethane	Chloroform	Chloromethane
8-3-5	5/16/2017	5	*NA*	*NA*	*NA*	*NA*	*NA*	*NA*	*NA*	*NA*	*NA*	*NA*	*NA*	*NA*	*NA*	*NA*	*NA*	*NA*	*NA*	*NA*	*NA*
8-3 Dup	5/16/2017	5	**1E-05**	**2E-06**	**ND**	**ND**	*ND*	*ND*	*NA*	**9E-07**	*ND*	*ND*	*ND*	**4E-07**	*NA*	**1E-03**	**4E-05**	*ND*	*ND*	**ND**	*ND*

The Fehling Group, LLC

TABLE M-7d
Trench Air Hazard Quotients (gray-shaded values) and Hazard Index Values (blue-shaded values)
~ Construction Worker Receptor ~

Sample ID	Secondary Sample ID	Sample Depth (ft bgs)	Cyclohexane	Dichlorodifluoromethane	Ethanol	Ethylbenzene	m,p-Xylene	Methylene chloride	Naphthalene	n-Propylbenzene	o-Xylene	p-Isopropyltoluene	Tetrachloroethene	Toluene	Trichloroethene	Trichlorofluoromethane	Vinyl acetate	Vinyl chloride	2-Propanol	Gasoline Range Organics	Σ HQ = HI
8-3-5	5/16/2017	5	*NA*	*NA*	*NA*	*NA*	*NA*	*NA*	*NA*	*NA*	*NA*	*NA*	*NA*	*NA*	*NA*	*NA*	*NA*	*NA*	*NA*	*NA*	**0E+00**
8-3 Dup	5/16/2017	5	*NA*	*ND*	*NA*	*ND*	**4E-05**	*ND*	*ND*	*NA*	**2E-05**	*NA*	**5E-03**	**1E-05**	**4E-03**	**4E-06**	*ND*	*ND*	*NA*	*NA*	**1E-02**

The Fehling Group, LLC

ATTACHMENT N

Derivation of Air RBCs for Construction Worker Receptor

ATTACHMENT N
Air RBCs for Construction Worker Receptor

The air RBCs for the construction worker receptor are derived using the standard inhalation dose equations for the cancer and noncancer endpoints used by CalEPA, RWQCB, and USEPA to derive their DTSC-SLs, ESLs, and RSLs, respectively, along with exposure parameters for the construction worker receptor set forth in DTSC HERO HHRA Note 1 (CalEPA, 2014).

The air RBCs for the construction worker receptor are calculated as follows:

Eqn. 1:

$$RBC_{sg-c} = \frac{TR \times AT_c}{EF \times ED \times ET} \times \frac{1}{IUR}$$

Eqn. 2:

$$RBC_{sg-nc} = \frac{THQ \times AT_{nc}}{EF \times ED \times ET} \times RfC$$

where:

AT_c	averaging time (cancer endpoint) (70 years = 613,200 hours);
IUR	inhalation unit risk (chemical-specific value in $[\mu g/m^3]^{-1}$) (see **Table N-1**);
THQ	target hazard quotient (HQ) (1.0 [unitless]);
RfC	reference concentration (chemical-specific value in $\mu g/m^3$) (see **Table N-1**);
$RBC_{cw\text{-}sg\text{-}c}$	cancer endpoint air RBC for construction worker exposure scenario (chemical-specific value in $\mu g/m^3$);
TR	target incremental lifetime cancer risk (ILCR) (1E-06 [unitless]);
EF	exposure frequency for construction worker exposure scenario (50 weeks x 5 days/week = 250 days/year);
ED	construction worker exposure duration (1 year);
ET	construction worker exposure time (8 hours/day);
$RBC_{cw\text{-}sg\text{-}nc}$	noncancer endpoint air RBC for construction worker exposure scenario (chemical-specific value in $\mu g/m^3$); and
$AT_{cw\text{-}sg\text{-}nc}$	averaging time (noncancer endpoint) (50 weeks per year x 7 days per week x 1 year = 350 days = 8,400 hours).

The cancer and noncancer air RBCs for the construction worker receptor are presented in **Table N-1**.

TABLE N-1
Risk-Based Air Concentrations
~ Construction Worker Receptor ~

COPC	TR (unitless)	THQ (unitless)	AT_c (hours)	AT_{nc} (hours)	ED (years)	EF (days/year)	ET (hours/day)	IUR $(\mu g/m^3)^{-1}$	RfC $(\mu g/m^3)$	Air RBC $(\mu g/m^3)$	
										Cancer Endpoint	Noncancer Endpoint
TPH-GRO	1.00E-06	1	613200	8400	1	250	8	--	3.00E+01	--	1.26E+02
1,1,1-Trichloroethane	1.00E-06	1	613200	8400	1	250	8	--	1.00E+03	--	4.20E+03
1,1-Dichloroethane	1.00E-06	1	613200	8400	1	250	8	1.60E-06	8.00E+02	1.92E+02	3.36E+03
1,2,4-Trichlorobenzene	1.00E-06	1	613200	8400	1	250	8	7.25E-06	2.00E+00	4.23E+01	8.40E+00
1,2,4-Trimethylbenzene	1.00E-06	1	613200	8400	1	250	8	--	6.00E+01	--	2.52E+02
1,3,5-Trimethylbenzene	1.00E-06	1	613200	8400	1	250	8	--	6.00E+01	--	2.52E+02
1,3-Dichlorobenzene	1.00E-06	1	613200	8400	1	250	8	--	2.00E+02	--	8.40E+02
2,2,4-Trimethylpentane	1.00E-06	1	613200	8400	1	250	8	--	--	--	--
2-Butanone	1.00E-06	1	613200	8400	1	250	8	--	5.00E+03	--	2.10E+04
2-Hexanone	1.00E-06	1	613200	8400	1	250	8	--	3.00E+01	--	1.26E+02
4-Ethyl Toluene	1.00E-06	1	613200	8400	1	250	8	--	1.00E+02	--	4.20E+02
4-Methyl-2-pentanone	1.00E-06	1	613200	8400	1	250	8	--	3.00E+03	--	1.26E+04
Acetone	1.00E-06	1	613200	8400	1	250	8	--	3.10E+04	--	1.30E+05
Acetonitrile	1.00E-06	1	613200	8400	1	250	8	--	6.00E+01	--	2.52E+02
Benzene	1.00E-06	1	613200	8400	1	250	8	2.90E-05	3.00E+00	1.06E+01	1.26E+01
Carbon disulfide	1.00E-06	1	613200	8400	1	250	8	--	7.00E+02	--	2.94E+03
Chlorobenzene	1.00E-06	1	613200	8400	1	250	8	--	5.00E+01	--	2.10E+02
Chloroethane	1.00E-06	1	613200	8400	1	250	8	--	1.00E+04	--	4.20E+04
Chloroform	1.00E-06	1	613200	8400	1	250	8	2.30E-05	9.80E+01	1.33E+01	4.12E+02
Chloromethane	1.00E-06	1	613200	8400	1	250	8	--	9.00E+01	--	3.78E+02
Cyclohexane	1.00E-06	1	613200	8400	1	250	8	--	6.00E+03	--	2.52E+04
Dichlorodifluoromethane	1.00E-06	1	613200	8400	1	250	8	--	1.00E+02	--	4.20E+02
Ethanol	1.00E-06	1	613200	8400	1	250	8	--	--	--	--
Ethylbenzene	1.00E-06	1	613200	8400	1	250	8	2.50E-06	1.00E+03	1.23E+02	4.20E+03
m,p-Xylene	1.00E-06	1	613200	8400	1	250	8	--	1.00E+02	--	4.20E+02
Methylene chloride	1.00E-06	1	613200	8400	1	250	8	1.00E-06	4.00E+02	3.07E+02	1.68E+03
Naphthalene	1.00E-06	1	613200	8400	1	250	8	3.40E-05	3.00E+00	9.02E+00	1.26E+01
n-Propylbenzene	1.00E-06	1	613200	8400	1	250	8	--	1.00E+03	--	4.20E+03
o-Xylene	1.00E-06	1	613200	8400	1	250	8	--	1.00E+02	--	4.20E+02
p-Isopropyltoluene	1.00E-06	1	613200	8400	1	250	8	--	1.00E+03	--	4.20E+03
Tetrachloroethene	1.00E-06	1	613200	8400	1	250	8	6.10E-06	4.00E+01	5.03E+01	1.68E+02
Toluene	1.00E-06	1	613200	8400	1	250	8	--	3.00E+02	--	1.26E+03
Trichloroethene	1.00E-06	1	613200	8400	1	250	8	4.10E-06	2.00E+00	7.48E+01	8.40E+00
Trichlorofluoromethane	1.00E-06	1	613200	8400	1	250	8	--	1.20E+03	--	5.04E+03
Vinyl acetate	1.00E-06	1	613200	8400	1	250	8	--	2.00E+02	--	8.40E+02
Vinyl chloride	1.00E-06	1	613200	8400	1	250	8	7.80E-05	1.00E+02	3.93E+00	4.20E+02
2-Propanol	1.00E-06	1	613200	8400	1	250	8	--	2.00E+02	--	8.40E+02
1,1,2-Trichloroethane	1.00E-06	1	613200	8400	1	250	8	1.60E-05	2.00E-01	1.92E+01	8.40E-01
1,1-Dichloroethene	1.00E-06	1	613200	8400	1	250	8	--	7.00E+01	--	2.94E+02

Green-shaded IUR and RfC values are from DTSC-SL tables. The Air RBCs are also green-shaded to indicate their reliance on CalEPA IUR and RfC values.
Gray-shaded IUR and RfC values are from USEPA RSL tables. The Air RBCs are also gray-shaded to indicate their reliance on USEPA IUR and RfC values.

Surrogates:
1,2-Dichlorobenzene for 1,3-Dichlorobenzene
Xylenes for 4-Ethyl Toluene
n-Propylbenzene for p-Isopropyltoluene

The Fehling Group, LLC

ATTACHMENT O

ProUCL Output (USEPA, 2015)

	A	B	C	D	E	F	G	H	I	J	K	L
1	**UCL Statistics for Uncensored Full Data Sets**											
2	**PARC Area 1A**											
3	User Selected Options											
4												
5	From File	WorkSheet_a.xls										
6	Full Precision	OFF										
7	Confidence Coefficient	95%										
8	Number of Bootstrap Operations	2000										
9												
10												
11	**Barium**											
12												
13	**General Statistics**											
14	Total Number of Observations					29		Number of Distinct Observations				25
15								Number of Missing Observations				10
16	Minimum					35		Mean				110.2
17	Maximum					635		Median				77
18	SD					118.4		Std. Error of Mean				21.99
19	Coefficient of Variation					1.075		Skewness				3.525
20												
21	**Normal GOF Test**											
22	Shapiro Wilk Test Statistic					0.585		**Shapiro Wilk GOF Test**				
23	5% Shapiro Wilk Critical Value					0.926		Data Not Normal at 5% Significance Level				
24	Lilliefors Test Statistic					0.273		**Lilliefors GOF Test**				
25	5% Lilliefors Critical Value					0.161		Data Not Normal at 5% Significance Level				
26	**Data Not Normal at 5% Significance Level**											
27												
28	**Assuming Normal Distribution**											
29	**95% Normal UCL**							**95% UCLs (Adjusted for Skewness)**				
30	95% Student's-t UCL					147.6		95% Adjusted-CLT UCL (Chen-1995)				161.7
31								95% Modified-t UCL (Johnson-1978)				150
32												
33	**Gamma GOF Test**											
34	A-D Test Statistic					1.279		**Anderson-Darling Gamma GOF Test**				
35	5% A-D Critical Value					0.758		Data Not Gamma Distributed at 5% Significance Level				
36	K-S Test Statistic					0.182		**Kolmogorov-Smirnov Gamma GOF Test**				
37	5% K-S Critical Value					0.165		Data Not Gamma Distributed at 5% Significance Level				
38	**Data Not Gamma Distributed at 5% Significance Level**											
39												
40	**Gamma Statistics**											
41	k hat (MLE)					1.893		k star (bias corrected MLE)				1.72
42	Theta hat (MLE)					58.19		Theta star (bias corrected MLE)				64.04
43	nu hat (MLE)					109.8		nu star (bias corrected)				99.78
44	MLE Mean (bias corrected)					110.2		MLE Sd (bias corrected)				84
45								Approximate Chi Square Value (0.05)				77.73
46	Adjusted Level of Significance					0.0407		Adjusted Chi Square Value				76.57
47												
48	**Assuming Gamma Distribution**											
49	95% Approximate Gamma UCL (use when n>=50))					141.4		95% Adjusted Gamma UCL (use when n<50)				143.6
50												

	A	B	C	D	E	F	G	H	I	J	K	L
51	**Lognormal GOF Test**											
52				Shapiro Wilk Test Statistic		0.92	**Shapiro Wilk Lognormal GOF Test**					
53				5% Shapiro Wilk Critical Value		0.926	Data Not Lognormal at 5% Significance Level					
54				Lilliefors Test Statistic		0.118	**Lilliefors Lognormal GOF Test**					
55				5% Lilliefors Critical Value		0.161	Data appear Lognormal at 5% Significance Level					
56	**Data appear Approximate Lognormal at 5% Significance Level**											
57												
58	**Lognormal Statistics**											
59				Minimum of Logged Data		3.555			Mean of logged Data			4.415
60				Maximum of Logged Data		6.454			SD of logged Data			0.689
61												
62	**Assuming Lognormal Distribution**											
63				95% H-UCL		138.1			90% Chebyshev (MVUE) UCL			146.8
64				95% Chebyshev (MVUE) UCL		166.2			97.5% Chebyshev (MVUE) UCL			193.3
65				99% Chebyshev (MVUE) UCL		246.3						
66												
67	**Nonparametric Distribution Free UCL Statistics**											
68	**Data appear to follow a Discernible Distribution at 5% Significance Level**											
69												
70	**Nonparametric Distribution Free UCLs**											
71				95% CLT UCL		146.3			95% Jackknife UCL			147.6
72				95% Standard Bootstrap UCL		146.8			95% Bootstrap-t UCL			196.3
73				95% Hall's Bootstrap UCL		309.3			95% Percentile Bootstrap UCL			149.7
74				95% BCA Bootstrap UCL		164.1						
75				90% Chebyshev(Mean, Sd) UCL		176.1			95% Chebyshev(Mean, Sd) UCL			206
76				97.5% Chebyshev(Mean, Sd) UCL		247.5			99% Chebyshev(Mean, Sd) UCL			328.9
77												
78	**Suggested UCL to Use**											
79				95% H-UCL		138.1						
80												
81	Note: Suggestions regarding the selection of a 95% UCL are provided to help the user to select the most appropriate 95% UCL.											
82	Recommendations are based upon data size, data distribution, and skewness.											
83	These recommendations are based upon the results of the simulation studies summarized in Singh, Maichle, and Lee (2006).											
84	However, simulations results will not cover all Real World data sets; for additional insight the user may want to consult a statistician.											
85												
86	**ProUCL computes and outputs H-statistic based UCLs for historical reasons only.**											
87	**H-statistic often results in unstable (both high and low) values of UCL95 as shown in examples in the Technical Guide.**											
88	**It is therefore recommended to avoid the use of H-statistic based 95% UCLs.**											
89	**Use of nonparametric methods are preferred to compute UCL95 for skewed data sets which do not follow a gamma distribution.**											
90												
91												

92	**Copper**										
93											
94	**General Statistics**										
95				Total Number of Observations	29			Number of Distinct Observations	24		
96								Number of Missing Observations	10		
97				Minimum	3.6			Mean	36.17		
98				Maximum	243			Median	13		
99				SD	56.35			Std. Error of Mean	10.46		
100				Coefficient of Variation	1.558			Skewness	2.591		
101											
102	**Normal GOF Test**										
103				Shapiro Wilk Test Statistic	0.617			**Shapiro Wilk GOF Test**			
104				5% Shapiro Wilk Critical Value	0.926			Data Not Normal at 5% Significance Level			
105				Lilliefors Test Statistic	0.303			**Lilliefors GOF Test**			
106				5% Lilliefors Critical Value	0.161			Data Not Normal at 5% Significance Level			
107	**Data Not Normal at 5% Significance Level**										
108											
109	**Assuming Normal Distribution**										
110				**95% Normal UCL**				**95% UCLs (Adjusted for Skewness)**			
111				95% Student's-t UCL	53.97			95% Adjusted-CLT UCL (Chen-1995)	58.76		
112								95% Modified-t UCL (Johnson-1978)	54.81		
113											
114	**Gamma GOF Test**										
115				A-D Test Statistic	1.624			**Anderson-Darling Gamma GOF Test**			
116				5% A-D Critical Value	0.785			Data Not Gamma Distributed at 5% Significance Level			
117				K-S Test Statistic	0.212			**Kolmogorov-Smirnov Gamma GOF Test**			
118				5% K-S Critical Value	0.169			Data Not Gamma Distributed at 5% Significance Level			
119	**Data Not Gamma Distributed at 5% Significance Level**										
120											
121	**Gamma Statistics**										
122				k hat (MLE)	0.736			k star (bias corrected MLE)	0.683		
123				Theta hat (MLE)	49.11			Theta star (bias corrected MLE)	52.94		
124				nu hat (MLE)	42.72			nu star (bias corrected)	39.63		
125				MLE Mean (bias corrected)	36.17			MLE Sd (bias corrected)	43.76		
126								Approximate Chi Square Value (0.05)	26.21		
127				Adjusted Level of Significance	0.0407			Adjusted Chi Square Value	25.56		
128											
129	**Assuming Gamma Distribution**										
130				95% Approximate Gamma UCL (use when n>=50))	54.7			95% Adjusted Gamma UCL (use when n<50)	56.09		
131											

132	**Lognormal GOF Test**											
133				Shapiro Wilk Test Statistic	0.914	**Shapiro Wilk Lognormal GOF Test**						
134				5% Shapiro Wilk Critical Value	0.926	Data Not Lognormal at 5% Significance Level						
135				Lilliefors Test Statistic	0.118	**Lilliefors Lognormal GOF Test**						
136				5% Lilliefors Critical Value	0.161	Data appear Lognormal at 5% Significance Level						
137	**Data appear Approximate Lognormal at 5% Significance Level**											
138												
139	**Lognormal Statistics**											
140				Minimum of Logged Data	1.281	Mean of logged Data	2.773					
141				Maximum of Logged Data	5.493	SD of logged Data	1.23					
142												
143	**Assuming Lognormal Distribution**											
144				95% H-UCL	64.87	90% Chebyshev (MVUE) UCL	59.54					
145				95% Chebyshev (MVUE) UCL	71.71	97.5% Chebyshev (MVUE) UCL	88.59					
146				99% Chebyshev (MVUE) UCL	121.8							
147												
148	**Nonparametric Distribution Free UCL Statistics**											
149	**Data appear to follow a Discernible Distribution at 5% Significance Level**											
150												
151	**Nonparametric Distribution Free UCLs**											
152				95% CLT UCL	53.39	95% Jackknife UCL	53.97					
153				95% Standard Bootstrap UCL	52.49	95% Bootstrap-t UCL	67.51					
154				95% Hall's Bootstrap UCL	70.05	95% Percentile Bootstrap UCL	54.18					
155				95% BCA Bootstrap UCL	60.32							
156				90% Chebyshev(Mean, Sd) UCL	67.57	95% Chebyshev(Mean, Sd) UCL	81.79					
157				97.5% Chebyshev(Mean, Sd) UCL	101.5	99% Chebyshev(Mean, Sd) UCL	140.3					
158												
159	**Suggested UCL to Use**											
160				95% H-UCL	64.87							
161												
162	Note: Suggestions regarding the selection of a 95% UCL are provided to help the user to select the most appropriate 95% UCL.											
163	Recommendations are based upon data size, data distribution, and skewness.											
164	These recommendations are based upon the results of the simulation studies summarized in Singh, Maichle, and Lee (2006).											
165	However, simulations results will not cover all Real World data sets; for additional insight the user may want to consult a statistician.											
166												
167	**ProUCL computes and outputs H-statistic based UCLs for historical reasons only.**											
168	**H-statistic often results in unstable (both high and low) values of UCL95 as shown in examples in the Technical Guide.**											
169	**It is therefore recommended to avoid the use of H-statistic based 95% UCLs.**											
170	**Use of nonparametric methods are preferred to compute UCL95 for skewed data sets which do not follow a gamma distribution.**											
171												
172												

173	**Lead**										
174											
175					**General Statistics**						
176				Total Number of Observations	29				Number of Distinct Observations	26	
177									Number of Missing Observations	10	
178				Minimum	1.1				Mean	123.8	
179				Maximum	910				Median	4.4	
180				SD	228.7				Std. Error of Mean	42.47	
181				Coefficient of Variation	1.848				Skewness	2.349	
182											
183					**Normal GOF Test**						
184				Shapiro Wilk Test Statistic	0.615				**Shapiro Wilk GOF Test**		
185				5% Shapiro Wilk Critical Value	0.926				Data Not Normal at 5% Significance Level		
186				Lilliefors Test Statistic	0.308				**Lilliefors GOF Test**		
187				5% Lilliefors Critical Value	0.161				Data Not Normal at 5% Significance Level		
188					**Data Not Normal at 5% Significance Level**						
189											
190					**Assuming Normal Distribution**						
191				**95% Normal UCL**					**95% UCLs (Adjusted for Skewness)**		
192				95% Student's-t UCL	196				95% Adjusted-CLT UCL (Chen-1995)	213.4	
193									95% Modified-t UCL (Johnson-1978)	199.1	
194											
195					**Gamma GOF Test**						
196				A-D Test Statistic	2.245				**Anderson-Darling Gamma GOF Test**		
197				5% A-D Critical Value	0.854				Data Not Gamma Distributed at 5% Significance Level		
198				K-S Test Statistic	0.287				**Kolmogorov-Smirnov Gamma GOF Test**		
199				5% K-S Critical Value	0.176				Data Not Gamma Distributed at 5% Significance Level		
200					**Data Not Gamma Distributed at 5% Significance Level**						
201											
202					**Gamma Statistics**						
203				k hat (MLE)	0.308				k star (bias corrected MLE)	0.299	
204				Theta hat (MLE)	401.3				Theta star (bias corrected MLE)	413.3	
205				nu hat (MLE)	17.89				nu star (bias corrected)	17.37	
206				MLE Mean (bias corrected)	123.8				MLE Sd (bias corrected)	226.2	
207									Approximate Chi Square Value (0.05)	8.937	
208				Adjusted Level of Significance	0.0407				Adjusted Chi Square Value	8.576	
209											
210					**Assuming Gamma Distribution**						
211				95% Approximate Gamma UCL (use when n>=50))	240.5				95% Adjusted Gamma UCL (use when n<50)	250.7	
212											

	A	B	C	D	E	F	G	H	I	J	K	L
213	**Lognormal GOF Test**											
214					Shapiro Wilk Test Statistic	0.842	**Shapiro Wilk Lognormal GOF Test**					
215					5% Shapiro Wilk Critical Value	0.926	Data Not Lognormal at 5% Significance Level					
216					Lilliefors Test Statistic	0.226	**Lilliefors Lognormal GOF Test**					
217					5% Lilliefors Critical Value	0.161	Data Not Lognormal at 5% Significance Level					
218	**Data Not Lognormal at 5% Significance Level**											
219												
220	**Lognormal Statistics**											
221					Minimum of Logged Data	0.0953	Mean of logged Data	2.592				
222					Maximum of Logged Data	6.813	SD of logged Data	2.376				
223												
224	**Assuming Lognormal Distribution**											
225					95% H-UCL	1706	90% Chebyshev (MVUE) UCL	466.2				
226					95% Chebyshev (MVUE) UCL	602	97.5% Chebyshev (MVUE) UCL	790.5				
227					99% Chebyshev (MVUE) UCL	1161						
228												
229	**Nonparametric Distribution Free UCL Statistics**											
230	**Data do not follow a Discernible Distribution (0.05)**											
231												
232	**Nonparametric Distribution Free UCLs**											
233					95% CLT UCL	193.6	95% Jackknife UCL	196				
234					95% Standard Bootstrap UCL	193.3	95% Bootstrap-t UCL	221.9				
235					95% Hall's Bootstrap UCL	234	95% Percentile Bootstrap UCL	195.7				
236					95% BCA Bootstrap UCL	219.7						
237					90% Chebyshev(Mean, Sd) UCL	251.2	95% Chebyshev(Mean, Sd) UCL	308.9				
238					97.5% Chebyshev(Mean, Sd) UCL	389	99% Chebyshev(Mean, Sd) UCL	546.3				
239												
240	**Suggested UCL to Use**											
241					97.5% Chebyshev (Mean, Sd) UCL	389						
242												
243	Note: Suggestions regarding the selection of a 95% UCL are provided to help the user to select the most appropriate 95% UCL.											
244	Recommendations are based upon data size, data distribution, and skewness.											
245	These recommendations are based upon the results of the simulation studies summarized in Singh, Maichle, and Lee (2006).											
246	However, simulations results will not cover all Real World data sets; for additional insight the user may want to consult a statistician.											
247												
248												

249	**Mercury**										
250											
251					**General Statistics**						
252				Total Number of Observations	29			Number of Distinct Observations	11		
253								Number of Missing Observations	10		
254				Minimum	0.11			Mean	0.293		
255				Maximum	3.5			Median	0.11		
256				SD	0.639			Std. Error of Mean	0.119		
257				Coefficient of Variation	2.178			Skewness	4.869		
258											
259					**Normal GOF Test**						
260				Shapiro Wilk Test Statistic	0.316			**Shapiro Wilk GOF Test**			
261				5% Shapiro Wilk Critical Value	0.926			Data Not Normal at 5% Significance Level			
262				Lilliefors Test Statistic	0.436			**Lilliefors GOF Test**			
263				5% Lilliefors Critical Value	0.161			Data Not Normal at 5% Significance Level			
264					**Data Not Normal at 5% Significance Level**						
265											
266					**Assuming Normal Distribution**						
267				**95% Normal UCL**				**95% UCLs (Adjusted for Skewness)**			
268				95% Student's-t UCL	0.495			95% Adjusted-CLT UCL (Chen-1995)	0.603		
269								95% Modified-t UCL (Johnson-1978)	0.513		
270											
271					**Gamma GOF Test**						
272				A-D Test Statistic	5.902			**Anderson-Darling Gamma GOF Test**			
273				5% A-D Critical Value	0.774			Data Not Gamma Distributed at 5% Significance Level			
274				K-S Test Statistic	0.354			**Kolmogorov-Smirnov Gamma GOF Test**			
275				5% K-S Critical Value	0.167			Data Not Gamma Distributed at 5% Significance Level			
276					**Data Not Gamma Distributed at 5% Significance Level**						
277											
278					**Gamma Statistics**						
279				k hat (MLE)	1.006			k star (bias corrected MLE)	0.925		
280				Theta hat (MLE)	0.292			Theta star (bias corrected MLE)	0.317		
281				nu hat (MLE)	58.33			nu star (bias corrected)	53.63		
282				MLE Mean (bias corrected)	0.293			MLE Sd (bias corrected)	0.305		
283								Approximate Chi Square Value (0.05)	37.81		
284				Adjusted Level of Significance	0.0407			Adjusted Chi Square Value	37.01		
285											
286					**Assuming Gamma Distribution**						
287				95% Approximate Gamma UCL (use when n>=50))	0.416			95% Adjusted Gamma UCL (use when n<50)	0.425		
288											

	A	B	C	D	E	F	G	H	I	J	K	L
289	**Lognormal GOF Test**											
290					Shapiro Wilk Test Statistic	0.594	**Shapiro Wilk Lognormal GOF Test**					
291					5% Shapiro Wilk Critical Value	0.926	Data Not Lognormal at 5% Significance Level					
292					Lilliefors Test Statistic	0.299	**Lilliefors Lognormal GOF Test**					
293					5% Lilliefors Critical Value	0.161	Data Not Lognormal at 5% Significance Level					
294	**Data Not Lognormal at 5% Significance Level**											
295												
296	**Lognormal Statistics**											
297					Minimum of Logged Data	-2.207	Mean of logged Data	-1.8				
298					Maximum of Logged Data	1.253	SD of logged Data	0.775				
299												
300	**Assuming Lognormal Distribution**											
301					95% H-UCL	0.308	90% Chebyshev (MVUE) UCL	0.325				
302					95% Chebyshev (MVUE) UCL	0.372	97.5% Chebyshev (MVUE) UCL	0.437				
303					99% Chebyshev (MVUE) UCL	0.566						
304												
305	**Nonparametric Distribution Free UCL Statistics**											
306	**Data do not follow a Discernible Distribution (0.05)**											
307												
308	**Nonparametric Distribution Free UCLs**											
309					95% CLT UCL	0.489	95% Jackknife UCL	0.495				
310					95% Standard Bootstrap UCL	0.486	95% Bootstrap-t UCL	1.59				
311					95% Hall's Bootstrap UCL	1.286	95% Percentile Bootstrap UCL	0.516				
312					95% BCA Bootstrap UCL	0.668						
313					90% Chebyshev(Mean, Sd) UCL	0.65	95% Chebyshev(Mean, Sd) UCL	0.811				
314					97.5% Chebyshev(Mean, Sd) UCL	1.035	99% Chebyshev(Mean, Sd) UCL	1.474				
315												
316	**Suggested UCL to Use**											
317					95% Chebyshev (Mean, Sd) UCL	0.811						
318												
319	Note: Suggestions regarding the selection of a 95% UCL are provided to help the user to select the most appropriate 95% UCL.											
320	Recommendations are based upon data size, data distribution, and skewness.											
321	These recommendations are based upon the results of the simulation studies summarized in Singh, Maichle, and Lee (2006).											
322	However, simulations results will not cover all Real World data sets; for additional insight the user may want to consult a statistician.											
323												
324												

325	**Zinc**										
326											
327	**General Statistics**										
328				Total Number of Observations	29			Number of Distinct Observations	24		
329								Number of Missing Observations	10		
330				Minimum	14			Mean	138.7		
331				Maximum	1586			Median	41		
332				SD	298.5			Std. Error of Mean	55.43		
333				Coefficient of Variation	2.152			Skewness	4.41		
334											
335	**Normal GOF Test**										
336				Shapiro Wilk Test Statistic	0.434		**Shapiro Wilk GOF Test**				
337				5% Shapiro Wilk Critical Value	0.926		Data Not Normal at 5% Significance Level				
338				Lilliefors Test Statistic	0.338		**Lilliefors GOF Test**				
339				5% Lilliefors Critical Value	0.161		Data Not Normal at 5% Significance Level				
340	**Data Not Normal at 5% Significance Level**										
341											
342	**Assuming Normal Distribution**										
343				**95% Normal UCL**				**95% UCLs (Adjusted for Skewness)**			
344				95% Student's-t UCL	233			95% Adjusted-CLT UCL (Chen-1995)	278.4		
345								95% Modified-t UCL (Johnson-1978)	240.6		
346											
347	**Gamma GOF Test**										
348				A-D Test Statistic	2.141		**Anderson-Darling Gamma GOF Test**				
349				5% A-D Critical Value	0.794		Data Not Gamma Distributed at 5% Significance Level				
350				K-S Test Statistic	0.238		**Kolmogorov-Smirnov Gamma GOF Test**				
351				5% K-S Critical Value	0.17		Data Not Gamma Distributed at 5% Significance Level				
352	**Data Not Gamma Distributed at 5% Significance Level**										
353											
354	**Gamma Statistics**										
355				k hat (MLE)	0.661			k star (bias corrected MLE)	0.615		
356				Theta hat (MLE)	209.9			Theta star (bias corrected MLE)	225.4		
357				nu hat (MLE)	38.31			nu star (bias corrected)	35.68		
358				MLE Mean (bias corrected)	138.7			MLE Sd (bias corrected)	176.8		
359								Approximate Chi Square Value (0.05)	23.01		
360				Adjusted Level of Significance	0.0407			Adjusted Chi Square Value	22.41		
361											
362	**Assuming Gamma Distribution**										
363				95% Approximate Gamma UCL (use when n>=50))	215			95% Adjusted Gamma UCL (use when n<50)	220.9		
364											

	A	B	C	D	E	F	G	H	I	J	K	L
365	**Lognormal GOF Test**											
366					Shapiro Wilk Test Statistic	0.895	**Shapiro Wilk Lognormal GOF Test**					
367					5% Shapiro Wilk Critical Value	0.926	Data Not Lognormal at 5% Significance Level					
368					Lilliefors Test Statistic	0.166	**Lilliefors Lognormal GOF Test**					
369					5% Lilliefors Critical Value	0.161	Data Not Lognormal at 5% Significance Level					
370	**Data Not Lognormal at 5% Significance Level**											
371												
372	**Lognormal Statistics**											
373					Minimum of Logged Data	2.639			Mean of logged Data	4.01		
374					Maximum of Logged Data	7.369			SD of logged Data	1.212		
375												
376	**Assuming Lognormal Distribution**											
377					95% H-UCL	215.2			90% Chebyshev (MVUE) UCL	199.2		
378					95% Chebyshev (MVUE) UCL	239.5			97.5% Chebyshev (MVUE) UCL	295.4		
379					99% Chebyshev (MVUE) UCL	405.3						
380												
381	**Nonparametric Distribution Free UCL Statistics**											
382	**Data do not follow a Discernible Distribution (0.05)**											
383												
384	**Nonparametric Distribution Free UCLs**											
385					95% CLT UCL	229.9			95% Jackknife UCL	233		
386					95% Standard Bootstrap UCL	233.2			95% Bootstrap-t UCL	448.9		
387					95% Hall's Bootstrap UCL	580.3			95% Percentile Bootstrap UCL	245		
388					95% BCA Bootstrap UCL	295.2						
389					90% Chebyshev(Mean, Sd) UCL	305			95% Chebyshev(Mean, Sd) UCL	380.3		
390					97.5% Chebyshev(Mean, Sd) UCL	484.9			99% Chebyshev(Mean, Sd) UCL	690.3		
391												
392	**Suggested UCL to Use**											
393					95% Chebyshev (Mean, Sd) UCL	380.3						
394												
395	Note: Suggestions regarding the selection of a 95% UCL are provided to help the user to select the most appropriate 95% UCL.											
396	Recommendations are based upon data size, data distribution, and skewness.											
397	These recommendations are based upon the results of the simulation studies summarized in Singh, Maichle, and Lee (2006).											
398	However, simulations results will not cover all Real World data sets; for additional insight the user may want to consult a statistician.											

	A	B	C	D	E	F	G	H	I	J	K	L
1	**UCL Statistics for Uncensored Full Data Sets**											
2	**PARC Area 2A, 2B, 2C**											
3	User Selected Options											
4												
5	From File	WorkSheet.xls										
6	Full Precision	OFF										
7	Confidence Coefficient	95%										
8	Number of Bootstrap Operations	2000										
9												
10												
11	**Barium**											
12												
13	**General Statistics**											
14	Total Number of Observations					47	Number of Distinct Observations					38
15							Number of Missing Observations					0
16	Minimum					15	Mean					69.38
17	Maximum					169	Median					58
18	SD					41.2	Std. Error of Mean					6.009
19	Coefficient of Variation					0.594	Skewness					0.949
20												
21	**Normal GOF Test**											
22	Shapiro Wilk Test Statistic					0.885	**Shapiro Wilk GOF Test**					
23	5% Shapiro Wilk Critical Value					0.946	Data Not Normal at 5% Significance Level					
24	Lilliefors Test Statistic					0.188	**Lilliefors GOF Test**					
25	5% Lilliefors Critical Value					0.128	Data Not Normal at 5% Significance Level					
26	**Data Not Normal at 5% Significance Level**											
27												
28	**Assuming Normal Distribution**											
29	**95% Normal UCL**						**95% UCLs (Adjusted for Skewness)**					
30	95% Student's-t UCL					79.47	95% Adjusted-CLT UCL (Chen-1995)					80.16
31							95% Modified-t UCL (Johnson-1978)					79.61
32												
33	**Gamma GOF Test**											
34	A-D Test Statistic					0.515	**Anderson-Darling Gamma GOF Test**					
35	5% A-D Critical Value					0.756	Detected data appear Gamma Distributed at 5% Significance Level					
36	K-S Test Statistic					0.117	**Kolmogorov-Smirnov Gamma GOF Test**					
37	5% K-S Critical Value					0.13	Detected data appear Gamma Distributed at 5% Significance Level					
38	**Detected data appear Gamma Distributed at 5% Significance Level**											
39												
40	**Gamma Statistics**											
41	k hat (MLE)					3.059	k star (bias corrected MLE)					2.878
42	Theta hat (MLE)					22.68	Theta star (bias corrected MLE)					24.11
43	nu hat (MLE)					287.5	nu star (bias corrected)					270.5
44	MLE Mean (bias corrected)					69.38	MLE Sd (bias corrected)					40.9
45							Approximate Chi Square Value (0.05)					233.4
46	Adjusted Level of Significance					0.0449	Adjusted Chi Square Value					232.3
47												
48	**Assuming Gamma Distribution**											
49	95% Approximate Gamma UCL (use when n>=50)					80.41	95% Adjusted Gamma UCL (use when n<50)					80.78
50												

51	**Lognormal GOF Test**											
52				Shapiro Wilk Test Statistic	0.966	**Shapiro Wilk Lognormal GOF Test**						
53				5% Shapiro Wilk Critical Value	0.946	Data appear Lognormal at 5% Significance Level						
54				Lilliefors Test Statistic	0.0777	**Lilliefors Lognormal GOF Test**						
55				5% Lilliefors Critical Value	0.128	Data appear Lognormal at 5% Significance Level						
56	**Data appear Lognormal at 5% Significance Level**											
57												
58	**Lognormal Statistics**											
59				Minimum of Logged Data	2.708	Mean of logged Data	4.067					
60				Maximum of Logged Data	5.13	SD of logged Data	0.606					
61												
62	**Assuming Lognormal Distribution**											
63				95% H-UCL	83.6	90% Chebyshev (MVUE) UCL	89.67					
64				95% Chebyshev (MVUE) UCL	98.65	97.5% Chebyshev (MVUE) UCL	111.1					
65				99% Chebyshev (MVUE) UCL	135.6							
66												
67	**Nonparametric Distribution Free UCL Statistics**											
68	**Data appear to follow a Discernible Distribution at 5% Significance Level**											
69												
70	**Nonparametric Distribution Free UCLs**											
71				95% CLT UCL	79.27	95% Jackknife UCL	79.47					
72				95% Standard Bootstrap UCL	79.1	95% Bootstrap-t UCL	80.99					
73				95% Hall's Bootstrap UCL	80.2	95% Percentile Bootstrap UCL	80.15					
74				95% BCA Bootstrap UCL	79.85							
75				90% Chebyshev(Mean, Sd) UCL	87.41	95% Chebyshev(Mean, Sd) UCL	95.58					
76				97.5% Chebyshev(Mean, Sd) UCL	106.9	99% Chebyshev(Mean, Sd) UCL	129.2					
77												
78	**Suggested UCL to Use**											
79				95% Adjusted Gamma UCL	80.78							
80												
81	Note: Suggestions regarding the selection of a 95% UCL are provided to help the user to select the most appropriate 95% UCL.											
82	Recommendations are based upon data size, data distribution, and skewness.											
83	These recommendations are based upon the results of the simulation studies summarized in Singh, Maichle, and Lee (2006).											
84	However, simulations results will not cover all Real World data sets; for additional insight the user may want to consult a statistician.											
85												
86												

Copper		
General Statistics		
Total Number of Observations	47	Number of Distinct Observations 36
		Number of Missing Observations 0
Minimum	2.5	Mean 16.47
Maximum	264	Median 8.7
SD	37.93	Std. Error of Mean 5.533
Coefficient of Variation	2.303	Skewness 6.318
Normal GOF Test		
Shapiro Wilk Test Statistic	0.302	**Shapiro Wilk GOF Test**
5% Shapiro Wilk Critical Value	0.946	Data Not Normal at 5% Significance Level
Lilliefors Test Statistic	0.369	**Lilliefors GOF Test**
5% Lilliefors Critical Value	0.128	Data Not Normal at 5% Significance Level
Data Not Normal at 5% Significance Level		
Assuming Normal Distribution		
95% Normal UCL		**95% UCLs (Adjusted for Skewness)**
95% Student's-t UCL	25.76	95% Adjusted-CLT UCL (Chen-1995) 31.02
		95% Modified-t UCL (Johnson-1978) 26.61
Gamma GOF Test		
A-D Test Statistic	3.706	**Anderson-Darling Gamma GOF Test**
5% A-D Critical Value	0.777	Data Not Gamma Distributed at 5% Significance Level
K-S Test Statistic	0.219	**Kolmogorov-Smirnov Gamma GOF Test**
5% K-S Critical Value	0.133	Data Not Gamma Distributed at 5% Significance Level
Data Not Gamma Distributed at 5% Significance Level		
Gamma Statistics		
k hat (MLE)	1.043	k star (bias corrected MLE) 0.99
Theta hat (MLE)	15.8	Theta star (bias corrected MLE) 16.63
nu hat (MLE)	98.02	nu star (bias corrected) 93.1
MLE Mean (bias corrected)	16.47	MLE Sd (bias corrected) 16.55
		Approximate Chi Square Value (0.05) 71.84
Adjusted Level of Significance	0.0449	Adjusted Chi Square Value 71.25
Assuming Gamma Distribution		
95% Approximate Gamma UCL (use when n>=50))	21.34	95% Adjusted Gamma UCL (use when n<50) 21.52

	A	B	C	D	E	F	G	H	I	J	K	L
127	**Lognormal GOF Test**											
128				Shapiro Wilk Test Statistic		0.911	**Shapiro Wilk Lognormal GOF Test**					
129				5% Shapiro Wilk Critical Value		0.946	Data Not Lognormal at 5% Significance Level					
130				Lilliefors Test Statistic		0.105	**Lilliefors Lognormal GOF Test**					
131				5% Lilliefors Critical Value		0.128	Data appear Lognormal at 5% Significance Level					
132	**Data appear Approximate Lognormal at 5% Significance Level**											
133												
134	**Lognormal Statistics**											
135				Minimum of Logged Data		0.916	Mean of logged Data				2.251	
136				Maximum of Logged Data		5.576	SD of logged Data				0.821	
137												
138	**Assuming Lognormal Distribution**											
139				95% H-UCL		17.26	90% Chebyshev (MVUE) UCL				18.5	
140				95% Chebyshev (MVUE) UCL		20.92	97.5% Chebyshev (MVUE) UCL				24.26	
141				99% Chebyshev (MVUE) UCL		30.84						
142												
143	**Nonparametric Distribution Free UCL Statistics**											
144	**Data appear to follow a Discernible Distribution at 5% Significance Level**											
145												
146	**Nonparametric Distribution Free UCLs**											
147				95% CLT UCL		25.57	95% Jackknife UCL				25.76	
148				95% Standard Bootstrap UCL		25.24	95% Bootstrap-t UCL				58.5	
149				95% Hall's Bootstrap UCL		62.09	95% Percentile Bootstrap UCL				26.76	
150				95% BCA Bootstrap UCL		36.13						
151				90% Chebyshev(Mean, Sd) UCL		33.07	95% Chebyshev(Mean, Sd) UCL				40.59	
152				97.5% Chebyshev(Mean, Sd) UCL		51.02	99% Chebyshev(Mean, Sd) UCL				71.52	
153												
154	**Suggested UCL to Use**											
155				95% H-UCL		17.26						
156												
157	Note: Suggestions regarding the selection of a 95% UCL are provided to help the user to select the most appropriate 95% UCL.											
158	Recommendations are based upon data size, data distribution, and skewness.											
159	These recommendations are based upon the results of the simulation studies summarized in Singh, Maichle, and Lee (2006).											
160	However, simulations results will not cover all Real World data sets; for additional insight the user may want to consult a statistician.											
161												
162	**ProUCL computes and outputs H-statistic based UCLs for historical reasons only.**											
163	**H-statistic often results in unstable (both high and low) values of UCL95 as shown in examples in the Technical Guide.**											
164	**It is therefore recommended to avoid the use of H-statistic based 95% UCLs.**											
165	**Use of nonparametric methods are preferred to compute UCL95 for skewed data sets which do not follow a gamma distribution.**											
166												
167												

	A	B	C	D	E	F	G	H	I	J	K	L
168	**Lead**											
169												
170	**General Statistics**											
171					Total Number of Observations	47			Number of Distinct Observations	32		
172									Number of Missing Observations	0		
173					Minimum	1			Mean	10.3		
174					Maximum	180			Median	2.5		
175					SD	27.57			Std. Error of Mean	4.022		
176					Coefficient of Variation	2.677			Skewness	5.393		
177												
178	**Normal GOF Test**											
179					Shapiro Wilk Test Statistic	0.368			**Shapiro Wilk GOF Test**			
180					5% Shapiro Wilk Critical Value	0.946			Data Not Normal at 5% Significance Level			
181					Lilliefors Test Statistic	0.384			**Lilliefors GOF Test**			
182					5% Lilliefors Critical Value	0.128			Data Not Normal at 5% Significance Level			
183	**Data Not Normal at 5% Significance Level**											
184												
185	**Assuming Normal Distribution**											
186					**95% Normal UCL**				**95% UCLs (Adjusted for Skewness)**			
187					95% Student's-t UCL	17.05			95% Adjusted-CLT UCL (Chen-1995)	20.3		
188									95% Modified-t UCL (Johnson-1978)	17.58		
189												
190	**Gamma GOF Test**											
191					A-D Test Statistic	5.151			**Anderson-Darling Gamma GOF Test**			
192					5% A-D Critical Value	0.809			Data Not Gamma Distributed at 5% Significance Level			
193					K-S Test Statistic	0.241			**Kolmogorov-Smirnov Gamma GOF Test**			
194					5% K-S Critical Value	0.136			Data Not Gamma Distributed at 5% Significance Level			
195	**Data Not Gamma Distributed at 5% Significance Level**											
196												
197	**Gamma Statistics**											
198					k hat (MLE)	0.55			k star (bias corrected MLE)	0.529		
199					Theta hat (MLE)	18.74			Theta star (bias corrected MLE)	19.48		
200					nu hat (MLE)	51.67			nu star (bias corrected)	49.71		
201					MLE Mean (bias corrected)	10.3			MLE Sd (bias corrected)	14.16		
202									Approximate Chi Square Value (0.05)	34.52		
203					Adjusted Level of Significance	0.0449			Adjusted Chi Square Value	34.12		
204												
205	**Assuming Gamma Distribution**											
206					95% Approximate Gamma UCL (use when n>=50))	14.83			95% Adjusted Gamma UCL (use when n<50)	15.01		
207												

208	**Lognormal GOF Test**											
209					Shapiro Wilk Test Statistic	0.839	**Shapiro Wilk Lognormal GOF Test**					
210					5% Shapiro Wilk Critical Value	0.946	Data Not Lognormal at 5% Significance Level					
211					Lilliefors Test Statistic	0.17	**Lilliefors Lognormal GOF Test**					
212					5% Lilliefors Critical Value	0.128	Data Not Lognormal at 5% Significance Level					
213	**Data Not Lognormal at 5% Significance Level**											
214												
215	**Lognormal Statistics**											
216					Minimum of Logged Data	0	Mean of logged Data	1.193				
217					Maximum of Logged Data	5.193	SD of logged Data	1.253				
218												
219	**Assuming Lognormal Distribution**											
220					95% H-UCL	11.72	90% Chebyshev (MVUE) UCL	11.83				
221					95% Chebyshev (MVUE) UCL	14.01	97.5% Chebyshev (MVUE) UCL	17.03				
222					99% Chebyshev (MVUE) UCL	22.97						
223												
224	**Nonparametric Distribution Free UCL Statistics**											
225	**Data do not follow a Discernible Distribution (0.05)**											
226												
227	**Nonparametric Distribution Free UCLs**											
228					95% CLT UCL	16.92	95% Jackknife UCL	17.05				
229					95% Standard Bootstrap UCL	16.77	95% Bootstrap-t UCL	28.21				
230					95% Hall's Bootstrap UCL	38.5	95% Percentile Bootstrap UCL	17.59				
231					95% BCA Bootstrap UCL	21.71						
232					90% Chebyshev(Mean, Sd) UCL	22.37	95% Chebyshev(Mean, Sd) UCL	27.83				
233					97.5% Chebyshev(Mean, Sd) UCL	35.42	99% Chebyshev(Mean, Sd) UCL	50.32				
234												
235	**Suggested UCL to Use**											
236					95% Chebyshev (Mean, Sd) UCL	27.83						
237												
238	Note: Suggestions regarding the selection of a 95% UCL are provided to help the user to select the most appropriate 95% UCL.											
239	Recommendations are based upon data size, data distribution, and skewness.											
240	These recommendations are based upon the results of the simulation studies summarized in Singh, Maichle, and Lee (2006).											
241	However, simulations results will not cover all Real World data sets; for additional insight the user may want to consult a statistician.											
242												
243												

244	**Mercury**										
245											
246	**General Statistics**										
247				Total Number of Observations	47			Number of Distinct Observations	10		
248								Number of Missing Observations	0		
249				Minimum	0.061			Mean	0.209		
250				Maximum	3.6			Median	0.11		
251				SD	0.522			Std. Error of Mean	0.0762		
252				Coefficient of Variation	2.493			Skewness	6.288		
253											
254	**Normal GOF Test**										
255				Shapiro Wilk Test Statistic	0.221			**Shapiro Wilk GOF Test**			
256				5% Shapiro Wilk Critical Value	0.946			Data Not Normal at 5% Significance Level			
257				Lilliefors Test Statistic	0.454			**Lilliefors GOF Test**			
258				5% Lilliefors Critical Value	0.128			Data Not Normal at 5% Significance Level			
259	**Data Not Normal at 5% Significance Level**										
260											
261	**Assuming Normal Distribution**										
262				**95% Normal UCL**				**95% UCLs (Adjusted for Skewness)**			
263				95% Student's-t UCL	0.337			95% Adjusted-CLT UCL (Chen-1995)	0.409		
264								95% Modified-t UCL (Johnson-1978)	0.349		
265											
266	**Gamma GOF Test**										
267				A-D Test Statistic	13.7			**Anderson-Darling Gamma GOF Test**			
268				5% A-D Critical Value	0.775			Data Not Gamma Distributed at 5% Significance Level			
269				K-S Test Statistic	0.455			**Kolmogorov-Smirnov Gamma GOF Test**			
270				5% K-S Critical Value	0.132			Data Not Gamma Distributed at 5% Significance Level			
271	**Data Not Gamma Distributed at 5% Significance Level**										
272											
273	**Gamma Statistics**										
274				k hat (MLE)	1.164			k star (bias corrected MLE)	1.104		
275				Theta hat (MLE)	0.18			Theta star (bias corrected MLE)	0.19		
276				nu hat (MLE)	109.5			nu star (bias corrected)	103.8		
277				MLE Mean (bias corrected)	0.209			MLE Sd (bias corrected)	0.199		
278								Approximate Chi Square Value (0.05)	81.3		
279				Adjusted Level of Significance	0.0449			Adjusted Chi Square Value	80.67		
280											
281	**Assuming Gamma Distribution**										
282				95% Approximate Gamma UCL (use when n>=50))	0.267			95% Adjusted Gamma UCL (use when n<50)	0.27		
283											

	A	B	C	D	E	F	G	H	I	J	K	L
284	**Lognormal GOF Test**											
285					Shapiro Wilk Test Statistic	0.421	**Shapiro Wilk Lognormal GOF Test**					
286					5% Shapiro Wilk Critical Value	0.946	Data Not Lognormal at 5% Significance Level					
287					Lilliefors Test Statistic	0.387	**Lilliefors Lognormal GOF Test**					
288					5% Lilliefors Critical Value	0.128	Data Not Lognormal at 5% Significance Level					
289	**Data Not Lognormal at 5% Significance Level**											
290												
291	**Lognormal Statistics**											
292					Minimum of Logged Data	-2.797			Mean of logged Data	-2.05		
293					Maximum of Logged Data	1.281			SD of logged Data	0.619		
294												
295	**Assuming Lognormal Distribution**											
296					95% H-UCL	0.187			90% Chebyshev (MVUE) UCL	0.2		
297					95% Chebyshev (MVUE) UCL	0.221			97.5% Chebyshev (MVUE) UCL	0.249		
298					99% Chebyshev (MVUE) UCL	0.305						
299												
300	**Nonparametric Distribution Free UCL Statistics**											
301	**Data do not follow a Discernible Distribution (0.05)**											
302												
303	**Nonparametric Distribution Free UCLs**											
304					95% CLT UCL	0.335			95% Jackknife UCL	0.337		
305					95% Standard Bootstrap UCL	0.336			95% Bootstrap-t UCL	2.282		
306					95% Hall's Bootstrap UCL	1.296			95% Percentile Bootstrap UCL	0.356		
307					95% BCA Bootstrap UCL	0.471						
308					90% Chebyshev(Mean, Sd) UCL	0.438			95% Chebyshev(Mean, Sd) UCL	0.541		
309					97.5% Chebyshev(Mean, Sd) UCL	0.685			99% Chebyshev(Mean, Sd) UCL	0.967		
310												
311	**Suggested UCL to Use**											
312					95% Chebyshev (Mean, Sd) UCL	0.541						
313												
314	Note: Suggestions regarding the selection of a 95% UCL are provided to help the user to select the most appropriate 95% UCL.											
315	Recommendations are based upon data size, data distribution, and skewness.											
316	These recommendations are based upon the results of the simulation studies summarized in Singh, Maichle, and Lee (2006).											
317	However, simulations results will not cover all Real World data sets; for additional insight the user may want to consult a statistician.											
318												
319												

	A	B	C	D	E	F	G	H	I	J	K	L
320	**TPH-GRO**											
321												
322						**General Statistics**						
323					Total Number of Observations	43			Number of Distinct Observations		3	
324									Number of Missing Observations		4	
325					Minimum	1.1			Mean		10.49	
326					Maximum	391			Median		1.1	
327					SD	59.45			Std. Error of Mean		9.066	
328					Coefficient of Variation	5.667			Skewness		6.545	
329												
330						**Normal GOF Test**						
331					Shapiro Wilk Test Statistic	0.163			**Shapiro Wilk GOF Test**			
332					5% Shapiro Wilk Critical Value	0.943			Data Not Normal at 5% Significance Level			
333					Lilliefors Test Statistic	0.516			**Lilliefors GOF Test**			
334					5% Lilliefors Critical Value	0.134			Data Not Normal at 5% Significance Level			
335						**Data Not Normal at 5% Significance Level**						
336												
337						**Assuming Normal Distribution**						
338					**95% Normal UCL**				**95% UCLs (Adjusted for Skewness)**			
339					95% Student's-t UCL	25.74			95% Adjusted-CLT UCL (Chen-1995)		35.07	
340									95% Modified-t UCL (Johnson-1978)		27.25	
341												
342						**Gamma GOF Test**						
343					A-D Test Statistic	16.78			**Anderson-Darling Gamma GOF Test**			
344					5% A-D Critical Value	0.853			Data Not Gamma Distributed at 5% Significance Level			
345					K-S Test Statistic	0.588			**Kolmogorov-Smirnov Gamma GOF Test**			
346					5% K-S Critical Value	0.146			Data Not Gamma Distributed at 5% Significance Level			
347						**Data Not Gamma Distributed at 5% Significance Level**						
348												
349						**Gamma Statistics**						
350					k hat (MLE)	0.33			k star (bias corrected MLE)		0.322	
351					Theta hat (MLE)	31.8			Theta star (bias corrected MLE)		32.54	
352					nu hat (MLE)	28.37			nu star (bias corrected)		27.73	
353					MLE Mean (bias corrected)	10.49			MLE Sd (bias corrected)		18.48	
354									Approximate Chi Square Value (0.05)		16.72	
355					Adjusted Level of Significance	0.0444			Adjusted Chi Square Value		16.42	
356												
357						**Assuming Gamma Distribution**						
358					95% Approximate Gamma UCL (use when n>=50))	17.4			95% Adjusted Gamma UCL (use when n<50)		17.72	
359												

360	**Lognormal GOF Test**											
361					Shapiro Wilk Test Statistic	0.225	**Shapiro Wilk Lognormal GOF Test**					
362					5% Shapiro Wilk Critical Value	0.943	Data Not Lognormal at 5% Significance Level					
363					Lilliefors Test Statistic	0.534	**Lilliefors Lognormal GOF Test**					
364					5% Lilliefors Critical Value	0.134	Data Not Lognormal at 5% Significance Level					
365	**Data Not Lognormal at 5% Significance Level**											
366												
367	**Lognormal Statistics**											
368					Minimum of Logged Data	0.0953	Mean of logged Data	0.293				
369					Maximum of Logged Data	5.969	SD of logged Data	0.972				
370												
371	**Assuming Lognormal Distribution**											
372					95% H-UCL	3.047	90% Chebyshev (MVUE) UCL	3.207				
373					95% Chebyshev (MVUE) UCL	3.701	97.5% Chebyshev (MVUE) UCL	4.387				
374					99% Chebyshev (MVUE) UCL	5.736						
375												
376	**Nonparametric Distribution Free UCL Statistics**											
377	**Data do not follow a Discernible Distribution (0.05)**											
378												
379	**Nonparametric Distribution Free UCLs**											
380					95% CLT UCL	25.4	95% Jackknife UCL	25.74				
381					95% Standard Bootstrap UCL	N/A	95% Bootstrap-t UCL	N/A				
382					95% Hall's Bootstrap UCL	N/A	95% Percentile Bootstrap UCL	N/A				
383					95% BCA Bootstrap UCL	N/A						
384					90% Chebyshev(Mean, Sd) UCL	37.69	95% Chebyshev(Mean, Sd) UCL	50.01				
385					97.5% Chebyshev(Mean, Sd) UCL	67.1	99% Chebyshev(Mean, Sd) UCL	100.7				
386												
387	**Suggested UCL to Use**											
388					95% Chebyshev (Mean, Sd) UCL	50.01						
389												
390	Note: Suggestions regarding the selection of a 95% UCL are provided to help the user to select the most appropriate 95% UCL.											
391	Recommendations are based upon data size, data distribution, and skewness.											
392	These recommendations are based upon the results of the simulation studies summarized in Singh, Maichle, and Lee (2006).											
393	However, simulations results will not cover all Real World data sets; for additional insight the user may want to consult a statistician.											
394												
395												

	A	B	C	D	E	F	G	H	I	J	K	L
396	**TPH-DRO**											
397												
398						**General Statistics**						
399					Total Number of Observations	43			Number of Distinct Observations		7	
400									Number of Missing Observations		4	
401					Minimum	3			Mean		11.97	
402					Maximum	53			Median		10.6	
403					SD	6.767			Std. Error of Mean		1.032	
404					Coefficient of Variation	0.565			Skewness		5.547	
405												
406						**Normal GOF Test**						
407					Shapiro Wilk Test Statistic	0.325			**Shapiro Wilk GOF Test**			
408					5% Shapiro Wilk Critical Value	0.943			Data Not Normal at 5% Significance Level			
409					Lilliefors Test Statistic	0.441			**Lilliefors GOF Test**			
410					5% Lilliefors Critical Value	0.134			Data Not Normal at 5% Significance Level			
411						**Data Not Normal at 5% Significance Level**						
412												
413						**Assuming Normal Distribution**						
414					**95% Normal UCL**				**95% UCLs (Adjusted for Skewness)**			
415					95% Student's-t UCL	13.7			95% Adjusted-CLT UCL (Chen-1995)		14.6	
416									95% Modified-t UCL (Johnson-1978)		13.85	
417												
418						**Gamma GOF Test**						
419					A-D Test Statistic	10.7			**Anderson-Darling Gamma GOF Test**			
420					5% A-D Critical Value	0.751			Data Not Gamma Distributed at 5% Significance Level			
421					K-S Test Statistic	0.437			**Kolmogorov-Smirnov Gamma GOF Test**			
422					5% K-S Critical Value	0.135			Data Not Gamma Distributed at 5% Significance Level			
423						**Data Not Gamma Distributed at 5% Significance Level**						
424												
425						**Gamma Statistics**						
426					k hat (MLE)	7.164			k star (bias corrected MLE)		6.68	
427					Theta hat (MLE)	1.67			Theta star (bias corrected MLE)		1.792	
428					nu hat (MLE)	616.1			nu star (bias corrected)		574.5	
429					MLE Mean (bias corrected)	11.97			MLE Sd (bias corrected)		4.63	
430									Approximate Chi Square Value (0.05)		519.9	
431					Adjusted Level of Significance	0.0444			Adjusted Chi Square Value		518.1	
432												
433						**Assuming Gamma Distribution**						
434					95% Approximate Gamma UCL (use when n>=50))	13.22			95% Adjusted Gamma UCL (use when n<50)		13.27	
435												

	A	B	C	D	E	F	G	H	I	J	K	L
436	**Lognormal GOF Test**											
437					Shapiro Wilk Test Statistic	0.481	**Shapiro Wilk Lognormal GOF Test**					
438					5% Shapiro Wilk Critical Value	0.943	Data Not Lognormal at 5% Significance Level					
439					Lilliefors Test Statistic	0.419	**Lilliefors Lognormal GOF Test**					
440					5% Lilliefors Critical Value	0.134	Data Not Lognormal at 5% Significance Level					
441	**Data Not Lognormal at 5% Significance Level**											
442												
443	**Lognormal Statistics**											
444					Minimum of Logged Data	1.099	Mean of logged Data	2.411				
445					Maximum of Logged Data	3.97	SD of logged Data	0.34				
446												
447	**Assuming Lognormal Distribution**											
448					95% H-UCL	12.98	90% Chebyshev (MVUE) UCL	13.67				
449					95% Chebyshev (MVUE) UCL	14.52	97.5% Chebyshev (MVUE) UCL	15.7				
450					99% Chebyshev (MVUE) UCL	18.01						
451												
452	**Nonparametric Distribution Free UCL Statistics**											
453	**Data do not follow a Discernible Distribution (0.05)**											
454												
455	**Nonparametric Distribution Free UCLs**											
456					95% CLT UCL	13.66	95% Jackknife UCL	13.7				
457					95% Standard Bootstrap UCL	13.65	95% Bootstrap-t UCL	17.36				
458					95% Hall's Bootstrap UCL	21.15	95% Percentile Bootstrap UCL	13.91				
459					95% BCA Bootstrap UCL	15.24						
460					90% Chebyshev(Mean, Sd) UCL	15.06	95% Chebyshev(Mean, Sd) UCL	16.47				
461					97.5% Chebyshev(Mean, Sd) UCL	18.41	99% Chebyshev(Mean, Sd) UCL	22.24				
462												
463	**Suggested UCL to Use**											
464					95% Student's-t UCL	13.7	or 95% Modified-t UCL	13.85				
465												
466	Note: Suggestions regarding the selection of a 95% UCL are provided to help the user to select the most appropriate 95% UCL.											
467	Recommendations are based upon data size, data distribution, and skewness.											
468	These recommendations are based upon the results of the simulation studies summarized in Singh, Maichle, and Lee (2006).											
469	However, simulations results will not cover all Real World data sets; for additional insight the user may want to consult a statistician.											
470												
471												

	A	B	C	D	E	F	G	H	I	J	K	L
472	**TPH-ORO**											
473												
474						**General Statistics**						
475					Total Number of Observations	39			Number of Distinct Observations		6	
476									Number of Missing Observations		8	
477					Minimum	10.6			Mean		12.57	
478					Maximum	45			Median		10.6	
479					SD	6.774			Std. Error of Mean		1.085	
480					Coefficient of Variation	0.539			Skewness		3.916	
481												
482						**Normal GOF Test**						
483					Shapiro Wilk Test Statistic	0.344			**Shapiro Wilk GOF Test**			
484					5% Shapiro Wilk Critical Value	0.939			Data Not Normal at 5% Significance Level			
485					Lilliefors Test Statistic	0.486			**Lilliefors GOF Test**			
486					5% Lilliefors Critical Value	0.14			Data Not Normal at 5% Significance Level			
487						**Data Not Normal at 5% Significance Level**						
488												
489						**Assuming Normal Distribution**						
490					**95% Normal UCL**				**95% UCLs (Adjusted for Skewness)**			
491					95% Student's-t UCL	14.4			95% Adjusted-CLT UCL (Chen-1995)		15.09	
492									95% Modified-t UCL (Johnson-1978)		14.52	
493												
494						**Gamma GOF Test**						
495					A-D Test Statistic	11.67			**Anderson-Darling Gamma GOF Test**			
496					5% A-D Critical Value	0.75			Data Not Gamma Distributed at 5% Significance Level			
497					K-S Test Statistic	0.499			**Kolmogorov-Smirnov Gamma GOF Test**			
498					5% K-S Critical Value	0.141			Data Not Gamma Distributed at 5% Significance Level			
499						**Data Not Gamma Distributed at 5% Significance Level**						
500												
501						**Gamma Statistics**						
502					k hat (MLE)	7.313			k star (bias corrected MLE)		6.768	
503					Theta hat (MLE)	1.719			Theta star (bias corrected MLE)		1.858	
504					nu hat (MLE)	570.4			nu star (bias corrected)		527.9	
505					MLE Mean (bias corrected)	12.57			MLE Sd (bias corrected)		4.833	
506									Approximate Chi Square Value (0.05)		475.6	
507					Adjusted Level of Significance	0.0437			Adjusted Chi Square Value		473.7	
508												
509						**Assuming Gamma Distribution**						
510					95% Approximate Gamma UCL (use when n>=50))	13.96			95% Adjusted Gamma UCL (use when n<50)		14.01	
511												

	A	B	C	D	E	F	G	H	I	J	K	L
512	**Lognormal GOF Test**											
513					Shapiro Wilk Test Statistic	0.372	**Shapiro Wilk Lognormal GOF Test**					
514					5% Shapiro Wilk Critical Value	0.939	Data Not Lognormal at 5% Significance Level					
515					Lilliefors Test Statistic	0.496	**Lilliefors Lognormal GOF Test**					
516					5% Lilliefors Critical Value	0.14	Data Not Lognormal at 5% Significance Level					
517	**Data Not Lognormal at 5% Significance Level**											
518												
519	**Lognormal Statistics**											
520					Minimum of Logged Data	2.361			Mean of logged Data	2.462		
521					Maximum of Logged Data	3.807			SD of logged Data	0.318		
522												
523	**Assuming Lognormal Distribution**											
524					95% H-UCL	13.53			90% Chebyshev (MVUE) UCL	14.23		
525					95% Chebyshev (MVUE) UCL	15.1			97.5% Chebyshev (MVUE) UCL	16.31		
526					99% Chebyshev (MVUE) UCL	18.67						
527												
528	**Nonparametric Distribution Free UCL Statistics**											
529	**Data do not follow a Discernible Distribution (0.05)**											
530												
531	**Nonparametric Distribution Free UCLs**											
532					95% CLT UCL	14.36			95% Jackknife UCL	14.4		
533					95% Standard Bootstrap UCL	14.35			95% Bootstrap-t UCL	17.47		
534					95% Hall's Bootstrap UCL	15.12			95% Percentile Bootstrap UCL	14.53		
535					95% BCA Bootstrap UCL	15.1						
536					90% Chebyshev(Mean, Sd) UCL	15.83			95% Chebyshev(Mean, Sd) UCL	17.3		
537					97.5% Chebyshev(Mean, Sd) UCL	19.35			99% Chebyshev(Mean, Sd) UCL	23.37		
538												
539	**Suggested UCL to Use**											
540					95% Student's-t UCL	14.4			or 95% Modified-t UCL	14.52		
541												
542	Note: Suggestions regarding the selection of a 95% UCL are provided to help the user to select the most appropriate 95% UCL.											
543	Recommendations are based upon data size, data distribution, and skewness.											
544	These recommendations are based upon the results of the simulation studies summarized in Singh, Maichle, and Lee (2006).											
545	However, simulations results will not cover all Real World data sets; for additional insight the user may want to consult a statistician.											

	A	B	C	D	E	F	G	H	I	J	K	L
1	**UCL Statistics for Uncensored Full Data Sets**											
2	**PARC Area 5**											
3	User Selected Options											
4												
5	From File	WorkSheet_b.xls										
6	Full Precision	OFF										
7	Confidence Coefficient	95%										
8	Number of Bootstrap Operations	2000										
9												
10												
11	**Lead**											
12												
13	**General Statistics**											
14	Total Number of Observations	12					Number of Distinct Observations	10				
15							Number of Missing Observations	0				
16	Minimum	2					Mean	52.25				
17	Maximum	190					Median	34				
18	SD	54.77					Std. Error of Mean	15.81				
19	Coefficient of Variation	1.048					Skewness	1.655				
20												
21	**Normal GOF Test**											
22	Shapiro Wilk Test Statistic	0.824					**Shapiro Wilk GOF Test**					
23	5% Shapiro Wilk Critical Value	0.859					Data Not Normal at 5% Significance Level					
24	Lilliefors Test Statistic	0.216					**Lilliefors GOF Test**					
25	5% Lilliefors Critical Value	0.243					Data appear Normal at 5% Significance Level					
26	**Data appear Approximate Normal at 5% Significance Level**											
27												
28	**Assuming Normal Distribution**											
29	**95% Normal UCL**						**95% UCLs (Adjusted for Skewness)**					
30	95% Student's-t UCL	80.64					95% Adjusted-CLT UCL (Chen-1995)	86.33				
31							95% Modified-t UCL (Johnson-1978)	81.9				
32												
33	**Gamma GOF Test**											
34	A-D Test Statistic	0.288					**Anderson-Darling Gamma GOF Test**					
35	5% A-D Critical Value	0.761					Detected data appear Gamma Distributed at 5% Significance Level					
36	K-S Test Statistic	0.145					**Kolmogorov-Smirnov Gamma GOF Test**					
37	5% K-S Critical Value	0.253					Detected data appear Gamma Distributed at 5% Significance Level					
38	**Detected data appear Gamma Distributed at 5% Significance Level**											
39												
40	**Gamma Statistics**											
41	k hat (MLE)	0.89					k star (bias corrected MLE)	0.723				
42	Theta hat (MLE)	58.68					Theta star (bias corrected MLE)	72.23				
43	nu hat (MLE)	21.37					nu star (bias corrected)	17.36				
44	MLE Mean (bias corrected)	52.25					MLE Sd (bias corrected)	61.43				
45							Approximate Chi Square Value (0.05)	8.93				
46	Adjusted Level of Significance	0.029					Adjusted Chi Square Value	8.023				
47												
48	**Assuming Gamma Distribution**											
49	95% Approximate Gamma UCL (use when n>=50))	101.6					95% Adjusted Gamma UCL (use when n<50)	113.1				
50												

51	**Lognormal GOF Test**											
52				Shapiro Wilk Test Statistic		0.895	**Shapiro Wilk Lognormal GOF Test**					
53				5% Shapiro Wilk Critical Value		0.859	Data appear Lognormal at 5% Significance Level					
54				Lilliefors Test Statistic		0.206	**Lilliefors Lognormal GOF Test**					
55				5% Lilliefors Critical Value		0.243	Data appear Lognormal at 5% Significance Level					
56	**Data appear Lognormal at 5% Significance Level**											
57												
58	**Lognormal Statistics**											
59				Minimum of Logged Data		0.693	Mean of logged Data			3.299		
60				Maximum of Logged Data		5.247	SD of logged Data			1.428		
61												
62	**Assuming Lognormal Distribution**											
63				95% H-UCL		376.9	90% Chebyshev (MVUE) UCL			153.1		
64				95% Chebyshev (MVUE) UCL		193	97.5% Chebyshev (MVUE) UCL			248.3		
65				99% Chebyshev (MVUE) UCL		357						
66												
67	**Nonparametric Distribution Free UCL Statistics**											
68	**Data appear to follow a Discernible Distribution at 5% Significance Level**											
69												
70	**Nonparametric Distribution Free UCLs**											
71				95% CLT UCL		78.25	95% Jackknife UCL			80.64		
72				95% Standard Bootstrap UCL		77.09	95% Bootstrap-t UCL			101.5		
73				95% Hall's Bootstrap UCL		208.1	95% Percentile Bootstrap UCL			78.33		
74				95% BCA Bootstrap UCL		84.25						
75				90% Chebyshev(Mean, Sd) UCL		99.68	95% Chebyshev(Mean, Sd) UCL			121.2		
76				97.5% Chebyshev(Mean, Sd) UCL		151	99% Chebyshev(Mean, Sd) UCL			209.6		
77												
78	**Suggested UCL to Use**											
79				95% Student's-t UCL		80.64						
80												
81	When a data set follows an approximate (e.g., normal) distribution passing one of the GOF test											
82	When applicable, it is suggested to use a UCL based upon a distribution (e.g., gamma) passing both GOF tests in ProUCL											
83												
84	Note: Suggestions regarding the selection of a 95% UCL are provided to help the user to select the most appropriate 95% UCL.											
85	Recommendations are based upon data size, data distribution, and skewness.											
86	These recommendations are based upon the results of the simulation studies summarized in Singh, Maichle, and Lee (2006).											
87	However, simulations results will not cover all Real World data sets; for additional insight the user may want to consult a statistician.											
88												
89												

90	**Zinc**											
91												
92	**General Statistics**											
93				Total Number of Observations		12			Number of Distinct Observations		12	
94									Number of Missing Observations		0	
95				Minimum		11			Mean		59.75	
96				Maximum		137			Median		56.5	
97				SD		37.7			Std. Error of Mean		10.88	
98				Coefficient of Variation		0.631			Skewness		0.613	
99												
100	**Normal GOF Test**											
101				Shapiro Wilk Test Statistic		0.953			**Shapiro Wilk GOF Test**			
102				5% Shapiro Wilk Critical Value		0.859			Data appear Normal at 5% Significance Level			
103				Lilliefors Test Statistic		0.126			**Lilliefors GOF Test**			
104				5% Lilliefors Critical Value		0.243			Data appear Normal at 5% Significance Level			
105	**Data appear Normal at 5% Significance Level**											
106												
107	**Assuming Normal Distribution**											
108				**95% Normal UCL**					**95% UCLs (Adjusted for Skewness)**			
109				95% Student's-t UCL		79.3			95% Adjusted-CLT UCL (Chen-1995)		79.71	
110									95% Modified-t UCL (Johnson-1978)		79.62	
111												
112	**Gamma GOF Test**											
113				A-D Test Statistic		0.222			**Anderson-Darling Gamma GOF Test**			
114				5% A-D Critical Value		0.741			Detected data appear Gamma Distributed at 5% Significance Level			
115				K-S Test Statistic		0.138			**Kolmogorov-Smirnov Gamma GOF Test**			
116				5% K-S Critical Value		0.248			Detected data appear Gamma Distributed at 5% Significance Level			
117	**Detected data appear Gamma Distributed at 5% Significance Level**											
118												
119	**Gamma Statistics**											
120				k hat (MLE)		2.34			k star (bias corrected MLE)		1.81	
121				Theta hat (MLE)		25.54			Theta star (bias corrected MLE)		33.01	
122				nu hat (MLE)		56.15			nu star (bias corrected)		43.45	
123				MLE Mean (bias corrected)		59.75			MLE Sd (bias corrected)		44.41	
124									Approximate Chi Square Value (0.05)		29.33	
125				Adjusted Level of Significance		0.029			Adjusted Chi Square Value		27.57	
126												
127	**Assuming Gamma Distribution**											
128				95% Approximate Gamma UCL (use when n>=50))		88.5			95% Adjusted Gamma UCL (use when n<50)		94.15	
129												

130	**Lognormal GOF Test**											
131					Shapiro Wilk Test Statistic	0.947	**Shapiro Wilk Lognormal GOF Test**					
132					5% Shapiro Wilk Critical Value	0.859	Data appear Lognormal at 5% Significance Level					
133					Lilliefors Test Statistic	0.182	**Lilliefors Lognormal GOF Test**					
134					5% Lilliefors Critical Value	0.243	Data appear Lognormal at 5% Significance Level					
135	**Data appear Lognormal at 5% Significance Level**											
136												
137	**Lognormal Statistics**											
138					Minimum of Logged Data	2.398	Mean of logged Data	3.861				
139					Maximum of Logged Data	4.92	SD of logged Data	0.766				
140												
141	**Assuming Lognormal Distribution**											
142					95% H-UCL	114	90% Chebyshev (MVUE) UCL	104.9				
143					95% Chebyshev (MVUE) UCL	124.4	97.5% Chebyshev (MVUE) UCL	151.5				
144					99% Chebyshev (MVUE) UCL	204.6						
145												
146	**Nonparametric Distribution Free UCL Statistics**											
147	**Data appear to follow a Discernible Distribution at 5% Significance Level**											
148												
149	**Nonparametric Distribution Free UCLs**											
150					95% CLT UCL	77.65	95% Jackknife UCL	79.3				
151					95% Standard Bootstrap UCL	76.87	95% Bootstrap-t UCL	80.92				
152					95% Hall's Bootstrap UCL	81.44	95% Percentile Bootstrap UCL	77.25				
153					95% BCA Bootstrap UCL	77.92						
154					90% Chebyshev(Mean, Sd) UCL	92.4	95% Chebyshev(Mean, Sd) UCL	107.2				
155					97.5% Chebyshev(Mean, Sd) UCL	127.7	99% Chebyshev(Mean, Sd) UCL	168				
156												
157	**Suggested UCL to Use**											
158					95% Student's-t UCL	79.3						
159												
160	Note: Suggestions regarding the selection of a 95% UCL are provided to help the user to select the most appropriate 95% UCL.											
161	Recommendations are based upon data size, data distribution, and skewness.											
162	These recommendations are based upon the results of the simulation studies summarized in Singh, Maichle, and Lee (2006).											
163	However, simulations results will not cover all Real World data sets; for additional insight the user may want to consult a statistician.											
164												

UCL Statistics for Uncensored Full Data Sets

PARC Area 6

User Selected Options	
From File	WorkSheet_c.xls
Full Precision	OFF
Confidence Coefficient	95%
Number of Bootstrap Operations	2000

Antimony

General Statistics

Total Number of Observations	95	Number of Distinct Observations	18
		Number of Missing Observations	9
Minimum	1	Mean	8.493
Maximum	478	Median	1
SD	49.99	Std. Error of Mean	5.129
Coefficient of Variation	5.887	Skewness	9.067

Normal GOF Test

Shapiro Wilk Test Statistic	0.163	**Shapiro Wilk GOF Test**
5% Shapiro Wilk P Value	0	Data Not Normal at 5% Significance Level
Lilliefors Test Statistic	0.446	**Lilliefors GOF Test**
5% Lilliefors Critical Value	0.0911	Data Not Normal at 5% Significance Level

Data Not Normal at 5% Significance Level

Assuming Normal Distribution

95% Normal UCL		**95% UCLs (Adjusted for Skewness)**	
95% Student's-t UCL	17.01	95% Adjusted-CLT UCL (Chen-1995)	22.03
		95% Modified-t UCL (Johnson-1978)	17.81

Gamma GOF Test

A-D Test Statistic	27.04	**Anderson-Darling Gamma GOF Test**
5% A-D Critical Value	0.846	Data Not Gamma Distributed at 5% Significance Level
K-S Test Statistic	0.474	**Kolmogorov-Smirnov Gamma GOF Test**
5% K-S Critical Value	0.0986	Data Not Gamma Distributed at 5% Significance Level

Data Not Gamma Distributed at 5% Significance Level

Gamma Statistics

k hat (MLE)	0.386	k star (bias corrected MLE)	0.381
Theta hat (MLE)	21.98	Theta star (bias corrected MLE)	22.28
nu hat (MLE)	73.42	nu star (bias corrected)	72.44
MLE Mean (bias corrected)	8.493	MLE Sd (bias corrected)	13.75
		Approximate Chi Square Value (0.05)	53.84
Adjusted Level of Significance	0.0475	Adjusted Chi Square Value	53.6

Assuming Gamma Distribution

95% Approximate Gamma UCL (use when n>=50))	11.43	95% Adjusted Gamma UCL (use when n<50)	11.48

	A	B	C	D	E	F	G	H	I	J	K	L
51	**Lognormal GOF Test**											
52					Shapiro Wilk Test Statistic	0.481	**Shapiro Wilk Lognormal GOF Test**					
53					5% Shapiro Wilk P Value	0	Data Not Lognormal at 5% Significance Level					
54					Lilliefors Test Statistic	0.466	**Lilliefors Lognormal GOF Test**					
55					5% Lilliefors Critical Value	0.0911	Data Not Lognormal at 5% Significance Level					
56	**Data Not Lognormal at 5% Significance Level**											
57												
58	**Lognormal Statistics**											
59					Minimum of Logged Data	0				Mean of logged Data	0.427	
60					Maximum of Logged Data	6.17				SD of logged Data	1.07	
61												
62	**Assuming Lognormal Distribution**											
63					95% H-UCL	3.507				90% Chebyshev (MVUE) UCL	3.773	
64					95% Chebyshev (MVUE) UCL	4.263				97.5% Chebyshev (MVUE) UCL	4.944	
65					99% Chebyshev (MVUE) UCL	6.281						
66												
67	**Nonparametric Distribution Free UCL Statistics**											
68	**Data do not follow a Discernible Distribution (0.05)**											
69												
70	**Nonparametric Distribution Free UCLs**											
71					95% CLT UCL	16.93				95% Jackknife UCL	17.01	
72					95% Standard Bootstrap UCL	16.84				95% Bootstrap-t UCL	66.81	
73					95% Hall's Bootstrap UCL	58.67				95% Percentile Bootstrap UCL	18.12	
74					95% BCA Bootstrap UCL	24.49						
75					90% Chebyshev(Mean, Sd) UCL	23.88				95% Chebyshev(Mean, Sd) UCL	30.85	
76					97.5% Chebyshev(Mean, Sd) UCL	40.52				99% Chebyshev(Mean, Sd) UCL	59.53	
77												
78	**Suggested UCL to Use**											
79					95% Chebyshev (Mean, Sd) UCL	30.85						
80												
81	Note: Suggestions regarding the selection of a 95% UCL are provided to help the user to select the most appropriate 95% UCL.											
82	Recommendations are based upon data size, data distribution, and skewness.											
83	These recommendations are based upon the results of the simulation studies summarized in Singh, Maichle, and Lee (2006).											
84	However, simulations results will not cover all Real World data sets; for additional insight the user may want to consult a statistician.											
85												
86												

87	**Arsenic**											
88												
89	**General Statistics**											
90					Total Number of Observations	95			Number of Distinct Observations	41		
91									Number of Missing Observations	9		
92					Minimum	0.84			Mean	4.146		
93					Maximum	27			Median	1.9		
94					SD	5.404			Std. Error of Mean	0.554		
95					Coefficient of Variation	1.303			Skewness	2.365		
96												
97	**Normal GOF Test**											
98					Shapiro Wilk Test Statistic	0.642			**Shapiro Wilk GOF Test**			
99					5% Shapiro Wilk P Value	0			Data Not Normal at 5% Significance Level			
100					Lilliefors Test Statistic	0.307			**Lilliefors GOF Test**			
101					5% Lilliefors Critical Value	0.0911			Data Not Normal at 5% Significance Level			
102	**Data Not Normal at 5% Significance Level**											
103												
104	**Assuming Normal Distribution**											
105					**95% Normal UCL**				**95% UCLs (Adjusted for Skewness)**			
106					95% Student's-t UCL	5.067			95% Adjusted-CLT UCL (Chen-1995)	5.202		
107									95% Modified-t UCL (Johnson-1978)	5.09		
108												
109	**Gamma GOF Test**											
110					A-D Test Statistic	8.018			**Anderson-Darling Gamma GOF Test**			
111					5% A-D Critical Value	0.782			Data Not Gamma Distributed at 5% Significance Level			
112					K-S Test Statistic	0.234			**Kolmogorov-Smirnov Gamma GOF Test**			
113					5% K-S Critical Value	0.0945			Data Not Gamma Distributed at 5% Significance Level			
114	**Data Not Gamma Distributed at 5% Significance Level**											
115												
116	**Gamma Statistics**											
117					k hat (MLE)	1.019			k star (bias corrected MLE)	0.994		
118					Theta hat (MLE)	4.07			Theta star (bias corrected MLE)	4.173		
119					nu hat (MLE)	193.6			nu star (bias corrected)	188.8		
120					MLE Mean (bias corrected)	4.146			MLE Sd (bias corrected)	4.159		
121									Approximate Chi Square Value (0.05)	158		
122					Adjusted Level of Significance	0.0475			Adjusted Chi Square Value	157.6		
123												
124	**Assuming Gamma Distribution**											
125					95% Approximate Gamma UCL (use when n>=50))	4.954			95% Adjusted Gamma UCL (use when n<50)	4.968		
126												

	A	B	C	D	E	F	G	H	I	J	K	L
127	**Lognormal GOF Test**											
128					Shapiro Wilk Test Statistic	0.819	**Shapiro Wilk Lognormal GOF Test**					
129					5% Shapiro Wilk P Value	0	Data Not Lognormal at 5% Significance Level					
130					Lilliefors Test Statistic	0.178	**Lilliefors Lognormal GOF Test**					
131					5% Lilliefors Critical Value	0.0911	Data Not Lognormal at 5% Significance Level					
132	**Data Not Lognormal at 5% Significance Level**											
133												
134	**Lognormal Statistics**											
135					Minimum of Logged Data	-0.174				Mean of logged Data		0.857
136					Maximum of Logged Data	3.296				SD of logged Data		0.979
137												
138	**Assuming Lognormal Distribution**											
139					95% H-UCL	4.763				90% Chebyshev (MVUE) UCL		5.129
140					95% Chebyshev (MVUE) UCL	5.742				97.5% Chebyshev (MVUE) UCL		6.593
141					99% Chebyshev (MVUE) UCL	8.266						
142												
143	**Nonparametric Distribution Free UCL Statistics**											
144	**Data do not follow a Discernible Distribution (0.05)**											
145												
146	**Nonparametric Distribution Free UCLs**											
147					95% CLT UCL	5.058				95% Jackknife UCL		5.067
148					95% Standard Bootstrap UCL	5.047				95% Bootstrap-t UCL		5.279
149					95% Hall's Bootstrap UCL	5.224				95% Percentile Bootstrap UCL		5.111
150					95% BCA Bootstrap UCL	5.197						
151					90% Chebyshev(Mean, Sd) UCL	5.81				95% Chebyshev(Mean, Sd) UCL		6.563
152					97.5% Chebyshev(Mean, Sd) UCL	7.609				99% Chebyshev(Mean, Sd) UCL		9.663
153												
154	**Suggested UCL to Use**											
155					95% Chebyshev (Mean, Sd) UCL	6.563						
156												
157	Note: Suggestions regarding the selection of a 95% UCL are provided to help the user to select the most appropriate 95% UCL.											
158	Recommendations are based upon data size, data distribution, and skewness.											
159	These recommendations are based upon the results of the simulation studies summarized in Singh, Maichle, and Lee (2006).											
160	However, simulations results will not cover all Real World data sets; for additional insight the user may want to consult a statistician.											
161												
162												

163	**Barium**											
164												
165						**General Statistics**							
166					Total Number of Observations	95			Number of Distinct Observations	73		
167									Number of Missing Observations	9		
168					Minimum	18			Mean	176.4		
169					Maximum	2221			Median	75		
170					SD	346.7			Std. Error of Mean	35.57		
171					Coefficient of Variation	1.965			Skewness	4.559		
172												
173						**Normal GOF Test**						
174					Shapiro Wilk Test Statistic	0.422			**Shapiro Wilk GOF Test**			
175					5% Shapiro Wilk P Value	0			Data Not Normal at 5% Significance Level			
176					Lilliefors Test Statistic	0.347			**Lilliefors GOF Test**			
177					5% Lilliefors Critical Value	0.0911			Data Not Normal at 5% Significance Level			
178						**Data Not Normal at 5% Significance Level**						
179												
180						**Assuming Normal Distribution**						
181					**95% Normal UCL**				**95% UCLs (Adjusted for Skewness)**			
182					95% Student's-t UCL	235.5			95% Adjusted-CLT UCL (Chen-1995)	252.7		
183									95% Modified-t UCL (Johnson-1978)	238.3		
184												
185						**Gamma GOF Test**						
186					A-D Test Statistic	8.092			**Anderson-Darling Gamma GOF Test**			
187					5% A-D Critical Value	0.788			Data Not Gamma Distributed at 5% Significance Level			
188					K-S Test Statistic	0.233			**Kolmogorov-Smirnov Gamma GOF Test**			
189					5% K-S Critical Value	0.0949			Data Not Gamma Distributed at 5% Significance Level			
190						**Data Not Gamma Distributed at 5% Significance Level**						
191												
192						**Gamma Statistics**						
193					k hat (MLE)	0.894			k star (bias corrected MLE)	0.873		
194					Theta hat (MLE)	197.3			Theta star (bias corrected MLE)	202.1		
195					nu hat (MLE)	169.9			nu star (bias corrected)	165.9		
196					MLE Mean (bias corrected)	176.4			MLE Sd (bias corrected)	188.8		
197									Approximate Chi Square Value (0.05)	137.1		
198					Adjusted Level of Significance	0.0475			Adjusted Chi Square Value	136.7		
199												
200						**Assuming Gamma Distribution**							
201					95% Approximate Gamma UCL (use when n>=50))	213.5			95% Adjusted Gamma UCL (use when n<50)	214.1		
202												

	A	B	C	D	E	F	G	H	I	J	K	L
203	**Lognormal GOF Test**											
204					Shapiro Wilk Test Statistic	0.901	**Shapiro Wilk Lognormal GOF Test**					
205					5% Shapiro Wilk P Value	3.3153E-8	Data Not Lognormal at 5% Significance Level					
206					Lilliefors Test Statistic	0.134	**Lilliefors Lognormal GOF Test**					
207					5% Lilliefors Critical Value	0.0911	Data Not Lognormal at 5% Significance Level					
208	**Data Not Lognormal at 5% Significance Level**											
209												
210	**Lognormal Statistics**											
211					Minimum of Logged Data	2.89			Mean of logged Data	4.519		
212					Maximum of Logged Data	7.706			SD of logged Data	0.95		
213												
214	**Assuming Lognormal Distribution**											
215					95% H-UCL	178.8			90% Chebyshev (MVUE) UCL	192.5		
216					95% Chebyshev (MVUE) UCL	214.9			97.5% Chebyshev (MVUE) UCL	246		
217					99% Chebyshev (MVUE) UCL	307.1						
218												
219	**Nonparametric Distribution Free UCL Statistics**											
220	**Data do not follow a Discernible Distribution (0.05)**											
221												
222	**Nonparametric Distribution Free UCLs**											
223					95% CLT UCL	234.9			95% Jackknife UCL	235.5		
224					95% Standard Bootstrap UCL	233.5			95% Bootstrap-t UCL	276.6		
225					95% Hall's Bootstrap UCL	263.6			95% Percentile Bootstrap UCL	239		
226					95% BCA Bootstrap UCL	251.5						
227					90% Chebyshev(Mean, Sd) UCL	283.2			95% Chebyshev(Mean, Sd) UCL	331.5		
228					97.5% Chebyshev(Mean, Sd) UCL	398.6			99% Chebyshev(Mean, Sd) UCL	530.4		
229												
230	**Suggested UCL to Use**											
231					95% Chebyshev (Mean, Sd) UCL	331.5						
232												
233	Note: Suggestions regarding the selection of a 95% UCL are provided to help the user to select the most appropriate 95% UCL.											
234	Recommendations are based upon data size, data distribution, and skewness.											
235	These recommendations are based upon the results of the simulation studies summarized in Singh, Maichle, and Lee (2006).											
236	However, simulations results will not cover all Real World data sets; for additional insight the user may want to consult a statistician.											
237												
238												

239	**Cadmium**											
240												
241						**General Statistics**							
242					Total Number of Observations	95			Number of Distinct Observations	24		
243									Number of Missing Observations	9		
244					Minimum	0.5			Mean	1.364		
245					Maximum	15			Median	0.5		
246					SD	2.271			Std. Error of Mean	0.233		
247					Coefficient of Variation	1.665			Skewness	4.295		
248												
249						**Normal GOF Test**						
250					Shapiro Wilk Test Statistic	0.446			**Shapiro Wilk GOF Test**			
251					5% Shapiro Wilk P Value	0			Data Not Normal at 5% Significance Level			
252					Lilliefors Test Statistic	0.352			**Lilliefors GOF Test**			
253					5% Lilliefors Critical Value	0.0911			Data Not Normal at 5% Significance Level			
254						**Data Not Normal at 5% Significance Level**							
255												
256						**Assuming Normal Distribution**							
257					**95% Normal UCL**				**95% UCLs (Adjusted for Skewness)**			
258					95% Student's-t UCL	1.751			95% Adjusted-CLT UCL (Chen-1995)	1.857		
259									95% Modified-t UCL (Johnson-1978)	1.768		
260												
261						**Gamma GOF Test**							
262					A-D Test Statistic	15.63			**Anderson-Darling Gamma GOF Test**			
263					5% A-D Critical Value	0.78			Data Not Gamma Distributed at 5% Significance Level			
264					K-S Test Statistic	0.388			**Kolmogorov-Smirnov Gamma GOF Test**			
265					5% K-S Critical Value	0.0944			Data Not Gamma Distributed at 5% Significance Level			
266						**Data Not Gamma Distributed at 5% Significance Level**							
267												
268						**Gamma Statistics**							
269					k hat (MLE)	1.104			k star (bias corrected MLE)	1.076		
270					Theta hat (MLE)	1.235			Theta star (bias corrected MLE)	1.267		
271					nu hat (MLE)	209.8			nu star (bias corrected)	204.5		
272					MLE Mean (bias corrected)	1.364			MLE Sd (bias corrected)	1.315		
273									Approximate Chi Square Value (0.05)	172.4		
274					Adjusted Level of Significance	0.0475			Adjusted Chi Square Value	172		
275												
276						**Assuming Gamma Distribution**							
277					95% Approximate Gamma UCL (use when n>=50))	1.618			95% Adjusted Gamma UCL (use when n<50)	1.622		
278												

	A	B	C	D	E	F	G	H	I	J	K	L
279	**Lognormal GOF Test**											
280				Shapiro Wilk Test Statistic		0.649	**Shapiro Wilk Lognormal GOF Test**					
281				5% Shapiro Wilk P Value		0	Data Not Lognormal at 5% Significance Level					
282				Lilliefors Test Statistic		0.395	**Lilliefors Lognormal GOF Test**					
283				5% Lilliefors Critical Value		0.0911	Data Not Lognormal at 5% Significance Level					
284	**Data Not Lognormal at 5% Significance Level**											
285												
286	**Lognormal Statistics**											
287				Minimum of Logged Data		-0.693				Mean of logged Data		-0.206
288				Maximum of Logged Data		2.708				SD of logged Data		0.831
289												
290	**Assuming Lognormal Distribution**											
291				95% H-UCL		1.375				90% Chebyshev (MVUE) UCL		1.478
292				95% Chebyshev (MVUE) UCL		1.629				97.5% Chebyshev (MVUE) UCL		1.84
293				99% Chebyshev (MVUE) UCL		2.252						
294												
295	**Nonparametric Distribution Free UCL Statistics**											
296	**Data do not follow a Discernible Distribution (0.05)**											
297												
298	**Nonparametric Distribution Free UCLs**											
299				95% CLT UCL		1.748				95% Jackknife UCL		1.751
300				95% Standard Bootstrap UCL		1.747				95% Bootstrap-t UCL		1.987
301				95% Hall's Bootstrap UCL		2.11				95% Percentile Bootstrap UCL		1.774
302				95% BCA Bootstrap UCL		1.911						
303				90% Chebyshev(Mean, Sd) UCL		2.063				95% Chebyshev(Mean, Sd) UCL		2.38
304				97.5% Chebyshev(Mean, Sd) UCL		2.82				99% Chebyshev(Mean, Sd) UCL		3.683
305												
306	**Suggested UCL to Use**											
307				95% Chebyshev (Mean, Sd) UCL		2.38						
308												
309	Note: Suggestions regarding the selection of a 95% UCL are provided to help the user to select the most appropriate 95% UCL.											
310	Recommendations are based upon data size, data distribution, and skewness.											
311	These recommendations are based upon the results of the simulation studies summarized in Singh, Maichle, and Lee (2006).											
312	However, simulations results will not cover all Real World data sets; for additional insight the user may want to consult a statistician.											
313												
314												

315	**Copper**											
316												
317	**General Statistics**											
318					Total Number of Observations	95			Number of Distinct Observations	74		
319									Number of Missing Observations	9		
320					Minimum	1			Mean	123.8		
321					Maximum	2930			Median	13		
322					SD	361.7			Std. Error of Mean	37.11		
323					Coefficient of Variation	2.922			Skewness	5.819		
324												
325	**Normal GOF Test**											
326					Shapiro Wilk Test Statistic	0.383			**Shapiro Wilk GOF Test**			
327					5% Shapiro Wilk P Value	0			Data Not Normal at 5% Significance Level			
328					Lilliefors Test Statistic	0.367			**Lilliefors GOF Test**			
329					5% Lilliefors Critical Value	0.0911			Data Not Normal at 5% Significance Level			
330	**Data Not Normal at 5% Significance Level**											
331												
332	**Assuming Normal Distribution**											
333					**95% Normal UCL**				**95% UCLs (Adjusted for Skewness)**			
334					95% Student's-t UCL	185.5			95% Adjusted-CLT UCL (Chen-1995)	208.5		
335									95% Modified-t UCL (Johnson-1978)	189.2		
336												
337	**Gamma GOF Test**											
338					A-D Test Statistic	9.005			**Anderson-Darling Gamma GOF Test**			
339					5% A-D Critical Value	0.849			Data Not Gamma Distributed at 5% Significance Level			
340					K-S Test Statistic	0.266			**Kolmogorov-Smirnov Gamma GOF Test**			
341					5% K-S Critical Value	0.0987			Data Not Gamma Distributed at 5% Significance Level			
342	**Data Not Gamma Distributed at 5% Significance Level**											
343												
344	**Gamma Statistics**											
345					k hat (MLE)	0.375			k star (bias corrected MLE)	0.37		
346					Theta hat (MLE)	329.9			Theta star (bias corrected MLE)	334.3		
347					nu hat (MLE)	71.3			nu star (bias corrected)	70.38		
348					MLE Mean (bias corrected)	123.8			MLE Sd (bias corrected)	203.4		
349									Approximate Chi Square Value (0.05)	52.07		
350					Adjusted Level of Significance	0.0475			Adjusted Chi Square Value	51.82		
351												
352	**Assuming Gamma Distribution**											
353					95% Approximate Gamma UCL (use when n>=50))	167.4			95% Adjusted Gamma UCL (use when n<50)	168.1		
354												

	A	B	C	D	E	F	G	H	I	J	K	L
355	**Lognormal GOF Test**											
356					Shapiro Wilk Test Statistic	0.905	**Shapiro Wilk Lognormal GOF Test**					
357					5% Shapiro Wilk P Value	8.1385E-8	Data Not Lognormal at 5% Significance Level					
358					Lilliefors Test Statistic	0.153	**Lilliefors Lognormal GOF Test**					
359					5% Lilliefors Critical Value	0.0911	Data Not Lognormal at 5% Significance Level					
360	**Data Not Lognormal at 5% Significance Level**											
361												
362	**Lognormal Statistics**											
363					Minimum of Logged Data	0				Mean of logged Data	3.047	
364					Maximum of Logged Data	7.983				SD of logged Data	1.705	
365												
366	**Assuming Lognormal Distribution**											
367					95% H-UCL	153.5				90% Chebyshev (MVUE) UCL	153.5	
368					95% Chebyshev (MVUE) UCL	183.6				97.5% Chebyshev (MVUE) UCL	225.5	
369					99% Chebyshev (MVUE) UCL	307.7						
370												
371	**Nonparametric Distribution Free UCL Statistics**											
372	**Data do not follow a Discernible Distribution (0.05)**											
373												
374	**Nonparametric Distribution Free UCLs**											
375					95% CLT UCL	184.9				95% Jackknife UCL	185.5	
376					95% Standard Bootstrap UCL	183.6				95% Bootstrap-t UCL	255.4	
377					95% Hall's Bootstrap UCL	440.7				95% Percentile Bootstrap UCL	189.9	
378					95% BCA Bootstrap UCL	216.8						
379					90% Chebyshev(Mean, Sd) UCL	235.1				95% Chebyshev(Mean, Sd) UCL	285.6	
380					97.5% Chebyshev(Mean, Sd) UCL	355.6				99% Chebyshev(Mean, Sd) UCL	493.1	
381												
382	**Suggested UCL to Use**											
383					95% Chebyshev (Mean, Sd) UCL	285.6						
384												
385	Note: Suggestions regarding the selection of a 95% UCL are provided to help the user to select the most appropriate 95% UCL.											
386	Recommendations are based upon data size, data distribution, and skewness.											
387	These recommendations are based upon the results of the simulation studies summarized in Singh, Maichle, and Lee (2006).											
388	However, simulations results will not cover all Real World data sets; for additional insight the user may want to consult a statistician.											
389												
390												

391	**Lead**											
392												
393	**General Statistics**											
394					Total Number of Observations	96			Number of Distinct Observations	78		
395									Number of Missing Observations	8		
396					Minimum	1			Mean	726.5		
397					Maximum	17028			Median	21		
398					SD	2501			Std. Error of Mean	255.2		
399					Coefficient of Variation	3.442			Skewness	5.256		
400												
401	**Normal GOF Test**											
402					Shapiro Wilk Test Statistic	0.332			**Shapiro Wilk GOF Test**			
403					5% Shapiro Wilk P Value	0			Data Not Normal at 5% Significance Level			
404					Lilliefors Test Statistic	0.386			**Lilliefors GOF Test**			
405					5% Lilliefors Critical Value	0.0907			Data Not Normal at 5% Significance Level			
406	**Data Not Normal at 5% Significance Level**											
407												
408	**Assuming Normal Distribution**											
409					**95% Normal UCL**				**95% UCLs (Adjusted for Skewness)**			
410					95% Student's-t UCL	1150			95% Adjusted-CLT UCL (Chen-1995)	1293		
411									95% Modified-t UCL (Johnson-1978)	1173		
412												
413	**Gamma GOF Test**											
414					A-D Test Statistic	7.257			**Anderson-Darling Gamma GOF Test**			
415					5% A-D Critical Value	0.904			Data Not Gamma Distributed at 5% Significance Level			
416					K-S Test Statistic	0.216			**Kolmogorov-Smirnov Gamma GOF Test**			
417					5% K-S Critical Value	0.101			Data Not Gamma Distributed at 5% Significance Level			
418	**Data Not Gamma Distributed at 5% Significance Level**											
419												
420	**Gamma Statistics**											
421					k hat (MLE)	0.227			k star (bias corrected MLE)	0.226		
422					Theta hat (MLE)	3206			Theta star (bias corrected MLE)	3208		
423					nu hat (MLE)	43.5			nu star (bias corrected)	43.47		
424					MLE Mean (bias corrected)	726.5			MLE Sd (bias corrected)	1527		
425									Approximate Chi Square Value (0.05)	29.35		
426					Adjusted Level of Significance	0.0475			Adjusted Chi Square Value	29.18		
427												
428	**Assuming Gamma Distribution**											
429					95% Approximate Gamma UCL (use when n>=50))	1076			95% Adjusted Gamma UCL (use when n<50)	1082		
430												

	A	B	C	D	E	F	G	H	I	J	K	L
431	**Lognormal GOF Test**											
432					Shapiro Wilk Test Statistic	0.918	**Shapiro Wilk Lognormal GOF Test**					
433					5% Shapiro Wilk P Value	1.6112E-6	Data Not Lognormal at 5% Significance Level					
434					Lilliefors Test Statistic	0.0993	**Lilliefors Lognormal GOF Test**					
435					5% Lilliefors Critical Value	0.0907	Data Not Lognormal at 5% Significance Level					
436	**Data Not Lognormal at 5% Significance Level**											
437												
438	**Lognormal Statistics**											
439					Minimum of Logged Data	0				Mean of logged Data	3.403	
440					Maximum of Logged Data	9.743				SD of logged Data	2.647	
441												
442	**Assuming Lognormal Distribution**											
443					95% H-UCL	3179				90% Chebyshev (MVUE) UCL	2091	
444					95% Chebyshev (MVUE) UCL	2649				97.5% Chebyshev (MVUE) UCL	3424	
445					99% Chebyshev (MVUE) UCL	4945						
446												
447	**Nonparametric Distribution Free UCL Statistics**											
448	**Data do not follow a Discernible Distribution (0.05)**											
449												
450	**Nonparametric Distribution Free UCLs**											
451					95% CLT UCL	1146				95% Jackknife UCL	1150	
452					95% Standard Bootstrap UCL	1141				95% Bootstrap-t UCL	1734	
453					95% Hall's Bootstrap UCL	1518				95% Percentile Bootstrap UCL	1169	
454					95% BCA Bootstrap UCL	1385						
455					90% Chebyshev(Mean, Sd) UCL	1492				95% Chebyshev(Mean, Sd) UCL	1839	
456					97.5% Chebyshev(Mean, Sd) UCL	2320				99% Chebyshev(Mean, Sd) UCL	3266	
457												
458	**Suggested UCL to Use**											
459					95% Chebyshev (Mean, Sd) UCL	1839						
460												
461	Note: Suggestions regarding the selection of a 95% UCL are provided to help the user to select the most appropriate 95% UCL.											
462	Recommendations are based upon data size, data distribution, and skewness.											
463	These recommendations are based upon the results of the simulation studies summarized in Singh, Maichle, and Lee (2006).											
464	However, simulations results will not cover all Real World data sets; for additional insight the user may want to consult a statistician.											
465												
466												

467	**Mercury**											
468												
469						**General Statistics**							
470					Total Number of Observations	95			Number of Distinct Observations	46		
471									Number of Missing Observations	9		
472					Minimum	0.063			Mean	0.33		
473					Maximum	4.9			Median	0.116		
474					SD	0.583			Std. Error of Mean	0.0598		
475					Coefficient of Variation	1.767			Skewness	5.608		
476												
477						**Normal GOF Test**						
478					Shapiro Wilk Test Statistic	0.457			**Shapiro Wilk GOF Test**			
479					5% Shapiro Wilk P Value	0			Data Not Normal at 5% Significance Level			
480					Lilliefors Test Statistic	0.324			**Lilliefors GOF Test**			
481					5% Lilliefors Critical Value	0.0911			Data Not Normal at 5% Significance Level			
482						**Data Not Normal at 5% Significance Level**						
483												
484						**Assuming Normal Distribution**						
485					**95% Normal UCL**				**95% UCLs (Adjusted for Skewness)**			
486					95% Student's-t UCL	0.429			95% Adjusted-CLT UCL (Chen-1995)	0.465		
487									95% Modified-t UCL (Johnson-1978)	0.435		
488												
489						**Gamma GOF Test**						
490					A-D Test Statistic	10.69			**Anderson-Darling Gamma GOF Test**			
491					5% A-D Critical Value	0.783			Data Not Gamma Distributed at 5% Significance Level			
492					K-S Test Statistic	0.263			**Kolmogorov-Smirnov Gamma GOF Test**			
493					5% K-S Critical Value	0.0945			Data Not Gamma Distributed at 5% Significance Level			
494						**Data Not Gamma Distributed at 5% Significance Level**						
495												
496						**Gamma Statistics**						
497					k hat (MLE)	1.014			k star (bias corrected MLE)	0.989		
498					Theta hat (MLE)	0.325			Theta star (bias corrected MLE)	0.334		
499					nu hat (MLE)	192.7			nu star (bias corrected)	187.9		
500					MLE Mean (bias corrected)	0.33			MLE Sd (bias corrected)	0.332		
501									Approximate Chi Square Value (0.05)	157.2		
502					Adjusted Level of Significance	0.0475			Adjusted Chi Square Value	156.8		
503												
504						**Assuming Gamma Distribution**							
505					95% Approximate Gamma UCL (use when n>=50))	0.394			95% Adjusted Gamma UCL (use when n<50)	0.395		
506												

	A	B	C	D	E	F	G	H	I	J	K	L
507	**Lognormal GOF Test**											
508					Shapiro Wilk Test Statistic	0.787	**Shapiro Wilk Lognormal GOF Test**					
509					5% Shapiro Wilk P Value	0	Data Not Lognormal at 5% Significance Level					
510					Lilliefors Test Statistic	0.245	**Lilliefors Lognormal GOF Test**					
511					5% Lilliefors Critical Value	0.0911	Data Not Lognormal at 5% Significance Level					
512	**Data Not Lognormal at 5% Significance Level**											
513												
514	**Lognormal Statistics**											
515					Minimum of Logged Data	-2.765				Mean of logged Data	-1.677	
516					Maximum of Logged Data	1.589				SD of logged Data	0.9	
517												
518	**Assuming Lognormal Distribution**											
519					95% H-UCL	0.343				90% Chebyshev (MVUE) UCL	0.369	
520					95% Chebyshev (MVUE) UCL	0.409				97.5% Chebyshev (MVUE) UCL	0.466	
521					99% Chebyshev (MVUE) UCL	0.577						
522												
523	**Nonparametric Distribution Free UCL Statistics**											
524	**Data do not follow a Discernible Distribution (0.05)**											
525												
526	**Nonparametric Distribution Free UCLs**											
527					95% CLT UCL	0.428				95% Jackknife UCL	0.429	
528					95% Standard Bootstrap UCL	0.428				95% Bootstrap-t UCL	0.507	
529					95% Hall's Bootstrap UCL	0.848				95% Percentile Bootstrap UCL	0.438	
530					95% BCA Bootstrap UCL	0.471						
531					90% Chebyshev(Mean, Sd) UCL	0.509				95% Chebyshev(Mean, Sd) UCL	0.591	
532					97.5% Chebyshev(Mean, Sd) UCL	0.703				99% Chebyshev(Mean, Sd) UCL	0.925	
533												
534	**Suggested UCL to Use**											
535					95% Chebyshev (Mean, Sd) UCL	0.591						
536												
537	Note: Suggestions regarding the selection of a 95% UCL are provided to help the user to select the most appropriate 95% UCL.											
538	Recommendations are based upon data size, data distribution, and skewness.											
539	These recommendations are based upon the results of the simulation studies summarized in Singh, Maichle, and Lee (2006).											
540	However, simulations results will not cover all Real World data sets; for additional insight the user may want to consult a statistician.											
541												
542												

	A	B	C	D	E	F	G	H	I	J	K	L
543	**Nickel**											
544												
545						**General Statistics**							
546					Total Number of Observations	95				Number of Distinct Observations	61	
547										Number of Missing Observations	9	
548					Minimum	1.4				Mean	10.5	
549					Maximum	51				Median	7	
550					SD	10.46				Std. Error of Mean	1.074	
551					Coefficient of Variation	0.997				Skewness	2.276	
552												
553						**Normal GOF Test**						
554					Shapiro Wilk Test Statistic	0.704			**Shapiro Wilk GOF Test**			
555					5% Shapiro Wilk P Value	0			Data Not Normal at 5% Significance Level			
556					Lilliefors Test Statistic	0.239			**Lilliefors GOF Test**			
557					5% Lilliefors Critical Value	0.0911			Data Not Normal at 5% Significance Level			
558						**Data Not Normal at 5% Significance Level**						
559												
560						**Assuming Normal Distribution**						
561					**95% Normal UCL**				**95% UCLs (Adjusted for Skewness)**			
562					95% Student's-t UCL	12.28			95% Adjusted-CLT UCL (Chen-1995)		12.53	
563									95% Modified-t UCL (Johnson-1978)		12.32	
564												
565						**Gamma GOF Test**						
566					A-D Test Statistic	2.852			**Anderson-Darling Gamma GOF Test**			
567					5% A-D Critical Value	0.769			Data Not Gamma Distributed at 5% Significance Level			
568					K-S Test Statistic	0.145			**Kolmogorov-Smirnov Gamma GOF Test**			
569					5% K-S Critical Value	0.0934			Data Not Gamma Distributed at 5% Significance Level			
570						**Data Not Gamma Distributed at 5% Significance Level**						
571												
572						**Gamma Statistics**						
573					k hat (MLE)	1.62			k star (bias corrected MLE)		1.576	
574					Theta hat (MLE)	6.48			Theta star (bias corrected MLE)		6.661	
575					nu hat (MLE)	307.8			nu star (bias corrected)		299.4	
576					MLE Mean (bias corrected)	10.5			MLE Sd (bias corrected)		8.362	
577									Approximate Chi Square Value (0.05)		260.3	
578					Adjusted Level of Significance	0.0475			Adjusted Chi Square Value		259.8	
579												
580						**Assuming Gamma Distribution**						
581					95% Approximate Gamma UCL (use when n>=50))	12.07			95% Adjusted Gamma UCL (use when n<50)		12.1	
582												

583	**Lognormal GOF Test**											
584					Shapiro Wilk Test Statistic	0.959	**Shapiro Wilk Lognormal GOF Test**					
585					5% Shapiro Wilk P Value	0.0244	Data Not Lognormal at 5% Significance Level					
586					Lilliefors Test Statistic	0.0867	**Lilliefors Lognormal GOF Test**					
587					5% Lilliefors Critical Value	0.0911	Data appear Lognormal at 5% Significance Level					
588	**Data appear Approximate Lognormal at 5% Significance Level**											
589												
590	**Lognormal Statistics**											
591					Minimum of Logged Data	0.336	Mean of logged Data	2.012				
592					Maximum of Logged Data	3.932	SD of logged Data	0.786				
593												
594	**Assuming Lognormal Distribution**											
595					95% H-UCL	12.04	90% Chebyshev (MVUE) UCL	12.9				
596					95% Chebyshev (MVUE) UCL	14.16	97.5% Chebyshev (MVUE) UCL	15.9				
597					99% Chebyshev (MVUE) UCL	19.31						
598												
599	**Nonparametric Distribution Free UCL Statistics**											
600	**Data appear to follow a Discernible Distribution at 5% Significance Level**											
601												
602	**Nonparametric Distribution Free UCLs**											
603					95% CLT UCL	12.26	95% Jackknife UCL	12.28				
604					95% Standard Bootstrap UCL	12.21	95% Bootstrap-t UCL	12.71				
605					95% Hall's Bootstrap UCL	12.58	95% Percentile Bootstrap UCL	12.38				
606					95% BCA Bootstrap UCL	12.48						
607					90% Chebyshev(Mean, Sd) UCL	13.72	95% Chebyshev(Mean, Sd) UCL	15.18				
608					97.5% Chebyshev(Mean, Sd) UCL	17.2	99% Chebyshev(Mean, Sd) UCL	21.18				
609												
610	**Suggested UCL to Use**											
611					95% H-UCL	12.04						
612												
613	Note: Suggestions regarding the selection of a 95% UCL are provided to help the user to select the most appropriate 95% UCL.											
614	Recommendations are based upon data size, data distribution, and skewness.											
615	These recommendations are based upon the results of the simulation studies summarized in Singh, Maichle, and Lee (2006).											
616	However, simulations results will not cover all Real World data sets; for additional insight the user may want to consult a statistician.											
617												
618	**ProUCL computes and outputs H-statistic based UCLs for historical reasons only.**											
619	**H-statistic often results in unstable (both high and low) values of UCL95 as shown in examples in the Technical Guide.**											
620	**It is therefore recommended to avoid the use of H-statistic based 95% UCLs.**											
621	**Use of nonparametric methods are preferred to compute UCL95 for skewed data sets which do not follow a gamma distribution.**											
622												
623												

	A	B	C	D	E	F	G	H	I	J	K	L
624	**Selenium**											
625												
626						**General Statistics**							
627						Total Number of Observations	95				Number of Distinct Observations	11
628											Number of Missing Observations	9
629						Minimum	0.5				Mean	0.702
630						Maximum	11				Median	0.5
631						SD	1.109				Std. Error of Mean	0.114
632						Coefficient of Variation	1.58				Skewness	8.739
633												
634						**Normal GOF Test**						
635						Shapiro Wilk Test Statistic	0.203			**Shapiro Wilk GOF Test**		
636						5% Shapiro Wilk P Value	0			Data Not Normal at 5% Significance Level		
637						Lilliefors Test Statistic	0.457			**Lilliefors GOF Test**		
638						5% Lilliefors Critical Value	0.0911			Data Not Normal at 5% Significance Level		
639						**Data Not Normal at 5% Significance Level**						
640												
641						**Assuming Normal Distribution**						
642					**95% Normal UCL**					**95% UCLs (Adjusted for Skewness)**		
643					95% Student's-t UCL	0.891				95% Adjusted-CLT UCL (Chen-1995)	0.999	
644										95% Modified-t UCL (Johnson-1978)	0.908	
645												
646						**Gamma GOF Test**						
647						A-D Test Statistic	27.09			**Anderson-Darling Gamma GOF Test**		
648						5% A-D Critical Value	0.761			Data Not Gamma Distributed at 5% Significance Level		
649						K-S Test Statistic	0.503			**Kolmogorov-Smirnov Gamma GOF Test**		
650						5% K-S Critical Value	0.0927			Data Not Gamma Distributed at 5% Significance Level		
651						**Data Not Gamma Distributed at 5% Significance Level**						
652												
653						**Gamma Statistics**						
654						k hat (MLE)	2.586			k star (bias corrected MLE)	2.512	
655						Theta hat (MLE)	0.272			Theta star (bias corrected MLE)	0.28	
656						nu hat (MLE)	491.4			nu star (bias corrected)	477.2	
657						MLE Mean (bias corrected)	0.702			MLE Sd (bias corrected)	0.443	
658										Approximate Chi Square Value (0.05)	427.5	
659						Adjusted Level of Significance	0.0475			Adjusted Chi Square Value	426.8	
660												
661						**Assuming Gamma Distribution**						
662						95% Approximate Gamma UCL (use when n>=50))	0.784			95% Adjusted Gamma UCL (use when n<50)	0.785	
663												

	A	B	C	D	E	F	G	H	I	J	K	L
664	**Lognormal GOF Test**											
665				Shapiro Wilk Test Statistic		0.372	**Shapiro Wilk Lognormal GOF Test**					
666				5% Shapiro Wilk P Value		0	Data Not Lognormal at 5% Significance Level					
667				Lilliefors Test Statistic		0.504	**Lilliefors Lognormal GOF Test**					
668				5% Lilliefors Critical Value		0.0911	Data Not Lognormal at 5% Significance Level					
669	**Data Not Lognormal at 5% Significance Level**											
670												
671	**Lognormal Statistics**											
672				Minimum of Logged Data		-0.693				Mean of logged Data		-0.559
673				Maximum of Logged Data		2.398				SD of logged Data		0.438
674												
675	**Assuming Lognormal Distribution**											
676				95% H-UCL		0.683				90% Chebyshev (MVUE) UCL		0.717
677				95% Chebyshev (MVUE) UCL		0.757				97.5% Chebyshev (MVUE) UCL		0.812
678				99% Chebyshev (MVUE) UCL		0.922						
679												
680	**Nonparametric Distribution Free UCL Statistics**											
681	**Data do not follow a Discernible Distribution (0.05)**											
682												
683	**Nonparametric Distribution Free UCLs**											
684				95% CLT UCL		0.89				95% Jackknife UCL		0.891
685				95% Standard Bootstrap UCL		0.886				95% Bootstrap-t UCL		1.402
686				95% Hall's Bootstrap UCL		1.498				95% Percentile Bootstrap UCL		0.909
687				95% BCA Bootstrap UCL		1.114						
688				90% Chebyshev(Mean, Sd) UCL		1.044				95% Chebyshev(Mean, Sd) UCL		1.198
689				97.5% Chebyshev(Mean, Sd) UCL		1.413				99% Chebyshev(Mean, Sd) UCL		1.835
690												
691	**Suggested UCL to Use**											
692				95% Student's-t UCL		0.891				or 95% Modified-t UCL		0.908
693												
694	Note: Suggestions regarding the selection of a 95% UCL are provided to help the user to select the most appropriate 95% UCL.											
695	Recommendations are based upon data size, data distribution, and skewness.											
696	These recommendations are based upon the results of the simulation studies summarized in Singh, Maichle, and Lee (2006).											
697	However, simulations results will not cover all Real World data sets; for additional insight the user may want to consult a statistician.											
698												
699												

	A	B	C	D	E	F	G	H	I	J	K	L
700	**Silver**											
701												
702						**General Statistics**						
703					Total Number of Observations	95			Number of Distinct Observations	14		
704									Number of Missing Observations	9		
705					Minimum	0.1			Mean	0.331		
706					Maximum	13			Median	0.1		
707					SD	1.362			Std. Error of Mean	0.14		
708					Coefficient of Variation	4.121			Skewness	8.824		
709												
710						**Normal GOF Test**						
711					Shapiro Wilk Test Statistic	0.187			**Shapiro Wilk GOF Test**			
712					5% Shapiro Wilk P Value	0			Data Not Normal at 5% Significance Level			
713					Lilliefors Test Statistic	0.433			**Lilliefors GOF Test**			
714					5% Lilliefors Critical Value	0.0911			Data Not Normal at 5% Significance Level			
715						**Data Not Normal at 5% Significance Level**						
716												
717						**Assuming Normal Distribution**						
718					**95% Normal UCL**				**95% UCLs (Adjusted for Skewness)**			
719					95% Student's-t UCL	0.563			95% Adjusted-CLT UCL (Chen-1995)	0.696		
720									95% Modified-t UCL (Johnson-1978)	0.584		
721												
722						**Gamma GOF Test**						
723					A-D Test Statistic	27.25			**Anderson-Darling Gamma GOF Test**			
724					5% A-D Critical Value	0.802			Data Not Gamma Distributed at 5% Significance Level			
725					K-S Test Statistic	0.513			**Kolmogorov-Smirnov Gamma GOF Test**			
726					5% K-S Critical Value	0.096			Data Not Gamma Distributed at 5% Significance Level			
727						**Data Not Gamma Distributed at 5% Significance Level**						
728												
729						**Gamma Statistics**						
730					k hat (MLE)	0.671			k star (bias corrected MLE)	0.657		
731					Theta hat (MLE)	0.492			Theta star (bias corrected MLE)	0.503		
732					nu hat (MLE)	127.6			nu star (bias corrected)	124.9		
733					MLE Mean (bias corrected)	0.331			MLE Sd (bias corrected)	0.408		
734									Approximate Chi Square Value (0.05)	100.1		
735					Adjusted Level of Significance	0.0475			Adjusted Chi Square Value	99.72		
736												
737						**Assuming Gamma Distribution**						
738					95% Approximate Gamma UCL (use when n>=50))	0.413			95% Adjusted Gamma UCL (use when n<50)	0.414		
739												

	A	B	C	D	E	F	G	H	I	J	K	L
740	**Lognormal GOF Test**											
741				Shapiro Wilk Test Statistic		0.424	**Shapiro Wilk Lognormal GOF Test**					
742				5% Shapiro Wilk P Value		0	Data Not Lognormal at 5% Significance Level					
743				Lilliefors Test Statistic		0.501	**Lilliefors Lognormal GOF Test**					
744				5% Lilliefors Critical Value		0.0911	Data Not Lognormal at 5% Significance Level					
745	**Data Not Lognormal at 5% Significance Level**											
746												
747	**Lognormal Statistics**											
748				Minimum of Logged Data		-2.303				Mean of logged Data		-2.012
749				Maximum of Logged Data		2.565				SD of logged Data		0.823
750												
751	**Assuming Lognormal Distribution**											
752				95% H-UCL		0.224				90% Chebyshev (MVUE) UCL		0.241
753				95% Chebyshev (MVUE) UCL		0.265				97.5% Chebyshev (MVUE) UCL		0.299
754				99% Chebyshev (MVUE) UCL		0.366						
755												
756	**Nonparametric Distribution Free UCL Statistics**											
757	**Data do not follow a Discernible Distribution (0.05)**											
758												
759	**Nonparametric Distribution Free UCLs**											
760				95% CLT UCL		0.56				95% Jackknife UCL		0.563
761				95% Standard Bootstrap UCL		0.566				95% Bootstrap-t UCL		1.537
762				95% Hall's Bootstrap UCL		1.31				95% Percentile Bootstrap UCL		0.595
763				95% BCA Bootstrap UCL		0.831						
764				90% Chebyshev(Mean, Sd) UCL		0.75				95% Chebyshev(Mean, Sd) UCL		0.94
765				97.5% Chebyshev(Mean, Sd) UCL		1.203				99% Chebyshev(Mean, Sd) UCL		1.721
766												
767	**Suggested UCL to Use**											
768				95% Chebyshev (Mean, Sd) UCL		0.94						
769												
770	Note: Suggestions regarding the selection of a 95% UCL are provided to help the user to select the most appropriate 95% UCL.											
771	Recommendations are based upon data size, data distribution, and skewness.											
772	These recommendations are based upon the results of the simulation studies summarized in Singh, Maichle, and Lee (2006).											
773	However, simulations results will not cover all Real World data sets; for additional insight the user may want to consult a statistician.											
774												
775												

	A	B	C	D	E	F	G	H	I	J	K	L
776	**Zinc**											
777												
778	**General Statistics**											
779					Total Number of Observations	95				Number of Distinct Observations		71
780										Number of Missing Observations		9
781					Minimum	11				Mean		631.5
782					Maximum	10576				Median		50
783					SD	1779				Std. Error of Mean		182.5
784					Coefficient of Variation	2.817				Skewness		4.361
785												
786	**Normal GOF Test**											
787					Shapiro Wilk Test Statistic	0.391		**Shapiro Wilk GOF Test**				
788					5% Shapiro Wilk P Value	0		Data Not Normal at 5% Significance Level				
789					Lilliefors Test Statistic	0.364		**Lilliefors GOF Test**				
790					5% Lilliefors Critical Value	0.0911		Data Not Normal at 5% Significance Level				
791	**Data Not Normal at 5% Significance Level**											
792												
793	**Assuming Normal Distribution**											
794			**95% Normal UCL**					**95% UCLs (Adjusted for Skewness)**				
795					95% Student's-t UCL	934.6				95% Adjusted-CLT UCL (Chen-1995)		1019
796										95% Modified-t UCL (Johnson-1978)		948.3
797												
798	**Gamma GOF Test**											
799					A-D Test Statistic	10.19		**Anderson-Darling Gamma GOF Test**				
800					5% A-D Critical Value	0.855		Data Not Gamma Distributed at 5% Significance Level				
801					K-S Test Statistic	0.289		**Kolmogorov-Smirnov Gamma GOF Test**				
802					5% K-S Critical Value	0.099		Data Not Gamma Distributed at 5% Significance Level				
803	**Data Not Gamma Distributed at 5% Significance Level**											
804												
805	**Gamma Statistics**											
806					k hat (MLE)	0.353				k star (bias corrected MLE)		0.349
807					Theta hat (MLE)	1790				Theta star (bias corrected MLE)		1811
808					nu hat (MLE)	67.05				nu star (bias corrected)		66.26
809					MLE Mean (bias corrected)	631.5				MLE Sd (bias corrected)		1069
810										Approximate Chi Square Value (0.05)		48.53
811					Adjusted Level of Significance	0.0475				Adjusted Chi Square Value		48.3
812												
813	**Assuming Gamma Distribution**											
814					95% Approximate Gamma UCL (use when n>=50))	862.2				95% Adjusted Gamma UCL (use when n<50)		866.4
815												

816	**Lognormal GOF Test**											
817					Shapiro Wilk Test Statistic	0.858	**Shapiro Wilk Lognormal GOF Test**					
818					5% Shapiro Wilk P Value	5.264E-13	Data Not Lognormal at 5% Significance Level					
819					Lilliefors Test Statistic	0.186	**Lilliefors Lognormal GOF Test**					
820					5% Lilliefors Critical Value	0.0911	Data Not Lognormal at 5% Significance Level					
821	**Data Not Lognormal at 5% Significance Level**											
822												
823	**Lognormal Statistics**											
824					Minimum of Logged Data	2.398				Mean of logged Data	4.545	
825					Maximum of Logged Data	9.266				SD of logged Data	1.752	
826												
827	**Assuming Lognormal Distribution**											
828					95% H-UCL	763.9				90% Chebyshev (MVUE) UCL	755	
829					95% Chebyshev (MVUE) UCL	906.7				97.5% Chebyshev (MVUE) UCL	1117	
830					99% Chebyshev (MVUE) UCL	1531						
831												
832	**Nonparametric Distribution Free UCL Statistics**											
833	**Data do not follow a Discernible Distribution (0.05)**											
834												
835	**Nonparametric Distribution Free UCLs**											
836					95% CLT UCL	931.7				95% Jackknife UCL	934.6	
837					95% Standard Bootstrap UCL	931.2				95% Bootstrap-t UCL	1116	
838					95% Hall's Bootstrap UCL	965.3				95% Percentile Bootstrap UCL	954.1	
839					95% BCA Bootstrap UCL	1045						
840					90% Chebyshev(Mean, Sd) UCL	1179				95% Chebyshev(Mean, Sd) UCL	1427	
841					97.5% Chebyshev(Mean, Sd) UCL	1771				99% Chebyshev(Mean, Sd) UCL	2447	
842												
843	**Suggested UCL to Use**											
844					95% Chebyshev (Mean, Sd) UCL	1427						
845												
846	Note: Suggestions regarding the selection of a 95% UCL are provided to help the user to select the most appropriate 95% UCL.											
847	Recommendations are based upon data size, data distribution, and skewness.											
848	These recommendations are based upon the results of the simulation studies summarized in Singh, Maichle, and Lee (2006).											
849	However, simulations results will not cover all Real World data sets; for additional insight the user may want to consult a statistician.											
850												
851												

852	**TPH-GRO**											
853												
854	**General Statistics**											
855				Total Number of Observations		41			Number of Distinct Observations		6	
856									Number of Missing Observations		63	
857				Minimum		1.1			Mean		12.33	
858				Maximum		317			Median		5.3	
859				SD		48.95			Std. Error of Mean		7.645	
860				Coefficient of Variation		3.97			Skewness		6.332	
861												
862	**Normal GOF Test**											
863				Shapiro Wilk Test Statistic		0.205			**Shapiro Wilk GOF Test**			
864				5% Shapiro Wilk Critical Value		0.941			Data Not Normal at 5% Significance Level			
865				Lilliefors Test Statistic		0.462			**Lilliefors GOF Test**			
866				5% Lilliefors Critical Value		0.137			Data Not Normal at 5% Significance Level			
867	**Data Not Normal at 5% Significance Level**											
868												
869	**Assuming Normal Distribution**											
870				**95% Normal UCL**					**95% UCLs (Adjusted for Skewness)**			
871				95% Student's-t UCL		25.2			95% Adjusted-CLT UCL (Chen-1995)		32.98	
872									95% Modified-t UCL (Johnson-1978)		26.46	
873												
874	**Gamma GOF Test**											
875				A-D Test Statistic		7.325			**Anderson-Darling Gamma GOF Test**			
876				5% A-D Critical Value		0.81			Data Not Gamma Distributed at 5% Significance Level			
877				K-S Test Statistic		0.428			**Kolmogorov-Smirnov Gamma GOF Test**			
878				5% K-S Critical Value		0.146			Data Not Gamma Distributed at 5% Significance Level			
879	**Data Not Gamma Distributed at 5% Significance Level**											
880												
881	**Gamma Statistics**											
882				k hat (MLE)		0.537			k star (bias corrected MLE)		0.514	
883				Theta hat (MLE)		22.98			Theta star (bias corrected MLE)		24.01	
884				nu hat (MLE)		44			nu star (bias corrected)		42.11	
885				MLE Mean (bias corrected)		12.33			MLE Sd (bias corrected)		17.2	
886									Approximate Chi Square Value (0.05)		28.24	
887				Adjusted Level of Significance		0.0441			Adjusted Chi Square Value		27.82	
888												
889	**Assuming Gamma Distribution**											
890				95% Approximate Gamma UCL (use when n>=50))		18.39			95% Adjusted Gamma UCL (use when n<50)		18.66	
891												

892	**Lognormal GOF Test**											
893					Shapiro Wilk Test Statistic	0.728	**Shapiro Wilk Lognormal GOF Test**					
894					5% Shapiro Wilk Critical Value	0.941	Data Not Lognormal at 5% Significance Level					
895					Lilliefors Test Statistic	0.3	**Lilliefors Lognormal GOF Test**					
896					5% Lilliefors Critical Value	0.137	Data Not Lognormal at 5% Significance Level					
897	**Data Not Lognormal at 5% Significance Level**											
898												
899	**Lognormal Statistics**											
900					Minimum of Logged Data	0.0953				Mean of logged Data	1.341	
901					Maximum of Logged Data	5.759				SD of logged Data	1.095	
902												
903	**Assuming Lognormal Distribution**											
904					95% H-UCL	10.66				90% Chebyshev (MVUE) UCL	10.98	
905					95% Chebyshev (MVUE) UCL	12.86				97.5% Chebyshev (MVUE) UCL	15.48	
906					99% Chebyshev (MVUE) UCL	20.63						
907												
908	**Nonparametric Distribution Free UCL Statistics**											
909	**Data do not follow a Discernible Distribution (0.05)**											
910												
911	**Nonparametric Distribution Free UCLs**											
912					95% CLT UCL	24.9				95% Jackknife UCL	25.2	
913					95% Standard Bootstrap UCL	24.8				95% Bootstrap-t UCL	180.3	
914					95% Hall's Bootstrap UCL	93.15				95% Percentile Bootstrap UCL	27.34	
915					95% BCA Bootstrap UCL	35.52						
916					90% Chebyshev(Mean, Sd) UCL	35.26				95% Chebyshev(Mean, Sd) UCL	45.65	
917					97.5% Chebyshev(Mean, Sd) UCL	60.07				99% Chebyshev(Mean, Sd) UCL	88.39	
918												
919	**Suggested UCL to Use**											
920					95% Chebyshev (Mean, Sd) UCL	45.65						
921												
922	Note: Suggestions regarding the selection of a 95% UCL are provided to help the user to select the most appropriate 95% UCL.											
923	Recommendations are based upon data size, data distribution, and skewness.											
924	These recommendations are based upon the results of the simulation studies summarized in Singh, Maichle, and Lee (2006).											
925	However, simulations results will not cover all Real World data sets; for additional insight the user may want to consult a statistician.											
926												
927												

	A	B	C	D	E	F	G	H	I	J	K	L
928	**TPH-DRO**											
929												
930						**General Statistics**						
931					Total Number of Observations	42			Number of Distinct Observations		8	
932									Number of Missing Observations		62	
933					Minimum	5.3			Mean		174.4	
934					Maximum	6980			Median		5.3	
935					SD	1076			Std. Error of Mean		166	
936					Coefficient of Variation	6.168			Skewness		6.481	
937												
938						**Normal GOF Test**						
939					Shapiro Wilk Test Statistic	0.16			**Shapiro Wilk GOF Test**			
940					5% Shapiro Wilk Critical Value	0.942			Data Not Normal at 5% Significance Level			
941					Lilliefors Test Statistic	0.531			**Lilliefors GOF Test**			
942					5% Lilliefors Critical Value	0.135			Data Not Normal at 5% Significance Level			
943						**Data Not Normal at 5% Significance Level**						
944												
945						**Assuming Normal Distribution**						
946					**95% Normal UCL**				**95% UCLs (Adjusted for Skewness)**			
947					95% Student's-t UCL	453.8			95% Adjusted-CLT UCL (Chen-1995)		624.8	
948									95% Modified-t UCL (Johnson-1978)		481.4	
949												
950						**Gamma GOF Test**						
951					A-D Test Statistic	14.4			**Anderson-Darling Gamma GOF Test**			
952					5% A-D Critical Value	0.89			Data Not Gamma Distributed at 5% Significance Level			
953					K-S Test Statistic	0.502			**Kolmogorov-Smirnov Gamma GOF Test**			
954					5% K-S Critical Value	0.15			Data Not Gamma Distributed at 5% Significance Level			
955						**Data Not Gamma Distributed at 5% Significance Level**						
956												
957						**Gamma Statistics**						
958					k hat (MLE)	0.239			k star (bias corrected MLE)		0.238	
959					Theta hat (MLE)	729.1			Theta star (bias corrected MLE)		732.8	
960					nu hat (MLE)	20.09			nu star (bias corrected)		19.99	
961					MLE Mean (bias corrected)	174.4			MLE Sd (bias corrected)		357.5	
962									Approximate Chi Square Value (0.05)		10.85	
963					Adjusted Level of Significance	0.0443			Adjusted Chi Square Value		10.6	
964												
965						**Assuming Gamma Distribution**						
966					95% Approximate Gamma UCL (use when n>=50))	321.5			95% Adjusted Gamma UCL (use when n<50)		328.8	
967												

968	**Lognormal GOF Test**											
969				Shapiro Wilk Test Statistic		0.425	**Shapiro Wilk Lognormal GOF Test**					
970				5% Shapiro Wilk Critical Value		0.942	Data Not Lognormal at 5% Significance Level					
971				Lilliefors Test Statistic		0.331	**Lilliefors Lognormal GOF Test**					
972				5% Lilliefors Critical Value		0.135	Data Not Lognormal at 5% Significance Level					
973	**Data Not Lognormal at 5% Significance Level**											
974												
975	**Lognormal Statistics**											
976				Minimum of Logged Data		1.668			Mean of logged Data			2.171
977				Maximum of Logged Data		8.851			SD of logged Data			1.151
978												
979	**Assuming Lognormal Distribution**											
980				95% H-UCL		26.8			90% Chebyshev (MVUE) UCL			27.29
981				95% Chebyshev (MVUE) UCL		32.13			97.5% Chebyshev (MVUE) UCL			38.86
982				99% Chebyshev (MVUE) UCL		52.07						
983												
984	**Nonparametric Distribution Free UCL Statistics**											
985	**Data do not follow a Discernible Distribution (0.05)**											
986												
987	**Nonparametric Distribution Free UCLs**											
988				95% CLT UCL		447.4			95% Jackknife UCL			453.8
989				95% Standard Bootstrap UCL		450.9			95% Bootstrap-t UCL			47019
990				95% Hall's Bootstrap UCL		22142			95% Percentile Bootstrap UCL			506
991				95% BCA Bootstrap UCL		672.7						
992				90% Chebyshev(Mean, Sd) UCL		672.4			95% Chebyshev(Mean, Sd) UCL			898
993				97.5% Chebyshev(Mean, Sd) UCL		1211			99% Chebyshev(Mean, Sd) UCL			1826
994												
995	**Suggested UCL to Use**											
996				95% Chebyshev (Mean, Sd) UCL		898						
997												
998	Note: Suggestions regarding the selection of a 95% UCL are provided to help the user to select the most appropriate 95% UCL.											
999	Recommendations are based upon data size, data distribution, and skewness.											
1000	These recommendations are based upon the results of the simulation studies summarized in Singh, Maichle, and Lee (2006).											
1001	However, simulations results will not cover all Real World data sets; for additional insight the user may want to consult a statistician.											
1002												
1003												

	A	B	C	D	E	F	G	H	I	J	K	L
1004	**TPH-ORO**											
1005												
1006						**General Statistics**						
1007					Total Number of Observations	34			Number of Distinct Observations		27	
1008									Number of Missing Observations		70	
1009					Minimum	5.3			Mean		102.9	
1010					Maximum	1058			Median		37	
1011					SD	201			Std. Error of Mean		34.48	
1012					Coefficient of Variation	1.954			Skewness		3.759	
1013												
1014						**Normal GOF Test**						
1015					Shapiro Wilk Test Statistic	0.518			**Shapiro Wilk GOF Test**			
1016					5% Shapiro Wilk Critical Value	0.933			Data Not Normal at 5% Significance Level			
1017					Lilliefors Test Statistic	0.314			**Lilliefors GOF Test**			
1018					5% Lilliefors Critical Value	0.15			Data Not Normal at 5% Significance Level			
1019						**Data Not Normal at 5% Significance Level**						
1020												
1021						**Assuming Normal Distribution**						
1022					**95% Normal UCL**				**95% UCLs (Adjusted for Skewness)**			
1023					95% Student's-t UCL	161.2			95% Adjusted-CLT UCL (Chen-1995)		183.3	
1024									95% Modified-t UCL (Johnson-1978)		164.9	
1025												
1026						**Gamma GOF Test**						
1027					A-D Test Statistic	1.43			**Anderson-Darling Gamma GOF Test**			
1028					5% A-D Critical Value	0.805			Data Not Gamma Distributed at 5% Significance Level			
1029					K-S Test Statistic	0.163			**Kolmogorov-Smirnov Gamma GOF Test**			
1030					5% K-S Critical Value	0.159			Data Not Gamma Distributed at 5% Significance Level			
1031						**Data Not Gamma Distributed at 5% Significance Level**						
1032												
1033						**Gamma Statistics**						
1034					k hat (MLE)	0.567			k star (bias corrected MLE)		0.536	
1035					Theta hat (MLE)	181.6			Theta star (bias corrected MLE)		191.8	
1036					nu hat (MLE)	38.53			nu star (bias corrected)		36.46	
1037					MLE Mean (bias corrected)	102.9			MLE Sd (bias corrected)		140.5	
1038									Approximate Chi Square Value (0.05)		23.64	
1039					Adjusted Level of Significance	0.0422			Adjusted Chi Square Value		23.13	
1040												
1041						**Assuming Gamma Distribution**						
1042					95% Approximate Gamma UCL (use when n>=50))	158.6			95% Adjusted Gamma UCL (use when n<50)		162.2	
1043												

	A	B	C	D	E	F	G	H	I	J	K	L
1044	**Lognormal GOF Test**											
1045					Shapiro Wilk Test Statistic	0.931	**Shapiro Wilk Lognormal GOF Test**					
1046					5% Shapiro Wilk Critical Value	0.933	Data Not Lognormal at 5% Significance Level					
1047					Lilliefors Test Statistic	0.161	**Lilliefors Lognormal GOF Test**					
1048					5% Lilliefors Critical Value	0.15	Data Not Lognormal at 5% Significance Level					
1049	**Data Not Lognormal at 5% Significance Level**											
1050												
1051	**Lognormal Statistics**											
1052					Minimum of Logged Data	1.668				Mean of logged Data		3.533
1053					Maximum of Logged Data	6.964				SD of logged Data		1.479
1054												
1055	**Assuming Lognormal Distribution**											
1056					95% H-UCL	226.5				90% Chebyshev (MVUE) UCL		189.4
1057					95% Chebyshev (MVUE) UCL	231.6				97.5% Chebyshev (MVUE) UCL		290.2
1058					99% Chebyshev (MVUE) UCL	405.4						
1059												
1060	**Nonparametric Distribution Free UCL Statistics**											
1061	**Data do not follow a Discernible Distribution (0.05)**											
1062												
1063	**Nonparametric Distribution Free UCLs**											
1064					95% CLT UCL	159.6				95% Jackknife UCL		161.2
1065					95% Standard Bootstrap UCL	159				95% Bootstrap-t UCL		237.4
1066					95% Hall's Bootstrap UCL	366.9				95% Percentile Bootstrap UCL		159.9
1067					95% BCA Bootstrap UCL	188.7						
1068					90% Chebyshev(Mean, Sd) UCL	206.3				95% Chebyshev(Mean, Sd) UCL		253.1
1069					97.5% Chebyshev(Mean, Sd) UCL	318.2				99% Chebyshev(Mean, Sd) UCL		445.9
1070												
1071	**Suggested UCL to Use**											
1072					95% Chebyshev (Mean, Sd) UCL	253.1						
1073												
1074	Note: Suggestions regarding the selection of a 95% UCL are provided to help the user to select the most appropriate 95% UCL.											
1075	Recommendations are based upon data size, data distribution, and skewness.											
1076	These recommendations are based upon the results of the simulation studies summarized in Singh, Maichle, and Lee (2006).											
1077	However, simulations results will not cover all Real World data sets; for additional insight the user may want to consult a statistician.											
1078												

UCL Statistics for Uncensored Full Data Sets

PARC Area 7

User Selected Options	
From File	WorkSheet_d.xls
Full Precision	OFF
Confidence Coefficient	95%
Number of Bootstrap Operations	2000

Barium

General Statistics

Total Number of Observations	39	Number of Distinct Observations	31
		Number of Missing Observations	7
Minimum	18	Mean	91
Maximum	264	Median	96
SD	50.45	Std. Error of Mean	8.078
Coefficient of Variation	0.554	Skewness	0.958

Normal GOF Test

Shapiro Wilk Test Statistic	0.923	**Shapiro Wilk GOF Test**
5% Shapiro Wilk Critical Value	0.939	Data Not Normal at 5% Significance Level
Lilliefors Test Statistic	0.104	**Lilliefors GOF Test**
5% Lilliefors Critical Value	0.14	Data appear Normal at 5% Significance Level

Data appear Approximate Normal at 5% Significance Level

Assuming Normal Distribution

95% Normal UCL		**95% UCLs (Adjusted for Skewness)**	
95% Student's-t UCL	104.6	95% Adjusted-CLT UCL (Chen-1995)	105.6
		95% Modified-t UCL (Johnson-1978)	104.8

Gamma GOF Test

A-D Test Statistic	0.886	**Anderson-Darling Gamma GOF Test**
5% A-D Critical Value	0.754	Data Not Gamma Distributed at 5% Significance Level
K-S Test Statistic	0.166	**Kolmogorov-Smirnov Gamma GOF Test**
5% K-S Critical Value	0.142	Data Not Gamma Distributed at 5% Significance Level

Data Not Gamma Distributed at 5% Significance Level

Gamma Statistics

k hat (MLE)	3.069	k star (bias corrected MLE)	2.85
Theta hat (MLE)	29.66	Theta star (bias corrected MLE)	31.93
nu hat (MLE)	239.4	nu star (bias corrected)	222.3
MLE Mean (bias corrected)	91	MLE Sd (bias corrected)	53.91
		Approximate Chi Square Value (0.05)	188.8
Adjusted Level of Significance	0.0437	Adjusted Chi Square Value	187.6

Assuming Gamma Distribution

95% Approximate Gamma UCL (use when n>=50))	107.2	95% Adjusted Gamma UCL (use when n<50)	107.8

	A	B	C	D	E	F	G	H	I	J	K	L
51	**Lognormal GOF Test**											
52					Shapiro Wilk Test Statistic	0.93	**Shapiro Wilk Lognormal GOF Test**					
53					5% Shapiro Wilk Critical Value	0.939	Data Not Lognormal at 5% Significance Level					
54					Lilliefors Test Statistic	0.197	**Lilliefors Lognormal GOF Test**					
55					5% Lilliefors Critical Value	0.14	Data Not Lognormal at 5% Significance Level					
56	**Data Not Lognormal at 5% Significance Level**											
57												
58	**Lognormal Statistics**											
59					Minimum of Logged Data	2.89			Mean of logged Data	4.339		
60					Maximum of Logged Data	5.576			SD of logged Data	0.634		
61												
62	**Assuming Lognormal Distribution**											
63					95% H-UCL	115.4			90% Chebyshev (MVUE) UCL	123.6		
64					95% Chebyshev (MVUE) UCL	137.4			97.5% Chebyshev (MVUE) UCL	156.5		
65					99% Chebyshev (MVUE) UCL	194.1						
66												
67	**Nonparametric Distribution Free UCL Statistics**											
68	**Data appear to follow a Discernible Distribution at 5% Significance Level**											
69												
70	**Nonparametric Distribution Free UCLs**											
71					95% CLT UCL	104.3			95% Jackknife UCL	104.6		
72					95% Standard Bootstrap UCL	104.1			95% Bootstrap-t UCL	105.9		
73					95% Hall's Bootstrap UCL	107.8			95% Percentile Bootstrap UCL	104.4		
74					95% BCA Bootstrap UCL	105.4						
75					90% Chebyshev(Mean, Sd) UCL	115.2			95% Chebyshev(Mean, Sd) UCL	126.2		
76					97.5% Chebyshev(Mean, Sd) UCL	141.4			99% Chebyshev(Mean, Sd) UCL	171.4		
77												
78	**Suggested UCL to Use**											
79					95% Student's-t UCL	104.6						
80												
81	When a data set follows an approximate (e.g., normal) distribution passing one of the GOF test											
82	When applicable, it is suggested to use a UCL based upon a distribution (e.g., gamma) passing both GOF tests in ProUCL											
83												
84	Note: Suggestions regarding the selection of a 95% UCL are provided to help the user to select the most appropriate 95% UCL.											
85	Recommendations are based upon data size, data distribution, and skewness.											
86	These recommendations are based upon the results of the simulation studies summarized in Singh, Maichle, and Lee (2006).											
87	However, simulations results will not cover all Real World data sets; for additional insight the user may want to consult a statistician.											
88												
89												

90	**Copper**											
91												
92	**General Statistics**											
93				Total Number of Observations		39			Number of Distinct Observations		31	
94									Number of Missing Observations		7	
95				Minimum		1.1			Mean		159.3	
96				Maximum		4759			Median		12	
97				SD		764.9			Std. Error of Mean		122.5	
98				Coefficient of Variation		4.803			Skewness		6.037	
99												
100	**Normal GOF Test**											
101				Shapiro Wilk Test Statistic		0.213			**Shapiro Wilk GOF Test**			
102				5% Shapiro Wilk Critical Value		0.939			Data Not Normal at 5% Significance Level			
103				Lilliefors Test Statistic		0.485			**Lilliefors GOF Test**			
104				5% Lilliefors Critical Value		0.14			Data Not Normal at 5% Significance Level			
105	**Data Not Normal at 5% Significance Level**											
106												
107	**Assuming Normal Distribution**											
108				**95% Normal UCL**					**95% UCLs (Adjusted for Skewness)**			
109				95% Student's-t UCL		365.8			95% Adjusted-CLT UCL (Chen-1995)		487.3	
110									95% Modified-t UCL (Johnson-1978)		385.5	
111												
112	**Gamma GOF Test**											
113				A-D Test Statistic		6.723			**Anderson-Darling Gamma GOF Test**			
114				5% A-D Critical Value		0.862			Data Not Gamma Distributed at 5% Significance Level			
115				K-S Test Statistic		0.363			**Kolmogorov-Smirnov Gamma GOF Test**			
116				5% K-S Critical Value		0.154			Data Not Gamma Distributed at 5% Significance Level			
117	**Data Not Gamma Distributed at 5% Significance Level**											
118												
119	**Gamma Statistics**											
120				k hat (MLE)		0.291			k star (bias corrected MLE)		0.286	
121				Theta hat (MLE)		547.7			Theta star (bias corrected MLE)		557.8	
122				nu hat (MLE)		22.68			nu star (bias corrected)		22.27	
123				MLE Mean (bias corrected)		159.3			MLE Sd (bias corrected)		298.1	
124									Approximate Chi Square Value (0.05)		12.54	
125				Adjusted Level of Significance		0.0437			Adjusted Chi Square Value		12.25	
126												
127	**Assuming Gamma Distribution**											
128				95% Approximate Gamma UCL (use when n>=50))		282.8			95% Adjusted Gamma UCL (use when n<50)		289.5	
129												

	A	B	C	D	E	F	G	H	I	J	K	L
130	**Lognormal GOF Test**											
131					Shapiro Wilk Test Statistic	0.9	**Shapiro Wilk Lognormal GOF Test**					
132					5% Shapiro Wilk Critical Value	0.939	Data Not Lognormal at 5% Significance Level					
133					Lilliefors Test Statistic	0.131	**Lilliefors Lognormal GOF Test**					
134					5% Lilliefors Critical Value	0.14	Data appear Lognormal at 5% Significance Level					
135	**Data appear Approximate Lognormal at 5% Significance Level**											
136												
137	**Lognormal Statistics**											
138					Minimum of Logged Data	0.0953	Mean of logged Data	2.687				
139					Maximum of Logged Data	8.468	SD of logged Data	1.592				
140												
141	**Assuming Lognormal Distribution**											
142					95% H-UCL	118.2	90% Chebyshev (MVUE) UCL	98.01				
143					95% Chebyshev (MVUE) UCL	120.3	97.5% Chebyshev (MVUE) UCL	151.3				
144					99% Chebyshev (MVUE) UCL	212.1						
145												
146	**Nonparametric Distribution Free UCL Statistics**											
147	**Data appear to follow a Discernible Distribution at 5% Significance Level**											
148												
149	**Nonparametric Distribution Free UCLs**											
150					95% CLT UCL	360.7	95% Jackknife UCL	365.8				
151					95% Standard Bootstrap UCL	356.2	95% Bootstrap-t UCL	5884				
152					95% Hall's Bootstrap UCL	2518	95% Percentile Bootstrap UCL	398.9				
153					95% BCA Bootstrap UCL	528.8						
154					90% Chebyshev(Mean, Sd) UCL	526.7	95% Chebyshev(Mean, Sd) UCL	693.2				
155					97.5% Chebyshev(Mean, Sd) UCL	924.2	99% Chebyshev(Mean, Sd) UCL	1378				
156												
157	**Suggested UCL to Use**											
158					95% Chebyshev (Mean, Sd) UCL	693.2						
159												
160	Note: Suggestions regarding the selection of a 95% UCL are provided to help the user to select the most appropriate 95% UCL.											
161	Recommendations are based upon data size, data distribution, and skewness.											
162	These recommendations are based upon the results of the simulation studies summarized in Singh, Maichle, and Lee (2006).											
163	However, simulations results will not cover all Real World data sets; for additional insight the user may want to consult a statistician.											
164												
165												

	A	B	C	D	E	F	G	H	I	J	K	L
166	**Lead**											
167												
168						**General Statistics**							
169						Total Number of Observations	39				Number of Distinct Observations	30
170											Number of Missing Observations	7
171						Minimum	1				Mean	25.98
172						Maximum	254				Median	6.8
173						SD	45.47				Std. Error of Mean	7.28
174						Coefficient of Variation	1.75				Skewness	3.658
175												
176						**Normal GOF Test**						
177						Shapiro Wilk Test Statistic	0.585			**Shapiro Wilk GOF Test**		
178						5% Shapiro Wilk Critical Value	0.939			Data Not Normal at 5% Significance Level		
179						Lilliefors Test Statistic	0.291			**Lilliefors GOF Test**		
180						5% Lilliefors Critical Value	0.14			Data Not Normal at 5% Significance Level		
181						**Data Not Normal at 5% Significance Level**						
182												
183						**Assuming Normal Distribution**						
184						**95% Normal UCL**				**95% UCLs (Adjusted for Skewness)**		
185						95% Student's-t UCL	38.26			95% Adjusted-CLT UCL (Chen-1995)	42.52	
186										95% Modified-t UCL (Johnson-1978)	38.97	
187												
188						**Gamma GOF Test**						
189						A-D Test Statistic	1.409			**Anderson-Darling Gamma GOF Test**		
190						5% A-D Critical Value	0.81			Data Not Gamma Distributed at 5% Significance Level		
191						K-S Test Statistic	0.175			**Kolmogorov-Smirnov Gamma GOF Test**		
192						5% K-S Critical Value	0.149			Data Not Gamma Distributed at 5% Significance Level		
193						**Data Not Gamma Distributed at 5% Significance Level**						
194												
195						**Gamma Statistics**						
196						k hat (MLE)	0.53			k star (bias corrected MLE)	0.506	
197						Theta hat (MLE)	49.06			Theta star (bias corrected MLE)	51.35	
198						nu hat (MLE)	41.31			nu star (bias corrected)	39.47	
199						MLE Mean (bias corrected)	25.98			MLE Sd (bias corrected)	36.53	
200										Approximate Chi Square Value (0.05)	26.08	
201						Adjusted Level of Significance	0.0437			Adjusted Chi Square Value	25.65	
202												
203						**Assuming Gamma Distribution**							
204						95% Approximate Gamma UCL (use when n>=50))	39.33			95% Adjusted Gamma UCL (use when n<50)	39.99	
205												

	A	B	C	D	E	F	G	H	I	J	K	L
206	**Lognormal GOF Test**											
207				Shapiro Wilk Test Statistic		0.909	**Shapiro Wilk Lognormal GOF Test**					
208				5% Shapiro Wilk Critical Value		0.939	Data Not Lognormal at 5% Significance Level					
209				Lilliefors Test Statistic		0.128	**Lilliefors Lognormal GOF Test**					
210				5% Lilliefors Critical Value		0.14	Data appear Lognormal at 5% Significance Level					
211	**Data appear Approximate Lognormal at 5% Significance Level**											
212												
213	**Lognormal Statistics**											
214				Minimum of Logged Data		0			Mean of logged Data			2.069
215				Maximum of Logged Data		5.537			SD of logged Data			1.645
216												
217	**Assuming Lognormal Distribution**											
218				95% H-UCL		72.74			90% Chebyshev (MVUE) UCL			58.36
219				95% Chebyshev (MVUE) UCL		71.93			97.5% Chebyshev (MVUE) UCL			90.75
220				99% Chebyshev (MVUE) UCL		127.7						
221												
222	**Nonparametric Distribution Free UCL Statistics**											
223	**Data appear to follow a Discernible Distribution at 5% Significance Level**											
224												
225	**Nonparametric Distribution Free UCLs**											
226				95% CLT UCL		37.96			95% Jackknife UCL			38.26
227				95% Standard Bootstrap UCL		38.01			95% Bootstrap-t UCL			48.33
228				95% Hall's Bootstrap UCL		89.1			95% Percentile Bootstrap UCL			38.65
229				95% BCA Bootstrap UCL		42.85						
230				90% Chebyshev(Mean, Sd) UCL		47.83			95% Chebyshev(Mean, Sd) UCL			57.72
231				97.5% Chebyshev(Mean, Sd) UCL		71.45			99% Chebyshev(Mean, Sd) UCL			98.42
232												
233	**Suggested UCL to Use**											
234				95% Chebyshev (Mean, Sd) UCL		57.72						
235												
236	Note: Suggestions regarding the selection of a 95% UCL are provided to help the user to select the most appropriate 95% UCL.											
237	Recommendations are based upon data size, data distribution, and skewness.											
238	These recommendations are based upon the results of the simulation studies summarized in Singh, Maichle, and Lee (2006).											
239	However, simulations results will not cover all Real World data sets; for additional insight the user may want to consult a statistician.											
240												
241												

	A	B	C	D	E	F	G	H	I	J	K	L
242	**Mercury**											
243												
244						**General Statistics**							
245						Total Number of Observations	39				Number of Distinct Observations	14
246											Number of Missing Observations	7
247						Minimum	0.04				Mean	0.172
248						Maximum	1.29				Median	0.11
249						SD	0.208				Std. Error of Mean	0.0334
250						Coefficient of Variation	1.211				Skewness	4.663
251												
252						**Normal GOF Test**						
253						Shapiro Wilk Test Statistic	0.387			**Shapiro Wilk GOF Test**		
254						5% Shapiro Wilk Critical Value	0.939			Data Not Normal at 5% Significance Level		
255						Lilliefors Test Statistic	0.344			**Lilliefors GOF Test**		
256						5% Lilliefors Critical Value	0.14			Data Not Normal at 5% Significance Level		
257						**Data Not Normal at 5% Significance Level**						
258												
259						**Assuming Normal Distribution**						
260						**95% Normal UCL**				**95% UCLs (Adjusted for Skewness)**		
261						95% Student's-t UCL	0.228			95% Adjusted-CLT UCL (Chen-1995)	0.254	
262										95% Modified-t UCL (Johnson-1978)	0.232	
263												
264						**Gamma GOF Test**						
265						A-D Test Statistic	6.664			**Anderson-Darling Gamma GOF Test**		
266						5% A-D Critical Value	0.758			Data Not Gamma Distributed at 5% Significance Level		
267						K-S Test Statistic	0.301			**Kolmogorov-Smirnov Gamma GOF Test**		
268						5% K-S Critical Value	0.143			Data Not Gamma Distributed at 5% Significance Level		
269						**Data Not Gamma Distributed at 5% Significance Level**						
270												
271						**Gamma Statistics**						
272						k hat (MLE)	2.228			k star (bias corrected MLE)	2.073	
273						Theta hat (MLE)	0.0772			Theta star (bias corrected MLE)	0.083	
274						nu hat (MLE)	173.8			nu star (bias corrected)	161.7	
275						MLE Mean (bias corrected)	0.172			MLE Sd (bias corrected)	0.119	
276										Approximate Chi Square Value (0.05)	133.3	
277						Adjusted Level of Significance	0.0437			Adjusted Chi Square Value	132.3	
278												
279						**Assuming Gamma Distribution**						
280						95% Approximate Gamma UCL (use when n>=50))	0.209			95% Adjusted Gamma UCL (use when n<50)	0.21	
281												

282	**Lognormal GOF Test**											
283					Shapiro Wilk Test Statistic	0.681	**Shapiro Wilk Lognormal GOF Test**					
284					5% Shapiro Wilk Critical Value	0.939	Data Not Lognormal at 5% Significance Level					
285					Lilliefors Test Statistic	0.304	**Lilliefors Lognormal GOF Test**					
286					5% Lilliefors Critical Value	0.14	Data Not Lognormal at 5% Significance Level					
287	**Data Not Lognormal at 5% Significance Level**											
288												
289	**Lognormal Statistics**											
290					Minimum of Logged Data	-3.219	Mean of logged Data	-2.001				
291					Maximum of Logged Data	0.255	SD of logged Data	0.558				
292												
293	**Assuming Lognormal Distribution**											
294					95% H-UCL	0.189	90% Chebyshev (MVUE) UCL	0.202				
295					95% Chebyshev (MVUE) UCL	0.222	97.5% Chebyshev (MVUE) UCL	0.25				
296					99% Chebyshev (MVUE) UCL	0.305						
297												
298	**Nonparametric Distribution Free UCL Statistics**											
299	**Data do not follow a Discernible Distribution (0.05)**											
300												
301	**Nonparametric Distribution Free UCLs**											
302					95% CLT UCL	0.227	95% Jackknife UCL	0.228				
303					95% Standard Bootstrap UCL	0.226	95% Bootstrap-t UCL	0.401				
304					95% Hall's Bootstrap UCL	0.464	95% Percentile Bootstrap UCL	0.235				
305					95% BCA Bootstrap UCL	0.278						
306					90% Chebyshev(Mean, Sd) UCL	0.272	95% Chebyshev(Mean, Sd) UCL	0.317				
307					97.5% Chebyshev(Mean, Sd) UCL	0.38	99% Chebyshev(Mean, Sd) UCL	0.504				
308												
309	**Suggested UCL to Use**											
310					95% Chebyshev (Mean, Sd) UCL	0.317						
311												
312	Note: Suggestions regarding the selection of a 95% UCL are provided to help the user to select the most appropriate 95% UCL.											
313	Recommendations are based upon data size, data distribution, and skewness.											
314	These recommendations are based upon the results of the simulation studies summarized in Singh, Maichle, and Lee (2006).											
315	However, simulations results will not cover all Real World data sets; for additional insight the user may want to consult a statistician.											
316												
317												

Zinc

General Statistics

Total Number of Observations	39	Number of Distinct Observations	33
		Number of Missing Observations	7
Minimum	12	Mean	92.87
Maximum	941	Median	47
SD	155.3	Std. Error of Mean	24.88
Coefficient of Variation	1.673	Skewness	4.602

Normal GOF Test

Shapiro Wilk Test Statistic	0.486	**Shapiro Wilk GOF Test**	
5% Shapiro Wilk Critical Value	0.939	Data Not Normal at 5% Significance Level	
Lilliefors Test Statistic	0.301	**Lilliefors GOF Test**	
5% Lilliefors Critical Value	0.14	Data Not Normal at 5% Significance Level	

Data Not Normal at 5% Significance Level

Assuming Normal Distribution

95% Normal UCL		**95% UCLs (Adjusted for Skewness)**	
95% Student's-t UCL	134.8	95% Adjusted-CLT UCL (Chen-1995)	153.4
		95% Modified-t UCL (Johnson-1978)	137.9

Gamma GOF Test

A-D Test Statistic	1.597	**Anderson-Darling Gamma GOF Test**	
5% A-D Critical Value	0.778	Data Not Gamma Distributed at 5% Significance Level	
K-S Test Statistic	0.174	**Kolmogorov-Smirnov Gamma GOF Test**	
5% K-S Critical Value	0.146	Data Not Gamma Distributed at 5% Significance Level	

Data Not Gamma Distributed at 5% Significance Level

Gamma Statistics

k hat (MLE)	0.999	k star (bias corrected MLE)	0.939
Theta hat (MLE)	92.98	Theta star (bias corrected MLE)	98.9
nu hat (MLE)	77.91	nu star (bias corrected)	73.25
MLE Mean (bias corrected)	92.87	MLE Sd (bias corrected)	95.84
		Approximate Chi Square Value (0.05)	54.54
Adjusted Level of Significance	0.0437	Adjusted Chi Square Value	53.9

Assuming Gamma Distribution

95% Approximate Gamma UCL (use when n>=50))	124.7	95% Adjusted Gamma UCL (use when n<50)	126.2

358	**Lognormal GOF Test**											
359				Shapiro Wilk Test Statistic		0.952	**Shapiro Wilk Lognormal GOF Test**					
360				5% Shapiro Wilk Critical Value		0.939	Data appear Lognormal at 5% Significance Level					
361				Lilliefors Test Statistic		0.0902	**Lilliefors Lognormal GOF Test**					
362				5% Lilliefors Critical Value		0.14	Data appear Lognormal at 5% Significance Level					
363	**Data appear Lognormal at 5% Significance Level**											
364												
365	**Lognormal Statistics**											
366				Minimum of Logged Data		2.485	Mean of logged Data			3.953		
367				Maximum of Logged Data		6.847	SD of logged Data			0.985		
368												
369	**Assuming Lognormal Distribution**											
370				95% H-UCL		123.8	90% Chebyshev (MVUE) UCL			128.7		
371				95% Chebyshev (MVUE) UCL		149.4	97.5% Chebyshev (MVUE) UCL			178		
372				99% Chebyshev (MVUE) UCL		234.3						
373												
374	**Nonparametric Distribution Free UCL Statistics**											
375	**Data appear to follow a Discernible Distribution at 5% Significance Level**											
376												
377	**Nonparametric Distribution Free UCLs**											
378				95% CLT UCL		133.8	95% Jackknife UCL			134.8		
379				95% Standard Bootstrap UCL		133.4	95% Bootstrap-t UCL			188.2		
380				95% Hall's Bootstrap UCL		284.6	95% Percentile Bootstrap UCL			139.3		
381				95% BCA Bootstrap UCL		158.9						
382				90% Chebyshev(Mean, Sd) UCL		167.5	95% Chebyshev(Mean, Sd) UCL			201.3		
383				97.5% Chebyshev(Mean, Sd) UCL		248.2	99% Chebyshev(Mean, Sd) UCL			340.4		
384												
385	**Suggested UCL to Use**											
386				95% H-UCL		123.8						
387												
388	Note: Suggestions regarding the selection of a 95% UCL are provided to help the user to select the most appropriate 95% UCL.											
389	Recommendations are based upon data size, data distribution, and skewness.											
390	These recommendations are based upon the results of the simulation studies summarized in Singh, Maichle, and Lee (2006).											
391	However, simulations results will not cover all Real World data sets; for additional insight the user may want to consult a statistician.											
392												
393	**ProUCL computes and outputs H-statistic based UCLs for historical reasons only.**											
394	**H-statistic often results in unstable (both high and low) values of UCL95 as shown in examples in the Technical Guide.**											
395	**It is therefore recommended to avoid the use of H-statistic based 95% UCLs.**											
396	**Use of nonparametric methods are preferred to compute UCL95 for skewed data sets which do not follow a gamma distribution.**											
397												
398												

	A	B	C	D	E	F	G	H	I	J	K	L
399	**TPH-GRO**											
400												
401	**General Statistics**											
402	Total Number of Observations					20	Number of Distinct Observations					2
403							Number of Missing Observations					26
404	Minimum					1.1	Mean					1.31
405	Maximum					5.3	Median					1.1
406	SD					0.939	Std. Error of Mean					0.21
407	Coefficient of Variation					0.717	Skewness					4.472
408												
409	**Normal GOF Test**											
410	Shapiro Wilk Test Statistic					0.236	**Shapiro Wilk GOF Test**					
411	5% Shapiro Wilk Critical Value					0.905	Data Not Normal at 5% Significance Level					
412	Lilliefors Test Statistic					0.538	**Lilliefors GOF Test**					
413	5% Lilliefors Critical Value					0.192	Data Not Normal at 5% Significance Level					
414	**Data Not Normal at 5% Significance Level**											
415												
416	**Assuming Normal Distribution**											
417	**95% Normal UCL**						**95% UCLs (Adjusted for Skewness)**					
418	95% Student's-t UCL					1.673	95% Adjusted-CLT UCL (Chen-1995)					1.88
419							95% Modified-t UCL (Johnson-1978)					1.708
420												
421	**Gamma GOF Test**											
422	A-D Test Statistic					7.29	**Anderson-Darling Gamma GOF Test**					
423	5% A-D Critical Value					0.745	Data Not Gamma Distributed at 5% Significance Level					
424	K-S Test Statistic					0.547	**Kolmogorov-Smirnov Gamma GOF Test**					
425	5% K-S Critical Value					0.194	Data Not Gamma Distributed at 5% Significance Level					
426	**Data Not Gamma Distributed at 5% Significance Level**											
427												
428	**Gamma Statistics**											
429	k hat (MLE)					5.364	k star (bias corrected MLE)					4.593
430	Theta hat (MLE)					0.244	Theta star (bias corrected MLE)					0.285
431	nu hat (MLE)					214.6	nu star (bias corrected)					183.7
432	MLE Mean (bias corrected)					1.31	MLE Sd (bias corrected)					0.611
433							Approximate Chi Square Value (0.05)					153.4
434	Adjusted Level of Significance					0.038	Adjusted Chi Square Value					151.2
435												
436	**Assuming Gamma Distribution**											
437	95% Approximate Gamma UCL (use when n>=50))					1.569	95% Adjusted Gamma UCL (use when n<50)					1.592
438												

	A	B	C	D	E	F	G	H	I	J	K	L
439	**Lognormal GOF Test**											
440				Shapiro Wilk Test Statistic		0.236	**Shapiro Wilk Lognormal GOF Test**					
441				5% Shapiro Wilk Critical Value		0.905	Data Not Lognormal at 5% Significance Level					
442				Lilliefors Test Statistic		0.538	**Lilliefors Lognormal GOF Test**					
443				5% Lilliefors Critical Value		0.192	Data Not Lognormal at 5% Significance Level					
444	**Data Not Lognormal at 5% Significance Level**											
445												
446	**Lognormal Statistics**											
447				Minimum of Logged Data		0.0953			Mean of logged Data			0.174
448				Maximum of Logged Data		1.668			SD of logged Data			0.352
449												
450	**Assuming Lognormal Distribution**											
451				95% H-UCL		1.474			90% Chebyshev (MVUE) UCL			1.565
452				95% Chebyshev (MVUE) UCL		1.702			97.5% Chebyshev (MVUE) UCL			1.893
453				99% Chebyshev (MVUE) UCL		2.267						
454												
455	**Nonparametric Distribution Free UCL Statistics**											
456	**Data do not follow a Discernible Distribution (0.05)**											
457												
458	**Nonparametric Distribution Free UCLs**											
459				95% CLT UCL		1.655			95% Jackknife UCL			N/A
460				95% Standard Bootstrap UCL		N/A			95% Bootstrap-t UCL			N/A
461				95% Hall's Bootstrap UCL		N/A			95% Percentile Bootstrap UCL			N/A
462				95% BCA Bootstrap UCL		N/A						
463				90% Chebyshev(Mean, Sd) UCL		1.94			95% Chebyshev(Mean, Sd) UCL			2.225
464				97.5% Chebyshev(Mean, Sd) UCL		2.621			99% Chebyshev(Mean, Sd) UCL			3.399
465												
466	**Suggested UCL to Use**											
467				95% Student's-t UCL		1.673			or 95% Modified-t UCL			1.708
468												
469	Note: Suggestions regarding the selection of a 95% UCL are provided to help the user to select the most appropriate 95% UCL.											
470	Recommendations are based upon data size, data distribution, and skewness.											
471	These recommendations are based upon the results of the simulation studies summarized in Singh, Maichle, and Lee (2006).											
472	However, simulations results will not cover all Real World data sets; for additional insight the user may want to consult a statistician.											
473												
474												

	A	B	C	D	E	F	G	H	I	J	K	L
475	**TPH-DRO**											
476												
477	**General Statistics**											
478	Total Number of Observations					20	Number of Distinct Observations					10
479							Number of Missing Observations					26
480	Minimum					5.3	Mean					387.9
481	Maximum					6663	Median					11
482	SD					1481	Std. Error of Mean					331.3
483	Coefficient of Variation					3.819	Skewness					4.429
484												
485	**Normal GOF Test**											
486	Shapiro Wilk Test Statistic					0.277	**Shapiro Wilk GOF Test**					
487	5% Shapiro Wilk Critical Value					0.905	Data Not Normal at 5% Significance Level					
488	Lilliefors Test Statistic					0.447	**Lilliefors GOF Test**					
489	5% Lilliefors Critical Value					0.192	Data Not Normal at 5% Significance Level					
490	**Data Not Normal at 5% Significance Level**											
491												
492	**Assuming Normal Distribution**											
493	**95% Normal UCL**						**95% UCLs (Adjusted for Skewness)**					
494	95% Student's-t UCL					960.7	95% Adjusted-CLT UCL (Chen-1995)					1283
495							95% Modified-t UCL (Johnson-1978)					1015
496												
497	**Gamma GOF Test**											
498	A-D Test Statistic					4.262	**Anderson-Darling Gamma GOF Test**					
499	5% A-D Critical Value					0.86	Data Not Gamma Distributed at 5% Significance Level					
500	K-S Test Statistic					0.37	**Kolmogorov-Smirnov Gamma GOF Test**					
501	5% K-S Critical Value					0.212	Data Not Gamma Distributed at 5% Significance Level					
502	**Data Not Gamma Distributed at 5% Significance Level**											
503												
504	**Gamma Statistics**											
505	k hat (MLE)					0.268	k star (bias corrected MLE)					0.261
506	Theta hat (MLE)					1449	Theta star (bias corrected MLE)					1487
507	nu hat (MLE)					10.71	nu star (bias corrected)					10.43
508	MLE Mean (bias corrected)					387.9	MLE Sd (bias corrected)					759.5
509							Approximate Chi Square Value (0.05)					4.215
510	Adjusted Level of Significance					0.038	Adjusted Chi Square Value					3.907
511												
512	**Assuming Gamma Distribution**											
513	95% Approximate Gamma UCL (use when n>=50))					960.3	95% Adjusted Gamma UCL (use when n<50)					1036
514												

	A	B	C	D	E	F	G	H	I	J	K	L
515	**Lognormal GOF Test**											
516					Shapiro Wilk Test Statistic	0.706	**Shapiro Wilk Lognormal GOF Test**					
517					5% Shapiro Wilk Critical Value	0.905	Data Not Lognormal at 5% Significance Level					
518					Lilliefors Test Statistic	0.305	**Lilliefors Lognormal GOF Test**					
519					5% Lilliefors Critical Value	0.192	Data Not Lognormal at 5% Significance Level					
520	**Data Not Lognormal at 5% Significance Level**											
521												
522	**Lognormal Statistics**											
523					Minimum of Logged Data	1.668			Mean of logged Data	3.337		
524					Maximum of Logged Data	8.804			SD of logged Data	1.746		
525												
526	**Assuming Lognormal Distribution**											
527					95% H-UCL	604.7			90% Chebyshev (MVUE) UCL	266.9		
528					95% Chebyshev (MVUE) UCL	338			97.5% Chebyshev (MVUE) UCL	436.7		
529					99% Chebyshev (MVUE) UCL	630.6						
530												
531	**Nonparametric Distribution Free UCL Statistics**											
532	**Data do not follow a Discernible Distribution (0.05)**											
533												
534	**Nonparametric Distribution Free UCLs**											
535					95% CLT UCL	932.8			95% Jackknife UCL	960.7		
536					95% Standard Bootstrap UCL	911.3			95% Bootstrap-t UCL	10935		
537					95% Hall's Bootstrap UCL	8897			95% Percentile Bootstrap UCL	1044		
538					95% BCA Bootstrap UCL	1397						
539					90% Chebyshev(Mean, Sd) UCL	1382			95% Chebyshev(Mean, Sd) UCL	1832		
540					97.5% Chebyshev(Mean, Sd) UCL	2457			99% Chebyshev(Mean, Sd) UCL	3684		
541												
542	**Suggested UCL to Use**											
543					95% Chebyshev (Mean, Sd) UCL	1832						
544												
545	Note: Suggestions regarding the selection of a 95% UCL are provided to help the user to select the most appropriate 95% UCL.											
546	Recommendations are based upon data size, data distribution, and skewness.											
547	These recommendations are based upon the results of the simulation studies summarized in Singh, Maichle, and Lee (2006).											
548	However, simulations results will not cover all Real World data sets; for additional insight the user may want to consult a statistician.											
549												
550												

	A	B	C	D	E	F	G	H	I	J	K	L
551	**4,4'-DDD**											
552												
553	**General Statistics**											
554	Total Number of Observations					10	Number of Distinct Observations					2
555							Number of Missing Observations					36
556	Minimum					1.1	Mean					1.35
557	Maximum					3.6	Median					1.1
558	SD					0.791	Std. Error of Mean					0.25
559	Coefficient of Variation					0.586	Skewness					3.162
560												
561	**Normal GOF Test**											
562	Shapiro Wilk Test Statistic					0.366	**Shapiro Wilk GOF Test**					
563	5% Shapiro Wilk Critical Value					0.842	Data Not Normal at 5% Significance Level					
564	Lilliefors Test Statistic					0.524	**Lilliefors GOF Test**					
565	5% Lilliefors Critical Value					0.262	Data Not Normal at 5% Significance Level					
566	**Data Not Normal at 5% Significance Level**											
567												
568	**Assuming Normal Distribution**											
569	**95% Normal UCL**						**95% UCLs (Adjusted for Skewness)**					
570	95% Student's-t UCL					1.808	95% Adjusted-CLT UCL (Chen-1995)					2.028
571							95% Modified-t UCL (Johnson-1978)					1.85
572												
573	**Gamma GOF Test**											
574	A-D Test Statistic					3.315	**Anderson-Darling Gamma GOF Test**					
575	5% A-D Critical Value					0.729	Data Not Gamma Distributed at 5% Significance Level					
576	K-S Test Statistic					0.535	**Kolmogorov-Smirnov Gamma GOF Test**					
577	5% K-S Critical Value					0.267	Data Not Gamma Distributed at 5% Significance Level					
578	**Data Not Gamma Distributed at 5% Significance Level**											
579												
580	**Gamma Statistics**											
581	k hat (MLE)					5.96	k star (bias corrected MLE)					4.239
582	Theta hat (MLE)					0.227	Theta star (bias corrected MLE)					0.318
583	nu hat (MLE)					119.2	nu star (bias corrected)					84.77
584	MLE Mean (bias corrected)					1.35	MLE Sd (bias corrected)					0.656
585							Approximate Chi Square Value (0.05)					64.55
586	Adjusted Level of Significance					0.0267	Adjusted Chi Square Value					61.49
587												
588	**Assuming Gamma Distribution**											
589	95% Approximate Gamma UCL (use when n>=50))					1.773	95% Adjusted Gamma UCL (use when n<50)					1.861
590												

591	**Lognormal GOF Test**											
592				Shapiro Wilk Test Statistic		0.366	**Shapiro Wilk Lognormal GOF Test**					
593				5% Shapiro Wilk Critical Value		0.842	Data Not Lognormal at 5% Significance Level					
594				Lilliefors Test Statistic		0.524	**Lilliefors Lognormal GOF Test**					
595				5% Lilliefors Critical Value		0.262	Data Not Lognormal at 5% Significance Level					
596	**Data Not Lognormal at 5% Significance Level**											
597												
598	**Lognormal Statistics**											
599				Minimum of Logged Data		0.0953	Mean of logged Data			0.214		
600				Maximum of Logged Data		1.281	SD of logged Data			0.375		
601												
602	**Assuming Lognormal Distribution**											
603				95% H-UCL		1.719	90% Chebyshev (MVUE) UCL			1.793		
604				95% Chebyshev (MVUE) UCL		2.008	97.5% Chebyshev (MVUE) UCL			2.306		
605				99% Chebyshev (MVUE) UCL		2.891						
606												
607	**Nonparametric Distribution Free UCL Statistics**											
608	**Data do not follow a Discernible Distribution (0.05)**											
609												
610	**Nonparametric Distribution Free UCLs**											
611				95% CLT UCL		1.761	95% Jackknife UCL			N/A		
612				95% Standard Bootstrap UCL		N/A	95% Bootstrap-t UCL			N/A		
613				95% Hall's Bootstrap UCL		N/A	95% Percentile Bootstrap UCL			N/A		
614				95% BCA Bootstrap UCL		N/A						
615				90% Chebyshev(Mean, Sd) UCL		2.1	95% Chebyshev(Mean, Sd) UCL			2.44		
616				97.5% Chebyshev(Mean, Sd) UCL		2.911	99% Chebyshev(Mean, Sd) UCL			3.837		
617												
618	**Suggested UCL to Use**											
619				95% Student's-t UCL		1.808	or 95% Modified-t UCL			1.85		
620												
621	Note: Suggestions regarding the selection of a 95% UCL are provided to help the user to select the most appropriate 95% UCL.											
622	Recommendations are based upon data size, data distribution, and skewness.											
623	These recommendations are based upon the results of the simulation studies summarized in Singh, Maichle, and Lee (2006).											
624	However, simulations results will not cover all Real World data sets; for additional insight the user may want to consult a statistician.											
625												
626												

	A	B	C	D	E	F	G	H	I	J	K	L
627	**4,4'-DDE**											
628												
629						**General Statistics**						
630					Total Number of Observations	10			Number of Distinct Observations			2
631									Number of Missing Observations			36
632					Minimum	1.1			Mean			1.61
633					Maximum	6.2			Median			1.1
634					SD	1.613			Std. Error of Mean			0.51
635					Coefficient of Variation	1.002			Skewness			3.162
636												
637						**Normal GOF Test**						
638					Shapiro Wilk Test Statistic	0.366			**Shapiro Wilk GOF Test**			
639					5% Shapiro Wilk Critical Value	0.842			Data Not Normal at 5% Significance Level			
640					Lilliefors Test Statistic	0.524			**Lilliefors GOF Test**			
641					5% Lilliefors Critical Value	0.262			Data Not Normal at 5% Significance Level			
642						**Data Not Normal at 5% Significance Level**						
643												
644						**Assuming Normal Distribution**						
645					**95% Normal UCL**				**95% UCLs (Adjusted for Skewness)**			
646					95% Student's-t UCL	2.545			95% Adjusted-CLT UCL (Chen-1995)			2.994
647									95% Modified-t UCL (Johnson-1978)			2.63
648												
649						**Gamma GOF Test**						
650					A-D Test Statistic	3.339			**Anderson-Darling Gamma GOF Test**			
651					5% A-D Critical Value	0.734			Data Not Gamma Distributed at 5% Significance Level			
652					K-S Test Statistic	0.54			**Kolmogorov-Smirnov Gamma GOF Test**			
653					5% K-S Critical Value	0.269			Data Not Gamma Distributed at 5% Significance Level			
654						**Data Not Gamma Distributed at 5% Significance Level**						
655												
656						**Gamma Statistics**						
657					k hat (MLE)	2.558			k star (bias corrected MLE)			1.857
658					Theta hat (MLE)	0.629			Theta star (bias corrected MLE)			0.867
659					nu hat (MLE)	51.16			nu star (bias corrected)			37.15
660					MLE Mean (bias corrected)	1.61			MLE Sd (bias corrected)			1.181
661									Approximate Chi Square Value (0.05)			24.19
662					Adjusted Level of Significance	0.0267			Adjusted Chi Square Value			22.39
663												
664						**Assuming Gamma Distribution**						
665					95% Approximate Gamma UCL (use when n>=50))	2.472			95% Adjusted Gamma UCL (use when n<50)			2.671
666												

	A	B	C	D	E	F	G	H	I	J	K	L
667	**Lognormal GOF Test**											
668					Shapiro Wilk Test Statistic	0.366	**Shapiro Wilk Lognormal GOF Test**					
669					5% Shapiro Wilk Critical Value	0.842	Data Not Lognormal at 5% Significance Level					
670					Lilliefors Test Statistic	0.524	**Lilliefors Lognormal GOF Test**					
671					5% Lilliefors Critical Value	0.262	Data Not Lognormal at 5% Significance Level					
672	**Data Not Lognormal at 5% Significance Level**											
673												
674	**Lognormal Statistics**											
675					Minimum of Logged Data	0.0953	Mean of logged Data	0.268				
676					Maximum of Logged Data	1.825	SD of logged Data	0.547				
677												
678	**Assuming Lognormal Distribution**											
679					95% H-UCL	2.304	90% Chebyshev (MVUE) UCL	2.285				
680					95% Chebyshev (MVUE) UCL	2.643	97.5% Chebyshev (MVUE) UCL	3.14				
681					99% Chebyshev (MVUE) UCL	4.117						
682												
683	**Nonparametric Distribution Free UCL Statistics**											
684	**Data do not follow a Discernible Distribution (0.05)**											
685												
686	**Nonparametric Distribution Free UCLs**											
687					95% CLT UCL	2.449	95% Jackknife UCL	N/A				
688					95% Standard Bootstrap UCL	N/A	95% Bootstrap-t UCL	N/A				
689					95% Hall's Bootstrap UCL	N/A	95% Percentile Bootstrap UCL	N/A				
690					95% BCA Bootstrap UCL	N/A						
691					90% Chebyshev(Mean, Sd) UCL	3.14	95% Chebyshev(Mean, Sd) UCL	3.833				
692					97.5% Chebyshev(Mean, Sd) UCL	4.795	99% Chebyshev(Mean, Sd) UCL	6.684				
693												
694	**Suggested UCL to Use**											
695					95% Chebyshev (Mean, Sd) UCL	3.833						
696												
697	Note: Suggestions regarding the selection of a 95% UCL are provided to help the user to select the most appropriate 95% UCL.											
698	Recommendations are based upon data size, data distribution, and skewness.											
699	These recommendations are based upon the results of the simulation studies summarized in Singh, Maichle, and Lee (2006).											
700	However, simulations results will not cover all Real World data sets; for additional insight the user may want to consult a statistician.											
701												
702												

	A	B	C	D	E	F	G	H	I	J	K	L
703	**4,4'-DDT**											
704												
705						**General Statistics**						
706					Total Number of Observations	10			Number of Distinct Observations			4
707									Number of Missing Observations			36
708					Minimum	1.1			Mean			1.95
709					Maximum	6.5			Median			1.1
710					SD	1.737			Std. Error of Mean			0.549
711					Coefficient of Variation	0.891			Skewness			2.424
712												
713						**Normal GOF Test**						
714					Shapiro Wilk Test Statistic	0.587			**Shapiro Wilk GOF Test**			
715					5% Shapiro Wilk Critical Value	0.842			Data Not Normal at 5% Significance Level			
716					Lilliefors Test Statistic	0.388			**Lilliefors GOF Test**			
717					5% Lilliefors Critical Value	0.262			Data Not Normal at 5% Significance Level			
718						**Data Not Normal at 5% Significance Level**						
719												
720						**Assuming Normal Distribution**						
721					**95% Normal UCL**				**95% UCLs (Adjusted for Skewness)**			
722					95% Student's-t UCL	2.957			95% Adjusted-CLT UCL (Chen-1995)			3.303
723									95% Modified-t UCL (Johnson-1978)			3.027
724												
725						**Gamma GOF Test**						
726					A-D Test Statistic	1.769			**Anderson-Darling Gamma GOF Test**			
727					5% A-D Critical Value	0.734			Data Not Gamma Distributed at 5% Significance Level			
728					K-S Test Statistic	0.421			**Kolmogorov-Smirnov Gamma GOF Test**			
729					5% K-S Critical Value	0.269			Data Not Gamma Distributed at 5% Significance Level			
730						**Data Not Gamma Distributed at 5% Significance Level**						
731												
732						**Gamma Statistics**						
733					k hat (MLE)	2.406			k star (bias corrected MLE)			1.751
734					Theta hat (MLE)	0.81			Theta star (bias corrected MLE)			1.114
735					nu hat (MLE)	48.13			nu star (bias corrected)			35.02
736					MLE Mean (bias corrected)	1.95			MLE Sd (bias corrected)			1.474
737									Approximate Chi Square Value (0.05)			22.48
738					Adjusted Level of Significance	0.0267			Adjusted Chi Square Value			20.75
739												
740						**Assuming Gamma Distribution**						
741					95% Approximate Gamma UCL (use when n>=50))	3.038			95% Adjusted Gamma UCL (use when n<50)			3.291
742												

	A	B	C	D	E	F	G	H	I	J	K	L
743	**Lognormal GOF Test**											
744					Shapiro Wilk Test Statistic	0.654	**Shapiro Wilk Lognormal GOF Test**					
745					5% Shapiro Wilk Critical Value	0.842	Data Not Lognormal at 5% Significance Level					
746					Lilliefors Test Statistic	0.414	**Lilliefors Lognormal GOF Test**					
747					5% Lilliefors Critical Value	0.262	Data Not Lognormal at 5% Significance Level					
748	**Data Not Lognormal at 5% Significance Level**											
749												
750	**Lognormal Statistics**											
751					Minimum of Logged Data	0.0953			Mean of logged Data	0.446		
752					Maximum of Logged Data	1.872			SD of logged Data	0.622		
753												
754	**Assuming Lognormal Distribution**											
755					95% H-UCL	3.118			90% Chebyshev (MVUE) UCL	2.976		
756					95% Chebyshev (MVUE) UCL	3.484			97.5% Chebyshev (MVUE) UCL	4.189		
757					99% Chebyshev (MVUE) UCL	5.575						
758												
759	**Nonparametric Distribution Free UCL Statistics**											
760	**Data do not follow a Discernible Distribution (0.05)**											
761												
762	**Nonparametric Distribution Free UCLs**											
763					95% CLT UCL	2.853			95% Jackknife UCL	2.957		
764					95% Standard Bootstrap UCL	N/A			95% Bootstrap-t UCL	N/A		
765					95% Hall's Bootstrap UCL	N/A			95% Percentile Bootstrap UCL	N/A		
766					95% BCA Bootstrap UCL	N/A						
767					90% Chebyshev(Mean, Sd) UCL	3.598			95% Chebyshev(Mean, Sd) UCL	4.344		
768					97.5% Chebyshev(Mean, Sd) UCL	5.38			99% Chebyshev(Mean, Sd) UCL	7.414		
769												
770	**Suggested UCL to Use**											
771					95% Chebyshev (Mean, Sd) UCL	4.344						
772												
773	Note: Suggestions regarding the selection of a 95% UCL are provided to help the user to select the most appropriate 95% UCL.											
774	Recommendations are based upon data size, data distribution, and skewness.											
775	These recommendations are based upon the results of the simulation studies summarized in Singh, Maichle, and Lee (2006).											
776	However, simulations results will not cover all Real World data sets; for additional insight the user may want to consult a statistician.											
777												
778												

	A	B	C	D	E	F	G	H	I	J	K	L
779	**alpha-BHC**											
780												
781						**General Statistics**						
782					Total Number of Observations	10			Number of Distinct Observations	2		
783									Number of Missing Observations	36		
784					Minimum	1.1			Mean	1.25		
785					Maximum	2.6			Median	1.1		
786					SD	0.474			Std. Error of Mean	0.15		
787					Coefficient of Variation	0.379			Skewness	3.162		
788												
789						**Normal GOF Test**						
790					Shapiro Wilk Test Statistic	0.366			**Shapiro Wilk GOF Test**			
791					5% Shapiro Wilk Critical Value	0.842			Data Not Normal at 5% Significance Level			
792					Lilliefors Test Statistic	0.524			**Lilliefors GOF Test**			
793					5% Lilliefors Critical Value	0.262			Data Not Normal at 5% Significance Level			
794						**Data Not Normal at 5% Significance Level**						
795												
796						**Assuming Normal Distribution**						
797					**95% Normal UCL**				**95% UCLs (Adjusted for Skewness)**			
798					95% Student's-t UCL	1.525			95% Adjusted-CLT UCL (Chen-1995)	1.657		
799									95% Modified-t UCL (Johnson-1978)	1.55		
800												
801						**Gamma GOF Test**						
802					A-D Test Statistic	3.305			**Anderson-Darling Gamma GOF Test**			
803					5% A-D Critical Value	0.725			Data Not Gamma Distributed at 5% Significance Level			
804					K-S Test Statistic	0.533			**Kolmogorov-Smirnov Gamma GOF Test**			
805					5% K-S Critical Value	0.267			Data Not Gamma Distributed at 5% Significance Level			
806						**Data Not Gamma Distributed at 5% Significance Level**						
807												
808						**Gamma Statistics**						
809					k hat (MLE)	12.12			k star (bias corrected MLE)	8.552		
810					Theta hat (MLE)	0.103			Theta star (bias corrected MLE)	0.146		
811					nu hat (MLE)	242.4			nu star (bias corrected)	171		
812					MLE Mean (bias corrected)	1.25			MLE Sd (bias corrected)	0.427		
813									Approximate Chi Square Value (0.05)	141.8		
814					Adjusted Level of Significance	0.0267			Adjusted Chi Square Value	137.2		
815												
816						**Assuming Gamma Distribution**						
817					95% Approximate Gamma UCL (use when n>=50))	1.508			95% Adjusted Gamma UCL (use when n<50)	1.559		
818												

819	**Lognormal GOF Test**											
820				Shapiro Wilk Test Statistic		0.366	**Shapiro Wilk Lognormal GOF Test**					
821				5% Shapiro Wilk Critical Value		0.842	Data Not Lognormal at 5% Significance Level					
822				Lilliefors Test Statistic		0.524	**Lilliefors Lognormal GOF Test**					
823				5% Lilliefors Critical Value		0.262	Data Not Lognormal at 5% Significance Level					
824	**Data Not Lognormal at 5% Significance Level**											
825												
826	**Lognormal Statistics**											
827				Minimum of Logged Data		0.0953	Mean of logged Data			0.181		
828				Maximum of Logged Data		0.956	SD of logged Data			0.272		
829												
830	**Assuming Lognormal Distribution**											
831				95% H-UCL		1.484	90% Chebyshev (MVUE) UCL			1.561		
832				95% Chebyshev (MVUE) UCL		1.707	97.5% Chebyshev (MVUE) UCL			1.909		
833				99% Chebyshev (MVUE) UCL		2.306						
834												
835	**Nonparametric Distribution Free UCL Statistics**											
836	**Data do not follow a Discernible Distribution (0.05)**											
837												
838	**Nonparametric Distribution Free UCLs**											
839				95% CLT UCL		1.497	95% Jackknife UCL			N/A		
840				95% Standard Bootstrap UCL		N/A	95% Bootstrap-t UCL			N/A		
841				95% Hall's Bootstrap UCL		N/A	95% Percentile Bootstrap UCL			N/A		
842				95% BCA Bootstrap UCL		N/A						
843				90% Chebyshev(Mean, Sd) UCL		1.7	95% Chebyshev(Mean, Sd) UCL			1.904		
844				97.5% Chebyshev(Mean, Sd) UCL		2.187	99% Chebyshev(Mean, Sd) UCL			2.742		
845												
846	**Suggested UCL to Use**											
847				95% Student's-t UCL		1.525	or 95% Modified-t UCL			1.55		
848												
849	Note: Suggestions regarding the selection of a 95% UCL are provided to help the user to select the most appropriate 95% UCL.											
850	Recommendations are based upon data size, data distribution, and skewness.											
851	These recommendations are based upon the results of the simulation studies summarized in Singh, Maichle, and Lee (2006).											
852	However, simulations results will not cover all Real World data sets; for additional insight the user may want to consult a statistician.											
853												

UCL Statistics for Uncensored Full Data Sets

PARC Area 8

User Selected Options	
From File	WorkSheet_e.xls
Full Precision	OFF
Confidence Coefficient	95%
Number of Bootstrap Operations	2000

Barium

General Statistics

Total Number of Observations	9	Number of Distinct Observations	8
		Number of Missing Observations	11
Minimum	72	Mean	163.6
Maximum	561	Median	116
SD	152.5	Std. Error of Mean	50.83
Coefficient of Variation	0.932	Skewness	2.747

Note: Sample size is small (e.g., <10), if data are collected using ISM approach, you should use guidance provided in ITRC Tech Reg Guide on ISM (ITRC, 2012) to compute statistics of interest. For example, you may want to use Chebyshev UCL to estimate EPC (ITRC, 2012). Chebyshev UCL can be computed using the Nonparametric and All UCL Options of ProUCL 5.1

Normal GOF Test

Shapiro Wilk Test Statistic	0.59	**Shapiro Wilk GOF Test**
5% Shapiro Wilk Critical Value	0.829	Data Not Normal at 5% Significance Level
Lilliefors Test Statistic	0.375	**Lilliefors GOF Test**
5% Lilliefors Critical Value	0.274	Data Not Normal at 5% Significance Level

Data Not Normal at 5% Significance Level

Assuming Normal Distribution

95% Normal UCL		**95% UCLs (Adjusted for Skewness)**	
95% Student's-t UCL	258.1	95% Adjusted-CLT UCL (Chen-1995)	296.9
		95% Modified-t UCL (Johnson-1978)	265.8

Gamma GOF Test

A-D Test Statistic	0.987	**Anderson-Darling Gamma GOF Test**
5% A-D Critical Value	0.729	Data Not Gamma Distributed at 5% Significance Level
K-S Test Statistic	0.284	**Kolmogorov-Smirnov Gamma GOF Test**
5% K-S Critical Value	0.282	Data Not Gamma Distributed at 5% Significance Level

Data Not Gamma Distributed at 5% Significance Level

Gamma Statistics

k hat (MLE)	2.407	k star (bias corrected MLE)	1.679
Theta hat (MLE)	67.95	Theta star (bias corrected MLE)	97.42
nu hat (MLE)	43.33	nu star (bias corrected)	30.22
MLE Mean (bias corrected)	163.6	MLE Sd (bias corrected)	126.2
		Approximate Chi Square Value (0.05)	18.66
Adjusted Level of Significance	0.0231	Adjusted Chi Square Value	16.78

53	**Assuming Gamma Distribution**											
54	95% Approximate Gamma UCL (use when n>=50))				264.8		95% Adjusted Gamma UCL (use when n<50)				294.6	
55												
56	**Lognormal GOF Test**											
57	Shapiro Wilk Test Statistic				0.822		**Shapiro Wilk Lognormal GOF Test**					
58	5% Shapiro Wilk Critical Value				0.829		Data Not Lognormal at 5% Significance Level					
59	Lilliefors Test Statistic				0.229		**Lilliefors Lognormal GOF Test**					
60	5% Lilliefors Critical Value				0.274		Data appear Lognormal at 5% Significance Level					
61	**Data appear Approximate Lognormal at 5% Significance Level**											
62												
63	**Lognormal Statistics**											
64	Minimum of Logged Data				4.277		Mean of logged Data				4.875	
65	Maximum of Logged Data				6.33		SD of logged Data				0.618	
66												
67	**Assuming Lognormal Distribution**											
68	95% H-UCL				272.5		90% Chebyshev (MVUE) UCL				252.6	
69	95% Chebyshev (MVUE) UCL				296.8		97.5% Chebyshev (MVUE) UCL				358.2	
70	99% Chebyshev (MVUE) UCL				478.9							
71												
72	**Nonparametric Distribution Free UCL Statistics**											
73	**Data appear to follow a Discernible Distribution at 5% Significance Level**											
74												
75	**Nonparametric Distribution Free UCLs**											
76	95% CLT UCL				247.2		95% Jackknife UCL				258.1	
77	95% Standard Bootstrap UCL				240.5		95% Bootstrap-t UCL				504.5	
78	95% Hall's Bootstrap UCL				610.7		95% Percentile Bootstrap UCL				260.1	
79	95% BCA Bootstrap UCL				316.1							
80	90% Chebyshev(Mean, Sd) UCL				316.1		95% Chebyshev(Mean, Sd) UCL				385.1	
81	97.5% Chebyshev(Mean, Sd) UCL				481		99% Chebyshev(Mean, Sd) UCL				669.3	
82												
83	**Suggested UCL to Use**											
84	95% H-UCL				272.5							
85												
86	Note: Suggestions regarding the selection of a 95% UCL are provided to help the user to select the most appropriate 95% UCL.											
87	Recommendations are based upon data size, data distribution, and skewness.											
88	These recommendations are based upon the results of the simulation studies summarized in Singh, Maichle, and Lee (2006).											
89	However, simulations results will not cover all Real World data sets; for additional insight the user may want to consult a statistician.											
90												
91	**ProUCL computes and outputs H-statistic based UCLs for historical reasons only.**											
92	**H-statistic often results in unstable (both high and low) values of UCL95 as shown in examples in the Technical Guide.**											
93	**It is therefore recommended to avoid the use of H-statistic based 95% UCLs.**											
94	**Use of nonparametric methods are preferred to compute UCL95 for skewed data sets which do not follow a gamma distribution.**											
95												
96												

	A	B	C	D	E	F	G	H	I	J	K	L
97	**Copper**											
98												
99						**General Statistics**						
100					Total Number of Observations	9			Number of Distinct Observations	8		
101									Number of Missing Observations	11		
102					Minimum	7.8			Mean	45.64		
103					Maximum	148			Median	24		
104					SD	45.16			Std. Error of Mean	15.05		
105					Coefficient of Variation	0.989			Skewness	1.828		
106												
107					**Note: Sample size is small (e.g., <10), if data are collected using ISM approach, you should use**							
108					**guidance provided in ITRC Tech Reg Guide on ISM (ITRC, 2012) to compute statistics of interest.**							
109					**For example, you may want to use Chebyshev UCL to estimate EPC (ITRC, 2012).**							
110					**Chebyshev UCL can be computed using the Nonparametric and All UCL Options of ProUCL 5.1**							
111												
112						**Normal GOF Test**						
113					Shapiro Wilk Test Statistic	0.755			**Shapiro Wilk GOF Test**			
114					5% Shapiro Wilk Critical Value	0.829			Data Not Normal at 5% Significance Level			
115					Lilliefors Test Statistic	0.301			**Lilliefors GOF Test**			
116					5% Lilliefors Critical Value	0.274			Data Not Normal at 5% Significance Level			
117						**Data Not Normal at 5% Significance Level**						
118												
119						**Assuming Normal Distribution**						
120					**95% Normal UCL**				**95% UCLs (Adjusted for Skewness)**			
121					95% Student's-t UCL	73.64			95% Adjusted-CLT UCL (Chen-1995)	80.21		
122									95% Modified-t UCL (Johnson-1978)	75.17		
123												
124						**Gamma GOF Test**						
125					A-D Test Statistic	0.532			**Anderson-Darling Gamma GOF Test**			
126					5% A-D Critical Value	0.734			Detected data appear Gamma Distributed at 5% Significance Level			
127					K-S Test Statistic	0.225			**Kolmogorov-Smirnov Gamma GOF Test**			
128					5% K-S Critical Value	0.284			Detected data appear Gamma Distributed at 5% Significance Level			
129						**Detected data appear Gamma Distributed at 5% Significance Level**						
130												
131						**Gamma Statistics**						
132					k hat (MLE)	1.539			k star (bias corrected MLE)	1.1		
133					Theta hat (MLE)	29.66			Theta star (bias corrected MLE)	41.49		
134					nu hat (MLE)	27.7			nu star (bias corrected)	19.8		
135					MLE Mean (bias corrected)	45.64			MLE Sd (bias corrected)	43.52		
136									Approximate Chi Square Value (0.05)	10.7		
137					Adjusted Level of Significance	0.0231			Adjusted Chi Square Value	9.326		
138												

	A	B	C	D	E	F	G	H	I	J	K	L
139	**Assuming Gamma Distribution**											
140	95% Approximate Gamma UCL (use when n>=50)					84.43	95% Adjusted Gamma UCL (use when n<50)					96.91
141												
142	**Lognormal GOF Test**											
143	Shapiro Wilk Test Statistic					0.945	**Shapiro Wilk Lognormal GOF Test**					
144	5% Shapiro Wilk Critical Value					0.829	Data appear Lognormal at 5% Significance Level					
145	Lilliefors Test Statistic					0.187	**Lilliefors Lognormal GOF Test**					
146	5% Lilliefors Critical Value					0.274	Data appear Lognormal at 5% Significance Level					
147	**Data appear Lognormal at 5% Significance Level**											
148												
149	**Lognormal Statistics**											
150	Minimum of Logged Data					2.054	Mean of logged Data					3.462
151	Maximum of Logged Data					4.997	SD of logged Data					0.878
152												
153	**Assuming Lognormal Distribution**											
154	95% H-UCL					118	90% Chebyshev (MVUE) UCL					84.67
155	95% Chebyshev (MVUE) UCL					102.9	97.5% Chebyshev (MVUE) UCL					128.2
156	99% Chebyshev (MVUE) UCL					177.9						
157												
158	**Nonparametric Distribution Free UCL Statistics**											
159	**Data appear to follow a Discernible Distribution at 5% Significance Level**											
160												
161	**Nonparametric Distribution Free UCLs**											
162	95% CLT UCL					70.41	95% Jackknife UCL					73.64
163	95% Standard Bootstrap UCL					68.92	95% Bootstrap-t UCL					137.4
164	95% Hall's Bootstrap UCL					209.4	95% Percentile Bootstrap UCL					72.2
165	95% BCA Bootstrap UCL					76.2						
166	90% Chebyshev(Mean, Sd) UCL					90.81	95% Chebyshev(Mean, Sd) UCL					111.3
167	97.5% Chebyshev(Mean, Sd) UCL					139.7	99% Chebyshev(Mean, Sd) UCL					195.4
168												
169	**Suggested UCL to Use**											
170	95% Adjusted Gamma UCL					96.91						
171												
172	Note: Suggestions regarding the selection of a 95% UCL are provided to help the user to select the most appropriate 95% UCL.											
173	Recommendations are based upon data size, data distribution, and skewness.											
174	These recommendations are based upon the results of the simulation studies summarized in Singh, Maichle, and Lee (2006).											
175	However, simulations results will not cover all Real World data sets; for additional insight the user may want to consult a statistician.											
176												
177												

	A	B	C	D	E	F	G	H	I	J	K	L
178	**Lead**											
179												
180						**General Statistics**							
181					Total Number of Observations	17			Number of Distinct Observations	17		
182									Number of Missing Observations	3		
183					Minimum	1.1			Mean	61.5		
184					Maximum	328			Median	21		
185					SD	95.3			Std. Error of Mean	23.11		
186					Coefficient of Variation	1.55			Skewness	2.144		
187												
188						**Normal GOF Test**						
189					Shapiro Wilk Test Statistic	0.658			**Shapiro Wilk GOF Test**			
190					5% Shapiro Wilk Critical Value	0.892			Data Not Normal at 5% Significance Level			
191					Lilliefors Test Statistic	0.304			**Lilliefors GOF Test**			
192					5% Lilliefors Critical Value	0.207			Data Not Normal at 5% Significance Level			
193						**Data Not Normal at 5% Significance Level**						
194												
195						**Assuming Normal Distribution**						
196					**95% Normal UCL**				**95% UCLs (Adjusted for Skewness)**			
197					95% Student's-t UCL	101.9			95% Adjusted-CLT UCL (Chen-1995)	112.4		
198									95% Modified-t UCL (Johnson-1978)	103.9		
199												
200						**Gamma GOF Test**						
201					A-D Test Statistic	0.516			**Anderson-Darling Gamma GOF Test**			
202					5% A-D Critical Value	0.793			Detected data appear Gamma Distributed at 5% Significance Level			
203					K-S Test Statistic	0.135			**Kolmogorov-Smirnov Gamma GOF Test**			
204					5% K-S Critical Value	0.22			Detected data appear Gamma Distributed at 5% Significance Level			
205						**Detected data appear Gamma Distributed at 5% Significance Level**						
206												
207						**Gamma Statistics**						
208					k hat (MLE)	0.56			k star (bias corrected MLE)	0.501		
209					Theta hat (MLE)	109.8			Theta star (bias corrected MLE)	122.8		
210					nu hat (MLE)	19.05			nu star (bias corrected)	17.02		
211					MLE Mean (bias corrected)	61.5			MLE Sd (bias corrected)	86.92		
212									Approximate Chi Square Value (0.05)	8.689		
213					Adjusted Level of Significance	0.0346			Adjusted Chi Square Value	8.07		
214												

215	**Assuming Gamma Distribution**											
216					95% Approximate Gamma UCL (use when n>=50)	120.5			95% Adjusted Gamma UCL (use when n<50)			129.7
217												
218	**Lognormal GOF Test**											
219					Shapiro Wilk Test Statistic	0.967			**Shapiro Wilk Lognormal GOF Test**			
220					5% Shapiro Wilk Critical Value	0.892			Data appear Lognormal at 5% Significance Level			
221					Lilliefors Test Statistic	0.115			**Lilliefors Lognormal GOF Test**			
222					5% Lilliefors Critical Value	0.207			Data appear Lognormal at 5% Significance Level			
223	**Data appear Lognormal at 5% Significance Level**											
224												
225	**Lognormal Statistics**											
226					Minimum of Logged Data	0.0953			Mean of logged Data			3.005
227					Maximum of Logged Data	5.793			SD of logged Data			1.655
228												
229	**Assuming Lognormal Distribution**											
230					95% H-UCL	376			90% Chebyshev (MVUE) UCL			163.6
231					95% Chebyshev (MVUE) UCL	207.1			97.5% Chebyshev (MVUE) UCL			267.4
232					99% Chebyshev (MVUE) UCL	385.8						
233												
234	**Nonparametric Distribution Free UCL Statistics**											
235	**Data appear to follow a Discernible Distribution at 5% Significance Level**											
236												
237	**Nonparametric Distribution Free UCLs**											
238					95% CLT UCL	99.52			95% Jackknife UCL			101.9
239					95% Standard Bootstrap UCL	98.45			95% Bootstrap-t UCL			161.8
240					95% Hall's Bootstrap UCL	238.6			95% Percentile Bootstrap UCL			100.3
241					95% BCA Bootstrap UCL	112.4						
242					90% Chebyshev(Mean, Sd) UCL	130.8			95% Chebyshev(Mean, Sd) UCL			162.3
243					97.5% Chebyshev(Mean, Sd) UCL	205.8			99% Chebyshev(Mean, Sd) UCL			291.5
244												
245	**Suggested UCL to Use**											
246					95% Adjusted Gamma UCL	129.7						
247												
248	Note: Suggestions regarding the selection of a 95% UCL are provided to help the user to select the most appropriate 95% UCL.											
249	Recommendations are based upon data size, data distribution, and skewness.											
250	These recommendations are based upon the results of the simulation studies summarized in Singh, Maichle, and Lee (2006).											
251	However, simulations results will not cover all Real World data sets; for additional insight the user may want to consult a statistician.											
252												
253												

	A	B	C	D	E	F	G	H	I	J	K	L
254	**Zinc**											
255												
256						**General Statistics**							
257					Total Number of Observations	9			Number of Distinct Observations	9		
258									Number of Missing Observations	11		
259					Minimum	29			Mean	185.8		
260					Maximum	920			Median	92		
261					SD	281.1			Std. Error of Mean	93.7		
262					Coefficient of Variation	1.513			Skewness	2.781		
263												
264					**Note: Sample size is small (e.g., <10), if data are collected using ISM approach, you should use**							
265					**guidance provided in ITRC Tech Reg Guide on ISM (ITRC, 2012) to compute statistics of interest.**							
266					**For example, you may want to use Chebyshev UCL to estimate EPC (ITRC, 2012).**							
267					**Chebyshev UCL can be computed using the Nonparametric and All UCL Options of ProUCL 5.1**							
268												
269						**Normal GOF Test**						
270					Shapiro Wilk Test Statistic	0.564			**Shapiro Wilk GOF Test**			
271					5% Shapiro Wilk Critical Value	0.829			Data Not Normal at 5% Significance Level			
272					Lilliefors Test Statistic	0.361			**Lilliefors GOF Test**			
273					5% Lilliefors Critical Value	0.274			Data Not Normal at 5% Significance Level			
274						**Data Not Normal at 5% Significance Level**						
275												
276						**Assuming Normal Distribution**						
277					**95% Normal UCL**				**95% UCLs (Adjusted for Skewness)**			
278					95% Student's-t UCL	360			95% Adjusted-CLT UCL (Chen-1995)	432.7		
279									95% Modified-t UCL (Johnson-1978)	374.5		
280												
281						**Gamma GOF Test**						
282					A-D Test Statistic	0.857			**Anderson-Darling Gamma GOF Test**			
283					5% A-D Critical Value	0.743			Data Not Gamma Distributed at 5% Significance Level			
284					K-S Test Statistic	0.283			**Kolmogorov-Smirnov Gamma GOF Test**			
285					5% K-S Critical Value	0.287			Detected data appear Gamma Distributed at 5% Significance Level			
286						**Detected data follow Appr. Gamma Distribution at 5% Significance Level**						
287												
288						**Gamma Statistics**						
289					k hat (MLE)	1			k star (bias corrected MLE)	0.741		
290					Theta hat (MLE)	185.8			Theta star (bias corrected MLE)	250.8		
291					nu hat (MLE)	18			nu star (bias corrected)	13.33		
292					MLE Mean (bias corrected)	185.8			MLE Sd (bias corrected)	215.9		
293									Approximate Chi Square Value (0.05)	6.118		
294					Adjusted Level of Significance	0.0231			Adjusted Chi Square Value	5.124		
295												

	Assuming Gamma Distribution	
95% Approximate Gamma UCL (use when n>=50)	404.9	95% Adjusted Gamma UCL (use when n<50) 483.4
	Lognormal GOF Test	
Shapiro Wilk Test Statistic	0.91	**Shapiro Wilk Lognormal GOF Test**
5% Shapiro Wilk Critical Value	0.829	Data appear Lognormal at 5% Significance Level
Lilliefors Test Statistic	0.2	**Lilliefors Lognormal GOF Test**
5% Lilliefors Critical Value	0.274	Data appear Lognormal at 5% Significance Level
Data appear Lognormal at 5% Significance Level		
	Lognormal Statistics	
Minimum of Logged Data	3.367	Mean of logged Data 4.647
Maximum of Logged Data	6.824	SD of logged Data 1.003
	Assuming Lognormal Distribution	
95% H-UCL	544.7	90% Chebyshev (MVUE) UCL 326.4
95% Chebyshev (MVUE) UCL	401.8	97.5% Chebyshev (MVUE) UCL 506.3
99% Chebyshev (MVUE) UCL	711.7	
	Nonparametric Distribution Free UCL Statistics	
	Data appear to follow a Discernible Distribution at 5% Significance Level	
	Nonparametric Distribution Free UCLs	
95% CLT UCL	339.9	95% Jackknife UCL 360
95% Standard Bootstrap UCL	333.6	95% Bootstrap-t UCL 1173
95% Hall's Bootstrap UCL	1062	95% Percentile Bootstrap UCL 359.3
95% BCA Bootstrap UCL	398.3	
90% Chebyshev(Mean, Sd) UCL	466.9	95% Chebyshev(Mean, Sd) UCL 594.2
97.5% Chebyshev(Mean, Sd) UCL	770.9	99% Chebyshev(Mean, Sd) UCL 1118
	Suggested UCL to Use	
95% Adjusted Gamma UCL	483.4	
When a data set follows an approximate (e.g., normal) distribution passing one of the GOF test		
When applicable, it is suggested to use a UCL based upon a distribution (e.g., gamma) passing both GOF tests in ProUCL		
Note: Suggestions regarding the selection of a 95% UCL are provided to help the user to select the most appropriate 95% UCL.		
Recommendations are based upon data size, data distribution, and skewness.		
These recommendations are based upon the results of the simulation studies summarized in Singh, Maichle, and Lee (2006).		
However, simulations results will not cover all Real World data sets; for additional insight the user may want to consult a statistician.		

TPH-GRO

General Statistics

Total Number of Observations	5	Number of Distinct Observations	2
		Number of Missing Observations	15
Minimum	1.1	Mean	1.14
Maximum	1.3	Median	1.1
SD	0.0894	Std. Error of Mean	0.04
Coefficient of Variation	0.0785	Skewness	2.236

Note: Sample size is small (e.g., <10), if data are collected using ISM approach, you should use guidance provided in ITRC Tech Reg Guide on ISM (ITRC, 2012) to compute statistics of interest. For example, you may want to use Chebyshev UCL to estimate EPC (ITRC, 2012). Chebyshev UCL can be computed using the Nonparametric and All UCL Options of ProUCL 5.1

Normal GOF Test

Shapiro Wilk Test Statistic	0.552	**Shapiro Wilk GOF Test**
5% Shapiro Wilk Critical Value	0.762	Data Not Normal at 5% Significance Level
Lilliefors Test Statistic	0.473	**Lilliefors GOF Test**
5% Lilliefors Critical Value	0.343	Data Not Normal at 5% Significance Level

Data Not Normal at 5% Significance Level

Assuming Normal Distribution

95% Normal UCL		**95% UCLs (Adjusted for Skewness)**	
95% Student's-t UCL	1.225	95% Adjusted-CLT UCL (Chen-1995)	1.249
		95% Modified-t UCL (Johnson-1978)	1.232

Gamma GOF Test

A-D Test Statistic	1.332	**Anderson-Darling Gamma GOF Test**
5% A-D Critical Value	0.678	Data Not Gamma Distributed at 5% Significance Level
K-S Test Statistic	0.492	**Kolmogorov-Smirnov Gamma GOF Test**
5% K-S Critical Value	0.357	Data Not Gamma Distributed at 5% Significance Level

Data Not Gamma Distributed at 5% Significance Level

Gamma Statistics

k hat (MLE)	216.9	k star (bias corrected MLE)	86.88
Theta hat (MLE)	0.00526	Theta star (bias corrected MLE)	0.0131
nu hat (MLE)	2169	nu star (bias corrected)	868.8
MLE Mean (bias corrected)	1.14	MLE Sd (bias corrected)	0.122
		Approximate Chi Square Value (0.05)	801.4
Adjusted Level of Significance	0.0086	Adjusted Chi Square Value	772.6

	A	B	C	D	E	F	G	H	I	J	K	L
380	**Assuming Gamma Distribution**											
381				95% Approximate Gamma UCL (use when n>=50))		1.236			95% Adjusted Gamma UCL (use when n<50)			1.282
382												
383	**Lognormal GOF Test**											
384				Shapiro Wilk Test Statistic		0.552			**Shapiro Wilk Lognormal GOF Test**			
385				5% Shapiro Wilk Critical Value		0.762			Data Not Lognormal at 5% Significance Level			
386				Lilliefors Test Statistic		0.473			**Lilliefors Lognormal GOF Test**			
387				5% Lilliefors Critical Value		0.343			Data Not Lognormal at 5% Significance Level			
388	**Data Not Lognormal at 5% Significance Level**											
389												
390	**Lognormal Statistics**											
391				Minimum of Logged Data		0.0953			Mean of logged Data			0.129
392				Maximum of Logged Data		0.262			SD of logged Data			0.0747
393												
394	**Assuming Lognormal Distribution**											
395				95% H-UCL		N/A			90% Chebyshev (MVUE) UCL			1.254
396				95% Chebyshev (MVUE) UCL		1.306			97.5% Chebyshev (MVUE) UCL			1.378
397				99% Chebyshev (MVUE) UCL		1.519						
398												
399	**Nonparametric Distribution Free UCL Statistics**											
400	**Data do not follow a Discernible Distribution (0.05)**											
401												
402	**Nonparametric Distribution Free UCLs**											
403				95% CLT UCL		1.206			95% Jackknife UCL			N/A
404				95% Standard Bootstrap UCL		N/A			95% Bootstrap-t UCL			N/A
405				95% Hall's Bootstrap UCL		N/A			95% Percentile Bootstrap UCL			N/A
406				95% BCA Bootstrap UCL		N/A						
407				90% Chebyshev(Mean, Sd) UCL		1.26			95% Chebyshev(Mean, Sd) UCL			1.314
408				97.5% Chebyshev(Mean, Sd) UCL		1.39			99% Chebyshev(Mean, Sd) UCL			1.538
409												
410	**Suggested UCL to Use**											
411				95% Student's-t UCL		1.225			or 95% Modified-t UCL			1.232
412												
413	Note: Suggestions regarding the selection of a 95% UCL are provided to help the user to select the most appropriate 95% UCL.											
414	Recommendations are based upon data size, data distribution, and skewness.											
415	These recommendations are based upon the results of the simulation studies summarized in Singh, Maichle, and Lee (2006).											
416	However, simulations results will not cover all Real World data sets; for additional insight the user may want to consult a statistician.											
417												

ATTACHMENT P

VDEQ Trench Model for Soil Gas

VDEQ Soil Gas Trench Model

~ Utility Trench Attenuation Factors ~

VDEQ SOIL GAS TRENCH MODEL (VDEQ, 2018 - Eqn. 2-12 and 2-13)

Parameter	Symbol	Value	Units
Air-filled porosity	AC_{vad}	0.244	-
Fraction of unsealed trench floor	F	1	-
Air changes per hour	ACH	60	hr^{-1}
Total porosity	P	0.319	-
Length of trench	L	100	m
Width of trench	W	1	m
Depth of trench	D	2	m
Volume of trench	V	200	m^3
Area of trench	A	100	m^2

Surrogates: TPH-GRO = Benzene, Ethanol = Methanol, and 1,2-Dichlorobenzene = 1,3-Dichlorobenzene

SOIL GAS COPC	D_{air} (cm^2/s)	D values (cm) =>	Attenuation factors (α_{trench} values; unitless) for different sample depths		
			5-foot sample depth	10-foot sample depth*	15-foot sample depth**
			1	104.8	257.2
Acetone	1.1E-01		2.8E-03	2.7E-05	1.1E-05
Acetonitrile	1.3E-01		3.6E-03	3.4E-05	1.4E-05
Benzene	9.0E-02		2.4E-03	2.3E-05	9.4E-06
Carbon Disulfide	1.1E-01		2.9E-03	2.7E-05	1.1E-05
Chlorobenzene	7.2E-02		1.9E-03	1.9E-05	7.5E-06
Chloroform	7.7E-02		2.1E-03	2.0E-05	8.0E-06
Chloromethane	1.2E-01		3.3E-03	3.2E-05	1.3E-05
Cyclohexane	8.0E-02		2.2E-03	2.1E-05	8.4E-06
Dichlorobenzene, 1,2-	5.6E-02		1.5E-03	1.4E-05	5.9E-06
Dichlorodifluoromethane	7.6E-02		2.0E-03	2.0E-05	7.9E-06
Dichloroethane, 1,1-	8.4E-02		2.2E-03	2.1E-05	8.7E-06
Ethyl Chloride (Chloroethane)	1.0E-01		2.8E-03	2.7E-05	1.1E-05
Ethylbenzene	6.8E-02		1.8E-03	1.8E-05	7.2E-06
Hexanone, 2-	7.0E-02		1.9E-03	1.8E-05	7.4E-06
Isopropanol	1.0E-01		2.8E-03	2.6E-05	1.1E-05
Methanol	1.6E-01		4.3E-03	4.1E-05	1.7E-05
2-Butanone	9.1E-02		2.5E-03	2.3E-05	9.6E-06
4-Methyl-2-Pentanone	7.0E-02		1.9E-03	1.8E-05	7.3E-06
Methylene Chloride	1.0E-01		2.7E-03	2.6E-05	1.0E-05
Naphthalene	6.0E-02		1.6E-03	1.6E-05	6.3E-06
Propyl benzene	6.0E-02		1.6E-03	1.5E-05	6.3E-06
Tetrachloroethylene	5.0E-02		1.4E-03	1.3E-05	5.3E-06
Toluene	7.8E-02		2.1E-03	2.0E-05	8.1E-06
Trichlorobenzene, 1,2,4-	4.0E-02		1.1E-03	1.0E-05	4.1E-06
Trichloroethane, 1,1,1-	6.5E-02		1.7E-03	1.7E-05	6.8E-06
Trichloroethylene	6.9E-02		1.8E-03	1.8E-05	7.2E-06
Trichlorofluoromethane	6.5E-02		1.8E-03	1.7E-05	6.8E-06
Trimethylbenzene, 1,2,4-	6.1E-02		1.6E-03	1.6E-05	6.3E-06
Trimethylbenzene, 1,3,5-	6.0E-02		1.6E-03	1.5E-05	6.3E-06
Vinyl Acetate	8.5E-02		2.3E-03	2.2E-05	8.9E-06
Vinyl Chloride	1.1E-01		2.9E-03	2.7E-05	1.1E-05
Xylene, m-	6.8E-02		1.8E-03	1.8E-05	7.1E-06
Xylene, o-	6.9E-02		1.9E-03	1.8E-05	7.2E-06
Xylene, p-	6.8E-02		1.8E-03	1.8E-05	7.1E-06
Xylenes	6.9E-02		1.8E-03	1.8E-05	7.2E-06
TPH-GRO	9.0E-02		2.4E-03	2.3E-05	9.4E-06
Trichloroethane, 1,1,2-	6.7E-02		1.8E-03	1.7E-05	7.0E-06
Dichloroethene, 1,1-	8.6E-02		2.3E-03	2.2E-05	9.0E-06

Equation (2-11) simplifies to the following:

$$C_{trench} = C_{sg} \times \frac{D_{air} \times AC_{vad}^{3.33} \times A \times F \times 10^4 \times 3600}{L_d \times ACH \times V \times Por_{vad}^{2} \times 10^5} \qquad (2\text{-}12)$$

$$C_{trench} = C_{sg} \times VF_{sg}$$

Hence, $VF_{sg} = \frac{D_{air} \times AC_{vad}^{3.33} \times A \times F \times 10^4 \times 3600}{L_d \times ACH \times V \times Por_{vad}^{2} \times 10^5}$ (2-13)

Where:

H_i	=	Henry's Law constant for contaminant (RSL table)	atm-m³/mol
D_{air}	=	diffusion coefficient in air (RSL table)	cm^2/s
AC_{vad}	=	volumetric air content in vadose zone soil	cm^3/cm^3
A	=	area of trench	m^2
F	=	fraction of floor through which contaminant can enter	Unit less
R	=	ideal gas constant	atm-m³/ mole-K
T	=	average system absolute temperature	K
L_d	=	distance between trench bottom and groundwater* (equation 2-3)	cm
ACH	=	air changes per hour	h^{-1}
V	=	volume of trench	m^3
Por_{vad}	=	total soil porosity in vadose zone	cm^3/cm^3
10^{-5}	=	conversion factor	L/cm³
10^4	=	conversion factor	cm^2/m^2
3600	=	conversion factor	s/hr

*Ld = 1 cm (instead of 31 cm; as assumed in groundwater model
Construction worker trench dimensions remain consistent with groundwater equations.

This model can be used to estimate the contaminant concentration in soil vapor partitioning from the groundwater concentration; the contaminant is then transported by diffusion to the trench base or face (where applicable) and diluted by mixing within the trench. In order to accommodate for the assumption that the construction worker could intersect with the sample collection depth, distance between the trench bottom and vapor source (L_d) is modified to 1cm.

Virginia DEQ Construction Worker in Trench Groundwater and Soil Gas model was reviewed by Contaminated Sites Approved Professionals of British Columbia (CSAP) Society in (Meridian, 2012).

The Fehling Group, LLC

BUREAU OF ENGINEERING

SIXTH STREET PARK, ARTS AND RIVER CONNECTIVITY IMPROVEMENTS (PARC)
WORK ORDER NO. E700235D

ATTACHMENT NO. 3
SIXTH STREET VIADUCT SOIL REMEDIATION

BID SUBMITTAL
JULY 2022

City of Los Angeles
California

Department of Public Works
Bureau of Engineering



6th Street Viaduct - Area of Concern 1A
Los Angeles, California

Soil Remediation Report

prepared by
Rincon Consultants, Inc.

prepared on behalf of
Skanska-Stacy and Witbeck

April 8, 2022

RINCON CONSULTANTS, INC.
Environmental Scientists | Planners | Engineers
rinconconsultants.com

Rincon Consultants, Inc.

180 North Ashwood Avenue
Ventura, California 93003

805 644 4455

info@rinconconsultants.com
www.rinconconsultants.com

April 8, 2022
Project No: 14-01176

Paul Manning, CPESC, CESSWI, QSD, QSP, CGP ToR, ENV SP
Environmental Manager
Skanska USA Civil
1995 Agua Mansa Road
Riverside, California 92509
Via email: Paul.Manning@skanska.com

Subject: Soil Remediation Report
6th Street Viaduct, Area of Concern 1A
589 Santa Fe Avenue, Los Angeles, California

Dear Mr. Manning:

This report presents the findings of the remedial excavation of lead impacted soil within the PARC (Park, Arts, River, and Connectivity Improvements) Project Sixth Street Viaduct Replacement site located at 589 Santa Fe Avenue in Los Angeles, California. The PARC Project consists of nine different areas of concern (AOCs) as defined by the Remedial Action Plan (RAP) prepared for the City of Los Angeles by Tetra Tech BAS and dated February 24, 2022 (Tetra Tech BAS 2022). Soil remediation activities described in this Report pertain to the construction of a pedestrian bridge located within AOC 1A (Site).

Thank you for selecting Rincon for this project. If you have any questions or if we can be of any future assistance, please contact us.

Sincerely,
Rincon Consultants, Inc.

R. Scott English, RME
Senior Program Manager

Torin R. Snyder, PG, CHG, QSD/P ToR,
Principal

PROFESSIONAL GEOLOGIST
TORIN R. SNYDER
No. 8663
CHG
Exp. 12/31/23
STATE OF CALIFORNIA

This document has been digitally signed and sealed by Torin Snyder, PG, CHG on 4/8/2022.

Table of Contents

Executive Summary 1
Introduction 2
PARC Project Site Description 2
Site Characterization 2
Removal Action Activities 3
Removal Action Objectives 3
Removal Action Activities 3
Conclusion 5
References 6

Figures

Figure 1 ..... Vicinity Map
Figure 2 ..... Soil Sample Location Map

Tables

Table 1 ..... Waste Characterization and Confirmation Sample Results – Title 22 Metals
Table 2 ..... Waste Characterization Results – Total Petroleum Hydrocarbons
Table 3 ..... Waste Characterization Results – Volatile Organic Compounds

Appendices

Appendix A Excavation Photos
Appendix B Laboratory Analytical Reports
Appendix C Daily Field Sheets
Appendix D Waste Manifests and Weight Tickets
Appendix E Kroner Environmental Services, Inc. Imported Fill Memorandum
Appendix F Rule 1466 Monitoring Report

Executive Summary

This Soil Remediation Report (Report) was prepared to summarize the remedial excavation of lead impacted soil within the PARC (Park, Arts, River, and Connectivity Improvements) Project Sixth Street Viaduct Replacement site located at 589 Santa Fe Avenue in Los Angeles, California. The PARC Project consists of nine different areas of concern (AOCs) as defined by the Remedial Action Plan (RAP) prepared for the City of Los Angeles by Tetra Tech BAS and dated February 24, 2022 (Tetra Tech BAS 2022). Soil remediation activities described in this Report pertain to the construction of a pedestrian bridge located within AOC 1A (Site). No remediation activities occurred outside of the construction envelope within area AOC 1A.

As described in the RAP, lead and diesel range petroleum hydrocarbon impacts were identified across approximately 1.5 acres, to depths of between 1.0 and 3.5 feet (ft) below ground surface (bgs) within area AOC 1A. Prior to excavation activities, Rincon collected nine soil matrix samples (RB1 through RB9) for waste characterization on December 2, 2021. The soil samples were collected within the construction envelope of the planned pedestrian bridge. Lead concentrations in two samples exceeded the Soluble Threshold Limit Concentration of 5.0 milligrams per liter. As a result, soil excavated from the construction envelope was disposed of as non-Resource Conservation and Recovery Act California hazardous waste.

Between February 7 and 15, 2022, Skanska-Stacy and Witbeck excavated the impacted soil. All excavation activities were completed in accordance with the RAP, including compliance with South Coast Air Quality Management District (SCAQMD) Rule 1466 and 403. During excavation activities, Citadel EHS performed SCAQMD Rule 1466 monitoring. On February 11, 2022, nine confirmation soil matrix samples were collected at approximately 1.5 to 3.0 ft bgs from the sidewalls and base of the excavation to confirm soil within the excavation area did not exceed the clean-up goals.

In total, 3,097 tons of soil were excavated and transported from the Site as part of excavation and removal action activities. The construction envelope was excavated to a depth of approximately 3 to 3.5 ft bgs and impacted soil was disposed at the South Yuma County Landfill in Yuma, Arizona. After receipt of the confirmation sampling results, the construction envelope was backfilled with certified clean fill.

Introduction

This Soil Remediation Report (Report) has been prepared by Rincon Consultants, Inc. (Rincon) on behalf of Skanska-Stacy and Witbeck for the PARC (Park, Arts, River, and Connectivity Improvements) Project Sixth Street Viaduct Replacement located at 589 Santa Fe Avenue in Los Angeles, California (Figure 1). The PARC Project contains nine areas of concern (AOCs), identified in the *Remedial Action Plan* (RAP) prepared by Tetra Tech BAS and dated February 24, 2022. This Report only pertains to the pedestrian bridge construction envelope located within AOC 1A (Site; Figure 2). Remediation activities outside of the pedestrian bridge project will be completed at a later date and by others. The purpose of this Report is to detail the remedial activities and excavation of lead-impacted soil performed at the Site in accordance with the RAP.

PARC Project Site Description

The PARC Project is a 12-acre project, proposed to be located under, along and adjacent to Sixth Street and Whittier Boulevard, between Mateo Street on the west and Highway 101 on the east. The PARC Project is located within an area encompassing mostly commercial and industrial properties. AOC 1A is located at the western end of the PARC Project area, between Mateo Street and Santa Fe Avenue. This portion of the PARC Project is anticipated to consist of open recreational areas, including lawn and landscaped areas, a dog park, and an adult fitness area. Currently, the Site is a construction laydown yard for the larger PARC Project.

As described in detail in the *Final Report on Environmental Site Investigations* (SI Report), prepared by Hushmand and Associates, Inc. in May 2019, site investigations identified the presence of lead and petroleum constituents in soil beneath AOC 1A requiring remediation (Hushmand 2019).

Site Characterization

As indicated in the SI Report, the impacts within AOC 1A are estimated to extend across approximately 1.5 acres to depths of between 1.0 and 3.5 feet (ft) below ground surface (bgs) (Hushmand 2019). Lead was detected at total concentrations of up to 860 milligrams per kilogram (mg/kg) which is above the clean-up goal of 80 mg/kg. All detected concentrations were below the California Total Threshold Limit Concentration (TTLC) of 1,000 mg/kg, but numerous Soluble Threshold Limit Concentration (STLC) results exceeded the STLC of 5 milligrams per liter (mg/L). Toxicity Characteristic Leaching Potential (TCLP) concentrations in the soil matrix samples did not exceed the limit of 5 mg/L. Based on STLC exceedances, soil represented by these results is classified as non-Resource Conservation and Recovery Act (RCRA) California hazardous waste for removal and disposal purposes (Tetra Tech BAS 2021).

In the SI Report, total petroleum hydrocarbons (TPH) in the diesel range (TPH-diesel) were detected in two samples at concentrations of 63 and 110 mg/kg. Neither soil gas nor ambient air were

sampled within AOC 1A. A detailed site characterization is provided in the SI Report (Hushmand 2019).

Removal Action Activities

Removal Action Objectives

Site-specific remedial action objectives (RAOs) were developed based upon the existing environmental conditions at the time of the development of the RAP and reasonably anticipated future uses of the Site. Based on the RAOs, remedial clean-up goals were developed to establish specific target concentrations of lead in soil that are protective of both human health and the environment. Specific removal goals were developed for the Site through: (1) information obtained during site assessments; and (2) risk management decisions based upon the current and proposed future site use. Information used to develop these remedial goals included soil matrix analytical results, existing hydrogeologic data from nearby sites, and soil leaching analysis.

As described in the RAP, the RAOs were developed to reduce lead concentrations thus reducing the inhalation and direct contact exposure and associated human health risk to levels within the established thresholds and/or risk management range for the proposed recreational use of the property (Tetra Tech BAS 2022).

The clean-up goals for remediation of shallow soil to achieve the RAOs was based on the current set of Department of Toxic Substances Control (DTSC) Screening Levels (DTSC-SLs) for residential (unrestricted) land use, with consideration for naturally occurring background concentrations (DTSC 2020). The DTSC-SL and clean-up goal for lead at AOC 1A is 80 mg/kg.

Removal Action Activities

The lead-impacted soil in AOC 1A was classified as non-RCRA California hazardous waste in the SI Report with a lead TTLC as high as 860 mg/kg and lead STLC as high as 51 mg/L (Hushmand 2019). Consistent with the RAP, soil remediation excavation activities, estimated to be greater than 50 cubic yards, were performed in compliance with the South Coast Air Quality District (SCAQMD) Rule 403 (Fugitive Dust; SCAQMD 2005) and Rule 1466 (Control of Particulate Emissions from Soils with Toxic Air Contaminants; SCAQMD 2021) (described in additional detail below). Photos of excavation activities are included in Appendix A.

Waste Characterization

Before remedial activities were initiated, Rincon collected nine supplemental waste characterization samples using a hand auger on December 2, 2021. Soil samples were collected at 0.5, 3, and 5 ft bgs and analyzed for Title 22 metals by United States Environmental Protection Agency (EPA) Method 6010B/7471A, volatile organic compounds (VOCs) by EPA Method 8260B, total purgeable petroleum hydrocarbons (TPPH) by Leaking Underground Fuel Tank (LUFT) Gas Chromatography/Mass Spectrometry (GC/MS), and TPH by EPA Method 8015B. Concentrations of lead TTLC triggered STLC and TCLP analyses for three soil matrix samples based on concentrations greater than 50 mg/kg and 100 mg/kg, respectively. Based on the results, soil waste was characterized as non-RCRA California

hazardous waste which is consistent with the RAP and SI Report. Waste characterization results are included in Tables 1 through 3 and the analytical laboratory report is included as Appendix B.

Excavation and Disposal

Remedial excavation activities began on February 7, 2022 and concluded on February 15, 2022. The top 3 to 3.5 feet of soil was excavated and loaded into trucks for transportation and disposal. At the end of each day, except the final day (February 15, 2022), soil was stockpiled on Visqueen® polyethylene plastic sheeting (Visqueen) and covered to facilitate loading the following day. Daily field sheets detailing the day-to-day activities at the Site are included as Appendix C.

After excavation was complete for the day, the excavation area was screened using an X-ray fluorescence analyzer (XRF) to field screen the lead concentrations. All bottom soil screened was below the clean-up goal of 80 mg/kg total lead. Sidewalls were not screened with the XRF analyzer because excavation was limited to the construction envelope.

In total, 3,097 tons of non-RCRA California hazardous waste from the top 3 to 3.5 feet of the Site was disposed of at the South Yuma County Landfill in Yuma, Arizona. Waste manifests and weight tickets are included as Appendix D.

Confirmation Sampling

In accordance with the RAP, Rincon collected two bottom and seven sidewall soil confirmation samples from the excavation at approximately 3 and 1.5 feet bgs, respectively (Figure 2). Confirmation soil matrix samples were transported to Enthalpy Analytical under chain-of-custody protocol for lead analyses by EPA Method 6010B. The analytical laboratory reports are included in Appendix B.

Lead TTLC concentrations were below 50 mg/kg (STLC trigger concentration) in all bottom confirmation samples. Lead TTLC in two sidewall samples were above 100 mg/kg, exceeding the STLC and TCLP trigger concentrations (140 and 200 mg/kg) (Table 1). It was decided that the soil exceeding the clean-up goals would be dealt with when the area outside of the construction envelope is remediated at a later date. Therefore, no additional excavation activities or laboratory analysis were performed. Based on the results of confirmation soil matrix samples, the remedial excavation of lead impacted soil within the pedestrian bridge construction envelope was deemed complete.

Imported Backfill Material

After completion of the remedial excavation, Skanska-Stacy and Witbeck informed Rincon that certified clean fill was imported to the Site to backfill the excavation. Per the Kroner Environmental Services, Inc. (KES) memorandum, imported fill was sourced from a stockpile at 622 North Mission Road, Los Angeles, California (Mission Yard Stockpile) and sampled on September 13 and 28, 2021 (KES 2021). KES analyzed the source stockpile for TPH by EPA Method 8015B, VOCs by EPA Method 8260B, and Title 22 Metals by EPA Method 6010B/7470A. Due to elevated levels of TPH-diesel range, the top three feet of the stockpile were removed and segregated, and additional soil samples were collected. Based on the analytical results, the remaining soil in the Mission Yard Stockpile was approved for import to the project. It is Rincon's understanding that no additional soil has been added to the Mission Yard Stockpile since sampling by KES. A copy of the KES memorandum is included as Appendix E.

SCAQMD Rule 1466 Notification and Monitoring

The purpose of SCAQMD Rule 1466, *Control of Particulate Emissions from Soil with Toxic Air Contaminants*, is to minimize the amount of offsite fugitive dust emissions containing toxic air contaminants by reducing particulate emissions in the ambient air as a result of earth-moving activities, including excavation, grading, handling, treating, stockpiling, transferring, and removing contaminated soil from the Site (SCAQMD 2021). In compliance with Rule 1466, Rincon performed ambient PM_{10} monitoring, implemented dust control measures, erected visible signage onsite, and maintained field records.

Rule 1466 requires notification to SCAQMD prior to earth moving activities of soil known to contain toxic air contaminants, in this case lead, in exceedance of 50 cubic yards. The expected volume of lead-impacted soil planned for excavation at the Site exceeded the 50 cubic yard threshold for notification to SCAQMD. Citadel EHS (Citadel) was retained to perform Rule 1466 monitoring during the removal of lead-impacted soil. Upwind and downwind fence line monitoring for fugitive dust was conducted by Citadel during excavation of lead-impacted soil at the Site. Dust control measures including application of water to minimize airborne dust, were implemented by Skanska-Stacy and Witbeck during excavation, stockpiling, and truck loading activities.

The Rule 1466 dust monitoring closeout report prepared by Citadel and dated April 1, 2022, is included as Appendix F. The results of the closeout report are summarized below:

- The dust monitoring was conducted using TSI 8530 DustTrak II Aerosol Monitors (DustTraks) equipped with a TSI auto zero module, a TSI heated inlet, and a Netronix Thiamis 1000 data module. Citadel also monitored wind speed and direction using a Davis Vantage Pro 2.
- Dust levels (measured as PM_{10}) did not exceed the threshold value of 25 micrograms per cubic meter ($\mu g/m^3$) for the difference between the upwind and downwind locations using a 2-hour rolling average PM_{10} concentration during earth moving activities.
- An instantaneous exceedance on February 7, 2022, at 7:12 am was observed due to a truck driving by the DustTraks.
- Dust levels did not exceed the Rule 1466 work stoppage action level for PM_{10}.

Conclusion

This Report demonstrates that human health and environmental risks associated with lead-impacted soil identified within the pedestrian bridge construction envelope at the Site have been mitigated, and that lead-impacted soils were excavated, managed, and transported consistent with the RAP and local, state, and federal regulations. In total, 3,097 tons of soil were excavated and transported from the Site as part of excavation and removal action activities. The construction envelope was excavated to a depth of approximately 3 to 3.5 ft bgs and impacted soil was disposed at the South Yuma County Landfill in Yuma, Arizona as non-RCRA California hazardous waste. After receipt of the confirmation sampling results, the construction envelope was backfilled with certified clean fill.

Soil remediation activities were conducted in accordance with the RAP, including reporting requirements. Soil within the construction envelope of AOC 1A has achieved the RAOs and is below

the clean-up goal of 80 mg/kg. Lead-impacted soil remaining in AOC 1A outside of the construction envelope will be remediated at a later date by others.

References

California Department of Toxic Substances and Chemicals (DTSC). 2020. *Human Health Risk Assessment (HHRA) Note Number 3, DTSC-modified Screening Levels (DTSC-SLs)*. California Department of Toxic Substances Control, Human and Ecological Risk Office. June 2020.

Hushmand and Associates, Inc. (Hushmand). 2019. *Final Report on Environmental Site Investigations*. May 2019.

Kroner Environmental Services, Inc. (Kroner). 2021. *Transmittal of Soil Sample Results – Mission Yard*. October 8, 2021.

South Coast Air Quality Management District (SCAQMD). 2005. *Rule 403. Fugitive Dust*. Amended June 3, 2005. Available online: https://www.aqmd.gov/docs/default-source/rule-book/rule-iv/rule-403.pdf?sfvrsn=4

_____. 2021. *Rule 1466 – Control of Particulate Emissions from Soils with Toxic Air Contaminants*. Available online: https://www.aqmd.gov/home/rules-compliance/compliance/rule-1466

Tetra Tech BAS. 2022. *PARC Project: Sixth Street Viaduct Replacement, Los Angeles, California*. February 24, 2022.

Figures

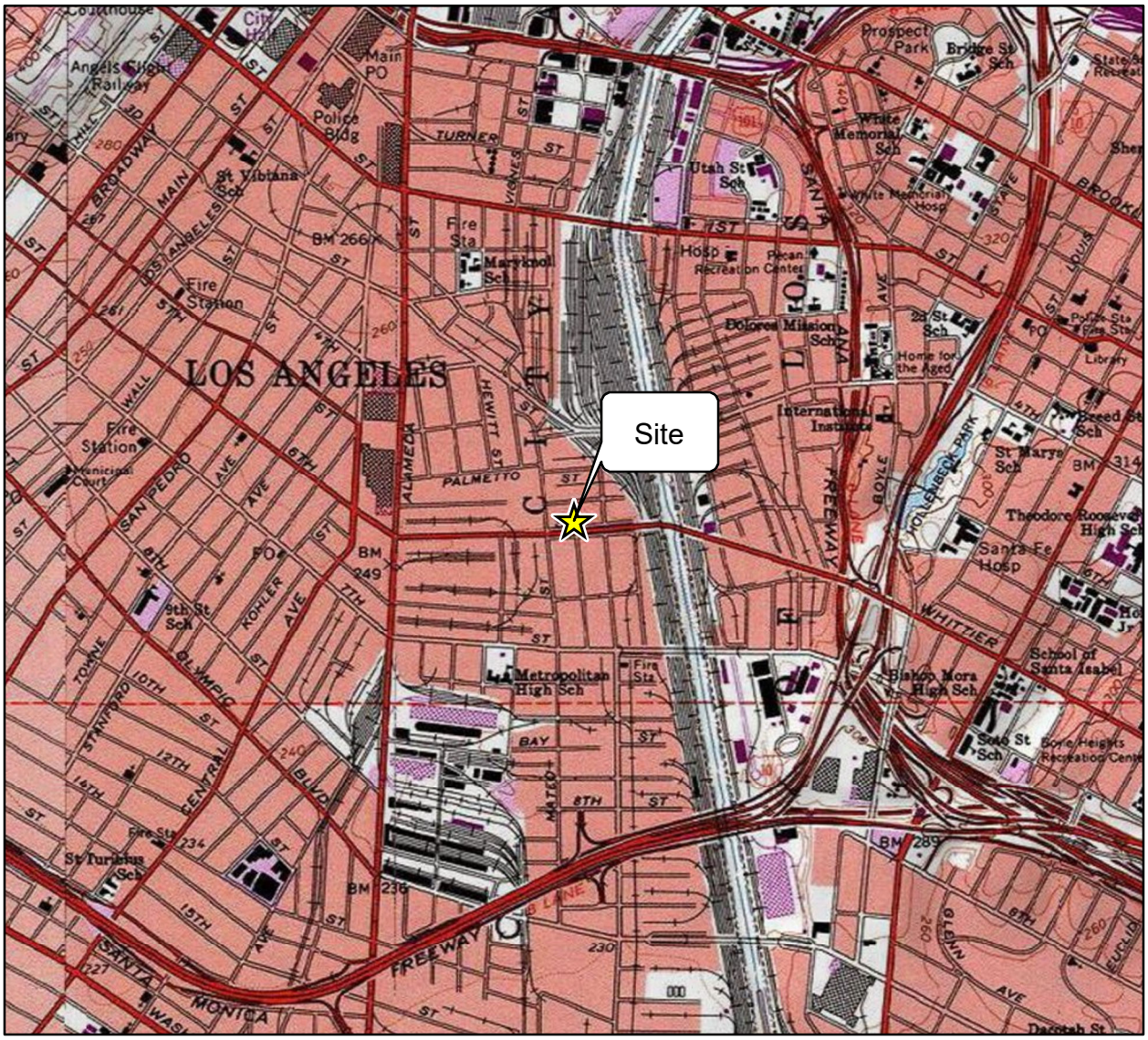

Imagery provided by National Geographic Society, Esri and its licensors © 2022. The topographic representation depicted in this map may not portray all of the features currently found in the vicinity today and/or features depicted in this map may have changed since the original topographic map was assembled.

0 1,000 2,000
Scale in Feet

N

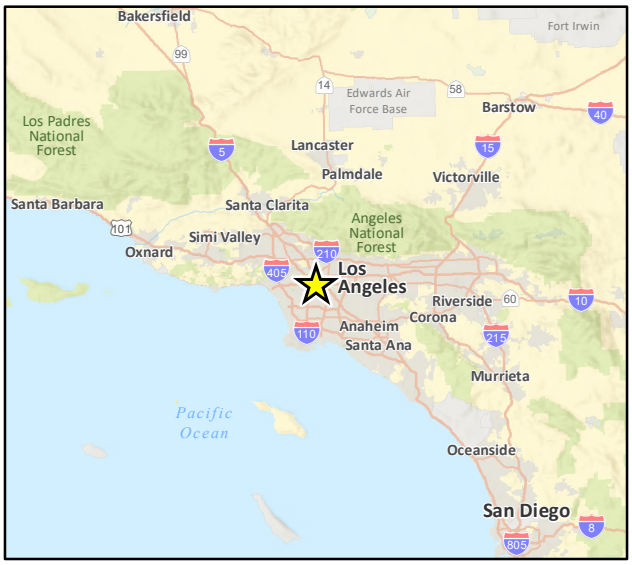

Vicinity Map

Figure 1



Imagery provided by Microsoft Bing and its licensors © 2022.

Soil Sample Location Map

Figure 2

Tables

Table 1: Waste Characterization and Confirmation Sample Results - Title 22 Metals

Sample ID	Sample Date	Sample Depth (feet bgs)	Concentration (mg/kg)																	
			Title 22 Metals (EPA Method 6010B/7471A)																	
			Antimony	Arsenic	Barium	Beryllium	Cadmium	Chromium	Cobalt	Copper	Lead TTLC (mg/kg)	Lead STLC (mg/L)	Lead TTLC (mg/L)	Mercury	Molyb-denum	Nickel	Selenium	Silver	Thallium	Vanadium	Zinc
Screening Levels[1]			31[a]	12[b]	15,000	16	71	NE	23[a]	3,100[a]	80	-	-	1.0	390[a]	820	390[a]	390[a]	0.78[a]	390[a]	23,000[a]
Confirmation Samples																				
SW-1-1.5	2/11/2022	1.5	-	-	-	-	-	-	-	-	**32**	-	-	-	-	-	-	-	-	-	-
SW-2-1.5	2/11/2022	1.5	-	-	-	-	-	-	-	-	**200**	-	-	-	-	-	-	-	-	-	-
SW-3-1.5	2/11/2022	1.5	-	-	-	-	-	-	-	-	**1.7**	-	-	-	-	-	-	-	-	-	-
SW-4-1.5	2/11/2022	1.5	-	-	-	-	-	-	-	-	**140**	-	-	-	-	-	-	-	-	-	-
SW-5-1.5	2/11/2022	1.5	-	-	-	-	-	-	-	-	**23**	-	-	-	-	-	-	-	-	-	-
SW-6-1.5	2/11/2022	1.5	-	-	-	-	-	-	-	-	**20**	-	-	-	-	-	-	-	-	-	-
SW-7-1.5	2/15/2022	1.5	-	-	-	-	-	-	-	-	**2.3**	-	-	-	-	-	-	-	-	-	-
B-8-3	2/11/2022	3.0	-	-	-	-	-	-	-	-	**1.3**	-	-	-	-	-	-	-	-	-	-
B-9-3	2/11/2022	3.0	-	-	-	-	-	-	-	-	**4.2**	-	-	-	-	-	-	-	-	-	-
Waste Characterization Samples																				
RB1	12/2/2021	0.5	**0.82 J**	**3.1**	**170**	**0.18 J**	**1.4**	**14**	**6.1**	**86**	**320**	**21**	**0.19 J**	**0.30**	<2.5	**22.8**	<1.0	**0.52**	<1.3 A10	**26**	**240**
RB2	12/2/2021	3.0	**0.75 J**	**1.6**	**57**	**0.11 J**	**0.15 J**	**8.1**	**4.7**	**7.4**	**4.1**	-	-	**0.043 J**	<2.5	**4.8**	<1.0	<0.50	<0.64	**21**	**27**
RB3	12/2/2021	5.0	**0.60 J**	**1.7**	**48**	**0.10 J**	**0.14 J**	**6.5**	**4.0**	**7.2**	**5.2**	-	-	**0.074 J**	<2.5	**4.3**	<1.0	<0.50	<0.64	**18**	**27**
RB4	12/2/2021	0.5	**1.6 J**	**2.5**	**190**	**0.19 J**	**0.66**	**17**	**7.5**	**36**	**170**	**11**	**0.10**	**0.18**	<2.5	**11.0**	<1.0	**0.23 J**	<1.3 A10	**30**	**270**
RB5	12/2/2021	3.0	**0.40 J**	**1.3**	**42**	**0.079 J**	**0.13 J**	**5.7**	**3.3**	**4.8**	**71**	**0.27**	-	**0.082 J**	<2.5	**3.5**	<1.0	<0.50	<0.64	**17**	**22**
RB6	12/2/2021	5.0	<5.0	**1.4**	**57**	**0.11 J**	**0.24 J**	**7.6**	**4.8**	**10**	**46**	-	-	**0.074 J**	<2.5	**5.3**	<1.0	**0.093 J**	<0.64	**18**	**51**
RB7	12/2/2021	0.5	**1.1 J**	**2.4**	**110**	**0.24 J**	**0.42 J**	**14**	**8.1**	**18**	**18**	-	-	**0.068 J**	<2.5	**10**	<1.0	<0.50	<1.3	**33**	**63**
RB8	12/2/2021	3.0	**0.69**	**2.0**	**86**	**0.17**	**0.26**	**20**	**6.0**	**12**	**9.8**	-	-	**0.053**	**0.40**	**12**	<1.0	<0.50	<1.3	**25**	**41**
RB9	12/2/2021	5.0	**0.54**	**1.5**	**48**	**0.14**	**0.18**	**8.0**	**4.1**	**7.4**	**3.1**	-	-	**0.040**	<2.5	**4.6**	<1.0	<0.50	<0.64	**18**	**25**
Waste Characterization	Trigger Level for Performing CA-WET (10 x STLC)		150	50	1,000	7.5	10	50	800	250	50	-	-	2.0	3,500	200	10	50	70	240	2,500
	Trigger Level for Performing TCLP (20 x TCLP)		NE	100	2,000	NE	20	100	NE	NE	100	-	-	4.0	NE	NE	20	100	NE	NE	NE
	State Hazardous Waste Disposal Criteria	STLC (mg/L)	15	5.0	100	0.75	1.0	5.0	80	25	-	5.0	-	0.20	350	20	1.0	5.0	7.0	24	250
		TTLC	500	500	10,000	75	100	2,500	8,000	2,500	1,000	-	-	20	3,500	2,000	100	500	700	2,400	5,000
	Federal Hazardous Waste Disposal Criteria	TCLP (mg/L)	NE	5.0	100	NE	1.0	5.0	NE	NE	-	-	5.0	0.20	NE	NE	1.0	5.0	NE	NE	NE

Notes:

[1] Per Section 3.1 of the Remedial Action Plan (RAP) prepared for the City of Los Angeles by Tetra Tech BAS and dated February 24, 2022, the following sources were used:

-- Department of Toxic Substances Control (DTSC) Modified Screening Levels (DTSC-SLs) for residential soil, dated June 2020

[a] -- Regional Screening Levels (RSLs) for residential soil (with a hazard quotient of 1.0), prepared by the United States Environmental Protection Agency (EPA), Region 9, dated November 2021

[b] -- DTSC Human Health Risk Assessment (HHRA) Note Number 11, Southern California Ambient Arsenic Screening Level, dated December 28, 2020

Definitions:

bold	Constituent detected above laboratory reporting limit
<	Constituent not detected above associated laboratory reporting limit or method detection limit
A10	Detection and quantitation limits were raised due to matrix interference
CA-WET	Waste extraction test, using citric acid, in accordance with California Code of Regulations, Title 22, Division 4.5, Chapter 11, Article 5, Appendix II
mg/kg	Milligrams per kilogram
mg/L	Milligrams per liter
J	Analyte was detected at a concentration below the reporting limit and above the laboratory method detection limit. Reported value is estimated.
NE	Screening level not established
STLC	Soluble Threshold Limit Concentrations (California Code of Regulations, Title 22, Division 4.5, Chapter 11, Article 3, Section 66261.24)
TCLP	Toxicity Characteristic Leaching Procedure (Code of Federal Regulations, Title 40, Chapter I, Subchapter I, Part 261, Section 261.24)
Title 22 Metals	As defined in California Code of Regulations, Title 22, Division 4.5, Chapter 11, Article 3, Section 66261.24 (seventeen metals listed in Table II); also known as CAM 17 metals
TTLC	Total Threshold Limit Concentration (California Code of Regulations, Title 22, Division 4.5, Chapter 11, Article 3, Section 66261.24)

Table 2: Waste Characterization Results - Total Petroleum Hydrocarbons

Sample ID	Sample Date	Sample Depth (feet bgs)	Concentration (mg/kg) Total Petroleum Hydrocarbons (LUFT-GC/MS) TPPH	(EPA Method 8015B/FFP) TPH-D	TPH-O
Screening Levels[1]			82[a]	97	2,400
Waste Characterization Samples					
RB1	12/2/2021	0.5	<0.23	<5.0	**110 A57**
RB2	12/2/2021	3.0	<0.20	<5.0	<5.0
RB3	12/2/2021	5.0	<0.20	<5.0	<5.0
RB4	12/2/2021	0.5	<0.20	**12 A52**	**26 A57**
RB5	12/2/2021	3.0	<0.20	<5.0	<5.0
RB6	12/2/2021	5.0	**0.091 J**	**12 A52**	**44 A57**
RB7	12/2/2021	0.5	<0.25	**13 A52**	**49 A57**
RB8	12/2/2021	3.0	<0.20	**12 A52**	**41 A57**
RB9	12/2/2021	5.0	<0.24	<5.0	<5.0

Notes:

[1] Per Section 3.1 of the Remedial Action Plan (RAP) prepared for the City of Los Angeles by Tetra Tech BAS and dated February 24, 2022, the following sources were used:

-- Department of Toxic Substances Control (DTSC) Modified Screening Levels (DTSC-SLs) for residential soil, dated June 2020

[a] -- Regional Screening Levels (RSLs) for residential soil (with a hazard quotient of 1.0), prepared by the United States Environmental Protection Agency, Region 9, dated November 2021

Definitions:

bold	Constituent detected above laboratory reporting limit
<	Constituent not detected above associated laboratory reporting limit or method detection limit
A52	Chromatogram not typical of diesel
A57	Chromatogram not typical of motor oil
J	Analyte was detected at a concentration below the reporting limit and above the laboratory method detection limit. Reported value is estimated.
LUFT-GC/MS	Leaking Underground Fuel Tank (LUFT) Gas Chromatography/Mass Spectrometry (GC/MS)
mg/kg	Milligrams per kilogram
FFP	Fuel fingerprint analysis
TPPH	Total purgeable petroleum hydrocarbons in the gasoline range (C4-C12)
TPH-D	Total petroleum hydrocarbons in the diesel range (C13-C22)
TPH-O	Total petroleum hydrocarbons in the oil range (C23-C32)

Table 3: Waste Characterization Results - Volatile Organic Compounds

Sample ID	Sample Date	Sample Depth (feet bgs)	**Concentration** (mg/kg)			
			Volatile Organic Compounds (EPA Method 8260B)			
			Benzene	Tetrachloroethene	Toluene	Other VOCs
Screening Levels[1]			0.33	0.59	1,100	<varies
Waste Characterization Samples						
RB1	12/2/2021	0.5	**0.00085 J**	**0.014**	<0.0056	<various
RB2	12/2/2021	3.0	**0.00074 J**	**0.0010 J**	<0.0050	<various
RB3	12/2/2021	5.0	<0.0050	<0.0050	<0.0050	<various
RB4	12/2/2021	0.5	<0.0050	**0.0093**	<0.0050	<various
RB5	12/2/2021	3.0	<0.0050	<0.0050	<0.0050	<various
RB6	12/2/2021	5.0	<0.0050	**0.0086**	**0.0019 J**	<various
RB7	12/2/2021	0.5	<0.0062	**0.0022 J**	**0.0014 J**	<various
RB8	12/2/2021	3.0	<0.0050	**0.0029 J**	<0.0050	<various
RB9	12/2/2021	5.0	<0.0059	**0.0023 J**	<0.0059	<various

Notes:

[1] Per Section 3.1 of the Remedial Action Plan (RAP) prepared for the City of Los Angeles by Tetra Tech BAS and dated February 24, 2022, the following sources were used:
-- Department of Toxic Substances Control (DTSC) Modified Screening Levels (DTSC-SLs) for residential soil, dated June 2020

Definitions:

bold	Constituent detected above laboratory reporting limit
<	Constituent not detected above associated laboratory reporting limit or method detection limit
J	Analyte was detected at a concentration below the reporting limit and above the laboratory method detection limit. Reported value is estimated.
EPA	United States Environmental Protection Agency
mg/kg	Milligrams per kilogram

Appendix A

Excavation Photos



Photograph 1. Excavation equipment onsite at the start of excavation on February 7, 2022.



Photograph 2. Weather monitoring station and rain gauge.



Photograph 3. Excavation envelope and lead impacted stockpile.

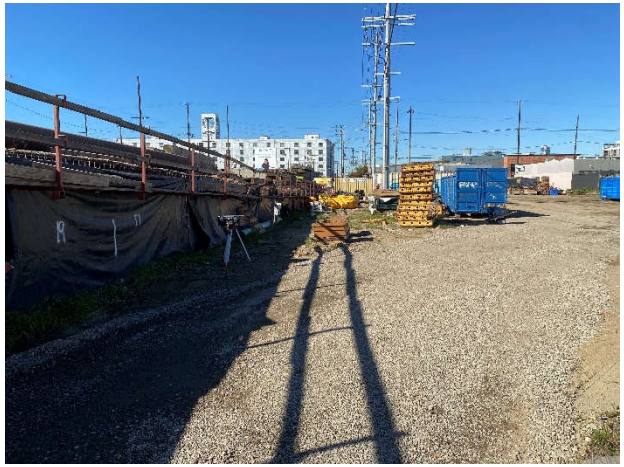

Photograph 4. TSI 8530 Aerosol Monitor equipped with a TSI auto zero module, a TSI heated inlet and a Netronix Thiamis 1000 data module monitoring at the downwind location.



Photograph 5. View of excavation equipment and footprint on February 8, 2022**.**

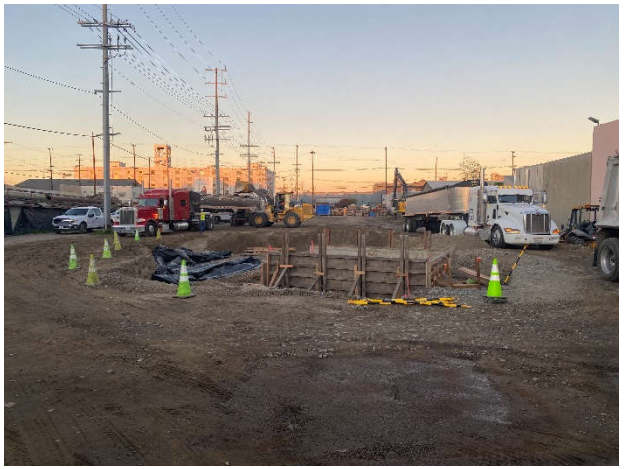

Photograph 6. Active loading of trucks with impacted soil.



Photograph 7. Excavation and stockpiling of soil



Photograph 8. View of the excavation envelope after completion

Appendix B

Laboratory Analytical Reports

Enthalpy Analytical
931 West Barkley Ave
Orange, CA 92868
(714) 771-6900

enthalpy.com

Lab Job Number: 458198
Report Level: II
Report Date: 02/16/2022

Analytical Report *prepared for:*

Scott English
Rincon Consultants - LA
250 E. 1st Street
Suite 1400
Los Angeles, CA 90012

Location: 6th St. Viaduct

Authorized for release by:

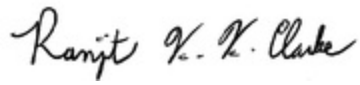

Ranjit K Clarke, Client Services Manager
(714) 771-9906
Ranjit.Clarke@enthalpy.com

This data package has been reviewed for technical correctness and completeness. Release of this data has been authorized by the Laboratory Manager or the Manager's designee, as verified by the above signature which applies to this PDF file as well as any associated electronic data deliverable files. The results contained in this report meet all requirements of NELAP and pertain only to those samples which were submitted for analysis. This report may be reproduced only in its entirety.

CA ELAP# 1338, NELAP# 4038, SCAQMD LAP# 18LA0518, LACSD ID# 10105

ENTHALPY ANALYTICAL

Sample Summary

Scott English
Rincon Consultants - LA
250 E. 1st Street
Suite 1400
Los Angeles, CA 90012

Lab Job #: 458198
Location: 6th St. Viaduct
Date Received: 02/11/22

Sample ID	Lab ID	Collected	Matrix
SW-1-1.5	458198-001	02/11/22 09:30	Soil
SW-2-1.5	458198-002	02/11/22 09:35	Soil
SW-3-1.5	458198-003	02/11/22 09:40	Soil
SW-4-1.5	458198-004	02/11/22 09:45	Soil
SW-5-1.5	458198-005	02/11/22 09:50	Soil
SW-6-1.5	458198-006	02/11/22 09:51	Soil
B-8-3	458198-007	02/11/22 09:55	Soil
B-9-3	458198-008	02/11/22 10:00	Soil

ENTHALPY ANALYTICAL

Chain of Custody Record

Lab No: 458198

Page: 1 of 1

Turn Around Time (rush by advanced notice only)

Standard:		5 Day:		3 Day:	
2 Day:		1 Day:		Custom TAT:	4 day

Enthalpy Analytical - Orange

931 W. Barkley Avenue, Orange, CA 92868

Phone 714-771-6900

Matrix: A = Air S = Soil/Solid W = Water DW = Drinking Wate SD = Sediment PP = Pure Product SEA = Sea Water SW = Swab T = Tissue WP = Wipe O = Other

Preservatives: 1 = $Na_2S_2O_3$ 2 = HCl 3 = HNO_3 4 = H_2SO_4 5 = NaOH 6 = Other

Sample Receipt Temp: 4.0/4.0 (lab use only)

CUSTOMER INFORMATION		PROJECT INFORMATION	
Company:	Rincon Consultants	Quote #:	
Report To:	Scott English	Proj. Name:	6th St. Viaduct
Email:	senglish@rinconconsultants.com	Proj. #:	14-01176
Address:	250 E 1st St	P.O. #:	-
	LA, CA	Address:	585 Santa Fe Ave, LA
Phone:	949-230-7813	Global ID:	-
Fax:	—	Sampled By:	Steve Ossim

	Sample ID	Sampling Date	Sampling Time	Matrix	Container No. / Size	Pres.	Analysis Request: Total Lead Gold	Test Instructions / Comments
1	SW-1	2/11/22	0930	S	2	No	X	Please send results by COB of Thursday 2/17
2	SW-2		0935				X	
3	SW-3		0940				X	
4	SW-4		0945				X	
5	SW-5		0950				X	
6	SW-6		0951				X	
7	B-8		0955				X	
8	B-9		1000				X	
9								
10								

	Signature	Print Name	Company / Title	Date / Time
[1] Relinquished By:		Steve Ossim	Rincon	2/11/22 1223
[1] Received By:		Grim	EA	2/11/22 1223
[2] Relinquished By:				
[2] Received By:				
[3] Relinquished By:				
[3] Received By:				

ENTHALPY ANALYTICAL

SAMPLE ACCEPTANCE CHECKLIST

Section 1

Client: Rincon Consultants Project: 6th Street West

Date Received: 2/11/22 Sampler's Name Present: ☑ Yes ☐ No

Section 2

Sample(s) received in a cooler? ☑ Yes, How many? 1 ☐ No (skip section 2) Sample Temp (°C) (No Cooler): _____

Sample Temp (°C), One from each cooler: #1: 4.0 #2: _____ #3: _____ #4: _____

(Acceptance range is < 6°C but not frozen (for Microbiology samples, acceptance range is < 10°C but not frozen). It is acceptable for samples collected the same day as sample receipt to have a higher temperature as long as there is evidence that cooling has begun.)

Shipping Information: _____

Section 3

Was the cooler packed with: ☑ Ice ☐ Ice Packs ☐ Bubble Wrap ☐ Styrofoam ☐ Paper ☐ None ☐ Other _____

Cooler Temp (°C): #1: 4.0 #2: _____ #3: _____ #4: _____

Section 4	YES	NO	N/A
Was a COC received?	✔		
Are sample IDs present?	✔		
Are sampling dates & times present?	✔		
Is a relinquished signature present?	✔		
Are the tests required clearly indicated on the COC?	✔		
Are custody seals present?		✔	
If custody seals are present, were they intact?			✔
Are all samples sealed in plastic bags? (Recommended for Microbiology samples)			✔
Did all samples arrive intact? If no, indicate in Section 4 below.	✔		
Did all bottle labels agree with COC? (ID, dates and times)	✔		
Were the samples collected in the correct containers for the required tests?	✔		
Are the containers labeled with the correct preservatives?			✔
Is there headspace in the VOA vials greater than 5-6 mm in diameter?			✔
Was a sufficient amount of sample submitted for the requested tests?	✔		

Section 5 Explanations/Comments

Section 6

For discrepancies, how was the Project Manager notified? ☐ Verbal PM Initials: _____ Date/Time _____

☐ Email (email sent to/on): _____ / _____

Project Manager's response:

Completed By: _____ Date: 2/11/22

Enthalpy Analytical, a subsidiary of Montrose Environmental Group ,Inc.
931 W. Barkley Ave, Orange, CA 92868 • T: (714) 771-6900 • F: (714) 538-1209
www.enthalpy.com/socal

MONTROSE ENVIRONMENTAL

Ranjit Clarke <ranjit.clarke@enthalpy.com>

RE: [EXT] Re: [EXTERNAL] Rush soil analysis -Rincon

1 message

Jonathan Bridgeman <jbridgeman@rinconconsultants.com> Tue, Feb 15, 2022 at 10:37 AM
To: Ranjit Clarke <Ranjit.Clarke@enthalpy.com>
Cc: Scott English <SEnglish@rinconconsultants.com>, Brian Cayton <bcayton@rinconconsultants.com>, Steve Ossim <sossim@rinconconsultants.com>

Hi Ranjit,

I just dropped off the sample for 48 hour TAT. Thanks for helping us with the rush.

These samples are from a project that we also dropped off samples for on Friday. The project number is 14-01176. Could you make an adjustment to the COC/Sample IDs for the samples dropped off on Friday? We would like to add a depth to the end of the sample ID. The changes are listed below:

- SW-1 change to SW-1-1.5
- SW-2 change to SW-2-1.5
- SW-3 change to SW-3-1.5
- SW-4 change to SW-4-1.5
- SW-5 change to SW-5-1.5
- SW-6 change to SW-6-1.5
- B-8 change to B-8-3
- B-9 change to B-9-3

Thanks,

Jon

From: Ranjit Clarke <Ranjit.Clarke@enthalpy.com>
Sent: Monday, February 14, 2022 9:48 AM
To: Jonathan Bridgeman <jbridgeman@rinconconsultants.com>
Subject: [EXT] Re: [EXTERNAL] Rush soil analysis -Rincon

CAUTION: This email originated from outside of Rincon Consultants. Be cautious before clicking on any links, or opening any attachments, until you are confident that the content is safe .

Yes, we can do that.

On Mon, Feb 14, 2022 at 9:42 AM Jonathan Bridgeman <jbridgeman@rinconconsultants.com> wrote:

> Hi Ranjit,

ENTHALPY ANALYTICAL

Analysis Results for 458198

Scott English
Rincon Consultants - LA
250 E. 1st Street
Suite 1400
Los Angeles, CA 90012

Lab Job #: 458198
Location: 6th St. Viaduct
Date Received: 02/11/22

Sample ID: SW-1-1.5 **Lab ID: 458198-001** **Collected: 02/11/22 09:30**
Matrix: Soil

458198-001 Analyte	Result	Qual	Units	RL	DF	Batch	Prepared	Analyzed	Chemist
Method: EPA 6010B Prep Method: EPA 3050B									
Lead	**32**		mg/Kg	1.1	1.1	283729	02/14/22	02/15/22	KLN

Sample ID: SW-2-1.5 **Lab ID: 458198-002** **Collected: 02/11/22 09:35**
Matrix: Soil

458198-002 Analyte	Result	Qual	Units	RL	DF	Batch	Prepared	Analyzed	Chemist
Method: EPA 6010B Prep Method: EPA 3050B									
Lead	**200**		mg/Kg	0.99	0.99	283729	02/14/22	02/15/22	KLN

Sample ID: SW-3-1.5 **Lab ID: 458198-003** **Collected: 02/11/22 09:40**
Matrix: Soil

458198-003 Analyte	Result	Qual	Units	RL	DF	Batch	Prepared	Analyzed	Chemist
Method: EPA 6010B Prep Method: EPA 3050B									
Lead	**1.7**		mg/Kg	1.0	1	283729	02/14/22	02/15/22	KLN

Sample ID: SW-4-1.5 **Lab ID: 458198-004** **Collected: 02/11/22 09:45**
Matrix: Soil

458198-004 Analyte	Result	Qual	Units	RL	DF	Batch	Prepared	Analyzed	Chemist
Method: EPA 6010B Prep Method: EPA 3050B									
Lead	**140**		mg/Kg	1.1	1.1	283729	02/14/22	02/15/22	KLN

Sample ID: SW-5-1.5 **Lab ID: 458198-005** **Collected: 02/11/22 09:50**
Matrix: Soil

458198-005 Analyte	Result	Qual	Units	RL	DF	Batch	Prepared	Analyzed	Chemist
Method: EPA 6010B Prep Method: EPA 3050B									
Lead	**23**		mg/Kg	1.0	1	283729	02/14/22	02/15/22	KLN

Results for any subcontracted analyses are not included in this section.

ENTHALPY ANALYTICAL

Analysis Results for 458198

Sample ID: SW-6-1.5	Lab ID: 458198-006	Collected: 02/11/22 09:51
	Matrix: Soil	

458198-006 Analyte	Result	Qual	Units	RL	DF	Batch	Prepared	Analyzed	Chemist
Method: EPA 6010B Prep Method: EPA 3050B									
Lead	**20**		mg/Kg	1.0	1	283729	02/14/22	02/15/22	KLN

Sample ID: B-8-3	Lab ID: 458198-007	Collected: 02/11/22 09:55
	Matrix: Soil	

458198-007 Analyte	Result	Qual	Units	RL	DF	Batch	Prepared	Analyzed	Chemist
Method: EPA 6010B Prep Method: EPA 3050B									
Lead	**1.3**		mg/Kg	0.84	0.84	283729	02/14/22	02/15/22	KLN

Sample ID: B-9-3	Lab ID: 458198-008	Collected: 02/11/22 10:00
	Matrix: Soil	

458198-008 Analyte	Result	Qual	Units	RL	DF	Batch	Prepared	Analyzed	Chemist
Method: EPA 6010B Prep Method: EPA 3050B									
Lead	**4.2**		mg/Kg	0.94	0.94	283729	02/14/22	02/15/22	KLN

Results for any subcontracted analyses are not included in this section.

ENTHALPY ANALYTICAL

Batch QC

Type: Blank	**Lab ID: QC972225**	**Batch: 283729**
Matrix: Soil	**Method: EPA 6010B**	**Prep Method: EPA 3050B**

QC972225 Analyte	Result	Qual	Units	RL	Prepared	Analyzed
Lead	ND		mg/Kg	1.0	02/14/22	02/15/22

Type: Lab Control Sample	**Lab ID: QC972226**	**Batch: 283729**
Matrix: Soil	**Method: EPA 6010B**	**Prep Method: EPA 3050B**

QC972226 Analyte	Result	Spiked	Units	Recovery	Qual	Limits
Lead	105.2	100.0	mg/Kg	105%		80-120

Type: Matrix Spike	**Lab ID: QC972227**	**Batch: 283729**
Matrix (Source ID): Soil (458198-001)	**Method: EPA 6010B**	**Prep Method: EPA 3050B**

QC972227 Analyte	Result	Source Sample Result	Spiked	Units	Recovery	Qual	Limits	DF
Lead	133.2	32.42	92.59	mg/Kg	109%		75-125	0.93

Type: Matrix Spike Duplicate	**Lab ID: QC972228**	**Batch: 283729**
Matrix (Source ID): Soil (458198-001)	**Method: EPA 6010B**	**Prep Method: EPA 3050B**

QC972228 Analyte	Result	Source Sample Result	Spiked	Units	Recovery	Qual	Limits	RPD	RPD Lim	DF
Lead	205.7	32.42	106.4	mg/Kg	163%	*	75-125	33*	20	1.1

* Value is outside QC limits

ND Not Detected

Enthalpy Analytical
931 West Barkley Ave
Orange, CA 92868
(714) 771-6900

enthalpy.com

Lab Job Number:	458286
Report Level:	II
Report Date:	02/17/2022

Analytical Report *prepared for:*

Scott English
Rincon Consultants - LA
250 E. 1st Street
Suite 1400
Los Angeles, CA 90012

Location: 6th St. Viaduct

Authorized for release by:

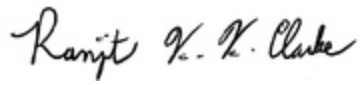

Ranjit K Clarke, Client Services Manager
(714) 771-9906
Ranjit.Clarke@enthalpy.com

This data package has been reviewed for technical correctness and completeness. Release of this data has been authorized by the Laboratory Manager or the Manager's designee, as verified by the above signature which applies to this PDF file as well as any associated electronic data deliverable files. The results contained in this report meet all requirements of NELAP and pertain only to those samples which were submitted for analysis. This report may be reproduced only in its entirety.

CA ELAP# 1338, NELAP# 4038, SCAQMD LAP# 18LA0518, LACSD ID# 10105

ENTHALPY ANALYTICAL

Sample Summary

Scott English
Rincon Consultants - LA
250 E. 1st Street
Suite 1400
Los Angeles, CA 90012

Lab Job #:	458286
Location:	6th St. Viaduct
Date Received:	02/15/22

Sample ID	Lab ID	Collected	Matrix
SW-7-1.5	458286-001	02/15/22 07:15	Soil

ENTHALPY ANALYTICAL

Chain of Custody Record

Lab No: 458280

Page: 1 of 1

Turn Around Time (rush by advanced notice only)

Standard:		5 Day:		3 Day:	
2 Day:	✓	1 Day:		Custom TAT:	

Enthalpy Analytical - Orange

931 W. Barkley Avenue, Orange, CA 92868

Phone 714-771-6900

Matrix: A = Air S = Soil/Solid W = Water DW = Drinking Wate SD = Sediment PP = Pure Product SEA = Sea Water SW = Swab T = Tissue WP = Wipe O = Other

Preservatives: 1 = $Na_2S_2O_3$ 2 = HCl 3 = HNO_3 4 = H_2SO_4 5 = NaOH 6 = Other

Sample Receipt Temp: (lab use only)

CUSTOMER INFORMATION		PROJECT INFORMATION	
Company:	Rincon Consultants		
Report To:	Scott English / Brian Cayton	Proj. Name:	6th St Viaduct
Email:	SEnglish@rincon consultants.com	Proj. #:	14-01176
Address:	250 E 1st St Suite 1400	P.O. #:	
	Los Angeles, CA	Address:	6th Street
Phone:		Global ID:	
Fax:		Sampled By:	Jon Bridgeman

Analysis Request: Total lead by EPA 6010

Test Instructions / Comments: BCayton@rincon consultants.com; 48 hr TAT

	Sample ID	Sampling Date	Sampling Time	Matrix	Container No. / Size	Pres.
1	SW-7-1.5	2.15.22	0715	S	2	-
2						
3						
4						
5						
6						
7						
8						
9						
10						

	Signature	Print Name	Company / Title	Date / Time
1 Relinquished By:		Jon Bridgeman	Rincon	2/15/22 / 850
1 Received By:		FEDEX	ES	2/15/22 0850
2 Relinquished By:				
2 Received By:				
3 Relinquished By:				
3 Received By:				

3 of 4.5

ENTHALPY ANALYTICAL

SAMPLE ACCEPTANCE CHECKLIST

Section 1

Client: RINCON CONSULTANTS Project: 6TH ST. VIADUCT

Date Received: 2/15/22 Sampler's Name Present: ☑ Yes ☐ No

Section 2

Sample(s) received in a cooler? ☑ Yes, How many? 1 ☐ No (skip section 2) Sample Temp (°C) (No Cooler): _____

Sample Temp (°C), One from each cooler: #1: 4.5 #2: _____ #3: _____ #4: _____

(Acceptance range is < 6°C but not frozen (for Microbiology samples, acceptance range is < 10°C but not frozen). It is acceptable for samples collected the same day as sample receipt to have a higher temperature as long as there is evidence that cooling has begun.)

Shipping Information: _____

Section 3

Was the cooler packed with: ☑ Ice ☐ Ice Packs ☐ Bubble Wrap ☐ Styrofoam ☐ Paper ☐ None ☐ Other _____

Cooler Temp (°C): #1: 3-4 #2: _____ #3: _____ #4: _____

Section 4	YES	NO	N/A
Was a COC received?	✓		
Are sample IDs present?	✓		
Are sampling dates & times present?	✓		
Is a relinquished signature present?	✓		
Are the tests required clearly indicated on the COC?	✓		
Are custody seals present?		✓	
If custody seals are present, were they intact?			✓
Are all samples sealed in plastic bags? (Recommended for Microbiology samples)			✓
Did all samples arrive intact? If no, indicate in Section 4 below.	✓		
Did all bottle labels agree with COC? (ID, dates and times)	✓		
Were the samples collected in the correct containers for the required tests?	✓		
Are the containers labeled with the correct preservatives?			✓
Is there headspace in the VOA vials greater than 5-6 mm in diameter?			✓
Was a sufficient amount of sample submitted for the requested tests?	✓		

Section 5 Explanations/Comments

_____

_____

_____

Section 6

For discrepancies, how was the Project Manager notified? ☐ Verbal PM Initials: _____ Date/Time _____

☐ Email (email sent to/on): _____ / _____

Project Manager's response:

Completed By: _____ Date: 2/15/22

ENTHALPY ANALYTICAL

Analysis Results for 458286

Scott English
Rincon Consultants - LA
250 E. 1st Street
Suite 1400
Los Angeles, CA 90012

Lab Job #: 458286
Location: 6th St. Viaduct
Date Received: 02/15/22

Sample ID: SW-7-1.5 **Lab ID: 458286-001** **Collected: 02/15/22 07:15**
Matrix: Soil

458286-001 Analyte	Result	Qual	Units	RL	DF	Batch	Prepared	Analyzed	Chemist
Method: EPA 6010B Prep Method: EPA 3050B									
Lead	**2.3**		mg/Kg	0.90	0.9	283800	02/15/22	02/17/22	SBW

Results for any subcontracted analyses are not included in this section.

ENTHALPY ANALYTICAL

Batch QC

Type: Blank	**Lab ID:** QC972413	**Batch:** 283800
Matrix: Miscell.	**Method:** EPA 6010B	**Prep Method:** EPA 3050B

QC972413 Analyte	Result	Qual	Units	RL	Prepared	Analyzed
Lead	ND		mg/Kg	1.0	02/15/22	02/16/22

Type: Lab Control Sample	**Lab ID:** QC972414	**Batch:** 283800
Matrix: Miscell.	**Method:** EPA 6010B	**Prep Method:** EPA 3050B

QC972414 Analyte	Result	Spiked	Units	Recovery	Qual	Limits
Lead	108.2	100.0	mg/Kg	108%		80-120

Type: Matrix Spike	**Lab ID:** QC972415	**Batch:** 283800
Matrix (Source ID): Soil (457975-001)	**Method:** EPA 6010B	**Prep Method:** EPA 3050B

QC972415 Analyte	Result	Source Sample Result	Spiked	Units	Recovery	Qual	Limits	DF
Lead	119.7	14.18	105.3	mg/Kg	100%		75-125	1.1

Type: Matrix Spike Duplicate	**Lab ID:** QC972416	**Batch:** 283800
Matrix (Source ID): Soil (457975-001)	**Method:** EPA 6010B	**Prep Method:** EPA 3050B

QC972416 Analyte	Result	Source Sample Result	Spiked	Units	Recovery	Qual	Limits	RPD	RPD Lim	DF
Lead	108.0	14.18	91.74	mg/Kg	102%		75-125	2	20	0.92

ND Not Detected

Appendix C

Daily Field Sheets

rincon

Field Log

Project No.: 14-01176
Date: 2-7-22

Rincon Personnel: Jon Bridgeman
Project Name: 6th St Viaduct Excavation
Arrival Time: 0545
Departure Time:

Site Information

Site Activity: 1466 Monitoring / Excavation

Weather/Site Conditions: Clear, 60s windy

Other Onsite Personnel (Name/Company): Citadel
Mike Pendergrass
Alex
Kevin
Skanska
(separate ~~HSA~~ HASP)

H&S Tailgate Meeting (initial): JB

Log

Time	Notes and Comments
0600	Onsite, Site walk w Citadel
0630	Citadel setting up equipment
	Spoke with Kevin. Aim for 30 trucks a day. loade out starts at 6 am, trucks go to Arizona, Skanska digs and [illegible] to [illegible]
	& loading and excavation already started (6 am) when we got onsite.
0645	Told Skanska (Kevin) to waterdown stockpile b/c visible dust was being produced on rec from Citadel. Skanska only watering down excavation area
0715	Water down whole lot
	18 total trucks today
0800	City inspector visit. Wrote down my name & left. (John [illegible] every day)
0830	Break
0845	Resume excavation, continuing to water stockpile
0930	Stopped excavation for day. Large stockpile onsite.
1000	Stockpile partially covered. Inform Austin (Skanska) that entire stockpile needs to be covered, including the toe
	Austin said he would get plastic from warehouse & cover it.
1015	Clean up/pack up offsite
	No VOC readings all day

Kevin Severance
Byron Godoy - field eng
civil super

Rincon Consultants Inc.

Field Log

Project No.: 2.8.2022
Date: 14-01176
6th St Viaduct Exc.

Rincon Personnel: Jon Bridgeman
Project Name: 6th Street Viaduct Exc
Arrival Time: 0545
Departure Time: 1015

Site Information

Site Activity: RCRA Soil Excavation
Other Onsite Personnel (Name/Company): Skanska, Citadel x2
Weather/Site Conditions: Clear 60s
H&S Tailgate Meeting (initial): JB

Log

Time	Notes and Comments
0545	Onsite and calibrate PID. Water truck had already come through
0600	Start soil loading/excavation. 2 lanes for trucks
	Trucks loaded to ~~home~~
0700	Water truck driver by
0710	Final truck. Total of 18.
0730	Excavating to build up stockpiles for tomorrow
0945	Finish. Exc. help Citadel cleanup equipment
1015	Offsite for day. No VOCs above 0 ppm.

Field Log

Project No.: 14-01176
Date: 2.9.2022

Rincon Personnel: Jon Bridgeman
Project Name: 16th St Viaduct (Task 3.2.8)
Arrival Time: 0530
Departure Time:

Site Information

Site Activity: Soil Excavation
Other Onsite Personnel (Name/Company): Citadel
Weather/Site Conditions: Sunny 70s
H&S Tailgate Meeting (initial): JB

Log

Time	Notes and Comments
0530	Onsite help Citadel set up equipment
0610	Water truck driven by
0610	Start loading trucks. Going to Yuma.
0650	Water truck driven by
0720	last truck excavating from area 3 stockpiling soil. Total of 21 trucks
0830	Making ramps for trucks & grading
0930	Check bottom soil w XRF. ~~305~~ 30 to 50 ppm range.
1000	Help Citadel takedown equipment offsite.
1015	
1015	No VOC readings all day.

Field Log

Project No.: 2.10.22
Date: 14-01176

Rincon Personnel: Jon Bridgeman
Project Name: 6th St Viaduct Task 3.28
Arrival Time: 0530
Departure Time: 1000

Site Information

Site Activity: Soil Excavation / 1466

Other Onsite Personnel (Name/Company): Skanska Citadel

Weather/Site Conditions: Clear 70s

H&S Tailgate Meeting (initial): JB

Log

Time	Notes and Comments
0530	Onsite helping with project setup for Citadel
0600	Start loading trucks (water truck already drove by
0645	water truck) drove by
0730	Finish excavation for trucks 19 total trucks going to Yuma
	Start building stockpile
0930	Finish excavation, cleaning equipment & store in office
1000	offsite, No VOC soil ~~[illegible]~~/identified with PID.

Field Log

Project No.: 14-01176
Date: 2/11/22

Rincon Personnel: Steve Ossin
Project Name: 6th St Viaduct
Arrival Time: 0530
Departure Time: 1020

Site Information

Site Activity: Excavation	Other Onsite Personnel (Name/Company):
Weather/Site Conditions: ~65° F clear	
	H&S Tailgate Meeting (initial):

Log

Time	Notes and Comments
0530	Arrive, assist Citadel w/ equipment set up
0600	loading of trucks begin, 18 trucks anticipated for the day
0650	Excavation begins simultaneous to loading
	watering also begins
0830	Excavation ends earlier than planned, only 13 trucks
	available today, a portion of yesterday's stockpile
0845	remains, stockpiling continues
	Stockpiling finishes, Citadel offsite, mob to office
	to pick up XRF/sampling jars.
0925	Arrive back onsite, begin sampling activities

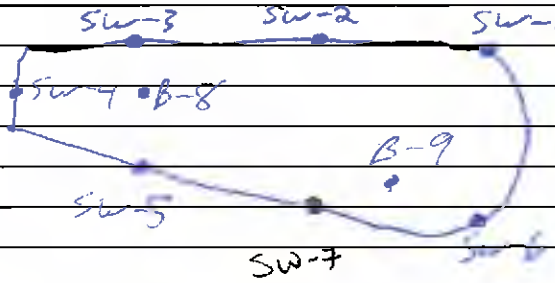

sample	XRF (lead ppm)
SW-1	42
SW-2	73
SW-3	11
SW-4	23
SW-5	17
SW-6	9
B-8	30
B-9	26

1020	Mob to office to return XRF, mob to Enthalpy after

SRO = 11

Field Log

Project No.: 14-01176
Date: 2/14/22

Rincon Personnel: Amanda Duval **Arrival Time:** 0545
Project Name: 6th Street Viaduct **Departure Time:** 0845

Site Information

Site Activity: excavation	Other Onsite Personnel (Name/Company): Muriel / Citadel
Weather/Site Conditions: clear, 67°	
	H&S Tailgate Meeting (initial):

Log

Time	Notes and Comments
0545	Rincon onsite
0610	first truck arrival loading trucks
0740	last truck, excavation is finished but need to finish loading trucks tomorrow
0815	watering stockpile, 4-5 trucks worth of soil left
	- took PID readings, all 0.0 ppm
0830	EOD, Rincon offsite

Field Log

Project No.: 14-01176
Date: 2/15/22

Rincon Personnel: Jon Bridgeman
Project Name: 6th St Viaduct
Arrival Time: 0530
Departure Time: 0800

Site Information

Site Activity: Soil Excavation / 1466
Other Onsite Personnel (Name/Company): Skanska Citadel
Weather/Site Conditions: Rain Windy, overcast
H&S Tailgate Meeting (initial): JB

Log

Time	Notes and Comments
0530	Onsite; hold setup instructions
0600	Start excavation (13 trucks on 2/11/22) (21 trucks on 2/14/2022)
0645	Finish Excavation (5 Trucks today) ½ of a truck left, spread soil around; start grading
0715	Collect SW-7 @ 15 ft bgs (at sidewall)

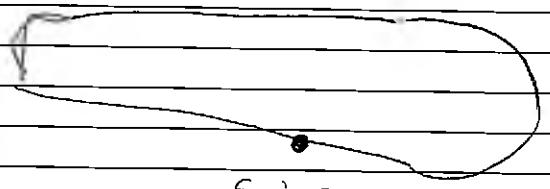

SW-7

0730	Stockpile reading at start of day was 0.0 PPM No new soil was excavated.
0800	Tear down equipment Offsite, taking samples to lab

JB 2/15/22

Appendix D

Waste Manifests and Weight Tickets

UNIFORM HAZARDOUS WASTE MANIFEST

Manifest Tracking Number: 01536968 FLE

5. Generator's Name and Mailing Address
City of Los Angeles, Department of Public Works
Bureau of Engineering 555 Ramirez Street
City of Los Angeles Ca. 90012

Generator's Site Address (if different than mailing address)
[illegible]

6. Transporter 1 Company Name
[illegible]

U.S. EPA ID Number
CAR [illegible] 660

7. Transporter 2 Company Name

U.S. EPA ID Number

8. Designated Facility Name and Site Address
South Yuma County Landfill
[illegible]

U.S. EPA ID Number
[illegible]

Item	9a. HM	9b. U.S. DOT Description (including Proper Shipping Name, Hazard Class, ID Number, and Packing Group if any)	10. Containers No.	Type	11. Total Quantity	12. Unit Wt./Vol.	13. Waste Codes
		NON RCRA Hazardous Waste Solid (Lead Impacted Soil)	001	DT	16	P	[illegible]

14. Special Handling Instructions and Additional Information
Profile#[illegible]

15. GENERATOR'S/OFFEROR'S CERTIFICATION: I hereby declare that the contents of this consignment are fully and accurately described above by proper shipping name, and are classified, packaged, marked and labeled/placarded, and are in all respects in proper condition for transport according to applicable international and national government regulations. If I am a large quantity generator, I certify that I have a program in place to reduce the volume and toxicity of waste generated to the degree I have determined to be economically practicable and that I have selected the practicable method of treatment, storage, or disposal currently available to me which minimizes the present and future threat to human health and the environment; OR, if I am a small quantity generator, I have made a good faith effort to minimize my waste generation and select the best waste management method that is available to me and that I can afford.

Generator's/Offeror's Printed/Typed Name: [illegible] Signature: [illegible] Month: 2 Day: 7 Year: 22

16. International Shipments: ☐ Import to U.S. ☐ Export from U.S. Port of entry/exit:
Transporter signature for exports only:

17. Transporter Acknowledgment of Receipt of Materials
Transporter 1 Printed/Typed Name: [illegible] Signature: [illegible] Month: 2 Day: 7 Year: 22

Transporter 2 Printed/Typed Name: Signature: Month: Day: Year:

18. Discrepancy
18a. Discrepancy Indication Space: ☐ Quantity ☐ Type ☐ Residue ☐ Partial Rejection ☐ Full Rejection

Manifest Reference Number:

18b. Alternate Facility (or Generator)
U.S. EPA ID Number

Facility's Phone:

18c. Signature of Alternate Facility (or Generator) Month: Day: Year:

19. Hazardous Waste Report Management Method Codes (i.e., codes for hazardous waste treatment, disposal, and recycling systems)

20. Designated Facility Owner or Operator: Certification of receipt of hazardous materials covered by this manifest except as noted in Item 18a.
Printed/Typed Name: Signature: Month: Day: Year:

GENERATOR'S INITIAL COPY

Please print or type

UNIFORM HAZARDOUS WASTE MANIFEST

015369686 FLE

GENERATOR

TRANSPORTER

DESIGNATED FACILITY

GENERATOR'S INITIAL COPY

UNIFORM HAZARDOUS WASTE MANIFEST

01536968S FLE

South Tuna County Landfill

GENERATOR'S INITIAL COPY

UNIFORM HAZARDOUS WASTE MANIFEST

South Yuma County Landf 11
[illegible]

Please print or type

Form Approved OMB No. 2050-0039

UNIFORM HAZARDOUS WASTE MANIFEST

1. Generator's Name and Mailing Address: City of Los Angeles Department of Public Works, Bureau of Engineering, 200 South Mt. Avenue, City of Los Angeles Dr. 90011

Generator's Site Address (if different than mailing address): 155 Tanta Fe Avenue, Los Angeles Ca. 91013

2. Generator's Phone Number: [illegible]

U.S. EPA ID Number: CAR000237445

3. Transporter's Phone Number:

4. Transporter's Name and Mailing Address: South Yuma County Landfill, 13500 South Avenue 18, Facility Phone: [illegible]

U.S. EPA ID Number: AZR000506267

Item No.	10. U.S. DOT Description (including Proper Shipping Name, Hazard Class, ID Number, and Packing Group (if any))	11. Containers No.	Type	12. Total Quantity	13. Unit Wt./Vol.	14. Waste Codes
1	8[illegible] RCRA Hazardous Waste Solid (Lead Impacted Dust)	[illegible]	DT	[illegible]	Y	01[illegible]
2						
3						
4						

15. Special Handling Instructions and Additional Information

Profile#[illegible]

Your Worksheet safety plan

16. GENERATOR'S/OFFEROR'S CERTIFICATION: [illegible]

Generator's/Offeror's Printed Typed Name: [illegible] Signature: [illegible] Month Day Year

17. Transportation Shipment: ☐ Imported to U.S. ☐ Exported from U.S. Port of Entry/Exit: Date Leaving U.S.

Transporter Signature (for exports only):

18. Transporter Acknowledgment of Receipt of Materials

Transporter 1 Printed Typed Name: [illegible] Signature: [illegible] Month Day Year: 2 7 22

Transporter 2 Printed Typed Name: Signature: Month Day Year

19. Discrepancy

19a. Discrepancy Indication Space: ☐ Quantity ☐ Type ☐ Residue ☐ Partial Rejection ☐ Full Rejection

Manifest Reference Number:

19b. Alternate Facility (or Generator): U.S. EPA ID Number:

Facility Phone:

19c. Signature of Alternate Facility (or Generator): Month Day Year

20. Hazardous Waste Report Management Method Codes (i.e., codes for hazardous waste treatment, disposal, and recycling systems):

1. 2. 3. 4.

21. Designated Facility Owner or Operator: Certification of receipt of hazardous materials covered by the manifest except as noted in Item 19a

Printed Typed Name: Signature: Month Day Year

EPA Form 8700-22 (Rev. 12-11) Previous editions are obsolete.

GENERATOR'S INITIAL COPY

UNIFORM HAZARDOUS WASTE MANIFEST

01536968 2 FLE

South Yuba County Landfill

GENERATOR'S INITIAL COPY

UNIFORM HAZARDOUS WASTE MANIFEST

[illegible] | 1 of 1 | [illegible] | 015[illegible]681 FLE

City of Los Angeles Department of Public Works
Bureau of Engineering 650 South Fox Avenue
City of Los Angeles Ca. 90013

[illegible] Fox Avenue
Los Angeles Ca. 90013

[illegible] Trucking | CAR000014653

South Yuma County Landfill
[illegible] South Avenue 37
[illegible] | AZD000504980

Item	Quantity	Type	Unit	Handling Codes
[illegible] Hazardous Waste Solid (Lead Impacted Soil)	[illegible]	[illegible]	TN	Y [illegible]

Profile #C-6868

[illegible]

[illegible]

[illegible]

[illegible]

[illegible]

[illegible]

[illegible]

GENERATOR'S INITIAL COPY

UNIFORM HAZARDOUS WASTE MANIFEST

015369680 FLE

South Yuba County Landfill

GENERATOR'S INITIAL COPY

UNIFORM HAZARDOUS WASTE MANIFEST

01533967 FLE

Generator's Name and Mailing Address

City of Los Angeles Department of Public Works, Bureau of Engineering 1149 South Broadway Los Angeles, CA 90015

Generator's Site Address (if different than mailing address)

130 Paseo De Arcadia Los Angeles, CA 90033

Generator's Phone

Transporter 1 Company Name

Airborne Express Inc

U.S. EPA ID Number

CAR 000 182 311

Transporter 2 Company Name

U.S. EPA ID Number

Designated Facility Name and Site Address

Clean Harbors Buttonwillow Landfill

Facility's Phone

2500 Route Avenue 37

Buttonwillow, CA 93206

U.S. EPA ID Number

CAD 008 366 560

No.	Container No.	Container Type	Total Quantity	Unit Wt./Vol.	Waste No.
1					
	RQ, DOT A Hazardous Waste Solid (Lead Impacted Soil)	DM	11	T	
2					
3					
4					

Special Handling Instructions and Additional Information

Profile #C-6868

GENERATOR'S CERTIFICATION: I hereby declare that the contents of this consignment are fully and accurately described above by proper shipping name and are classified, packed, marked and labeled/placarded, and are in all respects in proper condition for transport by highway according to applicable international and national governmental regulations. If export shipment and I am the Primary Exporter I certify that the contents of this consignment conform to the terms of the attached EPA Acknowledgment of Consent. I certify that the waste minimization statement identified in 40 CFR 262.27(a) (if I am a large quantity generator) or (b) (if I am a small quantity generator) is true.

Generator's Printed/Typed Name

Signature

Month Day Year

International Shipments: ☐ Import to U.S. ☐ Export from U.S. Port of entry/exit:

Transporter Acknowledgment of Receipt of Materials

Transporter 1 Printed/Typed Name

Signature

Month Day Year

Transporter 2 Printed/Typed Name

Signature

Month Day Year

Discrepancy

Discrepancy Indication Space: ☐ Quantity ☐ Type ☐ Residue ☐ Partial Rejection ☐ Full Rejection

Manifest Reference Number:

U.S. EPA ID Number

Facility's Phone

Waste Shipped/Received: Quantity

Month Day Year

Hazardous Waste Report Management Method Code (i.e., code for hazardous waste treatment, disposal, and recycling systems)

1 2 3 4

Designated Facility Owner or Operator: Certification of receipt of hazardous materials covered by this manifest except as noted in Item 18a

Printed/Typed Name

Signature

Month Day Year

EPA Form 8700-22 (Rev. 12-14) Previous editions are obsolete.

GENERATOR'S INITIAL COPY

Please print or type.

Form Approved. OMB No. 2050-0039

UNIFORM HAZARDOUS WASTE MANIFEST

1. Generator's Name and Mailing Address: City of Los Angeles Department of Public Works, Bureau of Sanitation, 555 South Fe Avenue, City of Los Angeles Ca. 90011

Generator's Site Address (if different than mailing address): 555 South Fe Avenue, Los Angeles Ca. 90011

Generator's Phone: [illegible]

2. Transporter 1 Company Name: [illegible]

U.S. EPA ID Number: [illegible]

3. Transporter 2 Company Name:

U.S. EPA ID Number:

4. Designated Facility Name and Site Address: South Yuba County Landfill, 1800 South Avenue 11

U.S. EPA ID Number: [illegible]

Item	Description	Quantity	Unit	Total Quantity	Unit Wt./Vol.	Waste Codes
1	NON RCRA Hazardous Waste Solid Lead Impacted Soil	[illegible]	[illegible]	[illegible]	V	[illegible]
2						
3						
4						

5. Special Handling Instructions and Additional Information:

Profile#C-0865

6. GENERATOR'S DOT/PERMIT CERTIFICATION: I hereby declare that the contents of this consignment are fully and accurately described above by the proper shipping name, and are classified, packaged, marked and labeled/placarded, and are in all respects in proper condition for transport according to applicable international and national government regulations. If I am a hazardous waste generator, I certify that the contents of this consignment conform to the terms of the attached EPA Acknowledgment of Consent.

I certify that the waste minimization statement identified in 40 CFR 262.27(a) (if I am a large quantity generator) or (b) (if I am a small quantity generator) is true.

Generator's Offeror's Printed/Typed Name: [illegible] Signature: [illegible] Month Day Year: [illegible]

7. Transporter Shipments: ☐ Transporter 1 ☐ Transporter 2 Port of entry/exit: Date Entering U.S.

Transporter Signature (for exports only):

8. Transporter Acknowledgment of Receipt of Materials:

Transporter 1 Printed/Typed Name: [illegible] Signature: [illegible] Month Day Year: 2 17 22

Transporter 2 Printed/Typed Name: Signature: Month Day Year:

9. Designated Facility Owner or Operator Certification of Receipt of Hazardous Materials Identified in Item 9 and Item 10:

Designated Facility Owner or Operator Certification of Receipt of Hazardous Materials Identified in Item 9 and Item 10:

Printed/Typed Name: Signature: Month Day Year:

GENERATOR

INT'L

TRANSPORTER

DESIGNATED FACILITY

Form 8700-22 (Rev. 12-17) Previous editions are obsolete.

GENERATOR'S INITIAL COPY

Please print or type.

Form Approved. OMB No. 2050-0039

UNIFORM HAZARDOUS WASTE MANIFEST

1. Generator's US EPA ID No.

2. Page 1 of

3. Emergency Response Phone

4. Manifest Tracking Number: 015269677 FLE

5. Generator's Name and Mailing Address

City of Los Angeles Department of Public Works
Bureau of Engineering 650 South Spring
City of Los Angeles CA 90013

Generator's Site Address (if different than mailing address)

100 Paseo De Roxas
Los Angeles Ca. 90000

Generator's Phone

6. Transporter 1 Company Name

DTC Trucking

US EPA ID Number

CAD 000 334 677

7. Transporter 2 Company Name

US EPA ID Number

8. Designated Facility Name and Site Address

South Yuma County Landfill
1000 South Avenue 40
Yuma, AZ 85365 (928) 329-2250

US EPA ID Number

AZD000634600

9a. HM	9b. U.S. DOT Description (including Proper Shipping Name, Hazard Class, ID Number, and Packing Group (if any))	10. Containers No.	10. Containers Type	11. Total Quantity	12. Unit Wt./Vol.	13. Waste Codes
	1. RQ NOS Hazardous Waste Solid (Lead Impacted Soil)	001	DM	16	T	
	2.					
	3.					
	4.					

14. Special Handling Instructions and Additional Information

Profile#C-6866

15. GENERATOR'S/OFFEROR'S CERTIFICATION: I hereby declare that the contents of this consignment are fully and accurately described above by the proper shipping name, and are classified, packaged, marked and labeled/placarded, and are in all respects in proper condition for transport by highway according to applicable international and national governmental regulations. If export shipment and I am the Primary Exporter I certify that the contents of this consignment conform to the terms of the attached EPA Acknowledgment of Consent.
I certify that the waste minimization statement identified in 40 CFR 262.27(a) (if I am a large quantity generator) or (b) (if I am a small quantity generator) is true.

Generator's/Offeror's Printed/Typed Name

Signature

Month Day Year

16. International Shipments

☐ Import to US ☐ Export from US Port of Entry/Exit:

Transporter signature (for exports only):

Date leaving US:

17. Transporter Acknowledgment of Receipt of Materials

Transporter 1 Printed/Typed Name

Signature

Month Day Year

3 17 22

Transporter 2 Printed/Typed Name

Signature

Month Day Year

18. Discrepancy

18a. Discrepancy Indication Space ☐ Quantity ☐ Type ☐ Residue ☐ Partial Rejection ☐ Full Rejection

Manifest Reference Number:

18b. Alternate Facility (or Generator)

US EPA ID Number

Facility's Phone:

18c. Signature of Alternate Facility (or Generator)

Month Day Year

19. Hazardous Waste Report Management Method Codes (i.e., codes for hazardous waste treatment, disposal, and recycling systems)

1. 2. 3.

20. Designated Facility Owner or Operator: Certification of receipt of hazardous materials covered by this manifest except as noted in Item 18a

Printed/Typed Name

Signature

Month Day Year

EPA Form 8700-22 (Rev. 12-17) Previous editions are obsolete.

DESIGNATED FACILITY COPY

Please print or type.

UNIFORM HAZARDOUS WASTE MANIFEST	1. Generator ID Number	2. Page 1 of	3. Emergency Response Phone	4. Manifest Tracking Number
	[illegible]	[illegible]	[illegible]	015369676 FLE

5. Generator's Name and Mailing Address: City of Los Angeles Department of Public Works, Bureau of Engineering 200 North Fk Avenue, City of Los Angeles Ca. 90013

Generator's Site Address (if different than mailing address): [illegible] Avenue, Los Angeles Ca. 90011

6. Transporter 1 Company Name: [illegible]

U.S. EPA ID Number: [illegible]

7. Transporter 2 Company Name:

U.S. EPA ID Number:

8. Designated Facility Name and Site Address: South Tuna County Landfill, [illegible] South Avenue [illegible]

U.S. EPA ID Number: [illegible]

Item	9. Waste Code	10. Containers No.	Type	11. Total Quantity	12. Unit Wt./Vol.	13. Waste Codes
	DOB RCRA Hazardous Waste Solid (Lead Impacted Soil)	[illegible]	[illegible]	[illegible]	Y	[illegible]

14. Special Handling Instructions and Additional Information

Profile#C-6360

15. GENERATOR'S/SHIPPER'S CERTIFICATION: [illegible]

Generator/Shipper's Printed Name: [illegible] Signature: [illegible] Month Day Year: [illegible]

16. Transporter Signature: ☐ Import to U.S. ☐ Export from U.S. Port of Entry/Exit: Date Leaving U.S.:

Transporter Signature (for exports only):

17. Transporter Acknowledgment of Receipt of Materials

Transporter 1 Printed/Typed Name: [illegible] Signature: [illegible] Month Day Year: [illegible]

Transporter 2 Printed/Typed Name: Signature: Month Day Year:

18. Discrepancy

19. Discrepancy Indication Space: ☐ Quantity ☐ Type ☐ Residue ☐ Partial Rejection ☐ Full Rejection

Manifest Reference Number:

20. Alternate Facility (or Generator): U.S. EPA ID Number:

Facility's Phone:

21. Signature of Alternate Facility (or Generator): Month Day Year:

22. Hazardous Waste Report Management Method Codes (i.e., codes for hazardous waste treatment, disposal, and recycling systems):

23. Designated Facility Owner or Operator: Certification of receipt of hazardous materials covered by the manifest except as noted in Item 19.

Printed/Typed Name: Signature: Month Day Year:

EPA Form 8700-22 (Rev. 12-12) Previous editions are obsolete.

GENERATOR'S INITIAL COPY

Please print or type.

Form Approved. OMB No. 2050-0039

UNIFORM HAZARDOUS WASTE MANIFEST	1. Generator ID Number	2. Page 1 of	3. Emergency Response Phone	4. Manifest Tracking Number
	[illegible]	[illegible]	[illegible]	015369673 FLE

5. Generator's Name and Mailing Address: City of Los Angeles Department of Public Works, Bureau of Engineering, 650 South Ft. Fremont, City of Los Angeles Ca. 90013

Generator's Site Address (if different than mailing address): 300 South Ft. Fremont, Los Angeles Ca. 90013

6. Generator's Company Name: [illegible]

7. Generator's Company Name:

8. Generator's Phone Name and Site Address: South Yuma County Landfill, 1515 South Avenue 11, Fortuna Foothills, AZ 85193

9. Site Address

No.	10. U.S. DOT Description (including Proper Shipping Name, Hazard Class, ID Number, and Packing Group if any)	11. Containers No.	Type	12. Total Quantity	13. Unit Wt./Vol.	14. Waste Codes
	NON RCRA Hazardous Waste Solid (Lead Impacted Soil)	[illegible]	[illegible]	[illegible]	[illegible]	[illegible]

15. Special Handling Instructions and Additional Information: Profile#C-[illegible]

16. GENERATOR'S/OFFEROR'S CERTIFICATION: I hereby declare that the contents of this consignment are fully and accurately described above by the proper shipping name, and are classified, packaged, marked and labeled/placarded, and are in all respects in proper condition for transport according to applicable international and national governmental regulations. If export shipment and I am the Primary Exporter, I certify that the contents of this consignment conform to the terms of the attached EPA Acknowledgment of Consent. I certify that the contents of this consignment conform to the terms of the attached EPA Acknowledgment of Consent. I certify that the contents of this consignment conform to the terms of the attached EPA Acknowledgment of Consent.

Generator's/Offeror's Printed/Typed Name: [illegible] Signature: [illegible] Month Day Year: [illegible]

17. Transporter Acknowledgment of Receipt of Materials: ☐ Transporter 1 Printed/Typed Name: [illegible] Signature: [illegible] Month Day Year: 2 7 [illegible]

Transporter 2 Printed/Typed Name: Signature: Month Day Year:

18. Discrepancy: 18a. Discrepancy Indication Space: ☐ Quantity ☐ Type ☐ Residue ☐ Partial Rejection ☐ Full Rejection

Manifest Reference Number:

18b. Alternate Facility (or Generator): U.S. EPA ID Number:

Facility's Phone:

18c. Signature of Alternate Facility (or Generator): Month Day Year:

19. Hazardous Waste Report Management Method Code (i.e., code for hazardous waste treatment, disposal, and recycling systems):

20. Designated Facility Owner or Operator: Certification of receipt of hazardous materials covered by the manifest except as noted in Item 18a.

Printed/Typed Name: Signature: Month Day Year:

Form Form 8700-22 (Rev. 12-17). Previous editions are obsolete.

GENERATOR'S INITIAL COPY

Please print or type

Form Approved. OMB No. 2050-0039

UNIFORM HAZARDOUS WASTE MANIFEST	1. Generator ID Number	2. Page 1 of	3. Emergency Response Phone	4. Manifest Tracking Number
	CAD059152771			015368674 FLE

5. Generator's Name and Mailing Address

County of Los Angeles Department of Public Works
Bureau of Engineering 101 Centre Plz
City of Los Angeles CA 90012

Generator's Site Address (if different than mailing address)

6. Transporter 1 Company Name

S Environmental Trucking

7. Transporter 2 Company Name

8. Designated Facility Name and Site Address

South Yuma County Landfill
[illegible] South Avenue 3E
[illegible] AZ [illegible]

9. Designated Facility ID

AZD980504380

10. No.	11. Waste Description (including Proper Shipping Name, Hazard Class, ID Number, and Packing Group (if any))	12. Containers		13. Total Quantity	14. Unit Wt./Vol.	15. Waste Codes
		No.	Type			
1	NA 9213A Hazardous Waste Solid (Lead Impacted Soil)	001	DT	16	T	
2						
3						
4						

16. Special Handling Instructions and Additional Information

Profile#: 5240

17. GENERATOR'S/OFFEROR'S CERTIFICATION: I hereby declare that the contents of this consignment are fully and accurately described above by the proper shipping name, and are classified, packaged, marked and labeled/placarded, and are in all respects in proper condition for transport by highway according to applicable international and national governmental regulations. If export shipment and I am the Primary Exporter, I certify that the contents of this consignment conform to the terms of the attached EPA Acknowledgment of Consent. I certify that the waste minimization statement identified in 40 CFR 262.27(a) (if I am a large quantity generator) or (b) (if I am a small quantity generator) is true. I am a small quantity generator and

Generator's/Offeror's Printed/Typed Name: [illegible]

Signature: [illegible]

Month: [illegible] Day: [illegible] Year: [illegible]

TRANSPORTER

18. International Shipments: ☐ Import to U.S. ☐ Export from U.S. Port of Entry/Exit: Date leaving U.S.:

19. Transporter Acknowledgment of Receipt of Materials

Transporter 1 Printed/Typed Name: Alfredo Lerma

Signature: [signature]

Month: 12 Day: 17 Year: 22

Transporter 2 Printed/Typed Name:

Signature:

Month: Day: Year:

DESIGNATED FACILITY

20. Discrepancy

20a. Discrepancy Indicator: ☐ Quantity ☐ Type ☐ Residue ☐ Partial Rejection ☐ Full Rejection

20b. Alternate Facility (or Generator)

Facility's Phone:

20c. Signature of Alternate Facility (or Generator)

Month: Day:

21. Designated Facility Owner or Operator: Certification of receipt of hazardous materials covered by this manifest except as noted in Item 20a

Printed/Typed Name:

Signature:

Month: Day: Year:

EPA Form 8700-22 (Rev. 12-15) Previous editions are obsolete.

GENERATOR'S INITIAL COPY

Please print or type.

Form Approved. OMB No. 2050-0039

1. Generator ID Number	2. Page 1 of	3. Emergency Response Phone	4. Manifest Tracking Number
CAR000087288	1		015369673 FLE

5. Generator's Name and Mailing Address

City of Los Angeles Department of Public Works
Bureau of Sanitation 1149 South Broadway
City of Los Angeles CA 90015

Generator's Site Address (if different than mailing address)

201 Torres de Reyes
Los Angeles CA 90013

Generator's Phone:

6. Transporter 1 Company Name

[illegible] (562

U.S. EPA ID Number

CAD983673977

7. Transporter 2 Company Name

U.S. EPA ID Number

8. Designated Facility Name and Site Address

South Yuba County Landfill

[illegible] South Avenue [illegible]

Facility's Phone:

U.S. EPA ID Number

9a. HM	9b. U.S. DOT Description (including Proper Shipping Name, Hazard Class, ID Number, and Packing Group (if any))	10. Containers No.	10. Containers Type	11. Total Quantity	12. Unit Wt./Vol.	13. Waste Codes
	Non RCRA Hazardous Waste Solid (Lead Impacted Soil)	001	DT	10	T	

14. Special Handling Instructions and Additional Information

Profile #C-6965

15. GENERATOR'S/OFFICER'S CERTIFICATION: I hereby declare that the contents of this consignment are fully and accurately described above by the proper shipping name, and are classified, packed, marked and labeled/placarded, and are in all respects in proper condition for transport according to applicable international and national governmental regulations. If export shipment and I am the Primary Exporter I certify that the contents of this consignment conform to the terms of the attached EPA Acknowledgment of Consent.
I certify that the waste minimization statement identified in 40 CFR 262.27(a) (if I am a large quantity generator) or (b) (if I am a small quantity generator) is true.

Generator's/Offeror's Printed/Typed Name

Month Day Year

16. International Shipments: ☐ Import to U.S. ☐ Export from U.S. Port of entry/exit:

Transporter signature (for exports only):

17. Transporter Acknowledgment of Receipt of Materials

Transporter 1 Printed/Typed Name: Eddie Trevino Signature: [signature] Month: 12 Day: 17 Year: 22

Transporter 2 Printed/Typed Name: Signature: Month: Day: Year:

18. Discrepancy

18a. Discrepancy Indication Space: ☐ Quantity ☐ Type ☐ Residue ☐ Partial Rejection ☐ Full Rejection

Manifest Reference Number:

18b. Alternate Facility (or Generator)

U.S. EPA ID Number

Facility's Phone:

18c. Signature of Alternate Facility (or Generator) Month: Day: Year:

19. Hazardous Waste Report Management Method Codes (i.e., codes for hazardous waste treatment, disposal, and recycling systems)

1.	2.	3.	4.

20. Designated Facility Owner or Operator: Certification of receipt of hazardous materials covered by this manifest except as noted in Item 18a

Printed/Typed Name: Signature: Month: Day: Year:

GENERATOR'S INITIAL COPY

UNIFORM HAZARDOUS WASTE MANIFEST

015369672 FLE

GENERATOR'S INITIAL COPY

Please print or type.

Form Approved. OMB No. 2050-0039

UNIFORM HAZARDOUS WASTE MANIFEST

1. Generator ID Number: [illegible]
2. Emergency Response Phone: [illegible]
3. Manifest Tracking Number: 015[illegible]9671 FLE

4. Generator's Name and Mailing Address: City of Los Angeles Department of Public Works, Bureau of Engineering, 200 South Ave Avenue, City of Los Angeles Ca. 90013
Generator's Site Address (if different than mailing address): [illegible] Avenue, Los Angeles Ca. 90013
Generator's Phone: [illegible]

5. Transporter 1 Company Name: ESPINOSA M. TRUCKING
U.S. EPA ID Number: CAR000190777

6. Transporter 2 Company Name:
U.S. EPA ID Number:

7. Designated Facility Name and Site Address: South Yuba County Landfill
U.S. EPA ID Number: [illegible]
Facility's Phone: [illegible]

Item	9a. U.S. DOT Description (including Proper Shipping Name, Hazard Class, ID Number, and Packing Group, if any)	10. Contents No.	Type	11. Total Quantity	12. Unit Wt./Vol.	13. Waste Codes
1	NON RCRA Hazardous Waste Solid (Load Impacted Soil)	001	[illegible]	16		11
2						
3						
4						

14. Special Handling Instructions and Additional Information:
Profile#C-686
Wear appropriate safety clothing

15. GENERATOR'S/OFFEROR'S CERTIFICATION: I hereby declare that the contents of this consignment are fully and accurately described above by the proper shipping name, and are classified, packaged, marked and labeled/placarded, and are in all respects in proper condition for transport according to applicable international and national governmental regulations. If export shipment and I am the Primary Exporter, I certify that the contents of this consignment conform to the terms of the attached EPA Acknowledgment of Consent.
I certify that the waste minimization statement identified in 40 CFR 262.27(a) (if I am a large quantity generator) or (b) (if I am a small quantity generator) is true.

Signature of Officer or Printed Typed Name: [illegible] Signature: [illegible] Month Day Year

16. Transporter Acknowledgment of Receipt of Materials
Transporter 1 Printed/Typed Name: MATAN ESPINOSA Signature: [illegible] Month 8 Day 7 Year 22
Transporter 2 Printed/Typed Name: Signature: Month Day Year

17. Discrepancy
17a. Discrepancy Indication Space: Quantity Type Residue Partial Rejection Full Rejection
Manifest Reference Number:

18. Alternate Facility (or Generator): U.S. EPA ID Number:
Facility's Phone:

19. Signature of Alternate Facility or Generator: Month Day Year

20. Designated Facility Owner or Operator: Certification of receipt of hazardous materials covered by the manifest except as noted in Item 18a
Printed/Typed Name: Signature: Month Day Year

GENERATOR

INT'L

TRANSPORTER

DESIGNATED FACILITY

Form 8700-22 (Rev. 12-11) Previous editions are obsolete.

GENERATOR'S INITIAL COPY

Please print or type

Form Approved. OMB No. 2050-0039

UNIFORM HAZARDOUS WASTE MANIFEST	1. Generator ID Number: CAC003159701	2. Page 1 of 1	3. Emergency Response Phone: [illegible]	4. Manifest Tracking Number: 015369670 FLE

5. Generator's Name and Mailing Address:
Corp of the Angeles, Department of Public Works
Bureau of Engineering, 900 South Fremont
City of Los Angeles Ca (90)
Generator's Phone: [illegible]

Generator's Site Address (if different than mailing address):
[illegible]
Los Angeles Ca [illegible]

6. Transporter 1 Company Name: FLORAL TRANSLOADING LLC
U.S. EPA ID Number: CAR000170175

7. Transporter 2 Company Name:
U.S. EPA ID Number:

8. Designated Facility Name and Site Address:
South Yuba County Landfill
[illegible]
Facility's Phone: [illegible]
U.S. EPA ID Number: [illegible]

No.	9. U.S. DOT Description (including Proper Shipping Name, Hazard Class, ID Number, and Packing Group (if any))	10. Containers No.	Type	11. Total Quantity	12. Unit Wt./Vol.	13. Waste Codes
1	[illegible] Hazardous Waste Solid (Lead Impacted Soil)	[illegible]	[illegible]	[illegible]	[illegible]	[illegible]
2						
3						
4						

14. Special Handling Instructions and Additional Information:
[illegible]

15. GENERATOR'S/OFFEROR'S CERTIFICATION: I hereby declare that the contents of this consignment are fully and accurately described above by the proper shipping name, and are classified, packaged, marked, and labeled/placarded, and are in all respects in proper condition for transport according to applicable international and national governmental regulations. If export shipment and I am the Primary Exporter, I certify that the contents of this consignment conform to the terms of the attached EPA Acknowledgment of Consent.
I certify that the above-mentioned materials contain a ID-DNI 202-27[illegible] of 1 [illegible] quantity generated in [illegible] and a total quantity generated in [illegible].

Generator's Office or Printed Type Name: [illegible]
Signature: [illegible]
Month Day Year: [illegible]

16. International Shipments: ☐ Import to U.S. ☐ Export from U.S.
Transporter signature for exports only:
Port of entry/exit: [illegible]
Date leaving U.S.:

17. Transporter Acknowledgment of Receipt of Materials:
Transporter 1 Printed Type Name: DANIE PATERSON
Signature: [illegible]
Month Day Year: 12 17 22
Transporter 2 Printed Type Name:
Signature:
Month Day Year:

18. Discrepancy:
18a. Discrepancy Indicator Space: ☐ Quantity ☐ Type ☐ Residue ☐ Partial Rejection ☐ Full Rejection
Manifest Reference Number:

18b. Alternate Facility (or Generator):
U.S. EPA ID Number:
Facility's Phone:

18c. Signature of Alternate Facility (or Generator):
Month Day Year:

19. Hazardous Waste Report Management Method Code (i.e., codes for hazardous waste treatment, disposal, and recycling systems):
1. 2. 3. 4.

20. Designated Facility Owner or Operator: Certification of receipt of hazardous materials covered by this manifest except as noted in Item 18a.
Printed/Typed Name:
Signature:
Month Day Year:

EPA Form 8700-22 (Rev. 12-17). Previous editions are obsolete.

GENERATOR'S INITIAL COPY

Please print or type

Form Approved OMB No. 2050-0039

UNIFORM HAZARDOUS WASTE MANIFEST	1. Generator ID Number	2. Page 1 of	3. Emergency Response Phone	4. Manifest Tracking Number
	[illegible]	[illegible]	[illegible]	015[illegible]637 FLE

5. Generator's Name and Mailing Address

City of Los Angeles, Department of Public Works
Bureau of Engineering, 19 Santa Fe Avenue
City of Los Angeles Co. 90013

Generator's Site Address (if different than mailing address)

[illegible] Santa Fe Avenue
Los Angeles Co. 90013

6. Transporter 1 Company Name — U.S. EPA ID Number: [illegible]

7. Transporter 2 Company Name — U.S. EPA ID Number:

8. Designated Facility Name and Site Address — U.S. EPA ID Number: AZD000[illegible]

South Yuma County Landfill
[illegible] Avenue [illegible]
[illegible]

Facility's Phone: [illegible]

Item	9a. U.S. DOT Description (including Proper Shipping Name, Hazard Class, ID Number, and Packing Group, if any)	10. Containers: No.	Type	11. Total Quantity	12. Unit Wt./Vol.	13. Waste Codes
1.	NON NOAA Hazardous Waste Solid (Lead Impacted Soil)	001	DT	18	Y	
2.						
3.						
4.						

14. Special Handling Instructions and Additional Information

Profile#[illegible]

15. [illegible]

Generator's Printed Typed Name: [illegible] — Signature: [illegible] — Month 2 Day 8 Year 22

16. International Shipments: ☐ Import to U.S. ☐ Export from U.S. — Port of entry/exit: — Date leaving U.S.

Transporter signature (for exports only):

17. Transporter Acknowledgment of Receipt of Materials

Transporter 1 Printed Typed Name: [illegible] — Signature: — Month 2 Day 8 Year 22

Transporter 2 Printed Typed Name: — Signature: — Month Day Year

18. Discrepancy

18a. Discrepancy Indication Space: ☐ Quantity ☐ Type ☐ Residue ☐ Partial Rejection ☐ Full Rejection

Manifest Reference Number:

18b. Alternate Facility (or Generator) — U.S. EPA ID Number:

Facility's Phone:

18c. Signature of Alternate Facility (or Generator) — Month Day Year

19. Hazardous Waste Report Management Method Codes (i.e., code for hazardous waste treatment, disposal, and recycling systems)

1.	2.	3.	4.

20. Designated Facility Owner or Operator: Certification of receipt of hazardous materials covered by this manifest except as noted in Item 18a

Printed Typed Name: — Signature: — Month Day Year

GENERATOR

TRANSPORTER

DESIGNATED FACILITY

EPA Form 8700-22 (Rev. 12-87) Previous editions are obsolete.

GENERATOR'S INITIAL COPY

Form Approved. OMB No. 2050-0039

UNIFORM HAZARDOUS WASTE MANIFEST

1. Generator's US EPA ID No. CACO11159701 — 2. Page 1 of 1 — 3. Emergency Response Phone — 4. Manifest Tracking Number 015363636 FLE

5. Generator's Name and Mailing Address
City of Los Angeles Department of Public Works
Bureau of Sanitation, 1149 South Broadway
City of Los Angeles, CA 90015
Generator's Phone (Include Area Code) (213) 485-4777

Operator's Use Only — 6. US EPA ID Number

7. Transporter 1 Company Name
Republic Services

8. US EPA ID Number
CAD982401845

9. Transporter 2 Company Name

10. US EPA ID Number

11. Designated Facility Name and Site Address
South Yuba County Landfill
[illegible]
Facility Phone: (530) 692-2106

12. US EPA ID Number
CAD059491557

13. US DOT Description (including Proper Shipping Name, Hazard Class, ID Number, and Packing Group if any)	14. Containers: No.	14. Containers: Type	15. Total Quantity	16. Unit Wt./Vol.	17. Waste Codes
1. NON RCRA Hazardous Waste Solid, Unspecified (Non-Regulated)	001	DT	18	Y	
2.					
3.					
4.					

18. Special Handling Instructions and Additional Information
Profile#: 6108

19. GENERATOR'S/OFFICER'S CERTIFICATION: I hereby declare that the contents of this consignment are fully and accurately described above by the proper shipping name and are classified, packaged, marked and labeled/placarded, and are in all respects in proper condition for transport according to applicable international and national governmental regulations. If export of this shipment is by air, I certify that the contents of this consignment conform to the terms of the attached EPA Acknowledgment of Consent.
I certify that the waste identification statements identified in 40 CFR 262.27(a) (if I am a large quantity generator) or (b) (if I am a small quantity generator) for the

Generator's Printed/Typed Name — Signature — Month 12 — Day 15 — Year 22

TRANSPORTER INTL

20. Transporter Acknowledgment of Receipt of Materials
Transporter 1 Printed/Typed Name — Signature — Month 12 — Day 18 — Year 22
Transporter 2 Printed/Typed Name — Signature — Month — Day — Year

DESIGNATED FACILITY

21. Discrepancy
21a. Discrepancy Indication Space: ☐ Quantity ☐ Type ☐ Residue ☐ Partial Rejection ☐ Full Rejection
Manifest Reference Number:

22. Alternate Facility (or Generator) — US EPA ID Number
Facility's Phone:

23. Signature of Alternate Facility (or Generator) — Month — Day — Year

24. Hazardous Waste Report Management Method Codes (i.e., codes for hazardous waste treatment, disposal, and recycling systems)
1. — 2. — 3. — 4.

25. Designated Facility Owner or Operator: Certification of receipt of hazardous materials covered by this manifest except as noted in Item 27a
Printed/Typed Name — Signature — Month — Day — Year

EPA Form 8700-22 (Rev. 12-17) Previous editions are obsolete.

GENERATOR'S INITIAL COPY

GENERATOR

TRANSPORTER

DESIGNATED FACILITY

01536934 FLE

GENERATOR'S INITIAL COPY

Form Approved OMB No. 2050-0039

UNIFORM HAZARDOUS WASTE MANIFEST	1. Generator ID Number	2. Page 1 of	3. Emergency Response Phone	4. Manifest Tracking Number
	[illegible]	[illegible]	[illegible]	01536963.1 FLE

5. Generator's Name and Mailing Address
City of Los Angeles Department of Public Works
Bureau of Engineering 681 Santa Fe Avenue
City of Los Angeles Ca. 90013
Generator's Site Address (if different than mailing address)
[illegible] Santa Fe Avenue
Los Angeles Ca. 90013

6. Transporter 1 Company Name: Kenore Trucking
U.S. EPA ID Number: [illegible]

7. Transporter 2 Company Name:
U.S. EPA ID Number:

8. Designated Facility Name and Site Address
South Yolo County Landfill
[illegible]
Facility's Phone: [illegible]
U.S. EPA ID Number: [illegible]

Item	9. U.S. DOT Description (Including Proper Shipping Name, Hazard Class, ID Number, and Packing Group, if any)	10. Contents No.	Type	11. Total Quantity	12. Unit Wt./Vol.	13. Waste Codes
1	NON RCRA Hazardous Waste Solid (Lead Impacted Soil)	[illegible]	DT	[illegible]	T	[illegible]
2						
3						
4						

14. Special Handling Instructions and Additional Information
Profile#C-[illegible]
[illegible]

15. GENERATOR'S/OFFEROR'S CERTIFICATION: I hereby declare that the contents of this consignment are fully and accurately described above by the proper shipping name, and are in all respects in proper condition for transport according to applicable international and national governmental regulations. If export shipment and I am the Primary Exporter, I certify that the contents of this consignment conform to the terms of the attached EPA Acknowledgment of Consent.
I certify that the waste minimization statement identified in 40 CFR 262.27(a) (if I am a large quantity generator) or (b) (if I am a small quantity generator) is true.

Generator's Offeror's Printed/Typed Name: [illegible] Signature: [illegible] Month 2 Day 9 Year 22

16. International Shipments: ☐ Import to U.S. ☐ Export from U.S. Port or Airport: Date Leaving U.S.
Transporter Signature (for exports only):

17. Transporter Acknowledgment of Receipt of Materials
Transporter 1 Printed/Typed Name: Robert Clark Signature: [illegible] Month 2 Day 9 Year 22
Transporter 2 Printed/Typed Name: Signature: Month Day Year

18. Discrepancy
18a. Discrepancy Indication Space: ☐ Quantity ☐ Type ☐ Residue ☐ Partial Rejection ☐ Full Rejection
Manifest Reference Number:

18b. Alternate Facility (or Generator): U.S. EPA ID Number:
Facility's Phone:

18c. Signature of Alternate Facility (or Generator): Month Day Year

19. Hazardous Waste Report Management Method Code (i.e., waste for hazardous waste treatment, disposal, and recycling systems):

20. Designated Facility Owner or Operator: Certification of receipt of hazardous materials covered by the manifest except as noted in Item 18a
Printed/Typed Name: Signature: Month Day Year

GENERATOR'S INITIAL COPY

Form Approved OMB No. 2050-0039

UNIFORM HAZARDOUS WASTE MANIFEST	1. Generator ID Number	2. Page 1 of	3. Emergency Response Phone	4. Manifest Tracking Number
	[illegible]			015[illegible]9631 FLE

5. Generator's Name and Mailing Address: City of Los Angeles Department of Public Works, Bureau of Engineering, 201 South Ft Avenue, City of Los Angeles Ca. 90013

Generator's Site Address (if different than mailing address): 200 South Ft Avenue, Los Angeles Ca. 90013

6. Transporter 1 Company Name: [illegible] Transport

U.S. EPA ID Number: PAR[illegible]GU257493

7. Transporter 2 Company Name:

U.S. EPA ID Number:

8. Designated Facility Name and Site Address: South Yuba County Landfill, 15516 South Avenue 12, Madison, AB 95765 (530) 351-5300

U.S. EPA ID Number: A[illegible]

No.	9. Description	10. Quantities Qty	Type	11. Total Quantity	12. Unit Wt./Vol.	13. Waste Codes
	[illegible] Hazardous Waste Solid Fixed Impacted Soil	101	07	[illegible]	Y	[illegible]

14. Special Handling Instructions and Additional Information:

Profile [illegible]

[illegible]

15. GENERATOR'S/OFFEROR'S CERTIFICATION: I hereby declare that the contents of this consignment are fully and accurately described above by the proper shipping name, and are classified, packaged, marked and labeled/placarded, and are in all respects in proper condition for transport according to applicable Institutional and National government regulations. I hereby declare that the contents of this consignment conform to the terms of the attached EPA Acknowledgment of Consent.

I certify that the waste minimization statement identified in 40 CFR 262.27(a) (if I am a large quantity generator) or (b) (if I am a small quantity generator) is true.

Generator's/Offeror's Printed/Typed Name: [illegible] Signature: Month 2 Day 8 Year 22

16. International Shipments: ☐ Import to U.S. ☐ Export from U.S. Port of Entry/Exit: Date Leaving U.S.

Transporter signature (for exports only):

17. Transporter Acknowledgment of Receipt of Materials:

Transporter 1 Printed/Typed Name: [illegible] Signature: [illegible] Month 2 Day 8 Year 22

Transporter 2 Printed/Typed Name: Signature: Month Day Year

18. Discrepancy:

18a. Discrepancy Indication Space: ☐ Quantity ☐ Type ☐ Residue ☐ Partial Rejection ☐ Full Rejection

Manifest Reference Number:

18b. Alternate Facility (or Generator): U.S. EPA ID Number:

Facility's Phone:

18c. Signature of Alternate Facility (or Generator): Month Day Year

19. Hazardous Waste Report Management Method Codes (i.e., codes for hazardous waste treatment, disposal, and recycling systems):

1	2	3	4

20. Designated Facility Owner or Operator: Certification of receipt of hazardous materials covered by the manifest except as noted in Item 18a

Printed/Typed Name: Signature: Month Day Year

GENERATOR'S INITIAL COPY

Form Approved: OMB No. 2050-0039

Please print or type.

UNIFORM HAZARDOUS WASTE MANIFEST

1. Generator ID Number: [illegible]
2. Page 1 of: 01
3. Emergency Response Phone: 213-[illegible]
4. Manifest Tracking Number: 015369626 FLE

5. Generator's Name and Mailing Address:
City of Los Angeles, Department of Public Works, Bureau of Engineering 200 [illegible] Ave. [illegible]
City of Los Angeles Ca 90001
Generator's Site Address (if different than mailing address): [illegible] Avenue [illegible] Los Angeles Ca, [illegible]
Generator's Phone: [illegible]

6. Transporter 1 Company Name: [illegible]
U.S. EPA ID Number: [illegible]

7. Transporter 2 Company Name:
U.S. EPA ID Number:

8. Designated Facility Name and Site Address:
South Yuma County Landfill
[illegible] Avenue [illegible]
Facility's Phone: [illegible]
U.S. EPA ID Number: [illegible]

No.	9a. U.S. DOT Description (including Proper Shipping Name, Hazard Class, ID Number, and Packing Group, if any)	10. Contents No.	Type	11. Total Quantity	12. Unit Wt./Vol.	13. Waste Codes
	RQ [illegible] Hazardous Waste Solid (Land Impacted Soil)	001	[illegible]	[illegible]	[illegible]	[illegible]

14. Special Handling Instructions and Additional Information:
Profile#C-[illegible]
[illegible] safety clothing

15. GENERATOR'S/OFFEROR'S CERTIFICATION: I hereby declare that the contents of this consignment are fully and accurately described above by the proper shipping name, and are classified, packaged, marked and labeled/placarded, and are in all respects in proper condition for transport according to applicable international and national governmental regulations. If export shipment and I am the Primary Exporter, I certify that the contents of this consignment conform to the terms of the attached EPA Acknowledgment of Consent.
I certify that the waste discrimination statement identified in 40 CFR 262.27(a) (if I am a large quantity generator) is true.

Generator's/Offeror's Printed/Typed Name: [illegible]
Signature:
Month 7 Day 9 Year 72

16. International Shipments: ☐ Import to U.S. ☐ Export from U.S. Port of Entry/Exit: [illegible]
Transporter signature (for exports only):

17. Transporter Acknowledgment of Receipt of Materials:
Transporter 1 Printed/Typed Name: [illegible]
Signature: [illegible]
Month 7 Day 9 Year 72

Transporter 2 Printed/Typed Name:
Signature:
Month Day Year

18. Discrepancy:
18a. Discrepancy Indication Space: ☐ Quantity ☐ Type ☐ Residue ☐ Partial Rejection ☐ Full Rejection
Manifest Reference Number:

18b. Alternate Facility (or Generator):
U.S. EPA ID Number:
Facility's Phone:

18c. Signature of Alternate Facility (or Generator):
Month Day Year

19. Hazardous Waste Report Management Method Codes (i.e., codes for hazardous waste treatment, disposal, and recycling systems):
1. 2. 3. 4.

20. Designated Facility Owner or Operator: Certification of receipt of hazardous materials covered by this manifest except as noted in Item 18a.
Printed/Typed Name:
Signature:
Month Day Year

GENERATOR

INT'L

TRANSPORTER

DESIGNATED FACILITY

EPA Form 8700-22 (Rev. 12-17) Previous editions are obsolete.

GENERATOR'S INITIAL COPY

Please print or type.

Form Approved. OMB No. 2050-0039

UNIFORM HAZARDOUS WASTE MANIFEST

1. Generator ID Number: CAC003159301
2. Page 1 of 1
3. Emergency Response Phone: [illegible]
4. Manifest Tracking Number: 015369629 FLE

5. Generator's Name and Mailing Address:
City of Los Angeles Department of Public Works
Bureau of Engineering 650 Santa Fe Avenue
City of Los Angeles Ca. 90013

Generator's Site Address (if different than mailing address):
150 Santa Fe Avenue
Los Angeles Ca. 90013

6. Generator's Phone: [illegible]
7. Generator's Company Name:
8. Generator's Mailing Address:
CAR000194 [illegible]

9. Designated Facility Name and Site Address:
South Yuba County Landfill
10520 South Avenue 12
Fax/Phone: [illegible]

10. EPA ID Number: AZ[illegible]

No.	11. U.S. DOT Description (including Proper Shipping Name, Hazard Class, ID Number, and Packing Group (if any))	12. Containers No.	Type	13. Total Quantity	14. Unit Wt./Vol.	15. Waste Codes
	1 RCRA Hazardous Waste Solid (Land Impacted Soil)	[illegible]	DT	[illegible]	Y	[illegible]

16. Special Handling Instructions and Additional Information:
Profile #C-6866
[illegible]

17. GENERATOR'S/OFFEROR'S CERTIFICATION: I hereby declare that the contents of this consignment are fully and accurately described above by the proper shipping name, and are classified, packaged, marked and labeled/placarded, and are in all respects in proper condition for transport according to applicable international and national governmental regulations. [illegible]

Generator's/Offeror's Printed/Typed Name: [illegible] Signature: [illegible] Month 2 Day 8 Year 22

18. International Shipments: ☐ Import to U.S. ☐ Export from U.S. Port of Entry/Exit: Date Leaving U.S.:
Transporter signature (for exports only):

19. Transporter Acknowledgment of Receipt of Materials:
Transporter 1 Printed/Typed Name: [illegible] Signature: [illegible] Month 2 Day 8 Year 22
Transporter 2 Printed/Typed Name: Signature: Month Day Year

20. Discrepancy:
Mix Discrepancy Indication Space: ☐ Quantity ☐ Type ☐ Residue ☐ Partial Rejection ☐ Full Rejection
Manifest Reference Number:

21. Alternate Facility (or Generator): U.S. EPA ID Number:
Facility's Phone:

22. Signature of Alternate Facility (or Generator): Month Day Year

23. Hazardous Waste Report Management Method Code (s): waste to hazardous waste treatment, disposal, and recycling systems:
1. 2. 3. 4.

24. Designated Facility Owner or Operator Certification of receipt of hazardous materials covered by the manifest except as noted in Item 18a:
Printed/Typed Name: Signature: Month Day Year

GENERATOR

TRANSPORTER INTL

DESIGNATED FACILITY

EPA Form 8700-22 (Rev. 12-17) Previous editions are obsolete.

GENERATOR'S INITIAL COPY

Form Approved. OMB No. 2050-0039

Please print or type	1. Generator ID Number	2. Page 1 of	3. Emergency Response Phone	4. Manifest Tracking Number
UNIFORM HAZARDOUS WASTE MANIFEST	CAC003184733	61	213-[illegible]	0153[illegible] FLE

5. Generator's Name and Mailing Address: City of Los Angeles, Department of Public Works, Bureau of Engineering, 801 South Fig Avenue, City of Los Angeles Ca. 90011

Generator's Site Address (if different than Mailing Address): 801 South Fig Avenue, Los Angeles Ca. 90011

Generator's Phone: [illegible]

6. Transporter 1 Company Name: Scott Express

U.S. EPA ID Number: [illegible]

7. Transporter 2 Company Name:

U.S. EPA ID Number:

8. Designated Facility Name and Site Address: South Yuma County Landfill, 1310 South Avenue 10

U.S. EPA ID Number: [illegible]

Facility's Phone: [illegible]

Item No.	9a. Hazardous Waste Shipping Name, Hazard Class, ID Number, and Packing Group (if any)	10. Containers No.	Type	11. Total Quantity	12. Unit Wt./Vol.	13. Waste Codes
1	RQ RCRA Hazardous Waste Solid Lead Impacted Soil	[illegible]	[illegible]	[illegible]	[illegible]	[illegible]
2						
3						
4						

14. Special Handling Instructions and Additional Information

[illegible]

15. GENERATOR'S/OFFEROR'S CERTIFICATION: I hereby declare that the contents of this consignment are fully and accurately described above by the proper shipping name, and are classified, packaged, marked and labeled/placarded, and are in all respects in proper condition for transport according to applicable international and national governmental regulations. If export shipment and I am the Primary Exporter, I certify that the contents of this consignment conform to the terms of the attached EPA Acknowledgment of Consent.

I certify that the waste minimization statement identified in 40 CFR 262.27(a) (if I am a large quantity generator) or (b) (if I am a small quantity generator) is true.

Generator's/Offeror's Printed/Typed Name: [illegible] | Signature: [illegible] | Month 7 Day 8 Year 22

16. International Shipments: ☐ Import to U.S. ☐ Export from U.S. Port of entry/exit: Date leaving U.S.

Transporter signature (for exports only):

17. Transporter Acknowledgment of Receipt of Materials

Transporter 1 Printed/Typed Name: [illegible] | Signature: [illegible] | Month 7 Day 8 Year 22

Transporter 2 Printed/Typed Name: | Signature: | Month Day Year

18. Discrepancy

18a. Discrepancy Indication Space: ☐ Quantity ☐ Type ☐ Residue ☐ Partial Rejection ☐ Full Rejection

Manifest Reference Number:

18b. Alternate Facility (or Generator): | U.S. EPA ID Number:

Facility's Phone:

18c. Signature of Alternate Facility (or Generator): | Month Day Year

19. Appropriate Waste Report Management Method Codes (i.e., codes for hazardous waste treatment, disposal, and recycling systems):

1. | 2. | 3. | 4.

20. Designated Facility Owner or Operator: Certification of receipt of hazardous materials covered by the manifest except as noted in Item 18a.

Printed/Typed Name: | Signature: | Month Day Year

GENERATOR

INTL

TRANSPORTER

DESIGNATED FACILITY

EPA Form 8700-22 (Rev. 12-17) Previous editions are obsolete

GENERATOR'S INITIAL COPY

Please print or type.

UNIFORM HAZARDOUS WASTE MANIFEST	1. Generator ID Number	2. Page 1 of	3. Emergency Response Phone	4. Manifest Tracking Number
	[illegible]	[illegible]	[illegible]	01530[illegible]627 FLE

5. Generator's Name and Mailing Address

City of Los Angeles Department of Public Works
Bureau of Engineering 650 Santa Fe Avenue
City of Los Angeles Ca 90021

Generator's Site Address (if different than mailing address)

[illegible] Santa Fe Avenue
Los Angeles Ca 90011

6. Transporter 1 Company Name: [illegible]

U.S. EPA ID Number: [illegible]

7. Transporter 2 Company Name:

U.S. EPA ID Number:

8. Designated Facility Name and Site Address

South Yuma County Landfill
[illegible] South Avenue II
[illegible]

U.S. EPA ID Number: [illegible]

No.	9. U.S. DOT Description (Including Proper Shipping Name, Hazard Class, ID Number, and Packing Group, if any)	10. Containers No.	Type	11. Total Quantity	12. Unit Wt./Vol.	13. Waste Codes
	100 MCMA Hazardous Waste Solid (Lead Impacted Soil)	[illegible]	[illegible]	[illegible]	Y	[illegible]

14. Special Handling Instructions and Additional Information

Profile#C-[illegible]
[illegible]

15. GENERATOR'S/OFFEROR'S CERTIFICATION: I hereby declare that the contents of this consignment are fully and accurately described above by the proper shipping name, and are classified, packaged, marked and labeled/placarded, and are in all respects in proper condition for transport according to applicable international and national governmental regulations. Proper shipment and/or the Primary Exporter is certify that the contents of this consignment conform to the terms of the attached EPA Acknowledgment of Consent.
I certify that the waste minimization statement identified in 40 CFR 262.27(a) (if I am a large quantity generator) or (b) (if I am a small quantity generator) is true.

Generator's/Offeror's Printed/Typed Name: [illegible] Signature: [illegible] Month 2 Day 8 Year 22

16. International Shipments: ☐ Import to U.S. ☐ Export from U.S. Port of entry/exit: Date leaving U.S.

Transporter signature (for exports only):

17. Transporter Acknowledgment of Receipt of Materials

Transporter 1 Printed/Typed Name: [illegible] Signature: [illegible] Month 2 Day 8 Year 22

Transporter 2 Printed/Typed Name: Signature: Month Day Year

18. Discrepancy

18a. Discrepancy Indication Space: ☐ Quantity ☐ Type ☐ Number ☐ Partial Rejection ☐ Full Rejection

Manifest Reference Number:

18b. Alternate Facility (or Generator): U.S. EPA ID Number:

Facility's Phone:

18c. Signature of Alternate Facility (or Generator): Month Day Year

19. Hazardous Waste Report Management Method Code (i.e., Waste Minimization Code and Handling Method)

20. Designated Facility Owner or Operator: Certification of receipt of hazardous materials covered by the manifest except as noted in Item 18a

Printed/Typed Name: Signature: Month Day Year

EPA Form 8700-22 (Rev. 12-11) Previous editions are obsolete.

GENERATOR'S INITIAL COPY

Please print or type.

Form Approved. OMB No. 2050-0039

UNIFORM HAZARDOUS WASTE MANIFEST	1. Generator ID Number: CACT03159701	2. Page 1 of 1	3. Emergency Response Phone: 213-634-6237	4. Manifest Tracking Number: 015369630 FLE

5. Generator's Name and Mailing Address:
City of Los Angeles Department of Public Works
Bureau of Engineering 202 South Fe Avenue
City of Los Angeles Ca. 90013
Generator's Phone: [illegible]

Generator's Site Address (if different than mailing address):
101 South Fe Avenue
Los Angeles Ca. 90013

6. Transporter 1 Company Name: OCHOA'S TRANSP
U.S. EPA ID Number: CAR000273490

7. Transporter 2 Company Name:
U.S. EPA ID Number:

8. Designated Facility Name and Site Address:
South Yuma County Landfill
[illegible] South Avenue [illegible]
Facility's Phone: [illegible]
U.S. EPA ID Number: [illegible]

No.	9b. U.S. DOT Description (including Proper Shipping Name, Hazard Class, ID Number, and Packing Group, if any)	10. Containers No.	Type	11. Total Quantity	12. Unit Wt./Vol.	13. Waste Codes
1.	9 RCMA Hazardous Waste Solid (Lead Impacted Soil)	001	DT	24	Y	[illegible]
2.						
3.						
4.						

14. Special Handling Instructions and Additional Information:
Profile#C-6866
Wear appropriate safety clothing

15. GENERATOR'S/OFFEROR'S CERTIFICATION: I hereby declare that the contents of this consignment are fully and accurately described above by the proper shipping name, and are classified, packaged, marked and labeled/placarded, and are in all respects in proper condition for transport according to applicable international and national governmental regulations. If export shipment and I am the Primary Exporter I certify that the contents of this consignment conform to the terms of the attached EPA Acknowledgment of Consent.
I certify that the waste minimization statement identified in 40 CFR 262.27(a) (if I am a large quantity generator) or (b) (if I am a small quantity generator) is true.

Generator's/Offeror's Printed/Typed Name: [illegible] Signature: [illegible] Month 2 Day 8 Year 22

16. International Shipments: ☐ Import to U.S. ☐ Export from U.S. Port of Entry/Exit: Date leaving U.S.
Transporter signature for exports only:

17. Transporter Acknowledgment of Receipt of Materials

Transporter 1 Printed/Typed Name: RAFAEL DEHOA Signature: [signature] Month 2 Day 8 Year 22

Transporter 2 Printed/Typed Name: Signature: Month Day Year

18. Discrepancy

18a. Discrepancy Indication Space: ☐ Quantity ☐ Type ☐ Residue ☐ Partial Rejection ☐ Full Rejection

Manifest Reference Number:

18b. Alternate Facility (or Generator): U.S. EPA ID Number:

Facility's Phone:

18c. Signature of Alternate Facility (or Generator): Month Day Year

19. Hazardous Waste Report Management Method Code (i.e., codes for biggest quantity, treatment, disposal, and recycling systems):

1.	2.	3.	4.

20. Designated Facility Owner or Operator: Certification of receipt of hazardous materials covered by the manifest except as noted in Item 18a

Printed/Typed Name: Signature: Month Day Year

GENERATOR

INTL.

TRANSPORTER

DESIGNATED FACILITY

EPA Form 8700-22 (Rev. 12-17) Previous editions are obsolete.

GENERATOR'S INITIAL COPY

Please print or type

Form Approved. OMB No. 2050-0039

UNIFORM HAZARDOUS WASTE MANIFEST	1. Generator ID Number	2. Page 1 of	3. Emergency Response Phone	4. Manifest Tracking Number
	[illegible]	[illegible]	[illegible]	015369638 FLE

5. Generator's Name and Mailing Address

City of Los Angeles Department of Public Works
Bureau of Engineering 650 Santa Fe Avenue
City of Los Angeles Ca. 90011

Generator's Site Address (if different than mailing address)

[illegible]
Los Angeles Ca. 90013

6. Transporter 1 Company Name: [illegible]

U.S. EPA ID Number: [illegible]

7. Transporter 2 Company Name:

U.S. EPA ID Number:

8. Designated Facility Name and Site Address

South Yuma County Landfill
[illegible]

U.S. EPA ID Number: [illegible]

No.	9a. U.S. DOT Description (including Proper Shipping Name, Hazard Class, ID Number, and Packing Group, if any)	10. Containers No.	Type	11. Total Quantity	12. Unit Wt./Vol.	13. Waste Codes
1	[illegible] (Lead Impacted Soil)	[illegible]	[illegible]	[illegible]	Y	[illegible]
2						
3						
4						

14. Special Handling Instructions and Additional Information

[illegible]

15. GENERATOR'S/OFFEROR'S CERTIFICATION: I hereby declare that the contents of this consignment are fully and accurately described above by the proper shipping name, and are classified, packaged, marked and labeled/placarded, and are in all respects in proper condition for transport according to applicable international and national governmental regulations. If export shipment and I am the Primary Exporter, I certify that the contents of this consignment conform to the terms of the attached EPA Acknowledgment of Consent.
I certify that the waste minimization statement identified in 40 CFR 262.27(a) (if I am a large quantity generator) or (b) (if I am a small quantity generator) is true.

Generator's Offeror's Printed/Typed Name: [illegible] | Signature: [illegible] | Month 7 Day 8 Year 12

16. Transporter Signature (for exports only): ☐ Exports U.S. ☐ Cross Free U.S. Port of Entry/Exit: Date Entering U.S.

17. Transporter Acknowledgment of Receipt of Materials

Transporter 1 Printed/Typed Name: TOM [illegible] | Signature: [illegible] | Month 7 Day 8 Year 12

Transporter 2 Printed/Typed Name: | Signature: | Month Day Year

18. Discrepancy

18a. Discrepancy Indication Space: ☐ Quantity ☐ Type ☐ Location ☐ Partial Reaction ☐ Full Reaction

Manifest Reference Number:

18b. Alternate Facility (or Generator): U.S. EPA ID Number:

Facility's Phone:

18c. Signature of Alternate Facility (or Generator): | Month Day Year

19. Hazardous Waste Report Management Method Codes (i.e., Waste to Hazardous Waste Treatment, Disposal, and Recycling Systems):

1	2	3	4

20. Designated Facility Owner or Operator: Certification of receipt of hazardous materials covered by the manifest except as noted in Item 18a.

Printed/Typed Name: | Signature: | Month Day Year

GENERATOR'S INITIAL COPY

Form Approved. OMB No. 2050-0039

UNIFORM HAZARDOUS WASTE MANIFEST	CAC[illegible]	1 of 1	[illegible]	015369632 FLE

Generator's Name and Mailing Address
City of Los Angeles, Department of Public Works
Bureau of Engineering 555 Ramirez Street
City of Los Angeles Ca 90012
Generator's Site Address (if different than mailing address)
[illegible]

Generator's Phone
[illegible]

Generator's EPA ID
[illegible]2076

Generator's Contact Name

Generator's EPA ID

Transporter 1 Company Name
South Yuma County Landfill
[illegible]
Facility Phone: [illegible]

U.S. EPA ID Number
[illegible]

13. U.S. DOT Description (including Proper Shipping Name, Hazard Class, ID Number, and Packing Group if any)		No.	Type	Total Quantity	Unit Wt./Vol.			
1	NON RCRA Hazardous Waste Solid (Lead Impacted Soil)	001	DT	36	Y	01		
2								
3								
4								

14. Special Handling Instructions and Additional Information

[illegible]

15. GENERATOR'S/OFFEROR'S CERTIFICATION: I hereby declare that the contents of this consignment are fully and accurately described above by proper shipping name, and are in all respects in proper condition for transport by highway according to applicable international and national government regulations. If export shipment and I am the Primary Exporter I certify that the contents of this consignment conform to the terms of the attached EPA Acknowledgment of Consent.
I certify that the waste minimization statement identified in 40 CFR 262.27(a) (if I am a small quantity generator) is true.

Generator's/Offeror's Printed/Typed Name | Signature | Month | Day | Year
[illegible] | | 7 | 8 | 22

16. International Shipments ☐ Import to U.S. ☐ Export from U.S. Port of entry/exit:
Transporter signature (for exports only) | Date leaving U.S.:

17. Transporter Acknowledgment of Receipt of Materials
Transporter 1 Printed/Typed Name | Signature | Month | Day | Year
[illegible] | [illegible] | 7 | 8 | 22

Transporter 2 Printed/Typed Name | Signature | Month | Day | Year

18. Discrepancy
18a. Discrepancy Indication Space ☐ Quantity ☐ Type ☐ Residue ☐ Partial Rejection ☐ Full Rejection
Manifest Reference Number:

18b. Alternate Facility (or Generator) | U.S. EPA ID Number
Facility's Phone:

18c. Signature of Alternate Facility (or Generator) | Month | Day | Year

19. Hazardous Waste Report Management Method Codes (i.e., codes for hazardous waste treatment, disposal, and recycling systems)

20. Designated Facility Owner or Operator: Certification of receipt of hazardous materials covered by this manifest except as noted in Item 18a
Printed/Typed Name | Signature | Month | Day | Year

GENERATOR'S INITIAL COPY

GENERATOR'S INITIAL COPY

Please print or type

Form Approved. OMB No. 2050-0039

UNIFORM HAZARDOUS WASTE MANIFEST

[illegible]

[illegible]

015369824 FLE

1. Generator's Name and Mailing Address

City of Los Angeles, Department of Public Works
Bureau of Engineering 200 North Fe Avenue
City of Los Angeles Ca 90013

Generator's Site Address (if different than mailing address)

[illegible]
Los Angeles Ca 90013

2. Generator's Contact Name: [illegible]

3. Generator's Contact Name: [illegible]

4. Generator's Mailing Address

South Yuma County Landfill
[illegible]

5. Generator's Site Address

[illegible]

Item	Description	Quantity	Type	Total Quantity	Unit Wt./Vol.	Waste Codes
	NON RCRA Hazardous Waste Solid (Lead Impacted Soil)	001	07	38	7	[illegible]

6. Special Handling Instructions and Additional Information

Profile#C-6865
[illegible]

7. Generator's Certification: [illegible]

Generator's Printed Typed Name: [illegible] Signature: [illegible] Month 2 Day 18 Year 22

8. Transporter Signature (for exports only): ☐ Exports U.S. ☐ Exports U.S. Port of Exports: Date Leaving U.S.

9. Transporter Acknowledgment of Receipt of Materials

Transporter 1 Printed Typed Name: [illegible] Signature: [illegible] Month 2 Day 18 Year 22

Transporter 2 Printed Typed Name: Signature: Month Day Year

10. Discrepancy

10a. Discrepancy Indication Space: ☐ Quantity ☐ Type ☐ Residue ☐ Partial Residue ☐ Full Residue

Manifest Reference Number

10b. Alternate Facility (or Generator): U.S. EPA ID Number

Facility's Phone

10c. Signature of Alternate Facility (or Generator): Month Day Year

11. Hazardous Waste Report Management Method Codes (i.e., codes for hazardous waste treatment, disposal, and recycling systems)

1	2	3	4

12. Designated Facility Owner or Operator: Certification of receipt of hazardous materials covered by the manifest except as noted in Item 10a

Printed Typed Name: Signature: Month Day Year

Form 8700-22 (Rev. 12/17) Previous editions are obsolete.

GENERATOR'S INITIAL COPY

Please print or type.

Form Approved. OMB No. 2050-0039

UNIFORM HAZARDOUS WASTE MANIFEST	1. Generator ID Number	2. Page	3. Emergency Response Phone	4. Manifest Tracking Number
	[illegible]	[illegible]	[illegible]	015[illegible]5623 FLE

5. Generator's Name and Mailing Address

City of Los Angeles, Department of Public Works
Bureau of Engineering, 1149 South Fe Avenue
City of Los Angeles Ca. 90015

Generator's Phone: [illegible]

6. Transporter 1 Company Name: [illegible]

U.S. EPA ID Number: [illegible]

7. Transporter 2 Company Name:

U.S. EPA ID Number:

8. Designated Facility Name and Site Address

South Yuma County Landfill
[illegible] South Avenue 12
[illegible] AZ [illegible] [illegible]

U.S. EPA ID Number: [illegible]

No.	9a. Hazardous Waste Material Description	10. Contents No.	Type	11. Total Quantity	12. Unit Wt./Vol.	13. Waste Codes
	NON RCRA Hazardous Waste Solids Head Impacted Soil	[illegible]	[illegible]	[illegible]	Y	[illegible]

14. Special Handling Instructions and Additional Information

[illegible]

15. GENERATOR'S/OFFEROR'S CERTIFICATION: [illegible]

Generator's Printed/Typed Name: [illegible] Signature: [illegible] Month 2 Day 8 Year 22

16. International Shipments: ☐ Importer's ☐ Exporter's ☐ Port of entry/exit

Transporter signature (for exports only): Date leaving U.S.

17. Transporter Acknowledgment of Receipt of Materials

Transporter 1 Printed/Typed Name: [illegible] Signature: Month 2 Day 8 Year 22

Transporter 2 Printed/Typed Name: Signature: Month Day Year

18. Discrepancy

18a. Discrepancy Indication Space: ☐ Quantity ☐ Type ☐ Residue ☐ Partial Rejection ☐ Full Rejection

Manifest Reference Number:

18b. Alternate Facility (or Generator): U.S. EPA ID Number:

Facility Phone:

18c. Signature of Alternate Facility (or Generator): Month Day Year

19. Hazardous Waste Report Management Method Codes (i.e., codes for hazardous waste treatment, disposal, and recycling systems):

1.	2.	3.	4.

20. Designated Facility Owner or Operator Certification of receipt of hazardous materials covered by the manifest except as noted in Item 18a

Printed/Typed Name: Signature: Month Day Year

GENERATOR

INTL

TRANSPORTER

DESIGNATED FACILITY

EPA Form 8700-22 (Rev. 12-17) Previous editions are obsolete

GENERATOR'S INITIAL COPY

015369622 FLE

GENERATOR'S INITIAL COPY

Form Approved. OMB No. 2050-0039

Please print or type

UNIFORM HAZARDOUS WASTE MANIFEST	2. Page 1 of	3. Emergency Response Phone	4. Manifest Tracking Number
			015363621 FLE

5. Generator's Name and Mailing Address

Generator's Site Address (if different than mailing address)

6. Transporter 1 Company Name — 7. US EPA ID Number

6. Transporter 2 Company Name — 8. US EPA ID Number

9. Designated Facility Name and Site Address — 10. US EPA ID Number

11.	12. US DOT Description (Including Proper Shipping Name, Hazard Class, ID Number, and Packing Group (if any))	13. Containers: No.	13. Containers: Type	14. Total Quantity	15. Unit Wt./Vol.	16. Waste Codes
a.	NA NOA Hazardous Waste Solid (Lead Impacted Soil)	001	DF	36	T	
b.						
c.						
d.						

17. Special handling instructions and additional information

18. GENERATOR'S/OFFEROR'S CERTIFICATION: I hereby declare that the contents of this consignment are fully and accurately described above by the proper shipping name, and are classified, packaged, marked and labeled/placarded, and are in all respects in proper condition for transport according to applicable international and national governmental regulations. If export shipment and I am the Primary Exporter I certify that the provisions of the consent specified in EPA Rule 40 CFR 262.57 have been followed. If I am a large quantity generator, I certify that I have a program in place to reduce the volume and toxicity of waste generated to the degree I have determined to be economically practicable and that I have selected the practicable method of treatment, storage, or disposal currently available to me which minimizes the present and future threat to human health and the environment; OR, if I am a small quantity generator, I have made a good faith effort to minimize my waste generation and select the best waste management method that is available to me and that I can afford.

Generator's Printed/Typed Name — Signature — Month / Day / Year: 12 / 8 / 22

19. International Shipments — Import to U.S. — Export from U.S. — Port of entry/exit:

Transporter signature (for exports only): — Date leaving U.S.:

20. Transporter Acknowledgment of Receipt of Materials

Transporter 1 Printed/Typed Name: Jaycen Lisby — Signature: — Month / Day / Year: 12 / 8 / 22

Transporter 2 Printed/Typed Name — Signature — Month / Day / Year

21. Discrepancy

21a. Discrepancy Indication Space — Quantity — Type — Residue — Partial Rejection — Full Rejection

Manifest Reference Number:

22. Alternate Facility (or Generator) — 23. US EPA ID Number

Facility's Phone:

23a. Signature of Alternate Facility (or Generator) — Month / Day / Year

24. Hazardous Waste Report Management Method Codes (i.e., codes for hazardous waste treatment, disposal, and recycling systems)

1.	2.	3.	4.

25. Designated Facility Owner or Operator: Certification of receipt of hazardous materials covered by this manifest except as noted in Item 21.

Printed/Typed Name — Signature — Month / Day / Year

EPA Form 8700-22 (Rev. 12-11) Previous editions are obsolete.

GENERATOR'S INITIAL COPY

Form Approved. OMB No. [illegible]

UNIFORM HAZARDOUS WASTE MANIFEST	1. Generator ID Number	2. Page 1 of	3. Emergency Response Phone	4. Manifest Tracking Number
	CAC[illegible]	[illegible]	[illegible]	015369520 FLE

5. Generator's Name and Mailing Address: [illegible] Department of Public Works, Bureau of Engineering 595 South Fy Avenue, [illegible] Los Angeles Ca. [illegible]

Generator's Phone: [illegible]

6. Transporter 1 Company Name: [illegible] M. TOUCHING

U.S. EPA ID Number: KAR[illegible]

7. Transporter 2 Company Name:

U.S. EPA ID Number:

8. Designated Facility Name and Site Address: South Kern County Landfill, [illegible] South Avenue of [illegible]

Facility's Phone: [illegible]

U.S. EPA ID Number: [illegible]

No.	9. U.S. DOT Description (including Proper Shipping Name, Hazard Class, ID Number, and Packing Group, if any)	10. Contaminants No.	Type	11. Total Quantity	12. Unit Wt./Vol.	13. Waste Codes
	NON RCRA Hazardous Waste Solid (Lead Impacted Soil)	[illegible]	[illegible]	[illegible]	Y	

14. Special Handling Instructions and Additional Information:

Profile#C-[illegible]

15. GENERATOR'S CERTIFICATION: [illegible]

Generator's Printed Name: [illegible] Signature: [illegible] Month 2 Day 8 Year 22

16. International Shipments: ☐ Import to U.S. ☐ Export from U.S. Port of Entry/Exit: Date Leaving U.S.

Transporter signature (for exports only):

17. Transporter Acknowledgment of Receipt of Materials:

Transporter 1 Printed/Typed Name: [illegible] Signature: [illegible] Month 2 Day 8 Year 22

Transporter 2 Printed/Typed Name: Signature: Month Day Year

18. Discrepancy:

18a. Discrepancy Indication Space: ☐ Quantity ☐ Type ☐ Residue ☐ Partial Rejection ☐ Full Rejection

Manifest Reference Number:

19. Manifest Facility or Generator: U.S. EPA ID Number:

Facility's Phone:

20. Signature of Manifest Facility or Generator: Month Day Year

21. Hazardous Waste Report Management Method Codes (i.e., codes for hazardous waste treatment, disposal, and recycling systems):

1.	2.	3.	4.

22. Designated Facility Owner or Operator: Certification of receipt of hazardous materials covered by this manifest except as noted in Item 18a.

Printed/Typed Name: Signature: Month Day Year

EPA Form 8700-22 (Rev. 12-17) Previous editions are obsolete.

GENERATOR'S INITIAL COPY

Please print or type.

Form Approved. OMB No. 2050-0039

UNIFORM HAZARDOUS WASTE MANIFEST	1. Generator ID Number	2. Page 1 of	3. Emergency Response Phone	4. Manifest Tracking Number
	CACR0015701	01	213-914-6277	015369640 FLE

5. Generator's Name and Mailing Address
City of Los Angeles Department of Public Works
Bureau of Engineering 201 North Fe Avenue
City of Los Angeles Ca. 90012

Generator's Site Address (if different than mailing address)
Los Angeles Fe Avenue
Los Angeles Ca. 90012

6. Transporter 1 Company Name: STV TRUCKING

U.S. EPA ID Number: CAR000142521

7. Transporter 2 Company Name

U.S. EPA ID Number

8. Designated Facility Name and Site Address
South Yuba County Landfill
[illegible] Ave
[illegible]

U.S. EPA ID Number: AZD[illegible]

9a. HM	9b. U.S. DOT Description (including Proper Shipping Name, Hazard Class, ID Number, and Packing Group (if any))	10. Containers No.	10. Containers Type	11. Total Quantity	12. Unit Wt./Vol.	13. Waste Codes
	1. Soil RCRA Hazardous Waste Solid (Impacted Soil)	001	CY	11	T	
	2.					
	3.					
	4.					

14. Special Handling Instructions and Additional Information
Profile#C-6564
Post approval to solidification

15. GENERATOR'S/OFFEROR'S CERTIFICATION: I hereby declare that the contents of this consignment are fully and accurately described above by the proper shipping name, and are classified, packaged, marked and labeled/placarded, and are in all respects in proper condition for transport according to applicable international and national governmental regulations. If export shipment and I am the Primary Exporter I certify that the contents of this consignment conform to the terms of the attached EPA Acknowledgment of Consent.
I certify that the waste minimization statement identified in 40 CFR 262.27(a) (if I am a large quantity generator) or (b) (if I am a small quantity generator) is true.

Generator's/Offeror's Printed/Typed Name: [illegible] Signature: [illegible] Month 12 Day 19 Year 22

16. International Shipments: Import to U.S. Export from U.S. Port of entry/exit:
Transporter signature (for exports only):

17. Transporter Acknowledgment of Receipt of Materials
Transporter 1 Printed/Typed Name: SERGIO LUEVANO JR. Signature: [illegible] Month 12 Day 19 Year 22

Transporter 2 Printed/Typed Name: Signature: Month Day Year

18. Discrepancy
18a. Discrepancy Indication Space: Quantity Type Residue Partial Rejection Full Rejection

Manifest Reference Number:

18b. Alternate Facility (or Generator)
U.S. EPA ID Number:
Facility's Phone:
18c. Signature of Alternate Facility (or Generator): Month Day Year

19. Hazardous Waste Management Method Codes (i.e., codes for hazardous waste treatment, disposal, and recycling systems)

20. Designated Facility Owner or Operator: Certification of receipt of hazardous materials covered by this manifest except as noted in Item 18a
Printed/Typed Name: Signature: Month Day Year

GENERATOR'S INITIAL COPY

GENERATOR | TRANSPORTER | DESIGNATED FACILITY

Please print or type

Form Approved OMB No. 2050-0039

UNIFORM HAZARDOUS WASTE MANIFEST

1. Generator ID Number: CACD039729231

2. Page 1 of 1

3. Emergency Response Phone: 213-441-4777

4. Manifest Tracking Number: 015260667 FLE

5. Generator's Name and Mailing Address: City of Los Angeles, Bureau of Sanitation, 1149 S. Broadway, City of Los Angeles Ca. 90015

Generator's Site Address (if different than mailing address): 181 Bixby Rd Wilmington Los Angeles Ca 90744

6. Transporter 1 Company Name: Power Truck Inc

U.S. EPA ID Number: CAD 981 554 610

7. Transporter 2 Company Name:

U.S. EPA ID Number:

8. Designated Facility Name and Site Address: Chiquita Canyon Landfill, 29201 Henry Mayo Drive, Castaic, CA 91384 (661) 257-3600

U.S. EPA ID Number: CAD 008 262 960

No.	9a. HM	9b. U.S. DOT Description (Including Proper Shipping Name, Hazard Class, ID Number, and Packing Group (if any))	10. Containers: No.	10. Containers: Type	11. Total Quantity	12. Unit Wt./Vol.	13. Waste Codes
1		NON RCRA Hazardous Waste Solid (Sand Injection Soil)	001	DT	16	Y	
2							
3							
4							

14. Special Handling Instructions and Additional Information: Profile#: 6966

15. GENERATOR'S/OFFICER'S CERTIFICATION: I hereby declare that the contents of this consignment are fully and accurately described above by the proper shipping name, and are classified, packed, marked and labeled/placarded, and are in all respects in proper condition for transport according to applicable international and national governmental regulations. If export shipment and I am the Primary Exporter, I certify that the contents of this consignment conform to the terms of the attached EPA Acknowledgment of Consent. I certify that the waste minimization statement identified in 40 CFR 262.27(a) (if I am a large quantity generator) or (b) (if I am a small quantity generator) is true.

Generator's/Offeror's Printed/Typed Name: [illegible] Signature: [illegible] Month: 3 Day: 7 Year: 22

16. International Shipments: ☐ Import to U.S. ☐ Export from U.S. Port of entry/exit:

Transporter signature (for exports only):

17. Transporter Acknowledgment of Receipt of Materials

Transporter 1 Printed/Typed Name: Richard Ii Signature: [signature] Month: 3 Day: 7 Year: 22

Transporter 2 Printed/Typed Name: Signature: Month: Day: Year:

18. Discrepancy

18a. Discrepancy Indication Space: ☐ Quantity ☐ Type ☐ Residue ☐ Partial Rejection ☐ Full Rejection

Manifest Reference Number:

18b. Alternate Facility (or Generator): U.S. EPA ID Number:

Facility's Phone:

18c. Signature of Alternate Facility (or Generator): Month: Day: Year:

19. Hazardous Waste Report Management Method Codes (i.e., codes for Hazardous Waste Report Management Method)

1. 2. 3. 4.

20. Designated Facility Owner or Operator: Certification of receipt of hazardous materials covered by the manifest except as noted in Item 18a

Printed/Typed Name: Signature: Month: Day: Year:

EPA Form 8700-22 (Rev. 12-17) Previous editions are obsolete.

GENERATOR'S INITIAL COPY

Form Approved OMB No. 2050-0039

UNIFORM HAZARDOUS WASTE MANIFEST	1. Generator ID Number	2. Page 1 of	3. Emergency Response Phone	4. Manifest Tracking Number
	[illegible]	[illegible]	[illegible]	015369838 FLE

5. Generator's Name and Mailing Address: City of Los Angeles Department of Public Works, Bureau of Engineering 180 Santa Fe Avenue, City of Los Angeles Ca. 90013

Generator's Site Address (if different than mailing address): 180 Santa Fe Avenue, Los Angeles Ca. 90013

Generator's Phone:

6. Transporter 1 Company Name: [illegible] Trucking — U.S. EPA ID Number: CAR000190777

7. Transporter 2 Company Name: — U.S. EPA ID Number:

8. Designated Facility Name and Site Address: South Yuma County Landfill, [illegible] South Avenue [illegible] — U.S. EPA ID Number: [illegible]

Facility's Phone: [illegible]

No.	9a. U.S. DOT Description (Including Proper Shipping Name, Hazard Class, ID Number, and Packing Group, if any)	10. Contents No.	Type	11. Total Quantity	12. Unit Wt./Vol.	13. Waste Codes
1	40R RCRA Hazardous Waste Solid (Land Impacted Soil)	001	[illegible]	[illegible]	Y	[illegible]
2						
3						
4						

14. Special Handling Instructions and Additional Information:

Profile#C-6856

[illegible]

15. GENERATOR'S/OFFEROR'S CERTIFICATION: I hereby declare that the contents of this consignment are fully and accurately described above by the proper shipping name, and are classified, packaged, marked and labeled/placarded, and are in all respects in proper condition for transport according to applicable international and national governmental regulations. If I am a large quantity generator, I certify that the contents of this consignment conform to the terms of the attached EPA Non-Waste Manifest or Certificate.

I certify that the waste minimization statement identified in 40 CFR 262.27(a) (if I am a large quantity generator) or (b) (if I am a small quantity generator) is true.

Generator's Offeror's Printed/Typed Name: [illegible] — Signature: [illegible] — Month 3 Day 9 Year 22

16. Transporter Acknowledgment: ☐ Import to U.S. ☐ Export from U.S. — Port of entry/exit: Date Leaving U.S.

Transporter Signature (for exports only):

17. Transporter Acknowledgment of Receipt of Materials:

Transporter 1 Printed/Typed Name: [illegible] — Signature: [illegible] — Month 3 Day 9 Year 22

Transporter 2 Printed/Typed Name: — Signature: — Month Day Year

18. Discrepancy:

18a. Discrepancy Indication Space: ☐ Quantity ☐ Type ☐ Residue ☐ Partial Rejection ☐ Full Rejection

Manifest Reference Number:

18b. Alternate Facility (or Generator): — U.S. EPA ID Number:

Facility's Phone:

Month Day Year

19. Hazardous Waste Report Management Method Codes (i.e., codes for hazardous waste treatment, disposal, and recycling systems):

20. Designated Facility Owner or Operator: Certification of receipt of hazardous materials covered by the manifest except as noted in Item 18a.

Printed/Typed Name: — Signature: — Month Day Year

GENERATOR'S INITIAL COPY

Please print or type.

Form Approved. OMB No. 2050-0039

UNIFORM HAZARDOUS WASTE MANIFEST

1. Generator ID Number: CAD981155701

2. Page 1 of 1

3. Emergency Response Phone:

4. Manifest Tracking Number: 101536641 FLE

GENERATOR

5. Generator's Name and Mailing Address: City of Los Angeles Department of Public Works Bureau of Engineering 555 Ramirez St Suite 700 City of Los Angeles Ca. 90012

Generator's Site Address (if different than mailing address): 100 Santa Fe Avenue Los Angeles Ca 90021

Generator's Phone:

6. Transporter 1 Company Name: Waste Management

U.S. EPA ID Number: CAD980749560

7. Transporter 2 Company Name:

U.S. EPA ID Number:

8. Designated Facility Name and Site Address: Santa Yuka County Landfill 1221 South Avenue 24 Bakersfield, CA 93308 (661) 391-1000

U.S. EPA ID Number: AZD000836310

	9a. HM	9b. U.S. DOT Description (including Proper Shipping Name, Hazard Class, ID Number, and Packing Group (if any))	10. Containers: No.	10. Containers: Type	11. Total Quantity	12. Unit Wt./Vol.	13. Waste Codes
1		* X RCRA Hazardous Waste Solid (Lead Impacted Soil)	001	CT	15	Y	141
2							
3							
4							

14. Special Handling Instructions and Additional Information: Profile#c-6166 Wear appropriate safety clothing

15. GENERATOR'S/OFFEROR'S CERTIFICATION: I hereby declare that the contents of this consignment are fully and accurately described above by proper shipping name, and are classified, packaged, marked and labeled/placarded, and are in all respects in proper condition for transport according to applicable international and national governmental regulations. If export shipment and I am the Primary Exporter, I certify that the contents of this consignment conform to the terms of the attached EPA Acknowledgment of Consent. I certify that the waste minimization statement identified in 40 CFR 262.27(a) (if I am a large quantity generator) or (b) (if I am a small quantity generator) is true.

Generator's/Offeror's Printed/Typed Name: [illegible] Signature: [illegible] Month: 2 Day: 3 Year: 22

TRANSPORTER

16. International Shipments: Import to U.S. Export from U.S. Port of entry/exit:

Transporter Signature (for exports only):

17. Transporter Acknowledgment of Receipt of Materials

Transporter 1 Printed/Typed Name: [illegible] Signature: [illegible] Month: 2 Day: 3 Year: 22

Transporter 2 Printed/Typed Name: Signature: Month: Day: Year:

DESIGNATED FACILITY

18. Discrepancy

18a. Discrepancy Indication Space: Quantity Type Residue Partial Rejection Full Rejection

Manifest Reference Number:

18b. Alternate Facility (or Generator)

U.S. EPA ID Number:

Facility's Phone:

18c. Signature of Alternate Facility (or Generator) Month: Day: Year:

19. Hazardous Waste Report Management Method Code(s) (i.e., codes for hazardous waste treatment, disposal, and recycling systems)

1. 2. 3. 4.

20. Designated Facility Owner or Operator: Certification of receipt of hazardous materials covered by this manifest except as noted in Item 18a

Printed/Typed Name: Signature: Month: Day: Year:

EPA Form 8700-22 (Rev. 1/16) Previous editions obsolete.

GENERATOR'S INITIAL COPY

Please print or type

UNIFORM HAZARDOUS WASTE MANIFEST

1 Generator's US EPA ID No.	2 Page 1 of	3 Emergency Response Phone	4 Manifest Tracking No.
CA0000158701	1	213-485-6237	015369542 FLE

5 Generator's Name and Mailing Address
City of Los Angeles Department of Public Works
Bureau of Engineering 585 Vale Pa Avenue
City of Los Angeles Ca 90012

Generator's Site Address (if different than mailing address)
Pat Lanis Fe Avenue
Los Angeles Co, 90021

6 Transporter 1 Company Name
Environmental Transportation

U.S. EPA ID Number
CAD982048663

7 Transporter 2 Company Name

U.S. EPA ID Number

8 Designated Facility Name and Site Address
South Yuba County Landfill
[illegible] South Avenue SE
[illegible]

U.S. EPA ID Number
AZD020530903

9a HM	9b U.S. DOT Description (including Proper Shipping Name, Hazard Class, ID Number, and Packing Group (if any))	10 Containers No.	10 Containers Type	11 Total Quantity	12 Unit Wt./Vol.	13 Waste Codes
	1. NON RCRA Hazardous Waste Solid (Lead Impacted Soil)	001	CY	10	Y	
	2.					
	3.					
	4.					

14 Special Handling Instructions and Additional Information
Profile#FC-4265

15 GENERATOR'S/OFFEROR'S CERTIFICATION: I hereby declare that the contents of this consignment are fully and accurately described above by proper shipping name and are classified, packaged, marked and labeled/placarded, and are in all respects in proper condition for transport according to applicable international and national governmental regulations. If export shipment and I am the Primary Exporter I certify that the contents of this consignment conform to the terms of the attached EPA Acknowledgment of Consent.
I certify that the waste minimization statement identified in 40 CFR 262.27(a) (if I am a large quantity generator) or (b) (if I am a small quantity generator) is true.

Generator's/Offeror's Printed/Typed Name | Signature | Month | Day | Year
[illegible] | | 12 | 19 | 12

16 International Shipments: ☐ Import to U.S. ☐ Export from U.S. Port of entry/exit:

17 Transporter Acknowledgment of Receipt of Materials

Transporter 1 Printed/Typed Name | Signature | Month | Day | Year
[illegible] | | 12 | 19 | 12

Transporter 2 Printed/Typed Name | Signature | Month | Day | Year

18 Discrepancy

18a Discrepancy Indication Space: ☐ Quantity ☐ Type ☐ Residue ☐ Partial Rejection ☐ Full Rejection

Manifest Reference Number:

18b Alternate Facility (or Generator)

U.S. EPA ID Number

Facility's Phone:

18c Signature of Alternate Facility (or Generator) | Month | Day | Year

19 Hazardous Waste Report Management Method Codes (i.e., codes for hazardous waste treatment, disposal, and recycling systems)

1.	2.	3.	4.

20 Designated Facility Owner or Operator: Certification of receipt of hazardous materials covered by this manifest except as noted in Item 18a

Printed/Typed Name | Signature | Month | Day | Year

EPA Form 8700-22 (Rev. 12-97) Previous editions are obsolete.

GENERATOR'S INITIAL COPY

Please print or type.

Form Approved. OMB No. 2050-0039

UNIFORM HAZARDOUS WASTE MANIFEST

1 Generator ID Number

2 Page 1 of

3 Emergency Response Phone

4 Manifest Tracking Number: 01536964 3 FLE

5 Generator's Name and Mailing Address

City of Los Angeles, Department of Public Works
Bureau of Engineering 903 Eastlake Ave
City of Los Angeles Ca 90012

Generator's Site Address (if different than mailing address)

[illegible] Santa Fe Avenue
Los Angeles Ca 90013

6 Transporter 1 Company Name

CWT EXP2055

U.S. EPA ID Number

CAD009156217

7 Transporter 2 Company Name

U.S. EPA ID Number

8 Designated Facility Name and Site Address

South Yuba County Landfill
10538 South Avenue 18
Nevada City, CA 95959 (530) 265-1320

U.S. EPA ID Number

CAD009096360

9a HM	9b U.S. DOT Description (including Proper Shipping Name, Hazard Class, ID Number, and Packing Group (if any))	10 Containers No.	Type	11 Total Quantity	12 Unit Wt./Vol.	13 Waste Codes		
	1. NON RCRA Hazardous Waste Solid (Lead Impacted Soil)	001	CT	16	T			
	2.							
	3.							
	4.							

14 Special Handling Instructions and Additional Information

Profile#C-4850

15 GENERATOR'S CERTIFICATION: I hereby declare that the contents of this consignment are fully and accurately described above by the proper shipping name, and are classified, packaged, marked and labeled/placarded, and are in all respects in proper condition for transport according to applicable international and national governmental regulations. If export shipment and I am the Primary Exporter I certify that the contents of this consignment conform to the terms of the attached EPA Acknowledgment of Consent.
I certify that the waste minimization statement identified in 40 CFR 262.27(a) (if I am a large quantity generator) or (b) (if I am a small quantity generator) is true.

Generator's/Offeror's Printed/Typed Name | Signature | Month 2 | Day 4 | Year 92

16 International Shipments: ☐ Import to U.S. ☐ Export from U.S. Port of entry/exit: Date leaving U.S.:

17 Transporter Acknowledgment of Receipt of Materials

Transporter 1 Printed/Typed Name: [illegible] | Signature | Month 2 | Day 4 | Year 92

Transporter 2 Printed/Typed Name | Signature | Month | Day | Year

18 Discrepancy

18a Discrepancy Indication Space: ☐ Quantity ☐ Type ☐ Residue ☐ Partial Rejection ☐ Full Rejection

Manifest Reference Number:

18b Alternate Facility (or Generator) | U.S. EPA ID Number

Facility's Phone:

18c Signature of Alternate Facility (or Generator) | Month | Day | Year

18d Hazardous Waste Report Management Method (Codes for hazardous waste handled at your facility)

19 Special Handling Instructions and Additional Information

20 Facility Owner or Operator: Certification of receipt of hazardous materials covered by this manifest except as noted in Item 18a

Printed/Typed Name | Signature | Month | Day | Year

EPA Form 8700-22 (Rev. 9-91) Previous editions are obsolete.

GENERATOR'S INITIAL COPY

Please print or type.

Form Approved. OMB No. 2050-0039

UNIFORM HAZARDOUS WASTE MANIFEST	1. Generator's Number	2. Page 1 of	3. Emergency Response Phone	4. Manifest Tracking Number
	[illegible]	01	[illegible]	015359644 FLE

5. Generator's Name and Mailing Address

City of Los Angeles Department of Public Works
Bureau of Engineering 555 Santa Fe Avenue
City of Los Angeles Ca 90013

Generator's Site Address (if different than mailing address)

[illegible] Santa Fe Avenue
Los Angeles Ca 90013

6. Transporter 1 Company Name: [illegible] Carrier [illegible]

7. Transporter 2 Company Name:

8. Designated Facility Name and Site Address

South Yuma County Landfill
[illegible] South Avenue [illegible]
[illegible] AZ [illegible]

9. Designated Facility Number: [illegible]

10. Description	11. Total Quantity	12. Unit Wt. Vol.	13. Waste Codes
NOA DCHA Hazardous Waste Solid (Lead Impacted Soil)	[illegible]	[illegible]	[illegible]

14. Special Handling Instructions and Additional Information

Profile#C-[illegible]

15. GENERATOR'S OFFICER'S CERTIFICATION: [illegible]

Generator's Primary Type Name: [illegible] Signature: [illegible] Date: 2 9 22

16. Transporter Acknowledgment of Receipt of Materials

Transporter 1 Printed/Typed Name: [illegible] Signature: [illegible] Date: 2 9 22

Transporter 2 Printed/Typed Name: Signature: Date: Day Year

17. Discrepancy

Discrepancy Indication Space: Quantity Type Residue Partial Rejection Full Rejection

18. Alternate Facility (or Generator)

Facility's Name: U.S. EPA ID Number:

19. Signature of Alternate Facility (or Generator): Month Day Year

20. Hazardous Waste Facility Management Method Code (i.e., code for hazardous waste treatment, disposal, and recycling systems):

21. Designated Facility Name or Generator Certification of Waste Minimization Indicator, Owner or Operator Certification:

Printed/Typed Name: Signature: Month Day Year

GENERATOR'S INITIAL COPY

Form Approved OMB No. 2050-0039

UNIFORM HAZARDOUS WASTE MANIFEST

1 Generator's US EPA ID No. 115703

2 Page 1 of

3 Emergency Response Phone

4 Manifest Tracking Number D15[illegible]9663 FLE

5 Generator's Name and Mailing Address
City of Los Angeles Department of Public Works
Bureau of Engineering 100 North Main Street
City of Los Angeles CA 90012

Generator's Site Address (if different than mailing address)
[illegible] La Brea
Los Angeles CA 90017

6 Transporter 1 Company Name
CHEAP TRANSP

7 US EPA ID Number
CAD0982[illegible]440

8 Transporter 2 Company Name

9 US EPA ID Number

10 Designated Facility Name and Site Address
South Yuba County Landfill
[illegible] South Avenue 3E
[illegible] 34 [illegible] [illegible] 581 9345

11 US EPA ID Number
A[illegible]0036[illegible]

12 Waste No.	13 Quantity	14 Unit Wt./Vol.	15 Waste Codes
1 RQ NON Hazardous Waste Solid (Lead Impacted Soil)	16	Y	
2			
3			
4			

14 Special Handling Instructions and Additional Information
Profile#C-1910

15 GENERATOR'S CERTIFICATION: I hereby declare that the contents of this consignment are fully and accurately described above by the proper shipping name, and are classified, packaged, marked and labeled/placarded, and are in all respects in proper condition for transport according to applicable international and national governmental regulations. If export shipment and I am the Primary Exporter, I certify that the contents of this consignment conform to the terms of the attached EPA Acknowledgment of Consent. I certify that the waste minimization statement identified in 40 CFR 262.27(a) (if I am a large quantity generator) or (b) (if I am a small quantity generator) is true.

Generator's/Offeror's Printed/Typed Name [illegible] Signature [illegible] Month 12 Day 9 Year 22

16 International Shipments ☐ Import to US ☐ Export from US Port of entry/exit:
Transporter signature (for exports only):

17 Transporter Acknowledgment of Receipt of Materials
Transporter 1 Printed/Typed Name [illegible] Signature [illegible] Month 12 Day 12 Year 22

Transporter 2 Printed/Typed Name Signature Month Day Year

18 Discrepancy
18a Discrepancy Indication Space ☐ Quantity ☐ Type ☐ Residue ☐ Partial Rejection ☐ Full Rejection
Manifest Reference Number:

18b Alternate Facility (or Generator) US EPA ID Number

Facility's Phone:

18c Signature of Alternate Facility (or Generator) Month Day Year

19 Hazardous Waste Management Method Codes (i.e., codes for hazardous waste treatment, disposal, and recycling systems)
1. 2. 3. 4.

20 Designated Facility Owner or Operator: Certification of receipt of hazardous materials covered by this manifest except as noted in Item 18a
Printed/Typed Name Signature Month Day Year

DESIGNATED FACILITY — TRANSPORTER — GENERATOR

EPA Form 8700-22 (Rev. 9-01) Previous editions are obsolete.

GENERATOR'S INITIAL COPY

Please print or type.

Form Approved. OMB No. 2050-0039

UNIFORM HAZARDOUS WASTE MANIFEST

1. Generator ID Number: [illegible]
2. Page 1 of 1
3. Emergency Response Phone: [illegible]
4. Manifest Tracking Number: 015363668 FLE

5. Generator's Name and Mailing Address:
City of Los Angeles, Department of Public Works
Bureau of Engineering 505 Santa Fe Avenue
City of Los Angeles Ca. 90013
Generator's Phone: [illegible]

Generator's Site Address (if different than mailing address):
100 Santa Fe Avenue
Los Angeles Ca. 90013

6. Transporter 1 Company Name: Kenan Transport
U.S. EPA ID Number: [illegible]

7. Transporter 2 Company Name:
U.S. EPA ID Number:

8. Designated Facility Name and Site Address:
South Yuma County Landfill
[illegible] South Avenue 11
Facility's Phone: [illegible]
U.S. EPA ID Number: [illegible]

No.	9a. U.S. DOT Description (including Proper Shipping Name, Hazard Class, ID Number, and Packing Group, if any)	10. Contents: No.	Type	11. Total Quantity	12. Unit Wt./Vol.	13. Waste Codes
1	[illegible] Hazardous Waste Solid (Lead Impacted Soil)	001	DT	16	Y	01
2						
3						
4						

14. Special Handling Instructions and Additional Information:
Profile#C-5866
Mass approximate safety clothing

15. GENERATOR'S/OFFEROR'S CERTIFICATION: [illegible]

Generator's Offeror's Printed/Typed Name: [illegible] Signature: [illegible] Month 12 Day 19 Year 22

16. International Shipments: ☐ Import to U.S. ☐ Export from U.S. Port of Entry/Exit: Date Leaving U.S.:
Transporter Signature (for exports only):

17. Transporter Acknowledgment of Receipt of Materials:
Transporter 1 Printed/Typed Name: [illegible] Signature: [illegible] Month 12 Day 19 Year 22
Transporter 2 Printed/Typed Name: Signature: Month Day Year

18. Discrepancy:
18a. Discrepancy Indication Space: ☐ Quantity ☐ Type ☐ Residue ☐ Partial Rejection ☐ Full Rejection
Manifest Reference Number:
18b. Alternate Facility (or Generator): U.S. EPA ID Number:
Facility's Phone:
18c. Signature of Alternate Facility (or Generator): Month Day Year

19. Hazardous Waste Report Management Method Codes (i.e., codes for hazardous waste treatment, disposal, and recycling systems):
1. 2. 3. 4.

20. Designated Facility Owner or Operator: Certification of receipt of hazardous materials covered by this manifest except as noted in Item 18a:
Printed/Typed Name: Signature: Month Day Year

GENERATOR

INT'L

TRANSPORTER

DESIGNATED FACILITY

EPA Form 8700-22 (Rev. 12-17) Previous editions are obsolete.

GENERATOR'S INITIAL COPY

UNIFORM HAZARDOUS WASTE MANIFEST

1. Generator ID Number: CACD015969251

Page 1 of 1

Information in the shaded areas is not required by federal law.

4. Manifest Tracking Number: 015369666 FLE

GENERATOR

5. Generator's Name and Mailing Address:
Dept of Los Angeles Department of Public Works
Bureau of Engineering 245 Palos Verdes Avenue
City of Los Angeles Ca. 90013

Generator's Site Address (if different than mailing address):
100 Yucca Pk Avenue
Los Angeles Ca. 90013

6. Transporter 1 Company Name: Tetra Tech

U.S. EPA ID Number: CAD982487496

7. Transporter 2 Company Name:

U.S. EPA ID Number:

8. Designated Facility Name and Site Address:
South Yuma County Landfill
Avenue 58 Avenue 38
Yuma, Arizona 85365 928-341-9400

U.S. EPA ID Number: AZD980406840

No.	9. US DOT Description (including Proper Shipping Name, Hazard Class, and ID Number)	10. Containers No.	10. Containers Type	11. Total Quantity	12. Unit Wt./Vol.	13. Waste Codes
1	NON RCRA Hazardous Waste Solid (Lead Impacted Soil)	001	DT	36	Y	
2						
3						
4						

14. Special Handling Instructions and Additional Information:
Profile#C-6946

15. GENERATOR'S CERTIFICATION: I certify the materials described above on this manifest are not subject to federal regulations for reporting proper disposal of Hazardous Waste.

Generator's/Offeror's Printed/Typed Name: Mario Lopez
Signature:
Month: 12 Day: 19 Year: 22

16. International Shipments: Import to U.S. Export from U.S. Port of entry/exit: Date leaving U.S.:

TRANSPORTER

17. Transporter Acknowledgment of Receipt of Materials

Transporter 1 Printed/Typed Name: Archie Gamboa Jr.
Signature:
Month: 12 Day: 22 Year:

Transporter 2 Printed/Typed Name:
Signature:
Month: Day: Year:

18. Discrepancy

18a. Discrepancy Indication Space: Quantity Type Residue Partial Rejection Full Rejection

Manifest Reference Number:

DESIGNATED FACILITY

18b. Alternate Facility (or Generator)

U.S. EPA ID Number:

Facility's Phone:

18c. Signature of Alternate Facility (or Generator)

Month: Day: Year:

19. Hazardous Waste Report Management Method Codes (i.e., codes for hazardous waste treatment, disposal, and recycling systems):

1. 2. 3. 4.

20. Designated Facility Owner or Operator: Certification of receipt of hazardous materials covered by this manifest except as noted in Item 18a

Printed/Typed Name:
Signature:
Month: Day: Year:

EPA Form 8700-22 (Rev. 9-01) Previous editions obsolete

GENERATOR'S INITIAL COPY

Please print or type

Form Approved. OMB No. 2050-0039

UNIFORM HAZARDOUS WASTE MANIFEST

1. Generator's US EPA ID No. CAC003385231

Manifest Tracking Number 015[illegible]085 FLE

2. Page 1 of 1

3. Generator's Name and Mailing Address
City of Los Angeles Department of Public Works
Bureau of Engineering SAS tasks for Sesame
City of Los Angeles Ca. 90012

4. Generator's Site Address (if different than mailing address)
520 Yucca St Sesame
Los Angeles Ca. 90012

5. Transporter 1 Company Name
Clean-Tech Inc

6. US EPA ID Number
CAR000185459

7. Transporter 2 Company Name

8. US EPA ID Number

9. Designated Facility Name and Site Address
South Yuba County Landfill
[illegible] Basin Avenue SE

10. US EPA ID Number
ACD003020990

11.	12. Container		13. Total Quantity	14. Unit Wt./Vol.	15. Waste Codes
	No.	Type			
1.	005 NON Hazardous Waste Solid Liquefied Soil	HOI	1	16 Y	
2.					
3.					
4.					

16. Special Handling Instructions and Additional Information
Profile#C-6816
Wear appropriate safety clothing

17. GENERATOR'S CERTIFICATION: I hereby declare that the contents of this consignment are fully and accurately described above by the proper shipping name and are classified, packaged, marked and labeled/placarded, and are in all respects in proper condition for transport by [illegible] according to applicable international and national governmental regulations. If export shipment and I am the Primary Exporter I certify that the contents of this consignment conform to the terms of the attached EPA Acknowledgment of Consent.
I certify that the waste minimization statement identified in 40 CFR 262.27(a) (if I am a large quantity generator) or (b) (if I am a small quantity generator) is true.

Generator's/Offeror's Printed/Typed Name: [illegible] Signature: [illegible] Month 12 Day 19 Year 22

18. International Shipments: ☐ Import to U.S. ☐ Export from U.S. Port of entry/exit:
Transporter signature (for exports only): Date leaving U.S.:

19. Transporter Acknowledgment of Receipt of Materials
Transporter 1 Printed/Typed Name: Josh Evans Signature: [signature] Month 12 Day 19 Year 22

Transporter 2 Printed/Typed Name: Signature: Month Day Year

20. Discrepancy
20a. Discrepancy Indication Space: ☐ Quantity ☐ Type ☐ Residue ☐ Partial Rejection ☐ Full Rejection
Manifest Reference Number:

20b. Alternate Facility (or Generator): US EPA ID Number:

20c. Signature of Alternate Facility (or Generator): Month Day Year

21. Hazardous Waste Report Management Method Codes (i.e., codes for hazardous waste treatment, disposal, and recycling systems)
1. 2. 3. 4.

22. Designated Facility Owner or Operator: Certification of receipt of hazardous materials covered by this manifest except as noted in Item 20a
Printed/Typed Name: Signature: Month Day Year

EPA Form 8700-22 (Rev. 03-17) Previous editions are obsolete

GENERATOR'S INITIAL COPY

GENERATOR | TRANSPORTER | DESIGNATED FACILITY

Form Approved OMB No. 2050-0039

UNIFORM HAZARDOUS WASTE MANIFEST	2 Page 1 of 1	3 Emergency Response Phone	4 Manifest Tracking Number 015359664 FLE	

5 Generator's Name and Mailing Address
City of Los Angeles Department of Public Works
Bureau of Sanitation 500 South Yuma Avenue
City of Los Angeles CA, 90013

Generator's Site Address (if different than mailing address)
500 South Yuma Avenue
Los Angeles CA 90013

6 Transporter 1 Company Name: Republic Services

US EPA ID Number: CAD981382703

7 Transporter 2 Company Name:

US EPA ID Number:

8 Designated Facility Name and Site Address
South Yuma County Landfill
500 South Avenue 3E
Yuma AZ 85365 (928) 341-9200

US EPA ID Number: AZD980816698

9a HM	9b U.S. DOT Description (including Proper Shipping Name, Hazard Class, ID Number, and Packing Group (if any))	10 Containers No.	10 Containers Type	11 Total Quantity	12 Unit Wt./Vol.	13 Waste Codes
	1. NON RCRA Hazardous Waste Solid (Dust Impacted Soil)	001	DT	26	Y	
	2.					
	3.					
	4.					

14 Special Handling Instructions and Additional Information
Profile#C-1864

15 GENERATOR'S/OFFICER'S CERTIFICATION: I hereby declare that the contents of this consignment are fully and accurately described above by the proper shipping name, and are classified, packaged, marked and labeled/placarded, and are in all respects in proper condition for transport by highway according to applicable international and national governmental regulations. If export shipment and I am the Primary Exporter, I certify that the contents of this consignment conform to the terms of the attached EPA Acknowledgment of Consent.
I certify that the waste minimization statement identified in 40 CFR 262.27(a) (if I am a large quantity generator) or (b) (if I am a small quantity generator) is true.

Generator's/Offeror's Printed/Typed Name: Yuma Diaz — Signature: [signature] — Month: 12 — Day: 19 — Year: 22

16 International Shipments: ☐ Import to US ☐ Export from US — Port of entry/exit:
Transporter signature (for exports only): — Date leaving U.S.:

17 Transporter Acknowledgment of Receipt of Materials
Transporter 1 Printed/Typed Name: [illegible] — Signature: [signature] — Month: 12 — Day: 19 — Year: 22
Transporter 2 Printed/Typed Name: — Signature: — Month: — Day: — Year:

18 Discrepancy
18a Discrepancy Indication Space: ☐ Quantity ☐ Type ☐ Residue ☐ Partial Rejection ☐ Full Rejection
Manifest Reference Number: — U.S. EPA ID Number:

18b Alternate Facility (or Generator)
Facility's Phone:
18c Signature of Alternate Facility (or Generator) — Month: — Day: — Year:

19 Hazardous Waste Report Management Method Codes (i.e., codes for hazardous waste treatment, disposal, and recycling systems)
1. — 2. — 3. — 4.

20 Designated Facility Owner or Operator: Certification of receipt of hazardous materials covered by the manifest except as noted in Item 18a
Printed/Typed Name: — Signature: — Month: — Day: — Year:

EPA Form 8700-22 (Rev. 12-11) Previous editions are obsolete. — GENERATOR'S INITIAL COPY

Please print or type.

Form Approved. OMB No. 2050-0039

UNIFORM HAZARDOUS WASTE MANIFEST

1. Generator's US EPA ID No.

2. Page 1 of

3. Emergency Response Phone

4. Manifest Tracking No. 015269663 FLE

5. Generator's Name and Mailing Address

Generator's Site Address (if different than mailing address)

6. Transporter 1 Company Name

7. Transporter 2 Company Name

8. Designated Facility Name and Site Address

9. U.S. DOT Description (including Proper Shipping Name, Hazard Class, ID Number, and Packing Group (if any))

10. Containers No. / Type

11. Total Quantity

12. Unit Wt./Vol.

13. Waste Codes

14. Special Handling Instructions and Additional Information

15. GENERATOR'S/OFFEROR'S CERTIFICATION: I hereby declare that the contents of this consignment are fully and accurately described above by the proper shipping name, and are classified, packaged, marked and labeled/placarded, and are in all respects in proper condition for transport according to applicable international and national governmental regulations. If export shipment and I am the Primary Exporter, I certify that the contents of this consignment conform to the terms of the attached EPA Acknowledgment of Consent.

I certify that the waste minimization statement identified in 40 CFR 262.27(a) (if I am a large quantity generator) or (b) (if I am a small quantity generator) is true.

Generator's/Offeror's Printed/Typed Name

Signature

Month / Day / Year

16. International Shipments

Import to U.S.

Export from U.S.

Port of entry/exit:

Transporter signature (for exports only):

17. Transporter Acknowledgment of Receipt of Materials

Transporter 1 Printed/Typed Name

Signature

Month / Day / Year

Transporter 2 Printed/Typed Name

Signature

Month / Day / Year

18. Discrepancy

18a. Discrepancy Indication Space

Quantity

Type

Residue

Partial Rejection

Full Rejection

Manifest Reference Number:

18b. Alternate Facility (or Generator)

U.S. EPA ID Number

Facility's Phone:

18c. Signature of Alternate Facility (or Generator)

Month / Day / Year

19. Hazardous Waste Report Management Method (codes for hazardous waste handled at your site)

1.

2.

3.

4.

20. Designated Facility Owner or Operator: Certification of receipt of hazardous materials covered by this manifest except as noted in Item 18a

Printed/Typed Name

Signature

Month / Day / Year

EPA Form 8700-22 (Rev. 12-05) Previous editions are obsolete.

GENERATOR'S INITIAL COPY

Please print or type.

Form Approved. OMB No. 2050-0039

UNIFORM HAZARDOUS WASTE MANIFEST	2. Generator ID Number CAD983691701	3. Page 1 of	4. Emergency Response Phone	5. Manifest Tracking Number 015369862 FLE

GENERATOR

6. Generator's Name and Mailing Address
City of Los Angeles, Department of Public Works
Bureau of Engineering 900 Santa Fe Avenue
City of Los Angeles Ca 90012

Generator's Phone (

7. Transporter 1 Company Name: Waste Solutions

8. US EPA ID Number: CAD981827279

9. Transporter 2 Company Name

10. US EPA ID Number

11. Designated Facility Name and Site Address
South Yuma County Landfill
1650 South Avenue 3E
Facility's Phone: 928 [illegible]

12. US EPA ID Number: AZD000506780

No.	13. US DOT Description (including Proper Shipping Name, Hazard Class, ID Number, and Packing Group (if any))	14. Containers No.	Type	15. Total Quantity	16. Unit Wt./Vol.	17. Waste Codes
1	NON RCRA Hazardous Waste Solid (Lead Impacted Soil)	001	DT	15	Y	
2						
3						
4						

14. Special Handling Instructions and Additional Information
PROFILE#C-630A

15. GENERATOR'S/OFFEROR'S CERTIFICATION: I hereby declare that the contents of this consignment are fully and accurately described above by proper shipping name and are classified, packaged, marked and labeled/placarded, and are in all respects in proper condition for transport according to applicable international and national governmental regulations. If export shipment and I am the Primary Exporter I certify that the contents of this consignment conform to the terms of the attached EPA Acknowledgment of Consent.
I certify that the waste minimization statement identified in 40 CFR 262.27(a) (if I am a large quantity generator) or (b) (if I am a small quantity generator) is true.

Printed/Typed Name: [illegible] Signature: [illegible] Month 12 Day 19 Year 12

TRANSPORTER

16. International Shipments: ☐ Import to U.S. ☐ Export from U.S. Port of entry/exit:
Transporter signature (for exports only): Date leaving U.S.:

17. Transporter Acknowledgment of Receipt of Materials

Transporter 1 Printed/Typed Name: [illegible] Signature: [illegible] Month 12 Day 19 Year 12

Transporter 2 Printed/Typed Name: Signature: Month Day Year

DESIGNATED FACILITY

18. Discrepancy
18a. Discrepancy Indication Space: ☐ Quantity ☐ Type ☐ Residue ☐ Partial Rejection ☐ Full Rejection
Manifest Reference Number:

18b. Alternate Facility (or Generator)
U.S. EPA ID Number:
Facility's Phone:

18c. Signature of Alternate Facility (or Generator) Month Day Year

19. Hazardous Waste Report Management Method Codes (i.e., codes for hazardous waste treatment, disposal, and recycling systems)
1. 2. 3. 4.

20. Designated Facility Owner or Operator: Certification of receipt of hazardous materials covered by this manifest except as noted in Item 18a
Printed/Typed Name: Signature: Month Day Year

EPA Form 8700-22 (Rev. 12-11) Previous editions are obsolete.

GENERATOR'S INITIAL COPY

UNIFORM HAZARDOUS WASTE MANIFEST

FLE

GENERATOR'S INITIAL COPY

Please print or type.

Form Approved. OMB No. 2050-0039

UNIFORM HAZARDOUS WASTE MANIFEST	1. Generator ID Number: CAG903153301	2. Page 1 of 1	3. Emergency Response Phone: [illegible]	4. Manifest Tracking Number: 015369680 FLE

5. Generator's Name and Mailing Address:
City of Los Angeles Department of Public Works
Bureau of Engineering 635 South 5th Avenue
City of Los Angeles Ca. 90013
Generator's Site Address (if different than mailing address):
[illegible] Waste Pit Avenue
Los Angeles Ca. 90013

6. Transporter 1 Company Name: Zamora Trucking
U.S. EPA ID Number: CA[illegible]

7. Transporter 2 Company Name:
U.S. EPA ID Number:

8. Designated Facility Name and Site Address:
South Yuma County Landfill
[illegible] South Avenue 10
Facility's Phone: [illegible]
U.S. EPA ID Number: AZR000504910

No.	9. U.S. DOT Description (Including Proper Shipping Name, Hazard Class, ID Number, and Packing Group, if any)	10. Containers No.	Type	11. Total Quantity	12. Unit Wt./Vol.	13. Waste Codes
	NON RCRA Hazardous Waste Solid (Lead Impacted Soil)	001	[illegible]	[illegible]	[illegible]	[illegible]

14. Special Handling Instructions and Additional Information:
Profile#C-6[illegible]
[illegible]

15. GENERATOR'S/OFFEROR'S CERTIFICATION: I hereby declare that the contents of this consignment are fully and accurately described above by the proper shipping name, and are classified, packaged, marked and labeled, and are in all respects in proper condition for transport according to applicable international and national governmental regulations. If export shipment and I am the Primary Exporter, I certify that the contents of this consignment conform to the terms of the attached EPA Acknowledgment of Consent.
I certify that the waste minimization statement identified in 40 CFR 262.27 (a) (if I am a large quantity generator) or (b) (if I am a small quantity generator) is true.

Generator's Name or Printed/Typed Name: [illegible] Signature: [illegible] Month: 7 Day: 9 Year: 22

16. Transport of Shipment: ☐ Export to U.S. ☐ Export from U.S. Port of Entry/Exit: Date Leaving U.S.
Transporter Signature (for exports only):

17. Transporter Acknowledgment of Receipt of Materials
Transporter 1 Printed/Typed Name: [illegible] Signature: [illegible] Month: 7 Day: 9 Year: 22
Transporter 2 Printed/Typed Name: Signature: Month: Day: Year:

18. Designated
18a. Designated Facility Name: ☐ Operator ☐ Site ☐ Planning ☐ Parcel Planning ☐ Full Planning
Manifest Tracking Number:

18b. Alternate Facility (or Generator): U.S. EPA ID Number:
Facility's Phone:

18c. Signature of Alternate Facility (or Generator): Month: Day: Year:

19. Hazardous Waste Report Management Method Codes (i.e., codes for hazardous waste treatment, disposal, and recycling systems):
1. 2. 3. 4.

20. Designated Facility Owner or Operator: Certification of receipt of hazardous materials covered by the manifest except as noted in Item 18a.
Printed/Typed Name: Signature: Month: Day: Year:

EPA Form 8700-22 (Rev. 12-11) Previous editions are obsolete.

GENERATOR'S INITIAL COPY

Form Approved OMB No. 2040-0039

UNIFORM HAZARDOUS WASTE MANIFEST	1. Generator ID Number	2. Page 1 of 1	3. Emergency Response Phone	4. Manifest Tracking Number
	[illegible]	01	[illegible]	015363691 FLE

5. Generator's Name and Mailing Address
City of Los Angeles, Department of Public Works,
Bureau of Engineering, 540 Fields Co. Avenue
City of Los Angeles Co. 90013
Generator's Phone: [illegible]

Generator's Site Address (if different than mailing address)
[illegible]
Los Angeles Co. [illegible]

6. Transporter 1 Company Name: VAZ Transportation
U.S. EPA ID Number: [illegible]

7. Transporter 2 Company Name:
U.S. EPA ID Number:

8. Designated Facility Name and Site Address
South Vista County Landfill
[illegible]
Facility Phone: [illegible]
U.S. EPA ID Number: [illegible]

Item	9. U.S. DOT Description (including Proper Shipping Name, Hazard Class, ID Number, and Packing Group if any)	10. Containers No.	Type	11. Total Quantity	12. Unit Wt./Vol.	13. Waste Codes
	NON RCRA Hazardous Waste Solid (Lead Impacted Soil)	[illegible]	[illegible]	14	Y	[illegible]

14. Special Handling Instructions and Additional Information
Profile#C-6866
Make appropriate safety plan

15. GENERATOR'S/MARKETER'S CERTIFICATION: I hereby declare that the contents of this consignment are fully and accurately described above by the proper shipping name and are classified, packaged, marked and labeled/placarded, and are in all respects in proper condition for transport accordingly to applicable international and national governmental regulations. If export shipment and I am the Primary Exporter, I certify that the contents of this consignment conform to the terms of the attached EPA Acknowledgment of Consent.
I certify that the waste minimization statement identified in 40 CFR 262 Ch. 1 is a true and accurate statement to the [illegible]

Generator's Printed Name: [illegible] Signature: [illegible] Month 3 Day 9 Year 22

16. International Shipments: ☐ Import to U.S. ☐ Export from U.S. Port of Entry/Exit: _____
Transporter signature (for exports only): _____

17. Transporter Acknowledgment of Receipt of Materials
Transporter 1 Printed/Typed Name: Victor Rodriguez Signature: [signature] Month 3 Day 9 Year 22
Transporter 2 Printed/Typed Name: Signature: Month Day Year

18. Discrepancy
18a. Discrepancy Indication Space: ☐ Quantity ☐ Type ☐ Residue ☐ Partial Rejection ☐ Full Rejection
Manifest Reference Number:

18b. Alternate Facility (or Generator): U.S. EPA ID Number:
Facility's Phone:

18c. Signature of Alternate Facility (or Generator): Month Day Year

19. Hazardous Waste Report Management Method Codes (i.e., waste for hazardous waste treatment, disposal, and recycling systems):

20. Designated Facility Owner or Operator Certification of receipt of hazardous materials covered by the manifest except as noted in Item 18a
Printed/Typed Name: Signature: Month Day Year

EPA Form 8 NC-22 Rev. 10-17. Previous editions are obsolete.

GENERATOR'S INITIAL COPY

UNIFORM HAZARDOUS WASTE MANIFEST				015369692 FLE

Generator's Name and Mailing Address

Dept of Public Works
Bureau of Engineering 900 South Fremont Ave
City of Los Angeles CA 90012

Generator's Site Address (if different than mailing address)

1st Roads to Various
Los Angeles Co Roads

Generator's Phone

Transporter 1 Company Name

Sunset Trans County Landfill

US EPA ID Number

Transporter 2 Company Name

US EPA ID Number

Designated Facility Name and Site Address	US EPA ID Number
Sunset Trans County Landfill [illegible] Avenue SE [illegible] NM 87507 (505) 241-8300	

	Waste Description	Containers No.	Type	Total Quantity	Unit Wt./Vol.	Waste Codes
1	NON RCRA Hazardous Waste Solid (Lead Impacted Soil)	001	DT	18	Y	
2						
3						
4						

13. Special Handling Instructions and Additional Information

Profile 1e4C-6460

14. GENERATOR'S/OFFEROR'S CERTIFICATION: I hereby declare that the contents of this consignment are fully and accurately described above by the proper shipping name, and are classified, packaged, marked and labeled/placarded, and are in all respects in proper condition for transport according to applicable international and national governmental regulations. If export shipment and I am the Primary Exporter, I certify that the contents of this consignment conform to the terms of the attached EPA Acknowledgment of Consent. I certify that the waste minimization statement identified in 40 CFR 262.27(a) (if I am a large quantity generator) or (b) (if I am a small quantity generator) is true.

Generator's/Offeror's Printed/Typed Name: [illegible] Signature: [illegible] Month: 12 Day: 19 Year: 12

15. International Shipments: ☐ Import to US ☐ Export from US Port of entry/exit:

Transporter signature (for exports only):

16. Transportation Acknowledgment of Receipt of Materials

Transporter 1 Printed/Typed Name: [illegible] Signature: [illegible] Month: 12 Day: 19 Year: 12

Transporter 2 Printed/Typed Name: Signature: Month: Day: Year:

17. Discrepancy

17a. Discrepancy Indication Space: ☐ Quantity ☐ Type ☐ Residue ☐ Partial Rejection ☐ Full Rejection

Manifest Reference Number:

17b. Alternate Facility (or Generator) US EPA ID Number

Facility's Phone:

17c. Signature of Alternate Facility (or Generator) Month: Day: Year:

18. Designated Facility Owner or Operator: Certification of receipt of hazardous materials covered by this manifest except as noted in Item 18a

Printed/Typed Name: Signature: Month: Day: Year:

EPA Form 8700-22 (Rev. 9-01) Previous editions are obsolete.

GENERATOR'S INITIAL COPY

Please Print or Type

Form Approved OMB No. 2050-0039

UNIFORM HAZARDOUS WASTE MANIFEST

1. Generator's Number: [illegible]
2. Page 1 of 1
3. Emergency Response Phone: [illegible]
4. Manifest Tracking Number: 015[illegible]3695 FLE

5. Generator's Name and Mailing Address:
City of Los Angeles Department of Public Works
Bureau of Engineering 555 Ramirez St Rm 1000
City of Los Angeles Ca. 90012
Generator's Phone: [illegible]

Generator's Site Address (if different than mailing address):
[illegible] Ramirez St Rm
Los Angeles Ca. 90012

6. Transporter 1 Company Name: [illegible] Trucking Inc HE3
U.S. EPA ID Number: CAR000 285346

7. Transporter 2 Company Name:
U.S. EPA ID Number:

8. Designated Facility Name and Site Address:
South Yuba County Landfill
[illegible] South Avenue SE
[illegible]
Facility's Phone: [illegible]
U.S. EPA ID Number: [illegible]

Item	9. U.S. DOT Description (including Proper Shipping Name, Hazard Class, ID Number, and Packing Group, if any)	10. Containers No.	Type	11. Total Quantity	12. Unit Wt./Vol.	13. Waste Codes
1.	RQ RCRA Hazardous Waste Solid (Lead Impacted Soil)	001	CT	55	Y	[illegible]
2.						
3.						
4.						

14. Special Handling Instructions and Additional Information:
Profile #C-6866
Wear appropriate safety [illegible]

15. GENERATOR'S/OFFICER'S CERTIFICATION: I hereby declare that the contents of this consignment are fully and accurately described above by the proper shipping name, and are classified, packaged, marked and labeled/placarded, and are in all respects in proper condition for transport according to applicable international and national governmental regulations. If export shipment and I am the Primary Exporter, I certify that the contents of this consignment conform to the terms of the attached EPA Acknowledgment of Consent.
I certify that the waste minimization statement identified in 40 CFR 262.27(a) (if I am a large quantity generator) or (b) (if I am a small quantity generator) is true.

Generator's/Primary Exporter Name: [illegible] Signature: [illegible] Month: 3 Day: 9 Year: 22

16. Transporter Signature: ☐ Import to U.S. ☐ Export from U.S. Port of Entry/Exit:
Transporter Signature for Waste Type: Date Leaving U.S.:

17. Transporter Acknowledgment of Receipt of Materials:
Transporter 1 Printed/Typed Name: Marco Castro Signature: Marco Castro Month: 3 Day: 9 Year: 22
Transporter 2 Printed/Typed Name: Signature: Month: Day: Year:

18. Discrepancy:
18a. Discrepancy Indication Space: ☐ Quantity ☐ Type ☐ Residue ☐ Partial Rejection ☐ Full Rejection
Manifest Reference Number:
18b. Alternate Facility (or Generator): U.S. EPA ID Number:
Facility's Phone:
18c. Signature of Alternate Facility (or Generator): Month: Day: Year:

19. Hazardous Waste Report Management Method Codes (i.e., codes for hazardous waste treatment, disposal, and recycling systems):
1. 2. 3. 4.

20. Designated Facility Owner or Operator: Certification of receipt of hazardous materials covered by this manifest except as noted in Item 18a:
Printed/Typed Name: Signature: Month: Day: Year:

EPA Form 8700-22 (Rev. 12-17) Previous editions are obsolete.

GENERATOR'S INITIAL COPY

Form Approved. OMB No. 2050-0039

Please print or type.

UNIFORM HAZARDOUS WASTE MANIFEST	1. Generator's US EPA ID Number: CAC003159731	2. Page 1 of: 01	3. Emergency Response Phone: 213-694-4277	4. Manifest Tracking Number: 015369694 FLE

GENERATOR

5. Generator's Name and Mailing Address: City of Los Angeles Department of Public Works, Bureau of Engineering, 201 North Fe Avenue, City of Los Angeles Ca. 90013

Generator's Site Address (if different than mailing address): 150 South Av Avenue, Los Angeles Ca. 90013

6. Transporter 1 Company Name: Mann Trucking Inc. #167

U.S. EPA ID Number: CAD000230425

7. Transporter 2 Company Name:

U.S. EPA ID Number:

8. Designated Facility Name and Site Address: South Yuma County Landfill, 15930 South Avenue 18, Yuma, AZ 85365 (928) 341-8000

U.S. EPA ID Number: AZD000626980

Item No.	9. Waste Shipping Name and Description	10. Containers No.	Type	11. Total Quantity	12. Unit WT/Vol	13. Waste Codes
	NON RCRA Hazardous Waste Solid (Lead Impacted Soil)	002	CT	27	Y	

14. Special Handling Instructions and Additional Information

Profile#C-6860
Wear appropriate safety clothing

15. GENERATOR'S/OFFEROR'S CERTIFICATION: I hereby declare that the contents of this consignment are fully and accurately described above by proper shipping name and are classified, packaged, marked and labeled/placarded, and are in all respects in proper condition for transport according to applicable international and national government regulations. If export shipment and I am the Primary Exporter, I certify that the contents of this consignment conform to the terms of the attached EPA Acknowledgment of Consent.
I certify that the waste minimization statement identified in 40 CFR 262.27(a) (if I am a large quantity generator) or (b) (if I am a small quantity generator) is true.

Printed/Typed Name: [illegible] | Signature: [illegible] | Month 12 Day 19 Year 22

INT'L

16. International Shipments: ☐ Import to U.S. ☐ Export from U.S. Port of entry/exit:
Transporter signature (for exports only):

TRANSPORTER

17. Transporter Acknowledgment of Receipt of Materials
Transporter 1 Printed/Typed Name: [illegible] | Signature: [illegible] | Month 12 Day 19 Year 22

Transporter 2 Printed/Typed Name: | Signature: | Month Day Year

DESIGNATED FACILITY

18. Discrepancy
18a. Discrepancy Indication Space: ☐ Quantity ☐ Type ☐ Residue ☐ Partial Rejection ☐ Full Rejection

Manifest Reference Number:

18b. Alternate Facility (or Generator): U.S. EPA ID Number:

Facility's Phone:

18c. Signature of Alternate Facility (or Generator): Month Day Year

19. Hazardous Waste Report Management Method (Code i.e., codes for hazardous waste treatment, disposal, and recycling systems)

20. Designated Facility Owner or Operator: Certification of receipt of hazardous materials covered by the manifest except as noted in Item 18a

Printed/Typed Name: | Signature: | Month Day Year

EPA Form 8700-22 (Rev. 12-05) Previous editions are obsolete.

GENERATOR'S INITIAL COPY

Please print or type.

Form Approved OMB No. 2050-0039

UNIFORM HAZARDOUS WASTE MANIFEST

1. Generator ID Number: CA0000137111

2. Page 1 of 1

3. Emergency Response Phone: 213-241-4217

4. Manifest Tracking Number: 015360969 JJK FLE

5. Generator's Name and Mailing Address: City of Los Angeles Engineering & Facility Maint. Bureau of Engineering 200 North Spring St. Room 703 City of Los Angeles CA 90012

Generator's Phone: 213-485-4217

Generator's Site Address (if different than mailing address): 100 Wilshire Dr. Arcadia Los Angeles Co. 91006

6. Transporter 1 Company Name: Kuo Trucking

U.S. EPA ID Number: CAR000321313

7. Transporter 2 Company Name:

U.S. EPA ID Number:

8. Designated Facility Name and Site Address: South Kern County Landfill 14905 South Adams Rd Tehachapi CA 93561

U.S. EPA ID Number: AIR000020230

Facility's Phone: 661-822-3435

9a. HM	9b. U.S. DOT Description (including Proper Shipping Name, Hazard Class, ID Number, and Packing Group (if any))	10. Containers No.	10. Containers Type	11. Total Quantity	12. Unit Wt./Vol.	13. Waste Codes
	1. Non RCRA Hazardous Waste Solid (Lead Impacted Soil)	001	DT	10	Y	
	2.					
	3.					
	4.					

14. Special Handling Instructions and Additional Information: FacilityID-0366 Wear appropriate safety attire.

15. GENERATOR'S CERTIFICATION: I hereby certify that the contents of this consignment are fully and accurately described above by the proper shipping name, and are classified, packaged, marked and labeled/placarded, and are in all respects in proper condition for transport according to applicable international and national governmental regulations. If export shipment and I am the Primary Exporter, I certify that the contents of this consignment conform to the terms of the attached EPA Acknowledgment of Consent. I certify that the waste minimization statement identified in 40 CFR 262.27(a) (if I am a large quantity generator) or (b) (if I am a small quantity generator) is true.

Generator's/Offeror's Printed/Typed Name: [illegible] Signature: [illegible] Month: 12 Day: 9 Year: 22

16. International Shipments: ☐ Import to U.S. ☐ Export from U.S. Port of Entry/Exit:

Transporter signature (for exports only): Date leaving U.S.:

17. Transporter Acknowledgment of Receipt of Materials

Transporter 1 Printed/Typed Name: Nico Orlando Signature: [signature] Month: 12 Day: 9 Year: 22

Transporter 2 Printed/Typed Name: Signature: Month: Day: Year:

18. Discrepancy

18a. Discrepancy Indication Space: ☐ Quantity ☐ Type ☐ Residue ☐ Partial Rejection ☐ Full Rejection

Manifest Reference Number:

18b. Alternate Facility (or Generator): U.S. EPA ID Number:

Facility's Phone:

18c. Signature of Alternate Facility (or Generator): Month: Day: Year:

19. Hazardous Waste Report Management Method Codes (i.e., codes for hazardous waste treatment, disposal, and recycling systems):

1.	2.	3.	4.

20. Designated Facility Owner or Operator: Certification of receipt of hazardous materials covered by this manifest except as noted in Item 18a

Printed/Typed Name: Signature: Month: Day: Year:

DESIGNATED FACILITY — TRANSPORTER — INTL — GENERATOR

GENERATOR'S INITIAL COPY

Form Approved. OMB No. 2050-0039

UNIFORM HAZARDOUS WASTE MANIFEST	2. Generator ID Number CAC003159701	3. Page 1 of 1	4. Emergency Response Phone	5. Manifest Tracking Number 015369700 FLE

6. Generator's Name and Mailing Address
City of Los Angeles, Department of Public Works
Bureau of Engineering 203 Bonds for Sewer
City of Los Angeles Ca 90011

Generator's Site Address (if different than mailing address)
100 Santa Fe Avenue
Los Angeles Ca. 90012

7. Transporter 1 Company Name: [illegible] Scott

8. US EPA ID Number: CAR000182728

9. Transporter 2 Company Name

10. US EPA ID Number

11. Designated Facility Name and Site Address
South Yuba County Landfill
[illegible] Avenue SE
[illegible] (530) 741-6708

12. US EPA ID Number: CAD000626242

13. Waste No.	14. US DOT Description (including Proper Shipping Name, Hazard Class, ID Number, and Packing Group if any)	15. Containers: No.	Type	16. Total Quantity	17. Unit Wt./Vol.	18. Waste Codes
	1. NON RCRA Hazardous Waste Solid (Lead Impacted Soil)	001	DT	18	T	
	2.					
	3.					
	4.					

14. Special Handling Instructions and Additional Information
Profile#0-0365
Wear appropriate safety clothing

15. GENERATOR'S/OFFICER'S CERTIFICATION: I hereby declare that the contents of this consignment are fully and accurately described above by the proper shipping name and are classified, packaged, marked and labeled/placarded, and are in all respects in proper condition for transport according to applicable international and national government regulations. If export shipment and I am the Primary Exporter I certify that the contents of this consignment conform to the terms of the attached EPA Acknowledgment of Consent.
I certify that the waste minimization statement identified in 40 CFR 262.27(a) (if I am a large quantity generator) or (b) (if I am a small quantity generator) is true.

Generator's/Offeror's Printed/Typed Name: [illegible] Date: 12/10/22

17. Transporter Acknowledgment of Receipt of Materials
Transporter 1 Printed/Typed Name: [illegible] Signature: [illegible] Date: 12/10/22
Transporter 2 Printed/Typed Name: Signature: Date:

18. Discrepancy
18a. Discrepancy Indication Space: ☐ Quantity ☐ Type ☐ Residue ☐ Partial Rejection ☐ Full Rejection
Manifest Reference Number:

18b. Alternate Facility (or Generator)
US EPA ID Number
Facility's Phone:

18c. Signature of Alternate Facility (or Generator) Date:

19. Hazardous Waste Report Management Method Codes (i.e., codes for hazardous waste treatment, disposal, and recycling systems)
1. 2. 3. 4.

20. Designated Facility Owner or Operator: Certification of receipt of hazardous materials covered by this manifest except as noted in Item 18a
Printed/Typed Name: Signature: Date:

EPA Form 8700-22 (Rev. 12-05) Previous editions are obsolete.

GENERATOR'S INITIAL COPY

Please print or type

Form Approved. OMB No. 2050-0039

UNIFORM HAZARDOUS WASTE MANIFEST	1. Generator ID Number	2. Page 1 of	3. Emergency Response Phone	4. Manifest Tracking Number
	CACD983478788	01		01530970 FLE

5. Generator's Name and Mailing Address

City of Los Angeles Department of Public Works
Bureau of Engineering 201 North Fe Avenue
City of Los Angeles CA 90012

A. State Manifest Document Number

5. Transporter 1 Company Name — 6. US EPA ID Number

7. Transporter 2 Company Name — 8. US EPA ID Number

9. Designated Facility Name and Site Address — 10. US EPA ID Number

South Yuma County Landfill
14134 South Avenue 37
Roll AZ 85366 (928) 341 4100

11. US DOT Description (including Proper Shipping Name, Hazard Class, ID Number, and Packing Group if any)	12. Containers: No.	Type	13. Total Quantity	14. Unit Wt./Vol.	15. Waste Codes
1. 6M RCRA Hazardous Waste Solid (Lead Impacted Soil)	001	CF	15	Y	
2.					
3.					
4.					

16. Special Handling Instructions and Additional Information

Profile # 6-5256

17. GENERATOR'S/OFFICER'S CERTIFICATION: I hereby declare that the contents of this consignment are fully and accurately described above by the proper shipping name, and are classified, packaged, marked and labeled/placarded, and are in all respects in proper condition for transport according to applicable international and national governmental regulations. If export shipment and I am the Primary Exporter I certify that the contents of this consignment conform to the terms of the attached EPA Acknowledgment of Consent.
I certify that the waste minimization statement identified in 40 CFR 262.27(a) (if I am a large quantity generator) or (b) (if I am a small quantity generator) is true.

Printed/Typed Name — Signature — Month 12 | Day 10 | Year 12

18. International Shipments: ☐ Import to U.S. ☐ Export from U.S. — Port of entry/exit: ___ — Date leaving U.S.: ___

19. Transporter Acknowledgment of Receipt of Materials

Transporter 1 Printed/Typed Name — Signature — Month 12 | Day 10 | Year 12

Transporter 2 Printed/Typed Name — Signature — Month | Day | Year

20. Discrepancy

20a. Discrepancy Indication Space: ☐ Quantity ☐ Type ☐ Residue ☐ Partial Rejection ☐ Full Rejection

20b. Alternate Facility (or Generator) — 20c. US EPA ID Number

20d. Facility's Phone

20e. Signature of Alternate Facility (or Generator) — Month | Day | Year

21. Hazardous Waste Report Management Method Codes (i.e., codes for hazardous waste treatment, disposal, and recycling systems)

1.	2.	3.	4.

22. Designated Facility Owner or Operator: Certification of receipt of hazardous materials covered by the manifest except as noted in Item 20a

Printed/Typed Name — Signature — Month | Day | Year

EPA Form 8700-22 (Rev. 9/01) Previous editions are obsolete.

GENERATOR'S INITIAL COPY

Please print or type.

Form Approved. OMB No. 2050-0039

UNIFORM HAZARDOUS WASTE MANIFEST	2. Generator ID Number			015369702 FLE
	CAD981594702			

3. Generator's Name and Mailing Address
City of Los Angeles Department of Public Works
Bureau of Engineering 9th Floor Rm
City of Los Angeles Ca 90012
Generator's Phone (Include Area Code): 213-485-4277

Generator Site Address (if different than mailing address)
200 North Spring
Los Angeles Ca 90012

4. Generator's Company Name
A&A Trucking Inc 1023

U.S. EPA ID Number
CAD 982 [illegible] 346

5. Transporter 1 Company Name

6. US EPA ID Number

7. Transporter 2 Company Name

8. US EPA ID Number

9. Designated Facility Name and Site Address
South Yuma County Landfill
13304 South Avenue 11
Yuma, AZ 85365 (928) 342-0456

10. US EPA ID Number
AZD980704960

11. Waste Shipping Name and Description (including Proper Shipping Name, Hazard Class, ID Number, and Packing Group if any)	12. Containers No.	12. Containers Type	13. Total Quantity	14. Unit Wt./Vol.	15. Waste Codes
1. NON RCRA Hazardous Waste Solid (Lead Impacted Soil)	001	DT	16	Y	
2.					
3.					
4.					

14. Special Handling Instructions and Additional Information
Profile #C-1005
Wear appropriate safety clothing

15. GENERATOR'S/OFFICER'S CERTIFICATION: I hereby declare that the contents of this consignment are fully and accurately described above by proper shipping name and are classified, packaged, marked and labeled/placarded, and are in all respects in proper condition for transport according to applicable international and national governmental regulations. If export shipment and I am the Primary Exporter I certify that the contents of this consignment conform to the terms of the attached EPA Acknowledgment of Consent.
I certify that the waste minimization statement identified in 40 CFR 262.27(a) (if I am a large quantity generator) or (b) (if I am a small quantity generator) is true.

Generator's/Offeror's Printed/Typed Name: Fredric Rice
Signature: FR
Month 12 Day 10 Year 22

16. International Shipments: ☐ Import to U.S. ☐ Export from U.S. Port of entry/exit:
Transporter signature (for exports only):

17. Transporter Acknowledgment of Receipt of Materials

Transporter 1 Printed/Typed Name: Turco Costa
Signature: Turco Costa
Month 12 Day 10 Year 22

Transporter 2 Printed/Typed Name:
Signature:
Month Day Year

18. Discrepancy

18a. Discrepancy Indication Space: ☐ Quantity ☐ Type ☐ Residue ☐ Partial Rejection ☐ Full Rejection

Manifest Reference Number:

18b. Alternate Facility (or Generator)

U.S. EPA ID Number

Facility's Phone:

18c. Signature of Alternate Facility (or Generator)
Month Day Year

19. Hazardous Waste Report Management Method Code(s) (i.e., codes for hazardous waste treatment, disposal, and recycling systems)

1. 2. 3. 4.

20. Designated Facility Owner or Operator: Certification of receipt of hazardous materials covered by this manifest except as noted in Item 18a

Printed/Typed Name:
Signature:
Month Day Year

GENERATOR'S INITIAL COPY

EPA Form 8700-22 (Rev. 03-17) Previous editions are obsolete.

GENERATOR | TRANSPORTER PART 1 | DESIGNATED FACILITY

Form Approved OMB No. 2050-0039

UNIFORM HAZARDOUS WASTE MANIFEST	CAD 0315970	[illegible]	015369703 FLE

1. Generator's Name and Mailing Address: City of Los Angeles, Department of Public Works, Bureau of Engineering 200 North Fe Avenue, City of Los Angeles Ca. 90013

Generator's Site Address (if different than mailing address): 200 North Fe Avenue, Los Angeles Ca. 90013

2. Generator's Contact Name: VRZ Transportation

U.S. EPA ID Number: [illegible]

3. Generator's Contact Name:

U.S. EPA ID Number:

4. Designated Facility Name and Site Address: South Yuma County Landfill, [illegible] South Avenue W, [illegible] AZ [illegible]

Facility's Phone: [illegible]

U.S. EPA ID Number: [illegible]

No.	10. Description	11. Total Quantity	12. Unit Wt./Vol.	13. Waste Codes
1	NON RCRA Hazardous Waste Solid (Lead Impacted Soil)	[illegible]	[illegible]	[illegible]
2				
3				
4				

Profile #C-6866

Wear appropriate safety clothing.

Generator's Printed Type Name: [illegible] Signature: [illegible] Date: 2 10 22

Transporter Signature (for exports only): ☐ Exports ☐ Exports

Transporter Acknowledgment of Receipt of Materials

Transporter 1 Printed Type Name: Victor Rodriguez Signature: [illegible] Date: 2 10 22

Transporter 2 Printed Type Name: Signature: Date: Date: Date:

Discrepancy

Discrepancy Indication Space: ☐ Quantity ☐ Type ☐ Residue ☐ Partial Rejection ☐ Full Rejection

Manifest Reference Number:

Manifest Tracking Number:

Facility Name:

Signature of Manifest Tracking Number: Date: Date: Date:

Hazardous Waste Report Management Method Code (i.e., code for hazardous waste treatment, disposal, and recycling systems):

1	2	3	4

Designated Facility Owner or Operator Certification of Receipt of Hazardous Materials Covered by the Manifest Except as Noted in Item 18a

Printed Type Name: Signature: Date: Date: Date:

Form 8700-22 (Rev. 12-17) Previous editions are obsolete.

GENERATOR'S INITIAL COPY

Please print or type

Form Approved. OMB No. 2050-0039

UNIFORM HAZARDOUS WASTE MANIFEST	1. Generator ID Number	2. Page 1 of	3. Emergency Response Phone	4. Manifest Tracking Number
	CAC003159701	01	212-494-[illegible]	015369704 FLE

5. Generator's Name and Mailing Address
City of Los Angeles Department of Public Works
Bureau of Engineering 500 Santa Fe Avenue
City of Los Angeles Ca. 90012
Generator's Phone ( ) Satellite Mobile [illegible]

Generator's Site Address (if different than mailing address)
500 Santa Fe Avenue
Los Angeles Ca. 90012

6. Transporter 1 Company Name
Kelly Trucking

U.S. EPA ID Number
[illegible]

7. Transporter 2 Company Name

8. Designated Facility Name and Site Address
South Yuma County Landfill
10036 South Avenue 37
Yuma AZ 85365 (928) 342-2300
Facility Phone

U.S. EPA ID Number
[illegible]

Item No.	9. U.S. DOT Description (including Proper Shipping Name, Hazard Class, ID Number, and Packing Group (if any))	10. Containers No.	Type	11. Total Quantity	12. Unit Wt./Vol.	13. Waste Codes
1	RQ HCRA Hazardous Waste Solid (Lead Impacted Soil)	001	DT	16	Y	45
2						
3						
4						

14. Special Handling Instructions and Additional Information
Profile#C-6886
Wear appropriate safety clothing

15. GENERATOR'S/OFFEROR'S CERTIFICATION: I hereby declare that the contents of this consignment are fully and accurately described above by the proper shipping name, and are classified, packaged, marked and labeled/placarded, and are in all respects in proper condition for transport according to applicable international and national governmental regulations. If export shipment and I am the Primary Exporter I certify that the contents of this consignment conform to the terms of the attached EPA Acknowledgment of Consent.
I certify that the waste minimization statement identified in 40 CFR 262.27(a) (if I am a large quantity generator) or (b) (if I am a small quantity generator) is true.

Generator's Office or Printed Type Name: [illegible] Signature: [illegible] Month 7 Day 10 Year 22

16. International Shipments ☐ Import to U.S. ☐ Export from U.S. Port of entry/exit: Date leaving U.S.
Transporter signature for exports only

17. Transporter Acknowledgment of Receipt of Materials
Transporter 1 Printed/Typed Name: [illegible] Signature: [illegible] Month 7 Day 10 Year 22
Transporter 2 Printed/Typed Name: Signature: Month Day Year

18. Discrepancy
18a. Discrepancy Indication Space ☐ Quantity ☐ Type ☐ Residue ☐ Partial Rejection ☐ Full Rejection
Manifest Reference Number

18b. Alternate Facility (or Generator) U.S. EPA ID Number
Facility Phone

18c. Signature of Alternate Facility (or Generator) Month Day Year

19. Hazardous Waste Report Management Method Codes (i.e., Code for hazardous waste treatment, disposal, and recycling systems)
1. 2. 3. 4.

20. Designated Facility Owner or Operator: Certification of receipt of hazardous materials covered by the manifest except as noted in Item 18a
Signature: Month Day Year

Form 8700-22 (Rev. 12-17) Previous editions are obsolete.

GENERATOR'S INITIAL COPY

Form Approved. OMB No. 2050-0039

Please print or type.

UNIFORM HAZARDOUS WASTE MANIFEST	1. Generator ID Number	2. Page 1 of	3. Emergency Response Phone	4. Manifest Tracking Number
	[illegible]	[illegible]	[illegible]	015369705 FLE

5. Generator's Name and Mailing Address
City of Los Angeles Department of Public Works
Bureau of Engineering 600 Santa Fe Avenue
City of Los Angeles Ca. 90013
Generator's Phone: [illegible]

Generator's Site Address (if different than mailing address)
[illegible]
[illegible]

6. Transporter 1 Company Name: Mayo Trucking Inc #[illegible]
U.S. EPA ID Number: CAA000280925

7. Transporter 2 Company Name:
U.S. EPA ID Number:

8. Designated Facility Name and Site Address
South Tuna County Landfill
[illegible] South Avenue [illegible]
Facility's Phone: [illegible]
U.S. EPA ID Number: AZ8000[illegible]

9a. Item	9b. U.S. DOT Description (Including Proper Shipping Name, Hazard Class, ID Number, and Packing Group, if any)	10. Contained		11. Total Quantity	12. Unit Wt./Vol.	13. Waste Codes
		No.	Type			
	Rib MCRA Hazardous Waste Solid (Lead Impacted Soil)	[illegible]	DT	[illegible]	T	[illegible]

14. Special Handling Instructions and Additional Information
Profile#[illegible]
[illegible]

15. GENERATOR'S/OFFICER'S CERTIFICATION: [illegible]

Generator's Printed Type Name: [illegible] Signature: [illegible] Month 12 Day 10 Year 02

16. Transportation Mode: ☐ Highway U.S. ☐ Rail/Water U.S. Port of Entry/Exit: Date Entry U.S.

17. Transporter Acknowledgment of Receipt of Materials
Transporter 1 Printed Type Name: [illegible] Signature: [illegible] Month 12 Day 10 Year 02
Transporter 2 Printed Type Name: Signature: Month Day Year

18. Discrepancy
18a. Discrepancy Indicator Status: ☐ Quantity ☐ Unit ☐ Residue ☐ Partial Reaction ☐ Full Reaction

18b. Alternate Facility (or Generator): U.S. EPA ID Number:

Facility's Phone:

18c. Signature of Alternate Facility (or Generator): Month Day Year

19. Hazardous Waste Report Management Method Codes (i.e., code for hazardous waste treatment, disposal, and recycling systems)

20. Designated Facility Owner or Operator: Certification of receipt of hazardous materials covered by the manifest except as noted in Item 18a.
Printed Type Name: Signature: Month Day Year

EPA Form 8700-22 (Rev. 12-17) Previous editions are obsolete.

GENERATOR'S INITIAL COPY

Form Approved. OMB No. [illegible]

Please print or type.

UNIFORM HAZARDOUS WASTE MANIFEST	1. Generator ID Number: CAC003159701	2. Page 1 of 1	3. Emergency Response Phone: [illegible]	4. Manifest Tracking Number: 015369706 FLE

5. Generator's Name and Mailing Address:
City of Los Angeles Department of Public Works
Bureau of Engineering 200 Santa Fe Avenue
City of Los Angeles Ca. 90012
Generator's Phone: [illegible]

Generator's Site Address (if different than mailing address):
[illegible] Santa Fe Avenue
Los Angeles Ca. 90012

6. Transporter 1 Company Name: [illegible]

7. Transporter 2 Company Name:

8. Designated Facility Name and Site Address:
South Yuma County Landfill
[illegible] South Avenue [illegible]
[illegible] AZ 85[illegible] (+1) 341-[illegible]

9. Designated Facility Number: [illegible]

Item No.	10. Description	11. Quantity No.	Type	12. Total Quantity	13. Unit Wt./Vol.	14. Waste Codes
1	RUS RCRA Hazardous Waste Solid (Lead Impacted Soil)	[illegible]	[illegible]	[illegible]	[illegible]	[illegible]
2						
3						
4						

15. Special Handling Instructions and Additional Information:
[illegible]
[illegible]

16. GENERATOR'S CERTIFICATION: [illegible]

Generator's Printed Name: [illegible] Signature: [illegible] Month Day Year: 12 10 22

17. Transportation Acknowledgement of Receipt of Materials:
Transporter 1 Printed Name: [illegible] Signature: [illegible] Month Day Year: 12 10 22
Transporter 2 Printed Name: Signature: Month Day Year:

18. Discrepancy:
18a. Discrepancy Indication Space: ☐ Quantity ☐ Type ☐ Residue ☐ Partial Rejection ☐ Full Rejection
Manifest Reference Number:

18b. Alternate Facility (or Generator): U.S. EPA ID Number:
Facility Phone:

18c. Signature of Alternate Facility (or Generator): Month Day Year:

19. Hazardous Waste Report Management Method Codes (i.e., codes for hazardous waste treatment, disposal, and recycling systems):

20. Designated Facility Owner or Operator: Certification of receipt of hazardous materials covered by the manifest except as noted in Item 18a:
Printed Name: Signature: Month Day Year:

EPA Form 8700-22 (Rev. 12-11) Previous editions are obsolete.

GENERATOR'S INITIAL COPY

Please print or type.

Form Approved. OMB No. 2050-0039

UNIFORM HAZARDOUS WASTE MANIFEST

1. Generator ID Number: CAD981497701

2. Page 1 of

3. Emergency Response Phone:

4. Manifest Tracking Number: 015369707 FLE

5. Generator's Name and Mailing Address: City of Los Angeles Department of Public Works, Bureau of Engineering, 201 North Figueroa, City of Los Angeles Co. 90012

Generator's Site Address (if different than mailing address): 201 North Figueroa, Los Angeles Co. 90012

6. Transporter 1 Company Name: [illegible]

7. Transporter 2 Company Name:

8. Designated Facility Name and Site Address: Sunshine Canyon City Landfill, 14747 South Avenue 16, Sylmar, CA 91342-7010

US EPA ID Number: ACP D 506590

9a. HM	9b. U.S. DOT Description (including Proper Shipping Name, Hazard Class, ID Number, and Packing Group (if any))	10. Containers No.	10. Containers Type	11. Total Quantity	12. Unit Wt./Vol.	13. Waste Codes
	1. RQ PCBs Hazardous Waste Solid (Lead Impacted Soil)	001	DT	10	Y	
	2.					
	3.					
	4.					

14. Special Handling Instructions and Additional Information:

Manifest 6866

Wear protective safety clothing.

15. GENERATOR'S/OFFICER'S CERTIFICATION: I hereby declare that the contents of this consignment are fully and accurately described above by the proper shipping name, and are classified, packaged, marked and labeled/placarded, and are in all respects in proper condition for transport according to applicable international and national governmental regulations. If export shipment and I am an Offeror, I certify that the contents of this consignment conform to the terms of the attached EPA Acknowledgment of Consent.
I certify that the waste minimization statement identified in 40 CFR 262.27(a) (if I am a large quantity generator) or (b) (if I am a small quantity generator) is true.

Generator's/Offeror's Printed/Typed Name: [illegible] Signature: [illegible] Month: 12 Day: 10 Year: 22

16. International Shipments: ☐ Import to U.S. ☐ Export from U.S. Port of Entry/Exit:

Transporter signature (for exports only):

17. Transporter Acknowledgment of Receipt of Materials

Transporter 1 Printed/Typed Name: [illegible] Signature: [illegible] Month: 12 Day: 10 Year: 22

Transporter 2 Printed/Typed Name: Signature: Month: Day: Year:

18. Discrepancy

18a. Discrepancy Indication Space: ☐ Quantity ☐ Type ☐ Residue ☐ Partial Rejection ☐ Full Rejection

Manifest Reference Number:

18b. Alternate Facility (or Generator)

Facility's Phone:

18c. Signature of Alternate Facility (or Generator) Month: Day: Year:

19. Hazardous Waste Report Management Method Codes (i.e., codes for hazardous waste treatment, disposal, and recycling systems)

1. 2. 3. 4.

20. Designated Facility Owner or Operator: Certification of receipt of hazardous materials covered by the manifest except as noted in Item 18a

Printed/Typed Name: Signature: Month: Day: Year:

EPA Form 8700-22 (Rev. 12-17) Previous editions are obsolete.

GENERATOR'S INITIAL COPY

Please print or type.

Form Approved. OMB No. 2050-0039

UNIFORM HAZARDOUS WASTE MANIFEST	1. Generator ID Number	2. Page 1 of	3. Emergency Response Phone	4. Manifest Tracking Number
	CAC003159701	01	213-[illegible]	015369708 FLE

5. Generator's Name and Mailing Address
City of Los Angeles, Department of Public Works
Bureau of Engineering 558 Santa Fe Avenue
City of Los Angeles Ca. 90013
Generator's Phone: Rafaela Moore 213-[illegible]

Generator's Site Address (if different than mailing address)
100 Santa Fe Avenue
Los Angeles Ca. 90013

6. Transporter 1 Company Name: BB's Trucking Firm Inc
U.S. EPA ID Number: CAR000106077

7. Transporter 2 Company Name:
U.S. EPA ID Number:

8. Designated Facility Name and Site Address
South Yuma County Landfill
[illegible] South Avenue [illegible]
Facility's Phone: [illegible]
U.S. EPA ID Number: AZR000006980

No.	9. U.S. DOT Description (Including Proper Shipping Name, Hazard Class, ID Number, and Packing Group, if any)	10. Containers No.	Type	11. Total Quantity	12. Unit Wt./Vol.	13. Waste Codes
1.	NON RCRA Hazardous Waste Solid (Lead Impacted Soil)	001	DT	16	Y	+1
2.						
3.						
4.						

14. Special Handling Instructions and Additional Information
Profile #[illegible]-6866
Wear appropriate safety clothing

15. GENERATOR'S/OFFEROR'S CERTIFICATION: [illegible]

Generator's/Offeror's Printed/Typed Name: [illegible] Signature: [illegible] Month 2 Day 10 Year 22

16. International Shipments: ☐ Import to U.S. ☐ Export to U.S. Port of entry/exit: Date leaving U.S.
Transporter signature (for exports only):

17. Transporter Acknowledgment of Receipt of Materials
Transporter 1 Printed/Typed Name: Jose Ponce Ulloa Signature: [signature] Month 2 Day 10 Year 22
Transporter 2 Printed/Typed Name: Signature: Month Day Year

18. Designated Facility Owner or Operator: Certification of receipt of hazardous materials covered by the manifest except as noted in Item 18a
Printed/Typed Name: Signature: Month Day Year

GENERATOR

INT'L

TRANSPORTER

DESIGNATED FACILITY

EPA Form 8700-22 (Rev. 12-97) Previous editions are obsolete.

GENERATOR'S INITIAL COPY

Please print or type.

Form Approved. OMB No. 2050-0039

UNIFORM HAZARDOUS WASTE MANIFEST	1. Generator ID Number	2. Page 1 of	3. Emergency Response Phone	4. Manifest Tracking Number
	[illegible]	[illegible]	[illegible]	015369703 FLE

5. Generator's Name and Mailing Address
City of Los Angeles Department of Public Works
Division of Engineering 555 Santa Fe Avenue
City of Los Angeles Ca. 90013

Generator's Site Address (if different than mailing address)
555 Santa Fe Avenue
Los Angeles Ca. 90013

6. Transporter 1 Company Name: Romero [illegible]
U.S. EPA ID Number: [illegible]85660

7. Transporter 2 Company Name:
U.S. EPA ID Number:

8. Designated Facility Name and Site Address
South Yuma County Landfill
[illegible] South Avenue 22
[illegible] AZ [illegible] (928) [illegible]
U.S. EPA ID Number: AZR000306980

Item No.	9. U.S. DOT Description (including Proper Shipping Name, Hazard Class, ID Number, and Packing Group, if any)	10. Containers No.	Type	11. Total Quantity	12. Unit Wt./Vol.	13. Waste Codes
	NSR RCRA Hazardous Waste Solid (Lead Impacted Soil)	001	DT	10	T	

14. Special Handling Instructions and Additional Information
[illegible]
[illegible] safety clothing

15. GENERATOR'S/OFFEROR'S CERTIFICATION: I hereby declare that the contents of this consignment are fully and accurately described above by the proper shipping name, and are classified, packaged, marked and labeled/placarded, and are in all respects in proper condition for transport according to applicable international and national governmental regulations. If export shipment and I am the Primary Exporter, I certify that the contents of this consignment conform to the terms of the attached EPA Acknowledgment of Consent.
I certify that the waste minimization statement identified in 40 CFR 262.27(a) (if I am a large quantity generator) or (b) (if I am a small quantity generator) is true.

Generator's/Offeror's Printed/Typed Name: [illegible] Signature: [illegible] Month 5 Day 10 Year 22

16. International Shipments: ☐ Import to U.S. ☐ Export from U.S. Port of entry/exit
Transporter signature (for exports only): Date leaving U.S.

17. Transporter Acknowledgment of Receipt of Materials
Transporter 1 Printed/Typed Name: [illegible] Signature: [illegible] Month 5 Day 10 Year 22
Transporter 2 Printed/Typed Name: Signature: Month Day Year

18. Discrepancy
18a. Discrepancy Indication Space: ☐ Quantity ☐ Type ☐ Residue ☐ Partial Rejection ☐ Full Rejection

18b. Alternate Facility (or Generator) U.S. EPA ID Number
Facility's Phone:

18c. Signature of Alternate Facility (or Generator) Month Day Year

19. Hazardous Waste Report Management Method Codes (i.e., codes for hazardous waste treatment, disposal, and recycling systems)
1. 2. 3. 4.

20. Designated Facility Owner or Operator: Certification of receipt of hazardous materials covered by the manifest except as noted in Item 18a
Printed/Typed Name: Signature: Month Day Year

GENERATOR'S INITIAL COPY

UNIFORM HAZARDOUS WASTE MANIFEST

1. Generator ID Number: CAC002159711

2. Page 1 of: 01

3. Emergency Response Phone:

4. Manifest Tracking Number: 015369710 FLE

5. Generator's Name and Mailing Address:
City of Los Angeles Department of Public Works
Bureau of Engineering 5th Santa Fe Avenue
City of Los Angeles CA 90013

Generator's Site Address (if different than mailing address):
149 Santa Fe Avenue
Los Angeles CA 90013

Generator's Phone: Bobbie Rose 213-485-5227

6. Transporter 1 Company Name: Doyle Trucking

U.S. EPA ID Number: CAD009158760

7. Transporter 2 Company Name:

U.S. EPA ID Number:

8. Designated Facility Name and Site Address:
South Yuba County Landfill
[illegible] South Avenue SE
[illegible]

Facility's Phone:

U.S. EPA ID Number: A3950104385

9a. HM	9b. U.S. DOT Description (including Proper Shipping Name, Hazard Class, ID Number, and Packing Group (if any))	10. Containers: No.	10. Containers: Type	11. Total Quantity	12. Unit Wt./Vol.	13. Waste Codes
	1. NON RCRA Hazardous Waste Solid (Lead Impacted Soil)	001	CT	16	Y	
	2.					
	3.					
	4.					

14. Special Handling Instructions and Additional Information:
First Load Expect
Most Appropriate water disposal

15. GENERATOR'S OFFICER CERTIFICATION: I hereby declare that the contents of this consignment are fully and accurately described above by the proper shipping name and are classified, packaged, marked and labeled/placarded, and are in all respects in proper condition for transport according to applicable international and national government regulations. I certify that the waste minimization statement identified in 40 CFR 262.27(a) (if I am a large quantity generator) or (b) (if I am a small quantity generator) is true.
I certify that the contents of this consignment conform to the terms of the attached EPA Acknowledgment of Consent.

Generator's Printed/Typed Name: [illegible] Signature: [illegible] Month: 12 Day: 10 Year: 12

16. International Shipments: Import to U.S. Export from U.S. Port of entry/exit:
Transporter signature (for exports only): Date leaving U.S.:

17. Transporter Acknowledgment of Receipt of Materials

Transporter 1 Printed/Typed Name: Robert Chyes Signature: [illegible] Month: 12 Day: 10 Year: 12

Transporter 2 Printed/Typed Name: Signature: Month: Day: Year:

18. Discrepancy

18a. Discrepancy Indication Space: Quantity Type Residue Partial Rejection Full Rejection

Manifest Reference Number:

18b. Alternate Facility (or Generator):

U.S. EPA ID Number:

Facility's Phone:

18c. Signature of Alternate Facility (or Generator): Month: Day: Year:

19. Hazardous Waste Report Management Method (codes for hazardous waste handled at your facility):

1. 2. 3. 4.

20. Designated Facility Owner or Operator: Certification of receipt of hazardous materials covered by this manifest except as noted in Item 18a

Printed/Typed Name: Signature: Month: Day: Year:

DESIGNATED FACILITY | TRANSPORTER | GENERATOR

EPA Form 8700-22 (Rev. 12-11) Previous editions are obsolete.

GENERATOR'S INITIAL COPY

015368711 FILE

Kettleman Hills

Kettleman Hills

Kettleman Hills

Please print or type

UNIFORM HAZARDOUS WASTE MANIFEST	1. Generator ID Number: CAC003159701	2. Page 1 of 1	3. Emergency Response Phone: 213-954-4272	4. Manifest Tracking Number: 015369712 FLE

5. Generator's Name and Mailing Address: City of Los Angeles Department of Public Works, Bureau of Engineering 500 Santa Fe Avenue, City of Los Angeles Ca. 90011

Generator's Site Address (if different than mailing address): 500 Santa Fe Avenue, Los Angeles Ca. 90033

6. Transporter 1 Company Name: [illegible]

U.S. EPA ID Number: [illegible]

7. Transporter 2 Company Name:

U.S. EPA ID Number:

8. Designated Facility Name and Site Address: South Yuma County Landfill, 10330 South Avenue 12, Tacoma, AZ 85363 (928) 341-8300

U.S. EPA ID Number: AZR000506980

No.	9. Ex. Ex. Shipping Name, Hazard Class, ID Number, and Packing Group (if any)	10. Containers No.	Type	11. Total Quantity	12. Unit Wt./Vol.	13. Waste Codes
1	NON RCRA Hazardous Waste Solid (Lead Impacted Soil)	1001	DT	36	Y	[illegible]
2						
3						
4						

14. Special Handling Instructions and Additional Information:

Profile#C-4866
Wear appropriate safety clothing

15. GENERATOR'S/OFFSHORE'S CERTIFICATION: I hereby declare that the contents of this consignment are fully and accurately described above by the proper shipping name, and are classified, packaged, marked and labeled/placarded, and are in all respects in proper condition for transport according to applicable international and national government regulations. I hereby declare that the contents of this consignment conform to the terms of the attached EPA Acknowledgment of Consent.
I certify that the waste minimization statement identified in 40 CFR 262.27(a) (if I am a large quantity generator) or 40 CFR 262.27(b) (if I am a small quantity generator) is true.

Generator's/Offshore's Printed/Typed Name: [illegible] Signature: [illegible] Month 12 Day 10 Year 82

16. International Shipments: ☐ Import to U.S. ☐ Export from U.S. Port of Entry/Exit: Date Leaving U.S.

17. Transporter Acknowledgment of Receipt of Materials:

Transporter 1 Printed/Typed Name: [illegible] Signature: [illegible] Month 12 Day 10 Year 82

Transporter 2 Printed/Typed Name: Signature: Month Day Year

18. Discrepancy:

18a. Discrepancy Indication Space: ☐ Quantity ☐ Type ☐ Residue ☐ Partial Rejection ☐ Full Rejection

Manifest Reference Number:

18b. Alternate Facility (or Generator): U.S. EPA ID Number:

Facility's Phone:

18c. Signature of Alternate Facility (or Generator): Month Day Year

19. Hazardous Waste Report Management Method (Code 1-4, enter by hazardous waste reference, discrete, and reaction number):

1.	2.	3.	4.

20. Designated Facility Owner or Operator: Certification of receipt of hazardous materials covered by this manifest except as noted in Item 18a.

Printed/Typed Name: Signature: Month Day Year

GENERATOR'S INITIAL COPY

Form Approved. OMB No. 2050-0039

GENERATOR	1. Generator ID Number	2. Page 1 of	3. Emergency Response Phone	4. Manifest Tracking Number
UNIFORM HAZARDOUS WASTE MANIFEST	CAC003159781	1	213-[illegible]	015362713 FLE

5. Generator's Name and Mailing Address: City of Los Angeles Department of Public Works, Bureau of Engineering, 565 Fifth Ave, Suite 500, City of Los Angeles Ca 90013

Generator's Site Address (if different than mailing address): 565 Fifth Ave, Los Angeles Ca 90013

Generator's Phone: [illegible]

6. Transporter 1 Company Name: OCHOA TRANSP — U.S. EPA ID Number: CAR000223490

7. Transporter 2 Company Name: — U.S. EPA ID Number:

8. Designated Facility Name and Site Address: South Yuma County Landfill, 15534 South Avenue 17, Tacoma, Arizona 85 85363 (928) 341 4500 — U.S. EPA ID Number: AZR000[illegible]

No.	9. Description	10. Contents No.	Type	11. Total Quantity	12. Unit Wt./Vol.	13. Waste Codes
1	608 RCRA Hazardous Waste Solid (Lead Impacted Soil)	001	DT	18	Y	[illegible]
2						
3						
4						

14. Special Handling Instructions and Additional Information:

Profile#C-[illegible]
Wear appropriate safety clothing.

15. GENERATOR'S/OFFEROR'S CERTIFICATION: [illegible]

Generator's Offeror's Printed/Typed Name: [illegible] — Signature: [illegible] — Month 2 Day 10 Year 22

16. International Shipments: ☐ Import to U.S. ☐ Export from U.S. — Port of Entry/Exit: Date Leaving U.S.:

Transporter Signature (for Exports Only):

17. Transporter Acknowledgment of Receipt of Materials

Transporter 1 Printed/Typed Name: RAFAEL O. — Signature: [signature] — Month 2 Day 10 Year 22

Transporter 2 Printed/Typed Name: — Signature: — Month Day Year

18. Discrepancy

18a. Quantity of Materials Noted: ☐ Quantity ☐ Type ☐ Residue ☐ Partial Rejection ☐ Full Rejection

Manifest Reference Number:

18b. Alternate Facility (or Generator): — U.S. EPA ID Number:

Facility's Phone:

18c. Signature of Alternate Facility (or Generator): — Month Day Year

19. Hazardous Waste Report Management Method Code(s) (i.e., code for hazardous waste treatment, disposal, and recycling systems):

1.	2.	3.	4.

20. Designated Facility Owner or Operator: Certification of receipt of hazardous materials covered by the manifest except as noted in Item 18a

Printed/Typed Name: — Signature: — Month Day Year

EPA Form 8700-22 (Rev. 12-17) Previous editions are obsolete.

GENERATOR'S INITIAL COPY

Please print or type

UNIFORM HAZARDOUS WASTE MANIFEST	Generator ID Number CAC003159701	Page 1 of 01	Emergency Response Phone 213-694-4272	Manifest Tracking Number 015369714 FLE

1. Generator's Name and Mailing Address
City of Los Angeles Department of Public Works
Bureau of Engineering 345 Santa Fe Avenue
City of Los Angeles Ca 90021

Generator's Site Address (if different than mailing address)
345 Santa Fe Avenue
Los Angeles Ca 90021

2. Generator's Phone Number (213) 485-3366

3. Transporter 1 Company Name
Ron Gass's Drayage

US EPA ID Number
CAD981963352

4. Transporter 2 Company Name

US EPA ID Number

5. Designated Facility Name and Site Address
South Yuma County Landfill
[illegible] South Avenue 4E
[illegible] AZ 85365 (928) 341-9360

US EPA ID Number
AZR000504985

6. No.	7. U.S. DOT Description (including Proper Shipping Name, Hazard Class, ID Number, and Packing Group (if any))	8. Containers No.	8. Containers Type	9. Total Quantity	10. Unit Wt./Vol.	11. Waste Codes		
1	NON RCRA Hazardous Waste Solids (Lead Impacted Soil)	001	DT	15	Y	9121		
2								
3								
4								

12. Special Handling Instructions and Additional Information
Profile No: 6866

13. GENERATOR'S/OFFRER'S CERTIFICATION: I hereby declare that the contents of this consignment are fully and accurately described above by the proper shipping name, and are classified, packaged, marked and labeled/placarded, and are in all respects in proper condition for transport according to applicable international and national governmental regulations. If export shipment and I am the Primary Exporter, I certify that the contents of this consignment conform to the terms of the attached EPA Acknowledgment of Consent.
I certify that the waste minimization statement identified in 40 CFR 262.27(a) (if I am a large quantity generator) or (b) (if I am a small quantity generator) is true.

Generator's/Offeror's Printed/Typed Name [illegible] Signature [illegible] Month 12 Day 10 Year 22

14. International Shipments ☐ Import to U.S. ☐ Export from U.S. Port of Entry/Exit
Transporter signature (for exports only): Date Entering U.S.

15. Transporter Acknowledgment of Receipt of Materials
Transporter 1 Printed/Typed Name [illegible] Signature [illegible] Month 12 Day 10 Year 22

Transporter 2 Printed/Typed Name Signature Month Day Year

16. Discrepancy
16a. Discrepancy Indication Space ☐ Quantity ☐ Type ☐ Residue ☐ Partial Rejection ☐ Full Rejection

Manifest Reference Number:

16b. Alternate Facility (or Generator)
US EPA ID Number

Facility's Phone

16c. Signature of Alternate Facility (or Generator) Month Day Year

16d. Hazardous Waste Report Management Method Codes (i.e., codes for hazardous waste treatment, disposal, and recycling systems)
1 2 3 4

17. Designated Facility Owner or Operator: Certification of receipt of hazardous materials covered by this manifest except as noted in Item 18a
Printed/Typed Name Signature Month Day Year

GENERATOR'S INITIAL COPY

Please print or type.

Form Approved. OMB No. 2050-0039

UNIFORM HAZARDOUS WASTE MANIFEST

1. Generator's US EPA ID No. CA7890179701

2. Page 1 of 1

3. Emergency Response Phone

4. Manifest Tracking No. 015359715 FLE

5. Generator's Name and Mailing Address
City of Los Angeles Department of Public Works
Bureau of Engineering 900 South Fremont
City of Los Angeles CA 90012

Generator's Site Address (if different than mailing address)
900 South Fremont
Los Angeles CA 90012

6. Transporter 1 Company Name
MARTINEZ CARTAGE

US EPA ID Number
CAR000104844

7. Transporter 2 Company Name

US EPA ID Number

8. Designated Facility Name and Site Address
South Yuma County Landfill
24594 South Avenue 55
Yuma AZ 85365 (928) 342-9180

US EPA ID Number
AZD980736539

9a. HM	9b. U.S. DOT Description (including Proper Shipping Name, Hazard Class, ID Number, and Packing Group)	10. Containers No.	10. Containers Type	11. Total Quantity	12. Unit Wt./Vol.	13. Waste Codes
	1. NON-RCRA Hazardous Waste Solid (Lead Impacted Soil)	001	DT	16	C	661
	2.					
	3.					
	4.					

14. Special Handling Instructions and Additional Information
Profile#: 6866
Wear appropriate safety clothing.

15. GENERATOR'S/OFFICER'S CERTIFICATION: I hereby declare that the contents of this consignment are fully and accurately described above by the proper shipping name and are classified, packaged, marked and labeled/placarded, and are in all respects in proper condition for transport according to applicable international and national governmental regulations. If export shipment and I am the Primary Exporter, I certify that the contents of this consignment conform to the terms of the attached EPA Acknowledgment of Consent.
I certify that the waste minimization statement identified in 40 CFR 262.27(a) (if I am a large quantity generator) or (b) (if I am a small quantity generator) is true.

Generator's/Offeror's Printed/Typed Name

Signature

Month 12 Day 10 Year 22

16. International Shipments ☐ Import to US ☐ Export from US Port of Entry/Exit:
Transporter signature (for exports only):

17. Transporter Acknowledgment of Receipt of Materials

Transporter 1 Printed/Typed Name: [illegible]

Signature

Month 12 Day 10 Year 22

Transporter 2 Printed/Typed Name

Signature

Month Day Year

18. Discrepancy

18a. Discrepancy Indication Space ☐ Quantity ☐ Type ☐ Residue ☐ Partial Rejection ☐ Full Rejection

Manifest Reference Number:

18b. Alternate Facility (or Generator)

US EPA ID Number

Facility's Phone:

18c. Signature of Alternate Facility (or Generator)

Month Day Year

19. Hazardous Waste Report Management Method Codes (i.e., codes for hazardous waste treatment, disposal, and recycling systems)

1. 2. 3. 4.

20. Designated Facility Owner or Operator: Certification of receipt of hazardous materials covered by the manifest except as noted in Item 18a

Printed/Typed Name

Signature

Month Day Year

EPA Form 8700-22 (Rev. 9-07) Previous editions are obsolete.

DESIGNATED FACILITY — TRANSPORTER INTL — GENERATOR

GENERATOR'S INITIAL COPY

Form Approved. OMB No. 2050-0039

UNIFORM HAZARDOUS WASTE MANIFEST	1. Generator's Number	2. Page 1 of	3. Emergency Response Phone	4. Manifest Tracking Number
	[illegible]	[illegible]	[illegible]	015369716 FLE

5. Generator's Name and Mailing Address: City of Los Angeles Department of Public Works, Bureau of Engineering, 540 South Fe Avenue, City of Los Angeles, Ca. 90013

Generator's Site Address (if different than mailing address): 700 Santa Fe Avenue, Los Angeles, Ca. 90013

6. Transporter 1 Company Name: [illegible] Mt. Touchwood

U.S. EPA ID Number: CAR000190777

7. Transporter 2 Company Name:

U.S. EPA ID Number:

8. Designated Facility Name and Site Address: South Yuma County Landfill, [illegible] Avenue [illegible], Tel. [illegible]

U.S. EPA ID Number: [illegible]

No.	9. U.S. DOT Description (including Proper Shipping Name, Hazard Class, ID Number, and Packing Group (if any))	10. Contents No.	Type	11. Total Quantity	12. Unit Wt./Vol.	13. Waste Codes
1	NON RCRA Hazardous Waste Solid (Lead Impacted Soil)	[illegible]	DT	[illegible]	Y	[illegible]
2						
3						
4						

14. Special Handling Instructions and Additional Information:

Pro[illegible]
Wear appropriate safety clothing.

15. GENERATOR'S/OFFEROR'S CERTIFICATION: I hereby declare that the contents of this consignment are fully and accurately described above by the proper shipping name, and are classified, packaged, marked and labeled/placarded, and are in all respects in proper condition for transport according to applicable international and national governmental regulations. If shipment is not in the Primary Supplier, I certify that the contents of this consignment conform to the terms of the attached EPA Acknowledgment of Consent. I certify that the above information contained in Section 9 of the Form is true and complete to the [illegible]

Generator's/Offeror's Printed/Typed Name: [illegible] Signature: [illegible] Month Day Year: 12 1/01 22

16. Transporter Signature: ☐ Shipment U.S. ☐ Export from U.S. Port of Entry/Exit: Date Leaving U.S.

17. Transporter Acknowledgment of Receipt of Materials

Transporter 1 Printed/Typed Name: [illegible] Signature: [illegible] Month Day Year: 12 1/01 22

Transporter 2 Printed/Typed Name: Signature: Month Day Year:

18. Discrepancy

18a. Discrepancy Indication Space: ☐ Quantity ☐ Type ☐ Residue ☐ Partial Reduction ☐ Full Reduction

Verified Discrepancy Number

18b. Alternate Facility (or Generator): U.S. EPA ID Number

Facility Name

18c. Signature of Alternate Facility (or Generator): Month Day Year

19. Hazardous Waste Report Management Method Designation (Codes for Transporter Waste Treatment, Disposal, and Recycling Systems)

1.	2.	3.	4.

20. Designated Facility Owner or Operator: Certification of receipt of hazardous materials covered by the manifest except as noted in Item 18a

Printed/Typed Name: Signature: Month Day Year:

GENERATOR'S INITIAL COPY

Form Approved

UNIFORM HAZARDOUS WASTE MANIFEST	1. Generator ID Number	2. Page 1 of	3. Emergency Response Phone	4. Manifest Tracking Number
	[illegible]	[illegible]	[illegible]	015369688 FLE

5. Generator's Name and Mailing Address

City of Los Angeles Department of Public Works
Bureau of Engineering 205 Tuck Fe Avenue
City of Los Angeles CA 90013

Generator's Site Address (if different than mailing address)

[illegible] Tuck Fe Avenue
Los Angeles CA [illegible]

6. Transporter 1 Company Name: [illegible] EXPRESS

U.S. EPA ID Number: CAR[illegible]

7. Transporter 2 Company Name

U.S. EPA ID Number

8. Designated Facility Name and Site Address

South Yuma County Landfill
14930 South Avenue 3E
Facility Phone: [illegible]

U.S. EPA ID Number: [illegible]

Item	9. Hazardous Waste Solid (Lead Impacted Soil)	10. Containers No.	Type	11. Total Quantity	12. Unit Wt./Vol.	13. Waste Codes
1	NUB RCRA Hazardous Waste Solid (Lead Impacted Soil)	001	DT	16	Y	01
2						
3						
4						

14. Special Handling Instructions and Additional Information

[illegible]

15. GENERATOR'S/OFFICER'S CERTIFICATION: [illegible]

Generator's Office or Designated Agent Name: [illegible] Signature: [illegible] Month: [illegible] Day: [illegible] Year: [illegible]

16. Transportation Statement: ☐ Shipped to U.S. ☐ Exported from U.S. Port of Entry/Exit: Date Leaving U.S.

Transporter Signature (for exports only)

17. Transporter 1 Acknowledgment of Receipt of Materials

Transporter 1 Printed/Typed Name: [illegible] Signature: [illegible] Month: [illegible] Day: [illegible] Year: [illegible]

Transporter 2 Printed/Typed Name: Signature: Month: Day: Year:

18. Discrepancy

18a. Discrepancy Indication Space: ☐ Quantity ☐ Type ☐ Residue ☐ Partial Reaction ☐ Full Reaction

Manifest Reference Number

19. Hazardous Facility or Generator

U.S. EPA ID Number

Facility Phone

19a. Signature of Hazardous Facility or Generator: Month: Day: Year:

20. Hazardous Waste Report Management Method Codes (i.e., codes for hazardous waste treatment, disposal, and recycling systems)

1.	2.	3.	4.

21. Designated Facility Owner or Operator: Certification of receipt of hazardous materials covered by this manifest except as noted in Item 19a

Printed/Typed Name: Signature: Month: Day: Year:

GENERATOR'S INITIAL COPY

Please print or type

Form Approved. OMB No. 2050-0039

UNIFORM HAZARDOUS WASTE MANIFEST

1. Generator ID Number: CA7890008707

2. Page 1 of 1

3. Emergency Response Phone: 213-485-6777

4. Manifest Tracking Number: 015589689 FLE

5. Generator's Name and Mailing Address: City of Los Angeles Department of Public Works Bureau of Engineering 200 North Spring Street City of Los Angeles Ca. 90012

Generator's Site Address (if different than mailing address): 1st Santa Fe Avenue Los Angeles Ca, 90021

6. Transporter 1 Company Name: S & L Environmental Transportation

7. US EPA ID Number: CAD059081667

8. Transporter 2 Company Name:

9. US EPA ID Number:

10. Designated Facility Name and Site Address: South Yuma County Landfill 2065 Avenue 12 Yuma, AZ 85365 (928) 726-6160

11. US EPA ID Number: AZD000629700

12a. HM	12b. US DOT Description (Including Proper Shipping Name, Hazard Class, ID Number, and Packing Group (if any))	13. Containers: No.	13. Containers: Type	14. Total Quantity	15. Unit Wt./Vol.	16. Waste Codes
	1. NON RCRA Hazardous Waste Solid (Lead Impacted Soil)	001	DT	16	Y	
	2.					
	3.					
	4.					

12c. Special Handling Instructions and Additional Information:

Profile #CA-[illegible]

14. GENERATOR'S/OFFEROR'S CERTIFICATION: I hereby declare that the contents of this consignment are fully and accurately described above by proper shipping name and are classified, packaged, marked and labeled/placarded, and are in all respects in proper condition for transport according to applicable international and national governmental regulations. If export shipment and I am the Primary Exporter I certify that the contents of this consignment conform to the terms of the attached EPA Acknowledgment of Consent. I certify that the waste minimization statement identified in 40 CFR 262.27(a) (if I am a large quantity generator) or (b) (if I am a small quantity generator) is true.

Generator's/Offeror's Printed/Typed Name: [illegible] Signature: [illegible] Month: 2 Day: 10 Year: 22

15. International Shipments: Import to U.S. Export from U.S. Port of entry/exit: Date leaving U.S.:

Transporter signature (for exports only):

16. Transportation Acknowledgment of Receipt of Materials

Transporter 1 Printed/Typed Name: Alejandro Lopez Signature: [signature] Month: 2 Day: 10 Year: 22

Transporter 2 Printed/Typed Name: Signature: Month: Day: Year:

17. Discrepancy

17a. Discrepancy Indication Space: Quantity Type Residue Partial Rejection Full Rejection

Manifest Reference Number:

17b. Alternate Facility (or Generator): US EPA ID Number:

Facility's Phone:

17c. Signature of Alternate Facility (or Generator): Month: Day: Year:

18. International Shipments: Transporter Signature (for exports only):

Transporter signature (for imports only):

18a. Hazardous Waste Report Management Method Codes (i.e., codes for hazardous waste treatment, disposal, and recycling systems):

1. 2. 3. 4.

18b. Designated Facility Owner or Operator: Certification of receipt of hazardous materials covered by this manifest except as noted in Item 18a

Printed/Typed Name: Signature: Month: Day: Year:

EPA Form 8700-22 (Rev. 12-11) Previous editions are obsolete.

GENERATOR'S INITIAL COPY

Form Approved, OMB No. 2050-0039

Please print or type.

UNIFORM HAZARDOUS WASTE MANIFEST	1. Generator ID Number: CAC001169701	2. Page 1 of 1	3. Emergency Response Phone: 213-434-4219	4. Manifest Tracking Number: 015369784 FLE

5. Generator's Name and Mailing Address:
City of Los Angeles Department of Public Works
Bureau of Engineering 500 South Fe Avenue
City of Los Angeles Ca. 90013
Generator's Phone: Natalie Houck 213-[illegible]

Generator's Site Address (if different than mailing address):
100 South Fe Avenue
Los Angeles Ca. 90013

6. Transporter 1 Company Name: FA Sub Tesoro

U.S. EPA ID Number: CAD 00[illegible]

7. Transporter 2 Company Name:

U.S. EPA ID Number:

8. Designated Facility Name and Site Address:
South Yuma County Landfill
19930 South Avenue 3E
Yuma, Ca 92303 (928) 341-9300

U.S. EPA ID Number: AZP000[illegible]

No.	9a. U.S. DOT Description (Including Proper Shipping Name, Hazard Class, ID Number, and Packing Group, if any)	10. Containers No.	Type	11. Total Quantity	12. Unit Wt./Vol.	13. Waste Codes
1	NON RCRA Hazardous Waste Solid (Lead Impacted Soil)	001	DT	18	Y	[illegible]
2						
3						
4						

14. Special Handling Instructions and Additional Information:
Profile #C-6766
Wear appropriate safety clothing

15. GENERATOR'S/OFFICER'S CERTIFICATION: I hereby certify that the contents of this consignment are fully and accurately described above by the proper shipping name, and are classified, packaged, marked and labeled/placarded, and are in all respects in proper condition for transport according to applicable international and national governmental regulations. If export shipment and I am the Primary Exporter, I certify that the contents of this consignment conform to the terms of the attached EPA Acknowledgment of Consent.
I certify that the waste minimization statement identified in 40 CFR 262.27(a) (if I am a large quantity generator) or (b) (if I am a small quantity generator) is true.

Generator's Office or Printed Typed Name: [illegible] Signature: [illegible] Month: 12 Day: 11 Year: 24

16. Hazardous Waste Shipment: ☐ Import to U.S. ☐ Export from U.S. Port of entry/exit: Date leaving U.S.

17. Transporter Acknowledgment of Receipt of Materials:
Transporter 1 Printed/Typed Name: [illegible] Signature: [illegible] Month: 12 Day: 11 Year: 24
Transporter 2 Printed/Typed Name: Signature: Month: Day: Year:

18. Discrepancy:
18a. Discrepancy Indication Space: ☐ Quantity ☐ Type ☐ Residue ☐ Partial Rejection ☐ Full Rejection

18b. Alternate Facility (or Generator): U.S. EPA ID Number:
Facility's Phone:

18c. Signature of Alternate Facility (or Generator): Month: Day: Year:

19. Hazardous Waste Report Management Method Code (i.e., code for hazardous waste treatment, disposal, and recycling systems):
1. 2. 3. 4.

20. Designated Facility Owner or Operator: Certification of receipt of hazardous materials covered by the manifest except as noted in Item 18a:
Printed/Typed Name: Signature: Month: Day: Year:

EPA Form 8700-22 (Rev. 12-12) Previous editions are obsolete.

GENERATOR'S INITIAL COPY

Form Approved. OMB No. 2050-0039

UNIFORM HAZARDOUS WASTE MANIFEST

1. Generator ID Number	2. Page 1 of	3. Emergency Response Phone	4. Manifest Tracking Number
CAC003159701	01	213-434-4177	015369786 FLE

5. Generator's Name and Mailing Address
City of Los Angeles Department of Public Works
Bureau of Engineering Attn: Sandy Fo
City of Los Angeles Ca 90012

Generator's Site Address (if different than mailing address)
200 Santa Fe Avenue
Los Angeles Ca 90013

Generator's Phone (213) 485-4177

6. Transporter 1 Company Name
BB's Trucking Inc

U.S. EPA ID Number
CAR000188677

7. Transporter 2 Company Name

U.S. EPA ID Number

8. Designated Facility Name and Site Address
South Yuma County Landfill
15551 South Avenue 40
Roll AZ 85347 (928) 783-8810

U.S. EPA ID Number
AZD980502899

9a. HM	9b. U.S. DOT Description (including Proper Shipping Name, Hazard Class, ID Number, and Packing Group (if any))	10. Containers No.	10. Containers Type	11. Total Quantity	12. Unit Wt./Vol.	13. Waste Codes
	a. NOM RCRA Hazardous Waste Solid (Lead Impacted Soil)	001	DT	10	Y	
	b.					
	c.					
	d.					

14. Special Handling Instructions and Additional Information
Profile PO-8864
Wear appropriate safety clothing.

15. GENERATOR'S/OFFICER'S CERTIFICATION: I hereby declare that the contents of this consignment are fully and accurately described above by the proper shipping name, and are classified, packaged, marked and labeled/placarded, and are in all respects in proper condition for transport according to applicable international and national governmental regulations. If export shipment and I am the Primary Exporter I certify that the contents of this consignment conform to the terms of the attached EPA Acknowledgment of Consent.
I certify that the waste minimization statement identified in 40 CFR 262.27(a) (if I am a large quantity generator) or (b) (if I am a small quantity generator) is true.

Generator's Printed/Typed Name: Timothy Riley
Signature:
Month: 12 Day: 11 Year: 22

16. International Shipments: Import to U.S. Export from U.S. Port of entry/exit:
Transporter signature (for exports only):
Date leaving U.S.:

17. Transporter Acknowledgment of Receipt of Materials
Transporter 1 Printed/Typed Name: Jose Ramirez
Signature:
Month: 12 Day: 11 Year: 22

Transporter 2 Printed/Typed Name:
Signature:
Month: Day: Year:

18. Discrepancy
18a. Discrepancy Indication Space: Quantity Type Residue Partial Rejection Full Rejection
Manifest Reference Number:

18b. Alternate Facility (or Generator)
EPA ID Number:
Facility's Phone:

18c. Signature of Alternate Facility (or Generator)
Month: Day: Year:

19. Hazardous Waste Report Management Method Codes (i.e., codes for hazardous waste treatment, disposal, and recycling systems)
1. 2. 3. 4.

20. Designated Facility Owner or Operator: Certification of receipt of hazardous materials covered by this manifest except as noted in Item 18a
Printed/Typed Name:
Signature:
Month: Day: Year:

EPA Form 8700-22 (Rev. 12-17) Previous editions are obsolete.

GENERATOR'S INITIAL COPY

GENERATOR | TRANSPORTER | DESIGNATED FACILITY

Please print or type.

Form Approved. OMB No. 2050-0039

UNIFORM HAZARDOUS WASTE MANIFEST

1. Generator's US EPA ID No. CAC 003159101 | Page 1 of 1 | Emergency Response Phone | 4. Manifest Tracking No. 015366787 FLE

5. Generator's Name and Mailing Address
City of Los Angeles Department of Public Works
Bureau of Engineering 500 South Vermont
City of Los Angeles Ca 90017
Generator's Phone (Telefax Phone) 213-485-4377

Operator's Name and Mailing Address
500 South Vermont
Los Angeles Ca 90021

6. Transporter 1 Company Name: ROCAMI Trucking | U.S. EPA ID Number: CAR000178615

7. Transporter 2 Company Name | U.S. EPA ID Number

8. Designated Facility Name and Site Address
South Yuma County Landfill
1650 South Avenue 12
Yuma AZ 85365 (928) 341-9500 | U.S. EPA ID Number: AZD980706980

No.	9. U.S. DOT Description (including Proper Shipping Name, Hazard Class, ID Number, and Packing Group (if any))	10. Containers: No.	Type	11. Total Quantity	12. Unit Wt./Vol.	13. Waste Codes
1	RQ NON Hazardous Waste Solid (Lead Impacted Soil)	001	CT	10	Y	
2						
3						
4						

14. Special Handling Instructions and Additional Information
Profile#C-6124
Wear appropriate safety clothing

15. GENERATOR'S/OFFICER'S CERTIFICATION: The materials described on this manifest are not subject to federal regulations for reporting proper shipping name, and are classified, packaged, marked and labeled/placarded, and are in all respects in proper condition for transport according to applicable international and national governmental regulations. If export shipment and I am the Primary Exporter, I certify that the contents of this consignment conform to the terms of the attached EPA Acknowledgment of Consent.
I certify that the waste minimization statement identified in 40 CFR 262.27(a) (if I am a large quantity generator) or (b) (if I am a small quantity generator) is true.
Generator's/Offeror's Printed/Typed Name | Signature | Month 12 | Day 11 | Year 24

16. International Shipments: Import to U.S. | Export from U.S. | Port of Entry/Exit
Transporter signature (for exports only): | Date leaving U.S.:

17. Transporter Acknowledgment of Receipt of Materials
Transporter 1 Printed/Typed Name: Ignacio Arvizu | Signature | Month 12 | Day 11 | Year 24
Transporter 2 Printed/Typed Name | Signature | Month | Day | Year

18. Discrepancy
18a. Discrepancy Indication Space: Quantity | Type | Residue | Partial Rejection | Full Rejection
Manifest Reference No.:
18b. Alternate Facility (or Generator) | U.S. EPA ID Number
Facility's Phone:
18c. Signature of Alternate Facility (or Generator) | Month | Day | Year

19. Hazardous Waste Management Method Codes (i.e., codes for hazardous waste treatment, disposal, and recycling systems)
1. | 2. | 3. | 4.

20. Designated Facility Owner or Operator: Certification of receipt of hazardous materials covered by this manifest except as noted in Item 18a
Printed/Typed Name | Signature | Month | Day | Year

Form 8700-22 (Rev. 12-05) Previous editions are obsolete. | GENERATOR'S INITIAL COPY

DESIGNATED FACILITY | TRANSPORTER | GENERATOR

Please print or type

Form Approved. OMB No. 2050-0039

UNIFORM HAZARDOUS WASTE MANIFEST

2. Page 1 of	3. Emergency Response Phone	4. Manifest Tracking Number
01	213-484-6277	015369788 FLE

1. Generator's Name and Mailing Address
City of Los Angeles, Department of Public Works
Bureau of Engineering 801 South Fe Avenue
City of Los Angeles Ca 9 013

Generator's Phone (With Area Code): 213-485-5777

1b. Generator's Site Address (if different than mailing address)
101 South Fe Avenue
Los Angeles Ca 90013

5. Transporter 1 Company Name: Romero Trucking

6. US EPA ID Number: CAD009135646

7. Transporter 2 Company Name:

8. US EPA ID Number:

9. Designated Facility Name and Site Address
South Yuma County Landfill
[illegible] South Avenue 3E
[illegible] AZ 85369 (928) 783-4504

10. US EPA ID Number: AZD050506980

No.	11. Containers: No.	Type	12. Total Quantity	13. Unit Wt./Vol.	14. Waste Codes
1	001	DT	25	Y	[illegible]
2					
3					
4					

15. Special Handling Instructions and Additional Information
Profile No-[illegible]
Wear appropriate safety clothing.

16. GENERATOR'S/OFFICER'S CERTIFICATION: I hereby declare that the contents of this consignment are fully and accurately described above by the proper shipping name, and are classified, packaged, marked and labeled/placarded, and are in all respects in proper condition for transport according to applicable international and national governmental regulations. If export shipment and I am the Primary Exporter, I certify that the contents of this consignment conform to the terms of the attached EPA Acknowledgment of Consent.
I certify that the waste minimization statement identified in 40 CFR 262.27(a) (if I am a large quantity generator) or (b) (if I am a small quantity generator) is true.

Generator's Printed/Typed Name: [illegible] | Signature: [illegible] | Month: 12 | Day: 11 | Year: 22

17. International Shipments: ☐ Import to U.S. ☐ Export from U.S. | Port of entry/exit:
Transporter signature (for exports only): | Date leaving U.S.:

18. Transporter Acknowledgment of Receipt of Materials

Transporter 1 Printed/Typed Name: Joel Ruiz | Signature: [signature] | Month: 12 | Day: 11 | Year: 22

Transporter 2 Printed/Typed Name: | Signature: | Month: | Day: | Year:

19. Discrepancy

19a. Discrepancy Indication Space: ☐ Quantity ☐ Type ☐ Residue ☐ Partial Rejection ☐ Full Rejection

Manifest Reference Number:

20. Facility Owner or Operator: Certification of receipt of hazardous materials covered by the manifest except as noted in Item 19a

US EPA ID Number:

Facility's Phone:

20a. Signature of Alternate Facility (or Generator)

Month: | Day: | Year:

21. Hazardous Waste Report Management Method Codes (i.e., codes for hazardous waste treatment, disposal, and recycling systems)

1.	2.	3.	4.

22. Designated Facility Owner or Operator: Certification of receipt of hazardous materials covered by the manifest except as noted in Item 19a

Printed/Typed Name: | Signature: | Month: | Day: | Year:

EPA Form 8700-22 (Rev. 12-17) Previous editions are obsolete.

GENERATOR'S INITIAL COPY

GENERATOR | TRANSPORTER | DESIGNATED FACILITY

Form Approved CAR 10 [illegible]

UNIFORM HAZARDOUS WASTE MANIFEST	1. Generator ID Number	2. Page 1 of	3. Emergency Response Phone	4. Manifest Tracking Number
	[illegible]	01	[illegible]	015[illegible]3789 FLE

5. Generator's Name and Mailing Address
City of Los Angeles, Department of Public Works
Bureau of Engineering 330 Santa Fe Avenue
City of Los Angeles Ca. 90013
Generator's Phone: [illegible]

Generator's Site Address (if different than mailing address)
330 Santa Fe Avenue
Los Angeles Ca. 90013

6. Transporter 1 Company Name: Romero Trucking
01 Site ID Number: CAR000185660

7. Transporter 2 Company Name:
02 Site ID Number:

8. Designated Facility Name and Site Address
South Yuma County Landfill
10330 South Avenue 17
Tel: [illegible]
03 Site ID Number: [illegible]

9. Hazardous Waste Shipping Name, Hazard Class, ID Number and Packing Group (if any)	10. Contents No.	Type	11. Total Quantity	12. Unit Wt./Vol.	13. Waste Codes
1. RQ RCRA Hazardous Waste Solid (Lead Impacted Soil)	001	0"	to	7	[illegible]
2.					
3.					
4.					

14. Type of Handling Instructions and Additional Information
Profile #[illegible]
Wear appropriate safety clothing

15. GENERATOR'S/OFFEROR'S CERTIFICATION: [illegible]

Generator's Printed/Typed Name: [illegible] Signature: [illegible] Month 2 Day 11 Year 22

16. International Shipments: ☐ Import ☐ Export Port of Entry/Exit
Transporter signature for exports only: Date Leaving U.S.

17. Transporter Acknowledgment of Receipt of Materials
Transporter 1 Printed/Typed Name: [illegible] Signature: [illegible] Month 2 Day 11 Year 22
Transporter 2 Printed/Typed Name: Signature: Month Day Year

18. Discrepancy
18a. Discrepancy Indication Space: ☐ Quantity ☐ Type ☐ Residue ☐ Partial Rejection ☐ Full Rejection
Manifest Reference Number:

18b. Alternate Facility (or Generator): U.S. EPA ID Number
Facility's Phone:

18c. Signature of Alternate Facility (or Generator): Month Day Year

19. Hazardous Waste Report Management Method Code (i.e., code for hazardous waste treatment, disposal, and recycling systems):

20. Designated Facility Owner or Operator Certification: [illegible]
Printed/Typed Name: Signature: Month Day Year

EPA Form 8700-22 (Rev. 12-11) Previous editions are obsolete.

GENERATOR'S INITIAL COPY

Form Approved OMB No. 2050-0039				
UNIFORM HAZARDOUS WASTE MANIFEST	1. Generator ID Number: CAC003159701	2. Page 1 of 1	3. Emergency Response Phone: 213-693-4277	4. Manifest Tracking Number: 015369790 FLE

5. Generator's Name and Mailing Address:
City of Los Angeles, Department of Public Works
Bureau of Engineering 800 Santa Fe Avenue
City of Los Angeles Ca. 90013
Generator's Phone: 213 [illegible]

Generator's Site Address (if different than mailing address):
800 Santa Fe Avenue
Los Angeles Ca. 90013

6. Transporter 1 Company Name: Ramon Trucking
U.S. EPA ID Number: CAC001 [illegible]

7. Transporter 2 Company Name:
U.S. EPA ID Number:

8. Designated Facility Name and Site Address:
South Yuma County Landfill
19134 South Avenue 17
Yuma, AZ 85303 (928) 791-4300
U.S. EPA ID Number: [illegible]

No.	9. U.S. DOT Description (including Proper Shipping Name, Hazard Class, ID Number, and Packing Group (if any))	10. Contrib. No.	Type	11. Total Quantity	12. Unit Wt./Vol.	13. Waste Codes
1	NON RCRA Hazardous Waste Solid (Lead Impacted Soil)	01	DT	34	Y	[illegible]
2						
3						
4						

14. Special Handling Instructions and Additional Information:
Profile #[illegible]
Wear appropriate safety clothing

15. GENERATOR'S CERTIFICATION: I hereby declare that the contents of this consignment are fully and accurately described above by the proper shipping name, and are in all respects in proper condition for transport according to applicable international and national governmental regulations. If export shipment and I am the Primary Exporter I certify that the contents of this consignment conform to the terms of the attached EPA Acknowledgment of Consent.
I certify that the waste minimization statement identified in 40 CFR 262.27(a) (if I am a large quantity generator) or (b) (if I am a small quantity generator) is true.

Generator's Printed Name: [illegible] Signature: [illegible] Month 2 Day 11 Year 22

16. Transporter Signature: ☐ Transit ☐ Dispatch ☐ Exit ☐ Port of Entry
Transporter Signature for Exports Only: Date of Entry: Date of Exit:

17. Transporter Acknowledgment of Receipt of Materials:
Transporter 1 Printed Name: [illegible] Signature: [illegible] Month 2 Day 11 Year 22
Transporter 2 Printed Name: Signature: Month Day Year

18. Discrepancy:
18a. Discrepancy Indication Space: ☐ Quantity ☐ Type ☐ Residue ☐ Partial Rejection ☐ Full Rejection
Manifest Reference Number:

19. Manifest Tracking Number: U.S. EPA ID Number:
Facility Name:
Signature of Authorized Representative: Month Day Year

20. Hazardous Waste Report Management Method Codes (i.e., codes for hazardous waste treatment, disposal, and recycling systems):
1. 2. 3. 4.

21. Designated Facility Owner or Operator: Certification of receipt of hazardous materials covered by the manifest except as noted in Item 18a:
Printed Name: Signature: Month Day Year

GENERATOR'S INITIAL COPY

Please print or type.

Form Approved. OMB No. 2050-0039

UNIFORM HAZARDOUS WASTE MANIFEST

1. Generator ID Number: CAC003159703

2. Page 1 of 1

3. Emergency Response Phone: 213 634-1277

4. Manifest Tracking Number: 015366791 FLE

5. Generator's Name and Mailing Address: City of Los Angeles Department of Public Works, Bureau of Engineering 540 Santa Fe Avenue, City of Los Angeles Ca 90013

Generator's Site Address (if different than mailing address): 700 Santa Fe Avenue, Los Angeles Ca 90013

Generator's Phone: 213 485-5911

6. Transporter 1 Company Name: CR&R TRANSPORTATION

U.S. EPA ID Number: CAD009733490

7. Transporter 2 Company Name:

U.S. EPA ID Number:

8. Designated Facility Name and Site Address: South Yuma County Landfill, 14520 South Avenue 12E, Yuma AZ 85365 (928) 342-9200

U.S. EPA ID Number: AZD029556930

Facility's Phone:

No.	9. Waste Description (including Proper Shipping Name, Hazard Class, ID Number and Packing Group if any)	10. Containers: No.	Type	11. Total Quantity	12. Unit Wt./Vol.	13. Waste Codes
1	NON RCRA Hazardous Waste Soils (Lead Impacted Soil)	001	DT	14	Y	
2						
3						
4						

14. Special Handling Instructions and Additional Information:

Profile#C-6164
Wear appropriate safety clothing.

15. GENERATOR'S/OFFEROR'S CERTIFICATION: I hereby declare that the contents of this consignment are fully and accurately described above by the proper shipping name, and are classified, packaged, marked and labeled/placarded, and are in all respects in proper condition for transport according to applicable international and national government regulations. If export shipment and I am the Primary Exporter, I certify that the contents of this consignment conform to the terms of the attached EPA Acknowledgment of Consent.
I certify that the waste minimization statement identified in 40 CFR 262.27(a) (if I am a large quantity generator) or (b) (if I am a small quantity generator) is true.

Generator's/Offeror's Printed/Typed Name: Anthony Brill

Signature:

Month: 2 | Day: 11 | Year: 22

16. International Shipments: ☐ Import to U.S. ☐ Export from U.S. Port of entry/exit:

Transporter signature (for exports only):

Date leaving U.S.:

17. Transporter Acknowledgment of Receipt of Materials

Transporter 1 Printed/Typed Name: Carlos De Leon

Signature:

Month: 3 | Day: 4 | Year: 22

Transporter 2 Printed/Typed Name:

Signature:

Month: | Day: | Year:

18. Discrepancy

18a. Discrepancy Indication Space: ☐ Quantity ☐ Type ☐ Residue ☐ Partial Rejection ☐ Full Rejection

Manifest Reference Number:

18b. Alternate Facility (or Generator)

U.S. EPA ID Number:

Facility's Phone:

18c. Signature of Alternate Facility (or Generator)

Month: | Day: | Year:

18d. Waste Management Method Codes (i.e., codes for treatment, disposal, and recycling systems)

1: | 2: | 3: | 4:

19. Designated Facility Owner or Operator: Certification of receipt of hazardous materials covered by this manifest except as noted in Item 18a

Printed/Typed Name:

Signature:

Month: | Day: | Year:

EPA Form 8700-22 (Rev. 12-17) Previous editions are obsolete.

GENERATOR'S INITIAL COPY

GENERATOR | TRANSPORTER | DESIGNATED FACILITY

Form Approved OMB No. 2050-0039

UNIFORM HAZARDOUS WASTE MANIFEST	1. Generator ID Number	2. Page 1 of	3. Emergency Response Phone	4. Manifest Tracking Number
	CAC003159701	01	213-694-3277	015369792 FLE

5. Generator's Name and Mailing Address
City of Los Angeles, Department of Public Works
Bureau of Engineering 650 Santa Fe Avenue
City of Los Angeles Ca 90012
Generator's Phone: 213-694-3277

Generator's Site Address (if different than mailing address)
100 South Fe Avenue
Los Angeles Ca 90012

6. Transporter 1 Company Name: [illegible]
U.S. EPA ID Number: 10XD000253493

7. Transporter 2 Company Name:
U.S. EPA ID Number:

8. Designated Facility Name and Site Address
South Yuma County Landfill
16534 South Avenue 11
Tel: 30 35363 (970) 391 5390
Facility's Phone:
U.S. EPA ID Number: ACR000006[illegible]

9. Item	10. Description	11. Quantity	12. Unit	13. Waste Codes
		No.	Type	
	NON RCRA Hazardous Waste Solid (Lead Impacted Soil)	001	DT	16 Y 61

14. Special Handling Instructions and Additional Information
Profile#C-6868
[illegible]

15. GENERATOR'S/OFFICER'S CERTIFICATION: I hereby declare that the contents of this shipment are fully and accurately described above by the proper shipping name, and are classified, packaged, marked and labeled/placarded, and are in all respects in proper condition for transport according to applicable international and national governmental regulations. If export shipment and I am the Primary Exporter, I certify that the contents of this consignment conform to the terms of the attached EPA Acknowledgment of Consent.
I certify that the same information statement identified in 40 CFR 262.27(a) (if I am a large quantity generator) or (b) (if I am a small quantity generator) is true.

Generator's Offeror's Printed/Typed Name: [illegible] Signature: [illegible] Month: 12 Day: 11 Year: 22

16. Generator Shipment: ☐ Quantity ☐ Type ☐ Number
Per or previous Date Issued (U.S.)
Generator Signature for Month/Day

17. Generator Acknowledgment of Receipt of Materials
Transporter 1 Printed/Typed Name: [illegible] Signature: [illegible] Month: 12 Day: 11 Year: 22
Transporter 2 Printed/Typed Name: Signature: Month: Day: Year:

18. Generator
19. Generator Indication Name: ☐ Quantity ☐ Type ☐ Number ☐ Partial Rejection ☐ Full Rejection
Manifest Reference Number:
20. Manifest Facility or Generator: U.S. EPA ID Number:
Facility's Phone:
21. Signature of Alternate Facility or Generator: Month: Day: Year:

22. Hazardous Waste Report Management Method Code (i.e., codes for hazardous waste treatment, disposal, and recycling systems)
1. 2. 3. 4.

23. Designated Facility Owner or Operator: Certification of receipt of hazardous materials covered by this manifest except as noted in Item 18a
Printed/Typed Name: Signature: Month: Day: Year:

EPA Form 8700-22 (Rev. 12-97) Previous editions are obsolete.

GENERATOR'S INITIAL COPY

Form Approved OMB No. 2050-0039

UNIFORM HAZARDOUS WASTE MANIFEST

CACOOJ159701

01536793 FLE

Generator's Name and Mailing Address
City of Los Angeles Department of Public Works
Bureau of Engineering 300 Santa Fe Avenue
City of Los Angeles CA 90013

Generator's Site Address
300 Santa Fe Avenue
Los Angeles CA 90013

Generator's Phone
(213) 922-8000 19635

U.S. EPA ID Number

Transporter 1 Company Name

Transporter 2 Company Name

Designated Facility Name and Site Address
South Yuma County Landfill
19510 South Avenue 48
Yuma AZ 85365 (928) 342-0750

U.S. EPA ID Number
AZD980625956

	9. Waste Description	10. Containers No.	10. Containers Type	11. Total Quantity	12. Unit Wt./Vol.	13. Waste Codes
a.	Non RCRA Hazardous Waste Solid (Lead Impacted Soil)	001	CT	20	Y	
b.						
c.						
d.						

14. Special Handling Instructions and Additional Information

Profile #

Non-hazardous waste solid

15. GENERATOR'S/OFFEROR'S CERTIFICATION: I hereby declare that the contents of this consignment are fully and accurately described above by the proper shipping name, and are classified, packaged, marked and labeled/placarded, and are in all respects in proper condition for transport according to applicable international and national governmental regulations. If export shipment and I am the Primary Exporter, I certify that the contents of this consignment conform to the terms of the attached EPA Acknowledgment of Consent.
I certify that the waste minimization statement identified in 40 CFR 262.27(a) (if I am a large quantity generator) or (b) (if I am a small quantity generator) is true.

Generator's/Offeror's Printed/Typed Name

Signature

Month Day Year
5 11 22

16. International Shipments: ☐ Import to U.S. ☐ Export from U.S. Port of entry/exit:

Transporter signature (for exports only):

17. Transporter Acknowledgment of Receipt of Materials

Transporter 1 Printed/Typed Name

Signature

Month Day Year
5 11 22

Transporter 2 Printed/Typed Name

Signature

Month Day Year

18. Discrepancy

18a. Discrepancy Indication Space: ☐ Quantity ☐ Type ☐ Residue ☐ Partial Rejection ☐ Full Rejection

Manifest Reference Number:

18b. Alternate Facility (or Generator)

U.S. EPA ID Number

Facility's Phone:

18c. Signature of Alternate Facility (or Generator)

Month Day Year

19. Hazardous Waste Report Management Method (Codes for Hazardous Waste Handled at Designated Facility)

a.	b.	c.	d.

20. Designated Facility Owner or Operator: Certification of receipt of hazardous materials covered by this manifest except as noted in Item 18a

Printed/Typed Name

Signature

Month Day Year

Continued from EPA ID Number (Item 1) if additional addresses are required

GENERATOR'S INITIAL COPY

UNIFORM HAZARDOUS WASTE MANIFEST

1. Generator's US EPA ID No. CAD031597701

2. Page 1 of 1

3. Emergency Response Phone 213-484-4277

4. Manifest Tracking Number 015369794 FLE

5. Generator's Name and Mailing Address
City of Los Angeles,Department of Publ
Bureau of Engineering 201 South Ma
City of Los Angeles CA 90012

Generator's Site Address (if different than mailing address)
201 South Main
Los Angeles Ca 90012

6. Transporter 1 Company Name
EnviroSCS

US EPA ID Number
CAT000626937

7. Transporter 2 Company Name

US EPA ID Number

8. Designated Facility Name and Site Address
South Yuma County Landfill
10751 South Avenue 22
Somerton, AZ 85350

US EPA ID Number
AZD009246961

9a. HM	9b. U.S. DOT Description (including Proper Shipping Name, Hazard Class, ID Number, and Packing Group (if any))	10. Containers No.	10. Containers Type	11. Total Quantity	12. Unit Wt./Vol.	13. Waste Codes
	1 NON RCRA Hazardous Waste Solid [Lead Impacted Soil]	003	CY	16	T	
	2					
	3					
	4					

14. Special Handling Instructions and Additional Information
resfile#C-6366
Wear appropriate safety clothing.

15. GENERATOR'S CERTIFICATION: I hereby declare that the contents of this consignment are fully and accurately described above by the proper shipping name and are classified, packed, marked and labeled/placarded, and are in all respects in proper condition for transport according to applicable international and national governmental regulations. If export shipment and I am the Primary Exporter I certify that the contents of this consignment conform to the terms of the attached EPA Acknowledgment of Consent.
I certify that the waste minimization statement identified in 40 CFR 262.27(a) (if I am a large quantity generator) or (b) (if I am a small quantity generator) is true.

Generator's/Offeror's Printed/Typed Name: Mitch Hical
Signature:
Month 12 Day 17 Year 22

16. International Shipments: Import to U.S. Export from U.S. Port of entry/exit:
Transporter signature (for exports only):
Date leaving U.S.:

17. Transporter Acknowledgment of Receipt of Materials
Transporter 1 Printed/Typed Name: Wesley Rollins
Signature:
Month 12 Day 18 Year 22

Transporter 2 Printed/Typed Name:
Signature:
Month Day Year

18. Discrepancy
18a. Discrepancy Indication Space: Quantity Type Residue Partial Rejection Full Rejection
Manifest Reference Number:

18b. Alternate Facility (or Generator)
US EPA ID Number:
Facility's Phone:

18c. Signature of Alternate Facility (or Generator)
Month Day Year

19. Hazardous Waste Report Management Method Codes (i.e., codes for hazardous waste treatment, disposal, and recycling systems)
1. 2. 3. 4.

20. Designated Facility Owner or Operator: Certification of receipt of hazardous materials covered by this manifest except as noted in Item 18a
Printed/Typed Name:
Signature:
Month Day Year

EPA Form 8700-22 (Rev. 12-17) Previous editions are obsolete.

GENERATOR'S INITIAL COPY

Please print or type

UNIFORM HAZARDOUS WASTE MANIFEST

1 Generator ID Number: CAC003159701

2 Page 1 of 1

3 Emergency Response Phone: 323-654-4227

4 Manifest Tracking Number: 015363795 FLE

5 Generator's Name and Mailing Address
City of Los Angeles, Department of Public Works
Bureau of Engineering 1149 Santa Fe Avenue
City of Los Angeles Ca. 90013
Generator's Site Address (if different than mailing address): 1149 Santa Fe Avenue Los Angeles CA 90021

6 Transporter 1 Company Name: A-B-C Soil
US EPA ID Number: CAD981718542

7 Transporter 2 Company Name:
US EPA ID Number:

8 Designated Facility Name and Site Address: South Yuba County Landfill
[illegible] South Avenue [illegible]
[illegible] CA 95945 (530) 541-3300
US EPA ID Number: CAD000629774

9a HM	9b U.S. DOT Description (including Proper Shipping Name, Hazard Class, ID Number, and Packing Group (if any))	10 Containers No.	10 Containers Type	11 Total Quantity	12 Unit Wt./Vol.	13 Waste Codes		
a	Non RCRA Hazardous Waste Solid (Lead Impacted Soil)	001	DM	18	Y			
b								
c								
d								

14 Special Handling Instructions and Additional Information
Profile # K-1866
Wear appropriate safety clothing

15 GENERATOR'S/OFFICER'S CERTIFICATION: I hereby declare that the contents of this consignment are fully and accurately described above by the proper shipping name and are classified, packaged, marked and labeled/placarded, and are in all respects in proper condition for transport according to applicable international and national governmental regulations. If export shipment and I am the Primary Exporter, I certify that the provisions of the environmental control by the terms of the attached EPA Acknowledgment of Consent.
I certify that the waste minimization statement identified in 40 CFR 262.27(a) (if I am a large quantity generator) or (b) (if I am a small quantity generator) is true.
Generator's/Offeror's Printed/Typed Name: [illegible] Signature: [illegible] Month 12 Day 11 Year 22

16 International Shipments: Import to U.S. Export from U.S. Port of entry/exit:
Transporter signature (for exports only):
Date leaving U.S.:

17 Transporter Acknowledgment of Receipt of Materials
Transporter 1 Printed/Typed Name: [illegible] Signature: [illegible] Month 12 Day 11 Year 22
Transporter 2 Printed/Typed Name: Signature: Month Day Year

18 Discrepancy
18a Discrepancy Indication Space: Quantity Type Residue Partial Rejection Full Rejection
Manifest Reference Number:
18b Alternate Facility (or Generator):
US EPA ID Number:
Facility's Phone:
18c Signature of Alternate Facility (or Generator): Month Day Year

18d Transporter Name Signature (for rejects): Month Day Year

19 Hazardous Waste Report Management Method Codes (i.e., codes for hazardous waste treatment, disposal, and recycling systems):
1. 2. 3. 4.

20 Designated Facility Owner or Operator: Certification of receipt of hazardous materials covered by this manifest except as noted in Item 18a
Printed/Typed Name: Signature: Month Day Year

DESIGNATED FACILITY

GENERATOR'S INITIAL COPY

Form Approved OMB No. 2050-0039

UNIFORM HAZARDOUS WASTE MANIFEST	1 Generator ID Number CAD 0 59701	2 Page 1 of 01	3 Emergency Response Phone 714-434-1277	4 Manifest Tracking Number 015369796 FLE

5 Generator's Name and Mailing Address
City of Los Angeles, Department of Public Works, Bureau of Engineering 500 Santa Fe Avenue City of Los Angeles CA 90013
Generator's Phone: Nicholas Weiss 213-485-5177

6 Transporter 1 Company Name: S Environmental Trucking — 7 US EPA ID Number: CAD981686447

8 Transporter 2 Company Name — 9 US EPA ID Number

10 Designated Facility Name and Site Address
South Yuba County Landfill
10538 Dutch Ave. LF
Yuba City CA 95991 530-741-6165 — 11 US EPA ID Number: AZD000506907

12 a. No.	12 b. U.S. DOT Description (including Proper Shipping Name, Hazard Class, ID Number, and Packing Group (if any))	12 c. Container No.	12 c. Container Type	13 Total Quantity	14 Unit Wt./Vol.	15 Waste Codes
	NON RCRA Hazardous Waste Solid (Lead Impacted Soil)	001	DT	36	Y	

16 Special Handling Instructions and Additional Information
Profile#C-6165
Wear appropriate safety clothing

17 GENERATOR'S/OFFICER'S CERTIFICATION: I hereby declare that the contents of this consignment are fully and accurately described above by the proper shipping name and are classified, packaged, marked and labeled/placarded, and are in all respects in proper condition for transport according to applicable international and national governmental regulations. I certify that the waste minimization statement identified in 40 CFR 262.27(a) (if I am a large quantity generator) or (b) (if I am a small quantity generator) is true.

Generator's/Offeror's Printed/Typed Name: Nicholas Weiss — Signature — Month 12 Day 14 Year 22

18 International Shipments: ☐ Import to U.S. ☐ Export from U.S. — Port of entry/exit: — Date leaving U.S.:

19 Transporter Acknowledgment of Receipt of Materials

Transporter 1 Printed/Typed Name: Brandon Lewis — Signature — Month 12 Day 14 Year 22

Transporter 2 Printed/Typed Name — Signature — Month Day Year

20 Discrepancy

20a Discrepancy Indication Space: ☐ Quantity ☐ Type ☐ Residue ☐ Partial Rejection ☐ Full Rejection

20b Alternate Facility (or Generator) — 20c US EPA ID Number

Facility's Phone:

20d Waste Shipped / Received — Month Day Year

20e Alternate Facility (or Generator) Management Method Type (i.e., codes for hazardous waste treatment, disposal, and recycling systems)

20f Designated Facility Owner or Operator: Certification of receipt of hazardous materials covered by this manifest except as noted in Item 20b.

Printed/Typed Name — Signature — Month Day Year

GENERATOR'S INITIAL COPY

Please print or type.

Form Approved OMB No. 2050-0039

UNIFORM HAZARDOUS WASTE MANIFEST

1. Generator ID Number: CAD981697981

2. Page 1 of: 31

3. Emergency Response Phone: 213-484-6877

4. Manifest Tracking Number: 015369791 FLE

5. Generator's Name and Mailing Address: City of Los Angeles Department of Public Works Bureau of Engineering 660 Santa Fe Avenue City of Los Angeles Ca 9001

Generator's Site Address (if different than mailing address): 660 Santa Fe Avenue Los Angeles Ca 90021

Generator's Phone: 213-485-5477

6. Transporter 1 Company Name: Lopinto's

US EPA ID Number: CAT000190773

7. Transporter 2 Company Name:

US EPA ID Number:

8. Designated Facility Name and Site Address: South Yuma County Landfill 1911 South Avenue 9E Yuma AZ 85365 (928) 941-4600

US EPA ID Number: AZD980695998

No.	9. US DOT Description (including Proper Shipping Name, Hazard Class, ID Number, and Packing Group (if any))	10. Containers: No.	Type	11. Total Quantity	12. Unit Wt./Vol.	13. Waste Codes
1	NON RCRA Hazardous Waste Solid (Lead Impacted Soil)	001	CY	16	Y	9035
2						
3						
4						

14. Special Handling Instructions and Additional Information:

Profile#: 21-0016
Wear appropriate safety clothing.

15. GENERATOR'S/OFFEROR'S CERTIFICATION: I hereby declare that the contents of this consignment are fully and accurately described above by the proper shipping name, and are classified, packaged, marked and labeled/placarded, and are in all respects in proper condition for transport according to applicable international and national governmental regulations. If export shipment and I am the Primary Exporter, I certify that the contents of this consignment conform to the terms of the attached EPA Acknowledgment of Consent.
I certify that the waste minimization statement identified in 40 CFR 262.27(a) (if I am a large quantity generator) or (b) (if I am a small quantity generator) is true.

Generator's Printed/Typed Name: JUAN ESPINOZA Signature: Date: 12/12/22

16. International Shipments: Import to US / Export from US — Port of entry/exit:

Transporter Signature (for exports only): Date leaving US:

17. Transporter Acknowledgment of Receipt of Materials

Transporter 1 Printed/Typed Name: JUAN ESPINOZA Signature: Date: 12/12/22

Transporter 2 Printed/Typed Name: Signature: Date:

18. Discrepancy

18a. Discrepancy Indication Space: Quantity / Type / Residue / Partial Rejection / Full Rejection

Manifest Reference Number:

18b. Alternate Facility (or Generator): US EPA ID Number:

Facility's Phone:

18c. Signature of Alternate Facility (or Generator): Date:

19. Hazardous Waste Report Management Method Codes (i.e., codes for hazardous waste treatment, disposal, and recycling systems):

1. 2. 3. 4.

20. Designated Facility Owner or Operator: Certification of receipt of hazardous materials covered by this manifest except as noted in Item 18a

Printed/Typed Name: Signature: Date:

DESIGNATED FACILITY — TRANSPORTER — INTL — GENERATOR

EPA Form 8700-22 (Rev. 12-17) Previous editions are obsolete.

GENERATOR'S INITIAL COPY

Please print or type.

Form approved. OMB No. 2050-0039

UNIFORM HAZARDOUS WASTE MANIFEST	1. Generator ID Number: CAC003159701	2. Page 1 of 1	3. Emergency Response Phone: 213-694-4277	4. Manifest Tracking Number: 015369696 FLE

5. Generator's Name and Mailing Address: City of Los Angeles Department of Public Works, Bureau of Engineering 185 South Fe Avenue, City of Los Angeles Ca, 90011

Generator's Phone: 213-[illegible]

Generator's Site Address (if different than mailing address): 185 South Fe Avenue, Los Angeles Ca, 90011

6. Transporter 1 Company Name: [illegible]

U.S. EPA ID Number: CAC000190773

7. Transporter 2 Company Name:

U.S. EPA ID Number:

8. Designated Facility Name and Site Address: South Yuma County Landfill, 15136 South Avenue 32, [illegible]

U.S. EPA ID Number: [illegible]

Facility's Phone:

9a. Item	9b. U.S. DOT Description (including Proper Shipping Name, Hazard Class, ID Number, and Packing Group, if any)	10. Contained		11. Total Quantity	12. Unit Wt./Vol.	13. Waste Codes	
		No.	Type				
	SUB RCRA Hazardous Waste Solid (Lead Impacted Soil)	001	DT	16	Y	[illegible]	

14. Special handling instructions and additional information:

Profile#C-6866

Wear appropriate safety clothing

15. GENERATOR'S/OFFICER'S CERTIFICATION: I hereby declare that the contents of this consignment are fully and accurately described above by the proper shipping name, and are classified, packaged, marked and labeled/placarded, and are in all respects in proper condition for transport according to applicable international and national governmental regulations. If export shipment and I am the Primary Exporter, I certify that the contents of this consignment conform to the terms of the attached EPA Acknowledgment of Consent.

I certify that the waste minimization statement identified in 40 CFR 262.27(a) (if I am a large quantity generator) or (b) (if I am a small quantity generator) is true.

Generator's/Offeror's Printed/Typed Name: [illegible] Signature: [illegible] Month: 10 Day: 11 Year: 22

16. International Shipments: ☐ Import to U.S. ☐ Export from U.S. Port of Entry/Exit:

Transporter signature (for exports only): Date leaving U.S.:

17. Transporter Acknowledgment of Receipt of Materials

Transporter 1 Printed/Typed Name: [illegible] Signature: [illegible] Month: 10 Day: 11 Year: 22

Transporter 2 Printed/Typed Name: Signature: Month: Day: Year:

18. Discrepancy

18a. Discrepancy Indication Space: ☐ Quantity ☐ Type ☐ Residue ☐ Partial Rejection ☐ Full Rejection

Manifest Reference Number:

18b. Alternate Facility (or Generator): U.S. EPA ID Number:

Facility's Phone:

18c. Signature of Alternate Facility (or Generator): Month: Day: Year:

19. Hazardous Waste Report Management Method Codes (i.e., codes for hazardous waste treatment, disposal, and recycling systems):

20. Designated Facility Owner or Operator: Certification of receipt of hazardous materials covered by the manifest except as noted in Item 18a

Printed/Typed Name: Signature: Month: Day: Year:

EPA Form 8700-22 (Rev. 12-17) Previous editions are obsolete.

GENERATOR'S INITIAL COPY

Please print or type

Form Approved. Draft No. 2060-0039

UNIFORM HAZARDOUS WASTE MANIFEST

1. Generator ID Number: CAC[illegible]

2. Page 1 of: [illegible]

3. Emergency Response Phone: [illegible]

4. Manifest Tracking Number: 015[illegible]39697 FLE

5. Generator's Name and Mailing Address: City of Los Angeles Department of Public Works, Bureau of Engineering 650 Santa Fe Avenue, City of Los Angeles Ca. 90021

Generator's Site Address (if different than mailing address): 650 Santa Fe Avenue, Los Angeles Ca. 90012

6. Transporter 1 Company Name: VAZQUEZ TRUCKING & SON

U.S. EPA ID Number: CAR000225694

7. Transporter 2 Company Name:

U.S. EPA ID Number:

8. Designated Facility Name and Site Address: South Yuma County Landfill, 1[illegible] South Avenue 32, Fortuna Road, Yuma, AZ 85365 (928) 261-1900

U.S. EPA ID Number: [illegible]

No.	9a. U.S. DOT Description (including Proper Shipping Name, Hazard Class, ID Number, and Packing Group if any)	10. Contents No.	Type	11. Total Quantity	12. Unit Wt./Vol.	13. Waste Codes
	1. KUB RCRA Hazardous Waste Solid (Lead Impacted Soil)	103	DT	16	Y	[illegible]
	2.					
	3.					
	4.					

14. Special Handling Instructions and Additional Information:

Precision [illegible]
Wear [illegible] safety [illegible]

15. GENERATOR'S/OFFEROR'S CERTIFICATION: I hereby declare that the contents of this consignment are fully and accurately described above by the proper shipping name, and are classified, packaged, marked and labeled/placarded, and are in all respects in proper condition for transport according to applicable international and national governmental regulations. If I am a large quantity generator, I certify that the contents of this consignment conform to the terms of the attached EPA Acknowledgment of Consent. I certify that the waste minimization statement identified in 40 CFR 262.27(d) (if I am a large quantity generator) or (if I am a small quantity generator) is true.

Generator's Printed Name: [illegible] Signature: [illegible] Month Day Year: 3 14 22

16. International Shipments: ☐ Import to U.S. ☐ Export from U.S. Port of entry/exit: Date leaving U.S.

17. Transporter Acknowledgment of Receipt of Materials

Transporter 1 Printed Name: MARTIN VAZQUEZ Signature: [illegible] Month Day Year: 3 14 22

Transporter 2 Printed Name: Signature: Month Day Year:

18. Discrepancy

18a. Discrepancy Indication Space: ☐ Quantity ☐ Type ☐ Residue ☐ Partial Rejection ☐ Full Rejection

18b. Alternate Facility (or Generator): U.S. EPA ID Number:

Facility's Phone:

18c. Signature of Alternate Facility (or Generator): Month Day Year:

19. Hazardous Waste Report Management Method Codes (i.e., codes for hazardous waste treatment, disposal, and recycling systems):

20. Designated Facility Owner or Operator: Certification of receipt of hazardous materials covered by the manifest except as noted in Item 18a

Signature: Month Day Year:

EPA Form 8700-22 (Rev. 12/17) Previous editions are obsolete.

GENERATOR'S INITIAL COPY

Please print or type.

Form Approved. OMB No. 2050-0039

UNIFORM HAZARDOUS WASTE MANIFEST	1. Generator ID Number	2. Page 1 of 1	3. Emergency Response Phone	4. Manifest Tracking Number
	CAC003159701	[illegible]	[illegible]	015369698 FLE

5. Generator's Name and Mailing Address
City of Los Angeles, Department of Public Works
Bureau of Engineering 505 Santa Fe Avenue
City of Los Angeles Ca. 90013
Generator's Site Address (if different than mailing address)
[illegible] Santa Fe Avenue
Los Angeles Ca. 90013

6. Generator's Company Name: [illegible]
U.S. EPA ID Number: [illegible]

7. Generator's Company Name:
U.S. EPA ID Number:

8. Designated Facility Name and Site Address
South Yuma County Landfill
[illegible] South Avenue [illegible]
Phone: [illegible] 341-[illegible]
U.S. EPA ID Number: [illegible]

Item No.	9. U.S. DOT Description (including Proper Shipping Name, Hazard Class, ID Number, and Packing Group (if any))	10. Containers No.	Type	11. Total Quantity	12. Unit Wt./Vol.	13. Waste Codes
	NOR RCRA Hazardous Waste Solid (Lead Impacted Soil)	[illegible]	[illegible]	26	Y	

14. Special Handling Instructions and Additional Information
Proc: 1a4C-6866
[illegible]

15. GENERATOR'S/OFFEROR'S CERTIFICATION: I hereby declare that the contents of this consignment are fully and accurately described above by the proper shipping name, and are classified, packaged, marked and labeled/placarded, and are in all respects in proper condition for transport according to applicable international and national governmental regulations. If export shipment and I am the Primary Exporter I certify that the contents of this consignment conform to the terms of the attached EPA Acknowledgment of Consent.
I certify that the waste information statement described in 40 CFR 262.27(a) (if I am a large quantity generator) is true.

Generator's Name or Printed Type Name: [illegible] Signature: [illegible] Month Day Year: 12 19 22

16. International Shipments: ☐ Import to U.S. ☐ Export from U.S. Port of Entry/Exit
Transporter signature (for exports only) Date leaving U.S.

17. Transporter Acknowledgment of Receipt of Materials
Transporter 1 Printed Type Name: [illegible] Signature: [illegible] Month Day Year: 12 19 22
Transporter 2 Printed Type Name: Signature: Month Day Year:

18. Discrepancy
18a. Discrepancy Indication Space: ☐ Quantity ☐ Type ☐ Residue ☐ Partial Rejection ☐ Full Rejection
Manifest Reference Number:
18b. Alternate Facility (or Generator) U.S. EPA ID Number:
Facility's Name:
18c. Signature of Alternate Facility (or Generator) Month Day Year:

19. Hazardous Waste Report Management Method Codes (i.e., codes for hazardous waste treatment, disposal, and recycling systems)
1. 2. 3. 4.

20. Designated Facility Owner or Operator Certification of receipt of hazardous materials covered by the manifest except as noted in Item 18a
Printed Type Name: Signature: Month Day Year:

GENERATOR'S INITIAL COPY

Please Print or Type

Form Approved OMB No. 2050-0039

UNIFORM HAZARDOUS WASTE MANIFEST	1. Generator ID Number	2. Page 1 of 1	3. Emergency Response Phone	4. Manifest Tracking Number
	CAC003159701	01	213-[illegible]	015369693 FLE

5. Generator's Name and Mailing Address
City of Los Angeles Department of Public Works
Bureau of Engineering 555 Santa Fe Avenue
City of Los Angeles Ca. 90013
Generator's Phone: [illegible]

Generator's Site Address (if different than mailing address)
[illegible] Santa Fe Avenue
Los Angeles Ca. 90013

6. Transporter 1 Company Name: DFB [illegible]
U.S. EPA ID Number: [illegible]

7. Transporter 2 Company Name:
U.S. EPA ID Number:

8. Designated Facility Name and Site Address
South Yuma County Landfill
[illegible] South Avenue 11
[illegible] AZ 85243 [illegible]
Facility's Phone: [illegible]
U.S. EPA ID Number: AZR000506260

No.	9a. U.S. DOT Description (including Proper Shipping Name, Hazard Class, ID Number, and Packing Group, if any)	10. Containers No.	Type	11. Total Quantity	12. Unit WT/Vol	13. Waste Codes
1	NON RCRA Hazardous Waste Solid (Lead Impacted Soil)	001	DT	16	Y	[illegible]
2						
3						
4						

14. Special Handling Instructions and Additional Information
Profile #[illegible]
Wear appropriate safety clothing

15. GENERATOR'S CERTIFICATION: I hereby declare that the contents of this consignment are fully and accurately described above by the proper shipping name, and are classified, packaged, marked and labeled/placarded, and are in all respects in proper condition for transport according to applicable international and national governmental regulations. If export shipment and I am the Primary Exporter, I certify that the contents of this consignment conform to the terms of the attached EPA Acknowledgment of Consent.
I certify that the waste minimization statement identified in 40 CFR 262.27(a) (if I am a large quantity generator) or (b) (if I am a small quantity generator) is true.

Generator's Name or Printed Name: [illegible] Signature: [illegible] Month 2 Day 14 Year 22

16. International Shipments: ☐ Import to U.S. ☐ Export from U.S. Port of Entry/Exit
Transporter signature (for exports only): Date Leaving U.S.

17. Transporter Acknowledgment of Receipt of Materials
Transporter 1 Printed/Typed Name: David Flore Signature: [signature] Month 2 Day 14 Year 22
Transporter 2 Printed/Typed Name: Signature: Month Day Year

18. Discrepancy
18a. Discrepancy Indication Space: ☐ Quantity ☐ Type ☐ Residue ☐ Partial Rejection ☐ Full Rejection

Manifest Reference Number:

18b. Alternate Facility (or Generator): U.S. EPA ID Number:
Facility's Phone:

18c. Signature of Alternate Facility (or Generator): Month Day Year

19. Hazardous Waste Report Management Method Codes (i.e., codes for hazardous waste treatment, disposal, and recycling systems):
1. 2. 3. 4.

20. Designated Facility Owner or Operator: Certification of receipt of hazardous materials covered by the manifest except as noted in Item 18a.
Printed/Typed Name: Signature: Month Day Year

GENERATOR'S INITIAL COPY

13

Please print or type

Form Approved. OMB No. 2050-0039

UNIFORM HAZARDOUS WASTE MANIFEST

1 Generator ID Number [illegible] 2 Page 1 of 3 3 Emergency Response Phone 4 Manifest Tracking Number 015369720 FLE

5 Generator's Name and Mailing Address
City of Los Angeles, Department of Public Works
Bureau of Engineering 201 North Figueroa
City of Los Angeles Ca. 90012

Generator's Site Address (if different than mailing address)
201 North Figueroa
Los Angeles Ca. 90012

6 Transporter 1 Company Name
A-1 Bonsor

U.S. EPA ID Number
CAD981124421

7 Transporter 2 Company Name

U.S. EPA ID Number

8 Designated Facility Name and Site Address
South Yuba County Landfill
[illegible] Rindly Airport Dr
[illegible]

U.S. EPA ID Number
NEW0050990

No.	9a. HM	9b. U.S. DOT Description (including Proper Shipping Name, Hazard Class, ID Number, and Packing Group (if any))	10. Containers No.	10. Containers Type	11. Total Quantity	12. Unit Wt./Vol.	13. Waste Codes
1		NON RCRA Hazardous Waste Solid (Lead Impacted Soil)	001	DT	16	T	
2							
3							
4							

14 Special Handling Instructions and Additional Information
Profile#C-6164

15 GENERATOR'S CERTIFICATION: I hereby declare that the contents of this consignment are fully and accurately described above by the proper shipping name, and are classified, packaged, marked and labeled/placarded, and are in all respects in proper condition for transport according to applicable international and national governmental regulations. If export shipment and I am the Primary Exporter I certify that the contents of this consignment conform to the terms of the attached EPA Acknowledgment of Consent.
I certify that the waste minimization statement identified in 40 CFR 262.27(a) (if I am a large quantity generator) or (b) (if I am a small quantity generator) is true.

Generator's/Offeror's Printed/Typed Name [illegible] Signature [illegible] Month 12 Day 17 Year 22

16 International Shipments ☐ Import to US ☐ Export from US Port of entry/exit:
Transporter signature (for exports only):

17 Transporter Acknowledgment of Receipt of Materials
Transporter 1 Printed/Typed Name [illegible] Signature [illegible] Month 12 Day 17 Year 22
Transporter 2 Printed/Typed Name Signature Month Day Year

18 Discrepancy
18a Discrepancy Indication Space ☐ Quantity ☐ Type ☐ Residue ☐ Partial Rejection ☐ Full Rejection
Manifest Reference No.:

18b Alternate Facility (or Generator)
Facility's Phone:

18c Signature of Alternate Facility (or Generator) Month Day Year

19 Hazardous Waste Report Management Method Codes (i.e., codes for hazardous waste treatment, disposal, and recycling systems)
1 2 3 4

20 Designated Facility Owner or Operator: Certification of receipt of hazardous materials covered by this manifest except as noted in Item 18a
Printed/Typed Name Signature Month Day Year

DESIGNATED FACILITY

GENERATOR'S INITIAL COPY

EPA Form 8700-22 (Rev. 12-15) Previous editions are obsolete

Please print or type

Form Approved. OMB No. 2050-0039

UNIFORM HAZARDOUS WASTE MANIFEST

2. Generator ID Number	3. Page 1 of	4. Emergency Response Phone	5. Manifest Tracking Number
CAD983159281	1	[illegible]	015353721 FLE

GENERATOR

5. Generator's Name and Mailing Address

County of Los Angeles Department of Public Works
Division of Environmental Services
City of San Angeles Co. 90012

Generator's Phone:

6. Transporter 1 Company Name

S Kinnard Trucking

U.S. EPA ID Number

CAD982001447

7. Transporter 2 Company Name

U.S. EPA ID Number

8. Designated Facility Name and Site Address

South Yuma County Landfill
19836 South Avenue 38
Yuma, AZ 85365 (928) 341-9630

U.S. EPA ID Number

AZD000506980

9a. HM	9b. U.S. DOT Description (including Proper Shipping Name, Hazard Class, ID Number, and Packing Group (if any))	10. Containers No.	10. Containers Type	11. Total Quantity	12. Unit Wt./Vol.	13. Waste Codes
	1. NON RCRA Hazardous Waste Solid, Lead Impacted Soil	001	DT	16	Y	331
	2.					
	3.					
	4.					

14. Special Handling Instructions and Additional Information

Profile#C-4006

15. GENERATOR'S CERTIFICATION: I hereby declare that the contents of this consignment are fully and accurately described above by the proper shipping name, and are classified, packaged, marked and labeled/placarded, and are in all respects in proper condition for transport according to applicable international and national governmental regulations. If export shipment and I am the Primary Exporter I certify that the contents of this consignment conform to the terms of the attached EPA Acknowledgment of Consent.
I certify that the waste minimization statement identified in 40 CFR 262.27(a) (if I am a large quantity generator) or (b) (if I am a small quantity generator) is true.

Generator's/Offeror's Printed/Typed Name: [illegible] | Signature: [illegible] | Month: 12 | Day: 14 | Year: 22

TRANSPORTER INTL

16. International Shipments: ☐ Import to U.S. ☐ Export from U.S. Port of entry/exit: _____
Transporter signature (for exports only): Date leaving U.S.: _____

17. Transporter Acknowledgment of Receipt of Materials

Transporter 1 Printed/Typed Name: Derrick Linnard | Signature: [signature] | Month: 12 | Day: 14 | Year: 22

Transporter 2 Printed/Typed Name: | Signature: | Month: | Day: | Year:

DESIGNATED FACILITY

18. Discrepancy

18a. Discrepancy Indication Space: ☐ Quantity ☐ Type ☐ Residue ☐ Partial Rejection ☐ Full Rejection

Manifest Reference Number:

18b. Alternate Facility (or Generator): U.S. EPA ID Number:

Facility's Phone:

18c. Signature of Alternate Facility (or Generator): Month: Day: Year:

19. Hazardous Waste Report Management Method Codes (i.e., codes for hazardous waste treatment, disposal, and recycling systems):

1.	2.	3.	4.

20. Designated Facility Owner or Operator: Certification of receipt of hazardous materials covered by this manifest except as noted in Item 18a

Printed/Typed Name: | Signature: | Month: | Day: | Year:

GENERATOR'S INITIAL COPY

Please print or type.

Form Approved. OMB No. 2050-0039

UNIFORM HAZARDOUS WASTE MANIFEST

1. Generator's Number: [illegible]

2. Page 1 of 1

3. Emergency Response Phone: [illegible]

4. Manifest Tracking Number: 015369722 FLE

5. Generator's Name and Mailing Address: City of Los Angeles Department of Public Works Bureau of Engineering 201 South Fe Avenue City of Los Angeles Ca. 90013

Generator's Site Address (if different than mailing address): [illegible] Los Angeles Ca. 90013

Generator's Phone:

6. Transporter 1 Company Name: [illegible]

U.S. EPA ID Number: [illegible]

7. Transporter 2 Company Name:

U.S. EPA ID Number:

8. Designated Facility Name and Site Address: South Yuma County Landfill [illegible] South Avenue 11

U.S. EPA ID Number: [illegible]

Facility's Phone: [illegible]

No.	9b. U.S. DOT Description (including Proper Shipping Name, Hazard Class, ID Number, and Packing Group, if any)	10. Contaminants No.	Type	11. Total Quantity	12. Unit Wt./Vol.	13. Waste Codes
1	NON RCRA Hazardous Waste Solid (Lead Impacted Soil)	001	DT	16	7	011
2						
3						
4						

14. Special Handling Instructions and Additional Information

Profile#C-[illegible]

15. [redacted] Instructions: If the designated site has not authorized, described above, by the proper shipping name, and are classified, packaged, marked and labeled/placarded, and are in all respects in proper condition for transport according to applicable international and national governmental regulations. If export shipment and if not, the Primary Exporter hereby certifies that the contents of this consignment represent in the terms of the attached EPA Acknowledgment of Consent.

Certify that the waste minimization statement identified in 40 CFR 262.27(a) or (b) is a large quantity generator or (c) if it is a small quantity generator is true.

Generator's Offer of Transport Name: [illegible] Date: 12 14 72

16. International Shipments: ☐ Import to U.S. ☐ Export from U.S. Port of Entry/Exit:

Transporter Signature (for exports only): Date Leaving U.S.:

17. Transporter Acknowledgment of Receipt of Materials

Transporter 1 Printed/Typed Name: [illegible] Signature: [illegible] Date: 12 14 72

Transporter 2 Printed/Typed Name: Signature: Date: Month Day Year

18. Discrepancy

18a. Discrepancy Indication Space: ☐ Quantity ☐ Type ☐ Residue ☐ Partial Rejection ☐ Full Rejection

Manifest Reference Number:

18b. Alternate Facility (or Generator): U.S. EPA ID Number:

Facility's Phone:

18c. Signature of Alternate Facility (or Generator): Month Day Year

19. Hazardous Waste Report Management Method Codes (i.e., codes for hazardous waste treatment, disposal, and recycling systems):

1.	2.	3.	4.

20. Designated Facility Owner or Operator: Certification of receipt of hazardous materials covered by the manifest except as noted in Item 18a.

Printed/Typed Name: Signature: Month Day Year

GENERATOR

INTL

TRANSPORTER

DESIGNATED FACILITY

GENERATOR'S INITIAL COPY

Please print or type

Form Approved. OMB No. 2050-0039

UNIFORM HAZARDOUS WASTE MANIFEST	1. Generator ID Number	2. Page 1 of	3. Emergency Response Phone	4. Manifest Tracking Number
	CAD981592211	01	213-481-1211	015362723 FLE

GENERATOR

5. Generator's Name and Mailing Address
City of Los Angeles Department of Public Works
Bureau of Engineering 201 North Fe Avenue
City of Los Angeles Ca. 90013

Generator's Site Address (if different than mailing address)
200 North El Pueblo
Los Angeles Ca. 90012

Generator's Phone

6. Transporter 1 Company Name
T & S Trucking

U.S. EPA ID Number
CAR000040720

7. Transporter 2 Company Name

U.S. EPA ID Number

8. Designated Facility Name and Site Address
South Yuma County Landfill
[illegible]

U.S. EPA ID Number
AZD980506930

Facility's Phone

No.	9. U.S. DOT Description (including Proper Shipping Name, Hazard Class, ID Number, and Packing Group (if any))	10. Containers No.	10. Containers Type	11. Total Quantity	12. Unit Wt./Vol.	13. Waste Codes
1	NON RCRA Hazardous Waste Solid (Lead Impacted Soil)	001	DT	14	Y	
2						
3						
4						

14. Special Handling Instructions and Additional Information
PROFILE # [illegible]
Wear appropriate safety clothing.

15. GENERATOR'S/OFFEROR'S CERTIFICATION: I hereby declare that the contents of this consignment are fully and accurately described above by the proper shipping name, and are classified, packaged, marked and labeled/placarded, and are in all respects in proper condition for transport according to applicable international and national governmental regulations. If export shipment and I am the Primary Exporter, I certify that the contents of this consignment conform to the terms of the attached EPA Acknowledgment of Consent.
I certify that the waste minimization statement identified in 40 CFR 262.27(a) (if I am a large quantity generator) or (b) (if I am a small quantity generator) is true.

Generator's/Offeror's Printed/Typed Name: Walter Kittel
Signature: [signature]
Month: 3 Day: 19 Year: 22

TRANSPORTER

16. International Shipments: ☐ Import to U.S. ☐ Export from U.S. Port of entry/exit: Date leaving U.S.:

17. Transporter Acknowledgment of Receipt of Materials

Transporter 1 Printed/Typed Name: Fidel Cerda
Signature: [signature]
Month: 3 Day: 14 Year: 22

Transporter 2 Printed/Typed Name:
Signature:
Month: Day: Year:

18. Discrepancy

18a. Discrepancy Indication Space: ☐ Quantity ☐ Type ☐ Residue ☐ Partial Rejection ☐ Full Rejection

Manifest Reference Number:

DESIGNATED FACILITY

18b. Alternate Facility (or Generator)

U.S. EPA ID Number

Facility's Phone:

18c. Signature of Alternate Facility (or Generator)
Month: Day: Year:

19. Hazardous Waste Report Management Method Codes (i.e., codes for hazardous waste treatment, disposal, and recycling systems)

1. 2. 3. 4.

20. Designated Facility Owner or Operator: Certification of receipt of hazardous materials covered by this manifest except as noted in Item 18a

Printed/Typed Name:
Signature:
Month: Day: Year:

EPA Form 8700-22 (Rev. 12-05) Previous editions are obsolete.

GENERATOR'S INITIAL COPY

UNIFORM HAZARDOUS WASTE MANIFEST

015369724 FLE

South Yuba County Landfill

profile#C-5016

GENERATOR'S INITIAL COPY

Please Print or Type

Form Approved. Draft for 2006 [illegible]

UNIFORM HAZARDOUS WASTE MANIFEST	1. Generator ID Number	2. Page 1 of	3. Emergency Response Phone	4. Manifest Tracking Number
	[illegible]	[illegible]	[illegible]	015[illegible]72[illegible] FLE

5. Generator's Name and Mailing Address

[illegible]

Generator's Phone

6. Transporter 1 Company Name: [illegible] Lucking

7. Transporter 2 Company Name

8. Designated Facility Name and Site Address

South Yuma County Landfill

[illegible]

Facility's Phone

Item	9a. U.S. DOT Description (including Proper Shipping Name, Hazard Class, ID Number, and Packing Group if any)	10. Containers No.	Type	11. Total Quantity	12. Unit Wt./Vol.	13. Waste Codes
1	BGN OCRA Hazardous Waste Solid (Lead Impacted Soil)	[illegible]	[illegible]	[illegible]	[illegible]	[illegible]
2						
3						
4						

14. Special Handling Instructions and Additional Information

Profile#[illegible]

[illegible]

15. GENERATOR'S/OFFEROR'S CERTIFICATION: [illegible]

Generator's Printed/Typed Name: [illegible] Signature: [illegible] Month 12 Day 19 Year 22

16. Transporter Signature: ☐ Import to U.S. ☐ Export from U.S. Port of Entry/Exit

Transporter Signature (for exports only)

17. Transporter Acknowledgment of Receipt of Materials

Transporter 1 Printed/Typed Name: [illegible] Signature: [illegible] Month 12 Day 19 Year 22

Transporter 2 Printed/Typed Name: Signature: Month Day Year

18. Discrepancy

18a. Discrepancy Indication Space: ☐ Quantity ☐ Type ☐ Residue ☐ Partial Rejection ☐ Full Rejection

Manifest Reference Number

18b. Alternate Facility (or Generator)

Facility's Phone

18c. Signature of Alternate Facility (or Generator) Month Day Year

19. Hazardous Waste Report Management Method Codes (i.e., codes for hazardous waste treatment, disposal, and recycling systems)

20. Designated Facility Owner or Operator: Certification of receipt of hazardous materials covered by the manifest except as noted in Item 18a

Printed/Typed Name: Signature: Month Day Year

EPA Form 8700-22 (Rev. 12-05) Previous editions are obsolete.

GENERATOR'S INITIAL COPY

Please Print or Type

Form Approved. OMB No. 2050-0039

UNIFORM HAZARDOUS WASTE MANIFEST	1. Generator ID Number	2. Page 1 of 1	3. Emergency Response Phone	4. Manifest Tracking Number
	CAC[illegible]	01	352-[illegible]	015[illegible]773 FLE

5. Generator's Name and Mailing Address
City of Los Angeles Department of Public Works
Bureau of Engineering 585 South Fk Avenue
City of Los Angeles Ca. 90013
Attn: [illegible] Natalie [illegible]

Generator's Site Address (if different than mailing address)
[illegible] South Fk Avenue
Los Angeles Ca. 90013

6. Transporter 1 Company Name: [illegible] Farm Inc
U.S. EPA ID Number: CAR000[illegible]

7. Transporter 2 Company Name:
U.S. EPA ID Number:

8. Designated Facility Name and Site Address
South Yuma County Landfill
[illegible] South Avenue [illegible]
Tuma [illegible] (928) [illegible]
U.S. EPA ID Number: [illegible]

Facility's Phone:

9a. No.	9b. U.S. DOT Description (including Proper Shipping Name, Hazard Class, ID Number, and Packing Group if any)	10. Contents: No.	Type	11. Total Quantity	12. Unit Wt./Vol.	13. Waste Codes
	[illegible] Hazardous Waste Solid (Lead Impacted Soil)	[illegible]	[illegible]	[illegible]	Y	[illegible]

14. Special Handling Instructions and Additional Information
Profile#C-[illegible]
Wear appropriate safety clothing

15. GENERATOR'S/OFFEROR'S CERTIFICATION: I hereby declare that the contents of this consignment are fully and accurately described above by the proper shipping name, and are classified, packaged, marked and labeled/placarded, and are in all respects in proper condition for transport according to applicable international and national governmental regulations. If export shipment and I am the Primary Exporter, I certify that the contents of this consignment conform to the terms of the attached EPA Acknowledgment of Consent.
I certify that the waste minimization statement identified in 40 CFR 262.27(a) (if I am a large quantity generator) or (b) (if I am a small quantity generator) is true.

Generator's Offeror's Printed/Typed Name: [illegible] Signature: [illegible] Month: 12 Day: 19 Year: 22

16. Interim Transporter: ☐ Signature of Receipt ☐ Signature of Receipt Date Signature of Receipt
Transporter signature for exports only

17. Transporter Acknowledgment of Receipt of Materials
Transporter 1 Printed/Typed Name: [illegible] Signature: [illegible] Month: 12 Day: 19 Year: 22
Transporter 2 Printed/Typed Name: Signature: Month: Day: Year:

18. Designated Facility Owner or Operator Certification of receipt of hazardous materials covered by the manifest except as noted in Item 18a
Printed/Typed Name: Signature: Month: Day: Year:

19. Designated Facility Owner or Operator Certification of receipt of hazardous materials covered by the manifest except as noted in Item 18a
Printed/Typed Name: Signature: Month: Day: Year:

GENERATOR'S INITIAL COPY

UNIFORM HAZARDOUS WASTE MANIFEST

015369774 FLE

1 Generator's Name and Mailing Address
City of Los Angeles Department of Public Works
Bureau of Engineering 1149 South Broadway
City of Los Angeles Ca, 90015
Contact Name Natalie Ghanty 213 485-4277

2 Generator's Phone Number

3 Generator's Site Address (if different than mailing address)
1149 South Broadway
Los Angeles Ca, 90015

4 Generator's EPA ID Number

5 Transporter 1 Company Name
Kar Kar Trucking

6 US EPA ID Number
CAD981400

7 Transporter 2 Company Name

8 US EPA ID Number

9 Designated Facility Name and Site Address
South Yuma County Landfill
15630 South Avenue 18
Yuma AZ 85365 (928) 345-9780

10 Facility's Phone

11 US DOT Description (including Proper Shipping Name, Hazard Class, ID Number, and Packing Group (if any))	12 Containers No.	Type	13 Total Quantity	14 Unit Wt./Vol.	15 Waste Codes
a. NOT REGULATED Non-Hazardous Waste Solid (Lead Impacted Soil)	001	DT	14.	Y	01
b.					
c.					
d.					

14 Special Handling Instructions and Additional Information
Profile#: 3001
Wear appropriate PPE during handling

15 GENERATOR'S/OFFICER'S CERTIFICATION: I hereby declare that the contents of this consignment are fully and accurately described above by the proper shipping name, and are classified, packaged, marked and labeled/placarded, and are in all respects in proper condition for transport according to applicable international and national governmental regulations. If export shipment and I am the Primary Exporter I certify that the contents of this consignment conform to the terms of the attached EPA Acknowledgment of Consent.
I certify that the waste minimization statement identified in 40 CFR 262.27(a) (if I am a large quantity generator) or (b) (if I am a small quantity generator) is true.

Generator's Printed/Typed Name: Natalie Ghanty
Signature
Month Day Year: 12 14 22

16 International Shipments: ☐ Import to US ☐ Export from US
Transporter signature (for exports only):
Port of entry/exit:

17 Transporter Acknowledgment of Receipt of Materials
Transporter 1 Printed/Typed Name
Signature
Month Day Year: 12 14 22

Transporter 2 Printed/Typed Name
Signature
Month Day Year

18 Discrepancy
18a Discrepancy Indication Space: ☐ Quantity ☐ Type ☐ Residue ☐ Partial Rejection ☐ Full Rejection
Manifest Reference Number:

18b Alternate Facility (or Generator)
US EPA ID Number

Facility's Phone

18c Signature of Alternate Facility (or Generator)
Month Day Year

19 Hazardous Waste Report Management Method Codes (i.e., codes for hazardous waste treatment, disposal, and recycling systems)
1. 2. 3. 4.

20 Designated Facility Owner or Operator: Certification of receipt of hazardous materials covered by this manifest except as noted in Item 18a
Printed/Typed Name
Signature
Month Day Year

DESIGNATED FACILITY

TRANSPORTER

GENERATOR

GENERATOR'S INITIAL COPY

Please print or type.

Form Approved. OMB No. 2050-0039

UNIFORM HAZARDOUS WASTE MANIFEST

1. Generator's Name and Mailing Address: Town of Los Angeles Department of Public Works Division of Engineering 900 Santa Fe Avenue City of Los Angeles Ca 90014

Generator's Phone ID: [illegible]

Generator's Site Address (if different than mailing address): 900 Santa Fe Avenue Los Angeles Ca. 90014

2. Transporter 1 Company Name: Romero Trucking

U.S. EPA ID Number: CAR000195660

3. Transporter 2 Company Name:

U.S. EPA ID Number:

4. Designated Facility Name and Site Address: South Tuna County Landfill 19138 South Avenue 18 Tuna AZ 85365 (928) 383-9388

U.S. EPA ID Number: [illegible]

No.	10. Hazardous Waste Shipping Name, Hazard Class, ID Number, and Packing Group (if any)	11. Containers No.	Type	12. Total Quantity	13. Unit Wt./Vol.	14. Waste Codes
1.	NON RCRA Hazardous Waste Solid (Lead Impacted Soil)	001	DT	10	T	011
2.						
3.						
4.						

15. Special Handling Instructions and Additional Information:

Profile #C-6866
Wear appropriate safety clothing.

16. GENERATOR'S/OFFICER'S CERTIFICATION: I hereby declare that the contents of this consignment are fully and accurately described above by the proper shipping name, and are classified, packaged, marked and labeled/placarded, and are in all respects in proper condition for transport according to applicable international and national governmental regulations. If I am a small quantity generator and I am Not Pursuing Exclusive Authority that the contents of this consignment conform to the terms of the attached EPA Manifesting Rule 40 Contract. I certify that the waste management statement identified in 40 CFR 262.27(a) (if I am a large quantity generator) is true.

Generator's Printed/Typed Name: [illegible] Signature: [illegible] Month 2 Day 14 Year 22

17. International Shipments: ☐ Import ☐ Export ☐ Transit Port of Entry/Exit Date Leaving U.S.

Transporter Signature for Hazardous Waste Code:

18. Transporter 1 Acknowledgment of Receipt of Materials

Transporter 1 Printed/Typed Name: [illegible] Signature: [illegible] Month 2 Day 14 Year 22

Transporter 2 Printed/Typed Name: Signature: Month Day Year

19. Discrepancy

19a. Discrepancy Indication Space: ☐ Quantity ☐ Type ☐ Quantity ☐ Partial Reduction ☐ Full Reduction

Hazardous Waste Number

19b. Alternate Facility (or Generator): U.S. EPA ID Number

Facility's Phone:

19c. Signature of Alternate Facility (or Generator): Month Day Year

20. Hazardous Waste Report Management Method Codes (i.e., waste for reference waste, Hazardous Waste, and Waste Reduction):

1. 2. 3. 4.

21. Designated Facility Owner or Operator: Certification of receipt of hazardous materials covered by the manifest except as noted in Item 19.

Printed/Typed Name: Signature: Month Day Year

GENERATOR'S INITIAL COPY

Form Approved OMB No. 2050-0039

Please print or type

UNIFORM HAZARDOUS WASTE MANIFEST	1. Generator's US EPA ID No. CAC003159703	2. Page 1 of 1	3. Emergency Response Phone 310-450-6273	4. Manifest Tracking Number 015369776 FLE

5. Generator's Name and Mailing Address
City of Los Angeles Department of Public Works
Bureau of Engineering 445 Santa Fe Avenue
City of Los Angeles Ca. 90013
Generator's Phone: Victoria Bonner 323-490-6272

Generator's Site Address (if different than mailing address)
199 Santa Fe Avenue
Los Angeles Ca. 90013

6. Transporter 1 Company Name: Ramos Trucking

U.S. EPA ID Number: CAD 000 785 660

7. Transporter 2 Company Name

U.S. EPA ID Number

8. Designated Facility Name and Site Address
South Yuma County Landfill
11558 South Avenue 17
Yuma AZ 85365 (928) 341-1234

U.S. EPA ID Number: AZD000624980

9a. HM	9b. U.S. DOT Description (including Proper Shipping Name, Hazard Class, ID Number, and Packing Group (if any))	10. Containers No.	10. Containers Type	11. Total Quantity	12. Unit Wt./Vol.	13. Waste Codes
X	NON RCRA Hazardous Waste Solid (Lead Impacted Soil)	001	DT	16	T	

14. Special Handling Instructions and Additional Information
Profile#C-1866
Work order/contract #: 47QRA21D0CV

15. GENERATOR'S/OFFICER'S CERTIFICATION: I hereby declare that the contents of this consignment are fully and accurately described above by the proper shipping name, and are classified, packaged, marked and labeled/placarded, and are in all respects in proper condition for transport according to applicable international and national government regulations. If export shipment and I am the Primary Exporter I certify that the contents of this consignment conform to the terms of the attached EPA Acknowledgment of Consent.
I certify that the waste minimization statement identified in 40 CFR 262.27(a) (if I am a large quantity generator) or (b) (if I am a small quantity generator) is true.

Generator's Printed/Typed Name: Victoria Bonner
Signature
Month Day Year: 12 14 22

TRANSPORTER

16. International Shipments: Import to U.S. Export from U.S. Port of entry/exit:
Transporter signature (for exports only):

17. Transporter Acknowledgment of Receipt of Materials
Transporter 1 Printed/Typed Name: Ramos
Signature
Month Day Year: 12 14 22

Transporter 2 Printed/Typed Name
Signature
Month Day Year

DESIGNATED FACILITY

18. Designated Facility Owner or Operator: Certification of receipt of hazardous materials covered by this manifest except as noted in Item 18a
Printed/Typed Name
Signature
Month Day Year

18a. Discrepancy Indication Space: Quantity Type Residue Partial Rejection Full Rejection
Manifest Reference Number:

18b. Alternate Facility (or Generator)
U.S. EPA ID Number
Facility's Phone:

18c. Signature of Alternate Facility (or Generator)
Month Day Year

19. Hazardous Waste Report Management Method Codes (i.e., codes for hazardous waste treatment, disposal, and recycling systems)
1. 2. 3. 4.

20. Designated Facility Owner or Operator: Certification of receipt of hazardous materials covered by the manifest except as noted in Item 18a
Printed/Typed Name
Signature
Month Day Year

U.S. DEPARTMENT OF TRANSPORTATION

EPA Form 8700-22 (Rev. 12-17) Previous editions are obsolete.

GENERATOR'S INITIAL COPY

Please print or type.

Form Approved. OMB No. 2050-0039

UNIFORM HAZARDOUS WASTE MANIFEST	2. Page 1 of	3. Emergency Response Phone	4. Manifest Tracking Number
CAD981397011	01	213-978-0777	01536977 i FLE

5. Generator's Name and Mailing Address
City of Los Angeles, Department of Public Works
Bureau of Engineering 200 Santa Fe Avenue
City of Los Angeles CA 90011

Generator's Site Address (if different than mailing address)
200 Santa Fe Avenue
Los Angeles Co 90021

Generator's Phone: 213-485-5505

6. Transporter 1 Company Name: Kenworth Trucking

U.S. EPA ID Number: CAD000195680

7. Transporter 2 Company Name

U.S. EPA ID Number

8. Designated Facility Name and Site Address
South Yuma County Landfill
10324 South Avenue 17
Facility Phone: 928 785-3363

U.S. EPA ID Number: AZD000502690

9a. HM	9b. U.S. DOT Description (including Proper Shipping Name, Hazard Class, ID Number, and Packing Group (if any))	10. Containers No.	10. Containers Type	11. Total Quantity	12. Unit Wt./Vol.	13. Waste Codes
1	NON RCRA Hazardous Waste Solid (Lead Impacted Soil)	001	CY	10	T	611
2						
3						
4						

14. Special Handling Instructions and Additional Information
Profile No. 9214
Non-hazardous lead impacted soil from excavation

15. GENERATOR'S/OFFEROR'S CERTIFICATION: I hereby declare that the contents of this consignment are fully and accurately described above by the proper shipping name, and are classified, packaged, marked and labeled/placarded, and are in all respects in proper condition for transport according to applicable international and national governmental regulations. If export shipment and I am the Primary Exporter I certify that the contents of this consignment conform to the terms of the attached EPA Acknowledgment of Consent.
I certify that the waste minimization statement identified in 40 CFR 262.27(a) (if I am a large quantity generator) or (b) (if I am a small quantity generator) is true.

Generator's/Offeror's Printed/Typed Name: Jeffrey Kuhl
Signature
Month 3 Day 14 Year 22

16. International Shipments: ☐ Import to U.S. ☐ Export from U.S. Port of entry/exit:
Transporter signature (for exports only):
Date leaving U.S.:

17. Transporter Acknowledgment of Receipt of Materials

Transporter 1 Printed/Typed Name	Signature	Month	Day	Year
Roberto Flores		3	14	22
Transporter 2 Printed/Typed Name	Signature	Month	Day	Year

18. Discrepancy

18a. Discrepancy Indication Space: ☐ Quantity ☐ Type ☐ Residue ☐ Partial Rejection ☐ Full Rejection
Manifest Reference Number:

18b. Alternate Facility (or Generator)
U.S. EPA ID Number
Facility's Phone:

18c. Signature of Alternate Facility (or Generator) — Month / Day / Year

19. Hazardous Waste Report Management Method Codes (i.e., codes for hazardous waste treatment, disposal, and recycling systems)

1.	2.	3.	4.

20. Designated Facility Owner or Operator: Certification of receipt of hazardous materials covered by this manifest except as noted in Item 18a

Printed/Typed Name	Signature	Month	Day	Year

EPA Form 8700-22 (Rev. 12-05) Previous editions are obsolete.

GENERATOR'S INITIAL COPY

Please print or type.

UNIFORM HAZARDOUS WASTE MANIFEST	CAC003159701	01	213-484-4277	015368778 FLE

City of Los Angeles Department of Public Works
Bureau of Engineering 100 Santa Fe Avenue
City of Los Angeles Ca. 90013
Telephone/Public Service Manager 213-484-4277

100 Santa Fe Avenue
Los Angeles Ca. 90013

NG THUCKING

South Yuba County Landfill
[illegible] South Avenue [illegible]
[illegible]

	EUR RCRA Hazardous Waste Solid (Load Impacted Soil)	001	DT	10	Y	611

Profile#C-8866
[illegible] safety clothing

GENERATOR'S OFFICER'S CERTIFICATION: [illegible]

[illegible] 12 [illegible] 12

[illegible] 12 [illegible] 12

[illegible]

[illegible]

[illegible]

[illegible]

[illegible]

[illegible]

GENERATOR'S INITIAL COPY

Please print or type.

Form Approved. OMB No. 2050-0039

UNIFORM HAZARDOUS WASTE MANIFEST

1. Generator ID Number

2. Page 1 of

3. Emergency Response Phone

4. Manifest Tracking Number: 015389773 FLE

5. Generator's Name and Mailing Address

City of Los Angeles Department of Public Works
Bureau of Engineering
City of Los Angeles, CA 90012
Generator's Phone (i.e. Contact Person) 213-485-5273

Generator's Site Address (if different than mailing address)

To be sent to Antelope Valley Los Angeles Co. 93551

6. Transporter 1 Company Name

Ford Transport

7. Transporter 2 Company Name

8. Designated Facility Name and Site Address

South Yuba County Landfill
Yuba South Avenue SE
Facility's Phone: AR 72395 (870) 345-4999

9. U.S. EPA ID Number

ARD073924990

10. Containers: No. / Type

11. Total Quantity

12. Unit Wt./Vol.

13. Waste Codes

1	NON RCRA Hazardous Waste Solid (Lead Impacted Soil)	001	DT	18	Y	
2						
3						
4						

14. Special Handling Instructions and Additional Information

Profile SC-1360
Wear appropriate safety clothing.

15. GENERATOR'S/OFFEROR'S CERTIFICATION: I hereby declare that the contents of this consignment are fully and accurately described above by the proper shipping name, and are classified, packaged, marked and labeled/placarded, and are in all respects in proper condition for transport according to applicable international and national governmental regulations. If export shipment and I am the Primary Exporter, I certify that the contents of this consignment conform to the terms of the attached EPA Acknowledgment of Consent.
I certify that the waste minimization statement identified in 40 CFR 262.27(a) (if I am a large quantity generator) or (b) (if I am a small quantity generator) is true.

Generator's/Offeror's Printed/Typed Name

Signature

Month: 3 Day: Year: 22

16. International Shipments: Import to U.S. Export from U.S. Port of entry/exit:
Transporter signature (for exports only):

17. Transporter Acknowledgment of Receipt of Materials

Transporter 1 Printed/Typed Name

Signature

Month: 3 Day: 14 Year: 22

Transporter 2 Printed/Typed Name

Signature

Month: Day: Year:

18. Discrepancy

18a. Discrepancy Indication Space: Quantity Type Residue Partial Rejection Full Rejection

Manifest Reference Number:

18b. Alternate Facility (or Generator)

U.S. EPA ID Number

Facility's Phone:

18c. Signature of Alternate Facility (or Generator)

Month: Day: Year:

19. Hazardous Waste Report Management Method Codes (i.e., codes for hazardous waste treatment, disposal, and recycling systems)

1. 2. 3. 4.

20. Designated Facility Owner or Operator: Certification of receipt of hazardous materials covered by this manifest except as noted in Item 18a

Printed/Typed Name

Signature

Month: Day: Year:

TSDF ITE (Rev. 12-17) Previous editions are obsolete.

GENERATOR'S INITIAL COPY

GENERATOR | TRANSPORTER | DESIGNATED FACILITY

UNIFORM HAZARDOUS WASTE MANIFEST	2 Generator's Phone	3 Page 1 of	4 Emergency Response Phone	5 Manifest Tracking Number
	CA7100315970	01	31[illegible]4-1233	015369780 FLE

1 Generator's Name and Mailing Address
City of Los Angeles Department of Public Works
Bureau of Engineering 200 North Spring
City of Los Angeles CA 90012
Generator's Site Address (if different than mailing address)
555 Gundry Ave
Long Beach CA 90802

6 Transporter 1 Company Name
Quad S Trans
7 U.S. EPA ID Number
CAT000233420

8 Transporter 2 Company Name

9 U.S. EPA ID Number

10 Designated Facility Name and Site Address
South Yuma County Landfill
15700 South Avenue 17
Yuma AZ 85365 (520) 783-8787
11 U.S. EPA ID Number
AZD980624980

12 Container No.	13 Container Type	14 Total Quantity	15 Unit Wt./Vol.	16 Waste Codes
001	07	10	Y	

12a Special Handling Instructions and Additional Information
Profile#: [illegible]
Near appropriate safety signage

14 GENERATOR'S/OFFEROR'S CERTIFICATION: I hereby declare that the contents of this consignment are fully and accurately described above by the proper shipping name, and are classified, packaged, marked and labeled/placarded, and are in all respects in proper condition for transport according to applicable international and national governmental regulations. If export shipment and I am a Primary Exporter I certify that the contents of this consignment conform to the terms of the attached EPA Acknowledgment of Consent.
I certify that the waste minimization statement identified in 40 CFR 262.27(a) (if I am a large quantity generator) or (b) (if I am a small quantity generator) is true.

Generator's/Offeror's Printed/Typed Name [illegible] Signature [illegible] Month 12 Day 14 Year 12

15 International Shipments ☐ Import to U.S. ☐ Export from U.S. Port of entry/exit:
Transporter signature (for exports only):

16 Transporter Acknowledgment of Receipt of Materials
Transporter 1 Printed/Typed Name R. Alfaro Signature [illegible] Month 12 Day 14 Year 12

17 Discrepancy
17a Discrepancy Indication Space ☐ Quantity ☐ Type ☐ Residue ☐ Partial Rejection ☐ Full Rejection
Manifest Reference Number:

17b Alternate Facility (or Generator)
U.S. EPA ID Number
Facility's Phone:

17c Signature of Alternate Facility (or Generator) Month Day Year

18 Hazardous Waste Report Management Method Codes (i.e., codes for hazardous waste treatment, disposal, and recycling systems)
1 2 3 4

19 Designated Facility Owner or Operator: Certification of receipt of hazardous materials covered by this manifest except as noted in Item 18a
Printed/Typed Name Signature Month Day Year

DESIGNATED FACILITY

TRANSPORTER

GENERATOR

EPA Form 8700-22 (Rev. 12-11) Previous editions are obsolete.

GENERATOR'S INITIAL COPY

Please print or type

UNIFORM HAZARDOUS WASTE MANIFEST	1. Generator ID Number	2. Page 1 of	3. Emergency Response Phone	4. Manifest Tracking Number
	[illegible]	[illegible]	[illegible]	015368781 FLE

5. Generator's Name and Mailing Address
City of Los Angeles, Department of Public Works
Bureau of Engineering 585 Santa Fe Avenue
City of Los Angeles Ca 90011
[illegible]

Generator's Site Address (if different than mailing address)
[illegible] Santa Fe Avenue
Los Angeles Ca 90013

6. Transporter 1 Company Name: MAFlinn Carriers [illegible]
U.S. EPA ID Number: CAR [illegible]

7. Transporter 2 Company Name:
U.S. EPA ID Number:

8. Designated Facility Name and Site Address
South Yuma County Landfill
[illegible] South Avenue [illegible]
Tacna AR [illegible]
Facility Phone:
U.S. EPA ID Number: [illegible]

No.	9. U.S. DOT Description (including Proper Shipping Name, Hazard Class, ID Number, and Packing Group, if any)	10. Containers No.	Type	11. Total Quantity	12. Unit Wt./Vol.	13. Waste Codes
1	NON RCRA Hazardous Waste Solid (Lead Impacted Soil)	[illegible]	[illegible]	[illegible]	[illegible]	[illegible]
2						
3						
4						

14. Special Handling Instructions and Additional Information
Profile #C-[illegible]
[illegible] contaminate safety clothing

15. GENERATOR'S/OFFEROR'S CERTIFICATION: I hereby declare that the contents of this consignment are fully and accurately described above by the proper shipping name, and are classified, packaged, marked and labeled/placarded, and are in all respects in proper condition for transport according to applicable international and national governmental regulations. If I am a small quantity generator, I certify that the contents of this consignment conform to the terms of the attached EPA Acknowledgment of Consent.
I certify that the same manifest statement identified in 40 CFR 262.27(a) (if I am a large quantity generator) or 40 CFR 262.27(b) (if I am a small quantity generator) is true.

Generator's/Offeror's Printed/Typed Name: [illegible] Signature: [illegible] Month 2 Day 14 Year 22

16. International Shipments: ☐ Export to U.S. ☐ Export from U.S. Port of Entry/Exit: Date leaving U.S.
Transporter signature (for exports only):

17. Transporter Acknowledgment of Receipt of Materials
Transporter 1 Printed/Typed Name: [illegible] Signature: [illegible] Month 2 Day 14 Year 22
Transporter 2 Printed/Typed Name: Signature: Month Day Year

18. Discrepancy
18a. Discrepancy Indication Space: ☐ Quantity ☐ Type ☐ Residue ☐ Partial Reaction ☐ Full Rejection
Manifest Reference Number:

18b. Alternate Facility (or Generator): U.S. EPA ID Number:
Facility's Phone:

18c. Signature of Alternate Facility (or Generator): Month Day Year

19. Hazardous Waste Report Management Method Codes (i.e., waste for hazardous waste treatment, disposal, and recycling systems)
1. 2. 3. 4.

20. Designated Facility Owner or Operator: Certification of receipt of hazardous materials covered by the manifest except as noted in Item 18a
Printed/Typed Name: Signature: Month Day Year

EPA Form 8700-22 (Rev. 12-11) Previous editions are obsolete.

GENERATOR'S INITIAL COPY

Please print or type.

Form Approved. OMB No. 2050-0039

UNIFORM HAZARDOUS WASTE MANIFEST	1. Generator ID Number: CAC003159701	2. Page 1 of 1	3. Emergency Response Phone: 213-[illegible]	4. Manifest Tracking Number: 015369782 FLE

5. Generator's Name and Mailing Address:
City of Los Angeles, Department of Public Works
Bureau of Engineering 565 Santa Fe Avenue
City of Los Angeles Ca. 90013
Generator's Phone: [illegible]

Generator's Site Address (if different than mailing address):
565 Santa Fe Avenue
Los Angeles Ca. 90013

6. Transporter 1 Company Name: TAP EX[illegible]
U.S. EPA ID Number: CA[illegible]

7. Transporter 2 Company Name:
U.S. EPA ID Number:

8. Designated Facility Name and Site Address:
South Yuma County Landfill
[illegible] South Avenue [illegible]
[illegible]
Facility's Phone:

U.S. EPA ID Number: AZR000506900

Item	9. Hazardous Waste Material Description	10. Containers No.	Type	11. Total Quantity	12. Unit Wt./Vol.	13. Waste Codes
1	NON RCRA Hazardous Waste Solid (Lead Impacted Soil)	002	DT	[illegible]	Y	1
2						
3						
4						

14. Special Handling Instructions and Additional Information:
Profile #C-[illegible]
Wear appropriate safety clothing.

15. GENERATOR'S/OFFEROR'S CERTIFICATION: I hereby declare that the contents of this consignment are fully and accurately described above by the proper shipping name, and are classified, packaged, marked and labeled/placarded, and are in all respects in proper condition for transport according to applicable international and national governmental regulations. I hereby acknowledge that I am the Primary Exporter. I certify that the contents of this consignment conform to the terms of the attached EPA Acknowledgment of Consent.
I certify that the waste minimization statement described in 40 CFR 262.27(a) (if I am a large quantity generator) or (b) (if I am a small quantity generator) is true.

Generator's Offeror's Printed/Typed Name: [illegible] Signature: [illegible] Month 12 Day 14 Year 22

16. International Shipments: ☐ Import to U.S. ☐ Export from U.S. Port of Entry/Exit: Date Leaving U.S.:
Transporter Signature (for exports only):

17. Transporter Acknowledgment of Receipt of Materials:
Transporter 1 Printed/Typed Name: [illegible] Signature: [illegible] Month 12 Day 14 Year 22
Transporter 2 Printed/Typed Name: Signature: Month Day Year

18. Discrepancy:
18a. Discrepancy Indication Space: ☐ Quantity ☐ Type ☐ Residue ☐ Partial Rejection ☐ Full Rejection
Manifest Reference Number:

18b. Alternate Facility (or Generator): U.S. EPA ID Number:
Facility's Phone:

18c. Signature of Alternate Facility (or Generator): Month Day Year

19. Hazardous Waste Report Management Method Codes (i.e., codes for hazardous waste treatment, disposal, and recycling systems):
1. 2. 3. 4.

20. Designated Facility Owner or Operator: Certification of receipt of hazardous materials covered by the manifest except as noted in Item 18a
Printed/Typed Name: Signature: Month Day Year

GENERATOR

INTL

TRANSPORTER

DESIGNATED FACILITY

EPA Form 8700-22 (Rev. 12-17) Previous Editions are obsolete.

GENERATOR'S INITIAL COPY

Form Approved. OMB No. 2050-0039

UNIFORM HAZARDOUS WASTE MANIFEST	1. Generator ID Number	2. Page 1 of	3. Emergency Response Phone	4. Manifest Tracking Number
	CAC003159701	01	213-[illegible]	015359783 FLE

5. Generator's Name and Mailing Address
City of Los Angeles Department of Public Works
Bureau of Engineering 540 Santa Fe Avenue
City of Los Angeles Ca. 90013
Generator's Phone: Natalie Moore 213-[illegible]

Generator's Site Address (if different than mailing address)
[illegible] Santa Fe Avenue
Los Angeles Ca. 90013

6. Transporter 1 Company Name: [illegible]
U.S. EPA ID Number: CAR00154[illegible]

7. Transporter 2 Company Name:
U.S. EPA ID Number:

8. Designated Facility Name and Site Address
South Yuma County Landfill
15530 South Avenue 17
Facility Phone: AZ 85365 (928) 341-0300
U.S. EPA ID Number: AZR000[illegible]

No.	9a. U.S. DOT Description (including Proper Shipping Name, Hazard Class, ID Number, and Packing Group (if any))	10. Containers No.	Type	11. Total Quantity	12. Unit Wt./Vol.	13. Waste Codes
1	NON RCRA Hazardous Waste Solid (Lead Impacted Soil)	[illegible]	DT	16	Y	611
2						
3						
4						

14. Special Handling Instructions and Additional Information
Profile [illegible]
Wear appropriate safety clothing.

15. Generator's Certification: I hereby declare that the contents of this consignment are fully and accurately described above by the proper shipping name, and are classified, packaged, marked and labeled/placarded, and are in all respects in proper condition for transport, according to applicable international and national governmental regulations. If export shipment and I am the Primary Exporter I certify that the contents of this consignment conform to the terms of the attached EPA Acknowledgment of Consent.
I certify that the waste minimization statement identified in 40 CFR 262.27(a) (if I am a large quantity generator) or (b) (if I am a small quantity generator) is true.

Generator's/Offeror's Printed/Typed Name: [illegible] Signature: [illegible] Month Day Year: 2 / 11 / 22

16. International Shipments: ☐ Import to U.S. ☐ Export from U.S. Port of Entry/Exit: Date Leaving U.S.
Transporter signature (for exports only):

17. Transporter Acknowledgment of Receipt of Materials
Transporter 1 Printed/Typed Name: [illegible] Signature: [illegible] Month Day Year: 2 / 11 / 22
Transporter 2 Printed/Typed Name: Signature: Month Day Year:

18. Discrepancy
18a. Discrepancy Indication Space: ☐ Quantity ☐ Type ☐ Residue ☐ Partial Rejection ☐ Full Rejection
Manifest Reference Number:

18b. Alternate Facility (or Generator): U.S. EPA ID Number:
Facility Phone:

18c. Signature of Alternate Facility (or Generator): Month Day Year:

19. Hazardous Waste Return Management Part and Codes (i.e., codes for hazardous waste treatment, disposal, and recycling systems):
1. 2. 3. 4.

20. Designated Facility Owner or Operator: Certification of receipt of hazardous materials specified by the Generator's Office or Agent in Item 16a
Printed/Typed Name: Signature: Month Day Year:

EPA Form 8700-22 (Rev. 12-17) Previous editions are obsolete.

GENERATOR'S INITIAL COPY

Form Approved. OMB No. 2050-0039

UNIFORM HAZARDOUS WASTE MANIFEST

1. Generator ID Number: CAD983549701

2. Page 1 of 1

3. Emergency Response Phone: 213-634-6177

4. Manifest Tracking Number: 015369728 FLE

5. Generator's Name and Mailing Address: City of Los Angeles Department of Public Works, Bureau of Engineering 1149 South Broadway City of Los Angeles, CA, 90015

Generator's Site Address (if different than mailing address): 1149 S Broadway Los Angeles CA 90

6. Transporter 1 Company Name: 5 Lakes Trucking

U.S. EPA ID Number: CAD000200667

7. Transporter 2 Company Name:

U.S. EPA ID Number:

8. Designated Facility Name and Site Address: South Yuba County Landfill 23 South Avenue M

U.S. EPA ID Number: ACD000800 0

9a. HM	9b. U.S. DOT Description (including Proper Shipping Name, Hazard Class, ID Number, and Packing Group (if any))	10. Containers No.	10. Containers Type	11. Total Quantity	12. Unit Wt./Vol.	13. Waste Codes
	NON RCRA Hazardous Waste Treated Soil	001	CT	16	T	001

14. Special Handling Instructions and Additional Information: PCB's 1.8 PPC-6365

15. GENERATOR'S/OFFEROR'S CERTIFICATION: I hereby declare that the contents of this consignment are fully and accurately described above by the proper shipping name, and are classified, packaged, marked and labeled/placarded, and are in all respects in proper condition for transport according to applicable international and national governmental regulations. I certify that the waste minimization statement identified in 40 CFR 262.27(a) (if I am a large quantity generator) or (b) (if I am a small quantity generator) is true.

Generator's/Offeror's Printed/Typed Name: [illegible] Signature: [illegible] Month: 12 Day: 15 Year: 22

16. International Shipments: Import to U.S. Export from U.S. Port of entry/exit: Transporter signature (for exports only): Date leaving U.S.:

17. Transporter Acknowledgment of Receipt of Materials

Transporter 1 Printed/Typed Name: Alfredo Linares Signature: [signature] Month: 12 Day: 15 Year: 22

Transporter 2 Printed/Typed Name: Signature: Month: Day: Year:

18. Discrepancy

18a. Discrepancy Indication Space: Quantity Type Residue Partial Rejection Full Rejection

Manifest Reference Number:

18b. Alternate Facility (or Generator): U.S. EPA ID Number:

Facility's Phone:

18c. Signature of Alternate Facility (or Generator): Month: Day: Year:

19. Hazardous Waste Report Management Method Codes (i.e., codes for hazardous waste treatment, disposal, and recycling systems)

1. 2. 3. 4.

20. Designated Facility Owner or Operator: Certification of receipt of hazardous materials covered by this manifest except as noted in Item 18a

Printed/Typed Name: Signature: Month: Day: Year:

EPA Form 8700-22 (Rev. 12-17) Previous editions are obsolete

GENERATOR'S INITIAL COPY

DESIGNATED FACILITY | TRANSPORTER | GENERATOR

17

Please print or type.

Form Approved. OMB No. 2050-0039

UNIFORM HAZARDOUS WASTE MANIFEST

1. Generator ID Number: CAD981585721

2. Page 1 of 1

3. Emergency Response Phone: 818-458-3731

4. Manifest Tracking Number: 015368723 FLE

5. Generator Name and Mailing Address: City of Los Angeles, Department of Public Works, Bureau of Engineering 201 North Figueroa Street, 13th Floor, City of Los Angeles CA 90012

Generator's Site Address (if different than mailing address): 700 Eagle Fy Avenue, Los Angeles Ca 90013

6. Transporter 1 Company Name: R T Burns

U.S. EPA ID Number: CAD981585421

7. Transporter 2 Company Name:

U.S. EPA ID Number:

8. Designated Facility Name and Site Address: South Yuba County Landfill, 10541 South Avenue M

U.S. EPA ID Number: CAD983606560

9a. HM	9b. U.S. DOT Description (including Proper Shipping Name, Hazard Class, ID Number, and Packing Group (if any))	10. Containers: No.	Type	11. Total Quantity	12. Unit Wt./Vol.	13. Waste Codes
	1. Non RCRA Hazardous Waste Solid Lead Impacted Soil	001	CT	16	Y	
	2.					
	3.					
	4.					

14. Special Handling Instructions and Additional Information:

Profile # 5161

15. GENERATOR'S CERTIFICATION: I hereby declare that the contents of this consignment are fully and accurately described above by proper shipping name and are classified, packaged, marked and labeled/placarded, and are in all respects in proper condition for transport according to applicable international and national governmental regulations. If export shipment and I am the Primary Exporter I certify that the contents of this consignment conform to the terms of the attached EPA Acknowledgment of Consent.

I certify that the waste minimization statement identified in 40 CFR 262.27(a) (if I am a large quantity generator) or (b) (if I am a small quantity generator) is true.

Generator's/Offeror's Printed/Typed Name: [illegible] Signature: [illegible] Month: 2 Day: 15 Year: 22

TRANSPORTER(S)

16. International Shipments: ☐ Import to U.S. ☐ Export from U.S. Port of entry/exit: Date leaving U.S.:

17. Transporter Acknowledgment of Receipt of Materials

Transporter 1 Printed/Typed Name: T D [illegible] Signature: [illegible] Month: 2 Day: 15 Year: 22

Transporter 2 Printed/Typed Name: Signature: Month: Day: Year:

DESIGNATED FACILITY

18. Discrepancy

18a. Discrepancy Indication Space: ☐ Quantity ☐ Type ☐ Residue ☐ Partial Rejection ☐ Full Rejection

18b. Alternate Facility (or Generator): U.S. EPA ID Number:

Facility's Phone:

18c. Signature of Alternate Facility (or Generator): Month: Day: Year:

19. Hazardous Waste Management Method Codes (i.e., codes for hazardous waste treatment, disposal, and recycling systems):

1. 2. 3. 4.

20. Designated Facility Owner or Operator: Certification of receipt of hazardous materials covered by this manifest except as noted in Item 18a

Printed/Typed Name: Signature: Month: Day: Year:

EPA Form 8700-22 (Rev. 12-11) Previous editions are obsolete.

GENERATOR'S INITIAL COPY

Please print or type

Form Approved. OMB No. 2050-0039

UNIFORM HAZARDOUS WASTE MANIFEST

Contractor ID Number	Page 1 of	Emergency Response Phone	Manifest Tracking Number
CAC003159701	01	213-[illegible]-1273	015369730 FLE

1. Generator's Name and Mailing Address
City of Los Angeles Department of Public Works, Bureau of Engineering 303 South Fe Avenue City of Los Angeles Ca. 90021
Generator's Site Address (if different than mailing address)
[illegible] Santa Fe Avenue Los Angeles Ca. 90022

2. Transporter 1 Company Name: VAZQUEZ TRUCKING & SON
U.S. EPA ID Number: CAD 00225094

3. Transporter 2 Company Name:
U.S. EPA ID Number:

4. Designated Facility Name and Site Address
South Yuma County Landfill
[illegible] South [illegible] St.
Facility's Phone: [illegible]
U.S. EPA ID Number: AZR000526986

No.	9a. U.S. DOT Description (including Proper Shipping Name, Hazard Class, ID Number, and Packing Group, if any)	10. Contractor Name	Type	11. Total Quantity	12. Unit Wt./Vol.	13. Waste Codes
1	[illegible] Hazardous Waste Solid (Lead Impacted Soil)	001	07	16	Y	[illegible]
2						
3						
4						

14. Special Handling Instructions and Additional Information
Profile#C-6868
[illegible]

15. GENERATOR'S CERTIFICATION: I hereby declare that the contents of this consignment are fully and accurately described above by the proper shipping name, and are classified, packaged, marked and labeled/placarded, and are in all respects in proper condition for transport according to applicable international and national government regulations. If export shipment and I am the Primary Exporter, I certify that the contents of this consignment conform to the terms of the attached EPA Acknowledgment of Consent.
I certify that the waste minimization statement identified in 40 CFR 262.27(a) (if I am a large quantity generator) or (b) (if I am a small quantity generator) is true.

Generator's Name & Printed Type Name: [illegible] Signature: [illegible] Month: 12 Day: 15 Year: 22

16. Transportation Statements: ☐ Expires U.S. ☐ Export Non-U.S. Port of Entry/Exit: Date Leaving U.S.
Transporter certifies the receipt of the Exports shipment

17. Transporter Acknowledgment of Receipt of Materials
Transporter 1 Printed/Typed Name: MARTIN VAZQUEZ Signature: [illegible] V Month: 12 Day: 15 Year: 22
Transporter 2 Printed/Typed Name: Signature: Month: Day: Year:

18. Discrepancy
18a. Discrepancy Indicator Space: ☐ Quantity ☐ Type ☐ Residue ☐ Partial Rejection ☐ Full Rejection
Manifest Reference Number:

18b. Alternate Facility or Generator: U.S. EPA ID Number:
Facility's Phone:

18c. Signature of Alternate Facility or Generator: Month: Day: Year:

19. Hazardous Waste Report Management Method Codes (i.e., codes for hazardous waste treatment, disposal, and recycling systems):
1. 2. 3. 4.

20. Designated Facility Owner or Operator: Certification of receipt of hazardous materials covered by the manifest except as noted in Item 18a
Printed/Typed Name: Signature: Month: Day: Year:

GENERATOR

TRANSPORTER

DESIGNATED FACILITY

EPA Form 8700-22 (Rev. 12-15) Previous editions are obsolete.

GENERATOR'S INITIAL COPY

Please print or type.

Form Approved OMB No. 2050-0039

UNIFORM HAZARDOUS WASTE MANIFEST	1. Generator ID Number	2. Page 1 of	3. Emergency Response Phone	4. Manifest Tracking Number
	[illegible]			015369731 FLE

5. Generator's Name and Mailing Address

City of Los Angeles, Department of Public Works
Department of Engineering, 100 South Main Street
City of Los Angeles CA 90012

Generator's Site Address (if different than mailing address)

111 Terminal Annex
Los Angeles CA 90021

6. Transporter 1 Company Name

[illegible]

U.S. EPA ID Number

CAD[illegible]

7. Transporter 2 Company Name

U.S. EPA ID Number

8. Designated Facility Name and Site Address

South Yuba County Landfill
[illegible] South Avenue 16
[illegible]

U.S. EPA ID Number

[illegible]

9a. HM	9b. U.S. DOT Description (including Proper Shipping Name, Hazard Class, ID Number, and Packing Group (if any))	10. Containers No.	10. Containers Type	11. Total Quantity	12. Unit Wt./Vol.	13. Waste Codes
	NOT RCRA Hazardous Waste Soil (Lead Impacted Soil)	[illegible]	CT	10	Y	

14. Special Handling Instructions and Additional Information

Profile#C-5261

15. GENERATOR'S/OFFEROR'S CERTIFICATION: I hereby declare that the contents of this consignment are fully and accurately described above by the proper shipping name, and are classified, packaged, marked and labeled/placarded, and are in all respects in proper condition for transport according to applicable international and national governmental regulations. If export shipment and I am the Primary Exporter I certify that the contents of this consignment conform to the terms of the attached EPA Acknowledgment of Consent. I certify that the waste minimization statement identified in 40 CFR 262.27(a) (if I am a large quantity generator) or (b) (if I am a small quantity generator) is true.

Printed/Typed Name: [illegible]

Signature: [illegible]

Month: 3 Day: 15 Year: 22

16. International Shipments: ☐ Import to U.S. ☐ Export from U.S. Port of entry/exit:

Transporter signature (for exports only):

17. Transporter Acknowledgment of Receipt of Materials

Transporter 1 Printed/Typed Name: [illegible]

Signature: [illegible]

Month: 3 Day: 15 Year: 22

Transporter 2 Printed/Typed Name:

Signature:

Month: Day: Year:

18. Discrepancy

18a. Discrepancy Indication Space: ☐ Quantity ☐ Type ☐ Residue ☐ Partial Rejection ☐ Full Rejection

Manifest Reference Number:

18b. Alternate Facility (or Generator)

U.S. EPA ID Number

Facility's Phone:

18c. Signature of Alternate Facility (or Generator)

Month: Day: Year:

19. Hazardous Waste Report Management Method (Codes for hazardous waste treatment, disposal, and recycling systems)

1.	2.	3.	4.

20. Designated Facility Owner or Operator: Certification of receipt of hazardous materials covered by this manifest except as noted in Item 18a

Printed/Typed Name:

Signature:

Month: Day: Year:

GENERATOR'S INITIAL COPY

Please print or type

Form Approved. OMB No. 2050-0039

Unifor Hazardous Waste Manifest	1. Generator ID Number	2. Page 1 of	3. Emergency Response Phone	4. Manifest Tracking Number
	CAC003159701	01	[illegible]	015369732 FLE

5. Generator's Name and Mailing Address

City of Los Angeles Department of Public Works
Bureau of Engineering 555 Santa Fe Avenue
City of Los Angeles Ca. 90013

Generator's Site Address (if different than mailing address)

555 Santa Fe Avenue
Los Angeles Ca. 90013

6. Generator's Phone ID Number

BBS TRUCKING SAM INC

CAR000126077

7. Transporter 1 Company Name

8. Transporter 2 Company Name

9. Designated Facility Name and Site Address

South Yuma County Landfill
[illegible] Avenue [illegible]
[illegible]

10. Facility's Phone

Item No.	11. U.S. DOT Description (including Proper Shipping Name, Hazard Class, ID Number, and Packing Group, if any)	12. Containers No.	Type	13. Total Quantity	14. Unit Wt./Vol.	15. Waste Codes
1	808 RCRA Hazardous Waste Solid (Lead Impacted Soil)	001	DT	16	Y	511
2						
3						
4						

16. Special Handling Instructions and Additional Information

[illegible]

17. GENERATOR SOFTWARE'S CERTIFICATION: [illegible]

Generator's Office or Authorized Agent Name | Signature | Month | Day | Year
[illegible] | [illegible] | 2 | 15 | 22

18. Transporter Signature (for Exports Only) ☐ Exports ☐ Export Type | Port of Entry/Exit | Date Leaving U.S.

19. Transporter Acknowledgment of Receipt of Materials

Transporter 1 Company Name | Signature | Month | Day | Year
[illegible] Rosina | [illegible] | 2 | 15 | 22

Transporter 2 Company Name | Signature | Month | Day | Year

20. Discrepancy

20a. Discrepancy Indication Space ☐ Quantity ☐ Type ☐ Residue ☐ Partial Rejection ☐ Full Rejection

Manifest Reference Number

20b. Alternate Facility (or Generator) | U.S. EPA ID Number

Facility's Phone

20c. Signature of Alternate Facility (or Generator) | Month | Day | Year

21. Hazardous Waste Report Management Method Code (i.e., Code 1 if Hazardous Waste Report Is Required and Mailing Address)

1.	2.	3.	4.

22. Designated Facility Owner or Operator Certification of receipt of hazardous materials covered by the manifest except as noted in Item 20a

Printed/Typed Name | Signature | Month | Day | Year

GENERATOR

INTL

TRANSPORTER

DESIGNATED FACILITY

Form 8700-22 (Rev. 12-17) Previous editions are obsolete.

GENERATOR'S INITIAL COPY

WEEK 02/07/2022-02/11/2022

DATE	TRUCK NAME	TICKET #	PROFILE #	TOTAL TONS
02/07/2022	GT-2000	197328	C-6866	23.350
02/07/2022	LIMONES-60	197329	C-6866	25.320
02/07/2022	FIGUEROA-24	197330	C-6866	26.470
02/07/2022	ESPINOSA-01	197333	C-6866	30.750
02/07/2022	QBAYSOY-17	197334	C-6866	25.800
02/07/2022	FIGUEROA-07	197340	C-6866	24.910
02/07/2022	S&V-01	197341	C-6866	26.740
02/07/2022	OCHOAS-126	197342	C-6866	31.780
02/07/2022	LAP-39	197343	C-6866	32.690
02/07/2022	DFB-01	197345	C-6866	25.800
02/07/2022	MATINEZ-127	197348	C-6866	28.250
02/07/2022	JM-102	197350	C-6866	25.510
02/07/2022	JGARCIA-388	197351	C-6866	27.200
02/07/2022	PEPE'S-02	197353	C-6866	24.310
02/07/2022	TORIN-02	197374	C-6866	24.480
02/07/2022	ROMERO-07	197376	C-6866	24.190
02/07/2022	ROMERO-05	197378	C-6866	23.540
02/07/2022	ROMERO-17	197380	C-6866	26.800
				477.890
02/08/2022	BENENO-01	197530	C-6866	25.170
02/08/2022	LIMONES-60	197531	C-6866	24.790
02/08/2022	QBAYSOY-17	197532	C-6866	25.950
02/08/2022	OCHOAS-126	197534	C-6866	32.560
02/08/2022	ESPINOSA-01	197536	C-6866	26.390
02/08/2022	LAP-39	197538	C-6866	32.150
02/08/2022	S&V-01	197540	C-6866	23.500
02/08/2022	MATINEZ-127	197544	C-6866	27.390
02/08/2022	PEPE'S-02	197546	C-6866	25.890
02/08/2022	JM-102	197547	C-6866	27.480
02/08/2022	JGARCIA-388	197548	C-6866	27.240
02/08/2022	TORIN-02	197556	C-6866	23.850
02/08/2022	DFB-01	197557	C-6866	25.370
02/08/2022	ROMERO-05	197560	C-6866	25.100
02/08/2022	ROMERO-17	197561	C-6866	25.670
02/08/2022	ROMERO-07	197569	C-6866	27.000
02/08/2022	ROMCAMI-731	197587	C-6866	26.040
02/08/2022	AMMCO-05	197607	C-6866	26.980
				478.520
02/09/2022	LAP-39	197737	C-6866	31.840
02/09/2022	ESPINOSA-01	197740	C-6866	26.550
02/09/2022	OCHOAS-126	197741	C-6866	31.370
02/09/2022	JM-102	197742	C-6866	27.160
02/09/2022	S&V-01	197745	C-6866	24.560
02/09/2022	LIMONES-60	197746	C-6866	26.050
02/09/2022	MATINEZ-127	197747	C-6866	26.710
02/09/2022	TORIN-02	197752	C-6866	24.980
02/09/2022	ROMERO-05	197753	C-6866	26.410
02/09/2022	VIGLER-02	197757	C-6866	25.660
02/09/2022	ROMERO-17	197760	C-6866	25.870
02/09/2022	ROMERO-07	197762	C-6866	24.140
02/09/2022	BADASS-02	197763	C-6866	24.850
02/09/2022	VRZ-01	197775	C-6866	26.160
02/09/2022	ROMCAMI-731	197776	C-6866	27.860
02/09/2022	MAXXO-167	197781	C-6866	28.370
02/09/2022	MOLINA-18	197789	C-6866	27.340
02/09/2022	NWO-345	197791	C-6866	26.770
02/09/2022	ZAMORA-504	197796	C-6866	28.810
02/09/2022	MALI-53	197800	C-6866	26.260
02/09/2022	PEPE'S-02	197826	C-6866	26.670
				564.390

02/10/2022	ESPINOSA-01	197956	C-6866	29.280	
02/10/2022	OCHOAS-126	197957	C-6866	32.850	
02/10/2022	LAP-39	197958	C-6866	31.990	
02/10/2022	LIMONES-60	197959	C-6866	26.590	
02/10/2022	MATINEZ-127	197964	C-6866	28.170	
02/10/2022	B&B-729	197966	C-6866	25.550	
02/10/2022	ROMERO-05	197967	C-6866	26.700	
02/10/2022	ROMERO-07	197968	C-6866	24.650	
02/10/2022	ROMERO-17	197969	C-6866	26.650	
02/10/2022	JGARCIA-388	197976	C-6866	27.260	
02/10/2022	ROMCAMI-731	197977	C-6866	26.250	
02/10/2022	VIGLER-02	197980	C-6866	25.780	
02/10/2022	ZAMORA-504	197982	C-6866	28.020	
02/10/2022	NWO-345	197985	C-6866	27.820	
02/10/2022	MAXXO-167	197987	C-6866	28.250	
02/10/2022	PEPE'S-02	197997	C-6866	27.120	
02/10/2022	VRZ-01	198010	C-6866	26.910	
02/10/2022	MALI-53	198011	C-6866	26.930	
				496.770	
02/11/2022	MOLINA-18	198077	C-6866	27.660	
02/11/2022	LIMONES-60	198161	C-6866	25.320	
02/11/2022	ESPINOSA-01	198173	C-6866	27.830	
02/11/2022	LAP-39	198174	C-6866	33.510	
02/11/2022	JGARCIA-388	198175	C-6866	28.820	
02/11/2022	ROMERO-05	198176	C-6866	24.820	
02/11/2022	B&B-729	198177	C-6866	25.320	
02/11/2022	F&SONS-04	198180	C-6866	26.150	
02/11/2022	ROMERO-07	198181	C-6866	24.780	
02/11/2022	PEPE'S-02	198183	C-6866	25.600	
02/11/2022	ROMERO-17	198184	C-6866	25.450	
02/11/2022	QBAYSOY-17	198193	C-6866	26.130	
02/11/2022	ROMCAMI-731	198212	C-6866	26.610	
02/12/2022	OCHOAS-126	198281	C-6866	33.620	
				381.620	
			Total Tons	**2,399.190**	

CR&R INCORPORATED – WeighMaster Certificate
environmental services

"PUBLIC WEIGHMASTER'S CERTIFICATE OF WEIGHT AND MEASURE"

This is to certify that the described merchandise, was weighed, counted, or measured by a public or deputy weighmaster, and when properly signed, and sealed, is prima facie evidence of the accuracy of the weight, count, or measure shown as prescribed by law.

SOUTH YUMA COUNTY LANDFILL IN
A CR & R INC COMPANY
YUMA AZ. 85365
928-341-9300

ORIGINAL

TICKET #: 197328

DATE: 2/7/2022
IN: 12:24:48 PM
OUT: 12:24:48 PM
OPERATOR: EsmeraldaB

HAULER: GLOBAL TRANSLOADING LLC
PROFILE: C-6866
TRUCK: GT-2000
MANIFEST #015369670FLE
ACCOUNT
SOURCE: LA LOS ANGE
NH20 - NON HAZARDOUS SOIL
MANIFEST CHARGE $40

GROSS Lbs: 80.720.00
TARE Lbs: 34.020.00
NET 46.700.00

TONS	RATE	AMOUNT
23.35		
Loads		

TOTAL AMOUNT:

** Account Customers Only: A State of Arizona per Ton Landfill fee of $0.25 will be added to your invoice **

CUSTOMER SIGNATURE

WEIGHMASTER SIGNATURE

The conditions on the back of this form must be observed. Your Signature acknowledges that you have read and understood all conditions of this certificate. You enter this facility at your own risk. CR&R Incorporated assumes NO liability for any injury or damage occurring while you are on the premises of this facility.

WHITE - ORIGINAL CANARY - OFFICE COPY PINK - CUSTOMER COPY AZTK001

2/7/2022

CR&R INCORPORATED – WeighMaster Certificate

environmental services

"PUBLIC WEIGHMASTER'S CERTIFICATE OF WEIGHT AND MEASURE"

This is to certify that the described merchandise, was weighed, counted, or measured by a public or deputy weighmaster, and when properly signed, and sealed, is prima facie evidence of the accuracy of the weight, count, or measure shown as prescribed by law.

SOUTH YUMA COUNTY LANDFILL INC
A CR & R INC COMPANY
YUMA AZ. 85365
928-341-9300

TICKET #: 197329

DATE: 2/7/2022
IN: 12:27:29 PM
OUT: 12:27:29 PM
OPERATOR: EsmeraldaB

HAULER: INDEPENDENT HAULER
PROFILE: C- 6866
TRUCK: LIMONES 60
MANIFEST #015636967411

GROSS Lbs: 79,840.00
TARE Lbs: 29,200.00
NET Lbs: 50,640.00

ACCOUNT:
SOURCE: LA LOS ANGELES

	TONS	RATE	AMOUNT
NH20 - NON HAZARDOUS SOIL 20	25.32		
MANIFEST CHARGE $40	Loads		
	TOTAL AMOUNT:		

** Account Customers Only: A State of Arizona per Ton Landfill Fee of $0.25 will be added to your invoice **

CUSTOMER SIGNATURE

WEIGHMASTER SIGNATURE

The conditions on the back of this form must be observed. Your Signature acknowledges that you have read and understood all conditions of this certificate.

You enter this facility at your own risk. CR&R Incorporated assumes NO liability for any injury or damage occurring while you are on the premises of this facility.

WHITE - ORIGINAL CANARY - OFFICE COPY PINK - CUSTOMER COPY AZTK001

CR&R INCORPORATED – WeighMaster Certificate
environmental services

"PUBLIC WEIGHMASTER'S CERTIFICATE OF WEIGHT AND MEASURE"

This is to certify that the described merchandise, was weighed, counted, or measured by a public or deputy weighmaster, and when properly signed, and sealed, is prima facie evidence of the accuracy of the weight, count, or measure shown as prescribed by law.

SOUTH YUMA COUNTY LAND[illegible] IN
A CR & R INC COMPANY [illegible] ORIGINAL
YUMA AZ. 85365
928-341-9300

TICKET #: 197330
DATE: 2/7/2022
IN: 12:29:39 PM
OUT: 12:29:39 PM
OPERATOR: EsmeraldaB

HAULER: INDEPENDENT HAUL[illegible]
PROFILE: C-6866 C-6[illegible] CITY OF LOS
TRUCK: FIGUEROA 24
MANIFEST #0153696/6FLE
ACCOUNT:
SOURCE: LA LOS ANGELES
NH20 - NON HAZARDOUS SOIL 20
MANIFEST CHARGE $40

GROSS Lbs: 82.420.00
TARE Lbs: 29.480.00
NET 52.940.00

TONS	RATE	AMOUNT
26.47		
Loads		

TOTAL AMOUNT:

** Account Customers Only: A State of Arizona per Ton Landfill fee of $0.25 will be added to your invoice **

CUSTOMER SIGNATURE

WEIGHMASTER SIGNATURE

The conditions on the back of this form must be observed. Your Signature acknowledges that you have read and understood all conditions of this certificate.

You enter this facility at your own risk. CR&R Incorporated assumes NO liability for any injury or damage occurring while you are on the premises of this facility.

WHITE - ORIGINAL CANARY - OFFICE COPY PINK - CUSTOMER COPY

AZTK001

CR&R INCORPORATED — WeighMaster Certificate
environmental services

"PUBLIC WEIGHMASTER'S CERTIFICATE OF WEIGHT AND MEASURE"

This is to certify that the described merchandise, was weighed, counted, or measured by a public or deputy weighmaster, and when properly signed, and sealed, is prima facie evidence of the accuracy of the weight, count, or measure shown as prescribed by law.

SOUTH YUMA COUNTY LANDFILL
A CR & R INC COMPANY
YUMA AZ. 85365
928-341-9300

ORIGINAL

TICKET #: 197333
DATE: 2/7/2022
IN: 12:32:27 PM
OUT: 12:32:27 PM
OPERATOR: EsmeraldaB

HAULER: INDEPENDENT HAULER
PROFILE: C 6866 C 6866 CITY OF LOS
TRUCK: ESPINOSA 01
MANIFEST #01536967 FILE
ACCOUNT:
SOURCE: LA LOS ANGELES

GROSS Lbs: 90,360.00
TARE Lbs: 28,860.00
NET " 61,500.00

		TONS	RATE	AMOUNT
NH20	NON HAZARDOUS SOIL 20	30.75	[redacted]	[redacted]
	MANIFEST CHARGE $40	Loads		

TOTAL AMOUNT: [redacted]

** Account Customers Only: A State of Arizona per Ton Landfill fee of $0.25 will be added to your invoice **

CUSTOMER SIGNATURE

WEIGHMASTER SIGNATURE

The conditions on the back of this form must be observed. Your Signature acknowledges that you have read and understood all conditions of this certificate. You enter this facility at your own risk. CR&R Incorporated assumes NO liability for any injury or damage occurring while you are on the premises of this facility.

WHITE - ORIGINAL CANARY - OFFICE COPY PINK - CUSTOMER COPY

AZTK001

CR&R INCORPORATED – WeighMaster Certificate
environmental services

"PUBLIC WEIGHMASTER'S CERTIFICATE OF WEIGHT AND MEASURE"

This is to certify that the described merchandise, was weighed, counted, or measured by a public or deputy weighmaster, and when properly signed, and sealed, is prima facie evidence of the accuracy of the weight, count, or measure shown as prescribed by law.

SOUTH YUMA COUNTY LANDFILL IN
A CR & R INC COMPANY
YUMA AZ. 85365
928-341-9300

TICKET #: 197334
ORIGINAL
DATE: 2/7/2022
IN: 12:35:09 PM
OUT: 12:35:09 PM
OPERATOR: EsmeraldaB

HAULER: INDEPENDENT HA[illegible]
PROFILE: C-6866
TRUCK: QBAYSOY-17
MANIFEST #01536967 5FLE[illegible]
ACCOUN[illegible]
SOURCE: LA LOS ANGE[illegible]
NH20 NON HAZARDOUS SOIL [illegible]
MANIFEST CHARGE $40

GROSS Lbs: 79,200.00
TARE Lbs: 27,600.00
NET 51,600.00

TONS	RATE	AMOUNT
25.80	$	
Loads		

TOTAL AMOUNT:

** Account Customers Only: A State of Arizona per ton Landfill fee of $0.25 will be added to your invoice **

Fidel

CUSTOMER SIGNATURE

WEIGHMASTER SIGNATURE

The conditions on the back of this form must be observed. Your Signature acknowledges that you have read and understood all conditions of this certificate.

You enter this facility at your own risk. CR&R Incorporated assumes NO liability for any injury or damage occurring while you are on the premises of this facility.

WHITE - ORIGINAL CANARY - OFFICE COPY PINK - CUSTOMER COPY

AZTK001

CR&R INCORPORATED – WeighMaster Certificate
environmental services

"PUBLIC WEIGHMASTER'S CERTIFICATE OF WEIGHT AND MEASURE"

This is to certify that the described merchandise, was weighed, counted, or measured by a public or deputy weighmaster, and when properly signed, and sealed, is prima facie evidence of the accuracy of the weight, count, or measure shown as prescribed by law.

SOUTH YUMA COUNTY LANDFILL IN
A CR & R INC COMPANY
YUMA AZ. 85365
928-341-9300

TICKET #: 197340

DATE: 2/7/2022
IN: 12:44:43 PM
OUT: 12:44:43 PM
OPERATOR: EsmeraldaB

HAULER: INDEPENDENT HAULER
PROFILE: C-6866 C-686
TRUCK: FIGUEROA-07
MANIFEST #015369673FLE
ACCOUNT:
SOURCE: LA LOS ANGELES
NH20 - NON HAZARDOUS SOIL 20
MANIFEST CHARGE $40

GROSS Lbs: 79,300.00
TARE Lbs: 29,480.00
NET 49,820.00

TONS	RATE	AMOUNT
24.91		
Loads		

TOTAL AMOUNT:

** Account Customers Only: A State of Arizona per Ton Landfill fee of $0.25 will be added to your invoice **

Frank

CUSTOMER SIGNATURE

WEIGHMASTER SIGNATURE

The conditions on the back of this form must be observed. Your Signature acknowledges that you have read and understood all conditions of this certificate. You enter this facility at your own risk. CR&R Incorporated assumes NO liability for any injury or damage occurring while you are on the premises of this facility.

WHITE - ORIGINAL CANARY - OFFICE COPY PINK - CUSTOMER COPY AZTK001

CR&R INCORPORATED – WeighMaster Certificate
environmental services

"PUBLIC WEIGHMASTER'S CERTIFICATE OF WEIGHT AND MEASURE"

This is to certify that the described merchandise, was weighed, counted, or measured by a public or deputy weighmaster, and when properly signed, and sealed, is prima facie evidence of the accuracy of the weight, count, or measure shown as prescribed by law.

SOUTH YUMA COUNTY LANDFILL
A CR & R INC COMPANY
YUMA AZ 85365
928-341-9300

TICKET #: 197341
DATE: 2/7/2022
IN: 12:47:50 PM
OUT: 12:47:50 PM
OPERATOR: EsmeraldaB

HAULER: INDEPENDENT HAULER
PROFILE: C-6866 C-6866 - CITY OF LOS
TRUCK: S&V 01
MANIFEST #015369672FLE
ACCOUNT:
SOURCE: LA LOS ANGELES
NH20 - NON HAZARDOUS SOIL 20
MANIFEST CHARGE $40

GROSS Lbs: 82,960.00
TARE Lbs: 29,480.00
NET 53,480.00

TONS	RATE	AMOUNT
26.74	[redacted]	[redacted]
Loads		

TOTAL AMOUNT: [redacted]

** Account Customers Only: A State of Arizona per Ton Landfill fee of $0.25 will be added to your invoice **

Sergio

CUSTOMER SIGNATURE

WEIGHMASTER SIGNATURE

The conditions on the back of this form must be observed. Your Signature acknowledges that you have read and understood all conditions of this certificate. You enter this facility at your own risk. CR&R Incorporated assumes NO liability for any injury or damage occurring while you are on the premises of this facility.

WHITE - ORIGINAL CANARY - OFFICE COPY PINK - CUSTOMER COPY

AZTK001

CR&R INCORPORATED – WeighMaster Certificate
environmental services

"PUBLIC WEIGHMASTER'S CERTIFICATE OF WEIGHT AND MEASURE"

This is to certify that the described merchandise, was weighed, counted, or measured by a public or deputy weighmaster, and when properly signed, and sealed, is prima facie evidence of the accuracy of the weight, count, or measure shown as prescribed by law.

SOUTH YUMA COUNTY LANDFILL IN TICKET #: [illegible]
A CR & R INC COMPANY ORIGINAL
YUMA AZ.85365 DATE: 2/7/2022
928 341-9300 IN: 12:50:04 PM
OUT: 12:50:04 PM

HAULER: INDEPENDENT HAULER OPERATOR: EsmeraldaB
PROFILE: C 6866 C 6866 CITY OF LOS
TRUCK: OCHOAS 626 GROSS Lbs: 90,060.00
MANIFEST #[illegible] TARE Lbs: 26,500.00
ACCOUNT: NET 63,560.00

SOURCE: LA LOS ANGELES TONS RATE AMOUNT
NH20 NON HAZARDOUS SOLE 20 31.78
MANIFEST CHARGE $40 Loads
TOTAL AMOUNT:

** Account Customers Only: A State of Arizona per Ton Landfill fee of $0.25 will be added to your invoice **

CUSTOMER SIGNATURE WEIGHMASTER SIGNATURE

The conditions on the back of this form must be observed. Your Signature acknowledges that you have read and understood all conditions of this certificate.

You enter this facility at your own risk. CR&R Incorporated assumes NO liability for any injury or damage occurring while you are on the premises of this facility.

AZTK001

WHITE - ORIGINAL CANARY - OFFICE COPY PINK - CUSTOMER COPY

CR&R INCORPORATED — WeighMaster Certificate

environmental services

"PUBLIC WEIGHMASTER'S CERTIFICATE OF WEIGHT AND MEASURE"

This is to certify that the described merchandise was weighed, counted, or measured by a public or deputy weighmaster, and when properly signed, and sealed, is prima facie evidence of the accuracy of the weight, count, or measure shown as prescribed by law.

SOUTH YUMA COUNTY LANDFILL
A CR & R INC COMPANY
YUMA AZ. 85365
928-341-9300

TICKET #: 197343

DATE: 2/7/2022
IN: 12:52:41 PM
OUT: 12:56:41 PM
OPERATOR: EsmeraldaB

HAULER: INDEPENDENT HAULER
PROFILE: C 6866 C 6866 ORIGIN LOS
TRUCK: LAP 39
MANIFEST #

ACCOUNT:
SOURCE: LA LOS ANGELES
NR20 - NON HAZARDOUS SOIL 20

GROSS Lbs:	91,460.00
TARE Lbs:	26,080.00
NET	65,380.00

TONS	RATE	AMOUNT
32.69		
Tons		
TOTAL AMOUNT:		

** Account Customers Only: A State of Arizona Per Ton Landfill Fee of $0.25 will be added to your invoice **

CUSTOMER SIGNATURE

WEIGHMASTER SIGNATURE

The conditions on the back of this form must be observed. Your Signature acknowledges that you have read and understood all conditions of this certificate.
You enter this facility at your own risk. CR&R Incorporated assumes NO liability for any injury or damage occurring while you are on the premises of this facility.

WHITE - ORIGINAL CANARY - OFFICE COPY PINK - CUSTOMER COPY AZTK001

CR&R INCORPORATED – Weigh Master Certificate
environmental services

PUBLIC WEIGHMASTER'S CERTIFICATE OF WEIGHT AND MEASURE"
This is to certify that the described merchandise, was weighed, counted, or measured by a public or deputy weighmaster, and when properly signed, and sealed, is prima facie evidence of the accuracy of the weight, count, or measure shown as prescribed by law.

SOUTH YUMA COUNTY LANDFILL — ORIGINAL
A CR & R INC COMPANY
YUMA AZ. 85365
928-341-9300

TICKET #: 197345
MANUAL
DATE: 2/7/2022
IN: 12:55:34 PM
OUT: 12:55:34 PM
OPERATOR: EsmeraldaB

HAULER: INDEPENDENT HAUL — CUSTOMER: CITY OF LOS
PROFILE: C- 6864
TRUCK: DFB -01
MANIFEST #0156369677FILE
ACCOUNT:
SOURCE: LA — LOS ANGELES
NH20 - NON HAZARDOUS SOIL 20
MANIFEST CHARGE $40

GROSS Lbs:	30,060.00
TARE Lbs:	28,460.00
NET	51,600.00

TONS	RATE	AMOUNT
25.80		
Loads		
TOTAL AMOUNT:		

** Account Customers Only: A State of Arizona per ton Landfill fee of $0.25 will be added to your invoice **

Daniel

CUSTOMER SIGNATURE

WEIGHMASTER SIGNATURE

The conditions on the back of this form must be observed. Your Signature acknowledges that you have read and understood all conditions of this certificate.
You enter this facility at your own risk. CR&R Incorporated assumes NO liability for any injury or damage occurring while you are on the premises of this facility.

AZTK001

WHITE - ORIGINAL CANARY - OFFICE COPY PINK - CUSTOMER COPY

CR&R INCORPORATED – WeighMaster Certificate
environmental services

"PUBLIC WEIGHMASTER'S CERTIFICATE OF WEIGHT AND MEASURE"

This is to certify that the described merchandise, was weighed, counted, or measured by a public or deputy weighmaster, and when properly signed, and sealed, is prima facie evidence of the accuracy of the weight, count, or measure shown as prescribed by law.

SOUTH YUMA COUNTY LANDFILL IN
A CR & R INC COMPANY
YUMA AZ. 85365
928 341 9300

ORIGINAL

TICKET #: 157348
DATE: 2/7/2022
IN: 01:07:47 PM
OUT: 01:07:47 PM
OPERATOR: EsmeraldaB

HAULER: INDEPENDENT HAULER
PROFILE: C 6866 C 66 CITY OF LA
TRUCK: MATINEZ 127
MANIFEST #0153696 79FLL
ACCOUNT:
SOURCE: LA LOS ANGELES
NH20 - NON HAZARDOUS SOIL 20
MANIFEST CHARGE $10

GROSS Lbs: 87,500.00
TARE Lbs: 31,000.00
NET 56,500.00

TONS	RATE	AMOUNT
28.25		
Loads		

TOTAL AMOUNT:

** Account Customers Only: A State of Arizona per Ton Landfill fee of $0.25 will be added to your invoice **

CUSTOMER SIGNATURE

WEIGHMASTER SIGNATURE

The conditions on the back of this form must be observed. Your Signature acknowledges that you have read and understood all conditions of this certificate.

You enter this facility at your own risk. CR&R Incorporated assumes NO liability for any injury or damage occurring while you are on the premises of this facility.

WHITE - ORIGINAL CANARY - OFFICE COPY PINK - CUSTOMER COPY

AZTK001

CR&R INCORPORATED – WeighMaster Certificate

environmental services

"PUBLIC WEIGHMASTER'S CERTIFICATE OF WEIGHT AND MEASURE"

This is to certify that the described merchandise, was weighed, counted, or measured by a public or deputy weighmaster, and when properly signed, and sealed, is prima facie evidence of the accuracy of the weight, count, or measure shown as prescribed by law.

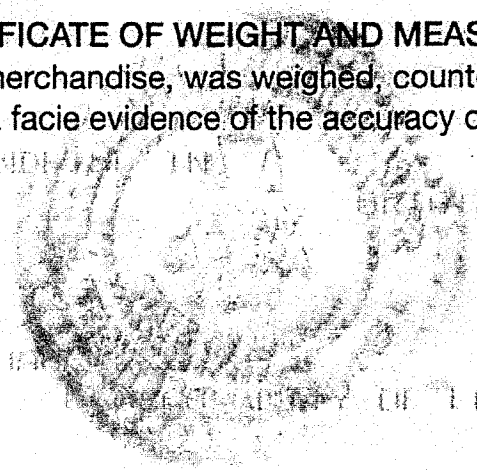

CUSTOMER SIGNATURE

WEIGHMASTER SIGNATURE

The conditions on the back of this form must be observed. Your Signature acknowledges that you have read and understood all conditions of this certificate. You enter this facility at your own risk. CR&R Incorporated assumes NO liability for any injury or damage occurring while you are on the premises of this facility.

WHITE - ORIGINAL CANARY - OFFICE COPY PINK - CUSTOMER COPY

AZTK001

CR&R INCORPORATED – WeighMaster Certificate

environmental services

"PUBLIC WEIGHMASTER'S CERTIFICATE OF WEIGHT AND MEASURE"

This is to certify that the described merchandise, was weighed, counted, or measured by a public or deputy weighmaster, and when properly signed, and sealed, is prima facie evidence of the accuracy of the weight, count, or measure shown as prescribed by law.

SOUTH YUMA COUNTY LANDFILL
A CR & R INC COMPANY
YUMA AZ. 85365
928-341-9300

TICKET #: 197350

DATE: 2/7/2022
IN: 01:14:23 PM
OUT: 01:14:25 PM
OPERATOR: EsmeraldaB

HAULER: INDEPENDENT HAULER
PROFILE: C- 6866 C- 6866 - CITY OF LOS
TRUCK: JGARCIA -388
MANIFEST #0153696-81FLE

GROSS Lbs: 81,800.00
TARE Lbs: 27,400.00
NET " 54,400.00

ACCOUNT:
SOURCE: LA LOS ANGELES

		TONS	RATE	AMOUNT
NH20	NON HAZARDOUS SOIL 20	27.20		
	MANIFEST CHARGE $40	1 loads		
		TOTAL AMOUNT:		

** Account Customers Only: A State of Arizona per ton landfill fee of $0.25 will be added to your invoice **.

CUSTOMER SIGNATURE

WEIGHMASTER SIGNATURE

The conditions on the back of this form must be observed. Your Signature acknowledges that you have read and understood all conditions of this certificate.

You enter this facility at your own risk. CR&R Incorporated assumes NO liability for any injury or damage occurring while you are on the premises of this facility.

WHITE - ORIGINAL CANARY - OFFICE COPY PINK - CUSTOMER COPY AZTK001

CR&R INCORPORATED – WeighMaster Certificate
environmental services

"PUBLIC WEIGHMASTER'S CERTIFICATE OF WEIGHT AND MEASURE"

This is to certify that the described merchandise, was weighed, counted, or measured by a public or deputy weighmaster, and when properly signed, and sealed, is prima facie evidence of the accuracy of the weight, count, or measure shown as prescribed by law.

SOUTH YUMA COUNTY LANDFILL INC. TICKET #: 197353
A CR & R INC COMPANY ORIGINAL
YUMA AZ. 85365 DATE: 2/7/2022
928-341-9300 IN: 01:16:40 PM
OUT: 01:16:40 PM
HAULER: INDEPENDENT HAULER OPERATOR: EsmeraldaB
PROFILE: D 6866 CITY OF LOS
TRUCK: PEPE'S 02 GROSS Lbs: 78,120.00
MANIFEST #0153696831 TARE Lbs: 29,500.00
ACCOUNT: NET 48,620.00

SOURCE ID	LOS ANGELES	TONS	RATE	AMOUNT
NH20	NON HAZARDOUS SOIL 20	24.31		
	MANIFEST CHARGE $40	Load		
		TOTAL AMOUNT:		

** Account Customers Only: A State of Arizona per Ton Landfill fee of $0.25 will be added to your invoice **

Pepe

CUSTOMER SIGNATURE

WEIGHMASTER SIGNATURE

The conditions on the back of this form must be observed. Your Signature acknowledges that you have read and understood all conditions of this certificate.

You enter this facility at your own risk. CR&R Incorporated assumes NO liability for any injury or damage occurring while you are on the premises of this facility.

WHITE - ORIGINAL CANARY - OFFICE COPY PINK - CUSTOMER COPY

AZTK001

CR&R INCORPORATED – WeighMaster Certificate

environmental services

"PUBLIC WEIGHMASTER'S CERTIFICATE OF WEIGHT AND MEASURE"

This is to certify that the described merchandise, was weighed, counted, or measured by a public or deputy weighmaster, and when properly signed, and sealed, is prima facie evidence of the accuracy of the weight, count, or measure shown as prescribed by law.

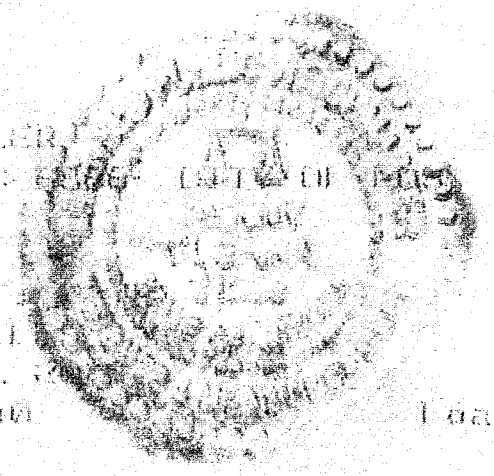

Account Customers Only: A State of Arizona per Ton Landfill Fee of $28.35 will be added to your invoice.

CUSTOMER SIGNATURE

WEIGHMASTER SIGNATURE

The conditions on the back of this form must be observed. Your Signature acknowledges that you have read and understood all conditions of this certificate.

You enter this facility at your own risk. CR&R Incorporated assumes NO liability for any injury or damage occurring while you are on the premises of this facility.

WHITE - ORIGINAL CANARY - OFFICE COPY PINK - CUSTOMER COPY

AZTK001

CR&R INCORPORATED – WeighMaster Certificate
environmental services

"PUBLIC WEIGHMASTER'S CERTIFICATE OF WEIGHT AND MEASURE"

This is to certify that the described merchandise, was weighed, counted, or measured by a public or deputy weighmaster, and when properly signed, and sealed, is prima facie evidence of the accuracy of the weight, count, or measure shown as prescribed by law.

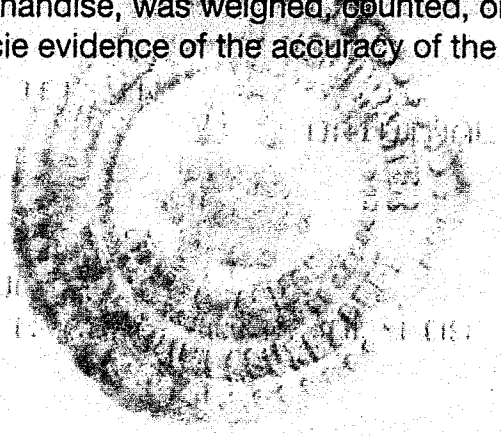

SOUTH YUMA COUNTY LANDFILL
A CR & R INC COMPANY
YUMA AZ 85365
928 341 9300

TICKET #: 197376

DATE: 2/7/2022
IN: 02:00:59 PM
OUT: 02:00:59 PM
OPERATOR: EsmeraldaB

HAULER: INDEPENDENT HAU
PROFILE: C 6866
TRUCK: ROMERO 07
MANIFEST #015369[illegible]
ACCOUNT:

GROSS Lbs: 77,800.00
TARE Lbs: 29,420.00
NET 48,380.00

SOURCE: LA LOS ANGELES
NH20 NON HAZARDOUS SOIL 20
MANIFEST CHARGE $40

TONS	RATE	AMOUNT
24.19		
Loads		

TOTAL AMOUNT:

** Account Customers Only: A State of Arizona per Ton Landfill fee of $0.25 will be added to your invoice **

CUSTOMER SIGNATURE

WEIGHMASTER SIGNATURE

The conditions on the back of this form must be observed. Your Signature acknowledges that you have read and understood all conditions of this certificate.

You enter this facility at your own risk. CR&R Incorporated assumes NO liability for any injury or damage occurring while you are on the premises of this facility.

WHITE - ORIGINAL CANARY - OFFICE COPY PINK - CUSTOMER COPY

AZTK001

CR&R INCORPORATED – WeighMaster Certificate
environmental services

"PUBLIC WEIGHMASTER'S CERTIFICATE OF WEIGHT AND MEASURE"

This is to certify that the described merchandise, was weighed, counted, or measured by a public or deputy weighmaster, and when properly signed, and sealed, is prima facie evidence of the accuracy of the weight, count, or measure shown as prescribed by law.

SOUTH YUMA COUNTY LANDFILL
A CR & R INC COMPANY
YUMA AZ. 85365
928 341 9300

TICKET #: 197378

DATE: 2/7/2022
IN: 02:03:53 PM
OUT: 02:03:53 PM
OPERATOR: EsmeraldaB

HAULER: INDEPENDENT HAULER
PROFILE: C 6866 C-6866 CITY OF LOS
TRUCK: ROMERO 05
MANIFEST #015369687file
ACCOUNT:

GROSS Lbs: 75,340.00
TARE Lbs: 28,260.00
NET 47,080.00

SOURCE: LA LOS ANGELES

	TONS	RATE	AMOUNT
NH20 - NON HAZARDOUS SOIL 20	23.54		
MANIFEST CHARGE $40	Loads		

TOTAL AMOUNT:

** Account Customers Only: A State of Arizona per Ton Landfill Fee of $0.25 will be added to your invoice **

CUSTOMER SIGNATURE

WEIGHMASTER SIGNATURE

The conditions on the back of this form must be observed. Your Signature acknowledges that you have read and understood all conditions of this certificate.

You enter this facility at your own risk. CR&R Incorporated assumes NO liability for any injury or damage occurring while you are on the premises of this facility.

WHITE - ORIGINAL CANARY - OFFICE COPY PINK - CUSTOMER COPY

AZTK001

CR&R INCORPORATED – WeighMaster Certificate
environmental services

"PUBLIC WEIGHMASTER'S CERTIFICATE OF WEIGHT AND MEASURE"

This is to certify that the described merchandise, was weighed, counted, or measured by a public or deputy weighmaster, and when properly signed, and sealed, is prima facie evidence of the accuracy of the weight, count, or measure shown as prescribed by law.

SOUTH YUMA COUNTY LANDFILL IN
A CR & R INC COMPANY ORIGINAL
YUMA AZ 85365
928-341-9300

TICKET #: 197380
DATE: 2/7/2022
IN: 02:06:36 PM
OUT: 02:06:36 PM
OPERATOR: Esmeralda8

HAULER: INDEPENDENT HAULER
PROFILE: C 6866 C 6866 CITY OF LOS
TRUCK: ROMERO 17
MANIFEST #0153696851 fe
ACCOUNT:

GROSS Lbs: 82,200.00
TARE Lbs: 28,600.00
NET 53,600.00

SOURCE: LA LOS ANGELES TONS RATE AMOUNT
NH20 - NON HAZARDOUS SOIL 20 26.80
MANIFEST CHARGE $40 each
TOTAL AMOUNT: $

** Account Customers Only: A State of Arizona per Ton Landfill fee of $0.25 will be added to your invoice **

CUSTOMER SIGNATURE

WEIGHMASTER SIGNATURE

The conditions on the back of this form must be observed. Your Signature acknowledges that you have read and understood all conditions of this certificate.

You enter this facility at your own risk. CR&R Incorporated assumes NO liability for any injury or damage occurring while you are on the premises of this facility.

AZTK001

WHITE - ORIGINAL CANARY - OFFICE COPY PINK - CUSTOMER COPY

CR&R INCORPORATED – WeighMaster Certificate

environmental services

2/8/2022

"PUBLIC WEIGHMASTER'S CERTIFICATE OF WEIGHT AND MEASURE"

This is to certify that the described merchandise, was weighed, counted, or measured by a public or deputy weighmaster, and when properly signed, and sealed, is prima facie evidence of the accuracy of the weight, count, or measure shown as prescribed by law.

CUSTOMER SIGNATURE

WEIGHMASTER SIGNATURE

The conditions on the back of this form must be observed. Your Signature acknowledges that you have read and understood all conditions of this certificate. You enter this facility at your own risk. CR&R Incorporated assumes NO liability for any injury or damage occurring while you are on the premises of this facility.

WHITE - ORIGINAL CANARY - OFFICE COPY PINK - CUSTOMER COPY

AZTK001

CR&R INCORPORATED – WeighMaster Certificate

environmental services

"PUBLIC WEIGHMASTER'S CERTIFICATE OF WEIGHT AND MEASURE"

This is to certify that the described merchandise, was weighed, counted, or measured by a public or deputy weighmaster, and when properly signed, and sealed, is prima facie evidence of the accuracy of the weight, count, or measure shown as prescribed by law.

SOUTH YUMA COUNTY LANDFILL IN
A CR & R INC COMPANY
YUMA AZ. 85365
928-341-9300

TICKET #: 197531

ORIGINAL

DATE: 2/8/2022
IN: 12:15:34 PM
OUT: 12:15:34 PM
OPERATOR: EsmeraldaB

HAULER: INDEPENDENT HAULER
PROFILE: C- 6866 C- 6866- CITY
TRUCK: LIMONES-60
MANIFEST #0153696211FLE

GROSS Lbs.: 78,700.00
TARE Lbs.: 29,200.00
NET 49,500.00

ACCOUNT:
SOURCE: LA LOS ANGELES

	RATE	AMOUNT
NH20 - NON HAZARDOUS SOIL 20		
MANIFEST CHARGE $40		
		24.79
	TOTAL AMOUNT:	

** Account Customers Only: A State of Arizona per ton Landfill fee of $0.25 will be added to your invoice **

Alfredo

CUSTOMER SIGNATURE

WEIGHMASTER SIGNATURE

The conditions on the back of this form must be observed. Your Signature acknowledges that you have read and understood all conditions of this certificate.

You enter this facility at your own risk. CR&R Incorporated assumes NO liability for any injury or damage occurring while you are on the premises of this facility.

WHITE - ORIGINAL CANARY - OFFICE COPY PINK - CUSTOMER COPY AZTK001

CR&R INCORPORATED — WeighMaster Certificate
environmental services

"PUBLIC WEIGHMASTER'S CERTIFICATE OF WEIGHT AND MEASURE"

This is to certify that the described merchandise, was weighed, counted, or measured by a public or deputy weighmaster, and when properly signed, and sealed, is prima facie evidence of the accuracy of the weight, count, or measure shown as prescribed by law.

SOUTH YUMA COUNTY LANDFILL IN
A CR & R INC COMPANY ORIGINAL
YUMA AZ.85365
928-341-9300

TICKET #: 197532
MANUAL
DATE: 2/8/2022
IN: 12:19:01 PM
OUT: 12:19:01 PM
OPERATOR: EsmeraldaB

HAULER: INDEPENDENT HAU
PROFILE:C-6866 [illegible] EOS
TRUCK: QBAYSOY-17
MANIFEST #015369623FLE
ACCOUNT:

GROSS Lbs: 79.500.00
TARE Lbs: 27.600.00
NET 51.900.00

SOURCE:LA LOS ANGELES
NH20 - NON HAZARDOUS SOIL 20
MANIFEST CHARGE $40

TONS 25.95
Loads

RATE AMOUNT

TOTAL AMOUNT:

** Account Customers Only: A State of Arizona Per Ton Landfill fee of $0.25 will be added to your invoice **

CUSTOMER SIGNATURE

WEIGHMASTER SIGNATURE

The conditions on the back of this form must be observed. Your Signature acknowledges that you have read and understood all conditions of this certificate.

You enter this facility at your own risk. CR&R Incorporated assumes NO liability for any injury or damage occurring while you are on the premises of this facility.

WHITE - ORIGINAL CANARY - OFFICE COPY PINK - CUSTOMER COPY

AZTK001

CR&R INCORPORATED – WeighMaster Certificate
environmental services

"PUBLIC WEIGHMASTER'S CERTIFICATE OF WEIGHT AND MEASURE"

This is to certify that the described merchandise, was weighed, counted, or measured by a public or deputy weighmaster, and when properly signed, and sealed, is prima facie evidence of the accuracy of the weight, count, or measure shown as prescribed by law.

SOUTH YUMA COUNTY LANDFILL
A CR & R INC COMPANY
YUMA AZ 85365
928 341 9300

TICKET #: 197534

DATE: 2/8/2022
IN: 12:21:34 PM
OUT: 12:21:34 PM
OPERATOR: EsmeraldaB

HAULER: INDEPENDENT HAULER
PROFILE: C 6866 C 6866 [illegible] LBS
TRUCK: OCHOAS 026
MANIFEST #0153696301 [illegible]
ACCOUNT:
SOURCE: LA LOS ANGELES
NH20 NON HAZARDOUS SOIL 20
MANIFEST CHARGE $40

GROSS Lbs: 91,620.00
TARE Lbs: 26,500.00
NET 65,120.00

TONS	RATE	AMOUNT
32.56		

Loads
TOTAL AMOUNT:

** Account Customers Only: A State of Arizona per Ton Landfill Fee of $0.25 will be added to your invoice **

CUSTOMER SIGNATURE

WEIGHMASTER SIGNATURE

The conditions on the back of this form must be observed. Your Signature acknowledges that you have read and understood all conditions of this certificate.

You enter this facility at your own risk. CR&R Incorporated assumes NO liability for any injury or damage occurring while you are on the premises of this facility.

WHITE - ORIGINAL CANARY - OFFICE COPY PINK - CUSTOMER COPY

AZTK001

CR&R INCORPORATED – WeighMaster Certificate
environmental services

"PUBLIC WEIGHMASTER'S CERTIFICATE OF WEIGHT AND MEASURE"

This is to certify that the described merchandise, was weighed, counted, or measured by a public or deputy weighmaster, and when properly signed, and sealed, is prima facie evidence of the accuracy of the weight, count, or measure shown as prescribed by law.

SOUTH YUMA COUNTY LANDFILL I[illegible] TICKET #: 197536
A CR & R INC COMPANY ORIGINAL
YUMA AZ. 85365 DATE: 2/8/2022
928-341-9300 IN: 12:24:21 PM
OUT: 12:24:21 PM
HAULER: INDEPENDENT HAULER OPERATOR: EsmeraldaB
PROFILE: C-6866 C-6866
TRUCK: ESPINOSA-01 GROSS Lbs: 81,640.00
MANIFEST #015369620FLE TARE Lbs: 28,860.00
ACCOUNT: NET 52,780.00
SOURCE: LA LOS ANGELES TONS RATE AMOUNT
NH20 - NON HAZARDOUS SOIL 20 26.39 [redacted]
MANIFEST CHARGE $40 Loads [redacted]
TOTAL AMOUNT: [redacted]

** Account Customers Only: A State of Arizona per Ton Landfill fee of $0.25 will be added to your invoice **

Espinosa

CUSTOMER SIGNATURE

WEIGHMASTER SIGNATURE

The conditions on the back of this form must be observed. Your Signature acknowledges that you have read and understood all conditions of this certificate. You enter this facility at your own risk. CR&R Incorporated assumes NO liability for any injury or damage occurring while you are on the premises of this facility.

WHITE - ORIGINAL CANARY - OFFICE COPY PINK - CUSTOMER COPY

AZTK001

CR&R INCORPORATED – WeighMaster Certificate
environmental services

"PUBLIC WEIGHMASTER'S CERTIFICATE OF WEIGHT AND MEASURE"

This is to certify that the described merchandise, was weighed, counted, or measured by a public or deputy weighmaster, and when properly signed, and sealed, is prima facie evidence of the accuracy of the weight, count, or measure shown as prescribed by law.

SOUTH YUMA COUNTY LANDFILL
A CR & R INC COMPANY
YUMA AZ. 85365
928-341-9300

TICKET #: 197538

DATE: 2/8/2022
IN: 12:29:09 PM
OUT: 12:29:09 PM
OPERATOR: EsmeraldaB

HAULER: INDEPENDENT HAU
PROFILE: C-0066
TRUCK: LAP-39
MANIFEST #015536562BELL
ACCOUNT:
SOURCE: LA LOS ANGELES
NH20 - NON HAZARDOUS SOIL 20
MANIFEST CHARGE $40

GROSS Lbs: 90,380.00
TARE Lbs: 26,080.00
NET 64,300.00

	TONS:	RATE	AMOUNT
	32.15		
Loads			
		TOTAL AMOUNT:	

** Account Customers Only: A State of Arizona per Ton Landfill fee of $0.25 will be added to your invoice **

Rosendo

CUSTOMER SIGNATURE

WEIGHMASTER SIGNATURE

The conditions on the back of this form must be observed. Your Signature acknowledges that you have read and understood all conditions of this certificate.
You enter this facility at your own risk. CR&R Incorporated assumes NO liability for any injury or damage occurring while you are on the premises of this facility.

WHITE - ORIGINAL CANARY - OFFICE COPY PINK - CUSTOMER COPY AZTK001

CR&R INCORPORATED – WeighMaster Certificate
environmental services

"PUBLIC WEIGHMASTER'S CERTIFICATE OF WEIGHT AND MEASURE"

This is to certify that the described merchandise, was weighed, counted, or measured by a public or deputy weighmaster, and when properly signed, and sealed, is prima facie evidence of the accuracy of the weight, count, or measure shown as prescribed by law.

SOUTH YUMA COUNTY LANDFILL IN [illegible] TICKET #: 197540
A CR & R INC COMPANY [illegible]
YUMA AZ.85365 DATE: 2/8/2022
928-341-9300 IN: 12:31:41 PM
OUT: 12:31:41 PM
HAULER: INDEPENDENT HAULER OPERATOR: EsmeraldaB
PROFILE:C-6866 C-6[illegible]
TRUCK: S&V-01 GROSS Lbs: 76,480.00
MANIFEST #0153696222FLE TARE Lbs: 29,480.00
ACCOUNT: NET " 47,000.00
SOURCE:LA LOS ANGELES TONS RATE AMOUNT
NH20 - NON HAZARDOUS SOIL 20 23.50
MANIFEST CHARGE $40 Loads
TOTAL AMOUNT [illegible]

** Account Customers Only: A State of Arizona per Ton Landfill fee of $0.25 will be added to your invoice **

Sergio

CUSTOMER SIGNATURE

[signature]

WEIGHMASTER SIGNATURE

The conditions on the back of this form must be observed. Your Signature acknowledges that you have read and understood all conditions of this certificate.
You enter this facility at your own risk. CR&R Incorporated assumes NO liability for any injury or damage occurring while you are on the premises of this facility.

WHITE - ORIGINAL CANARY - OFFICE COPY PINK - CUSTOMER COPY

AZTK001

CR&R INCORPORATED – WeighMaster Certificate
environmental services

"PUBLIC WEIGHMASTER'S CERTIFICATE OF WEIGHT AND MEASURE"

This is to certify that the described merchandise, was weighed, counted, or measured by a public or deputy weighmaster, and when properly signed, and sealed, is prima facie evidence of the accuracy of the weight, count, or measure shown as prescribed by law.

SOUTH YUMA COUNTY LANDFILL IN — TICKET #: 197544
A CR & R INC COMPANY — ORIGINAL
YUMA AZ 85365 — DATE: 2/8/2022
928-341-9300 — IN: 12:41:44 PM
OUT: 12:41:44 PM

HAULER: INDEPENDENT HAULER — OPERATOR: EsmeraldaB
PROFILE: C 6866 — C 6866: CITY OF LOS
TRUCK: MATINEZ 127 — GROSS Lbs: 85,780.00
MANIFEST #015369627FII — TARE Lbs: 31,000.00
ACCOUNT: — NET 54,780.00

SOURCE: LA	LOS ANGELES	TONS	RATE	AMOUNT
NH20 - NON HAZARDOUS SOIL 20		27.39		
MANIFEST CHARGE $40		Loads		

TOTAL AMOUNT:

** Account Customers Only: A State of Arizona per Ton Landfill Fee of $0.25 will be added to your invoice **

Jesus. — Benny Green

CUSTOMER SIGNATURE — WEIGHMASTER SIGNATURE

The conditions on the back of this form must be observed. Your Signature acknowledges that you have read and understood all conditions of this certificate.

You enter this facility at your own risk. CR&R Incorporated assumes NO liability for any injury or damage occurring while you are on the premises of this facility.

WHITE - ORIGINAL CANARY - OFFICE COPY PINK - CUSTOMER COPY

AZTK001

CR&R INCORPORATED – WeighMaster Certificate
environmental services

"PUBLIC WEIGHMASTER'S CERTIFICATE OF WEIGHT AND MEASURE"

This is to certify that the described merchandise, was weighed, counted, or measured by a public or deputy weighmaster, and when properly signed, and sealed, is prima facie evidence of the accuracy of the weight, count, or measure shown as prescribed by law.

SOUTH YUMA COUNTY LANDFILL IN
A CR & R INC COMPANY
YUMA AZ 85365
928-341-9300

ORIGINAL

TICKET #: 197546

DATE: 2/8/2022
IN: 12:43:48 PM
OUT: 12:43:48 PM
OPERATOR: EsmeraldaB

HAULER: INDEPENDENT HAULER
PROFILE: C 6866 C 6866 CITIZEN LOAD
TRUCK: PEPER 02
MANIFEST #0153696[illegible]
ACCOUNT:
SOURCE: LA LOS ANGELES TONS
NH20 - NON HAZARDOUS SOIL 20 25.00
MANIFEST CHARGE $40 Loads

GROSS Lbs: 81,280.00
TARE Lbs: 29,500.00
NET 51,780.00

RATE AMOUNT

TOTAL AMOUNT:

** Account Customers Only: A State of Arizona per Ton Landfill fee of $0.25 will be added to your invoice **

Jose

CUSTOMER SIGNATURE

WEIGHMASTER SIGNATURE

The conditions on the back of this form must be observed. Your Signature acknowledges that you have read and understood all conditions of this certificate.

You enter this facility at your own risk. CR&R Incorporated assumes NO liability for any injury or damage occurring while you are on the premises of this facility.

WHITE - ORIGINAL CANARY - OFFICE COPY PINK - CUSTOMER COPY

AZTK001

CR&R INCORPORATED – WeighMaster Certificate
environmental services

"PUBLIC WEIGHMASTER'S CERTIFICATE OF WEIGHT AND MEASURE"

This is to certify that the described merchandise, was weighed, counted, or measured by a public or deputy weighmaster, and when properly signed, and sealed, is prima facie evidence of the accuracy of the weight, count, or measure shown as prescribed by law.

SOUTH YUMA COUNTY LANDFILL LTD
A CR & R INC COMPANY ORIGINAL
YUMA AZ 85365
928-341-9300

TICKET #: 197547
DATE: 2/8/2022
IN: 12:46:04 PM
OUT: 12:46:04 PM
OPERATOR: EsmeraldaB

HAULER: INDEPENDENT HAULER
PROFILE: C-6866 [illegible] LOS
TRUCK: JM-[illegible]
MANIFEST #015369626[illegible]
ACCOUNT:

GROSS Lbs: 86,680.00
TARE Lbs: 31,720.00
NET 54,960.00

SOURCE: LA LOS ANGELES
NH20 - NON HAZARDOUS SOIL 20
MANIFEST CHARGE $40

TONS	RATE	AMOUNT
27.48		
Loads		

TOTAL AMOUNT:

** Account Customers Univ: A State of Arizona per Ton Landfill fee of $0.25 will be added to your invoice **

CUSTOMER SIGNATURE

WEIGHMASTER SIGNATURE

The conditions on the back of this form must be observed. Your Signature acknowledges that you have read and understood all conditions of this certificate.

You enter this facility at your own risk. CR&R Incorporated assumes NO liability for any injury or damage occurring while you are on the premises of this facility.

WHITE - ORIGINAL CANARY - OFFICE COPY PINK - CUSTOMER COPY

AZTK001

CR&R INCORPORATED – WeighMaster Certificate
environmental services

"PUBLIC WEIGHMASTER'S CERTIFICATE OF WEIGHT AND MEASURE"

This is to certify that the described merchandise, was weighed, counted, or measured by a public or deputy weighmaster, and when properly signed, and sealed, is prima facie evidence of the accuracy of the weight, count, or measure shown as prescribed by law.

SOUTH YUMA COUNTY LANDFILL
A CR & R INC COMPANY
YUMA AZ. 85365
928-341-9300

TICKET #: 197548

ORIGINAL

DATE: 2/8/2022
IN: 12:40:02 PM
OUT: 12:48:02 PM
OPERATOR: EsmeraldaB

HAULER: INDEPENDENT HAUL
PROFILE: C 6866
TRUCK: JGARCIA-388
MANIFEST #0153629629FLI

GROSS Lbs: 81,880.00
TARE Lbs: 27,400.00
NET 54,480.00

ACCOUNT:
SOURCE: LA LOS ANGELES

	TONS:	RATE	AMOUNT
NH20 - NON HAZARDOUS SOIL 20	27.24		
MANIFEST CHARGE $40	Loads		
		TOTAL AMOUNT:	

** Account Customers Only: A State of Arizona per Ton Landfill Fee of $0.25 will be added to your invoice **

Jose

CUSTOMER SIGNATURE

WEIGHMASTER SIGNATURE

The conditions on the back of this form must be observed. Your Signature acknowledges that you have read and understood all conditions of this certificate.
You enter this facility at your own risk. CR&R Incorporated assumes NO liability for any injury or damage occurring while you are on the premises of this facility.

WHITE - ORIGINAL CANARY - OFFICE COPY PINK - CUSTOMER COPY AZTK001

CR&R INCORPORATED – WeighMaster Certificate
environmental services

"PUBLIC WEIGHMASTER'S CERTIFICATE OF WEIGHT AND MEASURE"

This is to certify that the described merchandise, was weighed, counted, or measured by a public or deputy weighmaster, and when properly signed, and sealed, is prima facie evidence of the accuracy of the weight, count, or measure shown as prescribed by law.

SOUTH YUMA COUNTY LANDFILL IN
A CR & R INC COMPANY
YUMA AZ 85365
928-341-9300

TICKET #: [illegible]
DATE: [illegible]
IN: 01:04:43 PM
OUT: 01:04:43 PM
OPERATOR: EsmeraldaB

HAULER: INDEPENDENT HAULER
PROFILE: C-6866 C-6866 [illegible]
TRUCK: TORIN 02
MANIFEST #0[illegible]
ACCOUNT:
SOURCE: LA LOS ANGELES
NH20 - NON HAZARDOUS SOIL 20
MANIFEST CHARGE $40

GROSS Lbs: 78,100.00
TARE Lbs: 30,400.00
NET 47,700.00

TONS	RATE	AMOUNT
23.85		
Loads		

TOTAL AMOUNT:

** Account Customers Only: A State of Arizona per Ton Landfill fee of $0.25 will be added to your invoice **

Hector

CUSTOMER SIGNATURE

WEIGHMASTER SIGNATURE

The conditions on the back of this form must be observed. Your Signature acknowledges that you have read and understood all conditions of this certificate.

You enter this facility at your own risk. CR&R Incorporated assumes NO liability for any injury or damage occurring while you are on the premises of this facility.

WHITE - ORIGINAL CANARY - OFFICE COPY PINK - CUSTOMER COPY

AZTK001

CR&R INCORPORATED – WeighMaster Certificate
environmental services

"PUBLIC WEIGHMASTER'S CERTIFICATE OF WEIGHT AND MEASURE"

This is to certify that the described merchandise, was weighed, counted, or measured by a public or deputy weighmaster, and when properly signed, and sealed, is prima facie evidence of the accuracy of the weight, count, or measure shown as prescribed by law.

SOUTH YUMA COUNTY LANDFILL IN
A CR & R INC COMPANY
YUMA AZ.85365
928-341-9300

ORIGINAL

TICKET #: 197557

DATE: 2/8/2022
IN: 01:07:06 PM
OUT: 01:07:06 PM
OPERATOR: EsmeraldaB

HAULER: INDEPENDENT HAULER
PROFILE:C-6866 C-6[illegible]
TRUCK: DFB-01
MANIFEST #015369625FLL
ACCOUNT:
SOURCE:LA LOS ANGELES
NH20 - NON HAZARDOUS SOIL 20
MANIFEST CHARGE $40

GROSS Lbs: 79.200.00
TARE Lbs: 28.460.00
NET 50.740.00

TONS	RATE	AMOUNT
25.37		
Loads		

TOTAL AMOUNT:

** Account Customers Only: A State of Arizona per Ton Landfill fee of $0.25 will be added to your invoice **

David

CUSTOMER SIGNATURE

WEIGHMASTER SIGNATURE

The conditions on the back of this form must be observed. Your Signature acknowledges that you have read and understood all conditions of this certificate.

You enter this facility at your own risk. CR&R Incorporated assumes NO liability for any injury or damage occurring while you are on the premises of this facility.

WHITE - ORIGINAL CANARY - OFFICE COPY PINK - CUSTOMER COPY

AZTK001

CR&R INCORPORATED – WeighMaster Certificate
environmental services

"PUBLIC WEIGHMASTER'S CERTIFICATE OF WEIGHT AND MEASURE"

This is to certify that the described merchandise, was weighed, counted, or measured by a public or deputy weighmaster, and when properly signed, and sealed, is prima facie evidence of the accuracy of the weight, count, or measure shown as prescribed by law.

SOUTH YUMA COUNTY LANDFILL IN — TICKET #: 197560
A CR & R INC COMPANY — ORIGINAL
YUMA AZ 85365 — DATE: 2/8/2022
928-341-9300 — IN: 01:12:02 PM
OUT: 01:12:02 PM

HAULER: INDEPENDENT HAULER — OPERATOR: EsmeraldaB
PROFILE: C 6866 — C 6866- CITY OF LOS
TRUCK: ROMERO 05 — GROSS Lbs: 78,460.00
MANIFEST #01[illegible] — TARE Lbs: 28,260.00
ACCOUNT: — NET 50,200.00
SOURCE: LA — LOS ANGELES — TONS — RATE — AMOUNT
NH20 - NON HAZARDOUS SOIL 20 — 25.10
MANIFEST CHARGE $40 — Loads
TOTAL AMOUNT:

** Account Customers Only: A State of Arizona per Ton Landfill fee of $0.25 will be added to your invoice **

CUSTOMER SIGNATURE — WEIGHMASTER SIGNATURE

The conditions on the back of this form must be observed. Your Signature acknowledges that you have read and understood all conditions of this certificate. You enter this facility at your own risk. CR&R Incorporated assumes NO liability for any injury or damage occurring while you are on the premises of this facility.

CR&R INCORPORATED – WeighMaster Certificate
environmental services

"PUBLIC WEIGHMASTER'S CERTIFICATE OF WEIGHT AND MEASURE"

This is to certify that the described merchandise, was weighed, counted, or measured by a public or deputy weighmaster, and when properly signed, and sealed, is prima facie evidence of the accuracy of the weight, count, or measure shown as prescribed by law.

SOUTH YUMA COUNTY LANDFILL IN TICKET #: 197561
A CR & R INC COMPANY ORIGINAL
YUMA AZ 85365 DATE: 2/8/2022
933 341 9300 IN: 01:14:28 PM
OUT: 01:14:28 PM
HAULER: INDEPENDENT HAUL OPERATOR: EsmeraldaB
PROFILE: C 6866 C [illegible] OF LOS
TRUCK: ROMERO 17 GROSS Lbs: 79,940.00
MANIFEST #01536963[illegible] TARE Lbs: 28,600.00
ACCOUNT: NET 51,340.00
SOURCE: LA LOS ANGELES TONS RATE AMOUNT
NH20 NON HAZARDOUS SOIL 20 25.67
MANIFEST CHARGE $40 Loads
TOTAL AMOUNT:

** Account Customers Only: A State of Arizona per Ton Landfill fee of $0.25 will be added to your invoice **

CUSTOMER SIGNATURE

WEIGHMASTER SIGNATURE

The conditions on the back of this form must be observed. Your Signature acknowledges that you have read and understood all conditions of this certificate.

You enter this facility at your own risk. CR&R Incorporated assumes NO liability for any injury or damage occurring while you are on the premises of this facility.

WHITE - ORIGINAL CANARY - OFFICE COPY PINK - CUSTOMER COPY

AZTK001

CR&R INCORPORATED – WeighMaster Certificate
environmental services

"PUBLIC WEIGHMASTER'S CERTIFICATE OF WEIGHT AND MEASURE"

This is to certify that the described merchandise, was weighed, counted, or measured by a public or deputy weighmaster, and when properly signed, and sealed, is prima facie evidence of the accuracy of the weight, count, or measure shown as prescribed by law.

SOUTH YUMA COUNTY LANDFILL IN — TICKET #: 197569
A CR & R INC COMPANY — ORIGINAL
YUMA AZ 85365 — DATE: 2/8/2022
928 341 9300 — IN: 01:48:37 PM
OUT: 01:48:37 PM

HAULER: INDEPENDENT HAULER — OPERATOR: EsmeraldaB
PROFILE: C-6866 — C-6866 CITY OF LOS
TRUCK: ROMERO 07 — GROSS Lbs: 83,420.00
MANIFEST #0153696380FFE — TARE Lbs: 29,420.00
ACCOUNT: — NET 54,000.00
SOURCE: LA — LOS ANGELES — TONS — RATE — AMOUNT
NA20 - NON HAZARDOUS SOIL 20 — 27.00
MANIFEST CHARGE $40 — Loads
TOTAL AMOUNT:

** Account Customers Only: [illegible] Arizona per Ton Landfill fee of $0.25 will be added to your invoice

CUSTOMER SIGNATURE — WEIGHMASTER SIGNATURE

The conditions on the back of this form must be observed. Your Signature acknowledges that you have read and understood all conditions of this certificate.

You enter this facility at your own risk. CR&R Incorporated assumes NO liability for any injury or damage occurring while you are on the premises of this facility.

WHITE - ORIGINAL CANARY - OFFICE COPY PINK - CUSTOMER COPY

AZTK001

CR&R INCORPORATED
environmental services

WeighMaster Certificate

"PUBLIC WEIGHMASTER'S CERTIFICATE OF WEIGHT AND MEASURE"

This is to certify that the described merchandise, was weighed, counted, or measured by a public or deputy weighmaster, and when properly signed, and sealed, is prima facie evidence of the accuracy of the weight, count, or measure shown as prescribed by law.

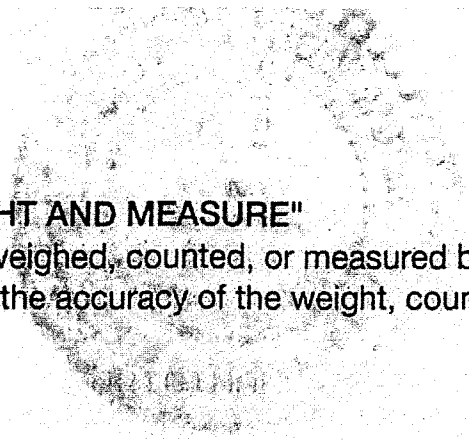

** Account Customers Only: A State of Arizona Tax for Landfill Use of $8.50 will be added to your invoice. **

CUSTOMER SIGNATURE

WEIGHMASTER SIGNATURE

The conditions on the back of this form must be observed. Your Signature acknowledges that you have read and understood all conditions of this certificate.

You enter this facility at your own risk. CR&R Incorporated assumes NO liability for any injury or damage occurring while you are on the premises of this facility.

WHITE - ORIGINAL CANARY - OFFICE COPY PINK - CUSTOMER COPY

AZTK001

CR&R INCORPORATED – WeighMaster Certificate
environmental services

"PUBLIC WEIGHMASTER'S CERTIFICATE OF WEIGHT AND MEASURE"

This is to certify that the described merchandise, was weighed, counted, or measured by a public or deputy weighmaster, and when properly signed, and sealed, is prima facie evidence of the accuracy of the weight, count, or measure shown as prescribed by law.

SOUTH YUMA COUNTY LANDFILL IN
A CR & R INC COMPANY
YUMA AZ. 85365
928-341-9300

ORIGINAL

TICKET #: 197607

DATE: 2/8/2022
IN: 03:13:31 PM
OUT: 03:13:31 PM
OPERATOR: EsmeraldaB

HAULER: INDEPENDENT HAULER
PROFILE: C-6866 C-6866- CITY OF LOS
TRUCK: AMMCO-05
MANIFEST #015369637FLE
ACCOUNT:
SOURCE: LA LOS ANGELES
NH20 - NON HAZARDOUS SOIL 26.98
MANIFEST CHARGE $40 Loads

GROSS Lbs: 83.960.00
TARE Lbs: 30.000.00
NET 53.960.00

	RATE	AMOUNT
TONS		
TOTAL AMOUNT:		

** Account Customers Only: A ... Arizona per Ton Landfill fee of $0.25 will be added to your invoice **

CUSTOMER SIGNATURE

WEIGHMASTER SIGNATURE

The conditions on the back of this form must be observed. Your Signature acknowledges that you have read and understood all conditions of this certificate. You enter this facility at your own risk. CR&R Incorporated assumes NO liability for any injury or damage occurring while you are on the premises of this facility.

WHITE - ORIGINAL CANARY - OFFICE COPY PINK - CUSTOMER COPY AZTK001

CR&R INCORPORATED – WeighMaster Certificate
environmental services

"PUBLIC WEIGHMASTER'S CERTIFICATE OF WEIGHT AND MEASURE"

This is to certify that the described merchandise, was weighed, counted, or measured by a public or deputy weighmaster, and when properly signed, and sealed, is prima facie evidence of the accuracy of the weight, count, or measure shown as prescribed by law.

SOUTH YUMA COUNTY LANDFILL
A CR & R INC COMPANY
[illegible] AZ 85365
[illegible]

TICKET #: 197737

DATE: 2/9/2022
IN: 12:19:00 PM
OUT: 12:19:00 PM

HAULER: INDEPENDENT HAULER
PROFILE: C-6866 C-6866- CITY OF LOS
TRUCK: LAP-39
MANIFEST #01536964 3fle
ACCOUNT:

OPERATOR: EsmeraldaB

GROSS Lbs: 89,760.00
TARE Lbs: 26,080.00
NET 63,680.00

SOURCE: LA LOS ANGELES
NH20 - NON HAZARDOUS SOIL 20
MANIFEST CHARGE $40

TONS	RATE	AMOUNT
31.84		
Loads		

TOTAL AMOUNT:

** Account Customers Only: A State of Arizona per Ton Landfill fee of $0.25 will be added to your invoice **

CUSTOMER SIGNATURE

WEIGHMASTER SIGNATURE

The conditions on the back of this form must be observed. Your Signature acknowledges that you have read and understood all conditions of this certificate. You enter this facility at your own risk. CR&R Incorporated assumes NO liability for any injury or damage occurring while you are on the premises of this facility.

WHITE - ORIGINAL CANARY - OFFICE COPY PINK - CUSTOMER COPY

AZTK001

2/9/2022

CR&R INCORPORATED — WeighMaster Certificate
environmental services

"PUBLIC WEIGHMASTER'S CERTIFICATE OF WEIGHT AND MEASURE"

This is to certify that the described merchandise, was weighed, counted, or measured by a public or deputy weighmaster, and when properly signed, and sealed, is prima facie evidence of the accuracy of the weight, count, or measure shown as prescribed by law.

SOUTH YUMA COUNTY LANDFILL IN [illegible] TICKET #: 197740
A CR & R INC COMPANY
YUMA AZ.85365 DATE: 2/9/2022
928-341-9300 IN: 12:22:29 PM
OUT: 12:22:29 PM
HAULER: INDEPENDENT HAUL[illegible] OPERATOR: EsmeraldaB
PROFILE:C-6866 [illegible]
TRUCK: ESPINOSA-01 GROSS Lbs: 81.960.00
MANIFEST #01536963 9file TARE Lbs: 28.860.00
ACCOUNT: NET 53.100.00
SOURCE:LA LOS ANGELES TONS RATE AMOUNT
NH20 - NON HAZARDOUS SOIL 20 26.55 [redacted]
MANIFEST CHARGE $40 Loads
TOTAL AMOUNT: [redacted]

** Account Customers Only: A State of Arizona der fon Landfill fee of $0.25 will be added to your invoice **

Espinosa

CUSTOMER SIGNATURE

WEIGHMASTER SIGNATURE

The conditions on the back of this form must be observed. Your Signature acknowledges that you have read and understood all conditions of this certificate. You enter this facility at your own risk. CR&R Incorporated assumes NO liability for any injury or damage occurring while you are on the premises of this facility.

WHITE - ORIGINAL CANARY - OFFICE COPY PINK - CUSTOMER COPY

AZTK001

CR&R INCORPORATED — WeighMaster Certificate
environmental services

"PUBLIC WEIGHMASTER'S CERTIFICATE OF WEIGHT AND MEASURE"

This is to certify that the described merchandise, was weighed, counted, or measured by a public or deputy weighmaster, and when properly signed, and sealed, is prima facie evidence of the accuracy of the weight, count, or measure shown as prescribed by law.

SOUTH YUMA COUNTY LANDFILL IN [illegible] TICKET #: 197741
A CR & R INC COMPANY ORIGINAL
YUMA AZ 85365 DATE: 2/9/2022
928-341-9300 IN: 12:24:36 PM
OUT: 12:24:36 PM

HAULER: INDEPENDENT HAULER OPERATOR: EsmeraldaB
PROFILE: C 6866 C 6866 CITY OF LOS
TRUCK: OCHOAS-126 GROSS Lbs: 89,240.00
MANIFEST #0[illegible] TARE Lbs: 26,500.00
ACCOUNT: NET 62,740.00
SOURCE: LA LOS ANGELES TONS: RATE AMOUNT
NH20 - NON HAZARDOUS SOIL 20 31.37
MANIFEST CHARGE $40 Loads
TOTAL AMOUNT:

** Account Customers Only: A State of Arizona per Ton Landfill fee of $0.25 will be added to your invoice **

CUSTOMER SIGNATURE

WEIGHMASTER SIGNATURE

The conditions on the back of this form must be observed. Your Signature acknowledges that you have read and understood all conditions of this certificate.

You enter this facility at your own risk. CR&R Incorporated assumes NO liability for any injury or damage occurring while you are on the premises of this facility.

WHITE - ORIGINAL CANARY - OFFICE COPY PINK - CUSTOMER COPY

AZTK001

CR&R INCORPORATED – WeighMaster Certificate
environmental services

"PUBLIC WEIGHMASTER'S CERTIFICATE OF WEIGHT AND MEASURE"

This is to certify that the described merchandise, was weighed, counted, or measured by a public or deputy weighmaster, and when properly signed, and sealed, is prima facie evidence of the accuracy of the weight, count, or measure shown as prescribed by law.

SOUTH YUMA COUNTY LANDFILL [illegible] TICKET #: 197742
A CR & R INC COMPANY [illegible]
YUMA AZ 85365 DATE: 2/9/2022
928 341-9300 IN: 12:29:59 PM
OUT: 12:29:59 PM
HAULER: INDEPENDENT HA[illegible] OPERATOR: EsmeraldaB
PROFILE: L 6866 [illegible]
TRUCK: JM-102 GROSS Lbs: 86,040.00
MANIFEST #0[illegible] TARE Lbs: 31,720.00
ACCOUNT: NET 54,320.00
SOURCE: LA LOS ANGELES TONS RATE AMOUNT
NH20 - NON HAZARDOUS SOIL 20 27.16
MANIFEST CHARGE $40 Loads
TOTAL AMOUNT:

** Account Customers Only: A State of Arizona per Ton Landfill fee of $0.25 will be added to your invoice **

CUSTOMER SIGNATURE

WEIGHMASTER SIGNATURE

The conditions on the back of this form must be observed. Your Signature acknowledges that you have read and understood all conditions of this certificate.

You enter this facility at your own risk. CR&R Incorporated assumes NO liability for any injury or damage occurring while you are on the premises of this facility.

WHITE - ORIGINAL CANARY - OFFICE COPY PINK - CUSTOMER COPY

AZTK001

CR&R — WeighMaster Certificate

environmental services

"PUBLIC WEIGHMASTER'S CERTIFICATE OF WEIGHT AND MEASURE"

This is to certify that the described merchandise, was weighed, counted, or measured by a public or deputy weighmaster, and when properly signed, and sealed, is prima facie evidence of the accuracy of the weight, count, or measure shown as prescribed by law.

SOUTH YUMA COUNTY LANDFILL IN[illegible] TICKET #: 197745

A CR & R INC COMPANY

YUMA AZ. 85365

928 -341 -9300 DATE: 2/28/2022

IN: 12:34:38 PM

OUT: 12:34:38 PM

HAULER: INDEPENDENT HAULER OPERATOR: EsmeraldaB

PROFILE: C- 6866 C- 6866- CITY OF LOS

TRUCK: G&V -01 GROSS Lbs: 78,600.00

MANIFEST #0015369640file TARE Lbs: 29,400.00

ACCOUNT: NET 49,200.00

SOURCE: LA LOS ANGELES TONS RATE AMOUNT

NH20 - NON HAZARDOUS SOIL 20 24.36 [redacted] [redacted]

MANIFEST CHARGE $40 Loads [redacted]

TOTAL AMOUNT: [redacted]

** Account Customers Only: A State of Arizona per ton landfill fee of $0.25 will be added to your invoice **.

CUSTOMER SIGNATURE

WEIGHMASTER SIGNATURE

The conditions on the back of this form must be observed. Your Signature acknowledges that you have read and understood all conditions of this certificate.

You enter this facility at your own risk. CR&R Incorporated assumes NO liability for any injury or damage occurring while you are on the premises of this facility.

WHITE - ORIGINAL CANARY - OFFICE COPY PINK - CUSTOMER COPY

AZTK001

CR&R INCORPORATED – WeighMaster Certificate
environmental services

"PUBLIC WEIGHMASTER'S CERTIFICATE OF WEIGHT AND MEASURE"
This is to certify that the described merchandise, was weighed, counted, or measured by a public or deputy weighmaster, and when properly signed, and sealed, is prima facie evidence of the accuracy of the weight, count, or measure shown as prescribed by law.

SOUTH YUMA COUNTY LANDFILL IN
A CR & R INC COMPANY
YUMA AZ. 85365
928-341-9300

ORIGINAL

TICKET #: 157746

DATE: 2/9/2022
IN: 12:36:33 PM
OUT: 12:36:33 PM
OPERATOR: EsmeraldaB

HAULER: INDEPENDENT HAULER
PROFILE: C- 6866
TRUCK: LIMONES -60
MANIFEST #015636964211

GROSS Lbs: 81,300.00
TARE Lbs: 29,200.00
NET 52,100.00

SOURCE: LA LOS ANGELES
NH20 - NON HAZARDOUS SOLID WASTE

TONS	RATE	AMOUNT
26.05		
Loads		

MANIFEST CHARGE $40

TOTAL AMOUNT:

** Account Customers Only: A State of Arizona certain Landfill fee of $0.25 will be added to your invoice **

CUSTOMER SIGNATURE

WEIGHMASTER SIGNATURE

The conditions on the back of this form must be observed. Your Signature acknowledges that you have read and understood all conditions of this certificate.
You enter this facility at your own risk. CR&R Incorporated assumes NO liability for any injury or damage occurring while you are on the premises of this facility.

WHITE - ORIGINAL CANARY - OFFICE COPY PINK - CUSTOMER COPY AZTK001

CR&R INCORPORATED – WeighMaster Certificate
environmental services

"PUBLIC WEIGHMASTER'S CERTIFICATE OF WEIGHT AND MEASURE"

This is to certify that the described merchandise, was weighed, counted, or measured by a public or deputy weighmaster, and when properly signed, and sealed, is prima facie evidence of the accuracy of the weight, count, or measure shown as prescribed by law.

SOUTH YUMA COUNTY LANDFILL INC
A CR & R INC COMPANY
YUMA AZ.85365
928-341-9300

TICKET #: 137747
ORIGINAL
DATE: 2/9/2022
IN: 12:39:44 PM
OUT: 12:39:44 PM

HAULER: INDEPENDENT HAULER
PROFILE: C-6866 C-6866 CITY OF LOS
TRUCK: MATINEZ-127
MANIFEST #0153696441le
ACCOUNT:
SOURCE: LA LOS ANGELES
NH20 - NON HAZARDOUS SOIL 20
MANIFEST CHARGE $40

OPERATOR: EsmeraldaB
GROSS Lbs: 84,420.00
TARE Lbs: 31,000.00
NET 53,420.00

TONS	RATE	AMOUNT
26.71		

Loads :
TOTAL AMOUNT:

** Account Customers Only: A State of Arizona per Ton Landfill fee of $0.25 will be added to your invoice **

CUSTOMER SIGNATURE

WEIGHMASTER SIGNATURE

The conditions on the back of this form must be observed. Your Signature acknowledges that you have read and understood all conditions of this certificate.

You enter this facility at your own risk. CR&R Incorporated assumes NO liability for any injury or damage occurring while you are on the premises of this facility.

WHITE - ORIGINAL CANARY - OFFICE COPY PINK - CUSTOMER COPY

AZTK001

CR&R INCORPORATED – WeighMaster Certificate
environmental services

"PUBLIC WEIGHMASTER'S CERTIFICATE OF WEIGHT AND MEASURE"

This is to certify that the described merchandise, was weighed, counted, or measured by a public or deputy weighmaster, and when properly signed, and sealed, is prima facie evidence of the accuracy of the weight, count, or measure shown as prescribed by law.

SOUTH YUMA COUNTY LANDFILL IN
A CR & R INC COMPANY ORIGINAL
YUMA AZ.85365
928 341 9300

TICKET #: 197752

DATE: 2/9/2022
IN: 12:53:35 PM
OUT: 12:53:35 PM
OPERATOR: EsmeraldaB

HAULER: INDEPENDENT HAULER
PROFILE: C-6866 [illegible] CITY OF LOS
TRUCK: TORIN 02
MANIFEST #01536966 file
ACCOUNT:
SOURCE: LA LOS ANGELES
NR20 - NON HAZARDOUS SOIL 20
MANIFEST CHARGE $40

GROSS Lbs: 80,360.00
TARE Lbs: 30,400.00
NET 49,960.00

TONS	RATE	AMOUNT
24.98		
Loads		

TOTAL AMOUNT:

** Account Customers Only: A State of Arizona per Ton Landfill Fee of $0.25 will be added to your invoice **

CUSTOMER SIGNATURE

WEIGHMASTER SIGNATURE

The conditions on the back of this form must be observed. Your Signature acknowledges that you have read and understood all conditions of this certificate.

You enter this facility at your own risk. CR&R Incorporated assumes NO liability for any injury or damage occurring while you are on the premises of this facility.

WHITE - ORIGINAL CANARY - OFFICE COPY PINK - CUSTOMER COPY

AZTK001

CR&R INCORPORATED – WeighMaster Certificate
environmental services

"PUBLIC WEIGHMASTER'S CERTIFICATE OF WEIGHT AND MEASURE"

This is to certify that the described merchandise, was weighed, counted, or measured by a public or deputy weighmaster, and when properly signed, and sealed, is prima facie evidence of the accuracy of the weight, count, or measure shown as prescribed by law.

SOUTH YUMA COUNTY LANDFILL, INC. TICKET #: 197[illegible]
A CR & R INC COMPANY ORIGINAL
YUMA AZ 85365 DATE: 2/9/2022
928-341-9300 IN: 12:57:23 PM
OUT: 12:57:23 PM
HAULER: INDEPENDENT HAULER OPERATOR: EsmeraldaB
PROFILE: C-6866 C-6866 - CITY OF LOS
TRUCK: ROMERO-05 GROSS Lbs: 81,080.00
MANIFEST #0[illegible] TARE Lbs: 28,260.00
ACCOUNT: NET 52,820.00
SOURCE: LA LOS ANGELES TONS RATE AMOUNT
NH20 - NON HAZARDOUS SOIL 20 26.41
MANIFEST CHARGE $40 Loads
TOTAL AMOUNT:

** Account Customers Only: A State of Arizona per Ton Landfill fee of $0.25 will be added to your invoice **

CUSTOMER SIGNATURE WEIGHMASTER SIGNATURE

The conditions on the back of this form must be observed. Your Signature acknowledges that you have read and understood *all conditions of this certificate.*

You enter this facility at your own risk. CR&R Incorporated assumes NO liability for any injury or damage occurring while you are on the premises of this facility.

WHITE - ORIGINAL CANARY - OFFICE COPY PINK - CUSTOMER COPY AZTK001

CR&R INCORPORATED – WeighMaster Certificate
environmental services

"PUBLIC WEIGHMASTER'S CERTIFICATE OF WEIGHT AND MEASURE"

This is to certify that the described merchandise, was weighed, counted, or measured by a public or deputy weighmaster, and when properly signed, and sealed, is prima facie evidence of the accuracy of the weight, count, or measure shown as prescribed by law.

SOUTH YUMA COUNTY LANDFILL INC
A CR & R INC COMPANY ORIGINAL
YUMA AZ 85365
928-341-9300

TICKET #: 197757

DATE: 2/9/2022
IN: 01:07:12 PM
OUT: 01:07:12 PM
OPERATOR: EsmeraldaB

HAULER: INDEPENDENT HAU
PROFILE: C 6866 [illegible] OF LOS
TRUCK: VIGLER 02
MANIFEST #0153696[illegible]

GROSS Lbs: 80.020.00
TARE Lbs: 28.700.00
NET 51.320.00

ACCOUNT:
SOURCE: LA LOS ANGELES
NH20 NON HAZARDOUS SOIL 20
MANIFEST CHARGE $10

TONS	RATE	AMOUNT
25.66		
Loads		

TOTAL AMOUNT:

** Account Customers Only: A State of Arizona per Ton Landfill fee of $0.25 will be added to your invoice **

CUSTOMER SIGNATURE

WEIGHMASTER SIGNATURE

The conditions on the back of this form must be observed. Your Signature acknowledges that you have read and understood all conditions of this certificate.

You enter this facility at your own risk. CR&R Incorporated assumes NO liability for any injury or damage occurring while you are on the premises of this facility.

WHITE - ORIGINAL CANARY - OFFICE COPY PINK - CUSTOMER COPY

AZTK001

CR&R INCORPORATED – WeighMaster Certificate

environmental services

"PUBLIC WEIGHMASTER'S CERTIFICATE OF WEIGHT AND MEASURE"

This is to certify that the described merchandise, was weighed, counted, or measured by a public or deputy weighmaster, and when properly signed, and sealed, is prima facie evidence of the accuracy of the weight, count, or measure shown as prescribed by law.

CUSTOMER SIGNATURE

WEIGHMASTER SIGNATURE

The conditions on the back of this form must be observed. Your Signature acknowledges that you have read and understood all conditions of this certificate.

You enter this facility at your own risk. CR&R Incorporated assumes NO liability for any injury or damage occurring while you are on the premises of this facility.

WHITE - ORIGINAL CANARY - OFFICE COPY PINK - CUSTOMER COPY

AZTK001

CR&R INCORPORATED – WeighMaster Certificate
environmental services

"PUBLIC WEIGHMASTER'S CERTIFICATE OF WEIGHT AND MEASURE"

This is to certify that the described merchandise, was weighed, counted, or measured by a public or deputy weighmaster, and when properly signed, and sealed, is prima facie evidence of the accuracy of the weight, count, or measure shown as prescribed by law.

SOUTH YUMA COUNTY LANDFILL, INC.
A CR & R INC COMPANY
YUMA AZ. 85365
928-341-9300

TICKET #: 197762

DATE: 2/9/2022
IN: 01:17:38 PM
OUT: 01:17:38 PM
OPERATOR: EsmeraldaB

HAULER: INDEPENDENT HA[illegible]
PROFILE: C-6866
TRUCK: ROMERO-07
MANIFEST #[illegible]
ACCOUNT:

GROSS Lbs: 77,700.00
TARE Lbs: 29,420.00
NET 48,280.00

SOURCE: LA LOS ANGELES
NH20 - NON HAZARDOUS SOIL 20
MANIFEST CHARGE $40

TONS	RATE	AMOUNT
24.14	$	
Loads		

TOTAL AMOUNT:

** Account Customers Only: A State of Arizona per Ton Landfill fee of $0.25 will be added to your invoice **

CUSTOMER SIGNATURE

WEIGHMASTER SIGNATURE

The conditions on the back of this form must be observed. Your Signature acknowledges that you have read and understood all conditions of this certificate.

You enter this facility at your own risk. CR&R Incorporated assumes NO liability for any injury or damage occurring while you are on the premises of this facility.

WHITE - ORIGINAL CANARY - OFFICE COPY PINK - CUSTOMER COPY

AZTK001

CR&R INCORPORATED – WeighMaster Certificate

environmental services

"PUBLIC WEIGHMASTER'S CERTIFICATE OF WEIGHT AND MEASURE"

This is to certify that the described merchandise, was weighed, counted, or measured by a public or deputy weighmaster, and when properly signed, and sealed, is prima facie evidence of the accuracy of the weight, count, or measure shown as prescribed by law.

SOUTH YUMA COUNTY LANDFILL - IN
A CR & R INC COMPANY
YUMA AZ. 85365
928-341-3300

ORIGINAL

TICKET #: 197763

DATE: 2/9/2022
IN: 01:32:41 PM
OUT: 01:22:41 PM
OPERATOR: EsmeraldaB

HAULER: INDEPENDENT HAULER
PROFILE: C- 6866
TRUCK: BADASS -02
MANIFEST #015365692file

GROSS Lbs: 80,390.00
TARE Lbs: 30,690.00
NET " 49,700.00

ACCOUNT:
SOURCE: LA LOS ANGELES
NH20 - NON HAZARDOUS SOIL 20
MANIFEST CHARGE $40

TONS: 24.85
Loads

RATE: 0

AMOUNT:

TOTAL AMOUNT:

** Account Customers Only: A State of Arizona Per Ton Landfill fee of $0.25 will be added to your invoice **

CUSTOMER SIGNATURE

WEIGHMASTER SIGNATURE

The conditions on the back of this form must be observed. Your Signature acknowledges that you have read and understood all conditions of this certificate.

You enter this facility at your own risk. CR&R Incorporated assumes NO liability for any injury or damage occurring while you are on the premises of this facility.

WHITE - ORIGINAL CANARY - OFFICE COPY PINK - CUSTOMER COPY AZTK001

CR&R INCORPORATED – WeighMaster Certificate
environmental services

"PUBLIC WEIGHMASTER'S CERTIFICATE OF WEIGHT AND MEASURE"

This is to certify that the described merchandise, was weighed, counted, or measured by a public or deputy weighmaster, and when properly signed, and sealed, is prima facie evidence of the accuracy of the weight, count, or measure shown as prescribed by law.

SOUTH YUMA COUNTY LANDFILL IN
A CR & R INC COMPANY
YUMA AZ. 85365
928-341-9300

TICKET #: 197775

DATE: 2/9/2022
IN: 01:48:02 PM
OUT: 01:48:02 PM
OPERATOR: EsmeraldaB

HAULER: INDEPENDENT HAULER
PROFILE: C-6866 C-686[illegible] [illegible] OF LOS [illegible]
TRUCK: VRZ-01
MANIFEST #01536969[illegible]
ACCOUNT:
SOURCE: LA LOS ANGELES
NM20 - NON HAZARDOUS SOIL 20
MANIFEST CHARGE $40

GROSS Lbs: 81,820.00
TARE Lbs: 29,500.00
NET 52,320.00

TONS	RATE	AMOUNT
26.16		
Loads		

TOTAL AMOUNT:

** Account Customers Only: A State of Arizona per ton Landfill fee of $0.25 will be added to your invoice **

Vich

CUSTOMER SIGNATURE

WEIGHMASTER SIGNATURE

The conditions on the back of this form must be observed. Your Signature acknowledges that you have read and understood all conditions of this certificate.

You enter this facility at your own risk. CR&R Incorporated assumes NO liability for any injury or damage occurring while you are on the premises of this facility.

WHITE - ORIGINAL CANARY - OFFICE COPY PINK - CUSTOMER COPY

AZTK001

CR&R INCORPORATED – WeighMaster Certificate
environmental services

"PUBLIC WEIGHMASTER'S CERTIFICATE OF WEIGHT AND MEASURE"

This is to certify that the described merchandise, was weighed, counted, or measured by a public or deputy weighmaster, and when properly signed, and sealed, is prima facie evidence of the accuracy of the weight, count, or measure shown as prescribed by law.

SOUTH YUMA COUNTY LANDFILL TICKET #: 197776
A CR & R INC COMPANY ORIGINAL
YUMA AZ 85365 DATE: 2/9/2022
928-341-9300 IN: 01:30:06 PM
OUT: 01:30:06 PM

HAULER: INDEPENDENT HAULER OPERATOR: EsmeraldaB
PROFILE: C-6866 C-6866 CITY OF IDS
TRUCK: ROMCAMI 731 GROSS Lbs: 36,140.00
MANIFEST #01536966[illegible] TARE Lbs: 30,420.00
ACCOUNT: NET 55,720.00

SOURCE: FA	LOS ANGELES	TONS	RATE	AMOUNT
NH20	NON HAZARDOUS SOIL 20	27.86		
	MANIFEST CHARGE $40	Loads		
		TOTAL AMOUNT:		

** Account Customers Only: A State of Arizona per Ton Landfill fee of $0.25 will be added to your invoice **

CUSTOMER SIGNATURE WEIGHMASTER SIGNATURE

The conditions on the back of this form must be observed. Your Signature acknowledges that you have read and understood all conditions of this certificate.

You enter this facility at your own risk. CR&R Incorporated assumes NO liability for any injury or damage occurring while you are on the premises of this facility.

WHITE - ORIGINAL CANARY - OFFICE COPY PINK - CUSTOMER COPY

AZTK001

CR&R INCORPORATED – WeighMaster Certificate
environmental services

"PUBLIC WEIGHMASTER'S CERTIFICATE OF WEIGHT AND MEASURE"

This is to certify that the described merchandise, was weighed, counted, or measured by a public or deputy weighmaster, and when properly signed, and sealed, is prima facie evidence of the accuracy of the weight, count, or measure shown as prescribed by law.

SOUTH YUMA COUNTY LANDFILL IN [illegible] TICKET #: 197781
A CR & R INC COMPANY ORIGINAL
YUMA AZ.85365
928-341-9300

DATE: 2/9/2022
IN: 02:06:41 PM
OUT: 02:06:41 PM
OPERATOR: EsmeraldaB

HAULER: INDEPENDENT HAULER
PROFILE:C-6866 C-[illegible]
TRUCK: MAXXO-167
MANIFEST #015369694file
ACCOUNT:

GROSS Lbs: 84.740.00
TARE Lbs: 28.000.00
NET " 56.740.00

SOURCE:LA LOS ANGELES TONS RATE AMOUNT
NH20 - NON HAZARDOUS SOIL 20 28.37
MANIFEST CHARGE $40 Loads
TOTAL AMOUNT:

**Account Customers Only: A State of Arizona per Ton Landfill fee of $0.25 will be added to your invoice **

Edwardo

CUSTOMER SIGNATURE

WEIGHMASTER SIGNATURE

The conditions on the back of this form must be observed. Your Signature acknowledges that you have read and understood all conditions of this certificate. You enter this facility at your own risk. CR&R Incorporated assumes NO liability for any injury or damage occurring while you are on the premises of this facility.

WHITE - ORIGINAL CANARY - OFFICE COPY PINK - CUSTOMER COPY AZTK001

CR&R INCORPORATED – WeighMaster Certificate
environmental services

"PUBLIC WEIGHMASTER'S CERTIFICATE OF WEIGHT AND MEASURE"

This is to certify that the described merchandise, was weighed, counted, or measured by a public or deputy weighmaster, and when properly signed, and sealed, is prima facie evidence of the accuracy of the weight, count, or measure shown as prescribed by law.

SOUTH YUMA COUNTY LANDFILL IN TICKET #: 197789
A CR & R INC COMPANY ORIGINAL
YUMA AZ 85365 DATE: 2/9/2022
928 341 9300 IN: 02:21:51 PM
OUT: 02:21:51 PM
HAULER: INDEPENDENT HAULER OPERATOR: EsmeraldaB
PROFILE: C 6866 C-6866 LOS LOS
TRUCK: MOLINA 18 GROSS Lbs: 83,680.00
MANIFEST #01536966211e TARE Lbs: 29,000.00
ACCOUNT: NET 54,680.00
SOURCE: LA LOS ANGELES TONS RATE AMOUNT
NH20 - NON HAZARDOUS SOIL 20 27.34
MANIFEST CHARGE $40 Loads
TOTAL AMOUNT:

** Account Customers Only: A State of Arizona per ton Landfill fee of $0.25 will be added to your invoice **

Chris
CUSTOMER SIGNATURE

WEIGHMASTER SIGNATURE

The conditions on the back of this form must be observed. Your Signature acknowledges that you have read and understood all conditions of this certificate.

You enter this facility at your own risk. CR&R Incorporated assumes NO liability for any injury or damage occurring while you are on the premises of this facility.

WHITE - ORIGINAL CANARY - OFFICE COPY PINK - CUSTOMER COPY AZTK001

CR&R – WeighMaster Certificate
environmental services

"PUBLIC WEIGHMASTER'S CERTIFICATE OF WEIGHT AND MEASURE"

This is to certify that the described merchandise, was weighed, counted, or measured by a public or deputy weighmaster, and when properly signed, and sealed, is prima facie evidence of the accuracy of the weight, count, or measure shown as prescribed by law.

SOUTH YUMA COUNTY LANDFILL
A CR & R INC COMPANY ORIGINAL
YUMA AZ.85365
928-341-9300

TICKET #: 197791

DATE: 2/9/2022
IN: 02:24:31 PM
OUT: 02:24:31 PM
OPERATOR: EsmeraldaB

HAULER: INDEPENDENT HA[illegible]
PROFILE:C-6866 [illegible] LOS
TRUCK: NWO-345
MANIFEST #015369695file
ACCOUNT:

GROSS Lbs: 81.640.00
TARE Lbs: 28.100.00
NET 53.540.00

SOURCE:LA LOS ANGELES

	TONS	RATE	AMOUNT
NH20 - NON HAZARDOUS SOIL 20	26.77		
MANIFEST CHARGE $40	Loads		

TOTAL AMOUNT:

** Account Customers Only: A State of Arizona per Ton Landfill fee of $0.25 will be added to your invoice **

Doc/10
CUSTOMER SIGNATURE

Rennie Green
WEIGHMASTER SIGNATURE

The conditions on the back of this form must be observed. Your Signature acknowledges that you have read and understood all conditions of this certificate. You enter this facility at your own risk. CR&R Incorporated assumes NO liability for any injury or damage occurring while you are on the premises of this facility.

WHITE - ORIGINAL CANARY - OFFICE COPY PINK - CUSTOMER COPY

AZTK001

CR&R INCORPORATED – WeighMaster Certificate
environmental services

"PUBLIC WEIGHMASTER'S CERTIFICATE OF WEIGHT AND MEASURE"
This is to certify that the described merchandise, was weighed, counted, or measured by a public or deputy weighmaster, and when properly signed, and sealed, is prima facie evidence of the accuracy of the weight, count, or measure shown as prescribed by law.

SOUTH YUMA COUNTY LANDFILL IN
A CR & R INC COMPANY
YUMA AZ.85365
928-341-9300

TICKET #: 197796

DATE: 2/9/2022
IN: 02:36:28 PM
OUT: 02:36:28 PM
OPERATOR: EsmeraldaB

HAULER: INDEPENDENT HAUL
PROFILE:C-6866
TRUCK: ZAMORA-504
MANIFEST #015369690file
ACCOUNT:
SOURCE:LA LOS ANGELES

GROSS Lbs: 86.120.00
TARE Lbs: 28.500.00
NET 57.620.00

	TONS	RATE	AMOUNT
NH20 - NON HAZARDOUS SOIL 20	28.81		
MANIFEST CHARGE $40	Loads		

TOTAL AMOUNT:

** Account Customers Only: A State of Arizona per Ton Landfill fee of $0.25 will be added to your invoice **

Cesar
CUSTOMER SIGNATURE

Jennifer Green
WEIGHMASTER SIGNATURE

The conditions on the back of this form must be observed. Your Signature acknowledges that you have read and understood all conditions of this certificate. You enter this facility at your own risk. CR&R Incorporated assumes NO liability for any injury or damage occurring while you are on the premises of this facility.

WHITE - ORIGINAL CANARY - OFFICE COPY PINK - CUSTOMER COPY AZTK001

CR&R INCORPORATED – WeighMaster Certificate
environmental services

"PUBLIC WEIGHMASTER'S CERTIFICATE OF WEIGHT AND MEASURE"

This is to certify that the described merchandise, was weighed, counted, or measured by a public or deputy weighmaster, and when properly signed, and sealed, is prima facie evidence of the accuracy of the weight, count, or measure shown as prescribed by law.

SOUTH YUMA COUNTY LANDFILL
A CR & R INC COMPANY
YUMA AZ. 85365
928-341-9300

TICKET #: 197800

DATE: 2/9/2022
IN: 02:42:25 PM
OUT: 02:42:25 PM
OPERATOR: EsmeraldaB

HAULER: INDEPENDENT HAUL
PROFILE: C-6866 C-6866 [illegible]
TRUCK: MAL1-53
MANIFEST #015369693FLE
ACCOUNT:
SOURCE: LA LOS ANGELES
NH20 - NON HAZARDOUS SOIL 20

GROSS Lbs: 83,860.00
TARE Lbs: 31,340.00
NET 52,520.00

TONS	RATE	AMOUNT
26.26		
Tons		

TOTAL AMOUNT: [illegible]

** Account Customers Only: A State of Arizona per Ton Landfill fee of $0.25 will be added to your invoice **

Marco

CUSTOMER SIGNATURE

[signature]

WEIGHMASTER SIGNATURE

The conditions on the back of this form must be observed. Your Signature acknowledges that you have read and understood all conditions of this certificate.

You enter this facility at your own risk. CR&R Incorporated assumes NO liability for any injury or damage occurring while you are on the premises of this facility.

WHITE - ORIGINAL CANARY - OFFICE COPY PINK - CUSTOMER COPY

AZTK001

CR&R INCORPORATED – WeighMaster Certificate
environmental services

"PUBLIC WEIGHMASTER'S CERTIFICATE OF WEIGHT AND MEASURE"

This is to certify that the described merchandise, was weighed, counted, or measured by a public or deputy weighmaster, and when properly signed, and sealed, is prima facie evidence of the accuracy of the weight, count, or measure shown as prescribed by law.

SOUTH YUMA COUNTY LANDFILL IN
A CR & R INC COMPANY
YUMA AZ 85365
928 341 9300

ORIGINAL

TICKET #: 197526

DATE: 2/9/2022
IN: 03:52:34 PM
OUT: 03:52:34 PM
OPERATOR: EsmeraldaB

HAULER: INDEPENDENT HAULER
PROFILE: C 6866 [illegible]
TRUCK: PEPE[illegible]
MANIFEST #0[illegible]
ACCOUN[illegible]
SOURCE: LA [illegible] ANG[illegible]
NA20 - NON HAZARDOUS SOI[illegible]
MANIFEST CHARGE $4[illegible]

GROSS Lbs: 82,840.00
TARE Lbs: 29,500.00
NET 53,340.00

TONS	RATE	AMOUNT
26.67		

Loads

TOTAL AMOUNT:

** Account Customers Only: A State of Arizona per Ton Landfill fee of $0.25 will be added to your invoice **

CUSTOMER SIGNATURE

WEIGHMASTER SIGNATURE

The conditions on the back of this form must be observed. Your Signature acknowledges that you have read and understood all conditions of this certificate.

You enter this facility at your own risk. CR&R Incorporated assumes NO liability for any injury or damage occurring while you are on the premises of this facility.

WHITE - ORIGINAL CANARY - OFFICE COPY PINK - CUSTOMER COPY

AZTK001

CR&R – WeighMaster Certificate
environmental services

"PUBLIC WEIGHMASTER'S CERTIFICATE OF WEIGHT AND MEASURE"

This is to certify that the described merchandise, was weighed, counted, or measured by a public or deputy weighmaster, and when properly signed, and sealed, is prima facie evidence of the accuracy of the weight, count, or measure shown as prescribed by law.

SOUTH YUMA COUNTY LANDFILL IN
A CR & R INC COMPANY
YUMA AZ. 85365
928-341-9300

ORIGINAL

TICKET #: 197956

DATE: 2/10/2022
IN: 12:11:03 PM
OUT: 12:11:03 PM
OPERATOR: EsmeraldaB

HAULER: INDEPENDENT HAULER
PROFILE: C 6866 C 6866-CITY OF LOS
TRUCK: ESPINOSA-01
MANIFEST #015369716FLE
ACCOUNT:
SOURCE: LA LOS ANGELES

GROSS Lbs: 87.420.00
TARE Lbs: 28.860.00
NET 58.560.00

	TONS	RATE	AMOUNT
NH20 - NON HAZARDOUS SOIL 20	29.28	[redacted]	[redacted]
MANIFEST CHARGE $40	Loads	[redacted]	[redacted]
	TOTAL AMOUNT:		[redacted]

** Account Customers Only: A State of Arizona per Ton Landfill fee of $0.25 will be added to your Invoice **

CUSTOMER SIGNATURE

WEIGHMASTER SIGNATURE

The conditions on the back of this form must be observed. Your Signature acknowledges that you have read and understood all conditions of this certificate. You enter this facility at your own risk. CR&R Incorporated assumes NO liability for any injury or damage occurring while you are on the premises of this facility.

WHITE - ORIGINAL CANARY - OFFICE COPY PINK - CUSTOMER COPY AZTK001

2/10/2022

CR&R INCORPORATED – WeighMaster Certificate
environmental services

"PUBLIC WEIGHMASTER'S CERTIFICATE OF WEIGHT AND MEASURE"

This is to certify that the described merchandise, was weighed, counted, or measured by a public or deputy weighmaster, and when properly signed, and sealed, is prima facie evidence of the accuracy of the weight, count, or measure shown as prescribed by law.

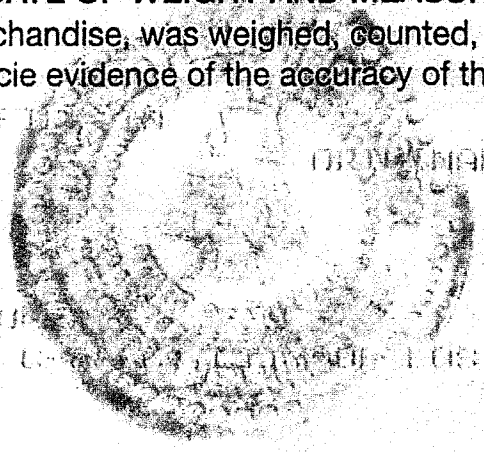

SOUTH YUMA COUNTY LANDFILL
A CR & R INC COMPANY ORIGINAL
YUMA AZ. 85365
928-341-9300

TICKET #: 197957

DATE: 2/10/2022
IN: 12:13:20 PM
OUT: 12:13:20 PM
OPERATOR: EsmeraldaB

HAULER: INDEPENDENT HAUL
PROFILE: C 6866 [illegible] LOS
TRUCK: [illegible]
MANIFEST [illegible]
ACCOUNT:
SOURCE: LA LOS ANGELES
NH20 - NON HAZARDOUS SOIL 20
MANIFEST CHARGE $40

GROSS Lbs: 92,200.00
TARE Lbs: 26,500.00
NET 65,700.00

TONS	RATE	AMOUNT
32.85		

Loads
TOTAL AMOUNT:

** Account Customers Only: A State of Arizona per Ton Landfill fee of $0.25 will be added to your invoice **

CUSTOMER SIGNATURE

WEIGHMASTER SIGNATURE

The conditions on the back of this form must be observed. Your Signature acknowledges that you have read and understood all conditions of this certificate.

You enter this facility at your own risk. CR&R Incorporated assumes NO liability for any injury or damage occurring while you are on the premises of this facility.

WHITE - ORIGINAL CANARY - OFFICE COPY PINK - CUSTOMER COPY

AZTK001

CR&R INCORPORATED – WeighMaster Certificate

environmental services

"PUBLIC WEIGHMASTER'S CERTIFICATE OF WEIGHT AND MEASURE"

This is to certify that the described merchandise, was weighed, counted, or measured by a public or deputy weighmaster, and when properly signed, and sealed, is prima facie evidence of the accuracy of the weight, count, or measure shown as prescribed by law.

SOUTH YUMA COUNTY LANDFILL TF
A CR & R INC COMPANY
YUMA AZ. 85365
928-341-9300

TICKET #: 197958

ORIGINAL

DATE: 2/10/2022
IN: 12:15:51 PM
OUT: 12:15:51 PM
OPERATOR: EsmeraldaB

HAULER: INDEPENDENT
PROFILE: C- 6866
TRUCK: LAP 39
MANIFEST #0153696880FLE

GROSS Lbs: 90,060.00
TARE Lbs: 26,080.00
NET 63,980.00

ACCOUNT:
SOURCE: LA LOS ANGELES

	TONS	RATE	AMOUNT
NH20 - NON HAZARDOUS SOIL 20	31.99		
MANIFEST CHARGE $40	1 Loads		
		TOTAL AMOUNT:	

** Account Customers Only: A State of Arizona per ton Landfill fee of $0.25 will be added to your invoice **

CUSTOMER SIGNATURE

WEIGHMASTER SIGNATURE

The conditions on the back of this form must be observed. Your Signature acknowledges that you have read and understood all conditions of this certificate.

You enter this facility at your own risk. CR&R Incorporated assumes NO liability for any injury or damage occurring while you are on the premises of this facility.

WHITE - ORIGINAL CANARY - OFFICE COPY PINK - CUSTOMER COPY AZTK001

CR&R INCORPORATED – WeighMaster Certificate
environmental services

"PUBLIC WEIGHMASTER'S CERTIFICATE OF WEIGHT AND MEASURE"

This is to certify that the described merchandise, was weighed, counted, or measured by a public or deputy weighmaster, and when properly signed, and sealed, is prima facie evidence of the accuracy of the weight, count, or measure shown as prescribed by law.

SOUTH YUMA COUNTY LANDFILL IN
A CR & R INC COMPANY ORIGINAL
YUMA AZ.85365
928-341-9300

TICKET #: 197959
DATE: 2/10/2022
IN: 12:18:12 PM
OUT: 12:18:12 PM
OPERATOR: EsmeraldaB

HAULER: INDEPENDENT HA[illegible]
PROFILE:C-6866 [illegible] CITY OF LOS
TRUCK: LIMONES-60
MANIFEST #015369689FLE
ACCOUNT:
SOURCE:LA LOS ANGELES
NH20 - NON HAZARDOUS SOIL 20
MANIFEST CHARGE $40

GROSS Lbs: 82.380.00
TARE Lbs: 29.200.00
NET 53.180.00

TONS	RATE	AMOUNT
26.59	[illegible]	[illegible]
Loads		

TOTAL AMOUNT: [illegible]

** Account Customers Only: A State of Arizona per Ton Landfill fee of $0.25 will be added to your invoice **

CUSTOMER SIGNATURE

WEIGHMASTER SIGNATURE

The conditions on the back of this form must be observed. Your Signature acknowledges that you have read and understood all conditions of this certificate.

You enter this facility at your own risk. CR&R Incorporated assumes NO liability for any injury or damage occurring while you are on the premises of this facility.

WHITE - ORIGINAL CANARY - OFFICE COPY PINK - CUSTOMER COPY

AZTK001

CR&R INCORPORATED – WeighMaster Certificate
environmental services

"PUBLIC WEIGHMASTER'S CERTIFICATE OF WEIGHT AND MEASURE"

This is to certify that the described merchandise, was weighed, counted, or measured by a public or deputy weighmaster, and when properly signed, and sealed, is prima facie evidence of the accuracy of the weight, count, or measure shown as prescribed by law.

SOUTH YUMA COUNTY LANDFILL IN
A CR & R INC COMPANY
YUMA AZ 85365
928-341-9300

ORIGINAL

TICKET #: 197964

DATE: 2/10/2022
IN: 12:26:21 PM
OUT: 12:26:21 PM
OPERATOR: EsmeraldaB

HAULER: INDEPENDENT HAULER
PROFILE: C 6066 C 6066- CITY OF LOS
TRUCK: MATINEZ-127
MANIFEST #01536971[illegible]
ACCOUNT:
SOURCE: LA LOS ANGELES
NM20 - NON HAZARDOUS SOIL 20
MANIFEST CHARGE $40

GROSS Lbs: 87,340.00
TARE Lbs: 31,000.00
NET 56,340.00

28.17

TONS	RATE	AMOUNT
28.17		

Loads

TOTAL AMOUNT:

** Account Customers Only: A State of Arizona per Ton Landfill Fee of $0.25 will be added to your invoice **

CUSTOMER SIGNATURE

WEIGHMASTER SIGNATURE

The conditions on the back of this form must be observed. Your Signature acknowledges that you have read and understood all conditions of this certificate.

You enter this facility at your own risk. CR&R Incorporated assumes NO liability for any injury or damage occurring while you are on the premises of this facility.

WHITE - ORIGINAL CANARY - OFFICE COPY PINK - CUSTOMER COPY

AZTK001

CR&R INCORPORATED – WeighMaster Certificate
environmental services

"PUBLIC WEIGHMASTER'S CERTIFICATE OF WEIGHT AND MEASURE"

This is to certify that the described merchandise, was weighed, counted, or measured by a public or deputy weighmaster, and when properly signed, and sealed, is prima facie evidence of the accuracy of the weight, count, or measure shown as prescribed by law.

SOUTH YUMA COUNTY LANDFILL IN
A CR & R INC COMPANY ORIGINAL
YUMA AZ, 85365
928-341-9300

TICKET #: 197966
DATE: 2/10/2022
IN: 12:33:43 PM
OUT: 12:33:43 PM
OPERATOR: EsmeraldaB

HAULER: INDEPENDENT HAULER
PROFILE: C-6866 C-6866- CITY OF LOS
TRUCK: B&B 729
MANIFEST #015369708FLE
ACCOUNT:
SOURCE: LA LOS ANGELES
NH20 - NON HAZARDOUS SOIL 20
MANIFEST CHARGE $40

GROSS Lbs: 80,560.00
TARE Lbs: 29,460.00
NET 51,100.00

25.55

TONS	RATE	AMOUNT
25.55		
Loads		

TOTAL AMOUNT:

** Account Customers Only: A State of Arizona per Ton Landfill fee of $0.25 will be added to your invoice **

CUSTOMER SIGNATURE

WEIGHMASTER SIGNATURE

The conditions on the back of this form must be observed. Your Signature acknowledges that you have read and understood all conditions of this certificate. You enter this facility at your own risk. CR&R Incorporated assumes NO liability for any injury or damage occurring while you are on the premises of this facility.

WHITE - ORIGINAL CANARY - OFFICE COPY PINK - CUSTOMER COPY

AZTK001

CR&R INCORPORATED – WeighMaster Certificate
environmental services

"PUBLIC WEIGHMASTER'S CERTIFICATE OF WEIGHT AND MEASURE"

This is to certify that the described merchandise, was weighed, counted, or measured by a public or deputy weighmaster, and when properly signed, and sealed, is prima facie evidence of the accuracy of the weight, count, or measure shown as prescribed by law.

SOUTH YUMA COUNTY LANDFILL
A CR & R INC COMPANY
YUMA AZ 85365
928-341-9300

TICKET #: 197967

DATE: 2/10/2022
IN: 12:35:57 PM
OUT: 12:35:57 PM
OPERATOR: EsmeraldaB

HAULER: INDEPENDENT HAUL
PROFILE: C 6866
TRUCK: ROMERO-MS
MANIFEST #0153697 0LLE
ACCOUNT:
SOURCE: LA LOS ANGELES
NH20 - NON HAZARDOUS SOIL 20
MANIFEST CHARGE $40

GROSS Lbs: 81,660.00
TARE Lbs: 28,260.00
NET 53,400.00

TONS	RATE	AMOUNT
26.70		
Loads		

TOTAL AMOUNT:

** Account Customers Only: A State of Arizona per Ton Landfill fee of $0.25 will be added to your invoice **

CUSTOMER SIGNATURE

WEIGHMASTER SIGNATURE

The conditions on the back of this form must be observed. Your Signature acknowledges that you have read and understood all conditions of this certificate.

You enter this facility at your own risk. CR&R Incorporated assumes NO liability for any injury or damage occurring while you are on the premises of this facility.

WHITE - ORIGINAL CANARY - OFFICE COPY PINK - CUSTOMER COPY

AZTK001

CR&R INCORPORATED – WeighMaster Certificate
environmental services

"PUBLIC WEIGHMASTER'S CERTIFICATE OF WEIGHT AND MEASURE"

This is to certify that the described merchandise, was weighed, counted, or measured by a public or deputy weighmaster, and when properly signed, and sealed, is prima facie evidence of the accuracy of the weight, count, or measure shown as prescribed by law.

SOUTH YUMA COUNTY LANDFILL
A CR & R INC COMPANY
YUMA AZ 85365
928-341-9300

ORIGINAL

TICKET #: 197968

DATE: 2/10/2022
IN: 12:38:12 PM
OUT: 12:38:12 PM

HAULER: INDEPENDENT HAULER
PROFILE: C-6866 C-6866- CITY OF LOS
TRUCK: ROMERO 07
MANIFEST #0153697[illegible]

OPERATOR: EsmeraldaB

GROSS Lbs: 78,720.00
TARE Lbs: 29,420.00
NET 49,300.00

ACCOUNT:
SOURCE: LA LOS ANGELES
NU20 - NON HAZARDOUS SOIL 20
MANIFEST CHARGE $40

TONS	RATE	AMOUNT
24.65		$
Loads		
TOTAL AMOUNT:		

** Account Customers Only: A State of Arizona per Ton Landfill fee of $0.25 will be added to your invoice **

CUSTOMER SIGNATURE

WEIGHMASTER SIGNATURE

The conditions on the back of this form must be observed. Your Signature acknowledges that you have read and understood all conditions of this certificate.

You enter this facility at your own risk. CR&R Incorporated assumes NO liability for any injury or damage occurring while you are on the premises of this facility.

WHITE - ORIGINAL CANARY - OFFICE COPY PINK - CUSTOMER COPY

AZTK001

CR&R INCORPORATED – WeighMaster Certificate

environmental services

"PUBLIC WEIGHMASTER'S CERTIFICATE OF WEIGHT AND MEASURE"

This is to certify that the described merchandise, was weighed, counted, or measured by a public or deputy weighmaster, and when properly signed, and sealed, is prima facie evidence of the accuracy of the weight, count, or measure shown as prescribed by law.

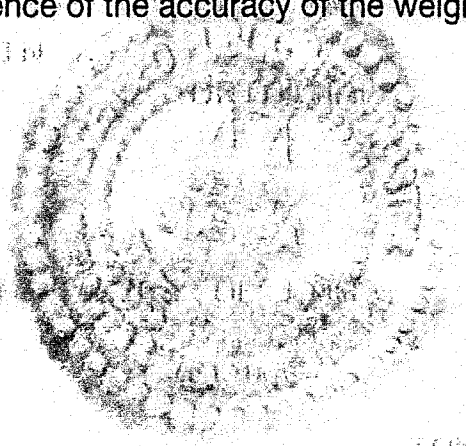

CUSTOMER SIGNATURE

WEIGHMASTER SIGNATURE

The conditions on the back of this form must be observed. Your Signature acknowledges that you have read and understood all conditions of this certificate.

You enter this facility at your own risk. CR&R Incorporated assumes NO liability for any injury or damage occurring while you are on the premises of this facility.

WHITE - ORIGINAL CANARY - OFFICE COPY PINK - CUSTOMER COPY

AZTK001

CR&R INCORPORATED – WeighMaster Certificate
environmental services

"PUBLIC WEIGHMASTER'S CERTIFICATE OF WEIGHT AND MEASURE"
This is to certify that the described merchandise, was weighed, counted, or measured by a public or deputy weighmaster, and when properly signed, and sealed, is prima facie evidence of the accuracy of the weight, count, or measure shown as prescribed by law.

SOUTH YUMA COUNTY LANDFILL
A CR & R INC COMPANY
YUMA AZ. 85365
928-341-9300

TICKET #: 197376

DATE: 2/10/2020
IN: 01:05:23 PM
OUT: 01:05:23 PM
OPERATOR: EsmeraldaB

HAULER: INDEPENDENT HAUL
PROFILE: C-6866
TRUCK: JGARCIA-388
MANIFEST #0153697141LE

GROSS Lbs: 81,920.00
TARE Lbs: 27,400.00
NET 54,520.00

ACCOUNT:
SOURCE: LA LOS ANGELES
NH20 - NON HAZARDOUS SOIL 20
MANIFEST CHARGE $40

TONS	RATE	AMOUNT
27.26		
Loads		
	TOTAL AMOUNT:	

** Account Customers Only: A State of Arizona per Ton Landfill fee of $0.25 will be added to your invoice **

J. Garcia

CUSTOMER SIGNATURE

WEIGHMASTER SIGNATURE

The conditions on the back of this form must be observed. Your Signature acknowledges that you have read and understood all conditions of this certificate.
You enter this facility at your own risk. CR&R Incorporated assumes NO liability for any injury or damage occurring while you are on the premises of this facility.

WHITE - ORIGINAL CANARY - OFFICE COPY PINK - CUSTOMER COPY AZTK001

CR&R INCORPORATED – WeighMaster Certificate
environmental services

"PUBLIC WEIGHMASTER'S CERTIFICATE OF WEIGHT AND MEASURE"

This is to certify that the described merchandise, was weighed, counted, or measured by a public or deputy weighmaster, and when properly signed, and sealed, is prima facie evidence of the accuracy of the weight, count, or measure shown as prescribed by law.

SOUTH YUMA COUNTY LANDFILL
A CR & R INC COMPANY
YUMA AZ. 85365
928-341-9300

TICKET #: 197977

DATE: 2/10/2022
IN: 01:07:34 PM
OUT: 01:07:34 PM
OPERATOR: Esmeralda8

HAULER: INDEPENDENT HAUL
PROFILE: C-6866
TRUCK: ROMCAMI 731
MANIFEST #01[illegible]7FLE
ACCOUNT:
SOURCE: LA LOS ANGELES
NH20 - NON HAZARDOUS SOIL 20
MANIFEST CHARGE $40

GROSS Lbs: 82,920.00
TARE Lbs: 30,420.00
NET 52,500.00

TONS	RATE	AMOUNT
26.25		
1 loads		
TOTAL AMOUNT:		

** Account Customers Only: A State of Arizona per Ton Landfill fee of $0.25 will be added to your invoice **

CUSTOMER SIGNATURE

WEIGHMASTER SIGNATURE

The conditions on the back of this form must be observed. Your Signature acknowledges that you have read and understood all conditions of this certificate.

You enter this facility at your own risk. CR&R Incorporated assumes NO liability for any injury or damage occurring while you are on the premises of this facility.

WHITE - ORIGINAL CANARY - OFFICE COPY PINK - CUSTOMER COPY

AZTK001

CR&R INCORPORATED – WeighMaster Certificate
environmental services

"PUBLIC WEIGHMASTER'S CERTIFICATE OF WEIGHT AND MEASURE"

This is to certify that the described merchandise, was weighed, counted, or measured by a public or deputy weighmaster, and when properly signed, and sealed, is prima facie evidence of the accuracy of the weight, count, or measure shown as prescribed by law.

SOUTH YUMA COUNTY LANDFILL IN
A CR & R INC COMPANY
YUMA AZ. 85365
928-341-0300

ORIGINAL

TICKET #: 197980
DATE: 2/10/2022
IN: 01:02:19 PM
OUT: 01:12:19 PM
OPERATOR: EsmeraldaB

HAULER: INDEPENDENT HAULER
PROFILE: C-6866 C-6866 CITY OF PMS
TRUCK: VIBLER-02
MANIFEST #01536970IFLL
ACCOUNT:

GROSS Lbs: 80,260.00
TARE Lbs: 28,700.00
NET 51,560.00

SOURCE: LA LOS ANGELES

		TONS	RATE	AMOUNT
NH20	NON HAZARDOUS SOIL 20	25.78		
	MANIFEST CHARGE $40	Loads		

TOTAL AMOUNT:

** Account Customers Only: A State of Arizona per Ton Landfill fee of $0.25 will be added to your invoice **

CUSTOMER SIGNATURE

WEIGHMASTER SIGNATURE

The conditions on the back of this form must be observed. Your Signature acknowledges that you have read and understood all conditions of this certificate.

You enter this facility at your own risk. CR&R Incorporated assumes NO liability for any injury or damage occurring while you are on the premises of this facility.

WHITE - ORIGINAL CANARY - OFFICE COPY PINK - CUSTOMER COPY

AZTK001

CR&R INCORPORATED — WeighMaster Certificate
environmental services

"PUBLIC WEIGHMASTER'S CERTIFICATE OF WEIGHT AND MEASURE"
This is to certify that the described merchandise, was weighed, counted, or measured by a public or deputy weighmaster, and when properly signed, and sealed, is prima facie evidence of the accuracy of the weight, count, or measure shown as prescribed by law.

SOUTH YUMA COUNTY LANDFILL
A CR & R INC COMPANY
YUMA AZ.85365
928-341-9300

TICKET #: 197982

DATE: 2/10/2022
IN: 01:14:51 PM
OUT: 01:14:51 PM
OPERATOR: EsmeraldaB

HAULER: INDEPENDENT HA[illegible]
PROFILE:C-6866
TRUCK: ZAMORA-504
MANIFEST #015369706FLE
ACCOUNT:
SOURCE:LA LOS ANGELES
NH20 - NON HAZARDOUS SOIL 20
MANIFEST CHARGE $40

GROSS Lbs: 84.540.00
TARE Lbs: 28.500.00
NET 56.040.00

TONS	RATE	AMOUNT
28.02		
Loads		

TOTAL AMOUNT:

** Account Customers Only: A State of Arizona per-ton Landfill fee of $0.25 will be added to your invoice **

Zamora

CUSTOMER SIGNATURE

WEIGHMASTER SIGNATURE

The conditions on the back of this form must be observed. Your Signature acknowledges that you have read and understood all conditions of this certificate. You enter this facility at your own risk. CR&R Incorporated assumes NO liability for any injury or damage occurring while you are on the premises of this facility.

WHITE - ORIGINAL CANARY - OFFICE COPY PINK - CUSTOMER COPY AZTK001

CR&R environmental services – WeighMaster Certificate

"PUBLIC WEIGHMASTER'S CERTIFICATE OF WEIGHT AND MEASURE"

This is to certify that the described merchandise, was weighed, counted, or measured by a public or deputy weighmaster, and when properly signed, and sealed, is prima facie evidence of the accuracy of the weight, count, or measure shown as prescribed by law.

SOUTH YUMA COUNTY LANDFILL, 10 [illegible] ORIGINAL
A CR & R INC COMPANY
YUMA AZ, 85365
928-341-9300

TICKET #: 197985

DATE: 2/10/2022
IN: 01:21:08 PM
OUT: 01:21:08 PM
OPERATOR: EsmeraldaB

HAULER: INDEPENDENT HAUL[illegible]
PROFILE:C-6866 C[illegible] OF LOS
TRUCK: NWO-345
MANIFEST #015369704FLE
ACCOUNT:
SOURCE:LA LOS ANGELES

GROSS Lbs: 83,740.00
TARE Lbs: 28,100.00
NET 55,640.00

	TONS	RATE	AMOUNT
NH20 - NON HAZARDOUS SOIL 20	27.82		
	Tons		
	TOTAL AMOUNT:		

** Account Customers Only: A State of Arizona per Ton Landfill fee of $0.25 will be added to your invoice **

CUSTOMER SIGNATURE

WEIGHMASTER SIGNATURE

The conditions on the back of this form must be observed. Your Signature acknowledges that you have read and understood all conditions of this certificate.

You enter this facility at your own risk. CR&R Incorporated assumes NO liability for any injury or damage occurring while you are on the premises of this facility.

WHITE - ORIGINAL CANARY - OFFICE COPY PINK - CUSTOMER COPY AZTK001

CR&R INCORPORATED – WeighMaster Certificate
environmental services

"PUBLIC WEIGHMASTER'S CERTIFICATE OF WEIGHT AND MEASURE"

This is to certify that the described merchandise, was weighed, counted, or measured by a public or deputy weighmaster, and when properly signed, and sealed, is prima facie evidence of the accuracy of the weight, count, or measure shown as prescribed by law.

SOUTH YUMA COUNTY LANDFILL INC TICKET #: 197987
A CR & R INC COMPANY ORIGINAL
YUMA AZ 85365 DATE: 2/10/2022
928-341-9304 IN: 01:24:11 PM
OUT: 01:24:11 PM
HAULER: INDEPENDENT HAULER OPERATOR: Esmeralda B
PROFILE: C-6866 C-6866- CITY OF LOS
TRUCK: MAX 01 GROSS 04,500.00
MANIFEST #01536 TARE LBS 28,000.00
ACCOUNT: MET 36.
SOURCE: LA LOS ANGELES TONS RATE AMOUNT
NH20 NON HAZARDOUS SOIL 20 28.25
MANIFEST CHARGE $ 0.00 - CITY OF LOS
HAULER: INDEPENDENT HAULER TOTAL AMOUNT: $
28.25
** Account Customers Only: A State of Arizona per Ton Landfill Disposal $0.25
will be added to your invoice **
A CR & R INC COMPANY ORIGINAL
SOUTH YUMA COUNTY LANDFILL INC

Eduardo

CUSTOMER SIGNATURE

Denny Green

WEIGHMASTER SIGNATURE

The conditions on the back of this form must be observed. Your Signature acknowledges that you have read and understood all conditions of this certificate. You enter this facility at your own risk. CR&R Incorporated assumes NO liability for any injury or damage occurring while you are on the premises of this facility.

WHITE - ORIGINAL CANARY - OFFICE COPY PINK - CUSTOMER COPY

AZTK001

CR&R INCORPORATED – WeighMaster Certificate
environmental services

"PUBLIC WEIGHMASTER'S CERTIFICATE OF WEIGHT AND MEASURE"

This is to certify that the described merchandise, was weighed, counted, or measured by a public or deputy weighmaster, and when properly signed, and sealed, is prima facie evidence of the accuracy of the weight, count, or measure shown as prescribed by law.

SOUTH YUMA COUNTY LANDFILL INC
A CR & R INC COMPANY
YUMA AZ 85365
928-341-9300

ORIGINAL

TICKET #: 197997

DATE: 2/10/2022
IN: 01:51:34 PM
OUT: 01:51:34 PM
OPERATOR: EsmeraldaB

HAULER: INDEPENDENT HAULER
PROFILE: C 6866 C 6866 [illegible]
TRUCK: PEPETS 02
MANIFEST #[illegible]
ACCOUNT:
SOURCE: LA LOS ANGELES
NH20 - NON HAZARDOUS SOIL 20
MANIFEST CHARGE $40

GROSS Lbs: 83,740.00
TARE Lbs: 29,500.00
NET 54,240.00

TONS	RATE	AMOUNT
27.12		
Loads		

TOTAL AMOUNT:

** Account Customers Only: A State of Arizona per Ton Landfill fee of $0.25 will be added to your invoice **

Pepe

CUSTOMER SIGNATURE

WEIGHMASTER SIGNATURE

The conditions on the back of this form must be observed. Your Signature acknowledges that you have read and understood all conditions of this certificate.

You enter this facility at your own risk. CR&R Incorporated assumes NO liability for any injury or damage occurring while you are on the premises of this facility.

WHITE - ORIGINAL CANARY - OFFICE COPY PINK - CUSTOMER COPY

AZTK001

CR&R INCORPORATED – WeighMaster Certificate
environmental services

"PUBLIC WEIGHMASTER'S CERTIFICATE OF WEIGHT AND MEASURE"

This is to certify that the described merchandise, was weighed, counted, or measured by a public or deputy weighmaster, and when properly signed, and sealed, is prima facie evidence of the accuracy of the weight, count, or measure shown as prescribed by law.

SOUTH YUMA COUNTY LANDFILL IN TICKET #: 198010
A CR & R INC COMPANY ORIGINAL
YUMA AZ. 85365
928 341-9300

DATE: 2/10/2022
IN: 02:15:45 PM
OUT: 02:15:45 PM
OPERATOR: EsmeraldaB

HAULER: INDEPENDENT [illegible]
PROFILE: C 6866 [illegible] CITY OF LOS
TRUCK: VRZ 01
MANIFEST #015369/00FEE
ACCOUNT:
SOURCE: LA LOS ANGELES
NH20 - NON HAZARDOUS SOIL 20
MANIFEST CHARGE $40

GROSS Lbs: 83,320.00
TARE Lbs: 29,500.00
NET 53,820.00

TONS	RATE	AMOUNT
26.91		

Loads
TOTAL AMOUNT:

** Account Customers Only: A State of Arizona per ton Landfill fee of $0.25 will be added to your invoice **

Victor

CUSTOMER SIGNATURE

WEIGHMASTER SIGNATURE

The conditions on the back of this form must be observed. Your Signature acknowledges that you have read and understood all conditions of this certificate.

You enter this facility at your own risk. CR&R Incorporated assumes NO liability for any injury or damage occurring while you are on the premises of this facility.

WHITE - ORIGINAL CANARY - OFFICE COPY PINK - CUSTOMER COPY

AZTK001

CR&R INCORPORATED – WeighMaster Certificate
environmental services

"PUBLIC WEIGHMASTER'S CERTIFICATE OF WEIGHT AND MEASURE"

This is to certify that the described merchandise, was weighed, counted, or measured by a public or deputy weighmaster, and when properly signed, and sealed, is prima facie evidence of the accuracy of the weight, count, or measure shown as prescribed by law.

SOUTH YUMA COUNTY LANDFILL [illegible] TICKET #: [illegible]
A CR & R INC COMPANY ORIGINAL
YUMA AZ [illegible]
928 [illegible]

DATE: 2/10/2022
IN: 02:17:56 PM
OUT: 02:17:56 PM
OPERATOR: EsmeraldaB

HAULER: INDEPENDENT HAU[illegible]
PROFILE: C [illegible]
TRUCK: MAL [illegible]
MANIFEST #[illegible]
ACCOUNT:
SOURCE: LA LOS ANGELES
NH20 - NON HAZARDOUS SOIL 20
MANIFEST CHARGE $40

GROSS Lbs: 85,200.00
TARE Lbs: 31,340.00
NET 53,860.00

TONS	RATE	AMOUNT
26.93		
Loads		

TOTAL AMOUNT:

** Account Customers Only: A State of Arizona per Ton Landfill fee of $0.25 will be added to your invoice **

Marco
CUSTOMER SIGNATURE

WEIGHMASTER SIGNATURE

The conditions on the back of this form must be observed. Your Signature acknowledges that you have read and understood all conditions of this certificate.

You enter this facility at your own risk. CR&R Incorporated assumes NO liability for any injury or damage occurring while you are on the premises of this facility.

WHITE - ORIGINAL CANARY - OFFICE COPY PINK - CUSTOMER COPY

AZTK001

CR&R INCORPORATED – WeighMaster Certificate
environmental services

2/11/2022

"PUBLIC WEIGHMASTER'S CERTIFICATE OF WEIGHT AND MEASURE"

This is to certify that the described merchandise, was weighed, counted, or measured by a public or deputy weighmaster, and when properly signed, and sealed, is prima facie evidence of the accuracy of the weight, count, or measure shown as prescribed by law.

SOUTH YUMA COUNTY LANDFILL [illegible] TICKET #: [illegible]
A CR & R INC COMPANY ORIGINAL
YUMA AZ [illegible] DATE: [illegible]
[illegible] IN: 07:31:40 AM
OUT: 07:31:40 AM
HAULER: INDEPENDENT HAULER OPERATOR: PennyG
PROFILE: C-[illegible] C-[illegible] LOS
TRUCK: [illegible] GROSS Lbs: [illegible]
MANIFEST #[illegible] TARE Lbs: [illegible]
ACCOUNT: NET [illegible]
SOURCE: [illegible] LOS ANGELES TONS RATE AMOUNT
[illegible] NON HAZARDOUS SOIL [illegible] 27.66
MANIFEST CHARGE $40 Loads
TOTAL AMOUNT:

** Account Customers Only: A State of Arizona per Ton Landfill Fee of $0.25 will be added to your invoice **

Chris

CUSTOMER SIGNATURE

Penny Guerra

WEIGHMASTER SIGNATURE

The conditions on the back of this form must be observed. Your Signature acknowledges that you have read and understood all conditions of this certificate.

You enter this facility at your own risk. CR&R Incorporated assumes NO liability for any injury or damage occurring while you are on the premises of this facility.

WHITE - ORIGINAL CANARY - OFFICE COPY PINK - CUSTOMER COPY

AZTK001

CR&R INCORPORATED – WeighMaster Certificate
environmental services

"PUBLIC WEIGHMASTER'S CERTIFICATE OF WEIGHT AND MEASURE"
This is to certify that the described merchandise, was weighed, counted, or measured by a public or deputy weighmaster, and when properly signed, and sealed, is prima facie evidence of the accuracy of the weight, count, or measure shown as prescribed by law.

SOUTH YUMA COUNTY LANDFILL IN
A CR & R INC COMPANY
YUMA AZ.85365
928-341-9300

TICKET #: 198161

ORIGINAL

DATE: 2/11/2022
IN: 12:26:36 PM
OUT: 12:26:36 PM
OPERATOR: EsmeraldaB

HAULER: INDEPENDENT HAULER
PROFILE: C-6866 C-6866
TRUCK: LIMONES-60
MANIFEST #015369796FLE
ACCOUNT:

GROSS Lbs: 79.840.00
TARE Lbs: 29.200.00
NET 50.640.00

SOURCE: LA LOS ANGELES

	TONS	RATE	AMOUNT
NH20 - NON HAZARDOUS SOIL 20	25.32		
MANIFEST CHARGE $40	Loads		

TOTAL AMOUNT:

** Account Customers Only: A State of Arizona per Ton Landfill fee of $0.25 will be added to your invoice **

Alfredo

CUSTOMER SIGNATURE

WEIGHMASTER SIGNATURE

The conditions on the back of this form must be observed. Your Signature acknowledges that you have read and understood all conditions of this certificate. You enter this facility at your own risk. CR&R Incorporated assumes NO liability for any injury or damage occurring while you are on the premises of this facility.

WHITE - ORIGINAL CANARY - OFFICE COPY PINK - CUSTOMER COPY

AZTK001

CR&R – WeighMaster Certificate
environmental services

"PUBLIC WEIGHMASTER'S CERTIFICATE OF WEIGHT AND MEASURE"
This is to certify that the described merchandise was weighed, counted, or measured by a public or deputy weighmaster, and when properly signed, and sealed, is prima facie evidence of the accuracy of the weight, count, or measure shown as prescribed by law.

SOUTH YUMA COUNTY LANDFILL INC
A CR & R INC COMPANY
YUMA AZ. 85365
928-341-9300

TICKET #: 150173

DATE: 2/11/2022
IN: 12:48:29 PM
OUT: 12:48:29 PM
OPERATOR: EsmeraldaB

HAULER: INDEPENDENT HAULER
PROFILE: C-6666
TRUCK: ESPINOSA-01
MANIFEST #0015369797file

GROSS lbs: 84,520.00
TARE lbs: 28,860.00
NET 55,660.00

ACCOUNT:

SOURCE: 1 of 1 LOC: ANGELES

ITEMS:	RATE	AMOUNT
NR20 - NON HAZARDOUS SOIL 20	27.83	
MANIFEST CHARGE $40	1 each	
	TOTAL AMOUNT:	

** Account Customers Only: A State of Arizona Per Ton Landfill Fee of $0.25 will be added to your invoice **

ESP

CMO

CUSTOMER SIGNATURE

WEIGHMASTER SIGNATURE

The conditions on the back of this form must be observed. Your Signature acknowledges that you have read and understood all conditions of this certificate.
You enter this facility at your own risk. CR&R Incorporated assumes NO liability for any injury or damage occurring while you are on the premises of this facility.

WHITE - ORIGINAL CANARY - OFFICE COPY PINK - CUSTOMER COPY

AZTK001

CR&R INCORPORATED – WeighMaster Certificate
environmental services

"PUBLIC WEIGHMASTER'S CERTIFICATE OF WEIGHT AND MEASURE"

This is to certify that the described merchandise, was weighed, counted, or measured by a public or deputy weighmaster, and when properly signed, and sealed, is prima facie evidence of the accuracy of the weight, count, or measure shown as prescribed by law.

SOUTH YUMA COUNTY LANDF[illegible] TICKET #: 198174
A CR & R INC COMPANY [illegible]INAL
YUMA AZ.85365 DATE: 2/11/2022
928-341-9300 IN: 12:50:32 PM
OUT: 12:50:32 PM
HAULER: INDEPENDENT HA[illegible] OPERATOR: EsmeraldaB
PROFILE:C-6866
TRUCK: LAP-39 GROSS Lbs: 93.100.00
MANIFEST #0153697941le TARE Lbs: 26.080.00
ACCOUNT: NET " 67.020.00
SOURCE:LA LOS ANGELES TONS RATE AMOUNT
NH20 - NON HAZARDOUS SOIL 20 33.51-
MANIFEST CHARGE $40 Loads
TOTAL AMOUNT:

** Account Customers Only: A State of Arizona per Ton Landfill fee of $0.25 will be added to your invoice **

Rosendo

CUSTOMER SIGNATURE

WEIGHMASTER SIGNATURE

The conditions on the back of this form must be observed. Your Signature acknowledges that you have read and understood all conditions of this certificate.

You enter this facility at your own risk. CR&R Incorporated assumes NO liability for any injury or damage occurring while you are on the premises of this facility.

WHITE - ORIGINAL CANARY - OFFICE COPY PINK - CUSTOMER COPY

AZTK001

CR&R INCORPORATED – WeighMaster Certificate
environmental services

"PUBLIC WEIGHMASTER'S CERTIFICATE OF WEIGHT AND MEASURE"

This is to certify that the described merchandise, was weighed, counted, or measured by a public or deputy weighmaster, and when properly signed, and sealed, is prima facie evidence of the accuracy of the weight, count, or measure shown as prescribed by law.

SOUTH YUMA COUNTY LANDFILL IN
A CR & R INC COMPANY
YUMA AZ. 85365
928-341-9300

ORIGINAL

TICKET #: 198175
DATE: 2/11/2022
IN: 12:53:41 PM
OUT: 12:53:41 PM
OPERATOR: EsmeraldaB

HAULER: INDEPENDENT HAULER
PROFILE: C-6866 C-6866- CITY OF LOS
TRUCK: JGARCIA-388
MANIFEST #01536979311e
ACCOUNT:
SOURCE: LA LOS ANGE[illegible]

GROSS Lbs: 85.040.00
TARE Lbs: 27.400.00
NET 57.640.00

	TONS	RATE	AMOUNT
NH20 - NON HAZARDOUS SOIL	28.82		
MANIFEST CHARGE $4[illegible]	[illegible]oads		

TOTAL AMOUNT:

** Account Customers Only [illegible] Arizona per Ton Landfill fee of $0.25 will be added to your invoi[illegible]

CUSTOMER SIGNATURE

WEIGHMASTER SIGNATURE

The conditions on the back of this form must be observed. Your Signature acknowledges that you have read and understood all conditions of this certificate. You enter this facility at your own risk. CR&R Incorporated assumes NO liability for any injury or damage occurring while you are on the premises of this facility.

WHITE - ORIGINAL CANARY - OFFICE COPY PINK - CUSTOMER COPY

AZTK001

CR&R INCORPORATED – WeighMaster Certificate
environmental services

"PUBLIC WEIGHMASTER'S CERTIFICATE OF WEIGHT AND MEASURE"

This is to certify that the described merchandise, was weighed, counted, or measured by a public or deputy weighmaster, and when properly signed, and sealed, is prima facie evidence of the accuracy of the weight, count, or measure shown as prescribed by law.

SOUTH YUMA COUNTY LANDFILL IN — TICKET #: 198176
A CR & R INC COMPANY — ORIGINAL
YUMA AZ. 85365 — DATE: 2/11/2022
928-341-9300 — IN: 12:57:33 PM
OUT: 12:57:33 PM
HAULER: INDEPENDENT HAULER — OPERATOR: EsmeraldaB
PROFILE: C-6866 — C-6866 CITY OF LOS
TRUCK: RUMERO 05 — GROSS Lbs: 77,900.00
MANIFEST #015369790 — TARE Lbs: 28,260.00
ACCOUNT: — NET 49,640.00 — 24.82
SOURCE: LA — LOS ANGELES — TONS — RATE — AMOUNT
NH20 NON HAZARDOUS SOIL 20 — 24.82 — 0
MANIFEST CHARGE $40 — Fuels
TOTAL AMOUNT:

** Account Customers Only: A [illegible] Arizona per Ton Landfill fee of $0.25 will be added to your invoice **

CUSTOMER SIGNATURE — WEIGHMASTER SIGNATURE

The conditions on the back of this form must be observed. Your Signature acknowledges that you have read and understood all conditions of this certificate.

You enter this facility at your own risk. CR&R Incorporated assumes NO liability for any injury or damage occurring while you are on the premises of this facility.

WHITE - ORIGINAL CANARY - OFFICE COPY PINK - CUSTOMER COPY

AZTK001

CR&R – WeighMaster Certificate
environmental services

"PUBLIC WEIGHMASTER'S CERTIFICATE OF WEIGHT AND MEASURE"

This is to certify that the described merchandise, was weighed, counted, or measured by a public or deputy weighmaster, and wher properly signed, and sealed, is prima facie evidence of the accuracy of the weight, count, or measure shown as prescribed by law.

SOUTH YUMA COUNTY LANDFILL IN
A CR & R INC COMPANY
YUMA AZ.85365
928 341-9300

ORIGINAL

TICKET #: 198177
DATE: 2/11/2022
IN: 01:00:01 PM
OUT: 01:00:01 PM
OPERATOR: EsmeraldaB

HAULER: INDEPENDENT HAULER
PROFILE: C-6866 C-6866 [illegible]
TRUCK: 0&0-729
MANIFEST #015369786file
ACCOUNT:
SOURCE: LA LOS ANGELES
NH20 - NON HAZARDOUS SOIL
MANIFEST CHARGE $40

GROSS Lbs: 80.100.00
TARE Lbs: 29.460.00
NET " 50.640.00

TONS	RATE	AMOUNT
25.32	[redacted]	[redacted]
Loads		

TOTAL AMOUNT: [redacted]

** Account Customers Only: A [illegible] or Arizona per Ton Landfill fee of $0.25 will be added to your invoice **

CUSTOMER SIGNATURE

WEIGHMASTER SIGNATURE

The conditions on the back of this form must be observed. Your Signature acknowledges that you have read and understood all conditions of this certificate. You enter this facility at your own risk. CR&R Incorporated assumes NO liability for any injury or damage occurring while you are on the premises of this facility.

WHITE - ORIGINAL CANARY - OFFICE COPY PINK - CUSTOMER COPY

AZTK001

CR&R INCORPORATED – WeighMaster Certificate
environmental services

"PUBLIC WEIGHMASTER'S CERTIFICATE OF WEIGHT AND MEASURE"

This is to certify that the described merchandise, was weighed, counted, or measured by a public or deputy weighmaster, and when properly signed, and sealed, is prima facie evidence of the accuracy of the weight, count, or measure shown as prescribed by law.

SOUTH YUMA COUNTY LANDFILL IN
A CR & R INC COMPANY ORIGINAL
YUMA AZ 85365
928 341 9300

TICKET #: 198180
DATE: 2/11/2022
IN: 01:05:11 PM
OUT: 01:05:11 PM

HAULER: INDEPENDENT HAULER
PROFILE: C-6866 C-6866-
TRUCK: F&SONS 04
MANIFEST #0[illegible]
ACCOUNT:
SOURCE: LA LOS ANGELES [illegible]
NH30 - NON HAZARDOUS SOIL [illegible]
MANIFEST CHARGE $40 [illegible]

OPERATOR: EsmeraldaB

GROSS Lbs: 80,900.00
TARE Lbs: 28,600.00
NET 52,300.00 26.15

	RATE	AMOUNT
TOTAL AMOUNT:		

** Account Customers Only: A [illegible] Arizona [illegible] Landfill fee of $0.25 will be added to your invoice **

CUSTOMER SIGNATURE

WEIGHMASTER SIGNATURE

The conditions on the back of this form must be observed. Your Signature acknowledges that you have read and understood all conditions of this certificate.

You enter this facility at your own risk. CR&R Incorporated assumes NO liability for any injury or damage occurring while you are on the premises of this facility.

WHITE - ORIGINAL CANARY - OFFICE COPY PINK - CUSTOMER COPY

AZTK001

CR&R INCORPORATED – WeighMaster Certificate
environmental services

"PUBLIC WEIGHMASTER'S CERTIFICATE OF WEIGHT AND MEASURE"

This is to certify that the described merchandise, was weighed, counted, or measured by a public or deputy weighmaster, and when properly signed, and sealed, is prima facie evidence of the accuracy of the weight, count, or measure shown as prescribed by law.

SOUTH YUMA COUNTY LANDFILL IN
A CR & R INC COMPANY
YUMA AZ. 85365
928 341 9300

ORIGINAL

TICKET #: 198181
DATE: 2/11/2022
IN: 01:07:24 PM
OUT: 01:07:24 PM
OPERATOR: EsmeraldaB

HAULER: INDEPENDENT HAULER
PROFILE: C 6866 C 6866 CITY OF LOS
TRUCK: ROMERO 07
MANIFEST #0153697881
ACCOUNT:
SOURCE: LA LOS ANGELES
NH20 NON HAZARDOUS SOIL 20
MANIFEST CHARGE $40

GROSS Lbs: 78,980.00
TARE Lbs: 29,420.00
NET 49,560.00 24.98

	RATE	AMOUNT
.78	1	
1 Quart		

TOTAL AMOUNT:

** Account Customers Only: A [illegible] Arizona per Ton Landfill fee of $0.25 will be added to your invoice

CUSTOMER SIGNATURE

WEIGHMASTER SIGNATURE

The conditions on the back of this form must be observed. Your Signature acknowledges that you have read and understood all conditions of this certificate.

You enter this facility at your own risk. CR&R Incorporated assumes NO liability for any injury or damage occurring while you are on the premises of this facility.

WHITE - ORIGINAL CANARY - OFFICE COPY PINK - CUSTOMER COPY

AZTK001

CR&R INCORPORATED – WeighMaster Certificate
environmental services

"PUBLIC WEIGHMASTER'S CERTIFICATE OF WEIGHT AND MEASURE"

This is to certify that the described merchandise, was weighed, counted, or measured by a public or deputy weighmaster, and when properly signed, and sealed, is prima facie evidence of the accuracy of the weight, count, or measure shown as prescribed by law.

SOUTH YUMA COUNTY LANDFILL IN
A CR & R INC COMPANY ORIGINAL
YUMA AZ 85365
928-341-9300

TICKET #: 198183
DATE: 2/11/2022
IN: 01:10:35 PM
OUT: 01:10:35 PM
OPERATOR: EsmeraldaB

HAULER: INDEPENDENT HAULER
PROFILE: C-6866 C-6866 CITY OF LOS
TRUCK: PEPE'S-02
MANIFEST #0[illegible]
ACCOUNT:
SOURCE: LA LOS ANGELES [illegible] TONS
NH20 - NON HAZARDOUS SOIL [illegible] 25.60
MANIFEST CHARGE $40 [illegible] Loads

GROSS Lbs: 80,700.00
TARE Lbs: 29,500.00
NET 51,200.00

RATE	AMOUNT

TOTAL AMOUNT:

** Account Customers Only: [illegible] Arizona per Ton Landfill fee of $0.25 will be added to your invoice

CUSTOMER SIGNATURE

WEIGHMASTER SIGNATURE

The conditions on the back of this form must be observed. Your Signature acknowledges that you have read and understood all conditions of this certificate.

You enter this facility at your own risk. CR&R Incorporated assumes NO liability for any injury or damage occurring while you are on the premises of this facility.

WHITE - ORIGINAL CANARY - OFFICE COPY PINK - CUSTOMER COPY

AZTK001

CR&R INCORPORATED – WeighMaster Certificate

environmental services

"PUBLIC WEIGHMASTER'S CERTIFICATE OF WEIGHT AND MEASURE"

This is to certify that the described merchandise, was weighed, counted, or measured by a public or deputy weighmaster, and when properly signed, and sealed, is prima facie evidence of the accuracy of the weight, count, or measure shown as prescribed by law.

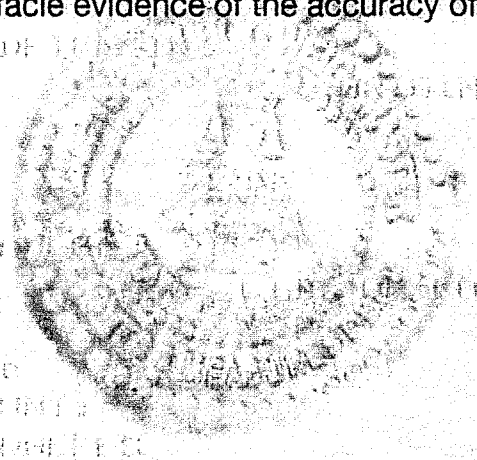

25.45

CUSTOMER SIGNATURE

WEIGHMASTER SIGNATURE

The conditions on the back of this form must be observed. Your Signature acknowledges that you have read and understood all conditions of this certificate.

You enter this facility at your own risk. CR&R Incorporated assumes NO liability for any injury or damage occurring while you are on the premises of this facility.

WHITE - ORIGINAL CANARY - OFFICE COPY PINK - CUSTOMER COPY AZTK001

CR&R INCORPORATED – WeighMaster Certificate
environmental services

"PUBLIC WEIGHMASTER'S CERTIFICATE OF WEIGHT AND MEASURE"
This is to certify that the described merchandise, was weighed, counted, or measured by a public or deputy weighmaster, and when properly signed, and sealed, is prima facie evidence of the accuracy of the weight, count, or measure shown as prescribed by law.

SOUTH YUMA COUNTY LANDFILL IN
A CR & R INC COMPANY ORIGINAL
YUMA AZ.85365
928-341-9300

TICKET #: 198193
MANUAL
DATE: 2/11/2022
IN: 01:39:57 PM
OUT: 01:39:57 PM
OPERATOR: EsmeraldaB

HAULER: INDEPENDENT HAULER
PROFILE: C-6866 C-6866 CITY OF LOS
TRUCK: QBAYSOY-L7
MANIFEST #0153697951 fle
ACCOUNT:
SOURCE: LA LOS ANGELES
NH20 - NON HAZARDOUS SOIL 20
MANIFEST CHARGE $40

GROSS Lbs: 79.860.00
TARE Lbs: 27.600.00
NET 52.260.00

TONS	RATE	AMOUNT
26.13		
Loads		

TOTAL AMOUNT:

** Account Customers Only: A State of Arizona per Ton Landfill fee of $0.25 will be added to your invoice **

Fidel

CUSTOMER SIGNATURE

Cut

WEIGHMASTER SIGNATURE

The conditions on the back of this form must be observed. Your Signature acknowledges that you have read and understood all conditions of this certificate. You enter this facility at your own risk. CR&R Incorporated assumes NO liability for any injury or damage occurring while you are on the premises of this facility.

WHITE - ORIGINAL CANARY - OFFICE COPY PINK - CUSTOMER COPY

AZTK001

CR&R INCORPORATED – WeighMaster Certificate
environmental services

"PUBLIC WEIGHMASTER'S CERTIFICATE OF WEIGHT AND MEASURE"

This is to certify that the described merchandise, was weighed, counted, or measured by a public or deputy weighmaster, and when properly signed, and sealed, is prima facie evidence of the accuracy of the weight, count, or measure shown as prescribed by law.

SOUTH YUMA COUNTY LANDFILL
A CR & R INC COMPANY
YUMA AZ.85365
928-341-9300

ORIGINAL

TICKET #: 198212

DATE: 2/11/2022
IN: 02:33:52 PM
OUT: 02:33:52 PM
OPERATOR: EsmeraldaB

HAULER: INDEPENDENT HAULER
PROFILE: C-6866 C-6866 TYPE OF LBS
TRUCK: ROMCAMI 731
MANIFEST #015369787file
ACCOUNT:
SOURCE: LA LOS ANGELES
MH20 - NON HAZARDOUS SOIL 20

GROSS Lbs: 83,640.00
TARE Lbs: 30,420.00
NET 53,220.00

TONS	RATE	AMOUNT
26.61	$	
Tons		

TOTAL AMOUNT:

** Account Customers Only: A State of Arizona per Ton Landfill Fee of $0.25 will be added to your invoice **

Ignacio

CUSTOMER SIGNATURE

WEIGHMASTER SIGNATURE

The conditions on the back of this form must be observed. Your Signature acknowledges that you have read and understood all conditions of this certificate.

You enter this facility at your own risk. CR&R Incorporated assumes NO liability for any injury or damage occurring while you are on the premises of this facility.

WHITE - ORIGINAL CANARY - OFFICE COPY PINK - CUSTOMER COPY

AZTK001

CR&R INCORPORATED – WeighMaster Certificate
environmental services

"PUBLIC WEIGHMASTER'S CERTIFICATE OF WEIGHT AND MEASURE"

This is to certify that the described merchandise, was weighed, counted, or measured by a public or deputy weighmaster, and when properly signed, and sealed, is prima facie evidence of the accuracy of the weight, count, or measure shown as prescribed by law.

SOUTH YUMA COUNTY LANDFILL [illegible] TICKET #: [illegible]
A CR & R INC COMPANY [illegible]
YUMA AZ. [illegible]
928 341 [illegible]

DATE: [illegible]
IN: 10:25:39 AM
OUT: 10:25:39 AM

HAULER: INDEPENDENT HAU[illegible] OPERATOR: EsmeraldaB
PROFILE: C 6866 [illegible] CITY OF LOS
TRUCK: [illegible]
MANIFEST #[illegible]
ACCOUNT:

GROSS Lbs: 93,740.00
TARE Lbs: 26,500.00
NET 67,240.00

SOURCE: LA LOS ANGELES

TONS	RATE	AMOUNT
33.62		

NH20 - NON HAZARDOUS SOIL 20
MANIFEST CHARGE $40
Loads
TOTAL AMOUNT:

** Account Customers Only: A State of Arizona per Ton Landfill Fee of $0.25 will be added to your invoice **

CUSTOMER SIGNATURE

WEIGHMASTER SIGNATURE

The conditions on the back of this form must be observed. Your Signature acknowledges that you have read and understood all conditions of this certificate.

You enter this facility at your own risk. CR&R Incorporated assumes NO liability for any injury or damage occurring while you are on the premises of this facility.

WHITE - ORIGINAL CANARY - OFFICE COPY PINK - CUSTOMER COPY

AZTK001

	6th Street Bridge to Yuma County Landfill			
DATE	**TRUCK NAME**	**TICKET #**	**PROFILE #**	**TOTAL TONS**
02/14/2022	QBAYSOY-17	198421	C-6866	24.940
02/14/2022	LIMONES-60	198422	C-6866	25.640
02/14/2022	FIGUEROA-24	198423	C-6866	26.810
02/14/2022	JM-102	198424	C-6866	26.680
02/14/2022	LAP-39	198427	C-6866	33.350
02/14/2022	OCHOAS-126	198429	C-6866	32.510
02/14/2022	MATINEZ-127	198431	C-6866	28.600
02/14/2022	DFB-01	198432	C-6866	26.140
02/14/2022	ESPINOSA-01	198433	C-6866	28.650
02/14/2022	VAQUEZ&SONS-23	198434	C-6866	24.690
02/14/2022	ROMERO-05	198439	C-6866	26.720
02/14/2022	PEPE'S-02	198442	C-6866	26.620
02/14/2022	B&B-729	198444	C-6866	26.630
02/14/2022	F&SONS-04	198453	C-6866	25.670
02/14/2022	ESPESIL-86	198463	C-6866	25.860
02/14/2022	ROMCAMI-731	198466	C-6866	24.980
02/14/2022	MG-20	198468	C-6866	31.960
02/14/2022	ROMERO-17	198471	C-6866	26.470
02/14/2022	ROMERO-07	198473	C-6866	26.110
02/14/2022	ROLIN-2623	198478	C-6866	23.100
02/14/2022	NWO-345	198480	C-6866	27.740
				569.870
02/15/2022	LIMONES-60	198626	C-6866	26.630
02/15/2022	FIGUEROA-24	198628	C-6866	24.860
02/15/2022	QBAYSOY-17	198630	C-6866	24.520
02/15/2022	B&B-729	198638	C-6866	27.560
02/15/2022	VAQUEZ&SONS-23	198663	C-6866	24.330
				127.900

CR&R INCORPORATED environmental services – WeighMaster Certificate

"PUBLIC WEIGHMASTER'S CERTIFICATE OF WEIGHT AND MEASURE"

This is to certify that the described merchandise, was weighed, counted, or measured by a public or deputy weighmaster, and when properly signed, and sealed, is prima facie evidence of the accuracy of the weight, count, or measure shown as prescribed by law.

24.94

CUSTOMER SIGNATURE

WEIGHMASTER SIGNATURE

The conditions on the back of this form must be observed. Your Signature acknowledges that you have read and understood all conditions of this certificate. You enter this facility at your own risk. CR&R Incorporated assumes NO liability for any injury or damage occurring while you are on the premises of this facility.

WHITE - ORIGINAL CANARY - OFFICE COPY PINK - CUSTOMER COPY

AZTK001

CR&R INCORPORATED – WeighMaster Certificate

environmental services

"PUBLIC WEIGHMASTER'S CERTIFICATE OF WEIGHT AND MEASURE"

This is to certify that the described merchandise, was weighed, counted, or measured by a public or deputy weighmaster, and when properly signed, and sealed, is prima facie evidence of the accuracy of the weight, count, or measure shown as prescribed by law.

25.64

CUSTOMER SIGNATURE

WEIGHMASTER SIGNATURE

The conditions on the back of this form must be observed. Your Signature acknowledges that you have read and understood all conditions of this certificate.

You enter this facility at your own risk. CR&R Incorporated assumes NO liability for any injury or damage occurring while you are on the premises of this facility.

WHITE - ORIGINAL CANARY - OFFICE COPY PINK - CUSTOMER COPY

AZTK001

CR&R INCORPORATED – WeighMaster Certificate
environmental services

"PUBLIC WEIGHMASTER'S CERTIFICATE OF WEIGHT AND MEASURE"

This is to certify that the described merchandise, was weighed, counted, or measured by a public or deputy weighmaster, and when properly signed, and sealed, is prima facie evidence of the accuracy of the weight, count, or measure shown as prescribed by law.

SOUTH YUMA COUNTY LANDFILL IN TICKET #: 198423
A. CR & R INC COMPANY ORIGINAL
YUMA AZ. 85365 DATE: 2/14/2022
928-341-9300 IN: 12:27:44 PM
OUT: 12:27:44 PM
HAULER: INDEPENDENT HAULER OPERATOR: EsmeraldaB
PROFILE: C-6866 C-6866- CITY OF LOS
TRUCK: FIGUEROA-24 GROSS Lbs: 83,100.00
MANIFEST #0035369698716 TARE Lbs: 29,480.00
ACCOUNT: 26.81 NET 53,620.00
SOURCE: LA LOS ANGELES TONS RATE AMOUNT
NH30 - NON HAZARDOUS SOIL 26.81
MANIFEST CHARGE $4[illegible] Loads
TOTAL AMOUNT:

** Account Customers Only: [illegible] of Arizona per Ton Landfill Fee of $0.25 will be added to your invoice [illegible]

CUSTOMER SIGNATURE WEIGHMASTER SIGNATURE

The conditions on the back of this form must be observed. Your Signature acknowledges that you have read and understood all conditions of this certificate.

You enter this facility at your own risk. CR&R Incorporated assumes NO liability for any injury or damage occurring while you are on the premises of this facility.

WHITE - ORIGINAL CANARY - OFFICE COPY PINK - CUSTOMER COPY AZTK001

CR&R INCORPORATED – WeighMaster Certificate
environmental services

"PUBLIC WEIGHMASTER'S CERTIFICATE OF WEIGHT AND MEASURE"

This is to certify that the described merchandise, was weighed, counted, or measured by a public or deputy weighmaster, and when properly signed, and sealed, is prima facie evidence of the accuracy of the weight, count, or measure shown as prescribed by law.

SOUTH YUMA COUNTY LANDFILL IN
A CR & R INC COMPANY ORIGINAL
YUMA AZ, 85365
928 341 9300

TICKET #: 198424
DATE: 2/14/2022
IN: 12:30:24 PM
OUT: 12:30:24 PM

HAULER: INDEPENDENT HAULER
PROFILE: C 6866 C 6866 CITY OF LOS
TRUCK: JM 102
MANIFEST #
ACCOUNT:
SOURCE: LA LOS ANGELES
MH20 NON HAZARDOUS SOLID
C153694783F1E

OPERATOR: Esmeralda8
GROSS Lbs: 85,080.00
TARE Lbs: 31,720.00
NET 53,360.00
26.68
TONS RATE AMOUNT
26.68
Tons
TOTAL AMOUNT:

** Account Customers Only. A State of Arizona per Ton Landfill fee of $0.25 will be added to your invoice.

JCB

CUSTOMER SIGNATURE

WEIGHMASTER SIGNATURE

The conditions on the back of this form must be observed. Your Signature acknowledges that you have read and understood all conditions of this certificate.

You enter this facility at your own risk. CR&R Incorporated assumes NO liability for any injury or damage occurring while you are on the premises of this facility.

WHITE - ORIGINAL CANARY - OFFICE COPY PINK - CUSTOMER COPY

AZTK001

CR&R INCORPORATED – WeighMaster Certificate

environmental services

"PUBLIC WEIGHMASTER'S CERTIFICATE OF WEIGHT AND MEASURE"

This is to certify that the described merchandise, was weighed, counted, or measured by a public or deputy weighmaster, and when properly signed, and sealed, is prima facie evidence of the accuracy of the weight, count, or measure shown as prescribed by law.

33.35

CUSTOMER SIGNATURE

WEIGHMASTER SIGNATURE

The conditions on the back of this form must be observed. Your Signature acknowledges that you have read and understood all conditions of this certificate.

You enter this facility at your own risk. CR&R Incorporated assumes NO liability for any injury or damage occurring while you are on the premises of this facility.

WHITE - ORIGINAL CANARY - OFFICE COPY PINK - CUSTOMER COPY

AZTK001

CR&R INCORPORATED – WeighMaster Certificate
environmental services

"PUBLIC WEIGHMASTER'S CERTIFICATE OF WEIGHT AND MEASURE"

This is to certify that the described merchandise, was weighed, counted, or measured by a public or deputy weighmaster, and when properly signed, and sealed, is prima facie evidence of the accuracy of the weight, count, or measure shown as prescribed by law.

SOUTH YUMA COUNTY LANDFILL IN
A CR & R INC COMPANY ORIGINAL
YUMA AZ.85365
928-341-9300

TICKET #: 198429
DATE: 2/14/2022
IN: 12:46:38 PM
OUT: 12:46:38 PM
OPERATOR: EsmeraldaB

HAULER: INDEPENDENT HAULER
PROFILE: C 6866 C 6866- CITY OF LOS
TRUCK: UCHAAS-126
MANIFEST #0[illegible]
ACCOUNT:
SOURCE: LA LOS ANGELES TONS
MH20 - NON HAZARDOUS SOIL 32.51
MANIFEST CHARGE $40 Loads

GROSS Lbs: 91,520.00
TARE Lbs: 26,500.00
NET 65,020.00
RATE AMOUNT

TOTAL AMOUNT:

32.51

** Account Customers Only: [illegible] per Ton Landfill Fee of $0.25 will be added to your invoice

CUSTOMER SIGNATURE

WEIGHMASTER SIGNATURE

The conditions on the back of this form must be observed. Your Signature acknowledges that you have read and understood all conditions of this certificate.

You enter this facility at your own risk. CR&R Incorporated assumes NO liability for any injury or damage occurring while you are on the premises of this facility.

WHITE - ORIGINAL CANARY - OFFICE COPY PINK - CUSTOMER COPY

AZTK001

CR&R INCORPORATED – WeighMaster Certificate
environmental services

"PUBLIC WEIGHMASTER'S CERTIFICATE OF WEIGHT AND MEASURE"

This is to certify that the described merchandise, was weighed, counted, or measured by a public or deputy weighmaster, and when properly signed, and sealed, is prima facie evidence of the accuracy of the weight, count, or measure shown as prescribed by law.

SOUTH YUMA COUNTY LANDFILL INC. TICKET #: 198431
A CR & R INC COMPANY ORIGINAL
YUMA AZ 85365 DATE: 2/14/2022
928-341-9300 IN: 12:50:34 PM
OUT: 12:50:34 PM

HAULER: INDEPENDENT HAULER OPERATOR: EsmeraldaB
PROFILE: C 6866
TRUCK: MATINEZ-127 GROSS Lbs: 88,200.00
MANIFEST #015369781flc TARE Lbs: 31,000.00
ACCOUNT: NET 57,200.00
SOURCE: LA LOS ANGELES TONS RATE AMOUNT
NH20 NON HAZARDOUS SOIL 20 28.60
MANIFEST CHARGE $40 Loads
TOTAL AMOUNT:

28.60

** Account Customers Only: A State of Arizona per ton Landfill fee of $0.25 will be added to your invoice **

CUSTOMER SIGNATURE

WEIGHMASTER SIGNATURE

The conditions on the back of this form must be observed. Your Signature acknowledges that you have read and understood all conditions of this certificate.

You enter this facility at your own risk. CR&R Incorporated assumes NO liability for any injury or damage occurring while you are on the premises of this facility.

WHITE - ORIGINAL CANARY - OFFICE COPY PINK - CUSTOMER COPY AZTK001

CR&R INCORPORATED – WeighMaster Certificate

environmental services

"PUBLIC WEIGHMASTER'S CERTIFICATE OF WEIGHT AND MEASURE"

This is to certify that the described merchandise, was weighed, counted, or measured by a public or deputy weighmaster, and when properly signed, and sealed, is prima facie evidence of the accuracy of the weight, count, or measure shown as prescribed by law.

26.14

**** Account Customers Only: A State of Arizona mandated Landfill fee of $0.25 will be added to your invoice. ****

CUSTOMER SIGNATURE

WEIGHMASTER SIGNATURE

The conditions on the back of this form must be observed. Your Signature acknowledges that you have read and understood all conditions of this certificate. You enter this facility at your own risk. CR&R Incorporated assumes NO liability for any injury or damage occurring while you are on the premises of this facility.

WHITE - ORIGINAL CANARY - OFFICE COPY PINK - CUSTOMER COPY

AZTK001

CR&R INCORPORATED – WeighMaster Certificate
environmental services

"PUBLIC WEIGHMASTER'S CERTIFICATE OF WEIGHT AND MEASURE"
This is to certify that the described merchandise, was weighed, counted, or measured by a public or deputy weighmaster, and when properly signed, and sealed, is prima facie evidence of the accuracy of the weight, count, or measure shown as prescribed by law.

SOUTH YUMA COUNTY LANDFILL IN
A CR & R INC COMPANY
YUMA AZ. 85365
928-341-9300

ORIGINAL

TICKET #: 198433
DATE: 2/14/2022
IN: 12:55:12 PM
OUT: 12:55:12 PM
OPERATOR: EsmeraldaB

HAULER: INDEPENDENT HAULER
PROFILE: C-6866 C-6866- CITY OF LOS
TRUCK: ESPINOSA-01
MANIFEST #015369696fle
ACCOUNT:
SOURCE: LA LOS ANGELES
NH20 - NON HAZARDOUS SOIL
MANIFEST CHARGE $40

28.65

GROSS Lbs: 86,160.00
TARE Lbs: 28,860.00
NET 57,300.00

TONS	RATE	AMOUNT
28.65		

Loads
TOTAL AMOUNT:

** Account Customers Only: [illegible] Arizona per ton Landfill fee of $0.25 will be added to your invoice

CUSTOMER SIGNATURE

WEIGHMASTER SIGNATURE

The conditions on the back of this form must be observed. Your Signature acknowledges that you have read and understood all conditions of this certificate.
You enter this facility at your own risk. CR&R Incorporated assumes NO liability for any injury or damage occurring while you are on the premises of this facility.

WHITE - ORIGINAL CANARY - OFFICE COPY PINK - CUSTOMER COPY

AZTK001

CR&R INCORPORATED – WeighMaster Certificate

environmental services

"PUBLIC WEIGHMASTER'S CERTIFICATE OF WEIGHT AND MEASURE"

This is to certify that the described merchandise, was weighed, counted, or measured by a public or deputy weighmaster, and when properly signed, and sealed, is prima facie evidence of the accuracy of the weight, count, or measure shown as prescribed by law.

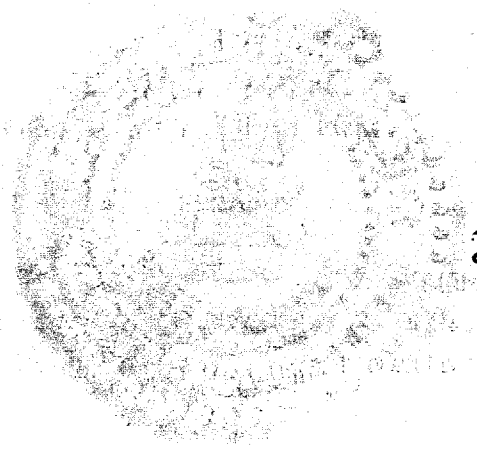

24.09

CUSTOMER SIGNATURE

WEIGHMASTER SIGNATURE

The conditions on the back of this form must be observed. Your Signature acknowledges that you have read and understood all conditions of this certificate.

You enter this facility at your own risk. CR&R Incorporated assumes NO liability for any injury or damage occurring while you are on the premises of this facility.

WHITE - ORIGINAL CANARY - OFFICE COPY PINK - CUSTOMER COPY

AZTK001

CR&R INCORPORATED – WeighMaster Certificate
environmental services

"PUBLIC WEIGHMASTER'S CERTIFICATE OF WEIGHT AND MEASURE"

This is to certify that the described merchandise, was weighed, counted, or measured by a public or deputy weighmaster, and when properly signed, and sealed, is prima facie evidence of the accuracy of the weight, count, or measure shown as prescribed by law.

SOUTH YUMA COUNTY LANDFILL IN
A CR & R INC COMPANY ORIGINAL
YUMA AZ 85365
928-341-9300

TICKET #: 198439
DATE: 2/14/2022
IN: 01:07:55 PM
OUT: 01:07:56 PM
OPERATOR: EsmeraldaB

HAULER: INDEPENDENT HAULER
PROFILE: C-6866 C-6868 CITY OF LOS
TRUCK: ROMERO 05
MANIFEST #0153697771 Ie
ACCOUNT:
SOURCE: LA LOS ANGEL
NH20 - NON HAZARDOUS SOIL
MANIFEST CHARGE $40

GROSS Lbs: 81,700.00
TARE Lbs: 28,260.00
NET 53,440.00
TONS 26.72
Loads

RATE	AMOUNT

TOTAL AMOUNT: 1

24.72

** Account Customers Only: A State of Arizona per ton Landfill fee of $0.25 will be added to your invoice **

CUSTOMER SIGNATURE

WEIGHMASTER SIGNATURE

The conditions on the back of this form must be observed. Your Signature acknowledges that you have read and understood all conditions of this certificate.

You enter this facility at your own risk. CR&R Incorporated assumes NO liability for any injury or damage occurring while you are on the premises of this facility.

WHITE - ORIGINAL CANARY - OFFICE COPY PINK - CUSTOMER COPY

AZTK001

CR&R INCORPORATED – WeighMaster Certificate

environmental services

"PUBLIC WEIGHMASTER'S CERTIFICATE OF WEIGHT AND MEASURE"

This is to certify that the described merchandise, was weighed, counted, or measured by a public or deputy weighmaster, and when properly signed, and sealed, is prima facie evidence of the accuracy of the weight, count, or measure shown as prescribed by law.

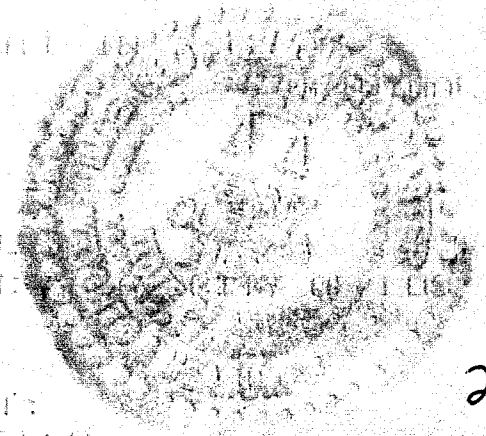

26.62

CUSTOMER SIGNATURE

WEIGHMASTER SIGNATURE

The conditions on the back of this form must be observed. Your Signature acknowledges that you have read and understood all conditions of this certificate.

You enter this facility at your own risk. CR&R Incorporated assumes NO liability for any injury or damage occurring while you are on the premises of this facility.

WHITE - ORIGINAL CANARY - OFFICE COPY PINK - CUSTOMER COPY

AZTK001

CR&R INCORPORATED – WeighMaster Certificate
environmental services

"PUBLIC WEIGHMASTER'S CERTIFICATE OF WEIGHT AND MEASURE"
This is to certify that the described merchandise, was weighed, counted, or measured by a public or deputy weighmaster, and when properly signed, and sealed, is prima facie evidence of the accuracy of the weight, count, or measure shown as prescribed by law.

SOUTH YUMA COUNTY LANDFILL IN
A CR & R INC COMPANY
YUMA AZ. 85365
928-341-9300

TICKET #: 198444

DATE: 2/14/2022
IN: 01:23:24 PM
OUT: 01:23:24 PM
OPERATOR: EsmeraldaB

HAULER: INDEPENDENT HAULER
PROFILE: C-6866 C-68
TRUCK: 8&8-729
MANIFEST #015369773file
ACCOUNT:

GROSS Lbs: 82,720.00
TARE Lbs: 29,460.00
NET 53,260.00

26.63

SOURCE: LA LOS ANGELES
NH20 - NON HAZARDOUS SOIL 20
MANIFEST CHARGE $40

TONS 26.63
Loads

RATE AMOUNT

TOTAL AMOUNT: 1

** Account Customers Only: A State of Arizona per Ton Landfill fee of $0.25 will be added to your invoice **

CUSTOMER SIGNATURE

WEIGHMASTER SIGNATURE

The conditions on the back of this form must be observed. Your Signature acknowledges that you have read and understood all conditions of this certificate. You enter this facility at your own risk. CR&R Incorporated assumes NO liability for any injury or damage occurring while you are on the premises of this facility.

AZTK001

WHITE - ORIGINAL CANARY - OFFICE COPY PINK - CUSTOMER COPY

CR&R INCORPORATED – WeighMaster Certificate
environmental services

"PUBLIC WEIGHMASTER'S CERTIFICATE OF WEIGHT AND MEASURE"

This is to certify that the described merchandise, was weighed, counted, or measured by a public or deputy weighmaster, and when properly signed, and sealed, is prima facie evidence of the accuracy of the weight, count, or measure shown as prescribed by law.

SOUTH YUMA COUNTY LANDFILL IN
A CR & R INC COMPANY ORIGINAL
YUMA AZ 85365
[illegible]

TICKET #: [illegible]
DATE: [illegible]
IN: 01:40:10 PM
OUT: 01:40:10 PM

HAULER: INDEPENDENT HAULER
PROFILE: [illegible] [illegible] CITY OF [illegible]
TRUCK: [illegible]
MANIFEST [illegible]
ACCOUNT:

OPERATOR: Esmeraldab
GROSS Lbs: 79,940.00
TARE Lbs: 28,600.00
NET 51,340.00

25.47

SOURCE: [illegible] LOS ANGELES
NA20 - NON HAZARDOUS SOIL 20
MANIFEST CHARGE $40

TONS 25.67
Loads

RATE AMOUNT

TOTAL AMOUNT:

** Account Customers Only: A State of Arizona [illegible] Ton Landfill fee of $0.25 will be added to your invoice **

CUSTOMER SIGNATURE

WEIGHMASTER SIGNATURE

The conditions on the back of this form must be observed. Your Signature acknowledges that you have read and understood all conditions of this certificate.

You enter this facility at your own risk. CR&R Incorporated assumes NO liability for any injury or damage occurring while you are on the premises of this facility.

WHITE - ORIGINAL CANARY - OFFICE COPY PINK - CUSTOMER COPY

AZTK001

CR&R INCORPORATED – WeighMaster Certificate

environmental services

"PUBLIC WEIGHMASTER'S CERTIFICATE OF WEIGHT AND MEASURE"

This is to certify that the described merchandise, was weighed, counted, or measured by a public or deputy weighmaster, and when properly signed, and sealed, is prima facie evidence of the accuracy of the weight, count, or measure shown as prescribed by law.

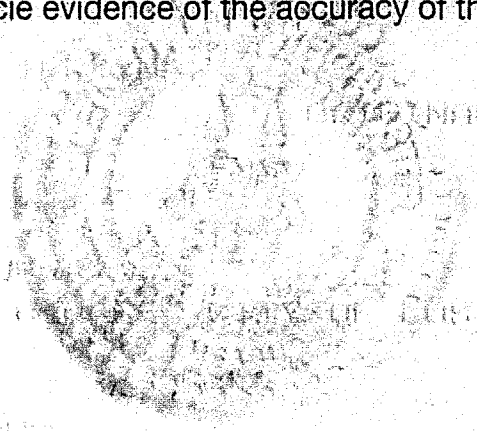

25.86

CUSTOMER SIGNATURE

WEIGHMASTER SIGNATURE

The conditions on the back of this form must be observed. Your Signature acknowledges that you have read and understood all conditions of this certificate.

You enter this facility at your own risk. CR&R Incorporated assumes NO liability for any injury or damage occurring while you are on the premises of this facility.

WHITE - ORIGINAL CANARY - OFFICE COPY PINK - CUSTOMER COPY

AZTK001

CR&R INCORPORATED – WeighMaster Certificate
environmental services

"PUBLIC WEIGHMASTER'S CERTIFICATE OF WEIGHT AND MEASURE"

This is to certify that the described merchandise, was weighed, counted, or measured by a public or deputy weighmaster, and when properly signed, and sealed, is prima facie evidence of the accuracy of the weight, count, or measure shown as prescribed by law.

SOUTH YUMA COUNTY LANDFILL INC
A CR & R INC COMPANY ORIGINAL
YUMA AZ 85365
928-341-9300

TICKET #: 198466
DATE: 2/14/2022
IN: 02:01:27 PM
OUT: 02:01:27 PM
OPERATOR: EsmeraldaB

HAULER: INDEPENDENT HAULER
PROFILE: C-6866 C-6866 CITY OF LOS
TRUCK: ROMCAMI 731
MANIFEST #015369774Tle
ACCOUNT:
SOURCE: LA LOS ANGELES
NH20 - NON HAZARDOUS SOIL 20
MANIFEST CHARGE $40

GROSS Lbs: 80,380.00
TARE Lbs: 30,420.00
NET 49,960.00

24.98

TONS	RATE	AMOUNT
24.98		
Loads		

TOTAL AMOUNT:

** Account Customers Only: A State of Arizona per Ton Landfill fee of $0.25 will be added to your invoice **

Nerico

CUSTOMER SIGNATURE

WEIGHMASTER SIGNATURE

The conditions on the back of this form must be observed. Your Signature acknowledges that you have read and understood all conditions of this certificate.

You enter this facility at your own risk. CR&R Incorporated assumes NO liability for any injury or damage occurring while you are on the premises of this facility.

WHITE - ORIGINAL CANARY - OFFICE COPY PINK - CUSTOMER COPY

AZTK001

CR&R INCORPORATED – WeighMaster Certificate
environmental services

"PUBLIC WEIGHMASTER'S CERTIFICATE OF WEIGHT AND MEASURE"

This is to certify that the described merchandise, was weighed, counted, or measured by a public or deputy weighmaster, and when properly signed, and sealed, is prima facie evidence of the accuracy of the weight, count, or measure shown as prescribed by law.

SOUTH YUMA COUNTY LANDFILL
A CR & R INC COMPANY
YUMA AZ. 85365
928 341 0300

TICKET #: 198468

DATE: 2/14/2022
IN: 02:05:15 PM
OUT: 02:05:15 PM
OPERATOR: EsmeraldaB

HAULER: INDEPENDENT HAULER
PROFILE: C 6866 C 6866 [illegible] LBS
TRUCK: MG 420
MANIFEST #015269778 1e
ACCOUNT:
SOURCE: LA LOS ANGELES
NH20 - NON HAZARDOUS SOIL 20
MANIFEST CHARGE $40

GROSS Lbs: 92,820.00
TARE Lbs: 28,900.00
NET 63,920.00

31.96

TONS	RATE	AMOUNT
31.96		

Loads

TOTAL AMOUNT:

** Account Customers Only: A State of Arizona per ton Landfill fee of $0.25 will be added to your invoice **

Juan
CUSTOMER SIGNATURE

Penny Guerra
WEIGHMASTER SIGNATURE

The conditions on the back of this form must be observed. Your Signature acknowledges that you have read and understood all conditions of this certificate.

You enter this facility at your own risk. CR&R Incorporated assumes NO liability for any injury or damage occurring while you are on the premises of this facility.

WHITE - ORIGINAL CANARY - OFFICE COPY PINK - CUSTOMER COPY

AZTK001

CR&R INCORPORATED – WeighMaster Certificate
environmental services

"PUBLIC WEIGHMASTER'S CERTIFICATE OF WEIGHT AND MEASUR

This is to certify that the described merchandise, was weighed, counted, measured by a public or deputy weighmaster, and when properly signed, and sealed, is prima facie evidence of the accuracy of the weight, count, or measure shown as prescribed by law.

SOUTH YUMA COUNTY LANDFILL [illegible] TICKET #: [illegible]
A CR & R INC COMPANY ORIGINAL
YUMA AZ. [illegible]
[illegible]

DATE: [illegible]
IN: [illegible]
OUT: [illegible]
OPERATOR: Esmeraldaß

HAULER: INDEPENDENT HAULER
PROFILE: [illegible] [illegible]
TRUCK: [illegible]
MANIFEST #[illegible]

GROSS Lbs: [illegible]
TARE Lbs: [illegible]
NET: [illegible]

ACCOUNT:
SOURCE: LA LOS ANGELES
NH20 - NON HAZARDOUS SOIL 20
MANIFEST CHARGE $40

24.47

TONS 26.47
Loads

RATE AMOUNT

TOTAL AMOUNT:

** Account Customers Only: A State of Arizona per Ton Landfill fee of $0.25 will be added to your invoice **

CUSTOMER SIGNATURE

WEIGHMASTER SIGNATURE

The conditions on the back of this form must be observed. Your Signature acknowledges that you have read and understood all conditions of this certificate.

You enter this facility at your own risk. CR&R Incorporated assumes NO liability for any injury or damage occurring while you are on the premises of this facility.

WHITE - ORIGINAL CANARY - OFFICE COPY PINK - CUSTOMER COPY

AZTK001

CR&R INCORPORATED – WeighMaster Certificate
environmental services

"PUBLIC WEIGHMASTER'S CERTIFICATE OF WEIGHT AND MEASURE"

This is to certify that the described merchandise, was weighed, counted, or measured by a public or deputy weighmaster, and when properly signed, and sealed, is prima facie evidence of the accuracy of the weight, count, or measure shown as prescribed by law.

SOUTH YUMA COUNTY LANDFILL INC
A CR & R SAL COMPANY
YUMA AZ 85365
928 341 9300

TICKET #: 198473
DATE: 2/14/2022
IN: 02:13:20 PM
OUT: 02:13:20 PM
OPERATOR: GsmeraldaB

HAULER: INDEPENDENT HAULER
PROFILE: C 6866 C 6[illegible] LBS
TRUCK: [illegible]
MANIFEST #[illegible]

GROSS Lbs: 81,640.00
TARE Lbs: 29,420.00
NET 52,220.00

ACCOUNT:
SOURCE: LA LOS ANGELES
MH20 NON HAZARDOUS SOIL 20
MANIFEST CHARGE $40

TONS 26.11
Loads

RATE AMOUNT

TOTAL AMOUNT:

26.11

** Account Customers Only: A State of Arizona per Ton Landfill fee of $0.25 will be added to your invoice **

Joel

CUSTOMER SIGNATURE

Denny Greco

WEIGHMASTER SIGNATURE

The conditions on the back of this form must be observed. Your Signature acknowledges that you have read and understood all conditions of this certificate.

You enter this facility at your own risk. CR&R Incorporated assumes NO liability for any injury or damage occurring while you are on the premises of this facility.

WHITE - ORIGINAL CANARY - OFFICE COPY PINK - CUSTOMER COPY

AZTK001

CR&R INCORPORATED – WeighMaster Certificate
environmental services

"PUBLIC WEIGHMASTER'S CERTIFICATE OF WEIGHT AND MEASURE"

This is to certify that the described merchandise, was weighed, counted, or measured by a public or deputy weighmaster, and when properly signed, and sealed, is prima facie evidence of the accuracy of the weight, count, or measure shown as prescribed by law.

SOUTH YUMA COUNTY LANDFILL IN
A CR & R INC COMPANY ORIGINAL
YUMA AZ. 85365
920 341 9300

TICKET #: 198478
DATE: 2/14/2022
IN: 02:23:51 PM
OUT: 02:23:51 PM
OPERATOR: EsmeraldaB

HAULER: INDEPENDENT HAULER
PROFILE: 6866 C 6866 DIV OF LOS
TRUCK: ROLIN-3623
MANIFEST #01536172411
ACCOUNT:
SOURCE: LA LOS ANGELES
NU20 - NON HAZARDOUS SOIL 20
MANIFEST CHARGE $40

GROSS Lbs: 75,880.00
TARE Lbs: 29,680.00
NET 46,200.00

23.10

TONS	RATE	AMOUNT
23.10		
1 dads	$	
TOTAL AMOUNT:		$

** Account Customers Only: A State of Arizona per Ton Landfill fee of $0.25 will be added to your invoice **

CUSTOMER SIGNATURE

WEIGHMASTER SIGNATURE

The conditions on the back of this form must be observed. Your Signature acknowledges that you have read and understood all conditions of this certificate.

You enter this facility at your own risk. CR&R Incorporated assumes NO liability for any injury or damage occurring while you are on the premises of this facility.

WHITE - ORIGINAL CANARY - OFFICE COPY PINK - CUSTOMER COPY

AZTK001

CR&R INCORPORATED – WeighMaster Certificate
environmental services

14

"PUBLIC WEIGHMASTER'S CERTIFICATE OF WEIGHT AND MEASURE"

This is to certify that the described merchandise, was weighed, counted, or measured by a public or deputy weighmaster, and when properly signed, and sealed, is prima facie evidence of the accuracy of the weight, count, or measure shown as prescribed by law.

SOUTH YUMA COUNTY LANDFILL IN
A CR & R INC COMPANY ORIGINAL
YUMA AZ.85365
928-341-9300

TICKET #: 198480

DATE: 2/14/2022
IN: 02:26:14 PM
OUT: 02:26:14 PM
OPERATOR: EsmeraldaB

HAULER: INDEPENDENT HAULER
PROFILE: C-6866 C-6866 CITY OF IDS
TRUCK: NWO 345
MANIFEST #0[illegible]
ACCOUNT:
SOURCE: LA LOS ANGELES
NH20 - NON HAZARDOUS SOIL 20
MANIFEST CHARGE $40

GROSS Lbs: 83,580.00
TARE Lbs: 28,100.00
NET 55,480.00

27.74

TONS	RATE	AMOUNT
27.74		
Loads		

TOTAL AMOUNT:

** Account Customers Only: A State of Arizona per Ton Landfill fee of $0.25 will be added to your invoice **

CUSTOMER SIGNATURE

WEIGHMASTER SIGNATURE

The conditions on the back of this form must be observed. Your Signature acknowledges that you have read and understood all conditions of this certificate.

You enter this facility at your own risk. CR&R Incorporated assumes NO liability for any injury or damage occurring while you are on the premises of this facility.

WHITE - ORIGINAL CANARY - OFFICE COPY PINK - CUSTOMER COPY

AZTK001

CR&R INCORPORATED – WeighMaster Certificate
environmental services

"PUBLIC WEIGHMASTER'S CERTIFICATE OF WEIGHT AND MEASURE"

This is to certify that the described merchandise, was weighed, counted, or measured by a public or deputy weighmaster, and when properly signed, and sealed, is prima facie evidence of the accuracy of the weight, count, or measure shown as prescribed by law.

SOUTH YUMA COUNTY LANDFILL IN
A CR & R INC COMPANY
YUMA AZ. 85365
928 341 9300

TICKET #: 198626

DATE: 2/15/2022
IN: 12:30:24 PM
OUT: 12:30:24 PM

HAULER: INDEPENDENT HAULER
PROFILE: C 6866
TRUCK: LIMONES 60
MANIFEST #01536972BFFE
ACCOUNT:
SOURCE: LA LOS ANGELES
NH20 - NON HAZARDOUS SOIL 20
MANIFEST CHARGE $40

OPERATOR: EsmeraldaB

GROSS Lbs: 82,460.00
TARE Lbs: 29,200.00
NET 53,260.00

24.63

TONS 26.63
Loads

RATE AMOUNT

TOTAL AMOUNT:

** Account Customers Only: A State of Arizona per ton Landfill fee of $0.25 will be added to your invoice **

Al Fredo
CUSTOMER SIGNATURE

Donny [illegible]
WEIGHMASTER SIGNATURE

The conditions on the back of this form must be observed. Your Signature acknowledges that you have read and understood all conditions of this certificate.

You enter this facility at your own risk. CR&R Incorporated assumes NO liability for any injury or damage occurring while you are on the premises of this facility.

WHITE - ORIGINAL CANARY - OFFICE COPY PINK - CUSTOMER COPY

AZTK001

CR&R INCORPORATED – WeighMaster Certificate
environmental services

"PUBLIC WEIGHMASTER'S CERTIFICATE OF WEIGHT AND MEASURE"

This is to certify that the described merchandise, was weighed, counted, or measured by a public or deputy weighmaster, and when properly signed, and sealed, is prima facie evidence of the accuracy of the weight, count, or measure shown as prescribed by law.

SOUTH YUMA COUNTY LANDFILL INC
A CR & R INC COMPANY
YUMA AZ. 85365
928-341-0300

TICKET #: 198628
MANUAL
DATE: 2/15/2022
IN: 12:32:43 PM
OUT: 12:32:43 PM
OPERATOR: EsmeraldaB

HAULER: INDEPENDENT HAULER
PROFILE: C-6866 C-6866 [illegible]
TRUCK: FIGUEROA 24
MANIFEST #01536973 FILE
ACCOUNT:
SOURCE: LA LOS ANGELES
NH20 - NON HAZARDOUS SOIL 20
MANIFEST CHARGE $40

GROSS Lbs: 79,200.00
TARE Lbs: 29,480.00
NET 49,720.00

24.86

TONS	RATE	AMOUNT
24.86		
Loads		

TOTAL AMOUNT:

** Account Customers Only: A State of Arizona per Ton Landfill fee of $0.25 will be added to your invoice **

Jesus
CUSTOMER SIGNATURE

Ronny Green
WEIGHMASTER SIGNATURE

The conditions on the back of this form must be observed. Your Signature acknowledges that you have read and understood all conditions of this certificate.

You enter this facility at your own risk. CR&R Incorporated assumes NO liability for any injury or damage occurring while you are on the premises of this facility.

WHITE - ORIGINAL CANARY - OFFICE COPY PINK - CUSTOMER COPY

AZTK001

CR&R INCORPORATED – WeighMaster Certificate

environmental services

"PUBLIC WEIGHMASTER'S CERTIFICATE OF WEIGHT AND MEASURE"

This is to certify that the described merchandise, was weighed, counted, or measured by a public or deputy weighmaster, and when properly signed, and sealed, is prima facie evidence of the accuracy of the weight, count, or measure shown as prescribed by law.

24.52

CUSTOMER SIGNATURE

WEIGHMASTER SIGNATURE

The conditions on the back of this form must be observed. Your Signature acknowledges that you have read and understood all conditions of this certificate.

You enter this facility at your own risk. CR&R Incorporated assumes NO liability for any injury or damage occurring while you are on the premises of this facility.

WHITE - ORIGINAL CANARY - OFFICE COPY PINK - CUSTOMER COPY

AZTK001

CR&R INCORPORATED – WeighMaster Certificate

environmental services

"PUBLIC WEIGHMASTER'S CERTIFICATE OF WEIGHT AND MEASURE"

This is to certify that the described merchandise was weighed, counted, or measured by a public or deputy weighmaster, and when properly signed, and sealed, is prima facie evidence of the accuracy of the weight, count, or measure shown as prescribed by law.

SOUTH YUMA COUNTY LANDFILL [illegible] ORIGINAL

A CR & R INC COMPANY

YUMA AZ. 85365

928-341-9300

TICKET #: 198638

DATE: 2/15/2022

IN: 12:59:57 PM

OUT: 12:59:57 PM

OPERATOR: EsmeraldaB

HAULER: INDEPENDENT [illegible] COUNTY OF LOS

PROFILE: C-6666

TRUCK: 838-729

MANIFEST #015369732FLE

ACCOUNT:

SOURCE: LA LOS ANGELES

NR20 - NON HAZARDOUS SOIL 20

MANIFEST CHARGE $40

27.56

GROSS Lbs:	84,500.00
TARE Lbs:	29,460.00
NET	55,120.00

TONS 27.56 RATE AMOUNT

Loads

TOTAL AMOUNT:

** Account Customers Only: A State of Arizona per ton Landfill fee of $0.25 will be added to your invoice **

JOS

CUSTOMER SIGNATURE

WEIGHMASTER SIGNATURE

The conditions on the back of this form must be observed. Your Signature acknowledges that you have read and understood all conditions of this certificate.

You enter this facility at your own risk. CR&R Incorporated assumes NO liability for any injury or damage occurring while you are on the premises of this facility.

AZTK001

WHITE - ORIGINAL CANARY - OFFICE COPY PINK - CUSTOMER COPY

CR&R INCORPORATED – WeighMaster Certificate

environmental services

"PUBLIC WEIGHMASTER'S CERTIFICATE OF WEIGHT AND MEASURE"

This is to certify that the described merchandise, was weighed, counted, or measured by a public or deputy weighmaster, and when properly signed, and sealed, is prima facie evidence of the accuracy of the weight, count, or measure shown as prescribed by law.

24.33

CUSTOMER SIGNATURE

WEIGHMASTER SIGNATURE

The conditions on the back of this form must be observed. Your Signature acknowledges that you have read and understood all conditions of this certificate.

You enter this facility at your own risk. CR&R Incorporated assumes NO liability for any injury or damage occurring while you are on the premises of this facility.

WHITE - ORIGINAL CANARY - OFFICE COPY PINK - CUSTOMER COPY

AZTK001

Appendix E

Kroner Environmental Services, Inc. Imported Fill Memorandum

KRONER ENVIRONMENTAL SERVICES, INC.

M E M O R A N D U M

October 8, 2021

To: Scott Klar

From: Kurt Kroner

Subject: Transmittal of Soil Sample Results – Mission Yard

On September 13, 2021, Kroner Environmental Services (KES) collected seventeen soil samples (MSP-1 through MSP-17) from the top of the stockpile located at Mission Yard (622 North Mission Road). The samples were collected from approximately 3 feet from the surface of the stockpile. Of these samples the following had detectable concentrations of diesel range hydrocarbons above the Soil Reuse/Soil Import limit of 100 mg/kg: MSP-1, MSP-4, MSP-5, MSP-7, MSP-8, MSP-10, MSP-12, and MSP-15. The results of 9/13/21 soil sampling have been reported in the "Mission Yard Soil Sampling 09.13.21" report and submitted to METRO for review on 11/10/21.

On September 28, 2021, KES instructed RCC to remove 3 feet of topsoil from the stockpile at the eight sample locations from 9/13/21 that had high detectable diesel hydrocarbon concentrations and to segregate the contaminated soil in a separate stockpile. KES collected a total of ten soil samples. Eight samples were collected from the Mission Yard stockpile after diesel contaminated soil was removed and segregated at the same sample locations from 9/13/21 which had high diesel hydrocarbon concentrations (MSP-1-2, MSP-4-2, MSP-5-2, MSP-7-2, MSP-8-2, MSP-10-2, MSP-12-2, and MSP-15-2). Note, "MSP-#" of each Sample ID correlates with the Sample IDs and locations of 9/13/21 sample collection. Two additional samples were collected from the segregated contaminated soil stockpile (CSP-1 and CSP-2). This report presents the results of this soil sampling. Attached are the Certified Analytical Reports.

Metals

The metals concentrations for all samples were below typical background levels for Southern California soils. Additionally, metals concentrations for all samples were below the total threshold limit concentrations (TTLC) for determination of hazardous waste per 22 CCR Chapter 11, Article 3 and well below the ten times (by rule of thumb) the STLC value, thus no further Waste Extraction testing (WET) is required.

VOCs

All samples had no detectable concentrations of VOCs.

TPH

The TPH analyses were reported as three different fractions of the hydrocarbon range with C4-C12 representing the gasoline range, C13-C22 representing the diesel range and C23-C40, representing the oil range. All the samples had no detectable gasoline range hydrocarbons.

Diesel range hydrocarbons were only detected in sample CSP-1 at 356 mg/kg which is above the Soil Reuse/Soil Import limit of 100 mg/kg for diesel range hydrocarbons. All the other samples were non-detect for diesel range hydrocarbons.

Oil range hydrocarbons were detected only in samples CSP-1 and CSP-2 at 324 mg/kg and 226 mg/kg, respectively. These concentrations are below the Soil Reuse/Soil Import limit of 1000 mg/kg for oil range hydrocarbons. All the other samples were non-detect for oil range hydrocarbons.

Conclusion

Based on the sample analyses, the remaining soil in the stockpile at Mission Yard can be imported and reused on the project if no additional material is added to the stockpile. The segregated contaminated material containing samples CSP-1 and CSP-2 will need to be disposed of at permitted disposal facility that can accept this waste.

If you have any questions regarding this memo, please contact us at (310) 474-1500.

Attachments:

Stockpile Photographs
Mission Yard Sampling 9/28/21 Figure
Lab Analysis Report
Mission Yard Soil Sampling 09.13.21 Report

Photographs



Mission Yard Stockpile
(After 3ft topsoil removal from locations: MSP-1, MSP-4, MSP-5, MSP-7, MSP-8, MSP-10, MSP-12, and MSP-15)



Segregated Contaminated Stockpile
(Samples CSP-1 and CSP-2)

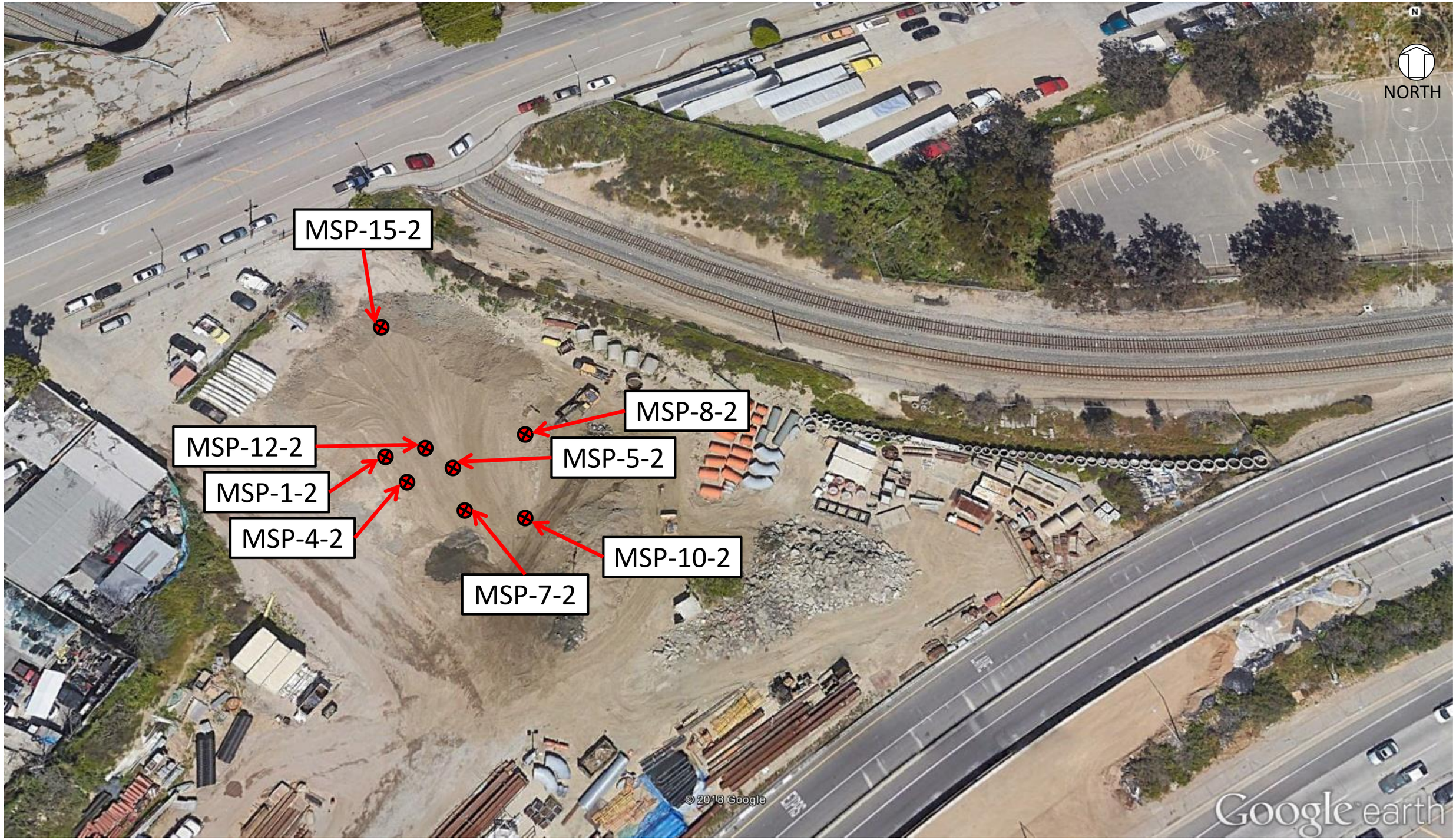

KRONER
ENVIRONMENTAL SERVICES, INC.
10801 National Blvd., Suite 415
Los Angeles, Calif. 90064
TEL 310-474-1500 FAX 310 474-1577

KEY

⊗ Sample Locations

Sample IDs: MSP-1-2, MSP-4-2, MSP-5-2, MSP-7-2, MSP-8-2, MSP-10-2, MSP-12-2, MSP-15-2,

Note: “MSP-#” correlates with the sample ID’s and locations of 9/13/21 sample collection.

Soil Sample Locations Regional Connector
Corridor: Mission Yard
Sampled: 09/28/21

American Scientific Laboratories, LLC
Environmental Testing Services
2520 N. San Fernando Road, LA CA 90065 Tel: (323) 223-9700 • Fax: (323) 223-9500

07 October 2021

Kurt Kroner

Kroner Environmental Services, Inc.

10801 National Blvd. # 415

Los Angeles, CA 90064

Work Order #: 2109254

Project Name: Regional Connector N. Mission Rd.

Project ID: 1093

Site Address: 622 North Mission Road

Enclosed are the results of analyses for samples received by the laboratory on September 28, 2021. If you have any questions concerning this report, please feel free to contact us.

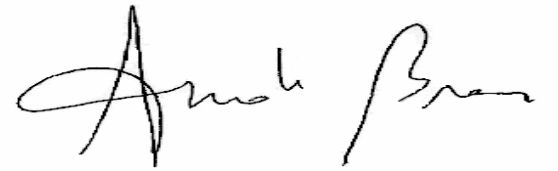

Molky Brar

Laboratory Director

American Scientific Laboratories, LLC (ASL) accepts sample materials from clients for analysis with the assumption that all of the information provided to ASL verbally or in writing by our clients (and/or their agents), regarding samples being submitted to ASL, is complete and accurate. ASL accepts all samples subject to the following conditions:

1) ASL is not responsible for verifying any client-provided information regarding any samples submitted to the laboratory.
2) ASL is not responsible for any consequences resulting from any inaccuracies , omissions, or misrepresentations contained in client-provided information regarding samples submitted to the laboratory.

AMERICAN SCIENTIFIC LABORATORIES, LLC
Environmental Testing Services
2520 N. San Fernando Road, LA, CA 90065 Tel: (323) 223-9700 • Fax: (323) 223-9500

CHAIN OF CUSTODY RECORD

COC# GLOBAL ID _____ E REPORT: ☑ PDF ☐ EDF ☐ EDD ASL JOB# 2109254

Company: Kroner Environmental Services		Report To: Michael Lucey	
Address: 10801 National Blvd., Suite 415	Project Name: Regional Connector	Address:	
Los Angeles, California 90064	Site Address: 622 North Mission Road	Invoice To: Monica Avina	
Telephone: (310) 474-1500 Fax:		Address: SAME	
Special Instruction:	Project ID:		
E-mail: mlucey@kronerenvironmental.com	Project Manager: Kurt Kroner	P.O.#: 1093	

ITEM	LAB USE ONLY Lab ID	SAMPLE DESCRIPTION Sample ID	Date	Time	Container(s) #	Type	Matrix	Preservation	TPH - 8015B Full Rang+	VOCs - 8260B+	CAM Metals - 6010B/7470A	Remarks
	2109254-01	MSP1-2	9/28/21	9:10	1	Glass	Soil	None	X	X	X	
	2109254-02	MSP4-2		9:15	1				X	X	X	
	2109254-03	MSP5-2		9:20	1				X	X	X	
	2109254-04	MSP7-2		9:25	1				X	X	X	
	2109254-05	MSP8-2		9:27	1				X	X	X	
	2109254-06	MSP10-2		9:30	1				X	X	X	
	2109254-07	MSP12-2		9:35	1				X	X	X	
	2109254-08	MSP15-2		9:40	1				X	X	X	

Collected By: Michael Lucey	Date 9/28/21	Time 9:40	Relinquished By:	Date	Time
Relinquished By: Michael Lucey	Date 9/28/21	Time 10:50	Received For Laboratory	Date 9/28/21	Time 10:55
Received By:	Date	Time	Condition of Sample:		

TAT ☑ Normal ☐ Rush

White - Report, Yellow - Laboratory, Pink - Client

Job# 2109254

ASL Sample Receipt Form

Client: Kroner Environmental Services

Date: 9-28-2021

Sample Information:

Temperature: 4.5 °C ☐ Blank ☒ Sample

Custody Seal: ☐ Yes ☒ No ☐ Not Available

Received Within Holding Time: ☒ Yes ☐ No

Container:

Proper Containers and Sufficient Volume: ☒ Yes ☐ No

Soil: __☐ 4oz 8 ☒ 8oz __☐ Sleeve __☐ VOA

Water: __☐ 500AG __☐ 1AG __☐ 125PB __☐ 250PB __☐ 500PB __☐ VOA __☐ Other _____

Air: __☐ Tedlar®

Sample Containers Intact: ☒ Yes ☐ No

Trip Blank ☐ Yes ☒ No

Chain-of-Custody (COC):

Received: ☒ Yes ☐ No

Samplers Name: ☒ Yes ☐ No

Container Labels match COC: ☒ Yes ☐ No

COC documents received complete: ☒ Yes ☐ No

Proper Preservation Noted: ☒ Yes ☐ No

Completed By: Janet Chin

AMERICAN SCIENTIFIC LABORATORIES, LLC
Environmental Testing Services
2520 N. San Fernando Road, LA CA 90065 Tel: (323) 223-9700 • Fax: (323) 223-9500

Kroner Environmental Services, Inc.	Project: Regional Connector N. Mission Rd.	Work Order No: 2109254
10801 National Blvd. # 415	Project Number: 1093	**Reported:**
Los Angeles CA, 90064	Project Manager: Kurt Kroner	10/07/2021 14:32

ANALYTICAL SUMMARY REPORT

Sample ID	Laboratory ID	Matrix	Date Sampled	Date Received
MSP1-2	2109254-01	Solid	09/28/2021 09:10	09/28/2021 10:55
MSP4-2	2109254-02	Solid	09/28/2021 09:15	09/28/2021 10:55
MSP5-2	2109254-03	Solid	09/28/2021 09:20	09/28/2021 10:55
MSP7-2	2109254-04	Solid	09/28/2021 09:25	09/28/2021 10:55
MSP8-2	2109254-05	Solid	09/28/2021 09:27	09/28/2021 10:55
MSP10-2	2109254-06	Solid	09/28/2021 09:30	09/28/2021 10:55
MSP12-2	2109254-07	Solid	09/28/2021 09:35	09/28/2021 10:55
MSP15-2	2109254-08	Solid	09/28/2021 09:40	09/28/2021 10:55

The results in this report apply to the samples analyzed in accordance with the chain of custody document. This analytical report must be reproduced in its entirety.

Amolk Brar, Lab Director

American Scientific Laboratories, LLC
Environmental Testing Services
2520 N. San Fernando Road, LA CA 90065 Tel: (323) 223-9700 • Fax: (323) 223-9500

Kroner Environmental Services, Inc.	Project: Regional Connector N. Mission Rd.	Work Order No: 2109254
10801 National Blvd. # 415	Project Number: 1093	**Reported:**
Los Angeles CA, 90064	Project Manager: Kurt Kroner	10/07/2021 14:32

Analytical Results

Client Sample ID: MSP1-2

Laboratory Sample ID: 2109254-01 (Solid)

Analyte	Result	Notes	MDL	PQL	Units	Dilution	Prep Method	Analyzed	Analyst	Method
Total Mercury (CVAA)				Batch ID: BJ10207			Prepared: 10/05/2021 11:08			
Mercury	**0.0424**	J	0.0100	0.0500	mg/kg	1	7471A	10/06/2021 14:21	LVE	7471A
Total ICP Metals				Batch ID: BJ10206			Prepared: 10/05/2021 11:04			
Antimony	ND		0.200	0.500	mg/kg	1	3050B	10/05/2021 19:23	LVE	SW846 6010B
Arsenic	**0.718**		0.150	0.250	mg/kg	1	3050B	10/05/2021 19:23	LVE	SW846 6010B
Barium	**35.4**		0.0500	0.500	mg/kg	1	3050B	10/05/2021 19:23	LVE	SW846 6010B
Beryllium	**0.111**	J	0.0400	0.500	mg/kg	1	3050B	10/05/2021 19:23	LVE	SW846 6010B
Cadmium	**0.540**		0.0400	0.500	mg/kg	1	3050B	10/05/2021 19:23	LVE	SW846 6010B
Chromium	**3.98**		0.0500	0.500	mg/kg	1	3050B	10/05/2021 19:23	LVE	SW846 6010B
Cobalt	**3.10**		0.0500	0.500	mg/kg	1	3050B	10/05/2021 19:23	LVE	SW846 6010B
Copper	**6.25**		0.0500	0.500	mg/kg	1	3050B	10/05/2021 19:23	LVE	SW846 6010B
Lead	**3.49**		0.100	0.250	mg/kg	1	3050B	10/05/2021 19:23	LVE	SW846 6010B
Molybdenum	**0.159**	J	0.0500	0.500	mg/kg	1	3050B	10/05/2021 19:23	LVE	SW846 6010B
Nickel	**3.44**		0.100	0.500	mg/kg	1	3050B	10/05/2021 19:23	LVE	SW846 6010B
Selenium	ND		0.200	0.500	mg/kg	1	3050B	10/05/2021 19:23	LVE	SW846 6010B
Silver	ND		0.0500	0.500	mg/kg	1	3050B	10/05/2021 19:23	LVE	SW846 6010B
Thallium	ND		0.150	0.500	mg/kg	1	3050B	10/05/2021 19:23	LVE	SW846 6010B
Vanadium	**11.8**		0.0500	0.500	mg/kg	1	3050B	10/05/2021 19:23	LVE	SW846 6010B
Zinc	**24.6**		0.350	0.500	mg/kg	1	3050B	10/05/2021 19:23	LVE	SW846 6010B
Total Petroleum Hydrocarbons(TPH-g)				Batch ID: BJ10004			Prepared: 09/30/2021 09:00			
Gasoline Range Organics	ND		250	500	ug/kg	1	5030A	09/30/2021 21:36	SA	8015B
Surrogate: Bromofluorobenzene			*98.2 %*	*70-120*			5030A	09/30/2021 21:36	SA	*8015B*
Total Petroleum Hydrocarbons(TPH DROORO)				Batch ID: BJ10010			Prepared: 09/30/2021 09:00			
Diesel range organics	ND		1.00	10.0	mg/kg	1	3550B	09/30/2021 18:44	DWI	8015B
Oil Range Organics	ND		17.0	50.0	mg/kg	1	3550B	09/30/2021 18:44	DWI	8015B
Surrogate: Chlorobenzene			*109 %*	*70-120*			3550B	09/30/2021 18:44	DWI	*8015B*

The results in this report apply to the samples analyzed in accordance with the chain of custody document. This analytical report must be reproduced in its entirety.

Amolk Brar, Lab Director

American Scientific Laboratories, LLC
Environmental Testing Services
2520 N. San Fernando Road, LA CA 90065 Tel: (323) 223-9700 • Fax: (323) 223-9500

Kroner Environmental Services, Inc.	Project: Regional Connector N. Mission Rd.	Work Order No: 2109254
10801 National Blvd. # 415	Project Number: 1093	**Reported:**
Los Angeles CA, 90064	Project Manager: Kurt Kroner	10/07/2021 14:32

Analytical Results

Client Sample ID: MSP1-2

Laboratory Sample ID: 2109254-01 (Solid)

Analyte	Result	Notes	MDL	PQL	Units	Dilution	Prep Method	Analyzed	Analyst	Method
Volatile Organic Compounds				Batch ID: BJ10007			Prepared: 09/30/2021 09:00			
Acetone	ND		12.7	50.0	ug/kg	1	5030A	09/30/2021 17:40	SA	8260B
Benzene	ND		0.930	2.00	ug/kg	1	5030A	09/30/2021 17:40	SA	8260B
Bromobenzene	ND		3.39	10.0	ug/kg	1	5030A	09/30/2021 17:40	SA	8260B
Bromochloromethane	ND		0.380	10.0	ug/kg	1	5030A	09/30/2021 17:40	SA	8260B
Bromodichloromethane	ND		0.630	10.0	ug/kg	1	5030A	09/30/2021 17:40	SA	8260B
Bromoform	ND		3.39	50.0	ug/kg	1	5030A	09/30/2021 17:40	SA	8260B
Bromomethane	ND		2.75	30.0	ug/kg	1	5030A	09/30/2021 17:40	SA	8260B
2-Butanone	ND		5.83	50.0	ug/kg	1	5030A	09/30/2021 17:40	SA	8260B
n-Butylbenzene	ND		2.05	10.0	ug/kg	1	5030A	09/30/2021 17:40	SA	8260B
sec-Butylbenzene	ND		3.04	10.0	ug/kg	1	5030A	09/30/2021 17:40	SA	8260B
tert-Butylbenzene	ND		1.34	10.0	ug/kg	1	5030A	09/30/2021 17:40	SA	8260B
Carbon disulfide	ND		5.53	10.0	ug/kg	1	5030A	09/30/2021 17:40	SA	8260B
Carbon tetrachloride	ND		2.48	10.0	ug/kg	1	5030A	09/30/2021 17:40	SA	8260B
Chlorobenzene	ND		0.890	10.0	ug/kg	1	5030A	09/30/2021 17:40	SA	8260B
Chloroethane	ND		2.15	30.0	ug/kg	1	5030A	09/30/2021 17:40	SA	8260B
2-Chloroethylvinyl Ether	ND		5.53	50.0	ug/kg	1	5030A	09/30/2021 17:40	SA	8260B
Chloroform	ND		1.24	10.0	ug/kg	1	5030A	09/30/2021 17:40	SA	8260B
Chloromethane	ND		1.74	30.0	ug/kg	1	5030A	09/30/2021 17:40	SA	8260B
4-Chlorotoluene	ND		1.34	10.0	ug/kg	1	5030A	09/30/2021 17:40	SA	8260B
2-Chlorotoluene	ND		2.35	10.0	ug/kg	1	5030A	09/30/2021 17:40	SA	8260B
1,2-Dibromo-3-chloropropane	ND		2.69	50.0	ug/kg	1	5030A	09/30/2021 17:40	SA	8260B
Dibromochloromethane	ND		0.650	10.0	ug/kg	1	5030A	09/30/2021 17:40	SA	8260B
1,2-Dibromoethane	ND		2.75	10.0	ug/kg	1	5030A	09/30/2021 17:40	SA	8260B
Dibromomethane	ND		2.30	10.0	ug/kg	1	5030A	09/30/2021 17:40	SA	8260B
1,2-Dichlorobenzene	ND		1.65	10.0	ug/kg	1	5030A	09/30/2021 17:40	SA	8260B
1,3-Dichlorobenzene	ND		1.03	10.0	ug/kg	1	5030A	09/30/2021 17:40	SA	8260B
1,4-Dichlorobenzene	ND		2.23	10.0	ug/kg	1	5030A	09/30/2021 17:40	SA	8260B
Dichlorodifluoromethane	ND		2.07	30.0	ug/kg	1	5030A	09/30/2021 17:40	SA	8260B
1,1-Dichloroethane	ND		1.30	10.0	ug/kg	1	5030A	09/30/2021 17:40	SA	8260B
1,2-Dichloroethane	ND		1.57	10.0	ug/kg	1	5030A	09/30/2021 17:40	SA	8260B
1,1-Dichloroethene	ND		1.60	10.0	ug/kg	1	5030A	09/30/2021 17:40	SA	8260B
cis-1,2-Dichloroethene	ND		2.16	10.0	ug/kg	1	5030A	09/30/2021 17:40	SA	8260B
trans-1,2-Dichloroethene	ND		2.60	10.0	ug/kg	1	5030A	09/30/2021 17:40	SA	8260B
1,1-Dichloropropene	ND		0.660	10.0	ug/kg	1	5030A	09/30/2021 17:40	SA	8260B
1,2-Dichloropropane	ND		0.920	10.0	ug/kg	1	5030A	09/30/2021 17:40	SA	8260B
1,3-Dichloropropane	ND		1.36	10.0	ug/kg	1	5030A	09/30/2021 17:40	SA	8260B

The results in this report apply to the samples analyzed in accordance with the chain of custody document. This analytical report must be reproduced in its entirety.

Amolk Brar, Lab Director

American Scientific Laboratories, LLC
Environmental Testing Services
2520 N. San Fernando Road, LA CA 90065 Tel: (323) 223-9700 • Fax: (323) 223-9500

Kroner Environmental Services, Inc.	Project: Regional Connector N. Mission Rd.	Work Order No: 2109254
10801 National Blvd. # 415	Project Number: 1093	**Reported:**
Los Angeles CA, 90064	Project Manager: Kurt Kroner	10/07/2021 14:32

Analytical Results

Client Sample ID: MSP1-2

Laboratory Sample ID: 2109254-01 (Solid)

Analyte	Result	Notes	MDL	PQL	Units	Dilution	Prep Method	Analyzed	Analyst	Method
Volatile Organic Compounds				Batch ID: BJ10007			Prepared: 09/30/2021 09:00			
2,2-Dichloropropane	ND		1.12	10.0	ug/kg	1	5030A	09/30/2021 17:40	SA	8260B
cis-1,3-Dichloropropene	ND		0.980	10.0	ug/kg	1	5030A	09/30/2021 17:40	SA	8260B
trans-1,3-Dichloropropene	ND		0.960	10.0	ug/kg	1	5030A	09/30/2021 17:40	SA	8260B
Ethylbenzene	ND		1.00	2.00	ug/kg	1	5030A	09/30/2021 17:40	SA	8260B
Hexachlorobutadiene	ND		2.77	30.0	ug/kg	1	5030A	09/30/2021 17:40	SA	8260B
2-Hexanone	ND		3.18	50.0	ug/kg	1	5030A	09/30/2021 17:40	SA	8260B
Isopropylbenzene	ND		1.42	10.0	ug/kg	1	5030A	09/30/2021 17:40	SA	8260B
p-Isopropyltoluene	ND		3.86	10.0	ug/kg	1	5030A	09/30/2021 17:40	SA	8260B
Methyl tert-Butyl Ether (MTBE)	ND		1.81	5.00	ug/kg	1	5030A	09/30/2021 17:40	SA	8260B
4-Methyl-2-pentanone (MIBK)	ND		3.14	50.0	ug/kg	1	5030A	09/30/2021 17:40	SA	8260B
Methylene chloride	ND		3.31	50.0	ug/kg	1	5030A	09/30/2021 17:40	SA	8260B
Naphthalene	ND		1.14	10.0	ug/kg	1	5030A	09/30/2021 17:40	SA	8260B
n-Propylbenzene	ND		1.14	10.0	ug/kg	1	5030A	09/30/2021 17:40	SA	8260B
Styrene	ND		0.800	10.0	ug/kg	1	5030A	09/30/2021 17:40	SA	8260B
1,1,1,2-Tetrachloroethane	ND		1.28	10.0	ug/kg	1	5030A	09/30/2021 17:40	SA	8260B
1,1,2,2-Tetrachloroethane	ND		3.25	10.0	ug/kg	1	5030A	09/30/2021 17:40	SA	8260B
Tetrachloroethene	ND		0.930	10.0	ug/kg	1	5030A	09/30/2021 17:40	SA	8260B
Toluene	ND		1.00	2.00	ug/kg	1	5030A	09/30/2021 17:40	SA	8260B
1,2,3-Trichlorobenzene	ND		1.23	10.0	ug/kg	1	5030A	09/30/2021 17:40	SA	8260B
1,2,4-Trichlorobenzene	ND		2.82	10.0	ug/kg	1	5030A	09/30/2021 17:40	SA	8260B
1,1,1-Trichloroethane	ND		2.03	10.0	ug/kg	1	5030A	09/30/2021 17:40	SA	8260B
1,1,2-Trichloroethane	ND		1.74	10.0	ug/kg	1	5030A	09/30/2021 17:40	SA	8260B
Trichloroethene	ND		1.15	10.0	ug/kg	1	5030A	09/30/2021 17:40	SA	8260B
Trichlorofluoromethane	ND		3.15	10.0	ug/kg	1	5030A	09/30/2021 17:40	SA	8260B
1,2,3-Trichloropropane	ND		1.74	10.0	ug/kg	1	5030A	09/30/2021 17:40	SA	8260B
1,2,4-Trimethylbenzene	ND		3.19	10.0	ug/kg	1	5030A	09/30/2021 17:40	SA	8260B
1,3,5- Trimethylbenzene	ND		1.23	10.0	ug/kg	1	5030A	09/30/2021 17:40	SA	8260B
Vinyl acetate	ND		10.8	50.0	ug/kg	1	5030A	09/30/2021 17:40	SA	8260B
Vinyl chloride	ND		2.79	30.0	ug/kg	1	5030A	09/30/2021 17:40	SA	8260B
m,p-Xylenes	ND		1.80	4.00	ug/kg	1	5030A	09/30/2021 17:40	SA	8260B
o-Xylene	ND		1.00	2.00	ug/kg	1	5030A	09/30/2021 17:40	SA	8260B
Surrogate: 4-Bromofluorobenzene			*109 %*		*70-120*		5030A	09/30/2021 17:40	SA	*8260B*
Surrogate: Dibromofluoromethane			*87.5 %*		*70-120*		5030A	09/30/2021 17:40	SA	*8260B*
Surrogate: Toluene-d8			*108 %*		*70-120*		5030A	09/30/2021 17:40	SA	*8260B*

The results in this report apply to the samples analyzed in accordance with the chain of custody document. This analytical report must be reproduced in its entirety.

Amolk Brar, Lab Director

American Scientific Laboratories, LLC
Environmental Testing Services
2520 N. San Fernando Road, LA CA 90065 Tel: (323) 223-9700 • Fax: (323) 223-9500

Kroner Environmental Services, Inc.	Project: Regional Connector N. Mission Rd.	Work Order No: 2109254
10801 National Blvd. # 415	Project Number: 1093	**Reported:**
Los Angeles CA, 90064	Project Manager: Kurt Kroner	10/07/2021 14:32

Analytical Results

Client Sample ID: MSP4-2

Laboratory Sample ID: 2109254-02 (Solid)

Analyte	Result	Notes	MDL	PQL	Units	Dilution	Prep Method	Analyzed	Analyst	Method
Total Mercury (CVAA)				Batch ID: BJ10207			Prepared: 10/05/2021 11:08			
Mercury	**0.0463**	J	0.0100	0.0500	mg/kg	1	7471A	10/06/2021 14:21	LVE	7471A
Total ICP Metals				Batch ID: BJ10206			Prepared: 10/05/2021 11:04			
Antimony	ND		0.200	0.500	mg/kg	1	3050B	10/05/2021 19:23	LVE	SW846 6010B
Arsenic	**0.875**		0.150	0.250	mg/kg	1	3050B	10/05/2021 19:23	LVE	SW846 6010B
Barium	**47.2**		0.0500	0.500	mg/kg	1	3050B	10/05/2021 19:23	LVE	SW846 6010B
Beryllium	**0.149**	J	0.0400	0.500	mg/kg	1	3050B	10/05/2021 19:23	LVE	SW846 6010B
Cadmium	**0.697**		0.0400	0.500	mg/kg	1	3050B	10/05/2021 19:23	LVE	SW846 6010B
Chromium	**5.27**		0.0500	0.500	mg/kg	1	3050B	10/05/2021 19:23	LVE	SW846 6010B
Cobalt	**3.74**		0.0500	0.500	mg/kg	1	3050B	10/05/2021 19:23	LVE	SW846 6010B
Copper	**9.51**		0.0500	0.500	mg/kg	1	3050B	10/05/2021 19:23	LVE	SW846 6010B
Lead	**5.81**		0.100	0.250	mg/kg	1	3050B	10/05/2021 19:23	LVE	SW846 6010B
Molybdenum	**0.280**	J	0.0500	0.500	mg/kg	1	3050B	10/05/2021 19:23	LVE	SW846 6010B
Nickel	**4.01**		0.100	0.500	mg/kg	1	3050B	10/05/2021 19:23	LVE	SW846 6010B
Selenium	ND		0.200	0.500	mg/kg	1	3050B	10/05/2021 19:23	LVE	SW846 6010B
Silver	ND		0.0500	0.500	mg/kg	1	3050B	10/05/2021 19:23	LVE	SW846 6010B
Thallium	ND		0.150	0.500	mg/kg	1	3050B	10/05/2021 19:23	LVE	SW846 6010B
Vanadium	**14.1**		0.0500	0.500	mg/kg	1	3050B	10/05/2021 19:23	LVE	SW846 6010B
Zinc	**51.0**		0.350	0.500	mg/kg	1	3050B	10/05/2021 19:23	LVE	SW846 6010B
Total Petroleum Hydrocarbons(TPH-g)				Batch ID: BJ10004			Prepared: 09/30/2021 09:00			
Gasoline Range Organics	ND		250	500	ug/kg	1	5030A	09/30/2021 22:04	SA	8015B
Surrogate: Bromofluorobenzene			*105 %*	*70-120*			5030A	09/30/2021 22:04	SA	*8015B*
Total Petroleum Hydrocarbons(TPH DROORO)				Batch ID: BJ10010			Prepared: 09/30/2021 09:00			
Diesel range organics	ND		1.00	10.0	mg/kg	1	3550B	09/30/2021 19:26	DWI	8015B
Oil Range Organics	ND		17.0	50.0	mg/kg	1	3550B	09/30/2021 19:26	DWI	8015B
Surrogate: Chlorobenzene			*107 %*	*70-120*			3550B	09/30/2021 19:26	DWI	*8015B*

The results in this report apply to the samples analyzed in accordance with the chain of custody document. This analytical report must be reproduced in its entirety.

Amolk Brar, Lab Director

American Scientific Laboratories, LLC
Environmental Testing Services
2520 N. San Fernando Road, LA CA 90065 Tel: (323) 223-9700 • Fax: (323) 223-9500

Kroner Environmental Services, Inc.	Project: Regional Connector N. Mission Rd.	Work Order No: 2109254
10801 National Blvd. # 415	Project Number: 1093	**Reported:**
Los Angeles CA, 90064	Project Manager: Kurt Kroner	10/07/2021 14:32

Analytical Results

Client Sample ID: MSP4-2

Laboratory Sample ID: 2109254-02 (Solid)

Analyte	Result	Notes	MDL	PQL	Units	Dilution	Prep Method	Analyzed	Analyst	Method
Volatile Organic Compounds				Batch ID: BJ10007			Prepared: 09/30/2021 09:00			
Acetone	ND		12.7	50.0	ug/kg	1	5030A	09/30/2021 18:08	SA	8260B
Benzene	ND		0.930	2.00	ug/kg	1	5030A	09/30/2021 18:08	SA	8260B
Bromobenzene	ND		3.39	10.0	ug/kg	1	5030A	09/30/2021 18:08	SA	8260B
Bromochloromethane	ND		0.380	10.0	ug/kg	1	5030A	09/30/2021 18:08	SA	8260B
Bromodichloromethane	ND		0.630	10.0	ug/kg	1	5030A	09/30/2021 18:08	SA	8260B
Bromoform	ND		3.39	50.0	ug/kg	1	5030A	09/30/2021 18:08	SA	8260B
Bromomethane	ND		2.75	30.0	ug/kg	1	5030A	09/30/2021 18:08	SA	8260B
2-Butanone	ND		5.83	50.0	ug/kg	1	5030A	09/30/2021 18:08	SA	8260B
n-Butylbenzene	ND		2.05	10.0	ug/kg	1	5030A	09/30/2021 18:08	SA	8260B
sec-Butylbenzene	ND		3.04	10.0	ug/kg	1	5030A	09/30/2021 18:08	SA	8260B
tert-Butylbenzene	ND		1.34	10.0	ug/kg	1	5030A	09/30/2021 18:08	SA	8260B
Carbon disulfide	ND		5.53	10.0	ug/kg	1	5030A	09/30/2021 18:08	SA	8260B
Carbon tetrachloride	ND		2.48	10.0	ug/kg	1	5030A	09/30/2021 18:08	SA	8260B
Chlorobenzene	ND		0.890	10.0	ug/kg	1	5030A	09/30/2021 18:08	SA	8260B
Chloroethane	ND		2.15	30.0	ug/kg	1	5030A	09/30/2021 18:08	SA	8260B
2-Chloroethylvinyl Ether	ND		5.53	50.0	ug/kg	1	5030A	09/30/2021 18:08	SA	8260B
Chloroform	ND		1.24	10.0	ug/kg	1	5030A	09/30/2021 18:08	SA	8260B
Chloromethane	ND		1.74	30.0	ug/kg	1	5030A	09/30/2021 18:08	SA	8260B
4-Chlorotoluene	ND		1.34	10.0	ug/kg	1	5030A	09/30/2021 18:08	SA	8260B
2-Chlorotoluene	ND		2.35	10.0	ug/kg	1	5030A	09/30/2021 18:08	SA	8260B
1,2-Dibromo-3-chloropropane	ND		2.69	50.0	ug/kg	1	5030A	09/30/2021 18:08	SA	8260B
Dibromochloromethane	ND		0.650	10.0	ug/kg	1	5030A	09/30/2021 18:08	SA	8260B
1,2-Dibromoethane	ND		2.75	10.0	ug/kg	1	5030A	09/30/2021 18:08	SA	8260B
Dibromomethane	ND		2.30	10.0	ug/kg	1	5030A	09/30/2021 18:08	SA	8260B
1,2-Dichlorobenzene	ND		1.65	10.0	ug/kg	1	5030A	09/30/2021 18:08	SA	8260B
1,3-Dichlorobenzene	ND		1.03	10.0	ug/kg	1	5030A	09/30/2021 18:08	SA	8260B
1,4-Dichlorobenzene	ND		2.23	10.0	ug/kg	1	5030A	09/30/2021 18:08	SA	8260B
Dichlorodifluoromethane	ND		2.07	30.0	ug/kg	1	5030A	09/30/2021 18:08	SA	8260B
1,1-Dichloroethane	ND		1.30	10.0	ug/kg	1	5030A	09/30/2021 18:08	SA	8260B
1,2-Dichloroethane	ND		1.57	10.0	ug/kg	1	5030A	09/30/2021 18:08	SA	8260B
1,1-Dichloroethene	ND		1.60	10.0	ug/kg	1	5030A	09/30/2021 18:08	SA	8260B
cis-1,2-Dichloroethene	ND		2.16	10.0	ug/kg	1	5030A	09/30/2021 18:08	SA	8260B
trans-1,2-Dichloroethene	ND		2.60	10.0	ug/kg	1	5030A	09/30/2021 18:08	SA	8260B
1,1-Dichloropropene	ND		0.660	10.0	ug/kg	1	5030A	09/30/2021 18:08	SA	8260B
1,2-Dichloropropane	ND		0.920	10.0	ug/kg	1	5030A	09/30/2021 18:08	SA	8260B
1,3-Dichloropropane	ND		1.36	10.0	ug/kg	1	5030A	09/30/2021 18:08	SA	8260B

The results in this report apply to the samples analyzed in accordance with the chain of custody document. This analytical report must be reproduced in its entirety.

Amolk Brar, Lab Director

American Scientific Laboratories, LLC
Environmental Testing Services
2520 N. San Fernando Road, LA CA 90065 Tel: (323) 223-9700 • Fax: (323) 223-9500

Kroner Environmental Services, Inc.	Project: Regional Connector N. Mission Rd.	Work Order No: 2109254
10801 National Blvd. # 415	Project Number: 1093	**Reported:**
Los Angeles CA, 90064	Project Manager: Kurt Kroner	10/07/2021 14:32

Analytical Results

Client Sample ID: MSP4-2

Laboratory Sample ID: 2109254-02 (Solid)

Analyte	Result	Notes	MDL	PQL	Units	Dilution	Prep Method	Analyzed	Analyst	Method
Volatile Organic Compounds				Batch ID: BJ10007			Prepared: 09/30/2021 09:00			
2,2-Dichloropropane	ND		1.12	10.0	ug/kg	1	5030A	09/30/2021 18:08	SA	8260B
cis-1,3-Dichloropropene	ND		0.980	10.0	ug/kg	1	5030A	09/30/2021 18:08	SA	8260B
trans-1,3-Dichloropropene	ND		0.960	10.0	ug/kg	1	5030A	09/30/2021 18:08	SA	8260B
Ethylbenzene	ND		1.00	2.00	ug/kg	1	5030A	09/30/2021 18:08	SA	8260B
Hexachlorobutadiene	ND		2.77	30.0	ug/kg	1	5030A	09/30/2021 18:08	SA	8260B
2-Hexanone	ND		3.18	50.0	ug/kg	1	5030A	09/30/2021 18:08	SA	8260B
Isopropylbenzene	ND		1.42	10.0	ug/kg	1	5030A	09/30/2021 18:08	SA	8260B
p-Isopropyltoluene	ND		3.86	10.0	ug/kg	1	5030A	09/30/2021 18:08	SA	8260B
Methyl tert-Butyl Ether (MTBE)	ND		1.81	5.00	ug/kg	1	5030A	09/30/2021 18:08	SA	8260B
4-Methyl-2-pentanone (MIBK)	ND		3.14	50.0	ug/kg	1	5030A	09/30/2021 18:08	SA	8260B
Methylene chloride	ND		3.31	50.0	ug/kg	1	5030A	09/30/2021 18:08	SA	8260B
Naphthalene	ND		1.14	10.0	ug/kg	1	5030A	09/30/2021 18:08	SA	8260B
n-Propylbenzene	ND		1.14	10.0	ug/kg	1	5030A	09/30/2021 18:08	SA	8260B
Styrene	ND		0.800	10.0	ug/kg	1	5030A	09/30/2021 18:08	SA	8260B
1,1,1,2-Tetrachloroethane	ND		1.28	10.0	ug/kg	1	5030A	09/30/2021 18:08	SA	8260B
1,1,2,2-Tetrachloroethane	ND		3.25	10.0	ug/kg	1	5030A	09/30/2021 18:08	SA	8260B
Tetrachloroethene	ND		0.930	10.0	ug/kg	1	5030A	09/30/2021 18:08	SA	8260B
Toluene	ND		1.00	2.00	ug/kg	1	5030A	09/30/2021 18:08	SA	8260B
1,2,3-Trichlorobenzene	ND		1.23	10.0	ug/kg	1	5030A	09/30/2021 18:08	SA	8260B
1,2,4-Trichlorobenzene	ND		2.82	10.0	ug/kg	1	5030A	09/30/2021 18:08	SA	8260B
1,1,1-Trichloroethane	ND		2.03	10.0	ug/kg	1	5030A	09/30/2021 18:08	SA	8260B
1,1,2-Trichloroethane	ND		1.74	10.0	ug/kg	1	5030A	09/30/2021 18:08	SA	8260B
Trichloroethene	ND		1.15	10.0	ug/kg	1	5030A	09/30/2021 18:08	SA	8260B
Trichlorofluoromethane	ND		3.15	10.0	ug/kg	1	5030A	09/30/2021 18:08	SA	8260B
1,2,3-Trichloropropane	ND		1.74	10.0	ug/kg	1	5030A	09/30/2021 18:08	SA	8260B
1,2,4-Trimethylbenzene	ND		3.19	10.0	ug/kg	1	5030A	09/30/2021 18:08	SA	8260B
1,3,5- Trimethylbenzene	ND		1.23	10.0	ug/kg	1	5030A	09/30/2021 18:08	SA	8260B
Vinyl acetate	ND		10.8	50.0	ug/kg	1	5030A	09/30/2021 18:08	SA	8260B
Vinyl chloride	ND		2.79	30.0	ug/kg	1	5030A	09/30/2021 18:08	SA	8260B
m,p-Xylenes	ND		1.80	4.00	ug/kg	1	5030A	09/30/2021 18:08	SA	8260B
o-Xylene	ND		1.00	2.00	ug/kg	1	5030A	09/30/2021 18:08	SA	8260B
Surrogate: 4-Bromofluorobenzene			*109 %*		*70-120*		5030A	09/30/2021 18:08	SA	*8260B*
Surrogate: Dibromofluoromethane			*86.1 %*		*70-120*		5030A	09/30/2021 18:08	SA	*8260B*
Surrogate: Toluene-d8			*108 %*		*70-120*		5030A	09/30/2021 18:08	SA	*8260B*

The results in this report apply to the samples analyzed in accordance with the chain of custody document. This analytical report must be reproduced in its entirety.

Amolk Brar, Lab Director

AMERICAN SCIENTIFIC LABORATORIES, LLC
Environmental Testing Services
2520 N. San Fernando Road, LA CA 90065 Tel: (323) 223-9700 • Fax: (323) 223-9500

Kroner Environmental Services, Inc.	Project: Regional Connector N. Mission Rd.	Work Order No: 2109254
10801 National Blvd. # 415	Project Number: 1093	**Reported:**
Los Angeles CA, 90064	Project Manager: Kurt Kroner	10/07/2021 14:32

Analytical Results

Client Sample ID: MSP5-2

Laboratory Sample ID: 2109254-03 (Solid)

Analyte	Result	Notes	MDL	PQL	Units	Dilution	Prep Method	Analyzed	Analyst	Method
Total Mercury (CVAA)				Batch ID: BJ10207			Prepared: 10/05/2021 11:08			
Mercury	**0.0475**	J	0.0100	0.0500	mg/kg	1	7471A	10/06/2021 14:21	LVE	7471A
Total ICP Metals				Batch ID: BJ10206			Prepared: 10/05/2021 11:04			
Antimony	ND		0.200	0.500	mg/kg	1	3050B	10/05/2021 19:23	LVE	SW846 6010B
Arsenic	**0.878**		0.150	0.250	mg/kg	1	3050B	10/05/2021 19:23	LVE	SW846 6010B
Barium	**42.1**		0.0500	0.500	mg/kg	1	3050B	10/05/2021 19:23	LVE	SW846 6010B
Beryllium	**0.149**	J	0.0400	0.500	mg/kg	1	3050B	10/05/2021 19:23	LVE	SW846 6010B
Cadmium	**0.702**		0.0400	0.500	mg/kg	1	3050B	10/05/2021 19:23	LVE	SW846 6010B
Chromium	**5.21**		0.0500	0.500	mg/kg	1	3050B	10/05/2021 19:23	LVE	SW846 6010B
Cobalt	**3.36**		0.0500	0.500	mg/kg	1	3050B	10/05/2021 19:23	LVE	SW846 6010B
Copper	**9.78**		0.0500	0.500	mg/kg	1	3050B	10/05/2021 19:23	LVE	SW846 6010B
Lead	**5.68**		0.100	0.250	mg/kg	1	3050B	10/05/2021 19:23	LVE	SW846 6010B
Molybdenum	**0.342**	J	0.0500	0.500	mg/kg	1	3050B	10/05/2021 19:23	LVE	SW846 6010B
Nickel	**4.07**		0.100	0.500	mg/kg	1	3050B	10/05/2021 19:23	LVE	SW846 6010B
Selenium	ND		0.200	0.500	mg/kg	1	3050B	10/05/2021 19:23	LVE	SW846 6010B
Silver	**1.34**		0.0500	0.500	mg/kg	1	3050B	10/05/2021 19:23	LVE	SW846 6010B
Thallium	ND		0.150	0.500	mg/kg	1	3050B	10/05/2021 19:23	LVE	SW846 6010B
Vanadium	**13.4**		0.0500	0.500	mg/kg	1	3050B	10/05/2021 19:23	LVE	SW846 6010B
Zinc	**34.9**		0.350	0.500	mg/kg	1	3050B	10/05/2021 19:23	LVE	SW846 6010B
Total Petroleum Hydrocarbons(TPH-g)				Batch ID: BJ10004			Prepared: 09/30/2021 09:00			
Gasoline Range Organics	ND		250	500	ug/kg	1	5030A	09/30/2021 22:33	SA	8015B
Surrogate: Bromofluorobenzene			*94.0 %*	*70-120*			5030A	09/30/2021 22:33	SA	*8015B*
Total Petroleum Hydrocarbons(TPH DROORO)				Batch ID: BJ10010			Prepared: 09/30/2021 09:00			
Diesel range organics	ND		1.00	10.0	mg/kg	1	3550B	09/30/2021 20:07	DWI	8015B
Oil Range Organics	ND		17.0	50.0	mg/kg	1	3550B	09/30/2021 20:07	DWI	8015B
Surrogate: Chlorobenzene			*109 %*	*70-120*			3550B	09/30/2021 20:07	DWI	*8015B*

The results in this report apply to the samples analyzed in accordance with the chain of custody document. This analytical report must be reproduced in its entirety.

Amolk Brar, Lab Director

American Scientific Laboratories, LLC
Environmental Testing Services
2520 N. San Fernando Road, LA CA 90065 Tel: (323) 223-9700 • Fax: (323) 223-9500

Kroner Environmental Services, Inc.	Project: Regional Connector N. Mission Rd.	Work Order No: 2109254
10801 National Blvd. # 415	Project Number: 1093	**Reported:**
Los Angeles CA, 90064	Project Manager: Kurt Kroner	10/07/2021 14:32

Analytical Results

Client Sample ID: MSP5-2

Laboratory Sample ID: 2109254-03 (Solid)

Analyte	Result	Notes	MDL	PQL	Units	Dilution	Prep Method	Analyzed	Analyst	Method
Volatile Organic Compounds				Batch ID: BJ10007			Prepared: 09/30/2021 09:00			
Acetone	ND		12.7	50.0	ug/kg	1	5030A	09/30/2021 18:36	SA	8260B
Benzene	ND		0.930	2.00	ug/kg	1	5030A	09/30/2021 18:36	SA	8260B
Bromobenzene	ND		3.39	10.0	ug/kg	1	5030A	09/30/2021 18:36	SA	8260B
Bromochloromethane	ND		0.380	10.0	ug/kg	1	5030A	09/30/2021 18:36	SA	8260B
Bromodichloromethane	ND		0.630	10.0	ug/kg	1	5030A	09/30/2021 18:36	SA	8260B
Bromoform	ND		3.39	50.0	ug/kg	1	5030A	09/30/2021 18:36	SA	8260B
Bromomethane	ND		2.75	30.0	ug/kg	1	5030A	09/30/2021 18:36	SA	8260B
2-Butanone	ND		5.83	50.0	ug/kg	1	5030A	09/30/2021 18:36	SA	8260B
n-Butylbenzene	ND		2.05	10.0	ug/kg	1	5030A	09/30/2021 18:36	SA	8260B
sec-Butylbenzene	ND		3.04	10.0	ug/kg	1	5030A	09/30/2021 18:36	SA	8260B
tert-Butylbenzene	ND		1.34	10.0	ug/kg	1	5030A	09/30/2021 18:36	SA	8260B
Carbon disulfide	ND		5.53	10.0	ug/kg	1	5030A	09/30/2021 18:36	SA	8260B
Carbon tetrachloride	ND		2.48	10.0	ug/kg	1	5030A	09/30/2021 18:36	SA	8260B
Chlorobenzene	ND		0.890	10.0	ug/kg	1	5030A	09/30/2021 18:36	SA	8260B
Chloroethane	ND		2.15	30.0	ug/kg	1	5030A	09/30/2021 18:36	SA	8260B
2-Chloroethylvinyl Ether	ND		5.53	50.0	ug/kg	1	5030A	09/30/2021 18:36	SA	8260B
Chloroform	ND		1.24	10.0	ug/kg	1	5030A	09/30/2021 18:36	SA	8260B
Chloromethane	ND		1.74	30.0	ug/kg	1	5030A	09/30/2021 18:36	SA	8260B
4-Chlorotoluene	ND		1.34	10.0	ug/kg	1	5030A	09/30/2021 18:36	SA	8260B
2-Chlorotoluene	ND		2.35	10.0	ug/kg	1	5030A	09/30/2021 18:36	SA	8260B
1,2-Dibromo-3-chloropropane	ND		2.69	50.0	ug/kg	1	5030A	09/30/2021 18:36	SA	8260B
Dibromochloromethane	ND		0.650	10.0	ug/kg	1	5030A	09/30/2021 18:36	SA	8260B
1,2-Dibromoethane	ND		2.75	10.0	ug/kg	1	5030A	09/30/2021 18:36	SA	8260B
Dibromomethane	ND		2.30	10.0	ug/kg	1	5030A	09/30/2021 18:36	SA	8260B
1,2-Dichlorobenzene	ND		1.65	10.0	ug/kg	1	5030A	09/30/2021 18:36	SA	8260B
1,3-Dichlorobenzene	ND		1.03	10.0	ug/kg	1	5030A	09/30/2021 18:36	SA	8260B
1,4-Dichlorobenzene	ND		2.23	10.0	ug/kg	1	5030A	09/30/2021 18:36	SA	8260B
Dichlorodifluoromethane	ND		2.07	30.0	ug/kg	1	5030A	09/30/2021 18:36	SA	8260B
1,1-Dichloroethane	ND		1.30	10.0	ug/kg	1	5030A	09/30/2021 18:36	SA	8260B
1,2-Dichloroethane	ND		1.57	10.0	ug/kg	1	5030A	09/30/2021 18:36	SA	8260B
1,1-Dichloroethene	ND		1.60	10.0	ug/kg	1	5030A	09/30/2021 18:36	SA	8260B
cis-1,2-Dichloroethene	ND		2.16	10.0	ug/kg	1	5030A	09/30/2021 18:36	SA	8260B
trans-1,2-Dichloroethene	ND		2.60	10.0	ug/kg	1	5030A	09/30/2021 18:36	SA	8260B
1,1-Dichloropropene	ND		0.660	10.0	ug/kg	1	5030A	09/30/2021 18:36	SA	8260B
1,2-Dichloropropane	ND		0.920	10.0	ug/kg	1	5030A	09/30/2021 18:36	SA	8260B
1,3-Dichloropropane	ND		1.36	10.0	ug/kg	1	5030A	09/30/2021 18:36	SA	8260B

The results in this report apply to the samples analyzed in accordance with the chain of custody document. This analytical report must be reproduced in its entirety.

Amolk Brar, Lab Director

American Scientific Laboratories, LLC
Environmental Testing Services
2520 N. San Fernando Road, LA CA 90065 Tel: (323) 223-9700 • Fax: (323) 223-9500

Kroner Environmental Services, Inc.	Project: Regional Connector N. Mission Rd.	Work Order No: 2109254
10801 National Blvd. # 415	Project Number: 1093	**Reported:**
Los Angeles CA, 90064	Project Manager: Kurt Kroner	10/07/2021 14:32

Analytical Results

Client Sample ID: MSP5-2

Laboratory Sample ID: 2109254-03 (Solid)

Analyte	Result	Notes	MDL	PQL	Units	Dilution	Prep Method	Analyzed	Analyst	Method
Volatile Organic Compounds				Batch ID: BJ10007			Prepared: 09/30/2021 09:00			
2,2-Dichloropropane	ND		1.12	10.0	ug/kg	1	5030A	09/30/2021 18:36	SA	8260B
cis-1,3-Dichloropropene	ND		0.980	10.0	ug/kg	1	5030A	09/30/2021 18:36	SA	8260B
trans-1,3-Dichloropropene	ND		0.960	10.0	ug/kg	1	5030A	09/30/2021 18:36	SA	8260B
Ethylbenzene	ND		1.00	2.00	ug/kg	1	5030A	09/30/2021 18:36	SA	8260B
Hexachlorobutadiene	ND		2.77	30.0	ug/kg	1	5030A	09/30/2021 18:36	SA	8260B
2-Hexanone	ND		3.18	50.0	ug/kg	1	5030A	09/30/2021 18:36	SA	8260B
Isopropylbenzene	ND		1.42	10.0	ug/kg	1	5030A	09/30/2021 18:36	SA	8260B
p-Isopropyltoluene	ND		3.86	10.0	ug/kg	1	5030A	09/30/2021 18:36	SA	8260B
Methyl tert-Butyl Ether (MTBE)	ND		1.81	5.00	ug/kg	1	5030A	09/30/2021 18:36	SA	8260B
4-Methyl-2-pentanone (MIBK)	ND		3.14	50.0	ug/kg	1	5030A	09/30/2021 18:36	SA	8260B
Methylene chloride	ND		3.31	50.0	ug/kg	1	5030A	09/30/2021 18:36	SA	8260B
Naphthalene	ND		1.14	10.0	ug/kg	1	5030A	09/30/2021 18:36	SA	8260B
n-Propylbenzene	ND		1.14	10.0	ug/kg	1	5030A	09/30/2021 18:36	SA	8260B
Styrene	ND		0.800	10.0	ug/kg	1	5030A	09/30/2021 18:36	SA	8260B
1,1,1,2-Tetrachloroethane	ND		1.28	10.0	ug/kg	1	5030A	09/30/2021 18:36	SA	8260B
1,1,2,2-Tetrachloroethane	ND		3.25	10.0	ug/kg	1	5030A	09/30/2021 18:36	SA	8260B
Tetrachloroethene	ND		0.930	10.0	ug/kg	1	5030A	09/30/2021 18:36	SA	8260B
Toluene	ND		1.00	2.00	ug/kg	1	5030A	09/30/2021 18:36	SA	8260B
1,2,3-Trichlorobenzene	ND		1.23	10.0	ug/kg	1	5030A	09/30/2021 18:36	SA	8260B
1,2,4-Trichlorobenzene	ND		2.82	10.0	ug/kg	1	5030A	09/30/2021 18:36	SA	8260B
1,1,1-Trichloroethane	ND		2.03	10.0	ug/kg	1	5030A	09/30/2021 18:36	SA	8260B
1,1,2-Trichloroethane	ND		1.74	10.0	ug/kg	1	5030A	09/30/2021 18:36	SA	8260B
Trichloroethene	ND		1.15	10.0	ug/kg	1	5030A	09/30/2021 18:36	SA	8260B
Trichlorofluoromethane	ND		3.15	10.0	ug/kg	1	5030A	09/30/2021 18:36	SA	8260B
1,2,3-Trichloropropane	ND		1.74	10.0	ug/kg	1	5030A	09/30/2021 18:36	SA	8260B
1,2,4-Trimethylbenzene	ND		3.19	10.0	ug/kg	1	5030A	09/30/2021 18:36	SA	8260B
1,3,5- Trimethylbenzene	ND		1.23	10.0	ug/kg	1	5030A	09/30/2021 18:36	SA	8260B
Vinyl acetate	ND		10.8	50.0	ug/kg	1	5030A	09/30/2021 18:36	SA	8260B
Vinyl chloride	ND		2.79	30.0	ug/kg	1	5030A	09/30/2021 18:36	SA	8260B
m,p-Xylenes	ND		1.80	4.00	ug/kg	1	5030A	09/30/2021 18:36	SA	8260B
o-Xylene	ND		1.00	2.00	ug/kg	1	5030A	09/30/2021 18:36	SA	8260B
Surrogate: 4-Bromofluorobenzene			*112 %*		*70-120*		5030A	09/30/2021 18:36	SA	*8260B*
Surrogate: Dibromofluoromethane			*84.0 %*		*70-120*		5030A	09/30/2021 18:36	SA	*8260B*
Surrogate: Toluene-d8			*108 %*		*70-120*		5030A	09/30/2021 18:36	SA	*8260B*

The results in this report apply to the samples analyzed in accordance with the chain of custody document. This analytical report must be reproduced in its entirety.

Amolk Brar, Lab Director

AMERICAN SCIENTIFIC LABORATORIES, LLC
Environmental Testing Services
2520 N. San Fernando Road, LA CA 90065 Tel: (323) 223-9700 • Fax: (323) 223-9500

Kroner Environmental Services, Inc.	Project: Regional Connector N. Mission Rd.	Work Order No: 2109254
10801 National Blvd. # 415	Project Number: 1093	**Reported:**
Los Angeles CA, 90064	Project Manager: Kurt Kroner	10/07/2021 14:32

Analytical Results

Client Sample ID: MSP7-2

Laboratory Sample ID: 2109254-04 (Solid)

Analyte	Result	Notes	MDL	PQL	Units	Dilution	Prep Method	Analyzed	Analyst	Method
Total Mercury (CVAA)				Batch ID: BJ10207			Prepared: 10/05/2021 11:08			
Mercury	**0.0624**		0.0100	0.0500	mg/kg	1	7471A	10/06/2021 14:21	LVE	7471A
Total ICP Metals				Batch ID: BJ10206			Prepared: 10/05/2021 11:04			
Antimony	ND		0.200	0.500	mg/kg	1	3050B	10/05/2021 19:23	LVE	SW846 6010B
Arsenic	**0.484**		0.150	0.250	mg/kg	1	3050B	10/05/2021 19:23	LVE	SW846 6010B
Barium	**33.2**		0.0500	0.500	mg/kg	1	3050B	10/05/2021 19:23	LVE	SW846 6010B
Beryllium	**0.125**	J	0.0400	0.500	mg/kg	1	3050B	10/05/2021 19:23	LVE	SW846 6010B
Cadmium	**0.576**		0.0400	0.500	mg/kg	1	3050B	10/05/2021 19:23	LVE	SW846 6010B
Chromium	**3.76**		0.0500	0.500	mg/kg	1	3050B	10/05/2021 19:23	LVE	SW846 6010B
Cobalt	**3.00**		0.0500	0.500	mg/kg	1	3050B	10/05/2021 19:23	LVE	SW846 6010B
Copper	**6.03**		0.0500	0.500	mg/kg	1	3050B	10/05/2021 19:23	LVE	SW846 6010B
Lead	**3.14**		0.100	0.250	mg/kg	1	3050B	10/05/2021 19:23	LVE	SW846 6010B
Molybdenum	**0.148**	J	0.0500	0.500	mg/kg	1	3050B	10/05/2021 19:23	LVE	SW846 6010B
Nickel	**3.02**		0.100	0.500	mg/kg	1	3050B	10/05/2021 19:23	LVE	SW846 6010B
Selenium	ND		0.200	0.500	mg/kg	1	3050B	10/05/2021 19:23	LVE	SW846 6010B
Silver	**0.675**		0.0500	0.500	mg/kg	1	3050B	10/05/2021 19:23	LVE	SW846 6010B
Thallium	ND		0.150	0.500	mg/kg	1	3050B	10/05/2021 19:23	LVE	SW846 6010B
Vanadium	**11.7**		0.0500	0.500	mg/kg	1	3050B	10/05/2021 19:23	LVE	SW846 6010B
Zinc	**27.2**		0.350	0.500	mg/kg	1	3050B	10/05/2021 19:23	LVE	SW846 6010B
Total Petroleum Hydrocarbons(TPH-g)				Batch ID: BJ10004			Prepared: 09/30/2021 09:00			
Gasoline Range Organics	ND		250	500	ug/kg	1	5030A	09/30/2021 23:02	SA	8015B
Surrogate: Bromofluorobenzene			*101 %*	*70-120*			5030A	09/30/2021 23:02	SA	*8015B*
Total Petroleum Hydrocarbons(TPH DROORO)				Batch ID: BJ10010			Prepared: 09/30/2021 09:00			
Diesel range organics	ND		1.00	10.0	mg/kg	1	3550B	09/30/2021 20:49	DWI	8015B
Oil Range Organics	ND		17.0	50.0	mg/kg	1	3550B	09/30/2021 20:49	DWI	8015B
Surrogate: Chlorobenzene			*108 %*	*70-120*			3550B	09/30/2021 20:49	DWI	*8015B*

The results in this report apply to the samples analyzed in accordance with the chain of custody document. This analytical report must be reproduced in its entirety.

Amolk Brar, Lab Director

American Scientific Laboratories, LLC
Environmental Testing Services
2520 N. San Fernando Road, LA CA 90065 Tel: (323) 223-9700 • Fax: (323) 223-9500

Kroner Environmental Services, Inc.	Project: Regional Connector N. Mission Rd.	Work Order No: 2109254
10801 National Blvd. # 415	Project Number: 1093	**Reported:**
Los Angeles CA, 90064	Project Manager: Kurt Kroner	10/07/2021 14:32

Analytical Results

Client Sample ID: MSP7-2

Laboratory Sample ID: 2109254-04 (Solid)

Analyte	Result	Notes	MDL	PQL	Units	Dilution	Prep Method	Analyzed	Analyst	Method
Volatile Organic Compounds				Batch ID: BJ10007			Prepared: 09/30/2021 09:00			
Acetone	ND		12.7	50.0	ug/kg	1	5030A	09/30/2021 19:04	SA	8260B
Benzene	ND		0.930	2.00	ug/kg	1	5030A	09/30/2021 19:04	SA	8260B
Bromobenzene	ND		3.39	10.0	ug/kg	1	5030A	09/30/2021 19:04	SA	8260B
Bromochloromethane	ND		0.380	10.0	ug/kg	1	5030A	09/30/2021 19:04	SA	8260B
Bromodichloromethane	ND		0.630	10.0	ug/kg	1	5030A	09/30/2021 19:04	SA	8260B
Bromoform	ND		3.39	50.0	ug/kg	1	5030A	09/30/2021 19:04	SA	8260B
Bromomethane	ND		2.75	30.0	ug/kg	1	5030A	09/30/2021 19:04	SA	8260B
2-Butanone	ND		5.83	50.0	ug/kg	1	5030A	09/30/2021 19:04	SA	8260B
n-Butylbenzene	ND		2.05	10.0	ug/kg	1	5030A	09/30/2021 19:04	SA	8260B
sec-Butylbenzene	ND		3.04	10.0	ug/kg	1	5030A	09/30/2021 19:04	SA	8260B
tert-Butylbenzene	ND		1.34	10.0	ug/kg	1	5030A	09/30/2021 19:04	SA	8260B
Carbon disulfide	ND		5.53	10.0	ug/kg	1	5030A	09/30/2021 19:04	SA	8260B
Carbon tetrachloride	ND		2.48	10.0	ug/kg	1	5030A	09/30/2021 19:04	SA	8260B
Chlorobenzene	ND		0.890	10.0	ug/kg	1	5030A	09/30/2021 19:04	SA	8260B
Chloroethane	ND		2.15	30.0	ug/kg	1	5030A	09/30/2021 19:04	SA	8260B
2-Chloroethylvinyl Ether	ND		5.53	50.0	ug/kg	1	5030A	09/30/2021 19:04	SA	8260B
Chloroform	ND		1.24	10.0	ug/kg	1	5030A	09/30/2021 19:04	SA	8260B
Chloromethane	ND		1.74	30.0	ug/kg	1	5030A	09/30/2021 19:04	SA	8260B
4-Chlorotoluene	ND		1.34	10.0	ug/kg	1	5030A	09/30/2021 19:04	SA	8260B
2-Chlorotoluene	ND		2.35	10.0	ug/kg	1	5030A	09/30/2021 19:04	SA	8260B
1,2-Dibromo-3-chloropropane	ND		2.69	50.0	ug/kg	1	5030A	09/30/2021 19:04	SA	8260B
Dibromochloromethane	ND		0.650	10.0	ug/kg	1	5030A	09/30/2021 19:04	SA	8260B
1,2-Dibromoethane	ND		2.75	10.0	ug/kg	1	5030A	09/30/2021 19:04	SA	8260B
Dibromomethane	ND		2.30	10.0	ug/kg	1	5030A	09/30/2021 19:04	SA	8260B
1,2-Dichlorobenzene	ND		1.65	10.0	ug/kg	1	5030A	09/30/2021 19:04	SA	8260B
1,3-Dichlorobenzene	ND		1.03	10.0	ug/kg	1	5030A	09/30/2021 19:04	SA	8260B
1,4-Dichlorobenzene	ND		2.23	10.0	ug/kg	1	5030A	09/30/2021 19:04	SA	8260B
Dichlorodifluoromethane	ND		2.07	30.0	ug/kg	1	5030A	09/30/2021 19:04	SA	8260B
1,1-Dichloroethane	ND		1.30	10.0	ug/kg	1	5030A	09/30/2021 19:04	SA	8260B
1,2-Dichloroethane	ND		1.57	10.0	ug/kg	1	5030A	09/30/2021 19:04	SA	8260B
1,1-Dichloroethene	ND		1.60	10.0	ug/kg	1	5030A	09/30/2021 19:04	SA	8260B
cis-1,2-Dichloroethene	ND		2.16	10.0	ug/kg	1	5030A	09/30/2021 19:04	SA	8260B
trans-1,2-Dichloroethene	ND		2.60	10.0	ug/kg	1	5030A	09/30/2021 19:04	SA	8260B
1,1-Dichloropropene	ND		0.660	10.0	ug/kg	1	5030A	09/30/2021 19:04	SA	8260B
1,2-Dichloropropane	ND		0.920	10.0	ug/kg	1	5030A	09/30/2021 19:04	SA	8260B
1,3-Dichloropropane	ND		1.36	10.0	ug/kg	1	5030A	09/30/2021 19:04	SA	8260B

The results in this report apply to the samples analyzed in accordance with the chain of custody document. This analytical report must be reproduced in its entirety.

Amolk Brar, Lab Director

American Scientific Laboratories, LLC
Environmental Testing Services
2520 N. San Fernando Road, LA CA 90065 Tel: (323) 223-9700 • Fax: (323) 223-9500

Kroner Environmental Services, Inc.	Project: Regional Connector N. Mission Rd.	Work Order No: 2109254
10801 National Blvd. # 415	Project Number: 1093	**Reported:**
Los Angeles CA, 90064	Project Manager: Kurt Kroner	10/07/2021 14:32

Analytical Results

Client Sample ID: MSP7-2

Laboratory Sample ID: 2109254-04 (Solid)

Analyte	Result	Notes	MDL	PQL	Units	Dilution	Prep Method	Analyzed	Analyst	Method
Volatile Organic Compounds				Batch ID: BJ10007			Prepared: 09/30/2021 09:00			
2,2-Dichloropropane	ND		1.12	10.0	ug/kg	1	5030A	09/30/2021 19:04	SA	8260B
cis-1,3-Dichloropropene	ND		0.980	10.0	ug/kg	1	5030A	09/30/2021 19:04	SA	8260B
trans-1,3-Dichloropropene	ND		0.960	10.0	ug/kg	1	5030A	09/30/2021 19:04	SA	8260B
Ethylbenzene	ND		1.00	2.00	ug/kg	1	5030A	09/30/2021 19:04	SA	8260B
Hexachlorobutadiene	ND		2.77	30.0	ug/kg	1	5030A	09/30/2021 19:04	SA	8260B
2-Hexanone	ND		3.18	50.0	ug/kg	1	5030A	09/30/2021 19:04	SA	8260B
Isopropylbenzene	ND		1.42	10.0	ug/kg	1	5030A	09/30/2021 19:04	SA	8260B
p-Isopropyltoluene	ND		3.86	10.0	ug/kg	1	5030A	09/30/2021 19:04	SA	8260B
Methyl tert-Butyl Ether (MTBE)	ND		1.81	5.00	ug/kg	1	5030A	09/30/2021 19:04	SA	8260B
4-Methyl-2-pentanone (MIBK)	ND		3.14	50.0	ug/kg	1	5030A	09/30/2021 19:04	SA	8260B
Methylene chloride	ND		3.31	50.0	ug/kg	1	5030A	09/30/2021 19:04	SA	8260B
Naphthalene	ND		1.14	10.0	ug/kg	1	5030A	09/30/2021 19:04	SA	8260B
n-Propylbenzene	ND		1.14	10.0	ug/kg	1	5030A	09/30/2021 19:04	SA	8260B
Styrene	ND		0.800	10.0	ug/kg	1	5030A	09/30/2021 19:04	SA	8260B
1,1,1,2-Tetrachloroethane	ND		1.28	10.0	ug/kg	1	5030A	09/30/2021 19:04	SA	8260B
1,1,2,2-Tetrachloroethane	ND		3.25	10.0	ug/kg	1	5030A	09/30/2021 19:04	SA	8260B
Tetrachloroethene	ND		0.930	10.0	ug/kg	1	5030A	09/30/2021 19:04	SA	8260B
Toluene	ND		1.00	2.00	ug/kg	1	5030A	09/30/2021 19:04	SA	8260B
1,2,3-Trichlorobenzene	ND		1.23	10.0	ug/kg	1	5030A	09/30/2021 19:04	SA	8260B
1,2,4-Trichlorobenzene	ND		2.82	10.0	ug/kg	1	5030A	09/30/2021 19:04	SA	8260B
1,1,1-Trichloroethane	ND		2.03	10.0	ug/kg	1	5030A	09/30/2021 19:04	SA	8260B
1,1,2-Trichloroethane	ND		1.74	10.0	ug/kg	1	5030A	09/30/2021 19:04	SA	8260B
Trichloroethene	ND		1.15	10.0	ug/kg	1	5030A	09/30/2021 19:04	SA	8260B
Trichlorofluoromethane	ND		3.15	10.0	ug/kg	1	5030A	09/30/2021 19:04	SA	8260B
1,2,3-Trichloropropane	ND		1.74	10.0	ug/kg	1	5030A	09/30/2021 19:04	SA	8260B
1,2,4-Trimethylbenzene	ND		3.19	10.0	ug/kg	1	5030A	09/30/2021 19:04	SA	8260B
1,3,5- Trimethylbenzene	ND		1.23	10.0	ug/kg	1	5030A	09/30/2021 19:04	SA	8260B
Vinyl acetate	ND		10.8	50.0	ug/kg	1	5030A	09/30/2021 19:04	SA	8260B
Vinyl chloride	ND		2.79	30.0	ug/kg	1	5030A	09/30/2021 19:04	SA	8260B
m,p-Xylenes	ND		1.80	4.00	ug/kg	1	5030A	09/30/2021 19:04	SA	8260B
o-Xylene	ND		1.00	2.00	ug/kg	1	5030A	09/30/2021 19:04	SA	8260B
Surrogate: 4-Bromofluorobenzene			*113 %*		*70-120*		5030A	09/30/2021 19:04	SA	*8260B*
Surrogate: Dibromofluoromethane			*82.3 %*		*70-120*		5030A	09/30/2021 19:04	SA	*8260B*
Surrogate: Toluene-d8			*109 %*		*70-120*		5030A	09/30/2021 19:04	SA	*8260B*

The results in this report apply to the samples analyzed in accordance with the chain of custody document. This analytical report must be reproduced in its entirety.

Amolk Brar, Lab Director

American Scientific Laboratories, LLC
Environmental Testing Services
2520 N. San Fernando Road, LA CA 90065 Tel: (323) 223-9700 • Fax: (323) 223-9500

Kroner Environmental Services, Inc.	Project: Regional Connector N. Mission Rd.	Work Order No: 2109254
10801 National Blvd. # 415	Project Number: 1093	**Reported:**
Los Angeles CA, 90064	Project Manager: Kurt Kroner	10/07/2021 14:32

Analytical Results

Client Sample ID: MSP8-2

Laboratory Sample ID: 2109254-05 (Solid)

Analyte	Result	Notes	MDL	PQL	Units	Dilution	Prep Method	Analyzed	Analyst	Method
Total Mercury (CVAA)				Batch ID: BJ10207			Prepared: 10/05/2021 11:08			
Mercury	**0.126**		0.0100	0.0500	mg/kg	1	7471A	10/06/2021 14:21	LVE	7471A
Total ICP Metals				Batch ID: BJ10206			Prepared: 10/05/2021 11:04			
Antimony	ND		0.200	0.500	mg/kg	1	3050B	10/05/2021 19:23	LVE	SW846 6010B
Arsenic	**0.627**		0.150	0.250	mg/kg	1	3050B	10/05/2021 19:23	LVE	SW846 6010B
Barium	**46.3**		0.0500	0.500	mg/kg	1	3050B	10/05/2021 19:23	LVE	SW846 6010B
Beryllium	**0.127**	J	0.0400	0.500	mg/kg	1	3050B	10/05/2021 19:23	LVE	SW846 6010B
Cadmium	**0.619**		0.0400	0.500	mg/kg	1	3050B	10/05/2021 19:23	LVE	SW846 6010B
Chromium	**5.70**		0.0500	0.500	mg/kg	1	3050B	10/05/2021 19:23	LVE	SW846 6010B
Cobalt	**4.01**		0.0500	0.500	mg/kg	1	3050B	10/05/2021 19:23	LVE	SW846 6010B
Copper	**8.01**		0.0500	0.500	mg/kg	1	3050B	10/05/2021 19:23	LVE	SW846 6010B
Lead	**4.67**		0.100	0.250	mg/kg	1	3050B	10/05/2021 19:23	LVE	SW846 6010B
Molybdenum	**0.197**	J	0.0500	0.500	mg/kg	1	3050B	10/05/2021 19:23	LVE	SW846 6010B
Nickel	**4.57**		0.100	0.500	mg/kg	1	3050B	10/05/2021 19:23	LVE	SW846 6010B
Selenium	ND		0.200	0.500	mg/kg	1	3050B	10/05/2021 19:23	LVE	SW846 6010B
Silver	**0.135**	J	0.0500	0.500	mg/kg	1	3050B	10/05/2021 19:23	LVE	SW846 6010B
Thallium	ND		0.150	0.500	mg/kg	1	3050B	10/05/2021 19:23	LVE	SW846 6010B
Vanadium	**14.4**		0.0500	0.500	mg/kg	1	3050B	10/05/2021 19:23	LVE	SW846 6010B
Zinc	**31.0**		0.350	0.500	mg/kg	1	3050B	10/05/2021 19:23	LVE	SW846 6010B
Total Petroleum Hydrocarbons(TPH-g)				Batch ID: BJ10004			Prepared: 09/30/2021 09:00			
Gasoline Range Organics	ND		250	500	ug/kg	1	5030A	09/30/2021 23:30	SA	8015B
Surrogate: Bromofluorobenzene			*98.6 %*	*70-120*			5030A	09/30/2021 23:30	SA	*8015B*
Total Petroleum Hydrocarbons(TPH DROORO)				Batch ID: BJ10010			Prepared: 09/30/2021 09:00			
Diesel range organics	ND		1.00	10.0	mg/kg	1	3550B	09/30/2021 21:30	DWI	8015B
Oil Range Organics	ND		17.0	50.0	mg/kg	1	3550B	09/30/2021 21:30	DWI	8015B
Surrogate: Chlorobenzene			*109 %*	*70-120*			3550B	09/30/2021 21:30	DWI	*8015B*

The results in this report apply to the samples analyzed in accordance with the chain of custody document. This analytical report must be reproduced in its entirety.

Amolk Brar, Lab Director

American Scientific Laboratories, LLC
Environmental Testing Services
2520 N. San Fernando Road, LA CA 90065 Tel: (323) 223-9700 • Fax: (323) 223-9500

Kroner Environmental Services, Inc.	Project: Regional Connector N. Mission Rd.	Work Order No: 2109254
10801 National Blvd. # 415	Project Number: 1093	**Reported:**
Los Angeles CA, 90064	Project Manager: Kurt Kroner	10/07/2021 14:32

Analytical Results

Client Sample ID: MSP8-2

Laboratory Sample ID: 2109254-05 (Solid)

Analyte	Result	Notes	MDL	PQL	Units	Dilution	Prep Method	Analyzed	Analyst	Method
Volatile Organic Compounds				Batch ID: BJ10007			Prepared: 09/30/2021 09:00			
Acetone	ND		12.7	50.0	ug/kg	1	5030A	09/30/2021 19:32	SA	8260B
Benzene	ND		0.930	2.00	ug/kg	1	5030A	09/30/2021 19:32	SA	8260B
Bromobenzene	ND		3.39	10.0	ug/kg	1	5030A	09/30/2021 19:32	SA	8260B
Bromochloromethane	ND		0.380	10.0	ug/kg	1	5030A	09/30/2021 19:32	SA	8260B
Bromodichloromethane	ND		0.630	10.0	ug/kg	1	5030A	09/30/2021 19:32	SA	8260B
Bromoform	ND		3.39	50.0	ug/kg	1	5030A	09/30/2021 19:32	SA	8260B
Bromomethane	ND		2.75	30.0	ug/kg	1	5030A	09/30/2021 19:32	SA	8260B
2-Butanone	ND		5.83	50.0	ug/kg	1	5030A	09/30/2021 19:32	SA	8260B
n-Butylbenzene	ND		2.05	10.0	ug/kg	1	5030A	09/30/2021 19:32	SA	8260B
sec-Butylbenzene	ND		3.04	10.0	ug/kg	1	5030A	09/30/2021 19:32	SA	8260B
tert-Butylbenzene	ND		1.34	10.0	ug/kg	1	5030A	09/30/2021 19:32	SA	8260B
Carbon disulfide	ND		5.53	10.0	ug/kg	1	5030A	09/30/2021 19:32	SA	8260B
Carbon tetrachloride	ND		2.48	10.0	ug/kg	1	5030A	09/30/2021 19:32	SA	8260B
Chlorobenzene	ND		0.890	10.0	ug/kg	1	5030A	09/30/2021 19:32	SA	8260B
Chloroethane	ND		2.15	30.0	ug/kg	1	5030A	09/30/2021 19:32	SA	8260B
2-Chloroethylvinyl Ether	ND		5.53	50.0	ug/kg	1	5030A	09/30/2021 19:32	SA	8260B
Chloroform	ND		1.24	10.0	ug/kg	1	5030A	09/30/2021 19:32	SA	8260B
Chloromethane	ND		1.74	30.0	ug/kg	1	5030A	09/30/2021 19:32	SA	8260B
4-Chlorotoluene	ND		1.34	10.0	ug/kg	1	5030A	09/30/2021 19:32	SA	8260B
2-Chlorotoluene	ND		2.35	10.0	ug/kg	1	5030A	09/30/2021 19:32	SA	8260B
1,2-Dibromo-3-chloropropane	ND		2.69	50.0	ug/kg	1	5030A	09/30/2021 19:32	SA	8260B
Dibromochloromethane	ND		0.650	10.0	ug/kg	1	5030A	09/30/2021 19:32	SA	8260B
1,2-Dibromoethane	ND		2.75	10.0	ug/kg	1	5030A	09/30/2021 19:32	SA	8260B
Dibromomethane	ND		2.30	10.0	ug/kg	1	5030A	09/30/2021 19:32	SA	8260B
1,2-Dichlorobenzene	ND		1.65	10.0	ug/kg	1	5030A	09/30/2021 19:32	SA	8260B
1,3-Dichlorobenzene	ND		1.03	10.0	ug/kg	1	5030A	09/30/2021 19:32	SA	8260B
1,4-Dichlorobenzene	ND		2.23	10.0	ug/kg	1	5030A	09/30/2021 19:32	SA	8260B
Dichlorodifluoromethane	ND		2.07	30.0	ug/kg	1	5030A	09/30/2021 19:32	SA	8260B
1,1-Dichloroethane	ND		1.30	10.0	ug/kg	1	5030A	09/30/2021 19:32	SA	8260B
1,2-Dichloroethane	ND		1.57	10.0	ug/kg	1	5030A	09/30/2021 19:32	SA	8260B
1,1-Dichloroethene	ND		1.60	10.0	ug/kg	1	5030A	09/30/2021 19:32	SA	8260B
cis-1,2-Dichloroethene	ND		2.16	10.0	ug/kg	1	5030A	09/30/2021 19:32	SA	8260B
trans-1,2-Dichloroethene	ND		2.60	10.0	ug/kg	1	5030A	09/30/2021 19:32	SA	8260B
1,1-Dichloropropene	ND		0.660	10.0	ug/kg	1	5030A	09/30/2021 19:32	SA	8260B
1,2-Dichloropropane	ND		0.920	10.0	ug/kg	1	5030A	09/30/2021 19:32	SA	8260B
1,3-Dichloropropane	ND		1.36	10.0	ug/kg	1	5030A	09/30/2021 19:32	SA	8260B

The results in this report apply to the samples analyzed in accordance with the chain of custody document. This analytical report must be reproduced in its entirety.

Amolk Brar, Lab Director

American Scientific Laboratories, LLC
Environmental Testing Services
2520 N. San Fernando Road, LA CA 90065 Tel: (323) 223-9700 • Fax: (323) 223-9500

Kroner Environmental Services, Inc.	Project: Regional Connector N. Mission Rd.	Work Order No: 2109254
10801 National Blvd. # 415	Project Number: 1093	**Reported:**
Los Angeles CA, 90064	Project Manager: Kurt Kroner	10/07/2021 14:32

Analytical Results

Client Sample ID: MSP8-2

Laboratory Sample ID: 2109254-05 (Solid)

Analyte	Result	Notes	MDL	PQL	Units	Dilution	Prep Method	Analyzed	Analyst	Method
Volatile Organic Compounds				Batch ID: BJ10007			Prepared: 09/30/2021 09:00			
2,2-Dichloropropane	ND		1.12	10.0	ug/kg	1	5030A	09/30/2021 19:32	SA	8260B
cis-1,3-Dichloropropene	ND		0.980	10.0	ug/kg	1	5030A	09/30/2021 19:32	SA	8260B
trans-1,3-Dichloropropene	ND		0.960	10.0	ug/kg	1	5030A	09/30/2021 19:32	SA	8260B
Ethylbenzene	ND		1.00	2.00	ug/kg	1	5030A	09/30/2021 19:32	SA	8260B
Hexachlorobutadiene	ND		2.77	30.0	ug/kg	1	5030A	09/30/2021 19:32	SA	8260B
2-Hexanone	ND		3.18	50.0	ug/kg	1	5030A	09/30/2021 19:32	SA	8260B
Isopropylbenzene	ND		1.42	10.0	ug/kg	1	5030A	09/30/2021 19:32	SA	8260B
p-Isopropyltoluene	ND		3.86	10.0	ug/kg	1	5030A	09/30/2021 19:32	SA	8260B
Methyl tert-Butyl Ether (MTBE)	ND		1.81	5.00	ug/kg	1	5030A	09/30/2021 19:32	SA	8260B
4-Methyl-2-pentanone (MIBK)	ND		3.14	50.0	ug/kg	1	5030A	09/30/2021 19:32	SA	8260B
Methylene chloride	ND		3.31	50.0	ug/kg	1	5030A	09/30/2021 19:32	SA	8260B
Naphthalene	ND		1.14	10.0	ug/kg	1	5030A	09/30/2021 19:32	SA	8260B
n-Propylbenzene	ND		1.14	10.0	ug/kg	1	5030A	09/30/2021 19:32	SA	8260B
Styrene	ND		0.800	10.0	ug/kg	1	5030A	09/30/2021 19:32	SA	8260B
1,1,1,2-Tetrachloroethane	ND		1.28	10.0	ug/kg	1	5030A	09/30/2021 19:32	SA	8260B
1,1,2,2-Tetrachloroethane	ND		3.25	10.0	ug/kg	1	5030A	09/30/2021 19:32	SA	8260B
Tetrachloroethene	ND		0.930	10.0	ug/kg	1	5030A	09/30/2021 19:32	SA	8260B
Toluene	ND		1.00	2.00	ug/kg	1	5030A	09/30/2021 19:32	SA	8260B
1,2,3-Trichlorobenzene	ND		1.23	10.0	ug/kg	1	5030A	09/30/2021 19:32	SA	8260B
1,2,4-Trichlorobenzene	ND		2.82	10.0	ug/kg	1	5030A	09/30/2021 19:32	SA	8260B
1,1,1-Trichloroethane	ND		2.03	10.0	ug/kg	1	5030A	09/30/2021 19:32	SA	8260B
1,1,2-Trichloroethane	ND		1.74	10.0	ug/kg	1	5030A	09/30/2021 19:32	SA	8260B
Trichloroethene	ND		1.15	10.0	ug/kg	1	5030A	09/30/2021 19:32	SA	8260B
Trichlorofluoromethane	ND		3.15	10.0	ug/kg	1	5030A	09/30/2021 19:32	SA	8260B
1,2,3-Trichloropropane	ND		1.74	10.0	ug/kg	1	5030A	09/30/2021 19:32	SA	8260B
1,2,4-Trimethylbenzene	ND		3.19	10.0	ug/kg	1	5030A	09/30/2021 19:32	SA	8260B
1,3,5- Trimethylbenzene	ND		1.23	10.0	ug/kg	1	5030A	09/30/2021 19:32	SA	8260B
Vinyl acetate	ND		10.8	50.0	ug/kg	1	5030A	09/30/2021 19:32	SA	8260B
Vinyl chloride	ND		2.79	30.0	ug/kg	1	5030A	09/30/2021 19:32	SA	8260B
m,p-Xylenes	ND		1.80	4.00	ug/kg	1	5030A	09/30/2021 19:32	SA	8260B
o-Xylene	ND		1.00	2.00	ug/kg	1	5030A	09/30/2021 19:32	SA	8260B
Surrogate: 4-Bromofluorobenzene			*113 %*		*70-120*		5030A	09/30/2021 19:32	SA	*8260B*
Surrogate: Dibromofluoromethane			*82.1 %*		*70-120*		5030A	09/30/2021 19:32	SA	*8260B*
Surrogate: Toluene-d8			*109 %*		*70-120*		5030A	09/30/2021 19:32	SA	*8260B*

The results in this report apply to the samples analyzed in accordance with the chain of custody document. This analytical report must be reproduced in its entirety.

Amolk Brar, Lab Director

AMERICAN SCIENTIFIC LABORATORIES, LLC
Environmental Testing Services
2520 N. San Fernando Road, LA CA 90065 Tel: (323) 223-9700 • Fax: (323) 223-9500

Kroner Environmental Services, Inc.	Project: Regional Connector N. Mission Rd.	Work Order No: 2109254
10801 National Blvd. # 415	Project Number: 1093	**Reported:**
Los Angeles CA, 90064	Project Manager: Kurt Kroner	10/07/2021 14:32

Analytical Results

Client Sample ID: MSP10-2

Laboratory Sample ID: 2109254-06 (Solid)

Analyte	Result	Notes	MDL	PQL	Units	Dilution	Prep Method	Analyzed	Analyst	Method
Total Mercury (CVAA)				Batch ID: BJ10207			Prepared: 10/05/2021 11:08			
Mercury	**0.131**		0.0100	0.0500	mg/kg	1	7471A	10/06/2021 14:21	LVE	7471A
Total ICP Metals				Batch ID: BJ10206			Prepared: 10/05/2021 11:04			
Antimony	ND		0.200	0.500	mg/kg	1	3050B	10/05/2021 19:23	LVE	SW846 6010B
Arsenic	**1.16**		0.150	0.250	mg/kg	1	3050B	10/05/2021 19:23	LVE	SW846 6010B
Barium	**62.2**		0.0500	0.500	mg/kg	1	3050B	10/05/2021 19:23	LVE	SW846 6010B
Beryllium	**0.246**	J	0.0400	0.500	mg/kg	1	3050B	10/05/2021 19:23	LVE	SW846 6010B
Cadmium	**0.945**		0.0400	0.500	mg/kg	1	3050B	10/05/2021 19:23	LVE	SW846 6010B
Chromium	**8.30**		0.0500	0.500	mg/kg	1	3050B	10/05/2021 19:23	LVE	SW846 6010B
Cobalt	**5.46**		0.0500	0.500	mg/kg	1	3050B	10/05/2021 19:23	LVE	SW846 6010B
Copper	**10.2**		0.0500	0.500	mg/kg	1	3050B	10/05/2021 19:23	LVE	SW846 6010B
Lead	**11.2**		0.100	0.250	mg/kg	1	3050B	10/05/2021 19:23	LVE	SW846 6010B
Molybdenum	**0.274**	J	0.0500	0.500	mg/kg	1	3050B	10/05/2021 19:23	LVE	SW846 6010B
Nickel	**5.48**		0.100	0.500	mg/kg	1	3050B	10/05/2021 19:23	LVE	SW846 6010B
Selenium	ND		0.200	0.500	mg/kg	1	3050B	10/05/2021 19:23	LVE	SW846 6010B
Silver	ND		0.0500	0.500	mg/kg	1	3050B	10/05/2021 19:23	LVE	SW846 6010B
Thallium	ND		0.150	0.500	mg/kg	1	3050B	10/05/2021 19:23	LVE	SW846 6010B
Vanadium	**22.2**		0.0500	0.500	mg/kg	1	3050B	10/05/2021 19:23	LVE	SW846 6010B
Zinc	**49.3**		0.350	0.500	mg/kg	1	3050B	10/05/2021 19:23	LVE	SW846 6010B
Total Petroleum Hydrocarbons(TPH-g)				Batch ID: BJ10113			Prepared: 10/01/2021 10:00			
Gasoline Range Organics	ND		250	500	ug/kg	1	5030A	10/01/2021 15:51	SA	8015B
Surrogate: Bromofluorobenzene			*85.2 %*	*70-120*			5030A	10/01/2021 15:51	SA	*8015B*
Total Petroleum Hydrocarbons(TPH DROORO)				Batch ID: BJ10010			Prepared: 09/30/2021 09:00			
Diesel range organics	ND		1.00	10.0	mg/kg	1	3550B	09/30/2021 22:11	DWI	8015B
Oil Range Organics	ND		17.0	50.0	mg/kg	1	3550B	09/30/2021 22:11	DWI	8015B
Surrogate: Chlorobenzene			*110 %*	*70-120*			3550B	09/30/2021 22:11	DWI	*8015B*

The results in this report apply to the samples analyzed in accordance with the chain of custody document. This analytical report must be reproduced in its entirety.

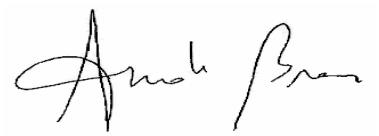

Amolk Brar, Lab Director

American Scientific Laboratories, LLC
Environmental Testing Services
2520 N. San Fernando Road, LA CA 90065 Tel: (323) 223-9700 • Fax: (323) 223-9500

Kroner Environmental Services, Inc.	Project: Regional Connector N. Mission Rd.	Work Order No: 2109254
10801 National Blvd. # 415	Project Number: 1093	**Reported:**
Los Angeles CA, 90064	Project Manager: Kurt Kroner	10/07/2021 14:32

Analytical Results

Client Sample ID: MSP10-2

Laboratory Sample ID: 2109254-06 (Solid)

Analyte	Result	Notes	MDL	PQL	Units	Dilution	Prep Method	Analyzed	Analyst	Method
Volatile Organic Compounds				Batch ID: BJ10007			Prepared: 09/30/2021 09:00			
Acetone	ND		12.7	50.0	ug/kg	1	5030A	09/30/2021 20:00	SA	8260B
Benzene	ND		0.930	2.00	ug/kg	1	5030A	09/30/2021 20:00	SA	8260B
Bromobenzene	ND		3.39	10.0	ug/kg	1	5030A	09/30/2021 20:00	SA	8260B
Bromochloromethane	ND		0.380	10.0	ug/kg	1	5030A	09/30/2021 20:00	SA	8260B
Bromodichloromethane	ND		0.630	10.0	ug/kg	1	5030A	09/30/2021 20:00	SA	8260B
Bromoform	ND		3.39	50.0	ug/kg	1	5030A	09/30/2021 20:00	SA	8260B
Bromomethane	ND		2.75	30.0	ug/kg	1	5030A	09/30/2021 20:00	SA	8260B
2-Butanone	ND		5.83	50.0	ug/kg	1	5030A	09/30/2021 20:00	SA	8260B
n-Butylbenzene	ND		2.05	10.0	ug/kg	1	5030A	09/30/2021 20:00	SA	8260B
sec-Butylbenzene	ND		3.04	10.0	ug/kg	1	5030A	09/30/2021 20:00	SA	8260B
tert-Butylbenzene	ND		1.34	10.0	ug/kg	1	5030A	09/30/2021 20:00	SA	8260B
Carbon disulfide	ND		5.53	10.0	ug/kg	1	5030A	09/30/2021 20:00	SA	8260B
Carbon tetrachloride	ND		2.48	10.0	ug/kg	1	5030A	09/30/2021 20:00	SA	8260B
Chlorobenzene	ND		0.890	10.0	ug/kg	1	5030A	09/30/2021 20:00	SA	8260B
Chloroethane	ND		2.15	30.0	ug/kg	1	5030A	09/30/2021 20:00	SA	8260B
2-Chloroethylvinyl Ether	ND		5.53	50.0	ug/kg	1	5030A	09/30/2021 20:00	SA	8260B
Chloroform	ND		1.24	10.0	ug/kg	1	5030A	09/30/2021 20:00	SA	8260B
Chloromethane	ND		1.74	30.0	ug/kg	1	5030A	09/30/2021 20:00	SA	8260B
4-Chlorotoluene	ND		1.34	10.0	ug/kg	1	5030A	09/30/2021 20:00	SA	8260B
2-Chlorotoluene	ND		2.35	10.0	ug/kg	1	5030A	09/30/2021 20:00	SA	8260B
1,2-Dibromo-3-chloropropane	ND		2.69	50.0	ug/kg	1	5030A	09/30/2021 20:00	SA	8260B
Dibromochloromethane	ND		0.650	10.0	ug/kg	1	5030A	09/30/2021 20:00	SA	8260B
1,2-Dibromoethane	ND		2.75	10.0	ug/kg	1	5030A	09/30/2021 20:00	SA	8260B
Dibromomethane	ND		2.30	10.0	ug/kg	1	5030A	09/30/2021 20:00	SA	8260B
1,2-Dichlorobenzene	ND		1.65	10.0	ug/kg	1	5030A	09/30/2021 20:00	SA	8260B
1,3-Dichlorobenzene	ND		1.03	10.0	ug/kg	1	5030A	09/30/2021 20:00	SA	8260B
1,4-Dichlorobenzene	ND		2.23	10.0	ug/kg	1	5030A	09/30/2021 20:00	SA	8260B
Dichlorodifluoromethane	ND		2.07	30.0	ug/kg	1	5030A	09/30/2021 20:00	SA	8260B
1,1-Dichloroethane	ND		1.30	10.0	ug/kg	1	5030A	09/30/2021 20:00	SA	8260B
1,2-Dichloroethane	ND		1.57	10.0	ug/kg	1	5030A	09/30/2021 20:00	SA	8260B
1,1-Dichloroethene	ND		1.60	10.0	ug/kg	1	5030A	09/30/2021 20:00	SA	8260B
cis-1,2-Dichloroethene	ND		2.16	10.0	ug/kg	1	5030A	09/30/2021 20:00	SA	8260B
trans-1,2-Dichloroethene	ND		2.60	10.0	ug/kg	1	5030A	09/30/2021 20:00	SA	8260B
1,1-Dichloropropene	ND		0.660	10.0	ug/kg	1	5030A	09/30/2021 20:00	SA	8260B
1,2-Dichloropropane	ND		0.920	10.0	ug/kg	1	5030A	09/30/2021 20:00	SA	8260B
1,3-Dichloropropane	ND		1.36	10.0	ug/kg	1	5030A	09/30/2021 20:00	SA	8260B

The results in this report apply to the samples analyzed in accordance with the chain of custody document. This analytical report must be reproduced in its entirety.

Amolk Brar, Lab Director

American Scientific Laboratories, LLC
Environmental Testing Services
2520 N. San Fernando Road, LA CA 90065 Tel: (323) 223-9700 • Fax: (323) 223-9500

Kroner Environmental Services, Inc.	Project: Regional Connector N. Mission Rd.	Work Order No: 2109254
10801 National Blvd. # 415	Project Number: 1093	**Reported:**
Los Angeles CA, 90064	Project Manager: Kurt Kroner	10/07/2021 14:32

Analytical Results

Client Sample ID: MSP10-2

Laboratory Sample ID: 2109254-06 (Solid)

Analyte	Result	Notes	MDL	PQL	Units	Dilution	Prep Method	Analyzed	Analyst	Method
Volatile Organic Compounds				Batch ID: BJ10007			Prepared: 09/30/2021 09:00			
2,2-Dichloropropane	ND		1.12	10.0	ug/kg	1	5030A	09/30/2021 20:00	SA	8260B
cis-1,3-Dichloropropene	ND		0.980	10.0	ug/kg	1	5030A	09/30/2021 20:00	SA	8260B
trans-1,3-Dichloropropene	ND		0.960	10.0	ug/kg	1	5030A	09/30/2021 20:00	SA	8260B
Ethylbenzene	ND		1.00	2.00	ug/kg	1	5030A	09/30/2021 20:00	SA	8260B
Hexachlorobutadiene	ND		2.77	30.0	ug/kg	1	5030A	09/30/2021 20:00	SA	8260B
2-Hexanone	ND		3.18	50.0	ug/kg	1	5030A	09/30/2021 20:00	SA	8260B
Isopropylbenzene	ND		1.42	10.0	ug/kg	1	5030A	09/30/2021 20:00	SA	8260B
p-Isopropyltoluene	ND		3.86	10.0	ug/kg	1	5030A	09/30/2021 20:00	SA	8260B
Methyl tert-Butyl Ether (MTBE)	ND		1.81	5.00	ug/kg	1	5030A	09/30/2021 20:00	SA	8260B
4-Methyl-2-pentanone (MIBK)	ND		3.14	50.0	ug/kg	1	5030A	09/30/2021 20:00	SA	8260B
Methylene chloride	ND		3.31	50.0	ug/kg	1	5030A	09/30/2021 20:00	SA	8260B
Naphthalene	ND		1.14	10.0	ug/kg	1	5030A	09/30/2021 20:00	SA	8260B
n-Propylbenzene	ND		1.14	10.0	ug/kg	1	5030A	09/30/2021 20:00	SA	8260B
Styrene	ND		0.800	10.0	ug/kg	1	5030A	09/30/2021 20:00	SA	8260B
1,1,1,2-Tetrachloroethane	ND		1.28	10.0	ug/kg	1	5030A	09/30/2021 20:00	SA	8260B
1,1,2,2-Tetrachloroethane	ND		3.25	10.0	ug/kg	1	5030A	09/30/2021 20:00	SA	8260B
Tetrachloroethene	ND		0.930	10.0	ug/kg	1	5030A	09/30/2021 20:00	SA	8260B
Toluene	ND		1.00	2.00	ug/kg	1	5030A	09/30/2021 20:00	SA	8260B
1,2,3-Trichlorobenzene	ND		1.23	10.0	ug/kg	1	5030A	09/30/2021 20:00	SA	8260B
1,2,4-Trichlorobenzene	ND		2.82	10.0	ug/kg	1	5030A	09/30/2021 20:00	SA	8260B
1,1,1-Trichloroethane	ND		2.03	10.0	ug/kg	1	5030A	09/30/2021 20:00	SA	8260B
1,1,2-Trichloroethane	ND		1.74	10.0	ug/kg	1	5030A	09/30/2021 20:00	SA	8260B
Trichloroethene	ND		1.15	10.0	ug/kg	1	5030A	09/30/2021 20:00	SA	8260B
Trichlorofluoromethane	ND		3.15	10.0	ug/kg	1	5030A	09/30/2021 20:00	SA	8260B
1,2,3-Trichloropropane	ND		1.74	10.0	ug/kg	1	5030A	09/30/2021 20:00	SA	8260B
1,2,4-Trimethylbenzene	ND		3.19	10.0	ug/kg	1	5030A	09/30/2021 20:00	SA	8260B
1,3,5- Trimethylbenzene	ND		1.23	10.0	ug/kg	1	5030A	09/30/2021 20:00	SA	8260B
Vinyl acetate	ND		10.8	50.0	ug/kg	1	5030A	09/30/2021 20:00	SA	8260B
Vinyl chloride	ND		2.79	30.0	ug/kg	1	5030A	09/30/2021 20:00	SA	8260B
m,p-Xylenes	ND		1.80	4.00	ug/kg	1	5030A	09/30/2021 20:00	SA	8260B
o-Xylene	ND		1.00	2.00	ug/kg	1	5030A	09/30/2021 20:00	SA	8260B
Surrogate: 4-Bromofluorobenzene			*113 %*		*70-120*		5030A	09/30/2021 20:00	SA	*8260B*
Surrogate: Dibromofluoromethane			*90.8 %*		*70-120*		5030A	09/30/2021 20:00	SA	*8260B*
Surrogate: Toluene-d8			*108 %*		*70-120*		5030A	09/30/2021 20:00	SA	*8260B*

The results in this report apply to the samples analyzed in accordance with the chain of custody document. This analytical report must be reproduced in its entirety.

Amolk Brar, Lab Director

AMERICAN SCIENTIFIC LABORATORIES, LLC
Environmental Testing Services
2520 N. San Fernando Road, LA CA 90065 Tel: (323) 223-9700 • Fax: (323) 223-9500

Kroner Environmental Services, Inc.	Project: Regional Connector N. Mission Rd.	Work Order No: 2109254
10801 National Blvd. # 415	Project Number: 1093	**Reported:**
Los Angeles CA, 90064	Project Manager: Kurt Kroner	10/07/2021 14:32

Analytical Results

Client Sample ID: MSP12-2

Laboratory Sample ID: 2109254-07 (Solid)

Analyte	Result	Notes	MDL	PQL	Units	Dilution	Prep Method	Analyzed	Analyst	Method
Total Mercury (CVAA)				Batch ID: BJ10207			Prepared: 10/05/2021 11:08			
Mercury	**0.0492**	J	0.0100	0.0500	mg/kg	1	7471A	10/06/2021 14:21	LVE	7471A
Total ICP Metals				Batch ID: BJ10206			Prepared: 10/05/2021 11:04			
Antimony	ND		0.200	0.500	mg/kg	1	3050B	10/05/2021 19:23	LVE	SW846 6010B
Arsenic	**0.897**		0.150	0.250	mg/kg	1	3050B	10/05/2021 19:23	LVE	SW846 6010B
Barium	**32.2**		0.0500	0.500	mg/kg	1	3050B	10/05/2021 19:23	LVE	SW846 6010B
Beryllium	**0.102**	J	0.0400	0.500	mg/kg	1	3050B	10/05/2021 19:23	LVE	SW846 6010B
Cadmium	**0.623**		0.0400	0.500	mg/kg	1	3050B	10/05/2021 19:23	LVE	SW846 6010B
Chromium	**4.43**		0.0500	0.500	mg/kg	1	3050B	10/05/2021 19:23	LVE	SW846 6010B
Cobalt	**2.91**		0.0500	0.500	mg/kg	1	3050B	10/05/2021 19:23	LVE	SW846 6010B
Copper	**6.19**		0.0500	0.500	mg/kg	1	3050B	10/05/2021 19:23	LVE	SW846 6010B
Lead	**12.8**		0.100	0.250	mg/kg	1	3050B	10/05/2021 19:23	LVE	SW846 6010B
Molybdenum	**0.778**		0.0500	0.500	mg/kg	1	3050B	10/05/2021 19:23	LVE	SW846 6010B
Nickel	**3.47**		0.100	0.500	mg/kg	1	3050B	10/05/2021 19:23	LVE	SW846 6010B
Selenium	**0.237**	J	0.200	0.500	mg/kg	1	3050B	10/05/2021 19:23	LVE	SW846 6010B
Silver	ND		0.0500	0.500	mg/kg	1	3050B	10/05/2021 19:23	LVE	SW846 6010B
Thallium	ND		0.150	0.500	mg/kg	1	3050B	10/05/2021 19:23	LVE	SW846 6010B
Vanadium	**11.7**		0.0500	0.500	mg/kg	1	3050B	10/05/2021 19:23	LVE	SW846 6010B
Zinc	**33.4**		0.350	0.500	mg/kg	1	3050B	10/05/2021 19:23	LVE	SW846 6010B
Total Petroleum Hydrocarbons(TPH-g)				Batch ID: BJ10004			Prepared: 09/30/2021 09:00			
Gasoline Range Organics	ND		250	500	ug/kg	1	5030A	10/01/2021 00:28	SA	8015B
Surrogate: Bromofluorobenzene			*98.2 %*	*70-120*			5030A	10/01/2021 00:28	SA	*8015B*
Total Petroleum Hydrocarbons(TPH DROORO)				Batch ID: BJ10010			Prepared: 09/30/2021 09:00			
Diesel range organics	ND		1.00	10.0	mg/kg	1	3550B	09/30/2021 22:53	DWI	8015B
Oil Range Organics	ND		17.0	50.0	mg/kg	1	3550B	09/30/2021 22:53	DWI	8015B
Surrogate: Chlorobenzene			*108 %*	*70-120*			3550B	09/30/2021 22:53	DWI	*8015B*

The results in this report apply to the samples analyzed in accordance with the chain of custody document. This analytical report must be reproduced in its entirety.

Amolk Brar, Lab Director

American Scientific Laboratories, LLC
Environmental Testing Services
2520 N. San Fernando Road, LA CA 90065 Tel: (323) 223-9700 • Fax: (323) 223-9500

Kroner Environmental Services, Inc.	Project: Regional Connector N. Mission Rd.	Work Order No: 2109254
10801 National Blvd. # 415	Project Number: 1093	**Reported:**
Los Angeles CA, 90064	Project Manager: Kurt Kroner	10/07/2021 14:32

Analytical Results

Client Sample ID: MSP12-2

Laboratory Sample ID: 2109254-07 (Solid)

Analyte	Result	Notes	MDL	PQL	Units	Dilution	Prep Method	Analyzed	Analyst	Method
Volatile Organic Compounds				Batch ID: BJ10007			Prepared: 09/30/2021 09:00			
Acetone	ND		12.7	50.0	ug/kg	1	5030A	09/30/2021 20:28	SA	8260B
Benzene	ND		0.930	2.00	ug/kg	1	5030A	09/30/2021 20:28	SA	8260B
Bromobenzene	ND		3.39	10.0	ug/kg	1	5030A	09/30/2021 20:28	SA	8260B
Bromochloromethane	ND		0.380	10.0	ug/kg	1	5030A	09/30/2021 20:28	SA	8260B
Bromodichloromethane	ND		0.630	10.0	ug/kg	1	5030A	09/30/2021 20:28	SA	8260B
Bromoform	ND		3.39	50.0	ug/kg	1	5030A	09/30/2021 20:28	SA	8260B
Bromomethane	ND		2.75	30.0	ug/kg	1	5030A	09/30/2021 20:28	SA	8260B
2-Butanone	ND		5.83	50.0	ug/kg	1	5030A	09/30/2021 20:28	SA	8260B
n-Butylbenzene	ND		2.05	10.0	ug/kg	1	5030A	09/30/2021 20:28	SA	8260B
sec-Butylbenzene	ND		3.04	10.0	ug/kg	1	5030A	09/30/2021 20:28	SA	8260B
tert-Butylbenzene	ND		1.34	10.0	ug/kg	1	5030A	09/30/2021 20:28	SA	8260B
Carbon disulfide	ND		5.53	10.0	ug/kg	1	5030A	09/30/2021 20:28	SA	8260B
Carbon tetrachloride	ND		2.48	10.0	ug/kg	1	5030A	09/30/2021 20:28	SA	8260B
Chlorobenzene	ND		0.890	10.0	ug/kg	1	5030A	09/30/2021 20:28	SA	8260B
Chloroethane	ND		2.15	30.0	ug/kg	1	5030A	09/30/2021 20:28	SA	8260B
2-Chloroethylvinyl Ether	ND		5.53	50.0	ug/kg	1	5030A	09/30/2021 20:28	SA	8260B
Chloroform	ND		1.24	10.0	ug/kg	1	5030A	09/30/2021 20:28	SA	8260B
Chloromethane	ND		1.74	30.0	ug/kg	1	5030A	09/30/2021 20:28	SA	8260B
4-Chlorotoluene	ND		1.34	10.0	ug/kg	1	5030A	09/30/2021 20:28	SA	8260B
2-Chlorotoluene	ND		2.35	10.0	ug/kg	1	5030A	09/30/2021 20:28	SA	8260B
1,2-Dibromo-3-chloropropane	ND		2.69	50.0	ug/kg	1	5030A	09/30/2021 20:28	SA	8260B
Dibromochloromethane	ND		0.650	10.0	ug/kg	1	5030A	09/30/2021 20:28	SA	8260B
1,2-Dibromoethane	ND		2.75	10.0	ug/kg	1	5030A	09/30/2021 20:28	SA	8260B
Dibromomethane	ND		2.30	10.0	ug/kg	1	5030A	09/30/2021 20:28	SA	8260B
1,2-Dichlorobenzene	ND		1.65	10.0	ug/kg	1	5030A	09/30/2021 20:28	SA	8260B
1,3-Dichlorobenzene	ND		1.03	10.0	ug/kg	1	5030A	09/30/2021 20:28	SA	8260B
1,4-Dichlorobenzene	ND		2.23	10.0	ug/kg	1	5030A	09/30/2021 20:28	SA	8260B
Dichlorodifluoromethane	ND		2.07	30.0	ug/kg	1	5030A	09/30/2021 20:28	SA	8260B
1,1-Dichloroethane	ND		1.30	10.0	ug/kg	1	5030A	09/30/2021 20:28	SA	8260B
1,2-Dichloroethane	ND		1.57	10.0	ug/kg	1	5030A	09/30/2021 20:28	SA	8260B
1,1-Dichloroethene	ND		1.60	10.0	ug/kg	1	5030A	09/30/2021 20:28	SA	8260B
cis-1,2-Dichloroethene	ND		2.16	10.0	ug/kg	1	5030A	09/30/2021 20:28	SA	8260B
trans-1,2-Dichloroethene	ND		2.60	10.0	ug/kg	1	5030A	09/30/2021 20:28	SA	8260B
1,1-Dichloropropene	ND		0.660	10.0	ug/kg	1	5030A	09/30/2021 20:28	SA	8260B
1,2-Dichloropropane	ND		0.920	10.0	ug/kg	1	5030A	09/30/2021 20:28	SA	8260B
1,3-Dichloropropane	ND		1.36	10.0	ug/kg	1	5030A	09/30/2021 20:28	SA	8260B

The results in this report apply to the samples analyzed in accordance with the chain of custody document. This analytical report must be reproduced in its entirety.

Amolk Brar, Lab Director

American Scientific Laboratories, LLC
Environmental Testing Services
2520 N. San Fernando Road, LA CA 90065 Tel: (323) 223-9700 • Fax: (323) 223-9500

Kroner Environmental Services, Inc.	Project: Regional Connector N. Mission Rd.	Work Order No: 2109254
10801 National Blvd. # 415	Project Number: 1093	**Reported:**
Los Angeles CA, 90064	Project Manager: Kurt Kroner	10/07/2021 14:32

Analytical Results

Client Sample ID: MSP12-2

Laboratory Sample ID: 2109254-07 (Solid)

Analyte	Result	Notes	MDL	PQL	Units	Dilution	Prep Method	Analyzed	Analyst	Method
Volatile Organic Compounds				Batch ID: BJ10007			Prepared: 09/30/2021 09:00			
2,2-Dichloropropane	ND		1.12	10.0	ug/kg	1	5030A	09/30/2021 20:28	SA	8260B
cis-1,3-Dichloropropene	ND		0.980	10.0	ug/kg	1	5030A	09/30/2021 20:28	SA	8260B
trans-1,3-Dichloropropene	ND		0.960	10.0	ug/kg	1	5030A	09/30/2021 20:28	SA	8260B
Ethylbenzene	ND		1.00	2.00	ug/kg	1	5030A	09/30/2021 20:28	SA	8260B
Hexachlorobutadiene	ND		2.77	30.0	ug/kg	1	5030A	09/30/2021 20:28	SA	8260B
2-Hexanone	ND		3.18	50.0	ug/kg	1	5030A	09/30/2021 20:28	SA	8260B
Isopropylbenzene	ND		1.42	10.0	ug/kg	1	5030A	09/30/2021 20:28	SA	8260B
p-Isopropyltoluene	ND		3.86	10.0	ug/kg	1	5030A	09/30/2021 20:28	SA	8260B
Methyl tert-Butyl Ether (MTBE)	ND		1.81	5.00	ug/kg	1	5030A	09/30/2021 20:28	SA	8260B
4-Methyl-2-pentanone (MIBK)	ND		3.14	50.0	ug/kg	1	5030A	09/30/2021 20:28	SA	8260B
Methylene chloride	ND		3.31	50.0	ug/kg	1	5030A	09/30/2021 20:28	SA	8260B
Naphthalene	ND		1.14	10.0	ug/kg	1	5030A	09/30/2021 20:28	SA	8260B
n-Propylbenzene	ND		1.14	10.0	ug/kg	1	5030A	09/30/2021 20:28	SA	8260B
Styrene	ND		0.800	10.0	ug/kg	1	5030A	09/30/2021 20:28	SA	8260B
1,1,1,2-Tetrachloroethane	ND		1.28	10.0	ug/kg	1	5030A	09/30/2021 20:28	SA	8260B
1,1,2,2-Tetrachloroethane	ND		3.25	10.0	ug/kg	1	5030A	09/30/2021 20:28	SA	8260B
Tetrachloroethene	ND		0.930	10.0	ug/kg	1	5030A	09/30/2021 20:28	SA	8260B
Toluene	ND		1.00	2.00	ug/kg	1	5030A	09/30/2021 20:28	SA	8260B
1,2,3-Trichlorobenzene	ND		1.23	10.0	ug/kg	1	5030A	09/30/2021 20:28	SA	8260B
1,2,4-Trichlorobenzene	ND		2.82	10.0	ug/kg	1	5030A	09/30/2021 20:28	SA	8260B
1,1,1-Trichloroethane	ND		2.03	10.0	ug/kg	1	5030A	09/30/2021 20:28	SA	8260B
1,1,2-Trichloroethane	ND		1.74	10.0	ug/kg	1	5030A	09/30/2021 20:28	SA	8260B
Trichloroethene	ND		1.15	10.0	ug/kg	1	5030A	09/30/2021 20:28	SA	8260B
Trichlorofluoromethane	ND		3.15	10.0	ug/kg	1	5030A	09/30/2021 20:28	SA	8260B
1,2,3-Trichloropropane	ND		1.74	10.0	ug/kg	1	5030A	09/30/2021 20:28	SA	8260B
1,2,4-Trimethylbenzene	ND		3.19	10.0	ug/kg	1	5030A	09/30/2021 20:28	SA	8260B
1,3,5- Trimethylbenzene	ND		1.23	10.0	ug/kg	1	5030A	09/30/2021 20:28	SA	8260B
Vinyl acetate	ND		10.8	50.0	ug/kg	1	5030A	09/30/2021 20:28	SA	8260B
Vinyl chloride	ND		2.79	30.0	ug/kg	1	5030A	09/30/2021 20:28	SA	8260B
m,p-Xylenes	ND		1.80	4.00	ug/kg	1	5030A	09/30/2021 20:28	SA	8260B
o-Xylene	ND		1.00	2.00	ug/kg	1	5030A	09/30/2021 20:28	SA	8260B
Surrogate: 4-Bromofluorobenzene			*115 %*		*70-120*		5030A	09/30/2021 20:28	SA	*8260B*
Surrogate: Dibromofluoromethane			*81.7 %*		*70-120*		5030A	09/30/2021 20:28	SA	*8260B*
Surrogate: Toluene-d8			*108 %*		*70-120*		5030A	09/30/2021 20:28	SA	*8260B*

The results in this report apply to the samples analyzed in accordance with the chain of custody document. This analytical report must be reproduced in its entirety.

Amolk Brar, Lab Director

American Scientific Laboratories, LLC
Environmental Testing Services
2520 N. San Fernando Road, LA CA 90065 Tel: (323) 223-9700 • Fax: (323) 223-9500

Kroner Environmental Services, Inc.	Project: Regional Connector N. Mission Rd.	Work Order No: 2109254
10801 National Blvd. # 415	Project Number: 1093	**Reported:**
Los Angeles CA, 90064	Project Manager: Kurt Kroner	10/07/2021 14:32

Analytical Results

Client Sample ID: MSP15-2

Laboratory Sample ID: 2109254-08 (Solid)

Analyte	Result	Notes	MDL	PQL	Units	Dilution	Prep Method	Analyzed	Analyst	Method
Total Mercury (CVAA)				Batch ID: BJ10207			Prepared: 10/05/2021 11:08			
Mercury	**0.0884**		0.0100	0.0500	mg/kg	1	7471A	10/06/2021 14:21	LVE	7471A
Total ICP Metals				Batch ID: BJ10206			Prepared: 10/05/2021 11:04			
Antimony	ND		0.200	0.500	mg/kg	1	3050B	10/05/2021 19:23	LVE	SW846 6010B
Arsenic	**1.08**		0.150	0.250	mg/kg	1	3050B	10/05/2021 19:23	LVE	SW846 6010B
Barium	**50.4**		0.0500	0.500	mg/kg	1	3050B	10/05/2021 19:23	LVE	SW846 6010B
Beryllium	**0.176**	J	0.0400	0.500	mg/kg	1	3050B	10/05/2021 19:23	LVE	SW846 6010B
Cadmium	**0.816**		0.0400	0.500	mg/kg	1	3050B	10/05/2021 19:23	LVE	SW846 6010B
Chromium	**6.51**		0.0500	0.500	mg/kg	1	3050B	10/05/2021 19:23	LVE	SW846 6010B
Cobalt	**4.52**		0.0500	0.500	mg/kg	1	3050B	10/05/2021 19:23	LVE	SW846 6010B
Copper	**9.42**		0.0500	0.500	mg/kg	1	3050B	10/05/2021 19:23	LVE	SW846 6010B
Lead	**7.41**		0.100	0.250	mg/kg	1	3050B	10/05/2021 19:23	LVE	SW846 6010B
Molybdenum	**0.237**	J	0.0500	0.500	mg/kg	1	3050B	10/05/2021 19:23	LVE	SW846 6010B
Nickel	**4.74**		0.100	0.500	mg/kg	1	3050B	10/05/2021 19:23	LVE	SW846 6010B
Selenium	ND		0.200	0.500	mg/kg	1	3050B	10/05/2021 19:23	LVE	SW846 6010B
Silver	ND		0.0500	0.500	mg/kg	1	3050B	10/05/2021 19:23	LVE	SW846 6010B
Thallium	ND		0.150	0.500	mg/kg	1	3050B	10/05/2021 19:23	LVE	SW846 6010B
Vanadium	**18.1**		0.0500	0.500	mg/kg	1	3050B	10/05/2021 19:23	LVE	SW846 6010B
Zinc	**41.7**		0.350	0.500	mg/kg	1	3050B	10/05/2021 19:23	LVE	SW846 6010B
Total Petroleum Hydrocarbons(TPH-g)				Batch ID: BJ10004			Prepared: 09/30/2021 09:00			
Gasoline Range Organics	ND		250	500	ug/kg	1	5030A	10/01/2021 00:57	SA	8015B
Surrogate: Bromofluorobenzene			*93.6 %*	*70-120*			5030A	10/01/2021 00:57	SA	*8015B*
Total Petroleum Hydrocarbons(TPH DROORO)				Batch ID: BJ10010			Prepared: 09/30/2021 09:00			
Diesel range organics	ND		1.00	10.0	mg/kg	1	3550B	09/30/2021 23:34	DWI	8015B
Oil Range Organics	ND		17.0	50.0	mg/kg	1	3550B	09/30/2021 23:34	DWI	8015B
Surrogate: Chlorobenzene			*111 %*	*70-120*			3550B	09/30/2021 23:34	DWI	*8015B*

The results in this report apply to the samples analyzed in accordance with the chain of custody document. This analytical report must be reproduced in its entirety.

Amolk Brar, Lab Director

American Scientific Laboratories, LLC
Environmental Testing Services
2520 N. San Fernando Road, LA CA 90065 Tel: (323) 223-9700 • Fax: (323) 223-9500

Kroner Environmental Services, Inc.	Project: Regional Connector N. Mission Rd.	Work Order No: 2109254
10801 National Blvd. # 415	Project Number: 1093	**Reported:**
Los Angeles CA, 90064	Project Manager: Kurt Kroner	10/07/2021 14:32

Analytical Results

Client Sample ID: MSP15-2

Laboratory Sample ID: 2109254-08 (Solid)

Analyte	Result	Notes	MDL	PQL	Units	Dilution	Prep Method	Analyzed	Analyst	Method
Volatile Organic Compounds				Batch ID: BJ10007			Prepared: 09/30/2021 09:00			
Acetone	ND		12.7	50.0	ug/kg	1	5030A	09/30/2021 20:56	SA	8260B
Benzene	ND		0.930	2.00	ug/kg	1	5030A	09/30/2021 20:56	SA	8260B
Bromobenzene	ND		3.39	10.0	ug/kg	1	5030A	09/30/2021 20:56	SA	8260B
Bromochloromethane	ND		0.380	10.0	ug/kg	1	5030A	09/30/2021 20:56	SA	8260B
Bromodichloromethane	ND		0.630	10.0	ug/kg	1	5030A	09/30/2021 20:56	SA	8260B
Bromoform	ND		3.39	50.0	ug/kg	1	5030A	09/30/2021 20:56	SA	8260B
Bromomethane	ND		2.75	30.0	ug/kg	1	5030A	09/30/2021 20:56	SA	8260B
2-Butanone	ND		5.83	50.0	ug/kg	1	5030A	09/30/2021 20:56	SA	8260B
n-Butylbenzene	ND		2.05	10.0	ug/kg	1	5030A	09/30/2021 20:56	SA	8260B
sec-Butylbenzene	ND		3.04	10.0	ug/kg	1	5030A	09/30/2021 20:56	SA	8260B
tert-Butylbenzene	ND		1.34	10.0	ug/kg	1	5030A	09/30/2021 20:56	SA	8260B
Carbon disulfide	ND		5.53	10.0	ug/kg	1	5030A	09/30/2021 20:56	SA	8260B
Carbon tetrachloride	ND		2.48	10.0	ug/kg	1	5030A	09/30/2021 20:56	SA	8260B
Chlorobenzene	ND		0.890	10.0	ug/kg	1	5030A	09/30/2021 20:56	SA	8260B
Chloroethane	ND		2.15	30.0	ug/kg	1	5030A	09/30/2021 20:56	SA	8260B
2-Chloroethylvinyl Ether	ND		5.53	50.0	ug/kg	1	5030A	09/30/2021 20:56	SA	8260B
Chloroform	ND		1.24	10.0	ug/kg	1	5030A	09/30/2021 20:56	SA	8260B
Chloromethane	ND		1.74	30.0	ug/kg	1	5030A	09/30/2021 20:56	SA	8260B
4-Chlorotoluene	ND		1.34	10.0	ug/kg	1	5030A	09/30/2021 20:56	SA	8260B
2-Chlorotoluene	ND		2.35	10.0	ug/kg	1	5030A	09/30/2021 20:56	SA	8260B
1,2-Dibromo-3-chloropropane	ND		2.69	50.0	ug/kg	1	5030A	09/30/2021 20:56	SA	8260B
Dibromochloromethane	ND		0.650	10.0	ug/kg	1	5030A	09/30/2021 20:56	SA	8260B
1,2-Dibromoethane	ND		2.75	10.0	ug/kg	1	5030A	09/30/2021 20:56	SA	8260B
Dibromomethane	ND		2.30	10.0	ug/kg	1	5030A	09/30/2021 20:56	SA	8260B
1,2-Dichlorobenzene	ND		1.65	10.0	ug/kg	1	5030A	09/30/2021 20:56	SA	8260B
1,3-Dichlorobenzene	ND		1.03	10.0	ug/kg	1	5030A	09/30/2021 20:56	SA	8260B
1,4-Dichlorobenzene	ND		2.23	10.0	ug/kg	1	5030A	09/30/2021 20:56	SA	8260B
Dichlorodifluoromethane	ND		2.07	30.0	ug/kg	1	5030A	09/30/2021 20:56	SA	8260B
1,1-Dichloroethane	ND		1.30	10.0	ug/kg	1	5030A	09/30/2021 20:56	SA	8260B
1,2-Dichloroethane	ND		1.57	10.0	ug/kg	1	5030A	09/30/2021 20:56	SA	8260B
1,1-Dichloroethene	ND		1.60	10.0	ug/kg	1	5030A	09/30/2021 20:56	SA	8260B
cis-1,2-Dichloroethene	ND		2.16	10.0	ug/kg	1	5030A	09/30/2021 20:56	SA	8260B
trans-1,2-Dichloroethene	ND		2.60	10.0	ug/kg	1	5030A	09/30/2021 20:56	SA	8260B
1,1-Dichloropropene	ND		0.660	10.0	ug/kg	1	5030A	09/30/2021 20:56	SA	8260B
1,2-Dichloropropane	ND		0.920	10.0	ug/kg	1	5030A	09/30/2021 20:56	SA	8260B
1,3-Dichloropropane	ND		1.36	10.0	ug/kg	1	5030A	09/30/2021 20:56	SA	8260B

The results in this report apply to the samples analyzed in accordance with the chain of custody document. This analytical report must be reproduced in its entirety.

Amolk Brar, Lab Director

American Scientific Laboratories, LLC
Environmental Testing Services
2520 N. San Fernando Road, LA CA 90065 Tel: (323) 223-9700 • Fax: (323) 223-9500

Kroner Environmental Services, Inc.	Project: Regional Connector N. Mission Rd.	Work Order No: 2109254
10801 National Blvd. # 415	Project Number: 1093	**Reported:**
Los Angeles CA, 90064	Project Manager: Kurt Kroner	10/07/2021 14:32

Analytical Results

Client Sample ID: MSP15-2

Laboratory Sample ID: 2109254-08 (Solid)

Analyte	Result	Notes	MDL	PQL	Units	Dilution	Prep Method	Analyzed	Analyst	Method
Volatile Organic Compounds				Batch ID: BJ10007			Prepared: 09/30/2021 09:00			
2,2-Dichloropropane	ND		1.12	10.0	ug/kg	1	5030A	09/30/2021 20:56	SA	8260B
cis-1,3-Dichloropropene	ND		0.980	10.0	ug/kg	1	5030A	09/30/2021 20:56	SA	8260B
trans-1,3-Dichloropropene	ND		0.960	10.0	ug/kg	1	5030A	09/30/2021 20:56	SA	8260B
Ethylbenzene	ND		1.00	2.00	ug/kg	1	5030A	09/30/2021 20:56	SA	8260B
Hexachlorobutadiene	ND		2.77	30.0	ug/kg	1	5030A	09/30/2021 20:56	SA	8260B
2-Hexanone	ND		3.18	50.0	ug/kg	1	5030A	09/30/2021 20:56	SA	8260B
Isopropylbenzene	ND		1.42	10.0	ug/kg	1	5030A	09/30/2021 20:56	SA	8260B
p-Isopropyltoluene	ND		3.86	10.0	ug/kg	1	5030A	09/30/2021 20:56	SA	8260B
Methyl tert-Butyl Ether (MTBE)	ND		1.81	5.00	ug/kg	1	5030A	09/30/2021 20:56	SA	8260B
4-Methyl-2-pentanone (MIBK)	ND		3.14	50.0	ug/kg	1	5030A	09/30/2021 20:56	SA	8260B
Methylene chloride	ND		3.31	50.0	ug/kg	1	5030A	09/30/2021 20:56	SA	8260B
Naphthalene	ND		1.14	10.0	ug/kg	1	5030A	09/30/2021 20:56	SA	8260B
n-Propylbenzene	ND		1.14	10.0	ug/kg	1	5030A	09/30/2021 20:56	SA	8260B
Styrene	ND		0.800	10.0	ug/kg	1	5030A	09/30/2021 20:56	SA	8260B
1,1,1,2-Tetrachloroethane	ND		1.28	10.0	ug/kg	1	5030A	09/30/2021 20:56	SA	8260B
1,1,2,2-Tetrachloroethane	ND		3.25	10.0	ug/kg	1	5030A	09/30/2021 20:56	SA	8260B
Tetrachloroethene	ND		0.930	10.0	ug/kg	1	5030A	09/30/2021 20:56	SA	8260B
Toluene	ND		1.00	2.00	ug/kg	1	5030A	09/30/2021 20:56	SA	8260B
1,2,3-Trichlorobenzene	ND		1.23	10.0	ug/kg	1	5030A	09/30/2021 20:56	SA	8260B
1,2,4-Trichlorobenzene	ND		2.82	10.0	ug/kg	1	5030A	09/30/2021 20:56	SA	8260B
1,1,1-Trichloroethane	ND		2.03	10.0	ug/kg	1	5030A	09/30/2021 20:56	SA	8260B
1,1,2-Trichloroethane	ND		1.74	10.0	ug/kg	1	5030A	09/30/2021 20:56	SA	8260B
Trichloroethene	ND		1.15	10.0	ug/kg	1	5030A	09/30/2021 20:56	SA	8260B
Trichlorofluoromethane	ND		3.15	10.0	ug/kg	1	5030A	09/30/2021 20:56	SA	8260B
1,2,3-Trichloropropane	ND		1.74	10.0	ug/kg	1	5030A	09/30/2021 20:56	SA	8260B
1,2,4-Trimethylbenzene	ND		3.19	10.0	ug/kg	1	5030A	09/30/2021 20:56	SA	8260B
1,3,5- Trimethylbenzene	ND		1.23	10.0	ug/kg	1	5030A	09/30/2021 20:56	SA	8260B
Vinyl acetate	ND		10.8	50.0	ug/kg	1	5030A	09/30/2021 20:56	SA	8260B
Vinyl chloride	ND		2.79	30.0	ug/kg	1	5030A	09/30/2021 20:56	SA	8260B
m,p-Xylenes	ND		1.80	4.00	ug/kg	1	5030A	09/30/2021 20:56	SA	8260B
o-Xylene	ND		1.00	2.00	ug/kg	1	5030A	09/30/2021 20:56	SA	8260B
Surrogate: 4-Bromofluorobenzene			*112 %*		*70-120*		5030A	09/30/2021 20:56	SA	*8260B*
Surrogate: Dibromofluoromethane			*84.3 %*		*70-120*		5030A	09/30/2021 20:56	SA	*8260B*
Surrogate: Toluene-d8			*107 %*		*70-120*		5030A	09/30/2021 20:56	SA	*8260B*

The results in this report apply to the samples analyzed in accordance with the chain of custody document. This analytical report must be reproduced in its entirety.

Amolk Brar, Lab Director

American Scientific Laboratories, LLC
Environmental Testing Services
2520 N. San Fernando Road, LA CA 90065 Tel: (323) 223-9700 • Fax: (323) 223-9500

Kroner Environmental Services, Inc.	Project: Regional Connector N. Mission Rd.	Work Order No: 2109254
10801 National Blvd. # 415	Project Number: 1093	**Reported:**
Los Angeles CA, 90064	Project Manager: Kurt Kroner	10/07/2021 14:32

Total Mercury (CVAA) - Quality Control Report

Analyte	Result	MDL	PQL	Units	Spike Level	Source Result	%REC	%REC Limits	RPD	RPD Limit	Notes
Batch BJ10207 - 7471A - 7471A											
Blank (BJ10207-BLK1)					Prepared: 10/05/202 Analyzed: 10/06/202						
Mercury	ND	0.0100	0.0500	mg/kg							
LCS (BJ10207-BS1)					Prepared: 10/05/202 Analyzed: 10/06/202						
Mercury	0.102	0.0100	0.0500	mg/kg	0.100		102	80-120			
LCS Dup (BJ10207-BSD1)					Prepared: 10/05/202 Analyzed: 10/06/202						
Mercury	0.100	0.0100	0.0500	mg/kg	0.100		100	80-120	2.07	20	

The results in this report apply to the samples analyzed in accordance with the chain of custody document. This analytical report must be reproduced in its entirety.

Amolk Brar, Lab Director

American Scientific Laboratories, LLC
Environmental Testing Services
2520 N. San Fernando Road, LA CA 90065 Tel: (323) 223-9700 • Fax: (323) 223-9500

Kroner Environmental Services, Inc.	Project: Regional Connector N. Mission Rd.	Work Order No: 2109254
10801 National Blvd. # 415	Project Number: 1093	**Reported:**
Los Angeles CA, 90064	Project Manager: Kurt Kroner	10/07/2021 14:32

Total ICP Metals - Quality Control Report

Analyte	Result	MDL	PQL	Units	Spike Level	Source Result	%REC	%REC Limits	RPD	RPD Limit	Notes
Batch BJ10206 - 3050B - SW846 6010B											
Blank (BJ10206-BLK1)					Prepared & Analyzed: 10/05/202						
Antimony	ND	0.200	0.500	mg/kg							
Arsenic	ND	0.150	0.250	"							
Barium	ND	0.0500	0.500	"							
Beryllium	ND	0.0400	0.500	"							
Cadmium	ND	0.0400	0.500	"							
Chromium	ND	0.0500	0.500	"							
Cobalt	ND	0.0500	0.500	"							
Copper	ND	0.0500	0.500	"							
Lead	ND	0.100	0.250	"							
Molybdenum	ND	0.0500	0.500	"							
Nickel	ND	0.100	0.500	"							
Selenium	ND	0.200	0.500	"							
Silver	ND	0.0500	0.500	"							
Thallium	ND	0.150	0.500	"							
Vanadium	ND	0.0500	0.500	"							
Zinc	ND	0.350	0.500	"							
LCS (BJ10206-BS1)					Prepared & Analyzed: 10/05/202						
Antimony	42.8	0.200	0.500	mg/kg	50.0		85.5	80-120			
Arsenic	45.2	0.150	0.250	"	50.0		90.4	80-120			
Barium	43.7	0.0500	0.500	"	50.0		87.3	80-120			
Beryllium	47.5	0.0400	0.500	"	50.0		95.1	80-120			
Cadmium	45.2	0.0400	0.500	"	50.0		90.4	80-120			
Chromium	44.6	0.0500	0.500	"	50.0		89.3	80-120			
Cobalt	45.3	0.0500	0.500	"	50.0		90.7	80-120			
Copper	47.1	0.0500	0.500	"	50.0		94.2	80-120			
Lead	45.3	0.100	0.250	"	50.0		90.7	80-120			
Molybdenum	43.8	0.0500	0.500	"	50.0		87.6	80-120			
Nickel	45.2	0.100	0.500	"	50.0		90.4	80-120			
Selenium	45.0	0.200	0.500	"	50.0		90.0	80-120			
Silver	47.4	0.0500	0.500	"	50.0		94.7	80-120			
Thallium	45.5	0.150	0.500	"	50.0		91.1	80-120			
Vanadium	45.0	0.0500	0.500	"	50.0		90.0	80-120			
Zinc	56.4	0.350	0.500	"	50.0		113	80-120			

The results in this report apply to the samples analyzed in accordance with the chain of custody document. This analytical report must be reproduced in its entirety.

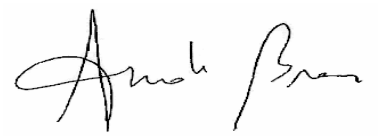

Amolk Brar, Lab Director

American Scientific Laboratories, LLC
Environmental Testing Services
2520 N. San Fernando Road, LA CA 90065 Tel: (323) 223-9700 • Fax: (323) 223-9500

Kroner Environmental Services, Inc.	Project: Regional Connector N. Mission Rd.	Work Order No: 2109254
10801 National Blvd. # 415	Project Number: 1093	**Reported:**
Los Angeles CA, 90064	Project Manager: Kurt Kroner	10/07/2021 14:32

Total ICP Metals - Quality Control Report

Analyte	Result	MDL	PQL	Units	Spike Level	Source Result	%REC	%REC Limits	RPD	RPD Limit	Notes
Batch BJ10206 - 3050B - SW846 6010B											
LCS Dup (BJ10206-BSD1)					Prepared & Analyzed: 10/05/202						
Antimony	46.1	0.200	0.500	mg/kg	50.0		92.2	80-120	7.53	20	
Arsenic	47.7	0.150	0.250	"	50.0		95.4	80-120	5.45	20	
Barium	43.7	0.0500	0.500	"	50.0		87.5	80-120	0.192	20	
Beryllium	49.9	0.0400	0.500	"	50.0		99.9	80-120	4.90	20	
Cadmium	48.2	0.0400	0.500	"	50.0		96.4	80-120	6.45	20	
Chromium	46.9	0.0500	0.500	"	50.0		93.8	80-120	4.95	20	
Cobalt	48.0	0.0500	0.500	"	50.0		96.0	80-120	5.68	20	
Copper	49.3	0.0500	0.500	"	50.0		98.6	80-120	4.63	20	
Lead	48.0	0.100	0.250	"	50.0		96.1	80-120	5.80	20	
Molybdenum	46.3	0.0500	0.500	"	50.0		92.6	80-120	5.57	20	
Nickel	47.9	0.100	0.500	"	50.0		95.8	80-120	5.77	20	
Selenium	47.4	0.200	0.500	"	50.0		94.9	80-120	5.25	20	
Silver	45.3	0.0500	0.500	"	50.0		90.6	80-120	4.41	20	
Thallium	48.7	0.150	0.500	"	50.0		97.4	80-120	6.67	20	
Vanadium	47.4	0.0500	0.500	"	50.0		94.8	80-120	5.21	20	
Zinc	59.7	0.350	0.500	"	50.0		119	80-120	5.67	20	

The results in this report apply to the samples analyzed in accordance with the chain of custody document. This analytical report must be reproduced in its entirety.

Amolk Brar, Lab Director

American Scientific Laboratories, LLC
Environmental Testing Services
2520 N. San Fernando Road, LA CA 90065 Tel: (323) 223-9700 • Fax: (323) 223-9500

Kroner Environmental Services, Inc.	Project: Regional Connector N. Mission Rd.	Work Order No: 2109254
10801 National Blvd. # 415	Project Number: 1093	**Reported:**
Los Angeles CA, 90064	Project Manager: Kurt Kroner	10/07/2021 14:32

Total Petroleum Hydrocarbons(TPH-g) - Quality Control Report

Analyte	Result	MDL	PQL	Units	Spike Level	Source Result	%REC	%REC Limits	RPD	RPD Limit	Notes
Batch BJ10004 - 5030A - 8015B											
Blank (BJ10004-BLK1)					Prepared & Analyzed: 09/30/202						
Gasoline Range Organics	ND	250	500	ug/kg							
LCS (BJ10004-BS1)					Prepared & Analyzed: 09/30/202						
Gasoline Range Organics	544			ug/L	500		109	75-120			
LCS Dup (BJ10004-BSD1)					Prepared & Analyzed: 09/30/202						
Gasoline Range Organics	528			ug/L	500		106	75-120	2.96	15	
Matrix Spike (BJ10004-MS1)		**Source: 2109235-01**			Prepared: 09/30/202 Analyzed: 10/01/202						
Gasoline Range Organics	571			ug/L	500	18.0	111	75-120			
Matrix Spike Dup (BJ10004-MSD1)		**Source: 2109235-01**			Prepared & Analyzed: 09/30/202						
Gasoline Range Organics	545			ug/L	500	18.0	105	75-120	4.64	15	
Batch BJ10113 - 5030A - 8015B											
Blank (BJ10113-BLK1)					Prepared & Analyzed: 10/01/202						
Gasoline Range Organics	ND	250	500	ug/kg							
LCS (BJ10113-BS1)					Prepared & Analyzed: 10/01/202						
Gasoline Range Organics	554			ug/L	500		111	75-120			
LCS Dup (BJ10113-BSD1)					Prepared & Analyzed: 10/01/202						
Gasoline Range Organics	551			ug/L	500		110	75-120	0.505	15	
Matrix Spike (BJ10113-MS1)		**Source: 2109254-06**			Prepared & Analyzed: 10/01/202						
Gasoline Range Organics	563			ug/L	500	0.00	113	75-120			

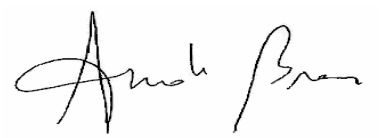

Amolk Brar, Lab Director

The results in this report apply to the samples analyzed in accordance with the chain of custody document. This analytical report must be reproduced in its entirety.

American Scientific Laboratories, LLC
Environmental Testing Services
2520 N. San Fernando Road, LA CA 90065 Tel: (323) 223-9700 • Fax: (323) 223-9500

Kroner Environmental Services, Inc.	Project: Regional Connector N. Mission Rd.	Work Order No: 2109254
10801 National Blvd. # 415	Project Number: 1093	**Reported:**
Los Angeles CA, 90064	Project Manager: Kurt Kroner	10/07/2021 14:32

Total Petroleum Hydrocarbons(TPH-g) - Quality Control Report

Analyte	Result	MDL	PQL	Units	Spike Level	Source Result	%REC	%REC Limits	RPD	RPD Limit	Notes
Batch BJ10113 - 5030A - 8015B											
Matrix Spike Dup (BJ10113-MSD1)		**Source: 2109254-06**			Prepared & Analyzed: 10/01/202						
Gasoline Range Organics	564			ug/L	500	0.00	113	75-120	0.200	15	

The results in this report apply to the samples analyzed in accordance with the chain of custody document. This analytical report must be reproduced in its entirety.

Amolk Brar, Lab Director

American Scientific Laboratories, LLC
Environmental Testing Services
2520 N. San Fernando Road, LA CA 90065 Tel: (323) 223-9700 • Fax: (323) 223-9500

Kroner Environmental Services, Inc.	Project: Regional Connector N. Mission Rd.	Work Order No: 2109254
10801 National Blvd. # 415	Project Number: 1093	**Reported:**
Los Angeles CA, 90064	Project Manager: Kurt Kroner	10/07/2021 14:32

Total Petroleum Hydrocarbons(TPH DROORO) - Quality Control Report

Analyte	Result	MDL	PQL	Units	Spike Level	Source Result	%REC	%REC Limits	RPD	RPD Limit	Notes
Batch BJ10010 - 3550B - 8015B											
Blank (BJ10010-BLK1)					Prepared & Analyzed: 09/30/202						
Diesel range organics	ND	1.00	10.0	mg/kg							
Oil Range Organics	ND	17.0	50.0	"							
Surrogate: Chlorobenzene	*111*			*mg/L*	*100*		*111*	*70-120*			
LCS (BJ10010-BS1)					Prepared & Analyzed: 09/30/202						
Diesel range organics	513			mg/L	500		103	75-120			
Surrogate: Chlorobenzene	*108*			*"*	*100*		*108*	*70-120*			
LCS Dup (BJ10010-BSD1)					Prepared & Analyzed: 09/30/202						
Diesel range organics	519			mg/L	500		104	75-120	1.15	20	
Surrogate: Chlorobenzene	*109*			*"*	*100*		*109*	*70-120*			
Matrix Spike (BJ10010-MS1)		**Source: 2109254-01**			Prepared & Analyzed: 09/30/202						
Diesel range organics	519			mg/L	500	0.00	104	75-120			
Surrogate: Chlorobenzene	*106*			*"*	*100*		*106*	*70-120*			
Matrix Spike Dup (BJ10010-MSD1)		**Source: 2109254-01**			Prepared & Analyzed: 09/30/202						
Diesel range organics	529			mg/L	500	0.00	106	75-120	1.95	20	
Surrogate: Chlorobenzene	*109*			*"*	*100*		*109*	*70-120*			

The results in this report apply to the samples analyzed in accordance with the chain of custody document. This analytical report must be reproduced in its entirety.

Amolk Brar, Lab Director

American Scientific Laboratories, LLC
Environmental Testing Services
2520 N. San Fernando Road, LA CA 90065 Tel: (323) 223-9700 • Fax: (323) 223-9500

Kroner Environmental Services, Inc.	Project: Regional Connector N. Mission Rd.	Work Order No: 2109254
10801 National Blvd. # 415	Project Number: 1093	**Reported:**
Los Angeles CA, 90064	Project Manager: Kurt Kroner	10/07/2021 14:32

Volatile Organic Compounds - Quality Control Report

Analyte	Result	MDL	PQL	Units	Spike Level	Source Result	%REC	%REC Limits	RPD	RPD Limit	Notes
Batch BJ10007 - 5030A - 8260B											
Blank (BJ10007-BLK1)					Prepared & Analyzed: 09/30/202						
Acetone	ND	12.7	50.0	ug/kg							
Benzene	ND	0.930	2.00	"							
Bromobenzene	ND	3.39	10.0	"							
Bromochloromethane	ND	0.380	10.0	"							
Bromodichloromethane	ND	0.630	10.0	"							
Bromoform	ND	3.39	50.0	"							
Bromomethane	ND	2.75	30.0	"							
2-Butanone	ND	5.83	50.0	"							
n-Butylbenzene	ND	2.05	10.0	"							
sec-Butylbenzene	ND	3.04	10.0	"							
tert-Butylbenzene	ND	1.34	10.0	"							
Carbon disulfide	ND	5.53	10.0	"							
Carbon tetrachloride	ND	2.48	10.0	"							
Chlorobenzene	ND	0.890	10.0	"							
Chloroethane	ND	2.15	30.0	"							
2-Chloroethylvinyl Ether	ND	5.53	50.0	"							
Chloroform	ND	1.24	10.0	"							
Chloromethane	ND	1.74	30.0	"							
4-Chlorotoluene	ND	1.34	10.0	"							
2-Chlorotoluene	ND	2.35	10.0	"							
1,2-Dibromo-3-chloropropane	ND	2.69	50.0	"							
Dibromochloromethane	ND	0.650	10.0	"							
1,2-Dibromoethane	ND	2.75	10.0	"							
Dibromomethane	ND	2.30	10.0	"							
1,2-Dichlorobenzene	ND	1.65	10.0	"							
1,3-Dichlorobenzene	ND	1.03	10.0	"							
1,4-Dichlorobenzene	ND	2.23	10.0	"							
Dichlorodifluoromethane	ND	2.07	30.0	"							
1,1-Dichloroethane	ND	1.30	10.0	"							
1,2-Dichloroethane	ND	1.57	10.0	"							
1,1-Dichloroethene	ND	1.60	10.0	"							
cis-1,2-Dichloroethene	ND	2.16	10.0	"							
trans-1,2-Dichloroethene	ND	2.60	10.0	"							
1,1-Dichloropropene	ND	0.660	10.0	"							
1,2-Dichloropropane	ND	0.920	10.0	"							
1,3-Dichloropropane	ND	1.36	10.0	"							
2,2-Dichloropropane	ND	1.12	10.0	"							
cis-1,3-Dichloropropene	ND	0.980	10.0	"							
trans-1,3-Dichloropropene	ND	0.960	10.0	"							
Ethylbenzene	ND	1.00	2.00	"							
Hexachlorobutadiene	ND	2.77	30.0	"							

The results in this report apply to the samples analyzed in accordance with the chain of custody document. This analytical report must be reproduced in its entirety.

Amolk Brar, Lab Director

American Scientific Laboratories, LLC
Environmental Testing Services
2520 N. San Fernando Road, LA CA 90065 Tel: (323) 223-9700 • Fax: (323) 223-9500

Kroner Environmental Services, Inc.	Project: Regional Connector N. Mission Rd.	Work Order No: 2109254
10801 National Blvd. # 415	Project Number: 1093	**Reported:**
Los Angeles CA, 90064	Project Manager: Kurt Kroner	10/07/2021 14:32

Volatile Organic Compounds - Quality Control Report

Analyte	Result	MDL	PQL	Units	Spike Level	Source Result	%REC	%REC Limits	RPD	RPD Limit	Notes
Batch BJ10007 - 5030A - 8260B											
Blank (BJ10007-BLK1)					Prepared & Analyzed: 09/30/202						
2-Hexanone	ND	3.18	50.0	ug/kg							
Isopropylbenzene	ND	1.42	10.0	"							
p-Isopropyltoluene	ND	3.86	10.0	"							
Methyl tert-Butyl Ether (MTBE)	ND	1.81	5.00	"							
4-Methyl-2-pentanone (MIBK)	ND	3.14	50.0	"							
Methylene chloride	ND	3.31	50.0	"							
Naphthalene	ND	1.14	10.0	"							
n-Propylbenzene	ND	1.14	10.0	"							
Styrene	ND	0.800	10.0	"							
1,1,1,2-Tetrachloroethane	ND	1.28	10.0	"							
1,1,2,2-Tetrachloroethane	ND	3.25	10.0	"							
Tetrachloroethene	ND	0.930	10.0	"							
Toluene	ND	1.00	2.00	"							
1,2,3-Trichlorobenzene	ND	1.23	10.0	"							
1,2,4-Trichlorobenzene	ND	2.82	10.0	"							
1,1,1-Trichloroethane	ND	2.03	10.0	"							
1,1,2-Trichloroethane	ND	1.74	10.0	"							
Trichloroethene	ND	1.15	10.0	"							
Trichlorofluoromethane	ND	3.15	10.0	"							
1,2,3-Trichloropropane	ND	1.74	10.0	"							
1,2,4-Trimethylbenzene	ND	3.19	10.0	"							
1,3,5- Trimethylbenzene	ND	1.23	10.0	"							
Vinyl acetate	ND	10.8	50.0	"							
Vinyl chloride	ND	2.79	30.0	"							
m,p-Xylenes	ND	1.80	4.00	"							
o-Xylene	ND	1.00	2.00	"							
LCS (BJ10007-BS1)					Prepared & Analyzed: 09/30/202						
Benzene	47.8			ug/L	50.0		95.6	75-120			
Chlorobenzene	49.6			"	50.0		99.2	75-120			
1,1-Dichloroethene	47.9			"	50.0		95.9	75-120			
Methyl tert-Butyl Ether (MTBE)	43.9			"	50.0		87.9	75-120			
Toluene	47.1			"	50.0		94.3	75-120			
Trichloroethene	46.4			"	50.0		92.9	75-120			

The results in this report apply to the samples analyzed in accordance with the chain of custody document. This analytical report must be reproduced in its entirety.

Amolk Brar, Lab Director

American Scientific Laboratories, LLC
Environmental Testing Services
2520 N. San Fernando Road, LA CA 90065 Tel: (323) 223-9700 • Fax: (323) 223-9500

Kroner Environmental Services, Inc.	Project: Regional Connector N. Mission Rd.	Work Order No: 2109254
10801 National Blvd. # 415	Project Number: 1093	**Reported:**
Los Angeles CA, 90064	Project Manager: Kurt Kroner	10/07/2021 14:32

Volatile Organic Compounds - Quality Control Report

Analyte	Result	MDL	PQL	Units	Spike Level	Source Result	%REC	%REC Limits	RPD	RPD Limit	Notes
Batch BJ10007 - 5030A - 8260B											
LCS Dup (BJ10007-BSD1)					Prepared & Analyzed: 09/30/202						
Benzene	46.9			ug/L	50.0		93.8	75-120	1.90	20	
Chlorobenzene	48.5			"	50.0		97.0	75-120	2.24	20	
1,1-Dichloroethene	50.5			"	50.0		101	75-120	5.24	15	
Methyl tert-Butyl Ether (MTBE)	38.8			"	50.0		77.6	75-120	12.4	15	
Toluene	45.7			"	50.0		91.5	75-120	3.01	15	
Trichloroethene	46.6			"	50.0		93.2	75-120	0.365	20	
Matrix Spike (BJ10007-MS1)		**Source: 2109254-01**			Prepared: 09/30/202 Analyzed: 10/01/202						
Benzene	44.7			ug/L	50.0	0.00	89.4	75-120			
Chlorobenzene	45.7			"	50.0	0.00	91.4	75-120			
1,1-Dichloroethene	48.3			"	50.0	0.00	96.6	75-120			
Methyl tert-Butyl Ether (MTBE)	48.7			"	50.0	0.00	97.4	75-120			
Toluene	44.9			"	50.0	0.330	89.1	75-120			
Trichloroethene	43.8			"	50.0	0.00	87.5	75-120			
Matrix Spike Dup (BJ10007-MSD1)		**Source: 2109254-01**			Prepared: 09/30/202 Analyzed: 10/01/202						
Benzene	44.9			ug/L	50.0	0.00	89.7	75-120	0.335	15	
Chlorobenzene	46.3			"	50.0	0.00	92.6	75-120	1.28	15	
1,1-Dichloroethene	48.3			"	50.0	0.00	96.6	75-120	0.0414	15	
Methyl tert-Butyl Ether (MTBE)	46.2			"	50.0	0.00	92.3	75-120	5.34	15	
Toluene	45.0			"	50.0	0.330	89.4	75-120	0.400	15	
Trichloroethene	44.3			"	50.0	0.00	88.6	75-120	1.23	15	

The results in this report apply to the samples analyzed in accordance with the chain of custody document. This analytical report must be reproduced in its entirety.

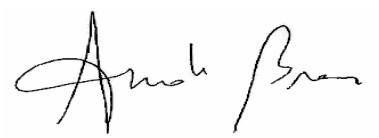

Amolk Brar, Lab Director

American Scientific Laboratories, LLC
Environmental Testing Services
2520 N. San Fernando Road, LA CA 90065 Tel: (323) 223-9700 • Fax: (323) 223-9500

Kroner Environmental Services, Inc.	Project: Regional Connector N. Mission Rd.	Work Order No: 2109254
10801 National Blvd. # 415	Project Number: 1093	**Reported:**
Los Angeles CA, 90064	Project Manager: Kurt Kroner	10/07/2021 14:32

Notes and Definitions

J	Detected but below the Reporting Limit; therefore, result is an estimated concentration (CLP J-Flag).
DET	Analyte DETECTED
ND	Analyte NOT DETECTED at or above the practical quantitation limit (PQL)
NR	Not Reported
dry	Sample results reported on a dry weight basis
RPD	Relative Percent Difference

American Scientific Laboratories, LLC
Environmental Testing Services
2520 N. San Fernando Road, LA CA 90065 Tel: (323) 223-9700 • Fax: (323) 223-9500

07 October 2021

Kurt Kroner

Kroner Environmental Services, Inc.

10801 National Blvd. # 415

Los Angeles, CA 90064

Work Order #: 2109255

Project Name: Regional Connector N. Mission Rd.

Project ID: 1093

Site Address: 622 North Mission Road

Enclosed are the results of analyses for samples received by the laboratory on September 28, 2021. If you have any questions concerning this report, please feel free to contact us.

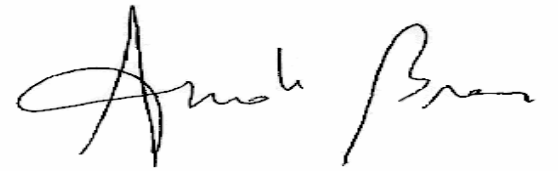

Molky Brar

Laboratory Director

American Scientific Laboratories, LLC (ASL) accepts sample materials from clients for analysis with the assumption that all of the information provided to ASL verbally or in writing by our clients (and/or their agents), regarding samples being submitted to ASL, is complete and accurate. ASL accepts all samples subject to the following conditions:

1) ASL is not responsible for verifying any client-provided information regarding any samples submitted to the laboratory.
2) ASL is not responsible for any consequences resulting from any inaccuracies , omissions, or misrepresentations contained in client-provided information regarding samples submitted to the laboratory.

AMERICAN SCIENTIFIC LABORATORIES, LLC
Environmental Testing Services
2520 N. San Fernando Road, LA, CA 90065 Tel: (323) 223-9700 • Fax: (323) 223-9500

COC# GLOBAL ID _____ E REPORT: ☑ PDF ☐ EDF ☐ EDD ASL JOB# 2109255

Company: Kroner Environmental Services		Report To: Michael Lucey	
Address: 10801 National Blvd., Suite 415	Project Name: Regional Connector	Address:	
Los Angeles, California 90064	Site Address: 622 North Mission Road	Invoice To: Monica Avina	
Telephone: (310) 474-1500 Fax:		Address: SAME	
Special Instruction:	Project ID:		
E-mail: mlucey@kronerenvironmental.com	Project Manager: Kurt Kroner	P.O.#: 1093	

ANALYSIS REQUESTED

ITEM	LAB USE ONLY Lab ID	SAMPLE DESCRIPTION Sample ID	Date	Time	Container(s) #	Type	Matrix	Preservation	TPH - 8015B Full Rang+	VOCs - 8260B +	CAM Metals - 6010B/7470A	Remarks
	2109255-01	CSP-1	9/28/21	9:50	1	Glass	Soil	None	X	X	X	
	2109255-02	CSP-2	9/28/21	9:55	1	Glass	Soil	None	X	X	X	

Collected By: Michael Lucey	Date 9/28/21	Time 9:55	Relinquished By: Date Time
Relinquished By: Michael Lucey	Date 9/28/21	Time 10:50	Received For Laboratory: Date 9/28/21 Time 10:55
Received By:	Date	Time	Condition of Sample:

TAT ☑ Normal ☐ Rush

White - Report, Yellow - Laboratory, Pink - Client

CHAIN OF CUSTODY RECORD

Job# 2109255

ASL Sample Receipt Form

Client: Kramer Environmental Services

Date: 9-28-2021

Sample Information:

Temperature: 4.5 °C ☐ Blank ☒ Sample

Custody Seal: ☐ Yes ☒ No ☐ Not Available

Received Within Holding Time: ☒ Yes ☐ No

Container:

Proper Containers and Sufficient Volume: ☒ Yes ☐ No

Soil: ☐ 4oz 2 ☒ 8oz ☐ Sleeve ☐ VOA

Water: ☐ 500AG ☐ 1AG ☐ 125PB ☐ 250PB ☐ 500PB ☐ VOA ☐ Other _____

Air: ☐ Tedlar®

Sample Containers Intact: ☒ Yes ☐ No

Trip Blank ☐ Yes ☒ No

Chain-of-Custody (COC):

Received: ☒ Yes ☐ No

Samplers Name: ☒ Yes ☐ No

Container Labels match COC: ☒ Yes ☐ No

COC documents received complete: ☒ Yes ☐ No

Proper Preservation Noted: ☒ Yes ☐ No

Completed By: Janet Chin

AMERICAN SCIENTIFIC LABORATORIES, LLC
Environmental Testing Services
2520 N. San Fernando Road, LA CA 90065 Tel: (323) 223-9700 • Fax: (323) 223-9500

Kroner Environmental Services, Inc.	Project: Regional Connector N. Mission Rd.	Work Order No: 2109255
10801 National Blvd. # 415	Project Number: 1093	**Reported:**
Los Angeles CA, 90064	Project Manager: Kurt Kroner	10/07/2021 14:34

ANALYTICAL SUMMARY REPORT

Sample ID	Laboratory ID	Matrix	Date Sampled	Date Received
CSP-1	2109255-01	Solid	09/28/2021 09:50	09/28/2021 10:55
CSP-2	2109255-02	Solid	09/28/2021 09:55	09/28/2021 10:55

The results in this report apply to the samples analyzed in accordance with the chain of custody document. This analytical report must be reproduced in its entirety.

Amolk Brar, Lab Director

American Scientific Laboratories, LLC
Environmental Testing Services
2520 N. San Fernando Road, LA CA 90065 Tel: (323) 223-9700 • Fax: (323) 223-9500

Kroner Environmental Services, Inc.	Project: Regional Connector N. Mission Rd.	Work Order No: 2109255
10801 National Blvd. # 415	Project Number: 1093	**Reported:**
Los Angeles CA, 90064	Project Manager: Kurt Kroner	10/07/2021 14:34

Analytical Results

Client Sample ID: CSP-1

Laboratory Sample ID: 2109255-01 (Solid)

Analyte	Result	Notes	MDL	PQL	Units	Dilution	Prep Method	Analyzed	Analyst	Method
Total Mercury (CVAA)				Batch ID: BJ10205			Prepared: 10/05/2021 11:00			
Mercury	**0.0446**	J	0.0100	0.0500	mg/kg	1	7471A	10/05/2021 16:20	LVE	7471A
Total ICP Metals				Batch ID: BJ10204			Prepared: 10/05/2021 10:52			
Antimony	ND		0.200	0.500	mg/kg	1	3050B	10/05/2021 19:51	LVE	SW846 6010B
Arsenic	**2.24**		0.150	0.250	mg/kg	1	3050B	10/05/2021 19:51	LVE	SW846 6010B
Barium	**59.4**		0.0500	0.500	mg/kg	1	3050B	10/05/2021 19:51	LVE	SW846 6010B
Beryllium	**0.161**	J	0.0400	0.500	mg/kg	1	3050B	10/05/2021 19:51	LVE	SW846 6010B
Cadmium	**0.949**		0.0400	0.500	mg/kg	1	3050B	10/05/2021 19:51	LVE	SW846 6010B
Chromium	**8.17**		0.0500	0.500	mg/kg	1	3050B	10/05/2021 19:51	LVE	SW846 6010B
Cobalt	**4.30**		0.0500	0.500	mg/kg	1	3050B	10/05/2021 19:51	LVE	SW846 6010B
Copper	**13.0**		0.0500	0.500	mg/kg	1	3050B	10/05/2021 19:51	LVE	SW846 6010B
Lead	**24.4**		0.100	0.250	mg/kg	1	3050B	10/05/2021 19:51	LVE	SW846 6010B
Molybdenum	**0.454**	J	0.0500	0.500	mg/kg	1	3050B	10/05/2021 19:51	LVE	SW846 6010B
Nickel	**6.00**		0.100	0.500	mg/kg	1	3050B	10/05/2021 19:51	LVE	SW846 6010B
Selenium	ND		0.200	0.500	mg/kg	1	3050B	10/05/2021 19:51	LVE	SW846 6010B
Silver	ND		0.0500	0.500	mg/kg	1	3050B	10/05/2021 19:51	LVE	SW846 6010B
Thallium	ND		0.150	0.500	mg/kg	1	3050B	10/05/2021 19:51	LVE	SW846 6010B
Vanadium	**17.6**		0.0500	0.500	mg/kg	1	3050B	10/05/2021 19:51	LVE	SW846 6010B
Zinc	**76.4**		0.350	0.500	mg/kg	1	3050B	10/05/2021 19:51	LVE	SW846 6010B
Total Petroleum Hydrocarbons(TPH-g)				Batch ID: BJ10004			Prepared: 09/30/2021 09:00			
Gasoline Range Organics	ND		250	500	ug/kg	1	5030A	10/01/2021 01:25	SA	8015B
Surrogate: Bromofluorobenzene			*106 %*	*70-120*			5030A	10/01/2021 01:25	SA	*8015B*
Total Petroleum Hydrocarbons(TPH DROORO)				Batch ID: BJ10035			Prepared: 09/30/2021 13:00			
Diesel range organics	**356**		1.00	10.0	mg/kg	1	3550B	10/01/2021 15:07	DWI	8015B
Oil Range Organics	**324**		17.0	50.0	mg/kg	1	3550B	10/01/2021 15:07	DWI	8015B
Surrogate: Chlorobenzene			*94.3 %*	*70-120*			3550B	10/01/2021 15:07	DWI	*8015B*

The results in this report apply to the samples analyzed in accordance with the chain of custody document. This analytical report must be reproduced in its entirety.

Amolk Brar, Lab Director

American Scientific Laboratories, LLC
Environmental Testing Services
2520 N. San Fernando Road, LA CA 90065 Tel: (323) 223-9700 • Fax: (323) 223-9500

Kroner Environmental Services, Inc.	Project: Regional Connector N. Mission Rd.	Work Order No: 2109255
10801 National Blvd. # 415	Project Number: 1093	**Reported:**
Los Angeles CA, 90064	Project Manager: Kurt Kroner	10/07/2021 14:34

Analytical Results

Client Sample ID: CSP-1

Laboratory Sample ID: 2109255-01 (Solid)

Analyte	Result	Notes	MDL	PQL	Units	Dilution	Prep Method	Analyzed	Analyst	Method
Volatile Organic Compounds				Batch ID: BJ10007			Prepared: 09/30/2021 09:00			
Acetone	ND		12.7	50.0	ug/kg	1	5030A	09/30/2021 21:24	SA	8260B
Benzene	ND		0.930	2.00	ug/kg	1	5030A	09/30/2021 21:24	SA	8260B
Bromobenzene	ND		3.39	10.0	ug/kg	1	5030A	09/30/2021 21:24	SA	8260B
Bromochloromethane	ND		0.380	10.0	ug/kg	1	5030A	09/30/2021 21:24	SA	8260B
Bromodichloromethane	ND		0.630	10.0	ug/kg	1	5030A	09/30/2021 21:24	SA	8260B
Bromoform	ND		3.39	50.0	ug/kg	1	5030A	09/30/2021 21:24	SA	8260B
Bromomethane	ND		2.75	30.0	ug/kg	1	5030A	09/30/2021 21:24	SA	8260B
2-Butanone	ND		5.83	50.0	ug/kg	1	5030A	09/30/2021 21:24	SA	8260B
n-Butylbenzene	ND		2.05	10.0	ug/kg	1	5030A	09/30/2021 21:24	SA	8260B
sec-Butylbenzene	ND		3.04	10.0	ug/kg	1	5030A	09/30/2021 21:24	SA	8260B
tert-Butylbenzene	ND		1.34	10.0	ug/kg	1	5030A	09/30/2021 21:24	SA	8260B
Carbon disulfide	ND		5.53	10.0	ug/kg	1	5030A	09/30/2021 21:24	SA	8260B
Carbon tetrachloride	ND		2.48	10.0	ug/kg	1	5030A	09/30/2021 21:24	SA	8260B
Chlorobenzene	ND		0.890	10.0	ug/kg	1	5030A	09/30/2021 21:24	SA	8260B
Chloroethane	ND		2.15	30.0	ug/kg	1	5030A	09/30/2021 21:24	SA	8260B
2-Chloroethylvinyl Ether	ND		5.53	50.0	ug/kg	1	5030A	09/30/2021 21:24	SA	8260B
Chloroform	ND		1.24	10.0	ug/kg	1	5030A	09/30/2021 21:24	SA	8260B
Chloromethane	ND		1.74	30.0	ug/kg	1	5030A	09/30/2021 21:24	SA	8260B
4-Chlorotoluene	ND		1.34	10.0	ug/kg	1	5030A	09/30/2021 21:24	SA	8260B
2-Chlorotoluene	ND		2.35	10.0	ug/kg	1	5030A	09/30/2021 21:24	SA	8260B
1,2-Dibromo-3-chloropropane	ND		2.69	50.0	ug/kg	1	5030A	09/30/2021 21:24	SA	8260B
Dibromochloromethane	ND		0.650	10.0	ug/kg	1	5030A	09/30/2021 21:24	SA	8260B
1,2-Dibromoethane	ND		2.75	10.0	ug/kg	1	5030A	09/30/2021 21:24	SA	8260B
Dibromomethane	ND		2.30	10.0	ug/kg	1	5030A	09/30/2021 21:24	SA	8260B
1,2-Dichlorobenzene	ND		1.65	10.0	ug/kg	1	5030A	09/30/2021 21:24	SA	8260B
1,3-Dichlorobenzene	ND		1.03	10.0	ug/kg	1	5030A	09/30/2021 21:24	SA	8260B
1,4-Dichlorobenzene	ND		2.23	10.0	ug/kg	1	5030A	09/30/2021 21:24	SA	8260B
Dichlorodifluoromethane	ND		2.07	30.0	ug/kg	1	5030A	09/30/2021 21:24	SA	8260B
1,1-Dichloroethane	ND		1.30	10.0	ug/kg	1	5030A	09/30/2021 21:24	SA	8260B
1,2-Dichloroethane	ND		1.57	10.0	ug/kg	1	5030A	09/30/2021 21:24	SA	8260B
1,1-Dichloroethene	ND		1.60	10.0	ug/kg	1	5030A	09/30/2021 21:24	SA	8260B
cis-1,2-Dichloroethene	ND		2.16	10.0	ug/kg	1	5030A	09/30/2021 21:24	SA	8260B
trans-1,2-Dichloroethene	ND		2.60	10.0	ug/kg	1	5030A	09/30/2021 21:24	SA	8260B
1,1-Dichloropropene	ND		0.660	10.0	ug/kg	1	5030A	09/30/2021 21:24	SA	8260B
1,2-Dichloropropane	ND		0.920	10.0	ug/kg	1	5030A	09/30/2021 21:24	SA	8260B
1,3-Dichloropropane	ND		1.36	10.0	ug/kg	1	5030A	09/30/2021 21:24	SA	8260B

The results in this report apply to the samples analyzed in accordance with the chain of custody document. This analytical report must be reproduced in its entirety.

Amolk Brar, Lab Director

American Scientific Laboratories, LLC
Environmental Testing Services
2520 N. San Fernando Road, LA CA 90065 Tel: (323) 223-9700 • Fax: (323) 223-9500

Kroner Environmental Services, Inc.	Project: Regional Connector N. Mission Rd.	Work Order No: 2109255
10801 National Blvd. # 415	Project Number: 1093	**Reported:**
Los Angeles CA, 90064	Project Manager: Kurt Kroner	10/07/2021 14:34

Analytical Results

Client Sample ID: CSP-1

Laboratory Sample ID: 2109255-01 (Solid)

Analyte	Result	Notes	MDL	PQL	Units	Dilution	Prep Method	Analyzed	Analyst	Method
Volatile Organic Compounds				Batch ID: BJ10007			Prepared: 09/30/2021 09:00			
2,2-Dichloropropane	ND		1.12	10.0	ug/kg	1	5030A	09/30/2021 21:24	SA	8260B
cis-1,3-Dichloropropene	ND		0.980	10.0	ug/kg	1	5030A	09/30/2021 21:24	SA	8260B
trans-1,3-Dichloropropene	ND		0.960	10.0	ug/kg	1	5030A	09/30/2021 21:24	SA	8260B
Ethylbenzene	ND		1.00	2.00	ug/kg	1	5030A	09/30/2021 21:24	SA	8260B
Hexachlorobutadiene	ND		2.77	30.0	ug/kg	1	5030A	09/30/2021 21:24	SA	8260B
2-Hexanone	ND		3.18	50.0	ug/kg	1	5030A	09/30/2021 21:24	SA	8260B
Isopropylbenzene	ND		1.42	10.0	ug/kg	1	5030A	09/30/2021 21:24	SA	8260B
p-Isopropyltoluene	ND		3.86	10.0	ug/kg	1	5030A	09/30/2021 21:24	SA	8260B
Methyl tert-Butyl Ether (MTBE)	ND		1.81	5.00	ug/kg	1	5030A	09/30/2021 21:24	SA	8260B
4-Methyl-2-pentanone (MIBK)	ND		3.14	50.0	ug/kg	1	5030A	09/30/2021 21:24	SA	8260B
Methylene chloride	ND		3.31	50.0	ug/kg	1	5030A	09/30/2021 21:24	SA	8260B
Naphthalene	ND		1.14	10.0	ug/kg	1	5030A	09/30/2021 21:24	SA	8260B
n-Propylbenzene	ND		1.14	10.0	ug/kg	1	5030A	09/30/2021 21:24	SA	8260B
Styrene	ND		0.800	10.0	ug/kg	1	5030A	09/30/2021 21:24	SA	8260B
1,1,1,2-Tetrachloroethane	ND		1.28	10.0	ug/kg	1	5030A	09/30/2021 21:24	SA	8260B
1,1,2,2-Tetrachloroethane	ND		3.25	10.0	ug/kg	1	5030A	09/30/2021 21:24	SA	8260B
Tetrachloroethene	ND		0.930	10.0	ug/kg	1	5030A	09/30/2021 21:24	SA	8260B
Toluene	ND		1.00	2.00	ug/kg	1	5030A	09/30/2021 21:24	SA	8260B
1,2,3-Trichlorobenzene	ND		1.23	10.0	ug/kg	1	5030A	09/30/2021 21:24	SA	8260B
1,2,4-Trichlorobenzene	ND		2.82	10.0	ug/kg	1	5030A	09/30/2021 21:24	SA	8260B
1,1,1-Trichloroethane	ND		2.03	10.0	ug/kg	1	5030A	09/30/2021 21:24	SA	8260B
1,1,2-Trichloroethane	ND		1.74	10.0	ug/kg	1	5030A	09/30/2021 21:24	SA	8260B
Trichloroethene	ND		1.15	10.0	ug/kg	1	5030A	09/30/2021 21:24	SA	8260B
Trichlorofluoromethane	ND		3.15	10.0	ug/kg	1	5030A	09/30/2021 21:24	SA	8260B
1,2,3-Trichloropropane	ND		1.74	10.0	ug/kg	1	5030A	09/30/2021 21:24	SA	8260B
1,2,4-Trimethylbenzene	ND		3.19	10.0	ug/kg	1	5030A	09/30/2021 21:24	SA	8260B
1,3,5- Trimethylbenzene	ND		1.23	10.0	ug/kg	1	5030A	09/30/2021 21:24	SA	8260B
Vinyl acetate	ND		10.8	50.0	ug/kg	1	5030A	09/30/2021 21:24	SA	8260B
Vinyl chloride	ND		2.79	30.0	ug/kg	1	5030A	09/30/2021 21:24	SA	8260B
m,p-Xylenes	ND		1.80	4.00	ug/kg	1	5030A	09/30/2021 21:24	SA	8260B
o-Xylene	ND		1.00	2.00	ug/kg	1	5030A	09/30/2021 21:24	SA	8260B
Surrogate: 4-Bromofluorobenzene			*120 %*		*70-120*		5030A	09/30/2021 21:24	SA	*8260B*
Surrogate: Dibromofluoromethane		*S-04*	*9.56 %*		*70-120*		5030A	09/30/2021 21:24	SA	*8260B*
Surrogate: Toluene-d8			*106 %*		*70-120*		5030A	09/30/2021 21:24	SA	*8260B*

The results in this report apply to the samples analyzed in accordance with the chain of custody document. This analytical report must be reproduced in its entirety.

Amolk Brar, Lab Director

American Scientific Laboratories, LLC
Environmental Testing Services
2520 N. San Fernando Road, LA CA 90065 Tel: (323) 223-9700 • Fax: (323) 223-9500

Kroner Environmental Services, Inc.	Project: Regional Connector N. Mission Rd.	Work Order No: 2109255
10801 National Blvd. # 415	Project Number: 1093	**Reported:**
Los Angeles CA, 90064	Project Manager: Kurt Kroner	10/07/2021 14:34

Analytical Results

Client Sample ID: CSP-2

Laboratory Sample ID: 2109255-02 (Solid)

Analyte	Result	Notes	MDL	PQL	Units	Dilution	Prep Method	Analyzed	Analyst	Method
Total Mercury (CVAA)				Batch ID: BJ10205			Prepared: 10/05/2021 11:00			
Mercury	**0.0584**		0.0100	0.0500	mg/kg	1	7471A	10/05/2021 16:20	LVE	7471A
Total ICP Metals				Batch ID: BJ10204			Prepared: 10/05/2021 10:52			
Antimony	ND		0.200	0.500	mg/kg	1	3050B	10/05/2021 19:51	LVE	SW846 6010B
Arsenic	**1.40**		0.150	0.250	mg/kg	1	3050B	10/05/2021 19:51	LVE	SW846 6010B
Barium	**57.1**		0.0500	0.500	mg/kg	1	3050B	10/05/2021 19:51	LVE	SW846 6010B
Beryllium	**0.173**	J	0.0400	0.500	mg/kg	1	3050B	10/05/2021 19:51	LVE	SW846 6010B
Cadmium	**0.850**		0.0400	0.500	mg/kg	1	3050B	10/05/2021 19:51	LVE	SW846 6010B
Chromium	**7.23**		0.0500	0.500	mg/kg	1	3050B	10/05/2021 19:51	LVE	SW846 6010B
Cobalt	**3.94**		0.0500	0.500	mg/kg	1	3050B	10/05/2021 19:51	LVE	SW846 6010B
Copper	**10.1**		0.0500	0.500	mg/kg	1	3050B	10/05/2021 19:51	LVE	SW846 6010B
Lead	**11.7**		0.100	0.250	mg/kg	1	3050B	10/05/2021 19:51	LVE	SW846 6010B
Molybdenum	**0.434**	J	0.0500	0.500	mg/kg	1	3050B	10/05/2021 19:51	LVE	SW846 6010B
Nickel	**5.83**		0.100	0.500	mg/kg	1	3050B	10/05/2021 19:51	LVE	SW846 6010B
Selenium	ND		0.200	0.500	mg/kg	1	3050B	10/05/2021 19:51	LVE	SW846 6010B
Silver	ND		0.0500	0.500	mg/kg	1	3050B	10/05/2021 19:51	LVE	SW846 6010B
Thallium	ND		0.150	0.500	mg/kg	1	3050B	10/05/2021 19:51	LVE	SW846 6010B
Vanadium	**16.1**		0.0500	0.500	mg/kg	1	3050B	10/05/2021 19:51	LVE	SW846 6010B
Zinc	**45.1**		0.350	0.500	mg/kg	1	3050B	10/05/2021 19:51	LVE	SW846 6010B
Total Petroleum Hydrocarbons(TPH-g)				Batch ID: BJ10004			Prepared: 09/30/2021 09:00			
Gasoline Range Organics	ND		250	500	ug/kg	1	5030A	10/01/2021 01:54	SA	8015B
Surrogate: Bromofluorobenzene			*97.8 %*	*70-120*			5030A	10/01/2021 01:54	SA	*8015B*
Total Petroleum Hydrocarbons(TPH DROORO)				Batch ID: BJ10035			Prepared: 09/30/2021 13:00			
Diesel range organics	ND		1.00	10.0	mg/kg	1	3550B	10/01/2021 14:24	DWI	8015B
Oil Range Organics	**226**		17.0	50.0	mg/kg	1	3550B	10/01/2021 14:24	DWI	8015B
Surrogate: Chlorobenzene			*93.6 %*	*70-120*			3550B	10/01/2021 14:24	DWI	*8015B*

The results in this report apply to the samples analyzed in accordance with the chain of custody document. This analytical report must be reproduced in its entirety.

Amolk Brar, Lab Director

American Scientific Laboratories, LLC
Environmental Testing Services
2520 N. San Fernando Road, LA CA 90065 Tel: (323) 223-9700 • Fax: (323) 223-9500

Kroner Environmental Services, Inc.	Project: Regional Connector N. Mission Rd.	Work Order No: 2109255
10801 National Blvd. # 415	Project Number: 1093	**Reported:**
Los Angeles CA, 90064	Project Manager: Kurt Kroner	10/07/2021 14:34

Analytical Results

Client Sample ID: CSP-2

Laboratory Sample ID: 2109255-02 (Solid)

Analyte	Result	Notes	MDL	PQL	Units	Dilution	Prep Method	Analyzed	Analyst	Method
Volatile Organic Compounds				Batch ID: BJ10007			Prepared: 09/30/2021 09:00			
Acetone	ND		12.7	50.0	ug/kg	1	5030A	09/30/2021 21:52	SA	8260B
Benzene	ND		0.930	2.00	ug/kg	1	5030A	09/30/2021 21:52	SA	8260B
Bromobenzene	ND		3.39	10.0	ug/kg	1	5030A	09/30/2021 21:52	SA	8260B
Bromochloromethane	ND		0.380	10.0	ug/kg	1	5030A	09/30/2021 21:52	SA	8260B
Bromodichloromethane	ND		0.630	10.0	ug/kg	1	5030A	09/30/2021 21:52	SA	8260B
Bromoform	ND		3.39	50.0	ug/kg	1	5030A	09/30/2021 21:52	SA	8260B
Bromomethane	ND		2.75	30.0	ug/kg	1	5030A	09/30/2021 21:52	SA	8260B
2-Butanone	ND		5.83	50.0	ug/kg	1	5030A	09/30/2021 21:52	SA	8260B
n-Butylbenzene	ND		2.05	10.0	ug/kg	1	5030A	09/30/2021 21:52	SA	8260B
sec-Butylbenzene	ND		3.04	10.0	ug/kg	1	5030A	09/30/2021 21:52	SA	8260B
tert-Butylbenzene	ND		1.34	10.0	ug/kg	1	5030A	09/30/2021 21:52	SA	8260B
Carbon disulfide	ND		5.53	10.0	ug/kg	1	5030A	09/30/2021 21:52	SA	8260B
Carbon tetrachloride	ND		2.48	10.0	ug/kg	1	5030A	09/30/2021 21:52	SA	8260B
Chlorobenzene	ND		0.890	10.0	ug/kg	1	5030A	09/30/2021 21:52	SA	8260B
Chloroethane	ND		2.15	30.0	ug/kg	1	5030A	09/30/2021 21:52	SA	8260B
2-Chloroethylvinyl Ether	ND		5.53	50.0	ug/kg	1	5030A	09/30/2021 21:52	SA	8260B
Chloroform	ND		1.24	10.0	ug/kg	1	5030A	09/30/2021 21:52	SA	8260B
Chloromethane	ND		1.74	30.0	ug/kg	1	5030A	09/30/2021 21:52	SA	8260B
4-Chlorotoluene	ND		1.34	10.0	ug/kg	1	5030A	09/30/2021 21:52	SA	8260B
2-Chlorotoluene	ND		2.35	10.0	ug/kg	1	5030A	09/30/2021 21:52	SA	8260B
1,2-Dibromo-3-chloropropane	ND		2.69	50.0	ug/kg	1	5030A	09/30/2021 21:52	SA	8260B
Dibromochloromethane	ND		0.650	10.0	ug/kg	1	5030A	09/30/2021 21:52	SA	8260B
1,2-Dibromoethane	ND		2.75	10.0	ug/kg	1	5030A	09/30/2021 21:52	SA	8260B
Dibromomethane	ND		2.30	10.0	ug/kg	1	5030A	09/30/2021 21:52	SA	8260B
1,2-Dichlorobenzene	ND		1.65	10.0	ug/kg	1	5030A	09/30/2021 21:52	SA	8260B
1,3-Dichlorobenzene	ND		1.03	10.0	ug/kg	1	5030A	09/30/2021 21:52	SA	8260B
1,4-Dichlorobenzene	ND		2.23	10.0	ug/kg	1	5030A	09/30/2021 21:52	SA	8260B
Dichlorodifluoromethane	ND		2.07	30.0	ug/kg	1	5030A	09/30/2021 21:52	SA	8260B
1,1-Dichloroethane	ND		1.30	10.0	ug/kg	1	5030A	09/30/2021 21:52	SA	8260B
1,2-Dichloroethane	ND		1.57	10.0	ug/kg	1	5030A	09/30/2021 21:52	SA	8260B
1,1-Dichloroethene	ND		1.60	10.0	ug/kg	1	5030A	09/30/2021 21:52	SA	8260B
cis-1,2-Dichloroethene	ND		2.16	10.0	ug/kg	1	5030A	09/30/2021 21:52	SA	8260B
trans-1,2-Dichloroethene	ND		2.60	10.0	ug/kg	1	5030A	09/30/2021 21:52	SA	8260B
1,1-Dichloropropene	ND		0.660	10.0	ug/kg	1	5030A	09/30/2021 21:52	SA	8260B
1,2-Dichloropropane	ND		0.920	10.0	ug/kg	1	5030A	09/30/2021 21:52	SA	8260B
1,3-Dichloropropane	ND		1.36	10.0	ug/kg	1	5030A	09/30/2021 21:52	SA	8260B

The results in this report apply to the samples analyzed in accordance with the chain of custody document. This analytical report must be reproduced in its entirety.

Amolk Brar, Lab Director

American Scientific Laboratories, LLC
Environmental Testing Services
2520 N. San Fernando Road, LA CA 90065 Tel: (323) 223-9700 • Fax: (323) 223-9500

Kroner Environmental Services, Inc.	Project: Regional Connector N. Mission Rd.	Work Order No: 2109255
10801 National Blvd. # 415	Project Number: 1093	**Reported:**
Los Angeles CA, 90064	Project Manager: Kurt Kroner	10/07/2021 14:34

Analytical Results

Client Sample ID: CSP-2

Laboratory Sample ID: 2109255-02 (Solid)

Analyte	Result	Notes	MDL	PQL	Units	Dilution	Prep Method	Analyzed	Analyst	Method
Volatile Organic Compounds				Batch ID: BJ10007			Prepared: 09/30/2021 09:00			
2,2-Dichloropropane	ND		1.12	10.0	ug/kg	1	5030A	09/30/2021 21:52	SA	8260B
cis-1,3-Dichloropropene	ND		0.980	10.0	ug/kg	1	5030A	09/30/2021 21:52	SA	8260B
trans-1,3-Dichloropropene	ND		0.960	10.0	ug/kg	1	5030A	09/30/2021 21:52	SA	8260B
Ethylbenzene	ND		1.00	2.00	ug/kg	1	5030A	09/30/2021 21:52	SA	8260B
Hexachlorobutadiene	ND		2.77	30.0	ug/kg	1	5030A	09/30/2021 21:52	SA	8260B
2-Hexanone	ND		3.18	50.0	ug/kg	1	5030A	09/30/2021 21:52	SA	8260B
Isopropylbenzene	ND		1.42	10.0	ug/kg	1	5030A	09/30/2021 21:52	SA	8260B
p-Isopropyltoluene	ND		3.86	10.0	ug/kg	1	5030A	09/30/2021 21:52	SA	8260B
Methyl tert-Butyl Ether (MTBE)	ND		1.81	5.00	ug/kg	1	5030A	09/30/2021 21:52	SA	8260B
4-Methyl-2-pentanone (MIBK)	ND		3.14	50.0	ug/kg	1	5030A	09/30/2021 21:52	SA	8260B
Methylene chloride	ND		3.31	50.0	ug/kg	1	5030A	09/30/2021 21:52	SA	8260B
Naphthalene	ND		1.14	10.0	ug/kg	1	5030A	09/30/2021 21:52	SA	8260B
n-Propylbenzene	ND		1.14	10.0	ug/kg	1	5030A	09/30/2021 21:52	SA	8260B
Styrene	ND		0.800	10.0	ug/kg	1	5030A	09/30/2021 21:52	SA	8260B
1,1,1,2-Tetrachloroethane	ND		1.28	10.0	ug/kg	1	5030A	09/30/2021 21:52	SA	8260B
1,1,2,2-Tetrachloroethane	ND		3.25	10.0	ug/kg	1	5030A	09/30/2021 21:52	SA	8260B
Tetrachloroethene	ND		0.930	10.0	ug/kg	1	5030A	09/30/2021 21:52	SA	8260B
Toluene	ND		1.00	2.00	ug/kg	1	5030A	09/30/2021 21:52	SA	8260B
1,2,3-Trichlorobenzene	ND		1.23	10.0	ug/kg	1	5030A	09/30/2021 21:52	SA	8260B
1,2,4-Trichlorobenzene	ND		2.82	10.0	ug/kg	1	5030A	09/30/2021 21:52	SA	8260B
1,1,1-Trichloroethane	ND		2.03	10.0	ug/kg	1	5030A	09/30/2021 21:52	SA	8260B
1,1,2-Trichloroethane	ND		1.74	10.0	ug/kg	1	5030A	09/30/2021 21:52	SA	8260B
Trichloroethene	ND		1.15	10.0	ug/kg	1	5030A	09/30/2021 21:52	SA	8260B
Trichlorofluoromethane	ND		3.15	10.0	ug/kg	1	5030A	09/30/2021 21:52	SA	8260B
1,2,3-Trichloropropane	ND		1.74	10.0	ug/kg	1	5030A	09/30/2021 21:52	SA	8260B
1,2,4-Trimethylbenzene	ND		3.19	10.0	ug/kg	1	5030A	09/30/2021 21:52	SA	8260B
1,3,5- Trimethylbenzene	ND		1.23	10.0	ug/kg	1	5030A	09/30/2021 21:52	SA	8260B
Vinyl acetate	ND		10.8	50.0	ug/kg	1	5030A	09/30/2021 21:52	SA	8260B
Vinyl chloride	ND		2.79	30.0	ug/kg	1	5030A	09/30/2021 21:52	SA	8260B
m,p-Xylenes	ND		1.80	4.00	ug/kg	1	5030A	09/30/2021 21:52	SA	8260B
o-Xylene	ND		1.00	2.00	ug/kg	1	5030A	09/30/2021 21:52	SA	8260B
Surrogate: 4-Bromofluorobenzene			*112 %*	*70-120*			5030A	09/30/2021 21:52	SA	*8260B*
Surrogate: Dibromofluoromethane			*70.2 %*	*70-120*			5030A	09/30/2021 21:52	SA	*8260B*
Surrogate: Toluene-d8			*107 %*	*70-120*			5030A	09/30/2021 21:52	SA	*8260B*

The results in this report apply to the samples analyzed in accordance with the chain of custody document. This analytical report must be reproduced in its entirety.

Amolk Brar, Lab Director

American Scientific Laboratories, LLC
Environmental Testing Services
2520 N. San Fernando Road, LA CA 90065 Tel: (323) 223-9700 • Fax: (323) 223-9500

Kroner Environmental Services, Inc.	Project: Regional Connector N. Mission Rd.	Work Order No: 2109255
10801 National Blvd. # 415	Project Number: 1093	**Reported:**
Los Angeles CA, 90064	Project Manager: Kurt Kroner	10/07/2021 14:34

Total Mercury (CVAA) - Quality Control Report

Analyte	Result	MDL	PQL	Units	Spike Level	Source Result	%REC	%REC Limits	RPD	RPD Limit	Notes
Batch BJ10205 - 7471A - 7471A											
Blank (BJ10205-BLK1)					Prepared & Analyzed: 10/05/202						
Mercury	ND	0.0100	0.0500	mg/kg							
LCS (BJ10205-BS1)					Prepared & Analyzed: 10/05/202						
Mercury	0.102	0.0100	0.0500	mg/kg	0.100		102	80-120			
LCS Dup (BJ10205-BSD1)					Prepared & Analyzed: 10/05/202						
Mercury	0.100	0.0100	0.0500	mg/kg	0.100		100	80-120	2.07	20	

The results in this report apply to the samples analyzed in accordance with the chain of custody document. This analytical report must be reproduced in its entirety.

Amolk Brar, Lab Director

American Scientific Laboratories, LLC
Environmental Testing Services
2520 N. San Fernando Road, LA CA 90065 Tel: (323) 223-9700 • Fax: (323) 223-9500

Kroner Environmental Services, Inc.	Project: Regional Connector N. Mission Rd.	Work Order No: 2109255
10801 National Blvd. # 415	Project Number: 1093	**Reported:**
Los Angeles CA, 90064	Project Manager: Kurt Kroner	10/07/2021 14:34

Total ICP Metals - Quality Control Report

Analyte	Result	MDL	PQL	Units	Spike Level	Source Result	%REC	%REC Limits	RPD	RPD Limit	Notes
Batch BJ10204 - 3050B - SW846 6010B											
Blank (BJ10204-BLK1)					Prepared & Analyzed: 10/05/202						
Antimony	ND	0.200	0.500	mg/kg							
Arsenic	ND	0.150	0.250	"							
Barium	ND	0.0500	0.500	"							
Beryllium	ND	0.0400	0.500	"							
Cadmium	ND	0.0400	0.500	"							
Chromium	ND	0.0500	0.500	"							
Cobalt	ND	0.0500	0.500	"							
Copper	ND	0.0500	0.500	"							
Lead	ND	0.100	0.250	"							
Molybdenum	ND	0.0500	0.500	"							
Nickel	ND	0.100	0.500	"							
Selenium	ND	0.200	0.500	"							
Silver	ND	0.0500	0.500	"							
Thallium	ND	0.150	0.500	"							
Vanadium	ND	0.0500	0.500	"							
Zinc	ND	0.350	0.500	"							
LCS (BJ10204-BS1)					Prepared & Analyzed: 10/05/202						
Antimony	42.8	0.200	0.500	mg/kg	50.0		85.5	80-120			
Arsenic	45.2	0.150	0.250	"	50.0		90.4	80-120			
Barium	43.7	0.0500	0.500	"	50.0		87.3	80-120			
Beryllium	47.5	0.0400	0.500	"	50.0		95.1	80-120			
Cadmium	45.2	0.0400	0.500	"	50.0		90.4	80-120			
Chromium	44.6	0.0500	0.500	"	50.0		89.3	80-120			
Cobalt	45.3	0.0500	0.500	"	50.0		90.7	80-120			
Copper	47.1	0.0500	0.500	"	50.0		94.2	80-120			
Lead	45.3	0.100	0.250	"	50.0		90.7	80-120			
Molybdenum	43.8	0.0500	0.500	"	50.0		87.6	80-120			
Nickel	45.2	0.100	0.500	"	50.0		90.4	80-120			
Selenium	45.0	0.200	0.500	"	50.0		90.0	80-120			
Silver	47.4	0.0500	0.500	"	50.0		94.7	80-120			
Thallium	45.5	0.150	0.500	"	50.0		91.1	80-120			
Vanadium	45.0	0.0500	0.500	"	50.0		90.0	80-120			
Zinc	56.4	0.350	0.500	"	50.0		113	80-120			

The results in this report apply to the samples analyzed in accordance with the chain of custody document. This analytical report must be reproduced in its entirety.

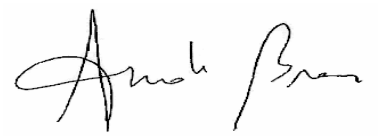

Amolk Brar, Lab Director

American Scientific Laboratories, LLC
Environmental Testing Services
2520 N. San Fernando Road, LA CA 90065 Tel: (323) 223-9700 • Fax: (323) 223-9500

Kroner Environmental Services, Inc.	Project: Regional Connector N. Mission Rd.	Work Order No: 2109255
10801 National Blvd. # 415	Project Number: 1093	**Reported:**
Los Angeles CA, 90064	Project Manager: Kurt Kroner	10/07/2021 14:34

Total ICP Metals - Quality Control Report

Analyte	Result	MDL	PQL	Units	Spike Level	Source Result	%REC	%REC Limits	RPD	RPD Limit	Notes
Batch BJ10204 - 3050B - SW846 6010B											
LCS Dup (BJ10204-BSD1)					Prepared & Analyzed: 10/05/202						
Antimony	46.1	0.200	0.500	mg/kg	50.0		92.2	80-120	7.53	20	
Arsenic	47.7	0.150	0.250	"	50.0		95.4	80-120	5.45	20	
Barium	43.7	0.0500	0.500	"	50.0		87.5	80-120	0.192	20	
Beryllium	49.9	0.0400	0.500	"	50.0		99.9	80-120	4.90	20	
Cadmium	48.2	0.0400	0.500	"	50.0		96.4	80-120	6.45	20	
Chromium	46.9	0.0500	0.500	"	50.0		93.8	80-120	4.95	20	
Cobalt	48.0	0.0500	0.500	"	50.0		96.0	80-120	5.68	20	
Copper	49.3	0.0500	0.500	"	50.0		98.6	80-120	4.63	20	
Lead	48.0	0.100	0.250	"	50.0		96.1	80-120	5.80	20	
Molybdenum	46.3	0.0500	0.500	"	50.0		92.6	80-120	5.57	20	
Nickel	47.9	0.100	0.500	"	50.0		95.8	80-120	5.77	20	
Selenium	47.4	0.200	0.500	"	50.0		94.9	80-120	5.25	20	
Silver	45.3	0.0500	0.500	"	50.0		90.6	80-120	4.41	20	
Thallium	48.7	0.150	0.500	"	50.0		97.4	80-120	6.67	20	
Vanadium	47.4	0.0500	0.500	"	50.0		94.8	80-120	5.21	20	
Zinc	59.7	0.350	0.500	"	50.0		119	80-120	5.67	20	

The results in this report apply to the samples analyzed in accordance with the chain of custody document. This analytical report must be reproduced in its entirety.

Amolk Brar, Lab Director

American Scientific Laboratories, LLC
Environmental Testing Services
2520 N. San Fernando Road, LA CA 90065 Tel: (323) 223-9700 • Fax: (323) 223-9500

Kroner Environmental Services, Inc.	Project: Regional Connector N. Mission Rd.	Work Order No: 2109255
10801 National Blvd. # 415	Project Number: 1093	**Reported:**
Los Angeles CA, 90064	Project Manager: Kurt Kroner	10/07/2021 14:34

Total Petroleum Hydrocarbons(TPH-g) - Quality Control Report

Analyte	Result	MDL	PQL	Units	Spike Level	Source Result	%REC	%REC Limits	RPD	RPD Limit	Notes
Batch BJ10004 - 5030A - 8015B											
Blank (BJ10004-BLK1)					Prepared & Analyzed: 09/30/202						
Gasoline Range Organics	ND	250	500	ug/kg							
LCS (BJ10004-BS1)					Prepared & Analyzed: 09/30/202						
Gasoline Range Organics	544			ug/L	500		109	75-120			
LCS Dup (BJ10004-BSD1)					Prepared & Analyzed: 09/30/202						
Gasoline Range Organics	528			ug/L	500		106	75-120	2.96	15	
Matrix Spike (BJ10004-MS1)		**Source: 2109235-01**			Prepared: 09/30/202 Analyzed: 10/01/202						
Gasoline Range Organics	571			ug/L	500	18.0	111	75-120			
Matrix Spike Dup (BJ10004-MSD1)		**Source: 2109235-01**			Prepared & Analyzed: 09/30/202						
Gasoline Range Organics	545			ug/L	500	18.0	105	75-120	4.64	15	

The results in this report apply to the samples analyzed in accordance with the chain of custody document. This analytical report must be reproduced in its entirety.

Amolk Brar, Lab Director

American Scientific Laboratories, LLC
Environmental Testing Services
2520 N. San Fernando Road, LA CA 90065 Tel: (323) 223-9700 • Fax: (323) 223-9500

Kroner Environmental Services, Inc.	Project: Regional Connector N. Mission Rd.	Work Order No: 2109255
10801 National Blvd. # 415	Project Number: 1093	**Reported:**
Los Angeles CA, 90064	Project Manager: Kurt Kroner	10/07/2021 14:34

Total Petroleum Hydrocarbons(TPH DROORO) - Quality Control Report

Analyte	Result	MDL	PQL	Units	Spike Level	Source Result	%REC	%REC Limits	RPD	RPD Limit	Notes
Batch BJ10035 - 3550B - 8015B											
Blank (BJ10035-BLK1)					Prepared: 09/30/202 Analyzed: 10/01/202						
Diesel range organics	ND	1.00	10.0	mg/kg							
Oil Range Organics	ND	17.0	50.0	"							
Surrogate: Chlorobenzene	*91.6*			*mg/L*	*100*		*91.6*	*70-120*			
LCS (BJ10035-BS1)					Prepared: 09/30/202 Analyzed: 10/01/202						
Diesel range organics	500			mg/L	500		99.9	75-120			
Surrogate: Chlorobenzene	*95.9*			*"*	*100*		*95.9*	*70-120*			
LCS Dup (BJ10035-BSD1)					Prepared: 09/30/202 Analyzed: 10/01/202						
Diesel range organics	497			mg/L	500		99.4	75-120	0.565	20	
Surrogate: Chlorobenzene	*95.8*			*"*	*100*		*95.8*	*70-120*			
Matrix Spike (BJ10035-MS1)		**Source: 2109279-04**			Prepared: 09/30/202 Analyzed: 10/01/202						
Diesel range organics	522			mg/L	500	0.00	104	75-120			
Surrogate: Chlorobenzene	*97.8*			*"*	*100*		*97.8*	*70-120*			
Matrix Spike Dup (BJ10035-MSD1)		**Source: 2109279-04**			Prepared: 09/30/202 Analyzed: 10/01/202						
Diesel range organics	513			mg/L	500	0.00	103	75-120	1.58	20	
Surrogate: Chlorobenzene	*97.3*			*"*	*100*		*97.3*	*70-120*			

The results in this report apply to the samples analyzed in accordance with the chain of custody document. This analytical report must be reproduced in its entirety.

Amolk Brar, Lab Director

American Scientific Laboratories, LLC
Environmental Testing Services
2520 N. San Fernando Road, LA CA 90065 Tel: (323) 223-9700 • Fax: (323) 223-9500

Kroner Environmental Services, Inc.	Project: Regional Connector N. Mission Rd.	Work Order No: 2109255
10801 National Blvd. # 415	Project Number: 1093	**Reported:**
Los Angeles CA, 90064	Project Manager: Kurt Kroner	10/07/2021 14:34

Volatile Organic Compounds - Quality Control Report

Analyte	Result	MDL	PQL	Units	Spike Level	Source Result	%REC	%REC Limits	RPD	RPD Limit	Notes
Batch BJ10007 - 5030A - 8260B											
Blank (BJ10007-BLK1)					Prepared & Analyzed: 09/30/202						
Acetone	ND	12.7	50.0	ug/kg							
Benzene	ND	0.930	2.00	"							
Bromobenzene	ND	3.39	10.0	"							
Bromochloromethane	ND	0.380	10.0	"							
Bromodichloromethane	ND	0.630	10.0	"							
Bromoform	ND	3.39	50.0	"							
Bromomethane	ND	2.75	30.0	"							
2-Butanone	ND	5.83	50.0	"							
n-Butylbenzene	ND	2.05	10.0	"							
sec-Butylbenzene	ND	3.04	10.0	"							
tert-Butylbenzene	ND	1.34	10.0	"							
Carbon disulfide	ND	5.53	10.0	"							
Carbon tetrachloride	ND	2.48	10.0	"							
Chlorobenzene	ND	0.890	10.0	"							
Chloroethane	ND	2.15	30.0	"							
2-Chloroethylvinyl Ether	ND	5.53	50.0	"							
Chloroform	ND	1.24	10.0	"							
Chloromethane	ND	1.74	30.0	"							
4-Chlorotoluene	ND	1.34	10.0	"							
2-Chlorotoluene	ND	2.35	10.0	"							
1,2-Dibromo-3-chloropropane	ND	2.69	50.0	"							
Dibromochloromethane	ND	0.650	10.0	"							
1,2-Dibromoethane	ND	2.75	10.0	"							
Dibromomethane	ND	2.30	10.0	"							
1,2-Dichlorobenzene	ND	1.65	10.0	"							
1,3-Dichlorobenzene	ND	1.03	10.0	"							
1,4-Dichlorobenzene	ND	2.23	10.0	"							
Dichlorodifluoromethane	ND	2.07	30.0	"							
1,1-Dichloroethane	ND	1.30	10.0	"							
1,2-Dichloroethane	ND	1.57	10.0	"							
1,1-Dichloroethene	ND	1.60	10.0	"							
cis-1,2-Dichloroethene	ND	2.16	10.0	"							
trans-1,2-Dichloroethene	ND	2.60	10.0	"							
1,1-Dichloropropene	ND	0.660	10.0	"							
1,2-Dichloropropane	ND	0.920	10.0	"							
1,3-Dichloropropane	ND	1.36	10.0	"							
2,2-Dichloropropane	ND	1.12	10.0	"							
cis-1,3-Dichloropropene	ND	0.980	10.0	"							
trans-1,3-Dichloropropene	ND	0.960	10.0	"							
Ethylbenzene	ND	1.00	2.00	"							
Hexachlorobutadiene	ND	2.77	30.0	"							

The results in this report apply to the samples analyzed in accordance with the chain of custody document. This analytical report must be reproduced in its entirety.

Amolk Brar, Lab Director

American Scientific Laboratories, LLC
Environmental Testing Services
2520 N. San Fernando Road, LA CA 90065 Tel: (323) 223-9700 • Fax: (323) 223-9500

Kroner Environmental Services, Inc.	Project: Regional Connector N. Mission Rd.	Work Order No: 2109255
10801 National Blvd. # 415	Project Number: 1093	**Reported:**
Los Angeles CA, 90064	Project Manager: Kurt Kroner	10/07/2021 14:34

Volatile Organic Compounds - Quality Control Report

Analyte	Result	MDL	PQL	Units	Spike Level	Source Result	%REC	%REC Limits	RPD	RPD Limit	Notes
Batch BJ10007 - 5030A - 8260B											
Blank (BJ10007-BLK1)					Prepared & Analyzed: 09/30/202						
2-Hexanone	ND	3.18	50.0	ug/kg							
Isopropylbenzene	ND	1.42	10.0	"							
p-Isopropyltoluene	ND	3.86	10.0	"							
Methyl tert-Butyl Ether (MTBE)	ND	1.81	5.00	"							
4-Methyl-2-pentanone (MIBK)	ND	3.14	50.0	"							
Methylene chloride	ND	3.31	50.0	"							
Naphthalene	ND	1.14	10.0	"							
n-Propylbenzene	ND	1.14	10.0	"							
Styrene	ND	0.800	10.0	"							
1,1,1,2-Tetrachloroethane	ND	1.28	10.0	"							
1,1,2,2-Tetrachloroethane	ND	3.25	10.0	"							
Tetrachloroethene	ND	0.930	10.0	"							
Toluene	ND	1.00	2.00	"							
1,2,3-Trichlorobenzene	ND	1.23	10.0	"							
1,2,4-Trichlorobenzene	ND	2.82	10.0	"							
1,1,1-Trichloroethane	ND	2.03	10.0	"							
1,1,2-Trichloroethane	ND	1.74	10.0	"							
Trichloroethene	ND	1.15	10.0	"							
Trichlorofluoromethane	ND	3.15	10.0	"							
1,2,3-Trichloropropane	ND	1.74	10.0	"							
1,2,4-Trimethylbenzene	ND	3.19	10.0	"							
1,3,5- Trimethylbenzene	ND	1.23	10.0	"							
Vinyl acetate	ND	10.8	50.0	"							
Vinyl chloride	ND	2.79	30.0	"							
m,p-Xylenes	ND	1.80	4.00	"							
o-Xylene	ND	1.00	2.00	"							
LCS (BJ10007-BS1)					Prepared & Analyzed: 09/30/202						
Benzene	47.8			ug/L	50.0		95.6	75-120			
Chlorobenzene	49.6			"	50.0		99.2	75-120			
1,1-Dichloroethene	47.9			"	50.0		95.9	75-120			
Methyl tert-Butyl Ether (MTBE)	43.9			"	50.0		87.9	75-120			
Toluene	47.1			"	50.0		94.3	75-120			
Trichloroethene	46.4			"	50.0		92.9	75-120			

The results in this report apply to the samples analyzed in accordance with the chain of custody document. This analytical report must be reproduced in its entirety.

Amolk Brar, Lab Director

American Scientific Laboratories, LLC
Environmental Testing Services
2520 N. San Fernando Road, LA CA 90065 Tel: (323) 223-9700 • Fax: (323) 223-9500

Kroner Environmental Services, Inc.	Project: Regional Connector N. Mission Rd.	Work Order No: 2109255
10801 National Blvd. # 415	Project Number: 1093	**Reported:**
Los Angeles CA, 90064	Project Manager: Kurt Kroner	10/07/2021 14:34

Volatile Organic Compounds - Quality Control Report

Analyte	Result	MDL	PQL	Units	Spike Level	Source Result	%REC	%REC Limits	RPD	RPD Limit	Notes
Batch BJ10007 - 5030A - 8260B											
LCS Dup (BJ10007-BSD1)					Prepared & Analyzed: 09/30/202						
Benzene	46.9			ug/L	50.0		93.8	75-120	1.90	20	
Chlorobenzene	48.5			"	50.0		97.0	75-120	2.24	20	
1,1-Dichloroethene	50.5			"	50.0		101	75-120	5.24	15	
Methyl tert-Butyl Ether (MTBE)	38.8			"	50.0		77.6	75-120	12.4	15	
Toluene	45.7			"	50.0		91.5	75-120	3.01	15	
Trichloroethene	46.6			"	50.0		93.2	75-120	0.365	20	
Matrix Spike (BJ10007-MS1)		**Source: 2109254-01**			Prepared: 09/30/202 Analyzed: 10/01/202						
Benzene	44.7			ug/L	50.0	0.00	89.4	75-120			
Chlorobenzene	45.7			"	50.0	0.00	91.4	75-120			
1,1-Dichloroethene	48.3			"	50.0	0.00	96.6	75-120			
Methyl tert-Butyl Ether (MTBE)	48.7			"	50.0	0.00	97.4	75-120			
Toluene	44.9			"	50.0	0.330	89.1	75-120			
Trichloroethene	43.8			"	50.0	0.00	87.5	75-120			
Matrix Spike Dup (BJ10007-MSD1)		**Source: 2109254-01**			Prepared: 09/30/202 Analyzed: 10/01/202						
Benzene	44.9			ug/L	50.0	0.00	89.7	75-120	0.335	15	
Chlorobenzene	46.3			"	50.0	0.00	92.6	75-120	1.28	15	
1,1-Dichloroethene	48.3			"	50.0	0.00	96.6	75-120	0.0414	15	
Methyl tert-Butyl Ether (MTBE)	46.2			"	50.0	0.00	92.3	75-120	5.34	15	
Toluene	45.0			"	50.0	0.330	89.4	75-120	0.400	15	
Trichloroethene	44.3			"	50.0	0.00	88.6	75-120	1.23	15	

The results in this report apply to the samples analyzed in accordance with the chain of custody document. This analytical report must be reproduced in its entirety.

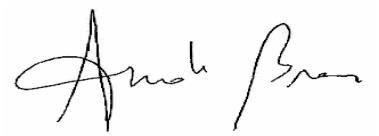

Amolk Brar, Lab Director

American Scientific Laboratories, LLC
Environmental Testing Services
2520 N. San Fernando Road, LA CA 90065 Tel: (323) 223-9700 • Fax: (323) 223-9500

Kroner Environmental Services, Inc.	Project: Regional Connector N. Mission Rd.	Work Order No: 2109255
10801 National Blvd. # 415	Project Number: 1093	**Reported:**
Los Angeles CA, 90064	Project Manager: Kurt Kroner	10/07/2021 14:34

Notes and Definitions

S-04	The surrogate recovery for this sample is outside of established control limits due to a sample matrix effect.
J	Detected but below the Reporting Limit; therefore, result is an estimated concentration (CLP J-Flag).
DET	Analyte DETECTED
ND	Analyte NOT DETECTED at or above the practical quantitation limit (PQL)
NR	Not Reported
dry	Sample results reported on a dry weight basis
RPD	Relative Percent Difference

KRONER ENVIRONMENTAL SERVICES, INC.

September 21, 2021

M E M O R A N D U M

To: Scott Klar

From: Kurt Kroner

Subject: Transmittal of Soil Sample Results – Mission Yard

On September 13, 2021, Kroner Environmental Services Inc. (KES) collected seventeen soil samples from the top of the stockpile located at Mission Yard (622 North Mission Road). The samples were collected from approximately 3 feet from the surface of the stockpile. The seventeen samples were collected by KES to adequately characterize 10,000 cubic yards of the remaining soil stored at the site for reuse on the project as stated in the Mission Yard Soil Sampling Plan. The samples were transported to American Scientific Laboratory, a California Accredited Laboratory, under chain of custody documentation. The samples were analyzed for Metals by EPA Method 6010B/7471A, Volatile Organic Compounds by EPA Method 8260B, and Total Petroleum Hydrocarbons (TPH) by Method 8015B. Below is a summary of the sample results and attached is the Certified Analytical Report.

Metals
Samples MSP-3 and MSP-7 had total lead detected at 60.8 mg/kg and 86.1 mg/kg. Both lead detections are below the lead limit of 350 mg/kg in the Mission Yard Soil Sampling and Stockpile Management Plan (MYSSMP) and the revised Department of Toxic Substance (DTSC) of 320 mg/kg for lead. However, the lead concentrations detected were above the total threshold limit concentrations (TTLC) for determination of hazardous waste per 22 CCR Chapter 11, Article 3 and also above ten times (by rule of thumb) the STLC value, thus additional Waste Extraction testing (WET) is required.

TPH
The TPH analyses were reported as three different fractions of the hydrocarbon range with C_4- C_{12} representing the gasoline range, C_{13}-C_{22} representing the diesel range and C_{23}-C_{40}, representing the oil range. All the samples had no detectable gasoline range hydrocarbons.

Diesel range hydrocarbons were detected in samples MSP-1, MSP-4, MSP-5, MSP-7, MSP-8, MSP-10, MSP-12 and MSP-15 ranging from 126 mg/kg to 1590 mg/kg which is above the Soil Reuse/Soil Import limit of 100 mg/kg for diesel range hydrocarbons. Diesel range hydrocarbons were detected in samples MSP-2, MSP-6, MSP-9, MSP-11, MSP-16 ranging from 46.0 mg/kg to 92.0 mg/kg which is below Soil Reuse/Soil Import limit of 100 mg/kg for diesel range hydrocarbons. All the other samples were non-detect for diesel range hydrocarbons.

Oil range hydrocarbons were detected in samples MSP-1, MSP-2, MSP-3, MSP-4, MSP-5, MSP-6, MSP-7, MSP-8, MSP-9, MSP-10, MSP-12, MSP-13, MSP-14, MSP-15 and MSP-16 ranging from 88 mg/kg to 606 mg/kg which is below the Soil Reuse/Soil Import limit of 1000 mg/kg for oil range hydrocarbons. All the other samples were non-detect for oil range hydrocarbons.

VOCs
The samples had no detectable VOCs.

Conclusion
Based on the sample analytical results, the 10,000 cubic yards of soil as shown in the attached site figure, the entire stockpile cannot be reused on the project because the soil does not meet the project soil reuse criteria for diesel range hydrocarbons. KES recommends removing approximately 3 feet of soil in the areas that exceeded the diesel range hydrocarbons reuse limit and collecting additional samples for characterization. Samples MSP-3 and MSP-7 had detections of elevated lead. Additional WET testing has been requested and will be provided in a supplementary memo.

If you have any questions regarding this memo, please contact us at (310) 474-1500.

Photo – Mission Yard Stockpile Sampled on September 13, 2021



KRONER
ENVIRONMENTAL SERVICES, INC.

Site Figure

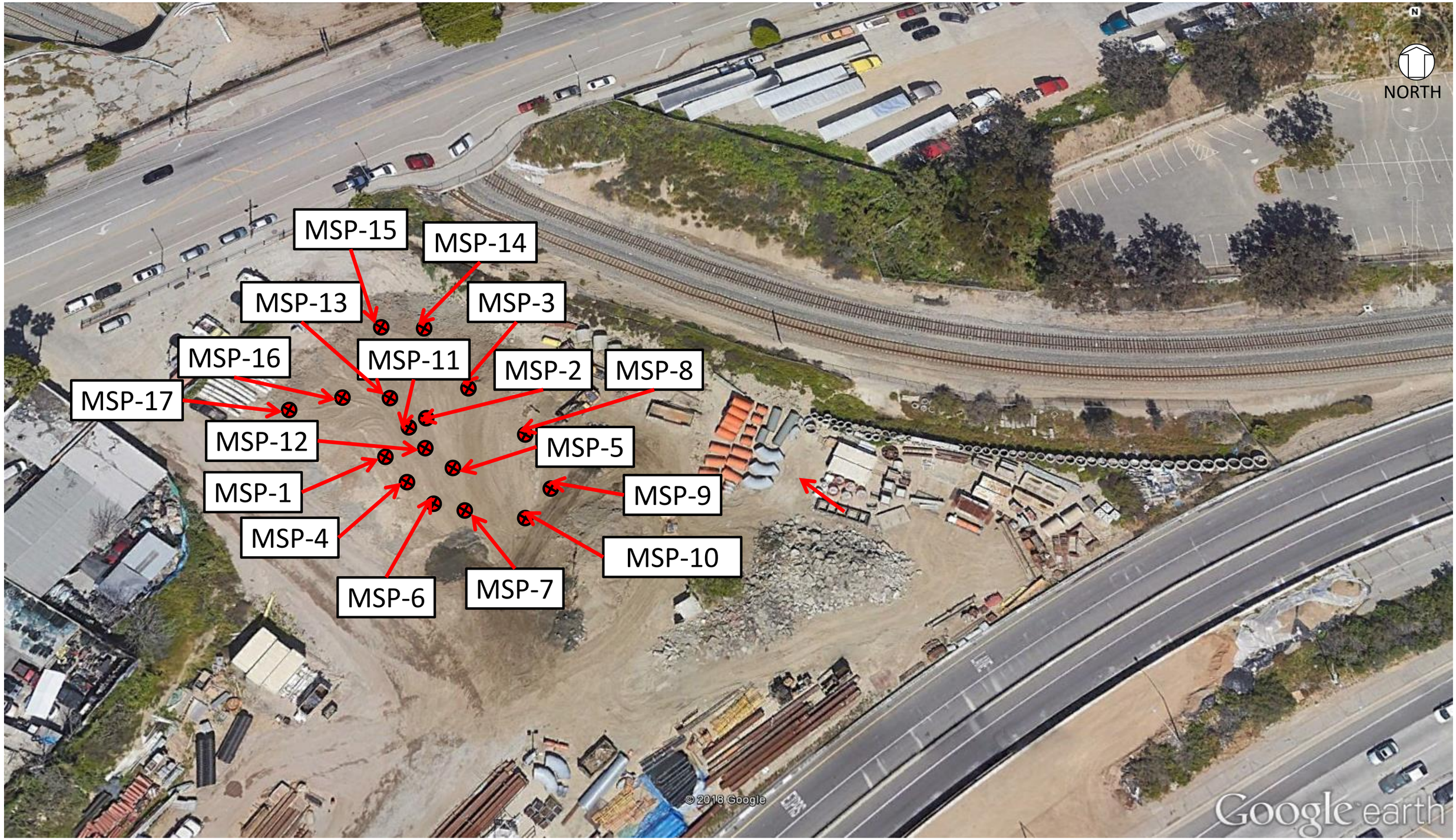

KRONER
ENVIRONMENTAL SERVICES, INC.
10801 National Blvd., Suite 415
Los Angeles, Calif. 90064
TEL 310-474-1500 FAX 310 474-1577

KEY

⊗ Sample Locations

Sample IDs: MSP-1, MSP-2, MSP-3, MSP-4, MSP-5, MSP-6, MSP-7, MSP-8, MSP-9, MSP-10, MSP-11, MSP-12, MSP-13, MSP-14, MSP-15, MSP-16, MSP-17

Soil Sample Locations Regional Connector
Corridor: Mission Yard
Sampled: 09/13/21

KRONER
ENVIRONMENTAL SERVICES, INC.

Certified Analytical Reports

American Scientific Laboratories, LLC
Environmental Testing Services
2520 N. San Fernando Road, LA CA 90065 Tel: (323) 223-9700 • Fax: (323) 223-9500

20 September 2021

Kurt Kroner

Kroner Environmental Services, Inc.

10801 National Blvd. # 415

Los Angeles, CA 90064

Work Order #: 2109115

Project Name: Regional Connector Mission Yard

Project ID: [none]

Site Address: 622 North Mission Road

Enclosed are the results of analyses for samples received by the laboratory on September 13, 2021. If you have any questions concerning this report, please feel free to contact us.

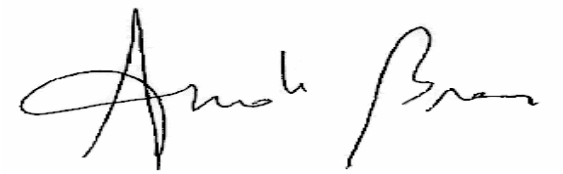

Molky Brar

Laboratory Director

American Scientific Laboratories, LLC (ASL) accepts sample materials from clients for analysis with the assumption that all of the information provided to ASL verbally or in writing by our clients (and/or their agents), regarding samples being submitted to ASL, is complete and accurate. ASL accepts all samples subject to the following conditions:

1) ASL is not responsible for verifying any client-provided information regarding any samples submitted to the laboratory.
2) ASL is not responsible for any consequences resulting from any inaccuracies , omissions, or misrepresentations contained in client-provided information regarding samples submitted to the laboratory.

AMERICAN SCIENTIFIC LABORATORIES, LLC
Environmental Testing Services
2520 N. San Fernando Road, LA, CA 90065 Tel: (323) 223-9700 • Fax: (323) 223-9500

COC# GLOBAL ID _____ E REPORT: ☑ PDF ☐ EDF ☐ EDD ASL JOB# 2109115

CHAIN OF CUSTODY RECORD

Company: Kroner Environmental Services		Report To: Michael Lucey	
Address: 10801 National Blvd., Suite 415	Project Name: Regional Connector	Address:	
Los Angeles, California 90064	Site Address: 622 North Mission Road	Invoice To: Monica Avina	
Telephone: (310) 474-1500 Fax:		Address: SAME	
Special Instruction:	Project ID:		
E-mail: mlucey@kronerenvironmental.com	Project Manager: Kurt Kroner	P.O.#: 1093	

ITEM	LAB USE ONLY Lab ID	SAMPLE DESCRIPTION Sample ID	Date	Time	Container(s) #	Type	Matrix	Preservation	TPH - 8015B Full Rang+	VOCs - 8260B +	CAM Metals - 6010B/7470A	Remarks
1	2109115-01	MSP-1	9/13/21	10:10	1	Glass	Soil	None	X	X	X	
2	2109115-02	MSP-2		10:15	1				X	X	X	
3	2109115-03	MSP-3		10:18	1				X	X	X	
4	2109115-04	MSP-4		10:20	1				X	X	X	
5	2109115-05	MSP-5		10:22	1				X	X	X	
6	2109115-06	MSP-6		10:25	1				X	X	X	
7	2109115-07	MSP-7		10:30	1				X	X	X	
8	2109115-08	MSP-8		10:35	1				X	X	X	
9	2109115-09	MSP-9		10:40	1				X	X	X	
10	2109115-10	MSP-10		10:43	1				X	X	X	

ANALYSIS REQUESTED

Collected By: Michael Lucey	Date 9/13/21	Time 10:43	Relinquished By:	Date	Time
Relinquished By: Michael Lucey	Date 9/13/21	Time 11:29	Received For Laboratory Janet Chin	Date 9-13-21	Time 11:29
Received By:	Date	Time	Condition of Sample:		

TAT ☐ Normal ☐ Rush

White - Report, Yellow - Laboratory, Pink - Client

AMERICAN SCIENTIFIC LABORATORIES, LLC
Environmental Testing Services
2520 N. San Fernando Road, LA, CA 90065 Tel: (323) 223-9700 • Fax: (323) 223-9500

COC# GLOBAL ID _____ E REPORT: ☑ PDF ☐ EDF ☐ EDD ASL JOB# 2109115

Company: Kroner Environmental Services		Report To: Michael Lucey	
Address: 10801 National Blvd., Suite 415	Project Name: Regional Connector	Address:	
Los Angeles, California 90064	Site Address: 622 North Mission Road	Invoice To: Monica Avina	
Telephone: (310) 474-1500 Fax:		Address: SAME	
Special Instruction:	Project ID:		
E-mail: mlucey@kronerenvironmental.com	Project Manager: Kurt Kroner	P.O.#: 1093	

ANALYSIS REQUESTED

ITEM	LAB USE ONLY Lab ID	SAMPLE DESCRIPTION Sample ID	Date	Time	Container(s) #	Type	Matrix	Preservation	TPH - 8015B Full Rang+	VOCs - 8260B+	CAM Metals - 6010B/7470A	Remarks
11	2109115-11	MSP-11	9/13/21	10:45	1	Glass	Soil	None	X	X	X	
12	2109115-12	MSP-12		10:50	1				X	X	X	
13	2109115-13	MSP-13		10:52	1				X	X	X	
14	2109115-14	MSP-14		11:00	1				X	X	X	
15	2109115-15	MSP-15		11:02	1				X	X	X	
16	2109115-16	MSP-16		11:05	1				X	X	X	
17	2109115-17	MSP-17		11:10	1				X	X	X	

CHAIN OF CUSTODY RECORD

Collected By: Michael Lucey	Date 9/13/21	Time 11:10	Relinquished By:	Date	Time
Relinquished By: Michael Lucey	Date 9/13/21	Time 11:29	Received For Laboratory Janet Chin	Date 9-13-21	Time 11:29
Received By:	Date	Time	Condition of Sample:		

TAT ☑ Normal ☐ Rush

White - Report, Yellow - Laboratory, Pink - Client

Job# 2109115

ASL Sample Receipt Form

Client: KRONER ENVIRONMENTAL SERVICES

Date: 09-14-2021

Sample Information:

Temperature: 5.0 °C ☐ Blank ☒ Sample

Custody Seal: ☐ Yes ☒ No ☐ Not Available

Received Within Holding Time: ☒ Yes ☐ No

Container:

Proper Containers and Sufficient Volume: ☒ Yes ☐ No

Soil: __☐ 4oz 17☑ 8oz __☐ Sleeve __☐ VOA

Water: __☐ 500AG __☐ 1AG __☐ 125PB __☐ 250PB __☐ 500PB __☐ VOA __☐ Other _____

Air: __☐ Tedlar®

Sample Containers Intact: ☒ Yes ☐ No

Trip Blank ☐ Yes ☑ No

Chain-of-Custody (COC):

Received: ☒ Yes ☐ No

Samplers Name: ☒ Yes ☐ No

Container Labels match COC: ☒ Yes ☐ No

COC documents received complete: ☒ Yes ☐ No

Proper Preservation Noted: ☐ Yes ☐ No N/A

Completed By: Janet Chin

American Scientific Laboratories, LLC
Environmental Testing Services
2520 N. San Fernando Road, LA CA 90065 Tel: (323) 223-9700 • Fax: (323) 223-9500

Kroner Environmental Services, Inc.	Project: Regional Connector Mission Yard	Work Order No: 2109115
10801 National Blvd. # 415	Project Number: [none]	**Reported:**
Los Angeles CA, 90064	Project Manager: Kurt Kroner	09/20/2021 17:20

ANALYTICAL SUMMARY REPORT

Sample ID	Laboratory ID	Matrix	Date Sampled	Date Received
MSP-1	2109115-01	Solid	09/13/2021 10:10	09/13/2021 11:29
MSP-2	2109115-02	Solid	09/13/2021 10:15	09/13/2021 11:29
MSP-3	2109115-03	Solid	09/13/2021 10:18	09/13/2021 11:29
MSP-4	2109115-04	Solid	09/13/2021 10:20	09/13/2021 11:29
MSP-5	2109115-05	Solid	09/13/2021 10:22	09/13/2021 11:29
MSP-6	2109115-06	Solid	09/13/2021 10:25	09/13/2021 11:29
MSP-7	2109115-07	Solid	09/13/2021 10:30	09/13/2021 11:29
MSP-8	2109115-08	Solid	09/13/2021 10:35	09/13/2021 11:29
MSP-9	2109115-09	Solid	09/13/2021 10:40	09/13/2021 11:29
MSP-10	2109115-10	Solid	09/13/2021 10:43	09/13/2021 11:29
MSP-11	2109115-11	Solid	09/13/2021 10:45	09/13/2021 11:29
MSP-12	2109115-12	Solid	09/13/2021 10:50	09/13/2021 11:29
MSP-13	2109115-13	Solid	09/13/2021 10:52	09/13/2021 11:29
MSP-14	2109115-14	Solid	09/13/2021 11:00	09/13/2021 11:29
MSP-15	2109115-15	Solid	09/13/2021 11:02	09/13/2021 11:29
MSP-16	2109115-16	Solid	09/13/2021 11:05	09/13/2021 11:29
MSP-17	2109115-17	Solid	09/13/2021 11:10	09/13/2021 11:29

The results in this report apply to the samples analyzed in accordance with the chain of custody document. This analytical report must be reproduced in its entirety.

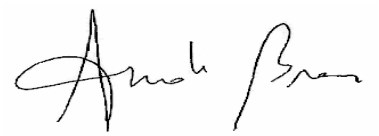

Amolk Brar, Lab Director

American Scientific Laboratories, LLC
Environmental Testing Services
2520 N. San Fernando Road, LA CA 90065 Tel: (323) 223-9700 • Fax: (323) 223-9500

Kroner Environmental Services, Inc.	Project: Regional Connector Mission Yard	Work Order No: 2109115
10801 National Blvd. # 415	Project Number: [none]	**Reported:**
Los Angeles CA, 90064	Project Manager: Kurt Kroner	09/20/2021 17:20

Analytical Results

Client Sample ID: MSP-1

Laboratory Sample ID: 2109115-01 (Solid)

Analyte	Result	Notes	PQL	Units	Dilution	Prep Method	Analyzed	Analyst	Method
Total Mercury (CVAA)				Batch ID:	BI10527		Prepared: 09/17/2021 14:05		
Mercury	ND		0.0500	mg/kg	1	7471A	09/20/2021 11:25	LVE	7471A
Total ICP Metals				Batch ID:	BI10526		Prepared: 09/17/2021 14:59		
Antimony	ND		0.500	mg/kg	1	3050B	09/20/2021 13:50	LVE	SW846 6010B
Arsenic	**1.82**		0.250	mg/kg	1	3050B	09/20/2021 13:50	LVE	SW846 6010B
Barium	**90.6**		0.500	mg/kg	1	3050B	09/20/2021 13:50	LVE	SW846 6010B
Beryllium	ND		0.500	mg/kg	1	3050B	09/20/2021 13:50	LVE	SW846 6010B
Cadmium	**1.05**		0.500	mg/kg	1	3050B	09/20/2021 13:50	LVE	SW846 6010B
Chromium	**8.31**		0.500	mg/kg	1	3050B	09/20/2021 13:50	LVE	SW846 6010B
Cobalt	**5.67**		0.500	mg/kg	1	3050B	09/20/2021 13:50	LVE	SW846 6010B
Copper	**12.4**		0.500	mg/kg	1	3050B	09/20/2021 13:50	LVE	SW846 6010B
Lead	**11.0**		0.250	mg/kg	1	3050B	09/20/2021 13:50	LVE	SW846 6010B
Molybdenum	ND		0.500	mg/kg	1	3050B	09/20/2021 13:50	LVE	SW846 6010B
Nickel	**6.28**		0.500	mg/kg	1	3050B	09/20/2021 13:50	LVE	SW846 6010B
Selenium	ND		0.500	mg/kg	1	3050B	09/20/2021 13:50	LVE	SW846 6010B
Silver	ND		0.500	mg/kg	1	3050B	09/20/2021 13:50	LVE	SW846 6010B
Thallium	ND		0.500	mg/kg	1	3050B	09/20/2021 13:50	LVE	SW846 6010B
Vanadium	**23.3**		0.500	mg/kg	1	3050B	09/20/2021 13:50	LVE	SW846 6010B
Zinc	**53.2**		0.500	mg/kg	1	3050B	09/20/2021 13:50	LVE	SW846 6010B
Total Petroleum Hydrocarbons(TPH-g)				Batch ID:	BI10496		Prepared: 09/17/2021 09:00		
Gasoline Range Organics	ND		500	ug/kg	1	5030A	09/17/2021 18:31	SA	8015B
Surrogate: Bromofluorobenzene			*88.1 %*		*70-120*	5030A	09/17/2021 18:31	SA	*8015B*
Total Petroleum Hydrocarbons(TPH DROORO)				Batch ID:	BI10510		Prepared: 09/17/2021 09:00		
Diesel range organics	**1040**		10.0	mg/kg	1	3550B	09/17/2021 19:46	DWI	8015B
Oil Range Organics	**558**		50.0	mg/kg	1	3550B	09/17/2021 19:46	DWI	8015B
Surrogate: Chlorobenzene			*97.9 %*		*70-120*	3550B	09/17/2021 19:46	DWI	*8015B*

The results in this report apply to the samples analyzed in accordance with the chain of custody document. This analytical report must be reproduced in its entirety.

Amolk Brar, Lab Director

American Scientific Laboratories, LLC
Environmental Testing Services
2520 N. San Fernando Road, LA CA 90065 Tel: (323) 223-9700 • Fax: (323) 223-9500

Kroner Environmental Services, Inc.	Project: Regional Connector Mission Yard	Work Order No: 2109115
10801 National Blvd. # 415	Project Number: [none]	**Reported:**
Los Angeles CA, 90064	Project Manager: Kurt Kroner	09/20/2021 17:20

Analytical Results

Client Sample ID: MSP-1

Laboratory Sample ID: 2109115-01 (Solid)

Analyte	Result	Notes	PQL	Units	Dilution	Prep Method	Analyzed	Analyst	Method
Volatile Organic Compounds				Batch ID:	BI10495		Prepared: 09/17/2021 09:00		
Acetone	ND		50.0	ug/kg	1	5030A	09/17/2021 18:07	SA	8260B
Benzene	ND		2.00	ug/kg	1	5030A	09/17/2021 18:07	SA	8260B
Bromobenzene	ND		10.0	ug/kg	1	5030A	09/17/2021 18:07	SA	8260B
Bromochloromethane	ND		10.0	ug/kg	1	5030A	09/17/2021 18:07	SA	8260B
Bromodichloromethane	ND		10.0	ug/kg	1	5030A	09/17/2021 18:07	SA	8260B
Bromoform	ND		50.0	ug/kg	1	5030A	09/17/2021 18:07	SA	8260B
Bromomethane	ND		30.0	ug/kg	1	5030A	09/17/2021 18:07	SA	8260B
2-Butanone	ND		50.0	ug/kg	1	5030A	09/17/2021 18:07	SA	8260B
n-Butylbenzene	ND		10.0	ug/kg	1	5030A	09/17/2021 18:07	SA	8260B
sec-Butylbenzene	ND		10.0	ug/kg	1	5030A	09/17/2021 18:07	SA	8260B
tert-Butylbenzene	ND		10.0	ug/kg	1	5030A	09/17/2021 18:07	SA	8260B
Carbon disulfide	ND		10.0	ug/kg	1	5030A	09/17/2021 18:07	SA	8260B
Carbon tetrachloride	ND		10.0	ug/kg	1	5030A	09/17/2021 18:07	SA	8260B
Chlorobenzene	ND		10.0	ug/kg	1	5030A	09/17/2021 18:07	SA	8260B
Chloroethane	ND		30.0	ug/kg	1	5030A	09/17/2021 18:07	SA	8260B
2-Chloroethylvinyl Ether	ND		50.0	ug/kg	1	5030A	09/17/2021 18:07	SA	8260B
Chloroform	ND		10.0	ug/kg	1	5030A	09/17/2021 18:07	SA	8260B
Chloromethane	ND		30.0	ug/kg	1	5030A	09/17/2021 18:07	SA	8260B
4-Chlorotoluene	ND		10.0	ug/kg	1	5030A	09/17/2021 18:07	SA	8260B
2-Chlorotoluene	ND		10.0	ug/kg	1	5030A	09/17/2021 18:07	SA	8260B
1,2-Dibromo-3-chloropropane	ND		50.0	ug/kg	1	5030A	09/17/2021 18:07	SA	8260B
Dibromochloromethane	ND		10.0	ug/kg	1	5030A	09/17/2021 18:07	SA	8260B
1,2-Dibromoethane	ND		10.0	ug/kg	1	5030A	09/17/2021 18:07	SA	8260B
Dibromomethane	ND		10.0	ug/kg	1	5030A	09/17/2021 18:07	SA	8260B
1,2-Dichlorobenzene	ND		10.0	ug/kg	1	5030A	09/17/2021 18:07	SA	8260B
1,3-Dichlorobenzene	ND		10.0	ug/kg	1	5030A	09/17/2021 18:07	SA	8260B
1,4-Dichlorobenzene	ND		10.0	ug/kg	1	5030A	09/17/2021 18:07	SA	8260B
Dichlorodifluoromethane	ND		30.0	ug/kg	1	5030A	09/17/2021 18:07	SA	8260B
1,1-Dichloroethane	ND		10.0	ug/kg	1	5030A	09/17/2021 18:07	SA	8260B
1,2-Dichloroethane	ND		10.0	ug/kg	1	5030A	09/17/2021 18:07	SA	8260B
1,1-Dichloroethene	ND		10.0	ug/kg	1	5030A	09/17/2021 18:07	SA	8260B
cis-1,2-Dichloroethene	ND		10.0	ug/kg	1	5030A	09/17/2021 18:07	SA	8260B
trans-1,2-Dichloroethene	ND		10.0	ug/kg	1	5030A	09/17/2021 18:07	SA	8260B
1,1-Dichloropropene	ND		10.0	ug/kg	1	5030A	09/17/2021 18:07	SA	8260B
1,2-Dichloropropane	ND		10.0	ug/kg	1	5030A	09/17/2021 18:07	SA	8260B
1,3-Dichloropropane	ND		10.0	ug/kg	1	5030A	09/17/2021 18:07	SA	8260B
2,2-Dichloropropane	ND		10.0	ug/kg	1	5030A	09/17/2021 18:07	SA	8260B
cis-1,3-Dichloropropene	ND		10.0	ug/kg	1	5030A	09/17/2021 18:07	SA	8260B
trans-1,3-Dichloropropene	ND		10.0	ug/kg	1	5030A	09/17/2021 18:07	SA	8260B
Ethylbenzene	ND		2.00	ug/kg	1	5030A	09/17/2021 18:07	SA	8260B

The results in this report apply to the samples analyzed in accordance with the chain of custody document. This analytical report must be reproduced in its entirety.

Amolk Brar, Lab Director

American Scientific Laboratories, LLC
Environmental Testing Services
2520 N. San Fernando Road, LA CA 90065 Tel: (323) 223-9700 • Fax: (323) 223-9500

Kroner Environmental Services, Inc.	Project: Regional Connector Mission Yard	Work Order No: 2109115
10801 National Blvd. # 415	Project Number: [none]	**Reported:**
Los Angeles CA, 90064	Project Manager: Kurt Kroner	09/20/2021 17:20

Analytical Results

Client Sample ID: MSP-1

Laboratory Sample ID: 2109115-01 (Solid)

Analyte	Result	Notes	PQL	Units	Dilution	Prep Method	Analyzed	Analyst	Method
Volatile Organic Compounds				Batch ID:	BI10495		Prepared: 09/17/2021 09:00		
Hexachlorobutadiene	ND		30.0	ug/kg	1	5030A	09/17/2021 18:07	SA	8260B
2-Hexanone	ND		50.0	ug/kg	1	5030A	09/17/2021 18:07	SA	8260B
Isopropylbenzene	ND		10.0	ug/kg	1	5030A	09/17/2021 18:07	SA	8260B
p-Isopropyltoluene	ND		10.0	ug/kg	1	5030A	09/17/2021 18:07	SA	8260B
Methyl tert-Butyl Ether (MTBE)	ND		5.00	ug/kg	1	5030A	09/17/2021 18:07	SA	8260B
4-Methyl-2-pentanone (MIBK)	ND		50.0	ug/kg	1	5030A	09/17/2021 18:07	SA	8260B
Methylene chloride	ND		50.0	ug/kg	1	5030A	09/17/2021 18:07	SA	8260B
Naphthalene	ND		10.0	ug/kg	1	5030A	09/17/2021 18:07	SA	8260B
n-Propylbenzene	ND		10.0	ug/kg	1	5030A	09/17/2021 18:07	SA	8260B
Styrene	ND		10.0	ug/kg	1	5030A	09/17/2021 18:07	SA	8260B
1,1,1,2-Tetrachloroethane	ND		10.0	ug/kg	1	5030A	09/17/2021 18:07	SA	8260B
1,1,2,2-Tetrachloroethane	ND		10.0	ug/kg	1	5030A	09/17/2021 18:07	SA	8260B
Tetrachloroethene	ND		10.0	ug/kg	1	5030A	09/17/2021 18:07	SA	8260B
Toluene	ND		2.00	ug/kg	1	5030A	09/17/2021 18:07	SA	8260B
1,2,3-Trichlorobenzene	ND		10.0	ug/kg	1	5030A	09/17/2021 18:07	SA	8260B
1,2,4-Trichlorobenzene	ND		10.0	ug/kg	1	5030A	09/17/2021 18:07	SA	8260B
1,1,1-Trichloroethane	ND		10.0	ug/kg	1	5030A	09/17/2021 18:07	SA	8260B
1,1,2-Trichloroethane	ND		10.0	ug/kg	1	5030A	09/17/2021 18:07	SA	8260B
Trichloroethene	ND		10.0	ug/kg	1	5030A	09/17/2021 18:07	SA	8260B
Trichlorofluoromethane	ND		10.0	ug/kg	1	5030A	09/17/2021 18:07	SA	8260B
1,2,3-Trichloropropane	ND		10.0	ug/kg	1	5030A	09/17/2021 18:07	SA	8260B
1,2,4-Trimethylbenzene	ND		10.0	ug/kg	1	5030A	09/17/2021 18:07	SA	8260B
1,3,5- Trimethylbenzene	ND		10.0	ug/kg	1	5030A	09/17/2021 18:07	SA	8260B
Vinyl acetate	ND		50.0	ug/kg	1	5030A	09/17/2021 18:07	SA	8260B
Vinyl chloride	ND		30.0	ug/kg	1	5030A	09/17/2021 18:07	SA	8260B
m,p-Xylenes	ND		4.00	ug/kg	1	5030A	09/17/2021 18:07	SA	8260B
o-Xylene	ND		2.00	ug/kg	1	5030A	09/17/2021 18:07	SA	8260B
Surrogate: 4-Bromofluorobenzene			*90.6 %*		*70-120*	5030A	09/17/2021 18:07	SA	*8260B*
Surrogate: Dibromofluoromethane			*81.5 %*		*70-120*	5030A	09/17/2021 18:07	SA	*8260B*
Surrogate: Toluene-d8			*94.9 %*		*70-120*	5030A	09/17/2021 18:07	SA	*8260B*

Analytical Results

Client Sample ID: MSP-2

Laboratory Sample ID: 2109115-02 (Solid)

Analyte	Result	Notes	PQL	Units	Dilution	Prep Method	Analyzed	Analyst	Method
Total Mercury (CVAA)				Batch ID:	BI10527		Prepared: 09/17/2021 14:05		
Mercury	**0.151**		0.0500	mg/kg	1	7471A	09/20/2021 11:25	LVE	7471A

The results in this report apply to the samples analyzed in accordance with the chain of custody document. This analytical report must be reproduced in its entirety.

Amolk Brar, Lab Director

American Scientific Laboratories, LLC
Environmental Testing Services
2520 N. San Fernando Road, LA CA 90065 Tel: (323) 223-9700 • Fax: (323) 223-9500

Kroner Environmental Services, Inc.	Project: Regional Connector Mission Yard	Work Order No: 2109115
10801 National Blvd. # 415	Project Number: [none]	**Reported:**
Los Angeles CA, 90064	Project Manager: Kurt Kroner	09/20/2021 17:20

Analytical Results

Client Sample ID: MSP-2

Laboratory Sample ID: 2109115-02 (Solid)

Analyte	Result	Notes	PQL	Units	Dilution	Prep Method	Analyzed	Analyst	Method
Total ICP Metals				Batch ID:	BI10526		Prepared: 09/17/2021 14:59		
Antimony	ND		0.500	mg/kg	1	3050B	09/20/2021 13:50	LVE	SW846 6010B
Arsenic	**1.73**		0.250	mg/kg	1	3050B	09/20/2021 13:50	LVE	SW846 6010B
Barium	**102**		0.500	mg/kg	1	3050B	09/20/2021 13:50	LVE	SW846 6010B
Beryllium	ND		0.500	mg/kg	1	3050B	09/20/2021 13:50	LVE	SW846 6010B
Cadmium	**1.36**		0.500	mg/kg	1	3050B	09/20/2021 13:50	LVE	SW846 6010B
Chromium	**29.4**		0.500	mg/kg	1	3050B	09/20/2021 13:50	LVE	SW846 6010B
Cobalt	**6.98**		0.500	mg/kg	1	3050B	09/20/2021 13:50	LVE	SW846 6010B
Copper	**18.0**		0.500	mg/kg	1	3050B	09/20/2021 13:50	LVE	SW846 6010B
Lead	**32.3**		0.250	mg/kg	1	3050B	09/20/2021 13:50	LVE	SW846 6010B
Molybdenum	**3.11**		0.500	mg/kg	1	3050B	09/20/2021 13:50	LVE	SW846 6010B
Nickel	**9.39**		0.500	mg/kg	1	3050B	09/20/2021 13:50	LVE	SW846 6010B
Selenium	**0.539**		0.500	mg/kg	1	3050B	09/20/2021 13:50	LVE	SW846 6010B
Silver	ND		0.500	mg/kg	1	3050B	09/20/2021 13:50	LVE	SW846 6010B
Thallium	ND		0.500	mg/kg	1	3050B	09/20/2021 13:50	LVE	SW846 6010B
Vanadium	**28.8**		0.500	mg/kg	1	3050B	09/20/2021 13:50	LVE	SW846 6010B
Zinc	**84.9**		0.500	mg/kg	1	3050B	09/20/2021 13:50	LVE	SW846 6010B
Total Petroleum Hydrocarbons(TPH-g)				Batch ID:	BI10496		Prepared: 09/17/2021 09:00		
Gasoline Range Organics	ND		500	ug/kg	1	5030A	09/17/2021 19:00	SA	8015B
Surrogate: Bromofluorobenzene			*92.6 %*		*70-120*	5030A	09/17/2021 19:00	SA	*8015B*
Total Petroleum Hydrocarbons(TPH DROORO)				Batch ID:	BI10510		Prepared: 09/17/2021 09:00		
Diesel range organics	**90.0**		10.0	mg/kg	1	3550B	09/17/2021 20:29	DWI	8015B
Oil Range Organics	**170**		50.0	mg/kg	1	3550B	09/17/2021 20:29	DWI	8015B
Surrogate: Chlorobenzene			*96.3 %*		*70-120*	3550B	09/17/2021 20:29	DWI	*8015B*

The results in this report apply to the samples analyzed in accordance with the chain of custody document. This analytical report must be reproduced in its entirety.

Amolk Brar, Lab Director

American Scientific Laboratories, LLC
Environmental Testing Services
2520 N. San Fernando Road, LA CA 90065 Tel: (323) 223-9700 • Fax: (323) 223-9500

Kroner Environmental Services, Inc.	Project: Regional Connector Mission Yard	Work Order No: 2109115
10801 National Blvd. # 415	Project Number: [none]	**Reported:**
Los Angeles CA, 90064	Project Manager: Kurt Kroner	09/20/2021 17:20

Analytical Results

Client Sample ID: MSP-2

Laboratory Sample ID: 2109115-02 (Solid)

Analyte	Result	Notes	PQL	Units	Dilution	Prep Method	Analyzed	Analyst	Method
Volatile Organic Compounds				Batch ID:	BI10495		Prepared: 09/17/2021 09:00		
Acetone	ND		50.0	ug/kg	1	5030A	09/17/2021 20:27	SA	8260B
Benzene	ND		2.00	ug/kg	1	5030A	09/17/2021 20:27	SA	8260B
Bromobenzene	ND		10.0	ug/kg	1	5030A	09/17/2021 20:27	SA	8260B
Bromochloromethane	ND		10.0	ug/kg	1	5030A	09/17/2021 20:27	SA	8260B
Bromodichloromethane	ND		10.0	ug/kg	1	5030A	09/17/2021 20:27	SA	8260B
Bromoform	ND		50.0	ug/kg	1	5030A	09/17/2021 20:27	SA	8260B
Bromomethane	ND		30.0	ug/kg	1	5030A	09/17/2021 20:27	SA	8260B
2-Butanone	ND		50.0	ug/kg	1	5030A	09/17/2021 20:27	SA	8260B
n-Butylbenzene	ND		10.0	ug/kg	1	5030A	09/17/2021 20:27	SA	8260B
sec-Butylbenzene	ND		10.0	ug/kg	1	5030A	09/17/2021 20:27	SA	8260B
tert-Butylbenzene	ND		10.0	ug/kg	1	5030A	09/17/2021 20:27	SA	8260B
Carbon disulfide	ND		10.0	ug/kg	1	5030A	09/17/2021 20:27	SA	8260B
Carbon tetrachloride	ND		10.0	ug/kg	1	5030A	09/17/2021 20:27	SA	8260B
Chlorobenzene	ND		10.0	ug/kg	1	5030A	09/17/2021 20:27	SA	8260B
Chloroethane	ND		30.0	ug/kg	1	5030A	09/17/2021 20:27	SA	8260B
2-Chloroethylvinyl Ether	ND		50.0	ug/kg	1	5030A	09/17/2021 20:27	SA	8260B
Chloroform	ND		10.0	ug/kg	1	5030A	09/17/2021 20:27	SA	8260B
Chloromethane	ND		30.0	ug/kg	1	5030A	09/17/2021 20:27	SA	8260B
4-Chlorotoluene	ND		10.0	ug/kg	1	5030A	09/17/2021 20:27	SA	8260B
2-Chlorotoluene	ND		10.0	ug/kg	1	5030A	09/17/2021 20:27	SA	8260B
1,2-Dibromo-3-chloropropane	ND		50.0	ug/kg	1	5030A	09/17/2021 20:27	SA	8260B
Dibromochloromethane	ND		10.0	ug/kg	1	5030A	09/17/2021 20:27	SA	8260B
1,2-Dibromoethane	ND		10.0	ug/kg	1	5030A	09/17/2021 20:27	SA	8260B
Dibromomethane	ND		10.0	ug/kg	1	5030A	09/17/2021 20:27	SA	8260B
1,2-Dichlorobenzene	ND		10.0	ug/kg	1	5030A	09/17/2021 20:27	SA	8260B
1,3-Dichlorobenzene	ND		10.0	ug/kg	1	5030A	09/17/2021 20:27	SA	8260B
1,4-Dichlorobenzene	ND		10.0	ug/kg	1	5030A	09/17/2021 20:27	SA	8260B
Dichlorodifluoromethane	ND		30.0	ug/kg	1	5030A	09/17/2021 20:27	SA	8260B
1,1-Dichloroethane	ND		10.0	ug/kg	1	5030A	09/17/2021 20:27	SA	8260B
1,2-Dichloroethane	ND		10.0	ug/kg	1	5030A	09/17/2021 20:27	SA	8260B
1,1-Dichloroethene	ND		10.0	ug/kg	1	5030A	09/17/2021 20:27	SA	8260B
cis-1,2-Dichloroethene	ND		10.0	ug/kg	1	5030A	09/17/2021 20:27	SA	8260B
trans-1,2-Dichloroethene	ND		10.0	ug/kg	1	5030A	09/17/2021 20:27	SA	8260B
1,1-Dichloropropene	ND		10.0	ug/kg	1	5030A	09/17/2021 20:27	SA	8260B
1,2-Dichloropropane	ND		10.0	ug/kg	1	5030A	09/17/2021 20:27	SA	8260B
1,3-Dichloropropane	ND		10.0	ug/kg	1	5030A	09/17/2021 20:27	SA	8260B
2,2-Dichloropropane	ND		10.0	ug/kg	1	5030A	09/17/2021 20:27	SA	8260B
cis-1,3-Dichloropropene	ND		10.0	ug/kg	1	5030A	09/17/2021 20:27	SA	8260B
trans-1,3-Dichloropropene	ND		10.0	ug/kg	1	5030A	09/17/2021 20:27	SA	8260B
Ethylbenzene	ND		2.00	ug/kg	1	5030A	09/17/2021 20:27	SA	8260B

The results in this report apply to the samples analyzed in accordance with the chain of custody document. This analytical report must be reproduced in its entirety.

Amolk Brar, Lab Director

American Scientific Laboratories, LLC
Environmental Testing Services
2520 N. San Fernando Road, LA CA 90065 Tel: (323) 223-9700 • Fax: (323) 223-9500

Kroner Environmental Services, Inc.	Project: Regional Connector Mission Yard	Work Order No: 2109115
10801 National Blvd. # 415	Project Number: [none]	**Reported:**
Los Angeles CA, 90064	Project Manager: Kurt Kroner	09/20/2021 17:20

Analytical Results

Client Sample ID: MSP-2

Laboratory Sample ID: 2109115-02 (Solid)

Analyte	Result	Notes	PQL	Units	Dilution	Prep Method	Analyzed	Analyst	Method
Volatile Organic Compounds				Batch ID:	BI10495		Prepared: 09/17/2021 09:00		
Hexachlorobutadiene	ND		30.0	ug/kg	1	5030A	09/17/2021 20:27	SA	8260B
2-Hexanone	ND		50.0	ug/kg	1	5030A	09/17/2021 20:27	SA	8260B
Isopropylbenzene	ND		10.0	ug/kg	1	5030A	09/17/2021 20:27	SA	8260B
p-Isopropyltoluene	ND		10.0	ug/kg	1	5030A	09/17/2021 20:27	SA	8260B
Methyl tert-Butyl Ether (MTBE)	ND		5.00	ug/kg	1	5030A	09/17/2021 20:27	SA	8260B
4-Methyl-2-pentanone (MIBK)	ND		50.0	ug/kg	1	5030A	09/17/2021 20:27	SA	8260B
Methylene chloride	ND		50.0	ug/kg	1	5030A	09/17/2021 20:27	SA	8260B
Naphthalene	ND		10.0	ug/kg	1	5030A	09/17/2021 20:27	SA	8260B
n-Propylbenzene	ND		10.0	ug/kg	1	5030A	09/17/2021 20:27	SA	8260B
Styrene	ND		10.0	ug/kg	1	5030A	09/17/2021 20:27	SA	8260B
1,1,1,2-Tetrachloroethane	ND		10.0	ug/kg	1	5030A	09/17/2021 20:27	SA	8260B
1,1,2,2-Tetrachloroethane	ND		10.0	ug/kg	1	5030A	09/17/2021 20:27	SA	8260B
Tetrachloroethene	ND		10.0	ug/kg	1	5030A	09/17/2021 20:27	SA	8260B
Toluene	ND		2.00	ug/kg	1	5030A	09/17/2021 20:27	SA	8260B
1,2,3-Trichlorobenzene	ND		10.0	ug/kg	1	5030A	09/17/2021 20:27	SA	8260B
1,2,4-Trichlorobenzene	ND		10.0	ug/kg	1	5030A	09/17/2021 20:27	SA	8260B
1,1,1-Trichloroethane	ND		10.0	ug/kg	1	5030A	09/17/2021 20:27	SA	8260B
1,1,2-Trichloroethane	ND		10.0	ug/kg	1	5030A	09/17/2021 20:27	SA	8260B
Trichloroethene	ND		10.0	ug/kg	1	5030A	09/17/2021 20:27	SA	8260B
Trichlorofluoromethane	ND		10.0	ug/kg	1	5030A	09/17/2021 20:27	SA	8260B
1,2,3-Trichloropropane	ND		10.0	ug/kg	1	5030A	09/17/2021 20:27	SA	8260B
1,2,4-Trimethylbenzene	ND		10.0	ug/kg	1	5030A	09/17/2021 20:27	SA	8260B
1,3,5- Trimethylbenzene	ND		10.0	ug/kg	1	5030A	09/17/2021 20:27	SA	8260B
Vinyl acetate	ND		50.0	ug/kg	1	5030A	09/17/2021 20:27	SA	8260B
Vinyl chloride	ND		30.0	ug/kg	1	5030A	09/17/2021 20:27	SA	8260B
m,p-Xylenes	ND		4.00	ug/kg	1	5030A	09/17/2021 20:27	SA	8260B
o-Xylene	ND		2.00	ug/kg	1	5030A	09/17/2021 20:27	SA	8260B
Surrogate: 4-Bromofluorobenzene			*97.6 %*		*70-120*	5030A	09/17/2021 20:27	SA	*8260B*
Surrogate: Dibromofluoromethane			*76.2 %*		*70-120*	5030A	09/17/2021 20:27	SA	*8260B*
Surrogate: Toluene-d8			*95.5 %*		*70-120*	5030A	09/17/2021 20:27	SA	*8260B*

Analytical Results

Client Sample ID: MSP-3

Laboratory Sample ID: 2109115-03 (Solid)

Analyte	Result	Notes	PQL	Units	Dilution	Prep Method	Analyzed	Analyst	Method
Total Mercury (CVAA)				Batch ID:	BI10527		Prepared: 09/17/2021 14:05		
Mercury	**0.118**		0.0500	mg/kg	1	7471A	09/20/2021 11:25	LVE	7471A

The results in this report apply to the samples analyzed in accordance with the chain of custody document. This analytical report must be reproduced in its entirety.

Amolk Brar, Lab Director

American Scientific Laboratories, LLC
Environmental Testing Services
2520 N. San Fernando Road, LA CA 90065 Tel: (323) 223-9700 • Fax: (323) 223-9500

Kroner Environmental Services, Inc.	Project: Regional Connector Mission Yard	Work Order No: 2109115
10801 National Blvd. # 415	Project Number: [none]	**Reported:**
Los Angeles CA, 90064	Project Manager: Kurt Kroner	09/20/2021 17:20

Analytical Results

Client Sample ID: MSP-3

Laboratory Sample ID: 2109115-03 (Solid)

Analyte	Result	Notes	PQL	Units	Dilution	Prep Method	Analyzed	Analyst	Method
Total ICP Metals				Batch ID:	BI10526		Prepared: 09/17/2021 14:59		
Antimony	ND		0.500	mg/kg	1	3050B	09/20/2021 13:50	LVE	SW846 6010B
Arsenic	**1.26**		0.250	mg/kg	1	3050B	09/20/2021 13:50	LVE	SW846 6010B
Barium	**66.7**		0.500	mg/kg	1	3050B	09/20/2021 13:50	LVE	SW846 6010B
Beryllium	ND		0.500	mg/kg	1	3050B	09/20/2021 13:50	LVE	SW846 6010B
Cadmium	**0.880**		0.500	mg/kg	1	3050B	09/20/2021 13:50	LVE	SW846 6010B
Chromium	**7.25**		0.500	mg/kg	1	3050B	09/20/2021 13:50	LVE	SW846 6010B
Cobalt	**4.09**		0.500	mg/kg	1	3050B	09/20/2021 13:50	LVE	SW846 6010B
Copper	**11.9**		0.500	mg/kg	1	3050B	09/20/2021 13:50	LVE	SW846 6010B
Lead	**60.8**		0.250	mg/kg	1	3050B	09/20/2021 13:50	LVE	SW846 6010B
Molybdenum	ND		0.500	mg/kg	1	3050B	09/20/2021 13:50	LVE	SW846 6010B
Nickel	**4.76**		0.500	mg/kg	1	3050B	09/20/2021 13:50	LVE	SW846 6010B
Selenium	ND		0.500	mg/kg	1	3050B	09/20/2021 13:50	LVE	SW846 6010B
Silver	ND		0.500	mg/kg	1	3050B	09/20/2021 13:50	LVE	SW846 6010B
Thallium	ND		0.500	mg/kg	1	3050B	09/20/2021 13:50	LVE	SW846 6010B
Vanadium	**19.7**		0.500	mg/kg	1	3050B	09/20/2021 13:50	LVE	SW846 6010B
Zinc	**63.0**		0.500	mg/kg	1	3050B	09/20/2021 13:50	LVE	SW846 6010B
Total Petroleum Hydrocarbons(TPH-g)				Batch ID:	BI10496		Prepared: 09/17/2021 09:00		
Gasoline Range Organics	ND		500	ug/kg	1	5030A	09/17/2021 19:29	SA	8015B
Surrogate: Bromofluorobenzene			*92.9 %*		*70-120*	5030A	09/17/2021 19:29	SA	*8015B*
Total Petroleum Hydrocarbons(TPH DROORO)				Batch ID:	BI10510		Prepared: 09/17/2021 09:00		
Diesel range organics	ND		10.0	mg/kg	1	3550B	09/17/2021 21:11	DWI	8015B
Oil Range Organics	**120**		50.0	mg/kg	1	3550B	09/17/2021 21:11	DWI	8015B
Surrogate: Chlorobenzene			*95.5 %*		*70-120*	3550B	09/17/2021 21:11	DWI	*8015B*

The results in this report apply to the samples analyzed in accordance with the chain of custody document. This analytical report must be reproduced in its entirety.

Amolk Brar, Lab Director

American Scientific Laboratories, LLC
Environmental Testing Services
2520 N. San Fernando Road, LA CA 90065 Tel: (323) 223-9700 • Fax: (323) 223-9500

Kroner Environmental Services, Inc.	Project: Regional Connector Mission Yard	Work Order No: 2109115
10801 National Blvd. # 415	Project Number: [none]	**Reported:**
Los Angeles CA, 90064	Project Manager: Kurt Kroner	09/20/2021 17:20

Analytical Results

Client Sample ID: MSP-3

Laboratory Sample ID: 2109115-03 (Solid)

Analyte	Result	Notes	PQL	Units	Dilution	Prep Method	Analyzed	Analyst	Method
Volatile Organic Compounds				Batch ID:	BI10495		Prepared: 09/17/2021 09:00		
Acetone	ND		50.0	ug/kg	1	5030A	09/17/2021 20:55	SA	8260B
Benzene	ND		2.00	ug/kg	1	5030A	09/17/2021 20:55	SA	8260B
Bromobenzene	ND		10.0	ug/kg	1	5030A	09/17/2021 20:55	SA	8260B
Bromochloromethane	ND		10.0	ug/kg	1	5030A	09/17/2021 20:55	SA	8260B
Bromodichloromethane	ND		10.0	ug/kg	1	5030A	09/17/2021 20:55	SA	8260B
Bromoform	ND		50.0	ug/kg	1	5030A	09/17/2021 20:55	SA	8260B
Bromomethane	ND		30.0	ug/kg	1	5030A	09/17/2021 20:55	SA	8260B
2-Butanone	ND		50.0	ug/kg	1	5030A	09/17/2021 20:55	SA	8260B
n-Butylbenzene	ND		10.0	ug/kg	1	5030A	09/17/2021 20:55	SA	8260B
sec-Butylbenzene	ND		10.0	ug/kg	1	5030A	09/17/2021 20:55	SA	8260B
tert-Butylbenzene	ND		10.0	ug/kg	1	5030A	09/17/2021 20:55	SA	8260B
Carbon disulfide	ND		10.0	ug/kg	1	5030A	09/17/2021 20:55	SA	8260B
Carbon tetrachloride	ND		10.0	ug/kg	1	5030A	09/17/2021 20:55	SA	8260B
Chlorobenzene	ND		10.0	ug/kg	1	5030A	09/17/2021 20:55	SA	8260B
Chloroethane	ND		30.0	ug/kg	1	5030A	09/17/2021 20:55	SA	8260B
2-Chloroethylvinyl Ether	ND		50.0	ug/kg	1	5030A	09/17/2021 20:55	SA	8260B
Chloroform	ND		10.0	ug/kg	1	5030A	09/17/2021 20:55	SA	8260B
Chloromethane	ND		30.0	ug/kg	1	5030A	09/17/2021 20:55	SA	8260B
4-Chlorotoluene	ND		10.0	ug/kg	1	5030A	09/17/2021 20:55	SA	8260B
2-Chlorotoluene	ND		10.0	ug/kg	1	5030A	09/17/2021 20:55	SA	8260B
1,2-Dibromo-3-chloropropane	ND		50.0	ug/kg	1	5030A	09/17/2021 20:55	SA	8260B
Dibromochloromethane	ND		10.0	ug/kg	1	5030A	09/17/2021 20:55	SA	8260B
1,2-Dibromoethane	ND		10.0	ug/kg	1	5030A	09/17/2021 20:55	SA	8260B
Dibromomethane	ND		10.0	ug/kg	1	5030A	09/17/2021 20:55	SA	8260B
1,2-Dichlorobenzene	ND		10.0	ug/kg	1	5030A	09/17/2021 20:55	SA	8260B
1,3-Dichlorobenzene	ND		10.0	ug/kg	1	5030A	09/17/2021 20:55	SA	8260B
1,4-Dichlorobenzene	ND		10.0	ug/kg	1	5030A	09/17/2021 20:55	SA	8260B
Dichlorodifluoromethane	ND		30.0	ug/kg	1	5030A	09/17/2021 20:55	SA	8260B
1,1-Dichloroethane	ND		10.0	ug/kg	1	5030A	09/17/2021 20:55	SA	8260B
1,2-Dichloroethane	ND		10.0	ug/kg	1	5030A	09/17/2021 20:55	SA	8260B
1,1-Dichloroethene	ND		10.0	ug/kg	1	5030A	09/17/2021 20:55	SA	8260B
cis-1,2-Dichloroethene	ND		10.0	ug/kg	1	5030A	09/17/2021 20:55	SA	8260B
trans-1,2-Dichloroethene	ND		10.0	ug/kg	1	5030A	09/17/2021 20:55	SA	8260B
1,1-Dichloropropene	ND		10.0	ug/kg	1	5030A	09/17/2021 20:55	SA	8260B
1,2-Dichloropropane	ND		10.0	ug/kg	1	5030A	09/17/2021 20:55	SA	8260B
1,3-Dichloropropane	ND		10.0	ug/kg	1	5030A	09/17/2021 20:55	SA	8260B
2,2-Dichloropropane	ND		10.0	ug/kg	1	5030A	09/17/2021 20:55	SA	8260B
cis-1,3-Dichloropropene	ND		10.0	ug/kg	1	5030A	09/17/2021 20:55	SA	8260B
trans-1,3-Dichloropropene	ND		10.0	ug/kg	1	5030A	09/17/2021 20:55	SA	8260B
Ethylbenzene	ND		2.00	ug/kg	1	5030A	09/17/2021 20:55	SA	8260B

The results in this report apply to the samples analyzed in accordance with the chain of custody document. This analytical report must be reproduced in its entirety.

Amolk Brar, Lab Director

American Scientific Laboratories, LLC
Environmental Testing Services
2520 N. San Fernando Road, LA CA 90065 Tel: (323) 223-9700 • Fax: (323) 223-9500

Kroner Environmental Services, Inc.	Project: Regional Connector Mission Yard	Work Order No: 2109115
10801 National Blvd. # 415	Project Number: [none]	**Reported:**
Los Angeles CA, 90064	Project Manager: Kurt Kroner	09/20/2021 17:20

Analytical Results

Client Sample ID: MSP-3

Laboratory Sample ID: 2109115-03 (Solid)

Analyte	Result	Notes	PQL	Units	Dilution	Prep Method	Analyzed	Analyst	Method
Volatile Organic Compounds				Batch ID:	BI10495		Prepared: 09/17/2021 09:00		
Hexachlorobutadiene	ND		30.0	ug/kg	1	5030A	09/17/2021 20:55	SA	8260B
2-Hexanone	ND		50.0	ug/kg	1	5030A	09/17/2021 20:55	SA	8260B
Isopropylbenzene	ND		10.0	ug/kg	1	5030A	09/17/2021 20:55	SA	8260B
p-Isopropyltoluene	ND		10.0	ug/kg	1	5030A	09/17/2021 20:55	SA	8260B
Methyl tert-Butyl Ether (MTBE)	ND		5.00	ug/kg	1	5030A	09/17/2021 20:55	SA	8260B
4-Methyl-2-pentanone (MIBK)	ND		50.0	ug/kg	1	5030A	09/17/2021 20:55	SA	8260B
Methylene chloride	ND		50.0	ug/kg	1	5030A	09/17/2021 20:55	SA	8260B
Naphthalene	ND		10.0	ug/kg	1	5030A	09/17/2021 20:55	SA	8260B
n-Propylbenzene	ND		10.0	ug/kg	1	5030A	09/17/2021 20:55	SA	8260B
Styrene	ND		10.0	ug/kg	1	5030A	09/17/2021 20:55	SA	8260B
1,1,1,2-Tetrachloroethane	ND		10.0	ug/kg	1	5030A	09/17/2021 20:55	SA	8260B
1,1,2,2-Tetrachloroethane	ND		10.0	ug/kg	1	5030A	09/17/2021 20:55	SA	8260B
Tetrachloroethene	ND		10.0	ug/kg	1	5030A	09/17/2021 20:55	SA	8260B
Toluene	ND		2.00	ug/kg	1	5030A	09/17/2021 20:55	SA	8260B
1,2,3-Trichlorobenzene	ND		10.0	ug/kg	1	5030A	09/17/2021 20:55	SA	8260B
1,2,4-Trichlorobenzene	ND		10.0	ug/kg	1	5030A	09/17/2021 20:55	SA	8260B
1,1,1-Trichloroethane	ND		10.0	ug/kg	1	5030A	09/17/2021 20:55	SA	8260B
1,1,2-Trichloroethane	ND		10.0	ug/kg	1	5030A	09/17/2021 20:55	SA	8260B
Trichloroethene	ND		10.0	ug/kg	1	5030A	09/17/2021 20:55	SA	8260B
Trichlorofluoromethane	ND		10.0	ug/kg	1	5030A	09/17/2021 20:55	SA	8260B
1,2,3-Trichloropropane	ND		10.0	ug/kg	1	5030A	09/17/2021 20:55	SA	8260B
1,2,4-Trimethylbenzene	ND		10.0	ug/kg	1	5030A	09/17/2021 20:55	SA	8260B
1,3,5- Trimethylbenzene	ND		10.0	ug/kg	1	5030A	09/17/2021 20:55	SA	8260B
Vinyl acetate	ND		50.0	ug/kg	1	5030A	09/17/2021 20:55	SA	8260B
Vinyl chloride	ND		30.0	ug/kg	1	5030A	09/17/2021 20:55	SA	8260B
m,p-Xylenes	ND		4.00	ug/kg	1	5030A	09/17/2021 20:55	SA	8260B
o-Xylene	ND		2.00	ug/kg	1	5030A	09/17/2021 20:55	SA	8260B
Surrogate: 4-Bromofluorobenzene			*99.4 %*		*70-120*	5030A	09/17/2021 20:55	SA	*8260B*
Surrogate: Dibromofluoromethane			*81.4 %*		*70-120*	5030A	09/17/2021 20:55	SA	*8260B*
Surrogate: Toluene-d8			*94.9 %*		*70-120*	5030A	09/17/2021 20:55	SA	*8260B*

Analytical Results

Client Sample ID: MSP-4

Laboratory Sample ID: 2109115-04 (Solid)

Analyte	Result	Notes	PQL	Units	Dilution	Prep Method	Analyzed	Analyst	Method
Total Mercury (CVAA)				Batch ID:	BI10527		Prepared: 09/17/2021 14:05		
Mercury	ND		0.0500	mg/kg	1	7471A	09/20/2021 11:25	LVE	7471A

The results in this report apply to the samples analyzed in accordance with the chain of custody document. This analytical report must be reproduced in its entirety.

Amolk Brar, Lab Director

American Scientific Laboratories, LLC
Environmental Testing Services
2520 N. San Fernando Road, LA CA 90065 Tel: (323) 223-9700 • Fax: (323) 223-9500

Kroner Environmental Services, Inc.	Project: Regional Connector Mission Yard	Work Order No: 2109115
10801 National Blvd. # 415	Project Number: [none]	**Reported:**
Los Angeles CA, 90064	Project Manager: Kurt Kroner	09/20/2021 17:20

Analytical Results

Client Sample ID: MSP-4

Laboratory Sample ID: 2109115-04 (Solid)

Analyte	Result	Notes	PQL	Units	Dilution	Prep Method	Analyzed	Analyst	Method
Total ICP Metals				Batch ID:	BI10526		Prepared: 09/17/2021 14:59		
Antimony	ND		0.500	mg/kg	1	3050B	09/20/2021 13:50	LVE	SW846 6010B
Arsenic	**1.91**		0.250	mg/kg	1	3050B	09/20/2021 13:50	LVE	SW846 6010B
Barium	**95.5**		0.500	mg/kg	1	3050B	09/20/2021 13:50	LVE	SW846 6010B
Beryllium	ND		0.500	mg/kg	1	3050B	09/20/2021 13:50	LVE	SW846 6010B
Cadmium	**1.07**		0.500	mg/kg	1	3050B	09/20/2021 13:50	LVE	SW846 6010B
Chromium	**9.05**		0.500	mg/kg	1	3050B	09/20/2021 13:50	LVE	SW846 6010B
Cobalt	**5.52**		0.500	mg/kg	1	3050B	09/20/2021 13:50	LVE	SW846 6010B
Copper	**13.1**		0.500	mg/kg	1	3050B	09/20/2021 13:50	LVE	SW846 6010B
Lead	**12.1**		0.250	mg/kg	1	3050B	09/20/2021 13:50	LVE	SW846 6010B
Molybdenum	**0.811**		0.500	mg/kg	1	3050B	09/20/2021 13:50	LVE	SW846 6010B
Nickel	**6.59**		0.500	mg/kg	1	3050B	09/20/2021 13:50	LVE	SW846 6010B
Selenium	ND		0.500	mg/kg	1	3050B	09/20/2021 13:50	LVE	SW846 6010B
Silver	ND		0.500	mg/kg	1	3050B	09/20/2021 13:50	LVE	SW846 6010B
Thallium	ND		0.500	mg/kg	1	3050B	09/20/2021 13:50	LVE	SW846 6010B
Vanadium	**22.6**		0.500	mg/kg	1	3050B	09/20/2021 13:50	LVE	SW846 6010B
Zinc	**56.4**		0.500	mg/kg	1	3050B	09/20/2021 13:50	LVE	SW846 6010B
Total Petroleum Hydrocarbons(TPH-g)				Batch ID:	BI10496		Prepared: 09/17/2021 09:00		
Gasoline Range Organics	ND		500	ug/kg	1	5030A	09/17/2021 19:57	SA	8015B
Surrogate: Bromofluorobenzene			*96.2 %*		*70-120*	5030A	09/17/2021 19:57	SA	*8015B*
Total Petroleum Hydrocarbons(TPH DROORO)				Batch ID:	BI10510		Prepared: 09/17/2021 09:00		
Diesel range organics	**176**		10.0	mg/kg	1	3550B	09/17/2021 21:54	DWI	8015B
Oil Range Organics	**246**		50.0	mg/kg	1	3550B	09/17/2021 21:54	DWI	8015B
Surrogate: Chlorobenzene			*96.1 %*		*70-120*	3550B	09/17/2021 21:54	DWI	*8015B*

The results in this report apply to the samples analyzed in accordance with the chain of custody document. This analytical report must be reproduced in its entirety.

Amolk Brar, Lab Director

American Scientific Laboratories, LLC
Environmental Testing Services
2520 N. San Fernando Road, LA CA 90065 Tel: (323) 223-9700 • Fax: (323) 223-9500

Kroner Environmental Services, Inc.	Project: Regional Connector Mission Yard	Work Order No: 2109115
10801 National Blvd. # 415	Project Number: [none]	**Reported:**
Los Angeles CA, 90064	Project Manager: Kurt Kroner	09/20/2021 17:20

Analytical Results

Client Sample ID: MSP-4

Laboratory Sample ID: 2109115-04 (Solid)

Analyte	Result	Notes	PQL	Units	Dilution	Prep Method	Analyzed	Analyst	Method
Volatile Organic Compounds				Batch ID:	BI10495		Prepared: 09/17/2021 09:00		
Acetone	ND		50.0	ug/kg	1	5030A	09/17/2021 18:35	SA	8260B
Benzene	ND		2.00	ug/kg	1	5030A	09/17/2021 18:35	SA	8260B
Bromobenzene	ND		10.0	ug/kg	1	5030A	09/17/2021 18:35	SA	8260B
Bromochloromethane	ND		10.0	ug/kg	1	5030A	09/17/2021 18:35	SA	8260B
Bromodichloromethane	ND		10.0	ug/kg	1	5030A	09/17/2021 18:35	SA	8260B
Bromoform	ND		50.0	ug/kg	1	5030A	09/17/2021 18:35	SA	8260B
Bromomethane	ND		30.0	ug/kg	1	5030A	09/17/2021 18:35	SA	8260B
2-Butanone	ND		50.0	ug/kg	1	5030A	09/17/2021 18:35	SA	8260B
n-Butylbenzene	ND		10.0	ug/kg	1	5030A	09/17/2021 18:35	SA	8260B
sec-Butylbenzene	ND		10.0	ug/kg	1	5030A	09/17/2021 18:35	SA	8260B
tert-Butylbenzene	ND		10.0	ug/kg	1	5030A	09/17/2021 18:35	SA	8260B
Carbon disulfide	ND		10.0	ug/kg	1	5030A	09/17/2021 18:35	SA	8260B
Carbon tetrachloride	ND		10.0	ug/kg	1	5030A	09/17/2021 18:35	SA	8260B
Chlorobenzene	ND		10.0	ug/kg	1	5030A	09/17/2021 18:35	SA	8260B
Chloroethane	ND		30.0	ug/kg	1	5030A	09/17/2021 18:35	SA	8260B
2-Chloroethylvinyl Ether	ND		50.0	ug/kg	1	5030A	09/17/2021 18:35	SA	8260B
Chloroform	ND		10.0	ug/kg	1	5030A	09/17/2021 18:35	SA	8260B
Chloromethane	ND		30.0	ug/kg	1	5030A	09/17/2021 18:35	SA	8260B
4-Chlorotoluene	ND		10.0	ug/kg	1	5030A	09/17/2021 18:35	SA	8260B
2-Chlorotoluene	ND		10.0	ug/kg	1	5030A	09/17/2021 18:35	SA	8260B
1,2-Dibromo-3-chloropropane	ND		50.0	ug/kg	1	5030A	09/17/2021 18:35	SA	8260B
Dibromochloromethane	ND		10.0	ug/kg	1	5030A	09/17/2021 18:35	SA	8260B
1,2-Dibromoethane	ND		10.0	ug/kg	1	5030A	09/17/2021 18:35	SA	8260B
Dibromomethane	ND		10.0	ug/kg	1	5030A	09/17/2021 18:35	SA	8260B
1,2-Dichlorobenzene	ND		10.0	ug/kg	1	5030A	09/17/2021 18:35	SA	8260B
1,3-Dichlorobenzene	ND		10.0	ug/kg	1	5030A	09/17/2021 18:35	SA	8260B
1,4-Dichlorobenzene	ND		10.0	ug/kg	1	5030A	09/17/2021 18:35	SA	8260B
Dichlorodifluoromethane	ND		30.0	ug/kg	1	5030A	09/17/2021 18:35	SA	8260B
1,1-Dichloroethane	ND		10.0	ug/kg	1	5030A	09/17/2021 18:35	SA	8260B
1,2-Dichloroethane	ND		10.0	ug/kg	1	5030A	09/17/2021 18:35	SA	8260B
1,1-Dichloroethene	ND		10.0	ug/kg	1	5030A	09/17/2021 18:35	SA	8260B
cis-1,2-Dichloroethene	ND		10.0	ug/kg	1	5030A	09/17/2021 18:35	SA	8260B
trans-1,2-Dichloroethene	ND		10.0	ug/kg	1	5030A	09/17/2021 18:35	SA	8260B
1,1-Dichloropropene	ND		10.0	ug/kg	1	5030A	09/17/2021 18:35	SA	8260B
1,2-Dichloropropane	ND		10.0	ug/kg	1	5030A	09/17/2021 18:35	SA	8260B
1,3-Dichloropropane	ND		10.0	ug/kg	1	5030A	09/17/2021 18:35	SA	8260B
2,2-Dichloropropane	ND		10.0	ug/kg	1	5030A	09/17/2021 18:35	SA	8260B
cis-1,3-Dichloropropene	ND		10.0	ug/kg	1	5030A	09/17/2021 18:35	SA	8260B
trans-1,3-Dichloropropene	ND		10.0	ug/kg	1	5030A	09/17/2021 18:35	SA	8260B
Ethylbenzene	ND		2.00	ug/kg	1	5030A	09/17/2021 18:35	SA	8260B

The results in this report apply to the samples analyzed in accordance with the chain of custody document. This analytical report must be reproduced in its entirety.

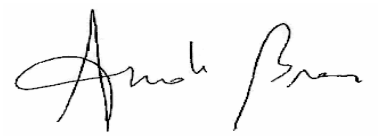

Amolk Brar, Lab Director

American Scientific Laboratories, LLC
Environmental Testing Services
2520 N. San Fernando Road, LA CA 90065 Tel: (323) 223-9700 • Fax: (323) 223-9500

Kroner Environmental Services, Inc.	Project: Regional Connector Mission Yard	Work Order No: 2109115
10801 National Blvd. # 415	Project Number: [none]	**Reported:**
Los Angeles CA, 90064	Project Manager: Kurt Kroner	09/20/2021 17:20

Analytical Results

Client Sample ID: MSP-4

Laboratory Sample ID: 2109115-04 (Solid)

Analyte	Result	Notes	PQL	Units	Dilution	Prep Method	Analyzed	Analyst	Method
Volatile Organic Compounds				Batch ID:	BI10495		Prepared: 09/17/2021 09:00		
Hexachlorobutadiene	ND		30.0	ug/kg	1	5030A	09/17/2021 18:35	SA	8260B
2-Hexanone	ND		50.0	ug/kg	1	5030A	09/17/2021 18:35	SA	8260B
Isopropylbenzene	ND		10.0	ug/kg	1	5030A	09/17/2021 18:35	SA	8260B
p-Isopropyltoluene	ND		10.0	ug/kg	1	5030A	09/17/2021 18:35	SA	8260B
Methyl tert-Butyl Ether (MTBE)	ND		5.00	ug/kg	1	5030A	09/17/2021 18:35	SA	8260B
4-Methyl-2-pentanone (MIBK)	ND		50.0	ug/kg	1	5030A	09/17/2021 18:35	SA	8260B
Methylene chloride	ND		50.0	ug/kg	1	5030A	09/17/2021 18:35	SA	8260B
Naphthalene	ND		10.0	ug/kg	1	5030A	09/17/2021 18:35	SA	8260B
n-Propylbenzene	ND		10.0	ug/kg	1	5030A	09/17/2021 18:35	SA	8260B
Styrene	ND		10.0	ug/kg	1	5030A	09/17/2021 18:35	SA	8260B
1,1,1,2-Tetrachloroethane	ND		10.0	ug/kg	1	5030A	09/17/2021 18:35	SA	8260B
1,1,2,2-Tetrachloroethane	ND		10.0	ug/kg	1	5030A	09/17/2021 18:35	SA	8260B
Tetrachloroethene	ND		10.0	ug/kg	1	5030A	09/17/2021 18:35	SA	8260B
Toluene	ND		2.00	ug/kg	1	5030A	09/17/2021 18:35	SA	8260B
1,2,3-Trichlorobenzene	ND		10.0	ug/kg	1	5030A	09/17/2021 18:35	SA	8260B
1,2,4-Trichlorobenzene	ND		10.0	ug/kg	1	5030A	09/17/2021 18:35	SA	8260B
1,1,1-Trichloroethane	ND		10.0	ug/kg	1	5030A	09/17/2021 18:35	SA	8260B
1,1,2-Trichloroethane	ND		10.0	ug/kg	1	5030A	09/17/2021 18:35	SA	8260B
Trichloroethene	ND		10.0	ug/kg	1	5030A	09/17/2021 18:35	SA	8260B
Trichlorofluoromethane	ND		10.0	ug/kg	1	5030A	09/17/2021 18:35	SA	8260B
1,2,3-Trichloropropane	ND		10.0	ug/kg	1	5030A	09/17/2021 18:35	SA	8260B
1,2,4-Trimethylbenzene	ND		10.0	ug/kg	1	5030A	09/17/2021 18:35	SA	8260B
1,3,5- Trimethylbenzene	ND		10.0	ug/kg	1	5030A	09/17/2021 18:35	SA	8260B
Vinyl acetate	ND		50.0	ug/kg	1	5030A	09/17/2021 18:35	SA	8260B
Vinyl chloride	ND		30.0	ug/kg	1	5030A	09/17/2021 18:35	SA	8260B
m,p-Xylenes	ND		4.00	ug/kg	1	5030A	09/17/2021 18:35	SA	8260B
o-Xylene	ND		2.00	ug/kg	1	5030A	09/17/2021 18:35	SA	8260B
Surrogate: 4-Bromofluorobenzene			*99.8 %*		*70-120*	5030A	09/17/2021 18:35	SA	*8260B*
Surrogate: Dibromofluoromethane			*79.2 %*		*70-120*	5030A	09/17/2021 18:35	SA	*8260B*
Surrogate: Toluene-d8			*97.5 %*		*70-120*	5030A	09/17/2021 18:35	SA	*8260B*

Analytical Results

Client Sample ID: MSP-5

Laboratory Sample ID: 2109115-05 (Solid)

Analyte	Result	Notes	PQL	Units	Dilution	Prep Method	Analyzed	Analyst	Method
Total Mercury (CVAA)				Batch ID:	BI10527		Prepared: 09/17/2021 14:05		
Mercury	**0.0592**		0.0500	mg/kg	1	7471A	09/20/2021 11:25	LVE	7471A

The results in this report apply to the samples analyzed in accordance with the chain of custody document. This analytical report must be reproduced in its entirety.

Amolk Brar, Lab Director

American Scientific Laboratories, LLC
Environmental Testing Services
2520 N. San Fernando Road, LA CA 90065 Tel: (323) 223-9700 • Fax: (323) 223-9500

Kroner Environmental Services, Inc.	Project: Regional Connector Mission Yard	Work Order No: 2109115
10801 National Blvd. # 415	Project Number: [none]	**Reported:**
Los Angeles CA, 90064	Project Manager: Kurt Kroner	09/20/2021 17:20

Analytical Results

Client Sample ID: MSP-5

Laboratory Sample ID: 2109115-05 (Solid)

Analyte	Result	Notes	PQL	Units	Dilution	Prep Method	Analyzed	Analyst	Method
Total ICP Metals				Batch ID:	BI10526		Prepared: 09/17/2021 14:59		
Antimony	ND		0.500	mg/kg	1	3050B	09/20/2021 13:50	LVE	SW846 6010B
Arsenic	**3.13**		0.250	mg/kg	1	3050B	09/20/2021 13:50	LVE	SW846 6010B
Barium	**82.9**		0.500	mg/kg	1	3050B	09/20/2021 13:50	LVE	SW846 6010B
Beryllium	ND		0.500	mg/kg	1	3050B	09/20/2021 13:50	LVE	SW846 6010B
Cadmium	**4.37**		0.500	mg/kg	1	3050B	09/20/2021 13:50	LVE	SW846 6010B
Chromium	**9.80**		0.500	mg/kg	1	3050B	09/20/2021 13:50	LVE	SW846 6010B
Cobalt	**6.65**		0.500	mg/kg	1	3050B	09/20/2021 13:50	LVE	SW846 6010B
Copper	**21.3**		0.500	mg/kg	1	3050B	09/20/2021 13:50	LVE	SW846 6010B
Lead	**43.9**		0.250	mg/kg	1	3050B	09/20/2021 13:50	LVE	SW846 6010B
Molybdenum	**1.41**		0.500	mg/kg	1	3050B	09/20/2021 13:50	LVE	SW846 6010B
Nickel	**9.97**		0.500	mg/kg	1	3050B	09/20/2021 13:50	LVE	SW846 6010B
Selenium	ND		0.500	mg/kg	1	3050B	09/20/2021 13:50	LVE	SW846 6010B
Silver	ND		0.500	mg/kg	1	3050B	09/20/2021 13:50	LVE	SW846 6010B
Thallium	ND		0.500	mg/kg	1	3050B	09/20/2021 13:50	LVE	SW846 6010B
Vanadium	**24.7**		0.500	mg/kg	1	3050B	09/20/2021 13:50	LVE	SW846 6010B
Zinc	**1030**		0.500	mg/kg	1	3050B	09/20/2021 13:50	LVE	SW846 6010B
Total Petroleum Hydrocarbons(TPH-g)				Batch ID:	BI10496		Prepared: 09/17/2021 09:00		
Gasoline Range Organics	ND		500	ug/kg	1	5030A	09/17/2021 20:54	SA	8015B
Surrogate: Bromofluorobenzene			*89.8 %*		*70-120*	5030A	09/17/2021 20:54	SA	*8015B*
Total Petroleum Hydrocarbons(TPH DROORO)				Batch ID:	BI10510		Prepared: 09/17/2021 09:00		
Diesel range organics	**318**		10.0	mg/kg	1	3550B	09/17/2021 23:18	DWI	8015B
Oil Range Organics	**180**		50.0	mg/kg	1	3550B	09/17/2021 23:18	DWI	8015B
Surrogate: Chlorobenzene			*99.0 %*		*70-120*	3550B	09/17/2021 23:18	DWI	*8015B*

The results in this report apply to the samples analyzed in accordance with the chain of custody document. This analytical report must be reproduced in its entirety.

Amolk Brar, Lab Director

American Scientific Laboratories, LLC
Environmental Testing Services
2520 N. San Fernando Road, LA CA 90065 Tel: (323) 223-9700 • Fax: (323) 223-9500

Kroner Environmental Services, Inc.	Project: Regional Connector Mission Yard	Work Order No: 2109115
10801 National Blvd. # 415	Project Number: [none]	**Reported:**
Los Angeles CA, 90064	Project Manager: Kurt Kroner	09/20/2021 17:20

Analytical Results

Client Sample ID: MSP-5

Laboratory Sample ID: 2109115-05 (Solid)

Analyte	Result	Notes	PQL	Units	Dilution	Prep Method	Analyzed	Analyst	Method
Volatile Organic Compounds				Batch ID:	BI10495		Prepared: 09/17/2021 09:00		
Acetone	ND		50.0	ug/kg	1	5030A	09/17/2021 19:02	SA	8260B
Benzene	ND		2.00	ug/kg	1	5030A	09/17/2021 19:02	SA	8260B
Bromobenzene	ND		10.0	ug/kg	1	5030A	09/17/2021 19:02	SA	8260B
Bromochloromethane	ND		10.0	ug/kg	1	5030A	09/17/2021 19:02	SA	8260B
Bromodichloromethane	ND		10.0	ug/kg	1	5030A	09/17/2021 19:02	SA	8260B
Bromoform	ND		50.0	ug/kg	1	5030A	09/17/2021 19:02	SA	8260B
Bromomethane	ND		30.0	ug/kg	1	5030A	09/17/2021 19:02	SA	8260B
2-Butanone	ND		50.0	ug/kg	1	5030A	09/17/2021 19:02	SA	8260B
n-Butylbenzene	ND		10.0	ug/kg	1	5030A	09/17/2021 19:02	SA	8260B
sec-Butylbenzene	ND		10.0	ug/kg	1	5030A	09/17/2021 19:02	SA	8260B
tert-Butylbenzene	ND		10.0	ug/kg	1	5030A	09/17/2021 19:02	SA	8260B
Carbon disulfide	ND		10.0	ug/kg	1	5030A	09/17/2021 19:02	SA	8260B
Carbon tetrachloride	ND		10.0	ug/kg	1	5030A	09/17/2021 19:02	SA	8260B
Chlorobenzene	ND		10.0	ug/kg	1	5030A	09/17/2021 19:02	SA	8260B
Chloroethane	ND		30.0	ug/kg	1	5030A	09/17/2021 19:02	SA	8260B
2-Chloroethylvinyl Ether	ND		50.0	ug/kg	1	5030A	09/17/2021 19:02	SA	8260B
Chloroform	ND		10.0	ug/kg	1	5030A	09/17/2021 19:02	SA	8260B
Chloromethane	ND		30.0	ug/kg	1	5030A	09/17/2021 19:02	SA	8260B
4-Chlorotoluene	ND		10.0	ug/kg	1	5030A	09/17/2021 19:02	SA	8260B
2-Chlorotoluene	ND		10.0	ug/kg	1	5030A	09/17/2021 19:02	SA	8260B
1,2-Dibromo-3-chloropropane	ND		50.0	ug/kg	1	5030A	09/17/2021 19:02	SA	8260B
Dibromochloromethane	ND		10.0	ug/kg	1	5030A	09/17/2021 19:02	SA	8260B
1,2-Dibromoethane	ND		10.0	ug/kg	1	5030A	09/17/2021 19:02	SA	8260B
Dibromomethane	ND		10.0	ug/kg	1	5030A	09/17/2021 19:02	SA	8260B
1,2-Dichlorobenzene	ND		10.0	ug/kg	1	5030A	09/17/2021 19:02	SA	8260B
1,3-Dichlorobenzene	ND		10.0	ug/kg	1	5030A	09/17/2021 19:02	SA	8260B
1,4-Dichlorobenzene	ND		10.0	ug/kg	1	5030A	09/17/2021 19:02	SA	8260B
Dichlorodifluoromethane	ND		30.0	ug/kg	1	5030A	09/17/2021 19:02	SA	8260B
1,1-Dichloroethane	ND		10.0	ug/kg	1	5030A	09/17/2021 19:02	SA	8260B
1,2-Dichloroethane	ND		10.0	ug/kg	1	5030A	09/17/2021 19:02	SA	8260B
1,1-Dichloroethene	ND		10.0	ug/kg	1	5030A	09/17/2021 19:02	SA	8260B
cis-1,2-Dichloroethene	ND		10.0	ug/kg	1	5030A	09/17/2021 19:02	SA	8260B
trans-1,2-Dichloroethene	ND		10.0	ug/kg	1	5030A	09/17/2021 19:02	SA	8260B
1,1-Dichloropropene	ND		10.0	ug/kg	1	5030A	09/17/2021 19:02	SA	8260B
1,2-Dichloropropane	ND		10.0	ug/kg	1	5030A	09/17/2021 19:02	SA	8260B
1,3-Dichloropropane	ND		10.0	ug/kg	1	5030A	09/17/2021 19:02	SA	8260B
2,2-Dichloropropane	ND		10.0	ug/kg	1	5030A	09/17/2021 19:02	SA	8260B
cis-1,3-Dichloropropene	ND		10.0	ug/kg	1	5030A	09/17/2021 19:02	SA	8260B
trans-1,3-Dichloropropene	ND		10.0	ug/kg	1	5030A	09/17/2021 19:02	SA	8260B
Ethylbenzene	ND		2.00	ug/kg	1	5030A	09/17/2021 19:02	SA	8260B

The results in this report apply to the samples analyzed in accordance with the chain of custody document. This analytical report must be reproduced in its entirety.

Amolk Brar, Lab Director

American Scientific Laboratories, LLC
Environmental Testing Services
2520 N. San Fernando Road, LA CA 90065 Tel: (323) 223-9700 • Fax: (323) 223-9500

Kroner Environmental Services, Inc.	Project: Regional Connector Mission Yard	Work Order No: 2109115
10801 National Blvd. # 415	Project Number: [none]	**Reported:**
Los Angeles CA, 90064	Project Manager: Kurt Kroner	09/20/2021 17:20

Analytical Results

Client Sample ID: MSP-5

Laboratory Sample ID: 2109115-05 (Solid)

Analyte	Result	Notes	PQL	Units	Dilution	Prep Method	Analyzed	Analyst	Method
Volatile Organic Compounds				Batch ID:	BI10495		Prepared: 09/17/2021 09:00		
Hexachlorobutadiene	ND		30.0	ug/kg	1	5030A	09/17/2021 19:02	SA	8260B
2-Hexanone	ND		50.0	ug/kg	1	5030A	09/17/2021 19:02	SA	8260B
Isopropylbenzene	ND		10.0	ug/kg	1	5030A	09/17/2021 19:02	SA	8260B
p-Isopropyltoluene	ND		10.0	ug/kg	1	5030A	09/17/2021 19:02	SA	8260B
Methyl tert-Butyl Ether (MTBE)	ND		5.00	ug/kg	1	5030A	09/17/2021 19:02	SA	8260B
4-Methyl-2-pentanone (MIBK)	ND		50.0	ug/kg	1	5030A	09/17/2021 19:02	SA	8260B
Methylene chloride	ND		50.0	ug/kg	1	5030A	09/17/2021 19:02	SA	8260B
Naphthalene	ND		10.0	ug/kg	1	5030A	09/17/2021 19:02	SA	8260B
n-Propylbenzene	ND		10.0	ug/kg	1	5030A	09/17/2021 19:02	SA	8260B
Styrene	ND		10.0	ug/kg	1	5030A	09/17/2021 19:02	SA	8260B
1,1,1,2-Tetrachloroethane	ND		10.0	ug/kg	1	5030A	09/17/2021 19:02	SA	8260B
1,1,2,2-Tetrachloroethane	ND		10.0	ug/kg	1	5030A	09/17/2021 19:02	SA	8260B
Tetrachloroethene	ND		10.0	ug/kg	1	5030A	09/17/2021 19:02	SA	8260B
Toluene	ND		2.00	ug/kg	1	5030A	09/17/2021 19:02	SA	8260B
1,2,3-Trichlorobenzene	ND		10.0	ug/kg	1	5030A	09/17/2021 19:02	SA	8260B
1,2,4-Trichlorobenzene	ND		10.0	ug/kg	1	5030A	09/17/2021 19:02	SA	8260B
1,1,1-Trichloroethane	ND		10.0	ug/kg	1	5030A	09/17/2021 19:02	SA	8260B
1,1,2-Trichloroethane	ND		10.0	ug/kg	1	5030A	09/17/2021 19:02	SA	8260B
Trichloroethene	ND		10.0	ug/kg	1	5030A	09/17/2021 19:02	SA	8260B
Trichlorofluoromethane	ND		10.0	ug/kg	1	5030A	09/17/2021 19:02	SA	8260B
1,2,3-Trichloropropane	ND		10.0	ug/kg	1	5030A	09/17/2021 19:02	SA	8260B
1,2,4-Trimethylbenzene	ND		10.0	ug/kg	1	5030A	09/17/2021 19:02	SA	8260B
1,3,5- Trimethylbenzene	ND		10.0	ug/kg	1	5030A	09/17/2021 19:02	SA	8260B
Vinyl acetate	ND		50.0	ug/kg	1	5030A	09/17/2021 19:02	SA	8260B
Vinyl chloride	ND		30.0	ug/kg	1	5030A	09/17/2021 19:02	SA	8260B
m,p-Xylenes	ND		4.00	ug/kg	1	5030A	09/17/2021 19:02	SA	8260B
o-Xylene	ND		2.00	ug/kg	1	5030A	09/17/2021 19:02	SA	8260B
Surrogate: 4-Bromofluorobenzene			*96.1 %*		*70-120*	5030A	09/17/2021 19:02	SA	*8260B*
Surrogate: Dibromofluoromethane			*76.6 %*		*70-120*	5030A	09/17/2021 19:02	SA	*8260B*
Surrogate: Toluene-d8			*96.1 %*		*70-120*	5030A	09/17/2021 19:02	SA	*8260B*

Analytical Results

Client Sample ID: MSP-6

Laboratory Sample ID: 2109115-06 (Solid)

Analyte	Result	Notes	PQL	Units	Dilution	Prep Method	Analyzed	Analyst	Method
Total Mercury (CVAA)				Batch ID:	BI10527		Prepared: 09/17/2021 14:05		
Mercury	ND		0.0500	mg/kg	1	7471A	09/20/2021 11:25	LVE	7471A

The results in this report apply to the samples analyzed in accordance with the chain of custody document. This analytical report must be reproduced in its entirety.

Amolk Brar, Lab Director

American Scientific Laboratories, LLC
Environmental Testing Services
2520 N. San Fernando Road, LA CA 90065 Tel: (323) 223-9700 • Fax: (323) 223-9500

Kroner Environmental Services, Inc.	Project: Regional Connector Mission Yard	Work Order No: 2109115
10801 National Blvd. # 415	Project Number: [none]	**Reported:**
Los Angeles CA, 90064	Project Manager: Kurt Kroner	09/20/2021 17:20

Analytical Results

Client Sample ID: MSP-6

Laboratory Sample ID: 2109115-06 (Solid)

Analyte	Result	Notes	PQL	Units	Dilution	Prep Method	Analyzed	Analyst	Method
Total ICP Metals				Batch ID:	BI10526		Prepared: 09/17/2021 14:59		
Antimony	ND		0.500	mg/kg	1	3050B	09/20/2021 13:50	LVE	SW846 6010B
Arsenic	**1.65**		0.250	mg/kg	1	3050B	09/20/2021 13:50	LVE	SW846 6010B
Barium	**64.1**		0.500	mg/kg	1	3050B	09/20/2021 13:50	LVE	SW846 6010B
Beryllium	ND		0.500	mg/kg	1	3050B	09/20/2021 13:50	LVE	SW846 6010B
Cadmium	**0.915**		0.500	mg/kg	1	3050B	09/20/2021 13:50	LVE	SW846 6010B
Chromium	**6.42**		0.500	mg/kg	1	3050B	09/20/2021 13:50	LVE	SW846 6010B
Cobalt	**4.31**		0.500	mg/kg	1	3050B	09/20/2021 13:50	LVE	SW846 6010B
Copper	**10.3**		0.500	mg/kg	1	3050B	09/20/2021 13:50	LVE	SW846 6010B
Lead	**8.94**		0.250	mg/kg	1	3050B	09/20/2021 13:50	LVE	SW846 6010B
Molybdenum	ND		0.500	mg/kg	1	3050B	09/20/2021 13:50	LVE	SW846 6010B
Nickel	**4.80**		0.500	mg/kg	1	3050B	09/20/2021 13:50	LVE	SW846 6010B
Selenium	ND		0.500	mg/kg	1	3050B	09/20/2021 13:50	LVE	SW846 6010B
Silver	ND		0.500	mg/kg	1	3050B	09/20/2021 13:50	LVE	SW846 6010B
Thallium	ND		0.500	mg/kg	1	3050B	09/20/2021 13:50	LVE	SW846 6010B
Vanadium	**16.6**		0.500	mg/kg	1	3050B	09/20/2021 13:50	LVE	SW846 6010B
Zinc	**46.5**		0.500	mg/kg	1	3050B	09/20/2021 13:50	LVE	SW846 6010B
Total Petroleum Hydrocarbons(TPH-g)				Batch ID:	BI10496		Prepared: 09/17/2021 09:00		
Gasoline Range Organics	ND		500	ug/kg	1	5030A	09/17/2021 21:22	SA	8015B
Surrogate: Bromofluorobenzene			*84.8 %*		*70-120*	5030A	09/17/2021 21:22	SA	*8015B*
Total Petroleum Hydrocarbons(TPH DROORO)				Batch ID:	BI10510		Prepared: 09/17/2021 09:00		
Diesel range organics	**80.0**		10.0	mg/kg	1	3550B	09/18/2021 00:01	DWI	8015B
Oil Range Organics	**226**		50.0	mg/kg	1	3550B	09/18/2021 00:01	DWI	8015B
Surrogate: Chlorobenzene			*96.6 %*		*70-120*	3550B	09/18/2021 00:01	DWI	*8015B*

The results in this report apply to the samples analyzed in accordance with the chain of custody document. This analytical report must be reproduced in its entirety.

Amolk Brar, Lab Director

American Scientific Laboratories, LLC
Environmental Testing Services
2520 N. San Fernando Road, LA CA 90065 Tel: (323) 223-9700 • Fax: (323) 223-9500

Kroner Environmental Services, Inc.	Project: Regional Connector Mission Yard	Work Order No: 2109115
10801 National Blvd. # 415	Project Number: [none]	**Reported:**
Los Angeles CA, 90064	Project Manager: Kurt Kroner	09/20/2021 17:20

Analytical Results

Client Sample ID: MSP-6

Laboratory Sample ID: 2109115-06 (Solid)

Analyte	Result	Notes	PQL	Units	Dilution	Prep Method	Analyzed	Analyst	Method
Volatile Organic Compounds				Batch ID:	BI10495		Prepared: 09/17/2021 12:00		
Acetone	ND		50.0	ug/kg	1	5030A	09/17/2021 21:23	SA	8260B
Benzene	ND		2.00	ug/kg	1	5030A	09/17/2021 21:23	SA	8260B
Bromobenzene	ND		10.0	ug/kg	1	5030A	09/17/2021 21:23	SA	8260B
Bromochloromethane	ND		10.0	ug/kg	1	5030A	09/17/2021 21:23	SA	8260B
Bromodichloromethane	ND		10.0	ug/kg	1	5030A	09/17/2021 21:23	SA	8260B
Bromoform	ND		50.0	ug/kg	1	5030A	09/17/2021 21:23	SA	8260B
Bromomethane	ND		30.0	ug/kg	1	5030A	09/17/2021 21:23	SA	8260B
2-Butanone	ND		50.0	ug/kg	1	5030A	09/17/2021 21:23	SA	8260B
n-Butylbenzene	ND		10.0	ug/kg	1	5030A	09/17/2021 21:23	SA	8260B
sec-Butylbenzene	ND		10.0	ug/kg	1	5030A	09/17/2021 21:23	SA	8260B
tert-Butylbenzene	ND		10.0	ug/kg	1	5030A	09/17/2021 21:23	SA	8260B
Carbon disulfide	ND		10.0	ug/kg	1	5030A	09/17/2021 21:23	SA	8260B
Carbon tetrachloride	ND		10.0	ug/kg	1	5030A	09/17/2021 21:23	SA	8260B
Chlorobenzene	ND		10.0	ug/kg	1	5030A	09/17/2021 21:23	SA	8260B
Chloroethane	ND		30.0	ug/kg	1	5030A	09/17/2021 21:23	SA	8260B
2-Chloroethylvinyl Ether	ND		50.0	ug/kg	1	5030A	09/17/2021 21:23	SA	8260B
Chloroform	ND		10.0	ug/kg	1	5030A	09/17/2021 21:23	SA	8260B
Chloromethane	ND		30.0	ug/kg	1	5030A	09/17/2021 21:23	SA	8260B
4-Chlorotoluene	ND		10.0	ug/kg	1	5030A	09/17/2021 21:23	SA	8260B
2-Chlorotoluene	ND		10.0	ug/kg	1	5030A	09/17/2021 21:23	SA	8260B
1,2-Dibromo-3-chloropropane	ND		50.0	ug/kg	1	5030A	09/17/2021 21:23	SA	8260B
Dibromochloromethane	ND		10.0	ug/kg	1	5030A	09/17/2021 21:23	SA	8260B
1,2-Dibromoethane	ND		10.0	ug/kg	1	5030A	09/17/2021 21:23	SA	8260B
Dibromomethane	ND		10.0	ug/kg	1	5030A	09/17/2021 21:23	SA	8260B
1,2-Dichlorobenzene	ND		10.0	ug/kg	1	5030A	09/17/2021 21:23	SA	8260B
1,3-Dichlorobenzene	ND		10.0	ug/kg	1	5030A	09/17/2021 21:23	SA	8260B
1,4-Dichlorobenzene	ND		10.0	ug/kg	1	5030A	09/17/2021 21:23	SA	8260B
Dichlorodifluoromethane	ND		30.0	ug/kg	1	5030A	09/17/2021 21:23	SA	8260B
1,1-Dichloroethane	ND		10.0	ug/kg	1	5030A	09/17/2021 21:23	SA	8260B
1,2-Dichloroethane	ND		10.0	ug/kg	1	5030A	09/17/2021 21:23	SA	8260B
1,1-Dichloroethene	ND		10.0	ug/kg	1	5030A	09/17/2021 21:23	SA	8260B
cis-1,2-Dichloroethene	ND		10.0	ug/kg	1	5030A	09/17/2021 21:23	SA	8260B
trans-1,2-Dichloroethene	ND		10.0	ug/kg	1	5030A	09/17/2021 21:23	SA	8260B
1,1-Dichloropropene	ND		10.0	ug/kg	1	5030A	09/17/2021 21:23	SA	8260B
1,2-Dichloropropane	ND		10.0	ug/kg	1	5030A	09/17/2021 21:23	SA	8260B
1,3-Dichloropropane	ND		10.0	ug/kg	1	5030A	09/17/2021 21:23	SA	8260B
2,2-Dichloropropane	ND		10.0	ug/kg	1	5030A	09/17/2021 21:23	SA	8260B
cis-1,3-Dichloropropene	ND		10.0	ug/kg	1	5030A	09/17/2021 21:23	SA	8260B
trans-1,3-Dichloropropene	ND		10.0	ug/kg	1	5030A	09/17/2021 21:23	SA	8260B
Ethylbenzene	ND		2.00	ug/kg	1	5030A	09/17/2021 21:23	SA	8260B

The results in this report apply to the samples analyzed in accordance with the chain of custody document. This analytical report must be reproduced in its entirety.

Amolk Brar, Lab Director

American Scientific Laboratories, LLC
Environmental Testing Services
2520 N. San Fernando Road, LA CA 90065 Tel: (323) 223-9700 • Fax: (323) 223-9500

Kroner Environmental Services, Inc.	Project: Regional Connector Mission Yard	Work Order No: 2109115
10801 National Blvd. # 415	Project Number: [none]	**Reported:**
Los Angeles CA, 90064	Project Manager: Kurt Kroner	09/20/2021 17:20

Analytical Results

Client Sample ID: MSP-6

Laboratory Sample ID: 2109115-06 (Solid)

Analyte	Result	Notes	PQL	Units	Dilution	Prep Method	Analyzed	Analyst	Method
Volatile Organic Compounds				Batch ID:	BI10495		Prepared: 09/17/2021 12:00		
Hexachlorobutadiene	ND		30.0	ug/kg	1	5030A	09/17/2021 21:23	SA	8260B
2-Hexanone	ND		50.0	ug/kg	1	5030A	09/17/2021 21:23	SA	8260B
Isopropylbenzene	ND		10.0	ug/kg	1	5030A	09/17/2021 21:23	SA	8260B
p-Isopropyltoluene	ND		10.0	ug/kg	1	5030A	09/17/2021 21:23	SA	8260B
Methyl tert-Butyl Ether (MTBE)	ND		5.00	ug/kg	1	5030A	09/17/2021 21:23	SA	8260B
4-Methyl-2-pentanone (MIBK)	ND		50.0	ug/kg	1	5030A	09/17/2021 21:23	SA	8260B
Methylene chloride	ND		50.0	ug/kg	1	5030A	09/17/2021 21:23	SA	8260B
Naphthalene	ND		10.0	ug/kg	1	5030A	09/17/2021 21:23	SA	8260B
n-Propylbenzene	ND		10.0	ug/kg	1	5030A	09/17/2021 21:23	SA	8260B
Styrene	ND		10.0	ug/kg	1	5030A	09/17/2021 21:23	SA	8260B
1,1,1,2-Tetrachloroethane	ND		10.0	ug/kg	1	5030A	09/17/2021 21:23	SA	8260B
1,1,2,2-Tetrachloroethane	ND		10.0	ug/kg	1	5030A	09/17/2021 21:23	SA	8260B
Tetrachloroethene	ND		10.0	ug/kg	1	5030A	09/17/2021 21:23	SA	8260B
Toluene	ND		2.00	ug/kg	1	5030A	09/17/2021 21:23	SA	8260B
1,2,3-Trichlorobenzene	ND		10.0	ug/kg	1	5030A	09/17/2021 21:23	SA	8260B
1,2,4-Trichlorobenzene	ND		10.0	ug/kg	1	5030A	09/17/2021 21:23	SA	8260B
1,1,1-Trichloroethane	ND		10.0	ug/kg	1	5030A	09/17/2021 21:23	SA	8260B
1,1,2-Trichloroethane	ND		10.0	ug/kg	1	5030A	09/17/2021 21:23	SA	8260B
Trichloroethene	ND		10.0	ug/kg	1	5030A	09/17/2021 21:23	SA	8260B
Trichlorofluoromethane	ND		10.0	ug/kg	1	5030A	09/17/2021 21:23	SA	8260B
1,2,3-Trichloropropane	ND		10.0	ug/kg	1	5030A	09/17/2021 21:23	SA	8260B
1,2,4-Trimethylbenzene	ND		10.0	ug/kg	1	5030A	09/17/2021 21:23	SA	8260B
1,3,5- Trimethylbenzene	ND		10.0	ug/kg	1	5030A	09/17/2021 21:23	SA	8260B
Vinyl acetate	ND		50.0	ug/kg	1	5030A	09/17/2021 21:23	SA	8260B
Vinyl chloride	ND		30.0	ug/kg	1	5030A	09/17/2021 21:23	SA	8260B
m,p-Xylenes	ND		4.00	ug/kg	1	5030A	09/17/2021 21:23	SA	8260B
o-Xylene	ND		2.00	ug/kg	1	5030A	09/17/2021 21:23	SA	8260B
Surrogate: 4-Bromofluorobenzene			*105 %*		*70-120*	5030A	09/17/2021 21:23	SA	*8260B*
Surrogate: Dibromofluoromethane		*S-04*	*41.4 %*		*70-120*	5030A	09/17/2021 21:23	SA	*8260B*
Surrogate: Toluene-d8			*97.0 %*		*70-120*	5030A	09/17/2021 21:23	SA	*8260B*

Analytical Results

Client Sample ID: MSP-7

Laboratory Sample ID: 2109115-07 (Solid)

Analyte	Result	Notes	PQL	Units	Dilution	Prep Method	Analyzed	Analyst	Method
Total Mercury (CVAA)				Batch ID:	BI10527		Prepared: 09/17/2021 14:05		
Mercury	**0.0847**		0.0500	mg/kg	1	7471A	09/20/2021 11:25	LVE	7471A

The results in this report apply to the samples analyzed in accordance with the chain of custody document. This analytical report must be reproduced in its entirety.

Amolk Brar, Lab Director

American Scientific Laboratories, LLC
Environmental Testing Services
2520 N. San Fernando Road, LA CA 90065 Tel: (323) 223-9700 • Fax: (323) 223-9500

Kroner Environmental Services, Inc.	Project: Regional Connector Mission Yard	Work Order No: 2109115
10801 National Blvd. # 415	Project Number: [none]	**Reported:**
Los Angeles CA, 90064	Project Manager: Kurt Kroner	09/20/2021 17:20

Analytical Results

Client Sample ID: MSP-7

Laboratory Sample ID: 2109115-07 (Solid)

Analyte	Result	Notes	PQL	Units	Dilution	Prep Method	Analyzed	Analyst	Method
Total ICP Metals				Batch ID:	BI10526		Prepared: 09/17/2021 14:59		
Antimony	**0.862**		0.500	mg/kg	1	3050B	09/20/2021 13:50	LVE	SW846 6010B
Arsenic	**3.15**		0.250	mg/kg	1	3050B	09/20/2021 13:50	LVE	SW846 6010B
Barium	**82.8**		0.500	mg/kg	1	3050B	09/20/2021 13:50	LVE	SW846 6010B
Beryllium	ND		0.500	mg/kg	1	3050B	09/20/2021 13:50	LVE	SW846 6010B
Cadmium	**1.13**		0.500	mg/kg	1	3050B	09/20/2021 13:50	LVE	SW846 6010B
Chromium	**10.5**		0.500	mg/kg	1	3050B	09/20/2021 13:50	LVE	SW846 6010B
Cobalt	**5.52**		0.500	mg/kg	1	3050B	09/20/2021 13:50	LVE	SW846 6010B
Copper	**15.0**		0.500	mg/kg	1	3050B	09/20/2021 13:50	LVE	SW846 6010B
Lead	**86.1**		0.250	mg/kg	1	3050B	09/20/2021 13:50	LVE	SW846 6010B
Molybdenum	**0.693**		0.500	mg/kg	1	3050B	09/20/2021 13:50	LVE	SW846 6010B
Nickel	**7.97**		0.500	mg/kg	1	3050B	09/20/2021 13:50	LVE	SW846 6010B
Selenium	ND		0.500	mg/kg	1	3050B	09/20/2021 13:50	LVE	SW846 6010B
Silver	ND		0.500	mg/kg	1	3050B	09/20/2021 13:50	LVE	SW846 6010B
Thallium	ND		0.500	mg/kg	1	3050B	09/20/2021 13:50	LVE	SW846 6010B
Vanadium	**24.9**		0.500	mg/kg	1	3050B	09/20/2021 13:50	LVE	SW846 6010B
Zinc	**78.1**		0.500	mg/kg	1	3050B	09/20/2021 13:50	LVE	SW846 6010B
Total Petroleum Hydrocarbons(TPH-g)				Batch ID:	BI10496		Prepared: 09/17/2021 09:00		
Gasoline Range Organics	ND		500	ug/kg	1	5030A	09/17/2021 21:51	SA	8015B
Surrogate: Bromofluorobenzene			*86.8 %*		*70-120*	5030A	09/17/2021 21:51	SA	*8015B*
Total Petroleum Hydrocarbons(TPH DROORO)				Batch ID:	BI10510		Prepared: 09/17/2021 09:00		
Diesel range organics	**1190**		10.0	mg/kg	1	3550B	09/18/2021 00:43	DWI	8015B
Oil Range Organics	**606**		50.0	mg/kg	1	3550B	09/18/2021 00:43	DWI	8015B
Surrogate: Chlorobenzene			*97.3 %*		*70-120*	3550B	09/18/2021 00:43	DWI	*8015B*

The results in this report apply to the samples analyzed in accordance with the chain of custody document. This analytical report must be reproduced in its entirety.

Amolk Brar, Lab Director

American Scientific Laboratories, LLC
Environmental Testing Services
2520 N. San Fernando Road, LA CA 90065 Tel: (323) 223-9700 • Fax: (323) 223-9500

Kroner Environmental Services, Inc.	Project: Regional Connector Mission Yard	Work Order No: 2109115
10801 National Blvd. # 415	Project Number: [none]	**Reported:**
Los Angeles CA, 90064	Project Manager: Kurt Kroner	09/20/2021 17:20

Analytical Results

Client Sample ID: MSP-7

Laboratory Sample ID: 2109115-07 (Solid)

Analyte	Result	Notes	PQL	Units	Dilution	Prep Method	Analyzed	Analyst	Method
Volatile Organic Compounds				Batch ID:	BI10495		Prepared: 09/17/2021 12:00		
Acetone	ND		50.0	ug/kg	1	5030A	09/17/2021 21:51	SA	8260B
Benzene	ND		2.00	ug/kg	1	5030A	09/17/2021 21:51	SA	8260B
Bromobenzene	ND		10.0	ug/kg	1	5030A	09/17/2021 21:51	SA	8260B
Bromochloromethane	ND		10.0	ug/kg	1	5030A	09/17/2021 21:51	SA	8260B
Bromodichloromethane	ND		10.0	ug/kg	1	5030A	09/17/2021 21:51	SA	8260B
Bromoform	ND		50.0	ug/kg	1	5030A	09/17/2021 21:51	SA	8260B
Bromomethane	ND		30.0	ug/kg	1	5030A	09/17/2021 21:51	SA	8260B
2-Butanone	ND		50.0	ug/kg	1	5030A	09/17/2021 21:51	SA	8260B
n-Butylbenzene	ND		10.0	ug/kg	1	5030A	09/17/2021 21:51	SA	8260B
sec-Butylbenzene	ND		10.0	ug/kg	1	5030A	09/17/2021 21:51	SA	8260B
tert-Butylbenzene	ND		10.0	ug/kg	1	5030A	09/17/2021 21:51	SA	8260B
Carbon disulfide	ND		10.0	ug/kg	1	5030A	09/17/2021 21:51	SA	8260B
Carbon tetrachloride	ND		10.0	ug/kg	1	5030A	09/17/2021 21:51	SA	8260B
Chlorobenzene	ND		10.0	ug/kg	1	5030A	09/17/2021 21:51	SA	8260B
Chloroethane	ND		30.0	ug/kg	1	5030A	09/17/2021 21:51	SA	8260B
2-Chloroethylvinyl Ether	ND		50.0	ug/kg	1	5030A	09/17/2021 21:51	SA	8260B
Chloroform	ND		10.0	ug/kg	1	5030A	09/17/2021 21:51	SA	8260B
Chloromethane	ND		30.0	ug/kg	1	5030A	09/17/2021 21:51	SA	8260B
4-Chlorotoluene	ND		10.0	ug/kg	1	5030A	09/17/2021 21:51	SA	8260B
2-Chlorotoluene	ND		10.0	ug/kg	1	5030A	09/17/2021 21:51	SA	8260B
1,2-Dibromo-3-chloropropane	ND		50.0	ug/kg	1	5030A	09/17/2021 21:51	SA	8260B
Dibromochloromethane	ND		10.0	ug/kg	1	5030A	09/17/2021 21:51	SA	8260B
1,2-Dibromoethane	ND		10.0	ug/kg	1	5030A	09/17/2021 21:51	SA	8260B
Dibromomethane	ND		10.0	ug/kg	1	5030A	09/17/2021 21:51	SA	8260B
1,2-Dichlorobenzene	ND		10.0	ug/kg	1	5030A	09/17/2021 21:51	SA	8260B
1,3-Dichlorobenzene	ND		10.0	ug/kg	1	5030A	09/17/2021 21:51	SA	8260B
1,4-Dichlorobenzene	ND		10.0	ug/kg	1	5030A	09/17/2021 21:51	SA	8260B
Dichlorodifluoromethane	ND		30.0	ug/kg	1	5030A	09/17/2021 21:51	SA	8260B
1,1-Dichloroethane	ND		10.0	ug/kg	1	5030A	09/17/2021 21:51	SA	8260B
1,2-Dichloroethane	ND		10.0	ug/kg	1	5030A	09/17/2021 21:51	SA	8260B
1,1-Dichloroethene	ND		10.0	ug/kg	1	5030A	09/17/2021 21:51	SA	8260B
cis-1,2-Dichloroethene	ND		10.0	ug/kg	1	5030A	09/17/2021 21:51	SA	8260B
trans-1,2-Dichloroethene	ND		10.0	ug/kg	1	5030A	09/17/2021 21:51	SA	8260B
1,1-Dichloropropene	ND		10.0	ug/kg	1	5030A	09/17/2021 21:51	SA	8260B
1,2-Dichloropropane	ND		10.0	ug/kg	1	5030A	09/17/2021 21:51	SA	8260B
1,3-Dichloropropane	ND		10.0	ug/kg	1	5030A	09/17/2021 21:51	SA	8260B
2,2-Dichloropropane	ND		10.0	ug/kg	1	5030A	09/17/2021 21:51	SA	8260B
cis-1,3-Dichloropropene	ND		10.0	ug/kg	1	5030A	09/17/2021 21:51	SA	8260B
trans-1,3-Dichloropropene	ND		10.0	ug/kg	1	5030A	09/17/2021 21:51	SA	8260B
Ethylbenzene	ND		2.00	ug/kg	1	5030A	09/17/2021 21:51	SA	8260B

The results in this report apply to the samples analyzed in accordance with the chain of custody document. This analytical report must be reproduced in its entirety.

Amolk Brar, Lab Director

American Scientific Laboratories, LLC
Environmental Testing Services
2520 N. San Fernando Road, LA CA 90065 Tel: (323) 223-9700 • Fax: (323) 223-9500

Kroner Environmental Services, Inc.	Project: Regional Connector Mission Yard	Work Order No: 2109115
10801 National Blvd. # 415	Project Number: [none]	**Reported:**
Los Angeles CA, 90064	Project Manager: Kurt Kroner	09/20/2021 17:20

Analytical Results

Client Sample ID: MSP-7

Laboratory Sample ID: 2109115-07 (Solid)

Analyte	Result	Notes	PQL	Units	Dilution	Prep Method	Analyzed	Analyst	Method
Volatile Organic Compounds				Batch ID:	BI10495		Prepared: 09/17/2021 12:00		
Hexachlorobutadiene	ND		30.0	ug/kg	1	5030A	09/17/2021 21:51	SA	8260B
2-Hexanone	ND		50.0	ug/kg	1	5030A	09/17/2021 21:51	SA	8260B
Isopropylbenzene	ND		10.0	ug/kg	1	5030A	09/17/2021 21:51	SA	8260B
p-Isopropyltoluene	ND		10.0	ug/kg	1	5030A	09/17/2021 21:51	SA	8260B
Methyl tert-Butyl Ether (MTBE)	ND		5.00	ug/kg	1	5030A	09/17/2021 21:51	SA	8260B
4-Methyl-2-pentanone (MIBK)	ND		50.0	ug/kg	1	5030A	09/17/2021 21:51	SA	8260B
Methylene chloride	ND		50.0	ug/kg	1	5030A	09/17/2021 21:51	SA	8260B
Naphthalene	ND		10.0	ug/kg	1	5030A	09/17/2021 21:51	SA	8260B
n-Propylbenzene	ND		10.0	ug/kg	1	5030A	09/17/2021 21:51	SA	8260B
Styrene	ND		10.0	ug/kg	1	5030A	09/17/2021 21:51	SA	8260B
1,1,1,2-Tetrachloroethane	ND		10.0	ug/kg	1	5030A	09/17/2021 21:51	SA	8260B
1,1,2,2-Tetrachloroethane	ND		10.0	ug/kg	1	5030A	09/17/2021 21:51	SA	8260B
Tetrachloroethene	ND		10.0	ug/kg	1	5030A	09/17/2021 21:51	SA	8260B
Toluene	ND		2.00	ug/kg	1	5030A	09/17/2021 21:51	SA	8260B
1,2,3-Trichlorobenzene	ND		10.0	ug/kg	1	5030A	09/17/2021 21:51	SA	8260B
1,2,4-Trichlorobenzene	ND		10.0	ug/kg	1	5030A	09/17/2021 21:51	SA	8260B
1,1,1-Trichloroethane	ND		10.0	ug/kg	1	5030A	09/17/2021 21:51	SA	8260B
1,1,2-Trichloroethane	ND		10.0	ug/kg	1	5030A	09/17/2021 21:51	SA	8260B
Trichloroethene	ND		10.0	ug/kg	1	5030A	09/17/2021 21:51	SA	8260B
Trichlorofluoromethane	ND		10.0	ug/kg	1	5030A	09/17/2021 21:51	SA	8260B
1,2,3-Trichloropropane	ND		10.0	ug/kg	1	5030A	09/17/2021 21:51	SA	8260B
1,2,4-Trimethylbenzene	ND		10.0	ug/kg	1	5030A	09/17/2021 21:51	SA	8260B
1,3,5- Trimethylbenzene	ND		10.0	ug/kg	1	5030A	09/17/2021 21:51	SA	8260B
Vinyl acetate	ND		50.0	ug/kg	1	5030A	09/17/2021 21:51	SA	8260B
Vinyl chloride	ND		30.0	ug/kg	1	5030A	09/17/2021 21:51	SA	8260B
m,p-Xylenes	ND		4.00	ug/kg	1	5030A	09/17/2021 21:51	SA	8260B
o-Xylene	ND		2.00	ug/kg	1	5030A	09/17/2021 21:51	SA	8260B
Surrogate: 4-Bromofluorobenzene			*107 %*		*70-120*	5030A	09/17/2021 21:51	SA	*8260B*
Surrogate: Dibromofluoromethane		*S-04*	*46.7 %*		*70-120*	5030A	09/17/2021 21:51	SA	*8260B*
Surrogate: Toluene-d8			*98.1 %*		*70-120*	5030A	09/17/2021 21:51	SA	*8260B*

Analytical Results

Client Sample ID: MSP-8

Laboratory Sample ID: 2109115-08 (Solid)

Analyte	Result	Notes	PQL	Units	Dilution	Prep Method	Analyzed	Analyst	Method
Total Mercury (CVAA)				Batch ID:	BI10527		Prepared: 09/17/2021 14:05		
Mercury	ND		0.0500	mg/kg	1	7471A	09/20/2021 11:25	LVE	7471A

The results in this report apply to the samples analyzed in accordance with the chain of custody document. This analytical report must be reproduced in its entirety.

Amolk Brar, Lab Director

American Scientific Laboratories, LLC
Environmental Testing Services
2520 N. San Fernando Road, LA CA 90065 Tel: (323) 223-9700 • Fax: (323) 223-9500

Kroner Environmental Services, Inc.	Project: Regional Connector Mission Yard	Work Order No: 2109115
10801 National Blvd. # 415	Project Number: [none]	**Reported:**
Los Angeles CA, 90064	Project Manager: Kurt Kroner	09/20/2021 17:20

Analytical Results

Client Sample ID: MSP-8

Laboratory Sample ID: 2109115-08 (Solid)

Analyte	Result	Notes	PQL	Units	Dilution	Prep Method	Analyzed	Analyst	Method
Total ICP Metals				Batch ID:	BI10526		Prepared: 09/17/2021 14:59		
Antimony	ND		0.500	mg/kg	1	3050B	09/20/2021 13:50	LVE	SW846 6010B
Arsenic	**2.10**		0.250	mg/kg	1	3050B	09/20/2021 13:50	LVE	SW846 6010B
Barium	**90.2**		0.500	mg/kg	1	3050B	09/20/2021 13:50	LVE	SW846 6010B
Beryllium	ND		0.500	mg/kg	1	3050B	09/20/2021 13:50	LVE	SW846 6010B
Cadmium	**1.14**		0.500	mg/kg	1	3050B	09/20/2021 13:50	LVE	SW846 6010B
Chromium	**8.11**		0.500	mg/kg	1	3050B	09/20/2021 13:50	LVE	SW846 6010B
Cobalt	**5.87**		0.500	mg/kg	1	3050B	09/20/2021 13:50	LVE	SW846 6010B
Copper	**13.5**		0.500	mg/kg	1	3050B	09/20/2021 13:50	LVE	SW846 6010B
Lead	**11.5**		0.250	mg/kg	1	3050B	09/20/2021 13:50	LVE	SW846 6010B
Molybdenum	**0.584**		0.500	mg/kg	1	3050B	09/20/2021 13:50	LVE	SW846 6010B
Nickel	**7.66**		0.500	mg/kg	1	3050B	09/20/2021 13:50	LVE	SW846 6010B
Selenium	ND		0.500	mg/kg	1	3050B	09/20/2021 13:50	LVE	SW846 6010B
Silver	ND		0.500	mg/kg	1	3050B	09/20/2021 13:50	LVE	SW846 6010B
Thallium	ND		0.500	mg/kg	1	3050B	09/20/2021 13:50	LVE	SW846 6010B
Vanadium	**26.1**		0.500	mg/kg	1	3050B	09/20/2021 13:50	LVE	SW846 6010B
Zinc	**56.7**		0.500	mg/kg	1	3050B	09/20/2021 13:50	LVE	SW846 6010B
Total Petroleum Hydrocarbons(TPH-g)				Batch ID:	BI10496		Prepared: 09/17/2021 09:00		
Gasoline Range Organics	ND		500	ug/kg	1	5030A	09/17/2021 22:19	SA	8015B
Surrogate: Bromofluorobenzene			*82.4 %*		*70-120*	5030A	09/17/2021 22:19	SA	*8015B*
Total Petroleum Hydrocarbons(TPH DROORO)				Batch ID:	BI10510		Prepared: 09/17/2021 09:00		
Diesel range organics	**694**		10.0	mg/kg	1	3550B	09/18/2021 01:25	DWI	8015B
Oil Range Organics	**512**		50.0	mg/kg	1	3550B	09/18/2021 01:25	DWI	8015B
Surrogate: Chlorobenzene			*99.1 %*		*70-120*	3550B	09/18/2021 01:25	DWI	*8015B*

The results in this report apply to the samples analyzed in accordance with the chain of custody document. This analytical report must be reproduced in its entirety.

Amolk Brar, Lab Director

American Scientific Laboratories, LLC
Environmental Testing Services
2520 N. San Fernando Road, LA CA 90065 Tel: (323) 223-9700 • Fax: (323) 223-9500

Kroner Environmental Services, Inc.	Project: Regional Connector Mission Yard	Work Order No: 2109115
10801 National Blvd. # 415	Project Number: [none]	**Reported:**
Los Angeles CA, 90064	Project Manager: Kurt Kroner	09/20/2021 17:20

Analytical Results

Client Sample ID: MSP-8

Laboratory Sample ID: 2109115-08 (Solid)

Analyte	Result	Notes	PQL	Units	Dilution	Prep Method	Analyzed	Analyst	Method
Volatile Organic Compounds				Batch ID:	BI10495		Prepared: 09/17/2021 09:00		
Acetone	ND		50.0	ug/kg	1	5030A	09/17/2021 19:31	SA	8260B
Benzene	ND		2.00	ug/kg	1	5030A	09/17/2021 19:31	SA	8260B
Bromobenzene	ND		10.0	ug/kg	1	5030A	09/17/2021 19:31	SA	8260B
Bromochloromethane	ND		10.0	ug/kg	1	5030A	09/17/2021 19:31	SA	8260B
Bromodichloromethane	ND		10.0	ug/kg	1	5030A	09/17/2021 19:31	SA	8260B
Bromoform	ND		50.0	ug/kg	1	5030A	09/17/2021 19:31	SA	8260B
Bromomethane	ND		30.0	ug/kg	1	5030A	09/17/2021 19:31	SA	8260B
2-Butanone	ND		50.0	ug/kg	1	5030A	09/17/2021 19:31	SA	8260B
n-Butylbenzene	ND		10.0	ug/kg	1	5030A	09/17/2021 19:31	SA	8260B
sec-Butylbenzene	ND		10.0	ug/kg	1	5030A	09/17/2021 19:31	SA	8260B
tert-Butylbenzene	ND		10.0	ug/kg	1	5030A	09/17/2021 19:31	SA	8260B
Carbon disulfide	ND		10.0	ug/kg	1	5030A	09/17/2021 19:31	SA	8260B
Carbon tetrachloride	ND		10.0	ug/kg	1	5030A	09/17/2021 19:31	SA	8260B
Chlorobenzene	ND		10.0	ug/kg	1	5030A	09/17/2021 19:31	SA	8260B
Chloroethane	ND		30.0	ug/kg	1	5030A	09/17/2021 19:31	SA	8260B
2-Chloroethylvinyl Ether	ND		50.0	ug/kg	1	5030A	09/17/2021 19:31	SA	8260B
Chloroform	ND		10.0	ug/kg	1	5030A	09/17/2021 19:31	SA	8260B
Chloromethane	ND		30.0	ug/kg	1	5030A	09/17/2021 19:31	SA	8260B
4-Chlorotoluene	ND		10.0	ug/kg	1	5030A	09/17/2021 19:31	SA	8260B
2-Chlorotoluene	ND		10.0	ug/kg	1	5030A	09/17/2021 19:31	SA	8260B
1,2-Dibromo-3-chloropropane	ND		50.0	ug/kg	1	5030A	09/17/2021 19:31	SA	8260B
Dibromochloromethane	ND		10.0	ug/kg	1	5030A	09/17/2021 19:31	SA	8260B
1,2-Dibromoethane	ND		10.0	ug/kg	1	5030A	09/17/2021 19:31	SA	8260B
Dibromomethane	ND		10.0	ug/kg	1	5030A	09/17/2021 19:31	SA	8260B
1,2-Dichlorobenzene	ND		10.0	ug/kg	1	5030A	09/17/2021 19:31	SA	8260B
1,3-Dichlorobenzene	ND		10.0	ug/kg	1	5030A	09/17/2021 19:31	SA	8260B
1,4-Dichlorobenzene	ND		10.0	ug/kg	1	5030A	09/17/2021 19:31	SA	8260B
Dichlorodifluoromethane	ND		30.0	ug/kg	1	5030A	09/17/2021 19:31	SA	8260B
1,1-Dichloroethane	ND		10.0	ug/kg	1	5030A	09/17/2021 19:31	SA	8260B
1,2-Dichloroethane	ND		10.0	ug/kg	1	5030A	09/17/2021 19:31	SA	8260B
1,1-Dichloroethene	ND		10.0	ug/kg	1	5030A	09/17/2021 19:31	SA	8260B
cis-1,2-Dichloroethene	ND		10.0	ug/kg	1	5030A	09/17/2021 19:31	SA	8260B
trans-1,2-Dichloroethene	ND		10.0	ug/kg	1	5030A	09/17/2021 19:31	SA	8260B
1,1-Dichloropropene	ND		10.0	ug/kg	1	5030A	09/17/2021 19:31	SA	8260B
1,2-Dichloropropane	ND		10.0	ug/kg	1	5030A	09/17/2021 19:31	SA	8260B
1,3-Dichloropropane	ND		10.0	ug/kg	1	5030A	09/17/2021 19:31	SA	8260B
2,2-Dichloropropane	ND		10.0	ug/kg	1	5030A	09/17/2021 19:31	SA	8260B
cis-1,3-Dichloropropene	ND		10.0	ug/kg	1	5030A	09/17/2021 19:31	SA	8260B
trans-1,3-Dichloropropene	ND		10.0	ug/kg	1	5030A	09/17/2021 19:31	SA	8260B
Ethylbenzene	ND		2.00	ug/kg	1	5030A	09/17/2021 19:31	SA	8260B

The results in this report apply to the samples analyzed in accordance with the chain of custody document. This analytical report must be reproduced in its entirety.

Amolk Brar, Lab Director

American Scientific Laboratories, LLC
Environmental Testing Services
2520 N. San Fernando Road, LA CA 90065 Tel: (323) 223-9700 • Fax: (323) 223-9500

Kroner Environmental Services, Inc.	Project: Regional Connector Mission Yard	Work Order No: 2109115
10801 National Blvd. # 415	Project Number: [none]	**Reported:**
Los Angeles CA, 90064	Project Manager: Kurt Kroner	09/20/2021 17:20

Analytical Results

Client Sample ID: MSP-8

Laboratory Sample ID: 2109115-08 (Solid)

Analyte	Result	Notes	PQL	Units	Dilution	Prep Method	Analyzed	Analyst	Method
Volatile Organic Compounds				Batch ID:	BI10495		Prepared: 09/17/2021 09:00		
Hexachlorobutadiene	ND		30.0	ug/kg	1	5030A	09/17/2021 19:31	SA	8260B
2-Hexanone	ND		50.0	ug/kg	1	5030A	09/17/2021 19:31	SA	8260B
Isopropylbenzene	ND		10.0	ug/kg	1	5030A	09/17/2021 19:31	SA	8260B
p-Isopropyltoluene	ND		10.0	ug/kg	1	5030A	09/17/2021 19:31	SA	8260B
Methyl tert-Butyl Ether (MTBE)	ND		5.00	ug/kg	1	5030A	09/17/2021 19:31	SA	8260B
4-Methyl-2-pentanone (MIBK)	ND		50.0	ug/kg	1	5030A	09/17/2021 19:31	SA	8260B
Methylene chloride	ND		50.0	ug/kg	1	5030A	09/17/2021 19:31	SA	8260B
Naphthalene	ND		10.0	ug/kg	1	5030A	09/17/2021 19:31	SA	8260B
n-Propylbenzene	ND		10.0	ug/kg	1	5030A	09/17/2021 19:31	SA	8260B
Styrene	ND		10.0	ug/kg	1	5030A	09/17/2021 19:31	SA	8260B
1,1,1,2-Tetrachloroethane	ND		10.0	ug/kg	1	5030A	09/17/2021 19:31	SA	8260B
1,1,2,2-Tetrachloroethane	ND		10.0	ug/kg	1	5030A	09/17/2021 19:31	SA	8260B
Tetrachloroethene	ND		10.0	ug/kg	1	5030A	09/17/2021 19:31	SA	8260B
Toluene	ND		2.00	ug/kg	1	5030A	09/17/2021 19:31	SA	8260B
1,2,3-Trichlorobenzene	ND		10.0	ug/kg	1	5030A	09/17/2021 19:31	SA	8260B
1,2,4-Trichlorobenzene	ND		10.0	ug/kg	1	5030A	09/17/2021 19:31	SA	8260B
1,1,1-Trichloroethane	ND		10.0	ug/kg	1	5030A	09/17/2021 19:31	SA	8260B
1,1,2-Trichloroethane	ND		10.0	ug/kg	1	5030A	09/17/2021 19:31	SA	8260B
Trichloroethene	ND		10.0	ug/kg	1	5030A	09/17/2021 19:31	SA	8260B
Trichlorofluoromethane	ND		10.0	ug/kg	1	5030A	09/17/2021 19:31	SA	8260B
1,2,3-Trichloropropane	ND		10.0	ug/kg	1	5030A	09/17/2021 19:31	SA	8260B
1,2,4-Trimethylbenzene	ND		10.0	ug/kg	1	5030A	09/17/2021 19:31	SA	8260B
1,3,5- Trimethylbenzene	ND		10.0	ug/kg	1	5030A	09/17/2021 19:31	SA	8260B
Vinyl acetate	ND		50.0	ug/kg	1	5030A	09/17/2021 19:31	SA	8260B
Vinyl chloride	ND		30.0	ug/kg	1	5030A	09/17/2021 19:31	SA	8260B
m,p-Xylenes	ND		4.00	ug/kg	1	5030A	09/17/2021 19:31	SA	8260B
o-Xylene	ND		2.00	ug/kg	1	5030A	09/17/2021 19:31	SA	8260B
Surrogate: 4-Bromofluorobenzene			*103 %*		*70-120*	5030A	09/17/2021 19:31	SA	*8260B*
Surrogate: Dibromofluoromethane			*74.0 %*		*70-120*	5030A	09/17/2021 19:31	SA	*8260B*
Surrogate: Toluene-d8			*97.8 %*		*70-120*	5030A	09/17/2021 19:31	SA	*8260B*

Analytical Results

Client Sample ID: MSP-9

Laboratory Sample ID: 2109115-09 (Solid)

Analyte	Result	Notes	PQL	Units	Dilution	Prep Method	Analyzed	Analyst	Method
Total Mercury (CVAA)				Batch ID:	BI10527		Prepared: 09/17/2021 14:05		
Mercury	**0.0714**		0.0500	mg/kg	1	7471A	09/20/2021 11:25	LVE	7471A

The results in this report apply to the samples analyzed in accordance with the chain of custody document. This analytical report must be reproduced in its entirety.

Amolk Brar, Lab Director

American Scientific Laboratories, LLC
Environmental Testing Services
2520 N. San Fernando Road, LA CA 90065 Tel: (323) 223-9700 • Fax: (323) 223-9500

Kroner Environmental Services, Inc.	Project: Regional Connector Mission Yard	Work Order No: 2109115
10801 National Blvd. # 415	Project Number: [none]	**Reported:**
Los Angeles CA, 90064	Project Manager: Kurt Kroner	09/20/2021 17:20

Analytical Results

Client Sample ID: MSP-9

Laboratory Sample ID: 2109115-09 (Solid)

Analyte	Result	Notes	PQL	Units	Dilution	Prep Method	Analyzed	Analyst	Method
Total ICP Metals				Batch ID:	BI10526		Prepared: 09/17/2021 14:59		
Antimony	ND		0.500	mg/kg	1	3050B	09/20/2021 13:50	LVE	SW846 6010B
Arsenic	**1.05**		0.250	mg/kg	1	3050B	09/20/2021 13:50	LVE	SW846 6010B
Barium	**56.9**		0.500	mg/kg	1	3050B	09/20/2021 13:50	LVE	SW846 6010B
Beryllium	ND		0.500	mg/kg	1	3050B	09/20/2021 13:50	LVE	SW846 6010B
Cadmium	**0.853**		0.500	mg/kg	1	3050B	09/20/2021 13:50	LVE	SW846 6010B
Chromium	**7.44**		0.500	mg/kg	1	3050B	09/20/2021 13:50	LVE	SW846 6010B
Cobalt	**4.79**		0.500	mg/kg	1	3050B	09/20/2021 13:50	LVE	SW846 6010B
Copper	**9.72**		0.500	mg/kg	1	3050B	09/20/2021 13:50	LVE	SW846 6010B
Lead	**7.04**		0.250	mg/kg	1	3050B	09/20/2021 13:50	LVE	SW846 6010B
Molybdenum	ND		0.500	mg/kg	1	3050B	09/20/2021 13:50	LVE	SW846 6010B
Nickel	**5.32**		0.500	mg/kg	1	3050B	09/20/2021 13:50	LVE	SW846 6010B
Selenium	ND		0.500	mg/kg	1	3050B	09/20/2021 13:50	LVE	SW846 6010B
Silver	ND		0.500	mg/kg	1	3050B	09/20/2021 13:50	LVE	SW846 6010B
Thallium	ND		0.500	mg/kg	1	3050B	09/20/2021 13:50	LVE	SW846 6010B
Vanadium	**21.5**		0.500	mg/kg	1	3050B	09/20/2021 13:50	LVE	SW846 6010B
Zinc	**43.1**		0.500	mg/kg	1	3050B	09/20/2021 13:50	LVE	SW846 6010B
Total Petroleum Hydrocarbons(TPH-g)				Batch ID:	BI10496		Prepared: 09/17/2021 09:00		
Gasoline Range Organics	ND		500	ug/kg	1	5030A	09/17/2021 22:48	SA	8015B
Surrogate: Bromofluorobenzene			*86.4 %*		*70-120*	5030A	09/17/2021 22:48	SA	*8015B*
Total Petroleum Hydrocarbons(TPH DROORO)				Batch ID:	BI10510		Prepared: 09/17/2021 09:00		
Diesel range organics	**74.0**		10.0	mg/kg	1	3550B	09/17/2021 16:56	DWI	8015B
Oil Range Organics	**57.0**		50.0	mg/kg	1	3550B	09/17/2021 16:56	DWI	8015B
Surrogate: Chlorobenzene			*98.9 %*		*70-120*	3550B	09/17/2021 16:56	DWI	*8015B*

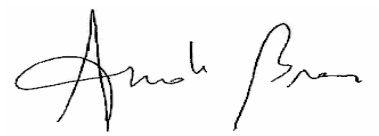

The results in this report apply to the samples analyzed in accordance with the chain of custody document. This analytical report must be reproduced in its entirety.

Amolk Brar, Lab Director

American Scientific Laboratories, LLC
Environmental Testing Services
2520 N. San Fernando Road, LA CA 90065 Tel: (323) 223-9700 • Fax: (323) 223-9500

Kroner Environmental Services, Inc.	Project: Regional Connector Mission Yard	Work Order No: 2109115
10801 National Blvd. # 415	Project Number: [none]	**Reported:**
Los Angeles CA, 90064	Project Manager: Kurt Kroner	09/20/2021 17:20

Analytical Results

Client Sample ID: MSP-9

Laboratory Sample ID: 2109115-09 (Solid)

Analyte	Result	Notes	PQL	Units	Dilution	Prep Method	Analyzed	Analyst	Method
Volatile Organic Compounds				Batch ID:	BI10495		Prepared: 09/17/2021 09:00		
Acetone	ND		50.0	ug/kg	1	5030A	09/17/2021 22:18	SA	8260B
Benzene	ND		2.00	ug/kg	1	5030A	09/17/2021 22:18	SA	8260B
Bromobenzene	ND		10.0	ug/kg	1	5030A	09/17/2021 22:18	SA	8260B
Bromochloromethane	ND		10.0	ug/kg	1	5030A	09/17/2021 22:18	SA	8260B
Bromodichloromethane	ND		10.0	ug/kg	1	5030A	09/17/2021 22:18	SA	8260B
Bromoform	ND		50.0	ug/kg	1	5030A	09/17/2021 22:18	SA	8260B
Bromomethane	ND		30.0	ug/kg	1	5030A	09/17/2021 22:18	SA	8260B
2-Butanone	ND		50.0	ug/kg	1	5030A	09/17/2021 22:18	SA	8260B
n-Butylbenzene	ND		10.0	ug/kg	1	5030A	09/17/2021 22:18	SA	8260B
sec-Butylbenzene	ND		10.0	ug/kg	1	5030A	09/17/2021 22:18	SA	8260B
tert-Butylbenzene	ND		10.0	ug/kg	1	5030A	09/17/2021 22:18	SA	8260B
Carbon disulfide	ND		10.0	ug/kg	1	5030A	09/17/2021 22:18	SA	8260B
Carbon tetrachloride	ND		10.0	ug/kg	1	5030A	09/17/2021 22:18	SA	8260B
Chlorobenzene	ND		10.0	ug/kg	1	5030A	09/17/2021 22:18	SA	8260B
Chloroethane	ND		30.0	ug/kg	1	5030A	09/17/2021 22:18	SA	8260B
2-Chloroethylvinyl Ether	ND		50.0	ug/kg	1	5030A	09/17/2021 22:18	SA	8260B
Chloroform	ND		10.0	ug/kg	1	5030A	09/17/2021 22:18	SA	8260B
Chloromethane	ND		30.0	ug/kg	1	5030A	09/17/2021 22:18	SA	8260B
4-Chlorotoluene	ND		10.0	ug/kg	1	5030A	09/17/2021 22:18	SA	8260B
2-Chlorotoluene	ND		10.0	ug/kg	1	5030A	09/17/2021 22:18	SA	8260B
1,2-Dibromo-3-chloropropane	ND		50.0	ug/kg	1	5030A	09/17/2021 22:18	SA	8260B
Dibromochloromethane	ND		10.0	ug/kg	1	5030A	09/17/2021 22:18	SA	8260B
1,2-Dibromoethane	ND		10.0	ug/kg	1	5030A	09/17/2021 22:18	SA	8260B
Dibromomethane	ND		10.0	ug/kg	1	5030A	09/17/2021 22:18	SA	8260B
1,2-Dichlorobenzene	ND		10.0	ug/kg	1	5030A	09/17/2021 22:18	SA	8260B
1,3-Dichlorobenzene	ND		10.0	ug/kg	1	5030A	09/17/2021 22:18	SA	8260B
1,4-Dichlorobenzene	ND		10.0	ug/kg	1	5030A	09/17/2021 22:18	SA	8260B
Dichlorodifluoromethane	ND		30.0	ug/kg	1	5030A	09/17/2021 22:18	SA	8260B
1,1-Dichloroethane	ND		10.0	ug/kg	1	5030A	09/17/2021 22:18	SA	8260B
1,2-Dichloroethane	ND		10.0	ug/kg	1	5030A	09/17/2021 22:18	SA	8260B
1,1-Dichloroethene	ND		10.0	ug/kg	1	5030A	09/17/2021 22:18	SA	8260B
cis-1,2-Dichloroethene	ND		10.0	ug/kg	1	5030A	09/17/2021 22:18	SA	8260B
trans-1,2-Dichloroethene	ND		10.0	ug/kg	1	5030A	09/17/2021 22:18	SA	8260B
1,1-Dichloropropene	ND		10.0	ug/kg	1	5030A	09/17/2021 22:18	SA	8260B
1,2-Dichloropropane	ND		10.0	ug/kg	1	5030A	09/17/2021 22:18	SA	8260B
1,3-Dichloropropane	ND		10.0	ug/kg	1	5030A	09/17/2021 22:18	SA	8260B
2,2-Dichloropropane	ND		10.0	ug/kg	1	5030A	09/17/2021 22:18	SA	8260B
cis-1,3-Dichloropropene	ND		10.0	ug/kg	1	5030A	09/17/2021 22:18	SA	8260B
trans-1,3-Dichloropropene	ND		10.0	ug/kg	1	5030A	09/17/2021 22:18	SA	8260B
Ethylbenzene	ND		2.00	ug/kg	1	5030A	09/17/2021 22:18	SA	8260B

The results in this report apply to the samples analyzed in accordance with the chain of custody document. This analytical report must be reproduced in its entirety.

Amolk Brar, Lab Director

American Scientific Laboratories, LLC
Environmental Testing Services
2520 N. San Fernando Road, LA CA 90065 Tel: (323) 223-9700 • Fax: (323) 223-9500

Kroner Environmental Services, Inc.	Project: Regional Connector Mission Yard	Work Order No: 2109115
10801 National Blvd. # 415	Project Number: [none]	**Reported:**
Los Angeles CA, 90064	Project Manager: Kurt Kroner	09/20/2021 17:20

Analytical Results

Client Sample ID: MSP-9

Laboratory Sample ID: 2109115-09 (Solid)

Analyte	Result	Notes	PQL	Units	Dilution	Prep Method	Analyzed	Analyst	Method
Volatile Organic Compounds				Batch ID:	BI10495		Prepared: 09/17/2021 09:00		
Hexachlorobutadiene	ND		30.0	ug/kg	1	5030A	09/17/2021 22:18	SA	8260B
2-Hexanone	ND		50.0	ug/kg	1	5030A	09/17/2021 22:18	SA	8260B
Isopropylbenzene	ND		10.0	ug/kg	1	5030A	09/17/2021 22:18	SA	8260B
p-Isopropyltoluene	ND		10.0	ug/kg	1	5030A	09/17/2021 22:18	SA	8260B
Methyl tert-Butyl Ether (MTBE)	ND		5.00	ug/kg	1	5030A	09/17/2021 22:18	SA	8260B
4-Methyl-2-pentanone (MIBK)	ND		50.0	ug/kg	1	5030A	09/17/2021 22:18	SA	8260B
Methylene chloride	ND		50.0	ug/kg	1	5030A	09/17/2021 22:18	SA	8260B
Naphthalene	ND		10.0	ug/kg	1	5030A	09/17/2021 22:18	SA	8260B
n-Propylbenzene	ND		10.0	ug/kg	1	5030A	09/17/2021 22:18	SA	8260B
Styrene	ND		10.0	ug/kg	1	5030A	09/17/2021 22:18	SA	8260B
1,1,1,2-Tetrachloroethane	ND		10.0	ug/kg	1	5030A	09/17/2021 22:18	SA	8260B
1,1,2,2-Tetrachloroethane	ND		10.0	ug/kg	1	5030A	09/17/2021 22:18	SA	8260B
Tetrachloroethene	ND		10.0	ug/kg	1	5030A	09/17/2021 22:18	SA	8260B
Toluene	ND		2.00	ug/kg	1	5030A	09/17/2021 22:18	SA	8260B
1,2,3-Trichlorobenzene	ND		10.0	ug/kg	1	5030A	09/17/2021 22:18	SA	8260B
1,2,4-Trichlorobenzene	ND		10.0	ug/kg	1	5030A	09/17/2021 22:18	SA	8260B
1,1,1-Trichloroethane	ND		10.0	ug/kg	1	5030A	09/17/2021 22:18	SA	8260B
1,1,2-Trichloroethane	ND		10.0	ug/kg	1	5030A	09/17/2021 22:18	SA	8260B
Trichloroethene	ND		10.0	ug/kg	1	5030A	09/17/2021 22:18	SA	8260B
Trichlorofluoromethane	ND		10.0	ug/kg	1	5030A	09/17/2021 22:18	SA	8260B
1,2,3-Trichloropropane	ND		10.0	ug/kg	1	5030A	09/17/2021 22:18	SA	8260B
1,2,4-Trimethylbenzene	ND		10.0	ug/kg	1	5030A	09/17/2021 22:18	SA	8260B
1,3,5- Trimethylbenzene	ND		10.0	ug/kg	1	5030A	09/17/2021 22:18	SA	8260B
Vinyl acetate	ND		50.0	ug/kg	1	5030A	09/17/2021 22:18	SA	8260B
Vinyl chloride	ND		30.0	ug/kg	1	5030A	09/17/2021 22:18	SA	8260B
m,p-Xylenes	ND		4.00	ug/kg	1	5030A	09/17/2021 22:18	SA	8260B
o-Xylene	ND		2.00	ug/kg	1	5030A	09/17/2021 22:18	SA	8260B
Surrogate: 4-Bromofluorobenzene			*102 %*		*70-120*	5030A	09/17/2021 22:18	SA	*8260B*
Surrogate: Dibromofluoromethane			*86.1 %*		*70-120*	5030A	09/17/2021 22:18	SA	*8260B*
Surrogate: Toluene-d8			*96.2 %*		*70-120*	5030A	09/17/2021 22:18	SA	*8260B*

Analytical Results

Client Sample ID: MSP-10

Laboratory Sample ID: 2109115-10 (Solid)

Analyte	Result	Notes	PQL	Units	Dilution	Prep Method	Analyzed	Analyst	Method
Total Mercury (CVAA)				Batch ID:	BI10527		Prepared: 09/17/2021 14:05		
Mercury	ND		0.0500	mg/kg	1	7471A	09/20/2021 11:25	LVE	7471A

The results in this report apply to the samples analyzed in accordance with the chain of custody document. This analytical report must be reproduced in its entirety.

Amolk Brar, Lab Director

American Scientific Laboratories, LLC
Environmental Testing Services
2520 N. San Fernando Road, LA CA 90065 Tel: (323) 223-9700 • Fax: (323) 223-9500

Kroner Environmental Services, Inc.	Project: Regional Connector Mission Yard	Work Order No: 2109115
10801 National Blvd. # 415	Project Number: [none]	**Reported:**
Los Angeles CA, 90064	Project Manager: Kurt Kroner	09/20/2021 17:20

Analytical Results

Client Sample ID: MSP-10

Laboratory Sample ID: 2109115-10 (Solid)

Analyte	Result	Notes	PQL	Units	Dilution	Prep Method	Analyzed	Analyst	Method
Total ICP Metals				Batch ID:	BI10526		Prepared: 09/17/2021 14:59		
Antimony	ND		0.500	mg/kg	1	3050B	09/20/2021 13:50	LVE	SW846 6010B
Arsenic	**2.19**		0.250	mg/kg	1	3050B	09/20/2021 13:50	LVE	SW846 6010B
Barium	**85.6**		0.500	mg/kg	1	3050B	09/20/2021 13:50	LVE	SW846 6010B
Beryllium	ND		0.500	mg/kg	1	3050B	09/20/2021 13:50	LVE	SW846 6010B
Cadmium	**1.10**		0.500	mg/kg	1	3050B	09/20/2021 13:50	LVE	SW846 6010B
Chromium	**8.75**		0.500	mg/kg	1	3050B	09/20/2021 13:50	LVE	SW846 6010B
Cobalt	**5.94**		0.500	mg/kg	1	3050B	09/20/2021 13:50	LVE	SW846 6010B
Copper	**13.1**		0.500	mg/kg	1	3050B	09/20/2021 13:50	LVE	SW846 6010B
Lead	**12.2**		0.250	mg/kg	1	3050B	09/20/2021 13:50	LVE	SW846 6010B
Molybdenum	ND		0.500	mg/kg	1	3050B	09/20/2021 13:50	LVE	SW846 6010B
Nickel	**6.44**		0.500	mg/kg	1	3050B	09/20/2021 13:50	LVE	SW846 6010B
Selenium	ND		0.500	mg/kg	1	3050B	09/20/2021 13:50	LVE	SW846 6010B
Silver	ND		0.500	mg/kg	1	3050B	09/20/2021 13:50	LVE	SW846 6010B
Thallium	ND		0.500	mg/kg	1	3050B	09/20/2021 13:50	LVE	SW846 6010B
Vanadium	**24.6**		0.500	mg/kg	1	3050B	09/20/2021 13:50	LVE	SW846 6010B
Zinc	**62.2**		0.500	mg/kg	1	3050B	09/20/2021 13:50	LVE	SW846 6010B
Total Petroleum Hydrocarbons(TPH-g)				Batch ID:	BI10496		Prepared: 09/17/2021 09:00		
Gasoline Range Organics	ND		500	ug/kg	1	5030A	09/17/2021 23:16	SA	8015B
Surrogate: Bromofluorobenzene			*85.1 %*		*70-120*	5030A	09/17/2021 23:16	SA	*8015B*
Total Petroleum Hydrocarbons(TPH DROORO)				Batch ID:	BI10511		Prepared: 09/17/2021 09:00		
Diesel range organics	**126**		10.0	mg/kg	1	3550B	09/17/2021 15:34	DWI	8015B
Oil Range Organics	**122**		50.0	mg/kg	1	3550B	09/17/2021 15:34	DWI	8015B
Surrogate: Chlorobenzene			*106 %*		*70-120*	3550B	09/17/2021 15:34	DWI	*8015B*

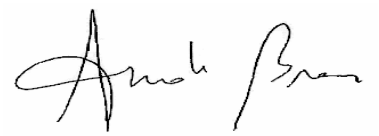

The results in this report apply to the samples analyzed in accordance with the chain of custody document. This analytical report must be reproduced in its entirety.

Amolk Brar, Lab Director

American Scientific Laboratories, LLC
Environmental Testing Services
2520 N. San Fernando Road, LA CA 90065 Tel: (323) 223-9700 • Fax: (323) 223-9500

Kroner Environmental Services, Inc.	Project: Regional Connector Mission Yard	Work Order No: 2109115
10801 National Blvd. # 415	Project Number: [none]	**Reported:**
Los Angeles CA, 90064	Project Manager: Kurt Kroner	09/20/2021 17:20

Analytical Results

Client Sample ID: MSP-10

Laboratory Sample ID: 2109115-10 (Solid)

Analyte	Result	Notes	PQL	Units	Dilution	Prep Method	Analyzed	Analyst	Method
Volatile Organic Compounds				Batch ID:	BI10495		Prepared: 09/17/2021 12:00		
Acetone	ND		50.0	ug/kg	1	5030A	09/17/2021 22:46	SA	8260B
Benzene	ND		2.00	ug/kg	1	5030A	09/17/2021 22:46	SA	8260B
Bromobenzene	ND		10.0	ug/kg	1	5030A	09/17/2021 22:46	SA	8260B
Bromochloromethane	ND		10.0	ug/kg	1	5030A	09/17/2021 22:46	SA	8260B
Bromodichloromethane	ND		10.0	ug/kg	1	5030A	09/17/2021 22:46	SA	8260B
Bromoform	ND		50.0	ug/kg	1	5030A	09/17/2021 22:46	SA	8260B
Bromomethane	ND		30.0	ug/kg	1	5030A	09/17/2021 22:46	SA	8260B
2-Butanone	ND		50.0	ug/kg	1	5030A	09/17/2021 22:46	SA	8260B
n-Butylbenzene	ND		10.0	ug/kg	1	5030A	09/17/2021 22:46	SA	8260B
sec-Butylbenzene	ND		10.0	ug/kg	1	5030A	09/17/2021 22:46	SA	8260B
tert-Butylbenzene	ND		10.0	ug/kg	1	5030A	09/17/2021 22:46	SA	8260B
Carbon disulfide	ND		10.0	ug/kg	1	5030A	09/17/2021 22:46	SA	8260B
Carbon tetrachloride	ND		10.0	ug/kg	1	5030A	09/17/2021 22:46	SA	8260B
Chlorobenzene	ND		10.0	ug/kg	1	5030A	09/17/2021 22:46	SA	8260B
Chloroethane	ND		30.0	ug/kg	1	5030A	09/17/2021 22:46	SA	8260B
2-Chloroethylvinyl Ether	ND		50.0	ug/kg	1	5030A	09/17/2021 22:46	SA	8260B
Chloroform	ND		10.0	ug/kg	1	5030A	09/17/2021 22:46	SA	8260B
Chloromethane	ND		30.0	ug/kg	1	5030A	09/17/2021 22:46	SA	8260B
4-Chlorotoluene	ND		10.0	ug/kg	1	5030A	09/17/2021 22:46	SA	8260B
2-Chlorotoluene	ND		10.0	ug/kg	1	5030A	09/17/2021 22:46	SA	8260B
1,2-Dibromo-3-chloropropane	ND		50.0	ug/kg	1	5030A	09/17/2021 22:46	SA	8260B
Dibromochloromethane	ND		10.0	ug/kg	1	5030A	09/17/2021 22:46	SA	8260B
1,2-Dibromoethane	ND		10.0	ug/kg	1	5030A	09/17/2021 22:46	SA	8260B
Dibromomethane	ND		10.0	ug/kg	1	5030A	09/17/2021 22:46	SA	8260B
1,2-Dichlorobenzene	ND		10.0	ug/kg	1	5030A	09/17/2021 22:46	SA	8260B
1,3-Dichlorobenzene	ND		10.0	ug/kg	1	5030A	09/17/2021 22:46	SA	8260B
1,4-Dichlorobenzene	ND		10.0	ug/kg	1	5030A	09/17/2021 22:46	SA	8260B
Dichlorodifluoromethane	ND		30.0	ug/kg	1	5030A	09/17/2021 22:46	SA	8260B
1,1-Dichloroethane	ND		10.0	ug/kg	1	5030A	09/17/2021 22:46	SA	8260B
1,2-Dichloroethane	ND		10.0	ug/kg	1	5030A	09/17/2021 22:46	SA	8260B
1,1-Dichloroethene	ND		10.0	ug/kg	1	5030A	09/17/2021 22:46	SA	8260B
cis-1,2-Dichloroethene	ND		10.0	ug/kg	1	5030A	09/17/2021 22:46	SA	8260B
trans-1,2-Dichloroethene	ND		10.0	ug/kg	1	5030A	09/17/2021 22:46	SA	8260B
1,1-Dichloropropene	ND		10.0	ug/kg	1	5030A	09/17/2021 22:46	SA	8260B
1,2-Dichloropropane	ND		10.0	ug/kg	1	5030A	09/17/2021 22:46	SA	8260B
1,3-Dichloropropane	ND		10.0	ug/kg	1	5030A	09/17/2021 22:46	SA	8260B
2,2-Dichloropropane	ND		10.0	ug/kg	1	5030A	09/17/2021 22:46	SA	8260B
cis-1,3-Dichloropropene	ND		10.0	ug/kg	1	5030A	09/17/2021 22:46	SA	8260B
trans-1,3-Dichloropropene	ND		10.0	ug/kg	1	5030A	09/17/2021 22:46	SA	8260B
Ethylbenzene	ND		2.00	ug/kg	1	5030A	09/17/2021 22:46	SA	8260B

The results in this report apply to the samples analyzed in accordance with the chain of custody document. This analytical report must be reproduced in its entirety.

Amolk Brar, Lab Director

American Scientific Laboratories, LLC
Environmental Testing Services
2520 N. San Fernando Road, LA CA 90065 Tel: (323) 223-9700 • Fax: (323) 223-9500

Kroner Environmental Services, Inc.	Project: Regional Connector Mission Yard	Work Order No: 2109115
10801 National Blvd. # 415	Project Number: [none]	**Reported:**
Los Angeles CA, 90064	Project Manager: Kurt Kroner	09/20/2021 17:20

Analytical Results

Client Sample ID: MSP-10

Laboratory Sample ID: 2109115-10 (Solid)

Analyte	Result	Notes	PQL	Units	Dilution	Prep Method	Analyzed	Analyst	Method
Volatile Organic Compounds				Batch ID:	BI10495		Prepared: 09/17/2021 12:00		
Hexachlorobutadiene	ND		30.0	ug/kg	1	5030A	09/17/2021 22:46	SA	8260B
2-Hexanone	ND		50.0	ug/kg	1	5030A	09/17/2021 22:46	SA	8260B
Isopropylbenzene	ND		10.0	ug/kg	1	5030A	09/17/2021 22:46	SA	8260B
p-Isopropyltoluene	ND		10.0	ug/kg	1	5030A	09/17/2021 22:46	SA	8260B
Methyl tert-Butyl Ether (MTBE)	ND		5.00	ug/kg	1	5030A	09/17/2021 22:46	SA	8260B
4-Methyl-2-pentanone (MIBK)	ND		50.0	ug/kg	1	5030A	09/17/2021 22:46	SA	8260B
Methylene chloride	ND		50.0	ug/kg	1	5030A	09/17/2021 22:46	SA	8260B
Naphthalene	ND		10.0	ug/kg	1	5030A	09/17/2021 22:46	SA	8260B
n-Propylbenzene	ND		10.0	ug/kg	1	5030A	09/17/2021 22:46	SA	8260B
Styrene	ND		10.0	ug/kg	1	5030A	09/17/2021 22:46	SA	8260B
1,1,1,2-Tetrachloroethane	ND		10.0	ug/kg	1	5030A	09/17/2021 22:46	SA	8260B
1,1,2,2-Tetrachloroethane	ND		10.0	ug/kg	1	5030A	09/17/2021 22:46	SA	8260B
Tetrachloroethene	ND		10.0	ug/kg	1	5030A	09/17/2021 22:46	SA	8260B
Toluene	ND		2.00	ug/kg	1	5030A	09/17/2021 22:46	SA	8260B
1,2,3-Trichlorobenzene	ND		10.0	ug/kg	1	5030A	09/17/2021 22:46	SA	8260B
1,2,4-Trichlorobenzene	ND		10.0	ug/kg	1	5030A	09/17/2021 22:46	SA	8260B
1,1,1-Trichloroethane	ND		10.0	ug/kg	1	5030A	09/17/2021 22:46	SA	8260B
1,1,2-Trichloroethane	ND		10.0	ug/kg	1	5030A	09/17/2021 22:46	SA	8260B
Trichloroethene	ND		10.0	ug/kg	1	5030A	09/17/2021 22:46	SA	8260B
Trichlorofluoromethane	ND		10.0	ug/kg	1	5030A	09/17/2021 22:46	SA	8260B
1,2,3-Trichloropropane	ND		10.0	ug/kg	1	5030A	09/17/2021 22:46	SA	8260B
1,2,4-Trimethylbenzene	ND		10.0	ug/kg	1	5030A	09/17/2021 22:46	SA	8260B
1,3,5- Trimethylbenzene	ND		10.0	ug/kg	1	5030A	09/17/2021 22:46	SA	8260B
Vinyl acetate	ND		50.0	ug/kg	1	5030A	09/17/2021 22:46	SA	8260B
Vinyl chloride	ND		30.0	ug/kg	1	5030A	09/17/2021 22:46	SA	8260B
m,p-Xylenes	ND		4.00	ug/kg	1	5030A	09/17/2021 22:46	SA	8260B
o-Xylene	ND		2.00	ug/kg	1	5030A	09/17/2021 22:46	SA	8260B
Surrogate: 4-Bromofluorobenzene			*98.5 %*		*70-120*	5030A	09/17/2021 22:46	SA	*8260B*
Surrogate: Dibromofluoromethane		*S-04*	*38.1 %*		*70-120*	5030A	09/17/2021 22:46	SA	*8260B*
Surrogate: Toluene-d8			*94.2 %*		*70-120*	5030A	09/17/2021 22:46	SA	*8260B*

Analytical Results

Client Sample ID: MSP-11

Laboratory Sample ID: 2109115-11 (Solid)

Analyte	Result	Notes	PQL	Units	Dilution	Prep Method	Analyzed	Analyst	Method
Total Mercury (CVAA)				Batch ID:	BI10527		Prepared: 09/17/2021 14:05		
Mercury	**0.0561**		0.0500	mg/kg	1	7471A	09/20/2021 11:25	LVE	7471A

The results in this report apply to the samples analyzed in accordance with the chain of custody document. This analytical report must be reproduced in its entirety.

Amolk Brar, Lab Director

American Scientific Laboratories, LLC
Environmental Testing Services
2520 N. San Fernando Road, LA CA 90065 Tel: (323) 223-9700 • Fax: (323) 223-9500

Kroner Environmental Services, Inc.	Project: Regional Connector Mission Yard	Work Order No: 2109115
10801 National Blvd. # 415	Project Number: [none]	**Reported:**
Los Angeles CA, 90064	Project Manager: Kurt Kroner	09/20/2021 17:20

Analytical Results

Client Sample ID: MSP-11

Laboratory Sample ID: 2109115-11 (Solid)

Analyte	Result	Notes	PQL	Units	Dilution	Prep Method	Analyzed	Analyst	Method
Total ICP Metals				Batch ID:	BI10526		Prepared: 09/17/2021 14:59		
Antimony	ND		0.500	mg/kg	1	3050B	09/20/2021 13:50	LVE	SW846 6010B
Arsenic	**0.955**		0.250	mg/kg	1	3050B	09/20/2021 13:50	LVE	SW846 6010B
Barium	**55.4**		0.500	mg/kg	1	3050B	09/20/2021 13:50	LVE	SW846 6010B
Beryllium	ND		0.500	mg/kg	1	3050B	09/20/2021 13:50	LVE	SW846 6010B
Cadmium	**0.900**		0.500	mg/kg	1	3050B	09/20/2021 13:50	LVE	SW846 6010B
Chromium	**6.56**		0.500	mg/kg	1	3050B	09/20/2021 13:50	LVE	SW846 6010B
Cobalt	**4.61**		0.500	mg/kg	1	3050B	09/20/2021 13:50	LVE	SW846 6010B
Copper	**8.37**		0.500	mg/kg	1	3050B	09/20/2021 13:50	LVE	SW846 6010B
Lead	**6.81**		0.250	mg/kg	1	3050B	09/20/2021 13:50	LVE	SW846 6010B
Molybdenum	ND		0.500	mg/kg	1	3050B	09/20/2021 13:50	LVE	SW846 6010B
Nickel	**4.57**		0.500	mg/kg	1	3050B	09/20/2021 13:50	LVE	SW846 6010B
Selenium	ND		0.500	mg/kg	1	3050B	09/20/2021 13:50	LVE	SW846 6010B
Silver	ND		0.500	mg/kg	1	3050B	09/20/2021 13:50	LVE	SW846 6010B
Thallium	ND		0.500	mg/kg	1	3050B	09/20/2021 13:50	LVE	SW846 6010B
Vanadium	**20.2**		0.500	mg/kg	1	3050B	09/20/2021 13:50	LVE	SW846 6010B
Zinc	**42.6**		0.500	mg/kg	1	3050B	09/20/2021 13:50	LVE	SW846 6010B
Total Petroleum Hydrocarbons(TPH-g)				Batch ID:	BI10496		Prepared: 09/17/2021 09:00		
Gasoline Range Organics	ND		500	ug/kg	1	5030A	09/17/2021 23:45	SA	8015B
Surrogate: Bromofluorobenzene			*90.9 %*		*70-120*	5030A	09/17/2021 23:45	SA	*8015B*
Total Petroleum Hydrocarbons(TPH DROORO)				Batch ID:	BI10510		Prepared: 09/17/2021 09:00		
Diesel range organics	**92.0**		10.0	mg/kg	1	3550B	09/17/2021 17:39	DWI	8015B
Oil Range Organics	ND		50.0	mg/kg	1	3550B	09/17/2021 17:39	DWI	8015B
Surrogate: Chlorobenzene			*95.7 %*		*70-120*	3550B	09/17/2021 17:39	DWI	*8015B*

The results in this report apply to the samples analyzed in accordance with the chain of custody document. This analytical report must be reproduced in its entirety.

Amolk Brar, Lab Director

American Scientific Laboratories, LLC
Environmental Testing Services
2520 N. San Fernando Road, LA CA 90065 Tel: (323) 223-9700 • Fax: (323) 223-9500

Kroner Environmental Services, Inc.	Project: Regional Connector Mission Yard	Work Order No: 2109115
10801 National Blvd. # 415	Project Number: [none]	**Reported:**
Los Angeles CA, 90064	Project Manager: Kurt Kroner	09/20/2021 17:20

Analytical Results

Client Sample ID: MSP-11

Laboratory Sample ID: 2109115-11 (Solid)

Analyte	Result	Notes	PQL	Units	Dilution	Prep Method	Analyzed	Analyst	Method
Volatile Organic Compounds				Batch ID:	BI10495		Prepared: 09/17/2021 09:00		
Acetone	ND		50.0	ug/kg	1	5030A	09/17/2021 23:14	SA	8260B
Benzene	ND		2.00	ug/kg	1	5030A	09/17/2021 23:14	SA	8260B
Bromobenzene	ND		10.0	ug/kg	1	5030A	09/17/2021 23:14	SA	8260B
Bromochloromethane	ND		10.0	ug/kg	1	5030A	09/17/2021 23:14	SA	8260B
Bromodichloromethane	ND		10.0	ug/kg	1	5030A	09/17/2021 23:14	SA	8260B
Bromoform	ND		50.0	ug/kg	1	5030A	09/17/2021 23:14	SA	8260B
Bromomethane	ND		30.0	ug/kg	1	5030A	09/17/2021 23:14	SA	8260B
2-Butanone	ND		50.0	ug/kg	1	5030A	09/17/2021 23:14	SA	8260B
n-Butylbenzene	ND		10.0	ug/kg	1	5030A	09/17/2021 23:14	SA	8260B
sec-Butylbenzene	ND		10.0	ug/kg	1	5030A	09/17/2021 23:14	SA	8260B
tert-Butylbenzene	ND		10.0	ug/kg	1	5030A	09/17/2021 23:14	SA	8260B
Carbon disulfide	ND		10.0	ug/kg	1	5030A	09/17/2021 23:14	SA	8260B
Carbon tetrachloride	ND		10.0	ug/kg	1	5030A	09/17/2021 23:14	SA	8260B
Chlorobenzene	ND		10.0	ug/kg	1	5030A	09/17/2021 23:14	SA	8260B
Chloroethane	ND		30.0	ug/kg	1	5030A	09/17/2021 23:14	SA	8260B
2-Chloroethylvinyl Ether	ND		50.0	ug/kg	1	5030A	09/17/2021 23:14	SA	8260B
Chloroform	ND		10.0	ug/kg	1	5030A	09/17/2021 23:14	SA	8260B
Chloromethane	ND		30.0	ug/kg	1	5030A	09/17/2021 23:14	SA	8260B
4-Chlorotoluene	ND		10.0	ug/kg	1	5030A	09/17/2021 23:14	SA	8260B
2-Chlorotoluene	ND		10.0	ug/kg	1	5030A	09/17/2021 23:14	SA	8260B
1,2-Dibromo-3-chloropropane	ND		50.0	ug/kg	1	5030A	09/17/2021 23:14	SA	8260B
Dibromochloromethane	ND		10.0	ug/kg	1	5030A	09/17/2021 23:14	SA	8260B
1,2-Dibromoethane	ND		10.0	ug/kg	1	5030A	09/17/2021 23:14	SA	8260B
Dibromomethane	ND		10.0	ug/kg	1	5030A	09/17/2021 23:14	SA	8260B
1,2-Dichlorobenzene	ND		10.0	ug/kg	1	5030A	09/17/2021 23:14	SA	8260B
1,3-Dichlorobenzene	ND		10.0	ug/kg	1	5030A	09/17/2021 23:14	SA	8260B
1,4-Dichlorobenzene	ND		10.0	ug/kg	1	5030A	09/17/2021 23:14	SA	8260B
Dichlorodifluoromethane	ND		30.0	ug/kg	1	5030A	09/17/2021 23:14	SA	8260B
1,1-Dichloroethane	ND		10.0	ug/kg	1	5030A	09/17/2021 23:14	SA	8260B
1,2-Dichloroethane	ND		10.0	ug/kg	1	5030A	09/17/2021 23:14	SA	8260B
1,1-Dichloroethene	ND		10.0	ug/kg	1	5030A	09/17/2021 23:14	SA	8260B
cis-1,2-Dichloroethene	ND		10.0	ug/kg	1	5030A	09/17/2021 23:14	SA	8260B
trans-1,2-Dichloroethene	ND		10.0	ug/kg	1	5030A	09/17/2021 23:14	SA	8260B
1,1-Dichloropropene	ND		10.0	ug/kg	1	5030A	09/17/2021 23:14	SA	8260B
1,2-Dichloropropane	ND		10.0	ug/kg	1	5030A	09/17/2021 23:14	SA	8260B
1,3-Dichloropropane	ND		10.0	ug/kg	1	5030A	09/17/2021 23:14	SA	8260B
2,2-Dichloropropane	ND		10.0	ug/kg	1	5030A	09/17/2021 23:14	SA	8260B
cis-1,3-Dichloropropene	ND		10.0	ug/kg	1	5030A	09/17/2021 23:14	SA	8260B
trans-1,3-Dichloropropene	ND		10.0	ug/kg	1	5030A	09/17/2021 23:14	SA	8260B
Ethylbenzene	ND		2.00	ug/kg	1	5030A	09/17/2021 23:14	SA	8260B

The results in this report apply to the samples analyzed in accordance with the chain of custody document. This analytical report must be reproduced in its entirety.

Amolk Brar, Lab Director

American Scientific Laboratories, LLC
Environmental Testing Services
2520 N. San Fernando Road, LA CA 90065 Tel: (323) 223-9700 • Fax: (323) 223-9500

Kroner Environmental Services, Inc.	Project: Regional Connector Mission Yard	Work Order No: 2109115
10801 National Blvd. # 415	Project Number: [none]	**Reported:**
Los Angeles CA, 90064	Project Manager: Kurt Kroner	09/20/2021 17:20

Analytical Results

Client Sample ID: MSP-11

Laboratory Sample ID: 2109115-11 (Solid)

Analyte	Result	Notes	PQL	Units	Dilution	Prep Method	Analyzed	Analyst	Method
Volatile Organic Compounds				Batch ID:	BI10495		Prepared: 09/17/2021 09:00		
Hexachlorobutadiene	ND		30.0	ug/kg	1	5030A	09/17/2021 23:14	SA	8260B
2-Hexanone	ND		50.0	ug/kg	1	5030A	09/17/2021 23:14	SA	8260B
Isopropylbenzene	ND		10.0	ug/kg	1	5030A	09/17/2021 23:14	SA	8260B
p-Isopropyltoluene	ND		10.0	ug/kg	1	5030A	09/17/2021 23:14	SA	8260B
Methyl tert-Butyl Ether (MTBE)	ND		5.00	ug/kg	1	5030A	09/17/2021 23:14	SA	8260B
4-Methyl-2-pentanone (MIBK)	ND		50.0	ug/kg	1	5030A	09/17/2021 23:14	SA	8260B
Methylene chloride	ND		50.0	ug/kg	1	5030A	09/17/2021 23:14	SA	8260B
Naphthalene	ND		10.0	ug/kg	1	5030A	09/17/2021 23:14	SA	8260B
n-Propylbenzene	ND		10.0	ug/kg	1	5030A	09/17/2021 23:14	SA	8260B
Styrene	ND		10.0	ug/kg	1	5030A	09/17/2021 23:14	SA	8260B
1,1,1,2-Tetrachloroethane	ND		10.0	ug/kg	1	5030A	09/17/2021 23:14	SA	8260B
1,1,2,2-Tetrachloroethane	ND		10.0	ug/kg	1	5030A	09/17/2021 23:14	SA	8260B
Tetrachloroethene	ND		10.0	ug/kg	1	5030A	09/17/2021 23:14	SA	8260B
Toluene	ND		2.00	ug/kg	1	5030A	09/17/2021 23:14	SA	8260B
1,2,3-Trichlorobenzene	ND		10.0	ug/kg	1	5030A	09/17/2021 23:14	SA	8260B
1,2,4-Trichlorobenzene	ND		10.0	ug/kg	1	5030A	09/17/2021 23:14	SA	8260B
1,1,1-Trichloroethane	ND		10.0	ug/kg	1	5030A	09/17/2021 23:14	SA	8260B
1,1,2-Trichloroethane	ND		10.0	ug/kg	1	5030A	09/17/2021 23:14	SA	8260B
Trichloroethene	ND		10.0	ug/kg	1	5030A	09/17/2021 23:14	SA	8260B
Trichlorofluoromethane	ND		10.0	ug/kg	1	5030A	09/17/2021 23:14	SA	8260B
1,2,3-Trichloropropane	ND		10.0	ug/kg	1	5030A	09/17/2021 23:14	SA	8260B
1,2,4-Trimethylbenzene	ND		10.0	ug/kg	1	5030A	09/17/2021 23:14	SA	8260B
1,3,5- Trimethylbenzene	ND		10.0	ug/kg	1	5030A	09/17/2021 23:14	SA	8260B
Vinyl acetate	ND		50.0	ug/kg	1	5030A	09/17/2021 23:14	SA	8260B
Vinyl chloride	ND		30.0	ug/kg	1	5030A	09/17/2021 23:14	SA	8260B
m,p-Xylenes	ND		4.00	ug/kg	1	5030A	09/17/2021 23:14	SA	8260B
o-Xylene	ND		2.00	ug/kg	1	5030A	09/17/2021 23:14	SA	8260B
Surrogate: 4-Bromofluorobenzene			*100 %*		*70-120*	5030A	09/17/2021 23:14	SA	*8260B*
Surrogate: Dibromofluoromethane			*82.9 %*		*70-120*	5030A	09/17/2021 23:14	SA	*8260B*
Surrogate: Toluene-d8			*97.0 %*		*70-120*	5030A	09/17/2021 23:14	SA	*8260B*

Analytical Results

Client Sample ID: MSP-12

Laboratory Sample ID: 2109115-12 (Solid)

Analyte	Result	Notes	PQL	Units	Dilution	Prep Method	Analyzed	Analyst	Method
Total Mercury (CVAA)				Batch ID:	BI10527		Prepared: 09/17/2021 14:05		
Mercury	**0.0563**		0.0500	mg/kg	1	7471A	09/20/2021 11:25	LVE	7471A

The results in this report apply to the samples analyzed in accordance with the chain of custody document. This analytical report must be reproduced in its entirety.

Amolk Brar, Lab Director

American Scientific Laboratories, LLC
Environmental Testing Services
2520 N. San Fernando Road, LA CA 90065 Tel: (323) 223-9700 • Fax: (323) 223-9500

Kroner Environmental Services, Inc.	Project: Regional Connector Mission Yard	Work Order No: 2109115
10801 National Blvd. # 415	Project Number: [none]	**Reported:**
Los Angeles CA, 90064	Project Manager: Kurt Kroner	09/20/2021 17:20

Analytical Results

Client Sample ID: MSP-12

Laboratory Sample ID: 2109115-12 (Solid)

Analyte	Result	Notes	PQL	Units	Dilution	Prep Method	Analyzed	Analyst	Method
Total ICP Metals				Batch ID:	BI10526		Prepared: 09/17/2021 14:59		
Antimony	ND		0.500	mg/kg	1	3050B	09/20/2021 13:50	LVE	SW846 6010B
Arsenic	**1.96**		0.250	mg/kg	1	3050B	09/20/2021 13:50	LVE	SW846 6010B
Barium	**71.8**		0.500	mg/kg	1	3050B	09/20/2021 13:50	LVE	SW846 6010B
Beryllium	ND		0.500	mg/kg	1	3050B	09/20/2021 13:50	LVE	SW846 6010B
Cadmium	**0.886**		0.500	mg/kg	1	3050B	09/20/2021 13:50	LVE	SW846 6010B
Chromium	**6.80**		0.500	mg/kg	1	3050B	09/20/2021 13:50	LVE	SW846 6010B
Cobalt	**5.12**		0.500	mg/kg	1	3050B	09/20/2021 13:50	LVE	SW846 6010B
Copper	**10.4**		0.500	mg/kg	1	3050B	09/20/2021 13:50	LVE	SW846 6010B
Lead	**8.72**		0.250	mg/kg	1	3050B	09/20/2021 13:50	LVE	SW846 6010B
Molybdenum	ND		0.500	mg/kg	1	3050B	09/20/2021 13:50	LVE	SW846 6010B
Nickel	**5.88**		0.500	mg/kg	1	3050B	09/20/2021 13:50	LVE	SW846 6010B
Selenium	ND		0.500	mg/kg	1	3050B	09/20/2021 13:50	LVE	SW846 6010B
Silver	ND		0.500	mg/kg	1	3050B	09/20/2021 13:50	LVE	SW846 6010B
Thallium	ND		0.500	mg/kg	1	3050B	09/20/2021 13:50	LVE	SW846 6010B
Vanadium	**20.2**		0.500	mg/kg	1	3050B	09/20/2021 13:50	LVE	SW846 6010B
Zinc	**53.8**		0.500	mg/kg	1	3050B	09/20/2021 13:50	LVE	SW846 6010B
Total Petroleum Hydrocarbons(TPH-g)				Batch ID:	BI10496		Prepared: 09/17/2021 09:00		
Gasoline Range Organics	ND		500	ug/kg	1	5030A	09/18/2021 00:14	SA	8015B
Surrogate: Bromofluorobenzene			*78.0 %*		*70-120*	5030A	09/18/2021 00:14	SA	*8015B*
Total Petroleum Hydrocarbons(TPH DROORO)				Batch ID:	BI10511		Prepared: 09/17/2021 09:00		
Diesel range organics	**584**		10.0	mg/kg	1	3550B	09/17/2021 16:15	DWI	8015B
Oil Range Organics	**270**		50.0	mg/kg	1	3550B	09/17/2021 16:15	DWI	8015B
Surrogate: Chlorobenzene			*108 %*		*70-120*	3550B	09/17/2021 16:15	DWI	*8015B*

The results in this report apply to the samples analyzed in accordance with the chain of custody document. This analytical report must be reproduced in its entirety.

Amolk Brar, Lab Director

American Scientific Laboratories, LLC
Environmental Testing Services
2520 N. San Fernando Road, LA CA 90065 Tel: (323) 223-9700 • Fax: (323) 223-9500

Kroner Environmental Services, Inc.	Project: Regional Connector Mission Yard	Work Order No: 2109115
10801 National Blvd. # 415	Project Number: [none]	**Reported:**
Los Angeles CA, 90064	Project Manager: Kurt Kroner	09/20/2021 17:20

Analytical Results

Client Sample ID: MSP-12

Laboratory Sample ID: 2109115-12 (Solid)

Analyte	Result	Notes	PQL	Units	Dilution	Prep Method	Analyzed	Analyst	Method
Volatile Organic Compounds				Batch ID:	BI10495		Prepared: 09/17/2021 12:00		
Acetone	ND		50.0	ug/kg	1	5030A	09/17/2021 23:41	SA	8260B
Benzene	ND		2.00	ug/kg	1	5030A	09/17/2021 23:41	SA	8260B
Bromobenzene	ND		10.0	ug/kg	1	5030A	09/17/2021 23:41	SA	8260B
Bromochloromethane	ND		10.0	ug/kg	1	5030A	09/17/2021 23:41	SA	8260B
Bromodichloromethane	ND		10.0	ug/kg	1	5030A	09/17/2021 23:41	SA	8260B
Bromoform	ND		50.0	ug/kg	1	5030A	09/17/2021 23:41	SA	8260B
Bromomethane	ND		30.0	ug/kg	1	5030A	09/17/2021 23:41	SA	8260B
2-Butanone	ND		50.0	ug/kg	1	5030A	09/17/2021 23:41	SA	8260B
n-Butylbenzene	ND		10.0	ug/kg	1	5030A	09/17/2021 23:41	SA	8260B
sec-Butylbenzene	ND		10.0	ug/kg	1	5030A	09/17/2021 23:41	SA	8260B
tert-Butylbenzene	ND		10.0	ug/kg	1	5030A	09/17/2021 23:41	SA	8260B
Carbon disulfide	ND		10.0	ug/kg	1	5030A	09/17/2021 23:41	SA	8260B
Carbon tetrachloride	ND		10.0	ug/kg	1	5030A	09/17/2021 23:41	SA	8260B
Chlorobenzene	ND		10.0	ug/kg	1	5030A	09/17/2021 23:41	SA	8260B
Chloroethane	ND		30.0	ug/kg	1	5030A	09/17/2021 23:41	SA	8260B
2-Chloroethylvinyl Ether	ND		50.0	ug/kg	1	5030A	09/17/2021 23:41	SA	8260B
Chloroform	ND		10.0	ug/kg	1	5030A	09/17/2021 23:41	SA	8260B
Chloromethane	ND		30.0	ug/kg	1	5030A	09/17/2021 23:41	SA	8260B
4-Chlorotoluene	ND		10.0	ug/kg	1	5030A	09/17/2021 23:41	SA	8260B
2-Chlorotoluene	ND		10.0	ug/kg	1	5030A	09/17/2021 23:41	SA	8260B
1,2-Dibromo-3-chloropropane	ND		50.0	ug/kg	1	5030A	09/17/2021 23:41	SA	8260B
Dibromochloromethane	ND		10.0	ug/kg	1	5030A	09/17/2021 23:41	SA	8260B
1,2-Dibromoethane	ND		10.0	ug/kg	1	5030A	09/17/2021 23:41	SA	8260B
Dibromomethane	ND		10.0	ug/kg	1	5030A	09/17/2021 23:41	SA	8260B
1,2-Dichlorobenzene	ND		10.0	ug/kg	1	5030A	09/17/2021 23:41	SA	8260B
1,3-Dichlorobenzene	ND		10.0	ug/kg	1	5030A	09/17/2021 23:41	SA	8260B
1,4-Dichlorobenzene	ND		10.0	ug/kg	1	5030A	09/17/2021 23:41	SA	8260B
Dichlorodifluoromethane	ND		30.0	ug/kg	1	5030A	09/17/2021 23:41	SA	8260B
1,1-Dichloroethane	ND		10.0	ug/kg	1	5030A	09/17/2021 23:41	SA	8260B
1,2-Dichloroethane	ND		10.0	ug/kg	1	5030A	09/17/2021 23:41	SA	8260B
1,1-Dichloroethene	ND		10.0	ug/kg	1	5030A	09/17/2021 23:41	SA	8260B
cis-1,2-Dichloroethene	ND		10.0	ug/kg	1	5030A	09/17/2021 23:41	SA	8260B
trans-1,2-Dichloroethene	ND		10.0	ug/kg	1	5030A	09/17/2021 23:41	SA	8260B
1,1-Dichloropropene	ND		10.0	ug/kg	1	5030A	09/17/2021 23:41	SA	8260B
1,2-Dichloropropane	ND		10.0	ug/kg	1	5030A	09/17/2021 23:41	SA	8260B
1,3-Dichloropropane	ND		10.0	ug/kg	1	5030A	09/17/2021 23:41	SA	8260B
2,2-Dichloropropane	ND		10.0	ug/kg	1	5030A	09/17/2021 23:41	SA	8260B
cis-1,3-Dichloropropene	ND		10.0	ug/kg	1	5030A	09/17/2021 23:41	SA	8260B
trans-1,3-Dichloropropene	ND		10.0	ug/kg	1	5030A	09/17/2021 23:41	SA	8260B
Ethylbenzene	ND		2.00	ug/kg	1	5030A	09/17/2021 23:41	SA	8260B

The results in this report apply to the samples analyzed in accordance with the chain of custody document. This analytical report must be reproduced in its entirety.

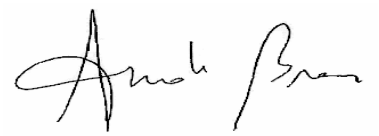

Amolk Brar, Lab Director

American Scientific Laboratories, LLC
Environmental Testing Services
2520 N. San Fernando Road, LA CA 90065 Tel: (323) 223-9700 • Fax: (323) 223-9500

Kroner Environmental Services, Inc.	Project: Regional Connector Mission Yard	Work Order No: 2109115
10801 National Blvd. # 415	Project Number: [none]	**Reported:**
Los Angeles CA, 90064	Project Manager: Kurt Kroner	09/20/2021 17:20

Analytical Results

Client Sample ID: MSP-12

Laboratory Sample ID: 2109115-12 (Solid)

Analyte	Result	Notes	PQL	Units	Dilution	Prep Method	Analyzed	Analyst	Method
Volatile Organic Compounds				Batch ID:	BI10495		Prepared: 09/17/2021 12:00		
Hexachlorobutadiene	ND		30.0	ug/kg	1	5030A	09/17/2021 23:41	SA	8260B
2-Hexanone	ND		50.0	ug/kg	1	5030A	09/17/2021 23:41	SA	8260B
Isopropylbenzene	ND		10.0	ug/kg	1	5030A	09/17/2021 23:41	SA	8260B
p-Isopropyltoluene	ND		10.0	ug/kg	1	5030A	09/17/2021 23:41	SA	8260B
Methyl tert-Butyl Ether (MTBE)	ND		5.00	ug/kg	1	5030A	09/17/2021 23:41	SA	8260B
4-Methyl-2-pentanone (MIBK)	ND		50.0	ug/kg	1	5030A	09/17/2021 23:41	SA	8260B
Methylene chloride	ND		50.0	ug/kg	1	5030A	09/17/2021 23:41	SA	8260B
Naphthalene	ND		10.0	ug/kg	1	5030A	09/17/2021 23:41	SA	8260B
n-Propylbenzene	ND		10.0	ug/kg	1	5030A	09/17/2021 23:41	SA	8260B
Styrene	ND		10.0	ug/kg	1	5030A	09/17/2021 23:41	SA	8260B
1,1,1,2-Tetrachloroethane	ND		10.0	ug/kg	1	5030A	09/17/2021 23:41	SA	8260B
1,1,2,2-Tetrachloroethane	ND		10.0	ug/kg	1	5030A	09/17/2021 23:41	SA	8260B
Tetrachloroethene	ND		10.0	ug/kg	1	5030A	09/17/2021 23:41	SA	8260B
Toluene	ND		2.00	ug/kg	1	5030A	09/17/2021 23:41	SA	8260B
1,2,3-Trichlorobenzene	ND		10.0	ug/kg	1	5030A	09/17/2021 23:41	SA	8260B
1,2,4-Trichlorobenzene	ND		10.0	ug/kg	1	5030A	09/17/2021 23:41	SA	8260B
1,1,1-Trichloroethane	ND		10.0	ug/kg	1	5030A	09/17/2021 23:41	SA	8260B
1,1,2-Trichloroethane	ND		10.0	ug/kg	1	5030A	09/17/2021 23:41	SA	8260B
Trichloroethene	ND		10.0	ug/kg	1	5030A	09/17/2021 23:41	SA	8260B
Trichlorofluoromethane	ND		10.0	ug/kg	1	5030A	09/17/2021 23:41	SA	8260B
1,2,3-Trichloropropane	ND		10.0	ug/kg	1	5030A	09/17/2021 23:41	SA	8260B
1,2,4-Trimethylbenzene	ND		10.0	ug/kg	1	5030A	09/17/2021 23:41	SA	8260B
1,3,5- Trimethylbenzene	ND		10.0	ug/kg	1	5030A	09/17/2021 23:41	SA	8260B
Vinyl acetate	ND		50.0	ug/kg	1	5030A	09/17/2021 23:41	SA	8260B
Vinyl chloride	ND		30.0	ug/kg	1	5030A	09/17/2021 23:41	SA	8260B
m,p-Xylenes	ND		4.00	ug/kg	1	5030A	09/17/2021 23:41	SA	8260B
o-Xylene	ND		2.00	ug/kg	1	5030A	09/17/2021 23:41	SA	8260B
Surrogate: 4-Bromofluorobenzene			*103 %*		*70-120*	5030A	09/17/2021 23:41	SA	*8260B*
Surrogate: Dibromofluoromethane		*S-04*	*44.4 %*		*70-120*	5030A	09/17/2021 23:41	SA	*8260B*
Surrogate: Toluene-d8			*94.8 %*		*70-120*	5030A	09/17/2021 23:41	SA	*8260B*

Analytical Results

Client Sample ID: MSP-13

Laboratory Sample ID: 2109115-13 (Solid)

Analyte	Result	Notes	PQL	Units	Dilution	Prep Method	Analyzed	Analyst	Method
Total Mercury (CVAA)				Batch ID:	BI10527		Prepared: 09/17/2021 14:05		
Mercury	**0.0925**		0.0500	mg/kg	1	7471A	09/20/2021 11:25	LVE	7471A

The results in this report apply to the samples analyzed in accordance with the chain of custody document. This analytical report must be reproduced in its entirety.

Amolk Brar, Lab Director

American Scientific Laboratories, LLC
Environmental Testing Services
2520 N. San Fernando Road, LA CA 90065 Tel: (323) 223-9700 • Fax: (323) 223-9500

Kroner Environmental Services, Inc.	Project: Regional Connector Mission Yard	Work Order No: 2109115
10801 National Blvd. # 415	Project Number: [none]	**Reported:**
Los Angeles CA, 90064	Project Manager: Kurt Kroner	09/20/2021 17:20

Analytical Results

Client Sample ID: MSP-13

Laboratory Sample ID: 2109115-13 (Solid)

Analyte	Result	Notes	PQL	Units	Dilution	Prep Method	Analyzed	Analyst	Method
Total ICP Metals				Batch ID:	BI10526		Prepared: 09/17/2021 14:59		
Antimony	ND		0.500	mg/kg	1	3050B	09/20/2021 13:50	LVE	SW846 6010B
Arsenic	**1.13**		0.250	mg/kg	1	3050B	09/20/2021 13:50	LVE	SW846 6010B
Barium	**65.5**		0.500	mg/kg	1	3050B	09/20/2021 13:50	LVE	SW846 6010B
Beryllium	ND		0.500	mg/kg	1	3050B	09/20/2021 13:50	LVE	SW846 6010B
Cadmium	**0.794**		0.500	mg/kg	1	3050B	09/20/2021 13:50	LVE	SW846 6010B
Chromium	**6.17**		0.500	mg/kg	1	3050B	09/20/2021 13:50	LVE	SW846 6010B
Cobalt	**4.44**		0.500	mg/kg	1	3050B	09/20/2021 13:50	LVE	SW846 6010B
Copper	**10.8**		0.500	mg/kg	1	3050B	09/20/2021 13:50	LVE	SW846 6010B
Lead	**10.1**		0.250	mg/kg	1	3050B	09/20/2021 13:50	LVE	SW846 6010B
Molybdenum	ND		0.500	mg/kg	1	3050B	09/20/2021 13:50	LVE	SW846 6010B
Nickel	**5.04**		0.500	mg/kg	1	3050B	09/20/2021 13:50	LVE	SW846 6010B
Selenium	ND		0.500	mg/kg	1	3050B	09/20/2021 13:50	LVE	SW846 6010B
Silver	ND		0.500	mg/kg	1	3050B	09/20/2021 13:50	LVE	SW846 6010B
Thallium	ND		0.500	mg/kg	1	3050B	09/20/2021 13:50	LVE	SW846 6010B
Vanadium	**19.5**		0.500	mg/kg	1	3050B	09/20/2021 13:50	LVE	SW846 6010B
Zinc	**42.3**		0.500	mg/kg	1	3050B	09/20/2021 13:50	LVE	SW846 6010B
Total Petroleum Hydrocarbons(TPH-g)				Batch ID:	BI10496		Prepared: 09/17/2021 09:00		
Gasoline Range Organics	ND		500	ug/kg	1	5030A	09/18/2021 00:42	SA	8015B
Surrogate: Bromofluorobenzene			*88.8 %*		*70-120*	5030A	09/18/2021 00:42	SA	*8015B*
Total Petroleum Hydrocarbons(TPH DROORO)				Batch ID:	BI10511		Prepared: 09/17/2021 09:00		
Diesel range organics	ND		10.0	mg/kg	1	3550B	09/17/2021 17:38	DWI	8015B
Oil Range Organics	**92.0**		50.0	mg/kg	1	3550B	09/17/2021 17:38	DWI	8015B
Surrogate: Chlorobenzene			*110 %*		*70-120*	3550B	09/17/2021 17:38	DWI	*8015B*

The results in this report apply to the samples analyzed in accordance with the chain of custody document. This analytical report must be reproduced in its entirety.

Amolk Brar, Lab Director

American Scientific Laboratories, LLC
Environmental Testing Services
2520 N. San Fernando Road, LA CA 90065 Tel: (323) 223-9700 • Fax: (323) 223-9500

Kroner Environmental Services, Inc.	Project: Regional Connector Mission Yard	Work Order No: 2109115
10801 National Blvd. # 415	Project Number: [none]	**Reported:**
Los Angeles CA, 90064	Project Manager: Kurt Kroner	09/20/2021 17:20

Analytical Results

Client Sample ID: MSP-13

Laboratory Sample ID: 2109115-13 (Solid)

Analyte	Result	Notes	PQL	Units	Dilution	Prep Method	Analyzed	Analyst	Method
Volatile Organic Compounds				Batch ID:	BI10495		Prepared: 09/17/2021 09:00		
Acetone	ND		50.0	ug/kg	1	5030A	09/18/2021 00:09	SA	8260B
Benzene	ND		2.00	ug/kg	1	5030A	09/18/2021 00:09	SA	8260B
Bromobenzene	ND		10.0	ug/kg	1	5030A	09/18/2021 00:09	SA	8260B
Bromochloromethane	ND		10.0	ug/kg	1	5030A	09/18/2021 00:09	SA	8260B
Bromodichloromethane	ND		10.0	ug/kg	1	5030A	09/18/2021 00:09	SA	8260B
Bromoform	ND		50.0	ug/kg	1	5030A	09/18/2021 00:09	SA	8260B
Bromomethane	ND		30.0	ug/kg	1	5030A	09/18/2021 00:09	SA	8260B
2-Butanone	ND		50.0	ug/kg	1	5030A	09/18/2021 00:09	SA	8260B
n-Butylbenzene	ND		10.0	ug/kg	1	5030A	09/18/2021 00:09	SA	8260B
sec-Butylbenzene	ND		10.0	ug/kg	1	5030A	09/18/2021 00:09	SA	8260B
tert-Butylbenzene	ND		10.0	ug/kg	1	5030A	09/18/2021 00:09	SA	8260B
Carbon disulfide	ND		10.0	ug/kg	1	5030A	09/18/2021 00:09	SA	8260B
Carbon tetrachloride	ND		10.0	ug/kg	1	5030A	09/18/2021 00:09	SA	8260B
Chlorobenzene	ND		10.0	ug/kg	1	5030A	09/18/2021 00:09	SA	8260B
Chloroethane	ND		30.0	ug/kg	1	5030A	09/18/2021 00:09	SA	8260B
2-Chloroethylvinyl Ether	ND		50.0	ug/kg	1	5030A	09/18/2021 00:09	SA	8260B
Chloroform	ND		10.0	ug/kg	1	5030A	09/18/2021 00:09	SA	8260B
Chloromethane	ND		30.0	ug/kg	1	5030A	09/18/2021 00:09	SA	8260B
4-Chlorotoluene	ND		10.0	ug/kg	1	5030A	09/18/2021 00:09	SA	8260B
2-Chlorotoluene	ND		10.0	ug/kg	1	5030A	09/18/2021 00:09	SA	8260B
1,2-Dibromo-3-chloropropane	ND		50.0	ug/kg	1	5030A	09/18/2021 00:09	SA	8260B
Dibromochloromethane	ND		10.0	ug/kg	1	5030A	09/18/2021 00:09	SA	8260B
1,2-Dibromoethane	ND		10.0	ug/kg	1	5030A	09/18/2021 00:09	SA	8260B
Dibromomethane	ND		10.0	ug/kg	1	5030A	09/18/2021 00:09	SA	8260B
1,2-Dichlorobenzene	ND		10.0	ug/kg	1	5030A	09/18/2021 00:09	SA	8260B
1,3-Dichlorobenzene	ND		10.0	ug/kg	1	5030A	09/18/2021 00:09	SA	8260B
1,4-Dichlorobenzene	ND		10.0	ug/kg	1	5030A	09/18/2021 00:09	SA	8260B
Dichlorodifluoromethane	ND		30.0	ug/kg	1	5030A	09/18/2021 00:09	SA	8260B
1,1-Dichloroethane	ND		10.0	ug/kg	1	5030A	09/18/2021 00:09	SA	8260B
1,2-Dichloroethane	ND		10.0	ug/kg	1	5030A	09/18/2021 00:09	SA	8260B
1,1-Dichloroethene	ND		10.0	ug/kg	1	5030A	09/18/2021 00:09	SA	8260B
cis-1,2-Dichloroethene	ND		10.0	ug/kg	1	5030A	09/18/2021 00:09	SA	8260B
trans-1,2-Dichloroethene	ND		10.0	ug/kg	1	5030A	09/18/2021 00:09	SA	8260B
1,1-Dichloropropene	ND		10.0	ug/kg	1	5030A	09/18/2021 00:09	SA	8260B
1,2-Dichloropropane	ND		10.0	ug/kg	1	5030A	09/18/2021 00:09	SA	8260B
1,3-Dichloropropane	ND		10.0	ug/kg	1	5030A	09/18/2021 00:09	SA	8260B
2,2-Dichloropropane	ND		10.0	ug/kg	1	5030A	09/18/2021 00:09	SA	8260B
cis-1,3-Dichloropropene	ND		10.0	ug/kg	1	5030A	09/18/2021 00:09	SA	8260B
trans-1,3-Dichloropropene	ND		10.0	ug/kg	1	5030A	09/18/2021 00:09	SA	8260B
Ethylbenzene	ND		2.00	ug/kg	1	5030A	09/18/2021 00:09	SA	8260B

The results in this report apply to the samples analyzed in accordance with the chain of custody document. This analytical report must be reproduced in its entirety.

Amolk Brar, Lab Director

American Scientific Laboratories, LLC
Environmental Testing Services
2520 N. San Fernando Road, LA CA 90065 Tel: (323) 223-9700 • Fax: (323) 223-9500

Kroner Environmental Services, Inc.	Project: Regional Connector Mission Yard	Work Order No: 2109115
10801 National Blvd. # 415	Project Number: [none]	**Reported:**
Los Angeles CA, 90064	Project Manager: Kurt Kroner	09/20/2021 17:20

Analytical Results

Client Sample ID: MSP-13

Laboratory Sample ID: 2109115-13 (Solid)

Analyte	Result	Notes	PQL	Units	Dilution	Prep Method	Analyzed	Analyst	Method
Volatile Organic Compounds				Batch ID:	BI10495		Prepared: 09/17/2021 09:00		
Hexachlorobutadiene	ND		30.0	ug/kg	1	5030A	09/18/2021 00:09	SA	8260B
2-Hexanone	ND		50.0	ug/kg	1	5030A	09/18/2021 00:09	SA	8260B
Isopropylbenzene	ND		10.0	ug/kg	1	5030A	09/18/2021 00:09	SA	8260B
p-Isopropyltoluene	ND		10.0	ug/kg	1	5030A	09/18/2021 00:09	SA	8260B
Methyl tert-Butyl Ether (MTBE)	ND		5.00	ug/kg	1	5030A	09/18/2021 00:09	SA	8260B
4-Methyl-2-pentanone (MIBK)	ND		50.0	ug/kg	1	5030A	09/18/2021 00:09	SA	8260B
Methylene chloride	ND		50.0	ug/kg	1	5030A	09/18/2021 00:09	SA	8260B
Naphthalene	ND		10.0	ug/kg	1	5030A	09/18/2021 00:09	SA	8260B
n-Propylbenzene	ND		10.0	ug/kg	1	5030A	09/18/2021 00:09	SA	8260B
Styrene	ND		10.0	ug/kg	1	5030A	09/18/2021 00:09	SA	8260B
1,1,1,2-Tetrachloroethane	ND		10.0	ug/kg	1	5030A	09/18/2021 00:09	SA	8260B
1,1,2,2-Tetrachloroethane	ND		10.0	ug/kg	1	5030A	09/18/2021 00:09	SA	8260B
Tetrachloroethene	ND		10.0	ug/kg	1	5030A	09/18/2021 00:09	SA	8260B
Toluene	ND		2.00	ug/kg	1	5030A	09/18/2021 00:09	SA	8260B
1,2,3-Trichlorobenzene	ND		10.0	ug/kg	1	5030A	09/18/2021 00:09	SA	8260B
1,2,4-Trichlorobenzene	ND		10.0	ug/kg	1	5030A	09/18/2021 00:09	SA	8260B
1,1,1-Trichloroethane	ND		10.0	ug/kg	1	5030A	09/18/2021 00:09	SA	8260B
1,1,2-Trichloroethane	ND		10.0	ug/kg	1	5030A	09/18/2021 00:09	SA	8260B
Trichloroethene	ND		10.0	ug/kg	1	5030A	09/18/2021 00:09	SA	8260B
Trichlorofluoromethane	ND		10.0	ug/kg	1	5030A	09/18/2021 00:09	SA	8260B
1,2,3-Trichloropropane	ND		10.0	ug/kg	1	5030A	09/18/2021 00:09	SA	8260B
1,2,4-Trimethylbenzene	ND		10.0	ug/kg	1	5030A	09/18/2021 00:09	SA	8260B
1,3,5- Trimethylbenzene	ND		10.0	ug/kg	1	5030A	09/18/2021 00:09	SA	8260B
Vinyl acetate	ND		50.0	ug/kg	1	5030A	09/18/2021 00:09	SA	8260B
Vinyl chloride	ND		30.0	ug/kg	1	5030A	09/18/2021 00:09	SA	8260B
m,p-Xylenes	ND		4.00	ug/kg	1	5030A	09/18/2021 00:09	SA	8260B
o-Xylene	ND		2.00	ug/kg	1	5030A	09/18/2021 00:09	SA	8260B
Surrogate: 4-Bromofluorobenzene			*97.1 %*		*70-120*	5030A	09/18/2021 00:09	SA	*8260B*
Surrogate: Dibromofluoromethane			*72.8 %*		*70-120*	5030A	09/18/2021 00:09	SA	*8260B*
Surrogate: Toluene-d8			*95.2 %*		*70-120*	5030A	09/18/2021 00:09	SA	*8260B*

Analytical Results

Client Sample ID: MSP-14

Laboratory Sample ID: 2109115-14 (Solid)

Analyte	Result	Notes	PQL	Units	Dilution	Prep Method	Analyzed	Analyst	Method
Total Mercury (CVAA)				Batch ID:	BI10527		Prepared: 09/17/2021 14:05		
Mercury	ND		0.0500	mg/kg	1	7471A	09/20/2021 11:25	LVE	7471A

The results in this report apply to the samples analyzed in accordance with the chain of custody document. This analytical report must be reproduced in its entirety.

Amolk Brar, Lab Director

American Scientific Laboratories, LLC
Environmental Testing Services
2520 N. San Fernando Road, LA CA 90065 Tel: (323) 223-9700 • Fax: (323) 223-9500

Kroner Environmental Services, Inc.	Project: Regional Connector Mission Yard	Work Order No: 2109115
10801 National Blvd. # 415	Project Number: [none]	**Reported:**
Los Angeles CA, 90064	Project Manager: Kurt Kroner	09/20/2021 17:20

Analytical Results

Client Sample ID: MSP-14

Laboratory Sample ID: 2109115-14 (Solid)

Analyte	Result	Notes	PQL	Units	Dilution	Prep Method	Analyzed	Analyst	Method
Total ICP Metals				Batch ID:	BI10526		Prepared: 09/17/2021 14:59		
Antimony	ND		0.500	mg/kg	1	3050B	09/20/2021 13:50	LVE	SW846 6010B
Arsenic	**1.10**		0.250	mg/kg	1	3050B	09/20/2021 13:50	LVE	SW846 6010B
Barium	**56.4**		0.500	mg/kg	1	3050B	09/20/2021 13:50	LVE	SW846 6010B
Beryllium	ND		0.500	mg/kg	1	3050B	09/20/2021 13:50	LVE	SW846 6010B
Cadmium	**0.869**		0.500	mg/kg	1	3050B	09/20/2021 13:50	LVE	SW846 6010B
Chromium	**7.17**		0.500	mg/kg	1	3050B	09/20/2021 13:50	LVE	SW846 6010B
Cobalt	**4.03**		0.500	mg/kg	1	3050B	09/20/2021 13:50	LVE	SW846 6010B
Copper	**11.3**		0.500	mg/kg	1	3050B	09/20/2021 13:50	LVE	SW846 6010B
Lead	**15.5**		0.250	mg/kg	1	3050B	09/20/2021 13:50	LVE	SW846 6010B
Molybdenum	ND		0.500	mg/kg	1	3050B	09/20/2021 13:50	LVE	SW846 6010B
Nickel	**4.84**		0.500	mg/kg	1	3050B	09/20/2021 13:50	LVE	SW846 6010B
Selenium	ND		0.500	mg/kg	1	3050B	09/20/2021 13:50	LVE	SW846 6010B
Silver	ND		0.500	mg/kg	1	3050B	09/20/2021 13:50	LVE	SW846 6010B
Thallium	ND		0.500	mg/kg	1	3050B	09/20/2021 13:50	LVE	SW846 6010B
Vanadium	**19.6**		0.500	mg/kg	1	3050B	09/20/2021 13:50	LVE	SW846 6010B
Zinc	**49.0**		0.500	mg/kg	1	3050B	09/20/2021 13:50	LVE	SW846 6010B
Total Petroleum Hydrocarbons(TPH-g)				Batch ID:	BI10496		Prepared: 09/17/2021 09:00		
Gasoline Range Organics	ND		500	ug/kg	1	5030A	09/18/2021 01:11	SA	8015B
Surrogate: Bromofluorobenzene			*86.0 %*		*70-120*	5030A	09/18/2021 01:11	SA	*8015B*
Total Petroleum Hydrocarbons(TPH DROORO)				Batch ID:	BI10511		Prepared: 09/17/2021 09:00		
Diesel range organics	ND		10.0	mg/kg	1	3550B	09/17/2021 18:20	DWI	8015B
Oil Range Organics	**88.0**		50.0	mg/kg	1	3550B	09/17/2021 18:20	DWI	8015B
Surrogate: Chlorobenzene			*108 %*		*70-120*	3550B	09/17/2021 18:20	DWI	*8015B*

The results in this report apply to the samples analyzed in accordance with the chain of custody document. This analytical report must be reproduced in its entirety.

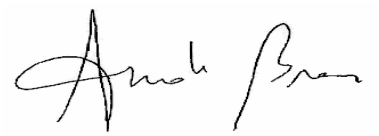

Amolk Brar, Lab Director

American Scientific Laboratories, LLC
Environmental Testing Services
2520 N. San Fernando Road, LA CA 90065 Tel: (323) 223-9700 • Fax: (323) 223-9500

Kroner Environmental Services, Inc.	Project: Regional Connector Mission Yard	Work Order No: 2109115
10801 National Blvd. # 415	Project Number: [none]	**Reported:**
Los Angeles CA, 90064	Project Manager: Kurt Kroner	09/20/2021 17:20

Analytical Results

Client Sample ID: MSP-14

Laboratory Sample ID: 2109115-14 (Solid)

Analyte	Result	Notes	PQL	Units	Dilution	Prep Method	Analyzed	Analyst	Method
Volatile Organic Compounds				Batch ID:	BI10495		Prepared: 09/17/2021 09:00		
Acetone	ND		50.0	ug/kg	1	5030A	09/18/2021 00:37	SA	8260B
Benzene	ND		2.00	ug/kg	1	5030A	09/18/2021 00:37	SA	8260B
Bromobenzene	ND		10.0	ug/kg	1	5030A	09/18/2021 00:37	SA	8260B
Bromochloromethane	ND		10.0	ug/kg	1	5030A	09/18/2021 00:37	SA	8260B
Bromodichloromethane	ND		10.0	ug/kg	1	5030A	09/18/2021 00:37	SA	8260B
Bromoform	ND		50.0	ug/kg	1	5030A	09/18/2021 00:37	SA	8260B
Bromomethane	ND		30.0	ug/kg	1	5030A	09/18/2021 00:37	SA	8260B
2-Butanone	ND		50.0	ug/kg	1	5030A	09/18/2021 00:37	SA	8260B
n-Butylbenzene	ND		10.0	ug/kg	1	5030A	09/18/2021 00:37	SA	8260B
sec-Butylbenzene	ND		10.0	ug/kg	1	5030A	09/18/2021 00:37	SA	8260B
tert-Butylbenzene	ND		10.0	ug/kg	1	5030A	09/18/2021 00:37	SA	8260B
Carbon disulfide	ND		10.0	ug/kg	1	5030A	09/18/2021 00:37	SA	8260B
Carbon tetrachloride	ND		10.0	ug/kg	1	5030A	09/18/2021 00:37	SA	8260B
Chlorobenzene	ND		10.0	ug/kg	1	5030A	09/18/2021 00:37	SA	8260B
Chloroethane	ND		30.0	ug/kg	1	5030A	09/18/2021 00:37	SA	8260B
2-Chloroethylvinyl Ether	ND		50.0	ug/kg	1	5030A	09/18/2021 00:37	SA	8260B
Chloroform	ND		10.0	ug/kg	1	5030A	09/18/2021 00:37	SA	8260B
Chloromethane	ND		30.0	ug/kg	1	5030A	09/18/2021 00:37	SA	8260B
4-Chlorotoluene	ND		10.0	ug/kg	1	5030A	09/18/2021 00:37	SA	8260B
2-Chlorotoluene	ND		10.0	ug/kg	1	5030A	09/18/2021 00:37	SA	8260B
1,2-Dibromo-3-chloropropane	ND		50.0	ug/kg	1	5030A	09/18/2021 00:37	SA	8260B
Dibromochloromethane	ND		10.0	ug/kg	1	5030A	09/18/2021 00:37	SA	8260B
1,2-Dibromoethane	ND		10.0	ug/kg	1	5030A	09/18/2021 00:37	SA	8260B
Dibromomethane	ND		10.0	ug/kg	1	5030A	09/18/2021 00:37	SA	8260B
1,2-Dichlorobenzene	ND		10.0	ug/kg	1	5030A	09/18/2021 00:37	SA	8260B
1,3-Dichlorobenzene	ND		10.0	ug/kg	1	5030A	09/18/2021 00:37	SA	8260B
1,4-Dichlorobenzene	ND		10.0	ug/kg	1	5030A	09/18/2021 00:37	SA	8260B
Dichlorodifluoromethane	ND		30.0	ug/kg	1	5030A	09/18/2021 00:37	SA	8260B
1,1-Dichloroethane	ND		10.0	ug/kg	1	5030A	09/18/2021 00:37	SA	8260B
1,2-Dichloroethane	ND		10.0	ug/kg	1	5030A	09/18/2021 00:37	SA	8260B
1,1-Dichloroethene	ND		10.0	ug/kg	1	5030A	09/18/2021 00:37	SA	8260B
cis-1,2-Dichloroethene	ND		10.0	ug/kg	1	5030A	09/18/2021 00:37	SA	8260B
trans-1,2-Dichloroethene	ND		10.0	ug/kg	1	5030A	09/18/2021 00:37	SA	8260B
1,1-Dichloropropene	ND		10.0	ug/kg	1	5030A	09/18/2021 00:37	SA	8260B
1,2-Dichloropropane	ND		10.0	ug/kg	1	5030A	09/18/2021 00:37	SA	8260B
1,3-Dichloropropane	ND		10.0	ug/kg	1	5030A	09/18/2021 00:37	SA	8260B
2,2-Dichloropropane	ND		10.0	ug/kg	1	5030A	09/18/2021 00:37	SA	8260B
cis-1,3-Dichloropropene	ND		10.0	ug/kg	1	5030A	09/18/2021 00:37	SA	8260B
trans-1,3-Dichloropropene	ND		10.0	ug/kg	1	5030A	09/18/2021 00:37	SA	8260B
Ethylbenzene	ND		2.00	ug/kg	1	5030A	09/18/2021 00:37	SA	8260B

The results in this report apply to the samples analyzed in accordance with the chain of custody document. This analytical report must be reproduced in its entirety.

Amolk Brar, Lab Director

American Scientific Laboratories, LLC
Environmental Testing Services
2520 N. San Fernando Road, LA CA 90065 Tel: (323) 223-9700 • Fax: (323) 223-9500

Kroner Environmental Services, Inc.	Project: Regional Connector Mission Yard	Work Order No: 2109115
10801 National Blvd. # 415	Project Number: [none]	**Reported:**
Los Angeles CA, 90064	Project Manager: Kurt Kroner	09/20/2021 17:20

Analytical Results

Client Sample ID: MSP-14

Laboratory Sample ID: 2109115-14 (Solid)

Analyte	Result	Notes	PQL	Units	Dilution	Prep Method	Analyzed	Analyst	Method
Volatile Organic Compounds				Batch ID:	BI10495		Prepared: 09/17/2021 09:00		
Hexachlorobutadiene	ND		30.0	ug/kg	1	5030A	09/18/2021 00:37	SA	8260B
2-Hexanone	ND		50.0	ug/kg	1	5030A	09/18/2021 00:37	SA	8260B
Isopropylbenzene	ND		10.0	ug/kg	1	5030A	09/18/2021 00:37	SA	8260B
p-Isopropyltoluene	ND		10.0	ug/kg	1	5030A	09/18/2021 00:37	SA	8260B
Methyl tert-Butyl Ether (MTBE)	ND		5.00	ug/kg	1	5030A	09/18/2021 00:37	SA	8260B
4-Methyl-2-pentanone (MIBK)	ND		50.0	ug/kg	1	5030A	09/18/2021 00:37	SA	8260B
Methylene chloride	ND		50.0	ug/kg	1	5030A	09/18/2021 00:37	SA	8260B
Naphthalene	ND		10.0	ug/kg	1	5030A	09/18/2021 00:37	SA	8260B
n-Propylbenzene	ND		10.0	ug/kg	1	5030A	09/18/2021 00:37	SA	8260B
Styrene	ND		10.0	ug/kg	1	5030A	09/18/2021 00:37	SA	8260B
1,1,1,2-Tetrachloroethane	ND		10.0	ug/kg	1	5030A	09/18/2021 00:37	SA	8260B
1,1,2,2-Tetrachloroethane	ND		10.0	ug/kg	1	5030A	09/18/2021 00:37	SA	8260B
Tetrachloroethene	ND		10.0	ug/kg	1	5030A	09/18/2021 00:37	SA	8260B
Toluene	ND		2.00	ug/kg	1	5030A	09/18/2021 00:37	SA	8260B
1,2,3-Trichlorobenzene	ND		10.0	ug/kg	1	5030A	09/18/2021 00:37	SA	8260B
1,2,4-Trichlorobenzene	ND		10.0	ug/kg	1	5030A	09/18/2021 00:37	SA	8260B
1,1,1-Trichloroethane	ND		10.0	ug/kg	1	5030A	09/18/2021 00:37	SA	8260B
1,1,2-Trichloroethane	ND		10.0	ug/kg	1	5030A	09/18/2021 00:37	SA	8260B
Trichloroethene	ND		10.0	ug/kg	1	5030A	09/18/2021 00:37	SA	8260B
Trichlorofluoromethane	ND		10.0	ug/kg	1	5030A	09/18/2021 00:37	SA	8260B
1,2,3-Trichloropropane	ND		10.0	ug/kg	1	5030A	09/18/2021 00:37	SA	8260B
1,2,4-Trimethylbenzene	ND		10.0	ug/kg	1	5030A	09/18/2021 00:37	SA	8260B
1,3,5- Trimethylbenzene	ND		10.0	ug/kg	1	5030A	09/18/2021 00:37	SA	8260B
Vinyl acetate	ND		50.0	ug/kg	1	5030A	09/18/2021 00:37	SA	8260B
Vinyl chloride	ND		30.0	ug/kg	1	5030A	09/18/2021 00:37	SA	8260B
m,p-Xylenes	ND		4.00	ug/kg	1	5030A	09/18/2021 00:37	SA	8260B
o-Xylene	ND		2.00	ug/kg	1	5030A	09/18/2021 00:37	SA	8260B
Surrogate: 4-Bromofluorobenzene			*105 %*		*70-120*	5030A	09/18/2021 00:37	SA	*8260B*
Surrogate: Dibromofluoromethane			*75.7 %*		*70-120*	5030A	09/18/2021 00:37	SA	*8260B*
Surrogate: Toluene-d8			*96.5 %*		*70-120*	5030A	09/18/2021 00:37	SA	*8260B*

Analytical Results

Client Sample ID: MSP-15

Laboratory Sample ID: 2109115-15 (Solid)

Analyte	Result	Notes	PQL	Units	Dilution	Prep Method	Analyzed	Analyst	Method
Total Mercury (CVAA)				Batch ID:	BI10527		Prepared: 09/17/2021 14:05		
Mercury	ND		0.0500	mg/kg	1	7471A	09/20/2021 11:25	LVE	7471A

The results in this report apply to the samples analyzed in accordance with the chain of custody document. This analytical report must be reproduced in its entirety.

Amolk Brar, Lab Director

American Scientific Laboratories, LLC
Environmental Testing Services
2520 N. San Fernando Road, LA CA 90065 Tel: (323) 223-9700 • Fax: (323) 223-9500

Kroner Environmental Services, Inc.	Project: Regional Connector Mission Yard	Work Order No: 2109115
10801 National Blvd. # 415	Project Number: [none]	**Reported:**
Los Angeles CA, 90064	Project Manager: Kurt Kroner	09/20/2021 17:20

Analytical Results

Client Sample ID: MSP-15

Laboratory Sample ID: 2109115-15 (Solid)

Analyte	Result	Notes	PQL	Units	Dilution	Prep Method	Analyzed	Analyst	Method
Total ICP Metals				Batch ID:	BI10526		Prepared: 09/17/2021 14:59		
Antimony	**1.55**		0.500	mg/kg	1	3050B	09/20/2021 13:50	LVE	SW846 6010B
Arsenic	**2.43**		0.250	mg/kg	1	3050B	09/20/2021 13:50	LVE	SW846 6010B
Barium	**94.7**		0.500	mg/kg	1	3050B	09/20/2021 13:50	LVE	SW846 6010B
Beryllium	ND		0.500	mg/kg	1	3050B	09/20/2021 13:50	LVE	SW846 6010B
Cadmium	**1.29**		0.500	mg/kg	1	3050B	09/20/2021 13:50	LVE	SW846 6010B
Chromium	**13.4**		0.500	mg/kg	1	3050B	09/20/2021 13:50	LVE	SW846 6010B
Cobalt	**6.03**		0.500	mg/kg	1	3050B	09/20/2021 13:50	LVE	SW846 6010B
Copper	**16.7**		0.500	mg/kg	1	3050B	09/20/2021 13:50	LVE	SW846 6010B
Lead	**16.6**		0.250	mg/kg	1	3050B	09/20/2021 13:50	LVE	SW846 6010B
Molybdenum	**0.745**		0.500	mg/kg	1	3050B	09/20/2021 13:50	LVE	SW846 6010B
Nickel	**10.4**		0.500	mg/kg	1	3050B	09/20/2021 13:50	LVE	SW846 6010B
Selenium	ND		0.500	mg/kg	1	3050B	09/20/2021 13:50	LVE	SW846 6010B
Silver	ND		0.500	mg/kg	1	3050B	09/20/2021 13:50	LVE	SW846 6010B
Thallium	ND		0.500	mg/kg	1	3050B	09/20/2021 13:50	LVE	SW846 6010B
Vanadium	**28.4**		0.500	mg/kg	1	3050B	09/20/2021 13:50	LVE	SW846 6010B
Zinc	**279**		0.500	mg/kg	1	3050B	09/20/2021 13:50	LVE	SW846 6010B
Total Petroleum Hydrocarbons(TPH-g)				Batch ID:	BI10496		Prepared: 09/17/2021 09:00		
Gasoline Range Organics	ND		500	ug/kg	1	5030A	09/18/2021 01:40	SA	8015B
Surrogate: Bromofluorobenzene			*80.0 %*		*70-120*	5030A	09/18/2021 01:40	SA	*8015B*
Total Petroleum Hydrocarbons(TPH DROORO)				Batch ID:	BI10511		Prepared: 09/17/2021 09:00		
Diesel range organics	**1590**		10.0	mg/kg	1	3550B	09/17/2021 19:01	DWI	8015B
Oil Range Organics	**358**		50.0	mg/kg	1	3550B	09/17/2021 19:01	DWI	8015B
Surrogate: Chlorobenzene			*109 %*		*70-120*	3550B	09/17/2021 19:01	DWI	*8015B*

The results in this report apply to the samples analyzed in accordance with the chain of custody document. This analytical report must be reproduced in its entirety.

Amolk Brar, Lab Director

American Scientific Laboratories, LLC
Environmental Testing Services
2520 N. San Fernando Road, LA CA 90065 Tel: (323) 223-9700 • Fax: (323) 223-9500

Kroner Environmental Services, Inc.	Project: Regional Connector Mission Yard	Work Order No: 2109115
10801 National Blvd. # 415	Project Number: [none]	**Reported:**
Los Angeles CA, 90064	Project Manager: Kurt Kroner	09/20/2021 17:20

Analytical Results

Client Sample ID: MSP-15

Laboratory Sample ID: 2109115-15 (Solid)

Analyte	Result	Notes	PQL	Units	Dilution	Prep Method	Analyzed	Analyst	Method
Volatile Organic Compounds				Batch ID:	BI10495		Prepared: 09/17/2021 12:00		
Acetone	ND		50.0	ug/kg	1	5030A	09/18/2021 01:05	SA	8260B
Benzene	ND		2.00	ug/kg	1	5030A	09/18/2021 01:05	SA	8260B
Bromobenzene	ND		10.0	ug/kg	1	5030A	09/18/2021 01:05	SA	8260B
Bromochloromethane	ND		10.0	ug/kg	1	5030A	09/18/2021 01:05	SA	8260B
Bromodichloromethane	ND		10.0	ug/kg	1	5030A	09/18/2021 01:05	SA	8260B
Bromoform	ND		50.0	ug/kg	1	5030A	09/18/2021 01:05	SA	8260B
Bromomethane	ND		30.0	ug/kg	1	5030A	09/18/2021 01:05	SA	8260B
2-Butanone	ND		50.0	ug/kg	1	5030A	09/18/2021 01:05	SA	8260B
n-Butylbenzene	ND		10.0	ug/kg	1	5030A	09/18/2021 01:05	SA	8260B
sec-Butylbenzene	ND		10.0	ug/kg	1	5030A	09/18/2021 01:05	SA	8260B
tert-Butylbenzene	ND		10.0	ug/kg	1	5030A	09/18/2021 01:05	SA	8260B
Carbon disulfide	ND		10.0	ug/kg	1	5030A	09/18/2021 01:05	SA	8260B
Carbon tetrachloride	ND		10.0	ug/kg	1	5030A	09/18/2021 01:05	SA	8260B
Chlorobenzene	ND		10.0	ug/kg	1	5030A	09/18/2021 01:05	SA	8260B
Chloroethane	ND		30.0	ug/kg	1	5030A	09/18/2021 01:05	SA	8260B
2-Chloroethylvinyl Ether	ND		50.0	ug/kg	1	5030A	09/18/2021 01:05	SA	8260B
Chloroform	ND		10.0	ug/kg	1	5030A	09/18/2021 01:05	SA	8260B
Chloromethane	ND		30.0	ug/kg	1	5030A	09/18/2021 01:05	SA	8260B
4-Chlorotoluene	ND		10.0	ug/kg	1	5030A	09/18/2021 01:05	SA	8260B
2-Chlorotoluene	ND		10.0	ug/kg	1	5030A	09/18/2021 01:05	SA	8260B
1,2-Dibromo-3-chloropropane	ND		50.0	ug/kg	1	5030A	09/18/2021 01:05	SA	8260B
Dibromochloromethane	ND		10.0	ug/kg	1	5030A	09/18/2021 01:05	SA	8260B
1,2-Dibromoethane	ND		10.0	ug/kg	1	5030A	09/18/2021 01:05	SA	8260B
Dibromomethane	ND		10.0	ug/kg	1	5030A	09/18/2021 01:05	SA	8260B
1,2-Dichlorobenzene	ND		10.0	ug/kg	1	5030A	09/18/2021 01:05	SA	8260B
1,3-Dichlorobenzene	ND		10.0	ug/kg	1	5030A	09/18/2021 01:05	SA	8260B
1,4-Dichlorobenzene	ND		10.0	ug/kg	1	5030A	09/18/2021 01:05	SA	8260B
Dichlorodifluoromethane	ND		30.0	ug/kg	1	5030A	09/18/2021 01:05	SA	8260B
1,1-Dichloroethane	ND		10.0	ug/kg	1	5030A	09/18/2021 01:05	SA	8260B
1,2-Dichloroethane	ND		10.0	ug/kg	1	5030A	09/18/2021 01:05	SA	8260B
1,1-Dichloroethene	ND		10.0	ug/kg	1	5030A	09/18/2021 01:05	SA	8260B
cis-1,2-Dichloroethene	ND		10.0	ug/kg	1	5030A	09/18/2021 01:05	SA	8260B
trans-1,2-Dichloroethene	ND		10.0	ug/kg	1	5030A	09/18/2021 01:05	SA	8260B
1,1-Dichloropropene	ND		10.0	ug/kg	1	5030A	09/18/2021 01:05	SA	8260B
1,2-Dichloropropane	ND		10.0	ug/kg	1	5030A	09/18/2021 01:05	SA	8260B
1,3-Dichloropropane	ND		10.0	ug/kg	1	5030A	09/18/2021 01:05	SA	8260B
2,2-Dichloropropane	ND		10.0	ug/kg	1	5030A	09/18/2021 01:05	SA	8260B
cis-1,3-Dichloropropene	ND		10.0	ug/kg	1	5030A	09/18/2021 01:05	SA	8260B
trans-1,3-Dichloropropene	ND		10.0	ug/kg	1	5030A	09/18/2021 01:05	SA	8260B
Ethylbenzene	ND		2.00	ug/kg	1	5030A	09/18/2021 01:05	SA	8260B

The results in this report apply to the samples analyzed in accordance with the chain of custody document. This analytical report must be reproduced in its entirety.

Amolk Brar, Lab Director

American Scientific Laboratories, LLC
Environmental Testing Services
2520 N. San Fernando Road, LA CA 90065 Tel: (323) 223-9700 • Fax: (323) 223-9500

Kroner Environmental Services, Inc.	Project: Regional Connector Mission Yard	Work Order No: 2109115
10801 National Blvd. # 415	Project Number: [none]	**Reported:**
Los Angeles CA, 90064	Project Manager: Kurt Kroner	09/20/2021 17:20

Analytical Results

Client Sample ID: MSP-15

Laboratory Sample ID: 2109115-15 (Solid)

Analyte	Result	Notes	PQL	Units	Dilution	Prep Method	Analyzed	Analyst	Method
Volatile Organic Compounds				Batch ID:	BI10495		Prepared: 09/17/2021 12:00		
Hexachlorobutadiene	ND		30.0	ug/kg	1	5030A	09/18/2021 01:05	SA	8260B
2-Hexanone	ND		50.0	ug/kg	1	5030A	09/18/2021 01:05	SA	8260B
Isopropylbenzene	ND		10.0	ug/kg	1	5030A	09/18/2021 01:05	SA	8260B
p-Isopropyltoluene	ND		10.0	ug/kg	1	5030A	09/18/2021 01:05	SA	8260B
Methyl tert-Butyl Ether (MTBE)	ND		5.00	ug/kg	1	5030A	09/18/2021 01:05	SA	8260B
4-Methyl-2-pentanone (MIBK)	ND		50.0	ug/kg	1	5030A	09/18/2021 01:05	SA	8260B
Methylene chloride	ND		50.0	ug/kg	1	5030A	09/18/2021 01:05	SA	8260B
Naphthalene	ND		10.0	ug/kg	1	5030A	09/18/2021 01:05	SA	8260B
n-Propylbenzene	ND		10.0	ug/kg	1	5030A	09/18/2021 01:05	SA	8260B
Styrene	ND		10.0	ug/kg	1	5030A	09/18/2021 01:05	SA	8260B
1,1,1,2-Tetrachloroethane	ND		10.0	ug/kg	1	5030A	09/18/2021 01:05	SA	8260B
1,1,2,2-Tetrachloroethane	ND		10.0	ug/kg	1	5030A	09/18/2021 01:05	SA	8260B
Tetrachloroethene	ND		10.0	ug/kg	1	5030A	09/18/2021 01:05	SA	8260B
Toluene	ND		2.00	ug/kg	1	5030A	09/18/2021 01:05	SA	8260B
1,2,3-Trichlorobenzene	ND		10.0	ug/kg	1	5030A	09/18/2021 01:05	SA	8260B
1,2,4-Trichlorobenzene	ND		10.0	ug/kg	1	5030A	09/18/2021 01:05	SA	8260B
1,1,1-Trichloroethane	ND		10.0	ug/kg	1	5030A	09/18/2021 01:05	SA	8260B
1,1,2-Trichloroethane	ND		10.0	ug/kg	1	5030A	09/18/2021 01:05	SA	8260B
Trichloroethene	ND		10.0	ug/kg	1	5030A	09/18/2021 01:05	SA	8260B
Trichlorofluoromethane	ND		10.0	ug/kg	1	5030A	09/18/2021 01:05	SA	8260B
1,2,3-Trichloropropane	ND		10.0	ug/kg	1	5030A	09/18/2021 01:05	SA	8260B
1,2,4-Trimethylbenzene	ND		10.0	ug/kg	1	5030A	09/18/2021 01:05	SA	8260B
1,3,5- Trimethylbenzene	ND		10.0	ug/kg	1	5030A	09/18/2021 01:05	SA	8260B
Vinyl acetate	ND		50.0	ug/kg	1	5030A	09/18/2021 01:05	SA	8260B
Vinyl chloride	ND		30.0	ug/kg	1	5030A	09/18/2021 01:05	SA	8260B
m,p-Xylenes	ND		4.00	ug/kg	1	5030A	09/18/2021 01:05	SA	8260B
o-Xylene	ND		2.00	ug/kg	1	5030A	09/18/2021 01:05	SA	8260B
Surrogate: 4-Bromofluorobenzene			*109 %*		*70-120*	5030A	09/18/2021 01:05	SA	*8260B*
Surrogate: Dibromofluoromethane		*S-04*	*18.9 %*		*70-120*	5030A	09/18/2021 01:05	SA	*8260B*
Surrogate: Toluene-d8			*93.8 %*		*70-120*	5030A	09/18/2021 01:05	SA	*8260B*

Analytical Results

Client Sample ID: MSP-16

Laboratory Sample ID: 2109115-16 (Solid)

Analyte	Result	Notes	PQL	Units	Dilution	Prep Method	Analyzed	Analyst	Method
Total Mercury (CVAA)				Batch ID:	BI10527		Prepared: 09/17/2021 14:05		
Mercury	**0.0806**		0.0500	mg/kg	1	7471A	09/20/2021 11:25	LVE	7471A

The results in this report apply to the samples analyzed in accordance with the chain of custody document. This analytical report must be reproduced in its entirety.

Amolk Brar, Lab Director

American Scientific Laboratories, LLC
Environmental Testing Services
2520 N. San Fernando Road, LA CA 90065 Tel: (323) 223-9700 • Fax: (323) 223-9500

Kroner Environmental Services, Inc.	Project: Regional Connector Mission Yard	Work Order No: 2109115
10801 National Blvd. # 415	Project Number: [none]	**Reported:**
Los Angeles CA, 90064	Project Manager: Kurt Kroner	09/20/2021 17:20

Analytical Results

Client Sample ID: MSP-16

Laboratory Sample ID: 2109115-16 (Solid)

Analyte	Result	Notes	PQL	Units	Dilution	Prep Method	Analyzed	Analyst	Method
Total ICP Metals				Batch ID:	BI10526		Prepared: 09/17/2021 14:59		
Antimony	**0.840**		0.500	mg/kg	1	3050B	09/20/2021 13:50	LVE	SW846 6010B
Arsenic	**1.88**		0.250	mg/kg	1	3050B	09/20/2021 13:50	LVE	SW846 6010B
Barium	**106**		0.500	mg/kg	1	3050B	09/20/2021 13:50	LVE	SW846 6010B
Beryllium	ND		0.500	mg/kg	1	3050B	09/20/2021 13:50	LVE	SW846 6010B
Cadmium	**1.78**		0.500	mg/kg	1	3050B	09/20/2021 13:50	LVE	SW846 6010B
Chromium	**11.2**		0.500	mg/kg	1	3050B	09/20/2021 13:50	LVE	SW846 6010B
Cobalt	**5.64**		0.500	mg/kg	1	3050B	09/20/2021 13:50	LVE	SW846 6010B
Copper	**18.0**		0.500	mg/kg	1	3050B	09/20/2021 13:50	LVE	SW846 6010B
Lead	**27.8**		0.250	mg/kg	1	3050B	09/20/2021 13:50	LVE	SW846 6010B
Molybdenum	**1.25**		0.500	mg/kg	1	3050B	09/20/2021 13:50	LVE	SW846 6010B
Nickel	**9.10**		0.500	mg/kg	1	3050B	09/20/2021 13:50	LVE	SW846 6010B
Selenium	ND		0.500	mg/kg	1	3050B	09/20/2021 13:50	LVE	SW846 6010B
Silver	ND		0.500	mg/kg	1	3050B	09/20/2021 13:50	LVE	SW846 6010B
Thallium	ND		0.500	mg/kg	1	3050B	09/20/2021 13:50	LVE	SW846 6010B
Vanadium	**25.6**		0.500	mg/kg	1	3050B	09/20/2021 13:50	LVE	SW846 6010B
Zinc	**72.1**		0.500	mg/kg	1	3050B	09/20/2021 13:50	LVE	SW846 6010B
Total Petroleum Hydrocarbons(TPH-g)				Batch ID:	BI10496		Prepared: 09/17/2021 09:00		
Gasoline Range Organics	ND		500	ug/kg	1	5030A	09/18/2021 02:09	SA	8015B
Surrogate: Bromofluorobenzene			*98.3 %*		*70-120*	5030A	09/18/2021 02:09	SA	*8015B*
Total Petroleum Hydrocarbons(TPH DROORO)				Batch ID:	BI10511		Prepared: 09/17/2021 09:00		
Diesel range organics	**46.0**		10.0	mg/kg	1	3550B	09/17/2021 19:42	DWI	8015B
Oil Range Organics	**120**		50.0	mg/kg	1	3550B	09/17/2021 19:42	DWI	8015B
Surrogate: Chlorobenzene			*110 %*		*70-120*	3550B	09/17/2021 19:42	DWI	*8015B*

The results in this report apply to the samples analyzed in accordance with the chain of custody document. This analytical report must be reproduced in its entirety.

Amolk Brar, Lab Director

American Scientific Laboratories, LLC
Environmental Testing Services
2520 N. San Fernando Road, LA CA 90065 Tel: (323) 223-9700 • Fax: (323) 223-9500

Kroner Environmental Services, Inc.	Project: Regional Connector Mission Yard	Work Order No: 2109115
10801 National Blvd. # 415	Project Number: [none]	**Reported:**
Los Angeles CA, 90064	Project Manager: Kurt Kroner	09/20/2021 17:20

Analytical Results

Client Sample ID: MSP-16

Laboratory Sample ID: 2109115-16 (Solid)

Analyte	Result	Notes	PQL	Units	Dilution	Prep Method	Analyzed	Analyst	Method
Volatile Organic Compounds				Batch ID:	BI10495		Prepared: 09/17/2021 12:00		
Acetone	ND		50.0	ug/kg	1	5030A	09/18/2021 01:33	SA	8260B
Benzene	ND		2.00	ug/kg	1	5030A	09/18/2021 01:33	SA	8260B
Bromobenzene	ND		10.0	ug/kg	1	5030A	09/18/2021 01:33	SA	8260B
Bromochloromethane	ND		10.0	ug/kg	1	5030A	09/18/2021 01:33	SA	8260B
Bromodichloromethane	ND		10.0	ug/kg	1	5030A	09/18/2021 01:33	SA	8260B
Bromoform	ND		50.0	ug/kg	1	5030A	09/18/2021 01:33	SA	8260B
Bromomethane	ND		30.0	ug/kg	1	5030A	09/18/2021 01:33	SA	8260B
2-Butanone	ND		50.0	ug/kg	1	5030A	09/18/2021 01:33	SA	8260B
n-Butylbenzene	ND		10.0	ug/kg	1	5030A	09/18/2021 01:33	SA	8260B
sec-Butylbenzene	ND		10.0	ug/kg	1	5030A	09/18/2021 01:33	SA	8260B
tert-Butylbenzene	ND		10.0	ug/kg	1	5030A	09/18/2021 01:33	SA	8260B
Carbon disulfide	ND		10.0	ug/kg	1	5030A	09/18/2021 01:33	SA	8260B
Carbon tetrachloride	ND		10.0	ug/kg	1	5030A	09/18/2021 01:33	SA	8260B
Chlorobenzene	ND		10.0	ug/kg	1	5030A	09/18/2021 01:33	SA	8260B
Chloroethane	ND		30.0	ug/kg	1	5030A	09/18/2021 01:33	SA	8260B
2-Chloroethylvinyl Ether	ND		50.0	ug/kg	1	5030A	09/18/2021 01:33	SA	8260B
Chloroform	ND		10.0	ug/kg	1	5030A	09/18/2021 01:33	SA	8260B
Chloromethane	ND		30.0	ug/kg	1	5030A	09/18/2021 01:33	SA	8260B
4-Chlorotoluene	ND		10.0	ug/kg	1	5030A	09/18/2021 01:33	SA	8260B
2-Chlorotoluene	ND		10.0	ug/kg	1	5030A	09/18/2021 01:33	SA	8260B
1,2-Dibromo-3-chloropropane	ND		50.0	ug/kg	1	5030A	09/18/2021 01:33	SA	8260B
Dibromochloromethane	ND		10.0	ug/kg	1	5030A	09/18/2021 01:33	SA	8260B
1,2-Dibromoethane	ND		10.0	ug/kg	1	5030A	09/18/2021 01:33	SA	8260B
Dibromomethane	ND		10.0	ug/kg	1	5030A	09/18/2021 01:33	SA	8260B
1,2-Dichlorobenzene	ND		10.0	ug/kg	1	5030A	09/18/2021 01:33	SA	8260B
1,3-Dichlorobenzene	ND		10.0	ug/kg	1	5030A	09/18/2021 01:33	SA	8260B
1,4-Dichlorobenzene	ND		10.0	ug/kg	1	5030A	09/18/2021 01:33	SA	8260B
Dichlorodifluoromethane	ND		30.0	ug/kg	1	5030A	09/18/2021 01:33	SA	8260B
1,1-Dichloroethane	ND		10.0	ug/kg	1	5030A	09/18/2021 01:33	SA	8260B
1,2-Dichloroethane	ND		10.0	ug/kg	1	5030A	09/18/2021 01:33	SA	8260B
1,1-Dichloroethene	ND		10.0	ug/kg	1	5030A	09/18/2021 01:33	SA	8260B
cis-1,2-Dichloroethene	ND		10.0	ug/kg	1	5030A	09/18/2021 01:33	SA	8260B
trans-1,2-Dichloroethene	ND		10.0	ug/kg	1	5030A	09/18/2021 01:33	SA	8260B
1,1-Dichloropropene	ND		10.0	ug/kg	1	5030A	09/18/2021 01:33	SA	8260B
1,2-Dichloropropane	ND		10.0	ug/kg	1	5030A	09/18/2021 01:33	SA	8260B
1,3-Dichloropropane	ND		10.0	ug/kg	1	5030A	09/18/2021 01:33	SA	8260B
2,2-Dichloropropane	ND		10.0	ug/kg	1	5030A	09/18/2021 01:33	SA	8260B
cis-1,3-Dichloropropene	ND		10.0	ug/kg	1	5030A	09/18/2021 01:33	SA	8260B
trans-1,3-Dichloropropene	ND		10.0	ug/kg	1	5030A	09/18/2021 01:33	SA	8260B
Ethylbenzene	ND		2.00	ug/kg	1	5030A	09/18/2021 01:33	SA	8260B

The results in this report apply to the samples analyzed in accordance with the chain of custody document. This analytical report must be reproduced in its entirety.

Amolk Brar, Lab Director

American Scientific Laboratories, LLC
Environmental Testing Services
2520 N. San Fernando Road, LA CA 90065 Tel: (323) 223-9700 • Fax: (323) 223-9500

Kroner Environmental Services, Inc.	Project: Regional Connector Mission Yard	Work Order No: 2109115
10801 National Blvd. # 415	Project Number: [none]	**Reported:**
Los Angeles CA, 90064	Project Manager: Kurt Kroner	09/20/2021 17:20

Analytical Results

Client Sample ID: MSP-16

Laboratory Sample ID: 2109115-16 (Solid)

Analyte	Result	Notes	PQL	Units	Dilution	Prep Method	Analyzed	Analyst	Method
Volatile Organic Compounds				Batch ID:	BI10495		Prepared: 09/17/2021 12:00		
Hexachlorobutadiene	ND		30.0	ug/kg	1	5030A	09/18/2021 01:33	SA	8260B
2-Hexanone	ND		50.0	ug/kg	1	5030A	09/18/2021 01:33	SA	8260B
Isopropylbenzene	ND		10.0	ug/kg	1	5030A	09/18/2021 01:33	SA	8260B
p-Isopropyltoluene	ND		10.0	ug/kg	1	5030A	09/18/2021 01:33	SA	8260B
Methyl tert-Butyl Ether (MTBE)	ND		5.00	ug/kg	1	5030A	09/18/2021 01:33	SA	8260B
4-Methyl-2-pentanone (MIBK)	ND		50.0	ug/kg	1	5030A	09/18/2021 01:33	SA	8260B
Methylene chloride	ND		50.0	ug/kg	1	5030A	09/18/2021 01:33	SA	8260B
Naphthalene	ND		10.0	ug/kg	1	5030A	09/18/2021 01:33	SA	8260B
n-Propylbenzene	ND		10.0	ug/kg	1	5030A	09/18/2021 01:33	SA	8260B
Styrene	ND		10.0	ug/kg	1	5030A	09/18/2021 01:33	SA	8260B
1,1,1,2-Tetrachloroethane	ND		10.0	ug/kg	1	5030A	09/18/2021 01:33	SA	8260B
1,1,2,2-Tetrachloroethane	ND		10.0	ug/kg	1	5030A	09/18/2021 01:33	SA	8260B
Tetrachloroethene	ND		10.0	ug/kg	1	5030A	09/18/2021 01:33	SA	8260B
Toluene	ND		2.00	ug/kg	1	5030A	09/18/2021 01:33	SA	8260B
1,2,3-Trichlorobenzene	ND		10.0	ug/kg	1	5030A	09/18/2021 01:33	SA	8260B
1,2,4-Trichlorobenzene	ND		10.0	ug/kg	1	5030A	09/18/2021 01:33	SA	8260B
1,1,1-Trichloroethane	ND		10.0	ug/kg	1	5030A	09/18/2021 01:33	SA	8260B
1,1,2-Trichloroethane	ND		10.0	ug/kg	1	5030A	09/18/2021 01:33	SA	8260B
Trichloroethene	ND		10.0	ug/kg	1	5030A	09/18/2021 01:33	SA	8260B
Trichlorofluoromethane	ND		10.0	ug/kg	1	5030A	09/18/2021 01:33	SA	8260B
1,2,3-Trichloropropane	ND		10.0	ug/kg	1	5030A	09/18/2021 01:33	SA	8260B
1,2,4-Trimethylbenzene	ND		10.0	ug/kg	1	5030A	09/18/2021 01:33	SA	8260B
1,3,5- Trimethylbenzene	ND		10.0	ug/kg	1	5030A	09/18/2021 01:33	SA	8260B
Vinyl acetate	ND		50.0	ug/kg	1	5030A	09/18/2021 01:33	SA	8260B
Vinyl chloride	ND		30.0	ug/kg	1	5030A	09/18/2021 01:33	SA	8260B
m,p-Xylenes	ND		4.00	ug/kg	1	5030A	09/18/2021 01:33	SA	8260B
o-Xylene	ND		2.00	ug/kg	1	5030A	09/18/2021 01:33	SA	8260B
Surrogate: 4-Bromofluorobenzene			*110 %*		*70-120*	5030A	09/18/2021 01:33	SA	*8260B*
Surrogate: Dibromofluoromethane		*S-04*	*2.38 %*		*70-120*	5030A	09/18/2021 01:33	SA	*8260B*
Surrogate: Toluene-d8			*95.5 %*		*70-120*	5030A	09/18/2021 01:33	SA	*8260B*

Analytical Results

Client Sample ID: MSP-17

Laboratory Sample ID: 2109115-17 (Solid)

Analyte	Result	Notes	PQL	Units	Dilution	Prep Method	Analyzed	Analyst	Method
Total Mercury (CVAA)				Batch ID:	BI10527		Prepared: 09/17/2021 14:05		
Mercury	ND		0.0500	mg/kg	1	7471A	09/20/2021 11:25	LVE	7471A

The results in this report apply to the samples analyzed in accordance with the chain of custody document. This analytical report must be reproduced in its entirety.

Amolk Brar, Lab Director

American Scientific Laboratories, LLC
Environmental Testing Services
2520 N. San Fernando Road, LA CA 90065 Tel: (323) 223-9700 • Fax: (323) 223-9500

Kroner Environmental Services, Inc.	Project: Regional Connector Mission Yard	Work Order No: 2109115
10801 National Blvd. # 415	Project Number: [none]	**Reported:**
Los Angeles CA, 90064	Project Manager: Kurt Kroner	09/20/2021 17:20

Analytical Results

Client Sample ID: MSP-17

Laboratory Sample ID: 2109115-17 (Solid)

Analyte	Result	Notes	PQL	Units	Dilution	Prep Method	Analyzed	Analyst	Method
Total ICP Metals				Batch ID:	BI10526		Prepared: 09/17/2021 14:59		
Antimony	**0.591**		0.500	mg/kg	1	3050B	09/20/2021 13:50	LVE	SW846 6010B
Arsenic	**1.44**		0.250	mg/kg	1	3050B	09/20/2021 13:50	LVE	SW846 6010B
Barium	**209**		0.500	mg/kg	1	3050B	09/20/2021 13:50	LVE	SW846 6010B
Beryllium	ND		0.500	mg/kg	1	3050B	09/20/2021 13:50	LVE	SW846 6010B
Cadmium	**1.07**		0.500	mg/kg	1	3050B	09/20/2021 13:50	LVE	SW846 6010B
Chromium	**8.83**		0.500	mg/kg	1	3050B	09/20/2021 13:50	LVE	SW846 6010B
Cobalt	**5.40**		0.500	mg/kg	1	3050B	09/20/2021 13:50	LVE	SW846 6010B
Copper	**11.3**		0.500	mg/kg	1	3050B	09/20/2021 13:50	LVE	SW846 6010B
Lead	**9.22**		0.250	mg/kg	1	3050B	09/20/2021 13:50	LVE	SW846 6010B
Molybdenum	**1.96**		0.500	mg/kg	1	3050B	09/20/2021 13:50	LVE	SW846 6010B
Nickel	**6.03**		0.500	mg/kg	1	3050B	09/20/2021 13:50	LVE	SW846 6010B
Selenium	**0.509**		0.500	mg/kg	1	3050B	09/20/2021 13:50	LVE	SW846 6010B
Silver	ND		0.500	mg/kg	1	3050B	09/20/2021 13:50	LVE	SW846 6010B
Thallium	ND		0.500	mg/kg	1	3050B	09/20/2021 13:50	LVE	SW846 6010B
Vanadium	**24.6**		0.500	mg/kg	1	3050B	09/20/2021 13:50	LVE	SW846 6010B
Zinc	**42.5**		0.500	mg/kg	1	3050B	09/20/2021 13:50	LVE	SW846 6010B
Total Petroleum Hydrocarbons(TPH-g)				Batch ID:	BI10496		Prepared: 09/17/2021 09:00		
Gasoline Range Organics	ND		500	ug/kg	1	5030A	09/18/2021 02:38	SA	8015B
Surrogate: Bromofluorobenzene			*92.4 %*		*70-120*	5030A	09/18/2021 02:38	SA	*8015B*
Total Petroleum Hydrocarbons(TPH DROORO)				Batch ID:	BI10511		Prepared: 09/17/2021 09:00		
Diesel range organics	ND		10.0	mg/kg	1	3550B	09/17/2021 14:53	DWI	8015B
Oil Range Organics	ND		50.0	mg/kg	1	3550B	09/17/2021 14:53	DWI	8015B
Surrogate: Chlorobenzene			*106 %*		*70-120*	3550B	09/17/2021 14:53	DWI	*8015B*

The results in this report apply to the samples analyzed in accordance with the chain of custody document. This analytical report must be reproduced in its entirety.

Amolk Brar, Lab Director

American Scientific Laboratories, LLC
Environmental Testing Services
2520 N. San Fernando Road, LA CA 90065 Tel: (323) 223-9700 • Fax: (323) 223-9500

Kroner Environmental Services, Inc.	Project: Regional Connector Mission Yard	Work Order No: 2109115
10801 National Blvd. # 415	Project Number: [none]	**Reported:**
Los Angeles CA, 90064	Project Manager: Kurt Kroner	09/20/2021 17:20

Analytical Results

Client Sample ID: MSP-17

Laboratory Sample ID: 2109115-17 (Solid)

Analyte	Result	Notes	PQL	Units	Dilution	Prep Method	Analyzed	Analyst	Method
Volatile Organic Compounds				Batch ID:	BI10495		Prepared: 09/17/2021 09:00		
Acetone	ND		50.0	ug/kg	1	5030A	09/18/2021 02:01	SA	8260B
Benzene	ND		2.00	ug/kg	1	5030A	09/18/2021 02:01	SA	8260B
Bromobenzene	ND		10.0	ug/kg	1	5030A	09/18/2021 02:01	SA	8260B
Bromochloromethane	ND		10.0	ug/kg	1	5030A	09/18/2021 02:01	SA	8260B
Bromodichloromethane	ND		10.0	ug/kg	1	5030A	09/18/2021 02:01	SA	8260B
Bromoform	ND		50.0	ug/kg	1	5030A	09/18/2021 02:01	SA	8260B
Bromomethane	ND		30.0	ug/kg	1	5030A	09/18/2021 02:01	SA	8260B
2-Butanone	ND		50.0	ug/kg	1	5030A	09/18/2021 02:01	SA	8260B
n-Butylbenzene	ND		10.0	ug/kg	1	5030A	09/18/2021 02:01	SA	8260B
sec-Butylbenzene	ND		10.0	ug/kg	1	5030A	09/18/2021 02:01	SA	8260B
tert-Butylbenzene	ND		10.0	ug/kg	1	5030A	09/18/2021 02:01	SA	8260B
Carbon disulfide	ND		10.0	ug/kg	1	5030A	09/18/2021 02:01	SA	8260B
Carbon tetrachloride	ND		10.0	ug/kg	1	5030A	09/18/2021 02:01	SA	8260B
Chlorobenzene	ND		10.0	ug/kg	1	5030A	09/18/2021 02:01	SA	8260B
Chloroethane	ND		30.0	ug/kg	1	5030A	09/18/2021 02:01	SA	8260B
2-Chloroethylvinyl Ether	ND		50.0	ug/kg	1	5030A	09/18/2021 02:01	SA	8260B
Chloroform	ND		10.0	ug/kg	1	5030A	09/18/2021 02:01	SA	8260B
Chloromethane	ND		30.0	ug/kg	1	5030A	09/18/2021 02:01	SA	8260B
4-Chlorotoluene	ND		10.0	ug/kg	1	5030A	09/18/2021 02:01	SA	8260B
2-Chlorotoluene	ND		10.0	ug/kg	1	5030A	09/18/2021 02:01	SA	8260B
1,2-Dibromo-3-chloropropane	ND		50.0	ug/kg	1	5030A	09/18/2021 02:01	SA	8260B
Dibromochloromethane	ND		10.0	ug/kg	1	5030A	09/18/2021 02:01	SA	8260B
1,2-Dibromoethane	ND		10.0	ug/kg	1	5030A	09/18/2021 02:01	SA	8260B
Dibromomethane	ND		10.0	ug/kg	1	5030A	09/18/2021 02:01	SA	8260B
1,2-Dichlorobenzene	ND		10.0	ug/kg	1	5030A	09/18/2021 02:01	SA	8260B
1,3-Dichlorobenzene	ND		10.0	ug/kg	1	5030A	09/18/2021 02:01	SA	8260B
1,4-Dichlorobenzene	ND		10.0	ug/kg	1	5030A	09/18/2021 02:01	SA	8260B
Dichlorodifluoromethane	ND		30.0	ug/kg	1	5030A	09/18/2021 02:01	SA	8260B
1,1-Dichloroethane	ND		10.0	ug/kg	1	5030A	09/18/2021 02:01	SA	8260B
1,2-Dichloroethane	ND		10.0	ug/kg	1	5030A	09/18/2021 02:01	SA	8260B
1,1-Dichloroethene	ND		10.0	ug/kg	1	5030A	09/18/2021 02:01	SA	8260B
cis-1,2-Dichloroethene	ND		10.0	ug/kg	1	5030A	09/18/2021 02:01	SA	8260B
trans-1,2-Dichloroethene	ND		10.0	ug/kg	1	5030A	09/18/2021 02:01	SA	8260B
1,1-Dichloropropene	ND		10.0	ug/kg	1	5030A	09/18/2021 02:01	SA	8260B
1,2-Dichloropropane	ND		10.0	ug/kg	1	5030A	09/18/2021 02:01	SA	8260B
1,3-Dichloropropane	ND		10.0	ug/kg	1	5030A	09/18/2021 02:01	SA	8260B
2,2-Dichloropropane	ND		10.0	ug/kg	1	5030A	09/18/2021 02:01	SA	8260B
cis-1,3-Dichloropropene	ND		10.0	ug/kg	1	5030A	09/18/2021 02:01	SA	8260B
trans-1,3-Dichloropropene	ND		10.0	ug/kg	1	5030A	09/18/2021 02:01	SA	8260B
Ethylbenzene	ND		2.00	ug/kg	1	5030A	09/18/2021 02:01	SA	8260B

The results in this report apply to the samples analyzed in accordance with the chain of custody document. This analytical report must be reproduced in its entirety.

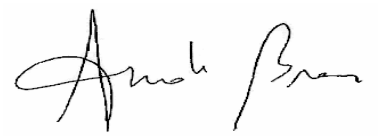

Amolk Brar, Lab Director

American Scientific Laboratories, LLC
Environmental Testing Services
2520 N. San Fernando Road, LA CA 90065 Tel: (323) 223-9700 • Fax: (323) 223-9500

Kroner Environmental Services, Inc.	Project: Regional Connector Mission Yard	Work Order No: 2109115
10801 National Blvd. # 415	Project Number: [none]	**Reported:**
Los Angeles CA, 90064	Project Manager: Kurt Kroner	09/20/2021 17:20

Analytical Results

Client Sample ID: MSP-17

Laboratory Sample ID: 2109115-17 (Solid)

Analyte	Result	Notes	PQL	Units	Dilution	Prep Method	Analyzed	Analyst	Method
Volatile Organic Compounds				Batch ID:	BI10495	Prepared:	09/17/2021 09:00		
Hexachlorobutadiene	ND		30.0	ug/kg	1	5030A	09/18/2021 02:01	SA	8260B
2-Hexanone	ND		50.0	ug/kg	1	5030A	09/18/2021 02:01	SA	8260B
Isopropylbenzene	ND		10.0	ug/kg	1	5030A	09/18/2021 02:01	SA	8260B
p-Isopropyltoluene	ND		10.0	ug/kg	1	5030A	09/18/2021 02:01	SA	8260B
Methyl tert-Butyl Ether (MTBE)	ND		5.00	ug/kg	1	5030A	09/18/2021 02:01	SA	8260B
4-Methyl-2-pentanone (MIBK)	ND		50.0	ug/kg	1	5030A	09/18/2021 02:01	SA	8260B
Methylene chloride	ND		50.0	ug/kg	1	5030A	09/18/2021 02:01	SA	8260B
Naphthalene	ND		10.0	ug/kg	1	5030A	09/18/2021 02:01	SA	8260B
n-Propylbenzene	ND		10.0	ug/kg	1	5030A	09/18/2021 02:01	SA	8260B
Styrene	ND		10.0	ug/kg	1	5030A	09/18/2021 02:01	SA	8260B
1,1,1,2-Tetrachloroethane	ND		10.0	ug/kg	1	5030A	09/18/2021 02:01	SA	8260B
1,1,2,2-Tetrachloroethane	ND		10.0	ug/kg	1	5030A	09/18/2021 02:01	SA	8260B
Tetrachloroethene	ND		10.0	ug/kg	1	5030A	09/18/2021 02:01	SA	8260B
Toluene	ND		2.00	ug/kg	1	5030A	09/18/2021 02:01	SA	8260B
1,2,3-Trichlorobenzene	ND		10.0	ug/kg	1	5030A	09/18/2021 02:01	SA	8260B
1,2,4-Trichlorobenzene	ND		10.0	ug/kg	1	5030A	09/18/2021 02:01	SA	8260B
1,1,1-Trichloroethane	ND		10.0	ug/kg	1	5030A	09/18/2021 02:01	SA	8260B
1,1,2-Trichloroethane	ND		10.0	ug/kg	1	5030A	09/18/2021 02:01	SA	8260B
Trichloroethene	ND		10.0	ug/kg	1	5030A	09/18/2021 02:01	SA	8260B
Trichlorofluoromethane	ND		10.0	ug/kg	1	5030A	09/18/2021 02:01	SA	8260B
1,2,3-Trichloropropane	ND		10.0	ug/kg	1	5030A	09/18/2021 02:01	SA	8260B
1,2,4-Trimethylbenzene	ND		10.0	ug/kg	1	5030A	09/18/2021 02:01	SA	8260B
1,3,5- Trimethylbenzene	ND		10.0	ug/kg	1	5030A	09/18/2021 02:01	SA	8260B
Vinyl acetate	ND		50.0	ug/kg	1	5030A	09/18/2021 02:01	SA	8260B
Vinyl chloride	ND		30.0	ug/kg	1	5030A	09/18/2021 02:01	SA	8260B
m,p-Xylenes	ND		4.00	ug/kg	1	5030A	09/18/2021 02:01	SA	8260B
o-Xylene	ND		2.00	ug/kg	1	5030A	09/18/2021 02:01	SA	8260B
Surrogate: 4-Bromofluorobenzene			*113 %*		*70-120*	5030A	09/18/2021 02:01	SA	*8260B*
Surrogate: Dibromofluoromethane			*82.6 %*		*70-120*	5030A	09/18/2021 02:01	SA	*8260B*
Surrogate: Toluene-d8			*96.9 %*		*70-120*	5030A	09/18/2021 02:01	SA	*8260B*

The results in this report apply to the samples analyzed in accordance with the chain of custody document. This analytical report must be reproduced in its entirety.

Amolk Brar, Lab Director

American Scientific Laboratories, LLC
Environmental Testing Services
2520 N. San Fernando Road, LA CA 90065 Tel: (323) 223-9700 • Fax: (323) 223-9500

Kroner Environmental Services, Inc.	Project: Regional Connector Mission Yard	Work Order No: 2109115
10801 National Blvd. # 415	Project Number: [none]	**Reported:**
Los Angeles CA, 90064	Project Manager: Kurt Kroner	09/20/2021 17:20

Total Mercury (CVAA) - Quality Control Report

Analyte	Result	PQL	Units	Spike Level	Source Result	%REC	%REC Limits	RPD	RPD Limit	Notes
Batch BI10527 - 7471A - 7471A										
Blank (BI10527-BLK1)				Prepared: 09/17/202 Analyzed: 09/20/202						
Mercury	ND	0.0500	mg/kg							
LCS (BI10527-BS1)				Prepared: 09/17/202 Analyzed: 09/20/202						
Mercury	0.104	0.0500	mg/kg	0.100		104	80-120			
LCS Dup (BI10527-BSD1)				Prepared: 09/17/202 Analyzed: 09/20/202						
Mercury	0.108	0.0500	mg/kg	0.100		108	80-120	3.57	20	

The results in this report apply to the samples analyzed in accordance with the chain of custody document. This analytical report must be reproduced in its entirety.

Amolk Brar, Lab Director

American Scientific Laboratories, LLC
Environmental Testing Services
2520 N. San Fernando Road, LA CA 90065 Tel: (323) 223-9700 • Fax: (323) 223-9500

Kroner Environmental Services, Inc.	Project: Regional Connector Mission Yard	Work Order No: 2109115
10801 National Blvd. # 415	Project Number: [none]	**Reported:**
Los Angeles CA, 90064	Project Manager: Kurt Kroner	09/20/2021 17:20

Total ICP Metals - Quality Control Report

Analyte	Result	PQL	Units	Spike Level	Source Result	%REC	%REC Limits	RPD	RPD Limit	Notes
Batch BI10526 - 3050B - SW846 6010B										
Blank (BI10526-BLK1)				Prepared: 09/17/202 Analyzed: 09/20/202						
Antimony	ND	0.500	mg/kg							
Arsenic	ND	0.250	"							
Barium	ND	0.500	"							
Beryllium	ND	0.500	"							
Cadmium	ND	0.500	"							
Chromium	ND	0.500	"							
Cobalt	ND	0.500	"							
Copper	ND	0.500	"							
Lead	ND	0.250	"							
Molybdenum	ND	0.500	"							
Nickel	ND	0.500	"							
Selenium	ND	0.500	"							
Silver	ND	0.500	"							
Thallium	ND	0.500	"							
Vanadium	ND	0.500	"							
Zinc	ND	0.500	"							
LCS (BI10526-BS1)				Prepared: 09/17/202 Analyzed: 09/20/202						
Antimony	0.960	0.0100	mg/kg	1.00		96.0	80-120			
Arsenic	0.970	0.00500	"	1.00		97.0	80-120			
Barium	0.962	0.0100	"	1.00		96.2	80-120			
Beryllium	1.07	0.0100	"	1.00		107	80-120			
Cadmium	0.996	0.0100	"	1.00		99.6	80-120			
Chromium	0.991	0.0100	"	1.00		99.1	80-120			
Cobalt	0.994	0.0100	"	1.00		99.4	80-120			
Copper	1.03	0.0100	"	1.00		103	80-120			
Lead	1.01	0.00500	"	1.00		101	80-120			
Molybdenum	0.955	0.0100	"	1.00		95.5	80-120			
Nickel	1.01	0.0100	"	1.00		101	80-120			
Selenium	0.988	0.0100	"	1.00		98.8	80-120			
Silver	0.973	0.0100	"	1.00		97.3	80-120			
Thallium	1.04	0.0100	"	1.00		104	80-120			
Vanadium	0.991	0.0100	"	1.00		99.1	80-120			
Zinc	1.06	0.0100	"	1.00		106	80-120			

The results in this report apply to the samples analyzed in accordance with the chain of custody document. This analytical report must be reproduced in its entirety.

Amolk Brar, Lab Director

American Scientific Laboratories, LLC
Environmental Testing Services
2520 N. San Fernando Road, LA CA 90065 Tel: (323) 223-9700 • Fax: (323) 223-9500

Kroner Environmental Services, Inc.	Project: Regional Connector Mission Yard	Work Order No: 2109115
10801 National Blvd. # 415	Project Number: [none]	**Reported:**
Los Angeles CA, 90064	Project Manager: Kurt Kroner	09/20/2021 17:20

Total ICP Metals - Quality Control Report

Analyte	Result	PQL	Units	Spike Level	Source Result	%REC	%REC Limits	RPD	RPD Limit	Notes
Batch BI10526 - 3050B - SW846 6010B										
LCS Dup (BI10526-BSD1)				Prepared: 09/17/202 Analyzed: 09/20/202						
Antimony	0.962	0.0100	mg/kg	1.00		96.2	80-120	0.215	20	
Arsenic	0.965	0.00500	"	1.00		96.5	80-120	0.555	20	
Barium	0.955	0.0100	"	1.00		95.5	80-120	0.668	20	
Beryllium	1.05	0.0100	"	1.00		105	80-120	1.08	20	
Cadmium	0.991	0.0100	"	1.00		99.1	80-120	0.467	20	
Chromium	0.986	0.0100	"	1.00		98.6	80-120	0.516	20	
Cobalt	0.988	0.0100	"	1.00		98.8	80-120	0.609	20	
Copper	1.02	0.0100	"	1.00		102	80-120	0.400	20	
Lead	1.00	0.00500	"	1.00		100	80-120	0.543	20	
Molybdenum	0.948	0.0100	"	1.00		94.8	80-120	0.672	20	
Nickel	0.998	0.0100	"	1.00		99.8	80-120	0.835	20	
Selenium	0.986	0.0100	"	1.00		98.6	80-120	0.180	20	
Silver	0.979	0.0100	"	1.00		97.9	80-120	0.653	20	
Thallium	1.03	0.0100	"	1.00		103	80-120	0.895	20	
Vanadium	0.988	0.0100	"	1.00		98.8	80-120	0.336	20	
Zinc	1.03	0.0100	"	1.00		103	80-120	2.76	20	

The results in this report apply to the samples analyzed in accordance with the chain of custody document. This analytical report must be reproduced in its entirety.

Amolk Brar, Lab Director

American Scientific Laboratories, LLC
Environmental Testing Services
2520 N. San Fernando Road, LA CA 90065 Tel: (323) 223-9700 • Fax: (323) 223-9500

Kroner Environmental Services, Inc.	Project: Regional Connector Mission Yard	Work Order No: 2109115
10801 National Blvd. # 415	Project Number: [none]	**Reported:**
Los Angeles CA, 90064	Project Manager: Kurt Kroner	09/20/2021 17:20

Total Petroleum Hydrocarbons(TPH-g) - Quality Control Report

Analyte	Result	PQL	Units	Spike Level	Source Result	%REC	%REC Limits	RPD	RPD Limit	Notes
Batch BI10496 - 5030A - 8015B										
Blank (BI10496-BLK1)				Prepared & Analyzed: 09/17/202						
Gasoline Range Organics	ND	500	ug/kg							
LCS (BI10496-BS1)				Prepared & Analyzed: 09/17/202						
Gasoline Range Organics	508		ug/L	500		102	75-120			
LCS Dup (BI10496-BSD1)				Prepared & Analyzed: 09/17/202						
Gasoline Range Organics	527		ug/L	500		105	75-120	3.64	15	
Matrix Spike (BI10496-MS1)	**Source: 2109115-17**			Prepared & Analyzed: 09/17/202						
Gasoline Range Organics	562		ug/L	500	17.9	109	75-120			
Matrix Spike Dup (BI10496-MSD1)	**Source: 2109115-17**			Prepared & Analyzed: 09/17/202						
Gasoline Range Organics	574		ug/L	500	17.9	111	75-120	2.21	15	

The results in this report apply to the samples analyzed in accordance with the chain of custody document. This analytical report must be reproduced in its entirety.

Amolk Brar, Lab Director

American Scientific Laboratories, LLC
Environmental Testing Services
2520 N. San Fernando Road, LA CA 90065 Tel: (323) 223-9700 • Fax: (323) 223-9500

Kroner Environmental Services, Inc.	Project: Regional Connector Mission Yard	Work Order No: 2109115
10801 National Blvd. # 415	Project Number: [none]	**Reported:**
Los Angeles CA, 90064	Project Manager: Kurt Kroner	09/20/2021 17:20

Total Petroleum Hydrocarbons(TPH DROORO) - Quality Control Report

Analyte	Result	PQL	Units	Spike Level	Source Result	%REC	%REC Limits	RPD	RPD Limit	Notes
Batch BI10510 - 3550B - 8015B										
Blank (BI10510-BLK1)				Prepared & Analyzed: 09/17/202						
Diesel range organics	ND	10.0	mg/kg							
Oil Range Organics	ND	50.0	"							
Surrogate: Chlorobenzene	*97.8*		*mg/L*	*100*		*97.8*	*70-120*			
LCS (BI10510-BS1)				Prepared & Analyzed: 09/17/202						
Diesel range organics	521		mg/L	500		104	75-120			
Surrogate: Chlorobenzene	*93.0*		*"*	*100*		*93.0*	*70-120*			
LCS Dup (BI10510-BSD1)				Prepared & Analyzed: 09/17/202						
Diesel range organics	524		mg/L	500		105	75-120	0.653	20	
Surrogate: Chlorobenzene	*94.5*		*"*	*100*		*94.5*	*70-120*			
Matrix Spike (BI10510-MS1)	**Source: 2109164-05**			Prepared & Analyzed: 09/17/202						
Diesel range organics	520		mg/L	500	0.00	104	75-120			
Surrogate: Chlorobenzene	*96.1*		*"*	*100*		*96.1*	*70-120*			
Matrix Spike Dup (BI10510-MSD1)	**Source: 2109164-05**			Prepared & Analyzed: 09/17/202						
Diesel range organics	525		mg/L	500	0.00	105	75-120	1.09	20	
Surrogate: Chlorobenzene	*93.8*		*"*	*100*		*93.8*	*70-120*			
Batch BI10511 - 3550B - 8015B										
Blank (BI10511-BLK1)				Prepared & Analyzed: 09/17/202						
Diesel range organics	ND	10.0	mg/kg							
Oil Range Organics	ND	50.0	"							
Surrogate: Chlorobenzene	*107*		*mg/L*	*100*		*107*	*70-120*			

The results in this report apply to the samples analyzed in accordance with the chain of custody document. This analytical report must be reproduced in its entirety.

Amolk Brar, Lab Director

American Scientific Laboratories, LLC
Environmental Testing Services
2520 N. San Fernando Road, LA CA 90065 Tel: (323) 223-9700 • Fax: (323) 223-9500

Kroner Environmental Services, Inc.	Project: Regional Connector Mission Yard	Work Order No: 2109115
10801 National Blvd. # 415	Project Number: [none]	**Reported:**
Los Angeles CA, 90064	Project Manager: Kurt Kroner	09/20/2021 17:20

Total Petroleum Hydrocarbons(TPH DROORO) - Quality Control Report

Analyte	Result	PQL	Units	Spike Level	Source Result	%REC	%REC Limits	RPD	RPD Limit	Notes
Batch BI10511 - 3550B - 8015B										
LCS (BI10511-BS1)				Prepared & Analyzed: 09/17/202						
Diesel range organics	480		mg/L	500		96.1	75-120			
Surrogate: Chlorobenzene	*102*		*"*	*100*		*102*	*70-120*			
LCS Dup (BI10511-BSD1)				Prepared & Analyzed: 09/17/202						
Diesel range organics	480		mg/L	500		95.9	75-120	0.173	20	
Surrogate: Chlorobenzene	*102*		*"*	*100*		*102*	*70-120*			
Matrix Spike (BI10511-MS1)		**Source: 2109115-17**		Prepared & Analyzed: 09/17/202						
Diesel range organics	518		mg/L	500	5.80	102	75-120			
Surrogate: Chlorobenzene	*113*		*"*	*100*		*113*	*70-120*			
Matrix Spike Dup (BI10511-MSD1)		**Source: 2109115-17**		Prepared & Analyzed: 09/17/202						
Diesel range organics	521		mg/L	500	5.80	103	75-120	0.586	20	
Surrogate: Chlorobenzene	*116*		*"*	*100*		*116*	*70-120*			

The results in this report apply to the samples analyzed in accordance with the chain of custody document. This analytical report must be reproduced in its entirety.

Amolk Brar, Lab Director

American Scientific Laboratories, LLC
Environmental Testing Services
2520 N. San Fernando Road, LA CA 90065 Tel: (323) 223-9700 • Fax: (323) 223-9500

Kroner Environmental Services, Inc.	Project: Regional Connector Mission Yard	Work Order No: 2109115
10801 National Blvd. # 415	Project Number: [none]	**Reported:**
Los Angeles CA, 90064	Project Manager: Kurt Kroner	09/20/2021 17:20

Volatile Organic Compounds - Quality Control Report

Analyte	Result	PQL	Units	Spike Level	Source Result	%REC	%REC Limits	RPD	RPD Limit	Notes
Batch BI10495 - 5030A - 8260B										
Blank (BI10495-BLK1)				Prepared & Analyzed: 09/17/202						
Acetone	ND	50.0	ug/kg							
Benzene	ND	2.00	"							
Bromobenzene	ND	10.0	"							
Bromochloromethane	ND	10.0	"							
Bromodichloromethane	ND	10.0	"							
Bromoform	ND	50.0	"							
Bromomethane	ND	30.0	"							
2-Butanone	ND	50.0	"							
n-Butylbenzene	ND	10.0	"							
sec-Butylbenzene	ND	10.0	"							
tert-Butylbenzene	ND	10.0	"							
Carbon disulfide	ND	10.0	"							
Carbon tetrachloride	ND	10.0	"							
Chlorobenzene	ND	10.0	"							
Chloroethane	ND	30.0	"							
2-Chloroethylvinyl Ether	ND	50.0	"							
Chloroform	ND	10.0	"							
Chloromethane	ND	30.0	"							
4-Chlorotoluene	ND	10.0	"							
2-Chlorotoluene	ND	10.0	"							
1,2-Dibromo-3-chloropropane	ND	50.0	"							
Dibromochloromethane	ND	10.0	"							
1,2-Dibromoethane	ND	10.0	"							
Dibromomethane	ND	10.0	"							
1,2-Dichlorobenzene	ND	10.0	"							
1,3-Dichlorobenzene	ND	10.0	"							
1,4-Dichlorobenzene	ND	10.0	"							
Dichlorodifluoromethane	ND	30.0	"							
1,1-Dichloroethane	ND	10.0	"							
1,2-Dichloroethane	ND	10.0	"							
1,1-Dichloroethene	ND	10.0	"							
cis-1,2-Dichloroethene	ND	10.0	"							
trans-1,2-Dichloroethene	ND	10.0	"							
1,1-Dichloropropene	ND	10.0	"							
1,2-Dichloropropane	ND	10.0	"							
1,3-Dichloropropane	ND	10.0	"							
2,2-Dichloropropane	ND	10.0	"							
cis-1,3-Dichloropropene	ND	10.0	"							
trans-1,3-Dichloropropene	ND	10.0	"							
Ethylbenzene	ND	2.00	"							
Hexachlorobutadiene	ND	30.0	"							

The results in this report apply to the samples analyzed in accordance with the chain of custody document. This analytical report must be reproduced in its entirety.

Amolk Brar, Lab Director

American Scientific Laboratories, LLC
Environmental Testing Services
2520 N. San Fernando Road, LA CA 90065 Tel: (323) 223-9700 • Fax: (323) 223-9500

Kroner Environmental Services, Inc.	Project: Regional Connector Mission Yard	Work Order No: 2109115
10801 National Blvd. # 415	Project Number: [none]	**Reported:**
Los Angeles CA, 90064	Project Manager: Kurt Kroner	09/20/2021 17:20

Volatile Organic Compounds - Quality Control Report

Analyte	Result	PQL	Units	Spike Level	Source Result	%REC	%REC Limits	RPD	RPD Limit	Notes
Batch BI10495 - 5030A - 8260B										
Blank (BI10495-BLK1)				Prepared & Analyzed: 09/17/202						
2-Hexanone	ND	50.0	ug/kg							
Isopropylbenzene	ND	10.0	"							
p-Isopropyltoluene	ND	10.0	"							
Methyl tert-Butyl Ether (MTBE)	ND	5.00	"							
4-Methyl-2-pentanone (MIBK)	ND	50.0	"							
Methylene chloride	ND	50.0	"							
Naphthalene	ND	10.0	"							
n-Propylbenzene	ND	10.0	"							
Styrene	ND	10.0	"							
1,1,1,2-Tetrachloroethane	ND	10.0	"							
1,1,2,2-Tetrachloroethane	ND	10.0	"							
Tetrachloroethene	ND	10.0	"							
Toluene	ND	2.00	"							
1,2,3-Trichlorobenzene	ND	10.0	"							
1,2,4-Trichlorobenzene	ND	10.0	"							
1,1,1-Trichloroethane	ND	10.0	"							
1,1,2-Trichloroethane	ND	10.0	"							
Trichloroethene	ND	10.0	"							
Trichlorofluoromethane	ND	10.0	"							
1,2,3-Trichloropropane	ND	10.0	"							
1,2,4-Trimethylbenzene	ND	10.0	"							
1,3,5- Trimethylbenzene	ND	10.0	"							
Vinyl acetate	ND	50.0	"							
Vinyl chloride	ND	30.0	"							
m,p-Xylenes	ND	4.00	"							
o-Xylene	ND	2.00	"							
LCS (BI10495-BS1)				Prepared & Analyzed: 09/17/202						
Benzene	50.5		ug/L	50.0		101	75-120			
Chlorobenzene	51.2		"	50.0		102	75-120			
1,1-Dichloroethene	50.8		"	50.0		102	75-120			
Methyl tert-Butyl Ether (MTBE)	37.8		"	50.0		75.6	75-120			
Toluene	46.8		"	50.0		93.5	75-120			
Trichloroethene	47.5		"	50.0		95.0	75-120			

The results in this report apply to the samples analyzed in accordance with the chain of custody document. This analytical report must be reproduced in its entirety.

Amolk Brar, Lab Director

American Scientific Laboratories, LLC
Environmental Testing Services
2520 N. San Fernando Road, LA CA 90065 Tel: (323) 223-9700 • Fax: (323) 223-9500

Kroner Environmental Services, Inc.	Project: Regional Connector Mission Yard	Work Order No: 2109115
10801 National Blvd. # 415	Project Number: [none]	**Reported:**
Los Angeles CA, 90064	Project Manager: Kurt Kroner	09/20/2021 17:20

Volatile Organic Compounds - Quality Control Report

Analyte	Result	PQL	Units	Spike Level	Source Result	%REC	%REC Limits	RPD	RPD Limit	Notes
Batch BI10495 - 5030A - 8260B										
LCS Dup (BI10495-BSD1)				Prepared & Analyzed: 09/17/202						
Benzene	47.8		ug/L	50.0		95.6	75-120	5.49	20	
Chlorobenzene	49.8		"	50.0		99.6	75-120	2.87	20	
1,1-Dichloroethene	47.8		"	50.0		95.5	75-120	6.25	15	
Methyl tert-Butyl Ether (MTBE)	42.1		"	50.0		84.1	75-120	10.6	15	
Toluene	46.9		"	50.0		93.9	75-120	0.384	15	
Trichloroethene	45.4		"	50.0		90.8	75-120	4.50	20	
Matrix Spike (BI10495-MS1)		**Source: 2109115-17**		Prepared: 09/17/202 Analyzed: 09/18/202						
Benzene	43.7		ug/L	50.0	0.00	87.3	75-120			
Chlorobenzene	44.7		"	50.0	0.00	89.3	75-120			
1,1-Dichloroethene	47.2		"	50.0	0.00	94.4	75-120			
Methyl tert-Butyl Ether (MTBE)	46.4		"	50.0	0.00	92.9	75-120			
Toluene	44.6		"	50.0	0.00	89.2	75-120			
Trichloroethene	41.2		"	50.0	0.00	82.4	75-120			
Matrix Spike Dup (BI10495-MSD1)		**Source: 2109115-17**		Prepared: 09/17/202 Analyzed: 09/18/202						
Benzene	41.5		ug/L	50.0	0.00	83.0	75-120	5.10	15	
Chlorobenzene	43.7		"	50.0	0.00	87.4	75-120	2.17	15	
1,1-Dichloroethene	42.0		"	50.0	0.00	84.0	75-120	11.7	15	
Methyl tert-Butyl Ether (MTBE)	41.4		"	50.0	0.00	82.8	75-120	11.5	15	
Toluene	42.4		"	50.0	0.00	84.9	75-120	4.89	15	
Trichloroethene	38.7		"	50.0	0.00	77.4	75-120	6.23	15	

The results in this report apply to the samples analyzed in accordance with the chain of custody document. This analytical report must be reproduced in its entirety.

Amolk Brar, Lab Director

American Scientific Laboratories, LLC
Environmental Testing Services
2520 N. San Fernando Road, LA CA 90065 Tel: (323) 223-9700 • Fax: (323) 223-9500

Kroner Environmental Services, Inc.	Project: Regional Connector Mission Yard	Work Order No: 2109115
10801 National Blvd. # 415	Project Number: [none]	**Reported:**
Los Angeles CA, 90064	Project Manager: Kurt Kroner	09/20/2021 17:20

Notes and Definitions

S-04	The surrogate recovery for this sample is outside of established control limits due to a sample matrix effect.
DET	Analyte DETECTED
ND	Analyte NOT DETECTED at or above the practical quantitation limit (PQL)
NR	Not Reported
dry	Sample results reported on a dry weight basis
RPD	Relative Percent Difference

Appendix F

Rule 1466 Monitoring Report

CITADEL EHS
assess • resolve • strengthen

April 1, 2022 - Revised

Scott English
RINCON CONSULTANTS, INC.
250 East First Street, Suite 1400
Los Angeles, California 90012

Re: CITADEL Project No. 1814.1002.0
SCAQMD Rule 1466 Dust Monitoring Summary Report
Sixth Street Viaduct
585 South Santa Fe Avenue
Los Angeles, California 90013

Dear Mr. English:

Citadel EHS (Citadel) is pleased to provide this Summary Report detailing dust monitoring activities conducted at the Sixth Street Viaduct Project located at 585 South Santa Fe Avenue in the City of Los Angeles, California (Site). According to information provided by the Client, the soil to be excavated from the Site is impacted with lead. Therefore, the Client requested that Citadel conduct Rule 1466 Particulate Matter 10 (PM10) dust monitoring. The purpose of the dust monitoring was to monitor for particulate emissions from soils with toxic air contaminants and fugitive dust, in accordance with South Coast Air Quality Management District (SCAQMD) Rule 1466. A Site Location Map and Site Map are included as Figures 1 and 2, respectively.

Prior to onsite field activities, Citadel submitted a Rule 1466 Notification Online Form to the SCAQMD. Citadel also prepared a site-specific health and safety plan (HASP). This HASP identified existing and potential hazards for workers at the Site during excavation and dust monitoring activities. A copy of the Rule 1466 Notification and Invoice, and the signed HASP are included in Appendices A and B, respectively.

On February 7, 2022, Citadel representatives, arrived onsite and met with Mr. Jonathan Bridgeman with Rincon; assembled the dust monitoring equipment; and completed the safety orientation prepared by Skanska, the general contractor for the Project. Citadel conducted the dust monitoring at one upwind location and one downwind location between February 7 and February 15, 2022, during earth-moving activities per the requirements of section (d) Monitoring Requirements of SCAQMD Rule 1466 as amended on June 4, 2021. The prevailing wind in this area is from the west, but the excavation and loading activities were performed during a period of winds predominantly from the northeast. The upwind location was located in the northeast corner of the Site and the downwind location was along the south boundary of the Site, southwest of the upwind monitor. All work was conducted under the supervision of the On-Site Dust Supervisor, Mr. Mike Pendergrass.

The dust monitoring was conducted using TSI 8530 DustTrak II Aerosol Monitors (DustTraks) equipped with a TSI auto zero module, a TSI heated inlet and a Netronix Thiamis 1000 data module. Citadel also monitored wind speed and direction using a Davis Vantage Pro 2. Wind direction and speed were reported via an onsite monitor every one minute or less. However, the data available for download only recorded the average wind direction and speed per hour on February 7, 8, 9, 10, and 14, 2022. The upwind DustTrak failed to record data on February 7, 2022, from 8:02am to 10:43am. Manual documentation of the measurements was conducted during

the data loss and is included in Appendix E. The failure was resolved by February 8, 2022. The weather data is reported in Table 1 and the calculated 2-hour rolling average PM10 concentrations from February 7 to February 15, 2022, is included in Table 2.

An intra-instrument precision test was performed per the requirements of Rule 1466 Appendix 2 on February 7, 2022, and again on February 14, 2022. The results were within the precision requirements for both tests. The results are included in Appendix C.

No exceedances of the threshold value of 25 micrograms per cubic meter ($\mu g/m^3$) for the difference between the upwind and downwind locations were observed for the 2-hour rolling average PM10 concentrations recorded during the duration of the project. An instantaneous exceedance on February 7, 2022, at 7:12am was observed due to a truck driving by the DustTrak.

Citadel's daily field notes, SCQAMD Rule 1466 Logs, and Photographic Log are included in Appendices D, E, and F, respectively.

If after your review of this report, you have any questions or require additional information, please do not hesitate to contact our office at (818) 246-2707.

Sincerely,
CITADEL EHS

Alexandria Reed
Staff Environmental Specialist,
Engineering & Environmental Sciences

T. Michael Pendergrass, P.G.
Senior Project Geologist,
Engineering & Environmental Sciences

FIGURES:

Figure 1 Site Location Map
Figure 2 Site Map

TABLES:

Table 1 Weather Data
Table 2 2-Hour Rolling Averages of PM10 Concentrations

APPENDICES:

Appendix A SCAQMD Rule 1466 Notification and Invoice
Appendix B Health and Safety Plan
Appendix C SCAQMD Rule 1466 Intra-Instrument Precision Test Logs
Appendix D Citadel's Field Notes
Appendix E SCAQMD Rule 1466 Logs
Appendix F Photographic Log

CITADEL EHS
assess resolve strengthen

Figures

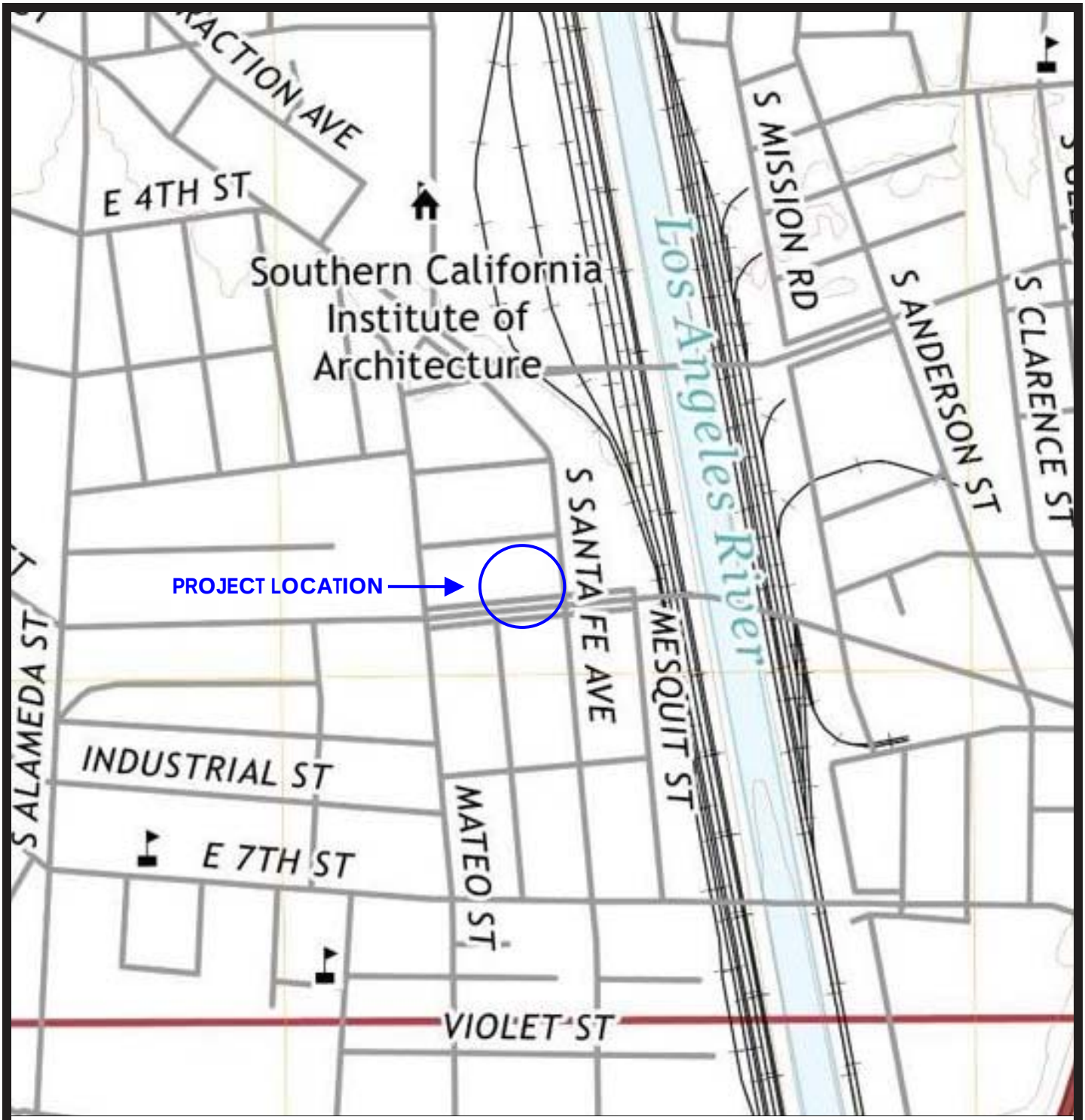

Not to Scale

Source: USGS, Los Angeles Quadrangle, 2018, 7.5 Minute Series

CITADEL EHS
assess resolve strengthen

RINCON CONSULTANTS, INC.

Sixth Street Viaduct
Los Angeles, California

Figure 1

PROJECT NO.: 1814.1002.0

DATE: MARCH 2022

Site Location Map

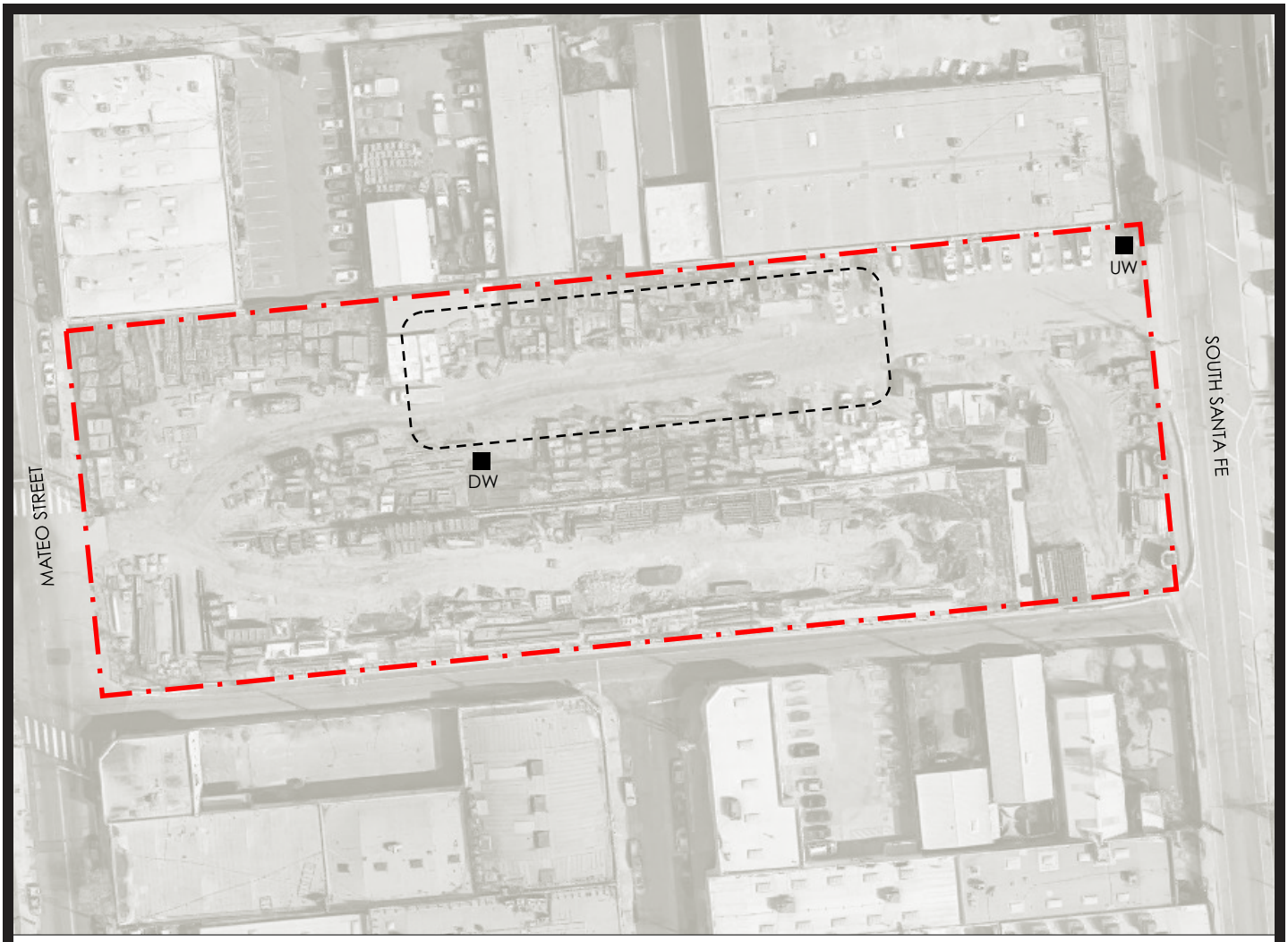

APPROXIMATE SITE BOUNDARIES

APPROXIMATE EXCAVATION BOUNDARIES

DUSTTRAK LOCATIONS (UW = UPWIND; DW = DOWNWIND)

N

Not to Scale

Source: Google Earth

CITADEL EHS
assess resolve strengthen

RINCON CONSULTANTS, INC.

Sixth Street Viaduct
Los Angeles, California

Figure 2

PROJECT NO.: 1814.1002.0

DATE: MARCH 2022

Site Map

CITADEL EHS
assess resolve strengthen

Tables

Table 1
Wind Data
February 7 to February 14, 2022
Sixth Street Viaduct
Los Angeles, California 90013

Date	Time	Wind Speed MPH	Wind Direction
2/7/2022	6:00 AM	1	NE
2/7/2022	7:00 AM	1	NE
2/7/2022	8:00 AM	1	NE
2/7/2022	9:00 AM	0	NE
2/7/2022	10:00 AM	2	NE
2/7/2022	11:00 AM	2	NNE
2/8/2022	7:00 AM	2	NE
2/8/2022	8:00 AM	2	NE
2/8/2022	9:00 AM	1	NE
2/8/2022	10:00 AM	1	NE
2/9/2022	6:00 AM	0	NNW
2/9/2022	7:00 AM	1	SW
2/9/2022	8:00 AM	1	SW
2/9/2022	9:00 AM	1	W
2/9/2022	10:00 AM	1	W
2/9/2022	11:00 AM	0	W
2/10/2022	6:00 AM	0	SW
2/10/2022	7:00 AM	0	W
2/10/2022	8:00 AM	0	NNW
2/10/2022	9:00 AM	0	N
2/10/2022	10:00 AM	0	SW
2/14/2022	6:00 AM	1	W
2/14/2022	7:00 AM	1	ENE

MPH = Miles Per Hour

Table 2
2-Hour Rolling Averages of PM10 Concentrations
February 7 to February 15, 2022
Sixth Street Viaduct
Los Angeles, California 90013

Timestamp (PST)	Upwind PM10 Total (Avg 120) (ug/m³)	Downwind PM10 Total (Avg 120) (ug/m³)	Difference between Downwind and Upwind
2/7/2022 7:02	21	26.6	5.6
2/7/2022 7:03	22	26.2	4.2
2/7/2022 7:04	18	25.9	7.9
2/7/2022 7:05	17	25.7	8.7
2/7/2022 7:06	18	25.4	7.4
2/7/2022 7:07	22	25.1	3.1
2/7/2022 7:08	20	24.8	4.8
2/7/2022 7:09	18	24.7	6.7
2/7/2022 7:10	14	24.5	10.5
2/7/2022 7:11	18	24.3	6.3
2/7/2022 7:12	147	24	123
2/7/2022 7:13	185	23.8	161.2
2/7/2022 7:14	27	24.6	2.4
2/7/2022 7:15	16	32.1	16.1
2/7/2022 7:16	15	32.5	17.5
2/7/2022 7:17	14	32	18
2/7/2022 7:18	14	31.5	17.5
2/7/2022 7:19	17	31.1	14.1
2/7/2022 7:20	20	30.6	10.6
2/7/2022 7:21	19	30.2	11.2
2/7/2022 7:22	22	29.9	7.9
2/7/2022 7:23	18	29.6	11.6
2/7/2022 7:24	17	29.4	12.4
2/7/2022 7:25	24	29.2	5.2
2/7/2022 7:26	20	28.9	8.9
2/7/2022 7:27	19	28.7	9.7
2/7/2022 7:28	14	28.6	14.6
2/7/2022 7:29	14	28.4	14.4
2/7/2022 7:30	13	28.1	15.1
2/7/2022 7:31	17	27.8	10.8
2/7/2022 7:32	18	27.5	9.5
2/7/2022 7:33	13	27.3	14.3
2/7/2022 7:34	13	27.1	14.1
2/7/2022 7:35	13	26.8	13.8
2/7/2022 7:36	13	26.6	13.6
2/7/2022 7:37	13	26.3	13.3
2/7/2022 7:38	13	26.1	13.1
2/7/2022 7:39	12	25.9	13.9
2/7/2022 7:40	14	25.6	11.6

Table 2
2-Hour Rolling Averages of PM10 Concentrations
February 7 to February 15, 2022
Sixth Street Viaduct
Los Angeles, California 90013

Timestamp (PST)	Upwind PM10 Total (Avg 120) (ug/m³)	Downwind PM10 Total (Avg 120) (ug/m³)	Difference between Downwind and Upwind
2/7/2022 7:41	13	25.4	12.4
2/7/2022 7:42	13	25.2	12.2
2/7/2022 7:43	13	25	12
2/7/2022 7:44	13	24.8	11.8
2/7/2022 7:45	14	24.6	10.6
2/7/2022 7:46	13	24.4	11.4
2/7/2022 7:47	13	24.3	11.3
2/7/2022 7:48	13	24.1	11.1
2/7/2022 7:49	13	23.9	10.9
2/7/2022 7:50	14	23.8	9.8
2/7/2022 7:51	13	23.6	10.6
2/7/2022 7:52	12	23.4	11.4
2/7/2022 7:53	12	23.3	11.3
2/7/2022 7:54	14	23.1	9.1
2/7/2022 7:55	14	23	9
2/7/2022 7:56	16	22.9	6.9
2/7/2022 7:57	13	22.7	9.7
2/7/2022 7:58	13	22.6	9.6
2/7/2022 7:59	13	22.5	9.5
2/7/2022 8:00	12	22.4	10.4
2/7/2022 8:01	12	22.3	10.3
2/7/2022 8:02	-	22.2	-
2/7/2022 8:03	-	22	-
2/7/2022 8:04	-	21.9	-
2/7/2022 8:05	-	21.8	-
2/7/2022 8:06	-	21.6	-
2/7/2022 8:07	-	21.5	-
2/7/2022 8:08	-	21.4	-
2/7/2022 8:09	-	21.3	-
2/7/2022 8:10	-	21.1	-
2/7/2022 8:11	-	21	-
2/7/2022 8:12	-	20.9	-
2/7/2022 8:13	-	20.8	-
2/7/2022 8:14	-	20.7	-
2/7/2022 8:15	-	20.6	-
2/7/2022 8:16	-	20.5	-
2/7/2022 8:17	-	20.4	-
2/7/2022 8:18	-	20.3	-
2/7/2022 8:19	-	20.2	-

Table 2
2-Hour Rolling Averages of PM10 Concentrations
February 7 to February 15, 2022
Sixth Street Viaduct
Los Angeles, California 90013

Timestamp (PST)	Upwind PM10 Total (Avg 120) (ug/m³)	Downwind PM10 Total (Avg 120) (ug/m³)	Difference between Downwind and Upwind
2/7/2022 8:20	-	20.1	-
2/7/2022 8:21	-	20	-
2/7/2022 8:22	-	19.9	-
2/7/2022 8:23	-	19.8	-
2/7/2022 8:24	-	19.7	-
2/7/2022 8:25	-	19.7	-
2/7/2022 8:26	-	19.6	-
2/7/2022 8:27	-	19.5	-
2/7/2022 8:28	-	19.4	-
2/7/2022 8:29	-	19.3	-
2/7/2022 8:30	-	19.3	-
2/7/2022 8:31	-	19.2	-
2/7/2022 8:32	-	19.1	-
2/7/2022 8:33	-	19	-
2/7/2022 8:34	-	19	-
2/7/2022 8:35	-	18.9	-
2/7/2022 8:36	-	18.8	-
2/7/2022 8:37	-	18.7	-
2/7/2022 8:38	-	18.7	-
2/7/2022 8:39	-	18.6	-
2/7/2022 8:40	-	18.5	-
2/7/2022 8:41	-	18.5	-
2/7/2022 8:42	-	18.4	-
2/7/2022 8:43	-	18.1	-
2/7/2022 8:44	-	17.7	-
2/7/2022 8:45	-	17.4	-
2/7/2022 8:46	-	17	-
2/7/2022 8:47	-	16.7	-
2/7/2022 8:48	-	16.6	-
2/7/2022 8:49	-	16.5	-
2/7/2022 8:50	-	16.5	-
2/7/2022 8:51	-	16.5	-
2/7/2022 8:52	-	16.4	-
2/7/2022 8:53	-	16.3	-
2/7/2022 8:54	-	16.3	-
2/7/2022 8:55	-	16.2	-
2/7/2022 8:56	-	16.1	-
2/7/2022 8:57	-	16.1	-
2/7/2022 8:58	-	16	-

Table 2
2-Hour Rolling Averages of PM10 Concentrations
February 7 to February 15, 2022
Sixth Street Viaduct
Los Angeles, California 90013

Timestamp (PST)	Upwind PM10 Total (Avg 120) (ug/m³)	Downwind PM10 Total (Avg 120) (ug/m³)	Difference between Downwind and Upwind
2/7/2022 8:59	-	15.9	-
2/7/2022 9:00	-	15.8	-
2/7/2022 9:01	-	15.7	-
2/7/2022 9:02	-	15.6	-
2/7/2022 9:03	-	15.5	-
2/7/2022 9:04	-	15.4	-
2/7/2022 9:05	-	15.3	-
2/7/2022 9:06	-	15.2	-
2/7/2022 9:07	-	15.1	-
2/7/2022 9:08	-	14.9	-
2/7/2022 9:09	-	14.8	-
2/7/2022 9:10	-	14.7	-
2/7/2022 9:11	-	14.6	-
2/7/2022 9:12	-	14.5	-
2/7/2022 9:13	-	14.4	-
2/7/2022 9:14	-	14.1	-
2/7/2022 9:15	-	11.9	-
2/7/2022 9:16	-	11.6	-
2/7/2022 9:17	-	11.5	-
2/7/2022 9:18	-	11.4	-
2/7/2022 9:19	-	11.3	-
2/7/2022 9:20	-	11.3	-
2/7/2022 9:21	-	11.2	-
2/7/2022 9:22	-	11	-
2/7/2022 9:23	-	10.9	-
2/7/2022 9:24	-	10.8	-
2/7/2022 9:25	-	10.7	-
2/7/2022 9:26	-	10.6	-
2/7/2022 9:27	-	10.5	-
2/7/2022 9:28	-	10.3	-
2/7/2022 9:29	-	10.2	-
2/7/2022 9:30	-	10.2	-
2/7/2022 9:31	-	10.1	-
2/7/2022 9:32	-	10	-
2/7/2022 9:33	-	10	-
2/7/2022 9:34	-	9.8	-
2/7/2022 9:35	-	9.8	-
2/7/2022 9:36	-	9.7	-
2/7/2022 9:37	-	9.7	-

Table 2
2-Hour Rolling Averages of PM10 Concentrations
February 7 to February 15, 2022
Sixth Street Viaduct
Los Angeles, California 90013

Timestamp (PST)	Upwind PM10 Total (Avg 120) (ug/m³)	Downwind PM10 Total (Avg 120) (ug/m³)	Difference between Downwind and Upwind
2/7/2022 9:38	-	9.6	-
2/7/2022 9:39	-	9.6	-
2/7/2022 9:40	-	9.5	-
2/7/2022 9:41	-	9.5	-
2/7/2022 9:42	-	9.4	-
2/7/2022 9:43	-	9.3	-
2/7/2022 9:44	-	9.2	-
2/7/2022 9:45	-	9.2	-
2/7/2022 9:46	-	9.1	-
2/7/2022 9:47	-	9.1	-
2/7/2022 9:48	-	9	-
2/7/2022 9:49	-	9	-
2/7/2022 9:50	-	8.9	-
2/7/2022 9:51	-	8.8	-
2/7/2022 9:52	-	8.8	-
2/7/2022 9:53	-	8.7	-
2/7/2022 9:54	-	8.7	-
2/7/2022 9:55	-	8.8	-
2/7/2022 9:56	-	8.7	-
2/7/2022 9:57	-	8.7	-
2/7/2022 9:58	-	8.6	-
2/7/2022 9:59	-	8.5	-
2/7/2022 10:00	-	8.5	-
2/7/2022 10:01	-	8.5	-
2/7/2022 10:02	-	8.4	-
2/7/2022 10:03	-	8.4	-
2/7/2022 10:04	-	8.4	-
2/7/2022 10:05	-	8.4	-
2/7/2022 10:06	-	8.3	-
2/7/2022 10:07	-	8.3	-
2/7/2022 10:08	-	8.3	-
2/7/2022 10:09	-	8.3	-
2/7/2022 10:10	-	8.3	-
2/7/2022 10:11	-	8.2	-
2/7/2022 10:12	-	8.2	-
2/7/2022 10:13	-	8.1	-
2/7/2022 10:14	-	8.3	-
2/7/2022 10:15	-	8.3	-
2/7/2022 10:16	-	8.2	-

Table 2
2-Hour Rolling Averages of PM10 Concentrations
February 7 to February 15, 2022
Sixth Street Viaduct
Los Angeles, California 90013

Timestamp (PST)	Upwind PM10 Total (Avg 120) (ug/m³)	Downwind PM10 Total (Avg 120) (ug/m³)	Difference between Downwind and Upwind
2/7/2022 10:17	-	8.1	-
2/7/2022 10:18	-	8.1	-
2/7/2022 10:19	-	8	-
2/7/2022 10:20	-	7.9	-
2/7/2022 10:21	-	7.8	-
2/7/2022 10:22	-	7.7	-
2/7/2022 10:23	-	7.7	-
2/7/2022 10:24	-	7.6	-
2/7/2022 10:25	-	7.5	-
2/7/2022 10:26	-	7.4	-
2/7/2022 10:27	-	7.3	-
2/7/2022 10:28	-	7.2	-
2/7/2022 10:29	-	7.2	-
2/7/2022 10:30	-	7.1	-
2/7/2022 10:31	-	7	-
2/7/2022 10:32	-	6.9	-
2/7/2022 10:33	-	7	-
2/7/2022 10:34	-	7.2	-
2/7/2022 10:35	-	7.3	-
2/7/2022 10:36	-	7.3	-
2/7/2022 10:37	-	7.2	-
2/7/2022 10:38	-	7.1	-
2/7/2022 10:39	-	7	-
2/7/2022 10:40	-	6.9	-
2/7/2022 10:41	-	6.8	-
2/7/2022 10:42	-	6.7	-
2/7/2022 10:43	-	6.6	-
2/8/2022 6:01	9	11.3	2.3
2/8/2022 6:02	8	11.2	3.2
2/8/2022 6:03	7.7	11.1	3.4
2/8/2022 6:04	8.5	11.1	2.6
2/8/2022 6:05	8.8	11	2.2
2/8/2022 6:06	8.8	10.9	2.1
2/8/2022 6:07	8.9	10.9	2
2/8/2022 6:08	8.8	10.9	2.1
2/8/2022 6:09	8.6	10.8	2.2
2/8/2022 6:10	8.5	10.8	2.3
2/8/2022 6:11	8.4	10.7	2.3

Table 2
2-Hour Rolling Averages of PM10 Concentrations
February 7 to February 15, 2022
Sixth Street Viaduct
Los Angeles, California 90013

Timestamp (PST)	Upwind PM10 Total (Avg 120) (ug/m³)	Downwind PM10 Total (Avg 120) (ug/m³)	Difference between Downwind and Upwind
2/8/2022 6:12	8.3	10.6	2.3
2/8/2022 6:13	8.2	10.6	2.4
2/8/2022 6:14	8.1	10.5	2.4
2/8/2022 6:15	8.1	10.6	2.5
2/8/2022 6:16	8	10.7	2.7
2/8/2022 6:17	8.1	10.7	2.6
2/8/2022 6:18	8.3	10.7	2.4
2/8/2022 6:19	8.3	10.7	2.4
2/8/2022 6:20	8.2	10.8	2.6
2/8/2022 6:21	8.1	10.8	2.7
2/8/2022 6:22	8.1	10.8	2.7
2/8/2022 6:23	9	10.8	1.8
2/8/2022 6:24	9.2	10.8	1.6
2/8/2022 6:25	9.2	10.8	1.6
2/8/2022 6:26	9.2	10.8	1.6
2/8/2022 6:27	9.3	10.8	1.5
2/8/2022 6:28	9.5	10.8	1.3
2/8/2022 6:29	9.5	10.8	1.3
2/8/2022 6:30	9.4	10.8	1.4
2/8/2022 6:31	9.3	10.8	1.5
2/8/2022 6:32	9.3	10.8	1.5
2/8/2022 6:33	9.3	10.8	1.5
2/8/2022 6:34	9.3	10.9	1.6
2/8/2022 6:35	9.3	10.9	1.6
2/8/2022 6:36	9.4	10.9	1.5
2/8/2022 6:37	9.4	10.9	1.5
2/8/2022 6:38	9.6	10.9	1.3
2/8/2022 6:39	9.7	11	1.3
2/8/2022 6:40	9.7	11	1.3
2/8/2022 6:41	9.7	11	1.3
2/8/2022 6:42	9.7	10.9	1.2
2/8/2022 6:43	9.8	10.9	1.1
2/8/2022 6:44	10.1	10.9	0.8
2/8/2022 6:45	10.2	10.9	0.7
2/8/2022 6:46	10.2	10.8	0.6
2/8/2022 6:47	10.2	10.8	0.6
2/8/2022 6:48	10.4	10.8	0.4
2/8/2022 6:49	10.5	10.8	0.3
2/8/2022 6:50	10.5	10.8	0.3

Table 2
2-Hour Rolling Averages of PM10 Concentrations
February 7 to February 15, 2022
Sixth Street Viaduct
Los Angeles, California 90013

Timestamp (PST)	Upwind PM10 Total (Avg 120) (ug/m³)	Downwind PM10 Total (Avg 120) (ug/m³)	Difference between Downwind and Upwind
2/8/2022 6:51	10.9	10.8	0.1
2/8/2022 6:52	11.1	10.8	0.3
2/8/2022 6:53	11.1	10.7	0.4
2/8/2022 6:54	11.3	10.7	0.6
2/8/2022 6:55	11.3	10.7	0.6
2/8/2022 6:56	11.3	10.7	0.6
2/8/2022 6:57	11.2	10.7	0.5
2/8/2022 6:58	11.1	10.7	0.4
2/8/2022 6:59	11	10.6	0.4
2/8/2022 7:00	11	10.6	0.4
2/8/2022 7:01	11	10.6	0.4
2/8/2022 7:02	11.2	10.6	0.6
2/8/2022 7:03	11.5	10.6	0.9
2/8/2022 7:04	11.7	10.6	1.1
2/8/2022 7:05	11.7	10.6	1.1
2/8/2022 7:06	11.7	10.7	1
2/8/2022 7:07	11.7	10.7	1
2/8/2022 7:08	11.7	10.8	0.9
2/8/2022 7:09	11.9	10.8	1.1
2/8/2022 7:10	12	10.8	1.2
2/8/2022 7:11	12.5	10.8	1.7
2/8/2022 7:12	12.7	10.9	1.8
2/8/2022 7:13	12.9	11	1.9
2/8/2022 7:14	13	11	2
2/8/2022 7:15	13	11.1	1.9
2/8/2022 7:16	13.1	11.2	1.9
2/8/2022 7:17	13.3	11.2	2.1
2/8/2022 7:18	13.3	11.3	2
2/8/2022 7:19	13.4	11.3	2.1
2/8/2022 7:20	13.4	11.3	2.1
2/8/2022 7:21	13.4	11.4	2
2/8/2022 7:22	13.4	11.4	2
2/8/2022 7:23	13.4	11.4	2
2/8/2022 7:24	13.5	11.4	2.1
2/8/2022 7:25	13.4	11.4	2
2/8/2022 7:26	13.4	11.4	2
2/8/2022 7:27	13.4	11.5	1.9
2/8/2022 7:28	13.5	11.5	2
2/8/2022 7:29	13.5	11.5	2

Table 2
2-Hour Rolling Averages of PM10 Concentrations
February 7 to February 15, 2022
Sixth Street Viaduct
Los Angeles, California 90013

Timestamp (PST)	Upwind PM10 Total (Avg 120) (ug/m³)	Downwind PM10 Total (Avg 120) (ug/m³)	Difference between Downwind and Upwind
2/8/2022 7:30	13.4	11.5	1.9
2/8/2022 7:31	13.5	11.5	2
2/8/2022 7:32	13.4	11.5	1.9
2/8/2022 7:33	13.4	11.5	1.9
2/8/2022 7:34	13.3	11.5	1.8
2/8/2022 7:35	13.2	11.5	1.7
2/8/2022 7:36	13.2	11.6	1.6
2/8/2022 7:37	13.1	11.6	1.5
2/8/2022 7:38	13.1	11.6	1.5
2/8/2022 7:39	13	11.6	1.4
2/8/2022 7:40	12.9	11.6	1.3
2/8/2022 7:41	12.9	11.1	1.8
2/8/2022 7:42	12.8	11.1	1.7
2/8/2022 7:43	12.7	11.1	1.6
2/8/2022 7:44	12.6	11	1.6
2/8/2022 7:45	12.6	11	1.6
2/8/2022 7:46	12.5	11	1.5
2/8/2022 7:47	12.5	11	1.5
2/8/2022 7:48	12.4	10.9	1.5
2/8/2022 7:49	12.3	10.9	1.4
2/8/2022 7:50	12.3	10.9	1.4
2/8/2022 7:51	12.2	10.9	1.3
2/8/2022 7:52	12.2	10.8	1.4
2/8/2022 7:53	12.2	10.8	1.4
2/8/2022 7:54	12.1	10.8	1.3
2/8/2022 7:55	12.1	10.8	1.3
2/8/2022 7:56	12	10.7	1.3
2/8/2022 7:57	12	10.7	1.3
2/8/2022 7:58	11.9	10.7	1.2
2/8/2022 7:59	11.9	10.6	1.3
2/8/2022 8:00	11.8	10.6	1.2
2/8/2022 8:01	11.8	10.6	1.2
2/8/2022 8:02	11.8	10.6	1.2
2/8/2022 8:03	11.8	10.6	1.2
2/8/2022 8:04	11.8	10.5	1.3
2/8/2022 8:05	11.8	10.5	1.3
2/8/2022 8:06	11.8	10.5	1.3
2/8/2022 8:07	11.8	10.5	1.3
2/8/2022 8:08	11.8	10.5	1.3

Table 2
2-Hour Rolling Averages of PM10 Concentrations
February 7 to February 15, 2022
Sixth Street Viaduct
Los Angeles, California 90013

Timestamp (PST)	Upwind PM10 Total (Avg 120) (ug/m³)	Downwind PM10 Total (Avg 120) (ug/m³)	Difference between Downwind and Upwind
2/8/2022 8:09	11.8	10.5	1.3
2/8/2022 8:10	11.9	10.5	1.4
2/8/2022 8:11	12	10.5	1.5
2/8/2022 8:12	12	10.5	1.5
2/8/2022 8:13	12	10.5	1.5
2/8/2022 8:14	12.1	10.5	1.6
2/8/2022 8:15	12.1	10.5	1.6
2/8/2022 8:16	12.2	10.5	1.7
2/8/2022 8:17	12.2	10.5	1.7
2/8/2022 8:18	12.3	10.5	1.8
2/8/2022 8:19	12.3	10.5	1.8
2/8/2022 8:20	12.4	10.8	1.6
2/8/2022 8:21	12.5	11.6	0.9
2/8/2022 8:22	12.7	11.8	0.9
2/8/2022 8:23	12.8	12	0.8
2/8/2022 8:24	13.4	12.1	1.3
2/8/2022 8:25	13.7	12.2	1.5
2/8/2022 8:26	13.9	12.3	1.6
2/8/2022 8:27	14	12.4	1.6
2/8/2022 8:28	14.1	12.5	1.6
2/8/2022 8:29	14.3	12.6	1.7
2/8/2022 8:30	14.5	12.7	1.8
2/8/2022 8:31	14.7	12.7	2
2/8/2022 8:32	14.9	12.8	2.1
2/8/2022 8:33	15	12.8	2.2
2/8/2022 8:34	15.1	12.8	2.3
2/8/2022 8:35	15.1	12.9	2.2
2/8/2022 8:36	15.1	12.9	2.2
2/8/2022 8:37	15.2	12.9	2.3
2/8/2022 8:38	15.2	12.9	2.3
2/8/2022 8:39	15.2	12.9	2.3
2/8/2022 8:40	15.2	12.9	2.3
2/8/2022 8:41	15.2	12.9	2.3
2/8/2022 8:42	15.2	12.9	2.3
2/8/2022 8:43	15.1	12.9	2.2
2/8/2022 8:44	15	12.9	2.1
2/8/2022 8:45	15	12.9	2.1
2/8/2022 8:46	14.9	12.9	2
2/8/2022 8:47	14.9	12.9	2

Table 2
2-Hour Rolling Averages of PM10 Concentrations
February 7 to February 15, 2022
Sixth Street Viaduct
Los Angeles, California 90013

Timestamp (PST)	Upwind PM10 Total (Avg 120) (ug/m³)	Downwind PM10 Total (Avg 120) (ug/m³)	Difference between Downwind and Upwind
2/8/2022 8:48	14.8	12.9	1.9
2/8/2022 8:49	14.7	12.8	1.9
2/8/2022 8:50	14.6	12.8	1.8
2/8/2022 8:51	14.5	12.8	1.7
2/8/2022 8:52	14.4	12.8	1.6
2/8/2022 8:53	14.3	12.8	1.5
2/8/2022 8:54	14.2	12.7	1.5
2/8/2022 8:55	14.1	12.7	1.4
2/8/2022 8:56	14.1	12.7	1.4
2/8/2022 8:57	14.1	12.7	1.4
2/8/2022 8:58	14.1	12.7	1.4
2/8/2022 8:59	14.2	12.7	1.5
2/8/2022 9:00	14.1	12.7	1.4
2/8/2022 9:01	14.1	12.7	1.4
2/8/2022 9:02	14	12.8	1.2
2/8/2022 9:03	13.8	12.8	1
2/8/2022 9:04	13.6	12.8	0.8
2/8/2022 9:05	13.6	12.7	0.9
2/8/2022 9:06	13.6	12.7	0.9
2/8/2022 9:07	13.6	12.6	1
2/8/2022 9:08	13.5	12.6	0.9
2/8/2022 9:09	13.4	12.5	0.9
2/8/2022 9:10	13.3	12.5	0.8
2/8/2022 9:11	13	12.4	0.6
2/8/2022 9:12	12.8	12.4	0.4
2/8/2022 9:13	12.7	12.3	0.4
2/8/2022 9:14	12.7	12.2	0.5
2/8/2022 9:15	12.6	12.1	0.5
2/8/2022 9:16	12.5	12	0.5
2/8/2022 9:17	12.4	11.9	0.5
2/8/2022 9:18	12.3	11.8	0.5
2/8/2022 9:19	12.2	11.8	0.4
2/8/2022 9:20	12.1	11.7	0.4
2/8/2022 9:21	12	11.6	0.4
2/8/2022 9:22	12	11.5	0.5
2/8/2022 9:23	11.8	11.4	0.4
2/8/2022 9:24	11.8	11.4	0.4
2/8/2022 9:25	11.7	11.3	0.4
2/8/2022 9:26	11.7	11.2	0.5

Table 2
2-Hour Rolling Averages of PM10 Concentrations
February 7 to February 15, 2022
Sixth Street Viaduct
Los Angeles, California 90013

Timestamp (PST)	Upwind PM10 Total (Avg 120) (ug/m³)	Downwind PM10 Total (Avg 120) (ug/m³)	Difference between Downwind and Upwind
2/9/2022 5:51	4.7	6	1.3
2/9/2022 5:52	4.7	6	1.3
2/9/2022 5:53	4.8	6	1.2
2/9/2022 5:54	4.8	6.3	1.5
2/9/2022 5:55	4.8	6.2	1.4
2/9/2022 5:56	4.8	6.2	1.4
2/9/2022 5:57	4.9	6.3	1.4
2/9/2022 5:58	5.1	6.4	1.3
2/9/2022 5:59	5.2	6.6	1.4
2/9/2022 6:00	5.2	6.7	1.5
2/9/2022 6:01	5.3	6.9	1.6
2/9/2022 6:02	5.5	7.1	1.6
2/9/2022 6:03	5.6	7.3	1.7
2/9/2022 6:04	5.8	7.6	1.8
2/9/2022 6:05	5.9	7.9	2
2/9/2022 6:06	6.1	8.1	2
2/9/2022 6:07	6.2	8.2	2
2/9/2022 6:08	6.3	8.4	2.1
2/9/2022 6:09	6.5	8.5	2
2/9/2022 6:10	6.6	8.6	2
2/9/2022 6:11	6.8	8.7	1.9
2/9/2022 6:12	6.9	8.8	1.9
2/9/2022 6:13	7	8.9	1.9
2/9/2022 6:14	7.1	9	1.9
2/9/2022 6:15	7.2	9.1	1.9
2/9/2022 6:16	7.4	10	2.6
2/9/2022 6:17	7.5	10.1	2.6
2/9/2022 6:18	7.5	10.3	2.8
2/9/2022 6:19	7.6	10.4	2.8
2/9/2022 6:20	7.7	10.5	2.8
2/9/2022 6:21	7.9	10.6	2.7
2/9/2022 6:22	8	10.7	2.7
2/9/2022 6:23	8	10.7	2.7
2/9/2022 6:24	8	10.7	2.7
2/9/2022 6:25	8.1	10.8	2.7
2/9/2022 6:26	8.2	10.8	2.6
2/9/2022 6:27	8.4	10.8	2.4
2/9/2022 6:28	8.5	10.8	2.3
2/9/2022 6:29	8.6	10.9	2.3

Table 2
2-Hour Rolling Averages of PM10 Concentrations
February 7 to February 15, 2022
Sixth Street Viaduct
Los Angeles, California 90013

Timestamp (PST)	Upwind PM10 Total (Avg 120) (ug/m³)	Downwind PM10 Total (Avg 120) (ug/m³)	Difference between Downwind and Upwind
2/9/2022 6:30	8.7	11	2.3
2/9/2022 6:31	8.8	11	2.2
2/9/2022 6:32	8.9	11	2.1
2/9/2022 6:33	8.9	11	2.1
2/9/2022 6:34	8.9	11	2.1
2/9/2022 6:35	8.9	11	2.1
2/9/2022 6:36	8.9	10.9	2
2/9/2022 6:37	8.9	10.9	2
2/9/2022 6:38	8.8	10.9	2.1
2/9/2022 6:39	8.8	10.8	2
2/9/2022 6:40	8.8	10.8	2
2/9/2022 6:41	9.4	10.7	1.3
2/9/2022 6:42	9.4	10.7	1.3
2/9/2022 6:43	9.4	10.7	1.3
2/9/2022 6:44	9.3	10.7	1.4
2/9/2022 6:45	9.3	10.7	1.4
2/9/2022 6:46	9.3	10.7	1.4
2/9/2022 6:47	9.2	10.6	1.4
2/9/2022 6:48	9.2	10.6	1.4
2/9/2022 6:49	9.1	10.6	1.5
2/9/2022 6:50	9.1	10.6	1.5
2/9/2022 6:51	9.1	10.5	1.4
2/9/2022 6:52	9	10.5	1.5
2/9/2022 6:53	9	10.5	1.5
2/9/2022 6:54	9	10.5	1.5
2/9/2022 6:55	8.9	10.4	1.5
2/9/2022 6:56	8.9	10.5	1.6
2/9/2022 6:57	8.9	10.6	1.7
2/9/2022 6:58	8.9	10.6	1.7
2/9/2022 6:59	8.9	10.6	1.7
2/9/2022 7:00	9	10.6	1.6
2/9/2022 7:01	9	10.6	1.6
2/9/2022 7:02	9	10.6	1.6
2/9/2022 7:03	9	10.6	1.6
2/9/2022 7:04	9.1	10.6	1.5
2/9/2022 7:05	9.2	10.6	1.4
2/9/2022 7:06	9.2	10.6	1.4
2/9/2022 7:07	9.2	10.6	1.4
2/9/2022 7:08	9.2	10.6	1.4

Table 2
2-Hour Rolling Averages of PM10 Concentrations
February 7 to February 15, 2022
Sixth Street Viaduct
Los Angeles, California 90013

Timestamp (PST)	Upwind PM10 Total (Avg 120) (ug/m³)	Downwind PM10 Total (Avg 120) (ug/m³)	Difference between Downwind and Upwind
2/9/2022 7:09	9.2	10.5	1.3
2/9/2022 7:10	9.4	10.6	1.2
2/9/2022 7:11	9.5	10.7	1.2
2/9/2022 7:12	9.5	10.7	1.2
2/9/2022 7:13	9.5	10.7	1.2
2/9/2022 7:14	9.6	10.7	1.1
2/9/2022 7:15	9.7	10.7	1
2/9/2022 7:16	9.7	10.7	1
2/9/2022 7:17	9.7	10.7	1
2/9/2022 7:18	9.7	10.7	1
2/9/2022 7:19	9.7	10.7	1
2/9/2022 7:20	9.7	10.7	1
2/9/2022 7:21	9.7	10.6	0.9
2/9/2022 7:22	9.9	10.6	0.7
2/9/2022 7:23	9.9	10.6	0.7
2/9/2022 7:24	9.9	10.6	0.7
2/9/2022 7:25	9.9	10.6	0.7
2/9/2022 7:26	9.9	10.6	0.7
2/9/2022 7:27	9.9	10.6	0.7
2/9/2022 7:28	9.9	10.6	0.7
2/9/2022 7:29	9.9	10.6	0.7
2/9/2022 7:30	9.9	10.6	0.7
2/9/2022 7:31	9.9	10.6	0.7
2/9/2022 7:32	10	10.6	0.6
2/9/2022 7:33	10	10.7	0.7
2/9/2022 7:34	10	10.7	0.7
2/9/2022 7:35	10.1	10.8	0.7
2/9/2022 7:36	10.1	10.8	0.7
2/9/2022 7:37	10.4	10.9	0.5
2/9/2022 7:38	10.6	11	0.4
2/9/2022 7:39	10.8	11.1	0.3
2/9/2022 7:40	12.4	11.2	1.2
2/9/2022 7:41	12.8	11.3	1.5
2/9/2022 7:42	13.3	11.5	1.8
2/9/2022 7:43	13.5	11.6	1.9
2/9/2022 7:44	13.7	11.7	2
2/9/2022 7:45	13.8	11.8	2
2/9/2022 7:46	13.8	11.8	2
2/9/2022 7:47	13.9	11.9	2

Table 2
2-Hour Rolling Averages of PM10 Concentrations
February 7 to February 15, 2022
Sixth Street Viaduct
Los Angeles, California 90013

Timestamp (PST)	Upwind PM10 Total (Avg 120) (ug/m³)	Downwind PM10 Total (Avg 120) (ug/m³)	Difference between Downwind and Upwind
2/9/2022 7:48	14	11.9	2.1
2/9/2022 7:49	14.2	11.9	2.3
2/9/2022 7:50	14.2	11.9	2.3
2/9/2022 7:51	14.4	12	2.4
2/9/2022 7:52	14.6	12.1	2.5
2/9/2022 7:53	14.8	12.2	2.6
2/9/2022 7:54	14.9	12.2	2.7
2/9/2022 7:55	15.2	12.3	2.9
2/9/2022 7:56	15.5	12.4	3.1
2/9/2022 7:57	15.7	12.5	3.2
2/9/2022 7:58	16.2	12.6	3.6
2/9/2022 7:59	16.5	12.6	3.9
2/9/2022 8:00	16.6	12.7	3.9
2/9/2022 8:01	16.7	12.7	4
2/9/2022 8:02	16.8	12.8	4
2/9/2022 8:03	16.8	12.8	4
2/9/2022 8:04	16.8	12.8	4
2/9/2022 8:05	16.9	12.8	4.1
2/9/2022 8:06	16.9	12.8	4.1
2/9/2022 8:07	16.9	12.8	4.1
2/9/2022 8:08	16.9	12.7	4.2
2/9/2022 8:09	16.9	12.7	4.2
2/9/2022 8:10	16.9	12.7	4.2
2/9/2022 8:11	16.9	12.7	4.2
2/9/2022 8:12	16.9	12.7	4.2
2/9/2022 8:13	17	12.8	4.2
2/9/2022 8:14	17.1	12.8	4.3
2/9/2022 8:15	17.1	12.8	4.3
2/9/2022 8:16	17.2	12.7	4.5
2/9/2022 8:17	17.2	12.7	4.5
2/9/2022 8:18	17.4	12.7	4.7
2/9/2022 8:19	18.5	12.7	5.8
2/9/2022 8:20	20.2	12.7	7.5
2/9/2022 8:21	20.3	12.8	7.5
2/9/2022 8:22	20.3	12.8	7.5
2/9/2022 8:23	20.4	12.8	7.6
2/9/2022 8:24	20.4	12.8	7.6
2/9/2022 8:25	20.5	12.8	7.7
2/9/2022 8:26	20.5	12.8	7.7

Table 2
2-Hour Rolling Averages of PM10 Concentrations
February 7 to February 15, 2022
Sixth Street Viaduct
Los Angeles, California 90013

Timestamp (PST)	Upwind PM10 Total (Avg 120) (ug/m³)	Downwind PM10 Total (Avg 120) (ug/m³)	Difference between Downwind and Upwind
2/9/2022 8:27	20.4	12.8	7.6
2/9/2022 8:28	20.5	12.8	7.7
2/9/2022 8:29	20.7	12.8	7.9
2/9/2022 8:30	20.8	12.8	8
2/9/2022 8:31	20.8	12.8	8
2/9/2022 8:32	20.8	12.8	8
2/9/2022 8:33	20.9	12.9	8
2/9/2022 8:34	21.1	12.9	8.2
2/9/2022 8:35	21.2	12.9	8.3
2/9/2022 8:36	21.3	13	8.3
2/9/2022 8:37	21.5	13	8.5
2/9/2022 8:38	21.7	13.1	8.6
2/9/2022 8:39	21.9	13.1	8.8
2/9/2022 8:40	22	13.2	8.8
2/9/2022 8:41	21.8	13.2	8.6
2/9/2022 8:42	21.9	13.2	8.7
2/9/2022 8:43	21.9	13.3	8.6
2/9/2022 8:44	22	13.3	8.7
2/9/2022 8:45	22	13.5	8.5
2/9/2022 8:46	22.1	13.6	8.5
2/9/2022 8:47	22.2	13.6	8.6
2/9/2022 8:48	22.2	13.7	8.5
2/9/2022 8:49	22.3	13.7	8.6
2/9/2022 8:50	22.4	13.7	8.7
2/9/2022 8:51	22.4	13.7	8.7
2/9/2022 8:52	22.5	13.7	8.8
2/9/2022 8:53	22.5	13.8	8.7
2/9/2022 8:54	22.6	14	8.6
2/9/2022 8:55	22.7	14.1	8.6
2/9/2022 8:56	22.7	14	8.7
2/9/2022 8:57	22.8	14.1	8.7
2/9/2022 8:58	22.8	14.1	8.7
2/9/2022 8:59	22.9	14.2	8.7
2/9/2022 9:00	22.9	14.2	8.7
2/9/2022 9:01	23	14.3	8.7
2/9/2022 9:02	23	14.3	8.7
2/9/2022 9:03	23.1	14.4	8.7
2/9/2022 9:04	23.1	14.4	8.7
2/9/2022 9:05	23.1	14.5	8.6

Table 2
2-Hour Rolling Averages of PM10 Concentrations
February 7 to February 15, 2022
Sixth Street Viaduct
Los Angeles, California 90013

Timestamp (PST)	Upwind PM10 Total (Avg 120) (ug/m³)	Downwind PM10 Total (Avg 120) (ug/m³)	Difference between Downwind and Upwind
2/9/2022 9:06	23.1	14.5	8.6
2/9/2022 9:07	23.2	14.5	8.7
2/9/2022 9:08	23.2	14.6	8.6
2/9/2022 9:09	23.2	14.6	8.6
2/9/2022 9:10	23.1	14.6	8.5
2/9/2022 9:11	23	14.6	8.4
2/9/2022 9:12	23.1	14.6	8.5
2/9/2022 9:13	23.1	14.6	8.5
2/9/2022 9:14	23.1	14.6	8.5
2/9/2022 9:15	23	14.6	8.4
2/9/2022 9:16	23	14.6	8.4
2/9/2022 9:17	23	14.7	8.3
2/9/2022 9:18	23	14.7	8.3
2/9/2022 9:19	23	14.7	8.3
2/9/2022 9:20	23	14.7	8.3
2/9/2022 9:21	23	14.8	8.2
2/9/2022 9:22	22.9	14.8	8.1
2/9/2022 9:23	23	14.8	8.2
2/9/2022 9:24	22.9	14.8	8.1
2/9/2022 9:25	22.9	14.8	8.1
2/9/2022 9:26	22.9	14.9	8
2/9/2022 9:27	22.9	14.9	8
2/9/2022 9:28	22.9	14.9	8
2/9/2022 9:29	22.9	14.9	8
2/9/2022 9:30	22.9	14.9	8
2/9/2022 9:31	22.9	14.9	8
2/9/2022 9:32	22.9	14.9	8
2/9/2022 9:33	22.9	14.9	8
2/9/2022 9:34	22.9	14.9	8
2/9/2022 9:35	22.9	14.8	8.1
2/9/2022 9:36	22.8	14.8	8
2/9/2022 9:37	22.5	14.7	7.8
2/9/2022 9:38	22.4	14.6	7.8
2/9/2022 9:39	22.1	14.5	7.6
2/9/2022 9:40	20.6	14.4	6.2
2/9/2022 9:41	20.2	14.3	5.9
2/9/2022 9:42	19.7	14.2	5.5
2/9/2022 9:43	19.5	14	5.5
2/9/2022 9:44	19.4	13.9	5.5

Table 2
2-Hour Rolling Averages of PM10 Concentrations
February 7 to February 15, 2022
Sixth Street Viaduct
Los Angeles, California 90013

Timestamp (PST)	Upwind PM10 Total (Avg 120) (ug/m³)	Downwind PM10 Total (Avg 120) (ug/m³)	Difference between Downwind and Upwind
2/9/2022 9:45	19.3	13.8	5.5
2/9/2022 9:46	19.3	13.8	5.5
2/9/2022 9:47	19.3	13.7	5.6
2/9/2022 9:48	19.2	13.7	5.5
2/9/2022 9:49	19.2	13.6	5.6
2/9/2022 9:50	19.1	13.5	5.6
2/9/2022 9:51	19	13.5	5.5
2/9/2022 9:52	18.7	13.4	5.3
2/9/2022 9:53	18.6	13.3	5.3
2/9/2022 9:54	18.5	13.2	5.3
2/10/2022 5:53	13	26	13
2/10/2022 5:54	14.5	23	8.5
2/10/2022 5:55	15	22	7
2/10/2022 5:56	15.8	22.6	6.8
2/10/2022 5:57	16	21.7	5.7
2/10/2022 5:58	15.8	20.7	4.9
2/10/2022 5:59	15.7	20	4.3
2/10/2022 6:00	15.6	19.7	4.1
2/10/2022 6:01	15.4	19.3	3.9
2/10/2022 6:02	15.5	19.1	3.6
2/10/2022 6:03	15.5	20	4.5
2/10/2022 6:04	15.6	20	4.4
2/10/2022 6:05	15.8	20.4	4.6
2/10/2022 6:06	15.9	20.7	4.8
2/10/2022 6:07	15.9	20.9	5
2/10/2022 6:08	16.3	20.9	4.6
2/10/2022 6:09	16.6	21.1	4.5
2/10/2022 6:10	16.9	21.1	4.2
2/10/2022 6:11	17.3	21.2	3.9
2/10/2022 6:12	17.3	21.4	4.1
2/10/2022 6:13	17.3	21.8	4.5
2/10/2022 6:14	17.2	22.1	4.9
2/10/2022 6:15	17.3	22.5	5.2
2/10/2022 6:16	17.3	22.7	5.4
2/10/2022 6:17	17.3	23.5	6.2
2/10/2022 6:18	17.2	23.6	6.4
2/10/2022 6:19	17.4	23.8	6.4
2/10/2022 6:20	17.8	24.1	6.3

Table 2
2-Hour Rolling Averages of PM10 Concentrations
February 7 to February 15, 2022
Sixth Street Viaduct
Los Angeles, California 90013

Timestamp (PST)	Upwind PM10 Total (Avg 120) (ug/m³)	Downwind PM10 Total (Avg 120) (ug/m³)	Difference between Downwind and Upwind
2/10/2022 6:21	17.9	24.6	6.7
2/10/2022 6:22	18	24.7	6.7
2/10/2022 6:23	18.1	24.9	6.8
2/10/2022 6:24	25.1	25	0.1
2/10/2022 6:25	25.5	25.1	0.4
2/10/2022 6:26	25.5	25.2	0.3
2/10/2022 6:27	25.4	25.2	0.2
2/10/2022 6:28	25.9	25.6	0.3
2/10/2022 6:29	26.5	26.1	0.4
2/10/2022 6:30	28.6	26.6	2
2/10/2022 6:31	32.6	27	5.6
2/10/2022 6:32	33.2	27.4	5.8
2/10/2022 6:33	33.9	27.7	6.2
2/10/2022 6:34	34.7	28	6.7
2/10/2022 6:35	35.6	28.1	7.5
2/10/2022 6:36	36.9	28.3	8.6
2/10/2022 6:37	38.2	28.5	9.7
2/10/2022 6:38	38.6	28.7	9.9
2/10/2022 6:39	38.7	29.1	9.6
2/10/2022 6:40	39	29.9	9.1
2/10/2022 6:41	39	30.7	8.3
2/10/2022 6:42	39.7	31.5	8.2
2/10/2022 6:43	40.4	32	8.4
2/10/2022 6:44	40.6	32.6	8
2/10/2022 6:45	42.5	33.6	8.9
2/10/2022 6:46	46	34.7	11.3
2/10/2022 6:47	46.9	35.7	11.2
2/10/2022 6:48	47.2	36.4	10.8
2/10/2022 6:49	-	36.8	-
2/10/2022 6:50	47.7	37.1	10.6
2/10/2022 6:51	48.3	37.3	11
2/10/2022 6:52	49	37.5	11.5
2/10/2022 6:53	50	37.9	12.1
2/10/2022 6:54	50.8	38.8	12
2/10/2022 6:55	52	40.3	11.7
2/10/2022 6:56	52.4	41.5	10.9
2/10/2022 6:57	-	41.8	-
2/10/2022 6:58	-	42.5	-
2/10/2022 6:59	52.8	42.7	10.1

Table 2
2-Hour Rolling Averages of PM10 Concentrations
February 7 to February 15, 2022
Sixth Street Viaduct
Los Angeles, California 90013

Timestamp (PST)	Upwind PM10 Total (Avg 120) (ug/m³)	Downwind PM10 Total (Avg 120) (ug/m³)	Difference between Downwind and Upwind
2/10/2022 7:00	53.2	42.9	10.3
2/10/2022 7:01	54.3	42.9	11.4
2/10/2022 7:02	55.1	43	12.1
2/10/2022 7:03	55.8	43.1	12.7
2/10/2022 7:04	56.2	43.2	13
2/10/2022 7:05	56.5	43.3	13.2
2/10/2022 7:06	56.6	43.6	13
2/10/2022 7:07	56.8	43.7	13.1
2/10/2022 7:08	56.9	43.8	13.1
2/10/2022 7:09	57.2	43.8	13.4
2/10/2022 7:10	57.4	43.8	13.6
2/10/2022 7:11	57.8	43.9	13.9
2/10/2022 7:12	58.5	44.5	14
2/10/2022 7:13	58.9	45	13.9
2/10/2022 7:14	58.9	45.6	13.3
2/10/2022 7:15	58.8	46.1	12.7
2/10/2022 7:16	58.6	46.5	12.1
2/10/2022 7:17	58.4	46.8	11.6
2/10/2022 7:18	58.2	47	11.2
2/10/2022 7:19	58.2	47.1	11.1
2/10/2022 7:20	58.3	47.2	11.1
2/10/2022 7:21	58.3	47.4	10.9
2/10/2022 7:22	58.4	47.6	10.8
2/10/2022 7:23	58.5	47.9	10.6
2/10/2022 7:24	58.7	48.2	10.5
2/10/2022 7:25	58.8	48.3	10.5
2/10/2022 7:26	58.9	48.4	10.5
2/10/2022 7:27	59	48.4	10.6
2/10/2022 7:28	59.1	48.4	10.7
2/10/2022 7:29	59	48.4	10.6
2/10/2022 7:30	59.1	48.3	10.8
2/10/2022 7:31	59.3	48.3	11
2/10/2022 7:32	59.4	49	10.4
2/10/2022 7:33	59.4	49.4	10
2/10/2022 7:34	59.3	49.8	9.5
2/10/2022 7:35	59.2	49.9	9.3
2/10/2022 7:36	59	49.9	9.1
2/10/2022 7:37	59.1	49.9	9.2
2/10/2022 7:38	59.1	49.8	9.3

Table 2
2-Hour Rolling Averages of PM10 Concentrations
February 7 to February 15, 2022
Sixth Street Viaduct
Los Angeles, California 90013

Timestamp (PST)	Upwind PM10 Total (Avg 120) (ug/m³)	Downwind PM10 Total (Avg 120) (ug/m³)	Difference between Downwind and Upwind
2/10/2022 7:39	59.3	49.8	9.5
2/10/2022 7:40	59.1	49.7	9.4
2/10/2022 7:41	59.1	49.7	9.4
2/10/2022 7:42	59	49.9	9.1
2/10/2022 7:43	58.9	49.9	9
2/10/2022 7:44	58.8	49.9	8.9
2/10/2022 7:45	58.7	49.8	8.9
2/10/2022 7:46	58.7	49.8	8.9
2/10/2022 7:47	58.6	49.7	8.9
2/10/2022 7:48	58.7	49.6	9.1
2/10/2022 7:49	58.7	49.5	9.2
2/10/2022 7:50	58.6	49.4	9.2
2/10/2022 7:51	58.4	49.3	9.1
2/10/2022 7:52	58.7	49.3	9.4
2/10/2022 7:53	58.9	49.5	9.4
2/10/2022 7:54	58.8	49.7	9.1
2/10/2022 7:55	59.1	49.9	9.2
2/10/2022 7:56	59.5	50.2	9.3
2/10/2022 7:57	59.9	50.5	9.4
2/10/2022 7:58	60.3	50.9	9.4
2/10/2022 7:59	60.7	51.2	9.5
2/10/2022 8:00	61	51.5	9.5
2/10/2022 8:01	61.3	52	9.3
2/10/2022 8:02	61.8	52.6	9.2
2/10/2022 8:03	62.1	52.8	9.3
2/10/2022 8:04	62.6	52.9	9.7
2/10/2022 8:05	62.9	53	9.9
2/10/2022 8:06	63.3	53.1	10.2
2/10/2022 8:07	63.7	53.3	10.4
2/10/2022 8:08	64	53.4	10.6
2/10/2022 8:09	64.1	53.5	10.6
2/10/2022 8:10	64.3	53.6	10.7
2/10/2022 8:11	64.5	53.7	10.8
2/10/2022 8:12	64.7	53.8	10.9
2/10/2022 8:13	64.9	53.8	11.1
2/10/2022 8:14	65.3	53.9	11.4
2/10/2022 8:15	65.7	54	11.7
2/10/2022 8:16	65.9	54.1	11.8
2/10/2022 8:17	66.1	54.1	12

CITADEL EHS
assess - resolve - strengthen

Table 2
2-Hour Rolling Averages of PM10 Concentrations
February 7 to February 15, 2022
Sixth Street Viaduct
Los Angeles, California 90013

Timestamp (PST)	Upwind PM10 Total (Avg 120) (ug/m³)	Downwind PM10 Total (Avg 120) (ug/m³)	Difference between Downwind and Upwind
2/10/2022 8:18	66.4	54.2	12.2
2/10/2022 8:19	66.6	54.3	12.3
2/10/2022 8:20	66.8	54.3	12.5
2/10/2022 8:21	67.1	54.3	12.8
2/10/2022 8:22	67.4	54.3	13.1
2/10/2022 8:23	67.7	54.4	13.3
2/10/2022 8:24	66.1	54.5	11.6
2/10/2022 8:25	66.1	54.6	11.5
2/10/2022 8:26	66.3	54.7	11.6
2/10/2022 8:27	66.6	54.9	11.7
2/10/2022 8:28	66.8	55	11.8
2/10/2022 8:29	66.8	55	11.8
2/10/2022 8:30	66.4	55	11.4
2/10/2022 8:31	65.2	55	10.2
2/10/2022 8:32	65.1	54.9	10.2
2/10/2022 8:33	65	54.9	10.1
2/10/2022 8:34	64.8	54.8	10
2/10/2022 8:35	64.6	54.8	9.8
2/10/2022 8:36	64.1	54.8	9.3
2/10/2022 8:37	63.7	54.8	8.9
2/10/2022 8:38	63.5	54.8	8.7
2/10/2022 8:39	63.6	54.7	8.9
2/10/2022 8:40	63.5	54.4	9.1
2/10/2022 8:41	63.6	54.2	9.4
2/10/2022 8:42	63.3	53.9	9.4
2/10/2022 8:43	63.1	53.7	9.4
2/10/2022 8:44	63	53.4	9.6
2/10/2022 8:45	62.1	53	9.1
2/10/2022 8:46	60.8	52.4	8.4
2/10/2022 8:47	60.4	52	8.4
2/10/2022 8:48	60.2	51.7	8.5
2/10/2022 8:49	60	51.4	8.6
2/10/2022 8:50	59.8	51.1	8.7
2/10/2022 8:51	59.5	50.9	8.6
2/10/2022 8:52	58.9	50.6	8.3
2/10/2022 8:53	58.5	50.3	8.2
2/10/2022 8:54	57.8	49.7	8.1
2/10/2022 8:55	57.5	48.9	8.6
2/10/2022 8:56	57.4	48.2	9.2

Table 2
2-Hour Rolling Averages of PM10 Concentrations
February 7 to February 15, 2022
Sixth Street Viaduct
Los Angeles, California 90013

Timestamp (PST)	Upwind PM10 Total (Avg 120) (ug/m³)	Downwind PM10 Total (Avg 120) (ug/m³)	Difference between Downwind and Upwind
2/10/2022 8:57	57.3	47.8	9.5
2/10/2022 8:58	57.2	47.3	9.9
2/10/2022 8:59	56.9	46.9	10
2/10/2022 9:00	56.6	46.6	10
2/10/2022 9:01	55.9	46.5	9.4
2/10/2022 9:02	55.3	46.4	8.9
2/10/2022 9:03	54.8	46.3	8.5
2/10/2022 9:04	54.2	46	8.2
2/11/2022 5:56	8	7	1
2/11/2022 5:57	8.3	7.5	0.8
2/11/2022 5:58	8.6	7.7	0.9
2/11/2022 5:59	8.5	8	0.5
2/11/2022 6:00	8.4	8.4	0
2/11/2022 6:01	8.4	11.8	3.4
2/11/2022 6:02	8.4	11.7	3.3
2/11/2022 6:03	8.3	11.5	3.2
2/11/2022 6:04	8.4	11.3	2.9
2/11/2022 6:05	8.5	11.2	2.7
2/11/2022 6:06	8.7	11.1	2.4
2/11/2022 6:07	9.4	11	1.6
2/11/2022 6:08	9.6	10.8	1.2
2/11/2022 6:09	9.7	10.7	1
2/11/2022 6:10	9.8	10.9	1.1
2/11/2022 6:11	9.8	10.8	1
2/11/2022 6:12	9.8	10.7	0.9
2/11/2022 6:13	9.9	10.8	0.9
2/11/2022 6:14	9.9	10.8	0.9
2/11/2022 6:15	10	11	1
2/11/2022 6:16	10	11	1
2/11/2022 6:17	10	11	1
2/11/2022 6:18	10	11	1
2/11/2022 6:19	10	11	1
2/11/2022 6:20	10	11.1	1.1
2/11/2022 6:21	10	11	1
2/11/2022 6:22	10	11	1
2/11/2022 6:23	10.1	11	0.9
2/11/2022 6:24	10.1	10.9	0.8
2/11/2022 6:25	10.1	10.9	0.8

Table 2
2-Hour Rolling Averages of PM10 Concentrations
February 7 to February 15, 2022
Sixth Street Viaduct
Los Angeles, California 90013

Timestamp (PST)	Upwind PM10 Total (Avg 120) (ug/m³)	Downwind PM10 Total (Avg 120) (ug/m³)	Difference between Downwind and Upwind
2/11/2022 6:26	10.1	10.9	0.8
2/11/2022 6:27	10.2	10.8	0.6
2/11/2022 6:28	10.2	10.8	0.6
2/11/2022 6:29	10.2	10.8	0.6
2/11/2022 6:30	10.3	10.7	0.4
2/11/2022 6:31	10.3	10.7	0.4
2/11/2022 6:32	10.3	10.6	0.3
2/11/2022 6:33	10.4	10.7	0.3
2/11/2022 6:34	10.5	10.6	0.1
2/11/2022 6:35	10.6	10.7	0.1
2/11/2022 6:36	10.6	10.7	0.1
2/11/2022 6:37	10.8	10.6	0.2
2/11/2022 6:38	10.7	10.6	0.1
2/11/2022 6:39	10.7	10.8	0.1
2/11/2022 6:40	10.6	10.8	0.2
2/11/2022 6:41	10.6	10.8	0.2
2/11/2022 6:42	10.6	10.7	0.1
2/11/2022 6:43	10.8	10.8	0
2/11/2022 6:44	10.9	10.8	0.1
2/11/2022 6:45	11	10.8	0.2
2/11/2022 6:46	11.1	10.8	0.3
2/11/2022 6:47	11.2	10.7	0.5
2/11/2022 6:48	11.1	10.7	0.4
2/11/2022 6:49	11.2	10.6	0.6
2/11/2022 6:50	11.2	10.7	0.5
2/11/2022 6:51	11.2	10.7	0.5
2/11/2022 6:52	11.2	10.8	0.4
2/11/2022 6:53	11.2	10.9	0.3
2/11/2022 6:54	11.3	10.9	0.4
2/11/2022 6:55	11.3	11	0.3
2/11/2022 6:56	11.4	11	0.4
2/11/2022 6:57	11.7	11	0.7
2/11/2022 6:58	12	11.1	0.9
2/11/2022 6:59	12.2	11.2	1
2/11/2022 7:00	12.4	11.2	1.2
2/11/2022 7:01	12.7	11.3	1.4
2/11/2022 7:02	12.8	11.3	1.5
2/11/2022 7:03	12.9	11.4	1.5
2/11/2022 7:04	12.9	11.4	1.5

Table 2
2-Hour Rolling Averages of PM10 Concentrations
February 7 to February 15, 2022
Sixth Street Viaduct
Los Angeles, California 90013

Timestamp (PST)	Upwind PM10 Total (Avg 120) (ug/m³)	Downwind PM10 Total (Avg 120) (ug/m³)	Difference between Downwind and Upwind
2/11/2022 7:05	13.1	11.4	1.7
2/11/2022 7:06	13.2	11.5	1.7
2/11/2022 7:07	13.2	11.5	1.7
2/11/2022 7:08	13.2	11.5	1.7
2/11/2022 7:09	13.3	11.6	1.7
2/11/2022 7:10	13.3	11.8	1.5
2/11/2022 7:11	13.3	12	1.3
2/11/2022 7:12	13.7	12.1	1.6
2/11/2022 7:13	13.8	12.2	1.6
2/11/2022 7:14	13.9	12.3	1.6
2/11/2022 7:15	14.2	12.3	1.9
2/11/2022 7:16	15	12.4	2.6
2/11/2022 7:17	15.3	12.5	2.8
2/11/2022 7:18	15.5	12.5	3
2/11/2022 7:19	15.8	12.6	3.2
2/11/2022 7:20	15.9	12.6	3.3
2/11/2022 7:21	16	12.7	3.3
2/11/2022 7:22	16.1	12.8	3.3
2/11/2022 7:23	16.2	12.9	3.3
2/11/2022 7:24	16.5	13	3.5
2/11/2022 7:25	16.7	13.1	3.6
2/11/2022 7:26	16.8	13.2	3.6
2/11/2022 7:27	16.9	13.4	3.5
2/11/2022 7:28	16.9	13.5	3.4
2/11/2022 7:29	17	13.7	3.3
2/11/2022 7:30	17	13.9	3.1
2/11/2022 7:31	17.1	14.1	3
2/11/2022 7:32	17.2	14.4	2.8
2/11/2022 7:33	17.3	14.6	2.7
2/11/2022 7:34	17.4	14.8	2.6
2/11/2022 7:35	17.6	14.9	2.7
2/11/2022 7:36	17.8	15.1	2.7
2/11/2022 7:37	18	15.2	2.8
2/11/2022 7:38	19.3	15.2	4.1
2/11/2022 7:39	19.7	15.2	4.5
2/11/2022 7:40	20	15.2	4.8
2/11/2022 7:41	20.2	15.2	5
2/11/2022 7:42	20.5	15.2	5.3
2/11/2022 7:43	20.5	15.2	5.3

Table 2
2-Hour Rolling Averages of PM10 Concentrations
February 7 to February 15, 2022
Sixth Street Viaduct
Los Angeles, California 90013

Timestamp (PST)	Upwind PM10 Total (Avg 120) (ug/m³)	Downwind PM10 Total (Avg 120) (ug/m³)	Difference between Downwind and Upwind
2/11/2022 7:44	20.6	15.2	5.4
2/11/2022 7:45	20.7	15.2	5.5
2/11/2022 7:46	20.8	15.2	5.6
2/11/2022 7:47	20.8	15.2	5.6
2/11/2022 7:48	20.9	15.2	5.7
2/11/2022 7:49	20.9	15.2	5.7
2/11/2022 7:50	20.9	15.2	5.7
2/11/2022 7:51	21.1	15.2	5.9
2/11/2022 7:52	21.3	15.2	6.1
2/11/2022 7:53	21.6	15.2	6.4
2/11/2022 7:54	21.7	15.2	6.5
2/11/2022 7:55	21.8	15.3	6.5
2/11/2022 7:56	21.9	15.4	6.5
2/11/2022 7:57	22	15.4	6.6
2/11/2022 7:58	22.1	15.5	6.6
2/11/2022 7:59	22.2	15.6	6.6
2/11/2022 8:00	22.3	15.7	6.6
2/11/2022 8:01	22.5	15.7	6.8
2/11/2022 8:02	22.8	15.8	7
2/11/2022 8:03	23	15.9	7.1
2/11/2022 8:04	23.1	16	7.1
2/11/2022 8:05	23.3	16	7.3
2/11/2022 8:06	23.6	16.1	7.5
2/11/2022 8:07	23.7	16.2	7.5
2/11/2022 8:08	23.9	16.2	7.7
2/11/2022 8:09	24.2	16.3	7.9
2/11/2022 8:10	24.4	16.4	8
2/11/2022 8:11	24.6	16.4	8.2
2/11/2022 8:12	24.8	16.5	8.3
2/11/2022 8:13	25	16.5	8.5
2/11/2022 8:14	25.2	16.5	8.7
2/11/2022 8:15	25.4	16.4	9
2/11/2022 8:16	25.6	16.4	9.2
2/11/2022 8:17	25.8	16.4	9.4
2/11/2022 8:18	25.9	16.4	9.5
2/11/2022 8:19	26	16.4	9.6
2/11/2022 8:20	26.1	16.4	9.7
2/11/2022 8:21	26.2	16.4	9.8
2/11/2022 8:22	26.2	16.4	9.8

Table 2
2-Hour Rolling Averages of PM10 Concentrations
February 7 to February 15, 2022
Sixth Street Viaduct
Los Angeles, California 90013

Timestamp (PST)	Upwind PM10 Total (Avg 120) (ug/m³)	Downwind PM10 Total (Avg 120) (ug/m³)	Difference between Downwind and Upwind
2/11/2022 8:23	26.2	16.4	9.8
2/11/2022 8:24	26.3	16.4	9.9
2/11/2022 8:25	26.3	16.4	9.9
2/11/2022 8:26	26.3	16.4	9.9
2/11/2022 8:27	26.3	16.4	9.9
2/11/2022 8:28	26.3	16.4	9.9
2/11/2022 8:29	26.3	16.4	9.9
2/11/2022 8:30	26.4	16.7	9.7
2/11/2022 8:31	26.5	16.7	9.8
2/11/2022 8:32	26.7	16.7	10
2/11/2022 8:33	26.7	16.7	10
2/11/2022 8:34	26.7	16.7	10
2/11/2022 8:35	26.7	16.7	10
2/11/2022 8:36	26.7	16.7	10
2/14/2022 6:08	8.8	7.8	1
2/14/2022 6:09	8.8	7.9	0.9
2/14/2022 6:10	8.7	8.2	0.5
2/14/2022 6:11	8.6	8.5	0.1
2/14/2022 6:12	8.4	8.6	0.2
2/14/2022 6:13	-	8.6	-
2/14/2022 6:14	8.4	8.6	0.2
2/14/2022 6:15	8.4	8.6	0.2
2/14/2022 6:16	-	8.6	-
2/14/2022 6:17	8.5	8.6	0.1
2/14/2022 6:18	8.5	8.7	0.2
2/14/2022 6:19	8.4	8.7	0.3
2/14/2022 6:20	8.4	8.6	0.2
2/14/2022 6:21	8.4	8.6	0.2
2/14/2022 6:22	8.4	8.6	0.2
2/14/2022 6:23	8.3	8.7	0.4
2/14/2022 6:24	8.2	8.6	0.4
2/14/2022 6:25	8.2	8.6	0.4
2/14/2022 6:26	8.1	8.6	0.5
2/14/2022 6:27	8	8.6	0.6
2/14/2022 6:28	8	8.6	0.6
2/14/2022 6:29	8	8.6	0.6
2/14/2022 6:30	8	8.6	0.6
2/14/2022 6:31	8	8.5	0.5

Table 2
2-Hour Rolling Averages of PM10 Concentrations
February 7 to February 15, 2022
Sixth Street Viaduct
Los Angeles, California 90013

Timestamp (PST)	Upwind PM10 Total (Avg 120) (ug/m³)	Downwind PM10 Total (Avg 120) (ug/m³)	Difference between Downwind and Upwind
2/14/2022 6:32	7.9	8.5	0.6
2/14/2022 6:33	8	8.5	0.5
2/14/2022 6:34	8	8.5	0.5
2/14/2022 6:35	8	8.6	0.6
2/14/2022 6:36	8	8.7	0.7
2/14/2022 6:37	8	8.7	0.7
2/14/2022 6:38	7.9	8.7	0.8
2/14/2022 6:39	7.9	8.7	0.8
2/14/2022 6:40	7.9	8.6	0.7
2/14/2022 6:41	7.9	8.6	0.7
2/14/2022 6:42	7.9	8.6	0.7
2/14/2022 6:43	7.9	8.6	0.7
2/14/2022 6:44	7.9	8.6	0.7
2/14/2022 6:45	7.9	8.6	0.7
2/14/2022 6:46	7.9	8.6	0.7
2/14/2022 6:47	7.9	8.6	0.7
2/14/2022 6:48	8	8.6	0.6
2/14/2022 6:49	8	8.7	0.7
2/14/2022 6:50	8	8.7	0.7
2/14/2022 6:51	8	8.7	0.7
2/14/2022 6:52	8	8.7	0.7
2/14/2022 6:53	8	8.8	0.8
2/14/2022 6:54	8	8.8	0.8
2/14/2022 6:55	8	8.8	0.8
2/14/2022 6:56	8	8.8	0.8
2/14/2022 6:57	8	8.8	0.8
2/14/2022 6:58	8.1	8.9	0.8
2/14/2022 6:59	8.1	9	0.9
2/14/2022 7:00	8.1	9	0.9
2/14/2022 7:01	8.1	9.1	1
2/14/2022 7:02	8.2	9.2	1
2/14/2022 7:03	8.3	9.2	0.9
2/14/2022 7:04	8.4	9.3	0.9
2/14/2022 7:05	8.4	9.9	1.5
2/14/2022 7:06	8.5	9.9	1.4
2/14/2022 7:07	8.6	9.9	1.3
2/14/2022 7:08	8.8	9.9	1.1
2/14/2022 7:09	9.7	10	0.3
2/14/2022 7:10	10.4	10.1	0.3

Table 2
2-Hour Rolling Averages of PM10 Concentrations
February 7 to February 15, 2022
Sixth Street Viaduct
Los Angeles, California 90013

Timestamp (PST)	Upwind PM10 Total (Avg 120) (ug/m³)	Downwind PM10 Total (Avg 120) (ug/m³)	Difference between Downwind and Upwind
2/14/2022 7:11	10.7	10.2	0.5
2/14/2022 7:12	11	10.3	0.7
2/14/2022 7:13	11.1	10.3	0.8
2/14/2022 7:14	11.2	10.4	0.8
2/14/2022 7:15	11.2	10.5	0.7
2/14/2022 7:16	11.5	10.6	0.9
2/14/2022 7:17	11.7	10.6	1.1
2/14/2022 7:18	12.1	10.8	1.3
2/14/2022 7:19	12.6	11	1.6
2/14/2022 7:20	13	11.2	1.8
2/14/2022 7:21	13.5	11.4	2.1
2/14/2022 7:22	13.9	11.6	2.3
2/14/2022 7:23	14.5	11.7	2.8
2/14/2022 7:24	15	11.9	3.1
2/14/2022 7:25	16.9	12.1	4.8
2/14/2022 7:26	17.9	12.3	5.6
2/14/2022 7:27	19	12.4	6.6
2/14/2022 7:28	19.5	12.6	6.9
2/14/2022 7:29	19.7	12.7	7
2/14/2022 7:30	20.1	12.8	7.3
2/14/2022 7:31	20.6	12.8	7.8
2/14/2022 7:32	21	12.8	8.2
2/14/2022 7:33	21.3	12.9	8.4
2/14/2022 7:34	21.7	12.9	8.8
2/14/2022 7:35	21.9	12.8	9.1
2/14/2022 7:36	22.2	12.8	9.4
2/14/2022 7:37	22.4	12.8	9.6
2/14/2022 7:38	22.5	12.8	9.7
2/14/2022 7:39	22.5	12.8	9.7
2/14/2022 7:40	22.8	12.8	10
2/14/2022 7:41	23.1	12.8	10.3
2/14/2022 7:42	23.3	12.8	10.5
2/14/2022 7:43	23.4	12.8	10.6
2/14/2022 7:44	23.5	12.9	10.6
2/14/2022 7:45	23.5	13	10.5
2/14/2022 7:46	23.5	13.1	10.4
2/14/2022 7:47	23.6	13.3	10.3
2/14/2022 7:48	23.6	13.4	10.2
2/14/2022 7:49	23.7	13.6	10.1

Table 2
2-Hour Rolling Averages of PM10 Concentrations
February 7 to February 15, 2022
Sixth Street Viaduct
Los Angeles, California 90013

Timestamp (PST)	Upwind PM10 Total (Avg 120) (ug/m³)	Downwind PM10 Total (Avg 120) (ug/m³)	Difference between Downwind and Upwind
2/14/2022 7:50	23.8	13.6	10.2
2/14/2022 7:51	23.9	13.8	10.1
2/14/2022 7:52	24.1	13.9	10.2
2/14/2022 7:53	24.3	14	10.3
2/14/2022 7:54	24.5	14.1	10.4
2/14/2022 7:55	24.7	14.1	10.6
2/14/2022 7:56	24.9	14.2	10.7
2/14/2022 7:57	24.9	14.2	10.7
2/14/2022 7:58	24.9	14.3	10.6
2/14/2022 7:59	24.9	14.4	10.5
2/14/2022 8:00	25	15	10
2/14/2022 8:01	25.1	15	10.1
2/14/2022 8:02	25.2	15.1	10.1
2/14/2022 8:03	25.5	15.2	10.3
2/14/2022 8:04	25.7	15.3	10.4
2/14/2022 8:05	25.9	15.3	10.6
2/14/2022 8:06	26.1	15.4	10.7
2/14/2022 8:07	26.3	15.5	10.8
2/14/2022 8:08	26.5	15.5	11
2/14/2022 8:09	26.6	15.6	11
2/14/2022 8:10	26.7	15.6	11.1
2/14/2022 8:11	26.7	15.6	11.1
2/14/2022 8:12	26.8	15.6	11.2
2/14/2022 8:13	27	15.6	11.4
2/14/2022 8:14	27	15.6	11.4
2/14/2022 8:15	27	15.6	11.4
2/14/2022 8:16	27	15.6	11.4
2/14/2022 8:17	27.1	15.6	11.5
2/14/2022 8:18	27.4	15.5	11.9
2/14/2022 8:19	27.5	15.5	12
2/14/2022 8:20	27.5	15.5	12
2/14/2022 8:21	27.6	15.5	12.1
2/14/2022 8:22	27.6	15.5	12.1
2/14/2022 8:23	27.7	15.4	12.3
2/14/2022 8:24	27.9	15.4	12.5
2/14/2022 8:25	27.9	15.4	12.5
2/14/2022 8:26	28	15.4	12.6
2/14/2022 8:27	28	15.3	12.7
2/14/2022 8:28	28	15.3	12.7

Table 2
2-Hour Rolling Averages of PM10 Concentrations
February 7 to February 15, 2022
Sixth Street Viaduct
Los Angeles, California 90013

Timestamp (PST)	Upwind PM10 Total (Avg 120) (ug/m³)	Downwind PM10 Total (Avg 120) (ug/m³)	Difference between Downwind and Upwind
2/14/2022 8:29	28	15.3	12.7
2/14/2022 8:30	28.1	15.2	12.9
2/14/2022 8:31	28.1	15.2	12.9
2/14/2022 8:32	28.1	15.2	12.9
2/14/2022 8:33	28.1	15.2	12.9
2/14/2022 8:34	28	15.1	12.9
2/14/2022 8:35	28	15.1	12.9
2/14/2022 8:36	28	15	13
2/14/2022 8:37	28	15	13
2/14/2022 8:38	28	15	13
2/14/2022 8:39	28.1	15	13.1
2/14/2022 8:40	28.1	14.9	13.2
2/14/2022 8:41	28.1	15	13.1
2/14/2022 8:42	28.1	14.9	13.2
2/14/2022 8:43	28.1	14.9	13.2
2/14/2022 8:44	28.1	14.9	13.2
2/14/2022 8:45	28.1	14.9	13.2
2/14/2022 8:46	28.1	14.9	13.2
2/14/2022 8:47	28.1	14.9	13.2
2/14/2022 8:48	28.1	14.9	13.2
2/14/2022 8:49	28.1	14.8	13.3
2/14/2022 8:50	28.1	14.8	13.3
2/14/2022 8:51	28.1	14.8	13.3
2/14/2022 8:52	28.1	14.8	13.3
2/14/2022 8:53	28.2	14.8	13.4
2/14/2022 8:54	28.3	14.8	13.5
2/14/2022 8:55	28.6	14.8	13.8
2/14/2022 8:56	28.8	14.7	14.1
2/14/2022 8:57	28.9	14.7	14.2
2/14/2022 8:58	28.9	14.6	14.3
2/14/2022 8:59	29	14.5	14.5
2/14/2022 9:00	29	14.5	14.5
2/14/2022 9:01	29	14.4	14.6
2/14/2022 9:02	29	14.3	14.7
2/14/2022 9:03	29	14.3	14.7
2/14/2022 9:04	29	14.3	14.7
2/14/2022 9:05	29	14	15
2/14/2022 9:06	29	13.9	15.1
2/14/2022 9:07	29	13.9	15.1

Table 2
2-Hour Rolling Averages of PM10 Concentrations
February 7 to February 15, 2022
Sixth Street Viaduct
Los Angeles, California 90013

Timestamp (PST)	Upwind PM10 Total (Avg 120) (ug/m³)	Downwind PM10 Total (Avg 120) (ug/m³)	Difference between Downwind and Upwind
2/14/2022 9:08	28.9	13.8	15.1
2/14/2022 9:09	28.5	13.7	14.8
2/14/2022 9:10	28.1	13.6	14.5
2/14/2022 9:11	27.9	13.4	14.5
2/14/2022 9:12	27.8	13.3	14.5
2/14/2022 9:13	27.7	13.3	14.4
2/14/2022 9:14	27.7	13.1	14.6
2/14/2022 9:15	27.6	13	14.6
2/14/2022 9:16	27.4	12.9	14.5
2/14/2022 9:17	27.3	12.8	14.5
2/14/2022 9:18	27	12.7	14.3
2/14/2022 9:19	26.7	12.5	14.2
2/14/2022 9:20	26.4	12.3	14.1
2/14/2022 9:21	26	12.1	13.9
2/14/2022 9:22	25.7	11.8	13.9
2/14/2022 9:23	25.2	11.7	13.5
2/14/2022 9:24	24.8	11.5	13.3
2/14/2022 9:25	23.5	11.3	12.2
2/14/2022 9:26	22.7	11.1	11.6
2/14/2022 9:27	21.9	10.9	11
2/14/2022 9:28	21.5	10.7	10.8
2/14/2022 9:29	21.2	10.5	10.7
2/14/2022 9:30	20.9	10.4	10.5
2/14/2022 9:31	20.4	10.3	10.1
2/14/2022 9:32	20	10.2	9.8
2/14/2022 9:33	19.7	10.1	9.6
2/14/2022 9:34	19.3	10	9.3
2/14/2022 9:35	19	10	9
2/14/2022 9:36	18.7	9.9	8.8
2/14/2022 9:37	18.4	9.9	8.5
2/14/2022 9:38	18.2	9.8	8.4
2/14/2022 9:39	18.1	9.8	8.3
2/14/2022 9:40	17.8	9.7	8.1
2/14/2022 9:41	17.5	9.6	7.9
2/14/2022 9:42	17.2	9.6	7.6
2/14/2022 9:43	17	9.5	7.5
2/14/2022 9:44	16.8	9.4	7.4
2/14/2022 9:45	16.6	9.2	7.4
2/14/2022 9:46	16.5	9	7.5

Table 2
2-Hour Rolling Averages of PM10 Concentrations
February 7 to February 15, 2022
Sixth Street Viaduct
Los Angeles, California 90013

Timestamp (PST)	Upwind PM10 Total (Avg 120) (ug/m³)	Downwind PM10 Total (Avg 120) (ug/m³)	Difference between Downwind and Upwind
2/14/2022 9:47	16.3	8.8	7.5
2/14/2022 9:48	16.2	8.6	7.6
2/14/2022 9:49	16	8.4	7.6
2/14/2022 9:50	15.8	8.3	7.5
2/14/2022 9:51	15.6	8.1	7.5
2/14/2022 9:52	15.3	7.9	7.4
2/14/2022 9:53	15	7.8	7.2
2/14/2022 9:54	14.6	7.6	7
2/14/2022 9:55	14.4	7.5	6.9
2/14/2022 9:56	14.1	7.4	6.7
2/14/2022 9:57	13.9	7.3	6.6
2/14/2022 9:58	13.7	7.2	6.5
2/14/2022 9:59	13.7	7.2	6.5
2/14/2022 10:00	13.6	6.7	6.9
2/14/2022 10:01	13.4	6.7	6.7
2/14/2022 10:02	13.4	6.6	6.8
2/14/2022 10:03	13.2	6.6	6.6
2/14/2022 10:04	13	6.5	6.5
2/14/2022 10:05	12.8	6.5	6.3
2/14/2022 10:06	12.6	6.4	6.2
2/14/2022 10:07	12.5	6.4	6.1
2/14/2022 10:08	12.6	6.3	6.3
2/14/2022 10:09	12.4	6.3	6.1
2/14/2022 10:10	12.2	6.2	6
2/14/2022 10:11	12.1	6.2	5.9
2/14/2022 10:12	12	6.2	5.8
2/14/2022 10:13	12	6.2	5.8
2/14/2022 10:14	11.9	6.2	5.7
2/14/2022 10:15	11.7	6.2	5.5
2/14/2022 10:16	11.6	6.2	5.4
2/14/2022 10:17	11.5	6.2	5.3
2/14/2022 10:18	11.3	6.3	5
2/14/2022 10:19	11.2	6.3	4.9
2/14/2022 10:20	11.2	6.3	4.9
2/14/2022 10:21	11.2	6.3	4.9
2/14/2022 10:22	11.2	6.3	4.9
2/14/2022 10:23	11.1	6.4	4.7
2/14/2022 10:24	11	6.4	4.6
2/14/2022 10:25	11	6.4	4.6

Table 2
2-Hour Rolling Averages of PM10 Concentrations
February 7 to February 15, 2022
Sixth Street Viaduct
Los Angeles, California 90013

Timestamp (PST)	Upwind PM10 Total (Avg 120) (ug/m³)	Downwind PM10 Total (Avg 120) (ug/m³)	Difference between Downwind and Upwind
2/14/2022 10:26	11	6.5	4.5
2/14/2022 10:27	11	6.6	4.4
2/14/2022 10:28	11.1	6.6	4.5
2/14/2022 10:29	11.1	6.7	4.4
2/14/2022 10:30	11.2	6.8	4.4
2/14/2022 10:31	11.2	6.9	4.3
2/14/2022 10:32	11.3	7	4.3
2/14/2022 10:33	11.3	7.1	4.2
2/14/2022 10:34	11.4	7.1	4.3
2/14/2022 10:35	11.5	7.2	4.3
2/15/2022 5:53	11.7	20	8.3
2/15/2022 5:54	-	20.2	-
2/15/2022 5:55	11.8	19.9	8.1
2/15/2022 5:56	11.9	19.5	7.6
2/15/2022 5:57	12	19.3	7.3
2/15/2022 5:58	12.1	19.3	7.2
2/15/2022 5:59	12.1	19.1	7
2/15/2022 6:00	12.2	18.9	6.7
2/15/2022 6:01	-	18.8	-
2/15/2022 6:02	-	18.6	-
2/15/2022 6:03	-	-	-
2/15/2022 6:04	-	18.4	-
2/15/2022 6:05	-	18.3	-
2/15/2022 6:06	19	18.2	0.8
2/15/2022 6:07	-	18.1	-
2/15/2022 6:08	-	18	-
2/15/2022 6:09	19.5	17.9	1.6
2/15/2022 6:10	19.3	17.8	1.5
2/15/2022 6:11	19.5	17.8	1.7
2/15/2022 6:12	19.6	17.8	1.8
2/15/2022 6:13	19.7	17.8	1.9
2/15/2022 6:14	19.6	17.7	1.9
2/15/2022 6:15	19.5	17.7	1.8
2/15/2022 6:16	19.6	17.7	1.9
2/15/2022 6:17	19.7	17.7	2
2/15/2022 6:18	19.6	17.8	1.8
2/15/2022 6:19	20.2	17.9	2.3
2/15/2022 6:20	20.4	17.9	2.5

Table 2
2-Hour Rolling Averages of PM10 Concentrations
February 7 to February 15, 2022
Sixth Street Viaduct
Los Angeles, California 90013

Timestamp (PST)	Upwind PM10 Total (Avg 120) (ug/m³)	Downwind PM10 Total (Avg 120) (ug/m³)	Difference between Downwind and Upwind
2/15/2022 6:21	20.3	17.8	2.5
2/15/2022 6:22	20.3	17.8	2.5
2/15/2022 6:23	20.2	17.7	2.5
2/15/2022 6:24	20.2	17.7	2.5
2/15/2022 6:25	20.3	17.7	2.6
2/15/2022 6:26	20.3	17.6	2.7
2/15/2022 6:27	20.7	17.6	3.1
2/15/2022 6:28	20.8	17.6	3.2
2/15/2022 6:29	21.1	17.6	3.5
2/15/2022 6:30	21	17.9	3.1
2/15/2022 6:31	21.2	17.9	3.3
2/15/2022 6:32	23.7	17.8	5.9
2/15/2022 6:33	23.8	17.8	6
2/15/2022 6:34	23.9	17.7	6.2
2/15/2022 6:35	23.8	17.6	6.2
2/15/2022 6:36	23.7	17.6	6.1
2/15/2022 6:37	23.7	17.5	6.2
2/15/2022 6:38	23.8	17.5	6.3
2/15/2022 6:39	23.8	17.4	6.4
2/15/2022 6:40	23.9	17.4	6.5
2/15/2022 6:41	24.2	17.4	6.8
2/15/2022 6:42	24.4	17.4	7
2/15/2022 6:43	24.4	17.3	7.1
2/15/2022 6:44	24.6	17.3	7.3
2/15/2022 6:45	24.8	17.2	7.6
2/15/2022 6:46	25.4	17.2	8.2
2/15/2022 6:47	25.6	17.2	8.4
2/15/2022 6:48	25.6	17.2	8.4
2/15/2022 6:49	25.8	17.1	8.7
2/15/2022 6:50	26	17.1	8.9
2/15/2022 6:51	26.1	17	9.1
2/15/2022 6:52	26.4	17	9.4
2/15/2022 6:53	26.3	16.9	9.4
2/15/2022 6:54	26.2	16.8	9.4
2/15/2022 6:55	26.2	16.8	9.4
2/15/2022 6:56	26.1	16.8	9.3
2/15/2022 6:57	26.1	16.7	9.4
2/15/2022 6:58	26.2	16.7	9.5
2/15/2022 6:59	26.3	16.6	9.7

Table 2
2-Hour Rolling Averages of PM10 Concentrations
February 7 to February 15, 2022
Sixth Street Viaduct
Los Angeles, California 90013

Timestamp (PST)	Upwind PM10 Total (Avg 120) (ug/m³)	Downwind PM10 Total (Avg 120) (ug/m³)	Difference between Downwind and Upwind
2/15/2022 7:00	26.2	16.6	9.6
2/15/2022 7:01	26.3	16.5	9.8
2/15/2022 7:02	26.4	16.5	9.9
2/15/2022 7:03	26.6	16.5	10.1
2/15/2022 7:04	26.9	16.4	10.5
2/15/2022 7:05	26.8	16.4	10.4
2/15/2022 7:06	26.9	16.6	10.3

CITADEL EHS
assess resolve strengthen

Appendix A
SCAQMD Rule 1466 Notification and Invoice

SOUTH COAST AQMD

Rule 1466 Notification

Notification Category Information

Notification Cetegory
(●) New Notification ( ) Revised Notification

Submital Information

Rule 1466 Notice Number	Date Stored	Time Stored	Status
5016			DATA ENTRY

Submitter Information

Submitter Name *
Mike Pendergrass

Submitter Email Address *
mpendergrass@citadelehs.com

Submitter Phone Nbr *
(818)296-9405

Owner or Operator Information

Name of Owner or Operator *
City of Los Angeles, Bureau of Engineering, Dept. of Public Works

Address *
585 S. Santa Fe Avenue

City *
Los Angeles

State *
CA

Zip Code *
90013

Email Address *
gary.lamb@lacity.org

Owner/Operator Phone Nbr *
(213)694-4329

☑ **Mailing Address Same as Location**

Mailing Address *
585 S. Santa Fe Avenue

Mailing City *
Los Angeles

State *
CA

Zip Code *
90013

On-Site Dust Control Supervisor Information

On-Site Dust Supervisor Name
Mike Pendergrass

Dust Supervisor Email Address
mpendergrass@citadelehs.com

Dust Supervisor Phone Nbr
(818)482-1176

General Project Information

Designating Agency *
OTHER

Designating Agency - Other *
Los Angeles County Fire Department, Site Mitigation Unit

Project Number

Project Name
6th Street, Area 1A

Location Category
◉ Street Address ○ Coordinates

Location Address *
585 S. Santa Fe Avenue

Location City *
Los Angeles

State
CA

Zip Code *
90013

Current or Previous Operation or Use at Site

Project Activity Information

Scheduled Start Date *
2/7/2022

Scheduled Completion Date *
3/4/2022

☐ **Site is a school, early educational center, joint use agreement property or adjacent athletic area.**

Description of earth-moving activities (Check all boxes that apply)

- ☑ **Earth Cutting**
- ☑ **Excavating**
- ☐ **Filling Operations**
- ☑ **Grading**
- ☑ **Loading**
- ☑ **Stockpiling**
- ☐ **Unloading**
- ☐ **Other**

Attach a map indicating the specific location(s) of each earth-moving activity and the concentrations of the applicable toxic air contaminant(s) and location of monitors (1)

Site Map(s) *
(Pending) Site Map.pdf

Exemption Information

Exemption

- ○ (k)(2) Earth-moving activities in an enclosed system
- ○ (k)(3) Linear trenching
- ○ (k)(4) Excavation of less than 500 cubic yards/ small project exemption
- ◉ None

Certification Statement

By clicking the checkbox below, I certify that I am the duly-authorized person to submit this form. I hereby attest, to the best of my knowledge, that the information contained herein is true, accurate and complete. With regard to information that I do not have personal knowledge of, I hereby attest that I have accurately entered the information contained herein from authorized personnel who represented that the information is true, accurate and complete.

☑ **I Agree to the above Certification Statement** *

Signature *

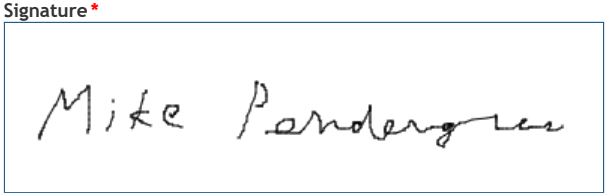

Note: You must press the submit button to complete the Rule 1466 notification process. If you do not see the submit button below, that means there is one or more error messages displayed on the above page. Once the issue(s) identified in the error message(s) have been address the submit button will appear.

From: Maria Corralejo
To: Mike Pendergrass
Cc: Rule1466
Subject: Rule1466
Date: Tuesday, February 8, 2022 7:59:17 AM

Good morning Mr. Pendergrass,

Initial notification received (#5016), submitted 02/4/2022 your pending notification number is 687185.

To finalize your initial notifications, submit a printout of this email along with the required notification fee of $68.07 per notification.

For USPS/Post Office only, mail to:
SCAQMD - Rule 1466 Notifications
File # 55641
Los Angeles, CA 90074-5641

For all other carriers, ship to:
Bank of America Lockbox Services
Lockbox # 55641
2706 Media Center Drive
Los Angeles, CA 90065

Thank you,

Maria Corralejo
Senior Office Assistant
South Coast Air Quality Management District

CITADEL EHS
assess resolve strengthen

Appendix B
Health and Safety Plan

CITADEL EHS
assess resolve strengthen

Rincon Consultants, Inc.
250 East 1st Street, Suite 1400
Los Angeles, California 90012

Health and Safety Plan

February 4, 2022

Citadel Project Number 1814.1002.0

Sixth Street Viaduct
585 South Santa Fe Avenue,
Los Angeles, California 90013

www.CitadelEHS.com

Table of Contents

1.0 SITE DESCRIPTION 1
2.0 BACKGROUND 1
3.0 SAFETY POLICY 1
4.0 WORK DESCRIPTION 2
5.0 KEY PROJECT PERSONNEL AND RESPONSIBILITIES 2
PROJECT MANAGER 2
SITE SAFETY OFFICER/PROJECT MONITOR 2
SUBCONTRACTOR PERSONNEL 3
6.0 SITE CONTROL MEASURES 3
7.0 STANDARD OPERATING PROCEDURES 3
GENERAL SAFETY 3
HAZARD EVALUATION 4
COMMUNICATION PROCEDURES 5
FIELD VEHICLES 5
MANUAL LIFTING 5
HEAT EXPOSURE 5
8.0 PERSONAL PROTECTIVE EQUIPMENT 6
9.0 DECONTAMINATION PROCEDURES 7
10.0 EMERGENCY PROCEDURES 8
SIGNATURE PAGE 12

1.0 SITE DESCRIPTION

Citadel EHS (Citadel) has prepared this Health and Safety Plan (HASP) for use during Soil Monitoring Services associated with the removal of soil impacted with lead to be conducted at 585 South Santa Fe Avenue, Los Angeles, California (Site).

Activities conducted under Citadel's direction at the Site will be in compliance with "OSWER Integrated Health and Safety Program Operating Practices for OSWER Field Activities," Pub. 9285.0-OIC (Nov. 2002), available at http://www.epa.gov/nscep/index.html, and "EPA's Emergency Responder Health and Safety Manual," OSWER Directive 9285.3-12 (July 2005 and updates), at http://www.epaosc.org/_HealthSafetyManual/manual-index.htm. In addition, this Site-Specific HASP shall comply with all currently applicable Occupational Safety and Health Administration (OSHA) regulations found at 29 Code of Federal Regulations (CFR) Part 1910, and other applicable federal, state, and local laws, regulations, and statutes. A copy of this HASP will be kept on-Site during scheduled field activities.

2.0 BACKGROUND

Based on information reviewed, Citadel understands that the Site is a former series of warehouse along the north side of Sixth Street between South Mateo Street and South Santa Fe Avenue. The Site will be undergoing excavation activities for the removal of soil impacted with lead as part of the Sixth Street Viaduct project.

The Client provided information from a 2021 report prepared by Tetra Tech that indicated elevated concentrations of lead are found in near surface soils at the Site. Maximum lead concentration found at the Site is 860 milligrams per kilogram (mg/kg).

Based on the waste characterization information supplied by the Client, lead impacted soils are characterized as non-RCRA hazardous waste due to elevated levels of lead. No soil should be transported offsite without receiving prior approval for disposal at the appropriate offsite facility/landfill.

The purpose of SCAQMD Rule 1466 is to minimize the amount of off-site fugitive dust emissions containing toxic air contaminants by reducing particulate emissions in the ambient air as a result of earth-moving activities, including excavation, grading, handling, treating, stockpiling, transferring, and removing contaminated soil from the Site. Lead is a toxic air contaminant as listed in Rule 1466 (Table I). As such, the Site is required to minimize fugitive dust emissions [(e)(2-8)], and comply with notification [(f)] and recordkeeping requirements [(h)].

3.0 SAFETY POLICY

Safety will be given primary importance in the planning and operation of this project. It is the policy of Citadel to conform to current OSHA standards in construction and local government agency requirements having authority over the project as regards to Citadel employees and public safety.

Each subcontracting firm will assume primary responsibility for the safety of their own work in regard to their employees and other persons. Subcontractors will assume the duty to comply with OSHA, and all other federal, state and local regulations.

The subcontractors work will be monitored by Citadel project managers for implementation of the Citadel HASP, while adhering to their own safety program. Citadel will retain the authority and power to enforce this HASP during the progress of the work. Any deficiencies in safe work practices will be brought to the attention of the subcontractor firm's supervisor for immediate corrective action. If the subcontractor fails or refuses to take corrective action promptly a stop work order shall be issued and the subcontractor or the subcontractor employee may be removed from the project.

4.0 WORK DESCRIPTION

SOIL EXCAVATION MONITORING AND CONFIRMATION SAMPLING

Citadel will provide on-site monitoring during excavation of soil impacted with lead per the requirements of South Coast Air Quality Management District (SCAQMD) Rule 1466. The Client estimates that the excavation activities will take four full days and 17 half days.

Upwind and downwind fence line monitoring for fugitive dust will be conducted by Citadel during excavation at the Site. Continuous real-time monitoring will be conducted during soil disturbing activities. If the PM10 concentration averaged over two hours exceeds 25 micrograms per cubic meter (µg/m^3), work shall stop, until the PM10 concentration is equal to or less than 25 µg/m^3 averaged over 30 minutes.

Dust control will be available continuously during excavation and handling of lead impacted soil. During excavation, water will be used to minimize airborne dust.

5.0 KEY PROJECT PERSONNEL AND RESPONSIBILITIES

Project Manager	Mike Pendergrass (Citadel)
Site Safety Officer (SSO)/Project Monitor	Mike Pendergrass, Tim Lambert, Alexandria Reed, Scott Grasse, Annie Liu, Muriel Nacar (Citadel)
Subcontractor Personnel	TBD

PROJECT MANAGER

The Project Manager has the ultimate responsibility for the health and safety of personnel at the Site. The Project Manager is responsible for:

- Ensuring that project personnel review and understand the requirements of this HASP;
- Keeping on-site personnel informed of the expected hazards and appropriate protective measures at the Site; and
- Providing resources necessary for maintaining a safe and health work environment

SITE SAFETY OFFICER/PROJECT MONITOR

The SSO is responsible for enforcing the requirements of this HASP once site work begins. The SSO has the authority to immediately correct situations where noncompliance with this HASP is noted and to immediately stop work in cases where an immediate danger to site workers or the environment is perceived. Responsibilities of the SSO also include:

- Obtaining and distributing PPE and air monitoring equipment necessary for this project;
- Limiting access at the Site to authorized personnel;
- Communicating unusual or unforeseen conditions at the Site to the Project Manager;
- Supervising and monitoring the safety performance of site personnel to evaluate the effectiveness of health and safety procedures and correct deficiencies;
- Conducting daily tailgate safety meetings before each day's activities begin; and
- Conducting a site safety inspection prior to the commencement of each day's field activities.

SUBCONTRACTOR PERSONNEL

Subcontractor personnel are expected to comply with the minimum requirements specified in this HASP. Failure to do so may result in the dismissal of the subcontractor or any of the subcontractor's workers from the job site. Subcontractors may employ health and safety procedures that afford them a greater measure of personal protection than those specified in this plan as long as they do not pose additional hazards to themselves, the environment, or others working in the area.

6.0 SITE CONTROL MEASURES

The SSO or Project Manager has been designated to coordinate access and security on site.

7.0 STANDARD OPERATING PROCEDURES

GENERAL SAFETY

- Maintain good housekeeping at all times in all project work areas.
- Check the work area to determine what problems or hazards may exist.
- Designate specific areas for the proper storage of materials.
- Store tools, equipment, materials, and supplies in an orderly manner.
- Provide containers for collecting trash and other debris.
- Clean up all spills quickly.
- Report unsafe conditions or unsafe acts to your supervisor immediately.
- Report all occupational illnesses, injuries, and vehicle accidents.
- Do not wear loose clothing, wristwatches, and other loose accessories when within arm's reach of moving machinery.
- Emergency exits and evacuation areas should be clearly marked during work activities.
- Personnel fall protection is required when climbing to perform maintenance six feet or higher above ground.
- Inspect hand tools and use proper PPE.
- Ensure proper grounding and guarding of equipment.
- Keep hands and fingers out of pinch points.
- Use good ergonomic posturing when working with heavy items.

HAZARD EVALUATION

The following substances are known or suspected to be on site. The primary hazards of each are identified as follows:

Substances	Concentration	Primary Hazards
Lead	Various	Inhalation, ingestion, dermal or eye contact

LEAD

Acute exposure to lead is associated with impaired kidney function, high blood pressure, nervous system and neurobehavioral effects, cognitive dysfunction later in life, and subtle cognitive effects attributed to prenatal exposure. Pregnant women need to be especially concerned with reducing lead exposure since this can have serious impact on the developing fetus. Health effects at these very high blood lead levels can range from acute effects such as convulsions, coma, and in some cases, death, to more chronic conditions such as anemia, peripheral neuropathy, interstitial kidney fibrosis, and severe abdominal cramping.

Based on limited evidence of human carcinogenic effects, workers may develop stomach cancer and lung cancer following inhalation exposure to lead, but more studies are needed to demonstrate the cancer risks compared to the levels and durations of lead exposure, and possibly confounding factors such as smoking, diet, and other carcinogens in the workplace. Experimental research indicates that rats and mice develop renal tumors following exposure to lead.

ACTION LEVELS AND EXPOSURE LIMITS

The required OSHA PEL for lead is no greater than 0.05 mg/m^3 averaged over an 8-hour period. PPE shall be required when working in areas where lead-impacted soil may be present at a concentration higher than 0.05 mg/m^3 (Cal-OSHA PEL).

DustTrak monitors will be used to determine fugitive dust emissions in the ambient air at the Site. These instruments only indicate total particulate levels and not specific contaminant concentrations. However, using the analytical results from soil samples previously collected, a total particulate Site Action Level can be calculated using the following equation:

$$\frac{OSHA\ PEL\ for\ Contaminant\ (\frac{mg}{m^3})}{(Contaminant\ decimal\ concentration)\ (Safety\ factor)} = Total\ Dust\ Action\ Level\ (\frac{mg}{m^3})$$

The lead value of 860 mg/kg was used in the calculation, a safety factor of 2 times (200%) was used to help ensure that the PEL for lead will not be exceeded during excavation activities. The resulting calculation is as follows:

$$\left(\frac{860\ mg}{1\ kg}\right)\left(\frac{1\ kg}{1{,}000{,}000\ mg}\right) = 0.000567$$

$$\frac{0.05\ \frac{mg}{m^3}}{(0.000860)(2)} = 29.1\ \frac{mg}{m^3}\ of\ particulates$$

Therefore, the total dust action level (TDAL) for lead is 29.1 mg/m^3. Rule 1466 requires a work stoppage if the PM_{10} concentration average exceeds 25 µg/m^3 until the PM_{10} concentration is

equal to or less than 25 µg/m^3 averaged over 30 minutes. This action level is much lower than the TDAL calculated above of 29.1 mg/m^3 and the Rule 1466 limitation for PM_{10} will be reached well before the calculated TDAL for lead of 29.1 mg/m^3.

COMMUNICATION PROCEDURES

Due to the close proximity of all field crew members, the necessity for radio communication is not necessary.

The following standard hand signals will be used:

Hand drawn across throat .....Cease operation immediately
Hand gripping throat .....Out of air, can't breathe
Grip partner's wrist or both hands around waist ..... Leave area immediately
Hands on top of head .....Need assistance
Thumbs up ..... OK, I am alright, understood
Thumbs down.....No, negative

FIELD VEHICLES

- Equip vehicles with emergency supplies and equipment.
- Maintain both a first aid kit and fire extinguisher in the field vehicle at all times.
- Utilize a rotary beacon on vehicle if working adjacent to active roadway.
- Always wear seatbelt while operating vehicle.
- Tie down loose items.

MANUAL LIFTING

- Personnel shall seek assistance when performing manual lifting tasks that appear beyond their physical capabilities.
- Assess the situation before lifting, ensure good lifting and body positioning practices, and ensure good carrying and setting down practices.

HEAT EXPOSURE

- Limit exposure to the sun or take extra precautions when the UV index rating is high.
- Take lunch and breaks in shaded areas.
- Create shade by using umbrellas, tents, and canopies.
- Wear proper clothing: long sleeved shirts with collars, long pants, and UV-protective sunglasses or safety glasses.
- Apply sunscreen generously to all exposed skin surfaces at least 20 minutes before exposure. Re-apply sunscreen at least every 2 hours, and more frequently when sweating or performing activities where sunscreen may be wiped off.
- Communicate any concerns regarding heat stress to a supervisor.
- Keep hydrated throughout the day (about 4 cups per hour).
- OHSA's Heat Index:

Heat Index	Risk Level	Protective Measures
Less than 91°F	Lower (Caution)	Basic heat safety and planning
91°F to 103°F	Moderate	Implement precautions and heighten awareness
103°F to 115°F	High	Additional precautions to protect workers
Greater than 115°F	Very High to Extreme	Triggers even more aggressive protective measures

Utilities (Under Ground and Above Ground): Low Hazard. All boring locations will be hand drilled and stop work will be enforced if any utilities are encountered.

Biological Hazards: Low to Medium Hazard. Beware of spiders, insects and other possible animals.

Site Instability: Low to Medium Hazard. The Site will be inspected prior to equipment placement and closely monitored. Any settling of the equipment will cause the work to stop immediately.

Equipment Refueling: Low Hazard. Equipment shall not be refueled with the engine running. Cigarettes, open flames, or other ignition sources are not allowed within 50 feet of the fueling location.

Personnel Injury: Upon notification of an injury, the Project Field Leader should evaluate the nature of the injury, and the affected person should be decontaminated to the extent possible prior to movement. The Project Field Leader shall initiate the appropriate first aid, and contact should be made for an ambulance and with the designated medical facility (if required).

Fire/Explosion: The fire department shall be alerted, and all personnel moved to a safe distance from the involved area.

Other Equipment Failure: If any other equipment on site fails to operate properly, the Project Team Leader shall be notified and then determine the effect of this failure on continuing operations on site. If the failure affects the safety of personnel or prevents completion of the Work Plan tasks, work will cease until the situation is evaluated and appropriate actions taken.

8.0 PERSONAL PROTECTIVE EQUIPMENT

The purpose of PPE is to protect employees from hazards and potential hazards they are likely to encounter during site activities. The amount and type of PPE used will be based on the nature of the hazard encountered or anticipated. Respiratory protection will be utilized when an airborne hazard has been identified using real-time air monitoring devices, or as a precautionary measure in areas designated by the SSO, elevating to level C. If this occurs, contractor personnel shall be respirator-approved.

Dermal protection, primarily in the form of chemical-resistant gloves and coveralls, will be worn whenever contact with chemically affected materials (e.g. soils, groundwater, sludge) is anticipated, without regard to the level of respiratory protection required.

Based on evaluation of potential hazards, the following levels of personal protection have been designated for the applicable work areas or tasks:

Location	Job Function	Level of Protection
Controlled Area	All Workers	A B C (D) Other

Specific protective equipment for each level of protection is as follows:

Level A
- Fully-encapsulating suit
- SCBA
- Disposable coveralls

Level B
- Splash gear
- SCBA

Level C
- Splash gear
- Half-face canister respirator with H_2S/VOC cartridge
- Mouth/nose canister respirator
- Efficiency 100 (HEPA)

Level D
- Hard hat
- Ear plugs
- Neoprene or leather gloves - nitrile gloves
- Safety vests and Glasses
- Hard toe boots

NO CHANGES TO THE SPECIFIED LEVELS OF PROTECTION SHALL BE MADE WITHOUT THE APPROVAL OF THE SSO OR PROJECT MANAGER.

9.0 DECONTAMINATION PROCEDURES

Despite protective procedures, personnel may come in contact with potentially hazardous compounds while performing work tasks. If so, decontamination needs to take place using an Alconox or tri-sodium phosphate (TSP), followed by a rinse with clean water. Standard decontamination procedure for levels C and D are as follows:

- Equipment drop
- Boot cover and outer glove wash and rinse
- Boot cover and out glove removal
- Suit wash and rinse
- Suit removal
- Safety boot wash and rinse
- Inner glove wash and rinse
- Respirator removal
- Inner glove removal
- Field wash of hands and face

Workers should employ only applicable steps in accordance with level of PPE worn and extent of contamination present. The SSO shall maintain adequate quantities of clean water to be used for personal decontamination (i.e. field wash of hands and face) whenever a suitable washing facility is not located in the immediate vicinity of the work area. Disposable items will be disposed of in an appropriate container. Wash and rinse water generated from decontamination activities will be handled and disposed of properly. Non-disposable items may need to be sanitized before reuse. Each site worker is responsible for the maintenance, decontamination, and sanitizing of his/her own PPE.

Used equipment may be decontaminated as follows:

- An Alconox or TSP and water solution will be used to wash the equipment.
- The equipment will then be rinsed with clean water.

Each person must follow these procedures to reduce the potential for transferring chemically affected materials offsite.

10.0 EMERGENCY PROCEDURES

In the event of an emergency, site personnel will signal distress with three blasts of a horn (a vehicle horn will be sufficient), or other predetermined signal. Communication signals, such as hand signals, must be established where communication equipment is not feasible or in areas of loud noise.

The SSO will designate evacuation routes and refuge areas to be used in the event of an emergency. Site personnel will stay upwind from vapors or smoke and upgradient from spills. Workers should exit through the established decontamination areas wherever possible. If evacuation cannot be done through an established decontamination area, site personnel will go to the nearest safe location and remove contaminated clothing there. Personnel will assemble at the predetermined refuge following evacuation and decontamination. The SSO will count and identify site personnel to verify that all personnel have been evacuated safely. Please refer to Figure 1.0 for the evacuation route and refuge location.

FIGURE 1.0 – EVACUATION ROUTE AND REFUGE AREAS

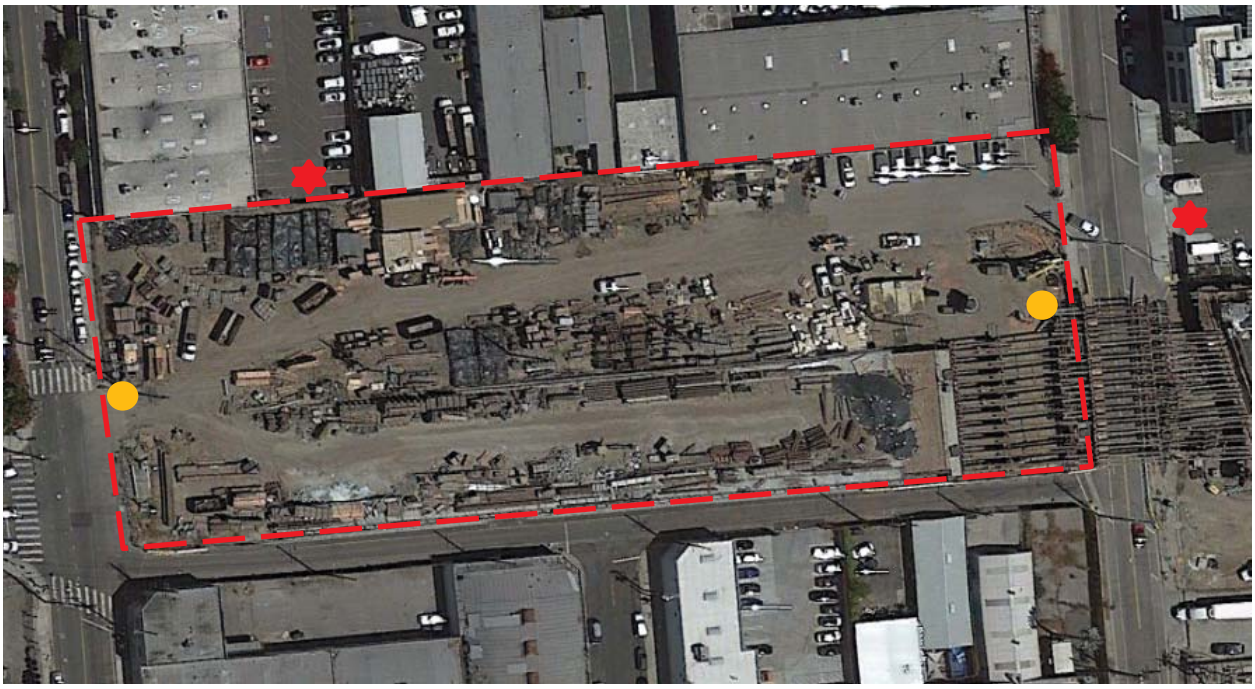

= Approximate Site Boundaries

= Refuge Areas

= Approximate DustTrak Monitor Locations – Upwind & Downwind based on historical prevailing winds. Actual locations will be based on current wind conditions.

The designated medical facility is:

Concentra Urgent Care
420 East 3rd Street, Suite 600
Los Angeles, California 90013

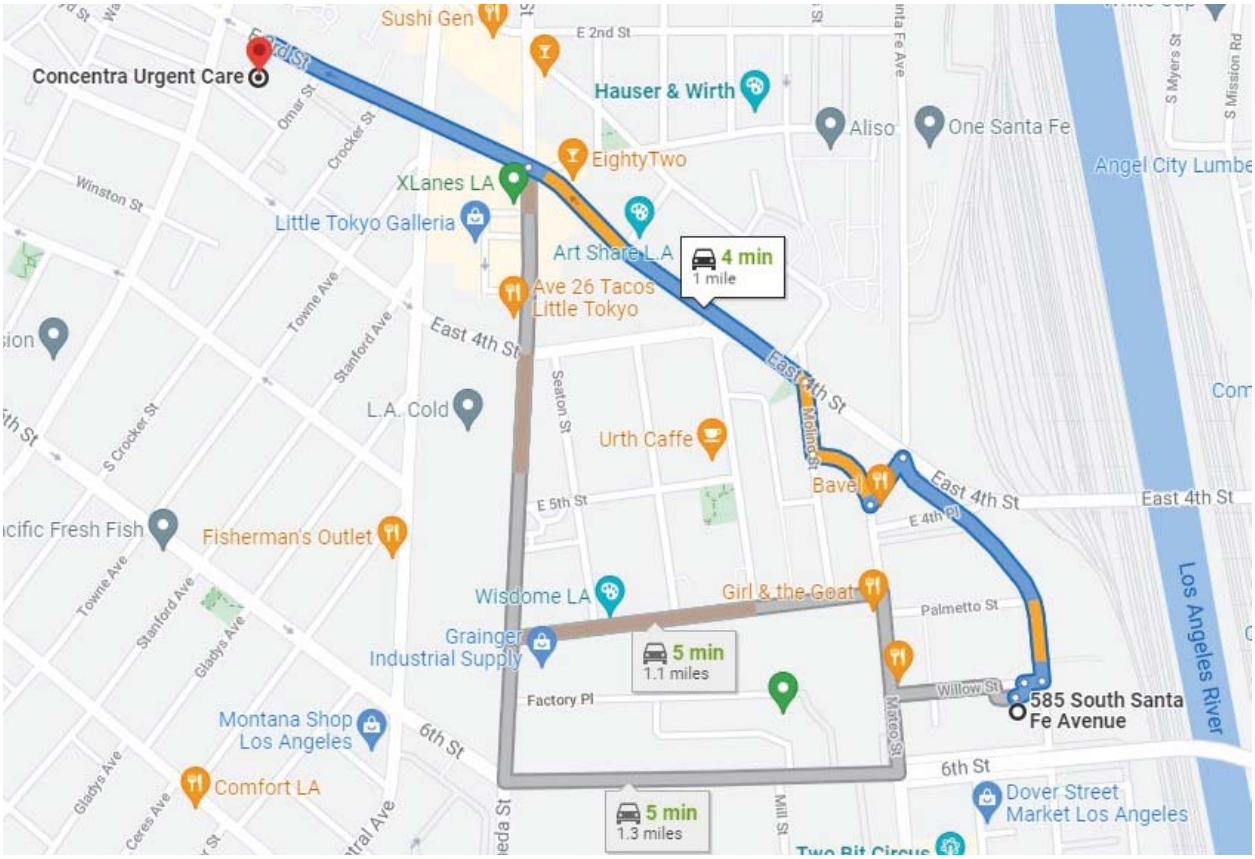

Directions:	
Head east toward Willow Street	89 feet
Turn right onto Willow Street	82 feet
Turn left onto South Santa Fe Avenue	0.2 miles
Turn left onto San Mateo Street	249 feet
Turn right onto East 4th Place	367 feet
Turn right onto Molino Street	322 feet
Turn left at the 1st cross street onto East 4th Place/East 4th Street	0.3 miles
Continue onto East 3rd Street	0.2 miles
Destination will on the left	

First-aid equipment is available in the SSO's vehicle.

List of emergency phone numbers:

Agency/Facility	**Phone#**
Police/Fire	911
Hospital	(213) 745-6106

This HASP has been prepared by:

Annie Liu

Digitally signed by Annie Liu
Date: 2022.02.06 20:27:01 -08'00'

Annie Liu
Project Assistant, Engineering and Environmental Sciences

Approved by:

T. Michael Pendergrass

Digitally signed by T. Michael Pendergrass
Date: 2022.02.06 20:26:38 -08'00'

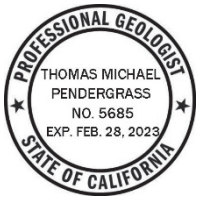

T. Michael Pendergrass, PG
Senior Project Geologist, Engineering and Environmental Sciences

SIGNATURE PAGE

The following signatures indicate that this Health and Safety Plan (HASP) has been read and accepted by all site personnel.

NAME	COMPANY	SIGNATURE	DATE
Mike Pendergrass	Citadel	Mike Pendergrass	2-7-22
Mike Pendergrass	Citadel	Mike Pendergrass	2-8-22
Muriel Nacar	Citadel		2-8-22
Muriel Nacar	Citadel		2-9-22
Muriel Nacar	Citadel		2-10-22
Muriel Nacar	Citadel		2-11-22
Muriel Nacar	Citadel		2-14-22

CITADEL EHS
assess resolve strengthen

Appendix C
SCAQMD Rule 1466 Intra-Instrument Precision Test Logs

SCAQMD Rule 1466 Intra-Instrument Precision Test Log

CITADEL EHS
assess • resolve • strengthen

Notice Number	Project Name	Project Location
687185	Sixth Street Viaduct	585 S. Santa Fe Avenue
Dust Control Supervisor	**Certification Number**	**Phone Number/Email Address**
Mike Pendergrass	SC2008-009746-9766	818-482-1176 mpendergrass@citadelehs.com

Date
2/7/2022

Elapsed Time (H:M)	UW	DW	Mean
0:01	22	54	38
0:02	19	52	35.5
0:03	17	52	34.5
0:04	16	52	34
0:05	17	52	34.5
0:06	20	23	21.5
0:07	19	17	18
0:08	17	17	17
0:09	13	17	15
0:10	16	17	16.5
0:11	28	17	22.5
0:12	140	17	78.5
0:13	19	17	18
0:14	12	17	14.5
0:15	12	17	14.5
0:16	12	17	14.5
0:17	13	17	15
0:18	13	17	15
0:19	17	17	17
0:20	13	17	15
0:21	17	21	19
0:22	18	21	19.5
0:23	15	20	17.5
0:24	21	17	19
0:25	21	18	19.5
0:26	18	21	19.5
0:27	15	21	18
0:28	13	19	16
0:29	13	14	13.5
0:30	17	18	17.5
0:31	18	49	33.5
0:32	14	266	140
0:33	13	43	28
0:34	13	17	15
0:35	13	15	14
0:36	13	15	14
0:37	13	14	13.5

0:38	13	14	13.5
0:39	15	21	18
0:40	14	18	16
0:41	14	22	18
0:42	14	18	16
0:43	16	19	17.5
0:44	14	19	16.5
0:45	14	24	19
0:46	14	18	16
0:47	14	15	14.5
0:48	14	14	14
0:49	14	14	14
0:50	14	16	15
0:51	13	18	15.5
0:52	13	14	13.5
0:53	14	13	13.5
0:54	15	13	14
0:55	17	13	15
0:56	15	13	14
0:57	15	13	14
0:58	15	12	13.5
0:59	12	14	13
1:00	13	14	13.5
Total (µg/m^3)	17.4	25.0	21.2

Mean = 21.2

Mean <15µg/m^3
3.8
Must be less than 5 µg/m^3

µg/m^3

Mean >15µg/m^3
17.9%
Must be less than 25 %

SCAQMD Rule 1466 Intra-Instrument Precision Test Log

Notice Number	Project Name	Project Location
687185	Sixth Street Viaduct	585 S. Santa Fe Avenue
Dust Control Supervisor	**Certification Number**	**Phone Number/Email Address**
Mike Pendergrass	SC2008-009746-9766	818-482-1176 mpendergrass@citadelehs.com

Date
2/14/2022

Elapsed Time (H:M)	UW	DW	Mean
0:01	9	3	6
0:02	10	3	6.5
0:03	10	3	6.5
0:04	8	3	5.5
0:05	8	4	6
0:06	8	4	6
0:07	8	8	8
0:08	11	6	8.5
0:09	10	6	8
0:10	9	4	6.5
0:11	9	4	6.5
0:12	9	5	7
0:13	11	5	8
0:14	10	6	8
0:15	9	5	7
0:16	8	3	5.5
0:17	8	4	6
0:18	8	4	6
0:19	9	9	9
0:20	10	7	8.5
0:21	9	4	6.5
0:22	9	6	7.5
0:23	9	5	7
0:24	11	7	9
0:25	12	8	10
0:26	10	5	7.5
0:27	13	9	11
0:28	14	10	12
0:29	15	10	12.5
0:30	16	12	14
0:31	31	25	28
0:32	17	12	14.5
0:33	16	11	13.5
0:34	16	11	13.5
0:35	15	11	13
0:36	14	11	12.5
0:37	14	9	11.5

0:38	14	9	11.5
0:39	14	10	12
0:40	12	8	10
0:41	12	7	9.5
0:42	13	8	10.5
0:43	13	9	11
0:44	13	9	11
0:45	13	10	11.5
0:46	13	10	11.5
0:47	13	8	10.5
0:48	14	9	11.5
0:49	11	8	9.5
0:50	12	8	10
0:51	14	8	11
0:52	15	9	12
0:53	18	13	15.5
0:54	14	9	11.5
0:55	12	8	10
0:56	15	11	13
0:57	16	12	14
0:58	16	11	13.5
0:59	18	13	15.5
1:00	18	14	16
Total (µg/m^3)	12.4	8.1	10.2

Mean = 10.2

Mean <15µg/m^3
2.2
Must be less than 5 µg/m^3

µg/m^3

Mean >15µg/m^3
21.4%
Must be less than 25 %

CITADEL EHS
assess resolve strengthen

Appendix D
Citadel's Field Notes

CITADEL EHS
PROJECT DOCUMENTATION

CITADEL EHS

CLIENT	Rincon Consultants Inc	**PAGE**	1 OF 2
PROJECT NUMBER	1814.1002.0	**CITADEL REPRESENTATIVE**	0
PROJECT NAME	Soil Excavation Monitoring	**CONTRACTOR**	Rincon Consultants Inc
PROJECT WORK AREA	6th Street Viaduct Parc Improvements	**SUPERVISOR**	Mike Pendergrass
PROJECT LOCATION	598 S. Mateo Street		

TIME	FIELD NOTES
0540	Citadel arrives on site. Check w/ Rincon, 5 minutes away.
0550	Tim Lambert, Alex Reed and Jon from Rincon arrive. Review work area and unload equipment and begin setup.
0710	Finish setup for weekly test, started test and attend safety briefing.
0830	Finish safety briefing and check equipment. Prepare to set in place.
0900	Dust traks in place. Begin monitoring.
0915	Excavation complete for the day. Begin taking down equipment
0945	Citadel off site

CITADEL REPRESENTATIVE:	Mike Pendergrass	**DAY:**	Monday
SIGNATURE:	Mike Pendergrass	**DATE:**	2-7-22

CITADEL EHS
PROJECT DOCUMENTATION

CITADEL EHS

CLIENT	Rincon Consultants Inc	**PAGE**	2 OF 2
PROJECT NUMBER	1814.1002.0	**CITADEL REPRESENTATIVE**	0
PROJECT NAME	Soil Excavation Monitoring	**CONTRACTOR**	Rincon Consultants Inc
PROJECT WORK AREA	6th Street Viaduct Parc Improveme	**SUPERVISOR**	Mike Pendergrass
PROJECT LOCATION	598 S. Mateo Street		

TIME	FIELD NOTES



CITADEL REPRESENTATIVE:	Mike Pendergrass	**TIME:**	1000
SIGNATURE:	Mike Pendergrass	**DATE:**	2-7-22

Revised November 2019

CITADEL EHS
PROJECT DOCUMENTATION

CITADEL EHS

CLIENT	Rincon Consultants Inc	**PAGE**	1 OF
PROJECT NUMBER	1814.1002.0	**CITADEL REPRESENTATIVE**	Muriel Nacer 0
PROJECT NAME	Soil Excavation Monitoring	**CONTRACTOR**	Rincon Consultants Inc
PROJECT WORK AREA	6th Street Viaduct Parc Improvements	**SUPERVISOR**	Mike Pendergrass
PROJECT LOCATION	598 S. Mateo Street		

TIME	FIELD NOTES
0515	Citadel arrives on site, starts Dust trak and weather
	station set up.
0550	Citadel finishes equipment set up, sets upwind
	Dust trak east of site and downwind southwest
	of site.
0615	Trucks arrive to haul dirt from soil stockpile
0710	Trucks finish hauling.
0825	Excavation occurs
0920	Excavation finished, Citadel starts packing equipment
0945	Citadel leaves Site.

CITADEL REPRESENTATIVE: Muriel Nacer	**DAY:** Tuesday
SIGNATURE:	**DATE:** 2-8-22

CITADEL EHS
PROJECT DOCUMENTATION

CITADEL EHS

CLIENT	Rincon Consultants Inc	**PAGE**	2 OF 2
PROJECT NUMBER	1814.1002.0	**CITADEL REPRESENTATIVE**	Muriel Nocal 0
PROJECT NAME	Soil Excavation Monitoring	**CONTRACTOR**	Rincon Consultants Inc
PROJECT WORK AREA	6th Street Viaduct Parc Improveme	**SUPERVISOR**	Mike Pendergrass
PROJECT LOCATION	585 S. Santa Fe Avenue		

TIME	FIELD NOTES



CITADEL REPRESENTATIVE: Muriel Nocal	**TIME:** Day Tuesday
SIGNATURE:	**DATE:** 2-8-22

Revised November 2019

CITADEL EHS
PROJECT DOCUMENTATION

CITADEL EHS

CLIENT	Rincon Consultants Inc	**PAGE**	1 OF
PROJECT NUMBER	1814.1002.0	**CITADEL REPRESENTATIVE**	Muriel Nacar 0
PROJECT NAME	Soil Excavation Monitoring	**CONTRACTOR**	Rincon Consultants Inc
PROJECT WORK AREA	6th Street Viaduct Parc Improvements	**SUPERVISOR**	Mike Pendergrass
PROJECT LOCATION	598 S. Mateo Street		

TIME	FIELD NOTES
0530	Citadel arrives on site start setting up pustrak
	and weather station.
0600	Trucks arrive for loading
0732	trucks finish loading
0743	Excavation starts up on the northeast portion of
	the site
0951	Excavation completed. Citadel starts to
	put away equipment
1006	Citadel leaves site.

CITADEL REPRESENTATIVE: Muriel Nacar	**DAY:** Wednesday
SIGNATURE:	**DATE:** 2-9-21

CITADEL EHS
PROJECT DOCUMENTATION

CITADEL EHS

CLIENT	Rincon Consultants Inc	**PAGE**	2 OF 2
PROJECT NUMBER	1814.1002.0	**CITADEL REPRESENTATIVE**	Munir Naeem 0
PROJECT NAME	Soil Excavation Monitoring	**CONTRACTOR**	Rincon Consultants Inc
PROJECT WORK AREA	6th Street Viaduct Parc Improveme	**SUPERVISOR**	Mike Pendergrass
PROJECT LOCATION	585 S. Santa Fe Avenue		

TIME	FIELD NOTES

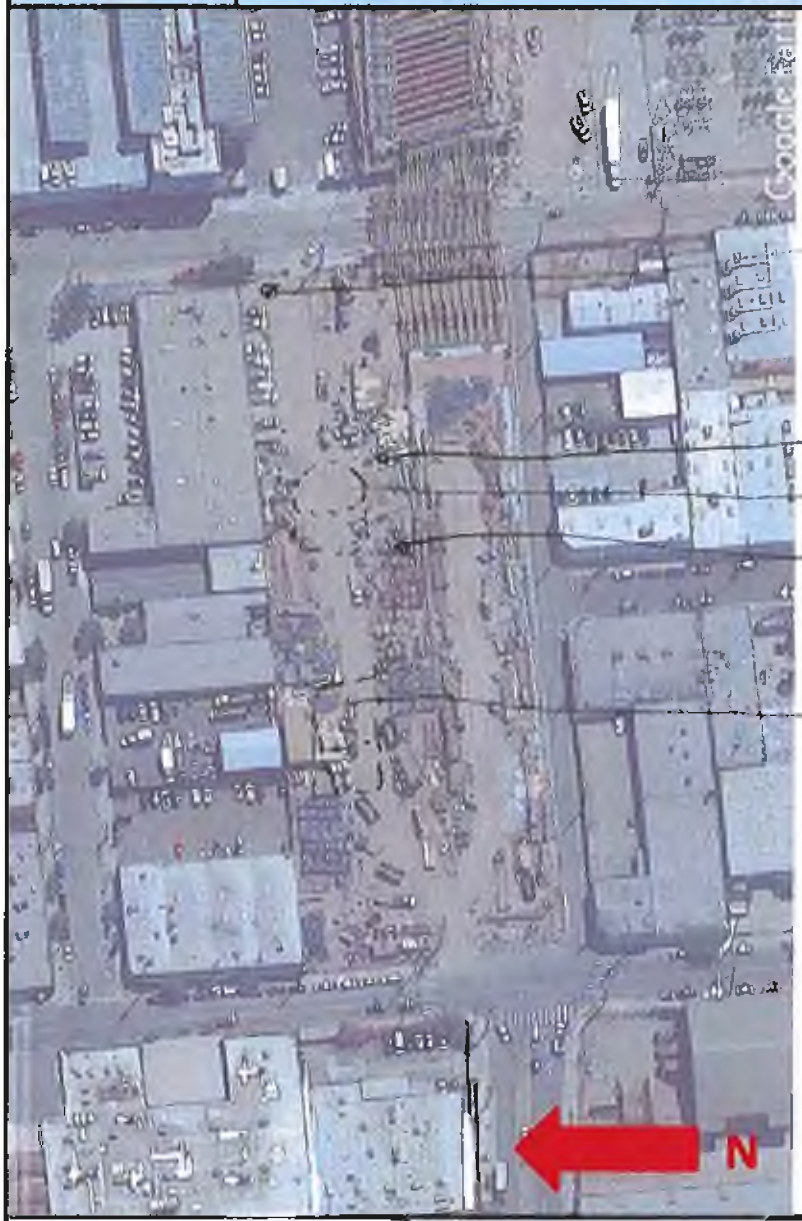

CITADEL REPRESENTATIVE: Munir Naeem	**TIME:** DAY Wednesday
SIGNATURE:	**DATE:** 2-9-22

Revised November 2019

CITADEL EHS
PROJECT DOCUMENTATION

CITADEL EHS

CLIENT	Rincon Consultants Inc	**PAGE**	1 OF 2
PROJECT NUMBER	1814.1002.0	**CITADEL REPRESENTATIVE**	Muriel Nacar 0
PROJECT NAME	Soil Excavation Monitoring	**CONTRACTOR**	Rincon Consultants Inc
PROJECT WORK AREA	6th Street Viaduct Parc Improvements	**SUPERVISOR**	Mike Pendergrass
PROJECT LOCATION	598 S. Mateo Street		

TIME	FIELD NOTES
0515	Citadel crews on site and starts setting
	up. the equipment.
0611	Trucks arrive to haul out soil.
0717	Trucks finish loading
0750	Excavation starts along the ~~east~~ portion of
	stockpile and excavation area #1
0903	Excavation completed. Citadel starts to put
	away equipment.
0915	Citadel leaves Site.

CITADEL REPRESENTATIVE: Muriel Nacar	**DAY:** Thursday
SIGNATURE:	**DATE:** 2-10-22

CITADEL EHS
PROJECT DOCUMENTATION

CLIENT	Rincon Consultants Inc	**PAGE**	2 OF 2
PROJECT NUMBER	1814.1002.0	**CITADEL REPRESENTATIVE**	Muriel Nacer 0
PROJECT NAME	Soil Excavation Monitoring	**CONTRACTOR**	Rincon Consultants Inc
PROJECT WORK AREA	6th Street Viaduct Parc Improveme	**SUPERVISOR**	Mike Pendergrass
PROJECT LOCATION	585 S. Santa Fe Avenue		

TIME	FIELD NOTES



CITADEL REPRESENTATIVE: Muriel Nacer	**~~TIME:~~** DST Wednesday
SIGNATURE:	**DATE:** 2-10-22

Revised November 2019

CITADEL EHS
PROJECT DOCUMENTATION

CITADEL EHS
envision · resolve · strengthen

CLIENT	Rincon Consultants Inc	**PAGE**	1 OF 2
PROJECT NUMBER	1814.1002.0	**CITADEL REPRESENTATIVE**	Muriel Nacar 0
PROJECT NAME	Soil Excavation Monitoring	**CONTRACTOR**	Rincon Consultants Inc
PROJECT WORK AREA	6th Street Viaduct Parc Improvements	**SUPERVISOR**	Mike Pendergrass
PROJECT LOCATION	598 S. Mateo Street		

TIME	FIELD NOTES
0515	Citadel arrives on site and starts setting up
	equipment.
0611 - 711	Trucks start hauling stockpile soil in stockpile
	and excavation area #1 & #2. Finish loading at 711
0645	New excavation occurs between area #1 & #2.
0715	Excavation completed, excavator begins stockpiling
	soil with a paint loader.
0825	Stockpiling completed, Citadel begins to put away
	equipment.
0900	Citadel leaves site

CITADEL REPRESENTATIVE: Muriel Nacar	**DAY:** Friday
SIGNATURE:	**DATE:** 2-11-22

CITADEL EHS
PROJECT DOCUMENTATION

CITADEL EHS

CLIENT	Rincon Consultants Inc	**PAGE**	2 OF 2
PROJECT NUMBER	1814.1002.0	**CITADEL REPRESENTATIVE**	Muriel Nacer 0
PROJECT NAME	Soil Excavation Monitoring	**CONTRACTOR**	Rincon Consultants Inc
PROJECT WORK AREA	6th Street Viaduct Parc Improveme	**SUPERVISOR**	Mike Pendergrass
PROJECT LOCATION	585 S. Santa Fe Avenue		

TIME	FIELD NOTES



CITADEL REPRESENTATIVE:	Muriel Nacer	**TIME: DAT**	Friday
SIGNATURE:		**DATE:**	2-11-22

Revised November 2019

CITADEL EHS
PROJECT DOCUMENTATION

CITADEL EHS

CLIENT	Rincon Consultants Inc	**PAGE**	1 OF 2
PROJECT NUMBER	1814.1002.0	**CITADEL REPRESENTATIVE**	Muriel Naeer 0
PROJECT NAME	Soil Excavation Monitoring	**CONTRACTOR**	Rincon Consultants Inc
PROJECT WORK AREA	6th Street Viaduct Parc Improvements	**SUPERVISOR**	Mike Pendergrass
PROJECT LOCATION	598 S. Mateo Street		

TIME	FIELD NOTES
0515	Citadel arrives on Site. Starts setting up
	Dust trak and weather station equipment.
0615	Trucks arrive to start hauling the one stockpile
	in the middle of the excavation area.
0740	Trucks finish loading, simultaneously excavation
	occurs along the border of the excavation
	site.
0815	Excavation completed.
0915	Tim arrives to test the Dust Trak
0945	Muriel leaves Site.

CITADEL REPRESENTATIVE: Muriel Naeer	**DAY:** Monday
SIGNATURE:	**DATE:** 2-14-22

CITADEL EHS
PROJECT DOCUMENTATION

CITADEL EHS

CLIENT	Rincon Consultants Inc	**PAGE**	2 OF 2
PROJECT NUMBER	1814.1002.0	**CITADEL REPRESENTATIVE**	Murel Nacar 0
PROJECT NAME	Soil Excavation Monitoring	**CONTRACTOR**	Rincon Consultants Inc
PROJECT WORK AREA	6th Street Viaduct Parc Improveme	**SUPERVISOR**	Mike Pendergrass
PROJECT LOCATION	585 S. Santa Fe Avenue		

TIME	FIELD NOTES
	

CITADEL REPRESENTATIVE: Murel Nacar	**TIME:** DAY: Monday
SIGNATURE:	**DATE:** 2-14-22

Revised November 201

CITADEL EHS
PROJECT DOCUMENTATION

CITADEL EHS

CLIENT	Rincon Consultants Inc	**PAGE**	1 OF 2
PROJECT NUMBER	1814.1002.0	**CITADEL REPRESENTATIVE**	Muriel Nacer 0
PROJECT NAME	Soil Excavation Monitoring	**CONTRACTOR**	Rincon Consultants Inc
PROJECT WORK AREA	6th Street Viaduct Parc Improvements	**SUPERVISOR**	Mike Pendergrass
PROJECT LOCATION	598 S. Mateo Street		

TIME	FIELD NOTES
0515	Citadel arrives on Site. Starts setting up equipment
0605	Trucks arrive for hauling.
0626	Trucks finish hauling. remaining soil in stockpile. Citadel starts putting away equipment.
720	Citadel leaves site.

CITADEL REPRESENTATIVE: Muriel Nacer	**DAY:** Tuesday
SIGNATURE:	**DATE:** 2-15-22

CITADEL EHS
PROJECT DOCUMENTATION

CITADEL EHS

CLIENT	Rincon Consultants Inc	**PAGE**	2 OF 2
PROJECT NUMBER	1814.1002.0	**CITADEL REPRESENTATIVE**	Muriel Nacar 0
PROJECT NAME	Soil Excavation Monitoring	**CONTRACTOR**	Rincon Consultants Inc
PROJECT WORK AREA	6th Street Viaduct Parc Improveme	**SUPERVISOR**	Mike Pendergrass
PROJECT LOCATION	585 S. Santa Fe Avenue		

TIME	FIELD NOTES



CITADEL REPRESENTATIVE: Muriel Nacar	**TIME:** DAY Tuesday
SIGNATURE:	**DATE:** 2-15-22

Revised November 2019

CITADEL EHS
assess resolve strengthen

Appendix E
SCAQMD Rule 1466 Logs

SCAQMD Rule 1466 Earth-Moving Activity Log

CITADEL EHS
assess · resolve · strengthen

Notice Number	Project Name		Project Location
687185	6th Street Viaduct Parc Improvements Soil Excavation Monitoring		585 S. Santa Fe Avenue
On-Site Dust Control Supervisor	**Certification Number**	**Phone Number**	**Email Address**
Mike Pendergrass	SC2008-009746-9766	818-482-1176	mpendergrass@citadelehs.com

Date	Start Time/ End Time	Earth-Moving Activity Conducted	Volume of Soil (Cubic Yards)
2-7-22	0600 – 0715	Truck loading and excavation.	18 trucks ~325 cy.
2-7-22	0715 - 915	Excavation only.	
2-8-22	0600 - 920	Excavation & Truck Loading	18 trucks ~325 CY
2-9-22	0600 - 915	Excavation & truck loading	21 trucks ~378 CY
2-10-22	611 - 903	Excavation & truck loading	19 Trucks ~342 CY
2-11-22	611 - 0825	Excavation & trucks loading.	13 Trucks ~234 CY
2-14-22	615 - 0815	Excavation & truck loading	21 trucks ~378 CY
2-15-22	605 - 0636	Truck loading	5 trucks ~90 CY

SCAQMD Rule 1466 Instrument Log

CITADEL EHS
assess · resolve · strengthen

Notice Number	Project Name		Project Location
687185	6th Street Viaduct Parc Improvements Soil Excavation Monitoring		585 S. Santa Fe Avenue
On-Site Dust Control Supervisor	**Certification Number**	**Phone Number**	**Email Address**
Mike Pendergrass	SC2008-009746-9766	818-482-1176	mpendergrass@citadelehs.com

Instrument Make and Model	DustTrak TSI 8530 DustTrak II
Calibration Date	February 4, 2022
Settings	
Factors (calibration, correction, or correlation)	
Location	6th Street Viaduct

Date	Time	Performance Check	Maintenance	Notes	Checked By (Trained Operator)
2-7-22	0715	Weekly test ~~Zero~~ Auto zero	Setup	UW	Tim Lambert
2-7-22	0715	Weekly Test Auto zero	Setup	DW	Tim Lambert
2-8-22	0650	Auto zero	—	UW	Muriel Nacar
2-8-22	0650	Auto zero	—	DW	Muriel Nacar
2-9-22	0550	Auto zero	—	UW	Muriel Nacar
2-9-22	0556	Auto zero	—	DW	Muriel Nacar
2-10-22	0541	Auto zero	—	UW	Muriel Nacar
2-10-22	0551	Auto zero	—	DW	Muriel Nacar
2-11-22	0539	Auto zero	—	UW	Muriel Nacar
2-11-22	0552	Auto zero	—	DW	Muriel Nacar

SCAQMD Rule 1466 Instrument Log

CITADEL EHS
assess • resolve • strengthen

Notice Number	Project Name		Project Location
687185	6th Street Viaduct Parc Improvements Soil Excavation Monitoring		585 S. Santa Fe Avenue
On-Site Dust Control Supervisor	**Certification Number**	**Phone Number**	**Email Address**
Mike Pendergrass	SC2008-009746-9766	818-482-1176	mpendergrass@citadelehs.com

Instrument Make and Model	TSI 8530 DustTrak II
Calibration Date	February 4, 2022
Settings	
Factors (calibration, correction, or correlation)	
Location	6th Street Viaduct, Los Angeles

Date	Time	Performance Check	Maintenance	Notes	Checked By (Trained Operator)
2/14/22	0547	Autozero	—	UW	Muriel Nacer
2/14/22	0557	Autozero	—	DW	Muriel Nacer
2/14/22	0930	weekly test	set up	UW	Tim Lambert
2/14/22	0930	weekly test	set up	DW	Tim Lambert
2/15/22	0545	Autozero	—	DW	Muriel Nacer
2/15/22	0554	Autozero	—	UW	Muriel Nacer

SCAQMD Rule 1466 PM_{10} Monitoring Log

CITADEL EHS
assess · resolve · strengthen

Notice Number	Project Name		Project Location
687185	6th Street Viaduct Parc Improvements Soil Excavation Monitoring		585 S. Santa Fe Avenue
On-Site Dust Control Supervisor	**Certification Number**	**Phone Number**	**Email Address**
Mike Pendergrass	SC2008-009746-9766	818-482-1176	mpendergrass@citadelehs.com

Date	Wind (mph)		Upwind (µg/m³)		Downwind (µg/m³)		Delta (µg/m³)	2 HR Avg Conc.	Comments	Measured By
	Speed	Direction	Time*	Conc.	Time*	Conc.				
2-7-22	1	NE	0941	0.015	0939	0.005	-0.01			MP
~~2-7-22~~	~~1~~	~~NE~~	0		~~0929~~					
2-8-22	2	ENE	0631	0.009	0629	0.012	0.004			MN
2-8-22	1	ENE	0819	0.013	0815	0.012	-0.001			MN
2-9-22	0	ENE	0654	0.009	0652	0.009	0.001			MN
2-9-22	0	SSW	0757	0.020	0754	0.013	-0.007			MN
2-9-22	1	SSW	0854	0.016	0852	0.013	-0.003			MN
2-10-22	0	NNW	0658	0.065	0653	0.061	-0.004			MN
2-10-22	1	NNW	0857	0.061	0755	0.060	-0.001			MN
2-10-22	0	NNW	0854	0.023	0853	0.036	0.013			MN
2-11-22	1	SSE	0854	0.017	0655	0.011	-0.006			MN
2-11-22	0	SSE	0850	0.030	0759	0.023	-0.007			MN

*Data logging shall be every 10 minutes or less per Rule 1466 (d)(3)(F)

SCAQMD Rule 1466 PM_{10} Monitoring Log

CITADEL EHS
assess · resolve · strengthen

Notice Number	Project Name		Project Location
687185	6th Street Viaduct Parc Improvements Soil Excavation Monitoring		585 S. Santa Fe Avenue
On-Site Dust Control Supervisor	**Certification Number**	**Phone Number**	**Email Address**
Mike Pendergrass	SC2008-009746-9766	818-482-1176	mpendergrass@citadelehs.com

Date	Wind (mph)		Upwind (~~µg~~ mg/m³)		Downwind (~~µg~~ ms/m³)		Delta (~~µg~~ DS/m³)	2 HR Avg Conc.	Comments	Measured By
	Speed	Direction	Time*	Conc.	Time*	Conc.				
2/14/22	0	NNE	0706	0.012	0703	0.016	-0.004			MN
2/14/22	0	NE	0801	0.038	0759	0.017	-0.019			MN

*Data logging shall be every 10 minutes or less per Rule 1466 (d)(3)(F)

SCAQMD Rule 1466 Transportation Log

CITADEL EHS
assess · resolve · strengthen

Notice Number	Project Name		Project Location
687185	6th Street Viaduct Parc Improvements Soil Excavation Monitoring		585 S. Santa Fe Avenue
On-Site Dust Control Supervisor	**Certification Number**	**Phone Number**	**Email Address**
Mike Pendergrass	SC2008-009746-9766	818-482-1176	mpendergrass@citadelehs.com

Date	Time	Transporting Company *(Name of Company and Address)*	Receiving Facility *(Name of Company and Address)*
02/7/22	6:20	Global	Yuma
2/7/22	6:22	Espinosa on TKg	Yuma
2/7/22	6:26	Sand U	Yuma
2/7/22	6:29	Figueroa Corp	Yuma
2/7/22	6:30	~~[illegible]~~ S Limones	Yuma
2/7/22	6:33	~~[illegible]~~ Qban Soy	Yuma
2/7/22	6:36	~~[illegible]~~ Figueroa TKg	Yuma
2/7/22	6:37	~~[illegible]~~ DFB	Yuma
2/7/22	6:42	JM TKg	Yuma
2/7/22	6:45	Martinez Carriers	Yuma
2/7/22	6:48	LMP Express	Yuma
2/7/22	6:52	Jose T Garcia TKg	Yuma

SCAQMD Rule 1466 Transportation Log

CITADEL EHS
assess • resolve • strengthen

Notice Number	Project Name		Project Location
687185	6th Street Viaduct Parc Improvements Soil Excavation Monitoring		585 S. Santa Fe Avenue
On-Site Dust Control Supervisor	**Certification Number**	**Phone Number**	**Email Address**
Mike Pendergrass	SC2008-009746-9766	818-482-1176	mpendergrass@citadelehs.com

Date	Time	Transporting Company *(Name of Company and Address)*	Receiving Facility *(Name of Company and Address)*
2/7/22	6:56	Ochoa Trkg	Tume
2/7/22	6:00	Pepe's Transport	Tume
2/7/22	7:02	Tbmn	Tume
2/7/22	7:03	Romero Trkg	Tume
2/7/22	7:09	Romero Trkg	Tume
2/7/22	7:10	Romero Trkg	Tume

SCAQMD Rule 1466 Transportation Log

CITADEL EHS
assess · resolve · strengthen

Notice Number	Project Name		Project Location
687185	6th Street Viaduct Parc Improvements Soil Excavation Monitoring		585 S. Santa Fe Avenue
On-Site Dust Control Supervisor	**Certification Number**	**Phone Number**	**Email Address**
Mike Pendergrass	SC2008-009746-9766	818-482-1176	mpendergrass@citadelehs.com

Date	Time	Transporting Company *(Name of Company and Address)*	Receiving Facility *(Name of Company and Address)*
2/8/22	6:11	Espinosa M Trucking	Yuma
2/8/22	6:11	S Limons	Yuma
2/8/22	6:16	Saul V	Yuma
2/8/22	6:17	QBM SOY	Yuma
2/8/22	6:21	Borrow Trk	Yuma
2/8/22	6:25	~~[illegible]~~ OFB ~~[illegible]~~	Yuma
2/8/22	6:26	~~[illegible]~~ JM Trucking	Yuma
2/8/22	6:30	~~[illegible]~~ Martinez Ramos	Yuma
2/8/22	6:31	UMP Express	Yuma
2/8/22	6:35	Jose T Garcia Trucking	Yuma
2/8/22	6:36	Ochoa Transportation	Yuma
2/8/22	6:39	Reyes transport	Yuma

SCAQMD Rule 1466 Transportation Log

CITADEL EHS
assess · resolve · strengthen

Notice Number	Project Name		Project Location
687185	6th Street Viaduct Parc Improvements Soil Excavation Monitoring		585 S. Santa Fe Avenue
On-Site Dust Control Supervisor	**Certification Number**	**Phone Number**	**Email Address**
Mike Pendergrass	SC2008-009746-9766	818-482-1176	mpendergrass@citadelehs.com

Date	Time	Transporting Company *(Name of Company and Address)*	Receiving Facility *(Name of Company and Address)*
2/8/22	6:42	Turin trkg	Yuma
2/8/22	6:44	Romero Trks	Yuma
2/8/22	6:50	Romero Trkg	Yuma
2/8/22	6:51	Romero Trucking	Yuma
2/8/22	7:02	Rocami Trks	Yuma
2/8/22	7:10	Ammo Express	Yuma
2/9/22	6:20	Espinoza M Trks	Yuma
2/9/22	6:20	Sand U	Yuma
2/9/22	6:23	JM Trkg	Yuma
2/9/22	6:27	5 limones	Yuma
2/9/22	6:28	LMP Express	Yuma
2/9/22	6:33	Martinez Corners	Yuma

SCAQMD Rule 1466 Transportation Log

CITADEL EHS
assess · retrieve · strengthen

Notice Number	Project Name		Project Location
687185	6th Street Viaduct Parc Improvements Soil Excavation Monitoring		585 S. Santa Fe Avenue
On-Site Dust Control Supervisor	**Certification Number**	**Phone Number**	**Email Address**
Mike Pendergrass	SC2008-009746-9766	818-482-1176	mpendergrass@citadelehs.com

Date	Time	Transporting Company *(Name of Company and Address)*	Receiving Facility *(Name of Company and Address)*
2/9/22	6:34	~~[illegible]~~ ochoa's Transport	Yuma
2/9/22	6:34	Reyes Transport	Yuma
2/9/22	6:39	Romero Trucking	Yuma
2/9/22	6:39	Toro Trucking	Yuma
2/9/22	6:45	Romero TKg	Yuma
2/9/22	6:50	Romero TKg	Yuma
2/9/22	6:54	Rocami TKg	Yuma
2/9/22	7:00	Molina & Son	Yuma
2/9/22	7:05	Visu Transport	Yuma
2/9/22	7:09	Zamora TKg	Yuma
2/9/22	7:15	VRZ	Yuma
2/9/22	7:19	Badass	Yuma

SCAQMD Rule 1466 Transportation Log

CITADEL EHS
assess · resolve · strengthen

Notice Number	Project Name		Project Location
687185	6th Street Viaduct Parc Improvements Soil Excavation Monitoring		585 S. Santa Fe Avenue
On-Site Dust Control Supervisor	**Certification Number**	**Phone Number**	**Email Address**
Mike Pendergrass	SC2008-009746-9766	818-482-1176	mpendergrass@citadelehs.com

Date	Time	Transporting Company *(Name of Company and Address)*	Receiving Facility *(Name of Company and Address)*
2/9/22	7:24	Meli TKS	Yuma
2/9/22	7:27	Maxo TKS	Yuma
2/9/22	7:32	NWO TKS.	Yuma
2/10/22	6:10	Espinosa M TKS	Yuma
2/10/22	6:12	LMP Express	Yuma
2/10/22	6:14	S Limones	Yuma
2/10/22	6:18	Martinez Carrier	Yuma
2/10/22	6:20	Jose T Garcia	Yuma
2/10/22	6:23	Ochoa Transportation	Yuma
2/10/22	6:23	Pepe's Transport	Yuma
2/10/22	6:26	Romero TKS	Yuma
2/10/22	6:26 ~~6:23~~	Romero TKS	Yuma

SCAQMD Rule 1466 Transportation Log

CITADEL EHS
assess · resolve · strengthen

Notice Number	Project Name		Project Location
687185	6th Street Viaduct Parc Improvements Soil Excavation Monitoring		585 S. Santa Fe Avenue
On-Site Dust Control Supervisor	**Certification Number**	**Phone Number**	**Email Address**
Mike Pendergrass	SC2008-009746-9766	818-482-1176	mpendergrass@citadelehs.com

Date	Time	Transporting Company *(Name of Company and Address)*	Receiving Facility *(Name of Company and Address)*
2/10/22	6:29	Romero TKg	Yuma
2/10/22	6:33	BB's	Yuma
2/10/22	6:36	Rocan's TKg	Yuma
2/10/22	6:39	Zamora TKg	Yuma
2/10/22	6:41	Mero TKg	Yuma
2/10/22	6:44	MMO	Yuma
2/10/22	6:48	VRZ	Yuma
2/10/22	6:49	Mali TKg	Yuma
2/10/22	6:54	VISW	Yuma
2/10/22	7:12	Molina & Sur	Yuma
2/11/22	6:13	Espinosa M TKg	Yuma
2/11/22	6:18	5 Limones	Yuma

SCAQMD Rule 1466 Transportation Log

CITADEL EHS
assess · resolve · strengthen

Notice Number	Project Name		Project Location
687185	6th Street Viaduct Parc Improvements Soil Excavation Monitoring		585 S. Santa Fe Avenue
On-Site Dust Control Supervisor	**Certification Number**	**Phone Number**	**Email Address**
Mike Pendergrass	SC2008-009746-9766	818-482-1176	mpendergrass@citadelehs.com

Date	Time	Transporting Company *(Name of Company and Address)*	Receiving Facility *(Name of Company and Address)*
2/11/22	6:19	Quon & Son	Yuma
2/11/22	6:24	LMP Express	Yuma
2/11/22	6:34	Jose T Garcia TKG	Yuma
2/11/22	6:38	Ref's Transport	Yuma
2/11/22	6:39	Ochoa Transport	Yuma
2/11/22	6:44	Romero TKG	Yuma
2/11/22	6:47	Romero TKG	Yuma
2/11/22	6:49	Romero TKG	Yuma
2/11/22	6:53	Rocamo's TKG	Yuma
2/11/22	6:55	BBS	Yuma
2/11/22	6:58	F & Sons TKG	Yuma
2/14/22	6:13	Espinoza M TKG	Yuma

SCAQMD Rule 1466 Transportation Log

CITADEL EHS
assess · resolve · strengthen

Notice Number	Project Name		Project Location
687185	6th Street Viaduct Parc Improvements Soil Excavation Monitoring		585 S. Santa Fe Avenue
On-Site Dust Control Supervisor	**Certification Number**	**Phone Number**	**Email Address**
Mike Pendergrass	SC2008-009746-9766	818-482-1176	mpendergrass@citadelehs.com

Date	Time	Transporting Company *(Name of Company and Address)*	Receiving Facility *(Name of Company and Address)*
2/14/22	6:18	S Linares	Yuma
2/14/22	6:21	Q bon & Son	Yuma
2/14/22	6:25	Vasquez & Sm Trk	Yuma
2/14/22	6:29	Figueroa T+C	Yuma
2/14/22	6:33	OFB	Yuma
2/14/22	6:36	JM TKG	Yuma
2/14/22	6:40	LAF Express	Yuma
2/14/22	6:45	Martinez Corres	Yuma
2/14/22	6:49	Ochoa's Transportation	Yuma
2/14/22	6:55	Pepe's Transport	Yuma
2/14/22	6:57	MG TKG	Yuma
2/14/22	7:01	Romero TKG	Yuma

SCAQMD Rule 1466 Transportation Log

CITADEL EHS
assess · resolve · strengthen

Notice Number	Project Name		Project Location
687185	6th Street Viaduct Parc Improvements Soil Excavation Monitoring		585 S. Santa Fe Avenue
On-Site Dust Control Supervisor	**Certification Number**	**Phone Number**	**Email Address**
Mike Pendergrass	SC2008-009746-9766	818-482-1176	mpendergrass@citadelehs.com

Date	Time	Transporting Company *(Name of Company and Address)*	Receiving Facility *(Name of Company and Address)*
2/14/22	7:05	Romero TKG	Yume
2/14/22	7:10	Romero TKG	Yume
2/14/22	7:15	Rocami TKG	Yume
2/14/22	7:19	BB's TKG	Yume
2/14/22	7:23	Espesil TKG	Yume
2/14/22	7:27	F A SMS TKG	Yume
2/14/22	7:32	Rollin ✓	Yume
2/14/22	7:35	NWO	Yume
2/15/22	6:13	S Limones	Yume
2/15/22	6:18	Orsan A Son	Yume
2/15/22	6:21	Vasquez TKG A Son	Yume
2/15/22	6:28	Fisveve TKG	Yume

SCAQMD Rule 1466 Transportation Log

CITADEL EHS
assess · resolve · strengthen

Notice Number	Project Name		Project Location
687185	6th Street Viaduct Parc Improvements Soil Excavation Monitoring		585 S. Santa Fe Avenue
On-Site Dust Control Supervisor	**Certification Number**	**Phone Number**	**Email Address**
Mike Pendergrass	SC2008-009746-9766	818-482-1176	mpendergrass@citadelehs.com

Date	Time	Transporting Company *(Name of Company and Address)*	Receiving Facility *(Name of Company and Address)*
7/15/22	6:32	BBI TRG	Yuma

CITADEL EHS
assess resolve strengthen

Appendix F
Photographic Log

PHOTO LOG



PHOTO 1: View of the upwind DustTrak in the northeast corner of the Site, looking north (2/7/22).



PHOTO 2: View of the downwind DustTrak along the south boundary of the Site, looking northeast (2/7/22).

CITADEL EHS
assess resolve strengthen

Rincon Consultants, Inc.

Sixth Street Viaduct
Los Angeles, California 90013

Citadel Project No. 1814.1002.0

PHOTO LOG



PHOTO 3: View of the weather station, looking northwest (2/7/22).



PHOTO 4: View of the excavation area, looking northwest (2/7/22).

CITADEL EHS
assess resolve strengthen

Rincon Consultants, Inc.

Sixth Street Viaduct
Los Angeles, California 90013

Citadel Project No. 1814.1002.0

BUREAU OF ENGINEERING

SIXTH STREET PARK, ARTS AND RIVER CONNECTIVITY IMPROVEMENTS (PARC)
WORK ORDER NO. E700235D

ATTACHMENT NO. 4
PRODUCT DATA AND CUT SHEETS

BID SUBMITTAL
JULY 2022

City of Los Angeles
California

Department of Public Works
Bureau of Engineering

Penal-Ware® 1696 Series

Econo Blowout Jet Toilet - Off Floor



1696-W-1

Fixture May Show Some Available Options

Please visit ***www.acorneng.com*** for most current specifications.

Econo Blowout Jet Toilet - Off Floor

Fixture is arranged to be installed on finished wall and serviced from an accessible pipe chase. Optional Wall Sleeve or Metal Template is recommended for all installations for required wall openings. Fixture mounting flange is fabricated of 16 gage and toilet bowl is fabricated of 14 gage, type 304 stainless steel. Exterior is polished to a satin finish. The inside of the toilet bowl also has a satin finish. Fixture is seamless welded construction. There are no accessible voids or crevices where contraband can be concealed.

Toilet is blowout jet type with an elongated bowl manufactured to ASME A112.19.3 and CSA B45.4 requirements and will flush with a minimum of 25 PSI flow pressure when used in conjunction with a minimum of 1.6 GPF. Trap has a minimum of 3-1/2" seal and will pass a 2-1/8" ball. Toilet waste outlet is 2-3/8" diameter plain end and extends beyond the rear of the fixture 11-1/4". Toilet flushing inlet has 1-1/2" NPS male end and extends beyond the rear of the fixture 9-1/2".

Regularly Furnished items include mounting hardware for walls up to 8" thick to anchor thru fixture slots.

GUIDE SPECIFICATIONS

Provide and install Acorn Penal-Ware® Econo Blowout Jet Toilet (specify model number and options). Fixture shall be fabricated from 14 gage and 16 gage, type 304 stainless steel. Construction shall be seamless welded. Toilet shall be concealed blowout jet type with an elongated bowl and a self-draining flushing rim. Toilet shall meet ASME A112.19.3 and CSA B45.4 requirements and will flush with a minimum of 25 PSI flow pressure when used in conjunction with a minimum of 1.6 GPF. Toilet trap shall have a minimum 3-1/2" seal that shall pass a 2-1/8" diameter ball and be fully enclosed. Fixture shall withstand loadings of 1,500 pounds without permanent damage. Fixture shall be furnished with necessary fasteners for proper installation.

Acorn Engineering Company • 15125 Proctor Avenue • P.O. Box 3527 • City of Industry, CA 91744-0527 U.S.A.
Tel: (800) 488-8999 • (626) 336-4561 • Fax: (626) 961-2200 • www.acorneng.com • E-mail: info@acorneng.com

Penal-Ware® 1696: Econo Blowout Jet Toilet - Off Floor

WALL THICKNESS AND TYPE (Must Specify)
Thickness: _____ Type: ❑ Concrete ❑ Block ❑ Steel

MODEL NUMBER AND OPTIONS SELECTION:

BASE MODEL NUMBER
☑ 1696 Econo Blowout Jet Toilet

SUPPLY (Must Specify)
☑ -W Wall (Concealed)

FIXTURE MOUNTING AND WASTE (Must Specify)
☑ -1 Off-Floor, Wall Outlet

FLUSH VALVE GPF's (Must Specify)
❑ -1.28 GPF (HET)
❑ -1.6 GPF (Not Available in California)
❑ -3.5 GPF (Not Available in California)

FLUSH VALVE OPTIONS (Must Specify)
REFER TO ACORN DURA-WARE ACCESSORIES FOR FLUSH VALVE COVER #2802, BOX #2803-1 AND PANEL #2898
❑ -EVSFV Master-Trol® Electronic Flush Valve
❑ -EVSPFV Master-Trol® Electronic Flush Valve w/ Piezo Button
❑ -FV Flush Valve, Mechanical (N/A for ADA)
❑ -FVBO Flush Valve by Others
❑ -FVH Flush Valve, Hydraulic
❑ -FVL Flush Valve, Lever Handle
❑ -MTPFV Master-Trol® PLUS Electronic Flush Valve
❑ -MTPPFV Master-Trol® PLUS Electronic Flush Valve w/ Piezo Button
❑ -MVCFV Time-Trol® Electronic Flush Valve

TOILET OPTIONS
❑ -CO1 Cleanout w/ O-Ring Connecting to No-Hub 4" (Plain End Only)
❑ -CO1-3 Cleanout w/ O-Ring Connecting to No-Hub 3" (Plain End Only, N/A with -WO3)
❑ -COH Cleanout Hook Assembly
❑ -FT Flood-Trol (N/A with Top Supply)
❑ -FTE Flood-Trol Electronic
❑ -PC Pinned Cleanout Plug (For -CO1 Options above)
❑ -TSC Toilet Shipping Cover

PRODUCT OPTIONS
❑ -ADA 18" Integral Seat Height
❑ -EG Enviro-Glaze Color Specify:_____ Toilet Interior & Exterior
❑ -EGE Enviro-Glaze Color Specify:_____ Toilet Exterior Only
❑ -MT Metal Template (Only 1 Required Per Project)
❑ -SW Wall Sleeve
❑ -TF Transformer, 120VAC to 24VAC (-MVCFV option)
❑ -VAC AcornVac System

Please visit ***www.acorneng.com*** for most current specifications.

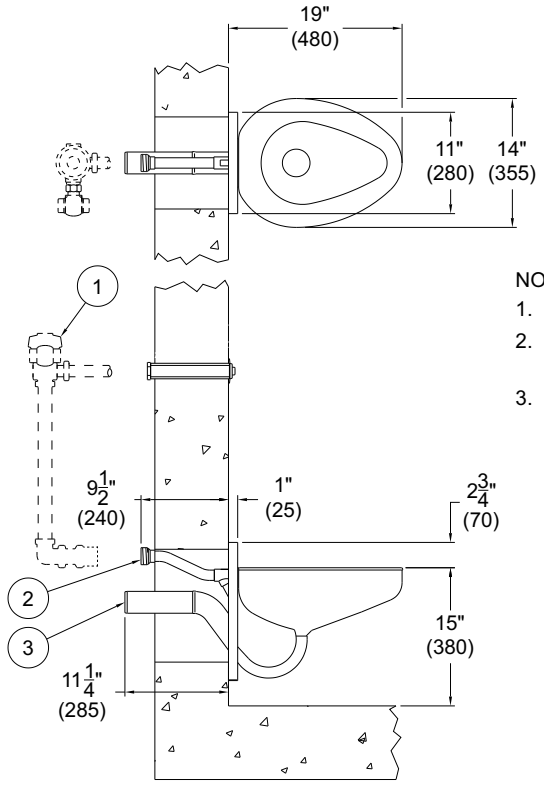

1696

NOTES:
1. Optional -FV Flush Valve - Wall Supply
2. 1-1/2" NPS Male Flushing Inlet - 9-1/2" Beyond Rear of Fixture
3. 2-3/8" O.D. Plain End Toilet Waste Outlet - 11-1/4" Beyond Rear of Fixture

Important: Installation instructions and current rough-in are furnished with each fixture. Do not rough in without certified dimensions.
Dimensions are subject to manufacturer's tolerance of plus or minus 1/4" and change without notice. Acorn assumes no responsibility for use of void or superseded data. © Copyright 2009 Acorn Engineering Company

Selection Summary
Model No. & Option_____
Quantity_____

Approved for Manufacturing
Company_____Title_____
Signature_____ Date_____

Acorn Engineering Company • 15125 Proctor Avenue • P.O. Box 3527 • City of Industry, CA 91744-0527 U.S.A.
Tel: (800) 488-8999 • (626) 336-4561 • Fax: (626) 961-2200 • www.acorneng.com • E-mail: info@acorneng.com

REFERENCE DRAWINGS	
–SW Wall Sleeve	9925–239–002
Hardware Package	9957–900–001

FOR -ADA MODELS –FLUSH VALVE MUST BE HYDRAULICALLY ACTUATED OR SUPPLIED WITH A SPECIAL HANDLE. MAX. CONTROL HEIGHT IS 36" ABOVE FINISHED FLOOR. CONTROLS MUST BE LOCATED ON OPEN SIDE OF TOILET.

NOTE: REFER TO A.D.A. ACCESSIBILITY GUIDELINES FOR COMPLETE INSTALLATION REQUIREMENTS.

NOTE: FOR UNITS WITH SUFFIX OPTION –ADA, ALL VERTICAL DIMENSIONS INDICATED * WILL INCREASE PROPORTIONALLY WITH ADA SEAT HEIGHT.

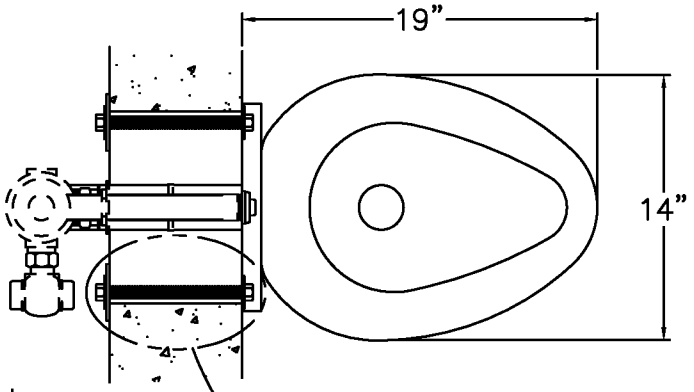

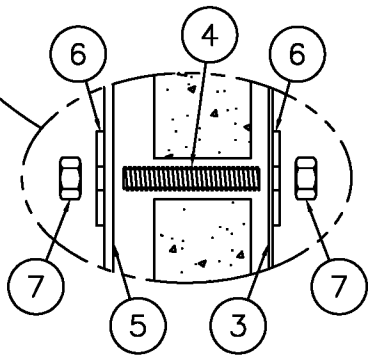

MOUNTING DETAIL

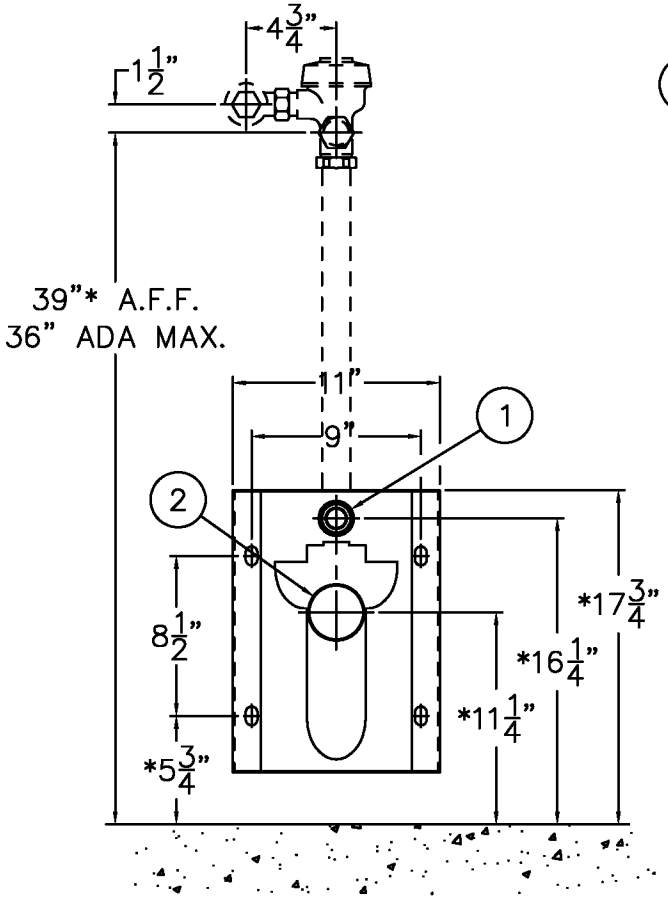

INSTALLATION INSTRUCTIONS

A–ROUGH–IN FOR:
- 1–1/2" NPT MALE FLUSHING INLET ①.
- 2–3/8" O.D. TOILET WASTE OUTLET ②.

B–PLACE TOILET ③ AGAINST CELL WALL, SLIDING STUDS ④ THROUGH WALL OPENING.

C–PLACE VERTICAL PLATES ⑤, WASHERS ⑥, AND NUTS ⑦ ONTO STUDS ④. TIGHTEN TO 60FT /LBS.

D–FLUSH SUPPLY LINE. CONNECT OPTIONAL –FV FLUSH VALVE ⑧ PER MANUFACTURERS' RECOMMENDATIONS.

ACORN ENGINEERING COMPANY
P.O. BOX 3527 Industry, CA 91744
15125 Proctor Ave Industry, CA 91748
(626) 336–4561 FAX (626) 961–2200

TITLE		
ECONO BLOWOUT JET TOILET - CAT. #1696-W-1		
MANUFACTURE DATE	DATE ISSUED	DRAWING NUMBER
APRIL 2003 TO PRESENT	**04/25/03**	**9925-039-002**
	DATE REVISED **02/06/15**	

ALL VERTICAL DIMENSIONS INDICATED * INCREASE PROPORTIONATELY WITH ADA SEAT HEIGHT.

VIEW IS FROM FIXTURE/CELL SIDE
SHADED AREAS ARE REQUIRED WALL OPENINGS

WALL SLEEVE (-SW)

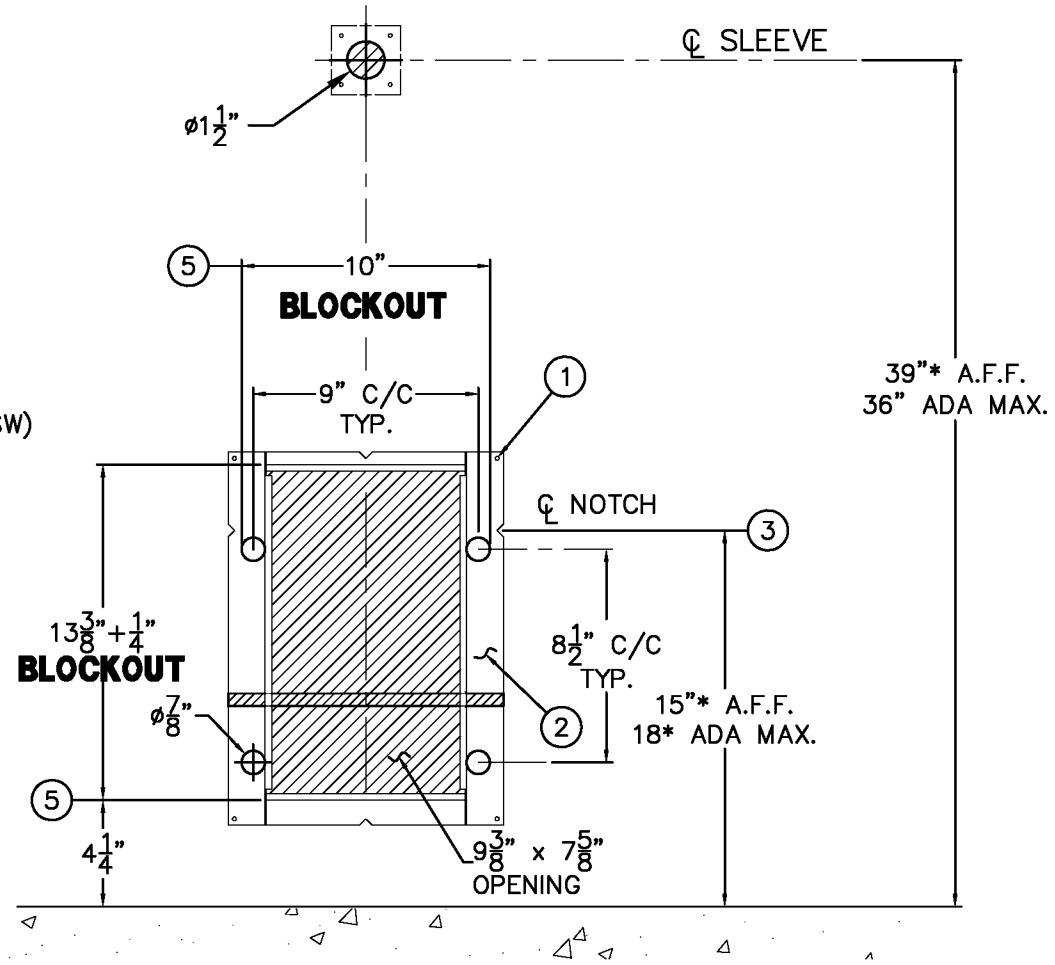

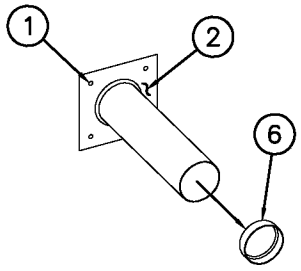

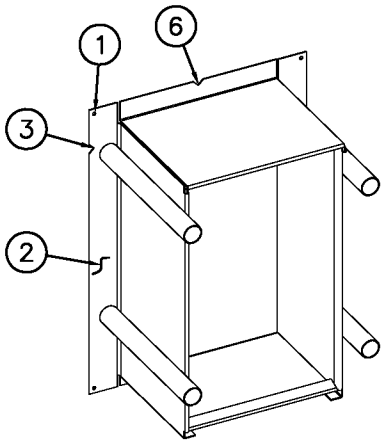

-SW WALL SLEEVES INSTALLATION INSTRUCTIONS:

SLEEVES ARE INSTALLED IN FORMS USING NAIL HOLES (1) PROVIDED OR GROUTED INTO BLOCK WALLS, BECOMING A PERMANENT PART OF THE WALL.
NOTE:
FOR POURED WALL CONSTRUCTION, TEMPORARY BRACING SHOULD BE INSTALLED WITHIN OPENING TO PREVENT DEFORMATION TO SLEEVE WHICH MAY OCCUR DURING POUR. DO NOT POUR CONCRETE DIRECTLY ON TOP OF WALL SLEEVE.
THE PUSHBUTTON SLEEVE IS CAPPED; THIS CAP (6) MUST BE REMOVED FROM THE CHASE SIDE OF THE WALL BEFORE INSTALLING FLUSH VALVE PUSHBUTTON.

A- INSTALL SLEEVE WITH FLANGE (2) ON CHASE SIDE OF WALL.
B- SIDE NOTCHES (3) INDICATE INTEGRAL SEAT HEIGHT LOCATED 15" ABOVE FINISHED FLOOR ON CELL SIDE.
C- VERTICAL OR TOP AND BOTTOM (4) NOTCHES INDICATE VERTICAL CENTERLINE OF SLEEVE OR TOILET FIXTURE.
D- USE BLOCK OUT DIMENSIONS (5) SHOWN WHEN SLEEVES ARE NOT AVAILABLE.

ACORN ENGINEERING COMPANY
P.O. BOX 3527 Industry, CA 91744
15125 Proctor Ave Industry, CA 91748
(626) 336-4561 FAX (626) 961-2200

TITLE		
-SW WALL SLEEVE - CAT. #1696		
MANUFACTURE DATE	DATE ISSUED	DRAWING NUMBER
APRIL 2003 TO PRESENT	**04/25/03**	**9925-239-002**
	DATE REVISED **04/05/13**	

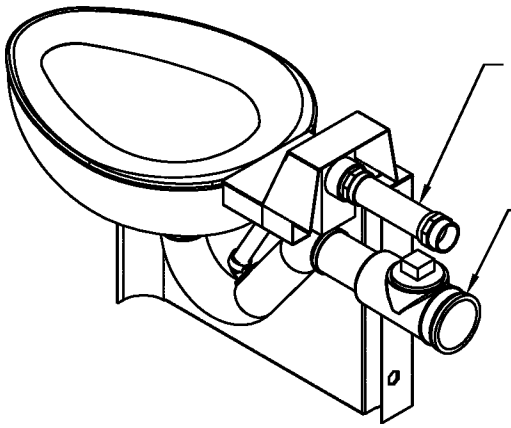

Optional –FVT Flush Valve Thru Wall Connection. Shown For Reference.

Optional –C01 Waste Fitting. Shown For Reference.

REFERENCE DRAWING	
WASTE CONNECTION WITH CLEANOUT –C01	9985–125–002

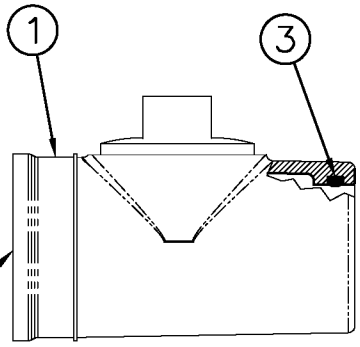

NOTE: Optional –C01 Waste Fitting Available With 3" or 4" No–Hub

Scaled: X 2

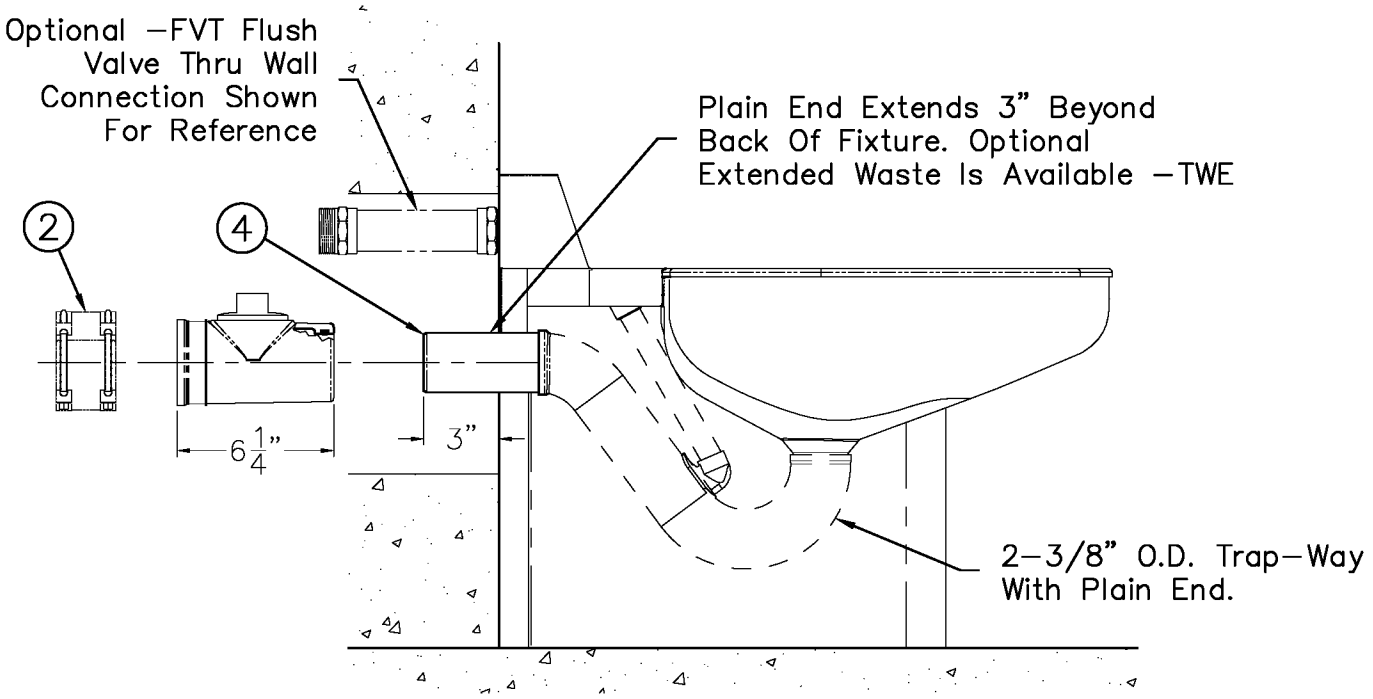

MODEL #1685 SHOWN FOR REFERENCE

INSTALLATION INSTRUCTIONS

A–INSERT O–RING ③ INTO GROOVE OF WASTE FITTING ①. LUBRICATE THE O–RING ③ WITH. O–RING LUBRICANT.

B–INSTALL WASTE FITTING ① TO FIXTURE P–TRAP WASTE EXTENSION ④. ENGAGEMENT IS APPROXIMATELY 1–1/4". NOTE: TOILET WASTE EXTENSION ④ IS 3" BEYOND BACK OF FIXTURE. LONGER WASTE EXTENSION IS AVAILABLE.

C–MAKE UP WASTE FITTING CONNECTION TO WASTE PIPING USING NO–HUB (BAND) CONNECTOR ②. BY OTHERS.

ACORN ENGINEERING COMPANY
P.O. BOX 3527 INDUSTRY, CA. 91744
(626) 336–4561 FAX (626) 961–2200

TITLE **NO-HUB WASTE CONNECTION WITH CLEANOUT -C01**

MANUFACTURE DATE	DATE ISSUED	DRAWING NUMBER
JULY 1975 PRESENT	1/29/96	9925-054-001
	DATE REVISED 11/08/13 D	

American Standard

BARRIER FREE

MADERA™ FloWise® 16-1/2" HEIGHT ELONGATED FLUSHOMETER TOILET

VITREOUS CHINA LESS EVERCLEAN®

MADERA™ FloWise® 16-1/2" HEIGHT ELONGATED LESS EVERCLEAN®

- Floor mount flushometer valve toilet
- Vitreous china
- High Efficiency, Low Consumption. Operates in the range of 1.1 gpf to 1.6 gpf (4.2 Lpf to 6.0 Lpf)
- Meets definition of HET (High Efficiency Toilet) when used with a high efficiency flush valve (1.28 gpf or 1.6 / 1.1 gpf dual flush)
- Fully glazed 2-1/8" trapway
- Elongated bowl
- 10" or 12" roughing-in
- 16-1/2" rim height for accessible application
- Condensation channel
- Powerful direct-fed siphon jet action
- 10" x 12" water surface area
- 1-1/2" inlet spud
- 2 bolt caps
- 100% factory flush tested

❏ **3043.001** Elongated bowl only, top spud
❏ **3248.001** Elongated bowl only, top spud with slotted rim for bedpan holding (White only)
❏ **3249.001** Elongated bowl only, back spud

System MaP* Score:
- 1,000 grams of miso @ 1.1 gpf, 1.28 gpf or 1.6 gpf when used with an American Standard flush valve

* Maximum Performance (MaP) testing performed by IAPMO R&T Lab. MaP Report conducted by Veritec Consulting, Inc. and Koeller and Company.

Component Parts:
❏ **047007-0070A** Inlet Spud (furnished with bowl)
❏ **481310-100** Bolt caps with retainers (furnished with bowl)

Nominal Dimensions:
718 x 356 x 419mm
(28-1/4" x 14" x 16-1/2")

Fixture only, less seat and flush valve

Recommended working pressure–between 25 psi at valve when flushing and 80 psi static

Compliance Certifications -
Meets or Exceeds the Following Specifications:
- ASME A112.19.2-2008 / CSA B45.1-08 for Vitreous China Fixtures



SEE REVERSE FOR ROUGHING-IN DIMENSIONS

To Be Specified:
❏ Color: ❏ White ❏ Bone
❏ Seat:
- ❏ American Standard #5901.100 Heavy duty open front less cover
- ❏ American Standard #5905.100 Extra heavy duty open front less cover

❏ Flushometer Valve:
- ❏ 1.6 gpf:
  - ❏ Sensor-Operated: American Standard Selectronic® DC Power #6065.161.002 (Top Spud)
  - ❏ Sensor-Operated: American Standard Selectronic® AC Power #6067.261.002 (Back Spud)
  - ❏ Manual: American Standard #6047.161.002 (Top Spud)
- ❏ 1.28 gpf:
  - ❏ Sensor-Operated: American Standard Selectronic® DC Power #6065.121.002 (Top Spud)
  - ❏ Sensor-Operated: American Standard Selectronic® AC Power #6067.221.002 (Back Spud)
  - ❏ Manual: American Standard #6047.121.002 (Top Spud)
- ❏ 1.6 / 1.1 gpf Dual Flush:
  - ❏ Sensor-Operated: American Standard Selectronic® DC Power #6065.761.002 (Top Spud)

MEETS THE AMERICANS WITH DISABILITIES ACT GUIDELINES AND ANSI A117.1 REQUIREMENTS FOR ACCESSIBLE AND USABLE BUILDING FACILITIES - CHECK LOCAL CODES.

WATER EFFICIENT PRODUCT

© 2014 AS America Inc.

MADERA™ FloWise® 16-1/2" HEIGHT ELONGATED FLUSHOMETER TOILET

VITREOUS CHINA LESS EVERCLEAN®

BARRIER FREE

3043.001/3248.001

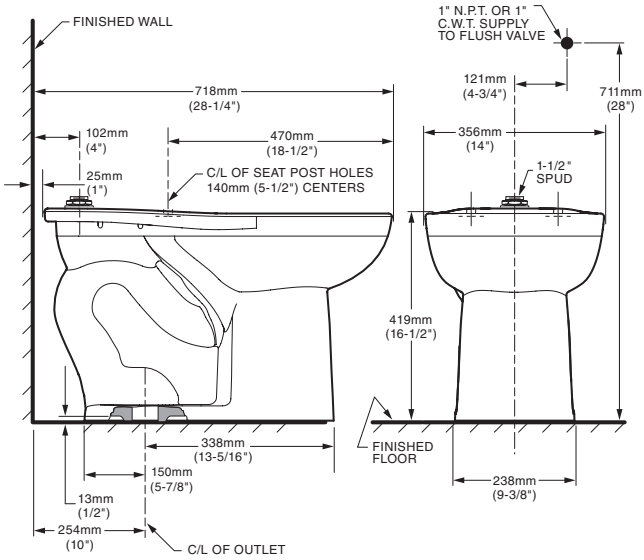

3249.001

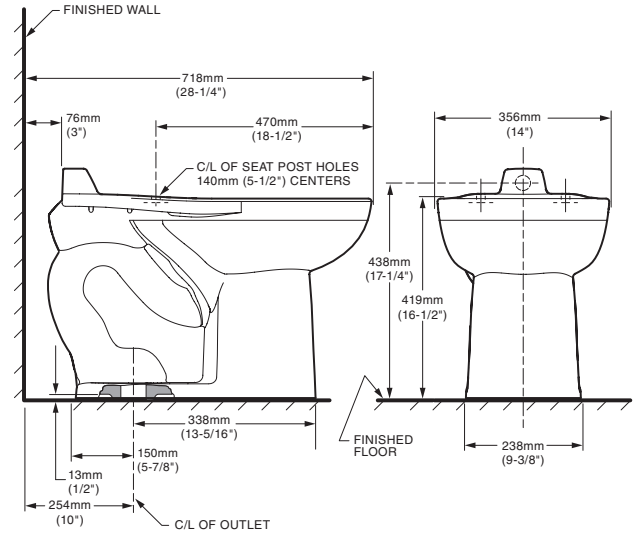

NOTES:
PRODUCT 3043 SHOWN, 3248 SAME EXCEPT WITH SLOTTED RIM FOR BED PAN HOLDING.
TO COMPLY WITH AREA CODE GOVERNING THE HEIGHT OF VACUUM BREAKER ON THE FLUSHOMETER VALVE, THE PLUMBER MUST VERIFY DIMENSIONS SHOWN FOR SUPPLY ROUGHING.
THIS TOILET DESIGNED TO ROUGH-IN AT A MINIMUM DIMENSION OF 254MM (10") AND A MAXIMUM DIMENSION OF 305MM (12") FROM FINISHED WALL TO C/L OF OUTLET.
FLUSHOMETER VALVE NOT INCLUDED WITH FIXTURE AND MUST BE ORDERED SEPARATELY. FLUSHOMETER VALVE REQUIREMENTS FOR 12" (305MM) ROUGH-IN: SWEAT EXTENSION NIPPLE IS REQUIRED. REFER TO VALVE MANUFACTURER AND LOCAL CODES.

IMPORTANT: Dimensions of fixtures are nominal and may vary within the range of tolerances established by ANSI Standard A112.19.2. These measurements are subject to change or cancellation. No responsibility is assumed for use of superseded or voided pages.

© 2014 AS America Inc.

Penal-Ware® 1652LRB Series

18" Lavatory with Rectangular Bowl - ADA 2010 Compliant



1652LRB-1-DMS-04-M

Fixture May Show Some Available Options

Please visit ***www.acorneng.com*** for most current specifications.

18" Lavatory with Lavy Rectangular Bowl - ADA 2010 Compliant

Fixture is designed to be installed on a finished wall and serviced from an accessible pipe chase. There are no voids or crevices where contraband can be concealed. Features include an integral self-draining soap dish and mounting hardware for walls up to 8” thick. Optional Wall Sleeve or Metal Template is recommended to provide through wall openings and mounting points. Lavatory complies with ANSI, UFAS, CBC and ADA 2010 requirements for accessibility. Compliance is subject to the interpretation and requirements of the local code authority.

Cabinet is fabricated from 14 gage, type 304 stainless steel and is seamless welded construction with exposed surfaces polished to a satin finish. Cabinet interior is sound deadened with fire-resistant material.

Lavatory Rectangular Bowl is 14" x 12" x 4-1/2" deep and includes an integral fast drain. Standard elbow waste outlet is 1-1/2" O.D. plain end and extends 3" beyond the back of wall.

Optional Lavatory Valve is an pneumatically operated, pushbutton Air-Control valve using atmospheric air. Pushbutton is vandal-resistant and requires less than 5 pounds to activate valve. Valve is metering, non-hold open type. Valve timing is adjustable from 5 to 60 seconds. Valve includes a 0.5 GPM flow control and can be remotely located up to 10 feet from the operating pushbutton. Valve and Bubbler conforms with lead free requirements of NSF61, Section 9 and CHSC 116875.

Suffix Option DMB, Deck Mounted Bubbler optionally available, provides a drinking bubbler that meets ADA requirements and lead free requirements of NSF61, Section 9 and CHSC 116875. This option also includes a separate pushbutton and non-metering Air-Control valve with .7 GPM flow control.

GUIDE SPECIFICATION

Provide and install an Acorn Penal-Ware, 18" wide ADA 2010 Compliant Lavatory with rectangular bowl (specify model number and options). Unit shall conform to ANSI, UFAS, CBC and ADA requirements for accessibility. Fixture shall be fabricated from 14 gage, type 304 stainless steel. Construction shall be seamless welded and exposed surfaces shall have a satin finish. Deck shall have an air-circulating, self-draining soap dish. Provide Air-Control pneumatically operated, metering, non-hold open valve with ADA compliant pushbutton. Valve and Bubbler conform with lead free requirements of NSF61, Section 9 and CHSC 116875. Cabinet interior shall be sound deadened with fire-resistant material. Fixture shall be furnished with necessary fasteners for proper installation.

Acorn Engineering Company • 15125 Proctor Avenue • P.O. Box 3527 • City of Industry, CA 91744-0527 U.S.A.
Tel: (800) 488-8999 • (626) 336-4561 • Fax: (626) 961-2200 • www.acorneng.com • E-mail: info@acorneng.com

Penal-Ware®: 1652LRB 18" Lavatory with Lavy Rectangular Bowl ADA Compliant

WALL THICKNESS AND TYPE (Must Specify)
Thickness: _____ Type: ❑ Concrete ❑ Block ❑ Steel

MODEL AND OPTIONS SELECTION:

BASE MODEL NUMBER
☑ 1652LRB 18" Lavatory with Lavy Rectangular Bowl - ADA Compliant

FIXTURE MOUNTING AND WASTE (Must Specify)
☑ -1 Off-Floor, Wall Outlet

SPOUT SELECTION (Must Specify)
❑ -DMS Deck Mounted Spout
❑ -BPH Hemispherical Penal Bubbler

VALVE SELECTION (Must Specify)
Air-Control (Pneumatic)
❑ -03-M Single Temp, Metering
❑ -04-M Hot & Cold, Metering

Master-Trol® (Electronic)
❑ -EVS1 Single Temp
❑ -EVS2 Hot & Cold
❑ -EVSP1 Single Temp, Piezo Button
❑ -EVSP2 Hot & Cold, Piezo Buttons

Master-Trol® PLUS (Electronic)
❑ -MTP1 Single Temp
❑ -MTP2 Hot & Cold
❑ -MTPP1 Single Temp, Piezo Button
❑ -MTPP2 Hot & Cold, Piezo Buttons
-MTP VALVE OPTION
❑ -PFB Power Failure Bypass (Provides drinking water in the event of power failure)

Time-Trol® (Electronic)
❑ -MVC1 Single Temp
❑ -MVC1-BAT Single Temp Battery Powered (Batteries Not Included)
❑ -MVC2 Hot & Cold
❑ -MVC2-BAT Hot & Cold Battery Powered (Batteries Not Included)

Programmable (Electronic) w/9VDC Plug-In Transformer
❑ -PPZ1 Single Temp Programmable Piezo Button
❑ -PPZ2 Hot & Cold Programmable Piezo Button

Valve By Others
❑ -9 Punched for Valve by Others

DECK PUNCHING (1-5/16" Diameter)
❑ -H1 Single Hole Centered
❑ -H24 Two Holes 4" Centered
❑ -H28 Two Holes 8" Centered (will eliminate soap depression)
❑ -H34 Three Holes 4" Centered
❑ -H38 Three Holes 8" Centered (will eliminate soap depression)

VALVE OPTIONS
❑ -BRS Brass Body Valve
❑ -CI Cycle Interrupt for Time-Trol® Valves
❑ -MA2 Manifolded, 2-Stack
❑ -MA3 Manifolded, 3-Stack (N/A with -PFB option)
❑ -MA4 Manifolded, 4-Stack (N/A with -PFB option)
❑ -PBH Hemispherical Pushbutton
❑ -TF Transformer, 120VAC to 24VAC (-MVC option only)

CABINET OPTIONS
❑ -FMT Fixture Mounted Trim
❑ -TB Toothbrush Holder ❑ Left ❑ Right
❑ -TG 12 Gage Cabinet
❑ -TH Towel Hook ❑ Single ❑ Double ❑ Left ❑ Right

LAVATORY WASTE OPTIONS
❑ -LW1 Thru-Wall Waste Extension with P-Trap
❑ -LWE Lavy Waste Extension (3" Standard)
Specify Length Beyond Fixture: _____
❑ -OF Lavatory Overflow

PRODUCT OPTIONS
❑ -DMB Deck Mounted Drinking Bubbler (Cold water only) N/A with -03-M tempered supply
❑ -BP Penal Style ❑ -BC Code Style
❑ -BPH Penal Hemispherical Style
❑ -EG Enviro-Glaze, Specify Color: _____
❑ -MT Metal Template (Only 1 Required Per Project)
❑ -SW Wall Sleeve
❑ -VAC AcornVac System

Please visit ***www.acorneng.com*** for most current specifications.

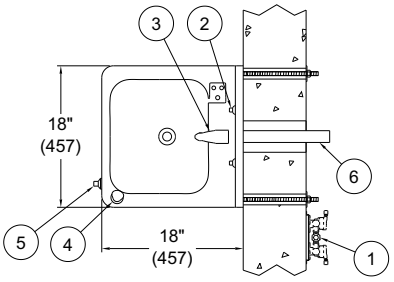

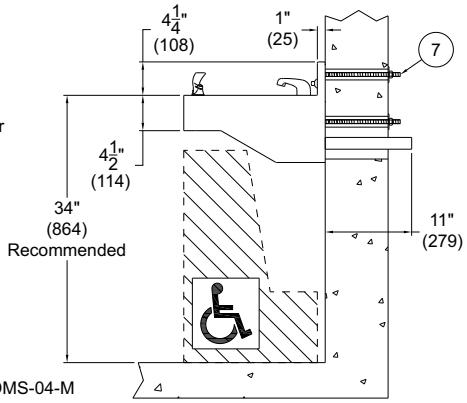

NOTES:
1. Optional -4 Air-Control Valve
2. Lavy Valve Pushbuttons
3. Lavy Bubbler
4. Optional -DMB Deck Mounted Bubbler
5. Pushbutton for option -DMB
6. Lavy Waste Outlet. Extended 11" Beyond Fixture
7. Wall Mounting Hardware

1652LRB-DMB-DMS-04-M

Important: Installation instructions and current rough-in are furnished with each fixture. Do not rough in without certified dimensions.
Dimensions are subject to manufacturer's tolerance of plus or minus 1/4" and change without notice. Acorn assumes no responsibility for use of void or superseded data. © Copyright 2009 Acorn Engineering Company

Selection Summary	Approved for Manufacturing
Model No. & Option_____	Company_____Title_____
Quantity_____	Signature_____ Date_____

Acorn Engineering Company • 15125 Proctor Avenue • P.O. Box 3527 • City of Industry, CA 91744-0527 U.S.A.
Tel: (800) 488-8999 • (626) 336-4561 • Fax: (626) 961-2200 • www.acorneng.com • E-mail: info@acorneng.com

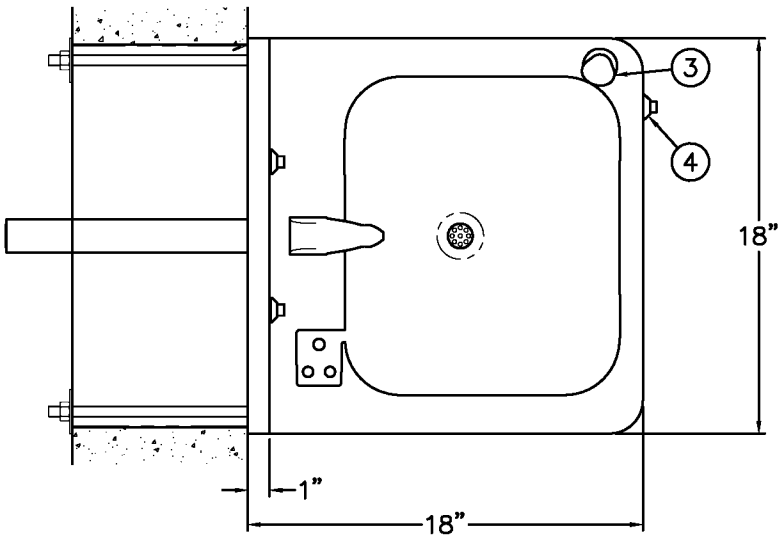

REFERENCE DRAWINGS	
HARDWARE PACKAGE	9957-900-001
-SW SLEEVE / -MT TEMPLATE	9925-212-001
AIR CONTROL CONNECTION	9900-006-003
-4 AIR-CONTROL (HOT & COLD)	9905-000-003
-MVC1 S/T TIME-TROL	9900-001-004
-EVS1 S/T MASTER-TROL	9905-330-004

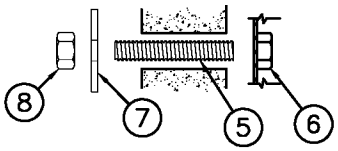

MOUNTING DETAIL

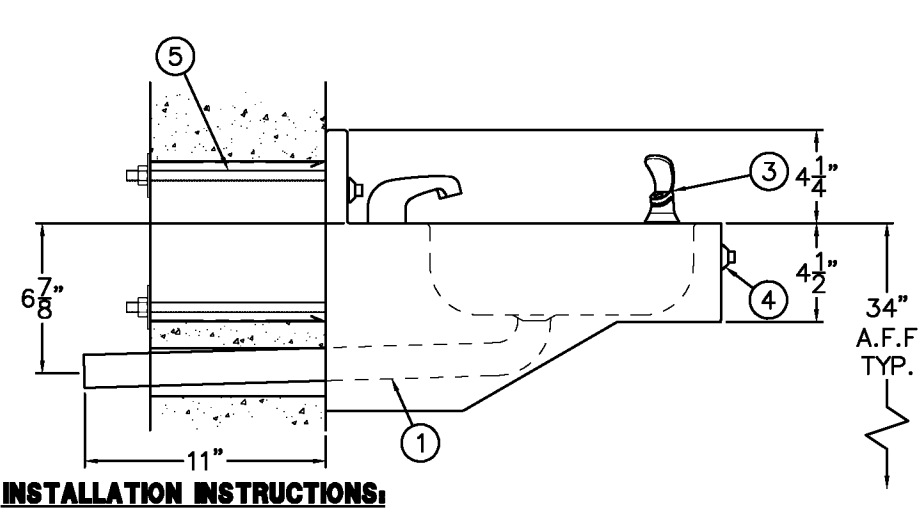

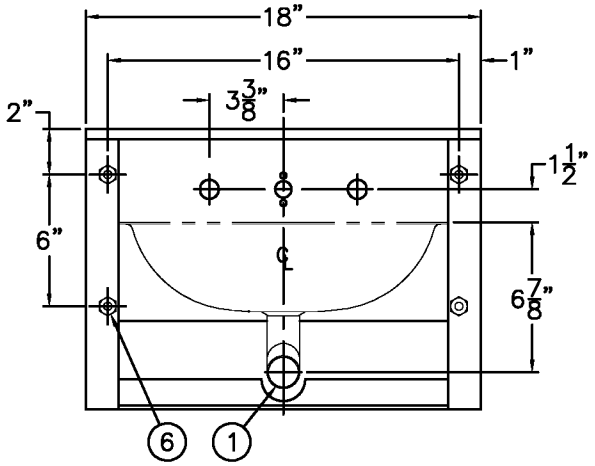

INSTALLATION INSTRUCTIONS:

A- ROUGH-IN FOR FIXTURE WASTE OUTLET: 1-1/2" O.D. ELBOW PLAIN END (1) PROVIDED.

B- SEE REFERENCE DRAWING BOX FOR APPROPRIATE VALVE INSTALLATION SHEETS.

C- REMOVE THE ACCESS PANEL (2) TO INSTALL OPTIONAL -DMB DECK MOUNTED BUBBLER (3) AND PUSHBUTTON (4).

D- THREAD 1/2" X 13 UNC STUDS (5) INTO ANCHOR TAPPINGS (6) ON REAR OF FIXTURE. STUDS (5) MUST HAVE A MINIMUM OF 1/2" ENGAGEMENT.

E- ALIGN STUDS (5) WITH THRU ANCHORING WALL OPENINGS OR THRU OPENGINS ON OPTIONAL -SW WALL SLEEVE AND SLIDE FIXTURE TO WALL.

F- FROM CHASE SIDE TIGHTEN WASHERS (7) AND NUTS (8) PROVIDED ON EXPOSED STUDS (5) TO 60 LBS.

G- MAKE UP LAVY WASTE CONNECTIONS: WASTE OUTLET (1) SUITABLE FOR A COMPRESSION CONNECTION.

NOTE: REFER TO ADA ACCESSIBILITY GUIDELINES FOR COMPLETE INSTALLATION REQUIREMENTS.

NOTE: FIXTURE IS SHOWN ON AN 8" WALL. FOR INSTALLATION ON SMALLER WALLS LAVY WASTE TAILPIECE CAN BE TRIMMED TO FIT BY INSTALLER.

ACORN ENGINEERING COMPANY
P.O. BOX 3527 Industry, CA 91744
15125 Proctor Ave Industry, CA 91748
(626) 336-4561 FAX (626) 961-2200

TITLE **18" ADA LAVATORY, RECTANGULAR BASIN #1652LRB-ADA**

MANUFACTURE DATE	DATE ISSUED	DRAWING NUMBER
JANUARY 2012 TO PRESENT	**06/25/12**	**9925-304-001**
	DATE REVISED	

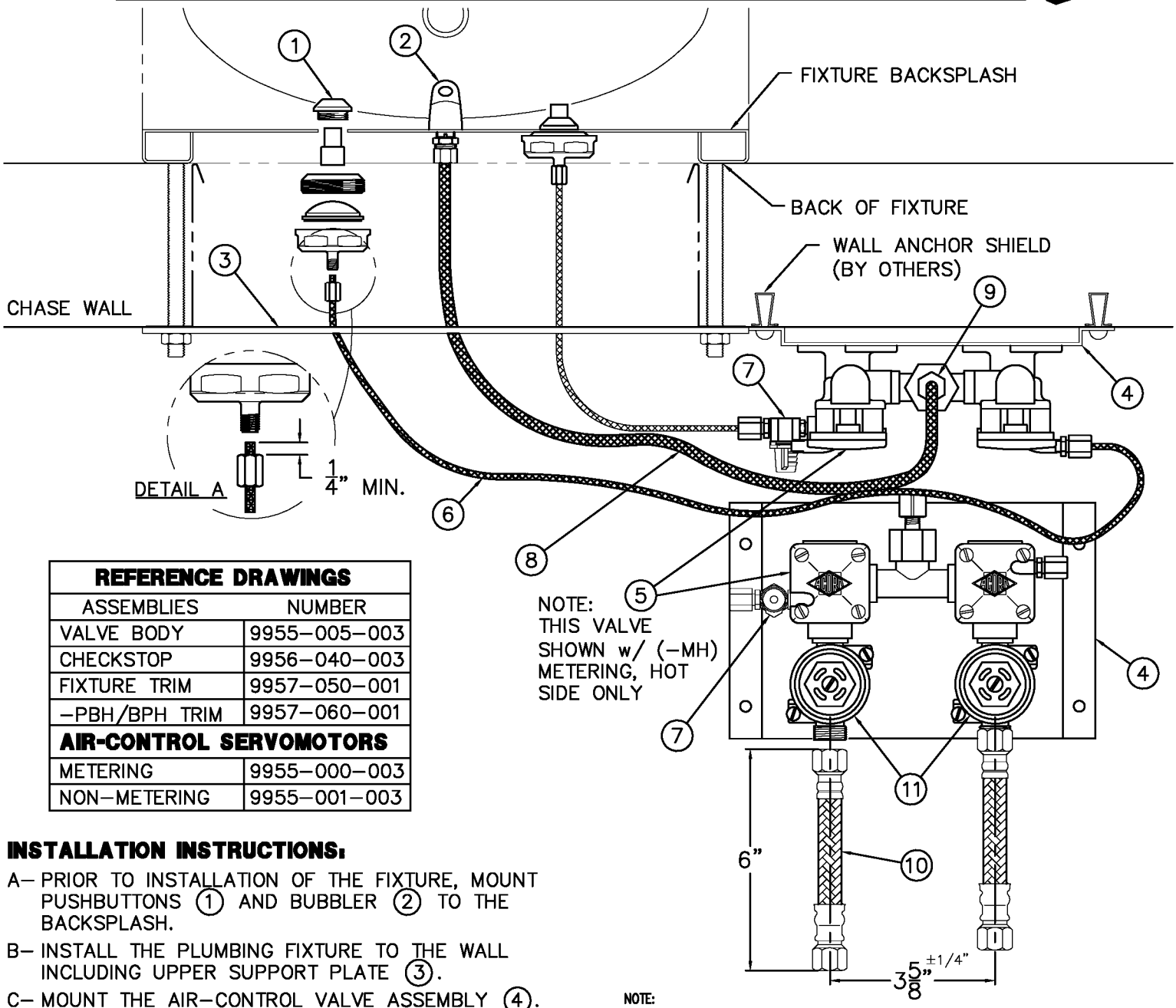

REFERENCE DRAWINGS	
ASSEMBLIES	NUMBER
VALVE BODY	9955-005-003
CHECKSTOP	9956-040-003
FIXTURE TRIM	9957-050-001
-PBH/BPH TRIM	9957-060-001
AIR-CONTROL SERVOMOTORS	
METERING	9955-000-003
NON-METERING	9955-001-003

INSTALLATION INSTRUCTIONS:

A- PRIOR TO INSTALLATION OF THE FIXTURE, MOUNT PUSHBUTTONS (1) AND BUBBLER (2) TO THE BACKSPLASH.

B- INSTALL THE PLUMBING FIXTURE TO THE WALL INCLUDING UPPER SUPPORT PLATE (3).

C- MOUNT THE AIR-CONTROL VALVE ASSEMBLY (4). LOCATE AS REQUIRED. MAXIMUM ALLOWABLE DISTANCE BETWEEN PUSHBUTTON (1) AND AIR-CONTROL SERVOMOTOR (5) IS 10 FEET. WALL ANCHORING HARDWARE ARE BY OTHERS.

D- CONNECT 1/8" O.D. POLYETHYLENE AIR LINES (6) TO PUSHBUTTONS (1) AND SERVOMOTOR (5). HAND TIGHTEN USING FERRULE NUTS PROVIDED. SEE DETAIL A. NOTE: WHEN METERING VALVES ARE SPECIFIED, AIR LINES CONNECT DIRECTLY TO VALVE TIMER (7).

E- CONNECT 1/4" O.D. POLYETHYLENE WATER LINE (8) TO BUBBLER (2) AND COMPRESSION NUT (9). HAND TIGHTEN USING FERRULE NUTS PROVIDED.

NOTE:
MAXIMUM RECOMMENDED WORKING WATER PRESSURE IS 100 PSI; TEMPERATURE IS 130° F; OUTLET TEMPERATURE IS RECOMMENDED AT A MAXIMUM OF 105° F.

WARNING:
PRIOR TO MAKING INSTALLATION, SUPPLY LINES MUST BE FLUSHED OF ALL FOREIGN MATERIAL SUCH AS PIPE DOPE, CHIPS, SOLDER, ETC. VALVE MUST BE DRAINED PRIOR TO BEING SUBJECTED TO FREEZING TEMPERATURES. MAXIMUM RECOMMENDED OUTLET WATER TEMPERATURE IS 105° F.

F- AFTER THOROUGHLY FLUSHING THE SUPPLY LINES, MAKE-UP 1/2" NPS FEMALE SUPPLY CONNECTIONS. NOTE: SUPPLY INLET CONNECTION WILL ACCOMODATE 1/2" NPT MALE ADAPTER. THREAD FLEX CONNECTOR HOSE (10) TO CHECKSTOPS (11) AND TO SUPPLY STUB OUTS.

G- SEE APPROPRIATE SERVOMOTOR REFERENCE DRAWING FOR DETAILS AND TIMING INSRUCTIONS.

ACORN ENGINEERING COMPANY
P.O. BOX 3527 Industry, CA 91744
15125 Proctor Ave Industry, CA 91746
(626) 336-4561 FAX (626) 961-2200

TITLE: **(04-SERIES) HOT & COLD AIR-CONTROL VALVE ASSEMBLY - NEW STYLE**

MANUFACTURE DATE	DATE ISSUED	DRAWING NUMBER
SEPT 1995 TO PRESENT	**11/1/95**	**9905-000-003**
	DATE REVISED **07/15/10**	

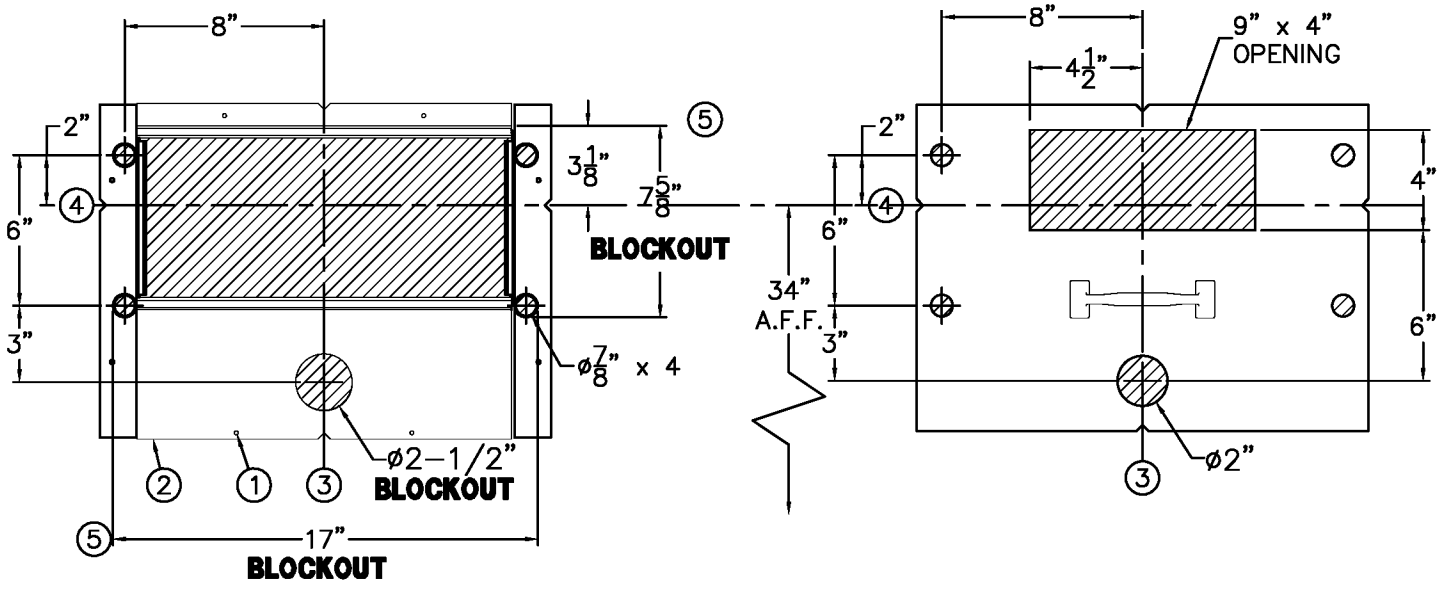

WALL SLEEVE **BOTH VIEWS ARE FROM CELL SIDE** **METAL TEMPLATE**

SHADED AREAS ARE REQUIRED WALL OPENINGS

WALL SLEEVE (-SW)

SLEEVES ARE INSTALLED IN FORMS (USING NAIL HOLES (1) PROVIDED) OR GROUTED INTO BLOCK WALLS, BECOMING A PERMANENT PART OF THE WALL.

A. INSTALLED SLEEVE WITH FLANGE (2) ON CHASE SIDE OF WALL.

B. LOCATE TOP AND BOTTOM NOTCHES AT VERTICAL CENTERLINE (3) OF PLUMBING FIXTURE.

C. LOCATE SIDE NOTCHES (4) AT DIMENSIONS SHOWN, MEASURED FROM THE FINISHED FLOOR ON CELL (FIXTURE) SIDE. THIS WILL LOCATE DECK HEIGHT.

NOTES:

1. FOR POURED WALL CONSTRUCTION, TEMPORARY BRACING SHOULD BE INSTALLED WITHIN SLEEVE OPENING TO PREVENT DEFORMATION TO SLEEVE WHICH MAY OCCUR DURING POUR. DO NOT POUR CONCRETE DIRECTLY ON TOP OF WALL SLEEVE.
2. WHEN SLEEVES ARE NOT AVAILABLE BLOCKOUT FOR SLEEVE OPENING IN WALL PER DIMENSIONS SHOWN (5).

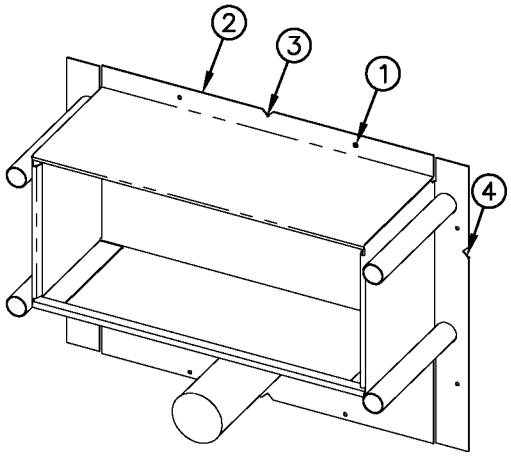

WALL SLEEVE
(-SW)

METAL TEMPLATE (-MT)

TEMPLATES ARE USED TO LAYOUT REQUIRED WALL OPENINGS FOR SUBSEQUENT FLAME CUTTING OR CORE DRILLING.

A. STRIKE A HORIZONTAL CHALK LINE (4) ON WALL AT DIMENSION SHOWN, MEASURED FROM THE FINISHED FLOOR ON CELL (FIXTURE) SIDE. THIS WILL LOCATE CENTERLINE FOR HORIZONTAL NOTCHES ON TEMPLATE.

B. STRIKE A VERTICAL CHALK LINE (3) ON THE WALL TO INDICATE CENTERLINE OF FIXTURE. THIS WILL LOCATE CENTERLINE FOR VERTICAL NOTCHES ON TEMPLATE.

C. PLACE TEMPLATE AGAINST WALL. LOCATE NOTCHES ALONG CHALK LINES, MARK WALL FOR REQUIRED OPENINGS.

ACORN ENGINEERING COMPANY
P.O. BOX 3527 Industry, CA 91744
15125 Proctor Ave Industry, CA 91748
(626) 336-4561 FAX (626) 961-2200

TITLE	-SW WALL SLEEVE/-MT METAL TEMPLATE 1652-ADA, 1652LRB-ADA, 1652-VAC	
MANUFACTURE DATE JUNE 1971 TO PRESENT	DATE ISSUED 03/01/90 DATE REVISED 06/27/12	DRAWING NUMBER 9925-212-001

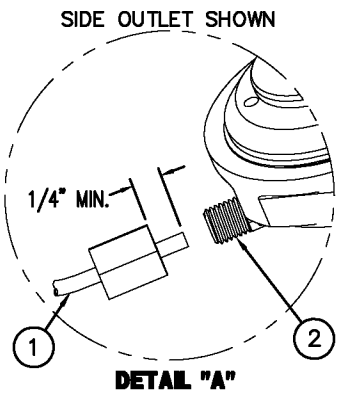

DETAIL "A"

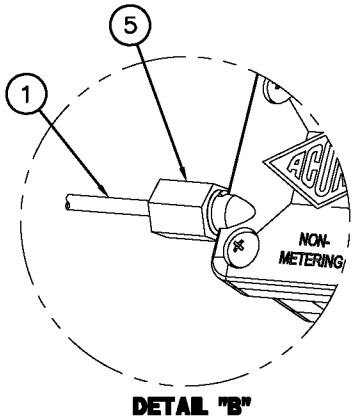

DETAIL "B"

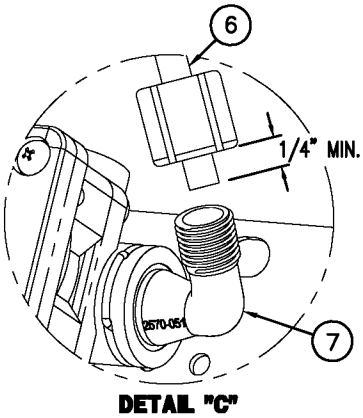

DETAIL "C"

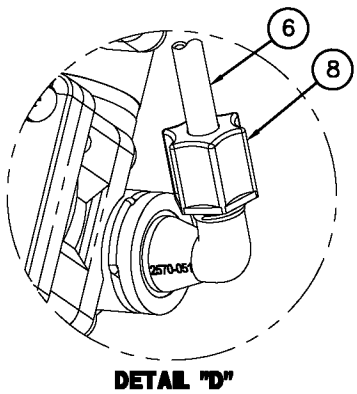

DETAIL "D"

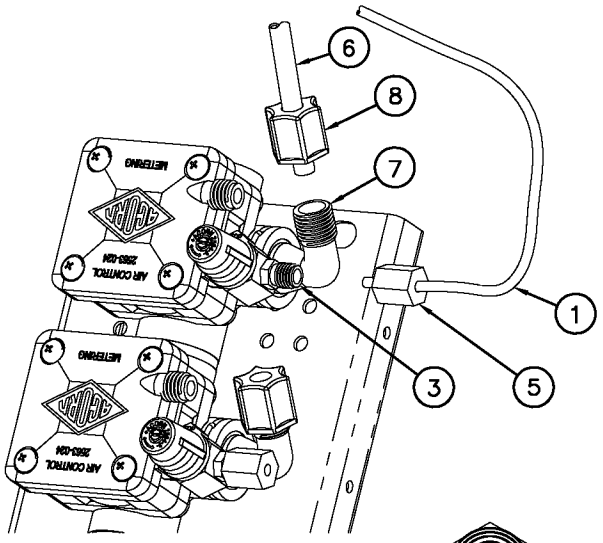

METERING

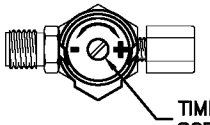

TIMING IS ADJUSTABLE FROM 5 TO 60 SECONDS AND IS ACCOMPLISHED BY ROTATING TIMING SCREW. TURING THE SCREW CLOCKWISE INCREASES WHILE COUNTERCLOCKWISE DECREASES TIMING.

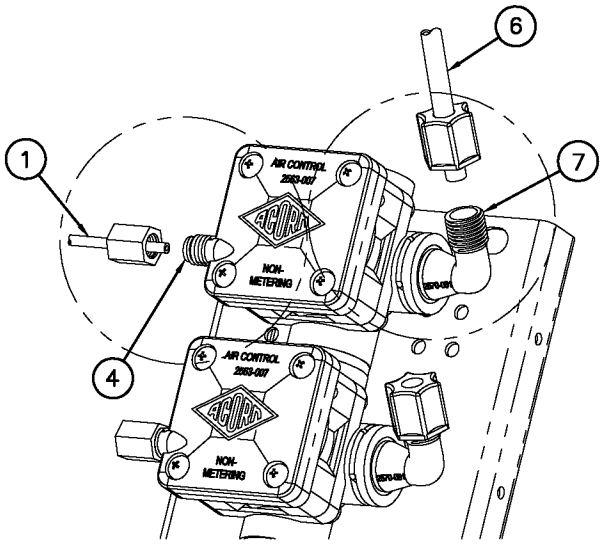

NON-METERING
DIRECT ACTING

REFERENCE DRAWINGS	
ASSEMBLIES	DRAWING
VALVE BODY	9955–006–003
CHECKSTOP	9956–040–003
FIXTURE TRIM	9957–051–001
AIR-CONTROL SERVOMOTORS	
METERING	9955–000–003
NON–METERING	9955–001–003

INSTALLATION INSTRUCTIONS:

A– MOUNT FIXTURE IN ACCORDANCE TO MANUFACTURER'S INSTALLATION INSTRUCTIONS.

B– ASSEMBLE SPOUTS AND PUSHBUTTONS TO FIXTURE.

C– CONNECT 1/8" O.D. POLYETHYLENE AIR LINE ① TO PUSHBUTTON ②, AND VALVE TIMER ASSEMBLY ③ SEE DETAIL "A". NOTE: FOR DIRECT ACTING: ASSEMBLE TO AIR PORT ④, SEE DETAIL "B". HAND TIGHTEN FERRULE NUT ⑤ PROVIDED.

D– CONNECT 1/4" O.D. POLYETHYLENE WATER LINES ⑥ TO VALVE ASSEMBLY ELBOW ⑦ SEE DETAILS "C", AND "D". HAND TIGHTEN FERRULE NUT ⑧ PROVIDED.

E– AFTER THOROUGHLY FLUSHING SUPPLY LINES MAKE UP CONNECTIONS TO VALVE ASSEMBLY INLET(S) 1/2" NPTE OR 1/2" NPS FLEX HOSE AS REQUIRED.

NOTE:

1) ALL TUBING SHOULD BE CUT SQUARE AND BE FREE OF BURRS OR DEFORMITIES TO ENSURE A WATER TIGHT CONNECTION.
2) EXTEND TUBING AT LEAST 1/4" BEYOND FERRULE NUT BEFORE INSERTING TUBING INTO CONNECTION OPENING BEFORE TIGHTENING.
3) TUBING SHOULD BE FREE OF KINKS FOR PROPER OPERATION
4) MAXIMUM RECOMMENDED WORKING WATER PRESSURE IS 100 PSI; TEMPERATURE IS 130° F; OUTLET TEMPERATURE IS RECOMMENDED AT A MAXIMUM OF 105° F.

WARNING:
PRIOR TO MAKING INSTALLATION, SUPPLY LINES MUST BE FLUSHED OF ALL FOREIGN MATERIAL SUCH AS PIPE DOPE, CHIPS, SOLDER, ETC. VALVE MUST BE DRAINED PRIOR TO BEING SUBJECTED TO FREEZING TEMPERATURES. MAXIMUM RECOMMENDED OUTLET WATER TEMPERATURE IS 105° F.

ACORN ENGINEERING COMPANY
P.O. BOX 3527 Industry, CA 91744
15125 Proctor Ave Industry, CA 91746
(626) 336–4561 FAX (626) 961–2200

TITLE **HAND OPERATED AIR-CONTROL VALVE CONNECTIONS**

MANUFACTURE DATE	DATE ISSUED	DRAWING NUMBER
JANUARY 1999 TO PRESENT	**04/22/10**	**9905-006-001**
	DATE REVISED **10/11/10**	

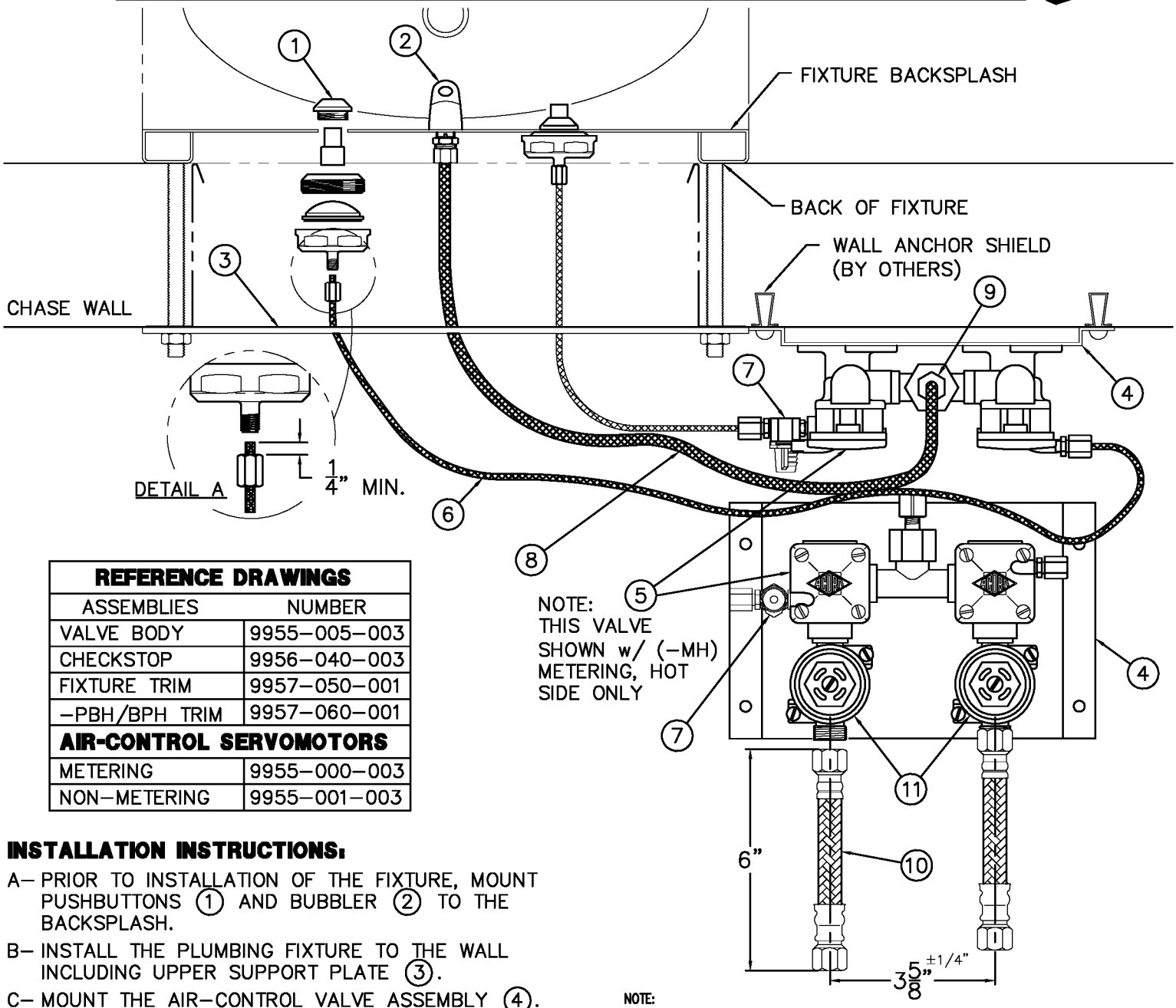

REFERENCE DRAWINGS	
ASSEMBLIES	NUMBER
VALVE BODY	9955-005-003
CHECKSTOP	9956-040-003
FIXTURE TRIM	9957-050-001
-PBH/BPH TRIM	9957-060-001
AIR-CONTROL SERVOMOTORS	
METERING	9955-000-003
NON-METERING	9955-001-003

INSTALLATION INSTRUCTIONS:

A- PRIOR TO INSTALLATION OF THE FIXTURE, MOUNT PUSHBUTTONS (1) AND BUBBLER (2) TO THE BACKSPLASH.

B- INSTALL THE PLUMBING FIXTURE TO THE WALL INCLUDING UPPER SUPPORT PLATE (3).

C- MOUNT THE AIR-CONTROL VALVE ASSEMBLY (4). LOCATE AS REQUIRED. MAXIMUM ALLOWABLE DISTANCE BETWEEN PUSHBUTTON (1) AND AIR-CONTROL SERVOMOTOR (5) IS 10 FEET. WALL ANCHORING HARDWARE ARE BY OTHERS.

D- CONNECT 1/8" O.D. POLYETHYLENE AIR LINES (6) TO PUSHBUTTONS (1) AND SERVOMOTOR (5). HAND TIGHTEN USING FERRULE NUTS PROVIDED. SEE DETAIL A. NOTE: WHEN METERING VALVES ARE SPECIFIED, AIR LINES CONNECT DIRECTLY TO VALVE TIMER (7).

E- CONNECT 1/4" O.D. POLYETHYLENE WATER LINE (8) TO BUBBLER (2) AND COMPRESSION NUT (9). HAND TIGHTEN USING FERRULE NUTS PROVIDED.

NOTE:
MAXIMUM RECOMMENDED WORKING WATER PRESSURE IS 100 PSI; TEMPERATURE IS 130° F; OUTLET TEMPERATURE IS RECOMMENDED AT A MAXIMUM OF 105° F.

WARNING:
PRIOR TO MAKING INSTALLATION, SUPPLY LINES MUST BE FLUSHED OF ALL FOREIGN MATERIAL SUCH AS PIPE DOPE, CHIPS, SOLDER, ETC. VALVE MUST BE DRAINED PRIOR TO BEING SUBJECTED TO FREEZING TEMPERATURES. MAXIMUM RECOMMENDED OUTLET WATER TEMPERATURE IS 105° F.

F- AFTER THOROUGHLY FLUSHING THE SUPPLY LINES, MAKE-UP 1/2" NPS FEMALE SUPPLY CONNECTIONS. NOTE: SUPPLY INLET CONNECTION WILL ACCOMODATE 1/2" NPT MALE ADAPTER. THREAD FLEX CONNECTOR HOSE (10) TO CHECKSTOPS (11) AND TO SUPPLY STUB OUTS.

G- SEE APPROPRIATE SERVOMOTOR REFERENCE DRAWING FOR DETAILS AND TIMING INSRUCTIONS.

ACORN ENGINEERING COMPANY
P.O. BOX 3527 Industry, CA 91744
15125 Proctor Ave Industry, CA 91746
(626) 336-4561 FAX (626) 961-2200

TITLE: **(04-SERIES) HOT & COLD AIR-CONTROL VALVE ASSEMBLY - NEW STYLE**

MANUFACTURE DATE	DATE ISSUED	DRAWING NUMBER
SEPT 1995 TO PRESENT	**11/1/95**	**9905-000-003**
	DATE REVISED **07/15/10**	

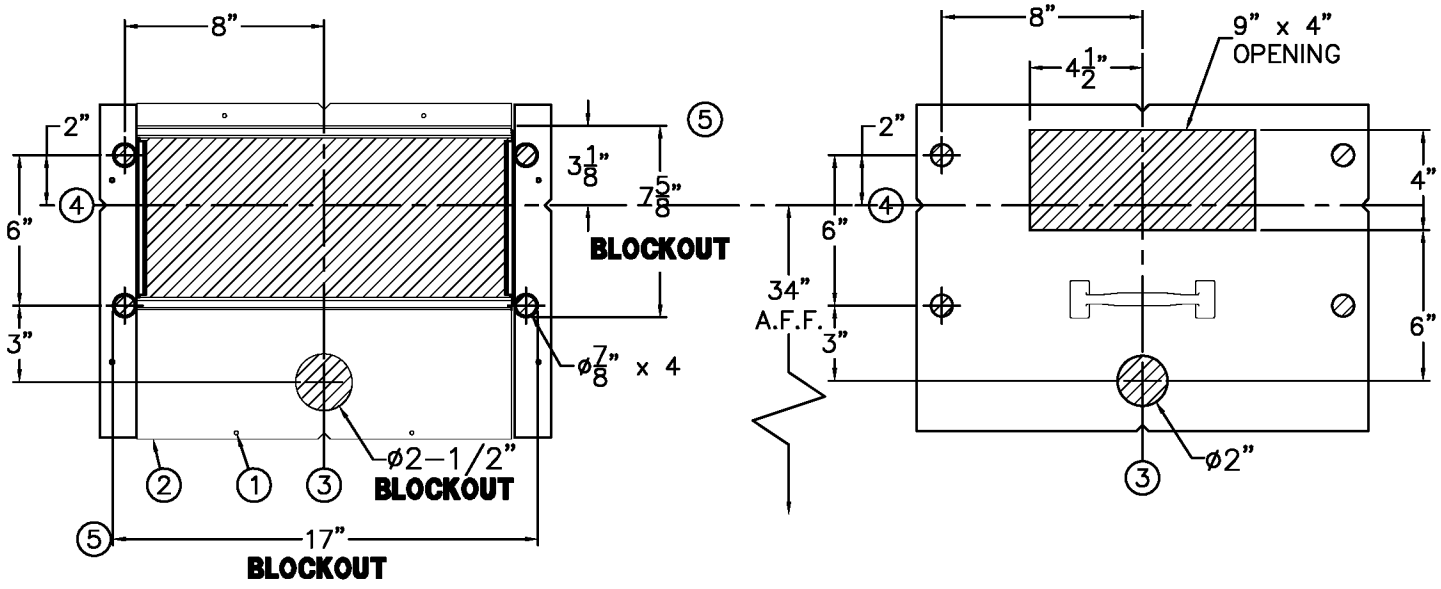

WALL SLEEVE **BOTH VIEWS ARE FROM CELL SIDE** **METAL TEMPLATE**

SHADED AREAS ARE REQUIRED WALL OPENINGS

WALL SLEEVE (-SW)

SLEEVES ARE INSTALLED IN FORMS (USING NAIL HOLES (1) PROVIDED) OR GROUTED INTO BLOCK WALLS, BECOMING A PERMANENT PART OF THE WALL.

A. INSTALLED SLEEVE WITH FLANGE (2) ON CHASE SIDE OF WALL.

B. LOCATE TOP AND BOTTOM NOTCHES AT VERTICAL CENTERLINE (3) OF PLUMBING FIXTURE.

C. LOCATE SIDE NOTCHES (4) AT DIMENSIONS SHOWN, MEASURED FROM THE FINISHED FLOOR ON CELL (FIXTURE) SIDE. THIS WILL LOCATE DECK HEIGHT.

NOTES:

1. FOR POURED WALL CONSTRUCTION, TEMPORARY BRACING SHOULD BE INSTALLED WITHIN SLEEVE OPENING TO PREVENT DEFORMATION TO SLEEVE WHICH MAY OCCUR DURING POUR. DO NOT POUR CONCRETE DIRECTLY ON TOP OF WALL SLEEVE.
2. WHEN SLEEVES ARE NOT AVAILABLE BLOCKOUT FOR SLEEVE OPENING IN WALL PER DIMENSIONS SHOWN (5).

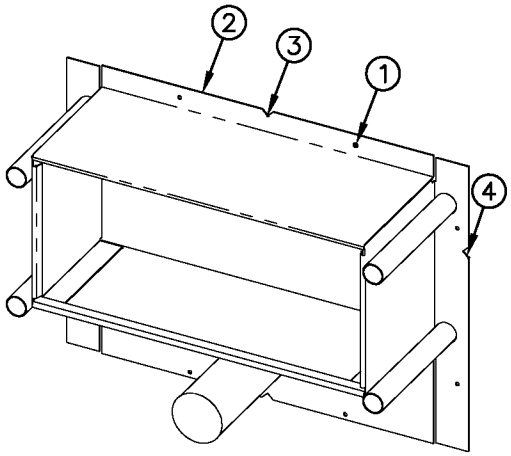

WALL SLEEVE
(-SW)

METAL TEMPLATE (-MT)

TEMPLATES ARE USED TO LAYOUT REQUIRED WALL OPENINGS FOR SUBSEQUENT FLAME CUTTING OR CORE DRILLING.

A. STRIKE A HORIZONTAL CHALK LINE (4) ON WALL AT DIMENSION SHOWN, MEASURED FROM THE FINISHED FLOOR ON CELL (FIXTURE) SIDE. THIS WILL LOCATE CENTERLINE FOR HORIZONTAL NOTCHES ON TEMPLATE.

B. STRIKE A VERTICAL CHALK LINE (3) ON THE WALL TO INDICATE CENTERLINE OF FIXTURE. THIS WILL LOCATE CENTERLINE FOR VERTICAL NOTCHES ON TEMPLATE.

C. PLACE TEMPLATE AGAINST WALL. LOCATE NOTCHES ALONG CHALK LINES, MARK WALL FOR REQUIRED OPENINGS.

ACORN ENGINEERING COMPANY
P.O. BOX 3527 Industry, CA 91744
15125 Proctor Ave Industry, CA 91748
(626) 336-4561 FAX (626) 961-2200

TITLE	-SW WALL SLEEVE/-MT METAL TEMPLATE 1652-ADA, 1652LRB-ADA, 1652-VAC	
MANUFACTURE DATE JUNE 1971 TO PRESENT	DATE ISSUED 03/01/90 DATE REVISED 06/27/12	DRAWING NUMBER 9925-212-001

DIMENSION "A"	
UP TO 8" WALL	8" TO 12" WALL
15–1/8"	19–1/8"

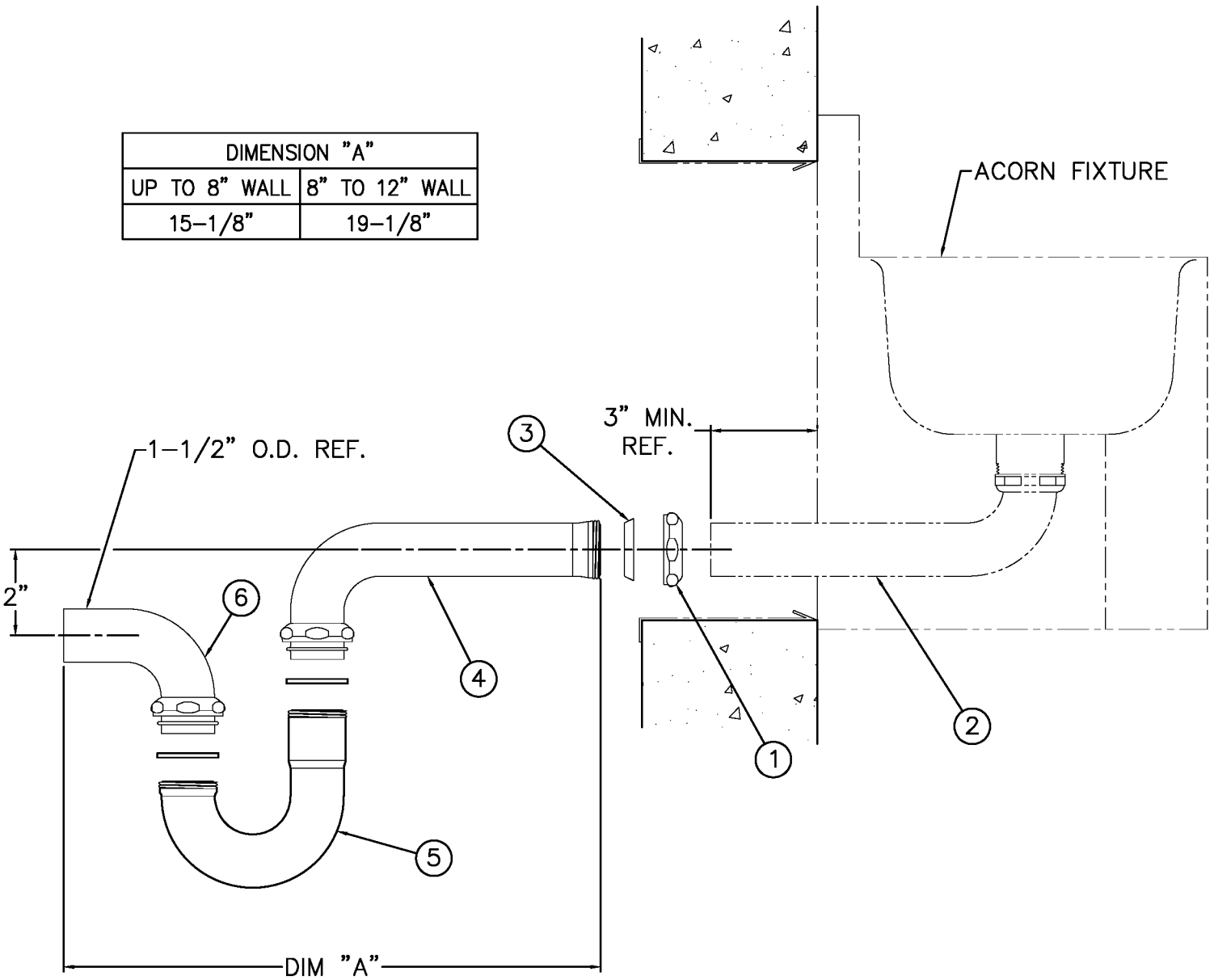

INSTALLATION INSTRUCTIONS:

A– AFTER INSTALLING ACORN UNIT ON FINISHED WALL, SLIP COMPRESSION NUT ① OVER 1–1/2" O.D. PLAIN END WASTE ②. USING COMPRESSION GASKET ③, AND NUT ① MAKE–UP COMPRESSION CONNECTION WITH SLIP JOINT ELBOW ④.

B– REMOVABLE TUBULAR P–TRAP ⑤ CONNECTS TO SLIP JOINT ELBOW ④ AND PLAIN END ELBOW ⑥ WITH COMPRESSION CONNECTIONS AS SHOWN.

NOTE: TUBULAR P–TRAP IS REMOVABLE IN ORDER TO ALLOW FOR WASTE CLEANOUT.

ACORN ENGINEERING COMPANY
P.O. BOX 3527 Industry, CA 91744
15125 Proctor Ave Industry, CA 91748
(626) 336–4561 FAX (626) 961–2200

TITLE: **LAVATORY THRU-WALL WASTE CONNECTION w/ P-TRAP & CLEANOUT CAT. # -LW1**

MANUFACTURE DATE	DATE ISSUED	DRAWING NUMBER
APRIL 30, 1998 TO PRESENT	**3/19/98**	**9925-065-002**
	DATE REVISED **4/23/98**	

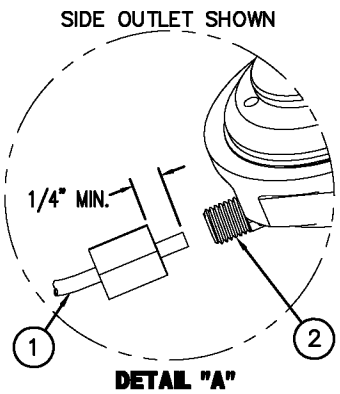

DETAIL "A"

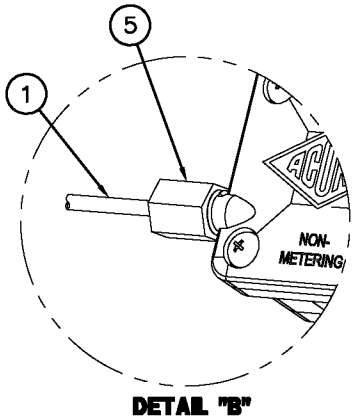

DETAIL "B"

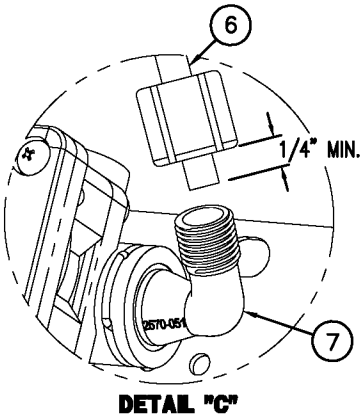

DETAIL "C"

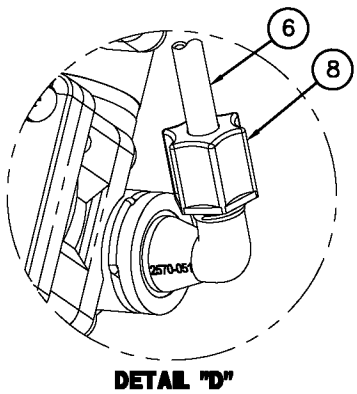

DETAIL "D"

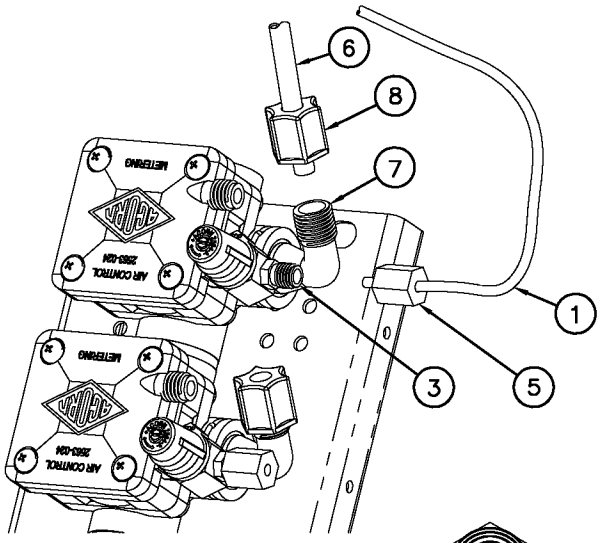

METERING

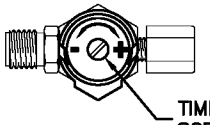

TIMING IS ADJUSTABLE FROM 5 TO 60 SECONDS AND IS ACCOMPLISHED BY ROTATING TIMING SCREW. TURING THE SCREW CLOCKWISE INCREASES WHILE COUNTERCLOCKWISE DECREASES TIMING.

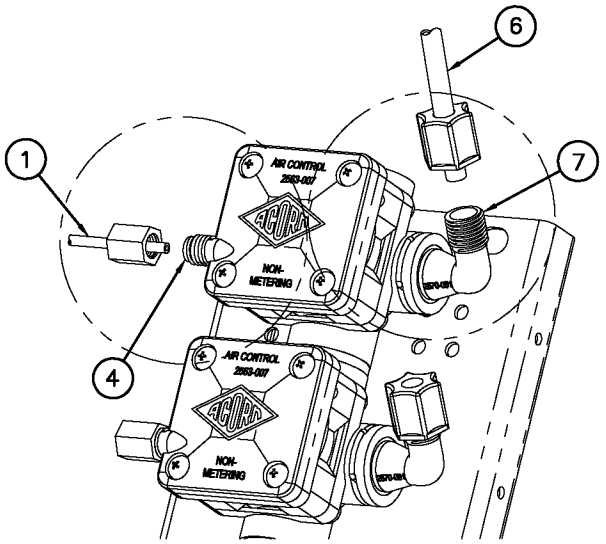

NON-METERING
DIRECT ACTING

REFERENCE DRAWINGS	
ASSEMBLIES	DRAWING
VALVE BODY	9955–006–003
CHECKSTOP	9956–040–003
FIXTURE TRIM	9957–051–001
AIR-CONTROL SERVOMOTORS	
METERING	9955–000–003
NON–METERING	9955–001–003

INSTALLATION INSTRUCTIONS:

A– MOUNT FIXTURE IN ACCORDANCE TO MANUFACTURER'S INSTALLATION INSTRUCTIONS.

B– ASSEMBLE SPOUTS AND PUSHBUTTONS TO FIXTURE.

C– CONNECT 1/8" O.D. POLYETHYLENE AIR LINE ① TO PUSHBUTTON ②, AND VALVE TIMER ASSEMBLY ③ SEE DETAIL "A". NOTE: FOR DIRECT ACTING: ASSEMBLE TO AIR PORT ④, SEE DETAIL "B". HAND TIGHTEN FERRULE NUT ⑤ PROVIDED.

D– CONNECT 1/4" O.D. POLYETHYLENE WATER LINES ⑥ TO VALVE ASSEMBLY ELBOW ⑦ SEE DETAILS "C", AND "D". HAND TIGHTEN FERRULE NUT ⑧ PROVIDED.

E– AFTER THOROUGHLY FLUSHING SUPPLY LINES MAKE UP CONNECTIONS TO VALVE ASSEMBLY INLET(S) 1/2" NPTE OR 1/2" NPS FLEX HOSE AS REQUIRED.

NOTE:

1) ALL TUBING SHOULD BE CUT SQUARE AND BE FREE OF BURRS OR DEFORMITIES TO ENSURE A WATER TIGHT CONNECTION.
2) EXTEND TUBING AT LEAST 1/4" BEYOND FERRULE NUT BEFORE INSERTING TUBING INTO CONNECTION OPENING BEFORE TIGHTENING.
3) TUBING SHOULD BE FREE OF KINKS FOR PROPER OPERATION
4) MAXIMUM RECOMMENDED WORKING WATER PRESSURE IS 100 PSI; TEMPERATURE IS 130° F; OUTLET TEMPERATURE IS RECOMMENDED AT A MAXIMUM OF 105° F.

WARNING:
PRIOR TO MAKING INSTALLATION, SUPPLY LINES MUST BE FLUSHED OF ALL FOREIGN MATERIAL SUCH AS PIPE DOPE, CHIPS, SOLDER, ETC. VALVE MUST BE DRAINED PRIOR TO BEING SUBJECTED TO FREEZING TEMPERATURES. MAXIMUM RECOMMENDED OUTLET WATER TEMPERATURE IS 105° F.

ACORN ENGINEERING COMPANY
P.O. BOX 3527 Industry, CA 91744
15125 Proctor Ave Industry, CA 91746
(626) 336–4561 FAX (626) 961–2200

TITLE **HAND OPERATED AIR-CONTROL VALVE CONNECTIONS**

MANUFACTURE DATE	DATE ISSUED	DRAWING NUMBER
JANUARY 1999 TO PRESENT	**04/22/10**	**9905-006-001**
	DATE REVISED **10/11/10**	

LUCERNE™
WALL-HUNG LAVATORY
VITREOUS CHINA

BARRIER FREE

LUCERNE™ WALL-HUNG LAVATORY

- Wall-hung sink
- Vitreous china
- Front overflow
- D-shaped bowl
- Self-draining deck area with contoured back and side splash shields
- Faucet ledge
- Compliant with Texas accessibility standard (TAS) for children age group 13 and up

Faucet holes on 203mm (8") centers (Illus.):

❑ **0356.028** For exposed bracket support
Shown with 4801.862 Amarilis Heritage faucet with Triune Cross handles (not included)

❑ **0356.015** For wall hanger (included) or concealed arms support

❑ **0356.915** For wall hanger (included) or concealed arms support
- Less overflow

Faucet holes on 102mm (4") centers:

❑ **0355.027** For exposed bracket support

❑ **0355.012** For wall hanger (included) or concealed arms support

❑ **0355.912** For wall hanger (included) or concealed arms support
- Less overflow

Single center faucet hole (Illus.):

❑ **0356.041** For exposed bracket support
Shown with 1340.000 metering faucet (not included)

❑ **0356.421** For wall hanger (included) or concealed arms support

❑ **0356.921** For wall hanger (included) or concealed arms support
- Less overflow

❑ **0356.439** For wall hanger (included) or concealed arms support
- Single faucet hole on right

❑ **0356.066** For exposed bracket support
- Single faucet hole on right

Nominal Dimensions:
521 x 464mm
(20-1/2" x 18-1/4")

Bowl sizes:
381mm (15") wide
254mm (10") front to back
165mm (6-1/2") deep

Compliance Certifications -
Meets or Exceeds the Following Specifications:
- ASME A112.19.2 / CSA B45.1 for Vitreous China Fixtures



0356.028



0356.041

SEE FOLLOWING PAGES FOR ROUGHING-IN DIMENSIONS

To Be Specified:
- ❑ Color: ❑ White
- ❑ Faucet*:
- ❑ Faucet Finish:
- ❑ Supplies:
- ❑ 1-1/4" Trap:
- ❑ Nipple:
- ❑ Bracket Support (by others):
- ❑ Concealed Arms Support (by others):

* See faucet section for additional models available

MEETS THE AMERICANS WITH DISABILITIES ACT GUIDELINES AND ANSI A117.1 ACCESSIBLE AND USABLE BUILDINGS AND FACILITIES - CHECK LOCAL CODES.
Top of front rim mounted 864mm (34") from finished floor.

© 2016 AS America Inc.

LUCERNE™
WALL-HUNG LAVATORY
VITREOUS CHINA

BARRIER FREE

0356.028 8" CTRS FOR EXPOSED BRACKET SUPPORT
0356.015 8" CTRS FOR WALL HANGER OR CONCEALED ARMS
0356.915 LESS OVERFLOW

0355.027 4" CTRS FOR EXPOSED BRACKET SUPPORT
0355.012 4" CTRS FOR WALL HANGER OR CONCEALED ARMS
0355.912 LESS OVERFLOW

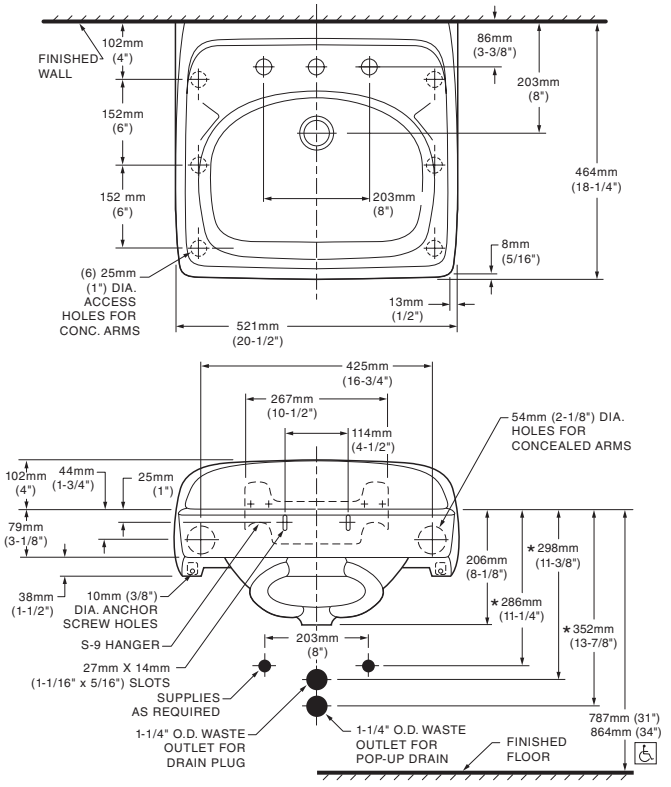

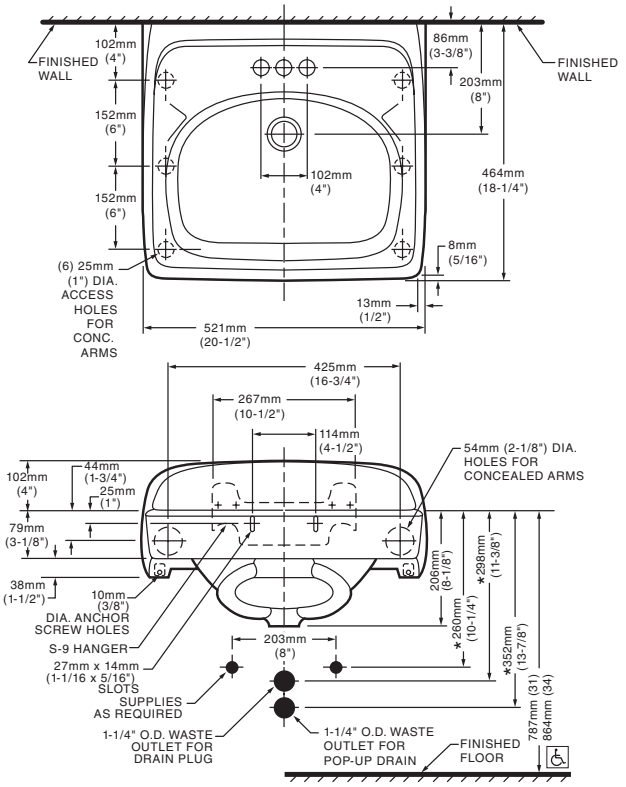

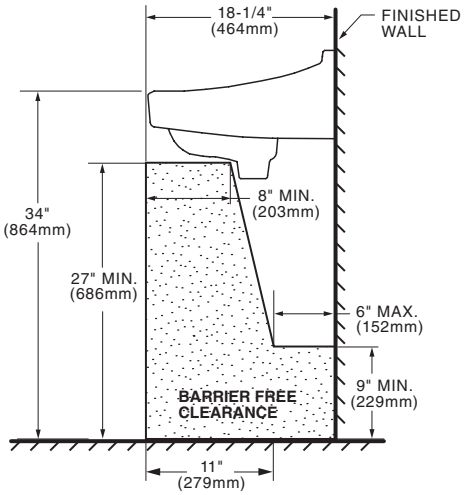

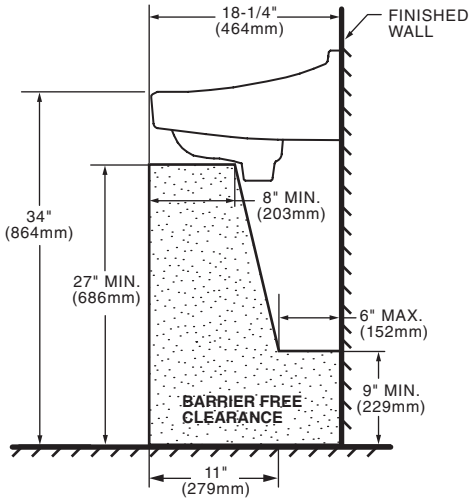

NOTES:
* DIMENSIONS SHOWN FOR LOCATION OF SUPPLIES AND "P" TRAP ARE SUGGESTED.
PROVIDE SUITABLE REINFORCEMENT FOR ALL WALL SUPPORTS.
FITTINGS NOT INCLUDED AND MUST BE ORDERED SEPARATELY.
CONCEALED ARM SUPPORT AS REQUIRED TO BE FURNISHED BY OTHERS.

IMPORTANT: Dimensions of fixtures are nominal and may vary within the range of tolerances established by ANSI Standard A112.19.2. These measurements are subject to change or cancellation. No responsibility is assumed for use of superseded or voided pages.

LAVATORY DESIGNED TO MEET ADA HANDICAPPED GUIDELINES WITH MOUNTING HEIGHT SET AT 864MM (34") ABOVE FINISHED FLOOR.

© 2016 AS America Inc.

PART OF LIXIL

LUCERNE™
WALL-HUNG LAVATORY
VITREOUS CHINA

BARRIER FREE

0356.041 SINGLE CENTER HOLE FOR EXPOSED BRACKET SUPPORT

0356.421 SINGLE CENTER HOLE FOR WALL HANGER OR CONCEALED ARMS

0356.921 LESS OVERFLOW

0356.439 SINGLE CENTER HOLE ON RIGHT FOR WALL HANGER OR CONCEALED ARMS

0356.066 SINGLE CENTER HOLE ON RIGHT FOR EXPOSED BRACKET SUPPORT

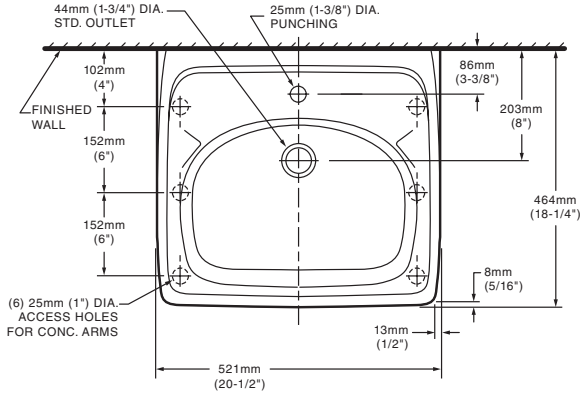

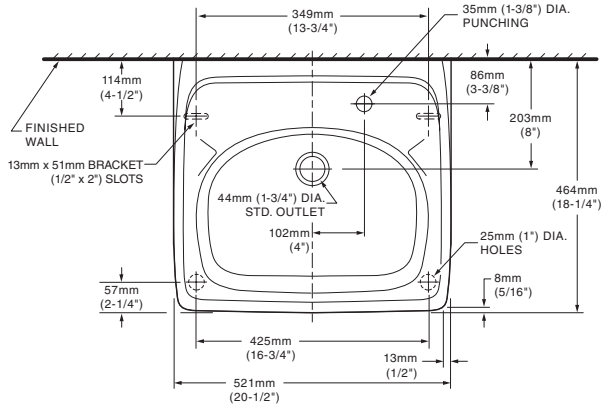

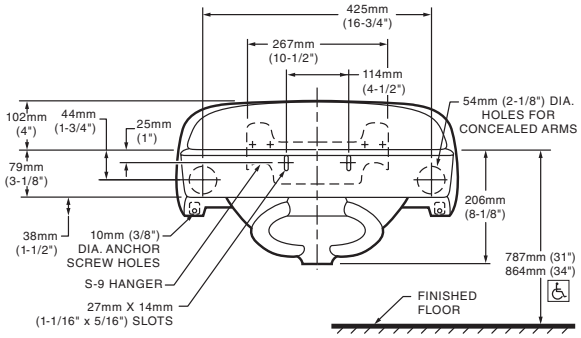

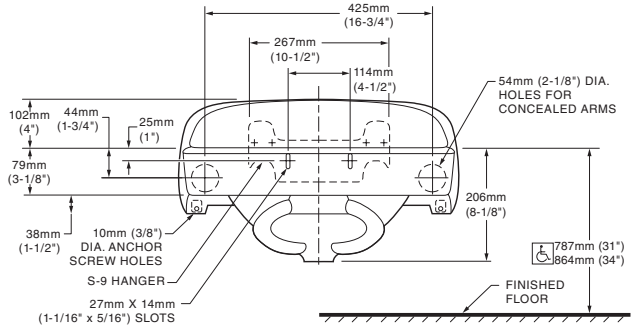

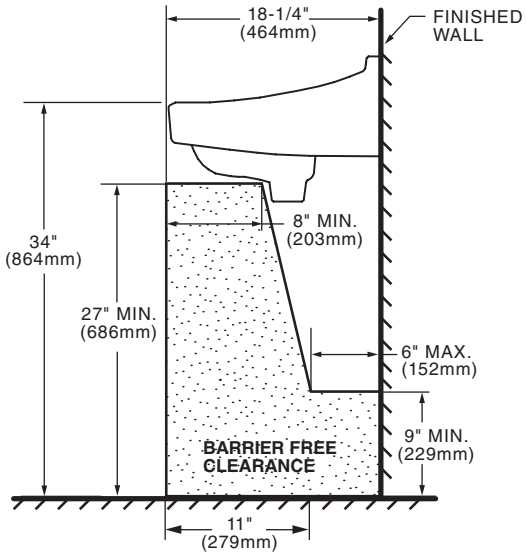

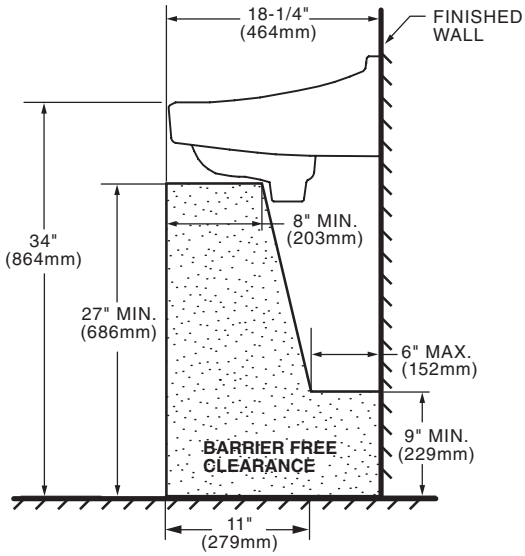

NOTES:
***** DIMENSIONS SHOWN FOR LOCATION OF SUPPLIES AND "P" TRAP ARE SUGGESTED.
PROVIDE SUITABLE REINFORCEMENT FOR ALL WALL SUPPORTS.
FITTINGS NOT INCLUDED AND MUST BE ORDERED SEPARATELY.
CONCEALED ARM SUPPORT AS REQUIRED TO BE FURNISHED BY OTHERS.

IMPORTANT: Dimensions of fixtures are nominal and may vary within the range of tolerances established by ANSI Standard A112.19.2. These measurements are subject to change or cancellation. No responsibility is assumed for use of superseded or voided pages.

LAVATORY DESIGNED TO MEET ADA HANDICAPPED GUIDELINES WITH MOUNTING HEIGHT SET AT 864MM (34") ABOVE FINISHED FLOOR.

© 2016 AS America Inc.

PART OF LIXIL

DLX-2133-A-GR

STYLIST GROUP

LEDGE TYPE - DOUBLE BOWL - DEEP
18 GAUGE

SUBMITTAL DATA

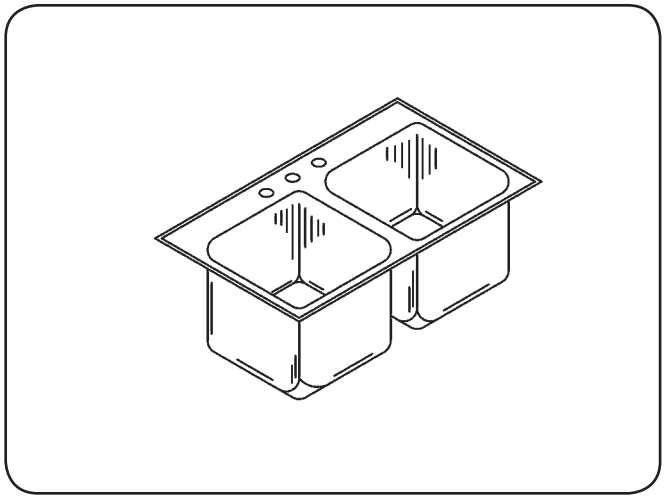

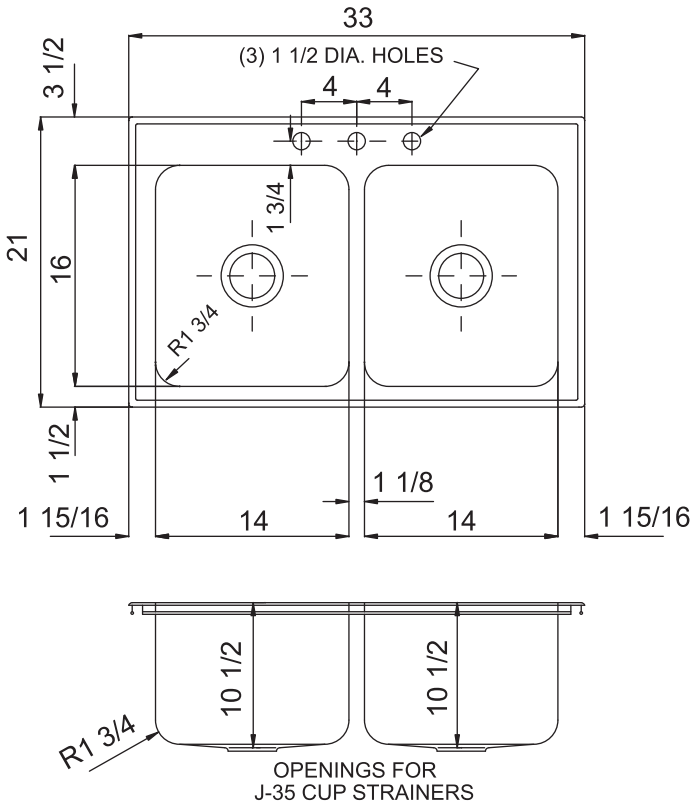

SPECIFICATION

Seamless die-drawn construction of 18 gauge type 304, 18-8 stainless steel. Interior and top surfaces polished to a non-porous Hand-Blended Just Finish with highlighted bowl rim. Fully coated underside insulates for sound, and reduces condensation. Maximum capacity straight-sided compartment with 1 3/4" radius corners provides greater capacity. Self-rimming top mount Grip-Rim Plus with stainless steel mounting channels. Conforms to ASME/ANSI A112.19.3M. Drain punch #35 centered for Just J-35 unless otherwise specified.

☐ **TYPE 316 STAINLESS STEEL** (Check if applicable)

19.80 Gallon Capacity

Capacity Matters
Max ID sizing with straight sided bowl configuration (non tapered sides). Tight corner radius design.

CUTOUT DIMENSIONS		
Model Number	Front-to-Back	Left-to-Right
DLX-2133-A-GR	20-1/4	32-1/4

FAUCET PUNCHING - MUST BE SPECIFIED	
☐	(1) Hole Centered
☐	(2) Holes on 4" centers
☐	(3) Holes on 4 "centers(illustrated)
☐	Alternate Punching: Faucet Model: Punching Required:

APPROVED FOR MANUFACTURING

MODEL NO.: DLX-2133-A-GR QTY: _____

JOB NAME: _____

TAG/ITEM: _____

CUSTOMER: _____

SIGNATURE: _____

MADE IN U.S.A.

RECYCLED STAINLESS *THE VALUE OPTION*

JUST MFG. COMPANY CONTINUES TO MAKE QUALITY AND FUNCTIONALITY A MARK OF THE JUST PRODUCT LINE. TO DO SO REQUIRES THAT WE RESERVE THE RIGHT TO CHANGE PRODUCT INFORMATION WITHOUT NOTICE. DIMENSIONS MAY VARY AND ARE SUBJECT TO CHANGE WITHOUT NOTICE. NO RESPONSIBILITY IS ASSUMED FOR USE OF SUPERSEDED OR VOIDED DATA. FOR THE MOST CURRENT AND ACCURATE INFORMATION REGARDING THE COMPLETE LINE OF JUST SINKS, FAUCETS AND DRAINS, CLICK ON THE ***SPEC LINE DRAWINGS*** LINK ON OUR WEB SITE AT ***www.justmfg.com***

JUST MANUFACTURING COMPANY 9233 KING STREET . FRANKLIN PARK . ILLINOIS . 60131-2111
PH: 847-678-5150 . FAX: 847-678-6817 . E-MAIL: custserv@justmfg.com . www.justmfg.com

©2007-JUST MFG-REVISED-1/2009

J-900

FAUCET GROUP

DECKMOUNT SINK FAUCET

SUBMITTAL DATA

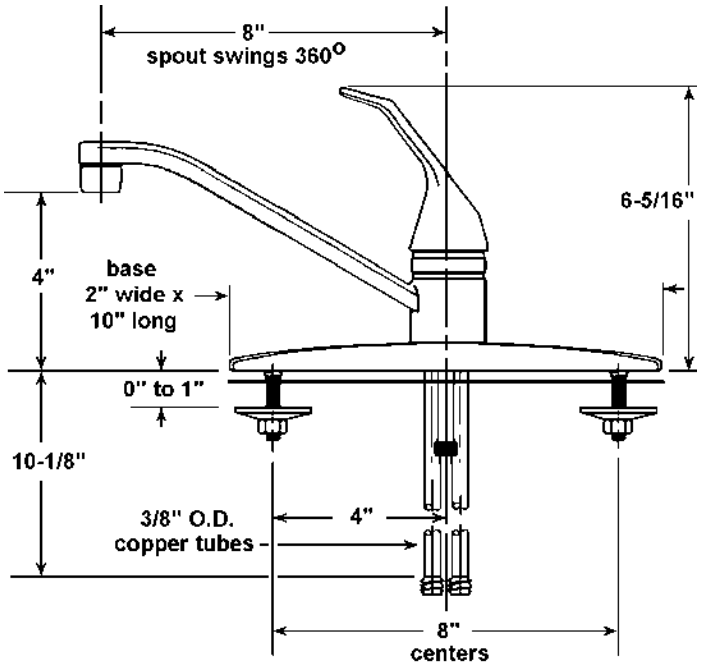



TECHNICAL DATA

CONSTRUCTION:

Single lever deck mounted kitchen sink faucet
8" brass swing spout
Brass body
Chrome plated die cast lever handle
Replaceable washerless valve cartridge
1/2" I.P.S. connections
Equipped with water saving aerator
Certified by IAPMO R&T to:
NSF/ANSI 61-Annex G
Lead-Plumbing Law

OPTIONS			
AERATORS / FLOW CONTROL			
	0.5 GPM		2.2 GPM
	1.0 GPM		
VANDAL RESISTANT			
	Aerator - VR-A		

FINISH

Polished chrome

FLOW RATE

1.5 GPM

A.D.A. COMPLIANT

Yes

VARIANTS

J-901 = J-900 w/ Spray

APPROVED FOR MANUFACTURING

MODEL NO.: **J-900** QTY: _____

JOB NAME: _____

TAG/ITEM: _____

CUSTOMER: _____

SIGNATURE: _____

JUST MFG. COMPANY CONTINUES TO MAKE QUALITY AND FUNCTIONALITY A MARK OF THE JUST PRODUCT LINE. WE RESERVE THE RIGHT TO CHANGE PRODUCT INFORMATION WITHOUT NOTICE. DIMENSIONS MAY CHANGE AND MAY BE SUBJECT TO CHANGE WITHOUT NOTICE. NO RESPONSIBILITY IS ASSUMED FOR USE OF SUPERCEDED OR VOIDED DATA. JUST MFG. CO. SINKS ARE MADE IN THE U.S.A. WHEN COMPARING OTHER BRAND PRODUCTS, BE SURE TO COMPARE USA QUALITY ALONG WITH FEATURES AND DIMENSIONS.

JUST MANUFACTURING COMPANY 9233 KING STREET FRANKLIN PARK ILLINOIS 60131-2111
PH: 847-678-5150 . FAX: 847-678-6817 . E-MAIL: custserv@justmfg.com . www.justmfg.com

© 2014-JUST MFG. CO.

J-900

PARTS DATA

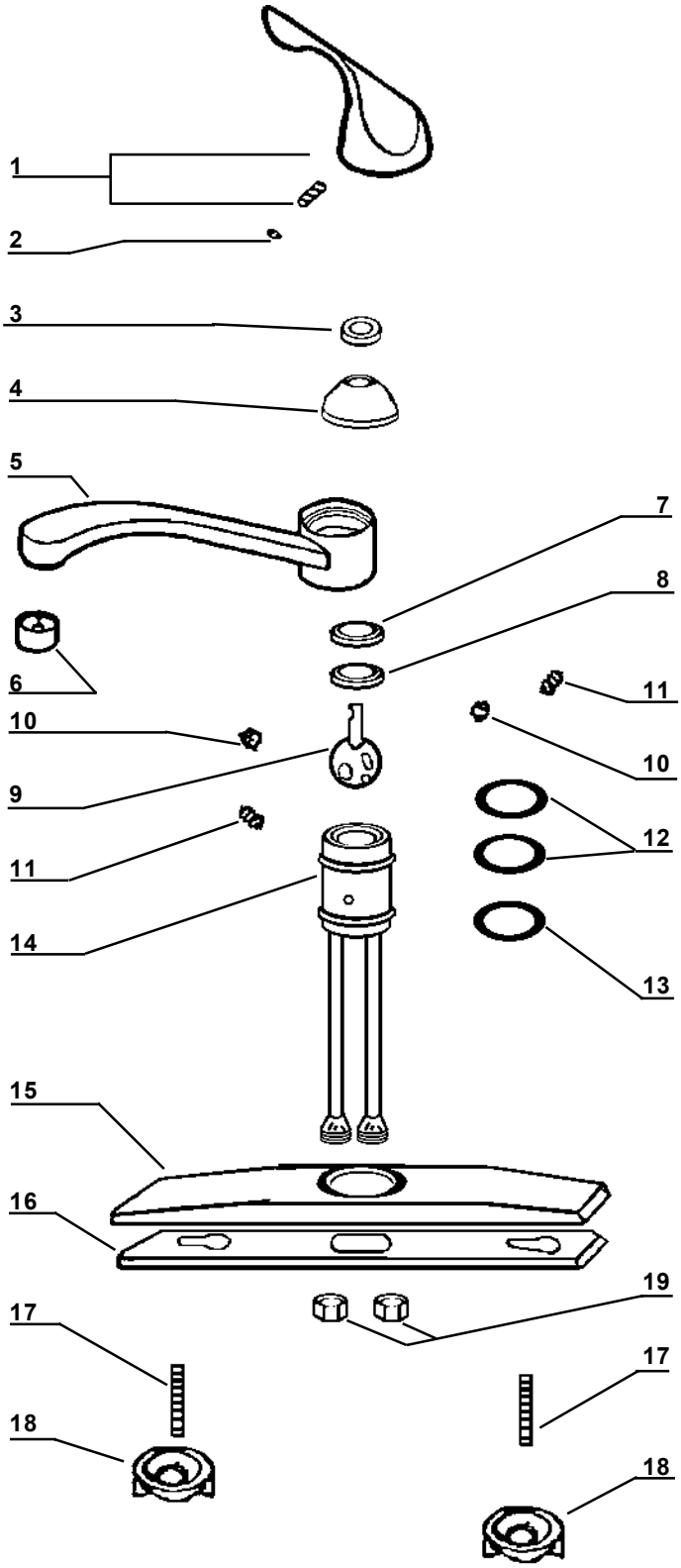

FAUCET GROUP

DECKMOUNT SINK FAUCET



Item No.	Part No.	Description
1	15C-812-01	Lever handle assembly - Chrome
2	10-822-02	Hot/Cold Index
3	01-812-03	Bonnet Ring
4	15C-812-04	Bonnet
5	O3C-812-05	Spout
6	01C-407-099	Aerator assembly
7	20-812-06	Bonnet Cap
8	30-812-07	Cartridge gasket
9	10-812-08	Cartridge
10	30-425-16	Port seal ring
11	10-425-17	Port spring
12	30-812-16	O-Ring
13	20-812-17	Poly gasket
14	- -	Core(not available)
15	20-735-16	Deck cover
16	20-735-17	Deck base
17	- -	Core screws (not available)
18	20-812-13	Mounting hardware parts bag (2 sets per bag)
19	01-408-26B	Nuts (2 required)

Rev.-5/2004

JUST MFG. COMPANY CONTINUES TO MAKE QUALITY AND FUNCTIONALITY A MARK OF THE JUST PRODUCT LINE. TO DO SO REQUIRES THAT WE RESERVE THE RIGHT TO CHANGE PRODUCT INFORMATION WITHOUT NOTICE. FOR THE MOST CURRENT AND ACCURATE INFORMATION REGARDING THE COMPLETE LINE OF **JUST** SINKS, FAUCETS AND DRAINS, CLICK ON THE ***SPEC LINE DRAWINGS*** LINK ON OUR WEB SITE AT ***www.justmfg.com***

JUST MANUFACTURING COMPANY
9233 KING STREET . FRANKLIN PARK . ILLINOIS . 60131-2111
PH: 847-678-5150 . FAX: 847-678-6817
E-MAIL: custserv@justmfg.com . www.justmfg.com

FIAT PRODUCTS

TERRAZZO MOP SERVICE BASIN 12" DEPTH WITH 6" DROP FRONT

12" MOP SERVICE BASIN WITH 6" DROP FRONT

- One piece, precast terrazzo made of black and white marble chips in gray portland cement to produce a compressive strength not less than 3000 P.S.I. seven days after casting.
- Terrazzo surface shall be ground and polished with all air holes or pits grouted and excess removed.
- Shoulders shall be not less than 12" high outside and 10" inside at lowest wall. Shoulder width not less than 2” on all sides with a 1/4" pitch towards the inside.
- Standard drain body is stainless steel cast integrally and provides for a caulked lead connection not less than 1" deep to a 3" pipe.
- Stainless steel strainer # 1453BB

Options

- QDC quick drain connectors
- Integral galvanized tiling flanges available at no additional charge.
- Stainless steel tiling flanges available with up-charge. Must be custom order.
- Chrome plated brass drain or Vandal proof drain. Must be custom order.

❑ **TSBC1610, TSBC1611, TSBC1612 Neo-corner Series** with stainless steel caps on thresholds only

❑ **TSB3000, TSB3001, TSB3002, TSB3003 Series** with stainless steel caps on all curbs

❑ **TSB3010, TSB3011, TSB3012, TSB3013 Series** with stainless steel caps on thresholds only

Optional Components:

❑ **830AA** Mop Service Basin Fitting

❑ **832AA** Hose & Hose Bracket

❑ **1239BB** Aluminum Bumperguard with Vinyl Insert

❑ **833AA** Silicone Sealant

❑ **MSG** Wall Guards - Stainless Steel
- Wall Guards are manufactured of heavy gauge stainless steel and help protect walls adjacent to Mop Basin. Two panels are required for corner installations. Optional third panel is required for a recessed installation. (MSG2424; MSG2828; MSG3232; MSG3624; MSG3636)

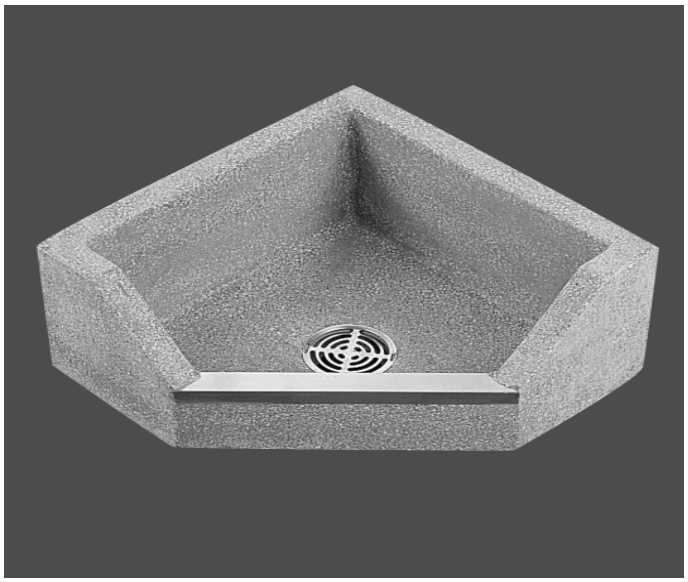

Shown: TSBC1610

SEE REVERSE FOR ROUGHING-IN DIMENSIONS

NOTES: Terrazzo Mop Basins **must** be installed on a 1/2" layer of mortar in order that the mop basin be level and to prevent cracking. Failure to install terrazzo without a mortar bed will void the warranty. Installations require a 1⁄4" clearance between mop basin and wall.

CERTIFICATIONS:

FIAT
QUALITY FOR LIFE

Customer Service Canada
1-800-387-0369
www.fiat.ca

Customer Service United States
1-800-442-1902
www.fiatproducts.com

© 2012 Fiat Products

Revised 8/12

FIAT PRODUCTS

TERRAZZO
MOP SERVICE BASIN
12" DEPTH WITH 6" DROP FRONT

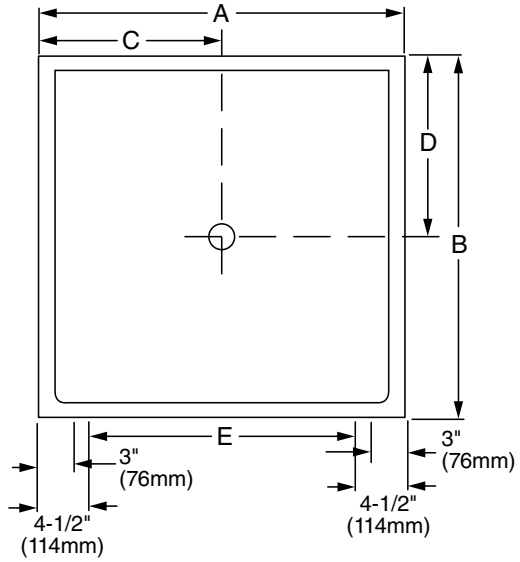

Series TSB3000
With Stainless Steel Caps On All Curbs

MODEL	SIZE	A	B	C	D	E
TSB3000	24" x 24" x 12"	24	24	12	12	15
TSB3001	32" x 32" x 12"	32	32	16	16	23
TSB3002	36" x 36" x 12"	36	36	18	18	27
TSB3003	36" x 24 x 12"	36	24	18	12	27

Series TSB3010
With Stainless Steel Threshold Only

MODEL	SIZE	A	B	C	D	E
TSB3010	24" x 24" x 12"	24	24	12	12	15
TSB3011	32" x 32" x 12"	32	32	16	16	23
TSB3012	36" x 36" x 12"	36	36	18	18	27
TSB3013	36" x 24 x 12"	36	24	18	12	27

Series TSBC1610
With Stainless Steel Caps Threshold Only

MODEL	SIZE	A	B	C	D	E	F
TSBC1610	24" x 24" x 12"	24	24	12	12	11	18-1/4
TSBC1611	32" x 32" x 12"	32	32	12	12	14	25-3/8
TSBC1612	36" x 36" x 12"	36	36	12	12	18	25-3/8

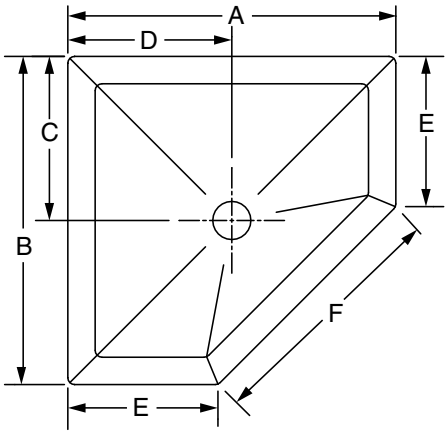

SERIES TSBC-1610
WITH STAINLESS STEEL CAPS
THRESHOLD ONLY

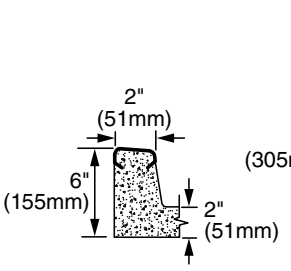

ST/ST CAP DETAIL
WITH 6" THRESHOLD

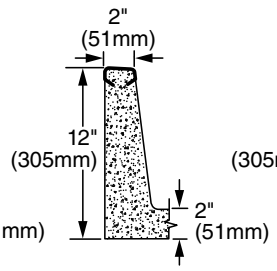

ST/ST CAP DETAIL

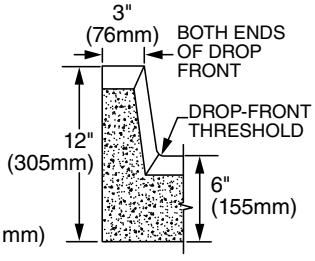

DROP FRONT
THRESHOLD DETAIL

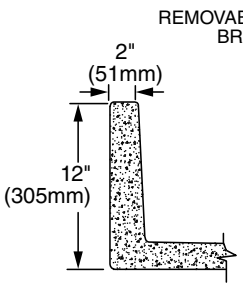

SECTION THRU
SIDES

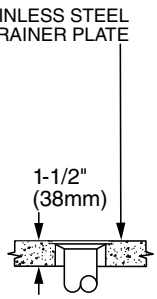

SECTION THRU
DRAIN
(LEAD CAULK &
3" PIPE "P" TRAP
BY OTHERS)

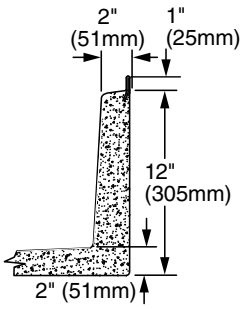

OPTIONAL GALV.
TILING FLANGE

MODELS TSB3010, TSB3011, TSB3012 AND TSB3013 SHALL BE SUPPLIED
WITH STAINLESS STEEL CAP ON DROPPED THRESHOLD CURB ONLY.

IMPORTANT: Roughing in dimensions may vary 1/2" and are subject to change or cancellation without prior notice.

FIAT
QUALITY FOR LIFE

Customer Service Canada
1-800-387-0369
www.fiat.ca

Customer Service United States
1-800-442-1902
www.fiatproducts.com

© 2012 Fiat Products

Revised 8/12

MECHANICAL FAUCETS

897-CP

Manual Faucets

Product Type

Wall Mounted 8" Body, Adjustable Arms 7-5/8" - 8-3/8" Hot and Cold Water Sink Faucet

Features & Specifications

- 8" Body, Adjustable Arms 7-5/8" - 8-3/8"
- 2-3/8" Vandal Proof Lever Handle
- Ceramic 1/4 Turn Operating Cartridge
- 1/2" NPT Adjustable Female Union Nut Supply Arms
- 3/4" Male Hose Thread Outlet
- Integral Stop Valves for Servicing the product
- Atmospheric Vacuum Breaker, Not Intended for Continuous Pressure Applications
- Vacuum Breaker Spout with Pail Hook and Wall Brace
- Atmospheric Vacuum Breaker, Not Intended for Continuous Pressure Applications
- CFNow! Item Ships in 3 Days

Performance Specification

- Rated Operating Pressure: 20-125 PSI
- Rated Operating Temperature: 40-140ºF

Warranty

- Lifetime Limited Faucet Warranty
- 5-Year Limited Cartridge Warranty
- 1-Year Limited Finish Warranty

Codes & Standards

- ASME A112.18.1/CSA B125.1
- ADA ANSI/ICC A117.1

Job Name _____

Item Number _____

Section/Tag _____

Model Specified _____

Architect _____

Engineer _____

Contractor _____

[ ] Submitted as Shown [ ] Submitted with Variations

Date _____



2100 South Clearwater Drive
Des Plaines, IL
P: 847/803-5000
F: 847/803-5454
Technical: 800/TEC-TRUE
www.chicagofaucets.com

897-CP

Manual Faucets

Architect/Engineer Specification

Chicago Faucets No. 897-CP, Sink Faucet for hot and cold water, wall-mounted with 7-5/8" - 8-3/8" adjustable centers. Chrome plated. Vacuum breaker spout with pail hook and wall brace. 2-3/8" metal, vandal-proof, lever handles with sixteen-point, tapered broach and secured blue and red index buttons. Ceramic cartridges, open and close in 90 degrees, features square, tapered stem. Adjustable supply arms include 1/2" NPT female union nut. 3/4" male hose thread outlet. Integral stop valves for servicing the faucet. NOTE: Atmospheric vacuum breaker is NOT intended for continuous pressure applications.

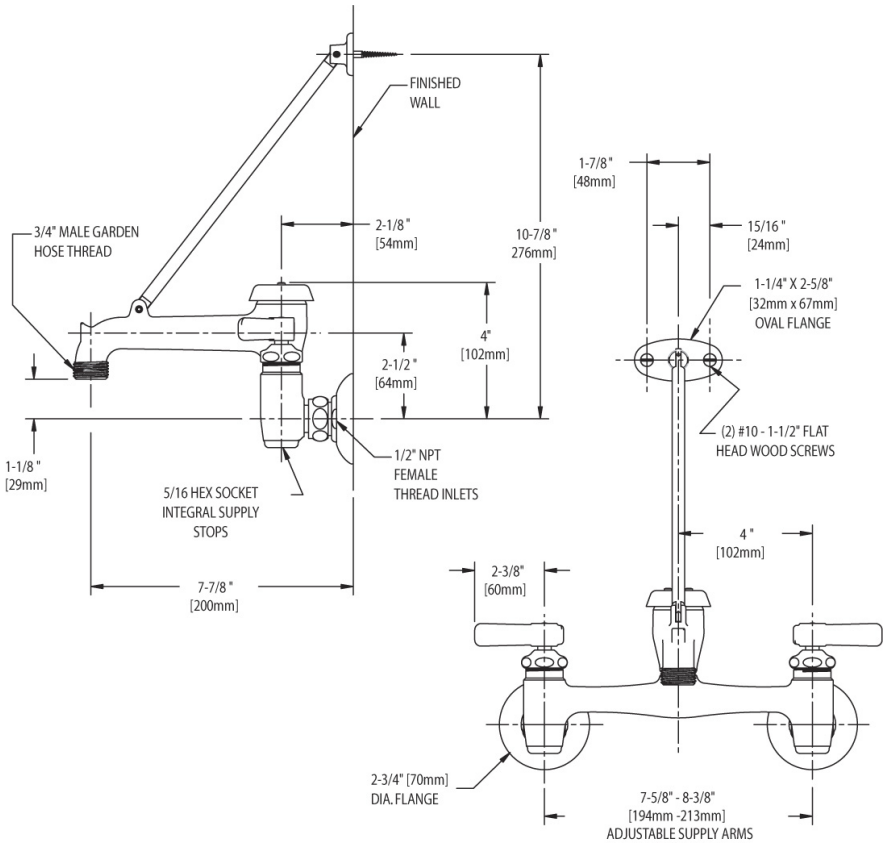

Operation and Maintenance

Installation should be in accordance with local plumbing codes. Flush all pipes thoroughly before installation. After installation, remove spout outlet or flow control and flush faucet thoroughly to clear any debris. Care should be taken when cleaning the product. Do not use abrasive cleaners, chemicals or solvents as they can result in surface damage. Use mild soap and warm water for cleaning and protecting the life of Chicago Faucet products. For specific operation and maintenance refer to the installation instructions and repair parts documents that are located at www.chicagofaucets.com.

Chicago Faucets, member of the Geberit Group, is the leading brand of commercial faucets and fittings in the United States, offering a complete range of products for schools, laboratories, hospitals, office buildings, food service, airports and sport facilities. Call 1.800.TECTRUE or 1.847.803.5000 Option 1 for installation or other technical assistance.

2100 South Clearwater Drive
Des Plaines, IL
P: 847/803-5000
F: 847/803-5454
Technical: 800/TEC-TRUE
www.chicagofaucets.com

model 1117L

Barrier-Free Dual Wall Mount Fountain

FEATURES & BENEFITS

CONSTRUCTION

One-piece stamped basin with low-profile design made of 14 gauge Type 304 stainless steel with integral 1/4" (.6 cm) mounting plate, and vandal-resistant bottom plate. Satin finish resists stains and corrosion.

INTEGRATED TRAP

Brass 1-1/4" NPT trap is internally mounted for easy installation and access.

QUALITY CONTROL

Both fountains are pre-built and fully water and pressure tested to ensure proper functionality.

BACK PANEL

Stainless steel back panel helps to protect the wall from inadvertent splashing, and its decorative satin finish increases location visibility and completes the fountains attractive appearance.

BARRIER-FREE CONFIGURABLE

Supplied with a low profile bowl, individual adjustable panels, and multiple mounting positions, this fountain can be configured for adult and child ADA considerations.

BUBBLER HEAD

Polished chrome-plated brass bubbler head with integral basin shank for added strength. Shielded, angled stream opening provides a steady, sanitary source of drinking water at .45 gpm.

PUSH BUTTON VALVE

The push-button activated valve has an all stainless steel body, with chrome plated brass push button assembly which allows for front access to water stream adjustment, water control cartridge, and water supply strainer replacement without having to go through the bottom plate. Operating pressure range of 30 to 90 psi (2.1 to 6.2 bar).

OPTIONS

- ☐ Remote Drinking Fountain Water chiller: Model HCR8, 8 gph (30.3 L) remote water chiller provides instantaneous cooling to meet a continuous demand for chilled water.
- ☐ Bottle Filler: Model 1920, bottle filler can be a stand-alone station, or mounted above Haws 1001, 1011, 1107L, 1109, 1117L, and 1119 series drinking fountain models.
- ☐ Back Panel: Model BP32, satin finish stainless steel 32" back panel for model 1920 bottle filler.
- ☐ Water Filter: Model 6426, 10" x 2" (25.4 x 5.1 cm), in-line lead removal element that reduces lead from incoming water supply.

For more information, visit www.hawsco.com or call (888) 640-4297.



SPECIFICATIONS

Model 1117L low profile "Hi-Lo" wall mounted barrier-free drinking fountain shall include dual 14 gauge Type 304 Stainless Steel satin finish basins with integral 1/4" (.6 cm) stainless steel mounting plates. Push-button operated stainless steel valves with front-accessible cartridge and flow adjustment provide 100% lead free waterways, polished chrome-plated brass vandal-resistant bubbler heads, polished chrome-plated brass vandal-resistant waste strainers, vandal-resistant bottom plates, stainless steel satin finish back panel, adjustable mounting allowing either basin high or low, in-wall mounting plate, and 1-1/4" NPT integral traps. The patented design allows the unit to be mounted to meet ADA or Child ADA specifications. REQUIRES MODEL 6717 PRICED SEPARATELY.

APPLICATIONS

Perfect for either public or private indoor/outdoor settings, Model 1117L is a great fit in areas where aesthetics are important to the overall appeal of the architecture. This series is precisely mounted, making it a nice addition to any surrounding. Beautiful satin finish helps to maintain the fountains overall appeal so it always remains looking as new as it did when it was installed. Specifically, this type of wall mounted drinking fountain may be placed in settings such as: schools and other locations in and around office buildings where the temperature remains above freezing.Model meets all current Federal Regulations for the disabled including those in the Americans with Disabilities Act. Haws manufactures drinking fountains and electric water coolers to be lead-free by all known definitions including NSF/ANSI Standard 61, Section 9, NSF/ANSI 372, California Proposition 65, and the Federal Safe Drinking Water Act. Product is compliant to California Health and Safety Code 116875 (AB 1953-2006).

DISCLAIMER: Continued product improvements make specifications subject to change without notice. Check www.hawsco.com for the latest product information and updates.

THIS DOCUMENT IS TRUE AND CORRECT AT TIME OF PUBLICATION. CONTINUED PRODUCT IMPROVEMENTS MAKE SPECIFICATIONS AND MEASUREMENTS SUBJECT TO CHANGE WITHOUT NOTICE.

NOTES:

1. HOLD ROUGH-IN DIMENSIONS ±⅛" (3.2MM).
2. WHEN INSTALLING THIS UNIT, LOCAL, STATE, OR FEDERAL CODES SHOULD BE ADHERED TO. FOR INSTALLATION HEIGHTS OTHER THAN SHOWN, DIMENSIONS MARKED (*) MUST BE ADJUSTED ACCORDINGLY.

[3] REFER TO 5874 SERIES OPERATION AND MAINTENANCE MANUAL FOR PUSH BUTTON AND VALVE INSTALLATION/MAINTENANCE INSTRUCTIONS.

[4] ROUGH IN DIMENSIONS FOR FOUNTAIN HEIGHTS:

CHILD WHEELCHAIR HEIGHT: SEE SHT 2 FIG 1
- WASTE: 26-1/4" (667mm)
- SUPPLY: 26-1/8" (664mm)
- MOUNTING HOLE: 24-13/16" (630mm)
- FOUNTAIN: 24" (610mm)
- BUBBLER: 29-7/8" (756mm)

ADULT WHEELCHAIR HEIGHT: SEE SHT 2 FIG 2
- WASTE: 29-1/4" (743mm)
- SUPPLY: 29-1/8" (740mm)
- MOUNTING HOLE: 27-13/16" (706mm)
- FOUNTAIN: 27" (686mm)
- BUBBLER: 32-7/8" (832mm)

STANDING ADULT HEIGHT: SEE SHT 2 FIG 3
- WASTE: 34-3/4" (883mm)
- SUPPLY: 34-5/8" (879mm)
- MOUNTING HOLE: 33-5/16" (846mm)
- FOUNTAIN: 32-1/5" (826mm)
- BUBBLER: 38-3/8" (972mm)

5. REFER TO MODEL 1117L INSTALLATION DRAWING SHEET 2 OF 2 (ON HAWS WEBSITE **WWW.HAWSCO.COM**) FOR PERMISSABLE BOWL MOUNTING PATTERNS. **TWO WHEELCHAIR HEIGHT FOUNTAINS CANNOT BE MOUNTED SIDE BY SIDE PER ANSI A117.1.**

NOTES CONTINUED ON SHEET 2 OF 2

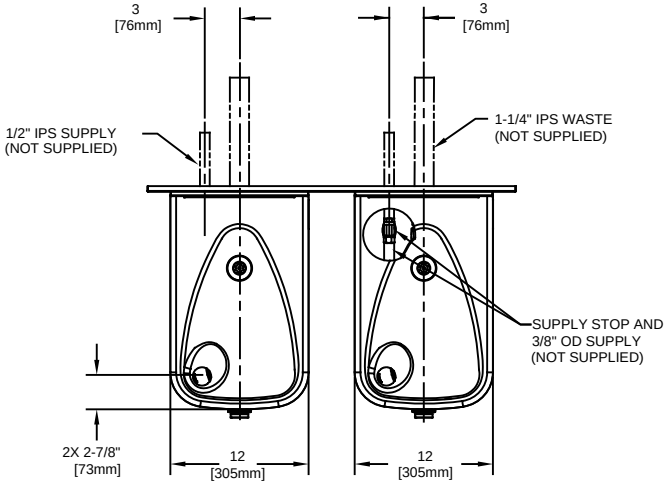

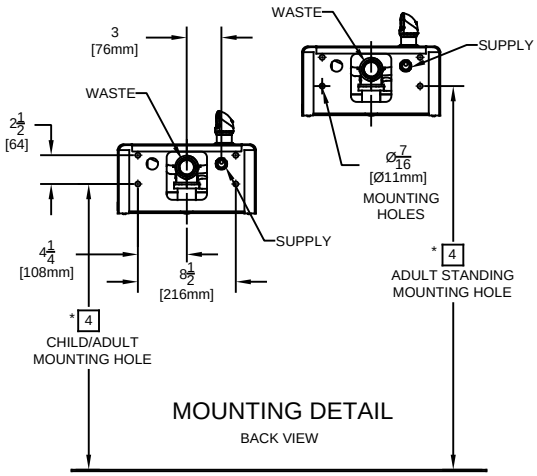

MOUNTING DETAIL
BACK VIEW

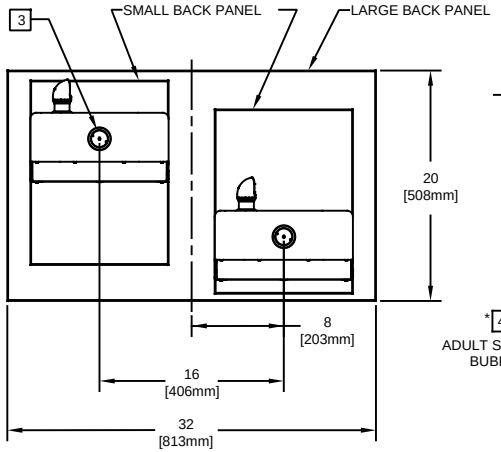

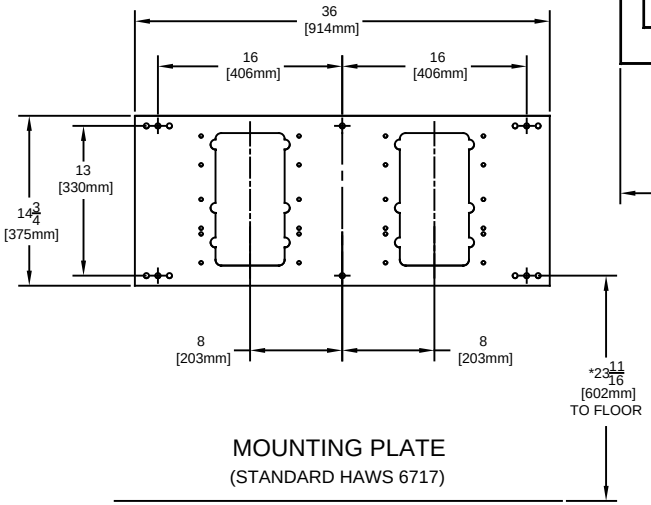

MOUNTING PLATE
(STANDARD HAWS 6717)

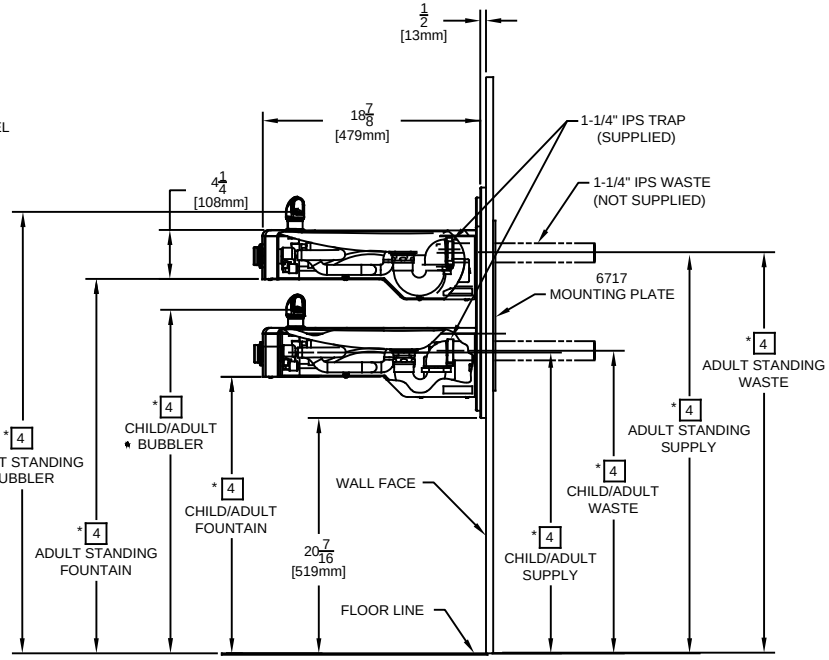

1455 KLEPPE LANE
SPARKS, NEVADA 89431
(775) 359-4712 FAX (775) 359-7424
E-MAIL: HAWS@HAWSCO.COM
WEBSITE: WWW.HAWSCO.COM

ECN NO.	REVISED PER ECN: 5255	BY: JP	MODEL(S)	PART NUMBER
DRAWN: C.FENNER	DATE: 10/06	CHK'D.: GC	1117L	0002080223.D
APPROVED: FV	DATE: 11/22/17			REVISION 15
SCALE: 1:2	DRAWING TYPE: INSTALLATION		SIZE: A	SHEET 1 OF 2

©2017 Haws Corporation - All Rights Reserved. HAWS® and other trademarks used in these materials are the exclusive property of Haws Corporation.

THIS DOCUMENT IS TRUE AND CORRECT AT TIME OF PUBLICATION. CONTINUED PRODUCT IMPROVEMENTS MAKE SPECIFICATIONS AND MEASUREMENTS SUBJECT TO CHANGE WITHOUT NOTICE.

NOTES:

6 FIGURES 1 AND 2 ARE REVERSIBLE. CAN BE RIGHT OR LEFT SIDE HIGH.

7 USE SHADED HOLES TO MOUNT AT INDICATED POSITIONS BASED ON COMBINATION SELECTED (FIGS. 1 THRU 3).

8. REFER TO SHEET 1 OF 2 NOTE 4 FOR INSTALLED FOUNTAIN DIMENSIONS.

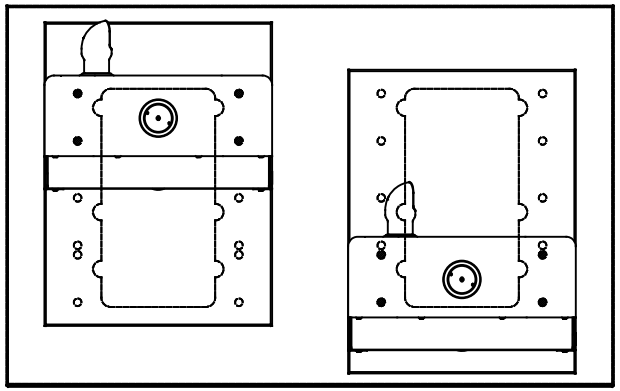

6

FIGURE 1.
ADULT STANDING/CHILD WHEELCHAIR

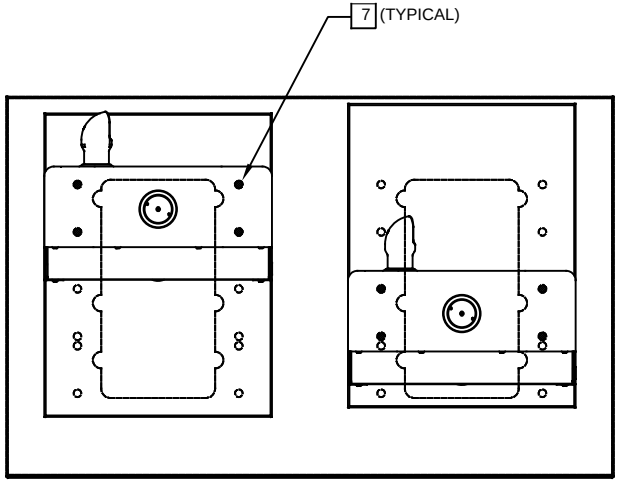

6

FIGURE 2.
ADULT STANDING/ADULT WHEELCHAIR

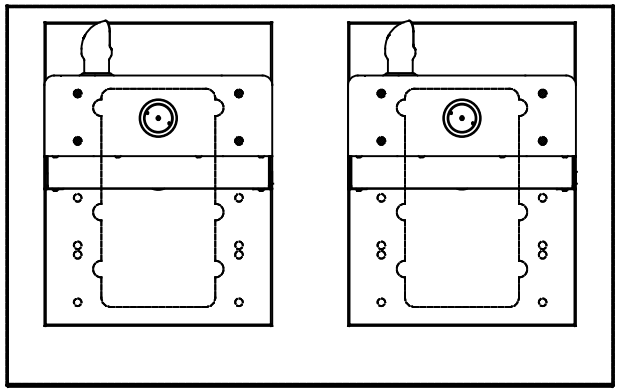

FIGURE 3.
ADULT STANDING/ADULT STANDING

BOWL MOUNTING PATTERNS

1455 KLEPPE LANE
SPARKS, NEVADA 89431
(775) 359-4712 FAX (775) 359-7424
E-MAIL: HAWS@HAWSCO.COM
WEBSITE: WWW.HAWSCO.COM

ECN NO.	REVISED PER	BY:	MODEL(S)	PART NUMBER
	ECN: 5255	JP	1117L	0002080223.D
DRAWN:	DATE:	CHK'D.:		REVISION
C.FENNER	12/29/06	GC		15
APPROVED:	DATE:			
FV	11/22/17			

SCALE: 1:2 | DRAWING TYPE: INSTALLATION | SIZE: A | SHEET 2 OF 2

©2017 Haws Corporation - All Rights Reserved. HAWS® and other trademarks used in these materials are the exclusive property of Haws Corporation.

NLS LIGHTING

VUE-3

FULL CUTOFF SITE LIGHTING

FORM AND FUNCTION
- Sleek, low profile housing
- Dark Sky Compliant, Full Cutoff
- Engineered for optimum thermal management
- Low depreciation rate
- Reduces energy consumption and costs up to 65%
- Exceeds IES foot candle levels utilizing the least number of poles and fixtures per project
- Optical system designed for Parking Lots, Auto Dealerships, Municipalities, Tennis Courts, Field Lighting

CONSTRUCTION
- Aluminum
- External cooling fins, Finite Element Analysis (FEA) designed
- Corrosion resistant external hardware

FINISH
- 3-5 mils electrostatic powder coat.
- NLS' standard high-quality finishes prevent corrosion protects against and extreme environmental conditions

WARRANTY
Five-year limited warranty for drivers and LEDs.

LISTINGS
- Certified to UL 1598
- UL 8750
- CSA C22.2 No. 250.0
- DesignLights Consortium® (DLC)
- DesignLights Consortium® Premium (DLCP)



LED WATTAGE CHART

	112L	128L	144L	160L	176L	192L
1050 milliamps	366w	409w	458w	505w	551w	594w

Project Name: VIADUCT PARK SPORTS FIELD

Type: 4 N4A - LUMINAIRE

Cat #	Light Dist.	No. of LEDs	Milliamps	Kelvin	Volts	Mounting	Color	Options
VUE-3	TT	176	1	50K	VOLT	KM	GPH	FSS, PE7+shorting cap
VUE-3 *(594W Max)* **(VUE-3)**	Type 1 **(T1)** Type 2 **(T2)** Type 3 **(T3)** Type 4 **(T4)** Type 5 **(T5)** Tennis Optic **(TT)**	112 **(112L)** 128 **(128L)** 144 **(144L)** 160 **(160L)** 176 **(176L)** 192 **(192L)**	530 **(53)** 700 **(7)** 1050 **(1)**	3000K **(30K)** 4000K **(40K)** 5000K **(50K)**	120-277 **(UNV)** 347-480 **(HV)**	**Direct Pole** Single, D180 6" **(DPS6)** D90, T90, T120, QD 16" **(DPS16)** Knuckle Mount **(KM)** Mast Arm **(MA)** Trunnion Mount **(TM)** **Standard finish is stainless steel. Can be painted to match fixture* Tennis Arm **(TA)** **See next page for Arm Configurations* **For Round Pole, please specify RPA4 or RPA5*	Bronze **(BRZ)** White **(WHT)** Silver **(SVR)** Hunter Green **(HGN)** Black **(BLK)** Graphite **(GPH)** Grey **(GRY)** Custom **(CS)**	Bird Spikes **(BS)** Marine Grade Finish **(MGF)** Nema 7-Pin Receptacle **(PE7)** + shorting cap **Universal Voltage 120-277* Photocell + Receptacle **(PCR)** Receptacle + Shorting Cap **(PER)** Integral FSP-211 Motion Sensor (UNV Voltage) **(FSP-8)** **For 8' + Below* **(FSP-20)** **For 9' to 20'* **(FSP-40)** **For 21' to 40'* Motion Sensor **(MS)** Surge Protector **(10K)** Rotate Optic Right **(ROR)** Rotate Optic Left **(ROL)** House Side Shield **(HSS)** Front Side Shield **(FSS)** Quick Mount Bracket **(QMB)** Retrofit Quick Mount Bracket **(RQMB)** Round Pole Adaptor 3"- 4" Pole **(RPA4)** 5"- 6" Pole **(RPA5)**

ELECTRICAL

- 120-277 Volts (UNV) or 347-480 Volts (HV)
- 0-10V dimming driver by Philips Advance
- Driver power factor at maximum load is ≥ .95, THD maximum load is 15%
- All internal wiring UL certified for 600 VAC and 105°C
- All drivers, controls, and sensors housed in enclosed IP-65 compartment
- Lumileds Luxeon MX LEDs
- CRI >70
- Color temperatures: 3000K, 4000K, 5000K

VUE-3
Weight: 62 lbs

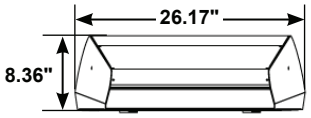

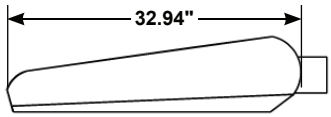

OPTIONS

- **BIRD SPIKES (BS)**—offers effective and humane deterrent for larger bird species and provides cost-effective long-term solution to nuisance bird infestations and protect your property.
- **MARINE GRADE FINISH (MGF)**—A multi-step process creating protective finishing coat against harsh environments.
  - Chemically washed in a 5 stage cleaning system.
  - Pre-baked
  - Powder coated 3-5 mils of Zinc Rich Super Durable Polyester Primer.
  - 1-2 feet inside pole coverage top and bottom.
  - Oven Baked.
  - Finished Powder Coating of Super Durable Polyester Powder Coat 3-5 mil thickness.
- **SHIELDS (HSS, FSS)**—Four-sided House Side Shield (HSS) is designed for full property line cut-off. Front-Side Shield (FSS) is a single-sided shield allowing partial cut-off on either side or front of luminaire.

EPA	SGL	D90	D180	T90	T120	QD
VUE-3	1.86	3.72	3.56	5.37	5.48	5.37

CONTROLS

- **FSP-211 (FSP-X)**—Passive infrared (PIR) sensor providing multi-level control based on motion/daylight contribution.
  - All control parameters adjustable via wireless configuration romote storing and transmitting sensor profiles.
  - FSP-20 mounting heights 9-20 feet
  - FSP-40 mounting heights 21-40 feet.
  - Includes 5 dimming event cycles, 0-10V dimming with motion sensing, reprogrammable in the field.
- **NEMA 7-PIN RECEPTACLE (PE7)**—An ANSI C136.41-2013 receptacle provides electrical and mechanical interconnection between photo control cell and luminaire. Dimming receptacle available two or four dimming contacts supports 0-10 VDC dimming methods or Digital Addressable Lighting Interface (DALI), providing reliable power interconnect.

DPX ARM LENGTH

	SGL	D90	D180	T90	T120	QD
VUE-3	6"	16"	6"	16"	16"	16"

FSP-211

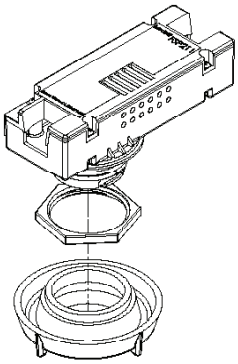

OPTICS

Recessed Star Power Optical System is 95% reflective material. Utilizes a linear diffused pattern, softening the light distribution and eliminating any dark shadows or striations.

- IES Types

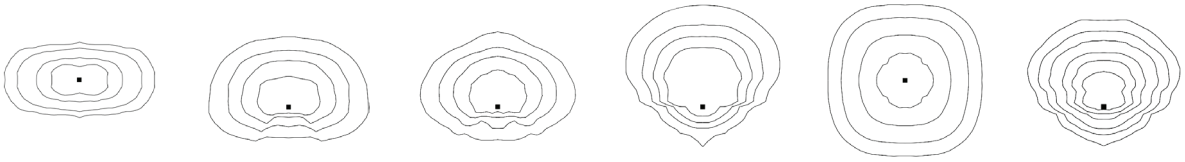

TYPE I (T1) TYPE II (T2) TYPE III (T3) TYPE IV (T4) TYPE V (T5) TYPE T (TT)

VUE - LUMEN DATA CHART																												
PART NUMBER	T1 OPTIC	Lm/W	*DLC	T2 OPTIC	Lm/W	*DLC	T2-HSS OPTIC	Lm/W	*DLC	T3 OPTIC	Lm/W	*DLC	T3-HSS OPTIC	Lm/W	*DLC	T4 OPTIC	Lm/W	*DLC	T4-HSS OPTIC	Lm/W	*DLC	T5 OPTIC	Lm/W	*DLC	TT OPTIC	Lm/W	*DLC	WATT
VUE-3-112L-1-30K	33306	91	S	39528	108	S	25621	70	S	37332	102	S	32757	90	S	35868	98	S	34770	95	S	36966	101	S	-	-	S	366
VUE-3-112L-1-40K	34404	94	S	39894	109	S	27085	74	S	37698	103	S	34222	94	S	36966	101	S	36234	99	S	37332	102	S	37332	102	S	366
VUE-3-112L-1-50K	36234	99	S	40626	111	S	28549	78	S	38064	104	S	36235	99	S	37698	103	S	37698	103	S	37698	103	S	38430	105	S	366
VUE-3-128L-1-30K	37219	91	S	44172	108	S	28631	70	S	41718	102	S	36811	90	S	40082	98	S	39060	95	S	41309	101	S	-	-	S	409
VUE-3-128L-1-40K	38446	94	S	44581	109	S	30267	74	S	42127	103	S	38447	94	S	41309	101	S	40491	99	S	41718	102	S	41718	102	S	409
VUE-3-128L-1-50K	40491	99	S	45399	111	S	31903	78	S	42536	104	S	40288	99	S	42127	103	S	41718	102	S	42127	103	S	42945	105	S	409
VUE-3-144L-1-30K	41678	91	S	49464	108	S	32061	70	S	46716	102	S	41222	90	S	44884	98	S	43510	95	S	46258	101	S	-	-	S	458
VUE-3-144L-1-40K	43052	94	S	49922	109	S	33893	74	S	47174	103	S	42825	94	S	46258	101	S	45342	99	S	46716	102	S	46716	102	S	458
VUE-3-144L-1-50K	45342	99	S	50838	111	S	35725	78	S	47632	104	S	45344	99	S	47174	103	S	46716	102	S	47174	103	S	48090	105	S	458
VUE-3-160L-1-30K	45955	91	S	54540	108	S	35351	70	S	51510	102	S	45450	90	S	49490	98	S	47975	95	S	51005	101	S	-	-	S	505
VUE-3-160L-1-40K	47470	94	S	55045	109	S	37370	74	S	52015	103	S	47470	94	S	51005	101	S	50248	99	S	51510	102	S	51510	102	S	505
VUE-3-160L-1-50K	49995	99	S	56055	111	S	39390	78	S	52520	104	S	49996	99	S	52015	103	S	52015	103	S	52015	103	S	53025	105	S	505
VUE-3-176L-1-30K	50141	91	S	59508	108	S	38573	70	S	56202	102	S	49592	90	S	53998	98	S	52345	95	S	55651	101	S	-	-	S	551
VUE-3-176L-1-40K	51794	94	S	60059	109	S	40775	74	S	56753	103	S	51796	94	S	55822	101	S	54549	98	S	56202	102	S	56202	102	S	551
VUE-3-176L-1-50K	54549	99	S	61161	111	S	42978	78	S	57304	104	S	54551	99	S	56753	103	P	56753	103	S	56753	103	S	57855	105	S	551
VUE-3-192L-1-30K	54054	91	S	64152	108	S	41581	70	S	60588	102	S	53462	90	S	58212	98	S	56430	95	S	59994	101	S	-	-	S	594
VUE-3-192L-1-40K	55836	94	S	64746	109	S	43956	74	S	61182	103	S	55838	94	S	59994	101	S	58212	98	S	60588	102	S	60588	102	S	594
VUE-3-192L-1-50K	58806	99	S	65934	111	S	46332	78	S	61776	104	S	58808	99	S	61182	103	S	60588	102	S	61182	103	S	62370	105	S	594

***DLC** *S= Standard* *P= Premium*

L70 DEPRECIATION

483,000 Hours (@77°F/ 25°C)

MOUNTING OPTIONS



Knuckle Mount



Tennis Arm



Trunnion Mount



Direct Pole Mount

2X4 DRILL PATTERN
(VUE-1 and VUE-2)

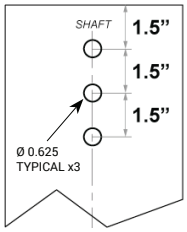

2X6 DRILL PATTERN
(VUE-3)

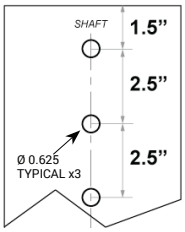

NLS LIGHTING

SLS / VUE - 4

SLS - SPORTS LIGHTING SOLUTIONS



FORM AND FUNCTION

- Sleek, low profile housing
- Dark Sky Compliant, Full Cutoff
- Engineered for optimum thermal management
- Low depreciation rate: L70 = 360,000 Hours
- Reduces energy consumption and costs up to 65%
- Exceeds IES foot candle levels utilizing the least number of poles and fixtures per project
- Optical system designed specifically for Sports Field Lighting

RELIABILITY

- 30 Year Solution
- L70 360,000 Hours
- 10KV Surge Protector standard

VUE - 4 SPORTS LIGHTING FIXTURE WITH INTEGRAL DRIVERS

A robust Sports Lighting Fixture designed for Parks and Recreational Facilities. Up to 850 watts, utilizing patented Star Power™ Optical System creating unmatched reliability.

SPECIALIZING IN PARKS AND RECREATIONAL FACILITIES

NLS Sports Lighting Solutions - an elite combination of performance, glare control and reliability. From young children to competitive athletes the NLS SLS is the perfect solution for competitors who strive to perform at their highest level.

PERFORMANCE

The Vue features NLS patented Star Power™ Optical System designed to create high, broad, uniform horizontal foot candle levels and also provide substantial vertical foot candles, so the ball is never lost from player view.

GLARE CONTROL

The Star Power™ Optical System is endorsed by the Founder of the International Dark Sky Association and Illuminating Engineer Society Sports Lighting Committee Associate as one of the best optical systems in glare reduction for dark sky, neighbors, and the sports application itself. Meets IES parks and recreation requirements.

VUE - 4 standard with (FSS) front side shield.

CONSTRUCTION
- Precision Die Formed aluminum housing for durability and consistency
- Stainless Steel corrosion resistant external hardware
- One-piece silicone gasket ensures IP-65 seal for electronics compartment

ELECTRICAL
- 120-277 Volts (UNV) or 347-480 Volts (HV)
- 0-10V dimming driver by Philips Advance
- Driver power factor at maximum load is ≥ .95, THD maximum load is 15%
- All internal wiring UL certified for 600 VAC and 105°C
- All drivers, controls, and sensors housed in enclosed IP-65 compartment

PATENTED OPTICAL SYSTEM
- SLS optical system features a patented soft athlete friendly high wattage low glare linear diffused optic, providing a wide distribution and uniform lighting from every fixture
- SLS optical system significantly reduces disability glare specifically for fifty to eighty feet mounting heights compared to competition

L70 DEPRECIATION
360,000 Hours (@77°F/ 25°C)

KELVIN
5700K

FINISH
3-5 mils electrostatic powder coat.
NLS' standard high-quality finishes prevent corrosion protects against and extreme environmental conditions.
Graphite (GPH) grey as standard finish.

MOUNTING
Stainless Steel Trunnion Mount
- Fast accurate installation with Pre-Aimed, Pre-Wired Cross Arm assemblies

OPTIONS
MARINE GRADE FINISH (MGF)—A multi-step process creating protective finishing coat against harsh environments
- Chemically washed in a 5 stage cleaning system.
- Pre-baked
- Powder coated 3-5 mils of Zinc Rich Super Durable Polyester Primer
- Oven Baked
- Finished Powder Coating of Super Durable Polyester Powder Coat 3-5 mil thickness

PHOTOCELL + RECEPTACLE (PCR)

NEMA 7 PIN RECEPTACLE (7PIN)—An ANSI C136.41-2013 receptacle provides electrical and mechanical interconnection between photo control cell and luminaire. Dimming receptacle available two or four dimming contacts supports 0-10 VDC dimming methods or Digital Addressable Lighting Interface (DALI), providing reliable power interconnect.

WIRELESS CONTROL SYSTEM (WCS)—Consult Factory for options

WARRANTY
Five-year standard warranty

LISTINGS
Certified to UL 1598
UL 8750
CSA C22.2 No. 250.0
IP67 Rated

SLS / VUE - 4 DIMENSION DRAWING

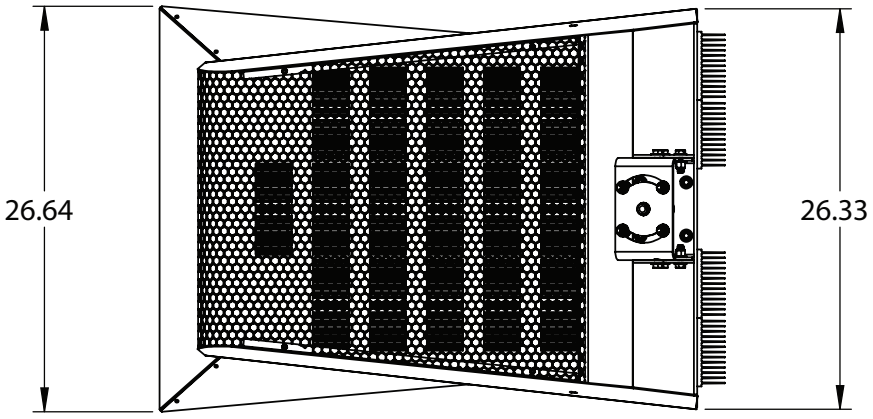

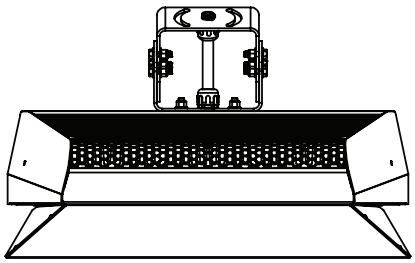

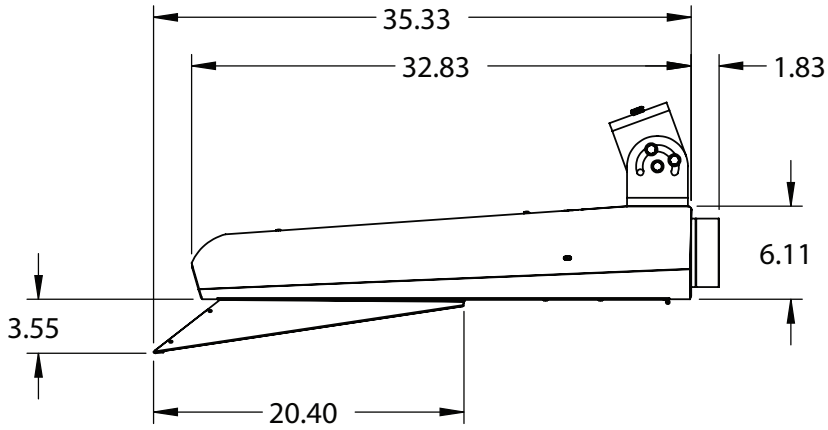

EPA	VUE-4 with FSS
Single	2.24

	WEIGHT
VUE-4 with Internal Driver	75 lbs

*All dimensions are in inches

Project Name:	Type:

SLS / VUE - 4

Cat#	Distribution	Wattage/Lumens	Kelvin
VUE - 4 **(VUE-4)**	T4M-FSS **(T4M)** Type 4 Medium Throw With Front Side Shield	**600 Watts** 75,011 Lumens **(60)** **650 Watts** 81,253 Lumens **(65)** **700 Watts** 87,502 Lumens **(70)** **750 Watts** 93,756 Lumens **(75)** **800 Watts** 100,017 Lumens **(80)**	5700K **(57)**
	T4L-FSS **(T4L)** Type 4 Long Throw With Front Side Shield *N1	**600 Watts** 66,607 Lumens **(60)** **650 Watts** 72,158 Lumens **(65)** **700 Watts** 77,709 Lumens **(70)** **750 Watts** 83,259 Lumens **(75)** **800 Watts** 88,810 Lumens **(80)**	

Volts	Mounting	Color	Options
120-277 **(UNV)** 347-480 **(HV)**	Trunnion Mount **(TM)**	Graphite **(GPH)**	Marine Grade Finish **(MGF)** Photocell + Receptacle **(PCR)** NEMA 7 Pin Receptacle + Shorting Cap **(7PIN)** Wireless Control System **(WCS)** * Consult Factory

*Notes

1. Front Side Shield (FSS) comes standard.

NLS LIGHTING
701 Kingshill Place, Carson, CA 90746
Call Us Today (310) 341-2037
nlslighting.com

KIM LIGHTING

UR20
Ouro™ LED kl_ur20post_spec.pdf

JOB _____ TYPE _____

NOTES _____ APPROVALS _____

FEATURES

- 20″ size in post top, pole and wall mount
- High performance optics up to 17,000 delivered lumens
- Elegant form factor
- Diffusion lens option
- SiteSync™ wireless control options

CERTIFICATIONS

c UL us LISTED

ida DARK SKY APPROVED 2016

DLC OPTIC LISTED

3000K and warmer CCTs only

SPECIFICATIONS



Weight: 35 lbs

FM33

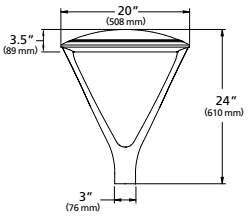

EPA: .512

PT23

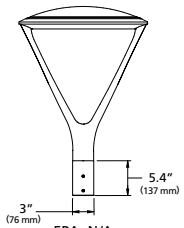

EPA: N/A

FM44

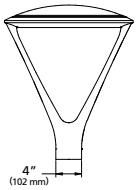

EPA: .534

PT24 / PT34

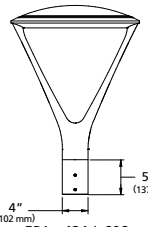

EPA: .424 / .608

ORDERING CODE

Series	LED Engine	CCT	Distribution	Rotation	Voltage	Mounting
UR20 Ouro	No Lens or Clear Lens	**5K7** 5000K, 70 CRI	**FR** Type 1/Front Row	Blank for no rotation	**UNV** 120-277V	**FM33** Flush mt 3.0" OD pole, 3" fixture base
	24L-25 3,000 lm	**4K7** 4000K, 70 CRI	**2** Type II	**L**[1] Optic rotation left	**347** 347V	**FM44** Flush mt 3.6" to 4.0" OD pole, 4" fixture base
	24L-65 7,000 lm	**4K8** 4000K, 80 CRI	**3** Type III	**R**[1] Optic rotation right	**480** 480V	**PT23** 3" Post Top mount for 2 3/8" OD Tenon
	56L-75 10,000 lm	**3K7** 3000K, 70 CRI	**4** Type IV		**DALI** 120-277V†	**PT24** 4" Post Top mount for 2 3/8" OD Tenon
	56L-110 15,000 lm	**3K8** 3000K, 80 CRI	**4W** Type IV Wide		†Consult factory	**PT34** 4" Post Top mount for 2 7/8" OD Tenon
	56L-140 17,000 lm	**3K9** 3000K, 90 CRI	**5QM** Type V Square Medium			
	HDL - High Diffusion Lens*	**AM** Amber	**5QN** Type V Square Narrow			
	28L-30 3,000 lm		**5R** Type V Rectangular			
	28L-70 7,000 lm		**5W** Type V Wide (Round)			
	68L-80 9,000 lm					
	68L-115 13,000 lm					
	68L-150 15,000 lm					
	* Only available with Type 3 and Type 5W optics					

Fixture Finish	Control Options		Options	Control Accessories
BL Black	**7PR-TL** 7 pin PCR with twist lock photocontrol	**SWP**[2,3] Site Sync Pre commision	**BC**[4] Back-light Control	**SCPREMOTE** Wattstoper configuration tool
DB Dark Bronze	**7PR-SC** 7 pin PCR with shorting cap	**SWPM-8F**[2,3] Site Sync with Sensor up to 8' MH	**SF** Single Fuse	**SWUSB** SiteSync Software on USB
LG Light Gray	**7PR** 7 pin PCR, wireless control enabled	**SWPM-40F**[2,3] Site Sync with Sensor 9' to 40' MH	**DF** Double Fuse	**SWTAB** SiteSync Windows® Tablet
GT Graphite	**AD-01**[2] AstroDIM: 50% output at midnight		**TB** Terminal Block	**SWBRG** SiteSync Wireless Bridge Node
PS Platinum Silver	**AD-02**[2] AstroDIM: 50% output midnight to 4 AM		**CLR**[5] Clear Lens	**WIR-RME-L** wiSCAPE External Fixture Module
TT Titanium	**AD-03**[2] AstroDIM: 50% output 10PM		**HDL**[5] Diffuse Lens	
WH White	**AD-04**[2] AstroDIM: 50% output 10PM to 4AM		**TL** Tamper proof latch	
CC Custom Color†	**SCL-8F** Low voltage sensor for 3rd party wireless controls via 7PR. For mounting heights up to 8'.			
†Consult factory	**SCL-40F** Low voltage sensor for 3rd party wireless controls via 7PR. For mounting heights 9' to 40'.			

Microsoft, Encarta, MSN, and Windows are either registered trademarks or trademarks of Microsoft Corporation in the United States and/or other countries.

Kim Lighting reserves the right to change specifications without notice.

1 Not available with 5QM, 5QN, and 5W distributions.
2 Not available with other sensor or wireless control options.
3 Specify group and zone at time of order. See www.hubbelllighting.com/sitesync for more details. Order at least one SiteSync interface accessory SWUSB or SWTAB. Each option contains SiteSync License, GUI, and Bridge Node.
4 Not available with Type 5 distributions or HDL option
5 Not available with fixture mounted sensors; use pole mount

Project: Sixth Street PARC Viaduct

Date: July 25,2019
Submittal:90% Issuance

Type: XF1/XF2

HLB Project #: 16165

APPENDIX B: LIGHTING CUTSHEETS Note: This document is for information only. Refer to specifications for all catalog numbers, etc.

LUMINAIRE PERFORMANCE

LED #	Nominal Lumen Package	Nominal Wattage	Lens Options	Distribution	3000K					4000K					5000K				
					Lumen	BUG Rating			lm/w	Lumen	BUG Rating			lm/w	Lumen	BUG Rating			lm/w
						B	U	G			B	U	G			B	U	G	
24L	3,000	25	No Lens	FR	3031	0	3	1	119	3225	0	3	1	127	3203	0	3	1	128
				FR-BC	2056	0	2	1	81	2188	0	2	1	86	2173	0	2	1	85
				2	3037	1	3	1	119	3231	1	3	1	127	3209	1	3	1	128
				2-BC	1770	0	2	1	70	1883	0	2	1	74	1870	0	2	1	73
				3	3090	1	2	1	121	3288	1	2	1	129	3265	1	2	1	131
				3-BC	1800	0	2	1	72	1915	0	2	1	77	1902	0	2	1	76
				4	3128	0	2	1	123	3328	0	2	1	131	3305	0	2	1	132
				4-BC	2277	0	2	1	89	2422	0	2	1	95	2406	0	2	1	94
				4W	3147	1	2	2	124	3349	1	2	2	132	3326	1	2	2	133
				4W-BC	1893	0	2	1	74	2015	0	2	1	79	2001	0	2	1	79
				5QM	3002	2	2	1	118	3195	2	2	1	125	3173	2	2	1	127
				5QN	2786	2	3	1	109	2964	2	3	1	116	2944	2	3	1	118
				5R	3127	2	2	2	123	3328	2	2	2	131	3305	2	2	2	132
				5W	3114	2	2	1	122	3313	2	2	1	130	3291	2	2	1	132
			Clear Lens	FR	2867	0	3	1	112	3051	0	3	1	120	3030	0	3	1	121
				FR-BC	1945	0	2	1	76	2070	0	2	1	81	2056	0	2	1	81
				2	2873	1	2	1	113	3057	1	3	1	120	3036	1	3	1	121
				2-BC	1674	0	2	1	66	1782	0	2	1	70	1769	0	2	1	69
				3	2923	1	2	1	115	3111	1	2	1	122	3089	1	2	1	124
				3BC	1788	0	2	1	72	1903	0	2	1	76	1890	0	2	1	76
				4	2959	0	2	1	116	3149	0	2	1	123	3127	0	2	1	125
				4-BC	2154	0	2	1	84	2292	0	2	1	90	2276	0	2	1	89
				4W	2977	1	2	1	117	3168	1	2	2	124	3146	1	2	2	126
				4W-BC	1791	0	2	1	70	1906	0	2	1	75	1893	0	2	1	5
				5QM	2840	1	2	1	111	3022	2	2	1	118	3002	2	2	1	120
				5QN	2636	1	3	1	103	2804	2	3	1	110	2785	2	3	1	111
				5R	2959	2	2	2	116	3148	2	2	2	123	3127	2	2	2	125
				5W	2946	2	2	1	115	3135	2	2	1	123	3113	2	2	1	125
28L		30	HDL Lens	3	2909	1	3	1	99	3096	1	3	1	106	3120	1	3	1	104
				5W	2998	1	3	1	103	3191	1	3	1	109	3169	1	3	1	106

Kim Lighting reserves the right to change specifications without notice.

© 2018 KIM LIGHTING | 17760 Rowland Street | City of Industry | CA 91748
P 626.968.5666 | F 626.369.2695 | www.kimlighting.com | Rev. Apr. 09, 2018

LUMINAIRE PERFORMANCE

LED #	Nominal Lumen Package	Nominal Wattage	Lens Options	Distribution	3000K					4000K					5000K				
					Lumen	BUG Rating			lm/w	Lumen	BUG Rating			lm/w	Lumen	BUG Rating			lm/w
						B	U	G			B	U	G			B	U	G	
24L	7,000	65	No Lens	FR	6983	1	3	1	107	7431	1	3	1	114	7380	1	3	1	114
				FR-BC	4530	0	3	1	70	4820	0	3	1	74	4787	0	3	1	74
				2	6780	1	3	2	104	7215	1	3	2	111	7165	1	3	2	110
				2-BC	3899	0	3	1	60	4149	0	3	1	64	4120	0	3	1	63
				3	6807	1	3	2	105	7244	1	3	2	111	7194	1	3	2	111
				3BC	3966	0	2	1	61	4220	0	2	1	65	4191	0	2	1	64
				4	6949	1	3	2	107	7394	1	3	2	114	7344	1	3	2	113
				4-BC	5016	0	3	2	77	5337	0	3	2	82	5300	0	3	2	82
				4W	6849	1	3	3	105	7288	1	3	3	112	7238	1	3	3	111
				4W-BC	4171	0	2	2	64	4438	0	2	2	68	4408	0	2	2	68
				5QM	7196	3	3	1	111	7658	3	3	1	118	4551	3	3	1	70
				5QN	7202	3	3	1	111	7663	3	3	1	118	7611	3	3	1	117
				5R	7205	3	3	3	111	7667	3	3	3	118	7614	3	3	3	117
				5W	7174	3	3	2	110	7634	3	3	2	117	7582	3	3	2	117
			Clear Lens	FR	6650	1	3	1	101	7076	1	3	1	107	7028	1	3	1	108
				FR-BC	4314	0	3	1	65	4590	0	3	1	70	4559	0	3	1	69
				2	6457	1	3	1	98	6871	1	3	2	104	6824	1	3	2	105
				2-BC	3713	0	3	1	56	3951	0	3	1	60	3924	0	3	1	59
				3	6483	1	3	2	98	6898	1	3	2	105	6851	1	3	2	105
				3-BC	3702	0	3	1	57	3939	0	3	1	61	3912	0	3	1	60
				4	6618	1	3	2	100	7042	1	3	2	107	6994	1	3	2	108
				4-BC	4776	0	2	2	72	5083	0	3	2	77	5048	0	3	2	76
				4W	6523	1	3	2	99	6941	1	3	3	105	6893	1	3	3	106
				4W-BC	3972	0	2	2	60	4227	0	2	2	64	4198	0	2	2	64
				5QM	6853	3	3	1	104	7292	3	3	1	110	4334	3	3	1	67
				5QN	6858	2	3	1	104	7298	3	3	1	111	7248	3	3	1	112
				5R	6861	3	3	3	104	7301	3	3	3	111	7251	3	3	3	112
				5W	6832	3	3	2	104	7270	3	3	2	110	7220	3	3	2	111
28L		70	HDL Lens	3	6247	2	3	2	95	6647	2	3	2	101	6443	2	3	2	92
				5W	6393	2	3	1	97	6803	2	3	1	103	6706	2	3	1	96

Kim Lighting reserves the right to change specifications without notice.

© 2018 KIM LIGHTING | 17760 Rowland Street | City of Industry | CA 91748
P 626.968.5666 | F 626.369.2695 | www.kimlighting.com | Rev. Apr. 09, 2018

LUMINAIRE PERFORMANCE

LED #	Nominal Lumen Package	Nominal Published Wattage	Lens Options	Distribution	3000K					4000K					5000K				
					Lumen	BUG Rating			lm/w	Lumen	BUG Rating			lm/w	Lumen	BUG Rating			lm/w
						B	U	G			B	U	G			B	U	G	
56L	10,000	75	No Lens	FR	9631	1	3	1	128	10249	1	3	1	136	10178	1	3	1	136
				FR-BC	6248	0	3	1	83	6648	0	3	1	88	6603	0	3	1	88
				2	9352	2	3	2	124	9951	2	3	2	132	9883	2	3	2	132
				2-BC	5378	0	3	1	71	5722	1	3	1	76	5683	1	3	1	76
				3	9389	2	3	2	125	9991	2	3	2	134	9922	2	3	2	132
				3-BC	5469	0	3	2	73	5820	1	3	2	78	5780	1	3	2	76
				4	9584	1	3	2	127	10199	1	3	2	136	10110	1	3	2	135
				4-BC	6918	0	3	2	92	7361	0	3	2	98	7311	0	3	2	97
				4W	9447	2	3	3	126	10052	2	3	3	134	9984	2	3	3	133
				4W-BC	5753	0	3	2	76	6122	1	3	2	81	6080	1	3	2	81
				5QM	9926	3	3	1	132	10562	3	3	2	140	10489	3	3	2	140
				5QN	9933	3	3	1	132	10570	3	3	1	140	10497	3	3	1	140
				5R	9937	3	3	3	132	10574	3	3	3	141	10502	3	3	3	140
				5W	9895	4	3	2	132	10529	4	3	2	140	10457	4	3	2	139
			Clear Lens	FR	9172	1	3	1	121	9760	1	3	1	129	9693	1	3	1	129
				FR-BC	5950	0	3	1	79	6331	0	3	1	84	6288	0	3	1	83
				2	8906	2	3	2	118	9476	2	3	2	125	9411	2	3	2	125
				2-BC	5121	0	3	1	68	5449	0	3	1	73	5412	0	3	1	62
				3	8941	1	3	2	118	9514	2	3	2	126	9449	2	3	2	126
				3-BC	5106	1	3	1	68	5433	1	3	2	72	5396	1	3	2	71
				4	9127	1	3	2	121	9712	1	3	2	128	9646	1	3	2	129
				4-BC	6588	0	3	2	87	7010	0	3	2	93	6962	0	3	2	92
				4W	8996	2	3	3	119	9573	2	3	3	127	9508	2	3	3	127
				4W-BC	5479	0	3	2	73	5830	1	3	2	78	5790	0	3	2	77
				5QM	9452	3	3	1	125	10058	3	3	1	133	9989	3	3	1	133
				5QN	9459	3	3	1	125	10066	3	3	1	133	9997	3	3	1	133
				5R	9464	3	3	3	125	10070	3	3	3	133	10001	3	3	3	133
				5W	9423	4	3	2	125	10027	4	3	2	133	9959	4	3	2	133
68L		80	HD Lens	3	8113	2	3	2	103	8633	2	3	2	109	8574	2	3	2	107
				5W	8304	2	3	2	105	8836	3	3	2	112	8925	3	3	2	112

Kim Lighting reserves the right to change specifications without notice.

© 2018 KIM LIGHTING | 17760 Rowland Street | City of Industry | CA 91748
P 626.968.5666 | F 626.369.2695 | www.kimlighting.com | Rev. Apr. 09, 2018

LUMINAIRE PERFORMANCE

LED #	Nominal Lumen Package	Nominal Published Wattage	Lens Options	Distribution	3000K					4000K					5000K				
					Lumen	BUG Rating			lm/w	Lumen	BUG Rating			lm/w	Lumen	BUG Rating			lm/w
						B	U	G			B	U	G			B	U	G	
56L	15,000	110	No Lens	FR	13991	1	3	1	129	14887	1	3	2	137	14785	1	3	2	134
				FR-BC	9076	1	3	1	84	9658	1	3	1	89	9592	1	3	1	FALSE
				2	13584	2	3	2	125	14455	2	3	2	133	14356	2	3	2	131
				2-BC	7812	1	3	2	72	8312	1	3	2	77	8255	1	3	2	76
				3	13639	2	3	3	126	14513	2	3	3	134	14414	2	3	3	131
				3-BC	7945	1	3	2	72	8454	1	3	2	77	8396	1	3	2	76
				4	13923	1	3	3	128	14815	1	3	3	137	14714	1	3	3	134
				4-BC	10049	1	3	2	93	10693	1	3	3	99	10620	1	3	3	98
				4W	13723	2	3	3	126	14603	2	3	3	135	14503	2	3	3	132
				4W-BC	8357	1	3	3	77	8892	1	3	3	82	8831	1	3	3	81
				5QM	14418	4	3	2	133	15342	4	3	2	141	15237	4	3	2	139
				5QN	14429	4	3	1	133	15354	4	3	1	141	15249	4	3	1	139
				5R	14436	4	3	4	133	15361	4	3	4	142	15256	4	3	4	139
				5W	14374	4	3	3	132	15295	4	3	-1	141	15191	4	3	3	138
			Clear Lens	FR	13237	1	3	1	122	14085	1	3	1	130	13989	1	3	1	127
				FR-BC	9590	1	3	1	89	8587	1	3	1	79	9075	1	3	1	84
				2	12852	2	3	2	119	13676	2	3	2	127	13583	2	3	2	123
				2-BC	7391	1	3	1	68	7864	1	3	2	73	7811	1	3	2	72
				3	12904	2	3	3	119	13731	2	3	3	127	13637	2	3	3	124
				3-BC	7369	1	3	2	67	7841	1	3	2	71	7788	1	3	2	71
				4	13173	1	3	3	122	14017	1	3	3	130	13921	1	3	3	127
				4-BC	9507	1	3	2	88	10117	1	3	2	94	10048	1	3	2	FALSE
				4W	12984	2	3	3	120	13816	2	3	3	128	13721	2	3	3	125
				4W-BC	7907	1	3	3	73	8413	1	3	3	78	8356	1	3	3	77
				5QM	13641	3	3	2	126	14516	4	3	2	134	14416	4	3	2	131
				5QN	13652	3	3	1	126	14527	4	3	1	134	14427	4	3	1	131
				5R	13658	4	3	4	126	14533	4	3	4	134	14434	4	3	4	131
				5W	13600	4	3	2	126	14471	4	3	3	134	14372	4	3	3	131
68L		115	HD Lens	3	11961	2	3	2	105	12728	2	3	2	112	12641	2	3	2	110
				5W	12242	3	3	2	108	13027	3	3	2	115	12937	3	3	2	112

Kim Lighting reserves the right to change specifications without notice.

© 2018 KIM LIGHTING | 17760 Rowland Street | City of Industry | CA 91748
P 626.968.5666 | F 626.369.2695 | www.kimlighting.com | Rev. Apr. 09, 2018

LUMINAIRE PERFORMANCE

LED #	Nominal Lumen Package	Nominal Published Wattage	Lens Options	Distribution	3000K					4000K					5000K				
					Lumen	BUG Rating			lm/w	Lumen	BUG Rating			lm/w	Lumen	BUG Rating			lm/w
						B	U	G			B	U	G			B	U	G	
56L	17,000	140	No Lens	FR	15842	2	3	2	115	16858	2	3	2	122	16742	2	3	2	120
				FR-BC	10277	1	3	1	75	10936	1	3	1	79	10861	1	3	1	79
				2	15382	2	3	2	112	16368	2	3	2	119	16256	2	3	2	116
				2-BC	8846	1	3	2	64	9412	1	3	2	68	9348	1	3	2	68
				3	15444	2	3	3	112	16434	2	3	3	119	16321	2	3	3	117
				3-BC	8997	1	3	2	64	9573	1	3	2	68	9508	1	3	2	68
				4	15765	1	3	3	114	16776	1	3	4	122	16661	1	3	4	119
				4-BC	11379	1	3	3	83	12108	1	3	3	88	12025	1	3	3	87
				4W	15539	2	3	4	113	16535	3	3	4	120	16422	3	3	4	117
				4W-BC	9463	1	3	3	69	10069	1	3	3	73	10000	1	3	3	73
				5QM	16326	4	3	2	118	17373	4	3	2	126	17254	4	3	2	123
				5QN	16339	4	3	1	119	17386	4	3	1	126	17267	4	3	1	123
				5R	16346	4	3	4	119	17394	4	3	4	126	17275	4	3	4	123
				5W	16277	4	3	3	118	17320	4	3	3	126	17201	4	3	3	123
			Clear Lens	FR	15034	1	3	2	108	15997	2	3	2	115	15888	2	3	2	113
				FR-BC	9753	1	3	1	70	10378	1	3	1	75	10307	1	3	1	74
				2	14597	2	3	2	105	15533	2	3	2	112	15426	2	3	2	110
				2-BC	8932	1	3	2	64	8932	1	3	2	64	8871	1	3	2	64
				3	14656	2	3	3	106	15595	2	3	3	112	15489	2	3	3	111
				3BC	8370	1	3	2	60	8906	1	3	2	64	8845	1	3	2	63
				4	14961	1	3	3	108	15920	1	3	3	115	15811	1	3	3	113
				4-BC	10798	1	3	3	78	11490	1	3	3	83	11412	1	3	3	82
				4W	14746	2	3	3	106	15691	2	3	4	113	11677	2	3	4	83
				4W-BC	8980	1	3	3	65	9555	1	3	3	69	9490	1	3	3	68
				5QM	15493	4	3	2	112	16486	4	3	2	119	16373	4	3	2	117
				5QN	15505	4	3	1	112	16499	4	3	1	119	16386	4	3	1	117
				5R	15512	4	3	4	112	16506	4	3	4	119	16393	4	3	4	117
				5W	15446	4	3	3	111	16436	4	3	3	118	16323	4	3	3	117
68L		115	HD Lens	3	13679	2	3	3	92	14456	3	3	3	98	14357	3	3	3	96
				5W	14000	3	3	2	95	14795	3	3	2	100	14694	3	3	2	98

Electrical Characteristics												Dimming				
System Watts	Drive Current	Line Voltage		Amps AC						Min. Power Factor	Max THD (%)	Dimming Range	Source current out		Absolute voltage	
		VAC	Hz	120	208	240	277	347	480				Min	Max	Min	Max
25	298mA	120-480	50/60	0.21	0.12	0.10	0.09	0.07	0.05	>0.9	20	10% to 100%	0mA	1mA	0V	10V
30	298mA			0.25	0.14	0.13	0.11	0.09	0.06							
65	800mA			0.54	0.31	0.27	0.23	0.19	0.14							
70	700mA			0.58	0.34	0.29	0.25	0.20	0.15							
75	420mA			0.63	0.36	0.31	0.27	0.22	0.16							
80	350mA			0.67	0.38	0.33	0.29	0.23	0.17							
110	600mA			0.92	0.53	0.46	0.40	0.32	0.23							
115	500mA			0.96	0.55	0.48	0.42	0.33	0.24							
140	750mA			1.17	0.67	0.58	0.51	0.40	0.29							
150	625mA			1.25	0.72	0.63	0.54	0.43	0.31							

TM-21 LIFETIME CALCULATION

Projected Lumen Maintenance (25°C / 77°F)						
HOURS	0	25,000	36,000	50,000	100,000	Reported L70
Projected Lumen Maintenance	100%	97%	95%	93%	87%	> 60,000 hrs

Kim Lighting reserves the right to change specifications without notice.

© 2018 KIM LIGHTING | 17760 Rowland Street | City of Industry | CA 91748
P 626.968.5666 | F 626.369.2695 | www.kimlighting.com | Rev. Apr. 09, 2018

SPECIFICATIONS

Housing:

- Low copper aluminum alloy die-casting is designed as one-piece with internal cooling fins.
- Solid, cast aluminum wall creates a thermal barrier between the optical and electrical compartments.
- Molded silicone gasket throughout insures the sealing between the two compartments and provides ingress protection.
- Housing is designed with integral LED heat sink utilized for thermal transfer and for securing the location of each LED module.
- IK09 rated enclosure protects electrical equipment against external mechanical impacts.

Lens Frame:

- One-piece low copper aluminum alloy die-cast is secured to housing with 6 screws.

Backlight Control

- Optional Backlight Control on each LED module to completely control unwanted backlight.

Lens

One-piece flat glass lens slips secure with clips. Extra silicone gasketing is provided to retain a clear optical compartment.

Optical Module:

- LEDs shall be mounted to a metal printed circuit board assembly (MCPCB).
- Optical lenses shall be clear injection molded PMMA acrylic.
- Each MCPCB and optic shall be sealed to the diecast housing and sealed with a continuous one piece injection molded silicone rubber gasket.
- Patent Pending design of optical array shall independently shield each LED optic across the length of the aperture.
- Optional fixture finish optical surfaces shall not exceed BUG ratings of the standard white finish and shall be greater than or equal to the delivered lumens of the optional matte black optical surface finish.

Electrical Components

- Standard programmable driver allows for programmable drive current settings.
- Electrical components are stategically located in the driver gear compartment with a molded silicon grommet seal to provide separation from the optical chamber.
- Maximum lightning surge current 20KA with thermally protected varistor technology. Surge suppression is series circuited preventing total fixture failure. ANSI/IEEE C62.41 Category C High.
- Open circuit fault will turn off the luminaire in order to protect the sensitive electronics and acts as a signal for maintenance.
- Programmable Driver is rated for -40°C starting.
- "Thermal Shield", primary side, thermister provides protection for the sustainable life of electronic components.

Dimming:

- Dimming range from 100% to 10% through the use of the standard 0-10V interface on the programmable driver.
- Modular wiring harness in the service area provides user access to the dimming circuitry.
- Dimming circuitry compatible with 0-10V, user-defined control devices.
- Optional factory programmed dimming profile.

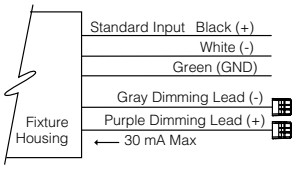

Fusing:

SF for 120, 277, and 347 Line volts

DF for 208, 240, and 480 Line volts

Hight temperature fuse holders factory installed inside the fixture housing.

Fuse is included.

Finish:

Fade and abrasion resistant, electrostatically applied, thermally cured, triglycidal isocyanurate (TGIC) polyester powdercoat.

Standard colors include (BL) Black, (DB) Dark Bronze, (GT) Graphite, (PS) Platinum Silver, (LG) Light Gray, (TT) Titanium, (WH) White, and (CC) Custom Color (Include RAL#).

Certifications and Listings:

- IUL 1598 Standard for Luminaires.
- IUL 8750 Standard for Safety for Light
- IEmitting Diode (LED) Equipment for use in Lighting Products.
- ICSA C22.2#250.0 Luminaires.
- ANSI C136.31-2010 Vibration tested and compliant 3.0 G Test Level 2 – Bridge/Overpass Applications
- IIP66 rated luminaire.
- IRoHS compliant.
- IIP66 rated.
- IIEC 66262 Mechanical Impact Code IK09.
- IDA approved, 3000K and warmer CCTs only.

CAUTION:

Fixtures must be grounded in accordance with national, state and/or local electrical codes. Failure to do so may result in serious personal injury.

WARRANTY:

For full warranty see: http://www.hubbelllighting.com/resources/warranty

Kim Lighting reserves the right to change specifications without notice.

© 2018 KIM LIGHTING | 17760 Rowland Street | City of Industry | CA 91748
P 626.968.5666 | F 626.369.2695 | www.kimlighting.com | Rev. Apr. 09, 2018

Project: Sixth Street PARC Viaduct

Date: July 25,2019
Submittal:90% Issuance

Type: XF1/XF2

HLB Project #: 16165

APPENDIX B: LIGHTING CUTSHEETS Note: This document is for information only. Refer to specifications for all catalog numbers, etc.

CONTROLS

Photocell Receptacle

7PR

Fully gasketed and wired 7-pin receptacle option. Easy access location above the electrical compartment. 7-pin construction allows for a user-defined interface and provides a controlled definition of operational performance. ANSI twist-lock control module by-others.

Standard customer operation modes:

1. Traditional on/off photoelectric control.
2. 5-pin wireless photoelectric control for added dimming feature.
3. 7-pin wireless photoelectric control for dimming and additional I/O connections for customer use.

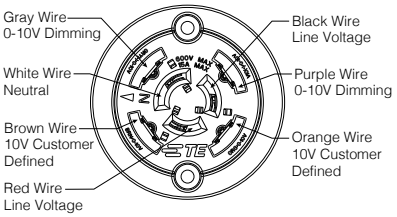

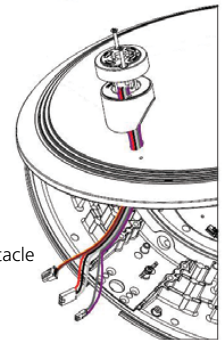

7-Pin receptacle placement

Wireless Controls

wiSCAPE™

Hubbell Control Solution's wiSCAPE™ On-Fixture Module is a bi-directional wireless RF device that allows an individual fixture to be managed, monitored and metered. The wiSCAPE In-Fixture Module communicates wirelessly over a robust 2.4GHz ISM (Industrial, Scientific and Medical) certified meshed radio signal. The wiSCAPE Fixture Module drastically simplifies control and automation of projects, especially in retrofit environments, and challenges the legacy world of wired-systems. wiSCAPE wireless control technology easily adapts to complex automation situations for quick, simple and economical commissioning. The On-Fixture Module is compatible with 7PR option.

SiteSync™[1]

SiteSync™ wireless control system for reduction in energy and maintenance cost while optimizing light quality 24/7. See ordering information or visit www.hubbelllighting.com/products/sitesync for more details.

Pole Mounted

Round Pole-Mounted Occupancy Sensor up to 16'

SCL-R

Round Pole-Mounted Occupancy Sensor up to 16' - an outdoor occupancy sensor with 0-10V interface dimming control that mounts directly to the pole. Wide 360° pattern. Module colors are available in Black, Gray, and White. Module is cut for round pole mounting. Pole diameter is needed upon order. Poles to be drilled in the field will be provided with installation instructions.

Ordering Example: SCL-R44/277[2]/BL[3]

Square Pole-Mounted Occupancy Sensor up to 16'

SCL-S

Square Pole-Mounted Occupancy Sensor up to 16' - an outdoor occupancy sensor with 0-10V interface dimming control that mounts directly to the pole. Wide 360° pattern. Module colors are available in Black, Gray, and White. Module is cut for square pole mounting. Pole diameter is needed upon order. Poles to be drilled in the field will be provided with installation instructions.

Ordering Example: SCL-L/277[2]/BL[3]

Round Pole-Mounted Occupancy Sensor 16' to 30'

SCH-R

Round Pole-Mounted Occupancy Sensor: 16' to 30' - an outdoor occupancy sensor with 0-10V interface dimming control that mounts directly to the pole. Wide 360° pattern. Module colors are available in Black, Gray, and White. Module is cut for round pole mounting. Pole diameter is needed upon order. Poles to be drilled in the field will be provided with installation instructions.

Ordering Example: SCH-R4[4]/277[2]/BL[3]

Square Pole-Mounted Occupancy Sensor 16' to 30'

SCH-S

Square Pole-Mounted Occupancy Sensor: 16 to 30' - an outdoor occupancy sensor with 0-10V interface dimming control that mounts directly to the pole. Wide 360° pattern. Module colors are available in Black, Gray, and White. Module is cut for round pole mounting. Pole diameter is needed upon order. Poles to be drilled in the field will be provided with installation instructions.

Ordering Example: SCH-S/277[2]/BL[3]

AstroDIM

AstroDIM provides multi-stage night-time power reduction based on an internal timer referenced to the power on/off time. There is no need for an external control infrastructure. The unit automatically performs a dimming profile based on the predefined scheduled reference to the midpoint, which is calculated based on the power on/off times.

[1]PRECOMMISSIONED SITESYNC ORDERING INFORMATION: When ordering a fixture with the SiteSync lighting control option, additional information will be required to complete the order. The SiteSync Commissioning Form or alternate schedule information must be completed. This form includes Project location, Group information, and Operating schedules. For more detailed information please visit www.HubbellLighting.com/products/sitesync or contact Hubbell Lighting tech support at (800) 345-4928.

SiteSync fixtures with occupancy sensor (SWPM) require the mounting height of the fixture for selection of the lens.

Examples:

SiteSync only : UR20/56L-75/3K7/UNV/ASQ/BL/SWP

SiteSync with Motion Control: UR20/56L-75/3K7/UNV/ASQ/BL/SWPM-40F

[2]Voltage, [3]Color, [4]Pole Diameter,

Kim Lighting reserves the right to change specifications without notice.

KIM LIGHTING

LTRA
Round Aluminum Tapered Pole
revision 10/8/15 • kl_ltra_spec.pdf

Type:
Job:
Catalog number:

	/	/	/
Pole	Mounting	Structural Luminaire Option	Finish
See page 2		See page 3	

Approvals:

Date:
Page: 1 of 4

Specifications

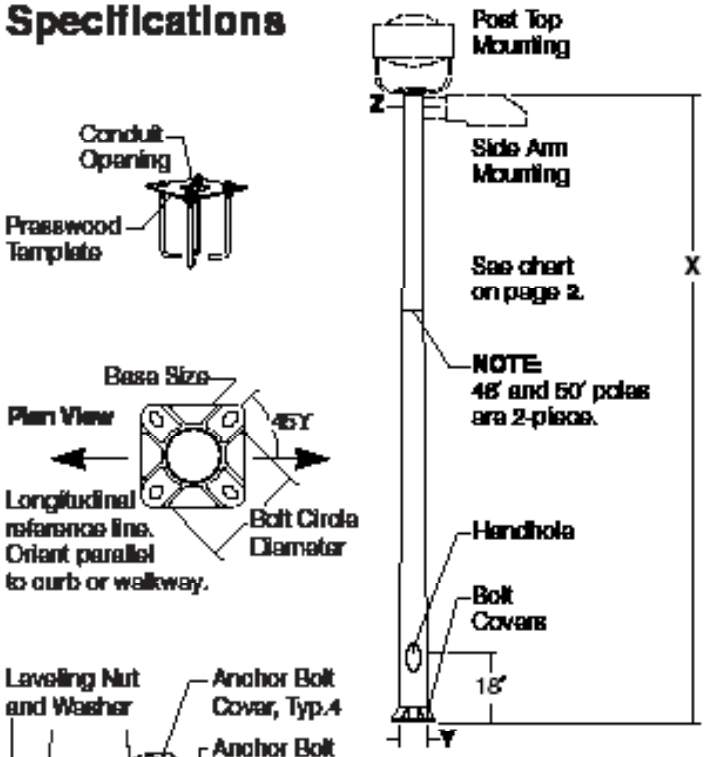

Pole Construction: Tapered by spinning and coldworking a seamless one-piece extruded tube of aluminum alloy 6063-T4. After tapering, shaft is welded to a cast aluminum anchor base of alloy A356, heat-treated to T-6 temper, and rotary sand finished. Poles above 39' include a flush field joint approximately 26½' above base, with both sections taper spun.

Bolt Covers: Cast aluminum anchor bolt covers included.

Pole Cap: A flush-sided cast aluminum pole cap is provided for side arm mounted luminaires.

Handhole: Reinforced handhole with a gasketed cover and grounding provisions provided, 18" up from base. Cover mounts flush.

Anchor Bolts: Four galvanized anchor bolts provided, complete with eight nuts, eight flat washers, and a pressewood template.

Vibration Dampener: Poles 20' and above include a mechanically fastened internal pendulum vibration dampener.

Strength: Poles will withstand wind loads as listed in chart (see page 2) when luminaires are mounted per fixture installation instructions.

Finish: Super TGIC thermoset polyester powder coat paint applied over a titanated zirconium conversion coating. Standard colors are Black, Dark Bronze, Light Gray, Graphite Platinum Silver, Titanium and White. Custom colors are available.

CAUTION: Installation of poles without luminaire(s) will compromise pole strength. Any accessories attached to pole, or other modifications will compromise pole strength and may result in pole failure.

Maintenance: A regularly scheduled maintenance program must be established to insure the protective paint coating is intact, corrosion or structural damage has not occurred, and anchor bolt nuts are tight. Failure to do so could lead to pole collapse and serious personal injury.

Certification: Certified UL 1598 in accordance with Article 410 of ANSI NFPA 70, National Electrical Code. Complies with the CSA standard. Note: If a UL or CSA label is required, a request must be made at time of order.

© 2015 KIM LIGHTING • 10555 EAST GALE AVENUE, CITY OF INDUSTRY, CA 91745-1788 • TEL: 626/968-5666 • FAX: 626/968-5716

Standard Features

NOTE: All allowable pole and fixture EPAs are derived from the AASHTO standard. Responsibility lies with the specifier for correct pole selection based on local codes and standards for the job location. (See page 4).

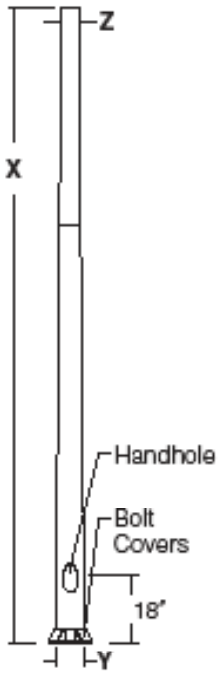

Pole Catalog Number	X	Y	Z	Allowable Pole EPA 80	90	100	110	120	130	140	Wind Map Steady Wind ↓ 150
☐ LTRA16-6186	16'	6" x .156	4"	21.80	19.36	17.93	14.70	12.26	10.30	8.67	7.36
☐ LTRA16-6188	16'	6" x .188	4"	26.32	23.38	21.64	17.77	14.83	12.49	10.56	9.01
☐ LTRA20-6186	20'	5" x .156	3"	9.67	8.51	7.98	6.45	5.30	4.42	3.73	3.18
☐ LTRA20-6188	20'	5" x .188	3"	12.01	10.59	9.89	8.03	6.63	5.55	4.70	4.03
☐ LTRA20-6186	20'	6" x .156	4"	15.75	13.94	12.96	10.58	8.77	7.30	6.04	5.03
☐ LTRA20-6188	20'	6" x .188	4"	19.23	17.04	15.82	12.94	10.76	8.99	7.50	6.30
☐ LTRA25-6186	25'	6" x .156	4"	10.73	9.44	8.85	7.15	5.88	4.79	3.84	3.06
☐ LTRA25-6188	25'	6" x .188	4"	13.39	11.82	11.04	8.96	7.39	6.08	4.95	4.03
☐ LTRA25-7186	25'	7" x .156	4"	16.32	14.43	13.44	10.95	8.85	7.19	5.88	4.81
☐ LTRA25-8186	25'	8" x .156	4½"	22.70	20.13	18.60	14.90	12.10	9.90	8.17	6.77
☐ LTRA30-7186	30'	7" x .156	4"	11.90	10.47	9.81	7.93	6.26	4.93	3.87	3.02
☐ LTRA30-8186	30'	8" x .156	4½"	17.06	15.09	13.96	11.00	8.75	6.99	5.60	4.48
☐ LTRA30-8188	30'	8" x .188	4½"	21.03	18.62	17.31	13.69	11.01	8.92	7.26	5.92
☐ LTRA30-8250	30'	8" x .250	4½"	28.43	25.23	23.30	18.72	15.23	12.52	10.36	8.63
☐ LTRA35-8186	35'	8" x .156	4½"	13.01	11.45	10.63	8.17	6.30	4.84	3.69	2.75
☐ LTRA35-8188	35'	8" x .188	4½"	16.30	14.38	13.33	10.40	8.17	6.44	5.06	3.95
☐ LTRA35-8250	35'	8" x .250	4½"	22.44	19.86	18.37	14.57	11.68	9.42	7.64	6.20
☐ LTRA35-10188	35'	10" x .188	6"	28.03	24.51	22.20	17.56	14.03	11.29	9.11	7.35
☐ LTRA39-8188	39'	8" x .188	4½"	13.29	11.68	10.85	8.28	6.33	4.81	3.60	2.63
☐ LTRA39-8250	39'	8" x .250	4½"	18.68	16.49	15.28	11.94	9.40	7.43	5.86	4.60
☐ LTRA39-10188	39'	10" x .188	6"	23.51	20.43	18.40	14.33	11.23	8.82	6.91	5.37
☐ LTRA39-10250	39'	10" x .250	6"	32.23	28.20	25.56	20.25	16.20	13.06	10.56	8.55
☐ LTRA46-10250	46'	10" x .250	6"	22.78	19.65	17.59	13.46	10.31	7.87	5.93	4.36
☐ LTRA50-10250	50'	10" x .250	6"	15.85	13.44	9.65	6.85	4.72	3.07	1.75	—

46' and 50' poles are 2-piece assemblies

Anchor Base and Bolt Detail

Pole Height	Y Pole Diameter	Bolt Circle DIA	Anchor Bolt Projection	Anchor Bolts Size	Base Size	Conduit Opening
20'	5"	9½"	3¼"	¾" x 30" + 4"	9¼" sq.	4½" DIA
16'-25'	6"	9½"	3¼"	¾" x 30" + 4"	10¼" sq.	5" DIA
25'-30'	7"	11"	3½"	1" x 36" + 4"	10¾" sq.	6½" DIA
25'-39'	8"	11½"	3½"	1" x 36" + 4"	11⅝" sq.	7½" DIA
35'-46'	10"	14¾"	4¾"	1" x 48" + 4"	14½" sq.	9½" DIA
50'	10"	14¾"	4¾"	1¼" x 42" + 6"	14½" sq.	9½" DIA

© 2015 KIM LIGHTING • 16555 EAST GALE AVENUE, CITY OF INDUSTRY, CA 91745-1788 • TEL: 626/968-5666 • FAX: 626/968-5716

Standard Features

Mounting

Flush Mount | Side Arm

Plan Views:



Mounting[1]: ☐FM ☐A ☐BA ☐B ☐BB ☐L ☐BL ☐T ☐BT ☐Y ☐BY ☐C ☐BC

NOTE: Allowable Pole EPA for jobsite wind conditions must be equal to or greater than fixture mount EPA. Please refer to Kim luminaire catalog for specific fixture.

[1]See luminaire drilling requirements in luminaire catalog.)

Structural Luminaires Only - Examples

☐ TS: Single Tension for small and large Structural - LTRA20-5156B-TS
☐ TD: Double Tension for small and large Structural - LTRA20-5156B-TD
☐ TR: Truss for small and large Structural - LTRA20-5156B-TR
☐ XTS: Single Tension for 1000W Structural - LTRA20-5156B-XTS
☐ XTD: Double Tension for 1000W Structural - LTRA20-5156B-XTD
☐ XTR: Truss for 1000W Structural - LTRA20-5156B-XTR

Finish

Standard thermoset polyester powder coat paint over titanated zirconium conversion coating.[2]

Color:	Black	Dark Bronze	Light Gray	Graphite	Platinum Silver	Titanium	White	Custom Color[1]
Cat. No.:	☐BL	☐DB	☐LG	☐GT	☐PS ☐	☐TT	☐WH	☐CC

[1]Custom color subject to additional charges, minimum quantities and extended lead times. Consult representative. Custom color description: _____

© 2015 KIM LIGHTING • 10555 EAST GALE AVENUE, CITY OF INDUSTRY, CA 91745-1788 • TEL: 626/968-5666 • FAX: 626/968-5716

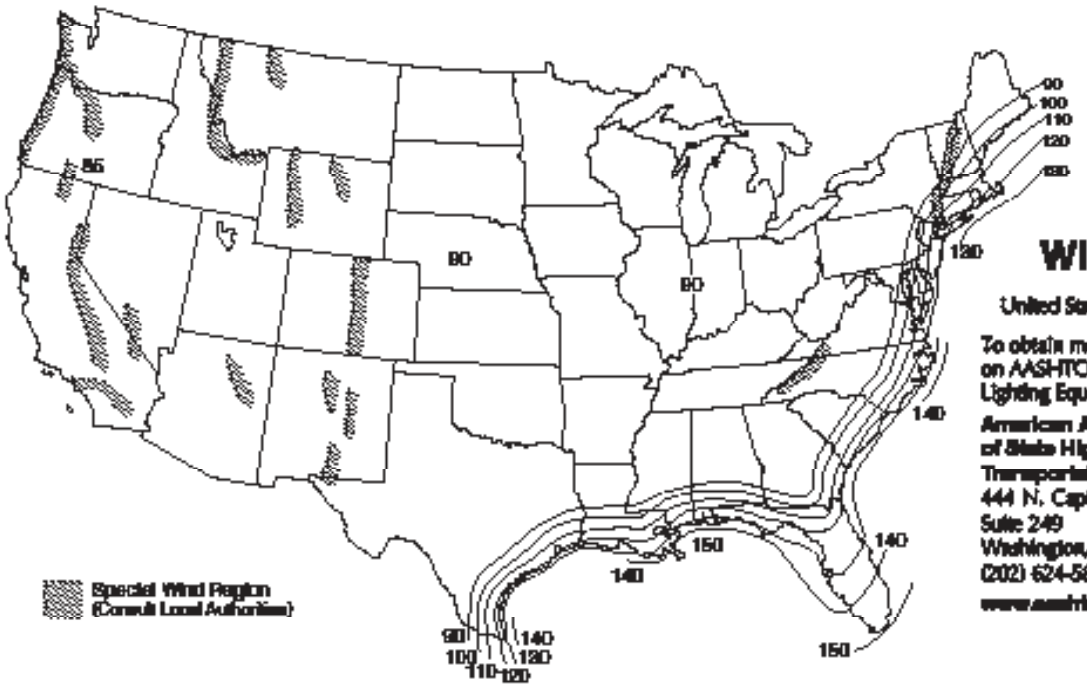

Wind Map

United States and Canada

To obtain more information on AASHTO Standards for Lighting Equipment contact:

American Association of State Highway and Transportation Officials:
444 N. Capitol Street, NW,
Suite 249
Washington, DC 20001
(202) 624-5800
www.aashto.org

NOTES:

- Values are based on 50 year mean recurrence interval 30' above grade.
- Hawaii has an 105 mph wind velocity.
- Puerto Rico has a 128 mph wind velocity.
- Caution must be exercised in determining wind velocities in special wind areas such as:

  Mountainous Regions

  Areas surrounding the Great Lakes or other large bodies of water or open land.

  Areas subject to extreme wind conditions, such as hurricanes, typhoons, cyclones, and tornadoes.

  Areas adjacent to airports.

  Any specific area with a known or suspected abnormally high intermittent wind condition caused by geography, adjacent structures, or other specific local conditions that may not be recorded in National Weather Service records.
- Allowable pole EPA for jobsite wind conditions must be equal to or greater than fixture EPA. Responsibility lies with the specifier for correct pole selection based on AASHTO wind map and job location.
- The Wind Map is intended only as a general guide. Always consult local authorities to determine maximum wind velocities, gusting and unique wind conditions for each specific application.
- **CAUTION:** Wind speeds and listed EPAs are for ground mounted installations. Poles mounted on structures (such as bridges and buildings) must consider vibration and coefficient of height factors beyond this general guide. Consult AASHTO standards.
- Extreme Wind Events: Hurricanes, Typhoons, Cyclones, or Tornadoes expose poles to flying debris, wind shear, and other unpredictable aerodynamic forces not indicated by the wind velocity ratings.
- Pole Strength Limited Warranty: Standard, unmodified Kim lighting Poles installed as recommended, undamaged by corrosion, or lack of maintenance, shall withstand steady wind conditions as provided on page 2 (Allowable Pole EPA). Installation of poles without luminaires, or attachment of any unauthorized accessories to poles shall void this warranty.

© 2015 KIM LIGHTING • 16555 EAST GALE AVENUE, CITY OF INDUSTRY, CA 91745-1788 • TEL: 626/968-5666 • FAX: 626/968-5716

Application
LED performance floodlights with 1/2" I.P.S. nipple for mounting to BEGA mounting accessories and wide beam light distribution designed for use in illuminating landscaping, facades, flag poles, trees and signage.

Materials
Luminaire housing and canopy constructed of die-cast marine grade, copper free (≤ 0.3% copper content) A360.0 aluminum alloy
1/2" I.P.S. threaded nipple constructed of 316 grade stainless steel
Clear safety glass
Reflector surface made of pure anodized aluminum
Silicone optical collimating lens
Silicone applied robotically to casting, plasma treated for increased adhesion
High temperature silicone gasket
Mechanically captive stainless steel fasteners

NRTL listed to North American Standards, suitable for wet locations
Protection class IP 65
Effective projection area: 0.3 sq. ft.
Weight: 5.3 lbs

Electrical

Operating voltage	120-277V AC
Minimum start temperature	-30° C
LED module wattage	37.5 W
System wattage	42.0 W
Controllability	0-10V dimmable
Color rendering index	Ra > 90
Luminaire lumens	3,916 lumens (4000K)
Lifetime at Ta = 15° C	320,000 h (L70)
Lifetime at Ta = 30° C	220,000 h (L70)

LED color temperature

☐ 4000K - Product number + **K4**
☐ 3500K - Product number + **K35**
☐ 3000K - Product number + **K3**
☐ 2700K - Product number + **K27**

BEGA can supply you with suitable LED replacement modules for up to 20 years after the purchase of LED luminaires - see website for details

Finish
All BEGA standard finishes are matte, textured polyester powder coat with minimum 3 mil thickness.

Available colors ☐ Black (BLK) ☐ White (WHT) ☐ RAL:
☐ Bronze (BRZ) ☐ Silver (SLV) ☐ CUS:

Type:
BEGA Product:
Project:
Modified:

Available Accessories

☐ **71 113** Elliptical spread lens
☐ **71 111** 180° glare shield
☐ **71 112** Concentric ring louver

Mounting options

☐ **70 379** Pole mount arm
☐ **70 252** Wood screw
☐ **70 204** Earth spike
☐ **70 889** Tree strap
☐ **79 511** Mounting block
☐ **70 280** Tube clamp
☐ **70 283** Screw clamp
☐ **19 593** Surface mount wiring box
☐ **19 594** Direct burial wiring box
☐ **70 249** Pole cap - for 3" O.D. poles

See individual accessory spec sheet for details.

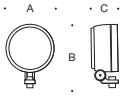



LED performance floodlight · wide beam distribution

	LED	β	A	B	C
84 528	37.5 W	58°	6 7/8	10	3 7/8

β = Beam angle

BEGA 1000 BEGA Way, Carpinteria, CA 93013 (805) 684-0533 info@bega-us.com

Due to the dynamic nature of lighting products and the associated technologies, luminaire data on this sheet is subject to change at the discretion of BEGA North America. For the most current technical data, please refer to bega-us.com
© copyright BEGA 2018 Updated 06/19/18

Type:
Project:
Options:
Modified:
Luminaire:
Fixture EPA:
Optional Tenon: ☐ 2⅜"ϕ x 3½" H
GCO: ☐
GFI: ☐

Approval:

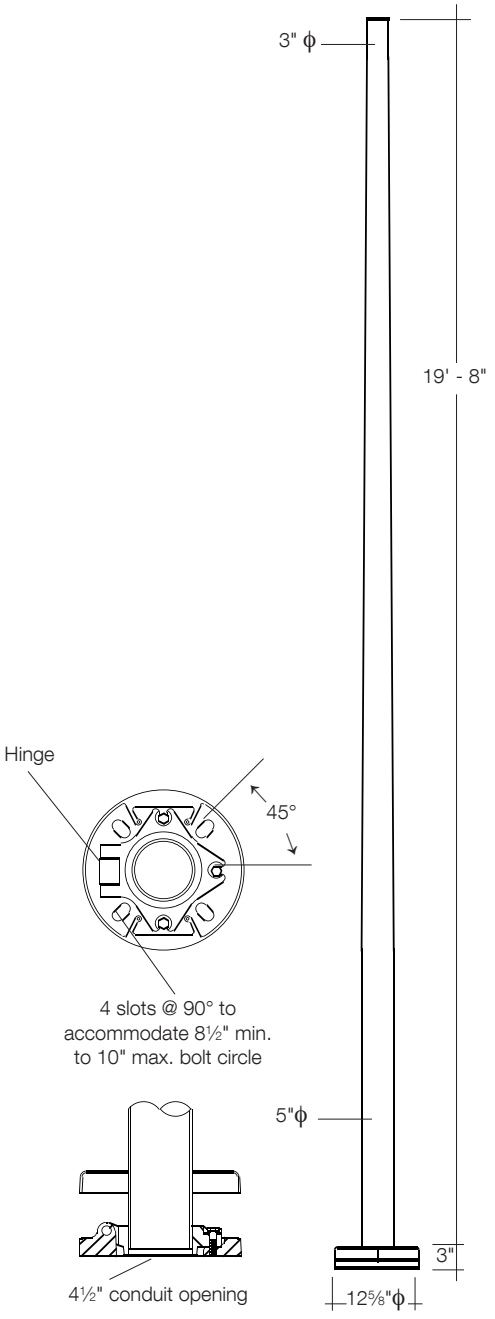

1908HR 3" - 5" Tapered round hinged pole

Shaft: Extruded from all new seamless 6063 aluminum alloy tubing, heat treated to a T-6 condition.

Anchor base: Round cast aluminum A356 alloy, heat treated to a T-6 condition. Anchor base and shaft continuously welded at the outside top and inside bottom of the anchor base casting. Pole base to be round hinged two piece casting. Hinge Pole shaft to be welded to upper base casting which is secured to lower base casting by three (3) stainless steel bolts. Bolts to be fastened to cast-in stainless threaded inserts in lower casting. Cast round two piece base cover supplied with pole.

Anchor bolts: Four (4) ¾" x 17" galvanized steel anchor bolts supplied with double nuts and flat washers. Maximum bolt projection 3½". For luminaires requiring threaded inserts and pole cap -specify: 1D (single); 2D (2@ 180°); 3D (3 @ 120°).

GCO or GFI: Standard GCO/GFI location is opposite the hinge. Height above base for ballast in luminaires is 18". For single luminaires with a pole base mounted (PBM) ballast the minimum height is 24" and 42" minimum for double PBM luminaires.

Weight: 87.0 lbs.

Disclaimer

BEGA-US warrants the specific anchor bolts and pole combination according to the product number(s) and description(s) indicated on this submittal sheet. Structural changes to the pole requested by the customer, including changes to pole length, may affect the compatibility of the anchor bolts and corresponding poles. BEGA-US is not responsible for the incompatibility of the anchor bolts and poles resulting from such structural changes without review by the BEGA-US engineering department. This includes, but is not limited to, any labor charges, charges for replacement materials and shipping.

Pole wind load rating:

MPH:	70	80	90	100	120
EPA:	10.7	7.5	5.3	3.9	2.3

Note: Data above assumes grade level installation and a maximum luminaire weight of 75 lbs.

Type:
Project:
Options:
Modified:
Luminaire:
Fixture EPA:
Optional Tenon: ☐ 2⅜"ϕ x 3½" H
GCO: ☐
GFI: ☐

Approval:

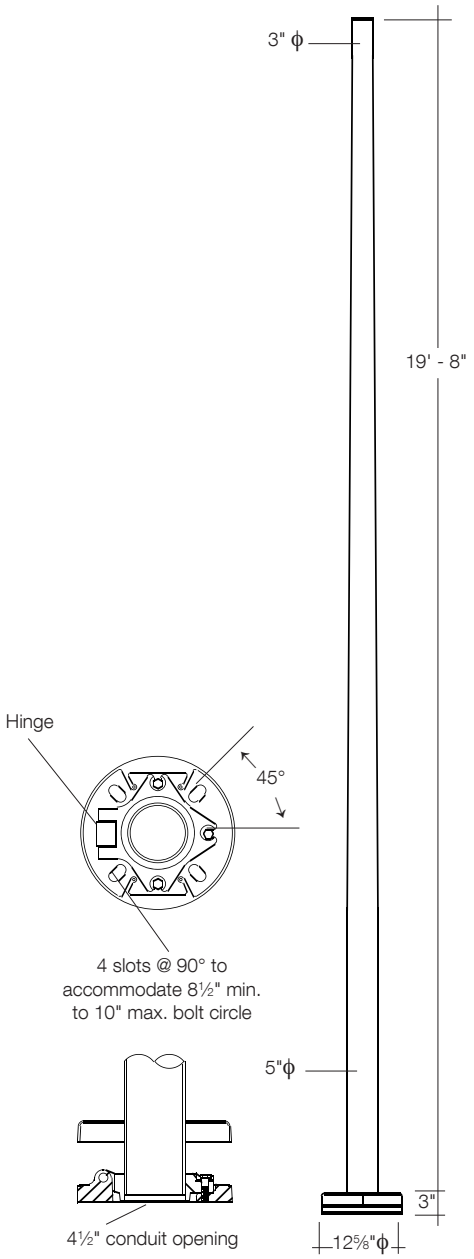

1908HR 3" - 5" Tapered round hinged pole

Shaft: Extruded from all new seamless 6063 aluminum alloy tubing, heat treated to a T-6 condition.

Anchor base: Round cast aluminum A356 alloy, heat treated to a T-6 condition. Anchor base and shaft continuously welded at the outside top and inside bottom of the anchor base casting. Pole base to be round hinged two piece casting. Hinge Pole shaft to be welded to upper base casting which is secured to lower base casting by three (3) stainless steel bolts. Bolts to be fastened to cast-in stainless threaded inserts in lower casting. Cast round two piece base cover supplied with pole.

Anchor bolts: Four (4) ¾" x 17" galvanized steel anchor bolts supplied with double nuts and flat washers. Maximum bolt projection 3½". For luminaires requiring threaded inserts and pole cap -specify: 1D (single); 2D (2@ 180°); 3D (3 @ 120°).

GCO or GFI: Standard GCO/GFI location is opposite the hinge. Height above base for ballast in luminaires is 18". For single luminaires with a pole base mounted (PBM) ballast the minimum height is 24" and 42" minimum for double PBM luminaires.

Weight: 87.0 lbs.

Disclaimer

BEGA-US warrants the specific anchor bolts and pole combination according to the product number(s) and description(s) indicated on this submittal sheet. Structural changes to the pole requested by the customer, including changes to pole length, may affect the compatibility of the anchor bolts and corresponding poles. BEGA-US is not responsible for the incompatibility of the anchor bolts and poles resulting from such structural changes without review by the BEGA-US engineering department. This includes, but is not limited to, any labor charges, charges for replacement materials and shipping.

Pole wind load rating:

MPH:	70	80	90	100	120
EPA:	10.7	7.5	5.3	3.9	2.3

Note: Data above assumes grade level installation and a maximum luminaire weight of 75 lbs.

BEGA-US 1000 BEGA Way, Carpinteria, CA 93013 [P] 805·684·0533 [F] 805·684·6682

©copyright BEGA-US 2015 Updated 04/15

Type:
Project:
Options:
Modified:
Luminaire:
Fixture EPA:
Optional Tenon: ☐ 2⅜"ϕ x 3½" H
GCO: ☐
GFI: ☐

Approval:

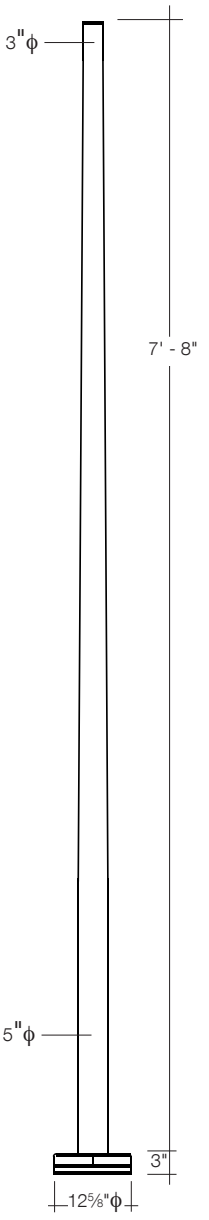

0708HR 3" - 5" Tapered round hinged pole

Shaft: Extruded from all new seamless 6063 aluminum alloy tubing, heat treated to a T-6 condition.

Anchor base: Round cast aluminum A356 alloy, heat treated to a T-6 condition. Anchor base and shaft continuously welded at the outside top and inside bottom of the anchor base casting. Pole base to be round hinged two piece casting. Hinge Pole shaft to be welded to upper base casting which is secured to lower base casting by three (3) stainless steel bolts. Bolts to be fastened to cast-in stainless threaded inserts in lower casting. Cast round two piece base cover supplied with pole.

Anchor bolts: Four (4) ¾" x 17" galvanized steel anchor bolts supplied with double nuts and flat washers. Maximum bolt projection 3½". For luminaires requiring threaded inserts and pole cap - specify: 1D (single); 2D (2@ 180°); 3D (3 @ 120°).

GCO or GFI: Standard GCO/GFI location is opposite the hinge. Height above base for ballast in luminaires is 18". For single luminaires with a pole base mounted (PBM) ballast the minimum height is 24" and 42" minimum for double PBM luminaires.

Weight: 39.0 lbs.

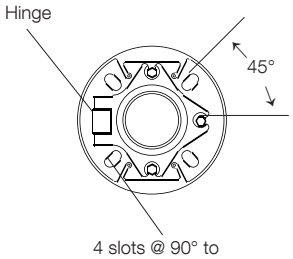

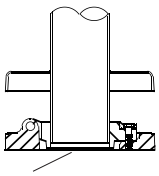

Disclaimer

BEGA-US warrants the specific anchor bolts and pole combination according to the product number(s) and description(s) indicated on this submittal sheet. Structural changes to the pole requested by the customer, including changes to pole length, may affect the compatibility of the anchor bolts and corresponding poles. BEGA-US is not responsible for the incompatibility of the anchor bolts and poles resulting from such structural changes without review by the BEGA-US engineering department. This includes, but is not limited to, any labor charges, charges for replacement materials and shipping.

Pole wind load rating:

MPH:	70	80	90	100	120
EPA:	22.7	16.9	12.9	10.6	6.6

Note: Data above assumes grade level installation and a maximum luminaire weight of 50 lbs.

BEGA-US 1000 BEGA Way, Carpinteria, CA 93013 [P] 805·684·0533 [F] 805·684·6682

©copyright BEGA-US 2015 Updated 04/15

Type:
Project:
Options:
Modified:
Luminaire:
Fixture EPA:
Optional Tenon: ☐ 2⅜"ϕ x 3½" H
GCO: ☐
GFI: ☐

Approval:

0708HR 3" - 5" Tapered round hinged pole

Shaft: Extruded from all new seamless 6063 aluminum alloy tubing, heat treated to a T-6 condition.

Anchor base: Round cast aluminum A356 alloy, heat treated to a T-6 condition. Anchor base and shaft continuously welded at the outside top and inside bottom of the anchor base casting. Pole base to be round hinged two piece casting. Hinge Pole shaft to be welded to upper base casting which is secured to lower base casting by three (3) stainless steel bolts. Bolts to be fastened to cast-in stainless threaded inserts in lower casting. Cast round two piece base cover supplied with pole.

Anchor bolts: Four (4) ¾" x 17" galvanized steel anchor bolts supplied with double nuts and flat washers. Maximum bolt projection 3½". For luminaires requiring threaded inserts and pole cap - specify: 1D (single); 2D (2@ 180°); 3D (3 @ 120°).

GCO or GFI: Standard GCO/GFI location is opposite the hinge. Height above base for ballast in luminaires is 18". For single luminaires with a pole base mounted (PBM) ballast the minimum height is 24" and 42" minimum for double PBM luminaires.

Weight: 39.0 lbs.

Disclaimer

BEGA-US warrants the specific anchor bolts and pole combination according to the product number(s) and description(s) indicated on this submittal sheet. Structural changes to the pole requested by the customer, including changes to pole length, may affect the compatibility of the anchor bolts and corresponding poles. BEGA-US is not responsible for the incompatibility of the anchor bolts and poles resulting from such structural changes without review by the BEGA-US engineering department. This includes, but is not limited to, any labor charges, charges for replacement materials and shipping.

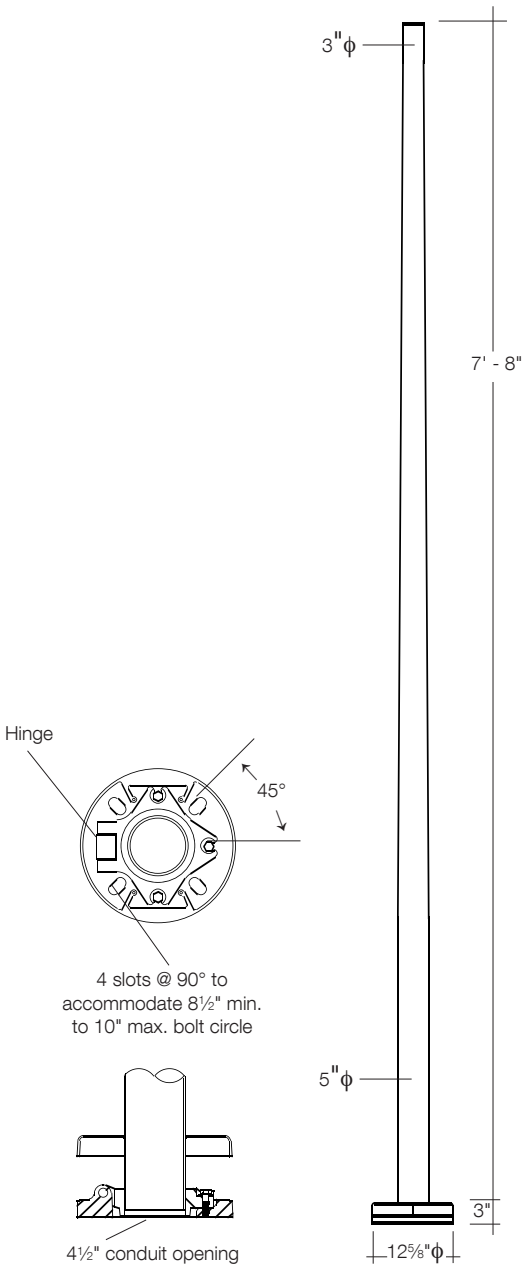

Pole wind load rating:

MPH:	70	80	90	100	120
EPA:	22.7	16.9	12.9	10.6	6.6

Note: Data above assumes grade level installation and a maximum luminaire weight of 50 lbs.

BEGA-US 1000 BEGA Way, Carpinteria, CA 93013 [P] 805·684·0533 [F] 805·684·6682

©copyright BEGA-US 2015 Updated 04/15



W6300 SERIES

Submersible Linear
Suitable for wet or dry

LED

CATALOG NUMBER	
NOTES	
TYPE	

Dimensions

L (SCF):	12"	16-11/32" (415mm)
	18"	22-11/32" (567mm)
	24"	28-11/32" (720mm)
	30"	34-11/32" (872mm)
	36"	40-11/32" (1025mm)
	42"	46-11/32" (1177mm)
	48"	52-11/32" (1329mm)
W:		1-3/4" (44mm)
H:	A3	3-7/8" (76mm)
	A6	6-7/8" (175mm)
	A9	9-7/8" (251mm)

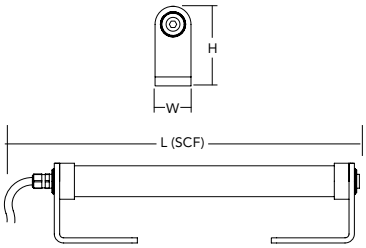

DESCRIPTION

The W6300 series is designed to be the most powerful, reliable, and easiest to implement linear submersible solution available. The W6300 is suitable for installation up to 9 feet (3m) deep in fountains and other water containing vessels not intended to accommodate the partial or complete immersion of persons. The W6300 utilizes Nichia white LEDs in five standard color temperatures and operates on 24VAC using magnetic transformers which can be dimmed with commonly available low voltage magnetic dimming equipment. Available in two beam spreads, narrow flood (30°) and very wide flood (140°), with an unique 1-piece adjustable mount allowing for 360 degree rotation.

ORDERING INFORMATION

EXAMPLE: W6312 LED 30MA 27K 24 NFL A3 SCF CSL10 LP

Series		Source		Drive Current		Color Temperature		Voltage		Distribution	
W6312	Submersible, Linear - 12"	**LED**	LED light source	**30MA**	30mA rms current	**27K**	2700K CCT	**24**	24 Volt ac	**NFL**	Narrow Flood
W6318	Submersible, Linear - 18"			**60MA**	60mA rms current	**30K**	3000K CCT			**VWFL**	Very Wide Flood
W6324	Submersible, Linear - 24"			**120MA**	120mA rms current	**35K**	3500K CCT				
W6330	Submersible, Linear - 30"					**40K**	4000K CCT				
W6336	Submersible, Linear - 36"					**50K**	5000K CCT				
W6342	Submersible, Linear - 42"										
W6348	Submersible, Linear - 48"										

Mounting		Conduit Option		Cord Set Length		Lamped	
A3	Mounting Bracket - 3"	**SCF**	Cord Feed Straight	**CSL _ _**	Cord Length Available from 10ft to 120ft in 5ft Increments	**LP**	Lamp Installed
A6	Mounting Bracket - 6"						
A9	Mounting Bracket - 9"						

Length	LED Amperage	Rated Watt
12"	30mA	2.5
	60mA	5
	120mA	10

Recommeded transformer is the T1906.

HYDREL

9144 Deering Avenue, Second Floor • Chatsworth, CA 91311
Phone: 866.533.9901 • www.hydrel.com

©2014-2017 Acuity Brands Lighting, Inc.
Rev. 11/29/17
W6300

winonaLED Project: _____ Qty: _____ Type:

TQD Dimming Transformer - 277V

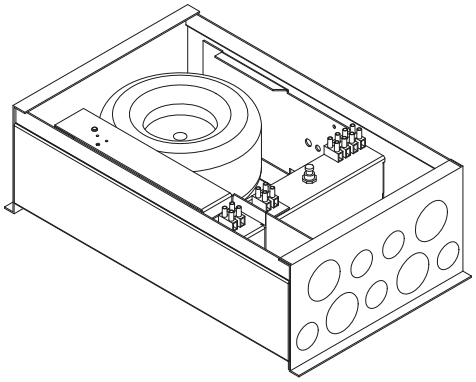

series

TQD150 — 150W, 5A @ 24VAC
TQD300 — 300W, 10A @ 24VAC
TQD500 — 500W, 16.67A @24VAC

277

primary voltage

277 — 277 Volt Primary

The **TQD Dimming Transformer** is a self-contained power source for Winline 24VAC Linear LED products that allows smooth continuous dimming to 1%. The TQD also provides smooth, continuous dimming in electronically noisy powerline environments.

Power: Available in 150VA, 300VA, and 500VA sizes. Primary voltage is 277V only. Secondary output voltage taps of 24V, 25V, 26V, and 27V, which can be used to make up for voltage drop on long remote distances. Resettable circuit breakers are provided on both the primary and secondary side.

Model	Continuous Rated Load
TQD150	5A @ 24VAC
TQD300	10A @ 24VAC
TQD500	16.67A @ 24VAC

Dimming Control: The TQD transformer can be connected to most 0-10V dimming controls. The 0-10V input terminals provide a max of .5mA of current to the control.
A 120Vac phase cut dimming input is also available for connection to dimmers with a neutral wire connection. See wiring diagrams for more information on compatible dimmers.

Mounting: The TQD and EMI Filter Unit are housed in a steel enclosure rated for indoor use only. Mount vertically at least 18" a.f.f. and allow 12" between transformer and other electrical equipment. Keep low voltage secondary wiring at least 6 feet from audio or other low voltage signal wiring. Maximum ambient temperatures around this transformer must not exceed 40ºC (104ºF) with relative humidity less than 90% (non-condensing).

Interior Only

ETL Listed:
Conforms to UL STD 8750

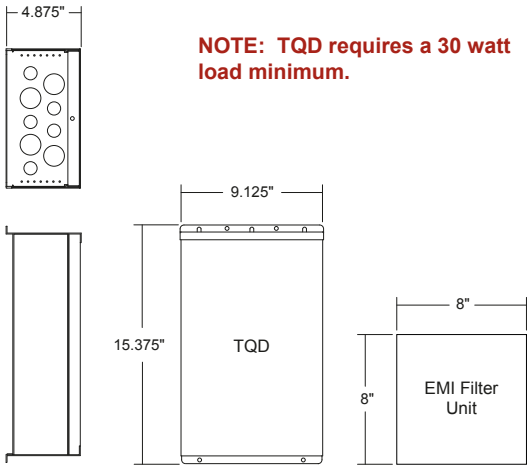

NOTE: TQD requires a 30 watt load minimum.

WINONA solutions | forms | light
AcuityBrands

Winona Lighting • 3760 West Fourth Street • Winona, MN 55987
800-328-5291 • www.winonalighting.com

Project: Sixth Street PARC Viaduct
Date: July 25,2019
Submittal:90% Issuance
Type: XF6

HLB Project #: 16165

APPENDIX B: LIGHTING CUTSHEETS Note: This document is for information only. Refer to specifications for all catalog numbers, etc.

winonaLED Project: _____ Qty: _____ Type:

TQD Dimming Transformer - 277V

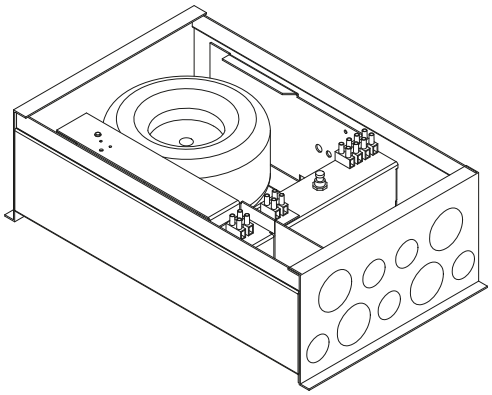

series

TQD150 — 150W, 5A @ 24VAC
TQD300 — 300W, 10A @ 24VAC
TQD500 — 500W, 16.67A @24VAC

277
primary voltage

277 — 277 Volt Primary

The **TQD Dimming Transformer** is a self-contained power source for Winline 24VAC Linear LED products that allows smooth continuous dimming to 1%. The TQD also provides smooth, continuous dimming in electronically noisy powerline environments.

Power: Available in 150VA, 300VA, and 500VA sizes. Primary voltage is 277V only. Secondary output voltage taps of 24V, 25V, 26V, and 27V, which can be used to make up for voltage drop on long remote distances. Resettable circuit breakers are provided on both the primary and secondary side.

Model	Continuous Rated Load
TQD150	5A @ 24VAC
TQD300	10A @ 24VAC
TQD500	16.67A @ 24VAC

Dimming Control: The TQD transformer can be connected to most 0-10V dimming controls. The 0-10V input terminals provide a max of .5mA of current to the control.
A 120Vac phase cut dimming input is also available for connection to dimmers with a neutral wire connection. See wiring diagrams for more information on compatible dimmers.

Mounting: The TQD and EMI Filter Unit are housed in a steel enclosure rated for indoor use only. Mount vertically at least 18" a.f.f. and allow 12" between transformer and other electrical equipment. Keep low voltage secondary wiring at least 6 feet from audio or other low voltage signal wiring. Maximum ambient temperatures around this transformer must not exceed 40ºC (104ºF) with relative humidity less than 90% (non-condensing).

Interior Only

ETL Listed:
Conforms to UL STD 8750

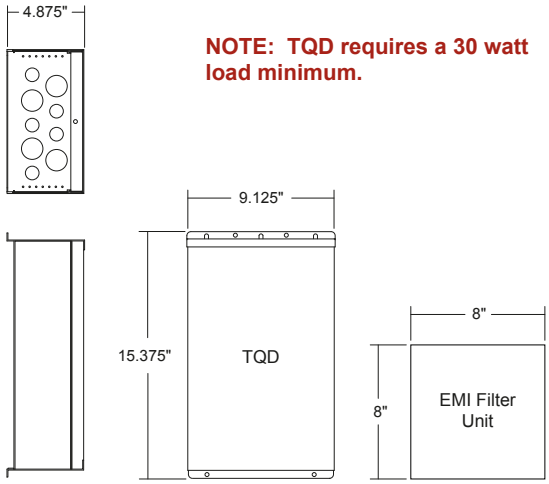

NOTE: TQD requires a 30 watt load minimum.

WINONA solutions | forms | light
AcuityBrands

Winona Lighting • 3760 West Fourth Street • Winona, MN 55987
800-328-5291 • www.winonalighting.com

TQD_277
06/02/2015

Project: Sixth Street PARC Viaduct
Date: July 25,2019
Submittal:90% Issuance
Type: XF6

HLB Project #: 16165

APPENDIX B: LIGHTING CUTSHEETS Note: This document is for information only. Refer to specifications for all catalog numbers, etc.

Wiring Diagram for 0-10V Dimming Control Input

Terminal names and use are as follows:

Primary Side

GND = Earth Ground
HOT = Line Connection
NEUT = Neutral Connection

Run a clean neutral back to the Distribution Panel for each TQD Dimming Transformer. Do not share neutral with other TQD Dimming Transformers or any other loads. Install EMI Filter Unit between the Distribution Panel and TQD. Each primary input terminal can accept up to (1) #12 AWG conductor.

Secondary Side

Secondary Circuit Breaker = Secondary connection to luminaire
Secondary Voltage Taps (27V, 26V, 25V, 24V) = Secondary connection to luminaire

Connect one and only one of these taps to get the desired secondary voltage. Multiple secondary circuits can be connected to these taps, however, do not connect multiple secondary circuits to different secondary voltage taps. Each secondary output terminal can accept up to (6) #14, (4) #12, (4) #10, or (2) #8 conductors.

0-10V Dimming Input

+ = Positive terminal of dimming control or violet wire of a 3-wire fluorescent dimmer
– = Negative terminal of dimming control or grey wire of a 3-wire fluorescent dimmer

Do not reverse polarity or connect line voltage to either of these terminals or permanent damage will result. This is a Class 2 wiring and must be physically separated from line voltage per NEC. Each dimming input terminal can accept up to (1) #12 conductor.

0-10V Dimming Control Compatability

While impossible to test the TQD Dimming Transformer with every dimming control made by every dimming control manufacturer, our testing has determined that most 3-wire type fluorescent dimming controls work the same. Models known to work well with the TQD include, but are not limited to, Verti VTF-6AM, and GRX-TVI module.

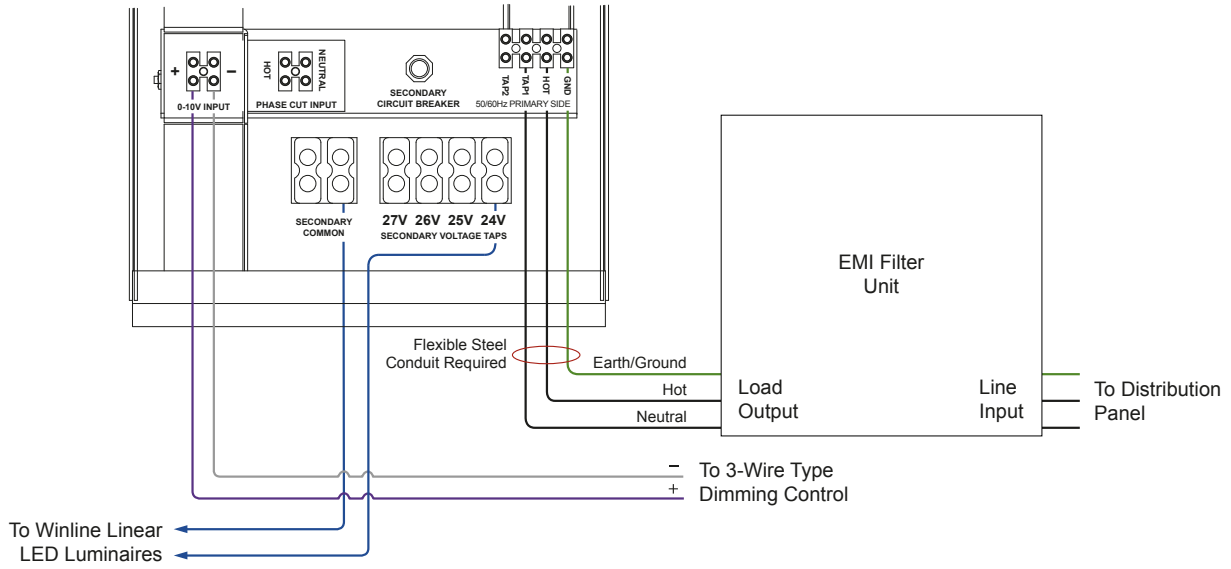

Wiring Diagram for Phase Cut Dimming Control Output

Terminal names and use are as follows:

Primary Side

GND = Earth Ground
HOT = Line Connection
NEUT = Neutral Connection

Run a clean neutral back to the Distribution Panel for each TQD Dimming Transformer. Do not share neutral with other TQD Dimming Transformers or any other loads. Install EMI Filter Unit between the Distribution Panel and TQD. Each primary input terminal can accept up to (1) #12 AWG conductor.

Secondary Side

Secondary Common = Secondary connection to luminaire
Secondary Voltage Taps (27V, 26V, 25V, 24V) = Secondary connection to luminaire

Connect one and only one of these taps to get the desired secondary voltage. Multiple secondary circuits can be connected to these taps, however, do not connect multiple secondary circuits to different secondary voltage taps. Each secondary output terminal can accept up to (6) #14, (4) #12, (4) #10, or (2) #8 conductors.

Phase Cut Dimming Input (120Vac only)

HOT = Dimmed Hot phase cut dimmer
NEUTRAL = Neutral from phase cut dimmer

The use of magnetic low voltage or forward phase dimmers with a neutral wire connection is required.

Phase Cut Dimming Control Compatability

While impossible to test the TQD Dimming Transformer with every dimming control made by every dimming control manufacturer, our testing has determined that, at a minimum, the use of phase cut controls with a neutral wire connection is required. Models known to work well with the TQD include, but are not limited to, Lutron's Maestro MRF2-6ND, GraphicEyeQS with PHPM-PA load converter, and RPM-4A module.

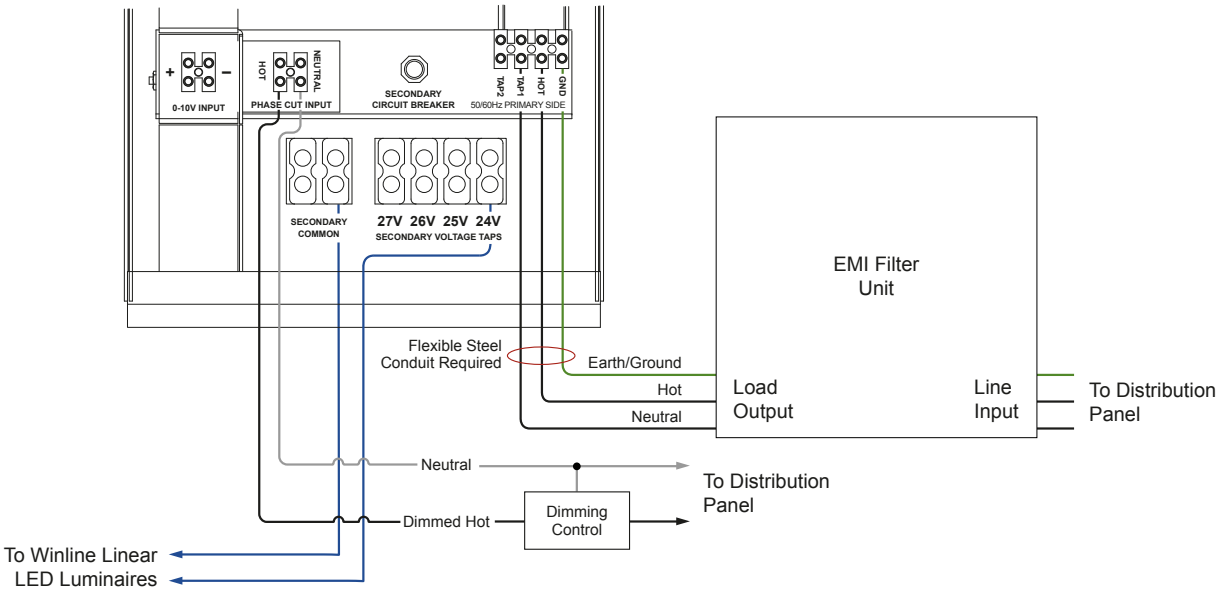

Start Up and Calibration

Make sure the full load and dimming controller is connected before energizing the TQD Dimming Transformer the first time.

At first power up the TQD Dimming Transformer will determine which type of dimmer is connected and then self-calibrate by running the lights up to 100% and then back to zero. It will then characterize the dimming response based on the load detected on the secondary circuit. The system is now ready to use.

START UP AND CALIBRATION

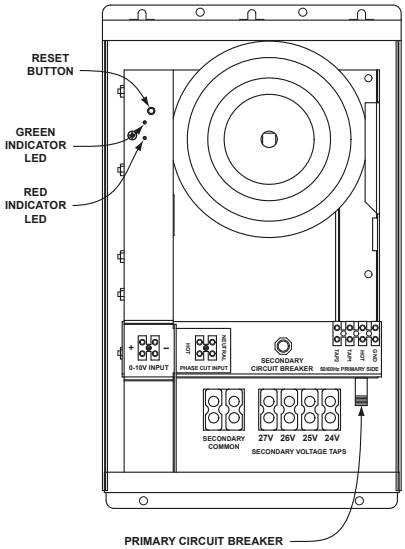

Recalibration: If the output load has been changed

If the connected load is changed after the initial start up, the transformer will need to be recalibrated for the new load. To recalibrate the transformer follow the steps below:

1. Set dimmer to 0% (OFF).
2. Hold down the Reset button for approximately 6 seconds. The RED indicator LED will flash rapidly.
3. When the RED indicator LED lights steady, release button and power the transformer off with the primary breaker inside the transformer (white toggle switch).
4. Power the transformer back up and the start up calibration sequence will begin.

Setting Minimum Dimming Threshold

Occasionally the minimum dimming threshold may need to be adjusted in order to get full travel on the dimming control. To reset the minimum dimming threshold of the TQD Dimming Transformer follow the steps below:

1. With the transformer energized hold down the Reset button for one second - the RED indicator LED will flash rapidly.
2. When the RED indicator LED lights steady, release the button.
3. The transformer will temporarily set the minimum dimming level to 0.01%.
4. Set the dimming control to the desired minimum level.
5. Hold down the Reset button until the RED indicator LED goes off - about 2 seconds.
6. The transformer is now in normal operating mode.

Switching Dimming Inputs

The TQD Dimming Transformer ships ready to accept either a 0-10V or Phase Cut input. Connecting anything to the 0-10V input will set the transformer to 0-10V input only. Likewise, connecting the Phase Cut dimmer to the Phase Cut terminals will set it to Phase Cut input only. If you inadverently connect to the wrong input, you will not be able to control the unit without taking the following steps:

To switch from 0-10V input to Phase Cut input do the following:

1. Set dimmer/controller to 0% (OFF) or short across 0-10V input terminals with length of wire
2. Ensure the LED load is off
3. Hold down the Reset button for at least 6 seconds - the RED indicator LED will flash rapidly
4. The RED LED will glow steady and then go out - release the button when the RED LED goes out
5. Power the transformer off with the primary breaker inside the transformer (white toggle switch)
6. Remove wire across 0-10V terminals
7. Connect Phase Cut terminals
8. Set dimmer/controller to 50%
9. Power the transformer back up and the start up calibration sequence will begin

To switch from Phase Cut input to 0-10V input do the following:

1. Set dimmer/controller to 0% (OFF)
2. Ensure the LED load is off
3. Hold down the Reset button for at least 6 seconds - the RED indicator LED will flash rapidly
4. The RED LED will glow steady and then go out - release the button when the RED LED goes out
5. Power the transformer off with the primary breaker inside the transformer (white toggle switch)
6. Disconnect Phase Cut input
7. Connect 0-10V input to 0-10V terminals
8. Set dimmer/controller to 50%
9. Power the transformer back up and the start up calibration sequence will begin

Troubleshooting Tips

The two indicator LEDs are very useful in determining what state the transformer is in as well as what is powered and connected.
GREEN flashing 2 seconds ON / 2 seconds OFF = Load connected, Dimmer connected, Load turned on.
GREEN flashing 4 seconds ON / 4 seconds OFF = Load connected, Dimmer connected, Load turned off.
RED and GREEN flashing together = Load connected, Dimmer NOT connected.
RED Flashing = Minimum Set mode.
RED Steady = Error (overvoltage, undervoltage no load, overload, overtemperature).
NO LEDs on = No power to transformer.

Preview

LED Luminaires and Retrofit Bulbs Licensing Program
Member
Coemar Lighting S.r.l.
ENABLED

LEDko EXT 2

FullSpectrum

KEY FEATURES

- RGBW color mixing
- 180 W LED light source
- Thick aluminum, long lasting light source in long lasting body
- No maintenance required
- Profile Zoom 17°- 38°



Reflection LEDko EXT 2 FullSpectrum
SPECIFICATIONS
RBGW colour mixing
Four blade framing system, each shutter blade is adjustable for radial position and angle
Internal gobo holder
Electronic 16 bit dimming with 3 selectable curves
Synchronized, random or pulse electronic strobe
Flicker-free operation with LEDs frequency controlled via DMX from 600 Hz to 19.000 Hz
Fan setting with 2 different options (Auto, Silent)
Weatherproof rating IP65
Profile zoom 17° - 38°
PHYSICAL SIZE
Length: 687.8 mm (25.9 in)
Width: 252.6 mm (8.4 in)
Height: 248 mm (7.0 in)
Height with bracket: 405 mm (15.7 in)
Weight: 16.0 Kg (30.8 lbs)
LIGHT SOURCE
Modular 180 W COB LED
LEDs life: 20.000 hours at 70% lumen intensity maintenance
CONTROL PROTOCOL AND PROGRAMMING
USITT DMX512A
Setting, addressing, testing and measurements via LEDs display
DMX channel: 1/4//8/11
RDM
ELECTRICAL SPECIFICATIONS/CONNECTIONS
AC power: 90-230V, auto sensing, 50/60 Hz
Internal cable without power plug
Power consumption: 0.8 A at 230 V, 2.04 A at 90 V - cosϕ 0,98
DMX data in/out: 5 pin locking XLR

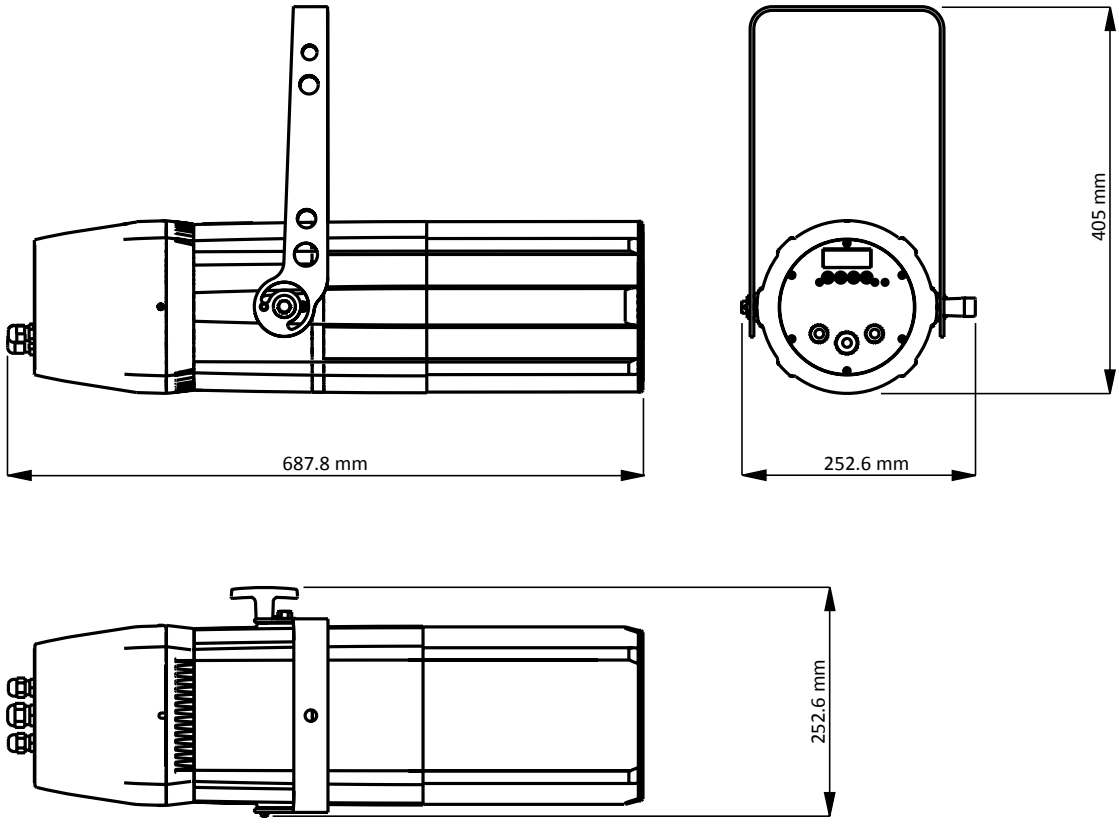
687.8 mm
405 mm
252.6 mm
252.6 mm

DMX Chart 11 Channels	
channel	**effect**
1	Master dimmer
2	Red
3	Green
4	Blue
5	White
6	Strobe effect
7	Dimmer fine
8	Special functions
9	Red tone
10	Green tone
11	Blue tone

DMX Chart 8 Channels	
channel	**effect**
1	Master dimmer
2	Red
3	Green
4	Blue
5	White
6	Strobe effect
7	Dimmer fine
8	Special functions

DMX Chart 4 Channels	
channel	**effect**
1	Red
2	Green
3	Blue
4	White

DMX Chart 1 Channels	
channel	**effect**
1	Master dimmer (color temperature settable by display)

Profile 17°/38° Zoom min.

Distance (m.)	1	2	3	4	5	6	7	8	9	10
FULL	57870	14468	6430	3617	2315	1608	1181	904	714	579
RED	10008	2502	1112	626	400	278	204	156	124	100
GREEN	22599	5650	2511	1412	904	628	461	353	279	226
BLUE	3330	833	370	208	133	93	68	52	41	33
WHITE	28170	7043	3130	1761	1127	783	575	440	348	282
Ø (m.)	0.30	0.60	0.90	1.20	1.49	1.79	2.09	2.39	2.69	2.99

Luminous emittance (Lux)

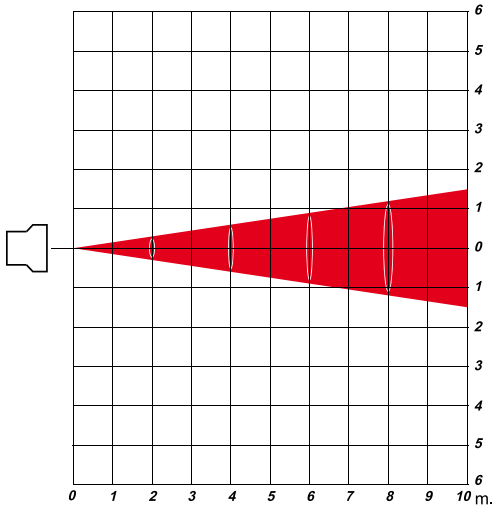

Angle: 17°

Profile 17 /38 - Zoom max.

Distance (m.)	1	2	3	4	5	6	7	8	9	10
FULL	15102	3776	1678	944	604	420	308	236	186	151
RED	2583	646	287	161	103	72	53	40	32	26
GREEN	5877	1469	653	367	235	163	120	92	73	59
BLUE	864	216	96	54	35	24	18	14	11	9
WHITE	7308	1827	812	457	292	203	149	114	90	73
Ø (m.)	0.69	1.38	2.07	2.75	3.44	4.13	4.82	5.51	6.20	6.89

Luminous emittance (Lux)

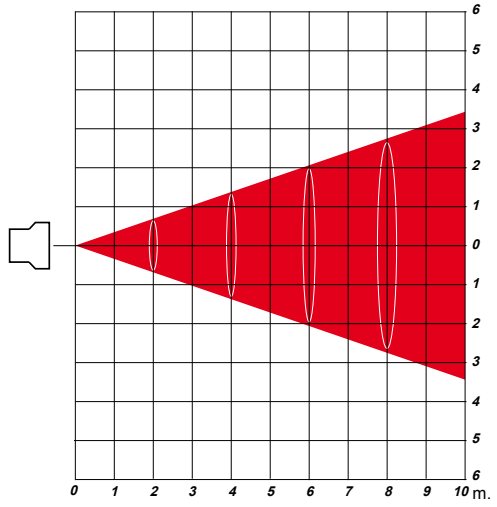

Angle: 38

ETC®

D60XTI™

Desire® Series

100V 115/120V 230/240V



GENERAL INFORMATION

ETC's Desire Series D60XTI brings the amazing control of the x7 color system™ and the long throw of a D60 to your facility for permanent installation. With its IP66 rating, this luminaire is ready for mounting inside or outside- wherever you need it. The Selador® x7 color system produces the widest range of spectrally-balanced saturated and tinted color choices available. The D60XTI offers a rugged die-cast enclosure, noiseless fan-free operation and multiple lens options that can be changed on site.

D60XTI LED ARRAY OPTIONS

D60XTI luminaires are based on the x7 color system that uses seven different LED colors to achieve true, usable broad spectrum color. The D60XTI luminaire is available with any one of the following x7 color arrays to best suit the intended application:

- D60XTI Vivid™ – the x7 color system array balanced for best all-around use as a color-changing wash luminaire
- D60XTI Lustr+™ – optimized with six colors plus high-intensity white LEDs to create an ideal front-light wash fixture. Full range color, with an emphasis on lighter colors and white
- D60XTI Studio HD™ – Studio HD combines warm white and cool white LEDs for variable color temperature mixing. Added to this are five carefully chosen LED colors from the Selador x7 color system to fill in the white LED spectral gaps. D60XTI Studio HD provides the richest variable white light possible in an LED luminaire

Also available in the following static white arrays:

- D60XTI Studio Daylight™ – Studio Daylight contains sixty 5600K LEDs for high-intensity, non-variable cool-white output
- D60XTI Studio Tungsten™ – Studio Tungsten contains sixty 3000K LEDs for high-intensity, non-variable warm-white output

ORDERING INFORMATION

Selador D60XTI

MODEL	DESCRIPTION
SELD60XTI-V	D60XTI Vivid wash luminaire
SELD60XTI-L	D60XTI Lustr+ front-light wash luminaire
SELD60XTI-H	D60XTI Studio HD wash luminaire
SELD60XTI-D	D60XTI Studio Daylight wash luminaire
SELD60XTI-T	D60XTI Studio Tungsten wash luminaire

Note: D60XTI luminaires ship with a hanging yoke, attached leads and a data termination board. C-clamp, lenses and other accessories are not included.

ETC®

D60XTI™

Desire® Series

100V 115/120V 230/240V



GENERAL INFORMATION

ETC's Desire Series D60XTI brings the amazing control of the x7 color system™ and the long throw of a D60 to your facility for permanent installation. With its IP66 rating, this luminaire is ready for mounting inside or outside- wherever you need it. The Selador® x7 color system produces the widest range of spectrally-balanced saturated and tinted color choices available. The D60XTI offers a rugged die-cast enclosure, noiseless fan-free operation and multiple lens options that can be changed on site.

D60XTI LED ARRAY OPTIONS

D60XTI luminaires are based on the x7 color system that uses seven different LED colors to achieve true, usable broad spectrum color. The D60XTI luminaire is available with any one of the following x7 color arrays to best suit the intended application:

- D60XTI Vivid™ – the x7 color system array balanced for best all-around use as a color-changing wash luminaire
- D60XTI Lustr+™ – optimized with six colors plus high-intensity white LEDs to create an ideal front-light wash fixture. Full range color, with an emphasis on lighter colors and white
- D60XTI Studio HD™ – Studio HD combines warm white and cool white LEDs for variable color temperature mixing. Added to this are five carefully chosen LED colors from the Selador x7 color system to fill in the white LED spectral gaps. D60XTI Studio HD provides the richest variable white light possible in an LED luminaire

Also available in the following static white arrays:

- D60XTI Studio Daylight™ – Studio Daylight contains sixty 5600K LEDs for high-intensity, non-variable cool-white output
- D60XTI Studio Tungsten™ – Studio Tungsten contains sixty 3000K LEDs for high-intensity, non-variable warm-white output

ORDERING INFORMATION

Selador D60XTI

MODEL	DESCRIPTION
SELD60XTI-V	D60XTI Vivid wash luminaire
SELD60XTI-L	D60XTI Lustr+ front-light wash luminaire
SELD60XTI-H	D60XTI Studio HD wash luminaire
SELD60XTI-D	D60XTI Studio Daylight wash luminaire
SELD60XTI-T	D60XTI Studio Tungsten wash luminaire

Note: D60XTI luminaires ship with a hanging yoke, attached leads and a data termination board. C-clamp, lenses and other accessories are not included.

Project: Sixth Street PARC Viaduct

Date: July 25,2019
Submittal:90% Issuance

Type: XF8

HLB Project #: 16165

APPENDIX B: LIGHTING CUTSHEETS Note: This document is for information only. Refer to specifications for all catalog numbers, etc.

SPECIFICATIONS

GENERAL
- Easy setup via any RDM device, such as ETC Gateways and Gadget
- 60 LED variable color-mixing light wash luminaire (color-mixing luminaires)
- 60 LED white-light wash luminaire (static white luminaires)
- ETL listed to UL1598
- IP66-rated for exterior wet-location use
- Data termination board for easy installation (included)
- Meets 3G ANSI C136.31 Vibration standard for bridge applications

PHYSICAL
- Rugged die-cast, all-metal housing
- Accessory ring for installation of secondary lenses
- Available in black (standard), white or silver (optional) or custom colors (contact factory)
- Hanging yoke standard.
- Cable diameter: power 0.36"/ data 0.34"
- Effective Projected Area (EPA): 0.95

ELECTRICAL
- 100VAC to 240VAC 50/60Hz universal power input
- Waterproof, 72" outdoor-rated power lead
- Up to 10 fixtures (15A max) may be fed on the same circuit
- Requires power from a non-dimmable source
- Inrush
  - 120V: 46A (First half-cycle)
  - 240V: 77A (First half-cycle)

LED*
- 50,000-hour LED life (50,000 hours to 70% intensity)
- 60 LUXEON® Rebel LED emitters
- Studio Daylight and Studio Tungsten use Rebel ES white light emitters for higher output

*See additional LED notes on page three

COLOR
- Exclusive x7 color system seven-color LED array
- Broad spectrum color interacts seamlessly with conventional sources
- Beautifully illuminates skin tones and other objects for a natural appearance and high color rendering
- Exclusive red-shift option emulates tungsten dimming performance (not available on static white luminaires)
- Studio HD array uses warm and cool white light emitters with additional deep-color emitters to allow variable color temperature from 2700K-6500K
- Studio Tungsten and Studio Daylight provide good color rendering at very high brightness

OPTICAL
- Primary field angle of 17° and beam angle of 8°
- Secondary lenses available for multiple beam spread options
- Lenses must be ordered separately
- Refer to accessories chart for lenses available

CONTROL
- DMX512 in and thru via termination board (included)
- See DMX Input Channel Profilesfor operation modes
- 15-bit virtual dimming engine provides smooth, high-quality theatrical fades and minimizes color shift during dimming
- RDM functionality for address and setting changes

SPECIFICATIONS

THERMAL
- Ambient operating temperature of -4° to 104°F (-20° to 40°C)
- Active electronic thermal management for droop-free operation
- Noiseless, fan-free convection cooling for acoustically sensitive installations
- Luminaire is designed for continuous operation up to 104°F (40°C) ambient temperature and requires free flow of air around luminaire housing

ADDITIONAL ORDERING INFORMATION

Fixtures Accessories

MODEL	DESCRIPTION
D40XTIWM	Wall-Mount Kit (black)
D40XTIWM-1	Wall-Mount Kit (white)
D40XTISPM	Single Pole Mount Kit (black)
D40XTISPM-1	Single Pole Mount Kit (white)
D40XTIDPM	Double Pole Mount Kit (black)
D40XTIDPM-1	Double Pole Mount Kit (white)
D60XTIL	Egg Crate (black)
D60XTIL-1	Egg Crate (white)
D60XTIHH	Half-Shield (black)
D60XTIHH-1	Half-Shield (white)
400CC	C-Clamp (does not ship with luminaire)
400SC	Safety Cable (32")

ADDITIONAL ORDERING INFORMATION

Secondary Lens Options

MODEL	DESCRIPTION: The following lenses are cut for D60XTI luminaires and create round, linear or oblong field patterns as described below. These lenses are not for use in Selador Classic™ (Vivid, Lustr®, Paletta™, etc.) fixtures.
Narrow Linear Field	Note: This is the same material as Selador Classic lenses. Not UV-stable, not for outdoors.
Round Field	Any one of the following round lenses may be installed permanently in the luminaires at the factory as a special order. UV-stable for outdoor use.
D60XTI-RVN	Very Narrow lens (round field)
D60XTI-RN	Narrow lens (round field)
D60XTI-RM	Medium lens (round field)
D60XTI-RW	Wide lens (round field)
D60XTI-RXW	Extra Wide lens (round field)
Oblong Field	UV-stable for outdoor use
D60XTI-ON	Narrow lens (oblong field)
D60XTI-OM	Medium lens (oblong field)
D60XTI-OW	Wide lens (oblong field)

http://www.etcconnect.com/docs/docs_downloads/miscdocs/Desire_vs_PAR_EA_revB.pdf

Typical Lens Field Profiles

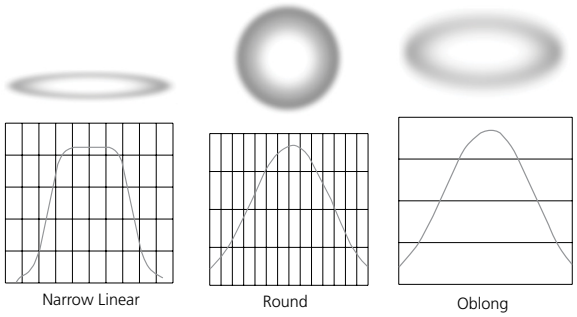

Power Consumption at Full Intensity (Average)

MODEL	VOLTAGE (V)	CURRENT (A)	WATTS
D60XTI	120 / 240	1	124

NOTES ABOUT LED LUMINAIRES

All LED sources experience some lessening of light output and color shift over time. LED output will vary with thermal conditions, which can be affected by ambient temperatures and orientation (see the D40 Ambient Temperature and Power Budgeting Guide for more details). Based on the LED manufacturer's B50 L70 specification, a Selador luminaire will achieve ~70% of its initial output after 50,000 hours of typical usage. In individual situations, LEDs will be used for different durations and at different levels. This can eventually lead to minor alterations in color performance, necessitating slight adjustment to presets, cues or programs.

CRI AND CQS RATINGS

Desire luminaires were evaluated for CRI and CQS performance using measured output spectrum and optimized mix solutions for a best spectral match to black body sources at 3200K and 5600K.

Fixture	CRI	CQS	Color Fidelity	Duv
D60XTI Vivid at 3200K	87	89	89	0.000
D60XTI Vivid at 5600K	90	92	92	0.000
D60XTI Lustr+ at 3200K	86	88	88	0.000
D60XTI Lustr+ at 5600K	93	92	90	0.000
D60XTI Studio HD at 3200K	89	90	91	0.000
D60XTI Studio HD at 5600K	92	94	94	0.000
D60XTI Studio Daylight at 5600K	71	70	69	0.001
D60XTI Studio Tungsten at 3000K	86	86	86	0.001

All D60XTI Studio luminaire versions provide excellent color rendering to the eye, particularly at higher color temperature settings such as 5600K. In most cases the Duv is 0.000. A Duv rating of 0.000 indicates that the color mix used is exactly on the black body line, with no green or magenta tint.

Notes to videographers:

- All Desire luminaires use LUXEON Rebel ES emitters specified by the strictest binning standards. However, on-camera LED response varies with different cameras and settings. Daylight LEDs can appear slightly greener than other 5600K sources on camera.
- Luminaires with non-variable single-color daylight arrays such as Studio Daylight may use standard color correction filters (Rosco 3314, Rosco 3316 or similar) to achieve the desired on-camera result.
- Camera tests using your specific set up are recommended to determine the best configuration.

LENS INFORMATION

Desire diffusion angle measurements

NOMINAL									
	No Lens	Very Narrow	Narrow	Medium	Wide	Extra Wide	Narrow Oval	Medium Oval	Wide Oval
D60XTI		25°	35°	45°	75°	N/A	20° x 40°	30° x 70°	35° x 80°
LUSTR+	18	22	27	42	69	104	20 x 37	25 x 60	30 x 82
VIVID	18	22	27	42	69	104	20 x 37	25 x 60	30 x 82
STUDIO HD	18	23	28	42	69	104	21 x 29	25 x 61	30 x 82
STUDIO D	22	25	30	43	70	105	24 x 39	28 x 62	32 x 80
STUDIO T	23	25	30	43	70	105	24 x 39	28 x 62	32 x 80

Values in black refer to old lens descriptions.

CONTROL OPTIONS

User settings on D60XTI luminaires allow multiple operational modes and settings for console operation via DMX protocol. Some of the setting options are:

- Multiple DMX options ranging from a simple RGB profile – which effectively controls all seven LED colors via three channels – to nine-channel direct color and intensity control
- Multiple dimming curve options
- Preset colors and sequences for stand-alone (no console required) operation
- White point selection – white light and color behavior based on a specific color temperature white light (i.e. 3200K, 5600K, etc)
- Loss of data behavior options – instant-off, hold last look for two minutes, etc.
- Output modes – three output options that offer the user a choice between maximum output and maximum consistency

See the user manual for a complete explanation of all of the control settings and options for the D60XTI

Quick Setups

To assist in managing the numerous control and luminaire behavior choices, five combinations of operational settings are available to quickly get started. These settings are specifically created for different applications and are easily accessible at the luminaire display. Each setting can then be modified as required to take advantage of all of the possible control features.

Setting Title	Profile	Description	Typical Features*
General	Direct	Factory default: For general purpose use including interior architectural applications.	• Standard dimming curve • Regulated output for color consistency
Stage	HSI Plus 7 Enabled	Theatrical lighting: Duplicates the color and dimming behavior of tungsten stage lighting fixtures.	• Incandescent dimming curve • Regulated output for color consistency • 3200K white point setting
XT Arch	HSI	Exterior architectural lighting: Provides a high degree of color consistency in high ambient temperature environments.	• Standard dimming curve • Protected output • 3200K white point setting
High Impact	RGB	Event lighting: Enables quickest response, simple RGB control and strobe channel for maximum effect usage.	• Quick dimming curve • Boost mode for maximum intensity • 5600K white point setting
Studio	Studio	Video/film lighting: Enables three parameter control of white light (intensity, white point and tint) via DMX from console.	• Linear dimming curve • Regulated output mode for color consistency

*See user manual for complete list of features for each Quick Setup.

CONTROL OPTIONS

DMX Input Channel Profiles

DMX Profile	DMX Channels	Channel Assignments	Notes
Direct	9	1 – Red 2 – Orange (white if Lustr+) 3 – Amber 4 – Green 5 – Cyan 6 – Blue 7 – Indigo 8 – Intensity 9 – Strobe	Direct control of each individual color with a separate master intensity channel. Color calibration of LEDs is not active in this mode. The nine-channel profile will produce the highest quality color crossfades.
HSI	5	1 – Hue (coarse) 2 – Hue (fine) 3 – Saturation 4 – Intensity 5 – Strobe	High-resolution hue (two-channels), saturation and intensity control. HSI mode will produce color crossfades around the color space.
HSIC	6	1 – Hue (coarse) 2 – Hue (fine) 3 – Saturation 4 – Intensity 5 – Strobe 6 – Color Point (CCT)	High-resolution hue, saturation and intensity control as above, with the addition of a color point channel to adjust the color temperature of the luminaire in both white light and color. Color crossfade performance is the same as EHSI.
RGB	5 (Ch. 4 not used)	1 – Red 2 – Green 3 – Blue 4 – n/a 5 - Strobe	Effectively addresses all seven colors via three channels of control. RGB profile will produce medium quality color crossfades.
Studio	3	1 – Intensity 2 – Color Point (CCT) 3 – Tint	Controls luminaire as a white light unit. If no DMX (i.e. console input) is present, fixture can be adjusted for these three parameters on the U/I at the back of the unit.
Additional profile options			
Plus 7		Seven additional color control channels are available in RGB, HSI, HSIC and Studio profile settings. For example: HSI with Plus 7 enabled becomes a 14-channel profile-	
		1 – Hue (coarse) 2 – Hue (fine) 3 – Saturation 4 – Intensity 5 – Strobe 6 – n/a 7 – Plus 7 control on/off 8 – Red 9 – Orange (white if Lustr+) 10 – Amber 11 – Green 12 – Cyan 13 – Blue 14 – Indigo	The desired color and intensity is achieved by using the HSI or RGB channels. Placing channel seven at a value over 51% gives the luminaire a 14-channel profile. Channels 8-14 represent the native colors of the luminaire and allow the operator to adjust individual color channels to fine-tune the color output.
Strobe		Variable strobe control: 0% is no strobe. The fixture output will strobe more rapidly as the strobe channel value approaches 100%.	

CONTROL OPTIONS

Studio Daylight and Studio Tungsten (only)

Quick Set-Ups

Setting Title	Profile	Description	Typical Features*
Studio	Studio	Simple mode for linear intensity control	• Linear dimming curve • Regulated output for intensity stability
Single Channel	Direct	For general purpose architectural use	• Standard dimming curve • Regulated output for consistency
Stage	Direct	Matches conventional luminaire performance	• Incandescent dimming curve • Regulated output

CONTROL OPTIONS

DMX Input Channel Profiles

DMX Profile	DMX Channels	Channel Assignments	Notes
Studio	3	1 – Intensity 2 – Strobe 3 – N/A (only used in D60)	Control of parameters is also enabled from the luminaire's user interface. No console required.
Direct	3	1 – Intensity 2 – Strobe 3 – N/A (only used in D60)	

PHOTOMETRICS

D60XTI Vivid™

Mode	Degree	Candela	Field Lumens	Beam Lumens	Lumens Per Watt
Boost - cold	17˚	170,540	3,760	1,667	31.9
Regulated	17˚	132,451	3,050	1,305	30

Metric conversions: For meters, multiply feet by 0.3048
For lux, multiply footcandles by 10.76

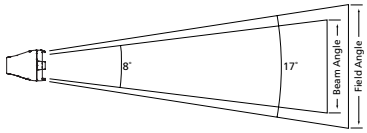

Throw Distance (d)	10.0′ 3.0m	15.0′ 4.6m	20.0′ 6.1m	25.0′ 7.6m	319′ 97m
Field Diameter	3.0′ .9m	4.4′ 1.4m	5.9′ 1.8m	7.4′ 2.3m	–
Illuminance (fc)	1,617	719	404	259	1
Illuminance (lux)	17,405	7,736	4,351	2,785	10.76

To determine center beam illumination in footcandles at any throw distance, divide candela by the throw distance squared

For field diameter at any distance, multiply distance by 0.295
For beam diameter at any distance, multiply by 0.145

Cosine Candela Plot

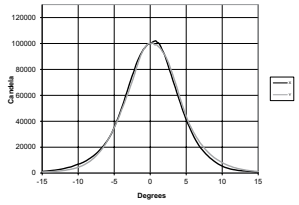

Iso-Illuminance Diagram
(Flat Surface Distribution)

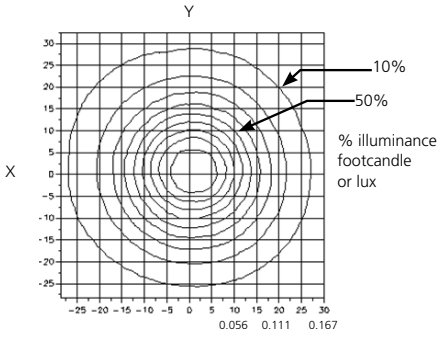

D60XTI Lustr+™

Mode	Degree	Candela	Field Lumens	Beam Lumens	Lumens Per Watt
Boost - cold	16°	195,012	4,317	1,931	34.9
Regulated	16˚	180,097	3,850	1,748	34.3

Metric conversions: For meters, multiply feet by 0.3048
For lux, multiply footcandles by 10.76

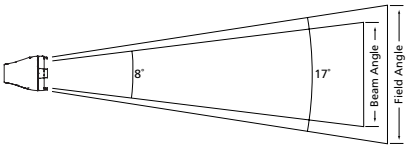

Throw Distance (d)	10′ 3.0m	15.0′ 4.6m	20.0′ 6.1m	25.0′ 7.6m	348′ 106m
Field Diameter	2.9′ .9m	4.3′ 1.3m	5.8′ 1.8m	7.2′ 2.2m	–
Illuminance (fc)	1,828	812	457	292	1
Illuminance (lux)	19,676	8,745	4,919	3,148	10.76

To determine center beam illumination in footcandles at any throw distance, divide candela by the throw distance squared

For field diameter at any distance, multiply distance by 0.288
For beam diameter at any distance, multiply by 0.112

Cosine Candela Plot

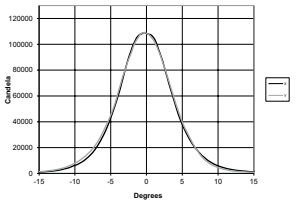

Iso-Illuminance Diagram
(Flat Surface Distribution)

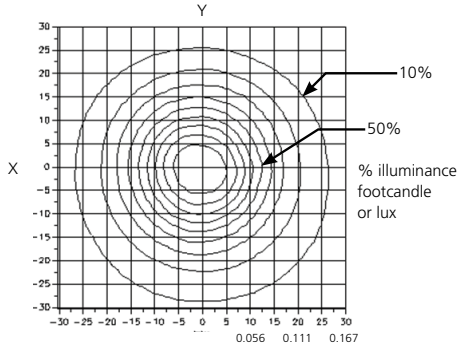

PHOTOMETRICS

D60XTI Studio HD

Mode	Degree	Candela	Field Lumens	Beam Lumens	Lumens Per Watt
Boost - cold	16˚	198,209	4,532	1,916	33.4
Regulated	16˚	185,414	4,224	1,780	33.7

Metric conversions: For meters, multiply feet by 0.3048
For lux, multiply footcandles by 10.76

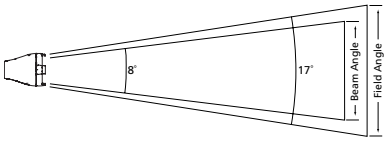

Throw Distance (d)	10.0′ 3.0m	15.0′ 4.6m	20.0′ 6.1m	25.0′ 7.6m	471.4′ 143.7m
Field Diameter	2.8′ 0.9m	4.2′ 1.3m	5.6′ 1.7m	7.0′ 2.1m	–
Illuminance (fc)	2,222	988	556	356	1
Iluminance (lux)	23,917	10,630	5,979	3,827	10.76

To determine center beam illumination in footcandles at any throw distance, divide candela by the throw distance squared

For field diameter at any distance, multiply distance by 0.281
For beam diameter at any distance, multiply by 0.142

Cosine Candela Plot

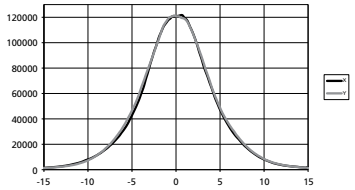

Iso-Illuminance Diagram
(Flat Surface Distribution)

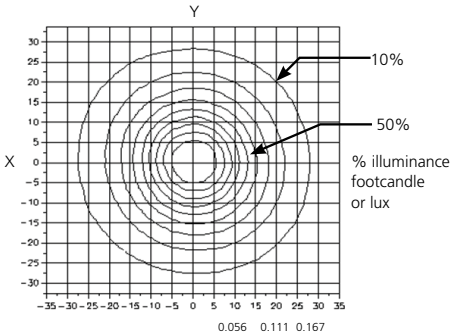

D60XTI Studio Daylight

Mode	Degree	Candela	Field Lumens	Beam Lumens	Lumens Per Watt
Boost - cold	22˚	209,556	8,216	4,068	55.3
Regulated	22˚	193,045	7,610	3,860	54.8

Metric conversions: For meters, multiply feet by 0.3048
For lux, multiply footcandles by 10.76

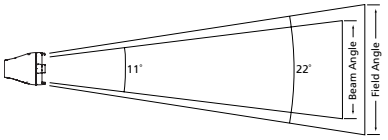

Throw Distance (d)	10′ 3.0m	15′ 4.6m	20′ 6.1m	25′ 7.6m	435.3′ 132.7m
Field Diameter	3.9′ 1.2m	5.8′ 1.8m	7.7′ 2.4m	9.7′ 2.9m	–
Illuminance (fc)	1,895	842	474	303	1
Illuminance (lux)	20,398	9,066	5,099	3,264	10.76

To determine center beam illumination in footcandles at any throw distance, divide candela by the throw distance squared

For field diameter at any distance, multiply distance by 0.387
For beam diameter at any distance, multiply by 0.194

Cosine Candela Plot

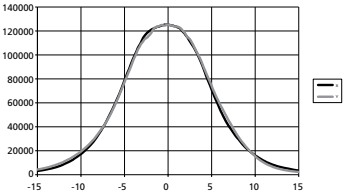

Iso-Illuminance Diagram
(Flat Surface Distribution)

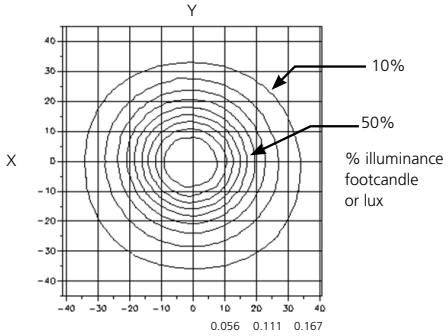

PHOTOMETRICS

D60XTI Studio Tungsten

Mode	Degree	Candela	Field Lumens	Beam Lumens	Lumens Per Watt
Boost - cold	23˚	171,089	6,482	3,001	43.2
Regulated	23˚	162,409	6,172	2,918	39.6

Metric conversions: For meters, multiply feet by 0.3048
For lux, multiply footcandles by 10.76

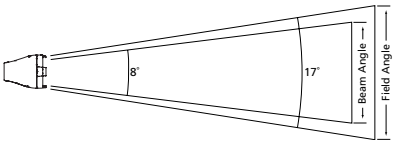

Throw Distance (d)	10′ 3.0m	15′ 4.6m	20′ 6.1m	25′ 7.6m	373.6′ 113.9m
Field Diameter	4.1′ 1.3m	6.2′ 1.9m	8.3′ 2.5m	10.4′ 3.2m	–
Illuminance (fc)	1,395	620	349	223	1
Illuminance (lux)	15,020	6,676	3,755	2,403	10.76

For field diameter at any distance, multiply distance by 0.414
For beam diameter at any distance, multiply by 0.189

Throw Distance Multiplier (TDM)

To determine the distance from the center of the beam (Origin) to a certain illuminance level at a particular distance, multiply the desired throw distance by the TDM desired on the Iso-Illuminance diagram.

Throw Distance (TD) x Throw Distance Multiplier (TDM) = Distance from the Origin (DfO) (distance from the center of the beam)

Example: 25 feet (TD) x 0.047 (TDM) = 1.175 feet from center of beam (DfO)

For illumination with any lamp, multiply the candlepower of a beam spread by the multiplying factor (mf) shown for that lamp.

To determine illumination in footcandles or lux at any throw distance, divide candlepower by distance squared.

Cosine Candela Plot

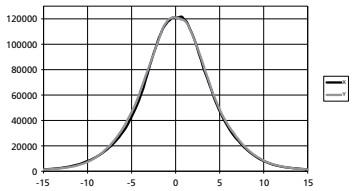

Iso-Illuminance Diagram
(Flat Surface Distribution)

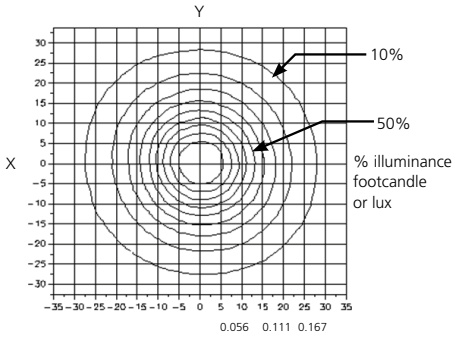

PHYSICAL

Selador D60XTI Weights and Dimensions

Total weight depends on how the individual luminaire is configured.

WEIGHT*		SHIPPING WEIGHT	
lbs	kgs	lbs	kgs
23	10.43	24.7	11.2

* Does not include mounting hardware

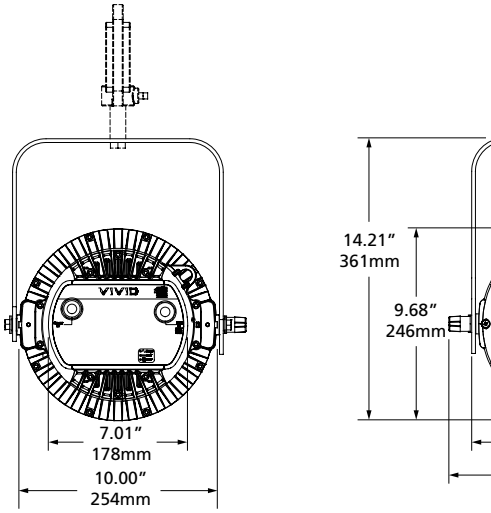

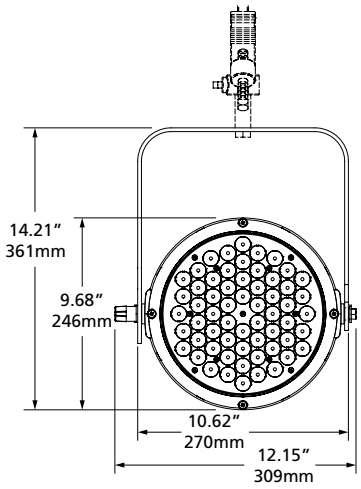

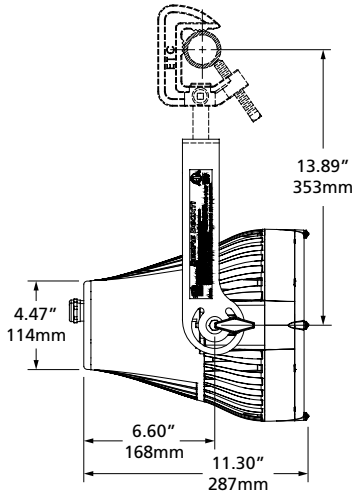

Corporate Headquarters ● 3031 Pleasant View Rd, PO Box 620979, Middleton WI 53562 0979 USA ● +1 608 831 4116
London, UK ● Unit 26-28, Victoria Industrial Estate, Victoria Road, London W3 6UU, UK ● +44 (0) 20 8896 1000
Rome, IT ● Via Pieve Torina, 48, 00156 Rome, Italy ● +39 (06) 32 111 683
Holzkirchen, DE ● Ohmstrasse 3, 83607 Holzkirchen, Germany ● +49 (80 24) 47 00-0
Hong Kong ● Room 1801, 18/F, Tower 1 Phase 1, Enterprise Square, 9 Sheung Yuet Road, Kowloon Bay, Kowloon, Hong Kong ● +852 2799 1220
Web ● etcconnect.com ● Copyright©2017 ETC. All Rights Reserved. All product information and specifications subject to change. 7410L1013 Rev F 05/17

Specification Sheet

lumenfacade™

INGROUND
COLOR CHANGING

Client _____ **Project name** _____

Order# _____ **Type** _____ **Qty** _____

FEATURES AND BENEFITS

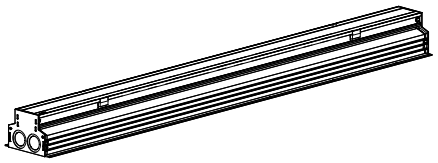

Physical :

- Aluminum optical chamber housing
- Anodized aluminum flush trim
- Polymer recycled PVC blockout housing reinforced with a stainless steel frame
- Available in 1', 2', 3' or 4' sections
- Die cast aluminum end caps
- Stainless steel hardware
- Tempered glass lens
- Asymmetric wallwash, 8° x 8°, 10° x 10°, 10° x 30°, 10° x 60°, 10° x 90°, 15° x 25°, 30° x 30°, 30° x 60°, 35° x 35°, 50° x 80°, 60° x 60°, 80° x 80° or 90° x 90° optics
- 0°, 2.5°, 5° or 20° factory-set optical aiming options (not available for asymmetric wallwash)
- IP68 rated for up to 1' (30cm), not suitable for permanent immersion applications
- IK10 rated
- Walk-over compliant up to 500 kg, self-supported; walk-over compliant up to 1000 kg, concrete-supported[1]

c UL us CE RoHS **IK10**

lumentalk

Photometric Summary

4ft RGB (full white), 0° tilt setting	Delivered Output [lm]	Intensity [peak cd]
WW	1,600*	1,206*
8°x8°	2,121*	27,842*
10°x10°	1,837*	16,501*
10°x30°	2,155*	11,889*
10°x60°	1,724*	4,765*
10°x90°	1,964*	2,919*
30°x30°	2,202*	7,936*
30°x60°	1,896*	2,499*
60°x60°	1,807*	1,439*
90°x90°	1,913*	1,002*

*Estimated. Consult lumenpulse website for the latest ies files.

Performance :

- Color mixing options: RGB (3 channels), RGBW (4 channels) or RGBA (4 channels)
- 1,435 delivered lumens and 4,525 candelas at nadir (RGB full output, 4' unit, 10°x60° optic, 2.5° tilt setting)
- 1,775 delivered lumens and 4,477 candelas at nadir (RGBW full output, 4' unit, 10°x60° optic, 2.5° tilt setting)
- 800 delivered lumens and 1,785 candelas at nadir (RGBA full output, 2' unit, 10°x60° optic 0° tilt setting)
- Lumen maintenance: 80,000 hrs [L70 @ 25°C]
- Lumen maintenance: 60,000 hrs [L70 @ 50°C]
- Lumen measurements: comply with LM - 79 - 08 standard
- Resolution per foot or per fixture (configured with LumenID V3 software & DMX/RDM)
- Operating temperatures: -40° C to 50° C [-40F to 122F]

Electrical :

- Line voltage luminaire for 100 to 277V
- Power and data in 1 cable (#16-5)
- IP68 push-lock connectors
- 17.25W/ft[2]
- Control options: Lumentalk or DMX/RDM enabled

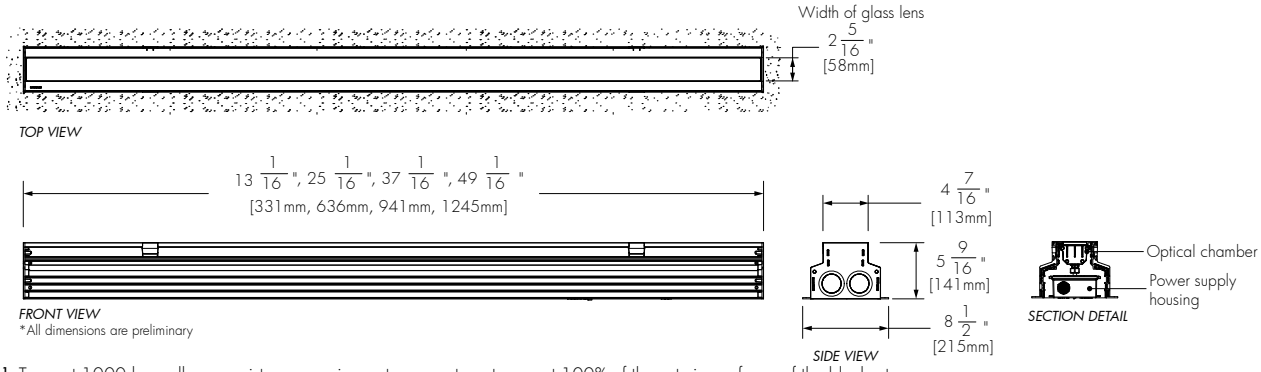

[1] To meet 1000 kg walk-over resistance requirements, cement must support 100% of the exterior surfaces of the blockout.
[2] Power consumption is typically 20% higher for 1' fixture lengths.

© Copyright Lumenpulse 2017

1751 Richardson, Suite 1505
Montreal (Quebec) Canada
H3K 1G6

1.877.937.3003
P.514.937.3003
F. 514.937.6289
info@lumenpulse.com
www.lumenpulsegroup.com

5-year limited warranty.

Consult www.lumenpulsegroup.com for our complete Standard Terms and Conditions of Sales.

lumenpulse GROUP

Lumenpulse reserves the right to make changes to this product at any time without prior notice and such modification shall be effective immediately.

2017.07.21
MG - R16

Project: Sixth Street PARC Viaduct

Date: July 25,2019
Submittal:90% Issuance

Type: XF9

HLB Project #: 16165

APPENDIX B: LIGHTING CUTSHEETS Note: This document is for information only. Refer to specifications for all catalog numbers, etc.

OPTICAL CHAMBER ORIENTATION

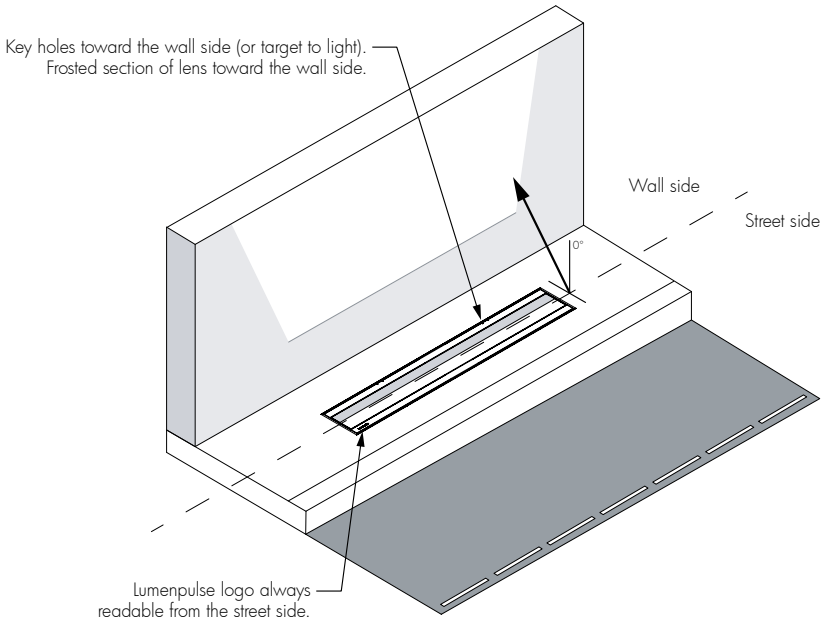

© Copyright Lumenpulse 2017

1751 Richardson, Suite 1505
Montreal (Quebec) Canada
H3K 1G6

1.877.937.3003
P.514.937.3003
F. 514.937.6289
info@lumenpulse.com
www.lumenpulsegroup.com

5-year limited warranty.

Consult www.lumenpulsegroup.com for our complete Standard Terms and Conditions of Sales.

lumenpulse™ GROUP

Lumenpulse reserves the right to make changes to this product at any time without prior notice and such modification shall be effective immediately.

Project: Sixth Street PARC Viaduct

Date: July 25,2019
Submittal:90% Issunace

Type: XF9

HLB Project #: 16165

APPENDIX B: LIGHTING CUTSHEETS Note: This document is for information only. Refer to specifications for all catalog numbers, etc.

ACCESSORIES

Order separately, refer to each item's specification sheet for ordering information

Control Systems:

LTO2 Lumentouch is a wall mount DMX 512 controller keypad.

LCU Lumencue is a USB / mini SD DMX 512 controller.

LID LumenID is a diagnostic and addressing DMX 512 controller.
It must be specified on all DMX applications.
Refer to LID specification sheet for details.

LID-LT LumentalkID is a diagnostic and addressing controller.
It must be specified for all Lumentalk (LT) applications.
Refer to LID-LT specification sheet for details.

LTN Lumentone is a simple pre-programmed DMX 512 controller with a push button rotary dial and live feedback.

Control Boxes:

CBX DMX/RDM control box.
Up to six power and data outputs to fixtures or fixture runs.
Ethernet enabled option.
Refer to CBX specification sheet for details.

© Copyright Lumenpulse 2017

1751 Richardson, Suite 1505
Montreal (Quebec) Canada
H3K 1G6

1.877.937.3003
P.514.937.3003
F. 514.937.6289
info@lumenpulse.com
www.lumenpulsegroup.com

5-year limited warranty.

Consult www.lumenpulsegroup.com for our complete Standard Terms and Conditions of Sales.

lumenpulse™ GROUP

Lumenpulse reserves the right to make changes to this product at any time without prior notice and such modification shall be effective immediately.

Project: Sixth Street PARC Viaduct

Date: July 25,2019
Submittal:90% Issunace

Type: XF9

HLB Project #: 16165

APPENDIX B: LIGHTING CUTSHEETS Note: This document is for information only. Refer to specifications for all catalog numbers, etc.

ACCESSORIES - continued
Order separately, refer to each item's specification sheet for ordering information

Cables:

LOILC-__-__ Leader Cable for Lumenfacade Inground.

Please specify certification (UL or CE), cable length (10', 25' or 50' [3m, 7.6m or 15.2m] standard).
Suitable for data applications.
Sealing endcap is mandatory for any unused connector. (1) included with every leader cable.
Consult Lumenfacade Inground leader cable specifiation sheet for details.

LOIJC-__-__ Jumper Cable for Lumenfacade Inground.

Please specify certification (UL or CE) and cable length (2', 4' or 10' [0.6m, 1.2m or 3m] standard).
Suitable for data applications.
Consult Lumenfacade Inground jumper cable specifiation sheet for details.

Jumper Cable Length Selection

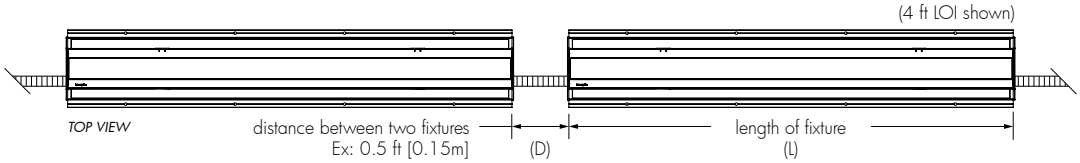

Add the length of one fixture to the distance between two fixtures: L + D.	Ex: L + D = 4.5ft [1.4m]
Order the next longest jumper cable available: **2', 4' or 10' [0.6m, 1.2m or 3m]**	Therefore 10' [3m] jumper cable required

Inground Junction Box (optional):

Lumenfacade Inground IP68 sealed junction box starter kit - **LOI-JBOX** order code.
*Use for stand alone fixtures and/or first of run fixtures
*LOI-JBOX accessory does not fit in 1ft fixtures.

© Copyright Lumenpulse 2017

1751 Richardson, Suite 1505
Montreal (Quebec) Canada
H3K 1G6

1.877.937.3003
P.514.937.3003
F. 514.937.6289
info@lumenpulse.com
www.lumenpulsegroup.com

5-year limited warranty.

Consult www.lumenpulsegroup.com for our complete Standard Terms and Conditions of Sales.

lumenpulse™ GROUP

Lumenpulse reserves the right to make changes to this product at any time without prior notice and such modification shall be effective immediately.

Project: Sixth Street PARC Viaduct

Date: July 25,2019
Submittal:90% Issunace

Type: XF9

HLB Project #: 16165

APPENDIX B: LIGHTING CUTSHEETS Note: This document is for information only. Refer to specifications for all catalog numbers, etc.

TYPICAL WIRING DIAGRAMS

Typical Installation with Leader Cable

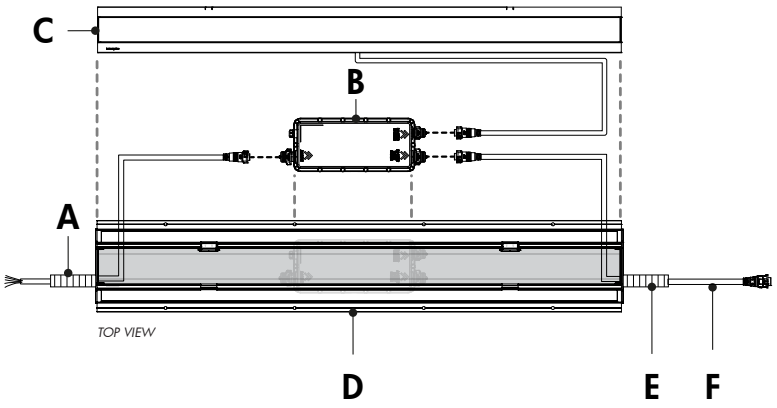

A - Leader cable (LOILC, order separately)
B - PACBOX
C - Optical chamber
D - Blockout
E - Conduit (By others)
F - Jumper cable to next fixture (LOIJC)
(For daisy-chain installation, order separately)

Typical Installation with IP68 LOI-JBOX Accessory

Cannot be used with 1ft LOI fixture

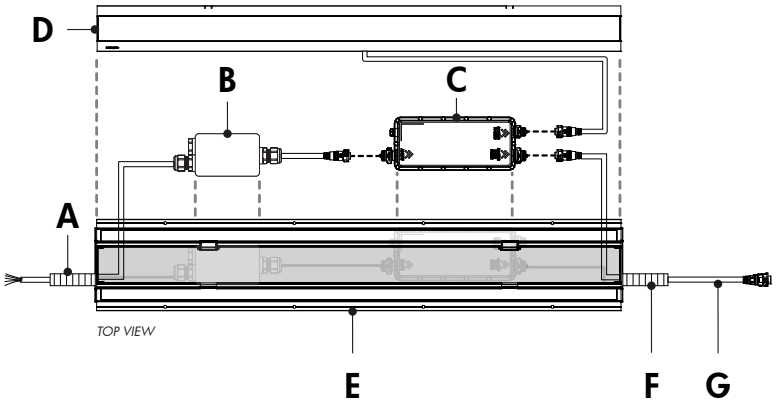

A - Power & data input cable (by others)
B - LOIJBOX (order separately)
C - PACBOX
D - Optical chamber
E - Blockout
F - Conduit (by others)
G - Jumper cable to next fixture (LOIJC)
(For daisy-chain installation, order separately)

© Copyright Lumenpulse 2017

1751 Richardson, Suite 1505
Montreal (Quebec) Canada
H3K 1G6

1.877.937.3003
P.514.937.3003
F. 514.937.6289
info@lumenpulse.com
www.lumenpulsegroup.com

5-year limited warranty.

Consult www.lumenpulsegroup.com for our complete Standard Terms and Conditions of Sales.

lumenpulse™ GROUP

Lumenpulse reserves the right to make changes to this product at any time without prior notice and such modification shall be effective immediately.

Project: Sixth Street PARC Viaduct

Date: July 25,2019
Submittal:90% Issunace

Type: XF9

HLB Project #: 16165

APPENDIX B: LIGHTING CUTSHEETS Note: This document is for information only. Refer to specifications for all catalog numbers, etc.

TYPICAL WIRING DIAGRAMS - continued

Wiring Color Code

American Color Code	*CE Color Code*	*USE*
Green	*Yellow/Green*	*Ground*
Black	*Brown*	*Live 100-277V*
White	*Blue*	*Neutral*
Red/Purple	*Black*	*0-10V / Data +*
Orange	*Grey*	*0-10V / Data -*

Lumentalk (LT)

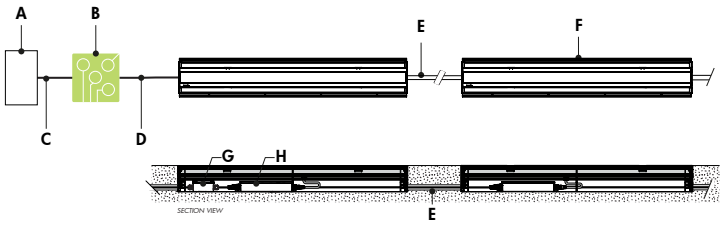

A - Third party DMX/RDM controller
B - Lumentranslator (LTI-DMX)
C - Data wiring (by others)
D - Power line (120-277V AC)
E - Jumper cable (LOIJC)
F - Lumenfacade Inground (LOI-LT)
G - IP68 LOIJBOX accessory (optional)
H - PACBOX

Wiring Detail using LOI-JBOX Accessory - Lumentalk (LT)

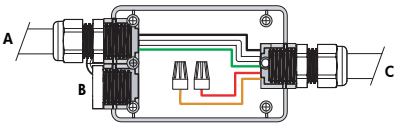

A - Power input (100-277V)
B - Cap
C - Cable to PACBOX

Notes:
- Consult factory for specific applications and maximum fixture count/cable length recommendations.
- Lumentalk enabled fixtures must be commissioned using LumentalkID software and a LID-LT. Consult factory for details.
- 1 DMX controller per Lumentalk network, maximum of 48 DMX channels per Lumentalk network (minimum step transition update rate is 1 second, minimum fade time between two colors is 1 minute). Consult factory for applications that require additional capabilities.
- Maximum of 1 transmitter (Lumentranslator or Lumenlink) per system.
- No third party fixtures allowed on the same circuit.
- 17.25 watts per foot [0.3m].

© Copyright Lumenpulse 2017

1751 Richardson, Suite 1505
Montreal (Quebec) Canada
H3K 1G6

1.877.937.3003
P.514.937.3003
F. 514.937.6289
info@lumenpulse.com
www.lumenpulsegroup.com

5-year limited warranty.

Consult www.lumenpulsegroup.com for our complete Standard Terms and Conditions of Sales.

lumenpulse™ GROUP

Lumenpulse reserves the right to make changes to this product at any time without prior notice and such modification shall be effective immediately.

TYPICAL WIRING DIAGRAMS - continued

Wiring Color Code

American Color Code	CE Color Code	USE
Green	Yellow/Green	Ground
Black	Brown	Live 100-277V
White	Blue	Neutral
Red/Purple	Black	0-10V / Data +
Orange	Grey	0-10V / Data -

Star Layout (DMX/RDM)

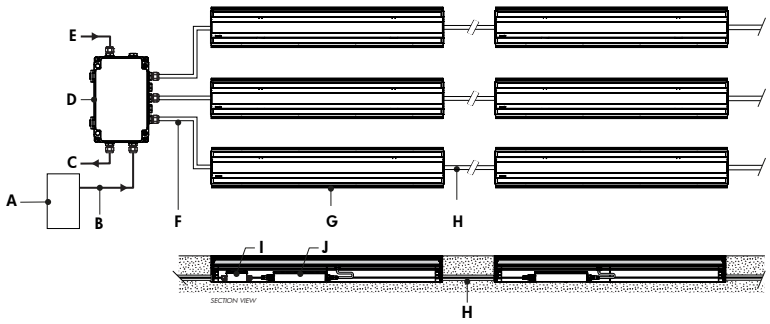

A - Third party DMX/RDM controller
B - Data input (Belden 9841 or equivalent, by others)
C - Data output to next CBX (optional, not isolated/not boosted)
D - CBX-ST
E - Power input (100-277V)
F - Leader cable (LOILC)
G - Lumenfacade Inground (LOI-DMX/RDM)
H - Jumper cable (LOIJC)
I - IP68 LOI-JBOX accessory (optional)
J - PACBOX

Wiring Detail using LOI-JBOX Accessory - DMX/RDM

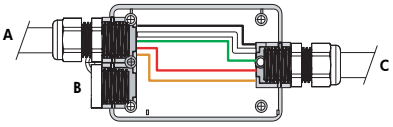

A - Power and data input to fixture (wiring by others)
B - Cap
C - Cable to PACBOX

Daisy Chain Layout (DMX/RDM)

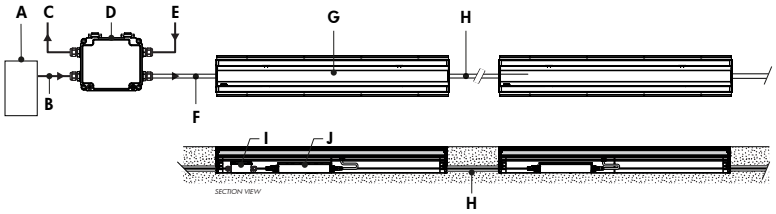

A - Third party DMX/RDM controller
B - Data input (Belden 9841 or equivalent, by others)
C - Data output to next CBX (optional, not isolated/not boosted)
D - CBX-DS
E - Power input (100-277V)
F - Leader cable (LOILC)
G - Lumenfacade Inground (LOI-DMX/RDM)
H - Jumper cable (LOIJC)
I - IP68 LOI-JBOX accessory (optional)
J - PACBOX

Wiring Detail using LOI-JBOX Accessory - DMX/RDM

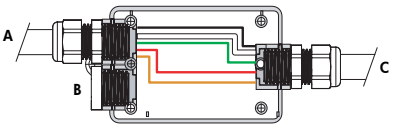

A - Power and data input to fixture (wiring by others)
B - Cap
C - Cable to PACBOX

Notes:
- Consult factory for specific applications and maximum fixture count/cable length recommendations.
- Maximum of 32 DMX/RDM enabled fixtures per CBX output.
- Maximum of 4 DMX/RDM repeaters/CBX cascading in line.
- Maximum of 6 outputs per CBX-ST, maximum of 1output per CBX-DS
- RGB color mixture option requires 3 DMX addresses. RGBW color mixture option requires 4 DMX addresses. RGBA color mixture option requires 4 DMX addresses.
- 17.25 watts per foot [0.3m].

© Copyright Lumenpulse 2017

1751 Richardson, Suite 1505
Montreal (Quebec) Canada
H3K 1G6

1.877.937.3003
P.514.937.3003
F. 514.937.6289
info@lumenpulse.com
www.lumenpulsegroup.com

5-year limited warranty.

Consult www.lumenpulsegroup.com for our complete Standard Terms and Conditions of Sales.

lumenpulse GROUP

Lumenpulse reserves the right to make changes to this product at any time without prior notice and such modification shall be effective immediately.

Specification Sheet

lumenfacade™

INGROUND
COLOR CHANGING

HOW TO ORDER

LOI	100/277	Select:	Select:	Select:	Select:	Select:	Select:	Select:
1	2	3	4	5	6	7	8	9

1

Housing:

LOI - Lumenfacade™ Inground

A Lumenfacade Inground fixture includes 1x optical chamber (LOIC), 1x power and control box (PACBOX) and 1x recessed blockout (RBO). The LOIC, PACBOX and RBO are provided according to the output/color, length and control configuration.

2

Voltage:

100/277 - 100-277 volts

3

Length:

12 - 13 1/16 inches (331mm) (3.39 kg/7.48 lbs)
24 - 25 1/16 inches (636mm) (6.93 kg/15.28 lbs)
36 - 37 1/16 inches (941mm) (9.68 kg/21.35 lbs)
48 - 49 1/16 inches (1245mm) (12.24 kg/26.99 lbs)

4

Colors and Color temperatures:

RGB - Additive red, green and blue
RGBW - Additive red, green, blue and white 4000K
RGBA - Additive red, green, blue and amber
Consult factory for color mix with Royal Blue, 3000K or other white color temperature LEDs.

5

Optics:

Asymmetric
WW - Asymmetric Wallwash optic

Symmetric

8x8 - 8° x 8°[2]
10x10 - 10° x 10°[2]
30x30 - 30° x 30°
35x35 - 35° x 35°
60x60 - 60° x 60°
80x80 - 80° x 80°
90x90 - 90° x 90°

Bi-symmetric

10x30 - 10° x 30°
10x60 - 10° x 60°
10x90 - 10° x 90°
15x25 - 15° x 25°
30x60 - 30° x 60°
50x80 - 50° x 80°

6

Tilt Setting:

Note: asymmetric wallwash optic is factory set with a 2.5 degree tilt.

TS0 - 0 degrees
TS2.5 - 2.5 degrees
TS5 - 5 degrees
TS20 - 20 degrees
Factory set. Cannot be adjusted in the field. Consider ground level when selecting a tilt setting for your application.

7

Optical Option:

INTL - Internal Louver[2]

8

Control:

LT - Lumentalk[3]
DMX/RDM - DMX/RDM enabled[4]

9

Option:

ASL - Anti-slip lens

Consult installation instructions to plan all aspects of the fixture installation. A completed LOI Certificate of Installation must be returned to Lumepulse Group to activate the warranty.

Notes:

[1] For best results, we recommend a 6-inch (15cm) setback from surface. Contact factory for application support. [2] The addition of an internal louver will affect beam distribution, consult factory for application support. [3] Lumentalk enabled fixtures must be commissioned using LumentalkID software and a LID-LT. Consult factory for details. [4] Fixtures set to by fixture resolution.3 DMX addresses per RGB fixture, 4 DMX addresses per RGBW fixture, 4 DMX addresses per RGBA fixture.

© Copyright Lumenpulse 2017

1751 Richardson, Suite 1505
Montreal (Quebec) Canada
H3K 1G6

1.877.937.3003
P.514.937.3003
F. 514.937.6289
info@lumenpulse.com
www.lumenpulsegroup.com

5-year limited warranty.

Consult www.lumenpulsegroup.com for our complete Standard Terms and Conditions of Sales.

lumenpulse™ GROUP

Lumenpulse reserves the right to make changes to this product at any time without prior notice and such modification shall be effective immediately.

Project: Sixth Street PARC Viaduct

Date: July 25,2019
Submittal:90% Issunace

Type: XF9

HLB Project #: 16165

APPENDIX B: LIGHTING CUTSHEETS Note: This document is for information only. Refer to specifications for all catalog numbers, etc.

Project Name _____ **Qty** _____

Type _____ **Catalog / Part Number** _____



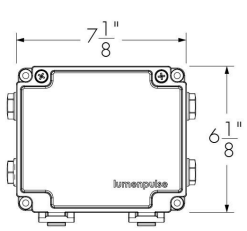

Daisy chain configuration, 100-277V

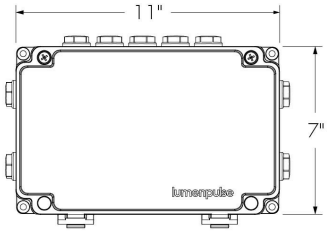

Daisy chain configuration, 347V
Star configuration, 100-347V

Certifications

Description

Lumenpulse has revamped the Control Box (CBX) with a new, simpler offering adapted to both indoor and outdoor use. Along with many mechanical advantages, the CBX has been re-designed to be as user-friendly as possible for control system installers and technicians. The CBX combines line voltage and DMX/RDM control signals in a single cable for robust bi-directional communication. Internally, the CBX boosts and splits the control signal into a maximum of six outputs for scalable network topologies. The CBX can be used to enable control for white, dynamic white, or color-changing luminaires from families such as Lumenbeam, Lumencove, and Lumenfacade. New families such as Lumenquad, that use a 6-conductor cable construction for DMX/RDM implementations, are fully supported by the revamped CBX. New 6-conductor luminaires, in conjunction with a 6-conductor configured CBX, will improve data reliability, reduce noise susceptibility, and enable longer DMX/RDM runs.

Features

Configurations	Daisy chain (1 output), Star (up to 6 outputs)
Input Protocols Supported	DMX/RDM
Output Protocols Supported	DMX/RDM
Test Button	Dynamic show broadcast for testing
Indicator Lights	TX and RX LED lights per port
3G Vibration Rated	Meets 3G ANSI C136.31 vibration standard for bridge applications
Options	Corrosion-resistant coating for hostile environments
Warranty	5-year limited warranty

lumenpulse™

1220 Marie-Victorin Blvd., Longueuil, QC J4G 2H9 CA **T** United States 617.307.5700 | Canada 1.877.937.3003 | 514.937.3003 **F** 514.937.6289
info@lumenpulse.com **www.lumenpulse.com** **www.lumenpulse.com/products/1274/cbx**

Lumenpulse Group Inc. reserves the right to make changes to this product at any time without prior notice and such modification shall be effective immediately
2018.06.06 copyright © 2018 Lumenpulse Group Inc.
EM - R14

Project: Sixth Street PARC Viaduct

Date: July 25,2019
Submittal:90% Issuance

Type: XF9

HLB Project #: 16165

APPENDIX B: LIGHTING CUTSHEETS Note: This document is for information only. Refer to specifications for all catalog numbers, etc.

Physical

Housing Material	Die cast aluminum
Compartments	Base for connections, Cover for electronics
Cover	Hinged with safety cable
Surface Finish	Electrostatically applied polyester powder coat
Weight	3.75 lbs (small housing), 7.95 lbs (large housing)

Electrical and control

Input Voltage	100 to 347 volts
Power Input	1/2 in provision holes for 1/2" NPT, PG16 or 20mm
Data Input	1/2 in provision holes for 1/2" NPT, PG16 or 20mm
Outputs	Up to 6 outputs, 1/2 in provision holes for 1/2" NPT, PG16 or 20mm
Control	DMX/RDM enabled
Luminaire Interface	5 or 6 conductor compliant

Environmental

Storage Temperature	-40 °F to 185 °F
Start-up Temperature	-13 °F to 122 °F
Operating Temperature	-13 °F to 122 °F
Ingress Protection Rating	IP66

lumenpulse™

1220 Marie-Victorin Blvd., Longueuil, QC J4G 2H9 CA **T** United States 617.307.5700 | Canada 1.877.937.3003 | 514.937.3003 **F** 514.937.6289
info@lumenpulse.com **www.lumenpulse.com** **www.lumenpulse.com/products/1274/cbx**

Lumenpulse Group Inc. reserves the right to make changes to this product at any time without prior notice and such modification shall be effective immediately
2018.06.06 copyright © 2018 Lumenpulse Group Inc.
EM - R14

Dimensions

Small housing

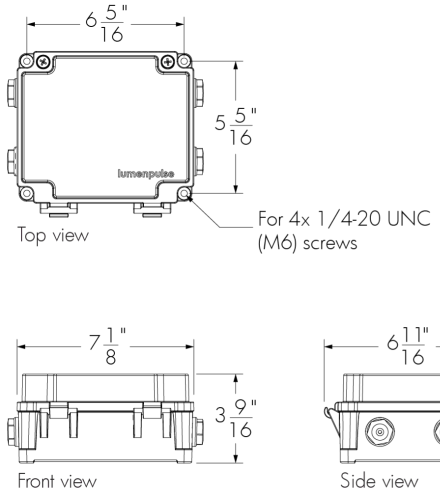

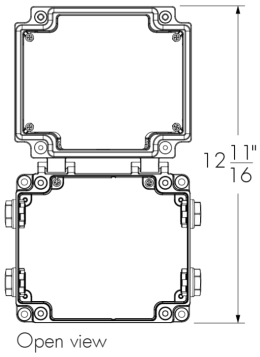

DS - Daisy Chain configuration, 100-277V

Large housing

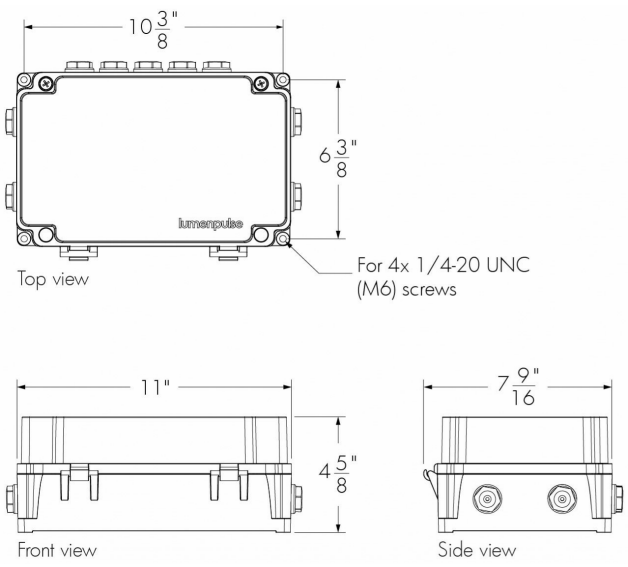

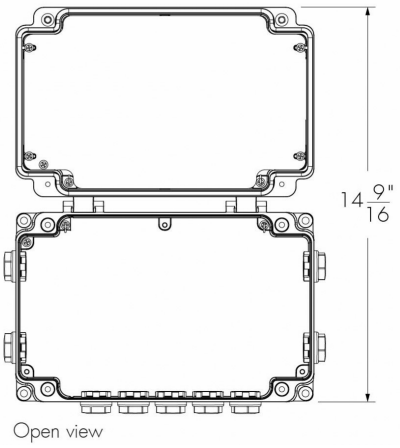

DS - Daisy Chain configuration, 347V
ST - Star configuration, 100-347V

Lumenpulse Group Inc. reserves the right to make changes to this product at any time without prior notice and such modification shall be effective immediately
2018.06.06 copyright © 2018 Lumenpulse Group Inc.
EM - R14

Input and output details

CBX-DS, 100-277V configuration

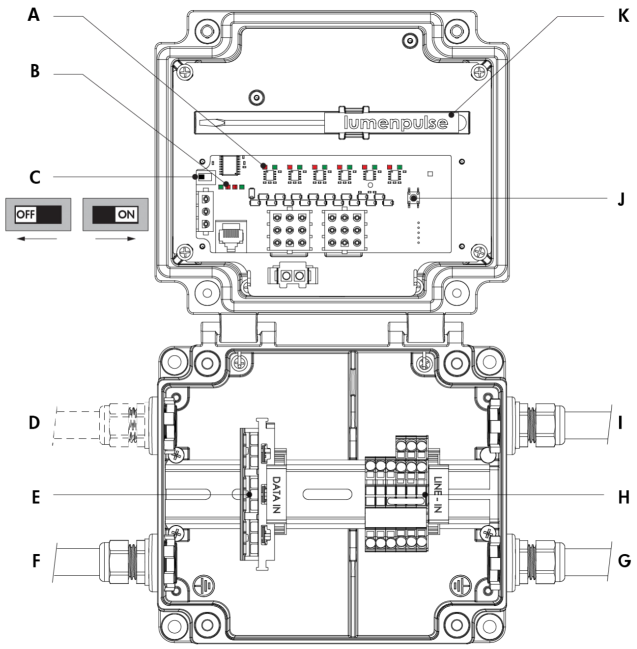

A - Output port LED indicator lights
Visual check of outgoing DMX control signal.
B - Input port LED indicator lights
Visual check of incoming DMX control signal.
C - Termination switch
Simple, time-saving switch for terminating the last device in line - no 120-ohm resistor required.
D - Optional data output to next CBX
Not isolated/ not boosted
E - Terminal blocks (data input)
Recommended wire gauge range: 24-16 AWG [0.205-1.307mm²]
F - Data input
G - Power & data output to fixture, 5 or 6 conductor cable
Maximum of 4x cascading control boxes per installation, isolated.
Note: 5 and 6 conductor fixtures cannot be combined in the same CBX.
H - Terminal blocks (power input/data output)
Recommended wire gauge: 16 AWG [1.307mm²]
Range: 20-12 AWG [0.519-3.301mm²]
I - Power input (100-277V)
J - Test button
Test fixtures with a simple button press that broadcasts a dynamic show to all of the fixtures on the line - with no programmer or console required. Once all fixtures are confirmed operational, the user can simply press the test button again and the test show will turn off.
K - Tool for connector operation

Refer to installation instructions for additional wiring details.

Lumenpulse Group Inc. reserves the right to make changes to this product at any time without prior notice and such modification shall be effective immediately
2018.06.06 copyright © 2018 Lumenpulse Group Inc.
EM - R14

CBX-DS, 347V configuration

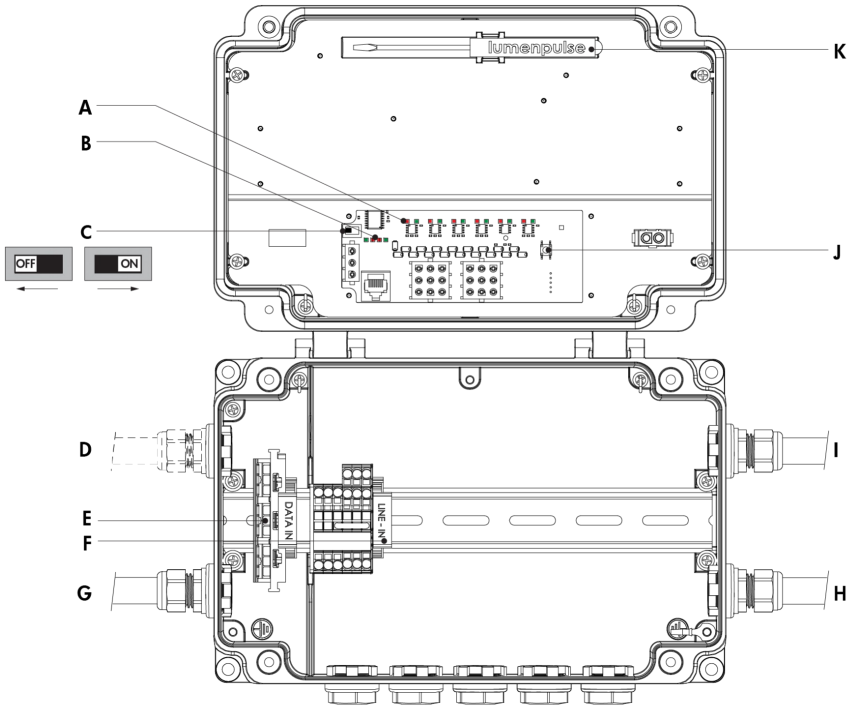

A - Output port LED indicator lights
Visual check of outgoing DMX control signal.
B - Input port LED indicator lights
Visual check of incoming DMX control signal.
C - Termination switch
Simple, time-saving switch for terminating the last device in line - no 120-ohm resistor required.
D - Optional data output to next CBX
Not isolated/ not boosted
E - Terminal blocks (data input)
Recommended wire gauge range: 24-16 AWG [0.205-1.307mm^2]
F - Terminal blocks (power input/data output)
Recommended wire gauge: 16 AWG [1.307mm^2]
Range: 20-12 AWG [0.519-3.301mm^2]
G - Data input
H - Power & data output to fixture, 5 or 6 conductor cable
Maximum of 4x cascading control boxes per installation, isolated.
Note: 5 and 6 conductor fixtures cannot be combined in the same CBX.
I - Power input (347V)
J - Test button
Test fixtures with a simple button press that broadcasts a dynamic show to all of the fixtures on the line - with no programmer or console required. Once all fixtures are confirmed operational, the user can simply press the test button again and the test show will turn off.
K - Tool for connector operation

Refer to installation instructions for additional wiring details.

Lumenpulse Group Inc. reserves the right to make changes to this product at any time without prior notice and such modification shall be effective immediately
2018.06.06 copyright © 2018 Lumenpulse Group Inc.
EM - R14

CBX-ST, 100-347V configuration

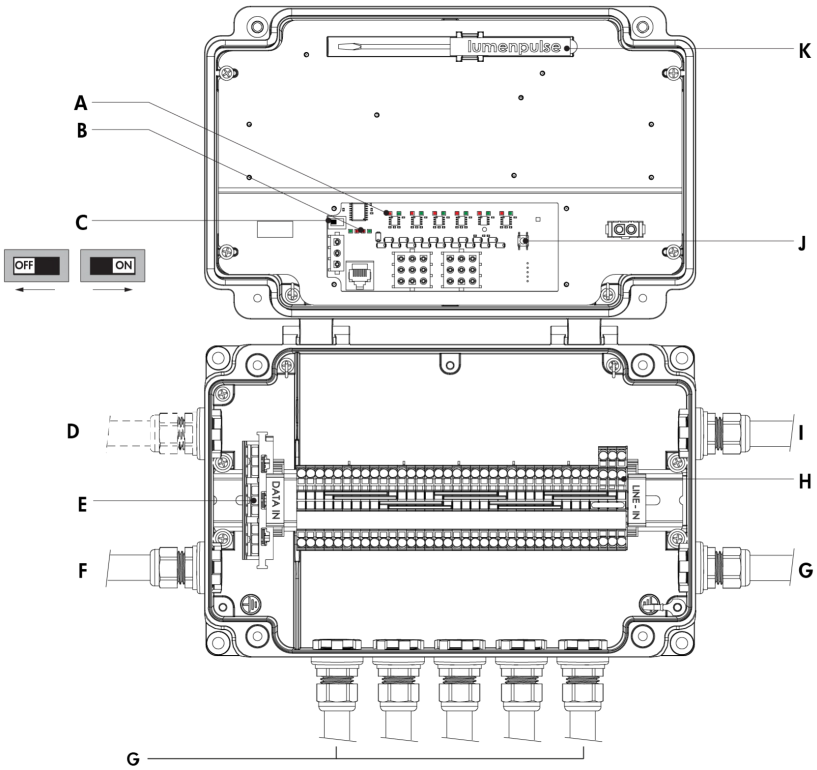

A - Output port LED indicator lights
Visual check of outgoing DMX control signal.
B - Input port LED indicator lights
Visual check of incoming DMX control signal.
C - Termination switch
Simple, time-saving switch for terminating the last device in line - no 120-ohm resistor required.
D - Optional data output to next CBX
Not isolated/ not boosted
E - Terminal blocks (data input)
Recommended wire gauge range: 24-16 AWG [0.205-1.307mm^2]
F - Data input
G - Power & data output to fixture, 5 or 6 conductor cable
Maximum of 4x cascading control boxes per installation, isolated.
Note: 5 and 6 conductor fixtures cannot be combined in the same CBX.
H - Terminal blocks (power input/data output)
Recommended wire gauge: 16 AWG [1.307mm^2]
Range: 20-12 AWG [0.519-3.301mm^2]
I - Power input (100-347V)
J - Test button
Test fixtures with a simple button press that broadcasts a dynamic show to all of the fixtures on the line - with no programmer or console required. Once all fixtures are confirmed operational, the user can simply press the test button again and the test show will turn off.
K - Tool for connector operation

Refer to installation instructions for additional wiring details.

Lumenpulse Group Inc. reserves the right to make changes to this product at any time without prior notice and such modification shall be effective immediately
2018.06.06 copyright © 2018 Lumenpulse Group Inc.
EM - R14

How to order

1	2	3	4	5	6

1 . Housing

CBX-DS	Power and Control box, Daisy Chain Configuration (1 output)
CBX-ST	Power and Control box, Star Configuration (up to 6 outputs)

2 . Input Voltage

100	100 volts
120	120 volts
208	208 volts
220	220 volts
240	240 volts
277	277 volts
347	347 volts [1]

3 . Control

DMX/RDM	DMX/RDM enabled

4 . Finish

BK	Black Sandtex®
BRZ	Bronze Sandtex®
SI	Silver Sandtex®
WH	Smooth white
BKTX	Textured black
BRZTX	Textured bronze non-metallic
GRATX	Textured medium gray
GRNTX	Textured green
WHTX	Textured white
CC	Custom color and finish (please specify RAL color) [2]

5 . Options

CRC	Corrosion-resistant coating for hostile environments [3]

6 . Certification

UL	UL compliant
CE	CE compliant

Notes:

[1] Consult fixture specification sheets for 347V availability.

[2] Lumenpulse offers a wide selection of RAL CLASSIC (K7) colors with a smooth texture and high-gloss finish. Please consult factory for a list of available K7 colors, other RAL textures and glosses, or to match alternate color charts. Final color matching results may vary.

[3] Use only when exposed to salt spray and harsh chemicals. This option is not required for normal outdoor exposure.

lumenpulse™

1220 Marie-Victorin Blvd., Longueuil, QC J4G 2H9 CA **T** United States 617.307.5700 | Canada 1.877.937.3003 | 514.937.3003 **F** 514.937.6289
info@lumenpulse.com **www.lumenpulse.com** **www.lumenpulse.com/products/1274/cbx**

Lumenpulse Group Inc. reserves the right to make changes to this product at any time without prior notice and such modification shall be effective immediately
2018.06.06 copyright © 2018 Lumenpulse Group Inc.
EM - R14

Project: Sixth Street PARC Viaduct

Date: July 25,2019
Submittal:90% Issuance

Type: XF9

HLB Project #: 16165

APPENDIX B: LIGHTING CUTSHEETS Note: This document is for information only. Refer to specifications for all catalog numbers, etc.

ALPHABET LEDRAbrands

Alphabet by Ledra Brands, Inc. | 15774 Gateway Circle Tustin, CA 92780 | PH: 714.259.9959 FAX: 714.259.9969 | AlphabetLighting.com

JOB NAME

CONTACT

ORDERING CODE

NU4" Round Adjustable Xicato

XICATO LUTRON 2016 OEM ADVANTAGE ACCOUNT eldoLED your product | our drive



DESCRIPTION

The NU4RA 4" recessed adjustable by ALPHABET offers cutting edge LED technology, premium performance, thoughtful construction and pleasing aesthetics. Offered standard with premium dimming using EldoLED 1% flicker free drivers in 120V, 277V, and 347V. A minimalistic look is achieved with an ultrathin 1/16" trim that is only 5/16" wide. Color choices of both trim and bezel are offered for a customized look. An adjustable hot-aiming system allows tilt adjustments from 0° to 40° with 360° rotation. The aiming adjustment and locking mechanisms are accessible from below the ceiling while the reflector is installed. A complex tilting mechanism positions the tilting axis for the maximum optical performance at all angles.

HOUSING

Electrocoated 16-gauge cold-rolled steel provides enhanced structural reinforcement and rust prevention. Superior, flame-retardant, UL-certified, injection-molded commercial-grade Lexan™ (PC) is used for the frame and regressed bezel trim. Lexan provides unmatched durability and impact resistance, 270°F heat deflection temperature, and is tested for UV resistance and water exposure in outdoor applications. The thermally-advanced, anodized heat sink uses 6063 aluminum alloy. Wet location rated is offered standard. A 90-minute constant-power IOTA emergency battery backup is available.

MOUNTING

An advanced mounting system allows for quick and secure installation with LED and driver serviceability from below the ceiling. The LED assembly uses die-cast aluminum mounting clamp grips (MCG) that swing out to tighten onto variable ceiling thicknesses ranging from 1/8" to 1-1/4". Integrated rubber feet on each MCG provide a non-slip vibration-resistant installation. The hidden MCG system is accessible from below ceiling by removing the snap-in lens/bezel assembly with either the included suction cup or a screwdriver blade. Integrated bar hangers feature integral toothed nails, T-bar mounting slots with locking holes, tabs for joist positioning, and extendibility from 14-3/4" to 26". Retrofit mounting option allows for installation from below ceiling by use of compact driver box. Ceiling cutout size is 4-3/8" diameter.

LISTINGS

- ETLus Listed to UL1598, cETL Listed to CSA C22.2 #250.0
- Type Non-IC, IC, CP, Airtight ASTM Standard E283
- Suitable for damp locations (no lens version)
- Suitable for wet locations, IP65 (lensed version)
- Non-conductive, Lexan dead-front construction
- Made in the USA – meets the requirements of the Buy American provision within the ARRA

LED INFO

- SDCM = 1X2 MacAdam Ellipse, Duv +/- 0.001

ORDERING CODE

see page 4

LM-79

SERIES	NU4	
TYPE	RA	round adjustable
LED	XTM19	XTM19
DELIVERED LUMENS	07LM[6]	600 lm
	10LM	860 lm
	13LM	1120 lm
	20LM[1]	1720 lm
	27LM[1,3]	2320 lm
CCT	27K	2700K
	B27K[2]	2700K beauty
	30K	3000K
	V30K	3000K vibrant
	35K	3500K
	40K	4000K
CRI	83	83CRI
	98	98CRI
REFLECTOR & LM MULTIPLIER	S35	35° specular, no lens (0.99)
	S55	55° specular no lens (1.00)
	D50	50° diffused, no lens (0.93)
	D60	60° diffused, no lens (0.90)
	SC35	35° specular with clear lens (0.89)
	SC55	55° specular with clear lens (0.91)
	DC50	50° diffused with clear lens (0.84)
	DC60	60° diffused with clear lens (0.82)
	HE60	60° high efficiency diffused lens (0.88)
	HE70	70° high efficiency diffused lens (0.78)
		(see page 2 for narrow beam angle options)
VOLTAGE	120	120V
	277	277V
	See Electrical Options for 347V.	
DIMMING	DIM10[5]	standard driver with flicker free 0-10V dimming to 1%
	DIM10Z[5]	flicker free 0-10V dimming to 0%
	DALI[5]	flicker free DALI dimming to 1%
	DALIZ[5]	flicker free DALI dimming to 0%
	DMXZ	flicker free DMX dimming to 0%
	LTE	Lutron Hi-lume 2-Wire (Triac) dimming to 1%
	LUT	Lutron Hi-lume EcoSystem dimming to 1%, Soft-on & Fade-to-Black
	LUTP[7]	Lutron Hi-lume Premier EcoSystem dimming to 0.1%, Soft-on & Fade-to-Black
	ELV[6]	leading & trailing edge dimming (Triac/ELV)
MOUNTING OPTIONS	NC	new construction with ceiling fitting plate
	IC[1]	insulation contact housing
	ICAT[1]	insulation contact / airtight housing
	CP[1]	chicago plenum housing
	RET	retrofit, no ceiling fitting plate
TRIM COLOR	WH	white
	MC	matte chrome
	BK	black
	BZ	bronze
	WT	wheat
BEZEL COLOR	WH	white
	MC	matte chrome
	BK	black
	BZ	bronze
	WT	wheat
ELECTRICAL OPTIONS	EM7	emergency battery backup, 90 minutes at 7 watts to LED
	EM12[4]	emergency battery backup, 90 minutes at 12 watts to LED
	FOR 347V	order separate "347V to 277V" step down transformer
	OPTION	p/n: P70489

ORDERING CODE

Follow the steps to specify your fixture, example:
NU4 - RA - XTM19 - 13LM - 35K - 98 - D50 - 120 - DIM10 - NC - WH - WH - EM7

XTM19	POWER	
DELIVERED LM	W (83CRI)	W (98CRI)
600	10	11
860	12	15
1120	17	21
1720	26	N/A
2320	29	N/A

Power Factor ≥ 0.9

NOTES

1 IC/ICAT/CP not available for 20LM and 27LM.
2 B27K Beauty Series choose 98CRI (actual 93). Available for 07LM, 10LM, and 13LM only.
3 27LM not available for 98CRI.
4 EM12 not available for 83CRI and 07LM, 10LM, 13LM.
5 Driver uses logarithmic dimming curve as standard. For linear dimming curve add "LIN" after dimming code, i.e. DIM10LIN.
6 Triac/ELV dimming not available in 07LM. Dimmable to <10% in 10LM, 13LM, 120V only. Dimmable to < 1% in 20LM or 27LM.
7 LUTP not available in 20LM or 27LM.

In a continuing effort to offer the best product possible we reserve the right to change, without notice, specifications or materials that in our opinion will not alter the function of the product.

Project: Sixth Street PARC Viaduct

Date: July 25,2019
Submittal:90% Issuance

Type: XF11

HLB Project #: 16165

APPENDIX B: LIGHTING CUTSHEETS Note: This document is for information only. Refer to specifications for all catalog numbers, etc.

SPECIALTY ORDERING CODE

XTM09 ORDERING CODE

SERIES	**NU4**	
TYPE	**RA**	round adjustable
LED	**XTM09**	XTM09
DELIVERED LUMENS	**07LM**	750 lm
	10LM	1000 lm
	13LM	1310 lm
	20LM	1740 lm
CCT	**27K**	2700K
	30K	3000K
	V30K	3000K vibrant
	35K	3500K
	40K	4000K
CRI	**83**	83CRI
	98[1]	98CRI
REFLECTOR & LM MULTIPLIER	**S15**	15° specular with clear lens
VOLTAGE	**120**	120V
	277	277V
	See Electrical Options for 347V.	
DIMMING	**DIM10**[4]	standard driver with flicker free 0-10V dimming to 1%
	DIM10Z[4]	flicker free 0-10V dimming to 0%
	DALI[4]	flicker free DALI dimming to 1%
	DALIZ[4]	flicker free DALI dimming to 0%
	DMXZ	flicker free DMX dimming to 0%
	LTE	Lutron Hi-lume 2-Wire (Triac) dimming to 1%
	LUT	Lutron Hi-lume EcoSystem dimming to 1%, Soft-on & Fade-to-Black
	LUTP[6]	Lutron Hi-lume premier EcoSystem dimming to 0.1%, Soft-on & Fade-to-Black
	ELV[5]	leading & trailing edge dimming (Triac/ELV)
MOUNTING OPTIONS	**NC**	new construction with ceiling fitting plate
	IC[2]	insulation contact housing
	ICAT[2]	insulation contact / airtight housing
	CP[2]	chicago plenum housing
	RET	retrofit, no ceiling fitting plate
TRIM COLOR	**WH**	white
	MC	matte chrome
	BK	black
	BZ	bronze
	WT	wheat
BEZEL COLOR	**WH**	white
	MC	matte chrome
	BK	black
	BZ	bronze
	WT	wheat
ELECTRICAL OPTIONS	**EM7**	emergency battery backup, 90 minutes at 7 watts to LED
	EM12[3]	emergency battery backup, 90 minutes at 12 watts to LED
	FOR 347V	order separate “347V to 277V” step down transformer
	OPTION	p/n: P70489

ORDERING CODE

Follow the steps to specify your fixture, example:
NU4 - RA - XTM09 - 13LM - 35K - 98 - S15 - 120 - DIM10 - NC - WH - WH - EM7

XTM09	POWER	
DELIVERED LM	**W (83CRI)**	**W (98CRI)**
750	12	14
1000	17	21
1310	24	30
1740	37	N/A

Power Factor ≥ 0.9

XTM09 NOTES

1 98 CRI not available for 20LM.
2 IC/ICAT/CP not available for 83/98 CRI in 13LM or 20LM.
3 EM12 not available for 83CRI in 07LM or 10LM.
4 Driver uses logarithmic dimming curve as standard. For linear dimming curve add “LIN” after dimming code, i.e. DIM10LIN.
5 Triac/ELV dimming to < 1% in 120V only.
6 LUTP not available in 13LM or 20LM.

MOUNTING OPTIONS

NC - NEW CONSTRUCTION

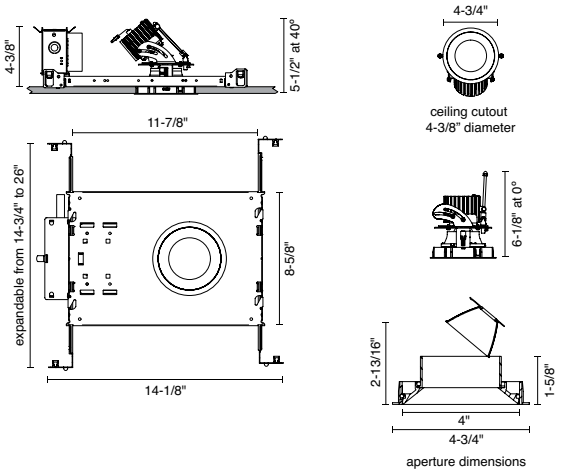

RET - RETROFIT

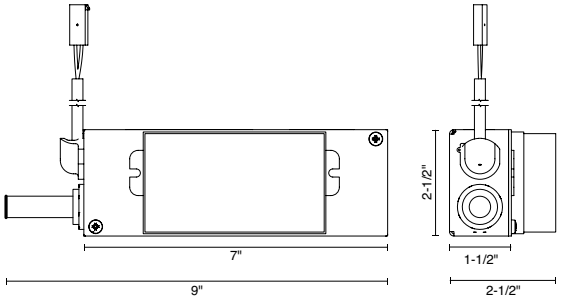

IC - INSULATION CONTACT HOUSING

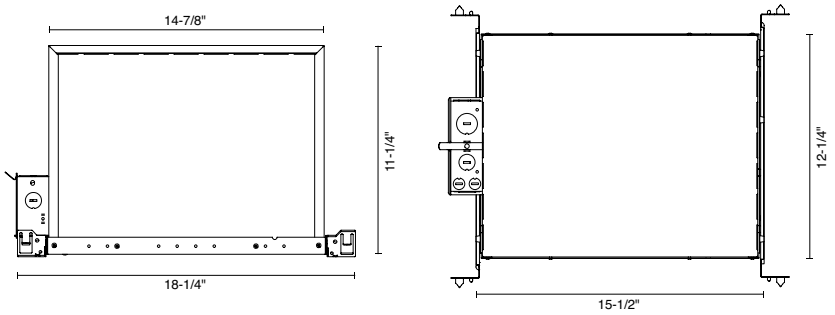

CP - CHICAGO PLENUM
ICAT - INSULATION CONTACT / AIR TIGHT

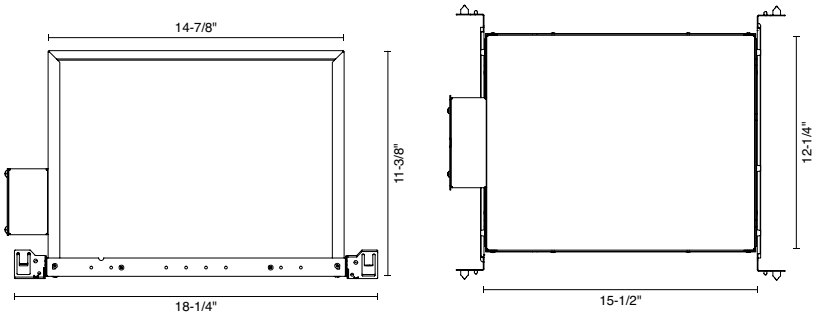

NOTES

1 Consult factory for smaller IC Housings when selecting lower lumen packages.

ORDERING CODE - ENERGY STAR

SERIES	**NU4**	
TYPE	**RA**	round adjustable
LED	**XTM19**	XTM19
DELIVERED LUMENS	**10LM** **13LM**	860 lm 1120 lm
CCT	**27K** **30K** **35K** **40K**	2700K 3000K 3500K 4000K
CRI	**83** **90**	83CRI 90CRI
REFLECTOR & LM MULTIPLIER	**S35** **S55**	35° specular, no lens (0.99) 55° specular, no lens (1.00)
VOLTAGE	**120** **277**	120V 277V
DIMMING	**DIM10**	standard driver with flicker free 0-10V dimming to 1%
MOUNTING OPTIONS	**NC** **IC** **ICAT** **RET**	new construction with ceiling fitting plate insulation contact housing insulation contact / airtight housing retrofit, no ceiling fitting plate
TRIM COLOR	**WH**	white
BEZEL COLOR	**WH**	white
ENERGY STAR	**ES**	energy star

ORDERING CODE

Follow the steps to specify your fixture, example:
NU4 - RA - XTM19 - 13LM - 27K - 90 - S35 - 120 - DIM10 - IC - WH - WH - ES

Zonal Lumen Summary

Zone	Lumens	%Lamp	%Fixt
0-20	395.89	N.A.	39.20
0-30	707.56	N.A.	70.10
0-40	925.52	N.A.	91.70
0-60	1004.58	N.A.	99.50
0-80	1007.83	N.A.	99.80
0-90	1009.24	N.A.	100.00
10-90	895.04	N.A.	88.70
20-40	529.63	N.A.	52.50
20-50	602.64	N.A.	59.70
40-70	80.72	N.A.	8.00
60-80	3.25	N.A.	0.30
70-80	1.58	N.A.	0.20
80-90	1.41	N.A.	0.10
90-110	0.33	N.A.	0.00
90-120	0.33	N.A.	0.00
90-130	0.33	N.A.	0.00
90-150	0.33	N.A.	0.00
90-180	0.33	N.A.	0.00
110-180	0.00	N.A.	0.00
0-180	1009.57	N.A.	100.00

Zonal Lumen Summary

Zone	Lumens
0-10	114.20
10-20	281.69
20-30	311.67
30-40	217.96
40-50	73.01
50-60	6.04
60-70	1.67
70-80	1.58
80-90	1.41
90-100	0.23
100-110	0.10
110-120	0.00
120-130	0.00
130-140	0.00
140-150	0.00
150-160	0.00
160-170	0.00
170-180	0.00

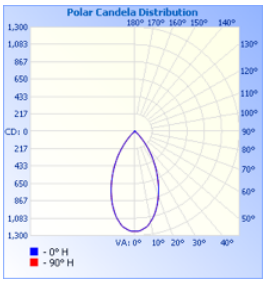

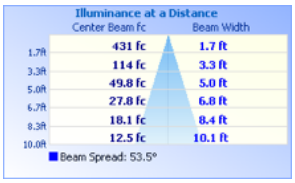

MARK
ARCHITECTURAL
LIGHTING™

Slot 4 LED Design2Ship™
Recessed Linear

Type:

Project:

Catalog Number:
DO NOT TYPE HERE. Autopopulated field.

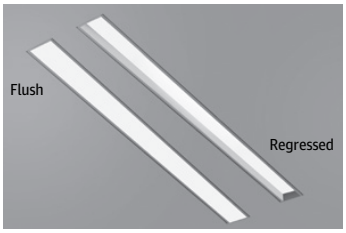

Slot 4 LED takes both form and function a step further with increased efficacy and integral controls creating a digitally addressable luminaire that is perfect where visually harmonious illumination and energy efficiency are desired.

Slot 4 LED is the ideal choice for spaces that emphasize lines and clean contemporary design. It is a perfect fit for Armstrong TechZone™ ceiling systems. A regressed lens option provides added dimension to the sleek, slender design.

Specification Features (continued on page 2)

Housing
Nominal 4" x 2', 3', 4', 5', 6', 7', 8' and continuous rows in 1' increments as standard, upper housing fabricated from cold-rolled steel with extruded aluminum ceiling trim.

Finish
Painted high reflectance matte white powder coat.

Reflector
Precision-formed steel; high reflectance matte white powder coat; 93% reflectivity.

Shielding
Flush Lens: Snap-in 90% transmissive satin acrylic lens.

Regressed Lens: Lay-in 90% transmissive satin acrylic lens.

Mounting
Recessed. Available for sheetrock, 9/16" slot grid or 15/16" inverted tee ceilings, or 9/16" inverted tee.

Design2Ship
Maximum order quantity of 500 linear feet per order. 5 business days from clean release of the order.

Technical Drawing

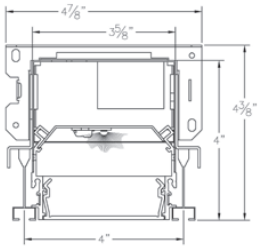

Flush - (FLP)

Fixture Performance - SL4L*

Lumens Output	400 LMF		600 LMF**		800 LMF**		1000LMF	
Fixture Style	RLP	FLP	RLP	FLP	RLP	FLP	RLP	FLP
Delivered Lumens/FT	316	314	544	541	737	734	928	924
Input Watts/FT	4	4	6	6	8	8	10	10
Lumen/Watt	91	91	95	95	93	93	90	89

*CCT (35K)
*Consult factory for customized lumen output and wattage
**Based on calculated values

A+ Capable options indicated by this color background.

Ordering

Example: SL4L QS LOP 4FT FLP TG 90CRI 35K 400LMF NLIGHT

SL4L	QS	LOP	LENGTH	FLP	CEILING
Series	**Program**	**Linear Length Plan**	**Total Run Length**	**Fixture Style**	**Ceiling Trim**
SL4L Slot 4 LED Linear Recessed	**QS** Quick Ship (5 day Shipping)	**LOP** Linear Optimized Plan	**2FT** 2' **3FT** 3' **4FT** 4' **5FT** 5' **6FT** 6' **7FT** 7' **8FT** 8' **_FT** *Specify continuous linear feet in 1 foot increments	**RLP**[1] Regressed Lens **FLP**[2] Flush Lens	**FL**[3] 5/8" Flange(sheetrock) **TG** 9/16" or 15/16" Flat or Inverted Tee **GB**[3] Trimless (sheetrock)

80CRI	35K	600LMF		MIN1	VOLTAGE
Direct Light Source Color Rendering	**Direct LED Color Temp**	**Direct LED Light Output**[4]	**Direct Distribution**	**Minimum Dimming Level**	**Voltage**
80CRI 80 CRI **90CRI** 90 CRI	**30K** 3000K **35K** 3500K **40K** 4000K	**400LMF** 400 Lumens per FT **600LMF** 600 Lumens per FT **800LMF** 800 Lumens per FT **1000LMF** 1000 Lumens per FT	**(blank)** Standard Distribution **WW**[4] Wall Wash	**NODIM** Non - Dim **MIN1** Constant current, dimming to 1% **DARK** Constant current, dimming to 0.1%	**120** 120V **277** 277V

EC	ZT	
Emergency Options	**Control Input**	**Options**
(blank) No Emergency **E10WLCP**[5] 4ft Emergency Section with battery pack **EC** 4ft Emergency circuit	**(blank)**[6] Non-dim **ZT** 0 10V **NLIGHT** nLight enabled	**CP** Chicago Plenum

Notes
1. Supplied with lift and shift lay-in lens.
2. Supplied with snap-in lens.
3. Not intended for post sheetrock installation.
4. Wall Wash not available with RLP lens option.
5. Remote mounted. Not available with CP.
6. Must select with NODIM option.

marklighting.com | 888-834-5684 | ©2017-2019 Acuity Brands Lighting, Inc. All Rights Reserved. We reserve the right to change design, materials and finish in any way that will not alter installed appearance or reduce function and performance.

Specification Features (continued)

LED Components
Linear: Nichia® - 757 Series LED chips (available in 80 or 90 CRI)

LED Life
Rated 65,000 hours (L80) at 25 °C ambient temperature.

Color Consistency
The Acuity Brands circuit boards for the linear LED components use a precise binning algorithm which creates a consistent color temperature from board to board. Color variation is no greater than a 2.5 Step MacAdam (2.5SDCM) along the black body locus from board to board.

Driver
eldoLED constant current driver options delivers ultra-smooth dimming resolution from 100% to 0.1%, while assuring flicker free, low current inrush, 89% efficiency and low EMI.

Integrated Controls
Optional nLight® embedded controls make luminaire addressable-allowing it to digitally communicate with other nLight enabled controls such as dimmers, switches, occupancy sensors and photocontrols. Simply connect all the nLight enabled control devices using standard CAT5 Cabling. (Input option: NLIGHT)

A+ Capable Luminaire
This item is an A+ capable luminaire, which has been designed and tested to provide consistent color appearance and out-of-the-box control compatibility with simple commissioning.

- All configurations of this luminaire meet the Acuity Brands' specification for chromatic consistency
- This luminaire is part of an A+ Certified solution for nLight® control networks when ordered with drivers marked by a shaded background*
- This luminaire is part of an A+ Certified solution for nLight control networks, providing advanced control functionality at the luminaire level, when selection includes driver and control options marked by a shaded background*

To learn more about A+, visit www.acuitybrands.com/aplus.

*See ordering tree for details

Optics
Slot LED's patent-pending, precision lumen DIRECTIR optics condition and refract light to deliver accurately controlled, striation-free, and uniform white light. All lumen DIRECTIR optics are injection-molded, optical grade, UV-resistant acrylic with selective finishing/polishing treatment.

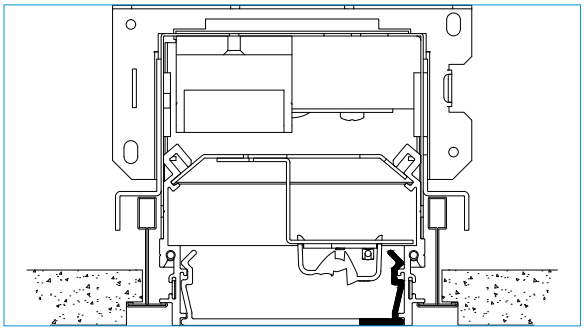

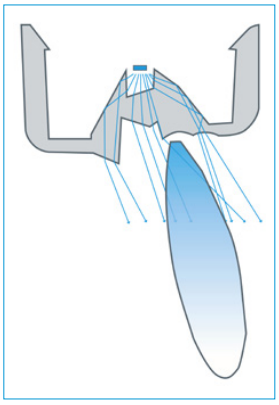

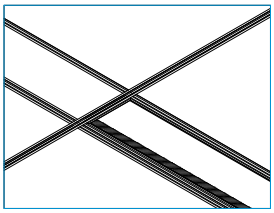

Wall Wash (WW)

Certification
CSA tested to UL 1598 standards.

Listings
DesignLights Consortium® (DLC) qualified product. Not all versions of this product may be DLC qualified. Please check the DLC Qualified Products List at www.designlights.org/QPL to confirm which versions are qualified.

Warranty
5-year limited warranty. Complete warranty terms located at:
www.acuitybrands.com/CustomerResources/Terms_and_conditions.aspx

Note: *Actual performance may differ as a result of end-user environment and application.*
All values are design or typical values, measured under laboratory conditions at 25 °C.
Specifications subject to change without notice.

Photometry
For photometric information refer to www.marklighting.com.

marklighting.com | 888-834-5684 | ©2017-2019 Acuity Brands Lighting, Inc. All Rights Reserved. We reserve the right to change design, materials and finish in any way that will not alter installed appearance or reduce function and performance.

Design2Ship™ Program Details

1. All Quick Ship orders should be activated through Agile.
2. Ship dates are 5 business days from date of clean release. Order lines must process and code upon entry, if you have an UNK, NCI or BOM status, re-check your spec sheet to correct nomenclature.
3. All order received after 3:30pm EST will be processed the next business day and will receive an ESD from that date.
4. All purchase orders must be clearly identified as Quick Ship. Non-Quick Ship products should be ordered on a separate purchase order.
5. Orders with both Quick Ship products and non-Quick Ship products will default to the longest lead-time.
6. If an order exceeds the product specification sheet quantity, then the following shall apply:
   a. If less than or equal to 2 times maximum Quick Ship quantity, the order will be split into two delivery dates. The first will go in 5 days followed by the second in 10 days.
   b. If the order is more than 2 times maximum Quick Ship quantity, then the order would not qualify as a Quick Ship order.

MAXIMUM QUANTITY OF 500 LINEAR FEET PER ORDER

7. Changes to the order is not permitted.
8. Cancellation after release will result in a 50% restock fee, minimum.
9. Order requirements:
   a. Complete ship to address
   b. Contact information
   c. Complete Quick Ship catalog number
   d. Pricing and commission rate
   e. Any shipping notes / site restrictions

Technical Drawing

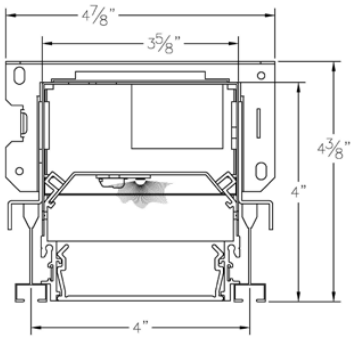

Flush - (FLP)

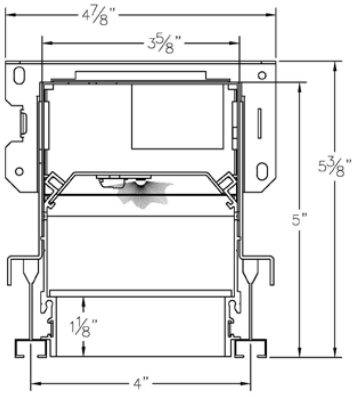

Regressed - (RLP)

Ceiling Trim

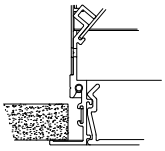

FL
(Flanged sheetrock)

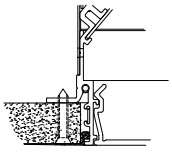

GB
(Flangeless sheetrock)

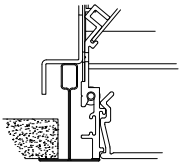

TG
(15/16" Grid)

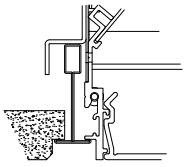

TG
(9/16" Grid)

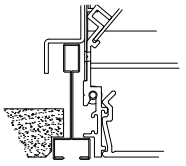

TG
(9/16" Slot Grid)

marklighting.com | 888-834-5684 | ©2017-2019 Acuity Brands Lighting, Inc. All Rights Reserved. We reserve the right to change design, materials and finish in any way that will not alter installed appearance or reduce function and performance.

Remote Emergency Battery Mounting

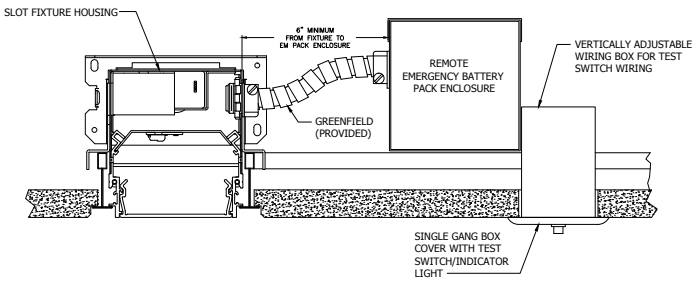

Notes

- Delivers 700 lumens per 4FT length. Default location is the right side of fixture and end of run.
- Provided with 4FT of flexible conduit. Maximum of 25FT remote distance if extended. Extension provided by others.

nLight Air Wireless

To Make fixture NLTAIR2 compatible the following components are required:

1) rpp20 D
2) rPODB 2P DX

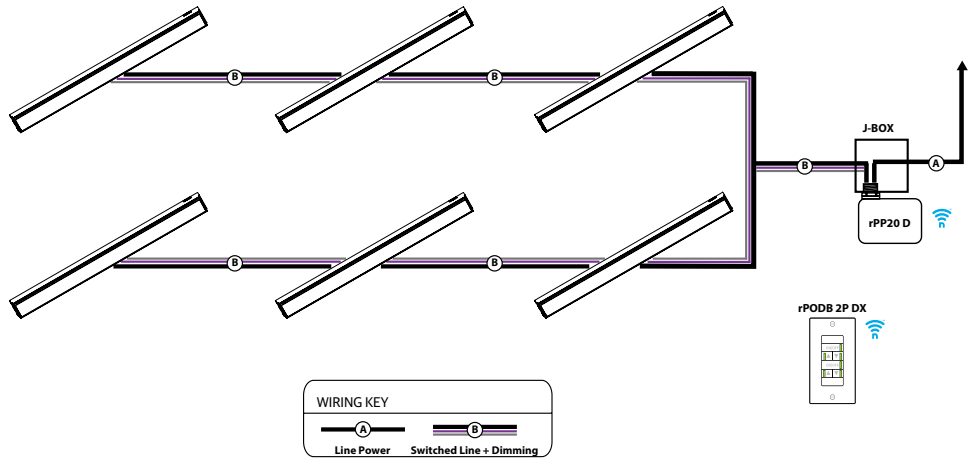

marklighting.com | 888-834-5684 | ©2017-2019 Acuity Brands Lighting, Inc. All Rights Reserved. We reserve the right to change design, materials and finish in any way that will not alter installed appearance or reduce function and performance.

PINNACLE ARCHITECTURAL LIGHTING®

Project Name _____

Date _____ Type _____



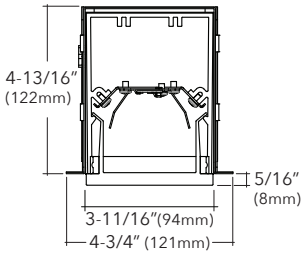

EDGE EV3WET

3" Recessed Linear WET

Key Features

- Approved for wet location unless otherwise noted. IP65 and IK10 rated
- Fixture is built using corrosion resistant materials
- 6063-T5 Extruded aluminum housing
- Highly reflective die-formed white painted reflector
- All-inclusive module houses all LED system components in one compact unit
- Unit easily releases from the housing for room-side maintenance
- Wiring access available through bottom of housing
- 5-year limited warranty covers LED, driver and fixture
- UL and cUL listed
- Buy American Act compliant

Example Part #: EV3-WET-830HO-8'-IND-FLF-U-OL1-1-0-W

EV3 - WET - ____ - ____ - ____ - ____ - ____ - ____ - ____ - ____ - ____ - ____ - ____ - ____

SHIELDING | CRI, CCT & OUTPUT | LENGTH | POSITION | MOUNTING | VOLTAGE | DRIVER | CIRCUITING | BATTERY & EMERGENCY | FINISH | FIXTURE OPTIONS | CONTROLS

WET	______	______	___
SHIELDING	**CRI, CCT & OUTPUT**	**LENGTH[1]**	**POSITION[2]**
WET - Satine Wet Lens *Shielding pg. 2*	**_27_ _** - 2700K **_30_ _** - 3000K **_35_ _** - 3500K **_40_ _** - 4000K **CL_ _ _ _ _ _** - Custom Lumens **CW_ _ _ _ _ _** - Custom Watts *Lumen Output pg. 2* *Example: 830HO is **8** = 80 CRI; **30** = 3000K; **HO** = High Output; Blank = Standard Output*	**_ _** - Individual Fixture *Length pg. 2*	**IND** - Individual **BOR** - Beginning of Row **MOR** - Middle of Row **EOR** - End of Row *Mounting pg. 3*

FL _	_	___	_
MOUNTING	**VOLTAGE**	**DRIVER**	**CIRCUITING**
FL(F) - 1/2" Flange *Mounting pg. 3*	**U** - Universal *(120 thru 277V)* **1** - 120V **2** - 277V **3** - 347V *Voltage pg. 3*	**OL1** - Osram *(10%, 0-10v, standard)* **OL2** - Osram *(1%, 0-10v)* **OL3** - Osram 347v *(10%, 0-10v)* **EE1** - eldoLED ECOdrive *(1%, 0-10v)* **ES1** - eldoLED SOLOdrive *(0%, 0-10v)* **LH1** - Lutron Hi-lume *(1%, EcoSystem)* **L51** - Lutron 5-Series *(5%, EcoSystem)* **PL2** - Philips Xitanium *(1%, 0-10v)* **PS1** - Philips Xitanium *(50%/100%)* **ND** - Non-Dimming *Driver pg. 3*	**1** - Single Circuit **M** - Multi Circuit **E** - Emergency *(entire fixture)* **N** - Night Light *(entire fixture)* *Circuiting pg. 4*

___	___	__	
BATTERY & EMERGENCY[3]	**FINISH**	**FIXTURE OPTIONS**	**CONTROLS**
0 - None **_P** - Philips Bodine 10W **_I** - Iota 10W **_IC** - Iota 10W *(CEC Listed)* **_E** - Emergency Circuit Section **_N** - Night Light Circuit Section **_L** - Life Safety Circuit Section **_G** - Philips Bodine GTD *Battery and Emergency pg. 4*	**W** - White **S** - Metallic Silver **BL** - Textured Black **BR** - Bronze **GR** - Graphite **CC** - Custom Color *Finish pg. 4*	**GLR** - Internal Fast Blow Fuse **EPF** - End Power Feed *Fixture Options pg. 5*	*Pinnacle is able to accommodate different control solutions from different manufacturers. Consult Factory for more information.*

[1] Individual fixtures come in nominal 2', 3', 4', 5', 6', 7', & 8' lengths, see pg. 2 for actual lengths. [2]Specify position of fixture. Use IND for an individual fixture, use BOR, MOR, or EOR for building connected rows. [3] Enter quantity for Battery and Emergency, Example 2P. [4] Pinnacle Lighting can integrate a variety of manufacturer solutions in to our fixtures. If your project has specific control requirements that are not listed below, please contact the factory as we are always willing to look into more options.

Specifications and dimensions subject to change without notice. Specification sheets that appear on pinnacle-ltg.com are the most recent version and supersede all other previously printed or electronic versions.

Shielding

WET
Satine Wet Lens

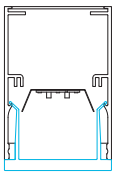

CRI, CCT & Output

- Specify either 80 or 90 CRI
- Longer lead-time may apply for 90 CRI. Consult factory.
- 80 CRI = R9≥19 and 90 CRI = R9≥61

Custom Output- Lumens OR Wattage

CL_ _ _ _ _	Specify CRI, CCT and desired lumens (i.e. CL835500)	*Specify lumens between standard offering listed below. Lumens are specified per color temp*
CW_ _ _ _ _	Specify CRI, CCT and desired wattage (i.e. CW9407)	*Specify watts between standard offering listed below*

80 CRI

	Color	Output	Watts *per foot*	Shielding **WET** Satine Wet *Lumens/ft*	*LPW*
830	3000K	Standard	4.7	319	67.9
830HO	3000K	High	8.7	593	68.6
835	3500K	Standard	4.7	328	69.8
835HO	3500K	High	8.7	610	70.5
840	4000K	Standard	4.7	335	71.3
840HO	4000K	High	8.7	622	71.9

90 CRI

927	2700K	Standard	4.7	252	53.6
927HO	2700K	High	8.7	469	54.2
930	3000K	Standard	4.7	294	62.6
930HO	3000K	High	8.7	547	63.2
935	3500K	Standard	4.7	295	62.8
935HO	3500K	High	8.7	549	63.5
940	4000K	Standard	4.7	299	63.6
940HO	4000K	High	8.7	555	64.2

Length

2	3	4	5	6	7	8
Individual Fixture	Individual Fixture	Individual Fixture	Individual Fixture	Individual Fixture	Individual Fixture	Individual Fixture
27-1/8" (689mm)						
	39" (991mm)					
		50-3/4" (1289mm)				
			62-5/8" (1591mm)			
				74-5/8" (1895mm)		
					86-1/2" (2197mm)	
						98-3/8" (2499mm)

Position

- When making rows with EDGE Wet, the rows must be ordered as individual units with a position specified
- Positions can either be "BOR" - Beginning of Row, "MOR" - Middle of Row, or "EOR" - End of Row
- The connection between fixtures is less than 1/8"
- For single, non-connected units, specify as "IND" for individual

IND	BOR	MOR	EOR
Individual Fixture	Beginning of Row	Middle of Row	End of Row

Mounting

- Available with standard 1/2" flange (FL)
- Utilize Surface Mount for in-wall application. Building surface waterproofing by others
- End trims and power cord attached at factory
- Approved for wet location unless otherwise noted
- Refer to installation instructions during installation at the jobsite

FL(F)	Flanged

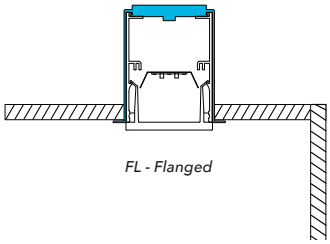

FL - Flanged

Voltage

- Some EDGE Wet configurations will not accommodate all voltage options; consult with factory

U	Universal
1	120 volt
2	277 volt
3	347 volt

Driver

- Standard Driver Option = OL1
- Driver Lifetime: 50,000 hours at 25°C ambient operating conditions
- For more driver options see Pinnacle Resource Guide
- Some EDGE Wet configurations will not accommodate all driver options; consult with factory

OL1	Osram Optotronic 10%, 0-10v
OL2	Osram Optotronic 1%, 0-10v, nominal 1% dimming range
OL3	Osram Optotronic 347v 10%, 0-10v, requires 347v option
EE1	eldoLED ECOdrive 1%, 0-10v Logarithmic
EE2	eldoLED ECOdrive 1%, 0-10v Linear
ES1	eldoLED SOLOdrive 0%, 0-10v Logarithmic
ES2	eldoLED SOLOdrive 0%, 0-10v Linear
LH1	Lutron Hi-lume Soft-on, Fade-to-black 1%, EcoSystem, LDE1
L51	Lutron 5-Series 5%, EcoSystem, LDE5
PL2	Philips Advance Xitanium 1%, 0-10v
PS1	Philips Advance Xitanium Step Dimming 50%/100%
ND	Non-Dimming

Specifications and dimensions subject to change without notice. Specification sheets that appear on pinnacle-ltg.com are the most recent version and supersede all other previously printed or electronic versions.

How to specify Circuiting, Battery and Emergency

1

- Select fixture circuiting from options below
- Some EDGE Wet configurations will not accommodate all circuiting options, consult with factory

Circuiting

1	Single Circuit
M	Multi Circuit
E	Emergency Circuit only
N	Night Light Circuit only

2 + **3**

- Battery and emergency section options are available in addition to fixture circuit
- Select battery and emergency section options below; factory shop drawing required
- Some EDGE Wet configurations will not accommodate all circuiting options, consult with factory

Battery and/or Emergency *If Required*

0	No battery or specific emergency section required

Battery

- Select battery section type if required, indicate total QTY. *Example 2P*
- 90 minute battery runtime; test button is integral to the fixture
- No battery option available for 2' lengths
- Entire direct fixture housing is on battery for lengths up to 5'
- Half of direct fixture is on battery for 6', 7' or 8' housing lengths
- For more battery options available, see Pinnacle Resource Guide

For Approximate Battery Lumen Output
- Multiply battery wattage X fixture LPW shown on Lumen Table
- 92.3 (LPW) x 10 (watts) = 923 battery lumen output

0	No battery
_P	Philips Bodine 10w Integral
_I	Iota 10w Integral
_IC	Iota 10w Integral *CEC Listed*

Emergency

- Select emergency section type if required, indicate total QTY. *Example 1E*
- Combine battery and emergency section ordering codes if both options are selected

_E	Emergency circuit section
_N	Night Light circuit section
_L	Life Safety circuit section NO THROUGH WIRE
_G	Philips Bodine GTD, Generator Transfer Device section

Battery OR Emergency Ordering Examples
- Single circuit, 10w Integral Battery — Ordering Code: 1-1P
- Emergency only, 10w Integral Battery — Ordering Code: E-1P
- Single circuit, GTD required — Ordering Code: 1-1G

Combination Section Ordering Examples
- Single circuit, (1) 10w battery, (1) emergency section — Ordering Code: 1-1P1E
- Multi circuit, (2) 10w battery, (2) emergency sections — Ordering Code: M-2P2E
- Single circuit, (1) night light section — Ordering Code: 1-1N

Finish

- Standard powder-coat textured white, metallic silver, textured black, graphite or bronze painted finish; consult factory for chip of standard paint finishes
- Selecting a fixture finish other than white may impact lumen output; consult factory for more information

W	White
S	Metallic Silver
BL	Textured Black
GR	Graphite
BR	Bronze
CC	Custom Color

Specifications and dimensions subject to change without notice. Specification sheets that appear on pinnacle-ltg.com are the most recent version and supersede all other previously printed or electronic versions.

Fixture Options

- Additional options to enhance the fixture and finish of the product
- Consult factory for MR16 configurations

GLR	Internal Fast Blow Fuse
EPF	End Power Feed

Controls

- Pinnacle is able to accommodate different control solutions from different manufacturers. Consult Factory for more information.

Photometrics

Satine Wet Lens

Test #	ITL86499
Catalog #	EV3-WET-N-840-4
Lumens	1338 lm
Watts	18.8 W
Efficacy	71 LPW

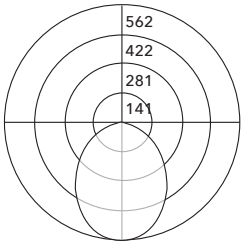

Candela Distribution

Vert Angle	Horizontal Angle				
	0	22.5	45	67.5	90
0	562	562	562	562	562
5	559	558	558	557	557
10	547	545	544	541	540
15	529	525	522	518	514
20	504	495	491	484	479
25	471	461	453	444	438
30	432	423	414	401	395
35	391	382	371	357	351
40	347	339	327	313	307
45	303	296	284	271	265
50	259	254	243	231	225
55	216	212	204	194	190
60	175	173	166	159	156
65	137	137	132	127	125
70	101	103	101	98	97
75	68	72	72	72	73
80	41	45	49	51	52
85	18	24	30	34	35
90	2	8	15	19	21

Luminance Data (cd/sq.m)

Angle In Degrees	Average 0-Deg	Average 45-Deg	Average 90-Deg
45	3516	3122	2855
55	3086	2690	2436
65	2635	2277	2074
75	2131	1863	1780
85	1625	1615	1669

For all available IES files, please visit our website at pinnacle-ltg.com. Photometry testing in accordance to IESNA-LM-79-08 at an NVLAP accredited testing laboratory. Testing conducted at 25°C ambient conditions

Applications & Certificates

Construction 6063-T5 extruded aluminum housing with welded ends. Internal lens gaskets seal housing to prevent moisture and debris from entering the fixture. Pressure equalizing vent allows fixture to "breathe" preventing condensation.

Shielding Solid acrylic diffuse snap-in lens with matte finish with an EPDM gasketed for complete wet seal.

Mounting Fixtures can be installed individually or connected for a continuous run appearance. IND fixtures are individual fixtures and have no joining holes. IND fixtures cannot be joined. BOR fixtures are used for beginning of row and have joining holes on non-power end of fixture. MOR fixtures are used for middle of row and have joining holes on both ends of fixture. EOR fixtures are used for the end of a row and have no joining holes on power end of fixture. Consult factory for detailed installation instructions.

LED 25°C test environment. Lumen output/wattage has a margin of +/- 5%; 2' or 3' lengths may have a greater wattage deviation. All luminaire configurations tested in accordance with IES LM-79. Diodes tested in accordance with IES LM-80. Lifetime calculated using IES TM-21. Minimum lifetime greater than 60,000 hours. Lifetime Projection L70 = 123,100 hours and L90 = 36,700 hours. MacAdam 3-Step Ellipses. Not all products are Lighting Facts listed. For all available IES files, please visit our website at pinnacle-ltg.com.

CRI, CCT & Lumen Output Two lumen packages available. Standard and High (HO). Custom outputs are available. Specify custom lumens or watts between standard offering listed on CRI, CCT & Output page. 80 CRI is available for 3000K, 3500K, and 4000K. 90 CRI is available for 2700K, 3000K, 3500K, and 4000K. 80 CRI = R9≥19 and 90 CRI = R9≥61.

Voltage Universal (U), 120 volt (1), 277 volt (2) and 347 volt (3) options available. Must specify OL3 in Driver section when 347 volt (3) is selected. Some EDGE Wet configurations will not accommodate all voltage options; consult with factory.

Driver Standard Driver Option is Osram 0-10V, 10% = OL1. Electronic driver, Power factor is >0.9 with a THD <20%. Driver Lifetime: 50,000 hours at 25°C ambient operating conditions. Ambient operating range: -20°F/-30°C to 122°F/55°C. For more driver options, see Pinnacle Resource Guide. Some EDGE Wet configurations will not accommodate all driver options.

Circuiting Select from single circuit (1), Multi circuit - For multiple circuiting and zone control, requires factory shop drawing (M), Emergency circuit (E) or Night Light circuit (N). For emergency circuiting situations that require no through wire or circuit separation, Life Safety Circuit should be selected. This will provide a separate power feed and only the Life Safety Circuit in that section. Some EDGE Wet configurations will not accommodate all circuiting options; consult with factory.

Battery & Emergency Select battery or emergency options if required. If battery or emergency option is not required, enter 0. Battery duration is 90 minutes as standard. Test button is integral to fixture. For more Battery options, see Pinnacle Resource Guide.

Finish Standard powder-coat textured white, metallic silver, textured black, graphite or bronze painted finish; consult factory for chip of standard paint finishes or for additional custom color and finish options.

Controls Consult Factory

Labels UL and cUL Listed, approved for wet location unless otherwise noted. IP65 and IK10 rated.

Buy American Act Compliant

Warranty EDGE Wet LED offered with a 5-year limited warranty. Covers LED, driver and fixture.

ZXLLi

Flood ◢ ZXLL Series



PROJECT

FIXTURE TYPE

Characteristics

Listed

Suitable for wet location use.

Technical Data

Material	Housing/Cap/Stem - Machined silicone magnesium aluminum alloy (6061-T6) resistant to corrosion Stainless steel (SS304) hardware
Lamp	HK LED
Voltage	120~277V
Wattage	1W / inch
Color Temp	3K, 4.5K
Power Supply	Integral LED driver

Ordering Guide

Series	ZXLLi
Barndoors	BD (linear)
Voltage	120~277V
Wattage	1W / inch
Lamp	HK LED
Color Temp	3K 4.5K
Stem (optional)	FSS
Finish	BK (black) BZ (bronze) WT (white) ABK (anodized black) ACL (anodized clear) CC (custom)

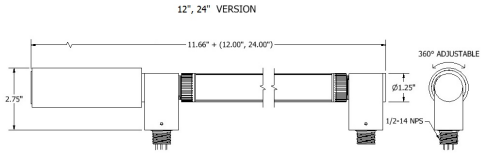

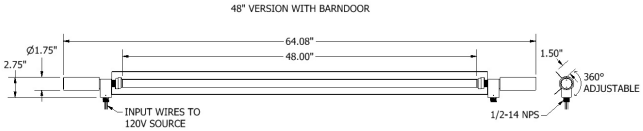

ALPHABET LEDRAbrands

Alphabet By Ledra Brands | 15774 Gateway Circle Tustin, CA 92780 | PH: 714.259.9959 FAX: 714.259.9969 | www.alphabetlighting.com

Job Name:	Contact:
Ordering Code:	Fixture Type:

ZETA750



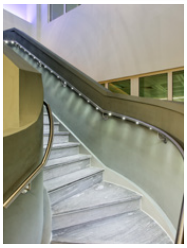

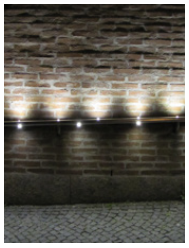



Description

The ZETA750 Series Puck is the most flexible and vandal resistant LED handrail lighting module on the market, offering unrivalled uniformity and photometric performance. Designed with the specifier in mind, it accommodates a wide range of options of beam distribution for a clean design.

The pucks can be installed in new handrail or retrofitted into existing handrail, flat or oval metallic structures and surfaces. Powerful yet small and unobtrusive, makes the Handrail Puck ideal for incorporation into street sculptures, illuminating artwork or to wash walls with clean, white LED light.

The ZETA750 is engineered of electroplated 316 stainless steel. Other custom materials are available including aluminum, brass, and super-duplex stainless steel (which offers exceptional corrosion resistance), as well as custom painted finishes. Please consult factory for these custom options.

At standard handrail height the pucks provide 11 foot-candles at the surface below. They are offered with wide, narrow, and asymmetric beam patterns. ETL wet rated for outdoor applications. For round handrail, the LED pucks are field installed with use of the ZETA750 series Drill Tool Kit. For flat surfaces, the installer may use their own drill bits and threading taps. Please refer to the installation instructions.

Housing

Extremely durable 316 stainless steel marine grade housing, with 3.5" (90mm) 20AWG wire leads. Choice of Thin Wall (recommended for ease of installation), or Heavy Wall. Curved face or flat face options available in three different beam patters 60°, 90° asymmetric, and 120°.

Mounting

Type of Surface- Install in metallic surface only for proper thermal dissipation. Luminaire is for use in non-insulated recessed surfaces.
Fits Railing size - Ø38.0mm, 1.496in to 100.0mm, 3.937in.
Thin Wall Puck minimum wall thickness - 1.5mm, 0.059in.
Heavy Wall Puck minimum wall thickness - 2.5mm, 0.980in.
Minimum distance between lights - 101.6mm, 4.000inches (center to center). Max 16 lights may be connected in series.

Electrical / Led Driver

- 3VDC, 500mA, 1.5W (Remote Driver Required)

Listings

- ETLus Listed to UL2108 (suitable for wet locations)
- cETL Listed to CSA C22.2 #250.0
- Impact tested to IK10 (EN62262)
- IP66 rated
- ADA Compliant when using handrail diameter 31.75mm (1.25") to 38.1mm (1.5") O.D.

LED Performance

LED:	Cree XPG
DUV:	.001
CCT:	2700k, 3000k, 4000k, 5000k
CRI:	>80*
Life:	90% at 51k hrs based on LM-80 testing
Warranty:	5 year limited warranty

*At 5000K CRI >70

Lumens	CCT
104 lm	2700k
111 lm	3000k
119 lm	4000k
127 lm	5000k

Ordering Codes

Follow the steps to specify your fixture, example: **750 - 4 - 2 - 1 - 1**

Part Number	CCT	Beam	Face Type	Wall Thickness
750 Rail Puck	**2** 2700k **3** 3000k **4** 4000k **5** 5000k	**1** Standard 60° **2** Symmetric 120° **3** Assymetric 90°	**1** Curved **2** Flat	**1** Heavy **2** Thin

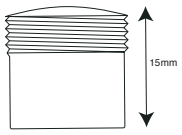

Heavy Wall Curved Face
- Mounts to pipe size: Ø38mm - Ø100mm
- Wall thickness ≥ 2.5mm
- Mounting thread: M16x1mm
- Requires counterbore Ø16mm x 1.8mm ↧



Thin Wall Curved Face
- Mounts to pipe size: Ø38mm - Ø100mm
- Wall thickness ≥ 1.5mm
- Mounting thread: M16x1mm

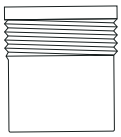

Heavy Wall Flat Face
- Mounts to flat surfaces
- Wall thickness ≥ 2.5mm
- Mounting thread: M16x1mm
- Requires counterbore Ø16mm x 1.8mm ↧



Thin Wall Flat Face
- Mounts to flat surfaces
- Wall thickness ≥ 1.5mm
- Mounting thread: M16x1mm

LM-79

Project: Sixth Street PARC Viaduct

Date: July 25,2019
Submittal:90% Issuance

Type: XF14

HLB Project #: 16165

APPENDIX B: LIGHTING CUTSHEETS Note: This document is for information only. Refer to specifications for all catalog numbers, etc.

Job Name:	Contact:
Ordering Code:	Fixture Type:



Standard 60º



Assymetric 90º



Symmetric 120º

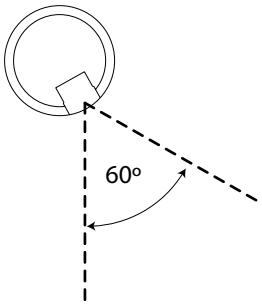

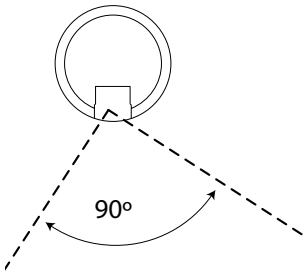

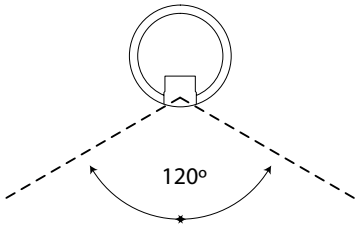

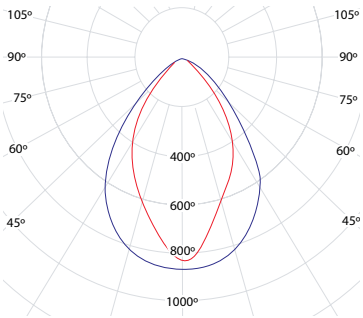

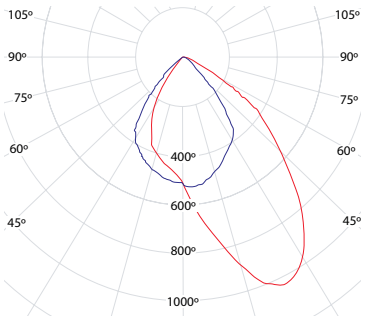

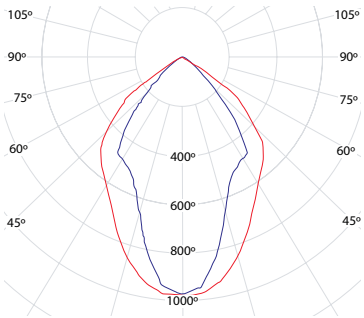

Job Name:	Contact:
Ordering Code:	Fixture Type:

60° STANDARD BEAM

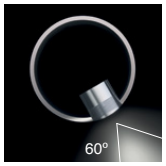

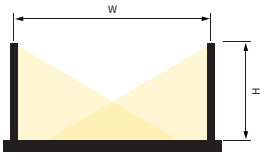

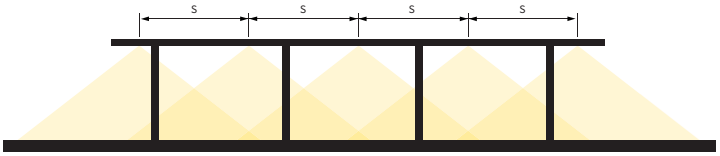

W = Path Width H = handrail height (900mm nominal) S = LED spacing

STANDARD BEAM - LIGHT FROM ONE SIDE

path width	1.2m		2.0m		3.0m		4.0m	
LED Spacing	lx	u	lx	u	lx	u	lx	u
0.5m	107	0.67	82	0.51	61	0.31	47	0.19
1.0m	55	0.76	41	0.58	31	0.34	24	0.21
2.0m	27	0.78	21	0.59	15	0.34	12	0.21

lx = average lux u = uniformity color temp = 3000K

STANDARD BEAM - LIGHT FROM BOTH SIDES

path width	1.2m		2.0m		3.0m		4.0m	
LED Spacing	lx	u	lx	u	lx	u	lx	u
0.5m	216	0.76	164	0.68	121	0.66	95	0.66
1.0m	109	0.82	83	0.72	61	0.72	48	0.72
2.0m	55	0.84	41	0.72	31	0.71	24	0.72

lx = average lux u = uniformity color temp = 3000K

90° VERTICAL ASYMMETRIC

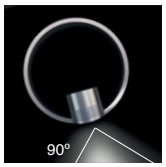

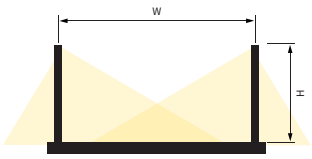

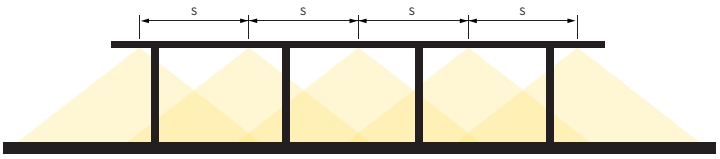

W = Path Width H = handrail height (900mm nominal) S = LED spacing

STANDARD BEAM - LIGHT FROM ONE SIDE

path width	1.2m		2.0m		3.0m		4.0m	
LED Spacing	lx	u	lx	u	lx	u	lx	u
0.5m	95	0.8	73	0.45	52	0.21	40	0.15
1.0m	48	0.89	37	0.51	27	0.23	20	0.16
2.0m	23	0.89	18	0.51	13	0.23	10	0.16

lx = average lux u = uniformity color temp = 3000K

STANDARD BEAM - LIGHT FROM BOTH SIDES

path width	1.2m		2.0m		3.0m		4.0m	
LED Spacing	lx	u	lx	u	lx	u	lx	u
0.5m	193	0.89	148	0.8	105	0.77	81	0.62
1.0m	97	0.9	74	0.8	53	0.86	41	0.66
2.0m	48	0.84	37	0.8	27	0.84	20	0.68

lx = average lux u = uniformity color temp = 3000K

120° VERTICAL SYMMETRIC



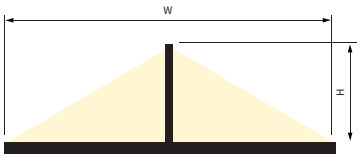

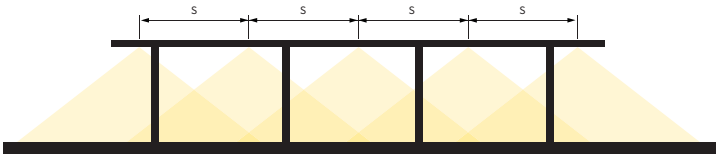

W = Path Width H = handrail height (900mm nominal) S = LED spacing

STANDARD BEAM - LIGHT FROM ONE SIDE

path width	1.2m		2.0m		3.0m		4.0m	
LED Spacing	lx	u	lx	u	lx	u	lx	u
0.5m	147	0.7	113	0.4	79	0.12	58	0.02
1.0m	74	0.71	57	0.44	40	0.12	29	0.02
2.0m	36	0.22	28	0.11	19	0.03	14	0.01

lx = average lux u = uniformity color temp = 3000K

STANDARD BEAM - LIGHT FROM BOTH SIDES

path width	1.2m		2.0m		3.0m		4.0m	
LED Spacing	lx	u	lx	u	lx	u	lx	u
0.5m	195	0.87	103	0.56	61	0.12	46	0.02
1.0m	95	0.88	52	0.62	32	0.11	24	0.02
2.0m	43	0.25	25	0.15	15	0.05	11	0.01

lx = average lux u = uniformity color temp = 3000K

Job Name:	Contact:
Ordering Code:	Fixture Type:

Driver Matrix

Driver	Quantity	Power Spec
P70418-500 26W LED Driver	for 2-16 fixtures	120-277V, 26W, 500mA, Trailing Edge (ELV) dimming
P70414-500-ECO 50W LED Driver w/ box	for 1-15 fixtures per channel (1 channel driver)	120-277V, 50W, 500mA, 0-10V (1%) dimming
P70414-500-SOLO 50W LED Driver w/ box	for 1-15 fixtures per channel (2 channel driver)	120-277V, 50W, 500mA, 0-10V (.1%) dimming
P70469-500-ECO 50W LED Driver w/ box	for 1-15 fixtures per channel (1 channel driver)	120-277V, 50W, 500mA, DALI (1%) dimming
P70469-500-SOLO 50W LED Driver w/ box	for 1-15 fixtures per channel (2 channel driver)	120-277V, 50W, 500mA, DALI (.1%) dimming
P70470-500 50W LED Driver w/ box	for 1-10 fixtures per channel (3 channel driver)	120-277V, 50W, 500mA, DMX/ ROM (0%) dimming

Note
1. All driver boxes are nema 1 rated for dry location only. wet rated nema enclosure to be provided by contractor as needed.

ZETA750 Tool Kit - For Round Handrail



*** Not shown, wire crimping pliers.**

1 1 x drill jig with clamp
2 1 x drill clutch assembly with 15 + 16mm cutters
3 1 x drill tap assembly with M16 x 1 tap
4 1 x M16 x 1 tap (spare)
5 1 x File
6 2 x 15mm cutters (spares)
7 1 x 16mm cutter (spare)
8 2 x cutter removal tools
9 1 x 10mm nut driver
10 1 x 2mm Allen key kit
11 1 x insertion tool
12 1 x bottle of cutting fluid

*** Not shown, wire crimping pliers.**

Rental Procedures and Fees

- Tool Kits are rented for a period of 30 days from time of shipping.
- Kits will need a separate PO for the cost to replace the kit as a DEPOSIT to be invoiced if not returned on time or in working order.
- No invoice will be issued if Kit is returned within allotted time inspected for to ensure noting is missing and it is operable.
- A non-refundable / non-negotiable RENTAL FEE for consumables and labor is charged for every order.
- Consult factory for fees as they are subject to change.

Flat Surfaces - No Toolkit Required

- For thin wall pucks: Drill 15mm hole in mounting surface; then thread 15mm hole using M16x1mm tap.
- For thick wall pucks: Drill 15mm hole in mounting surface; drill 16mm counterbore 1.8mm deep; then thread 15mm hole using M16x1mm tap.
- Drill bits/taps provided by others.

FLEX DC® 30

Specification Sheet



Title 24 JA8 2016 Compliant

CLOSET RA TED

Intertek

FLEX DC® 30 is a high performance flexible LED fixture suitable for use in coves, under cabinets, in shelves, in-grade, and virtually anywhere a linear fixture is required.

ELECTRICAL

Input Voltage	24VDC
Dimming Options	• PURE DC™ • MLV • 0-10V • DMX • Lutron (2-WIRE, 3-WIRE, EcoSystem)
Power Consumption	3.0 Watts per foot
Wire Size	18AWG, 2 wire
Certification	**ETL** - Conforms to UL Std. 2108; Certified to CSA Std. C22.2 No. 9.0. **Closet Rated** - Suitable for installation in the storage area of a clothes closet when used in Optic Arts® channel.

PHYSICAL

Field Cuttable	Every 1.97"
Operating Temperature	-40° C (-40°F) to +70°C (+158°F)
Environment	**IP40** - Dry Location **IP68** - Wet Location
Maximum Run Length	**IP40:** 32', **IP68:** 32'
Dimensions (WxH)	**IP40 -** 0.31" (8.0mm) x 0.12" (3.2mm) **IP68** - 0.41" (10.4mm) x 0.18" (4.5mm) **IP68 Endcaps -** 0.50" (12.70mm) x 0.31" (7.87mm)

ACCESSORIES

Mounting Clips	FLEXMNT.SIL.INT, FLEXMNT.SIL.EXT12 (pg. 8)
Channels	Optic Arts® Channel (pg. 3-7)
Connectors	LC-I2P-M, LC-I2P-F, LC-O2P-F, LC-O2P-M (pg. 8)
***FLEXConfig-1* Accessories**	FLEXDC.PFC.02.08, FLEXDC.BSC.02.08, LO-18G-2C-W-72, LP-18G-2C-W-72, LO-18G-2C-W-SP, LP-18G-2C-W-SP (pg. 9)

LUMEN OUTPUT

2000K (IP40 only)	174.44 lm/ft 62.44 lm/Watt
2400K	230.22 lm/ft 76.74 lm/Watt
2700K	262.59 lm/ft 87.53 lm/Watt
3000K	265.65 lm/ft 88.55 lm/Watt
3500K	276.03 lm/ft 92.01 lm/Watt
4100K	286.77 lm/ft 95.59 lm/Watt
6000K	272.94 lm/ft 90.98 lm/Watt
Amber	72.00 lm/ft 27.00 lm/Watt

Note: Stated lumen values have a tolerance of +/- 10%.

PERFORMANCE

CRI	90+
Lumen Maintenance	50,000 Hours
Binning Tolerance	+/- 100K
Warranty	5 years

PART NUMBER BUILDER

SERIES	IP RATING	COLOR	VOLTAGE	WATTAGE	CONFIGURATION	LENGTH
FLEXDC	**40** = IP40 - Dry Location **68** = IP68 - Wet Location	**20** = 2000K (IP40 only) **24** = 2400K **27** = 2700K **30** = 3000K **35** = 3500K **41** = 4100K **60** = 6000K **R** = Red **G** = Green **B** = Blue **A** = Amber	**24** = 24 VDC	**30** = 3.0W	**FLC1** = FLEX Config 1 **FLC2** = FLEX Config 2 **FLC3** = FLEX Config 3	**XX** = Custom Length

1130 Monterey Pass Rd, Monterey Park, CA 91754
213.250.6069 | customerservice@opticarts.com | **www.opticarts.com**

Optic Arts reserves the right to modify this specification without prior notice.
Last Modified: March 19, 2019 4:33 PM

© Optic Arts 2018

optic arts®

Project: Sixth Street PARC Viaduct

Date: July 25,2019
Submittal:90% Issunace

Type: XF15

HLB Project #: 16165

APPENDIX B: LIGHTING CUTSHEETS Note: This document is for information only. Refer to specifications for all catalog numbers, etc.

DIMENSIONS

INDOOR FLEX DC® 30

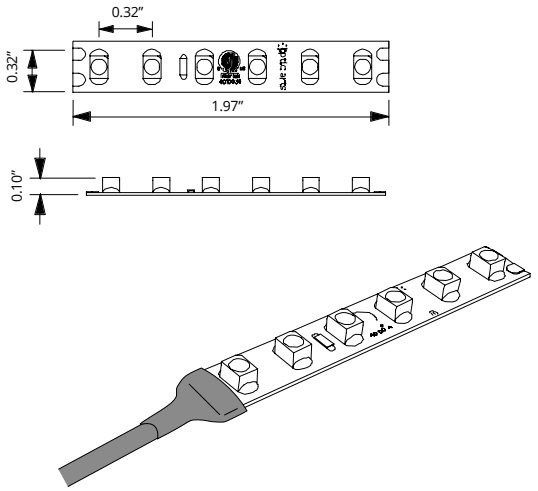

INDOOR DIMENSIONS

Width	0.32" (8.00mm)
Height	0.10" (2.52mm)
Cuttable Segment Length	1.97" (50.00mm)
Pitch Length	0.32" (8.00mm)
Max Run Length	32.00' (9753.60mm)

OUTDOOR FLEX DC® 30

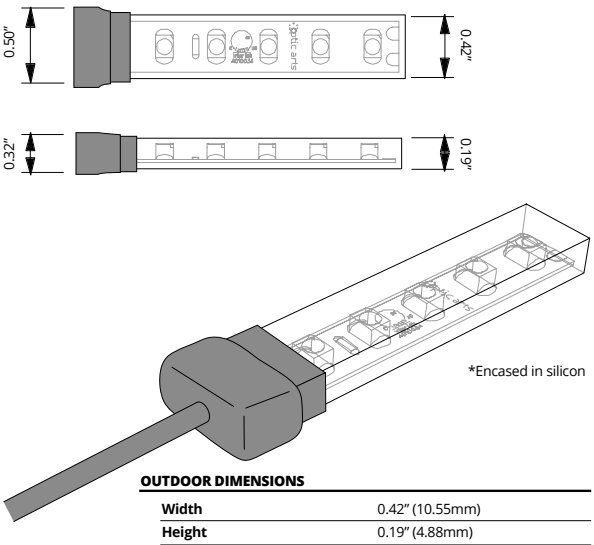

OUTDOOR DIMENSIONS

Width	0.42" (10.55mm)
Height	0.19" (4.88mm)
Width (Endcap)	0.50" (12.70mm)
Height (Endcap)	0.32" (7.94mm)
Max Run Length	32.00' (6096.00mm)

INDOOR FLEX DC® 30

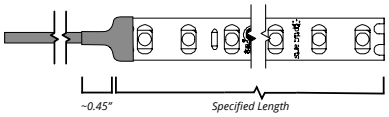

OUTDOOR FLEX DC® 30

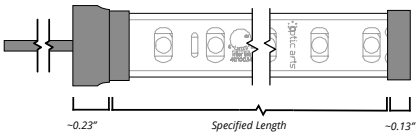

© Optic Arts 2018

optic arts®

Project: Sixth Street PARC Viaduct

Date: July 25,2019
Submittal:90% Issuance

Type: XF15

HLB Project #: 16165

APPENDIX B: LIGHTING CUTSHEETS Note: This document is for information only. Refer to specifications for all catalog numbers, etc.

FLEX DC® 30

Specification Sheet

MOUNTING OPTIONS - COMPATIBLE CHANNELS

Click to access *CHANNEL ACCESSORIES CATALOGUE >*

KEY

DIFFUSION LEVEL:

- **Not Blended**
- **Center Blend**
- **Blended with Milky Lens**

CONFIGURATION:

- **1** Configuration 1
- **1a** Configuration 1 with Auxiliary Housing Accessory
  See page 8 for Flex Connect Auxiliary Housing Accessories
- **2** Configuration 2
- **3** Configuration 3

CHS-R-1208

- *Click on channel titles below to access complete channel cut sheets.*

SMALL CHANNELS

SMALL CHANNEL PART NUMBER BREAKDOWN:

CHANNEL	CHANNEL SIZE	CHANNEL TYPE	FINISH	LENS TYPE	LENS DIFFUSION	MOUNTING
CH-SM = Channel Small	**LS** = Legacy Short **LT** = Legacy Tall	**SF** = Surface **RE** = Recessed	**SS** = Satin Silver **MB** = Matte Black Anodized[1] **BZ** = Deep Bronze Anodized[1] **WH** = White Powder Coat[1] **GY** = Gray Powder Coat[1] **BL** = Blue Powder Coat[1] **RD** = Red Powder Coat[1] **YL** = Yellow Powder Coat[1] **CH** = Chrome[1] **CR** = Custom RAL Powder Coat[1] *1: Special order finishes may increase order lead time and incur an added cost.*	**FL** = Flat **GZ** = Grazer	**CC** = Clear[4] **CF** = Frosted **CM** = Milky[4] **Leave Blank for Grazer* *4: Not compatible with Grazer Lens Type.*	**NA** = Direct Surface **MC** = Mounting Clip[3] **RC** = Rotating Clip[3] *3: Not compatible with recessed options*

CH-SM-LS-RE

(Previously Known As CHS-R-1208)

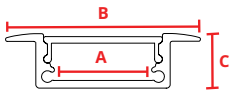

A: 0.68" (17.25mm)
B: 0.98" (25.00mm)
C: 0.34" (8.60mm)

MATERIAL
Anodized Aluminum.

DESCRIPTION
Small - Short - Recessed - Channel.

LENGTH
7 Ft.

LENS TYPES

Clear	CH-SM-LN-FL-CC
Frosted	CH-SM-LN-FL-CF
Milky	CH-SM-LN-FL-CM

ACCESSORIES

Endcap	CH-SM-LS-RE-FL-EC
Endcap w/hole	CH-SM-LS-RE-FL-ECH

CH-SM-LS-SF

(Previously Known As CHS-S-1208)

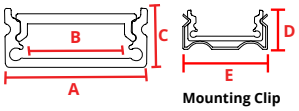

A: 0.68" (17.25mm)
B: 0.50" (12.59mm)
C: 0.34" (8.60mm)
D: 0.40" (12.70mm)
E: 0.78" (19.90mm)

MATERIAL
Anodized Aluminum

DESCRIPTION
Small - Short - Surface - Channel.

LENGTH
7 Ft.

LENS TYPES

Clear	CH-SM-LN-FL-CC
Frosted	CH-SM-LN-FL-CF
Milky	CH-SM-LN-FL-CM

ACCESSORIES

Endcap	CH-SM-LS-SF-FL-EC
Endcap w/hole	CH-SM-LS-SF-FL-ECH
Mounting Clip	CH-SM-LE-MC
Rotating Mounting Clip	CH-SM-LE-MC-R

CH-SM-LT-RE

(Previously Known As CHS-R-1715)

**Blends with IP20/40*
*** No Blend with IP65/67/68*

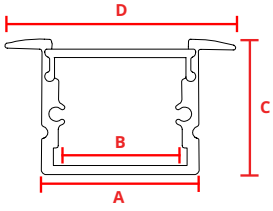

A: 0.68" (17.25mm)
B: 0.48" (12.30mm)
C: 0.59" (15.05mm)
D: 0.98" (25.00mm)

MATERIAL
Anodized Aluminum

DESCRIPTION
Small - Tall - Recessed - Channel.

LENGTH
7 Ft.

LENS TYPES

Clear	CH-SM-LN-FL-CC
Frosted	CH-SM-LN-FL-CF
Milky	CH-SM-LN-FL-CM

ACCESSORIES

Endcap	CH-SM-LT-RE-FL-EC
Endcap w/hole	CH-SM-LT-RE-FL-ECH

CH-SM-LT-SF

(Previously Known As CHS-S-1715)

**Blends with IP20/40*
*** No Blend with IP65/67/68*

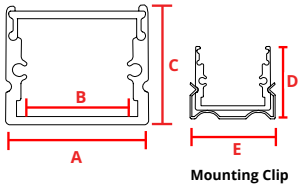

A: 0.68" (17.25mm)
B: 0.48" (12.30mm)
C: 0.59" (15.05mm)
D: 0.66" (16.76mm)
E: 0.78" (19.90mm)

MATERIAL
Anodized Aluminum

DESCRIPTION
Small - Tall - Surface - Channel.

LENGTH
7 Ft.

LENS TYPES

Clear	CH-SM-LN-FL-CC
Frosted	CH-SM-LN-FL-CF
Milky	CH-SM-LN-FL-CM

ACCESSORIES

Endcap	CH-SM-LT-SF-FL-EC
Endcap w/hole	CH-SM-LT-SF-FL-ECH
Mounting Clip	CH-SM-LE-MC
Rotating Mounting Clip	CH-SM-LE-MC-R

1130 Monterey Pass Rd, Monterey Park, CA 91754
213.250.6069 | customerservice@opticarts.com | **www.opticarts.com**

Optic Arts reserves the right to modify this specification without prior notice.
Last Modified: March 19, 2019 4:33 PM

© Optic Arts 2018

optic arts®

Project: Sixth Street PARC Viaduct

Date: July 25,2019
Submittal:90% Issuance

Type: XF15

HLB Project #: 16165

APPENDIX B: LIGHTING CUTSHEETS Note: This document is for information only. Refer to specifications for all catalog numbers, etc.

FLEX DC® 30

Specification Sheet

***MOUNTING OPTIONS** - COMPATIBLE CHANNELS*

Not Blended | **Blended w/Milky Lens** | **1** Configuration 1 | **1a** Configuration 1 with Auxiliary Housing Accessory | **2** Configuration 2 | **3** Configuration 3

MEDIUM CHANNELS

MEDIUM CHANNEL PART NUMBER BREAKDOWN:

CHANNEL	CHANNEL SIZE	CHANNEL TYPE	FINISH	LENS TYPE	LENS DIFFUSION	MOUNTING
CH-MD = Channel Medium	**LS** = Legacy Short **TL** = Tall[5]	**SF** = Surface **RE** = Recessed[4]	**SS** = Satin Silver **MB** = Matte Black Anodized[9] **BZ** = Deep Bronze Anodized[9] **WH** = White Powder Coat[9] **GY** = Gray Powder Coat[9] **BL** = Blue Powder Coat[9] **RD** = Red Powder Coat[9] **CH** = Chrome[9] **CR** = Custom RAL Powder Coat[9]	**FL** = Flat	**CC** = Clear **CF** = Frosted **CM** = Milky	**NA** = Direct Surface **MC** = Mounting Clip[7] **RC** = Rotating Clip[7] **PD** = Pendant[7, 8]

4: Not available for tall channel.
5: Only available in surface channel type.
7: Not compatible with recessed options.
8: Not available with Lite option.
9: Special order finishes may increase order lead time and incur an added cost.

CH-MD-LS-SF

(Previously Known As CHW-S-2010)

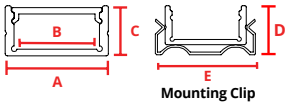

Mounting Clip

A: 0.93" (23.50mm)
B: 0.78" (20.00mm)
C: 0.39" (10.00mm)
D: 0.48" (12.19mm)
E: 1.02" (25.80mm)

1 | **2** | **3**

MATERIAL
Anodized Aluminum

DESCRIPTION
Medium - Lite - Surface - Channel.

LENGTH
7 Ft.

LENS TYPES

Clear	CH-MD-LN-FL-CC
Frosted	CH-MD-LN-FL-CF
Milky	CH-MD-LN-FL-CM

ACCESSORIES

Endcap	CH-MD-LS-SF-FL-EC
Endcap w/hole	CH-MD-LS-SF-FL-ECH
Mounting Clip	CH-MD-LE-MC
Rotating Mounting Clip	CH-MD-LE-MC-R

CH-MD-LS-RE

(Previously Known As CHW-R-2010)

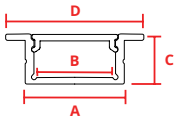

A: 0.93" (23.50mm)
B: 0.78" (20.00mm)
C: 0.39" (10.00mm)
D: 1.19" (30.24mm)

1 | **2**

MATERIAL
Anodized Aluminum

DESCRIPTION
Medium - Lite - Recessed - Channel.

LENGTH
7 Ft.

LENS TYPES

Clear	CH-MD-LN-FL-CC
Frosted	CH-MD-LN-FL-CF
Milky	CH-MD-LN-FL-CM

ACCESSORIES

Endcap	CH-MD-LS-RE-FL-EC
Endcap w/hole	CH-MD-LS-RE-FL-ECH
Mounting Clip	CH-MD-LE-MC
Rotating Mounting Clip	CH-MD-LE-MC-R

CH-MD-TL-SF

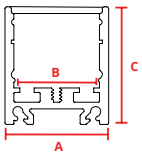

A: 0.90" (23.11mm)
B: 0.75" (19.05mm)
C: 1.02" (26.16mm)

1 | **2** | **3**

MATERIAL
Anodized Aluminum

DESCRIPTION
Medium - Tall - Surface - Channel.

LENGTH
7 Ft.

LENS TYPES

Clear	CH-MD-LN-FL-CC
Frosted	CH-MD-LN-FL-CF
Milky	CH-MD-LN-FL-CM

ACCESSORIES

Endcap	CH-MD-TL-SF-FL-EC
Endcap w/hole	CH-MD-TL-SF-FL-ECH
Mounting Clip	CH-MC
Rotating Mounting Clip	CH-MC-R-AY
Pendant	CH-PD-KIT

1130 Monterey Pass Rd, Monterey Park, CA 91754
213.250.6069 | customerservice@opticarts.com | **www.opticarts.com**

Optic Arts reserves the right to modify this specification without prior notice.
Last Modified: March 19, 2019 4:33 PM

© Optic Arts 2018

optic arts®

Project: Sixth Street PARC Viaduct

Date: July 25,2019
Submittal:90% Issuance

Type: XF15

HLB Project #: 16165

APPENDIX B: LIGHTING CUTSHEETS Note: This document is for information only. Refer to specifications for all catalog numbers, etc.

FLEX DC® 30

Specification Sheet

***MOUNTING OPTIONS** - COMPATIBLE CHANNELS*

Not Blended | Blended w/Milky Lens | 1 Configuration 1 | 1a Configuration 1 with Auxiliary Housing Accessory | 2 Configuration 2 | 3 Configuration 3

LARGE CHANNELS

CHANNEL PART NUMBER BREAKDOWN:

CHS +	R +	1208
SERIES	APPLICATION	DIMENSIONS
CHS = Slim Channel **CHW** = Wide Channel	**S** = Surface Mount **R** = Recessed Mount **C** = Corner Mount **H** = Hanging Mount	**XXXX** = W x H (mm)

CHW-S-3535

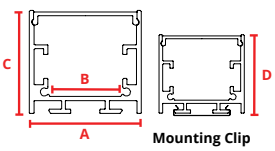

Mounting Clip

A: 1.39" (35.25mm)
B: 0.96" (24.50mm)
C: 1.39" (35.25mm)
D: 1.54" (39.00mm)

**Must specify for hanging or surface mount application.*

MATERIAL
Anodized Aluminum

DESCRIPTION
Wide and deep surface mounted or hanging channel. Eliminates visible LED nodes for most FLEXDC products when used with a milky lens.

LENGTH
2 meter

LENS TYPES

Frosted	CHW-35mm-CF
Milky	CHW-35mm-CM

ACCESSORIES

Endcap	CHW-S-3535-EC
Endcap w/hole	CHW-S-3535-ECH
Mounting Clip	CHW-S-3535-MC
Hanging Hardware	CHW-SH-3535-MW
Bracket Straight	CHW-S-XX35-BS
Bracket 90° Flat	CHW-S-XX35-B90F
Bracket 90° Raised	CHW-S-XX35-B90R
End Cap for FLEX AC	CHW-S-3535-ECAC
Mounting Clip for FLEX AC	CHW-S-3535-MCAC
VHB Tape	VHBTAPE.AC

CHW-R-4435

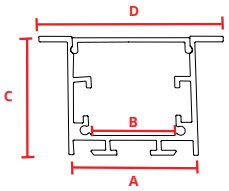

A: 1.39" (35.25mm)
B: 0.96" (24.50mm)
C: 1.39" (35.25mm)
D: 2.00" (51.04mm)

MATERIAL
Anodized Aluminum

DESCRIPTION
Wide and deep recessed channel. Eliminates visible LED nodes for most FLEXDC products when used with a milky lens. Can be securely and conveniently mounted with CHW-R-4435-SC spring clip.

LENGTH
2 meter

LENS TYPES

Frosted	CHW-35mm-CF
Milky	CHW-35mm-CM

ACCESSORIES

Endcap	CHW-R-4435-EC
Endcap w/hole	CHW-R-4435-ECH
Mounting Clip	CHW-R-4435-SC
Bracket Straight	CHW-S-XX35-BS
Bracket 90° Flat	CHW-S-XX35-B90F
Bracket 90° Raised	CHW-S-XX35-B90R
End Cap for FLEX AC	CHW-R-4435-ECAC
Mounting Clip for FLEX AC	CHW-R-4435-MCAC
VHB Tape	VHBTAPE.AC

CORNER CHANNELS

CHS-C-1919

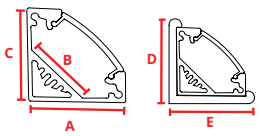

Mounting Clip

A: 0.73" (18.50mm)
B: 0.48" (12.20mm)
C: 0.73" (18.50mm)
D: 0.82" (20.82mm)
E: 0.82" (20.82mm)

MATERIAL
Anodized Aluminum

DESCRIPTION
Slim corner mount channel.

LENGTH
2 meter

LENS TYPES

Clear	CHS-12mm-CC
Frosted	CHS-12mm-CF
Milky	CHS-12mm-CM

ACCESSORIES

Endcap	CHS-C-1919-EC
Endcap w/hole	CHS-C-1919-ECH
Mounting Clip	CHS-C-1919-MC

CHS-C-1616

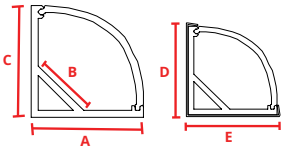

Mounting Clip

A: 0.63" (16.00mm)
B: 0.39" (10.00mm)
C: 0.63" (16.00mm)
D: 0.70" (17.78mm)
E: 0.70" (17.78mm)

MATERIAL
Anodized Aluminum

DESCRIPTION
Slim corner mount channel with rounded lens.

LENGTH
2 meter

LENS TYPES

Frosted	CHS-C-1616-CF
Milky	CHS-C-1616-CM

ACCESSORIES

Endcap	CHS-C-1616-EC
Endcap w/hole	CHS-C-1616-ECH
Mounting Clip	CHS-C-1616-MC

1130 Monterey Pass Rd, Monterey Park, CA 91754
213.250.6069 | customerservice@opticarts.com | **www.opticarts.com**

Optic Arts reserves the right to modify this specification without prior notice.
Last Modified: March 19, 2019 4:33 PM

© Optic Arts 2018

optic arts®

Project: Sixth Street PARC Viaduct

Date: July 25,2019
Submittal:90% Issuance

Type: XF15

HLB Project #: 16165

APPENDIX B: LIGHTING CUTSHEETS Note: This document is for information only. Refer to specifications for all catalog numbers, etc.

FLEX DC® 30

Specification Sheet

***MOUNTING OPTIONS** - COMPATIBLE CHANNELS*

Not Blended | Blended w/Milky Lens | 1 Configuration 1 | 1a Configuration 1 with Auxiliary Housing Accessory | 2 Configuration 2 | 3 Configuration 3

CORNER CHANNELS

CHW-C-3030

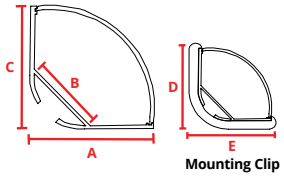

A: 1.18" (30.00mm)
B: 0.78" (20.20mm)
C: 1.18" (30.00mm)
D: 1.29" (32.77mm)
E: 1.29" (32.77mm)

MATERIAL
Anodized Aluminum

DESCRIPTION
45 degree channel with rounded lens.

LENGTH
2 meter

LENS TYPES

Clear	CHW-C-3030-CC
Frosted	CHW-C-3030-CF
Milky	CHW-C-3030-CM

ACCESSORIES

Endcap	CHW-C-3030-EC
Endcap w/hole	CHW-C-3030-ECH
Mounting Clip	CHW-C-3030-MC

CHW-C-3030S

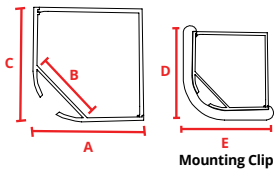

A: 1.18" (30.00mm)
B: 0.78" (20.20mm)
C: 1.18" (30.00mm)
D: 1.29" (32.77mm)
E: 1.29" (32.77mm)

MATERIAL
Anodized Aluminum

DESCRIPTION
45 degree channel with square lens.

LENGTH
2 meter

LENS TYPES

Clear	CHW-C-3030S-CC
Frosted	CHW-C-3030S-CF
Milky	CHW-C-3030S-CM

ACCESSORIES

Endcap	CHW-C-3030S-EC
Endcap w/hole	CHW-C-3030S-ECH
Mounting Clip	CHW-C-3030S-MC

SPECIALTY CHANNELS

CHS-S-1922R

**Blends with IP20/40*
*** No Blend with IP65/67/68*

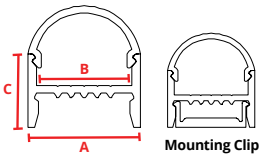

A: 0.77" (19.50mm)
B: 0.65" (16.50mm)
C: 0.86" (21.80mm)

MATERIAL
Anodized Aluminum

DESCRIPTION
Slim surface mounted channel with rounded wrap around lens. Mounting clip is fully concealed within fixture base.

LENGTH
2 meter

LENS TYPES

Milky	CHW-S-1922R-CM

ACCESSORIES

Endcap	CHS-S-1922R-EC
Endcap w/hole	CHS-S-1922R-ECH
Mounting Clip	CHS-S-1922R-MC

CHW-S-2623

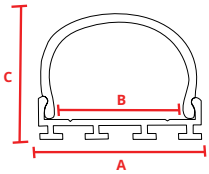

A: 1.03" (26.20mm)
B: 0.80" (20.35mm)
C: 0.89" (22.76mm)

MATERIAL
Anodized Aluminum

DESCRIPTION
Surface mounted channel with wrap around lens.

LENGTH
2 meter

LENS TYPES

Milky	CHW-S-2623-CM

ACCESSORIES

Endcap	CHW-S-2623-EC
Endcap w/hole	CHW-S-2623-ECH

CHS-S-1922S

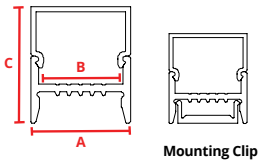

A: 0.77" (19.50mm)
B: 0.65" (16.50mm)
C: 0.86" (21.80mm)

MATERIAL
Anodized Aluminum

DESCRIPTION
Slim surface mounted channel with square wrap around lens. Mounting clip is fully concealed within fixture base.

LENGTH
2 meter

LENS TYPES

Milky	CHW-S-1922S-CM

ACCESSORIES

Endcap	CHS-S-1922S-EC
Endcap w/hole	CHS-S-1922S-ECH
Mounting Clip	CHS-S-1922S-MC

CHW-S/H-2027

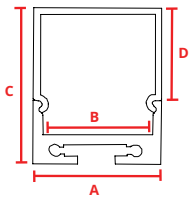

A: 0.79" (20.30mm)
B: 0.66" (16.70mm)
C: 1.06" (27.00mm)
D: 0.76" (19.50mm)

Must specify for hanging or surface mount application.

MATERIAL
Anodized Aluminum

DESCRIPTION
Small surfaced mounted or hanging channel with wrap around lens.

LENGTH
2 meter

LENS TYPES

Clear	CHW-SH-2027-CC
Frosted	CHW-SH-2027-CF
Milky	CHW-SH-2027-CM

ACCESSORIES

Endcap	CHW-SH-2027-EC
End Cap w/hole	CHW-SH-2027-ECH
Hanging Hardware	CHW-SH-MW
Bracket Straight	CHW-SH-BS
Bracket 90° Flat	CHW-SH-B90F
Bracket 90° Raised	CHW-SH-B90R

1130 Monterey Pass Rd, Monterey Park, CA 91754
213.250.6069 | customerservice@opticarts.com | **www.opticarts.com**

Optic Arts reserves the right to modify this specification without prior notice.
Last Modified: March 19, 2019 4:33 PM

© Optic Arts 2018

optic arts®

Project: Sixth Street PARC Viaduct

Date: July 25,2019
Submittal:90% Issunace

Type: XF15

HLB Project #: 16165

APPENDIX B: LIGHTING CUTSHEETS Note: This document is for information only. Refer to specifications for all catalog numbers, etc.

FLEX DC® 30

Specification Sheet

***MOUNTING OPTIONS** - COMPATIBLE CHANNELS*

Not Blended | **Blended w/Milky Lens** | **1** Configuration 1 | **1a** Configuration 1 with Auxiliary Housing Accessory | **2** Configuration 2 | **3** Configuration 3

SPECIALTY CHANNELS

CHW-S/H-3561

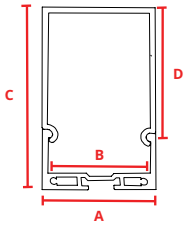

A: 1.38" (35.00mm)
B: 1.24" (31.40mm)
C: 2.43" (61.70mm)
D: 1.57" (39.90mm)

**Must specify for hanging or surface mount application.*

MATERIAL
Anodized Aluminum

DESCRIPTION
Large surface mounted or hanging channel with wrap around lens.

LENGTH
2 meter

LENS TYPES

Milky	CHW-SH-3561-CM

ACCESSORIES

Endcap	CHW-SH-3561-EC
End Cap w/hole	CHW-SH-3561-ECH
Hanging Hardware	CHW-SH-MW
Bracket Straight	CHW-SH-BS
Bracket 90° Flat	CHW-SH-B90F
Bracket 90° Raised	CHW-SH-B90R

CHW-S/H-3030

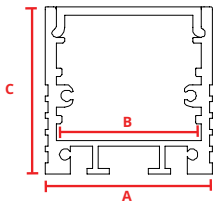

A: 1.18" (30.00mm)
B: 1.01" (25.60mm)
C: 1.18" (30.00mm)

**Must specify for hanging or surface mount application.*

MATERIAL
Anodized Aluminum

DESCRIPTION
Wide and deep surface mounted or hanging channel with flat lens for even blending.

LENGTH
2 meter

LENS TYPES

Milky	CHW-SH-3030-CM

ACCESSORIES

Endcap	CHW-SH-3030-EC
Endcap w/hole	CHW-SH-3030-ECH
Hanging Hardware	CHW-SH-MW
Bracket Straight	CHW-SH-BS
Bracket 90° Flat	CHW-SH-B90F
Bracket 90° Raised	CHW-SH-B90R
End Cap for FLEX AC	CHW-SH-3030-ECAC
Mounting Clip for FLEX AC	CHW-SH-3030-MCAC
VHB Tape	VHBTAPE.AC

CHW-S/H-7532

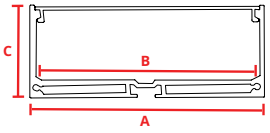

A: 2.95" (75.00mm)
B: 2.52" (64.00mm)
C: 1.26" (32.00mm)

**Must specify for hanging or surface mount application.*

MATERIAL
Anodized Aluminum

DESCRIPTION
Wide surface mounted or hanging channel with flat lens.

LENGTH
2 meter

LENS TYPES

Frosted	CHW-SH-7532-CF

ACCESSORIES

Endcap	CHW-SH-7532-EC
Endcap w/hole	CHW-SH-7532-ECH
Hanging Hardware	CHW-SH-MW
Bracket Straight	CHW-SH-BS
Bracket 90° Flat	CHW-SH-B90F
Bracket 90° Raised	CHW-SH-B90R

CHC-S-1921

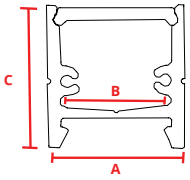

A: 0.76" (19.43mm)
B: 0.55" (14.09mm)
C: 0.84" (21.43mm)

MATERIAL
Anodized Aluminum

DESCRIPTION
Surface mount channel with flat lens. Mounts to ferrous and non-ferrous surfaces using magnets with no visible fasteners once mounted.

LENGTH
2 meter

LENS TYPES

Milky	CHC-S-1921-CM

ACCESSORIES

Anodized Aluminum Endcap	CHC-S-1921-EC
Anodized Aluminum Endcap w/hole	CHC-S-1921-ECH
Channel Mounted Magnet	CHC-S-1921-MA
Wall Mounted Magnet	CHC-S-1921-M
1' Mounting Plate	CHC-S-1921-B1

CHSP-S-1618

Fits IP40 FLEX DC® Only

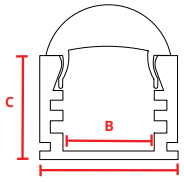

A: 0.63" (16.00mm)
B: 0.40" (10.16mm)
C: 0.49" (11.90mm)

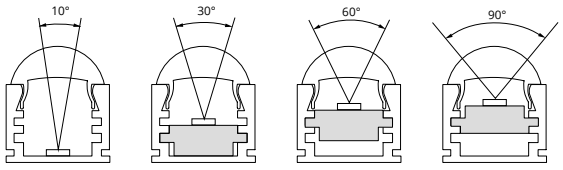

MATERIAL
Anodized Aluminum

DESCRIPTION
Includes an aluminum insert that allows selection between (4) different beamspreads based on the position of the insert.

LENGTH
2 meter

LENS TYPES

Focusing Lens	CHSP-S-1618-CFL

ACCESSORIES

Endcap	CHSP-S-1618-EC
Endcap w/hole	CHSP-S-1618-ECH
Mounting Clip	CHSP-S-1618-MC

1130 Monterey Pass Rd, Monterey Park, CA 91754
213.250.6069 | customerservice@opticarts.com | **www.opticarts.com**

Optic Arts reserves the right to modify this specification without prior notice.
Last Modified: March 19, 2019 4:33 PM

© Optic Arts 2018

optic arts®

Project: Sixth Street PARC Viaduct

Date: July 25,2019
Submittal:90% Issuance

Type: XF15

HLB Project #: 16165

APPENDIX B: LIGHTING CUTSHEETS Note: This document is for information only. Refer to specifications for all catalog numbers, etc.

ACCESSORIES

LC-I2P-M

Indoor Lead Connector (Male)

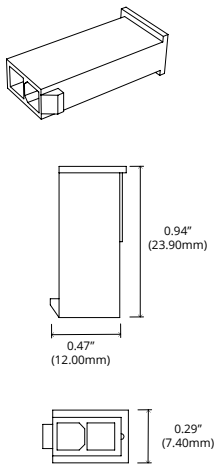

LC-I2P-F

Indoor Lead Connector (Female)

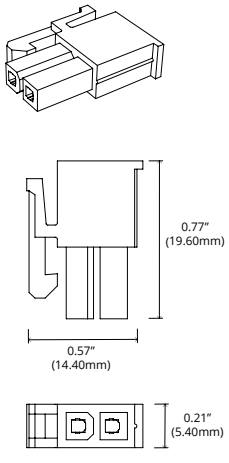

LC-O2P-F

Outdoor Lead Connector (Female)

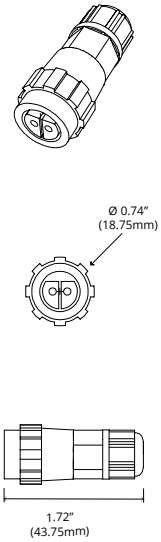

LC-O2P-M

Outdoor Lead Connector (Male)

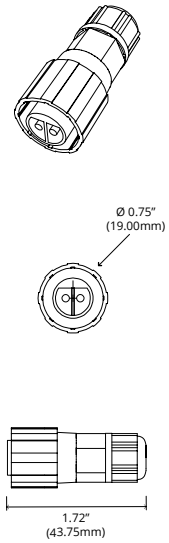

FLEX.ZIP

Strain Relief Clip

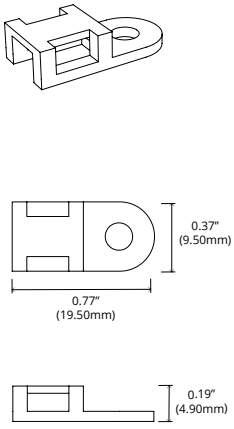

FLEXMNT.SIL.INT

Indoor Mounting Clip

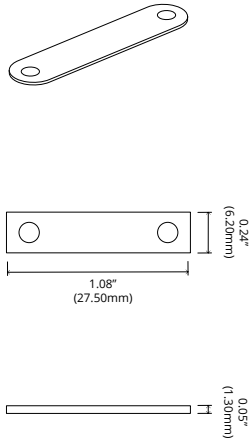

FLEXMNT.SIL.EXT12

Outdoor Mounting Clip

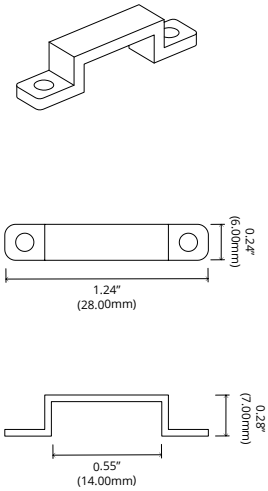

© Optic Arts 2018

optic arts®

Project: Sixth Street PARC Viaduct

Date: July 25,2019
Submittal:90% Issunace

Type: XF15

HLB Project #: 16165

APPENDIX B: LIGHTING CUTSHEETS Note: This document is for information only. Refer to specifications for all catalog numbers, etc.

ACCESSORIES

FLEXDC.PFC.02.08

Field installed FLEX Connect® power feed - 2 Conductor for 8mm Strip

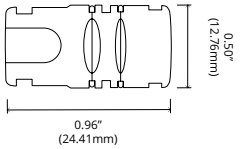



Fits in all channel **except**:

- CHS-R-1208
- CHS-R-1715
- CHC-S-1921
- CHSP-R-2970
- CHSP-S-1618
- CHSP-STEP-8142

FLEXDC.BSC.02.08

Field installed FLEX Connect® butt splice - 2 Conductor for 8mm Strip

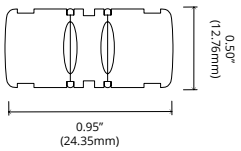

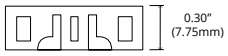

Fits in all channel **except**:

- CHS-R-1208
- CHS-R-1715
- CHC-S-1921
- CHSP-R-2970
- CHSP-S-1618
- CHSP-STEP-8142

LO-18G-2C-W-72

6' wire lead for FLEX Connect® (not in-wall rated)

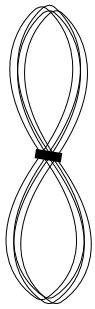

LP-18G-2C-W-72

6' Plenum rated wire lead for FLEX Connect®

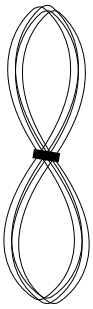

LO-18G-2C-W-SP

1000' spool of wire for FLEX Connect® (not in-wall rated)

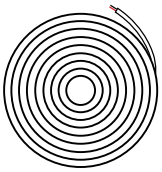

LP-18G-2C-W-SP

500' box of Plenum rated wire for FLEX Connect®

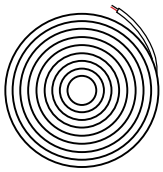

FLEXDC-PFC-HO-1208-SS-KIT

FLEX Connect® housing for CHS-S-1208

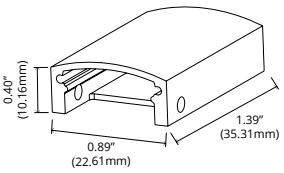

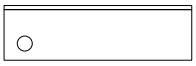

FLEXDC-PFC-HO-1715-SS-KIT

FLEX Connect® housing for CHS-S-1715

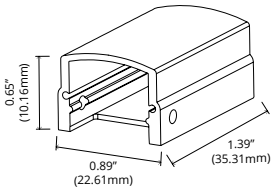

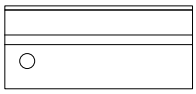

© Optic Arts 2018

optic arts®

Project: Sixth Street PARC Viaduct

Date: July 25,2019
Submittal:90% Issunace

Type: XF15

HLB Project #: 16165

APPENDIX B: LIGHTING CUTSHEETS Note: This document is for information only. Refer to specifications for all catalog numbers, etc.

CONFIGURATION TYPES

① FLEX cut to length with FLEX Connect® Power Feeds for Field Termination, Channel uncut for field cutting

- Specify ***FLEXConfig-1***
- Specify FLEX type and channel type
- FLEX factory cut to length, but not terminated
- One FLEX Connect® power feed connector and 6' lead provided per FLEX run
  - Uncut rolls of lead wire can also be provided (see page 8 for part #)
- Channel shipped uncut for field cutting.
- Specify number of butt splices (not shown - see page 8)
- IP68 not available in ***FLEXConfig-1***
- JA8 2016 not available in ***FLEXConfig-1***
- ***FLEXConfig-1*** is quick ship if run lengths are provided at time of order. Take offs, if needed, will add lead time.
- The below channels are ***NOT*** compatible with FLEX Connect®:

Slim:
- *CHS-R-1208*
- *CHS-R-1715*
- *CHS-C-1616*
- *CHC-S-1921*

Specialty:
- *CHSP-R-2970*
- *CHSP-S-1618*
- *CHSP-STEP-8142*

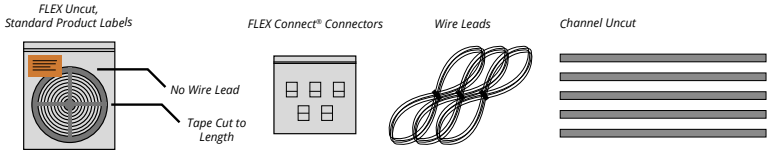

② Cut To Length With Soldered Leads, Assemble On-Site [1, 2, 3]

- Specify ***FLEXConfig-2***
- Specify FLEX type and channel type
- Specify run lengths
- IP68 only available in ***FLEXConfig-2***
- If no config is specified, and run lengths are provided, ***FLEXConfig-2*** will be used

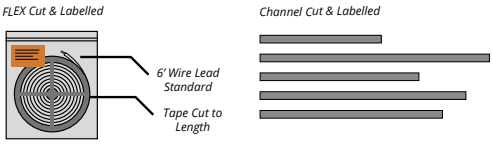

③ Pre-Assembled Factory Finished Fixtures [1, 2]

- Specify ***FLEXConfig-3***
- Fully assembled fixture
- ETL stamped and listed as a fixture
- 6.50' max length
- Standard 6' power lead unless otherwise specified
- The below channels ***CANNOT*** be factory assembled:

Slim:
- *CHS-R-1208*
- *CHS-R-1715*

Wide:
- *CHW-R-2010*
- *CHW-S-2027*
- *CHW-S-7532*
- *CHW-S-2623*
- *CHW-S-3030*
- *CHW-S-3561*

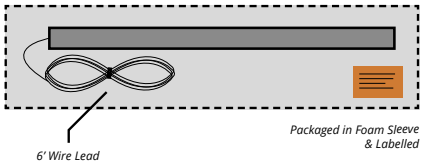

NOTES:

1. Due to the nature of the FLEX DC® product, specific lengths may not fall exactly on a cutting point. In this case, Optic Arts® will always cut to the smaller dimension unless otherwise specified.

2. Unless otherwise specified, channel is cut 15mm longer than FLEX DC®.

3. Some on-site assembly required. See installation guides for details.

1130 Monterey Pass Rd, Monterey Park, CA 91754

213.250.6069 | customerservice@opticarts.com | **www.opticarts.com**

Optic Arts reserves the right to modify this specification without prior notice.

Last Modified: March 19, 2019 4:33 PM

© Optic Arts 2018

optic arts®

Project: Sixth Street PARC Viaduct

Date: July 25,2019
Submittal:90% Issuance

Type: XF15

HLB Project #: 16165

APPENDIX B: LIGHTING CUTSHEETS Note: This document is for information only. Refer to specifications for all catalog numbers, etc.

COMPATIBLE DRIVERS

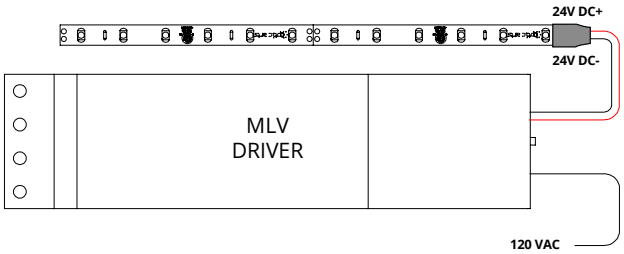

MLV (MLV)

PART	DESCRIPTION
ML10S24VDC	10W 120VAC DIMMABLE DRIVER
ML20S24VDC	20W 120VAC DIMMABLE DRIVER
ML35S24VDC	35W 120VAC DIMMABLE DRIVER
ML35S24VDC-277	35W 277VAC DIMMABLE DRIVER
ML40S24VDC	40W 120VAC DIMMABLE DRIVER
ML50S24VDC	50W 120VAC DIMMABLE DRIVER
ML50S24VDC-277	50W 277VAC DIMMABLE DRIVER
ML60S24VDC	60W 120VAC DIMMABLE DRIVER
ML75S24VDC	75W 120VAC DIMMABLE DRIVER
ML75S24VDC-277	75W 277VAC DIMMABLE DRIVER
ML96S24VDC	96W 120VAC DIMMABLE DRIVER
ML96S24VDC-277	96W 120VAC DIMMABLE DRIVER
EM2-200S24DC	200W 120VAC DIMMABLE DRIVER, 2 96W CIRCUITS
EM3-300S24DC	300W 120VAC DIMMABLE DRIVER, 3 96W CIRCUITS
EM2-200S24DC-277	200W 120VAC DIMMABLE DRIVER, 2 96W CIRCUITS
EM3-300S24DC-277	288W 120VAC DIMMABLE DRIVER, 3 96W CIRCUITS

DIMENSIONS	
10W-50W	**H** 2.11"; **W** 7.38"; **D** 1.60"
60W-96W	**H** 3.93"; **W** 8.13"; **D** 1.59"
200-300W	**H** 5.69"; **W** 10.29"; **D** 3.13"

DIMMING PERFORMANCE	
MLV DRIVER	Dims to 20% on most MLV dimmers

NOTE: Must be loaded between 75%-100% of rated load to maintain FLEX DC® warranty

120 VAC WIRING

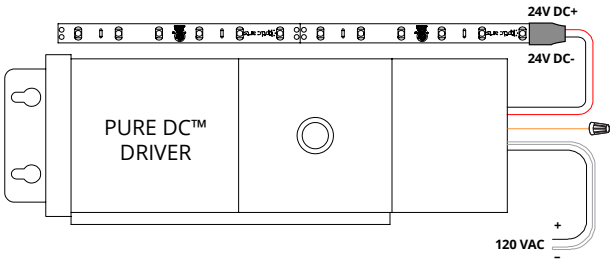

277 VAC WIRING

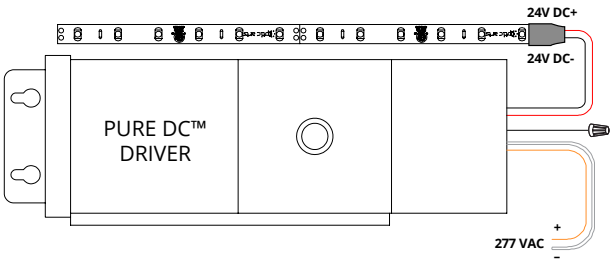

PURE DC™ MLV (PDC)

PART	DESCRIPTION
PDC.40.24	40W 120/277VAC PURE DC™ MLV DIMMABLE DRIVER
PDC.96.24	96W 120/277VAC PURE DC™ MLV DIMMABLE DRIVER

DIMENSIONS	
40W	**L** 14.25"; **W** 3.00"; **H** 2.88"
96W	**L** 14.75"; **W** 4.31"; **H** 4.81"

DIMMING PERFORMANCE	
PURE DC™ DRIVER	Dims to 0.1% on most MLV dimmers

1130 Monterey Pass Rd, Monterey Park, CA 91754
213.250.6069 | customerservice@opticarts.com | **www.opticarts.com**

Optic Arts reserves the right to modify this specification without prior notice.
Last Modified: March 19, 2019 4:33 PM

© Optic Arts 2018

optic arts®

Project: Sixth Street PARC Viaduct

Date: July 25,2019
Submittal:90% Issuance

Type: XF15

HLB Project #: 16165

APPENDIX B: LIGHTING CUTSHEETS Note: This document is for information only. Refer to specifications for all catalog numbers, etc.

COMPATIBLE DRIVERS

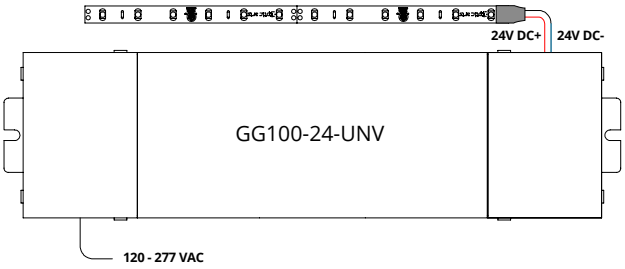

ELECTRONIC DRIVER - NON-DIM (ND)

PART	DESCRIPTION
GG100E-24-UNV	96W 120-277VAC ELECTRONIC DRIVER

DIMENSIONS	
ELECTRONIC DRIVER	**H** 3.00"; **W** 11.46"; **D** 1.30"

DIMMING PERFORMANCE	
ELECTRONIC DRIVER	Non-Dim

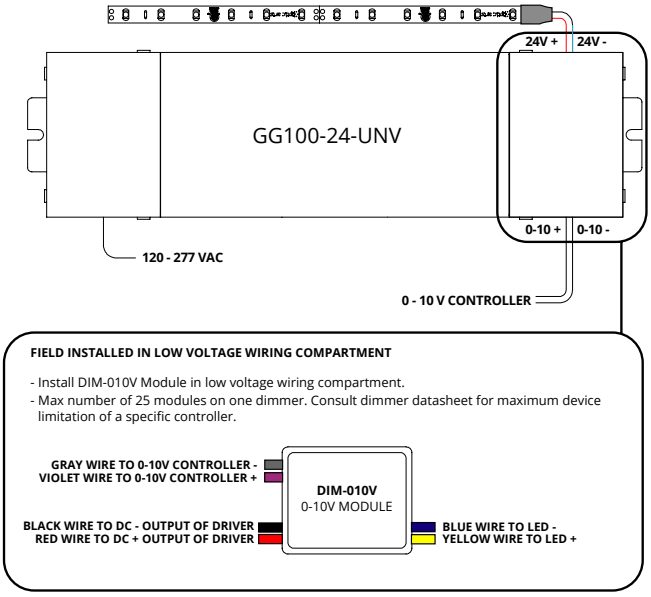

FIELD INSTALLED IN LOW VOLTAGE WIRING COMPARTMENT

- Install DIM-010V Module in low voltage wiring compartment.
- Max number of 25 modules on one dimmer. Consult dimmer datasheet for maximum device limitation of a specific controller.

ELECTRONIC DRIVER W/0-10V MODULE (010)

PART	DESCRIPTION
GG100E-24-UNV-010V	96W 120-277VAC ELECTRONIC DRIVER WITH 0-10V DIMMING MODULE (SINK)

DIMENSIONS	
ELECTRONIC DRIVER - 0-10V	**H** 3.00"; **W** 11.46"; **D** 1.30"

DIMMING PERFORMANCE	
ELECTRONIC DRIVER - 0-10V	Dims below 1% on most 0-10V dimmers

1130 Monterey Pass Rd, Monterey Park, CA 91754

213.250.6069 | customerservice@opticarts.com | **www.opticarts.com**

Optic Arts reserves the right to modify this specification without prior notice.

Last Modified: March 19, 2019 4:33 PM

© Optic Arts 2018

COMPATIBLE DRIVERS

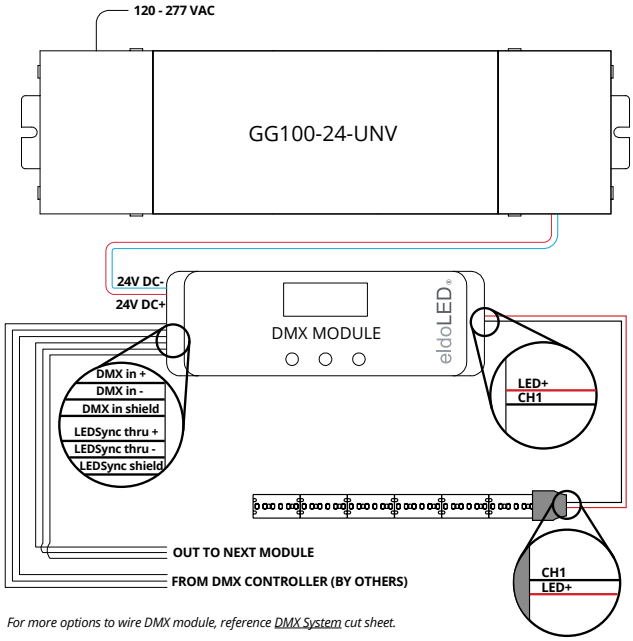

For more options to wire DMX module, reference DMX System cut sheet.

ELECTRONIC DRIVER W/DMX MODULE (DMX)

PART	DESCRIPTION
GG100E-24-UNV-DMX	96W 120-277VAC ELECTRONIC DRIVER WITH eldoLED DMX DIMMING MODULE

DIMENSIONS

96W	**H** 3.00"; **W** 11.46"; **D** 1.30"
DMX MODULE	**H** 1.97"; **W** 6.02"; **D** 0.91"

**Must be installed in UL box (by others)*

DIMMING PERFORMANCE

ELECTRONIC DRIVER - DMX MODULE	Dims to 0.1% on most DMX systems

1130 Monterey Pass Rd, Monterey Park, CA 91754

213.250.6069 | customerservice@opticarts.com | **www.opticarts.com**

Optic Arts reserves the right to modify this specification without prior notice.

Last Modified: March 19, 2019 4:33 PM

© Optic Arts 2018

optic arts®

Project: Sixth Street PARC Viaduct

Date: July 25,2019
Submittal:90% Issuance

Type: XF15

HLB Project #: 16165

APPENDIX B: LIGHTING CUTSHEETS Note: This document is for information only. Refer to specifications for all catalog numbers, etc.

COMPATIBLE DRIVERS

DIMMER WITH NEUTRAL

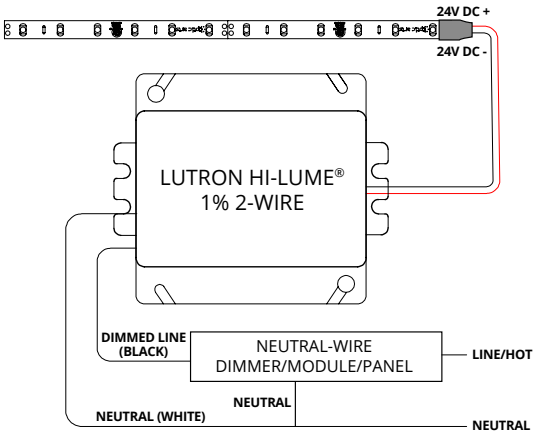

DIMMER WITHOUT NEUTRAL

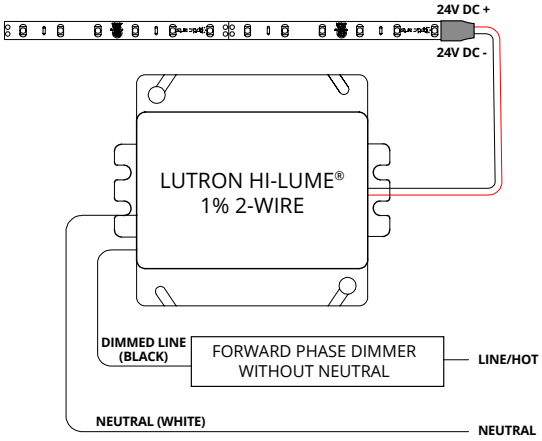

LUTRON HI-LUME® 1% 2-WIRE:
2-WIRE CONTROL FORWARD PHASE

Optic Arts is a Lutron OEM Advantage Partner

PART	DESCRIPTION
LTEA4U1UKL-CV240	5-40W, 120VAC, 2-WIRE FORWARD PHASE DRIVER

DIMENSIONS	
HI-LUME® 1% 2-WIRE	**H** 4.00"; **W** 4.89"; **D** 2.62"

DIMMING PERFORMANCE	
LUTRON HI-LUME® 1% 2-WIRE	Dims to 1% with compatible Lutron controls

1130 Monterey Pass Rd, Monterey Park, CA 91754
213.250.6069 | customerservice@opticarts.com | **www.opticarts.com**

Optic Arts reserves the right to modify this specification without prior notice.
Last Modified: March 19, 2019 4:33 PM

© Optic Arts 2018

optic arts®

Project: Sixth Street PARC Viaduct

Date: July 25,2019
Submittal:90% Issuance

Type: XF15

HLB Project #: 16165

APPENDIX B: LIGHTING CUTSHEETS Note: This document is for information only. Refer to specifications for all catalog numbers, etc.

COMPATIBLE DRIVERS

3-WIRE

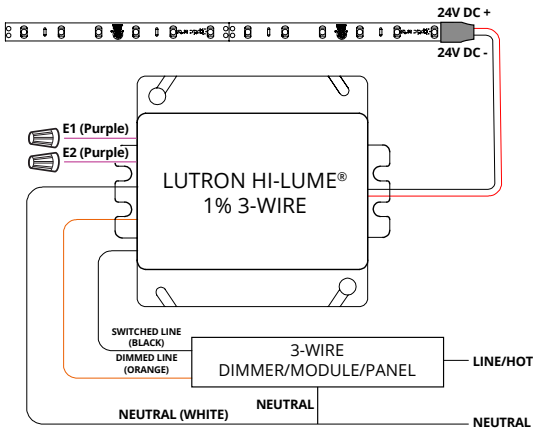

ECOSYSTEM

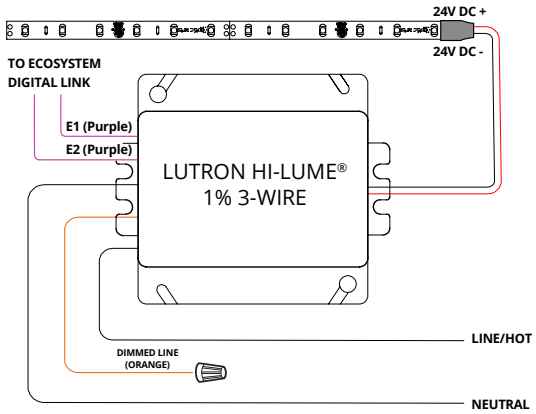

LUTRON HI-LUME® 1%:
3-WIRE/ECOSYSTEM

Optic Arts is a Lutron OEM Advantage Partner

PART	DESCRIPTION
L3DA4U1UKL-CV240	5-40W, 120-277VAC, 3-WIRE/ECOSYSTEM DRIVER

DIMENSIONS	
HI-LUME® 1%	**H** 4.00"; **W** 4.89"; **D** 2.62"

DIMMING PERFORMANCE	
LUTRON HI-LUME® 1% 3-WIRE/ ECOSYSTEM	Dims to 1% with compatible Lutron controls

1130 Monterey Pass Rd, Monterey Park, CA 91754

213.250.6069 | customerservice@opticarts.com | **www.opticarts.com**

Optic Arts reserves the right to modify this specification without prior notice.

Last Modified: March 19, 2019 4:33 PM

© Optic Arts 2018

optic arts®

Project: Sixth Street PARC Viaduct

Date: July 25,2019
Submittal:90% Issuance

Type: XF15

HLB Project #: 16165

APPENDIX B: LIGHTING CUTSHEETS Note: This document is for information only. Refer to specifications for all catalog numbers, etc.

FLEX DC® 30

Specification Sheet

COMPATIBLE DRIVERS

3-WIRE

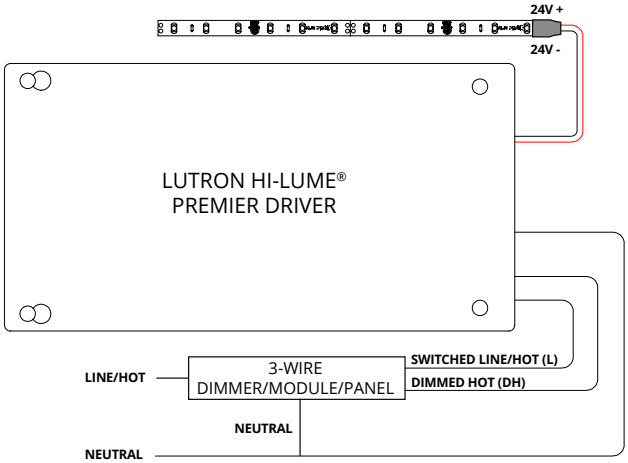

ECOSYSTEM

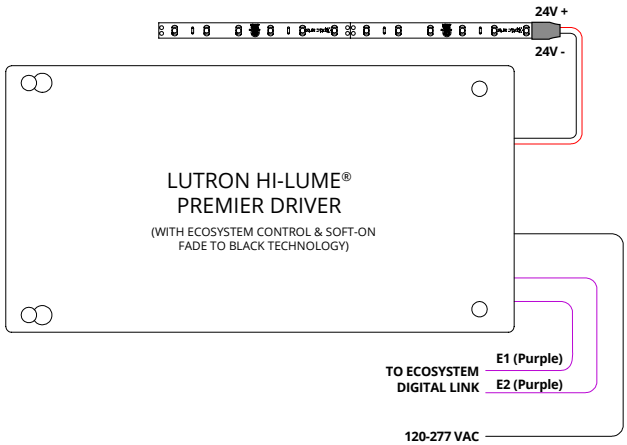

LUTRON HI-LUME® PREMIER:
3-WIRE/ECOSYSTEM

Optic Arts is a Lutron OEM Advantage Partner

PART	DESCRIPTION
L3D0-96W24V-U	2-96W, 120-277VAC, 3-WIRE/ECOSYSTEM DRIVER

DIMENSIONS

HI-LUME® PREMIER	**H** 5.5"; **W** 10.5"; **D** 2.0"

DIMMING PERFORMANCE

LUTRON HI-LUME® PREMIER	Dims to 0.1% with compatible Lutron controls

NOTE: Lutron soft-on, fade to black technology available with Ecosystem Digital Control only.

1130 Monterey Pass Rd, Monterey Park, CA 91754
213.250.6069 | customerservice@opticarts.com | **www.opticarts.com**

Optic Arts reserves the right to modify this specification without prior notice.
Last Modified: March 19, 2019 4:33 PM

© Optic Arts 2018

optic arts®

Project: Sixth Street PARC Viaduct

Date: July 25,2019
Submittal:90% Issuance

Type: XF15

HLB Project #: 16165

APPENDIX B: LIGHTING CUTSHEETS Note: This document is for information only. Refer to specifications for all catalog numbers, etc.

LITHONIA LIGHTING®

Catalog Number	
Notes	
Type	

LED Linear

CLX

24", 36", 48" and 96" Lengths

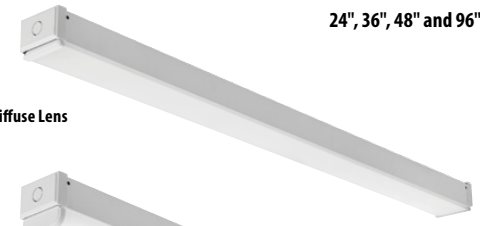

Flat Diffuse Lens



Round Diffuse Lens



Wide Diffuse Lens

FEATURES & SPECIFICATIONS

INTENDED USE — The CLX is a linear lighting solution that is available in multiple lengths, lumen packages and distributions. Designed for versatility, the CLX can address virtually any indoor lighting need. The CLX is also offered in standard and high efficacy configurations and capable of being continuous row mounted or installed as a stand-alone fixture. Ideal for uplight and downlight in commercial, retail, manufacturing, warehouse, and display applications. **Certain airborne contaminants can diminish the integrity of acrylic and/or polycarbonate.** Click here for Acrylic-Polycarbonate Compatibility table for suitable uses.

CONSTRUCTION — Channel and cover are formed from code-gauge cold-rolled steel. Housing and lens endcaps are injection molded plastic to provide a more architectural look and feel. The endcaps come standard with a 7/8" knock out for continuous mounting but can be ordered without.

Finish: Paint options include high-gloss, baked white polyester (WH), galvanized (GALV), matte black (MB) and smoke gray (SKGY). Five-stage iron phosphate pre-treatment ensures superior paint adhesion and rust resistance.

OPTICS — Offered with acrylic lens and less lens configurations. Provides a choice of optical distributions including, wide, narrow, and aisle.

ELECTRICAL — Utilizes high-output LEDs integrated on a two-layer circuit board, ensuring cool-running operation. Optional internal pluggable wiring harness for reduced labor cost in row mounting applications. (See PLR_ ordering information on page 15.) Electronic LED driver is multi-volt input and 0-10V dimming standard (see Operational Data on page 12 for actual wattage consumption). This fixture is designed to withstand a maximum line surge of 2.5kV at 0.75kA combination wave for indoor locations, for applications requiring higher level of protection additional surge protection must be provided.

L70>100,000 hours at 25˚C.

LEDs provide nominal 80 CRI or 90CRI at 3000 K, 3500 K,4000 K, or 5000 K.

Lumen output up to 2,500 lumens per foot.

INSTALLATION — Fixture may be ceiling or wall mounted (with or without THCLX hanger or angle mounted with CLXANGBRT), pendant or stem mounted with appropriate mounting options.

WARNING — Removing the lens and opening the fixture during installation exposes the LEDs, putting them at risk for damage.

If you plan to surface mount the fixture, we recommend using the THCLX. This eliminates the need to open the fixture.

If you plan to continuous row mount, we recommend using the PLR wiring harness option. This eliminates the need to open the fixture.

Damage to the LEDs caused during installation will not be covered under the warranty.

LISTINGS — CSA certified to US and Canadian safety standards. For use in damp locations between -4°F (-20°C) and 104°F (40°C). Optional High Ambient (HA) ranging to 122°F(50°C) available on certain lumen packages (See ambient temperature chart for additional information).
DesignLights Consortium® (DLC) Premium qualified product and DLC qualified product. Not all versions of this product may be DLC Premium qualified or DLC qualified. Please check the DLC Qualified Products List at www.designlights.org/QPL to confirm which versions are qualified.

WARRANTY — 5-year limited warranty. Complete warranty terms located at: www.acuitybrands.com/resources/terms-and-conditions

Note: Actual performance may differ as a result of end-user environment and application.
All values are design or typical values, measured under laboratory conditions at 25 °C.
Specifications subject to change without notice.

Stock configurations are offered for shorter lead times:

Stock Part Number	UPC	DLC QPL Product ID	DLC Premium
CLX L48 3000LM SEF FDL MVOLT GZ10 40K 80CRI WH	00191723525816	PJANKZR4	Yes
CLX L48 3000LM SEF FDL MVOLT GZ10 50K 80CRI WH	00191723525885	PKW32VKL	Yes
CLX L48 5000LM SEF FDL MVOLT GZ10 40K 80CRI WH	00191723525939	P77I8Z20	Yes
CLX L48 5000LM SEF FDL MVOLT GZ10 50K 80CRI WH	00191723525908	P8A42C1H	Yes
CLX L96 6000LM SEF FDL MVOLT GZ10 40K 80CRI WH	00191723525861	PPFTGRBV	Yes
CLX L96 6000LM SEF FDL MVOLT GZ10 50K 80CRI WH	00191723525915	PW6250TE	Yes
CLX L96 10000LM SEF FDL MVOLT GZ10 40K 80CRI WH	00191723525922	PYKOC7EW	Yes
CLX L96 10000LM SEF FDL MVOLT GZ10 50K 80CRI WH	00191723525830	PKYPL35K	Yes
CLX L48 3000LM SEF RDL MVOLT GZ10 40K 80CRI WH	00191723525960	PJANKZR4	Yes
CLX L48 3000LM SEF RDL MVOLT GZ10 50K 80CRI WH	00191723525892	PKW32VKL	Yes
CLX L48 5000LM SEF RDL MVOLT GZ10 40K 80CRI WH	00191723525854	P77I8Z20	Yes
CLX L48 5000LM SEF RDL MVOLT GZ10 50K 80CRI WH	00191723525946	P8A42C1H	Yes
CLX L96 6000LM SEF RDL MVOLT GZ10 40K 80CRI WH	00191723525878	PPFTGRBV	Yes
CLX L96 6000LM SEF RDL MVOLT GZ10 50K 80CRI WH	00191723525823	PD0SSIAD	Yes
CLX L96 10000LM SEF RDL MVOLT GZ10 40K 80CR WH	00191723525953	PYKOC7EW	Yes
CLX L96 10000LM SEF RDL MVOLT GZ10 50K 80CRI WH	00191723525847	PKYPL35K	Yes

A+ Capable Luminaire

This item is an A+ capable luminaire, which has been designed and tested to provide consistent color appearance and out-of-the-box control compatibility with simple commissioning.

- All configurations of this luminaire meet the Acuity Brands' specification for chromatic consistency
- This luminaire is part of an A+ Certified solution for nLight® or XPoint™ Wireless control networks marked by a shaded background*

To learn more about A+, visit www.acuitybrands.com/aplus.

*See ordering tree for details

ORDERING INFORMATION Lead times will vary depending on options selected. Consult with your sales representative. **Example**: CLX L48 5000LM SEF WDL MVOLT GZ10 40K 80CRI WH

Series	Length	Nominal lumens	Performance package	Louver	Lens
CLX LED linear	L24 24"[1,2]	1500LM 1,500 lumens 2000LM 2,000 lumens 2500LM 2,500 lumens 3500LM 3,500 lumens 4500LM 4,500 lumens 5000LM 5,000 lumens[3,4]	SEF Standard efficiency[5] HEF Premium efficiency	(Blank) Less louver SBLW Straight blade louver, white[6] SBLMB Straight blade louver, matte black[6] SBLGV Straight blade louver, galvanized[6] SBLSKGY Straight blade louver, smoke gray[6]	L/Lens Less lens FDL Flat diffuse[7,8] RDL Round diffuse[7,8] WDL Wide diffuse[7,8]
	L36 36"[2]	2250LM 2,250 lumens 3000LM 3,000 lumens 3750LM 3,750 lumens 5250LM 5,250 lumens 6750LM 6,750 lumens 7500LM 7,500 lumens[3,4]			
	L48 48"	3000LM 3,000 lumens 4000LM 4,000 lumens 5000LM 5,000 lumens 7000LM 7,000 lumens[2] 9000LM 9,000 lumens[2] 10000LM 10,000 lumens[2,4]			
	L96 96"	6000LM 6,000 lumens 8000LM 8,000 lumens 10000LM 10,000 lumens 14000LM 14,000 lumens[2,4] 18000LM 18,000 lumens[2,4] 20000LM 20,000 lumens[2,4]			

Distribution	Voltage		Driver[14]	Color temperature	Coloring rendering index
(Blank) General	MVOLT 120-277V[10]	277 277V	GZ10 0 -10V dimming[15]	30K 3000 K	80CRI 80 CRI
ND Narrow[8,9]	120 120V	347 347V[12,13]	EZ1 Dimming to 1%[2]	35K 3500 K	90CRI 90 CRI
WD Wide[8,9]	208 208V[11]	480 480V[12,13]		40K 4000 K	
AD2 Aisle, 24° off center[8,9]	240 240V[11]			50K 5000 K	

Options

PS1050	Emergency battery pack, 10W, CA Title 20 Noncompliant[2,11,13,16,17]
E10WLCP	Emergency battery pack, 10W Linear Constant Power, Certified in CA Title 20 MAEDBS[2,11,13,16,17]
BGTD	Generator transfer device, not avaialble with PS1050[13,16,18]
OCS	5', 18/3 Reloc selectable One Pass cable[16]
HA	High ambient, for use in ambient temperatures up to 50°C[11]
EPNKO	Decorative endplate, no knock out[19]
OUTCTR	Wiring leads pulled through back center of fixture[20]
OUTEND	Wiring leads pulled through end of fixture[21]
Cord Sets:	
CS1W	Staight blade plug, 120V[10,16]
CS3W	NEMA twist-lock plug, 120V[10,16]
CS7W	Staight blade plug, 277V[10,16]
CS11W	NEMA twist-lock plug, 277V[10,16]
CS25W	NEMA twist-lock plug, 347V[10,16]
CS97W	NEMA twist-lock plug, 480V[10,16]
CS93W	600V SEOOW white cord, no plug (no voltage required)
CS6G16STOWD5D	6' white cord, 16/5, no plug, includes low voltage dimming wires (no voltage required)[15]
PLR___	Plug-in wiring, see page 16 for ordering information
PLR1LVG	Plug-in wiring,low voltage dimming[22]
RRL___	RELOC®-ready luminaire. See page 15 for ordering information
SPD	Surge protection device, provides up to 6kV protection[16,20]
USPOM	Assembled in the United States
nLight® Wireless:[23,24]	
NLTAIR2 RES7	nLight® Generation 2 enabled PIR integral occupancy sensor with automatic dimming photocell
NLTAIR2 RES7PDT	nLight AIR Generation 2 enabled dual technology integral occupancy sensor with automatic dimming photocell
NLTAIR2 RIO	No sensor control
nLight® Wired:[23,25,26]	
N100	nLight® without lumen management
NES7	nLight® nES 7 PIR integral occupancy sensor[27]
NESPDT7	nLight® nES PDT 7 dual technology integral occupancy control[27]
NES7ADCX	nLight® nES 7 ADCX PIR integral occupancy sensor with automatic dimming photocell[27]
NESPDT7ADCX	nLight® nES PDT 7 dual technology integral occupancy sensor with automatic dimming photocell[27]
Individual controls:[23,25]	
MSD7	PIR integral occupancy sensor
MSDPDT7	PDT 7 dual technology integral occupancy control
MSD7ADC	PIR integral occupancy sensor with automatic dimming control photocell
MSDPDT7ADC	PDT integral occupancy sensor with automatic dimming control photocell

Finish

WH	White
GALVW	Galvanized with white lens end caps
GALVB	Galvanized with black lens end caps
MB	Matte black
SKGYW	Smoke gray with white lens end caps
SKGYB	Smoke gray with black lens end caps

See Accessories and footnotes on next page

© 2017-2019 Acuity Brands Lighting, Inc. All rights reserved.

Project: Sixth Street PARC Viaduct
Date: July 25,2019
Submittal:90% Issuance
Type: XF16

HLB Project #: 16165

APPENDIX B: LIGHTING CUTSHEETS Note: This document is for information only. Refer to specifications for all catalog numbers, etc.

Accessories: *Order as separate catalog number.*

Mounting:	
ZACVH	Aircraft cable 120" (one pair)
ZAC120	One adjustable aircraft cable with canopy 120" [28]
ZACFP120	One adjustable aircraft cable with feed (3 conductor) and canopy, 120" [28]
ZACFPD120	One adjustable aircraft cable with feed (5 conductor) and canopy 120" [28]
ZAC240	One adjustable aircraft cable with canopy 240" [28]
ZACFP240	One adjustable aircraft cable with feed (3 conductor) and canopy, 240" [28]
ZACFPD240	One adjustable aircraft cable with feed (5 conductor) and canopy 240" [28]
SQ_	Stem kit, 2" increments up to 48" [28]
THCLX ___	Tong hanger (Must specify color) (one pair) [29]
CLXANGBKT ___	Angle bracket, (Must specify color) (one pair) [29]
HC36	Hanger chain, 36" (one pair)
Sensors & Controls:	
LSXR	Sensor Switch ® LSXR occupancy sensor [30]
NPP16D	nLight® switching/dimming module
NPP16DER	nLight® switching/dimming module with emergency relay
rPP20D	nLight® air dimming/switching module
XPA CMRB0	XPoint™ Wireless 0-10V relay, external, 55°C max ambient
Reflectors:	
CLXRW24___	Wide decorative 24" reflector, (Must specify color) [31]
CLXRW36___	Wide decorative 36" reflector, (Must specify color) [31]
CLXRW48___	Wide decorative 48" reflector, (Must specify color) [31]
CLXRW96___	Two wide decorative 48" reflectors, (Must specify color) [31]
CLXRWU24___	Wide decorative 24" reflector with uplight, (Must specify color) [31]
CLXRWU36___	Wide decorative 36" reflector with uplight, (Must specify color) [31]
CLXRWU48___	Wide decorative 48" reflector with uplight, (Must specify color) [31]
CLXRWU96___	Two wide decorative 48" reflectors with uplight, (Must specify color) [31]
CLXRN24	Narrow 24" reflector, (Must specify color) [32]
CLXRN36	Narrow 36" reflector, (Must specify color) [32]
CLXRN48	Narrow 48" reflector, (Must specify color) [32]
CLXRN96___	Two narrow 48" reflectors, (Must specify color) [32]
Wireguards:	
WGCLX24___	24" wireguard, (Must specify color) [33]
WGCLX36___	36" wireguard, (Must specify color) [33]
WGCLX48___	48" wireguard, XX, (Must specify color) 96" fixture requires two [33]

Notes

1 Not available with OUTCTR option.
2 Not available with HA option.
3 Not available with SEF when ordered in combination with EZ1.
4 Not available with NLTAIR2 RES7, NLTAIR2 RES7PDT, or NLTAIR2 RIO.
5 Not available with EZ1 when ordered with L24 with 5000LM or L36 with 7500LM.
6 When ordered with L24 only available with 1500LM or 2000LM in combination with GZ10 driver. Not for use with THCLX, CLXANGBKT, CLX reflectors or WGCLX accessories. Not available with RDL lens options.
7 Only available with general distribution.
8 Not available with CLXRN accessories.
9 Available L/LENS only.
10 Not available with PS1050, E10WLCP, or BGTD.
11 Not available with BGTD option.
12 Voltage selected utilizes a step-down transformer. Not available with L24 when ordered with N100.Not available with PS1050, E10WLCP or BGTD option.
13 Requires SPD option.
14 When continuous row mounting, fixtures must all have the same driver selection.
15 Not available with Individual controls, nLight wired networking, nLight wireless networking, nLight wireless zone control options.
16 Must specify voltage.
17 Not available with L24 or L36. Not available with L48 in combination with N100.
18 Available with L48 or L96 only. 20 Not available with PS1050 or E10WLCP options. Not available with 208 or 240V. Not available Individual controls, NLight Wired, or NLight Wireless options.
19 Not available OUTEND.
20 Required with PS1050, E10WLCP, BGTD, XAD, or XAD924.
21 Not available with PLR options.
22 Not available with XPoint, Individual controls, NLight Wired, or NLight Wireless options.
23 Sensor housing will be the same color as lens end caps.
24 Not available with L24 in combination with 5000LM, not available with L36 in combination with 7500LM, not available with L48 in combination with 10000LM, and not available with L96 in combination with 14000LM, 18000LM, or 20000LM. Not available with PLRs containing low voltage dimming wires.
25 Not available with any other control option. Requires EZ1.
26 Only available in WDL.
27 Requires N100 option.
28 Ships standard as white.
29 Not available with louver, wireguards, wide reflectors.
30 More configurations on LSXR Specification Sheet.
31 L24 reflector is 22.65", L36 reflector is 34.01", L48 reflector is 46.80", L96 comes with two L48 reflectors.
32 For use with L/LENS fixtures only. L24 reflector is 22.75", L36 reflector is 34.20", L48 reflector is 46.85", L96 comes with two L48 reflectors.
33 Not for use with CLX wide reflector accessories.

OPTIONS AND ACCESSORIES



Narrow reflector
Ships separtely from fixture.
Order as:
CLXRN24___
CLXRN36___
CLXRN48___
CLXRN96___



Wide decorative reflector
Ships separtely from fixture.
Order as:
CLXRW24___
CLXRW36___
CLXRW48___
CLXRW96___

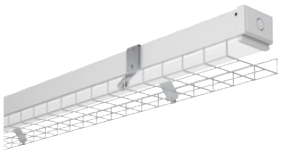

Wireguard
Ships separately from fixture:
96" fixture requires two WGCLX48.
Order as:
WGCLX24___
WGCLX36___
WGCLX48___



Aircraft Cable with Canopy
Available in 120" or 240"
Order as:
ZAC120
ZAC240

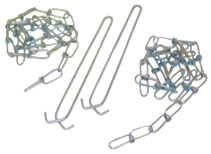

HANGER CHAIN
36" chain with Y hanger. ships as a pair
Order as:
HC36



ZACVH HANGER
10' Aircraft cable with Y hanger.
Order as:
ZACVH

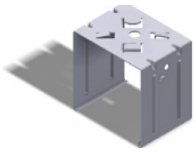

Tong hanger
Ships as a pair
Order As:
THCLX___

© 2017-2019 Acuity Brands Lighting, Inc. All rights reserved.

Project: Sixth Street PARC Viaduct
Date: July 25,2019
Submittal:90% Issuance
Type: XF16

HLB Project #: 16165

APPENDIX B: LIGHTING CUTSHEETS Note: This document is for information only. Refer to specifications for all catalog numbers, etc.

DIMENSIONS

All dimensions are in inches (centimeters) unless otherwise indicated.
Dimensions may vary with options or accessories.

INTEGRATED SENSOR ADDS 2.0 INCHES TO STANDALONE FIXTURE LENGTH
HOUSING END CAP ADDS 0.236 INCHES TO FIXTURE LENGTH PER SIDE. DIMENSIONS BELOW INCLUDE ENDCAPS.

A - 7/8" KNOCK OUT
B - 0.5" by 0.16" SLOT
C - 0.3" DIA HOLE

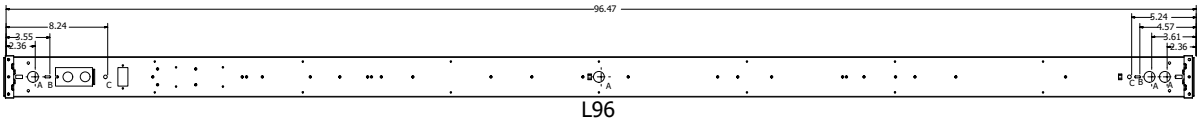

L96

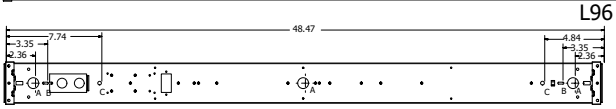

L48

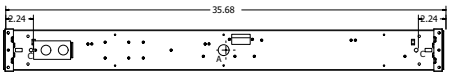

L36

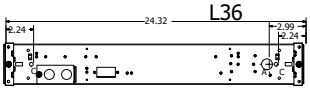

L24

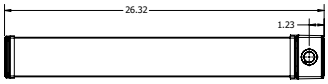

L24 WITH SENSOR

PALLET DIMENSIONS

Length	Approx Weight	Fixtures per pallet	Pallet Dims (L X W X H)
L24	4 lb	100	54x46x37
L36	5 lb	80	54x46x37
L48	7.5 lb	64	54x46x37
L96	14 lb	64	98x46x37

THCLX - SHIPS TWO PER ORDER,
UTILIZES A #8 HEX HEAD SCREW AND NUT
FIXTURE SITS 1.3 INCHES FROM STRUCTURE WHEN MOUNTED

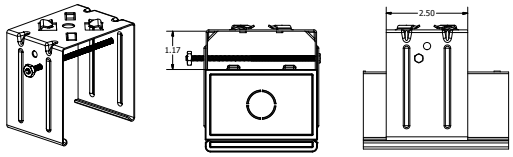

CLXANGBKT - SHIPS TWO PER ORDER
HOLES TO MOUNTING STRUCTURE ARE 0.175" DIA, 2.5" APART
FIXTURE SITS APPROXIMATELY 3.5" FROM STRUCTURE
WHEN MOUNTED HORIZONTAL TO STRUCTURE

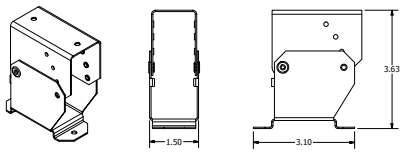

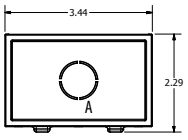

L/LENS

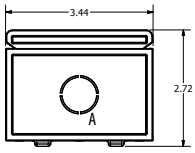

FDL

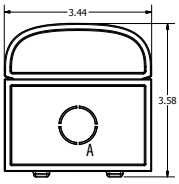

RDL

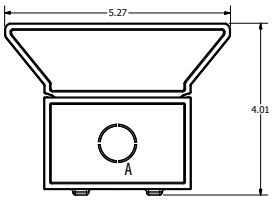

WDL

PHOTOMETRICS

See www.lithonia.com.

© 2017-2019 Acuity Brands Lighting, Inc. All rights reserved.

Project: Sixth Street PARC Viaduct
Date: July 25,2019
Submittal:90% Issuance
Type: XF16

HLB Project #: 16165

APPENDIX B: LIGHTING CUTSHEETS Note: This document is for information only. Refer to specifications for all catalog numbers, etc.

POWER SENTRY EMERGENCY BATTERY PACKS

		SEF Emergency Lumens	HEF Emergency Lumens
PS1050	Factory installable	1400	1500
E10WLCP	Factory installable	1400	1500
PS1555LCP	Field installable, remote mount only	2000	2100

Note: For emergency lumen output of specific model, please consult factory. One board will be illuminated during emergency operation.

CLX CHARACTERISTICS

Nominal Lumen Package	Length	Wattage								Length	Width	Depth	Comparable Light Source
		Standard efficiency				High efficiency							
		120V	277V	347V	480V	120V	277V	347V	480V	Dimensions are shown in inches			
2500LM	24"	19.9	19.9	25.9	25.9	18.5	18.5	24.5	24.5	24	3.5	3.75	1-lamp 32WT8, 1-lamp 54W T5HO, 50W HID
5000LM	24"	41.9	41.9	47.9	47.9	37.9	37.9	43.9	43.9	24	3.5	3.75	2-lamp 32WT8, 1-lamp 54W T5HO, 70W HID
3750LM	36"	28.1	28.1	34.1	34.1	27.0	27.0	33.0	33.0	36	3.5	3.75	1-lamp 32WT8, 1-lamp 54W T5HO, 50W HID
7500LM	36"	62.9	62.9	68.9	68.9	56.8	56.8	62.8	62.8	36	3.5	3.75	2-lamp 32WT8, 1-lamp 54W T5HO, 70W HID
5000LM	48"	35.4	35.4	41.4	41.4	32.9	32.9	38.9	38.9	48	3.5	3.75	2-lamp 32WT8, 1-lamp 54W T5HO, 70W HID
10000LM	48"	77.1	77.1	83.1	83.1	70.4	70.4	76.4	76.4	48	3.5	3.75	3 -lamp 32WT8, 2-lamp 54W T5HO, 100W HID
10000LM	96"	70.8	70.8	76.8	76.8	65.8	65.8	71.8	71.8	96	3.5	3.75	3 -lamp 32WT8, 2-lamp 54W T5HO, 100W HID
20000LM	96"	154.2	154.2	160.2	160.2	140.8	140.8	146.8	146.8	96	3.5	3.75	6 - lamp 32WT8, 4 -lamp 54T5HO, 200W HID

AMBIENT TEMPERATURE RATINGS

Driver Package		GZ10			EZ1 or EOHN			Any Driver	
Length	Lumen package	Direct Surface	THCLX/ Suspended	HA Option (Direct or Suspended)	Direct Surface	THCLX	Suspended 18"	Xpoint/ BGTD Direct Surface	PS1050 Suspended
L24	1500LM	40C	40C	N/A	35C	35C	35C	N/A	N/A
	2000LM	40C	40C		35C	35C	35C		
	2500LM	40C	40C		35C	35C	35C		
	3000LM	40C	40C		40C	40C	40C		
	4500LM	40C	40C		35C	35C	40C		
	5000LM	40C	40C		25C	30C	35C		
L36	2250LM	40C	40C		40C	40C	40C		
	3000LM	40C	40C		40C	40C	40C		
	3750LM	40C	40C		40C	40C	40C		
	5250LM	40C	40C		35C	35C	40C		
	6750LM	30C	40C		35C	35C	40C		
	7500LM	30C	40C		25C	30C	35C		
L48	3000LM	40C	40C	50C	40C	40C	40C	35C	25C
	4000LM	40C	40C	50C	40C	40C	40C		
	5000LM	40C	40C	50C	35C	35C	40C		
	7000LM	30C	40C	N/A	35C	35C	40C		
	9000LM	30C	40C		25C	30C	35C		
	10000LM	30C	40C		25C	30C	35C		
L96	6000LM	40C	40C	50C	35C	35C	40C		
	8000LM	30C	40C	50C	35C	35C	40C		
	10000LM	30C	40C	50C	25C	30C	35C		
	14000LM	40C	40C	N/A	35C	35C	40C		
	18000LM	30C	40C		25C	30C	35C		
	20000LM	30C	40C		25C	30C	35C		

© 2017-2019 Acuity Brands Lighting, Inc. All rights reserved.

CLX OPERATIONAL DATA

	Length	Nominal lumen package	Performance package	CRI	Delivered Lumens				Wattage
					Color Temperature				
					3000K	3500K	4000K	5000K	
L/Lens	L24	1500LM	SEF	80	1497	1540	1582	1619	10.85
				90	1305	1333	1371	1441	10.85
			HEF	80	1493	1514	1582	1586	10.39
				90	1220	1237	1301	1301	10.39
		2000LM	SEF	80	2066	2125	2183	2235	14.48
				90	1801	1840	1892	1989	14.48
			HEF	80	2060	2089	2183	2189	13.46
				90	1684	1708	1796	1796	13.46
		2500LM	SEF	80	2616	2689	2763	2829	18.41
				90	2279	2329	2394	2517	18.41
			HEF	80	2607	2644	2763	2771	17.42
				90	2132	2161	2273	2273	17.42
		3500LM	SEF	80	3518	3617	3716	3804	25.83
				90	3065	3132	3220	3385	25.83
			HEF	80	3506	3556	3716	3726	25.04
				90	2867	2907	3057	3057	25.04
		4500LM	SEF	80	5040	5182	5325	5451	38.7
				90	4392	4487	4614	4851	38.7
			HEF	80	5024	5096	5325	5339	34.8
				90	4108	4165	4380	4380	34.8
		5000LM	SEF	80	5355	5506	5657	5791	41.48
				90	4667	4767	4902	5153	41.48
			HEF	80	5338	5414	5657	5672	38.11
				90	4364	4425	4653	4653	38.11
	L36	2250LM	SEF	80	2411	2547	2101	2207	16.36
				90	2479	2607	2146	2320	16.36
			HEF	80	2437	2554	1965	2095	15.47
				90	2547	2403	1992	2095	15.47
		3000LM	SEF	80	3221	3388	2730	2868	20.8
				90	3310	3133	2789	3015	20.8
			HEF	80	3167	3319	2553	2722	19.98
				90	3310	3123	2589	2722	19.98
		3750LM	SEF	80	4123	4337	3495	3671	26.47
				90	4236	4010	3570	3859	26.47
			HEF	80	4054	4248	3268	3485	25.09
				90	4236	3997	3314	3485	25.09
		5250LM	SEF	80	5545	5833	4700	4937	39.9
				90	5698	5393	4801	5190	39.9
			HEF	80	5452	5713	4396	4687	34.3
				90	5698	5376	4457	4687	34.3
		6750LM	SEF	80	7081	7448	6001	6303	54.85
				90	7275	6886	6131	6627	54.85
			HEF	80	6962	7294	5613	5984	47.97
				90	7275	6864	5691	5984	47.97
		7500LM	SEF	80	7756	8158	6574	6905	62.6
				90	7969	7543	6716	7260	62.6
			HEF	80	7626	7991	6148	6555	54.02
				90	7969	7519	6234	6555	54.02

© 2017-2019 Acuity Brands Lighting, Inc. All rights reserved.

CLX OPERATIONAL DATA (continued)

	Length	Nominal lumen package	Performance package	CRI	Delivered Lumens				Wattage
					Color Temperature				
					3000K	3500K	4000K	5000K	
L/Lens	L48	3000LM	SEF	80	3019	3104	3190	3265	20.32
				90	2631	2688	2764.	2906.	20.32
			HEF	80	3010	3052	3190	3198	19.01
				90	2461	2495	2624	2624	19.01
		4000LM	SEF	80	4034	4148	4262	4363	27.58
				90	3515	3591	3693	3882	27.58
			HEF	80	4021	4078	4262	4273	24.75
				90	3288	3334	3505	3505	24.75
		5000LM	SEF	80	5047	5189	5332	5458	34.8
				90	4398	4493	4620	4857	34.8
			HEF	80	5031	5102	5332	5346	31.77
				90	4113	4171	4386	4386	31.77
		7000LM	SEF	80	7311	7517	7724	7907	49.05
				90	6371	6509	6692	7036	49.05
			HEF	80	7288	7391	7724	7744	44.67
				90	5959	6042	6353	6353	44.67
		9000LM	SEF	80	9215	9475	9735	9967	63.99
				90	8031	8204	8435	8869	63.99
			HEF	80	9186	9317	9735	9762	58.58
				90	7511	7615	8008	8008	58.58
		10000LM	SEF	80	10299	10590	10880	11139	73.37
				90	8975	9169	9427	9912	73.37
			HEF	80	10266	10412	10880	10910	66.27
				90	8394	8511	8950	8950	66.27
	L96	6000LM	SEF	80	5942	6110	6278	6427	38.15
				90	5178	5290	5439	5719	38.15
			HEF	80	5923	6008	6278	6294	35.54
				90	4843	4911	5164	5164	35.54
		8000LM	SEF	80	7929	8153	8376	8575	52.32
				90	6910	7059	7258	7631	52.32
			HEF	80	7903	8016	8376	8399	48.5
				90	6462	6552	6890	6890	48.5
		10000LM	SEF	80	9808	10085	10362	10608	66.47
				90	8548	8732	8978	9439	66.47
			HEF	80	9777	9916	10362	10390	60.89
				90	7994	8106	8523	8523	60.89
		14000LM	SEF	80	14323	14727	15131	15491	94.78
				90	12482	12752	13111	13784	94.78
			HEF	80	14277	14480	15131	15172	85.96
				90	11674	11836	12447	12447	85.96
		18000LM	SEF	80	18458	18979	19500	19963	128.98
				90	16086	16433	16896	17764	128.98
			HEF	80	18399	18661	19500	19552	116.92
				90	15044	15254	16040	16040	116.92
		20000LM	SEF	80	20386	20962	21537	22048	146.83
				90	17766	18150	18661	19619	146.83
			HEF	80	20321	20610	21537	21595	131.6
				90	16616	16847	17716	17716	131.6

© 2017-2019 Acuity Brands Lighting, Inc. All rights reserved.

CLX OPERATIONAL DATA (continued)

	Length	Nominal lumen package	Performance package	CRI	Delivered Lumens				Wattage
					Color Temperature				
					3000K	3500K	4000K	5000K	
RDL	L24	1500LM	SEF	80	1359	1397	1436	1470	10.85
				90	1184	1210	1244	1308	10.85
			HEF	80	1355	1374	1436	1439	10.39
				90	1107	1123	1181	1181	10.39
		2000LM	SEF	80	1875	1928	1981	2028	14.48
				90	1634	1670	1717	1805	14.48
			HEF	80	1869	1896	1981	1987	13.46
				90	1528	1550	1630	1630	13.46
		2500LM	SEF	80	2374	2441	2508	2567	18.41
				90	2069	2113	2173	2284	18.41
			HEF	80	2366	2400	2508	2514	17.42
				90	1935	1962	2063	2063	17.42
		3500LM	SEF	80	3192	3282	3372	3452	25.83
				90	2782	2842	2922	3072	25.83
			HEF	80	3182	3227	3372	3381	25.04
				90	2602	2638	2774	2774	25.04
		4500LM	SEF	80	4574	4703	4832	4947	38.7
				90	3986	4072	4187	4402	38.7
			HEF	80	4560	4624	4832	4845	34.8
				90	3728	3780	3975	3975	34.8
		5000LM	SEF	80	4860	4997	5134	5256	41.48
				90	4235	4327	4448	4677	41.48
			HEF	80	4844	4913	5134	5148	38.11
				90	3961	4016	4223	4223	38.11
	L36	2250LM	SEF	80	2188	2250	2311	2366	16.36
				90	1907	1948	2003	2106	16.36
			HEF	80	2181	2212	2311	2318	15.47
				90	1783	1808	1901	1901	15.47
		3000LM	SEF	80	2843	2924	3004	3075	20.8
				90	2478	2531	2603	2736	20.8
			HEF	80	2834	2875	3004	3012	19.98
				90	2317	2350	2471	2471	19.98
		3750LM	SEF	80	3639	3742	3845	3936	26.47
				90	3171	3240	3331	3502	26.47
			HEF	80	3628	3679	3845	3855	25.09
				90	2966	3007	3162	3162	25.09
		5250LM	SEF	80	4895	5033	5171	5294	39.9
				90	4265	4357	4480	4710	39.9
			HEF	80	4879	4948	5171	5185	34.3
				90	3989	4045	4253	4253	34.3
		6750LM	SEF	80	6250	6426	6602	6759	54.85
				90	5446	5564	5721	6014	54.85
			HEF	80	6230	6318	6602	6620	47.97
				90	5094	5165	5431	5431	47.97
		7500LM	SEF	80	6846	7039	7232	7404	62.6
				90	5966	6095	6266	6588	62.6
			HEF	80	6824	6921	7232	7252	54.02
				90	5580	5657	5949	5949	54.02

© 2017-2019 Acuity Brands Lighting, Inc. All rights reserved.

CLX OPERATIONAL DATA (continued)

	Length	Nominal lumen package	Performance package	CRI	Delivered Lumens				Wattage
					Color Temperature				
					3000K	3500K	4000K	5000K	
RDL	L48	3000LM	SEF	80	2740	2817	2895	2963	20.32
				90	2388	2439	2508	2637	20.32
			HEF	80	2731	2770	2895	2902	19.01
				90	2233	2264	2381	2381	19.01
		4000LM	SEF	80	3661	3764	3868	3959	27.58
				90	3190	3259	3351	3523	27.58
			HEF	80	3649	3701	3868	3878	24.75
				90	2984	3025	3181	3181	24.75
		5000LM	SEF	80	4580	4710	4839	4954	34.8
				90	3992	4078	4193	4408	34.8
			HEF	80	4566	4631	4839	4852	31.77
				90	3733	3785	3980	3980	31.77
		7000LM	SEF	80	6635	6822	7009	7176	49.05
				90	5782	5907	6073	6385	49.05
			HEF	80	6614	6708	7009	7028	44.67
				90	5408	5483	5766	5766	44.67
		9000LM	SEF	80	8363	8599	8835	9045	63.99
				90	7288	7446	7655	8049	63.99
			HEF	80	8336	8455	8835	8859	58.58
				90	6816	6911	7268	7268	58.58
		10000LM	SEF	80	9347	9611	9874	10109	73.37
				90	8145	8321	8556	8995	73.37
			HEF	80	9317	9450	9874	9901	66.27
				90	7618	7724	8122	8122	66.27
	L96	6000LM	SEF	80	5393	5545	5697	5832	38.15
				90	4700	4801	4936	5190	38.15
			HEF	80	5375	5452	5697	5712	35.54
				90	4395	4457	4686	4686	35.54
		8000LM	SEF	80	7196	7399	7602	7782	52.32
				90	6271	6406	6587	6925	52.32
			HEF	80	7173	7275	7602	7622	48.5
				90	5865	5946	6253	6253	48.5
		10000LM	SEF	80	8902	9153	9404	9627	66.47
				90	7757	7925	8148	8567	66.47
			HEF	80	8873	8999	9404	9429	60.89
				90	7255	7356	7735	7735	60.89
		14000LM	SEF	80	12999	13366	13732	14058	94.78
				90	11328	11573	11899	12510	94.78
			HEF	80	12957	13142	13732	13769	85.96
				90	10594	10742	11296	11296	85.96
		18000LM	SEF	80	16751	17224	17697	18117	128.98
				90	14598	14913	15334	16121	128.98
			HEF	80	16698	16936	17697	17744	116.92
				90	13653	13843	14557	14557	116.92
		20000LM	SEF	80	18501	19023	19545	20009	146.83
				90	16123	16471	16935	17805	146.83
			HEF	80	18442	18705	19545	19598	131.6
				90	15079	15290	16078	16078	131.6

© 2017-2019 Acuity Brands Lighting, Inc. All rights reserved.

CLX OPERATIONAL DATA (continued)

	Length	Nominal lumen package	Performance package	CRI	Delivered Lumens				Wattage
					Color Temperature				
					3000K	3500K	4000K	5000K	
FDL	L24	1500LM	SEF	80	1320	1358	1395	1428	10.85
				90	1151	1175	1208	1271	10.85
			HEF	80	1316	1335	1395	1399	10.39
				90	1076	1091	1147	1147	10.39
		2000LM	SEF	80	1822	1874	1925	1971	14.48
				90	1588	1622	1668	1754	14.48
			HEF	80	1816	1842	1925	1930	13.46
				90	1485	1506	1583	1583	13.46
		2500LM	SEF	80	2306	2371	2436	2494	18.41
				90	2010	2053	2111	2219	18.41
			HEF	80	2299	2332	2436	2443	17.42
				90	1880	1906	2004	2004	17.42
		3500LM	SEF	80	3102	3189	3277	3354	25.83
				90	2703	2761	2839	2985	25.83
			HEF	80	3092	3136	3277	3285	25.04
				90	2528	2563	2695	2695	25.04
		4500LM	SEF	80	4444	4570	4695	4807	38.7
				90	3873	3957	4068	4277	38.7
			HEF	80	4430	4493	4695	4708	34.8
				90	3622	3673	3862	3862	34.8
		5000LM	SEF	80	4722	4855	4988	5107	41.48
				90	4115	4204	4322	4544	41.48
			HEF	80	4707	4774	4988	5002	38.11
				90	3848	3902	4103	4103	38.11
	L36	2250LM	SEF	80	2126	2186	2246	2299	16.36
				90	1852	1892	1946	2046	16.36
			HEF	80	2119	2149	2246	2252	15.47
				90	1732	1757	1847	1847	15.47
		3000LM	SEF	80	2762	2840	2918	2988	20.8
				90	2407	2459	2529	2659	20.8
			HEF	80	2754	2793	2918	2926	19.98
				90	2251	2283	2401	2401	19.98
		3750LM	SEF	80	3536	3636	3735	3824	26.47
				90	3081	3148	3237	3403	26.47
			HEF	80	3525	3575	3735	3745	25.09
				90	2882	2922	3073	3073	25.09
		5250LM	SEF	80	4755	4890	5024	5143	39.9
				90	4144	4234	4353	4577	39.9
			HEF	80	4740	4808	5024	5037	34.3
				90	3876	3930	4132	4132	34.3
		6750LM	SEF	80	6072	6243	6415	6567	54.85
				90	5292	5406	5558	5844	54.85
			HEF	80	6053	6139	6415	6432	47.97
				90	4949	5018	5276	5276	47.97
		7500LM	SEF	80	6651	6839	7027	7194	62.6
				90	5796	5922	6088	6401	62.6
			HEF	80	6630	6725	7027	7046	54.02
				90	5421	5497	5780	5780	54.02

© 2017-2019 Acuity Brands Lighting, Inc. All rights reserved.

CLX OPERATIONAL DATA (continued)

	Length	Nominal lumen package	Performance package	CRI	Delivered Lumens				Wattage
					Color Temperature				
					3000K	3500K	4000K	5000K	
FDL	L48	3000LM	SEF	80	2662	2737	2812	2879	20.32
				90	2320	2370	2437	2562	20.32
			HEF	80	2654	2691	2812	2820	19.01
				90	2170	2200	2313	2313	19.01
		4000LM	SEF	80	3557	3657	3758	3847	27.58
				90	3100	3167	3256.	3423	27.58
			HEF	80	3546	3596	3758	3768	24.75
				90	2899	2939	3091	3091	24.75
		5000LM	SEF	80	4450	4576	4701	4813	34.8
				90	3878	3962	4073	4283	34.8
			HEF	80	4436	4499	4701	4714	31.77
				90	3627	3678	3867	3867	31.77
		7000LM	SEF	80	6446	6628	6810	6972	49.05
				90	5618	5739	5901	6204	49.05
			HEF	80	6426	6517	6810	6829	44.67
				90	5254	5327	5602	5602	44.67
		9000LM	SEF	80	8126	8355	8584	8788	63.99
				90	7081	7234	7438	7820	63.99
			HEF	80	8100	8215	8584	8607	58.58
				90	6623	6715	7061	7061	58.58
		10000LM	SEF	80	9081	9338	9594	9822	73.37
				90	7914	8085	8313	8740	73.37
			HEF	80	9052	9181	9594	9620	66.27
				90	7402	7505	7892	7892	66.27
	L96	6000LM	SEF	80	5240	5387	5535	5667	38.15
				90	4566	4665	4796	5042	38.15
			HEF	80	5223	5297	5535	5550	35.54
				90	4270	4330	4553	4553	35.54
		8000LM	SEF	80	6991	7189	7386	7561	52.32
				90	6093	6224	6400	6728	52.32
			HEF	80	6969	7068	7386	7406	48.5
				90	5698	5778	6075	6075	48.5
		10000LM	SEF	80	8649	8893	9137	9354	66.47
				90	7537	7700	7917	8323	66.47
			HEF	80	8621	8744	9137	9161	60.89
				90	7049	7147	7516	7516	60.89
		14000LM	SEF	80	12630	12986	13342	13659	94.78
				90	11006	11244	11561	12154	94.78
			HEF	80	12589	12768	13342	13378	85.96
				90	10293	10437	10975	10975	85.96
		18000LM	SEF	80	16276	16735	17194	17602	128.98
				90	14184	14490	14898	15663	128.98
			HEF	80	16223	16454	17194	17240	116.92
				90	13265	13450	14143	14143	116.92
		20000LM	SEF	80	17976	18483	18990	19441	146.83
				90	15665	16004	16454	17300	146.83
			HEF	80	17918	18173	18990	19041	131.6
				90	14651	14855	15621	15621	131.6

© 2017-2019 Acuity Brands Lighting, Inc. All rights reserved.

CLX OPERATIONAL DATA (continued)

	Length	Nominal lumen package	Performance package	CRI	Delivered Lumens				Wattage
					Color Temperature				
					3000K	3500K	4000K	5000K	
WDL	L24	1500LM	SEF	80	1377	1415	1454	1489	10.85
				90	1200	1226	1260	1325	10.85
			HEF	80	1372	1392	1454	1458	10.39
				90	1122	1138	1196	1196	10.39
		2000LM	SEF	80	1900	1953	2007	2055	14.48
				90	1656	1691	1739	1828	14.48
			HEF	80	1894	1921	2007	2012	13.46
				90	1548	1570	1651	1651	13.46
		2500LM	SEF	80	2405	2472	2540	2601	18.41
				90	2095	2141	2201	2314	18.41
			HEF	80	2397	2431	2540	2547	17.42
				90	1960	1987	2090	2090	17.42
		3500LM	SEF	80	3234	3325	3416	3497	25.83
				90	2818	2879	2960	3112	25.83
			HEF	80	3223	3269	3416	3426	25.04
				90	2636	2672	2810	2810	25.04
		4500LM	SEF	80	4634	4765	4895	5012	38.7
				90	4038	4125	4242	4459	38.7
			HEF	80	4619	4685	4895	4908	34.8
				90	3777	3829	4027	4027	34.8
		5000LM	SEF	80	4923	5062	5201	5324	41.48
				90	4290	4383	4506	4738	41.48
			HEF	80	4907	4977	5201	5215	38.11
				90	4012	4068	4278	4278	38.11
	L36	2250LM	SEF	80	2216	2279	2341	2397	16.36
				90	1931	1973	2029	2133	16.36
			HEF	80	2209	2241	2341	2348	15.47
				90	1806	1832	1926	1926	15.47
		3000LM	SEF	80	2880	2962	3043	3115	20.8
				90	2510	2564	2636	2772	20.8
			HEF	80	2871	2912	3043	3051	19.98
				90	2347	2380	2503	2503	19.98
		3750LM	SEF	80	3687	3791	3895	3987	26.47
				90	3213	3282	3375	3548	26.47
			HEF	80	3675	3727	3895	3905	25.09
				90	3005	3047	3204	3204	25.09
		5250LM	SEF	80	4958	5098	5238	5362	39.9
				90	4321	4414	4539	4772	39.9
			HEF	80	4942	5013	5238	5252	34.3
				90	4041	4097	4309	4309	34.3
		6750LM	SEF	80	6331	6510	6688	6847	54.85
				90	5517	5636	5795	6093	54.85
			HEF	80	6311	6401	6688	6706	47.97
				90	5160	5232	5502	5502	47.97
		7500LM	SEF	80	6935	7131	7326	7500	62.6
				90	6044	6174	6348	6674	62.6
			HEF	80	6913	7011	7326	7346	54.02
				90	5652	5731	6027	6027	54.02

© 2017-2019 Acuity Brands Lighting, Inc. All rights reserved.

CLX OPERATIONAL DATA (continued)

	Length	Nominal lumen package	Performance package	CRI	Delivered Lumens				Wattage
					Color Temperature				
					3000K	3500K	4000K	5000K	
WDL	L48	3000LM	SEF	80	2776	2854	2932	3002	20.32
				90	2419	2471	2541	2671	20.32
			HEF	80	2767	2806	2932	2940	19.01
				90	2262	2294	2412	2412	19.01
		4000LM	SEF	80	3709	3813	3918	4011	27.58
				90	3232	3302	3395	3569	27.58
			HEF	80	3697	3749	3918	3929	24.75
				90	3023	3065	3223	3223	24.75
		5000LM	SEF	80	4640	4771	4902	5018	34.8
				90	4044	4131	4247	4465	34.8
			HEF	80	4625	4691	4902	4915	31.77
				90	3782	3834	4032	4032	31.77
		7000LM	SEF	80	6721	6911	7101	7269	49.05
				90	5857	5984	6152	6469	49.05
			HEF	80	6700	6795	7101	7120	44.67
				90	5478	5554	5841	5841	44.67
		9000LM	SEF	80	8472	8711	8950	9163	63.99
				90	7383	7543	7755	8154	63.99
			HEF	80	8445	8565	8950	8974	58.58
				90	6905	7001	7362	7362	58.58
		10000LM	SEF	80	9469	9736	10003	10240	73.37
				90	8252	8430	8667	9112	73.37
			HEF	80	9438	9573	10003	10030	66.27
				90	7717	7825	8228	8228	66.27
	L96	6000LM	SEF	80	5463	5617	5771	5908	38.15
				90	4761	4864	5001	5258	38.15
			HEF	80	5445	5523	5771	5787	35.54
				90	4452	4515	4747	4747	35.54
		8000LM	SEF	80	7289	7495	7701	7884	52.32
				90	6353	6490	6672	7015	52.32
			HEF	80	7266	7370	7701	7722	48.5
				90	5941	6024	6334	6334	48.5
		10000LM	SEF	80	9017	9272	9526	9752	66.47
				90	7858	8028	8254	8678	66.47
			HEF	80	8988	9117	9526	9552	60.89
				90	7349	7452	7836	7836	60.89
		14000LM	SEF	80	13168	13540	13911	14241	94.78
				90	11476	11723	12054	12673	94.78
			HEF	80	13126	13313	13911	13949	85.96
				90	10732	10882	11443	11443	85.96
		18000LM	SEF	80	16970	17448	17927	18353	128.98
				90	14788	15108	15533	16331	128.98
			HEF	80	16915	17156	17927	17975	116.92
				90	13831	14024	14746	14746	116.92
		20000LM	SEF	80	18742	19271	19800	20270	146.83
				90	16333	16686	17156	18037	146.83
			HEF	80	18682	18948	19800	19853	131.6
				90	15276	15489	16287	16287	131.6

© 2017-2019 Acuity Brands Lighting, Inc. All rights reserved.

RRL - RELOC®-Ready Luminaire

- RRL connectors can be used with Quick-Flex®, System 820 and OnePass® systems.
- Load side of connector factory installed to luminaire.
- 4-pole mating connector with push-in terminations allows for simple installation.
- Touch-safe design on both halves meets UL/CSA requirement.
- Wiping contact design allows safe disconnect under load.



ORDERING INFORMATION Lead times will vary depending on options selected. Consult with your sales representative. **Example**: RRLA

Series		Wiring instructions	
RRL	RELOC®-ready luminaire	A	Hot conductor wired to position #1 (phase A)
		B	Hot conductor wired to position #2 (phase B)
		C	Hot conductor wired to position #3 (phase C) [1]

Compatible RELOC® Cables for Industrial Luminaires (ordered and shipped separately)



OCS



OCU



OD



DC



PT

Notes

1 C, ABE, and C12S options are not used with Quick-Flex QFC, QSFC, QPT, and QD.

PRODUCT INFORMATION

Advanced plug-in system with two-circuit capability. Available on industrial and strip products and a variety of architectural products mounted in continuous rows. 1, 2, 3 and 4-lamp fixtures. PLR22 (2-circuit) and crossover harness switches hot circuit serving next fixture in row. Reduces fixture types on job for alternating circuit applications (see example below.)

Easy one-step installation, saves up to 35% on labor costs. Expanded switching flexibility helps save energy.

Rows can be 50% longer with two-circuit systems. Polarized, lock-together nylon connectors prevent miswiring in the field. #12 THHN conductor, rated 600V, 90°C. White neutral wire included. Grounding accomplished by fixture in-row connectors.

CSA certified systems available with up to 2 circuits. G ground required.

Note: Specifications subject to change without notice.



Wiring

PLR

Advanced 1 or 2-Circuit Plug-In

ORDERING INFORMATION Lead times will vary depending on options selected. Consult with your sales representative.

Series	Number of hot wires		Branch circuits		Emergency circuit connected		Dimming		Ground	
PLR	(blank)	Not required for 22	Circuits to which ballast is connected				LV	Low-voltage dimming	G	Ground
PLR22	1	Black	(blank)	Not required for 22	(blank)	No emergency circuit				
	2	Black and red	A	Black wire	ELA	Emergency circuit wired to black wire				
			B	Red wire	ELB	Emergency circuit wired to red wire				

Typical Applications

- Multiple-circuit and single-circuit for longer continuous rows
- Multiple-circuit with alternating fixtures on separate circuits and 2-circuit (PLR 22)
- Multiple circuit with night-lights located along row as desired

© 2017-2019 Acuity Brands Lighting, Inc. All rights reserved.

ETC

Plug-In Stations

Control Series

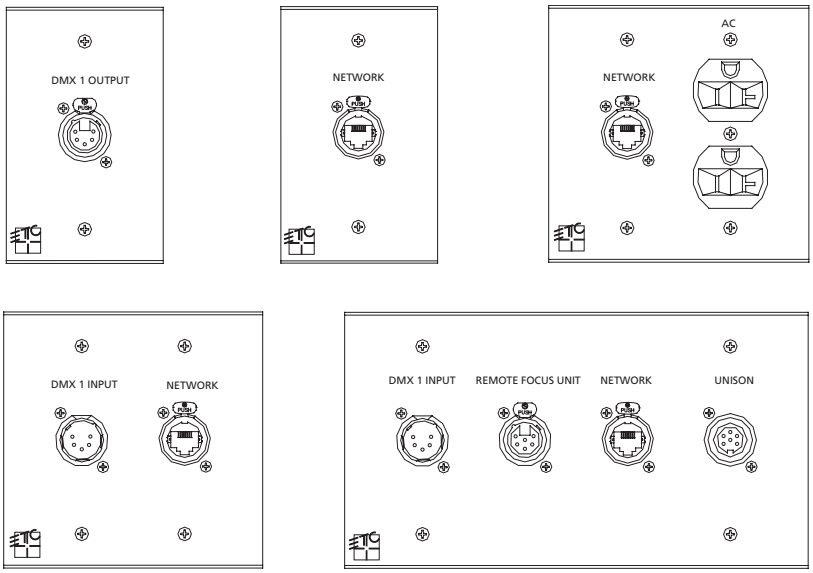

GENERAL INFORMATION

Electronic Control Plug-in Boxes or ECPBs allow lighting controls to connect and operate lighting and other equipment. Connections vary from industry standard DMX512 and Ethernet to portable houselight control and remote control devices.

APPLICATIONS

- An integral part of any complete lighting system installation:
  - Theatres and auditoriums
  - Television Studios
  - Houses of Worship
  - Museums
  - Casinos
  - Hospitality

FEATURES

- Surface or flush mount options
- Fits in most standard back boxes depending on variation
- Data options include:
  - DMX512 Input or Output
  - Remote Focus Unit (RFU)
  - Ethernet Network
  - Portable Unison station
  - Serial or computer interface
  - AC power option (voltage barrier required)

ORDERING INFORMATION

Standard Plug-in Stations

MODEL	DESCRIPTION
ECPB DMXIN	DMX In Plug-in station
ECPB RFU	RFU Plug-in station
ECPB NET	NET Plug-in station
ECPB DMXOUT	DMX Out Plug-in station
ECPB DMX/2-OUT	DMX 2-Out Plug-in station
ECPB DMX/3-OUT	DMX 3-Out Plug-in station
ECPB DMXOUT/RFU	DMX Out, RFU Plug-in station
ECPB DMXIN/RFU	DMX In, RFU Plug-in station
ECPB DMX IN/OUT	DMX In / Out Plug-in station
ECPB DMXIN/2-IN	DMX 1-In / DMX 2-In Plug-in station
ECPB DMXIN/NET	DMX 1-In / NET Plug-in station
ECPB DMXIN/2-IN/RFU/ NET	DMX 1-In, DMX 2-In, RFU, Net Plug-in station
ECPB DMXIN/RFU/NET	DMX In, RFU, NET Plug-in station
ECPB DMXIN/RFU/NET/ Unison	DMX In, RFU, NET, Unison Plug-in station
ECPB NET/AC	NET, AC Plug-in station
ECPB NET/NET	NET, NET Plug-in station
ECPB NET/NET/AC	NET, NET, AC Plug-in station
ECPB RFU/NET	RFU, NET Plug-in station
ECPB RFU/NET/UNISON	RFU, NET, Unison Plug-in station
ECPB UNISON/NET	UNISON, NET Plug-in station

SPECIFICATIONS

GENERAL

- Consist of the appropriate connectors required for the functional intent of the system
- Available with DMX input or output, Remote Focus Unit (RFU), Network, or architectural control connectors

CONNECTOR OPTIONS

- Following standard connectors available for Plug-in Stations:
  - 5-Pin male XLR connectors for DMX input
  - 5-Pin female XLR connectors for DMX output
  - 6-Pin female XLR connectors for RFU connections
  - RJ45 connectors for Network connections - Twisted Pair
  - 6-Pin female DIN connectors for Unison connections
  - DB9 female serial connector for architectural control from a computer
- Custom combinations and custom control connections available.

ELECTRICAL

- Low voltage class 2 wiring
- Operating Voltage: 12/24V Direct Current
- Barriers provided when line-voltage and Class 2 controls are ganged together in the same wallbox
- Terminal block supplied for contractor terminations

PHYSICAL

- Faceplates are .80" aluminum
- Finished in fine texture, scratch-resistant black powder coat
- White silk-screened graphics standard; engraving or custom legends available
- Mounts in an industry standard flush mount back box (supplied by others),
- Surface mount back boxes available from ETC
- Optional U-Bolt Kit for pipe mounting

PHYSICAL

Station Wall Plate Dimensions*

MODEL	WIDTH		HEIGHT		DEPTH	
	inches	mm	inches	mm	inches	mm
Single gang	2.75	70	4.50	114	2.50	64
Two gang	4.56	115	4.50	114	2.50	64
Three gang	6.38	162	4.50	114	3.50	89
Four gang	8.18	208	4.50	114	3.50	89
Five gang	10.00	254	4.50	114	3.50	89
Six gang	11.81	300	4.50	114	3.50	89
Seven gang	13.63	346	4.50	114	3.50	89

Station Back Boxes (supplied by others)

MODEL	SUGGESTED BOX
Single gang	RACO 690 or equivalent
Two gang	RACO 691 or equivalent
Three gang	RACO 697 or equivalent
Four gang	RACO 698 or equivalent
Five gang	RACO 699 or equivalent
Six gang	RACO 695 or equivalent
Seven gang	By ETC

* Custom stations may go up to a seven gang backbox. Gangable back boxes are not acceptable.

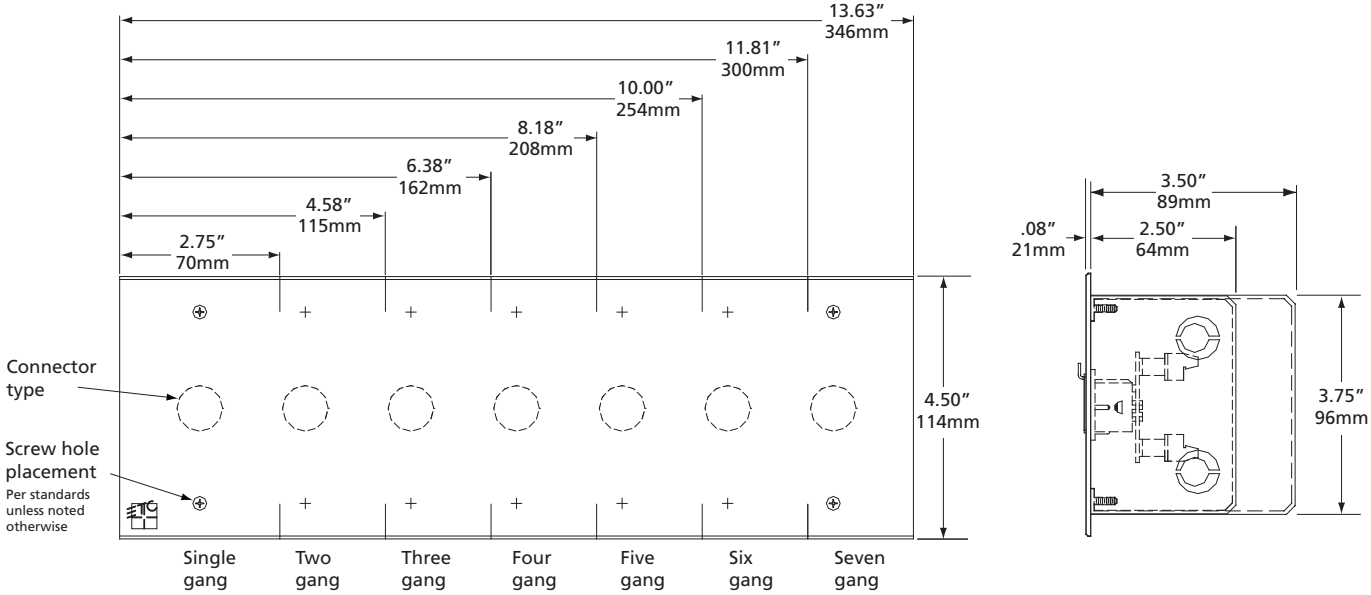

Corporate Headquarters • 3031 Pleasant View Rd, PO Box 620979, Middleton WI 53562 0979 USA • Tel +1 608 831 4116 • Fax +1 608 836 1736
London, UK • Unit 26-28, Victoria Industrial Estate, Victoria Road, London W3 6UU, UK • Tel +44 (0)20 8896 1000 • Fax +44 (0)20 8896 2000
Rome, IT • Via Ennio Quirino Visconti, 11, 00193 Rome, Italy • Tel +39 (06) 32 111 683 • Fax +39 (06) 32 656 990
Holzkirchen, DE • Ohmstrasse 3, 83607 Holzkirchen, Germany • Tel +49 (80 24) 47 00-0 • Fax +49 (80 24) 47 00-3 00
Hong Kong • Room 1801, 18/F, Tower 1 Phase 1, Enterprise Square, 9 Sheung Yuet Road, Kowloon Bay, Kowloon, Hong Kong • Tel +852 2799 1220 • Fax +852 2799 9325
Web • www.etcconnect.com • Copyright©2007 ETC. All Rights Reserved. All product information and specifications subject to change. 1094L1000 Rev.A Printed in USA 10/07

ETC®

DMX/RDM Two-Port Gateway

PoE 802.3af

Net3™ Gateway Series

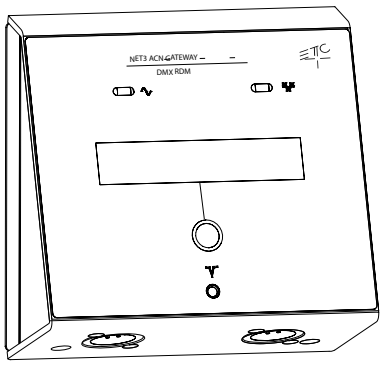

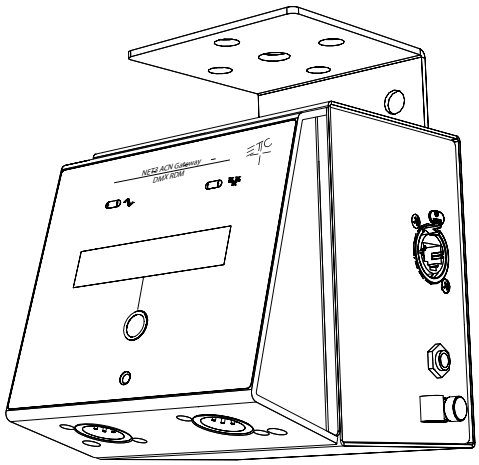

GENERAL INFORMATION

The DMX/RDM Two-Port Gateway provides network data distribution of RDM and data-level information. Built on the reliability and quality of ETC's Network development, DMX/RDM Gateways are built for the industry-standard ACN protocol. The Gateway is an Ethernet device that uses bidirectional communication with other network devices to send and receive DMX512 and RDM data, as well as ACN/sACN.

APPLICATIONS

- Roadhouses
- Touring
- University/professional theaters
- Convention halls
- Tech tables
- Stage manager panels
- System integration

FEATURES

- Distributed DMX and RDM over Ethernet
- Supports Net3 protocol powered by ACN
- DMX/RDM Output/Input
- Distributes DMX data to any input/output device
- Two DMX connections using 5-pin Male or Female XLR
- LCD screen for labeling, status and configuration information
- Power and Network status indicators
- Power over Ethernet (PoE) or external DC power supply
- Configurable using Net3 Concert software or directly from ACN

ORDERING INFORMATION

Net3 Two-Port Gateways

MODEL	DESCRIPTION
N32G-2F	Two-Port DMX/RDM Output Install Gateway
N3T2G-2F	Two-Port DMX/RDM Output Touring Gateway
N32G-2M	Two-Port DMX/RDM Input Install Gateway
N3T2G-2M	Two-Port DMX/RDM Input Touring Gateway
N32G-2T	Two-Port DMX/RDM Rear Terminal Install Gateway

Net3 Two-Port Gateway Accessories

MODEL	DESCRIPTION
N32G-BB	Surface-Mount Two-Gang Back Box
UBOLT	Touring Gateway U-Bolt Hardware Kit
400CC	Touring Gateway C-Clamp Hardware Kit
N3GA-PS	Net3 Gateway Universal Power Supply*

*N3GA-PS includes plugs for United States/Japan, Europe, Great Britan, and Australia/China. Used with Net3 Four-Port, Two-Port, Show Control and I/O Gateways.

SPECIFICATIONS

GENERAL

- Distributes DMX over Ethernet with any compatible input or output device
- RoHS Compliant (lead-free)
- CE compliant and ETL LISTED

FUNCTIONAL

- Supports Net3/ACN (ANSI E1.31 and E1.17)
- Supports RDM (ANSI E1.20)
- Supports USITT DMX512-A (ANSI E1.11)
- USITT DMX512 and ANSI E1.11 DMX512-A compliant
- Compliant with IEEE 802.3i for 10BASE-T, 802.3u for 100BASE-TX and 802.3af for Power over Ethernet
- Advanced Input Patch (AIP) allows any incoming address to be associated with any sACN address
- Flexible Output Patch (FOP) allows a 512 address universe to begin at any output address
- Support for per-address or per-universe level priority

MECHANICAL

- Fabricated from 16-gauge cold-rolled steel
- Black, fine-textured, scratch-resistant, powder-coat finish
- Two integrated DMX Input or Output ports
- Menu button for backlight/paging control
- Backlit LCD display for identification and status reporting:
  - Gateway identification
  - Network configuration
  - DMX port configuration
  - DMX port status
  - RDM configuration
- Front and rear power and data indicators
  - Blue power indicators
  - Green network activity indicator
- RJ45 for connection to lighting network
- Reset button for hard reset or forced reboot
- Flush-mount using standard two-gang back box (Raco 691 with half-inch-minimum mud ring or Raco 696 deep box)
- Surface-mount back boxes available form ETC (4105A2002)
- Hanging bracket and connectorized back box included with Touring version (C-clamp and U-Bolt hardware available)

PROCESSOR

- Maximum delay time from input to output not greater than one packet time
- Selectable DMX refresh rate with a maximum at least 40Hz

ENVIRONMENTAL

- Ambient operating temperature: 0° to 40°C (32° to 104°F)
- Operating humidity: 5% - 95% non-condensing
- Storage temperature: -40° to 70°C (-40° to 158°F)

POWER

- Supports IEEE802.3af Power over Ethernet or optional 8-28Vdc external power supply
- Maximum power consumption: 5 watts

DMX PORTS

- Two integrated 5-pin XLR connectors
- Software-configurable for input or output
- Fully optically-isolated input from the Gateway electronics
- Withstands fault voltages of up to 250VAC
- Integrated DMX/RDM termination

SPECIFICATIONS

CONFIGURATION

- Net3 Mode configuration provided by Net3 Concert software or directly from ACN
  - Supports up to 512 DMX addresses per port
  - Supports up to 63,999 Streaming ACN universes
- Up to 1,024 channels of data input or output
- DMX data input or output configurable by user
- Multiple outputs of a single DMX universe (DMX splitter) from a single Gateway
- Supports discrete DMX universe outputs per port
- Multiple sources may be combined to the network with each source or address allowed an independent priority
- Individual port start address and offset
- User-configurable labeling

ADDITIONAL INFORMATION

DMX512

Often shortened to DMX (Digital Multiplex), this communication protocol is used mainly to control dimmers and multi-parameter fixtures. A universe of DMX is defined as 512 channels. DMX sends a nearly continuous stream of level information for each control channel. It is a form of RS-485 digital serial communication.

RDM

Remote Device Management (ANSI E1.20) is a protocol enhancement to DMX512 that allows low-speed bidirectional communication between a system controller and attached RDM devices over a standard DMX line. This protocol will allow remote configuration, status monitoring, and management of devices.

sACN

Streaming ACN (ANSI E1.31), sends DMX-style control over TCP/IP networks. It provides a fast and efficient mechanism to transport the well-understood DMX protocol over Ethernet using an industry-standard protocol.

ACN

Architecture for Control Networks (ANSI E1.17) is a standard for high-speed bidirectional communication over TCP/IP on Ethernet network infrastructure. ACN is an open suite of protocols used between network devices for the purposes of greater and more adaptive control.

NET3

ETC's enhanced implementation of the standard ACN Protocol Suite (ANSI E1.17 and E1.31) including additional communication protocols for specialized applications and support of legacy systems.

TYPICAL SYSTEM RISER

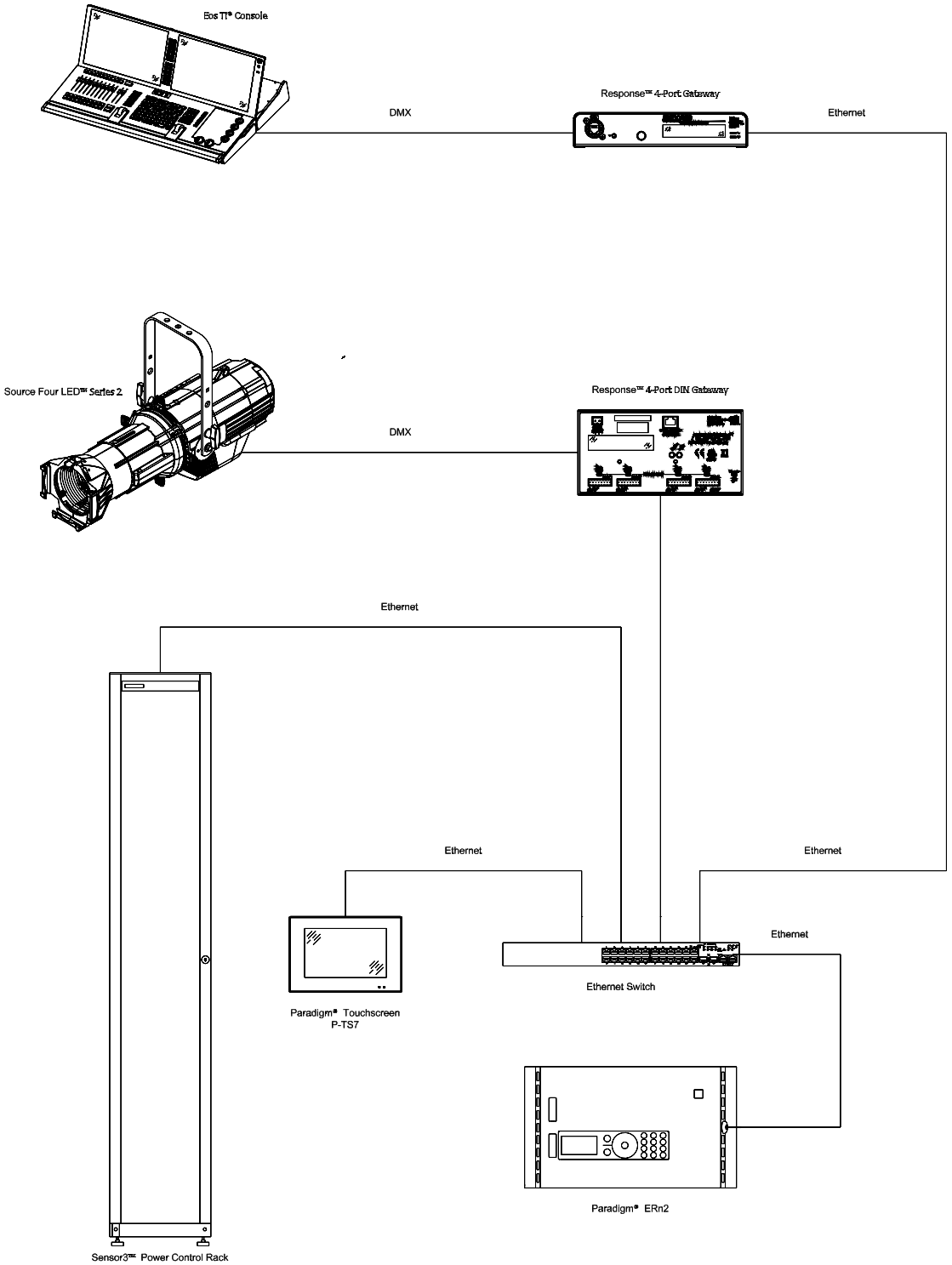

PHYSICAL

Net3 Two-Port Gateway Dimensions

MODEL	HEIGHT		WIDTH		DEPTH	
	inches	mm	inches	mm	inches	mm
N32G-2F / 2M	4.85	123	4.88	124	5.41	137
N3T2G-2F / 2M	6.47	165	4.88	124	5.41	137

Net3 Two-Port Gateway Weights

MODEL	WEIGHT		SHIPPING WEIGHT	
	lbs	kgs	lbs	kgs
N32G-2F / 2M	2.0	1.0	4.5	2.0
N3T2G-2F / 2M	3.9	1.8	4.8	2.2

Install gateway (Front/Side View)

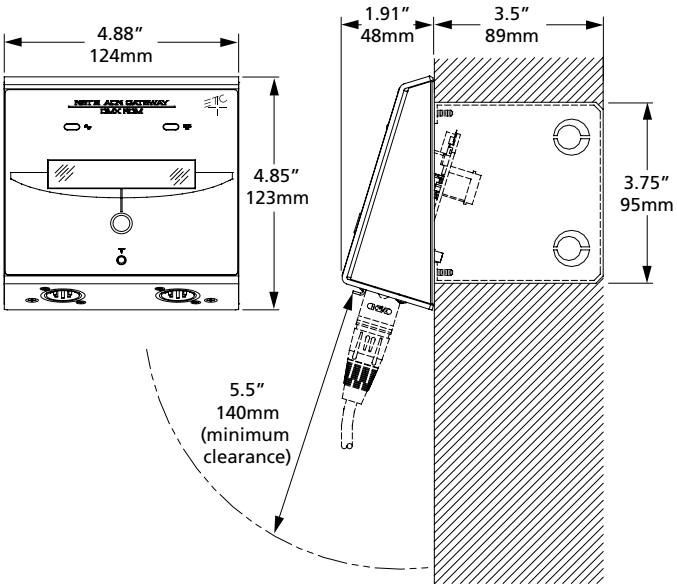

Touring gateway (Front/Side View)

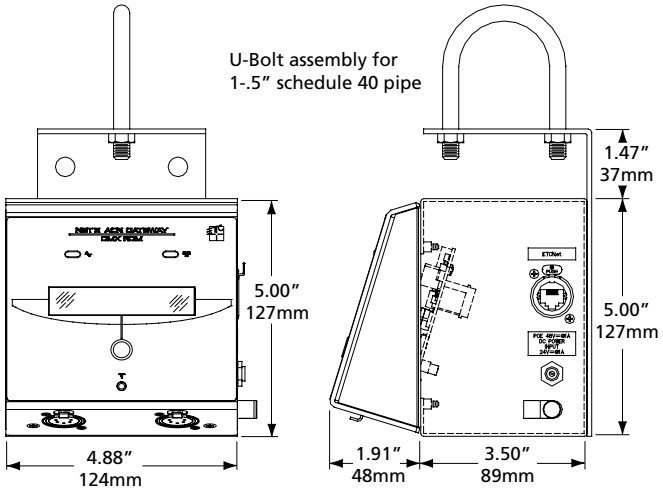

Touring Bracket (Top View)

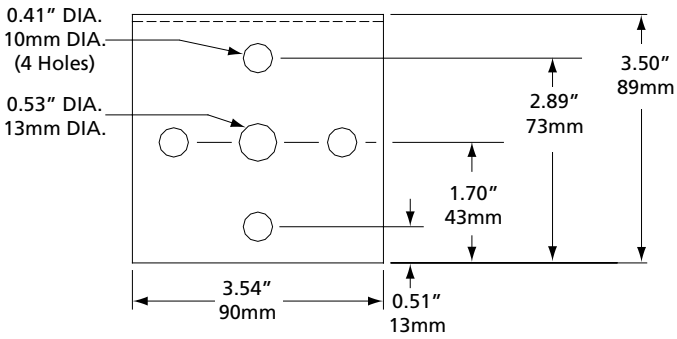

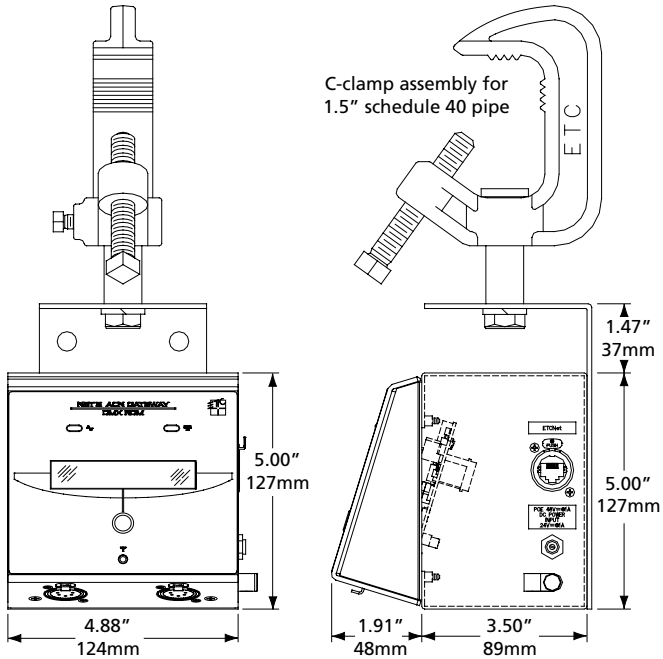

Corporate Headquarters ● 3031 Pleasant View Rd, PO Box 620979, Middleton WI 53562 0979 USA ● +1 608 831 4116
London, UK ● Unit 26-28, Victoria Industrial Estate, Victoria Road, London W3 6UU, UK ● +44 (0) 20 8896 1000
Rome, IT ● Via Pieve Torina, 48, 00156 Rome, Italy ● +39 (06) 32 111 683
Holzkirchen, DE ● Ohmstrasse 3, 83607 Holzkirchen, Germany ● +49 (80 24) 47 00-0
Hong Kong ● Room 1801, 18/F, Tower 1 Phase 1, Enterprise Square, 9 Sheung Yuet Road, Kowloon Bay, Kowloon, Hong Kong ● +852 2799 1220
Web ● etcconnect.com ● Copyright©2018 ETC. All Rights Reserved. All product information and specifications subject to change. 4261L1001 Rev G 01/18

ETC Unison® Heritage™ Fader Stations

Unison Control Series

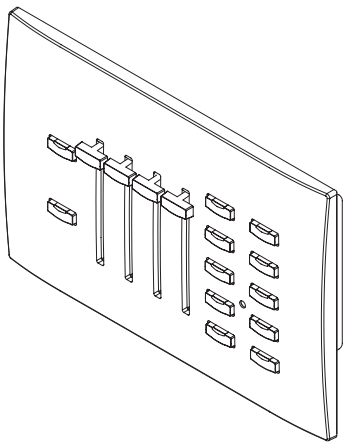

GENERAL INFORMATION

Elegant and clean-lined, Unison Heritage controls are designed to complement – not to compete with – the aesthetics of any interior environment, while being easy to install using LinkConnect. Artful but durable, Heritage stations are engineered to stand up to the daily abuse of busy public areas. The Unison Heritage series of button/fader control stations can be customized to suit any décor and application – available in a wide range of sizes, colors and configurations. Choose from pre-configured button/fader combinations or put stations together to create endless combinations of controls.

APPLICATIONS

- Churches
- Hotels
- Convention Centers
- Meeting Rooms
- Schools
- Restaurants

FEATURES

- LinkConnect – using Echelon® LonTalk® protocol with LinkPower, the two wire topology-free system gives you the freedom to put stations where you need them
- Fastener Free Faceplate System – no visible means of attachment
- ColorCondition – RGB LED's allow for customized control indication on a per button or fader basis, unlocking the conditional logic capabilities of a Unison control system
- Forever Legend System – complimentary colored standard or custom legend options using an indelible, laser-marking method
- RemoteDirect – built in InfraRed (IR) receivers on every station allow for optional IR remote control at every station location
- RealFade – physical slider controls for groups or zones with 1 to 16 faders per station, paired with up to 12 buttons
- LockOut – configurable control lockout from the push of a button
- Take Control – preset the faders on a Heritage fader station and then choose when to gain control of the lighting in a room, at exactly the right moment

ORDERING INFORMATION

Heritage Fader Stations

MODEL	DESCRIPTION	LEGEND
UH10100- __1F	1 gang, 1 fader	Master
UH10101- __1F	1 gang, 1 fader, 1 button	Master, On/Off
UH10101- __2F	1 gang, 1 fader, 1 button	Master, Entry
UH10101- __3F	1 gang, 1 fader, 1 button	Master, Panic
UH10102- __1F	1 gang, 1 fader, 2 buttons	Master, Open, Close
UH10102- __2F	1 gang, 1 fader, 2 buttons	Master, On, Off
UH10105- __1F	1 gang, 1 fader, 5 buttons	Master, Preset 1-4, Off
UH30407- __1F	3 gang, 4 fader, 7 buttons	Manual, Record, Master, Zone 1-3, Preset 1-4, Off
UH30412- __1F	3 gang, 4 fader, 12 buttons	Manual, Record, Master, Zone 1-3, Preset 1-9, Off
UH40707- __1F	4 gang, 7 fader, 7 buttons	Manual, Record, Master, Zone 1-6, Preset 1-4, Off
UH40712- __1F	4 gang, 7 fader, 12 buttons	Manual, Record, Master, Zone 1-6, Preset 1-9, Off
UH51007- __1F	5 gang, 10 fader, 7 buttons	Manual, Record, Master, Zone 1-9, Preset 1-4, Off
UH51012- __1F	5 gang, 10 fader, 12 buttons	Manual, Record, Master, Zone 1-9, Preset 1-9, Off
UH61307- __1F	6 gang, 13 fader, 7 buttons	Manual, Record, Master, Zone 1-12, Preset 1-4, Off
UH61312- __1F	6 gang, 13 fader, 12 buttons	Manual, Record, Master, Zone 1-12, Preset 1-9, Off
UH71607- __1F	7 gang, 16 fader, 7 buttons	Manual, Record, Master, Zone 1-15, Preset 1-4, Off
UH71612- __1F	7 gang, 16 fader, 12 buttons	Manual, Record, Master, Zone 1-15, Preset 1-9, Off

Enter station color code in __ space provided.

1 = Cream (RAL 9001)

2 = Ivory (RAL 1015)

3 = Gray (RAL 7001)

4 = Black (RAL 9004)

5 = Signal White (RAL 9003)

Above stations flush mount (F) in industry standard gang boxes. (By Others)

Also available in surface mount (S) and portable (P) configurations. (Contact ETC)

SPECIFICATIONS

FUNCTIONAL

- UL and cUL LISTED
- CE Marked

FUNCTIONAL

- Operate default or custom system functions including preset selection, manual mode activation, record mode activation, station lockout, raise, lower, sequence control, zone on/off, room combine, macro activation and timed event override
- Fader functions include master, zone, fade rate, or preset
- Custom button and fader functionality programmable via LightDesigner configuration software
- Programmable electronic lockout levels
- Buttons allow programming of individual lockout levels.

MECHANICAL

- Standard configurations with 7 or 12 buttons and 4, 7, 10, 13 or 16 faders
- Support for 1-12 buttons and 1-16 faders for custom applications, contact ETC
- Enclosed electronics assembly
- Faceplate with no visible means of attachment
- 45mm slide potentiometer faders and cantilevered switch arrays with removable caps
- Flush mount in industry standard back boxes
- Surface mount back boxes available from manufacturer
- Constructed of injection molded, ABS plastic in five standard colors, matched to RAL standard colors
- Custom colors available with sample
- Indelibly marked legends in a contrasting color
- Integral RGB LED response indicator for each button and fader
- Integrated IR receiver

ELECTRICAL

- Connect via Echelon® LinkPower® control network utilizing low voltage Class II wiring
- Topology free and polarity independent wiring over Belden 8471 or equivalent, and (1) #14 ESD drain wire
- Wiring may be bus, loop, home-run or any combination of these
- All station terminations are connectorized.
- UL and cUL LISTED, CE marked

THERMAL

- Ambient room temperature: 0-40°C / 32-104°F
- Ambient humidity: 30-90% non-condensing

PHYSICAL

Flush Backbox Dimensions*

GANG	HEIGHT		WIDTH		DEPTH	
	inches	mm	inches	mm	inches	mm
1 (RACO 690*)	3.75	95.3	2.0	50.8	2.5	63.5
3 (RACO 692*)	3.75	95.3	6.4	162.6	2.5	63.5
4 (RACO 693*)	3.75	95.3	8.2	208.3	2.5	63.5
5 (RACO 694*)	3.75	95.3	10.0	254.0	2.5	63.5
6 (RACO 695*)	3.75	95.3	11.8	299.7	2.5	63.5
7 (by ETC)	3.75	95.3	13.6	345.4	2.5	63.5

*Or equivalent

Surface Backbox Dimensions*

GANG	HEIGHT		WIDTH		DEPTH	
	inches	mm	inches	mm	inches	mm
1	4.6	116.8	2.9	73.7	2.5	63.5
3	4.6	116.8	6.9	175.3	2.5	63.5
4	4.6	116.8	8.7	221.0	2.5	63.5
5	4.6	116.8	10.5	266.7	2.5	63.5
6	4.6	116.8	12.3	312.4	2.5	63.5
7 (by ETC)	4.6	116.8	14.1	358.1	2.5	63.5

*Surface mount back boxes provided by ETC

Faceplate Dimensions*

GANG	HEIGHT		WIDTH	
	inches	mm	inches	mm
1	4.5	114.3	2.8	71.1
3	4.5	114.3	6.7	170.2
4	4.5	114.3	8.6	218.4
5	4.5	114.3	10.4	264.2
6	4.5	114.3	12.2	309.9
7	4.5	114.3	14.0	355.9

*Weights and dimensions typical

Corporate Headquarters • 3031 Pleasant View Rd, PO Box 620979, Middleton WI 53562 0979 USA • Tel +1 608 831 4116 • Fax +1 608 836 1736
London, UK • Unit 26-28, Victoria Industrial Estate, Victoria Road, London W3 6UU, UK • Tel +44 (0)20 8896 1000 • Fax +44 (0)20 8896 2000
Rome, IT • Via Ennio Quirino Visconti, 11, 00193 Rome, Italy • Tel +39 (06) 32 111 683 • Fax +44 (0) 20 8752 8486
Holzkirchen, DE • Ohmstrasse 3, 83607 Holzkirchen, Germany • Tel +49 (80 24) 47 00-0 • Fax +49 (80 24) 47 00-3 00
Hong Kong • Room 1801, 18/F, Tower 1 Phase 1, Enterprise Square, 9 Sheung Yuet Road, Kowloon Bay, Kowloon, Hong Kong • Tel +852 2799 1220 • Fax +852 2799 9325
Web • www.etcconnect.com • Copyright©2008 ETC. All Rights Reserved. All product information and specifications subject to change. 7181L1001 Rev. A Printed in USA 09/08

Unison® products protected by one or more of the following U.S. Patenten Numbers 5,323,088, 5,352,958 and 6,849,943; European Pateten Number 0603333; German Patent Number 69203609; US and International patents pending

ETC Unison® Heritage™ Locking Cover

Unison Control Series

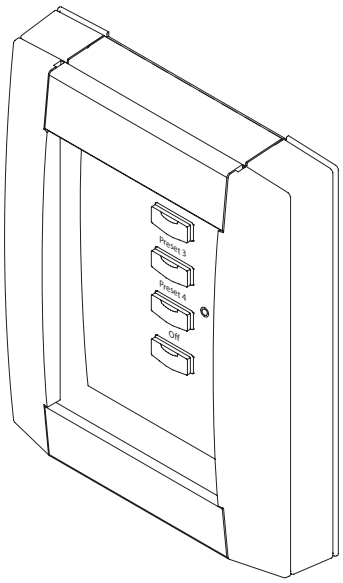

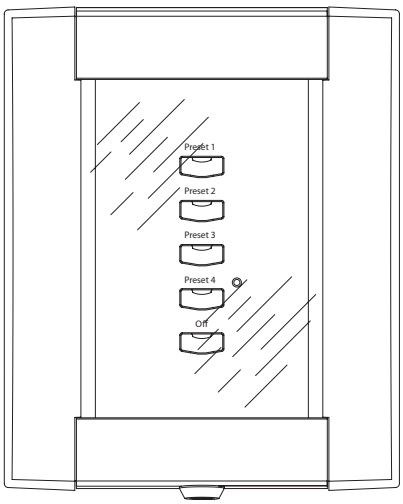

GENERAL INFORMATION

Elegant and clean-lined, Unison Heritage Locking Covers are designed to complement – not to compete with – the aesthetics of any interior environment. Artful but durable, Heritage Locking Covers are engineered to stand up to the daily abuse of busy public areas. A member of the Secure-It family of products, Unison Heritage Locking Covers are designed to prevent unauthorized use of Unison Heritage Button and Fader Stations, while providing protection for the station from accidental damage. Heritage Locking Covers are designed to allow easy access when required while providing visual feedback of the system status through a smoked polycarbonate window.

APPLICATIONS

- Churches
- Hotels
- Convention Centers
- Meeting Rooms
- Schools
- Restaurants

FEATURES

- Secure-It – Decide who has access to the lighting controls, locking out any unwanted actions, while protecting a Heritage Button or Fader station from external damage.
- Designed for use with all Unison Heritage Button, Fader and Keyswitch wall stations

ORDERING INFORMATION

Unison Heritage Sliding Locking Covers

MODEL	DESCRIPTION
SL-1_	1-Gang Flush-mount Sliding Locking Cover
SL-2_	2-Gang Flush-mount Sliding Locking Cover
SL-3_	3-Gang Flush-mount Sliding Locking Cover
SL-4_	4-Gang Flush-mount Sliding Locking Cover
SL-5_	5-Gang Flush-mount Sliding Locking Cover
SL-6_	6-Gang Flush-mount Sliding Locking Cover
SL-7_	7-Gang Flush-mount Sliding Locking Cover

Notes:

Enter color code in __ space provided:

C = Cream (RAL 9001)

I = Ivory (RAL 1015)

G = Gray (RAL 7001)

B = Black (RAL 9004)

W = Signal White (RAL 9003)

Ivory Gray and Signal White are avaialble in single gang configurations only

SPECIFICATIONS

FUNCTIONAL

- For Flush-mount applications
- Mounts to industry standard flush-mount backboxes (by others)
- Accommodates mounting for upward or downward door opening
- Includes integrated locking cylinder
- Maintains functionality of Unison RemoteDirect Infrared remotes

MECHANICAL

- Standard configurations for 1 gang thru 7 gang applications
- Constructed of injection molded, ABS plastic endcaps with extruded aluminum rails in five standard colors, matched to RAL standard colors
- Smoked polycarbinate window with captive mounting
- Integrated key cylinder with two keys
- No visible means of attachment
- Mounts to industry standard back box (by others)
- Accommodates RemoteDirect Infrared remote transmission through polycarbonate window.

PHYSICAL

Unison Heritage Sliding Locking Covers Dimensions*

MODEL	HEIGHT		WIDTH		DEPTH	
	inches	mm	inches	mm	inches	mm
SL-1	6.36	161.5	5.19	131.8	1.32	33.52
SL-2	6.36	161.5	7.33	186.2	1.32	33.52
SL-3	6.36	161.5	9.14	232.2	1.32	33.52
SL-4	6.36	161.5	10.95	278.1	1.32	33.52
SL-5	6.36	161.5	12.76	324.1	1.32	33.52
SL-6	6.36	161.5	14.58	370.3	1.32	33.52
SL-7	6.36	161.5	16.39	416.3	1.32	33.52

Unison Heritage Sliding Locking Covers Weights*

MODEL	WEIGHT		SHIPPING WEIGHT	
	lbs	kgs	lbs	kgs
SL-1	.94	0.4	2.14	1.0
SL-2	1.26	0.6	2.46	1.1
SL-3	1.56	0.7	2.76	1.3
SL-4	1.86	0.8	3.06	1.4
SL-5	2.13	1.0	3.33	1.5
SL-6	2.37	1.1	3.57	1.6
SL-7	2.67	1.2	3.87	1.7

*Weights and dimensions typical

Corporate Headquarters • 3031 Pleasant View Rd, PO Box 620979, Middleton WI 53562 0979 USA • Tel +1 608 831 4116 • Fax +1 608 836 1736
London, UK • Unit 26-28, Victoria Industrial Estate, Victoria Road, London W3 6UU, UK • Tel +44 (0)20 8896 1000 • Fax +44 (0)20 8896 2000
Rome, IT • Via Ennio Quirino Visconti, 11, 00193 Rome, Italy • Tel +39 (06) 32 111 683 • Fax +44 (0) 20 8752 8486
Holzkirchen, DE • Ohmstrasse 3, 83607 Holzkirchen, Germany • Tel +49 (80 24) 47 00-0 • Fax +49 (80 24) 47 00-3 00
Hong Kong • Room 1801, 18/F, Tower 1 Phase 1, Enterprise Square, 9 Sheung Yuet Road, Kowloon Bay, Kowloon, Hong Kong • Tel +852 2799 1220 • Fax +852 2799 9325
Web • www.etcconnect.com • Copyright©2009 ETC. All Rights Reserved. All product information and specifications subject to change. 7181L1004 Rev. A Printed in USA 02/09

Unison® products protected by one or more of the following U.S. Patenten Numbers 5,323,088, 5,352,958 and 6,849,943; European Pateten Number 0603333; German Patent Number 69203609; US and International patents pending



Lex PowerGATE™ Company Switch

LEX PRODUCTS CORP.

We Deliver the Power™



FEATURING NEW CAM/LUG CONNECTION CHAMBER

Safe and Convenient Power Access for:

- Theatres
- Convention Centers
- Studios
- Theme Parks
- Recreation Facilities

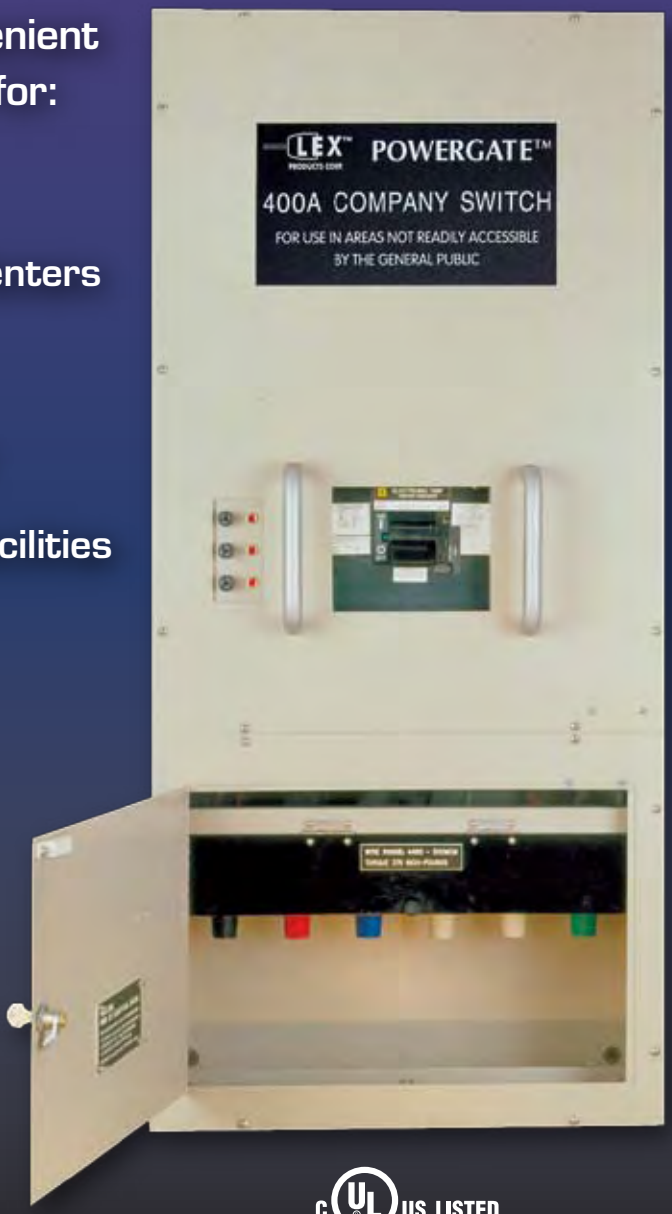

c UL US LISTED

(U.S.A. and Canada)

US Patent
No. 7,136,278 B2

011508



Features & Benefits

- **The cam and lug connections are interlocked to the main breaker through the access door so that neither cam nor lug connections can be made or broken under load.**
- **Because the PowerGATE™ Company Switch has one wiring chamber instead of two, the unit is far more compact.**
- **The unique arrangement of the cam and lug combination allows for both sets of cables to drape downward for a lower profile against the wall.**
- **Both cam and lug connections are behind the access door when in use, eliminating accidental disconnection, unauthorized acess and/or tampering with connections.**
- **An integral L.E.D. worklight is provided in the wiring chamber for ease of connection and enhanced safety.**

Square D Electronic Trip LEL Series Circuit Breaker



- The breaker has a 65,000 AIC (Amps Interrupting Capacity) rating. It will function even when subjected to a short circuit producing 65,000 Amps.
- The breaker is electronic trip 100% rated, unlike thermal magnetic breakers which are 80% rated.
- The 400 Amp Breaker can be reset to 200 Amp trip on the unit itself.
- An additional rating plug is available to reset the breaker trip rating at 100 Amps.
- The Breaker can be wired to display in a remote location.

Cam/Lug Connection Chamber

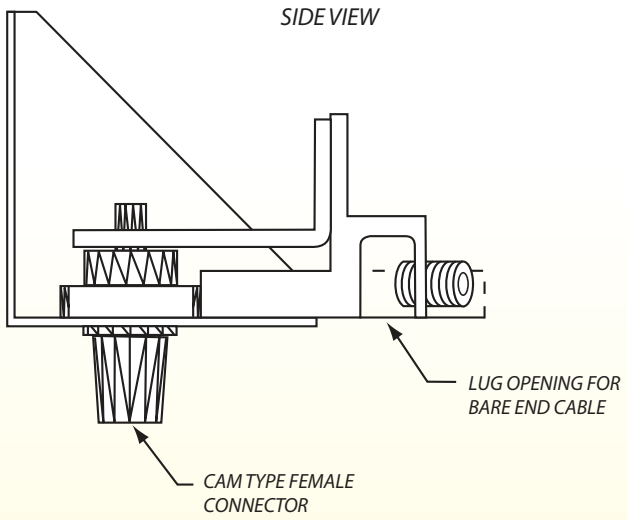

The exclusive cam/lug connection combination is at the heart of the PowerGATE™ Company Switch.

The detachable cam-type outlet and the direct wire lug have been combined in a compact and convenient arrangement, providing a host of unique features and benefits.

PowerGATE™ NEMA 3R Weatherproof Version

Company switches are great for outdoor events and productions, but they must be weatherproof.

Typically they have been mounted in a separate, bulky and expensive enclosure.

Lex Product's new NEMA 3R Weatherproof Version will save time, space and money, and most importantly, enhance the safety and convenience of any venue.

- Circuit Breakers and Connection Chamber are housed behind gasketed weatherproof door.
- Circuit Breaker door allows locking and limited access if desired.



Catalog Information

	400 AMP	200 AMP	100 AMP
Catalog No: Indoor	CS-400F-C6DS1	CS-200F-C6DS1	CS-100F-C6DS1 *
NEMA 3R Weatherproof	CS-400F-C6DS3	CS-200F-C6DS3	CS-100F-C6DS3
Rating:	400A 3Ø 120/208 VAC 65,000 AIC Main Breaker 100% rated	200A 3Ø 120/208 VAC 65,000 AIC Main Breaker 100% rated	100A 3Ø 120/208 VAC 65,000 AIC Main Breaker 100% rated
Output:	(6) Wire E1016 cam Black - phase Blue - phase Red - phase White - neutral Green - ground Add RGN to cat. no. for reverse gender of neutral & ground	(6) Wire E1016 cam Black - phase Blue - phase Red - phase White - neutral Green - ground Add RGN to cat. no. for reverse gender of neutral & ground	(6) Wire E1016 cam Black - phase Blue - phase Red - phase White - neutral Green - ground Add RGN to cat. no. for reverse gender of neutral & ground
Dimensions:	44"H x 20"W x 9"D	44"H x 20"W x 9"D	35"H x 20"W x 9"D

** For 5 wire, replace 6 with 5.*

Performance Specifications:

1. Unit shall be UL and CUL Listed and labeled.
2. The unit shall have a wiring chamber that contains both direct wire lugs and single pole cam output connectors.
3. Both Cam and lug cables shall drape downward when connected.
4. Cam and lug cables shall enter and exit the wiring chamber from access holes in the bottom of the enclosure.
5. A lockable hinged access door shall provide access to the wiring chamber, denying access to the connections when mated.
6. The access door shall engage the shunt trip mechanism of the main circuit breaker whenever it is not fully closed, so that connections cannot be made or broken under load.
7. The unit shall provide strain relief for lug cables exiting the bottom of the chamber.
8. Output lug connections shall accommodate a maximum of 250mcm cable.
9. A strip of white light-emitting diode worklight shall light the wiring chamber whenever the access door is not fully closed.
10. The unit shall contain (1) 100% rated 3 pole main circuit breaker with a 65K AIC rating.
11. Breaker shall be recessed beneath the plane of the front panel of the unit to prevent accidental operation.
12. Breaker shall be equipped with a padlock attachment to lock the handle in the off position when not in use.
13. The 400A breaker shall be resettable to 200 Amps trip on the unit. A separate plug shall be available to reset the 400A main breaker at 100 Amps.
14. The unit shall be equipped with light emitting diode indicator lights for each supply phase, labeled with NEC specified color-codes and alphabetic names of phases.
15. The unit shall further be supplied with a light emitting diode indicator light indicating supply to ground continuity, labeled with an alphabetic description and color coded green.
16. The ground connection shall be isolated from the frame.
17. Contractor connections to the main circuit breaker shall accept up to 500mcm wire.
18. Enclosure shall be fabricated from 14 gauge steel.
19. Enclosure shall have (4) welded mounting tabs.
20. When needed, the unit shall be UL and CUL Listed, as NEMA 3R Weatherproof.

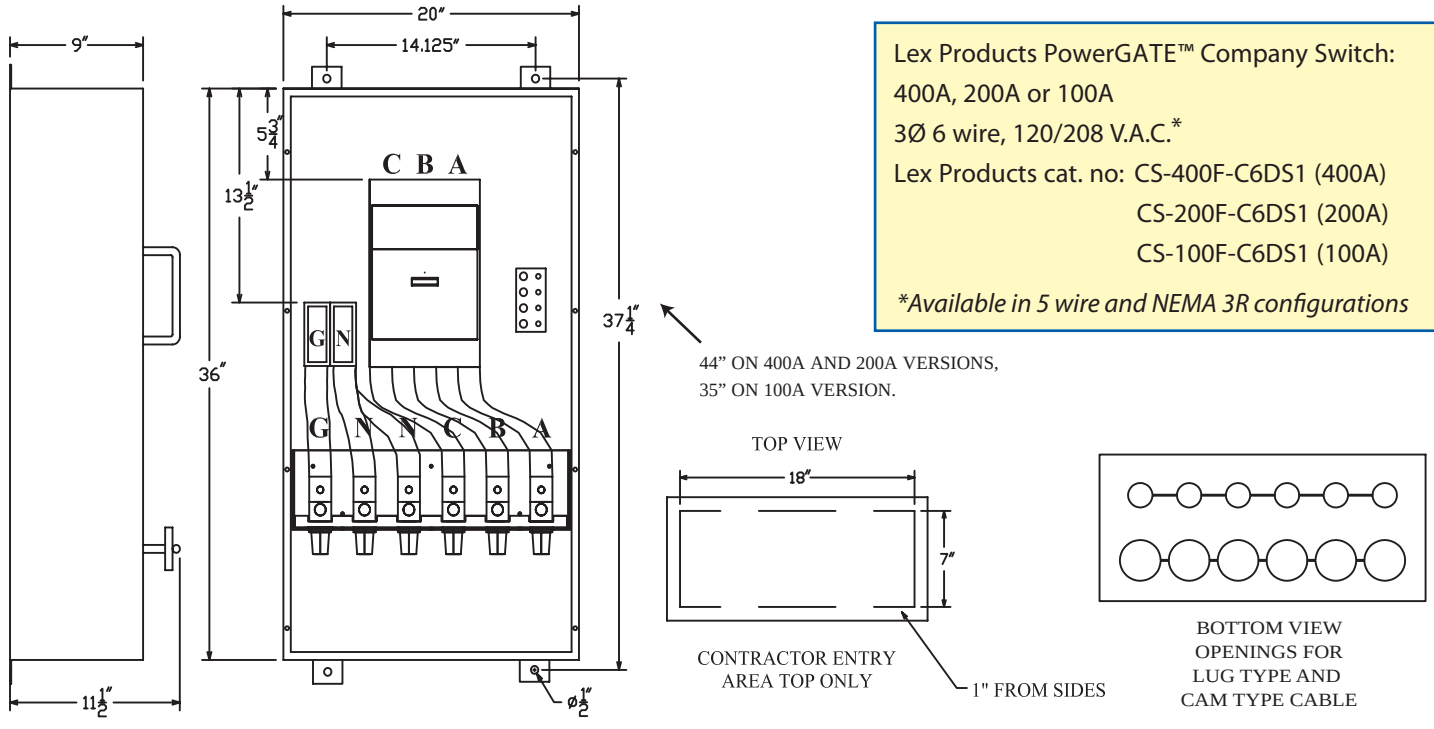

Lex Products PowerGATE™ Company Switch:
400A, 200A or 100A
3Ø 6 wire, 120/208 V.A.C.*
Lex Products cat. no: CS-400F-C6DS1 (400A)
CS-200F-C6DS1 (200A)
CS-100F-C6DS1 (100A)

**Available in 5 wire and NEMA 3R configurations*

LEX PRODUCTS CORP.

Lex Products Corp. 401 Shippan Avenue Stamford, CT 06902
Phone: 1-800-643-4460 Fax: 203-363-3742

We Deliver the Power™

www.lexproducts.com info@lexproducts.com

LISTED LISTED

Company Switch Series

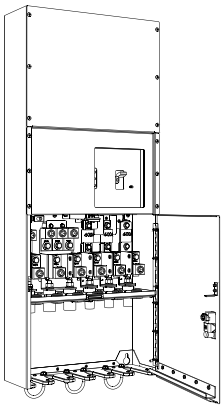

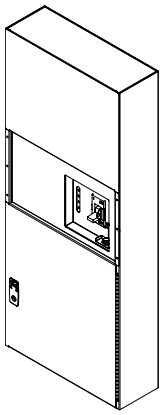

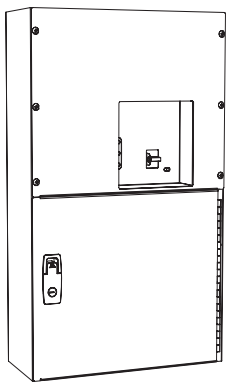

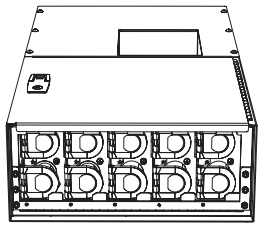

GENERAL INFORMATION

PowerSafe Company Switches come in two models:

- PowerSafe Pro : 100A, 200A, 400A
- PowerSafe Compact : 100A, 200A

PowerSafe Pro sets a new standard in safety and size. It offers important new features: locking connection covers, shunt-trip-protected doors that can lock connection covers in place while output power is present, and lockout/tagout brackets.

PowerSafe Compact offers safety in a smaller size. This model does not include the connector chamber, dual neutral, tie-off, LED worklights or support for 400A capacity, which allows the PowerSafe Compact model to be more compact.

A fault-current-limiting option provides additional safety in the event of a short circuit, by limiting the energy available at the output of the switch. This option reduces the available fault current via ultra-fast current-limiting fuses, allowing safe connection of equipment with lower SCCR (Short Circuit Current Rating) and reducing arc-flash hazard.

In addition to safety features, both models provide 65kA SCCR ratings with 100% rated breaker for lighting, sound, scenery, and stage equipment.

FEATURES

PowerSafe Pro

- **PowerSafe compartment:** Protects against access to output connections while the cabinet is energized
- **Double Neutral**: Supports 200% rated neutral
- **LED Worklight Option**: Illuminates interior and output lugs

PowerSafe Compact

- **Safety bracket**: Locks access to hinged covers over all connections while the door is closed

All Models

- **Shunt trip safety interlock**
- **SCCR**: Provides 65,000A Short Circuit Current Rating
- **Iso Ground**: Allows field configuration of isolation between enclosure ground and equipment ground
- **Output Connections**: Accommodates single-pole cam-style connectors and up to 4/0 class K cables using 500kcmil screw terminal

GENERAL INFORMATION (CONT.)

FEATURES (CONT.)

- **Power Indicators**: LEDs light up to show that power is on/available between each phase and neutral
- **Lockout/Tagout**: Accepts third-party locks on built-in bracket for support of NFPA 70E safety lockout/tagout procedures

APPLICATIONS

Entertainment venues requiring temporary power, such as:

Theaters	Convention centers	Auditoriums
Exhibition halls	Studios	Performing arts centers
Arenas	Casinos	Stadiums

ORDERING INFORMATION

Company Switch

ENCLOSURE MODEL NUMBER	MAX BREAKER RATING	BREAKER OPTION
PSP	400A	400A 200A 100A
PSC	200A	200A 100A

Model Number Examples:

PSP-200 is a 200A PowerSafe Pro

PSC-100 is a 100A PowerSafe Compact

Options

PS-CL	Fault-Current-Limiting option
PS-FKIT	All Female cam-style Outputs*
PSP-SR	Strain Relief tie-off option for PowerSafe Pro**

*All company switches come standard with male, neutral and ground cam-style configurators. Designation of all female cam-style connectors is optional and must be specifically stated in purchase order.

** Strain Relief tie-off option is not available in PowerSafe Compact.

SPECIFICATIONS

GENERAL

- UL and cUL Listed
- Meets/exceeds all applicable NEC standards
- Satisfies safety requirements for lockout/tagout
- Short Circuit Current Rating (SCCR): 65,000A RMS symmetrical

MECHANICAL

- Wall-mount unit with integral keyhole fixing points
- 16-gauge welded steel cabinet, rated NEMA 1
- Locking swing hinged door with clamp latch
- ETC Sensor styling with fine-textured, scratch-resistant epoxy paint
- Secondary door for access to bare-end tie-ins
- Conduit entry via top or side (see manual)
- Solid, top and side panel free of conduit knockouts to allow for greater flexibility in contractor conduit entry
- Integral breaker lockout bracket supports standard lockout/tagout procedures to prevent any persons from turning the breaker "on" while the lock is in place

ELECTRICAL

- Power input:120/208V – Three-phase, four-wire plus ground
- Wire capacity: copper and aluminum feeders are allowed
  - PowerSafe Compact: 8AWG-350kcmil
  - PowerSafe Pro: 3/0 - 500kcmil

Single lugs provided for all input connections except triple-neutral lugs in Pro model

- 65,000 AIC 100% rated 100A, 200A, or 400A breaker
- 65,000A SCCR symmetrical rated system
- Optional fault-current-limiting fuses reduce available let-thru current to connected portable equipment
- Reverse neutral and ground cam-style connector configuration
- Current transformers can optionally be installed in the field for connection to external third-party power meters
- Safety interlock disconnects output power when cabinet door is opened

PROTECTION FROM LIVE CONNECTIONS

PowerSafe Pro

- Door-covered "Fingered" cable entry for safe access through the front of the panel
- "Fingered" cable entry made of foam rubber surface for prevention of wear and tear on cabling

PowerSafe Compact

- Swing-hinged brackets lock covers in place until the front door is opened, preventing connector insertion under power

POWERSAFE PRO

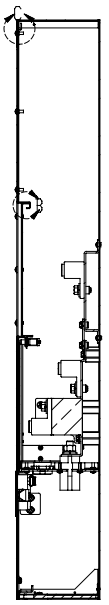

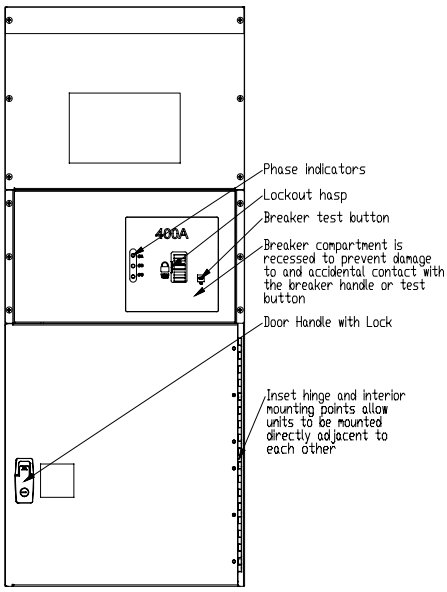

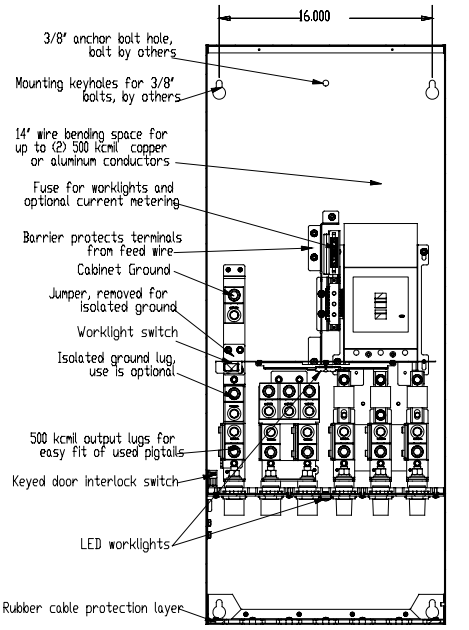

Some components hidden for clarity



Front panels interlock to prevent unauthorized removal without the key

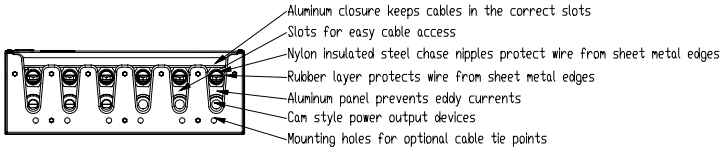

POWERSAFE COMPACT

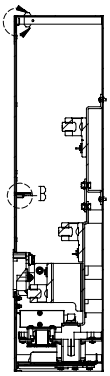

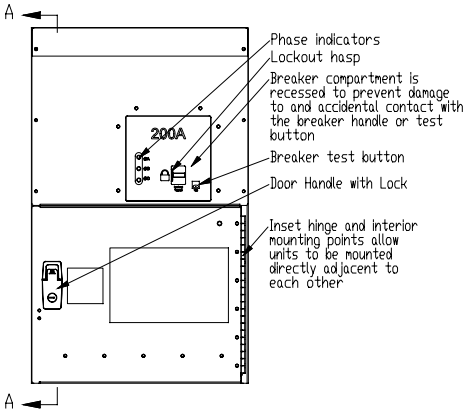

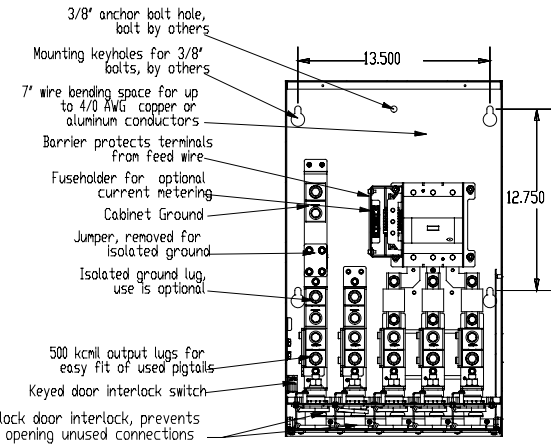

Some components hidden for clarity

Front panels interlock to prevent unauthorized removal without the key



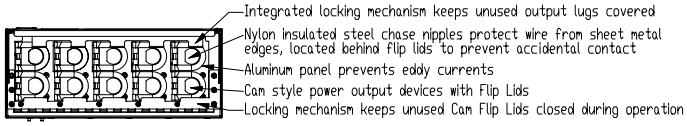

PHYSICAL (PRO)

Company Switch Dimensions

MODEL	HEIGHT		WIDTH		DEPTH	
	inches	mm	inches	mm	inches	mm
PSP	43.8	1105	18	457	6.25	167

Company Switch Weights

MODEL	WEIGHT		SHIPPING WEIGHT*	
	lbs	kgs	lbs	kgs
PSP	89	40.4	98	44.5

* Shipped on pallet

PHYSICAL (COMPACT)

Company Switch Dimensions

MODEL	HEIGHT		WIDTH		DEPTH	
	inches	mm	inches	mm	inches	mm
PSC	25	635	15.8	400	6.25	159

Company Switch Weights

MODEL	WEIGHT		SHIPPING WEIGHT	
	lbs	kgs	lbs	kgs
PSC	45	20.4	52	23.6

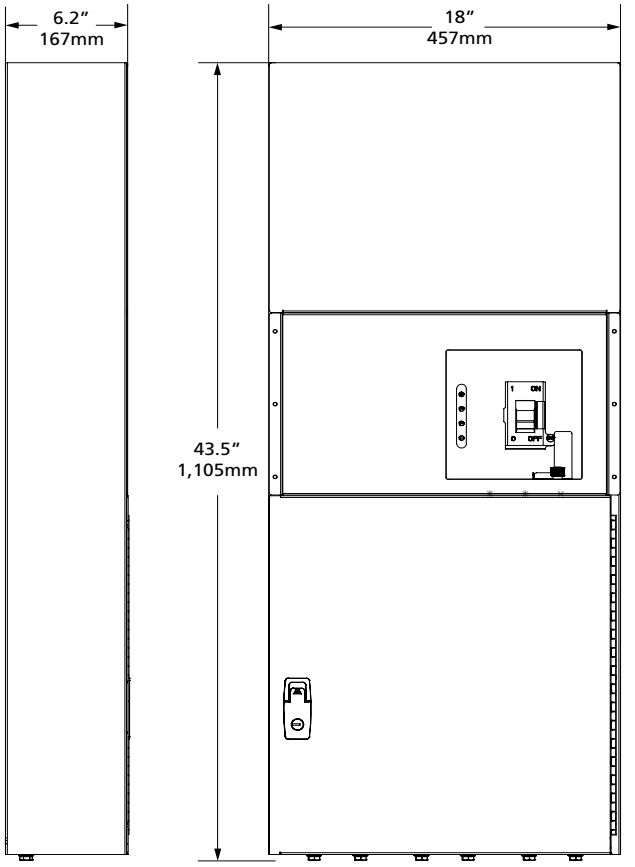

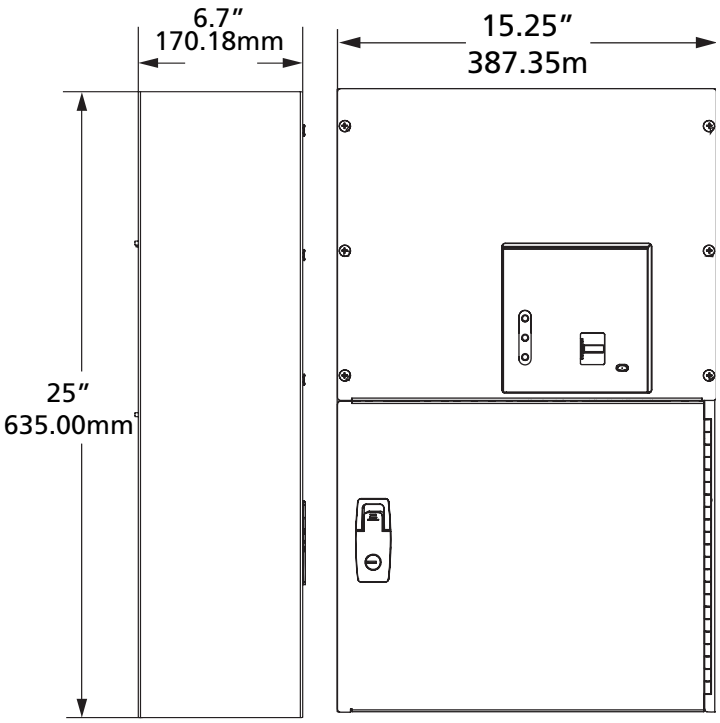

Corporate Headquarters • 3031 Pleasant View Rd, PO Box 620979, Middleton WI 53562 0979 USA • Tel +1 608 831 4116 • Fax +1 608 836 1736
London, UK • Unit 26-28, Victoria Industrial Estate, Victoria Road, London W3 6UU, UK • Tel +44 (0)20 8896 1000 • Fax +44 (0)20 8896 2000
Rome, IT • Via Pieve Torina, 48, 00156 Rome, Italy • Tel +39 (06) 32 111 683 • Fax +39 (06) 32 656 990
Holzkirchen, DE • Ohmstrasse 3, 83607 Holzkirchen, Germany • Tel +49 (80 24) 47 00-0 • Fax +49 (80 24) 47 00-3 00
Hong Kong • Room 1801, 18/F, Tower 1 Phase 1, Enterprise Square, 9 Sheung Yuet Road, Kowloon Bay, Kowloon, Hong Kong • Tel +852 2799 1220 • Fax +852 2799 9325
Web • www.etcconnect.com • U.S. Patents No: 7,136,278 and 7,254,009 • Copyright©2015 ETC. All Rights Reserved. All product information and specifications subject to change. 7158L1001 Rev. F USA 06/15

Stagecraft Industries, Inc.
TECHNICAL DATA SHEET

Series 600-100A

100A COMPANY SWITCH: ENTERTAINMENT INDUSTRY POWER PANEL

SERIES 600 - 120/208VAC, FOUR WIRE + GROUND

- **A 3PH disconnect designed specifically for entertainment industry applications**
- **100% equipment rated, continuous duty, electronic trip circuit breaker**
- **Spring loaded safety guards protect each connection point**
- **Equipped for OHSA Lockout/Tagout**
- **Industry standard cam type or Posi-lok® receptacles**
- **Copper buss bars throughout unit**
- **Configurable for either conventional or for isolated ground systems**
- **"First make, last break" warning prominently displayed**
- **Safety interlock prevents internal access while receptacles are energized.**

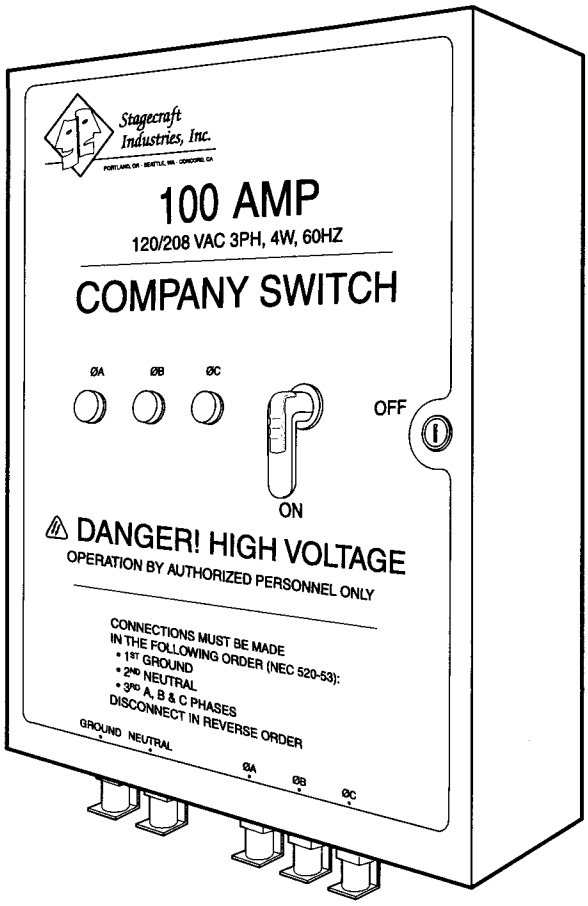

APPLICATIONS

- Auditoriums, Performing Arts Centers, Studios
- Theatres, Conference Centers, Ballrooms
- Exhibition Halls, Arenas, Casinos

CODES

UL Listed and Labeled
Meets NEC requirements outlined in:
Article 384 – Switchboards and Panelboards
Article 520 – Theaters, Audience Areas of Motion Picture and Television Studios, and similar locations
Article 530 – Motion Picture and Television Studios and similar locations

OPTIONS

- Cabinet lock to secure access
- NEMA 3R version for exterior applications
- Pigtail tie-in sets
- Cam to Posi-lok adapters

APPROVAL

Job Name _____

Job Number _____

Location _____

Date _____

Approved by _____

Model Number	Description
600-100-C	100A, (5) Cam output receptacles
600-100-C/BW	100A, (5) Cam receptacles, (5) lugs for bare wire connection
600-100-P	100A, (1) Cooper Crouse-Hinds® Posi-lok Panel w/ (5) receptacles

- **The enclosures for all standard products are 24" W x 36" H x 8" D.**
- **Approximate shipping weight 160 lbs.**

Stagecraft Industries, Inc.
TECHNICAL DATA SHEET

Series 600-100A

100A COMPANY SWITCH:
ENTERTAINMENT INDUSTRY POWER PANEL

SPECIFICATIONS

1. The Company Switch shall be a specialized power distribution panel for the connection of portable electrical equipment in theatres, auditoriums and other entertainment venues.

2. The Company Switch must satisfy the requirements of NFPA 70 (National Electric Code) Article 384 – Switchboards and Panelboards, and Article 520 – Theaters and Studios. Output panel connectors must specifically comply with Article 520-53(k) for Single-Pole Separable Connectors and Article 300-20(b), Induced Currents in Metal Enclosures. The entire assembly must be UL listed and labeled.

3. The Company Switch shall be a 24" W x 36" H x 8" D, NEMA 1, wall mounted enclosure constructed of 14 gauge steel finished with a black epoxy coating. NEMA 3R assemblies shall be available for exterior applications as an option.

4. The main breaker shall be a UL listed, 100% equipment rated, continuous-duty circuit breaker utilizing a microprocessor-based overcurrent protective trip system. It shall have a CSA/UL short-circuit interrupting rating of 65kA at 240VAC. Breakers with AIC ratings of up to 200kA shall be available as an option.

5. All connections from the main breaker and the input lugs to the outlet receptacles shall be made with copper buss bar. The grounding connection shall be made to the main cabinet frame with a provision for converting to an isolated ground at installation. Service input to the cabinet shall be 120/208 VAC, three phase, 4 wire + ground. Wiring size range for contractor connection shall be (1) 2AWG - 4/0, AL/CU for each line connection and (1) 6AWG - 500 kcmil, AL/CU for each neutral and ground.

6. Phase indicator lamps shall be mounted in a clearly visible location on the front panel of the enclosure. A safety interlock mechanism shall prevent the door to the enclosure from being opened if the breaker is on. An additional locking mechanism shall allow a padlock or lockout tag to secure the breaker in the OFF position. An optional keyed lock shall be available in place of the latch securing the enclosure door.

7. The NEC mandated warning advising the proper sequence for connecting and disconnecting single pole separable connectors shall be permanently printed on the front of the enclosure.

8. The Company Switch shall be Hi-Pot tested at 1250VAC for no less than 10 seconds.

9. Provide non-ferrous output panel at the bottom of the enclosure with one of the following options:

- -C (5) Panel Mount Receptacles (Cam-lok® E1016 or equal) with snap-back metal covers.
- -C/BW (5) Panel Mount Receptacles (Cam-lok E1016 or equal) with snap-back metal covers and (5) internal lugs for bare-wire cable connections with individual strain relief fittings for each load cable.
- -P (1) Posi-lok Output Panel (Posi-lok E0400) sequential interlock receptacle panel with (5) color coded receptacles

10. Provide a quantity of __ Model #600-100-x Company Switches as manufactured by Stagecraft Industries, Inc. or approved equal.

Posi-lok and Cam-lok are registered trademarks of Cooper Crouse-Hinds.



C (5) Panel Mount Receptacles (Cam-lok® E1016 or equal) with snap-back metal covers.

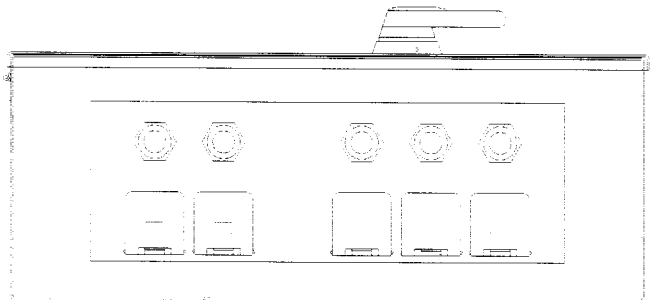

C/BW (5) Panel Mount Receptacles (Cam-lok® E1016 or equal) with snap-back metal covers and (5) internal lugs for bare-wire cable connections with individual strain relief fittings for each load cable.

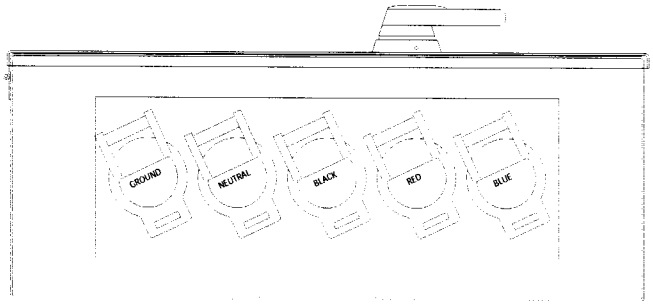

P (1) Posi-lok Output Panel (Posi-lok E0400) sequential interlock receptacle panel with (5) color coded receptacles.

Model Number	Description
600-100-C	100A, (5) Cam output receptacles
600-100-C/BW	100A, (5) Cam receptacles, (5) lugs for bare wire connection
600-100-P	100A, (1) Cooper Crouse-Hinds Posi-lok Panel w/ (5) receptacles

Stagecraft Industries, Inc.
TECHNICAL DATA SHEET

Series 600-200A

200A COMPANY SWITCH: ENTERTAINMENT INDUSTRY POWER PANEL

SERIES 600 - 120/208VAC, FOUR WIRE + GROUND

- **A 3PH disconnect designed specifically for entertainment industry applications**
- **100% equipment rated, continuous duty, electronic trip circuit breaker**
- **Spring loaded safety guards protect each connection point**
- **Equipped for OHSA Lockout/Tagout**
- **Industry standard cam type or Posi-lok® receptacles**
- **Copper buss bars throughout unit**
- **Configurable for either conventional or for isolated ground systems**
- **"First make, last break" warning prominently displayed**
- **Safety interlock prevents internal access while receptacles are energized.**

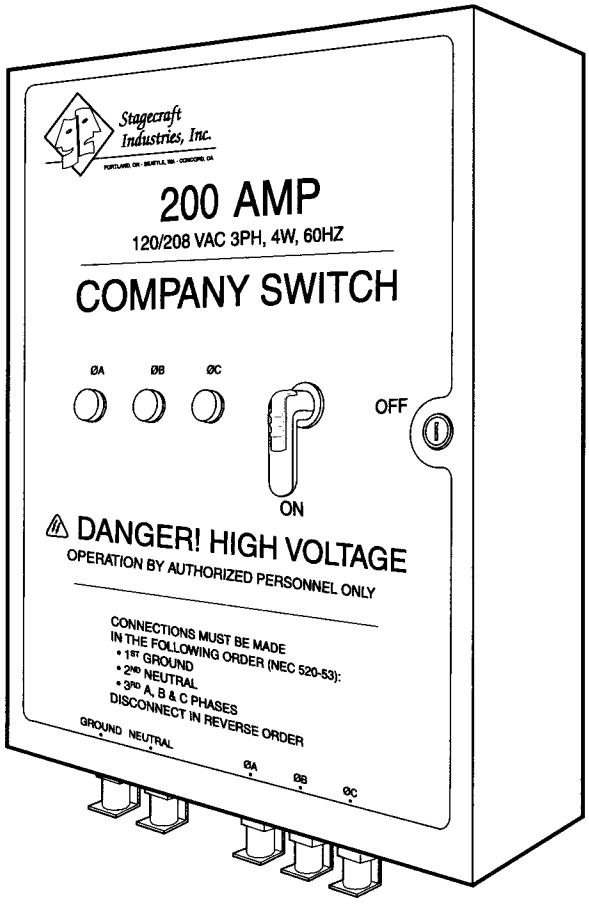

APPLICATIONS

- Auditoriums, Performing Arts Centers, Studios
- Theatres, Conference Centers, Ballrooms
- Exhibition Halls, Arenas, Casinos

CODES

UL Listed and Labeled
Meets NEC requirements outlined in:
Article 384 – Switchboards and Panelboards
Article 520 – Theaters, Audience Areas of Motion Picture and Television Studios, and similar locations
Article 530 – Motion Picture and Television Studios and similar locations

OPTIONS

- Cabinet lock to secure access
- NEMA 3R version for exterior applications
- Pigtail tie-in sets
- Cam to Posi-lok adapters

APPROVAL

Job Name _____

Job Number _____

Location _____

Date _____

Approved by _____

Model Number	Description
600-200-C	200A, (5) Cam output receptacles
600-200-C/BW	200A, (5) Cam receptacles, (5) lugs for bare wire connection
600-200-P	200A, (1) Cooper Crouse-Hinds® Posi-lok Panel w/ (5) receptacles

- **The enclosures for all standard products are 24" W x 36" H x 8" D.**
- **Approximate shipping weight 160 lbs.**

Stagecraft Industries, Inc.
www.stagecraftindustries.com
lighting@stagecraftindustries.com
compswitch200a-final.doc
rev. date 10.29.02
Portland, OR: 503-286-1600
Seattle, WA: 206-763-8800
Concord, CA: 925-827-1131

Stagecraft Industries, Inc.
TECHNICAL DATA SHEET

Series 600-200A

200A COMPANY SWITCH: ENTERTAINMENT INDUSTRY POWER PANEL

SPECIFICATIONS

1. The Company Switch shall be a specialized power distribution panel for the connection of portable electrical equipment in theatres, auditoriums and other entertainment venues.

2. The Company Switch must satisfy the requirements of NFPA 70 (National Electric Code) Article 384 – Switchboards and Panelboards, and Article 520 – Theaters and Studios. Output panel connectors must specifically comply with Article 520-53(k) for Single-Pole Separable Connectors and Article 300-20(b), Induced Currents in Metal Enclosures. The entire assembly must be UL listed and labeled.

3. The Company Switch shall be a 24" W x 36" H x 8" D, NEMA 1, wall mounted enclosure constructed of 14 gauge steel finished with a black epoxy coating. NEMA 3R assemblies shall be available for exterior applications as an option.

4. The main breaker shall be a UL listed, 100% equipment rated, continuous-duty circuit breaker utilizing a microprocessor-based overcurrent protective trip system. It shall have a CSA/UL short-circuit interrupting rating of 65kA at 240VAC. Breakers with AIC ratings of up to 200kA shall be available as an option.

5. All connections from the main breaker and the input lugs to the outlet receptacles shall be made with copper buss bar. The grounding connection shall be made to the main cabinet frame with a provision for converting to an isolated ground at installation. Service input to the cabinet shall be 120/208 VAC, three phase, 4 wire + ground. Wiring size range for contractor connection shall be (1) 6AWG – 350kcmil AL/CU for each line connection and (1) #6 – 500kcmil AL/CU for each neutral and ground.

6. Phase indicator lamps shall be mounted in a clearly visible location on the front panel of the enclosure. A safety interlock mechanism shall prevent the door to the enclosure from being opened if the breaker is on. An additional locking mechanism shall allow a padlock or lockout tag to secure the breaker in the OFF position. An optional keyed lock shall be available in place of the latch securing the enclosure door.

7. The NEC mandated warning advising the proper sequence for connecting and disconnecting single pole separable connectors shall be permanently printed on the front of the enclosure.

8. The Company Switch shall be Hi-Pot tested at 1250VAC for no less than 10 seconds.

9. Provide non-ferrous output panel at the bottom of the enclosure with one of the following options:

- -C (5) Panel Mount Receptacles (Cam-lok® E1016 or equal) with snap-back metal covers.
- -C/BW (5) Panel Mount Receptacles (Cam-lok E1016 or equal) with snap-back metal covers and (5) internal lugs for bare-wire cable connections with individual strain relief fittings for each load cable.
- -P (1) Posi-lok Output Panel (Posi-lok E0400) sequential interlock receptacle panel with (5) color coded receptacles

10. Provide a quantity of __ Model #600-200-x Company Switches as manufactured by Stagecraft Industries, Inc. or approved equal.

Posi-lok and Cam-lok are registered trademarks of Cooper Crouse-Hinds.

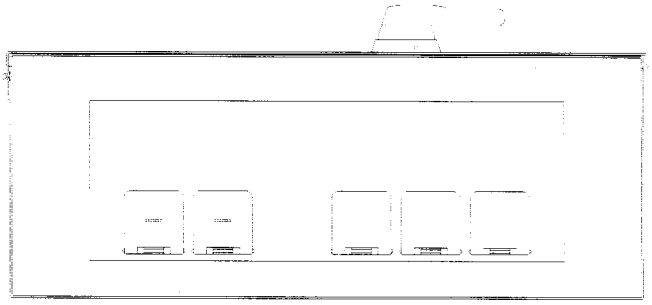

C (5) Panel Mount Receptacles (Cam-lok® E1016 or equal) with snap-back metal covers.

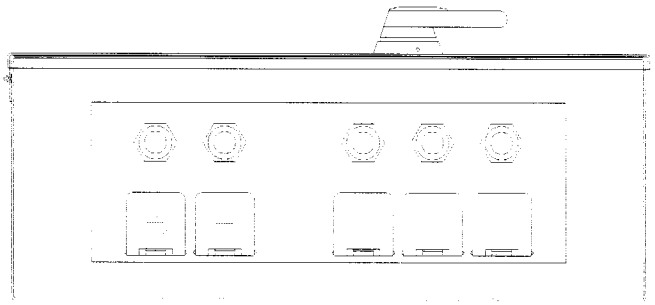

C/BW (5) Panel Mount Receptacles (Cam-lok E1016 or equal) with snap-back metal covers and (5) internal lugs for bare-wire cable connections with individual strain relief fittings for each load cable.

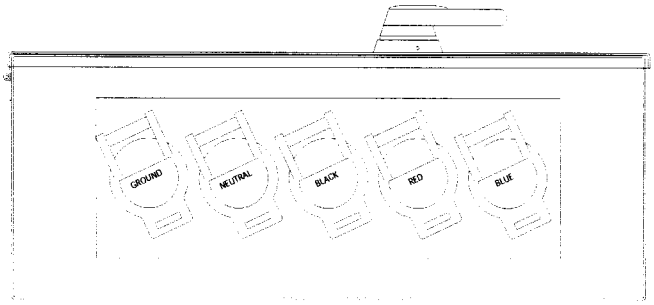

P (1) Posi-lok Output Panel (Posi-lok E0400) sequential interlock receptacle panel with (5) color coded receptacles.

Model Number	Description
600-200-C	200A, (5) Cam output receptacles
600-200-C/BW	200A, (5) Cam receptacles, (5) lugs for bare wire connection
600-200-P	200A, (1) Cooper Crouse-Hinds Posi-lok Panel w/ (5) receptacles

Stagecraft Industries, Inc.
TECHNICAL DATA SHEET

Series 600-400A

400A COMPANY SWITCH: ENTERTAINMENT INDUSTRY POWER PANEL

SERIES 600 - 120/208VAC, FOUR WIRE + GROUND

- **A 3PH disconnect designed specifically for entertainment industry applications**
- **100% equipment rated, continuous duty, electronic trip circuit breaker**
- **Spring loaded safety guards protect each connection point**
- **Equipped for OHSA Lockout/Tagout**
- **Industry standard cam type or Posi-lok® receptacles**
- **Copper buss bars throughout unit**
- **Configurable for either conventional or for isolated ground systems**
- **"First make, last break" warning prominently displayed**
- **Safety interlock prevents internal access while receptacles are energized.**
- **Added receptacle doubles neutral for non-linear loads in entertainment lighting.**

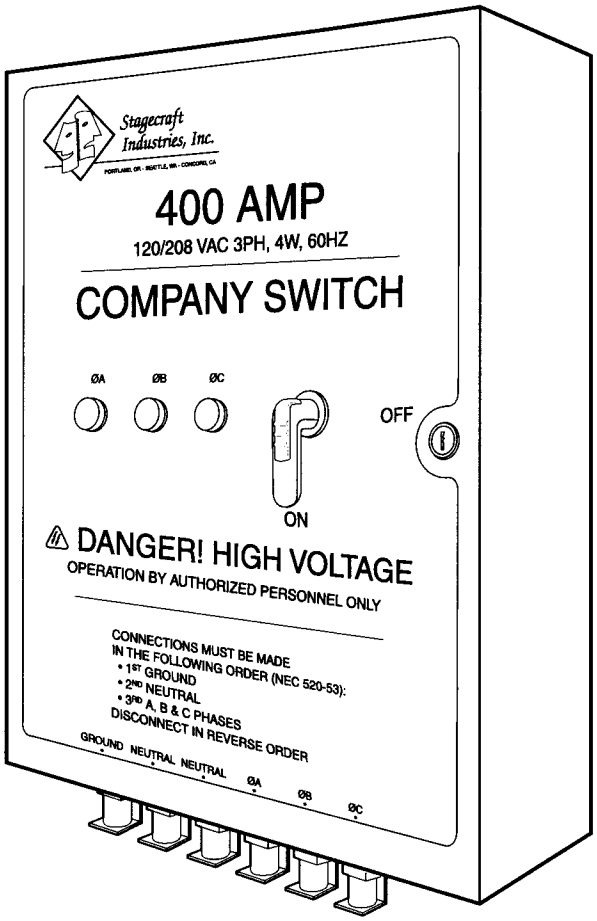

APPLICATIONS

- Auditoriums, Performing Arts Centers, Studios
- Theatres, Conference Centers, Ballrooms
- Exhibition Halls, Arenas, Casinos

CODES

UL Listed and Labeled
Meets NEC requirements outlined in:
Article 384 – Switchboards and Panelboards
Article 520 – Theaters, Audience Areas of Motion Picture and Television Studios, and similar locations
Article 530 – Motion Picture and Television Studios and similar locations

OPTIONS

- Cabinet lock to secure access
- NEMA 3R version for exterior applications
- Pigtail tie-in sets
- Cam to Posi-lok adapters

APPROVAL

Job Name _____

Job Number _____

Location _____

Date _____

Approved by _____

Model Number	Description
600-400-C	400A, (6) Cam output receptacles
600-400-C/BW	400A, (6) Cam receptacles, (6) lugs for bare wire connection
600-400-P	400A, (1) Cooper Crouse-Hinds® Posi-lok Panel with (6) receptacles

- **The enclosures for all standard products are 24" W x 36" H x 9" D.**
- **Approximate shipping weight 175 lbs.**

Stagecraft Industries, Inc.

www.stagecraftindustries.com
lighting@stagecraftindustries.com
compswitch400a-final.doc
rev. date 10.29.02

Portland, OR: 503-286-1600
Seattle, WA: 206-763-8800
Concord, CA: 925-827-1131

Stagecraft Industries, Inc.
TECHNICAL DATA SHEET

Series 600-400A

400A COMPANY SWITCH:
ENTERTAINMENT INDUSTRY POWER PANEL

SPECIFICATIONS

1. The Company Switch shall be a specialized power distribution panel for the connection of portable electrical equipment in theatres, auditoriums and other entertainment venues.

2. The Company Switch must satisfy the requirements of NFPA 70 (National Electric Code) Article 384 – Switchboards and Panelboards, and Article 520 – Theaters and Studios. Output panel connectors must specifically comply with Article 520-53(k) for Single-Pole Separable Connectors and Article 300-20(b), Induced Currents in Metal Enclosures. The entire assembly must be UL listed and labeled.

3. The Company Switch shall be a 24" W x 36" H x 8" D, NEMA 1, wall mounted enclosure constructed of 14 gauge steel finished with a black epoxy coating. NEMA 3R assemblies shall be available for exterior applications as an option.

4. The main breaker shall be a UL listed, 100% equipment rated, continuous-duty circuit breaker utilizing a microprocessor-based overcurrent protective trip system. It shall have a CSA/UL short-circuit interrupting rating of 65kA at 240VAC. Breakers with AIC ratings of up to 200kA shall be available as an option.

5. All connections from the main breaker and the input lugs to the outlet receptacles shall be made with copper buss bar. The grounding connection shall be made to the main cabinet frame with a provision for converting to an isolated ground at installation. Service input to the cabinet shall be 120/208 VAC, three phase, 4 wire + ground. Wiring size range for contractor connection shall be (2) 3/0 - 250 kcmil, AL/CU for each line connection and (2) 6AWG - 500 kcmil, AL/CU for each neutral and ground.

6. Phase indicator lamps shall be mounted in a clearly visible location on the front panel of the enclosure. A safety interlock mechanism shall prevent the door to the enclosure from being opened if the breaker is on. An additional locking mechanism shall allow a padlock or lockout tag to secure the breaker in the OFF position. An optional keyed lock shall be available in place of the latch securing the enclosure door.

7. The NEC mandated warning advising the proper sequence for connecting and disconnecting single pole separable connectors shall be permanently printed on the front of the enclosure.

8. The Company Switch shall be Hi-Pot tested at 1250VAC for no less than 10 seconds.

9. Provide non-ferrous output panel at the bottom of the enclosure with one of the following options:

- -C (6) Panel Mount Receptacles (Cam-lok® E1016 or equal) with snap-back metal covers.
- -C/BW (6) Panel Mount Receptacles (Cam-lok E1016 or equal) with snap-back metal covers and (6) internal lugs for bare-wire cable connections with individual strain relief fittings for each load cable.
- -P (1) Posi-lok Output Panel (Posi-lok E0400) sequential interlock receptacle panel with (6) color coded receptacles

10. Provide a quantity of __ Model #600-400-x Company Switches as manufactured by Stagecraft Industries, Inc. or approved equal.

Posi-lok and Cam-lok are registered trademarks of Cooper Crouse-Hinds.

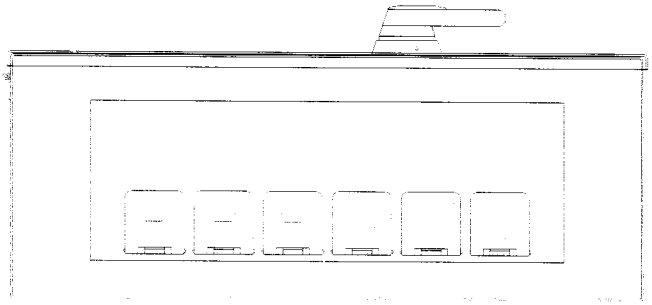

C (6) Panel Mount Receptacles (Cam-lok® E1016 or equal) with snap-back metal covers.

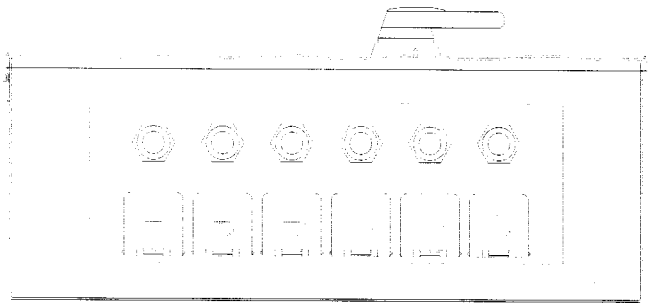

C/BW (6) Panel Mount Receptacles (Cam-lok E1016 or equal) with snap-back metal covers and (6) internal lugs for bare-wire cable connections with individual strain relief fittings for each load cable.

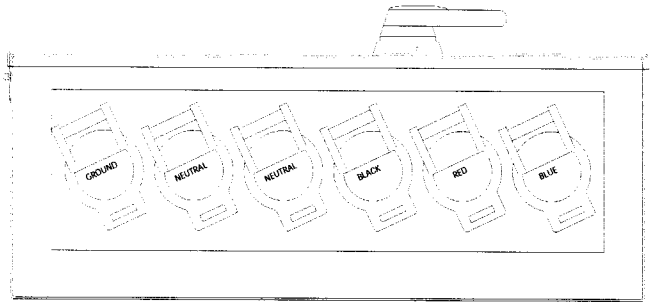

P (1) Posi-lok Output Panel (Posi-lok E0400) sequential interlock receptacle panel with (6) color coded receptacles.

Model Number	Description
600-400-C	400A, (6) Cam output receptacles
600-400-C/BW	400A, (6) Cam receptacles, (6) lugs for bare wire connection
600-400-P	400A, (1) Cooper Crouse-Hinds Posi-lok Panel with (6) receptacles

Stagecraft Industries, Inc.

www.stagecraftindustries.com
lighting@stagecraftindustries.com
compswitch400a-final.doc
rev. date 10.29.02

Portland, OR: 503-286-1600
Seattle, WA: 206-763-8800
Concord, CA: 925-827-1131

UNION CONNECTOR
40 Dale St. West Babylon, NY 11704
Ph: 631-753-9550 Fx: 631-753-9560
www.unionconnector.com
www.companyswitch.com

Product Bulletin No.: PBF-601

Outdoor Enclosures for Company Switches

Features

- UL Listed NEMA 3R outer enclosure
- Galvanized steel construction
- Company switch is completely enclosed inside the NEMA 3R enclosure
- Lockable trapdoor on bottom for cable access
- Protection from weather and vandalism
- Units available to accept ALL company switches manufactured by Union Connector
- Powder coated for long lasting finish
- Company Switch is factory installed inside NEMA 3R

Options

- NEMA 4X outer enclosure
- Stainless steel construction
- Dual doors
- Recessed mount design
- Floor / Pad mounting
- Special labeling
- Custom color / finish



NEMA 3R enclosure containing a 400A. Company Switch outside the Orange County Convention Center in Orlando, FL.
The 400A. Company Switch is completely enclosed and protected from weather and vandalism. The cable entry trapdoor on the bottom of the enclosure is closed and locked

40 Dale St. West Babylon, NY 11704
Ph: 631-753-9550 Fx: 631-753-9560
www.unionconnector.com
www.companyswitch.com

Outdoor Enclosures for Company Switches

Specifications

1. Enclosure shall be a UL Listed NEMA 3R, fabricated of galvanized steel .
2. Finish shall be ASA 61 Gray powder coat.
3. The enclosure shall contain (4) mounting tabs for surface mounting.
4. Dimensions for standard units shall be sized to accept standard Union Connector company switches as indicated:

Company Switch Type	Ampacity	NEMA 3R Height	Width	Depth
CSC	60-100	36	24	10
CSC	200-400	42	24	10
CSC/SP	60-100	48	30	12
CSC/SP	200-400	54	30	14
CSC/SP	600	54	30	12
PBS/SP	60-200	48	30	12
PBS/SP	400	64	34	14

5. A drip shield shall be provided above the door opening.
6. The enclosure shall have a hinged front door and a handle able to accept a padlock.
7. The bottom of the enclosure shall contain a hinged trapdoor for entry of portable cable. The trapdoor shall be secured by a latch accessible only from inside the enclosure.
8. The Company Switch shall be factory installed inside the NEMA 3R enclosure.

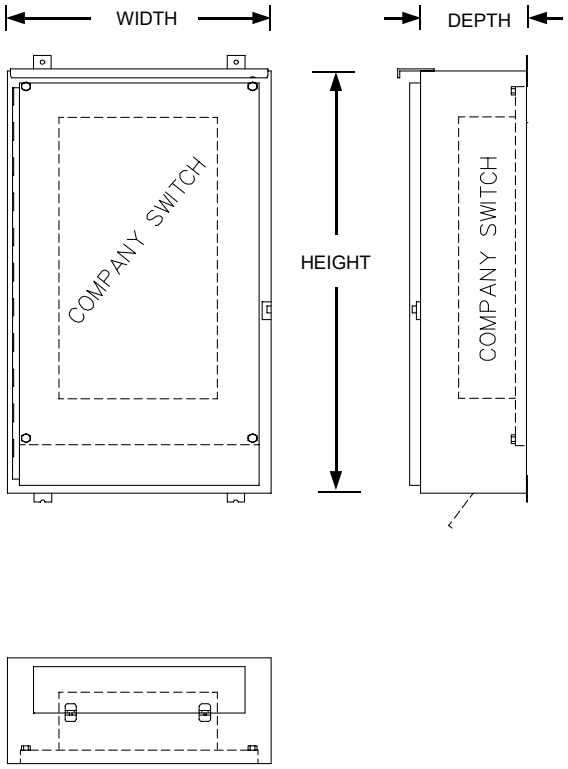

BUREAU OF ENGINEERING

SIXTH STREET PARK, ARTS AND RIVER CONNECTIVITY IMPROVEMENTS (PARC)
WORK ORDER NO. E700235D

ATTACHMENT NO. 5
PROP K AND PROP 68 SIGNAGE

BID SUBMITTAL
JULY 2022

City of Los Angeles
California

Department of Public Works
Bureau of Engineering

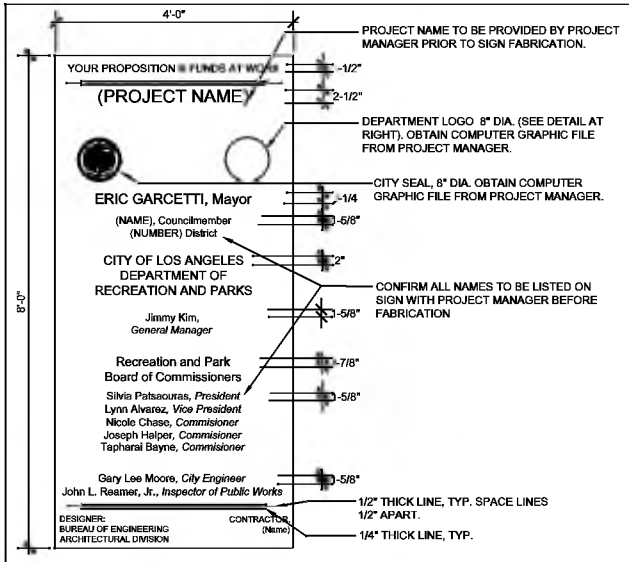

SIGN TEXT LAYOUT

SCALE: 3/4" = 1'-0"

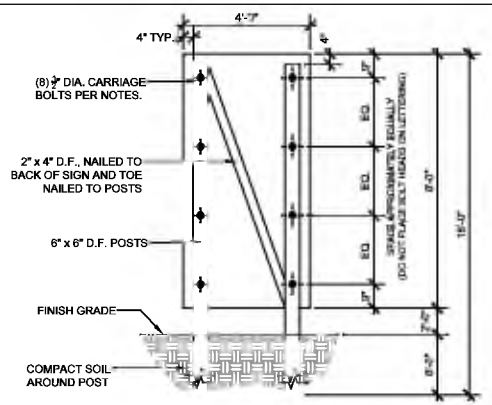

SIGN CONSTRUCTION VIEWED FROM REAR

SCALE: 3/8" = 1'-0"

NOTES:

1. SIGN SHALL BE CONSTRUCTED OF 3/4" ACX PLYWOOD. LETTERING SHALL BE PLACED ON FRONT SIDE. PAINT ALL EXPOSED WOOD SURFACES WITH ONE COAT PRIMER AND TWO COATS ENAMEL, PER DUNN-EDWARDS PRINTED SPECIFICATIONS, OR APPROVED EQUAL. COLORS: SIGN, TRIM, POSTS, AND DIAGONAL BRACING-SNOWCAP (WHITE) Q9-36P; ALL LETTERING (EXCLUDING CITY SEAL) AND TREE SILHOUETTE DESIGN SHALL BE BLACK.
2. SECURE SIGN TO 6" X 6" POSTS WITH 1/2" DIAMETER CARRIAGE BOLTS OF SUFFICIENT LENGTH TO SECURE SIGN TO POSTS. FOUR BOLTS PER POST. PROVIDE GALVANIZED WASHERS UNDER NUTS. DO NOT PLACE BOLTS THROUGH LETTERING.
3. ALTERNATE SIGN MOUNTING: UPON APPROVAL FROM PROJECT MANAGER, CONTRACTOR MAY OPT TO MOUNT SIGN ON A MOVEABLE BASE TO ACCOMMODATE CONSTRUCTION ACTIVITIES.
4. ☐ IF BOX TO LEFT IS CHECKED, ENTIRE FACE OF SIGN SHALL BE COVERED WITH 4' X 8' X 3/16" SHEET OF CLEAR PLEXIGLAS TO PROTECT FROM GRAFFITI. SECURE TO FACE OF SIGN WITH 1" X 2" EDGE TRIM. SECURE EDGE TRIM WITH NUMBER 12 X 1-1/4" STAINLESS STEEL FLAT HEAD WOOD SCREWS. SPACE AT 18" ON CENTER. AROUND PERIMETER OF SIGN.
5. SEE SPECIFICATIONS FOR ADDITIONAL INFORMATION AND REQUIREMENTS. SIGN SHALL BE INSTALLED WITHIN TWO WEEKS OF THE START OF CONSTRUCTION.



OBTAIN FULL SCALE COLOR GRAPHIC FILE OF DEPARTMENT LOGO FROM PROJECT MANAGER

DETAIL OF DEPARTMENT LOGO

NOT TO SCALE

	PARK CONSTRUCTION SIGN	
AS NOTED	REFINFO	L6030

BUREAU OF ENGINEERING

SIXTH STREET PARK, ARTS AND RIVER CONNECTIVITY IMPROVEMENTS (PARC) WORK ORDER NO. E700235D

ATTACHMENT NO. 6
VIADUCT EROSION AND SEDIMENT CONTROL PLANS

BID SUBMITTAL
JULY 2022

City of Los Angeles
California

Department of Public Works
Bureau of Engineering

BUREAU OF ENGINEERING

SIXTH STREET PARK, ARTS AND RIVER CONNECTIVITY IMPROVEMENTS (PARC)
WORK ORDER NO. E700235D

ATTACHMENT NO. 7
CITY STANDARD PLANS

BID SUBMITTAL
JULY 2022

City of Los Angeles
California

Department of Public Works
Bureau of Engineering

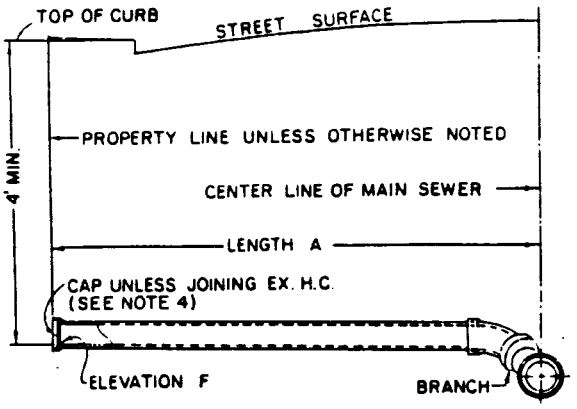

PROFILE
TYPE A

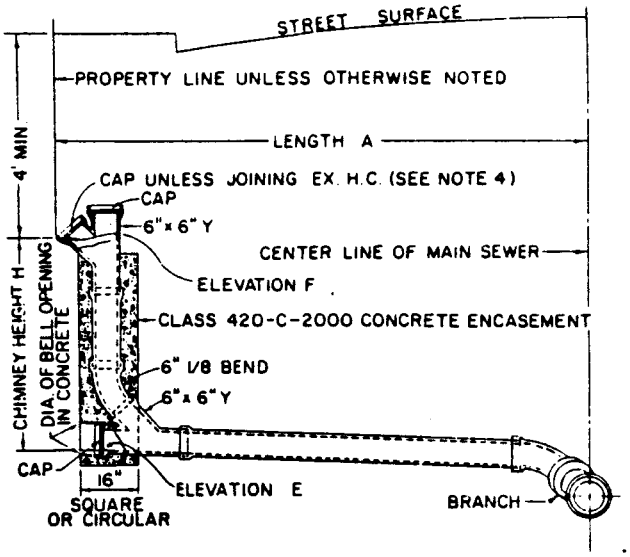

PROFILE
TYPE B

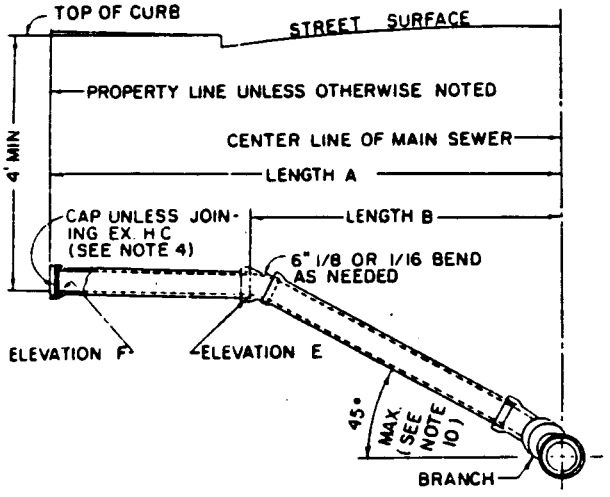

PROFILE
TYPE C

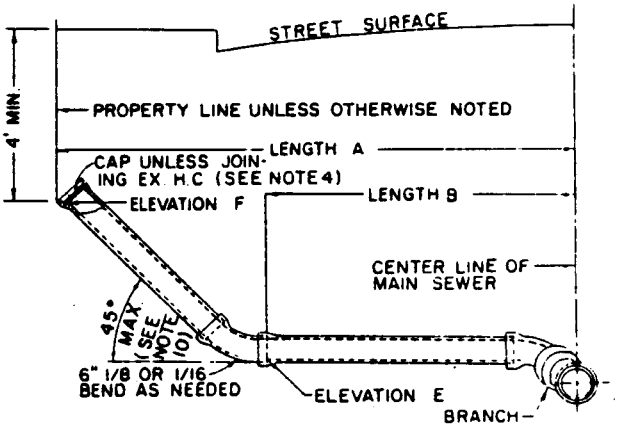

PROFILE
TYPE D

DEPARTMENT OF PUBLIC WORKS

BUREAU OF ENGINEERING

CITY OF LOS ANGELES

HOUSE CONNECTION SEWERS

STANDARD PLAN
S-110-1

SUBMITTED March 20 1980
ENGINEER OF DESIGN
DEPUTY ENGINEER

APPROVED MARCH 26 1980
CITY ENGINEER

DESIGNED BY	DRAWN BY	CHECKED BY
RGS	JRP	LIE

REVISIONS

NO	DATE	DESCRIPTION	ENGR OF DESIGN	CITY ENGR
V	11/1/82	CHANGED NOTE 3 RE ALLOWABLE PIPE MATERIALS AND STD SPEC REFERENCES	George [illegible]	Phil King [illegible]

SUPERSEDES	REFERENCES
B-3691, B-3692, B-3693, B-3694, B-3996	S-251

VAULT INDEX NUMBER B-4051

SHEET 1 OF 2 SHEETS

NOTES FOR HOUSE CONNECTION SEWERS

1. EXCEPT AS OTHERWISE INDICATED ON THE PROJECT PLANS, ALL HOUSE CONNECTION SEWERS SHALL BE TYPE "A" AND SHALL BE CONSTRUCTED ON STRAIGHT LINES AND GRADES BETWEEN CONTROL POINTS AND ELEVATIONS.

2. SEE PROJECT PLANS FOR VALUES OF:

   A. LENGTHS: "A" AND "B"

   B. HEIGHT: "H"

   C. ELEVATIONS: "E" AND "F"

▽ 3. ALL HOUSE CONNECTION SEWER PIPE SHALL BE 6 INCH:

   A) VITRIFIED CLAY PIPE CONFORMING TO SECTION 207-8; OR

   B) ABS SOLID WALL PIPE CONFORMING TO SECTION 207-15; OR

   C) ABS COMPOSITE PIPE CONFORMING TO SECTION 207-16; OR

   D) PVC PLASTIC PIPE CONFORMING TO SECTION 207-17; OR

   E) CAST IRON OR DUCTILE IRON PIPE CONFORMING TO SECTION 207-9;

   OF THE STANDARD SPECIFICATIONS. CHANGES FROM ONE TYPE OF MATERIAL OR SIZE TO ANOTHER SHALL BE MADE ONLY BY MEANS OF SUITABLE ADAPTERS APPROVED BY THE ENGINEER.

4. THE UPPER END OF THE HOUSE CONNECTION SHALL BE SEALED BY INSTALLING A CAP AND SEALING THE CAP WITH 1/2 INCH THICK TYPE "F" MORTAR AROUND THE CIRCUMFERENCE OF THE CAP.

5. EXCEPT AS CONTROLLED BY ELEVATIONS INDICATED ON THE PROJECT PLANS, THE MINIMUM SLOPE FOR ALL PIPES SHALL BE 2 PERCENT (S = 0.02 MINIMUM).

6. THE FIGURE IN A CIRCLE ON THE PROJECT PLANS ADJACENT TO A HOUSE CONNECTION SEWER STATION INDICATES THE DEPTH IN FEET BELOW THE EXISTING TOP OF CURB TO WHICH THE INVERT OF THE UPPER END OF THE HOUSE CONNECTION SEWER SHALL BE CONSTRUCTED. IF NO DEPTH IS INDICATED, THE INVERT OF THE UPPER END SHALL BE THE ELEVATION SHOWN ON THE PROFILE. WHERE NEITHER DEPTH NOR ELEVATION IS INDICATED, THE INVERT SHALL BE FOUR FEET BELOW THE TOP OF THE EXISTING CURB.

7. BRANCHES SHALL BE EITHER TEES OR WYES AND SHALL BE ROTATED UPWARD FROM THE HORIZONTAL TO AN ANGLE OF 22 1/2 DEGREES TO 45 DEGREES. WHEN TEES ARE USED, BENDS ARE NOT REQUIRED BUT MAY BE USED AT THE OPTION OF THE CONTRACTOR. WHEN THE BRANCH ROTATION DOES NOT CONFORM TO THE SLOPE OF THE HOUSE CONNECTION SEWER, PULLED JOINTS MAY BE USED FOR ADJUSTMENT.

8. THE MAXIMUM DEFLECTION AT EACH JOINT FOR 6-INCH VITRIFIED CLAY PIPE HOUSE CONNECTION SEWERS SHALL BE 4 DEGREES, WHICH IS EQUAL TO A PULL OF 9/16 INCH. (PULL IS DEFINED AS THE SEPARATION OF THE ABUTTING PIPE ENDS ON THE CONVEX SIDE OF THE CURVE MEASURED AT THE OUTSIDE OF THE PIPE BARREL.)

9. CONNECTION OF A BUILDING SEWER SMALLER THAN 6 INCHES TO A 6 INCH HOUSE CONNECTION SEWER SHALL BE MADE USING AN APPROVED INCREASER-TEE OR A INCREASER FOLLOWED BY A TEE.

10. ALL HOUSE CONNECTION SEWERS OR PORTIONS THEREOF CONSTRUCTED ON A SLOPE EXCEEDING 45° SHALL BE ENCASED IN CONFORMITY TO CASE 4 BEDDING PER STANDARD PLAN S-251.

11. HOUSE CONNECTION SEWERS CONSTRUCTED PURSUANT TO A HOUSE CONNECTION PERMIT SHALL CONFORM TO SECTION 64.17 OF THE LOS ANGELES MUNICIPAL CODE

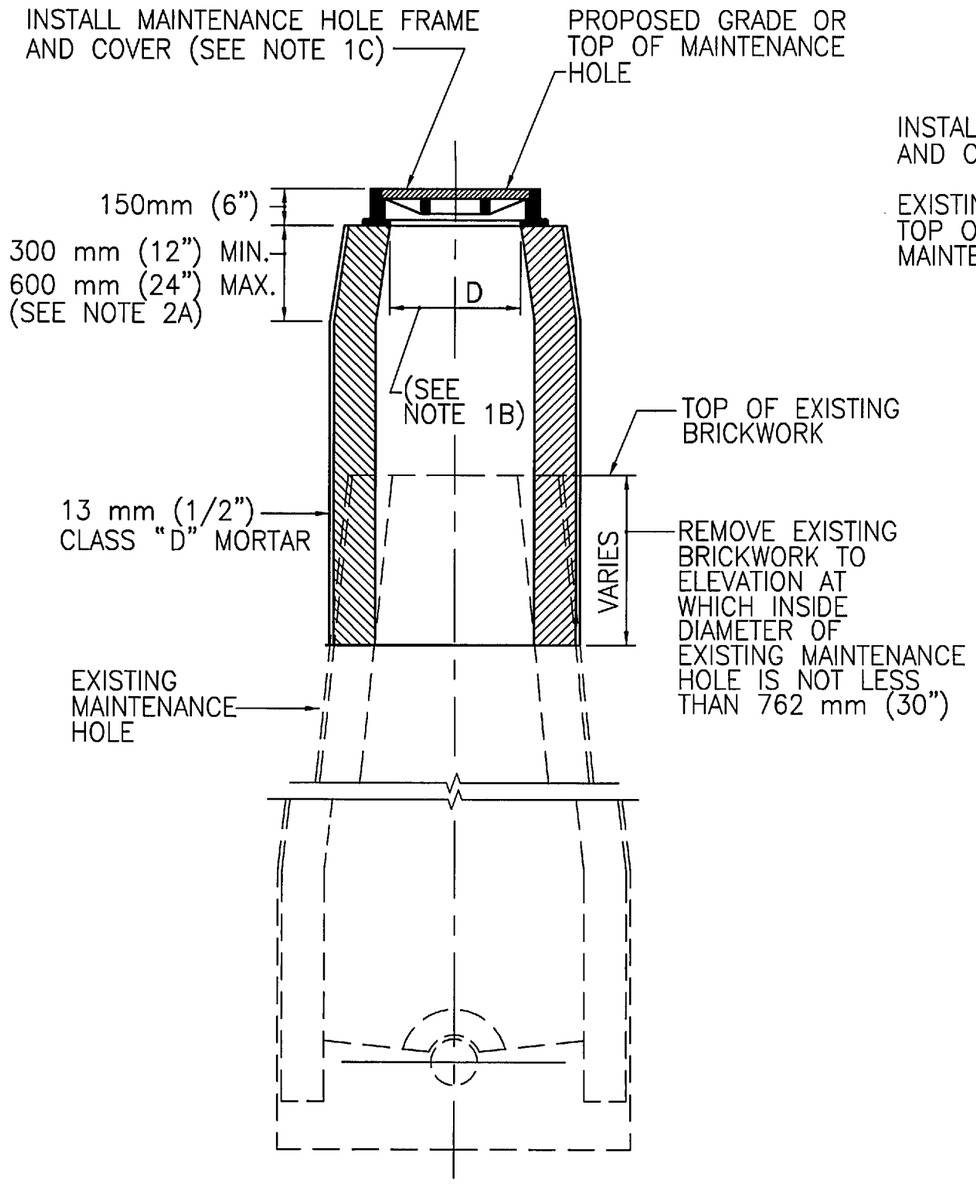

RAISING EXISTING BRICK MAINTENANCE HOLES

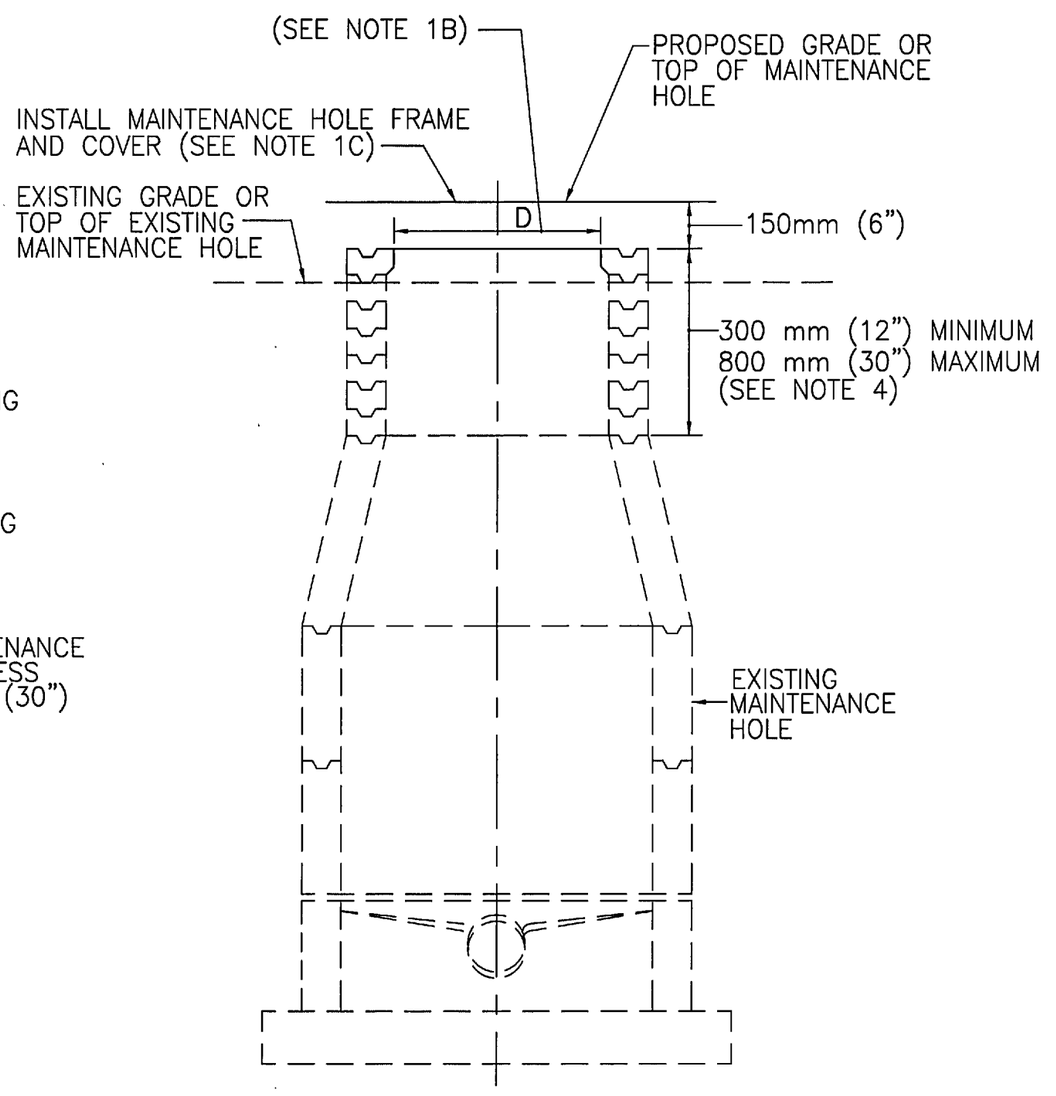

RAISING EXISTING PRECAST CONCRETE SEWER MAINTENANCE HOLES

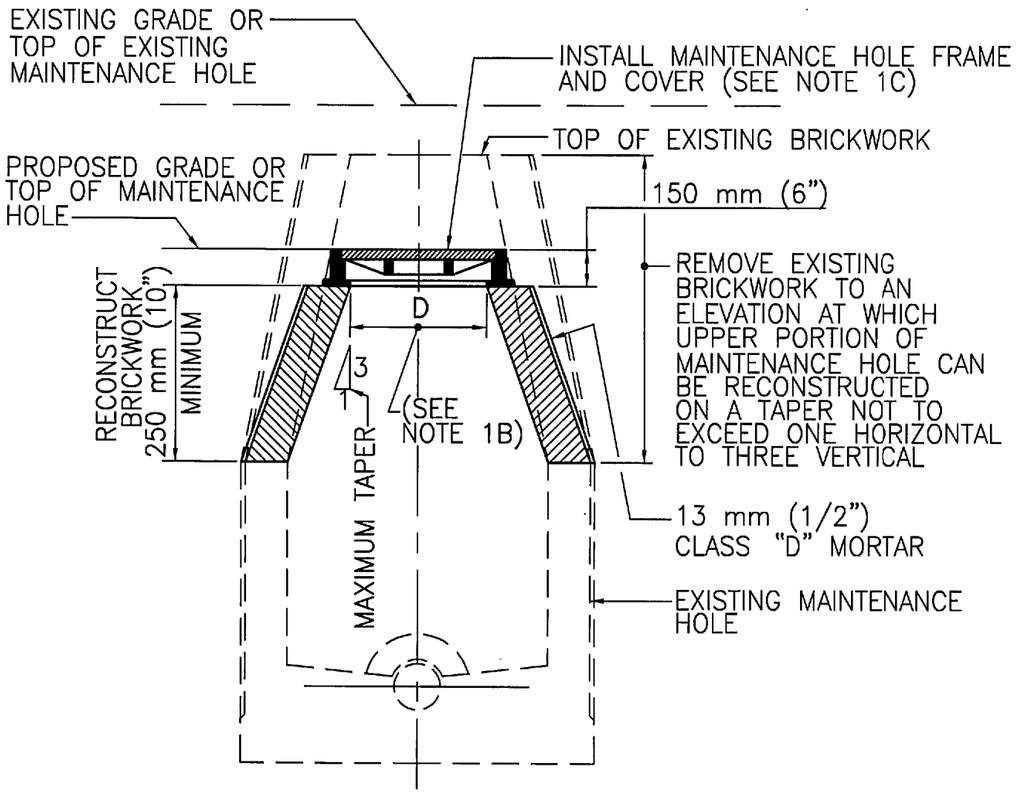

LOWERING EXISTING BRICK MAINTENANCE HOLES

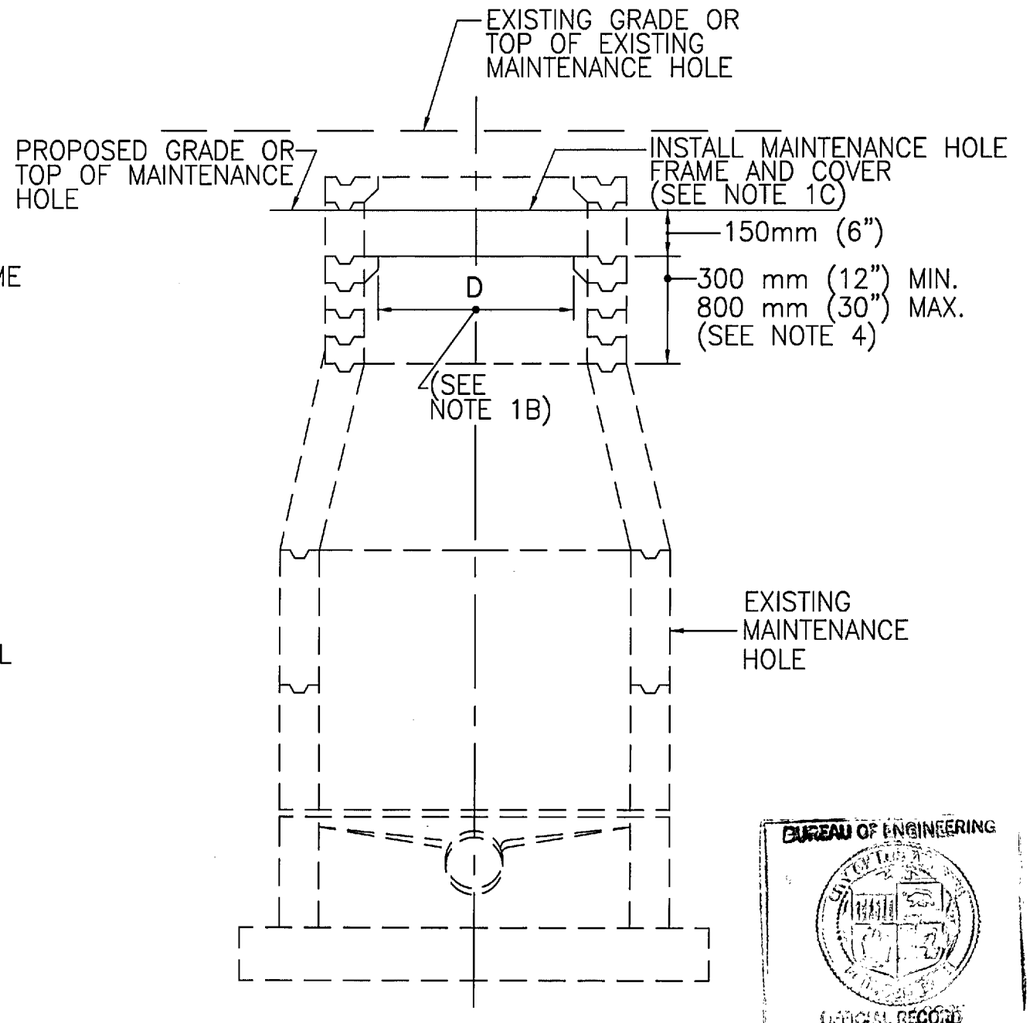

LOWERING EXISTING PRECAST CONCRETE SEWER MAINTENANCE HOLES

BUREAU OF ENGINEERING
CITY OF LOS ANGELES
OFFICIAL RECORD

BRICK MAINTENANCE HOLES

PRECAST CONCRETE SEWER MAINTENANCE HOLES

DEPARTMENT OF PUBLIC WORKS

BUREAU OF ENGINEERING

CITY OF LOS ANGELES

ADJUSTING SEWER MAINTENANCE HOLES TO GRADE

STANDARD PLAN
S-137-1

SUBMITTED 9-7 2005
ENGINEER OF DESIGN
DEPUTY CITY ENGINEER

APPROVED 9-29 2005
CITY ENGINEER

DESIGNED BY	DRAWN BY	CHECKED BY
P.H.L.	R.H.L.	P.H.L.

REGISTERED PROFESSIONAL ENGINEER
GARY LEE MOORE
No. C-49445
Exp. 9-30-06
CIVIL
STATE OF CALIFORNIA

REVISIONS					SUPERSEDES	REFERENCES
NO.	DATE	DESCRIPTION	ENGR. OF DESIGN	CITY ENGR.	B-4008	S-121 S-140 S-141 S-142 S-282
1	08/01/05	METRICATED UNITS				

VAULT INDEX NUMBER

SHEET 1 OF 2 SHEETS

B-4564

B-4564

B-4564

NOTES FOR ADJUSTING MAINTENANCE HOLE (MH) TO GRADE

1. GENERAL

   A. UNLESS OTHERWISE SHOWN, MH'S SHALL CONFORM TO STANDARD PLANS S-140, S-141, AND S-142.

   B. DIMENSION D SHALL BE THE SAME AS THE SIZE OF MH FRAME AND COVER TO BE USED.

   C. THE CONTRACTOR MAY REUSE THE EXISTING MH FRAME AND COVER, UNLESS IT IS DAMAGED BY THE CONTRACTOR DURING THE CONSTRUCTION OPERATIONS OR WHEN OTHERWISE INDICATED ON THE PROJECT PLANS. ITEMS DAMAGED BY THE CONTRACTOR SHALL BE REPLACED WITH IDENTICAL NEW ITEMS AT NO EXPENSE TO THE CITY.

   D. BRICK AND PLASTER SHALL CONFORM TO THE STANDARD SPECIFICATIONS, SECTION 202-1.

   E. EXISTING STEPS LOCATED WITHIN REMOVAL LIMITS SHALL NOT BE REPLACED. WHEN REMOVAL OF EXISTING STEPS BEYOND THE MH REMOVAL LIMITS IS INDICATED ON THE PROJECT PLANS, THE STEPS SHALL BE REMOVED TO A DEPTH OF 50 mm (2") BEYOND THE INSIDE FACE OF THE BRICK MH, AND THE HOLE SHALL BE FILLED WITH CLASS "C" MORTAR.

2. RAISING EXISTING BRICK MH'S

   A. BRICK MH'S TO BE RAISED LESS THAN 300 mm (12") MAY BE EXTENDED VERTICALLY, PROVIDED THAT AT A DEPTH OF 800 mm (30") BELOW THE TOP OF THE MH AT ITS NEW ELEVATION, THE INSIDE DIAMETER OF THE MH IS 762 mm (30") OR GREATER.

   B. BRICK MH'S TO BE RAISED LESS THAN 90 mm (3 1/2") MAY BE RAISED BY APPLYING CLASS "C" MORTAR TO THE TOP OF THE EXISTING BRICKWORK. IF THE BRICK MH IS TO BE RAISED 90 mm (3 1/2") OR MORE, A NEW COURSE OR COURSES OF BRICKWORK SHALL BE PLACED ON TOP OF THE EXISTING BRICK WORK.

3. LOWERING EXISTING BRICK MH'S

   A. WHERE A BRICK MH IS TO BE LOWERED LESS THAN 300 mm (12"), THE FRAME MAY BE RESET ON THE EXISTING BRICKWORK AND THE 250 mm (10") MINIMUM BRICKWORK RECONSTRUCTION BE OMITTED, PROVIDE THAT THE BASE OF THE FRAME DOES NOT OVERHANG THE BRICKWORK ON THE INSIDE SURFACE OF THE MH MORE THAN AVERAGE OF 40 mm (1 1/2") IN ANY QUADRANT NOR MORE THAN 50 mm (2") AT ANY POINT.

4. RAISING EXISTING PRECAST CONCRETE SEWER MH'S

   A. PRECAST CONCRETE MH'S TO BE RAISED LESS THAN 75 mm (3") MAY BE RAISED BY APPLYING CLASS "C" MORTAR TO THE TOP OF THE EXISTING MH PROVIDED THE TOTAL HEIGHT OF MORTAR, EXISTING AND NEWLY APPLIED, DOES NOT EXCEED 75 mm (3").

   B. WHERE THE PRECAST CONCRETE MH IS TO BE RAISED 75 mm (3") OR MORE, OR WHERE THE TOTAL HEIGHT OF MORTAR, EXISTING OR NEWLY APPLIED, WOULD EXCEED 75 mm (3"), GRADE RINGS SHALL BE UTILIZED. CLASS "C" MORTAR MAY BE USED FOR FINAL ADJUSTMENT, BUT NOT MORE THAN 75 mm (3") IN HEIGHT. WHERE RAISING THE MH WOULD RESULT IN THE UPPER SEGMENT OF THE SHAFT BEING MORE THAN 800 mm (30") IN HEIGHT, REMOVE THE REDUCER AND THE UPPER SEGMENT OF THE SHAFT, INSTALL ADDITIONAL RINGS OR PIPE TO THE LOWER SEGMENT OF THE SHAFT, AND REINSTALL THE REDUCER AND GRADE RINGS AS REQUIRED.

5. LOWERING EXISTING PRECAST CONCRETE SEWER MH'S

   A. REMOVE SUFFICIENT GRADE RINGS TO LOWER THE MH AS REQUIRED. APPLY CLASS "C" MORTAR TO A HEIGHT NOT EXCEEDING 75 mm (3") FOR ADJUSTMENT TO FINAL GRADE.

   B. WHERE REMOVAL OF GRADE RINGS WOULD RESULT IN THE UPPER SEGMENT OF THE SHAFT BEING LESS THAN 300 mm (12") IN HEIGHT, REMOVE THE REDUCER AND SUFFICIENT SECTIONS OF THE LOWER SEGMENT OF THE SHAFT AND REINSTALL ANY NECESSARY SEGMENT OF THE LOWER SHAFT, THE REDUCER, AND THE GRADE RINGS TO CONFORM TO ANY REQUIREMENTS OF THIS PLAN.

   C. EXISTING GRADE RINGS NEED NOT BE REMOVED IF EXISTING MORTAR MAY BE REMOVED, AND AT LEAST 13 mm (1/2") OF MORTAR MAY BE PLACED ON TOP OF THE EXISTING GRADE RINGS TO RESEAT THE FRAME.

6. REPLACEMENT OF BRICK REDUCER WITH PRECAST CONCRETE REDUCER AND SHAFT

   UNLESS OTHERWISE INDICATED ON THE PLANS, THE CONTRACTOR MAY INSTALL A PRECAST CONCENTRIC CONCRETE REDUCER, CONCRETE GRADE RINGS, AND CONCRETE PIPE IN LIEU OF RECONSTRUCTING A BRICK REDUCER, PROVIDED:

   A. THE MAXIMUM I. D. OF SEWER PIPE CONNECTED TO THE MH DOES NOT EXCEED 200 mm (8").

   B. THE CONTRACTOR SECURES PRIOR APPROVAL FROM THE ENGINEER TO INSTALL THE CONCENTRIC REDUCER ONTO THE MH SHAFT. THE ENGINEER MAY, AS PART OF THE INSTALLATION REQUIREMENTS, REQUIRE THE CONTRACTOR TO COAT THE INSIDE OF THE REDUCER, RINGS, AND PIPE WITH AN APPROVED COATING.

   C. THE CONCRETE GRADE RINGS, THE CONCRETE REDUCER AND ANY CONCRETE PIPE SHALL BE JOINED TOGETHER AND BEDDED ONTO THE EXISTING BRICK MH WITH CLASS "C" MORTAR. THE DEPTH, WIDTH, AND THICKNESS OF THE MORTAR SHALL BE OF SUFFICIENT DIMENSIONS TO PROPERLY AND ADEQUATELY JOIN AND BED THE COMPONENT PARTS.

7. UNLESS OTHERWISE NOTED, EXCESS PRECAST GRADE RINGS, REDUCERS AND CONES FROM A PARTICULAR MH MAY BE REUSED ON OTHER MH'S ON THE PROJECT. EXCESS PRECAST GRADE RINGS, CONES AND REDUCERS SHALL BE SALVAGED AND DELIVERED TO THE NEAREST CITY SANITATION YARD.

8. LINED MH SHAFTS SHALL HAVE EXISTING LINING EDGES REPAIRED OR LINING APPLIED TO THE INTERIORS OF UNLINED GRADE RINGS, BRICKS, CONES, REDUCERS, TRANSITIONS PER BROWN BOOK AND STANDARD PLAN S-121.

BOARD OF ENGINEERING
FOUNDED 1911
OFFICIAL RECORD

STANDARD PLAN NO. S-137-1	VAULT INDEX NUMBER	SHEET 2 OF 2 SHEETS

B-4564

B-4564

2468

B-4564

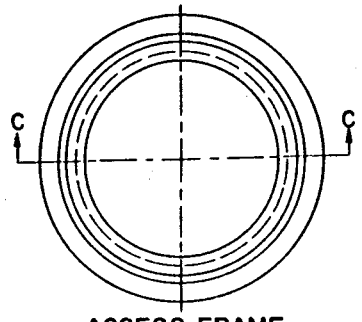

ACCESS FRAME

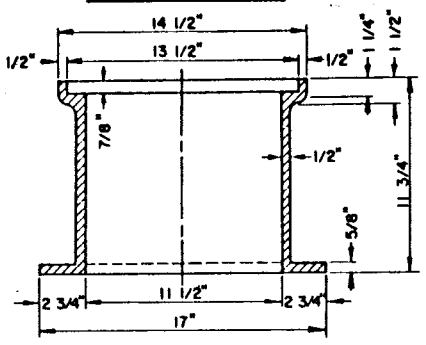

SECTION C-C

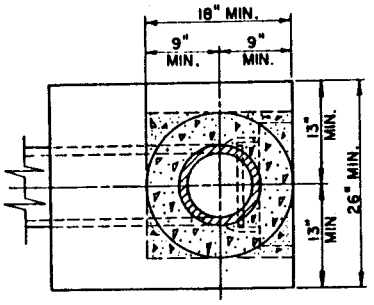

SECTION B-B

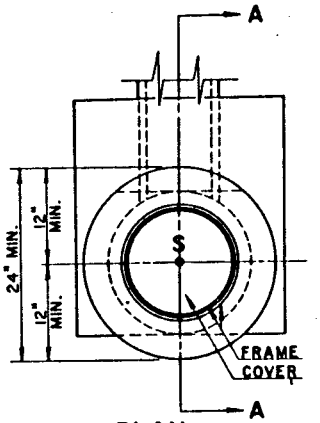

PLAN

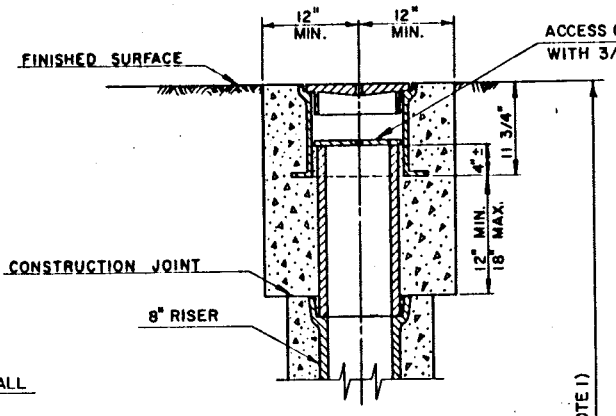

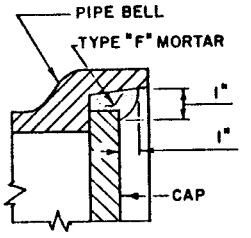

DETAIL "A"

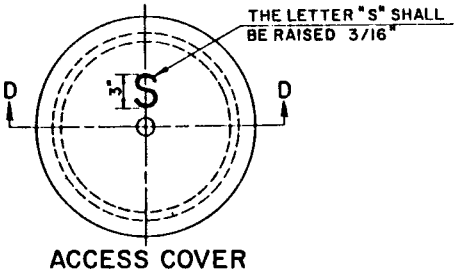

ACCESS COVER

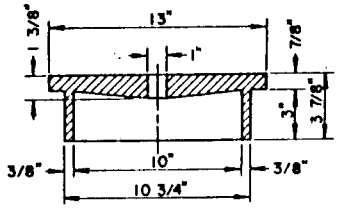

SECTION D-D

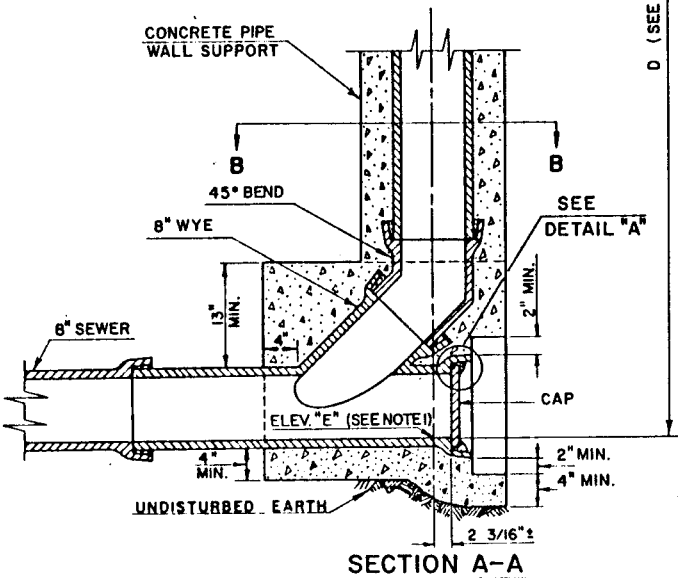

SECTION A-A

DEPARTMENT OF PUBLIC WORKS

BUREAU OF ENGINEERING

CITY OF LOS ANGELES

TERMINAL CLEANOUT STRUCTURE "Y" (T.C.S. "Y.")

STANDARD PLAN
S-164-0

SUBMITTED June 27, 1979
BY [signature] ENGINEER OF DESIGN
[signature] DEPUTY ENGINEER

APPROVED June 26, 1979
Donald C. Tillman
CITY ENGINEER

DESIGNED BY	DRAWN BY	CHECKED BY
LIE	RGM	LJM

REVISIONS					SUPERSEDES	REFERENCES
NO	DATE	DESCRIPTION	ENG'R OF DESIGN	CITY ENG'R	B-3717	

VAULT INDEX NUMBER B-3974

SHEET 1 OF 2 SHEETS

NOTES FOR TERMINAL CLEANOUT STRUCTURE "Y"

1. SEE PROJECT PLANS FOR VALUES OF DIMENSION "D" AND ELEVATION "E".

2. PIPE AND FITTINGS EXCEPT AS OTHERWISE SHOWN HEREON SHALL BE OF THE SAME MATERIAL AS THE SEWER, AND MAY BE ANY OF THE FOLLOWING:

   A. VITRIFIED CLAY PIPE CONFORMING TO SECTION 207-8 OF THE STANDARD SPECIFICATIONS;

   B. ABS SOLID WALL PIPE CONFORMING TO SECTION 207-14 OF THE STANDARD SPECIFICATIONS;

   C. ABS COMPOSITE PIPE CONFORMING TO SECTION 207-15 OF THE STANDARD SPECIFICATIONS;

   D. PVC PIPE CONFORMING TO SECTION 207-16 OF THE STANDARD SPECIFICATIONS.

3. PIPES AND FITTINGS SHALL BE PROPERLY ALIGNED AND MAINTAINED WHILE CONCRETE IS BEING PLACED AND ALLOWED TO HARDEN. JOINTS FOR PIPES AND FITTINGS SHALL BE MADE PRIOR TO PLACING CONCRETE. CONCRETE FOR BEDDING, ENCASEMENT, AND WALL SUPPORT FOR PIPES AND FITTINGS SHALL BE PLACED UNIFORMLY AROUND THE PIPE AND FITTINGS AS SHOWN HEREON TO MAINTAIN PROPER ALIGNMENT, AND SHALL BE CLASS 420-C-2000.

4. THE ACCESS FRAME, COVER, AND CAP SHALL BE CAST IRON CONFORMING TO SECTION 206-3 OF THE STANDARD SPECIFICATIONS. THE FINGER HOLES MAY BE DRILLED OUT OR MAY BE BLOCKED OUT PRIOR TO CASTING; THEY SHALL NOT BE PUNCHED OUT.

5. THE CONTRACTOR, AT HIS OPTION, MAY PLACE EITHER CIRCULAR OR SQUARE CONCRETE PIPE WALL SUPPORTS AS SHOWN HEREON.

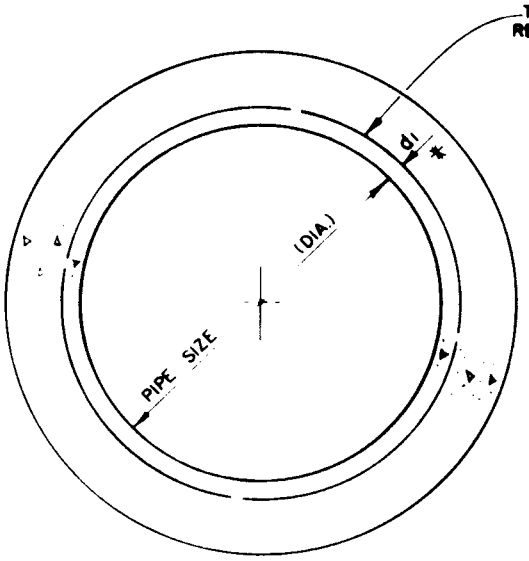

SINGLE CIRCULAR CAGE

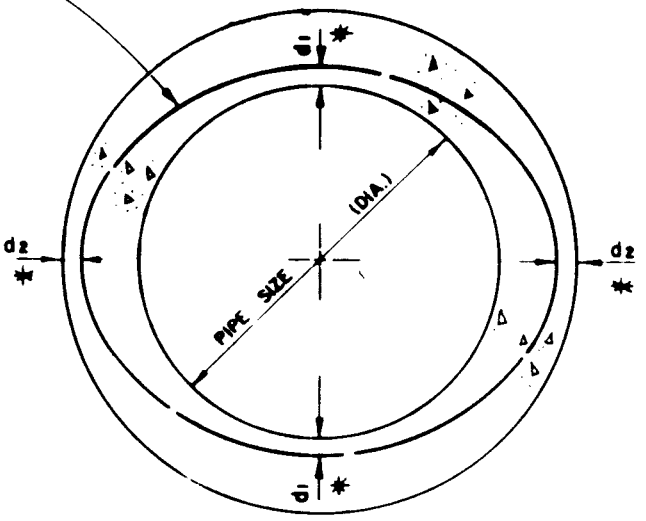

SINGLE ELLIPTICAL CAGE

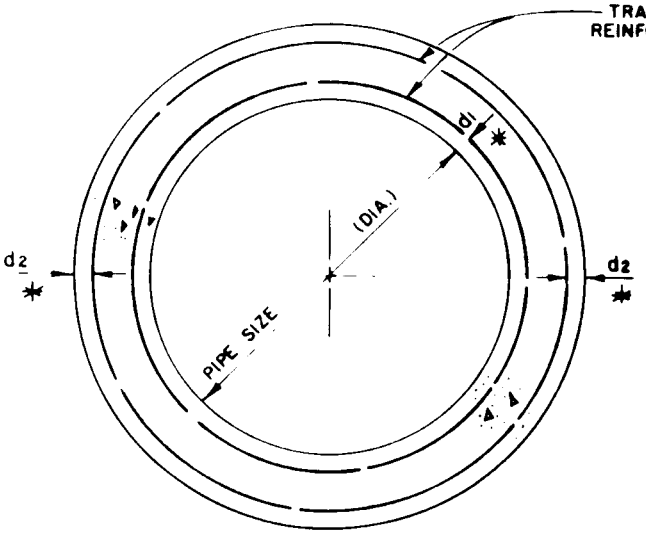

DOUBLE CIRCULAR CAGES

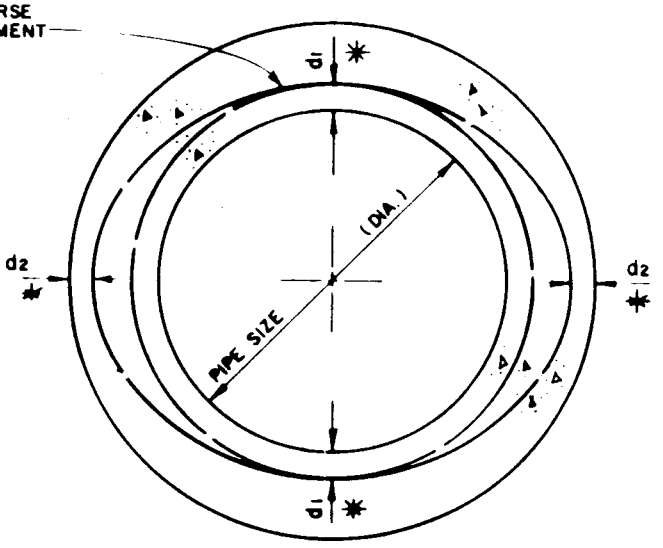

CIRCULAR-ELLIPTICAL CAGES

TYPICAL REINFORCEMENT CONFIGURATIONS

* SEE NOTE 3

DEPARTMENT OF PUBLIC WORKS

BUREAU OF ENGINEERING

CITY OF LOS ANGELES

REINFORCED CONCRETE PIPE

STANDARD PLAN
S-241-0

SUBMITTED April 25 1990
ENGINEER OF DESIGN
DEPUTY ENGINEER

APPROVED May 4 1990
CITY ENGINEER

DESIGNED BY	DRAWN BY	CHECKED BY
RGC	RGM	RGS

REGISTERED PROFESSIONAL ENGINEER
ROBERT G. MOORE
Exp. 12/31/90
No. 11168
CIVIL
STATE OF CALIFORNIA

NO.	REVISIONS DESCRIPTION

SUPERSEDES	REFERENCES

VAULT INDEX NUMBER B-4111

SHEET 1 OF 2 SHEETS

NOTES

1. EXCEPT AS MODIFIED HEREIN, ALL REINFORCED CONCRETE PIPE (RCP) NOT LARGER THAN 108 INCHES INTERNAL DIAMETER SHALL CONFORM TO SUBSECTION 207-2 OF THE STANDARD SPECIFICATIONS. FOR RCP LARGER THAN 108 INCHES, SEE PLANS OR SPECIAL PROVISIONS.

2. WHEN HIGH CHLORIDE, HIGH SULFATE, OR MARINE (WITHIN 1,000 FEET OF OCEAN OR TIDAL WATER) ENVIRONMENTS ARE INDICATED ON THE PLANS OR SPECIAL PROVISIONS, CONCRETE SHALL CONTAIN A MINIMUM OF 7 SACKS OF TYPE II CEMENT PER CUBIC YARD. FOR VERY HIGH SULFATE PRESENCE (OVER 15,000 PPM), 7 SACKS OF TYPE V CEMENT OR A 25% CLASS F FLY ASH MAXIMUM SUBSTITUTION BY WEIGHT WITH TYPE II CEMENT SHALL BE USED, PROVIDED THE TOTAL WEIGHT OF TYPE II CEMENT AND FLY ASH IS AT LEAST 564 POUNDS PER CUBIC YARD.

3. CONCRETE COVER FOR REINFORCING STEEL IN CONCRETE PIPE SHALL CONFORM TO SUBSECTION 207-2.4.2. WHEN "SPECIAL COVER RCP, TYPE_____" IS SPECIFIED ON THE PLANS OR SPECIAL PROVISIONS, THE MINIMUM CLEARANCE (d_1 OR d_2) FOR TRANSVERSE REINFORCEMENT SHALL BE:

TYPE	COVER	USE
I - A	d_1 = 1-1/2" -0" + 1/2"	16 < V ≤ 24
I - B	d_1 = 2" -0" + 1/2"	
II - A	d_1 = 2" -0" + 1/2"	24 < V ≤ 32
II - B	d_1 = 2-1/2" -0" + 1/2"	
III - A	d_1 = 2-1/2" -0" + 1/2"	32 < V ≤ 40
III - B	d_1 = 3" -0" + 1/2"	
IV	SPECIAL DESIGN--SEE PLANS OR SPECIAL PROVISIONS	V > 40
V	d_1, d_2 = 1/2 INCH MINIMUM ADDED TO THAT SPECIFIED IN 207-2.4.2	HIGH CHLORIDE, HIGH GROUNDWATER, OR MARINE ENVIRONMENT

NOTES TO DESIGNERS:

(A) "V" IS AVERAGE VELOCITY, FEET PER SECOND (FPS).
(B) "A" IS USED WHERE DEBRIS IN FLOW DOES NOT OCCUR.
(C) "B" IS USED WHERE DEBRIS IN FLOW OCCURS.
(D) INCREASED CONCRETE COVER IS NOT CUMULATIVE WITH THAT REQUIRED FOR MARINE, HIGH VELOCITY, GROUNDWATER, OR CHLORIDE ENVIRONMENTS, BUT SHOULD BE AT LEAST THE GREATEST OF ANY OF THE REQUIREMENTS.
(E) "d_2" IS APPLICABLE ONLY FOR TYPE V USAGE.
(F) FOR VELOCITIES LESS THAN OR EQUAL TO 16 FPS AND FOR NORMAL ENVIRONMENTS, CONCRETE COVER SHALL CONFORM TO SUBSECTION 207-2.4.2.

CASE 1 BEDDING INSTALLATION

LOAD FACTOR = 1.4

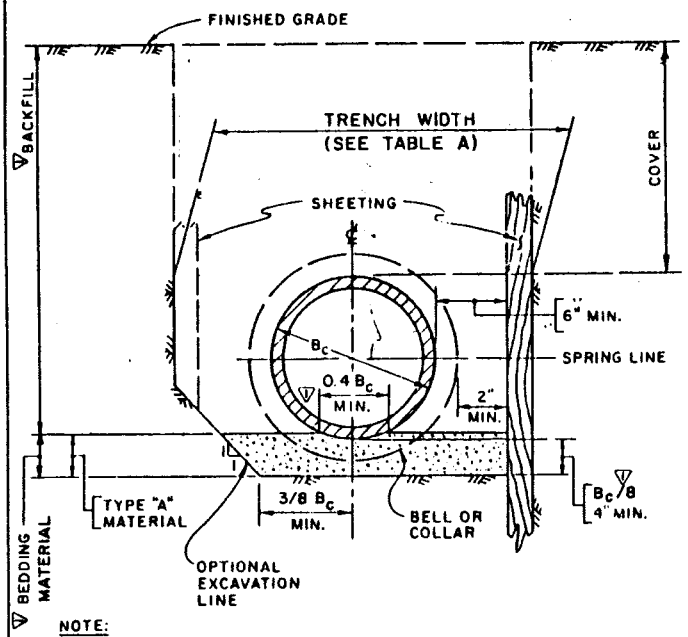

NOTE:

INDICATES UNDISTURBED EARTH

CASE 2 BEDDING INSTALLATION

LOAD FACTOR = 1.8

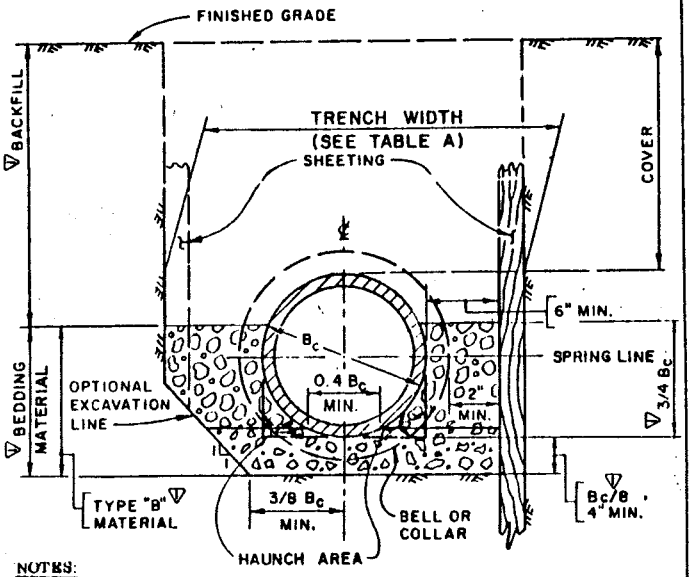

NOTES:

A. INDICATES UNDISTURBED EARTH.

B. TYPE "B" MATERIAL SHALL BE PLACED IN A MANNER SUCH AS SLICING, SHOVEL-SPADING, OR SHOVEL RODDING TO INSURE COMPLETE FILLING OF THE "HAUNCH AREAS" BELOW THE PIPE. (JETTING OF TYPE "B" MATERIAL IS NOT REQUIRED).

CASE 3 BEDDING INSTALLATION

LOAD FACTOR = 2.7

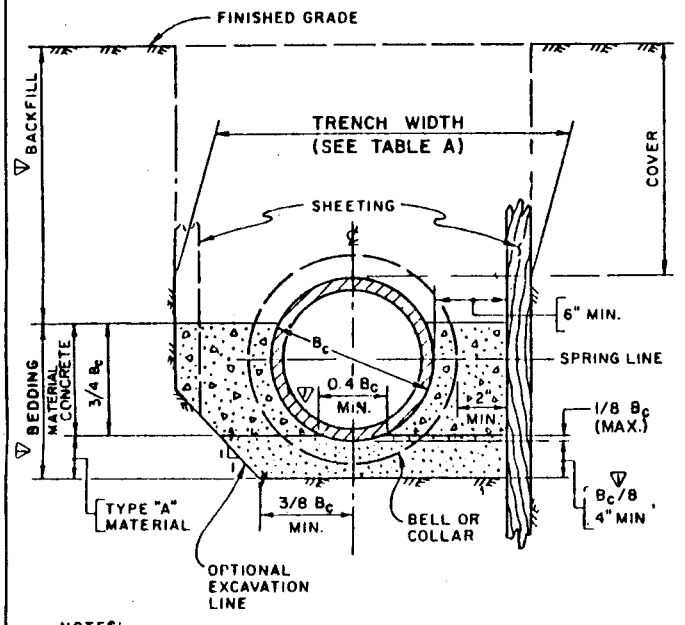

NOTES:

A. INDICATES UNDISTURBED EARTH

B. SEE NOTE 5.

CASE 4 BEDDING INSTALLATION

LOAD FACTOR = 3.2

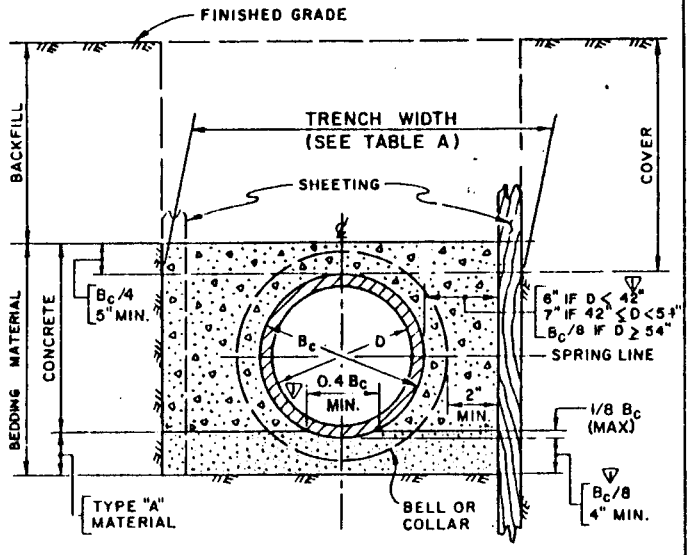

NOTES:

A. INDICATES UNDISTURBED EARTH.

B. < INDICATES "LESS THAN"; ≤ INDICATES "LESS THAN OR EQUAL TO"; ≥ INDICATES "GREATER THAN OR EQUAL TO".

DEPARTMENT OF PUBLIC WORKS

BUREAU OF ENGINEERING — CITY OF LOS ANGELES

PIPE LAYING IN TRENCHES

STANDARD PLAN S-251-1

SUBMITTED Dec. 25 1973

Philip H. Mann
DIVISION ENGINEER

DEPUTY ENGINEER

APPROVED January 7 1974

CITY ENGINEER

DESIGNED BY	DRAWN BY	CHECKED BY
A. MAGAÑA	R. FAGNAN	G.K. TAKAKI

REVISIONS					SUPERSEDES	REFERENCES
NO	DATE	DESCRIPTION	DIV. ENG'R	CITY ENG'R	B-3816	
1	2-7-77	BEDDING, BACKFILL LIMITS & DIMENSIONS, CASE 1 & 2 MATERIALS; CASE 2 CONSTRUCTION PROCEDURES; CASE DESIGNATIONS; USE OF CASE 2 IN TABLE B; GENERAL NOTES; LOAD FACTORS.	Philip H. Mann	O.C. Tillman		

VAULT INDEX NUMBER B-3893

SHEET 1 OF 2 SHEETS

CASE 5 BEDDING INSTALLATION ▽

LOAD FACTOR = 4.5

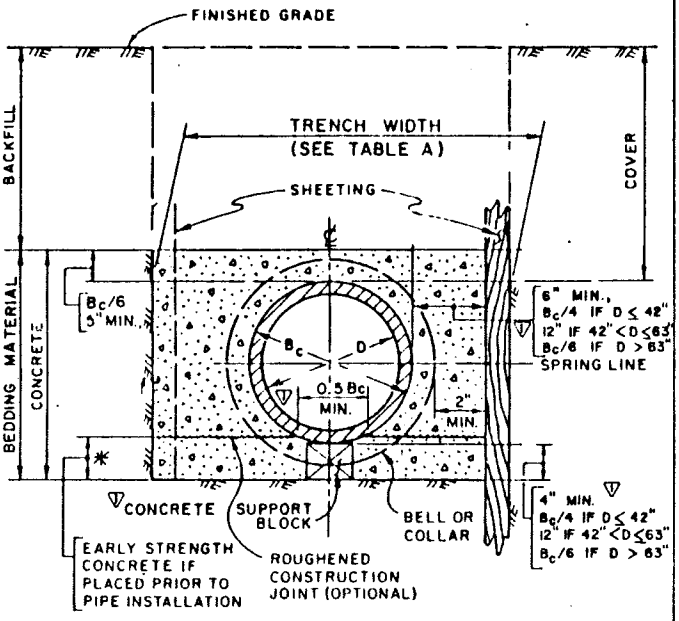

NOTES:

A. ⩘⩘⩘ INDICATES UNDISTURBED EARTH.

▽ B. TREATED PINE SHIMS MAY BE USED FOR GRADE ADJUSTMENT.

C. < INDICATES "LESS THAN"; ≤ INDICATES "LESS THAN OR EQUAL TO", > INDICATES "GREATER THAN".

D. ✱ INDICATES AREA REFERRED TO IN NOTE 12.D.(2).

TABLE A

MAXIMUM ALLOWABLE TRENCH WIDTH

NOTES: A IF COVER LESS THAN 8'-0" – UNLIMITED WIDTH
B IF MAXIMUM ALLOWABLE IS EXCEEDED, PROVIDE SUBSTITUTE INSTALLATION PER TABLE B.

INSIDE DIAMETER	PLASTIC, CLAY & CAST IRON	RCP WITH BELLS OR COLLARS	ACP & RCP WITHOUT BELLS OR COLLARS
6" - 15"	B_c + 18"	B_c + 32"	B_c + 20"
16" - 21"	B_c + 24"		
22" - 42"	B_c + 30"		
43" - 90"	------		
OVER 96"	------	B_c + 32"	B_c + 24"

TABLE B

SUBSTITUTE INSTALLATIONS
(APPLICABLE TO ALL PIPE SIZES)

CASE B	COVER C (Feet)	RATIO = TRENCH WIDTH / MAXIMUM ALLOWABLE TRENCH WIDTH: 1.00	1.05	1.10	1.15	1.20	1.25	1.30	1.35	1.40	1.45	1.50	1.55	1.60	1.65	1.70	1.75	NO LIMIT
▽ 1	8.1-15.0			2 A				3 A				4						
	15.1-20.0																	
	20.1-30.0																	
▽ 2	8.1-15.0									4								
	15.1-20.0			3 A									5				SPECIAL D	
	20.1-30.0																	
3	8.1-15.0		4		5													
	15.1-30.0																SPECIAL D	
4	8.1-30.0																	

NOTES: A. SEE NOTE 2.

B. CASE - INSTALLATION CASE SPECIFIED ON THE PLANS.

C. COVER - IF COVER EXCEEDS 30 FEET SUBSTITUTE SHALL BE AS ORDERED BY THE ENGINEER.

D. SPECIAL - CONTRACTOR SHALL CONSTRUCT SPECIAL AS ORDERED BY THE ENGINEER.

GENERAL NOTES

1. CASE 1 BEDDING INSTALLATION SHALL BE USED FOR ALL PIPE LAYING UNLESS OTHERWISE SPECIFIED ON THE PLANS OR NOTED HEREON.

▽ 2. IF THE ACTUAL TRENCH WIDTH EXCEEDS THE MAXIMUM INDICATED IN TABLE A, THE CONTRACTOR IS REQUIRED TO PROVIDE A SUBSTITUTE INSTALLATION PER TABLE B. HOWEVER, IF RUNNING, CAVING OR SQUEEZING SOILS ARE PRESENT, CASE 2 OR 3 SHALL NOT BE USED AS A SUBSTITUTE. CASE 4 SHALL BE THE MINIMUM SUBSTITUTE.

3. IF THE COVER ON CLAY PIPE IS LESS THAN 42 INCHES MEASURED FROM THE FINISHED GRADE OR INTERIM CONSTRUCTION GRADE, CASE 5 BEDDING INSTALLATION SHALL BE USED.

▽ 4. UNLESS OTHERWISE SPECIFIED ON THE PLANS, THE BEDDING INSTALLATION CASE FOR SEWER HOUSE CONNECTIONS SHALL BE THE SAME AS THAT USED FOR THE MAIN LINE.

5. LOAD FACTORS INDICATED FOR EACH BEDDING INSTALLATION CASE ARE BASED ON THE 3-EDGE BEARING TEST WITH A 1.0 LOAD FACTOR. LOAD FACTORS APPLY IN THE DESIGN OF RCP, VCP AND ACP.

▽ 6. IF RUNNING, CAVING OR SQUEEZING SOILS ARE ENCOUNTERED WHEN CASE 2 OR 3 BEDDING INSTALLATION IS SPECIFIED ON THE PLANS, THE ENGINEER SHALL BE IMMEDIATELY NOTIFIED IN ORDER THAT HE CAN DETERMINE WHAT CORRECTIVE MEASURES SHALL BE TAKEN.

7. ALL COSTS ARISING FROM THE CONTRACTOR'S CHOICE OF OPTIONAL CONSTRUCTION DETAILS, INCLUDING SUBSTITUTE BEDDING INSTALLATIONS WHEN THE MAXIMUM TRENCH WIDTH IS EXCEEDED, SHALL BE CONSIDERED INCLUDED IN THE BID PRICE FOR PIPE IN PLACE.

8. PIPE BELLS AND COUPLINGS OUTSIDE OF THE PIPE BARREL SHALL BE PREVENTED FROM BEARING UPON BEDDING MATERIAL BY SUITABLE EXCAVATION DURING THE PIPE LAYING OPERATIONS.

9. IF A CHANGE IN BEDDING INSTALLATION CASE OCCURS BETWEEN THE JOINTS OF A LENGTH OF PIPE, THE CONTRACTOR SHALL CONSTRUCT THE HIGHER CASE BEDDING INSTALLATION FOR THE ENTIRE LENGTH OF THAT PIPE.

▽ 10. THE HEIGHT OF BEDDING MATERIALS AS DESCRIBED IN SUBSECTION 306-1.2.1 OF THE STANDARD SPECIFICATIONS IS MODIFIED AS ILLUSTRATED IN BEDDING CASES 1 THROUGH 5.

11. BEDDING

A. TYPE "A" MATERIAL:

(1) TYPE "A" MATERIAL SHALL BE ONE OF THE FOLLOWING:

a. SAND
b. NO. 3 OR NO. 4 AGGREGATE OR 1/2" OR 3/4" CRUSHED ROCK FOR PIPES LARGER THAN 24 INCHES IN DIAMETER.
c. NO. 4 AGGREGATE OR 1/2" CRUSHED ROCK FOR PIPES 24 INCHES OR SMALLER IN DIAMETER.
▽ d. UNDISTURBED NATIVE FREE DRAINING MATERIAL HAVING A MINIMUM SAND EQUIVALENT OF 30 AND SHAPED TO FULLY SUPPORT THE PIPE.

▽ (2) IF ANY TYPE "A" MATERIAL DIRECTLY SUPPORTING THE PIPE IS REMOVED OR DISLOCATED IN THE PROCESS OF REMOVING A PIPELAYING SLING, THAT MATERIAL SHALL BE CAREFULLY REPLACED BY HAND-SHOVELING.

▽ B. TYPE "B" MATERIAL SHALL BE NO. 4 AGGREGATE OR 1/2" CRUSHED ROCK.

C. CONCRETE BEDDINGS:

▽ (1) AT LEAST 50% OF CONCRETE BEDDING WITHIN ANY 5-FOOT LENGTH SHALL BE PLACED AGAINST UNDISTURBED EARTH OR AGAINST TIMBER SHEETING WHICH IS PLACED AGAINST UNDISTURBED EARTH AND LEFT IN PLACE. ALL SHEETING ABOVE THE TOP OF BEDDING SHALL BE REMOVED. THE CONTRACTOR MAY REMOVE ALL STEEL SHEETING HAVING WEB THICKNESS OF 1/2" OR LESS. (MODIFIES STANDARD SPECIFICATIONS SUBSECTION 306-1.1.6).

(2) IF BACKFILL IS PLACED IMMEDIATELY AFTER PLACING CONCRETE BEDDING, SEE NOTE 12D.

▽ (3) TRANSVERSE CONSTRUCTION JOINTS SHALL BE PROVIDED AS FOLLOWS:

a. MAXIMUM SPACING SHALL BE 30 FEET FOR CLAY PIPE AND 40 FEET FOR CAST IRON, REINFORCED CONCRETE AND ASBESTOS CEMENT PIPES.
b. JOINTS SHALL BE LOCATED AT THE ENDS OF PIPE BELLS.
c. JOINTS SHALL BE PLACED AT ALL CHANGES BETWEEN ANY TWO BEDDING INSTALLATION CASES.

▽ (4) NO CONSTRUCTION JOINTS OTHER THAN THOSE REQUIRED BY NOTE 11.C.(3) SHALL BE LOCATED ABOVE THE SPRING LINE OF THE PIPE UNLESS AUTHORIZED BY THE ENGINEER OR SPECIFIED ON THE PLANS.

▽ 12. BACKFILLING: (MODIFIES STANDARD SPECIFICATIONS SUBSECTION 306-1.3)

A. BACKFILL MAY CONSIST OF THE EXCAVATED SOIL EXCEPT THAT BACKFILL SHALL NOT CONTAIN ROCKS GREATER THAN 2 INCHES TO A DISTANCE OF 1 FOOT OVER THE TOP OF THE PIPE. THERE WILL BE NO SAND EQUIVALENT REQUIREMENT. IMPORTED COHESIONLESS SAND SHALL NOT BE USED AS A BACKFILL EXCEPT AS PROVIDED FOR IN NOTE 12C.

B. EXCEPT WHERE MECHANICAL COMPACTION IS REQUIRED BY THE PLANS OR SPECIAL PROVISIONS, TRENCH BACKFILL SHALL BE JETTED. FLOODING OR PONDING IS PROHIBITED. THE UPPER 3 FEET OF BACKFILL IN STREETS SHALL EITHER BE JETTED AND ALLOWED TO DRAIN TO PROVIDE A FIRM AND UNYIELDING SUBGRADE OR SHALL BE MECHANICALLY COMPACTED.

C. WHERE MECHANICAL COMPACTION IS SPECIFIED, DAMPENED SAND SHALL BE USED AS BACKFILL TO ONE FOOT OVER THE TOP OF THE PIPE. AFTER DENSIFYING THE SAND BY JETTING, THE REMAINDER OF THE BACKFILL SHALL BE MECHANICALLY COMPACTED. ALL MECHANICALLY COMPACTED BACKFILL SHALL BE COMPACTED TO 90% RELATIVE COMPACTION.

SUBSECTION 306-1.3.2 OF THE STANDARD SPECIFICATIONS IS MODIFIED AS FOLLOWS:

WHERE OTHER TYPES OF IMPACT EQUIPMENT APPROVED BY THE ENGINEER ARE USED OVER SUCH PIPE, THE COMPACTIVE EFFORT PER BLOW SHALL NOT EXCEED THE FOLLOWING LIMITS UNLESS CASE 5 BEDDING IS USED, IN WHICH CASE THE PERMITTED EFFORT MAY BE TWICE THE TABULATED VALUES:

MAXIMUM COMPACTIVE EFFORT (FT-LB PER BLOW)	MINIMUM THICKNESS COMPACTED MATERIAL ABOVE BELLS OR CONCRETE ENCASEMENT (FT)	MINIMUM AREA OF COMPACTING FOOT (SQ IN)
200	1.5	16
400	2	25
625	2.5	36
900	3	36
1,225	3.5	49
1,600	4	64
2,025	4.5	64
2,500	5	64
3,600	6	81
4,900	7	81
6,400	8	100
8,100	9	100
10,000	10	144
12,100	11	144
14,400	12	144
16,900	13	144
19,600	14	144
22,500	15	144
100 x (FT COVER)^2	OVER 15	196

D. BACKFILLING OVER CONCRETE BEDDING (MODIFIES STANDARD SPECIFICATIONS SUBSECTION 306-1.3.1):

BACKFILL MAY BE PLACED IMMEDIATELY AFTER PLACEMENT OF CONCRETE BEDDING, SUBJECT TO THE FOLLOWING CONDITIONS AND RESTRAINTS:

(1) BACKFILL SHALL BE PLACED WITHIN 1 HOUR OF PLACING THE CONCRETE BEDDING AND IS LIMITED TO 10 FEET ABOVE THE TOP OF THE PIPE. WATER DENSIFICATION OF THE INITIAL 10 FEET OF BACKFILL SHALL NOT BE PERMITTED SOONER THAN 12 HOURS FOLLOWING CONCRETE PLACEMENT. ADDITIONAL BACKFILL SHALL NOT BE PLACED UNTIL THE MINIMUM ELAPSED TIME INDICATED IN THE "CONCRETE CLASS USE TABLE", STANDARD SPECIFICATIONS SUBSECTION 201-1.1.2.

(2) EXCEPT FOR THE AREA BELOW THE PIPE INDICATED ON CASE 5 BEDDING INSTALLATION, THE CONCRETE SHALL NOT CONTAIN ACCELERATING ADMIXTURE.

(3) THE CONCRETE BEDDING SHALL BE COVERED WITH A MINIMUM 6 MIL PLASTIC MEMBRANE TO PREVENT CONTAMINATION BY THE BACKFILL.

(4) THE CONCRETE BEDDING SHALL BE INCREASED AT LEAST AN ADDITIONAL 2 INCHES IN DEPTH.

(5) BACKFILL SHALL BE PLACED IN A MANNER WHICH WILL NOT DISTURB OR DISPLACE THE CONCRETE (SUCH AS "TUMBLING" IT DOWN THE SLOPE OF THE MATERIAL ALREADY IN PLACE IN THE TRENCH).

CASE 1

REINFORCED CONCRETE BEAM
FOR 4" TO 24" I.D. PIPE

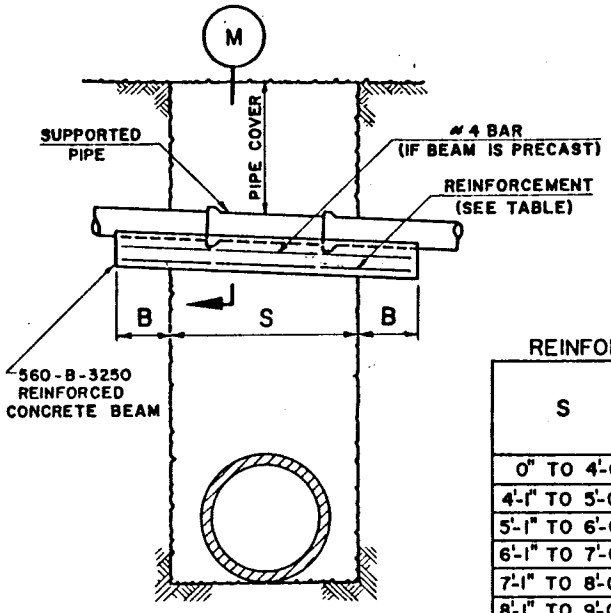

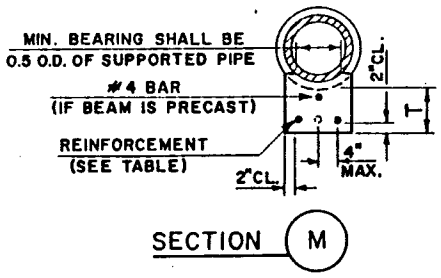

SECTION M

NOTES

1. WIDTH OF BEAM SHALL EQUAL O.D. OF SUPPORTED PIPE. MINIMUM WIDTH SHALL BE 6".
2. IF SUPPORTED PIPE IS BEDDED IN CONCRETE, BEAM WIDTH SHALL EQUAL BEDDING WIDTH.
3. IF BEAM IS PRECAST, ENDS OF BEAM SHALL BE FULLY BEDDED IN -480-B-2000 CONCRETE FOR LENGTH "B". THE BEDDING SHALL HAVE A MINIMUM THICKNESS OF 4". CLASS "C" MORTAR SHALL BE PLACED BETWEEN TOP OF BEAM AND SUPPORTED PIPE TO PROVIDE MINIMUM BEARING SHOWN.
4. THIS CASE IS PERMITTED ONLY IF THE TRENCH WALLS ARE FIRM AND UNYIELDING.
5. MAXIMUM SPACING OF BARS SHALL BE 4" O.C.

REINFORCED CONCRETE BEAM (DIMENSIONS AND REINFORCEMENT)

S	PIPE COVER														
	0' TO 6'-0"			6'-1" TO 12'-0"			12'-1" TO 16'-0"			16'-1" TO 20'-0"			20'-1" TO 25'-0"		
	T	BARS	B	T	BARS	B	T	BARS	B	T	BARS	B	T	BARS	B
0" TO 4'-0"	8"	#4	1'-6"	8"	#4	1'-6"	9"	#4	1'-6"	10"	#4	1'-6"	10½"	#4	1'-6"
4'-1" TO 5'-0"	8"	#4	1'-6"	9½"	#4	1'-6"	11"	#4	1'-6"	12"	#4	1'-6"	12½"	#5	1'-6"
5'-1" TO 6'-0"	9"	#4	1'-6"	11"	#5	1'-6"	12½"	#5	1'-6"	13½"	#5	2'-0"	14½"	#5	2'-0"
6'-1" TO 7'-0"	10"	#5	1'-6"	12½"	#5	2'-0"	14½"	#5	2'-0"	15½"	#5	2'-0"	16½"	#6	2'-0"
7'-1" TO 8'-0"	11"	#5	1'-6"	14"	#5	2'-0"	16"	#5	2'-0"	17½"	#6	2'-6"	19"	#6	2'-6"
8'-1" TO 9'-0"	12½"	#5	2'-0"	15½"	#6	2'-6"	17½"	#6	2'-6"	19½"	#6	2'-6"	21"	#6	2'-6"
9'-1" TO 10'-0"	13½"	#6	2'-0"	17"	#6	2'-6"	19½"	#6	3'-0"	21½"	#6	3'-0"	23"	#6	3'-0"
10'-1" TO 11'-0"	14½"	#6	2'-6"	18½"	#6	3'-0"	21"	#6	3'-0"	23½"	#6	3'-0"	25"	#7	3'-0"
11'-1" TO 12'-0"	15½"	#6	2'-6"	20"	#6	3'-0"	23"	#7	3'-6"	25½"	#7	3'-6"	27"	#7	3'-6"
12'-1" TO 13'-0"	17"	#6	3'-0"	21½"	#7	3'-6"	24½"	#7	3'-6"	27½"	#7	4'-0"	29"	#7	4'-0"
13'-1" TO 14'-0"	18"	#7	3'-0"	23"	#7	3'-6"	26½"	#7	4'-0"	29½"	#7	4'-0"	31½"	#7	4'-0"
14'-1" TO 15'-0"	19"	#7	3'-0"	25"	#7	4'-0"	28"	#7	4'-0"	31½"	#7	4'-6"			
15'-1" TO 16'-0"	20½"	#7	3'-6"	26½"	#7	4'-0"	30"	#8	4'-6"						
16'-1" TO 17'-0"	21½"	#7	3'-6"	28"	#8	4'-6"									
17'-1" TO 18'-0"	22½"	#8	4'-0"	29½"	#8	4'-6"									

CASE 2

CONCRETE WALL

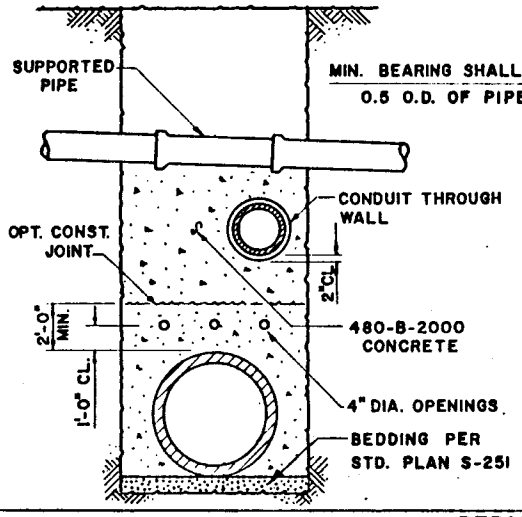

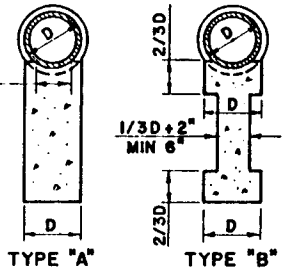

WALL SECTION

NOTES

1. THE SUPPORTING WALL SHALL HAVE A FIRM BEARING ON THE SUBGRADE AND AGAINST THE SIDES OF THE EXCAVATION.
2. ANY CONDUIT PASSING THROUGH THE WALL SHALL HAVE 2-INCH CLEARANCE FROM THE WALL.
3. 4-INCH DIA. OPENINGS THROUGH THE WALL AT 2 FT. O.C. HORIZONTALLY AND AT 5 FT. O.C. VERTICALLY SHALL BE PROVIDED TO PREVENT UNEQUAL PRESSURE RESULTING FROM JETTED BACKFILL.
4. IF SUPPORTED PIPE IS BEDDED IN CONCRETE, MINIMUM THICKNESS OF WALL SHALL EQUAL BEDDING WIDTH.
5. BRICK WITH MORTAR JOINTS MAY BE USED IN LIEU OF CONCRETE FOR WALLS UP TO 5 FT. IN HEIGHT OR LENGTH.

DEPARTMENT OF PUBLIC WORKS

BUREAU OF ENGINEERING — CITY OF LOS ANGELES

SUPPORTS FOR STORM DRAIN AND SEWER PIPES ACROSS TRENCHES

STANDARD PLAN S-253-0

SUBMITTED Feb 23 1976
DIVISION ENGINEER
DEPUTY ENGINEER

APPROVED MARCH 8 1976
CITY ENGINEER

DESIGNED BY	DRAWN BY	CHECKED BY
D.P.T.	D.P.T.	W. LOO

REVISIONS				
NO.	DATE	DESCRIPTION	DIV. ENG'R.	CITY ENG'R.

SUPERSEDES	REFERENCES
B-3289	B-3766 S-251

VAULT INDEX NUMBER B-3867

SHEET 1 OF 2 SHEETS

CASE 3

DUCTILE IRON PIPE

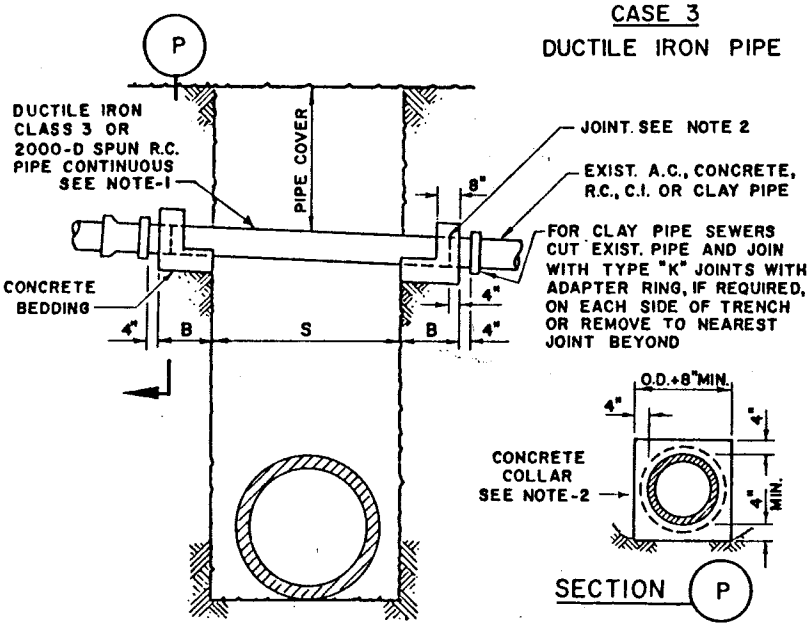

ALLOWABLE SPANS AND MIN. REQUIRED BEARING FOR DUCTILE IRON PIPE

DEPTH OF COVER	6" PIPE		8" PIPE		10" PIPE	
	S(max)	B(min)	S(max)	B(min)	S(max)	B(min)
0" TO 8'-0"	11'-0"	1'-6"	13'-6"	1'-6"	16'-6"	2'-0"
8'-1" TO 16'-0"	8'-0"	1'-6"	10'-0"	2'-0"	12'-0"	2'-6"
16'-1" TO 25'-0"	7'-0"	1'-6"	9'-0"	2'-0"	10'-6"	2'-6"

NOTES

1. 2000-D SPUN R.C. PIPE OF SAME DIAMETER AS THE EXISTING PIPE MAY BE USED ONLY WHEN THE EXISTING PIPE IS A.C., CONCRETE OR R.C. PIPE AND THE TRENCH WIDTH IS 5'-0" OR LESS.
2. THE CONCRETE COLLAR JOINT SHALL BE USED FOR JOINTS IN STORM DRAIN PIPE.
3. ADAPTER RING, WHEN REQUIRED, SHALL BE SYNTHETIC RUBBER CONFORMING TO THE SPECIFICATIONS FOR SEALING COMPONENTS IN STANDARD PLAN B-3766.

CASE 4

COLUMN SUPPORT WITH REINFORCED CONCRETE BEAM

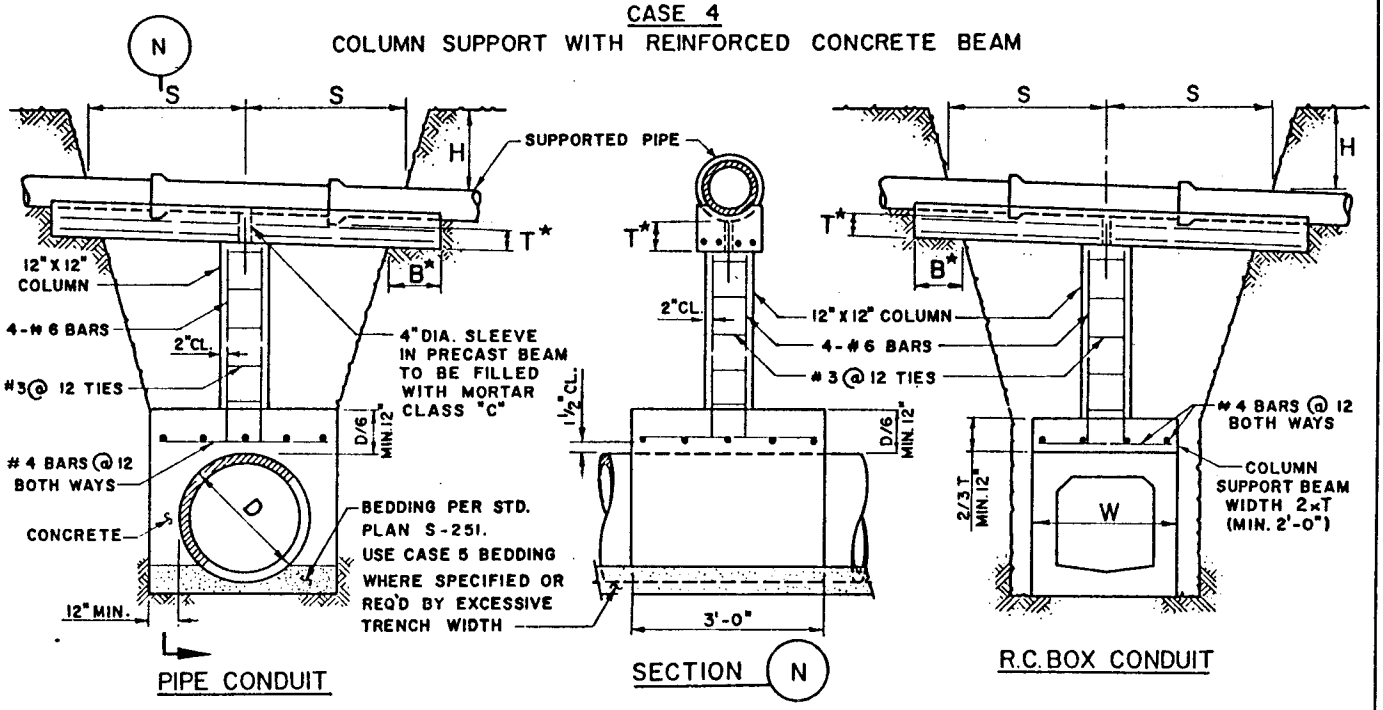

NOTES

1. SPAN "S" SHALL BE MAXIMUM 18 FT FOR EARTH COVER 8 FT OR LESS, 12 FT FOR EARTH COVER 16 FT OR LESS, AND 10 FT FOR OVER 16 FT EARTH COVER.
2. ALL CONCRETE SHALL BE 560-B-3250.
3. WHEN THE PIPE TO BE SUPPORTED CROSSES THE TRENCH ON A SKEW ANGLE, THE WALL OR BEAM WHICH SUPPORTS THE COLUMN SHALL BE CONSTRUCTED AT RIGHT ANGLE TO THE TRENCH.
4. SUPPORT SYSTEM MAY BE USED OVER CAST-IN-PLACE STRUCTURES.
5. BACKFILL ABOVE THE SUPPORT BEAM SHALL NOT BE PLACED UNTIL 72 HOURS AFTER THE SUPPORT IS POURED.
6. ★ REINFORCED CONCRETE BEAM DIMENSIONED AND REINFORCED PER TABLE UNDER CASE 1.

GENERAL NOTES

1. "S" IS THE SPAN OF THE PIPE SUPPORT MEASURED ALONG ITS CENTERLINE.
2. "B" IS THE LENGTH OF BEARING OF THE SUPPORT AGAINST UNDISTURBED EARTH MEASURED ALONG THE PIPE CENTERLINE.
3. CASE 2 SHALL BE USED FOR PARTIAL CROSSINGS, EXCEPT THAT WHERE THE DISTANCE FROM A SEWER CHIMNEY TO UNDISTURBED EARTH IS 18 INCHES OR LESS, THE TRENCH BACKFILL MAY BE DENSIFIED TO 18 INCHES ABOVE A HOUSE CONNECTION SEWER AND THEN RE-EXCAVATED FOR THE PIPE INSTALLATION.
4. ANY SEWER OR STORM DRAIN EXPOSED OR PARTIALLY EXPOSED IN A TUNNEL EXCAVATION SHALL BE SUPPORTED WITH A WALL, CASE 2.
5. IF BEDDING IS REMOVED FROM THE EXISTING PIPE THAT WILL REMAIN IN PLACE, THE PIPE SHALL BE REBEDDED WITH CONCRETE AT NO EXTRA COST TO THE CITY.

STANDARD PLAN NO. S-253-0	VAULT INDEX NUMBER B-3867	SHEET 2 OF 2 SHEETS

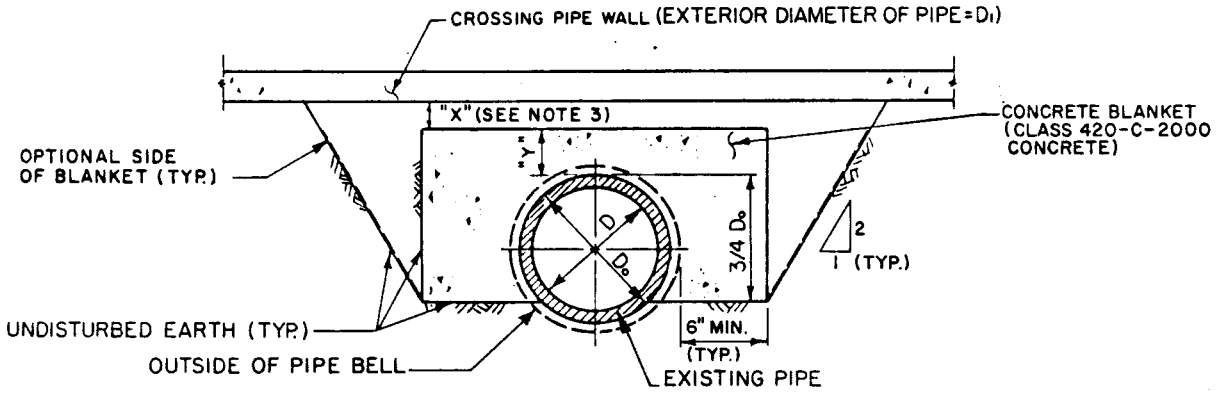

CONCRETE BLANKET

(FOR EXISTING PIPES CROSSED OVER BY A NEW PIPE)

NOTES FOR CONCRETE BLANKET:

1. CONCRETE BLANKET IS REQUIRED WHEN THE CLEARANCE BETWEEN THE TOP OF THE EXISTING PIPE AND THE BOTTOM OF THE CROSSING PIPE IS LESS THAN 18 INCHES.

▽1 2. "Y" = D/6, 4 INCHES MINIMUM (WHERE THE CLEARANCE BETWEEN THE TOP OF THE EXISTING PIPE AND THE BOTTOM OF THE CROSSING PIPE IS LESS THAN "Y", THE CONCRETE SHALL BE PLACED BETWEEN THE PIPES AND AROUND THE SIDES OF THE CROSSING PIPE UP TO A LEVEL EQUAL TO "Y" ABOVE THE EXISTING PIPE, OR AS REQUIRED BY NOTE 3 BELOW, WHICH EVER IS HIGHER.)

▽1 3. "X" = $D_1/8$ MINIMUM, TO PROVIDE BEDDING MATERIAL FOR THE CROSSING CONDUIT. WHEN "X" IS LESS THAN THIS MINIMUM, THE ENTIRE TOP SURFACE OF THE BLANKET SHALL EXTEND TO A LEVEL OF $0.15D_1$ ABOVE THE BOTTOM OF THE CROSSING PIPE.

▽1 4. THE BLANKET SHALL EXTEND LONGITUDINALLY BEYOND THE TRENCH EXCAVATION TO ONE FOOT BEFORE THE FIRST PIPE JOINTS, EXCEPT THAT THE BLANKET NEED NOT EXTEND MORE THAN 4 FEET BEYOND EACH SIDE OF THE TRENCH.

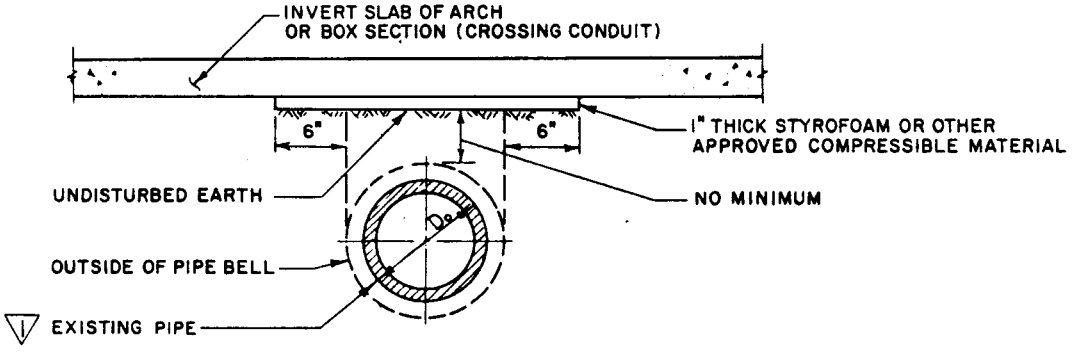

COMPRESSIBLE BLANKET

▽1 (FOR EXISTING PIPES CROSSED OVER BY A NEW BOX OR ARCH)

NOTES FOR COMPRESSIBLE BLANKET:

1. COMPRESSIBLE BLANKET IS REQUIRED WHEN THE CLEARANCE BETWEEN THE TOP OF THE EXISTING PIPE AND THE BOTTOM OF THE CROSSING CONDUIT (BOX OR ARCH) IS LESS THAN 18 INCHES.

2. THE BLANKET SHALL EXTEND LONGITUDINALLY FOR THE FULL CROSSING CONDUIT TRENCH WIDTH.

DEPARTMENT OF PUBLIC WORKS

BUREAU OF ENGINEERING — CITY LOS ANGELES

BLANKET PROTECTION FOR PIPES

STANDARD PLAN S-255-1

SUBMITTED 11/6 1987
ENGINEER OF DESIGN
DEPUTY ENGINEER

APPROVED NOV 6 1987
CITY ENGINEER

DESIGNED BY	DRAWN BY	CHECKED BY
LIE	R G M	L J M

▽ NO.	REVISIONS DESCRIPTION
1	REVISED NOTES 2, 3 AND 4. CHANGED "EXISTING CONDUIT" TO "EXISTING PIPE".

SUPERSEDES	REFERENCES
B-3980	

VAULT INDEX NUMBER B-4095

SHEET 1 OF 1 SHEETS

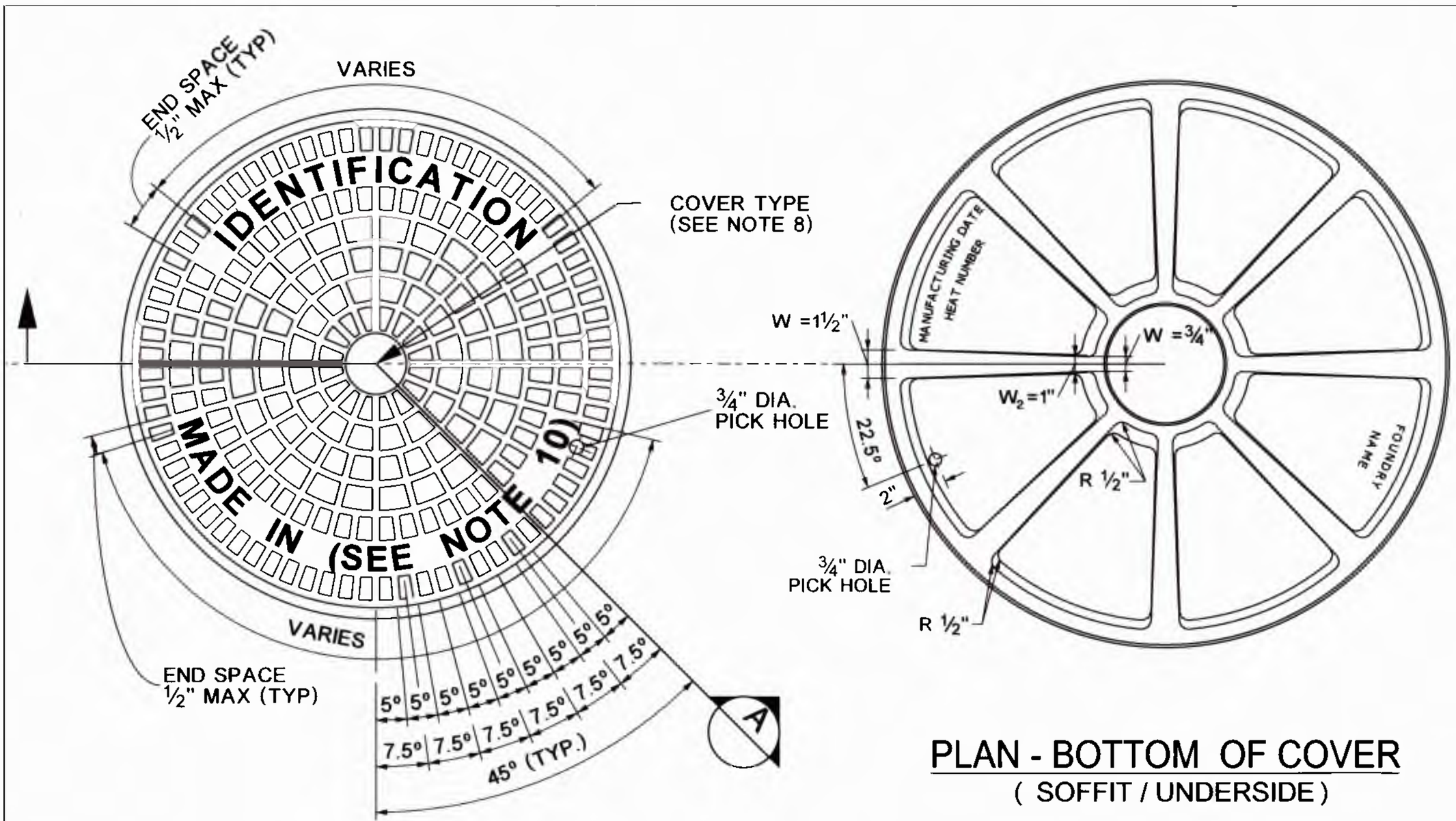

PLAN - TOP OF COVER
(TRAFFIC SIDE)

PLAN - BOTTOM OF COVER
(SOFFIT / UNDERSIDE)

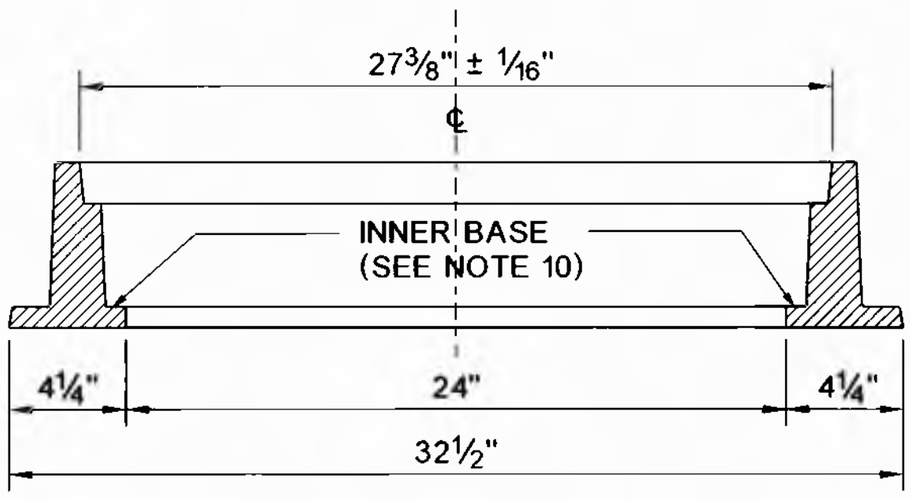

SECTION THRU FRAME



PLAN - TOP OF FRAME

MACHINE FINISH

BUREAU OF ENGINEERING
OFFICIAL RECORD

BUREAU OF ENGINEERING — DEPARTMENT OF PUBLIC WORKS — CITY OF LOS ANGELES

MAINTENANCE HOLE FRAME AND COVER 24-INCH

STANDARD PLAN
S-281-3

PREPARED	SUBMITTED	APPROVED
JONATHAN DE LEON BUREAU OF ENGINEERING CHECKED RAFFI A. MASSABKI, P.E. BUREAU OF ENGINEERING	6/16/11 SAMARA ALI-AHMAD, P.E. DATE ENGINEER OF DESIGN 6/16/11 KENNETH R. REDD, P.E. DATE DEPUTY CITY ENGINEER	6-16-11 GARY LEE MOORE, P.E. DATE CITY ENGINEER

REGISTERED PROFESSIONAL ENGINEER
GARY LEE MOORE
No. C-49446
Exp. 9.30.12
CIVIL
STATE OF CALIFORNIA

SUPERSEDES	REFERENCES
B-4114	S - 601

VAULT INDEX NUMBER B - 4664

SHEET 1 OF 3 SHEETS

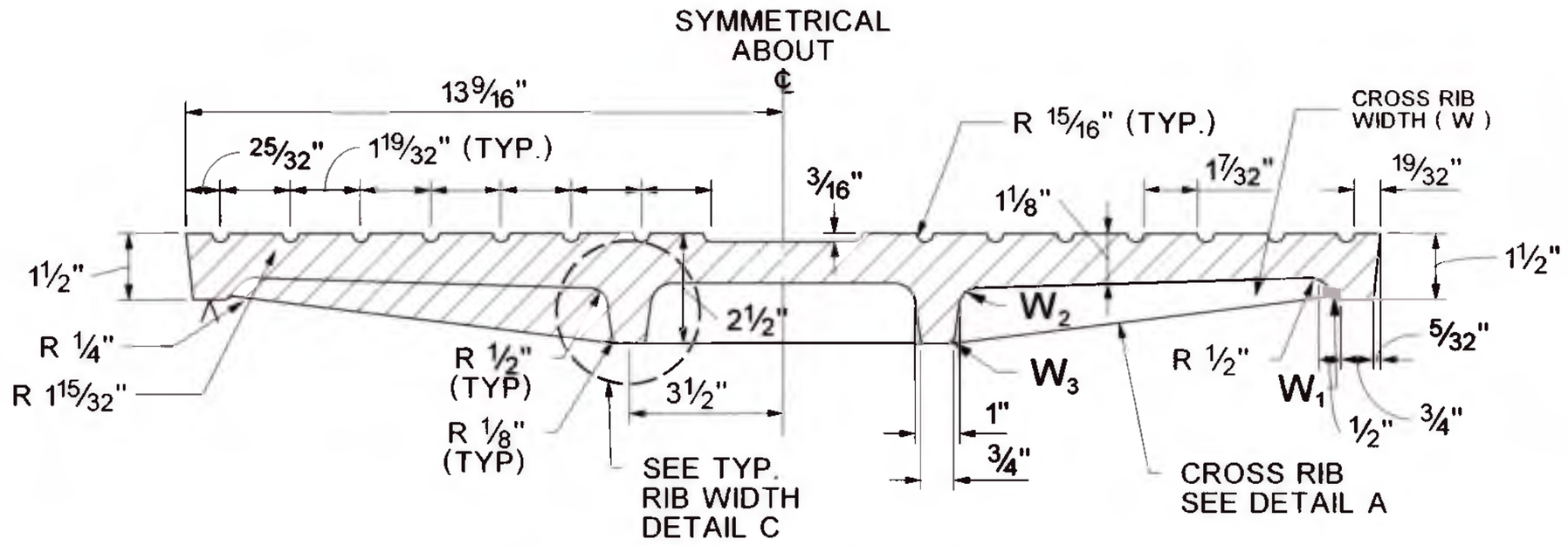

MACHINE FINISH

SECTION " A " COVER

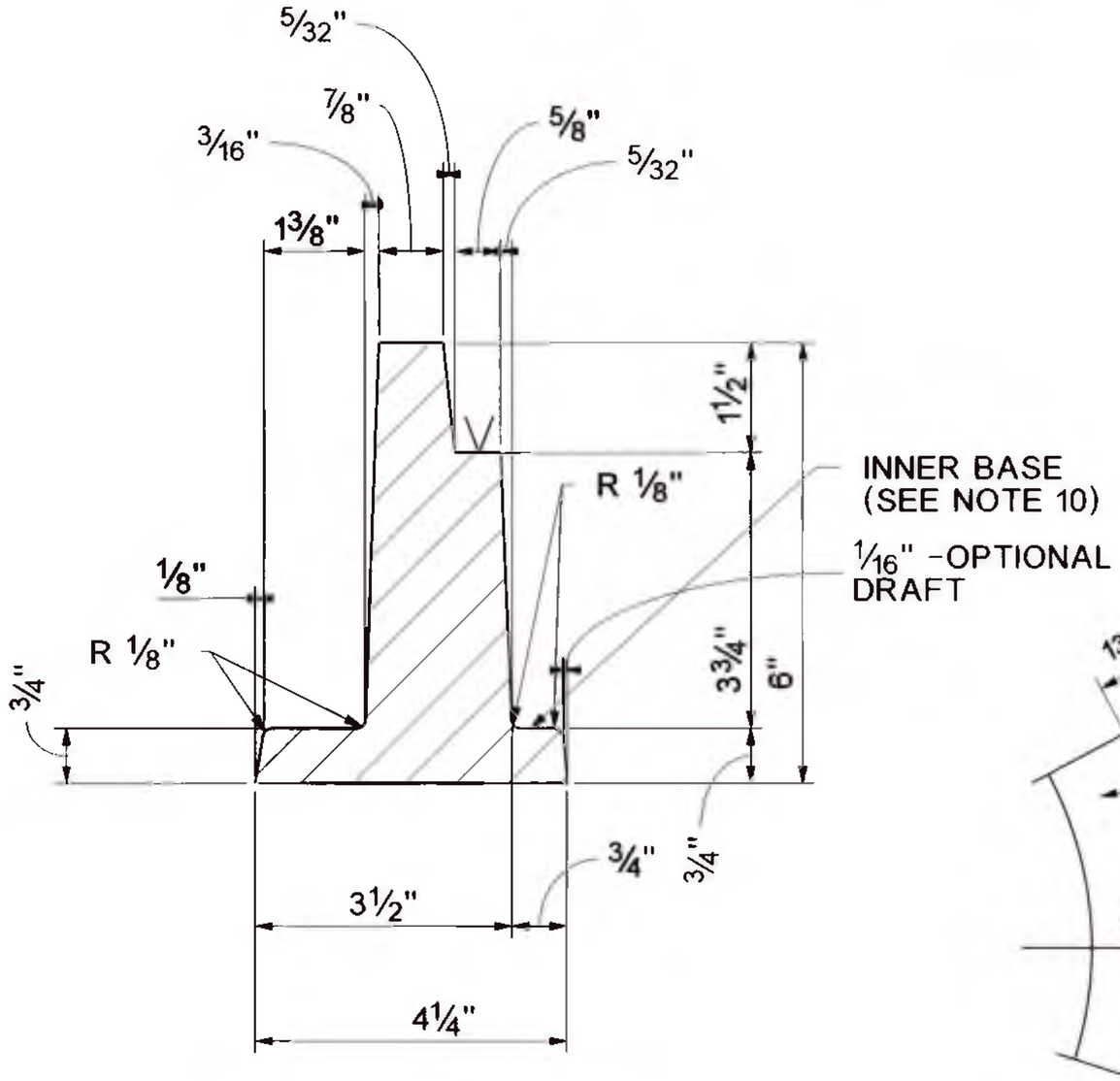

DETAIL OF FRAME

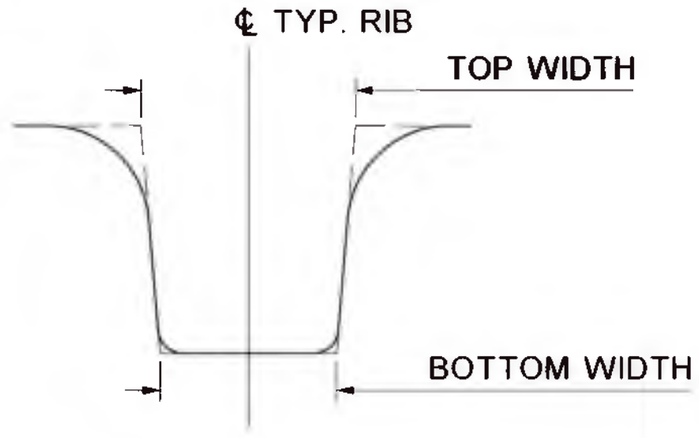

DETAIL C

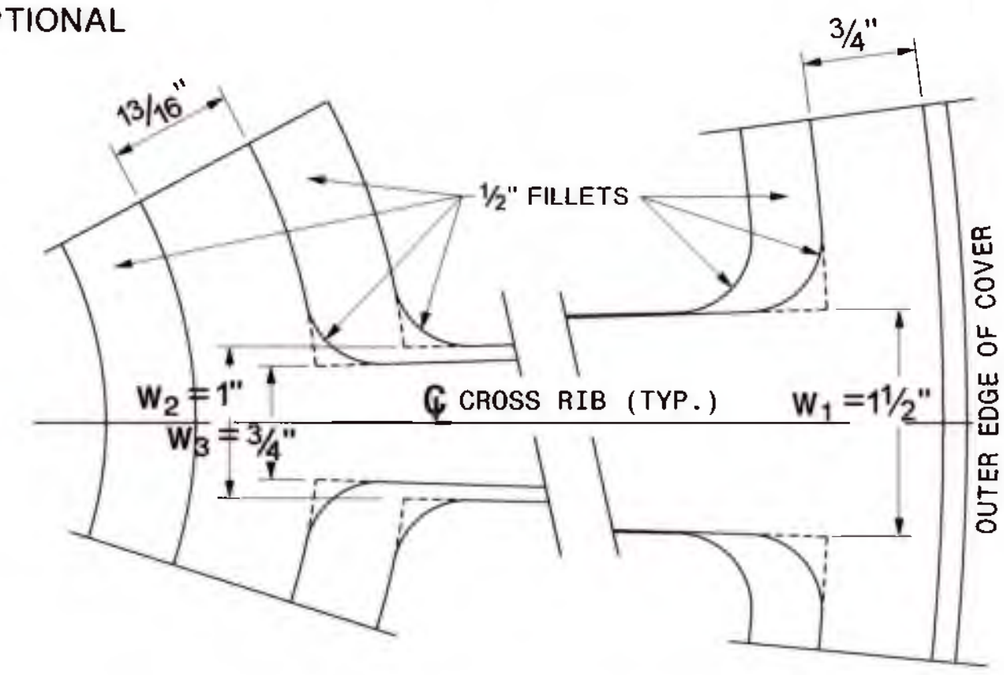

DETAIL A - CROSS RIB

LETTER HEIGHT VARIES

FIT TIGHT " S " OR " D " LETTERS AS APPLICABLE WITHIN SPECIFIED 3" DIA. CIRCLE

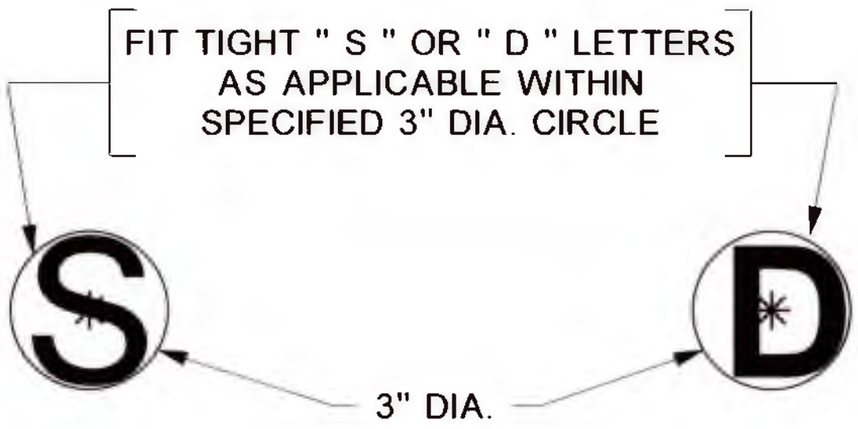

DETAIL B

BUREAU OF ENGINEERING
OFFICIAL RECORD

B-4664

NOTES

GENERAL

1. MAINTENANCE HOLE FRAME AND COVER SHALL CONFORM TO THE STANDARD SPECIFICATIONS, BROWN BOOK AND THE CITY OF LOS ANGELES STANDARD PLAN S-601 LATEST EDITION. IN CASE OF A CONFLICT BETWEEN THIS STANDARD PLAN "S-281-3" AND OTHER CITY OF LOS ANGELES STANDARD PLANS INCLUDING BUT NOT LIMITED TO STANDARD PLAN "S-601" LATEST EDITION, THIS STANDARD PLAN "S-281-3" SHALL GOVERN.

2. MAINTENANCE HOLE FRAME AND COVER SHALL BE CAST IRON CONFORMING TO SECTION 206-3 OF THE STANDARD SPECIFICATIONS AND SHALL RECEIVE AN ASPHALTIC COATING, AFTER FABRICATION EXCEPT MACHINED SURFACES, CONFORMING TO SECTION 206-3.6 OF THE STANDARD SPECIFICATIONS.

3. ALL HOLES IN CAST IRON SHALL BE DRILLED AFTER CASTING OR PLUGGED PRIOR TO CASTING. THEY SHALL NOT BE PUNCHED.

4. WEIGHT OF MAINTENANCE HOLE FRAME AND COVER SHALL BE PER THE FOLLOWING TABLE :

WEIGHT RANGE	**MINIMUM**		**MAXIMUM**
FRAME	250 LBS	-	275 LBS
COVER	175 LBS	-	195 LBS

TESTING

5. MAINTENANCE HOLE FRAME AND COVER SHALL BE TESTED FOR ACCURATE FIT, AND MARKED IN SETS PRIOR TO DELIVERY TO THE JOB SITE.

6. MAINTENANCE HOLE FRAME AND COVER SHALL BE TESTED FOR STRUCTURAL AND IMPACT LOADING, DEFLECTION, LONG TERM ABRASION AND SLIP RESISTANCE IN ACCORDANCE WITH THE CITY OF LOS ANGELES STANDARD PLAN S-601, LATEST EDITION.

7. PROVIDE FABRICATION / BATCH INSPECTION PER SUBSECTION 206-3.2 OF THE STANDARD SPECIFICATION. THE PROOF-LOAD FOR TEST METHOD B, SUBSECTION 206-3.2 OF THE STANDARD SPECIFICATION IS 52,000 LBS.

MARKINGS

8. MAINTENANCE HOLE COVERS FOR USE ON SEWER STRUCTURES SHALL BEAR THE LETTER "S" AND ON STORM DRAIN STRUCTURES THE LETTER "D" LOCATED AT THE CENTER OF THE COVER. SEE DETAIL B ON SHEET 2.

9. MARKINGS LOCATED ON FRAME AND TOP OF COVER SHALL BE FLUSH WITH FINISHED SURFACE. MARKINGS LOCATED ON THE COVER SOFFIT SHALL BE RAISED ABOVE THE ADJACENT FINISHED SURFACE. ETCHING, DIE STAMPING, ENGRAVING OR WELDING ON MARKINGS WILL NOT BE ACCEPTED.

10. COVER TYPE, IDENTIFICATION, FOUNDRY, HEAT NUMBER, MANUFACTURING DATE AND THE ENGLISH NAME OF COUNTRY OF ORIGIN PRECEDED BY "MADE IN" MARKINGS SHALL BE PER THE FOLLOWING TABLE. ALL MARKINGS SHALL BE RAISED, FLAT FACE LETTERS MARKED BY MEANS OF CAST-IN-MOLD LETTERING.

COVER		MARKINGS	FRAME
TOP SURFACE (Traffic side)	**BOTTOM SURFACE** (Soffit/ Underside)	DESCRIPTION, LOCATION AND SIZE * (**Height** x Line Width x Depth)	**INNER BASE** (Exposed side)
		IDENTIFICATION	
1-1/2" X 1/4" X 3/16"		" **PRIVATE** " or " **CITY OF LOS ANGELES** "	**5/16"** X 3/16" X 3/16"
		COUNTRY OF ORIGIN	
1-1/2" X 1/4" X 3/16"		**MADE IN** " **THE ENGLISH NAME OF COUNTRY OF ORIGIN** "	**5/16"** X 3/16" X 3/16"
		TYPE of MAINTENANCE HOLE	
Height X 1/4" X 3/16" (See Detail B)		" **S** " for Sewer MH " **D** " for Storm Drain MH	
		OTHER	
	5/16" X 3/16" X 3/16"	**FOUNDRY NAME** **MANUFACTURING DATE** and/ **HEAT NUMBER**	**5/16"** X 3/16" X 3/16"

*** Adjust spacing, kerning and/or mortising of letters as needed such that letters appear evenly spaced. The minimum spacing between words shall be ½ of the letter height specified.**

BUREAU OF ENGINEERING
OFFICIAL RECORD

STANDARD PLAN NO. S - 281 - 3	VAULT INDEX NUMBER B - 4664	SHEET 3 OF 3 SHEETS

B-4664

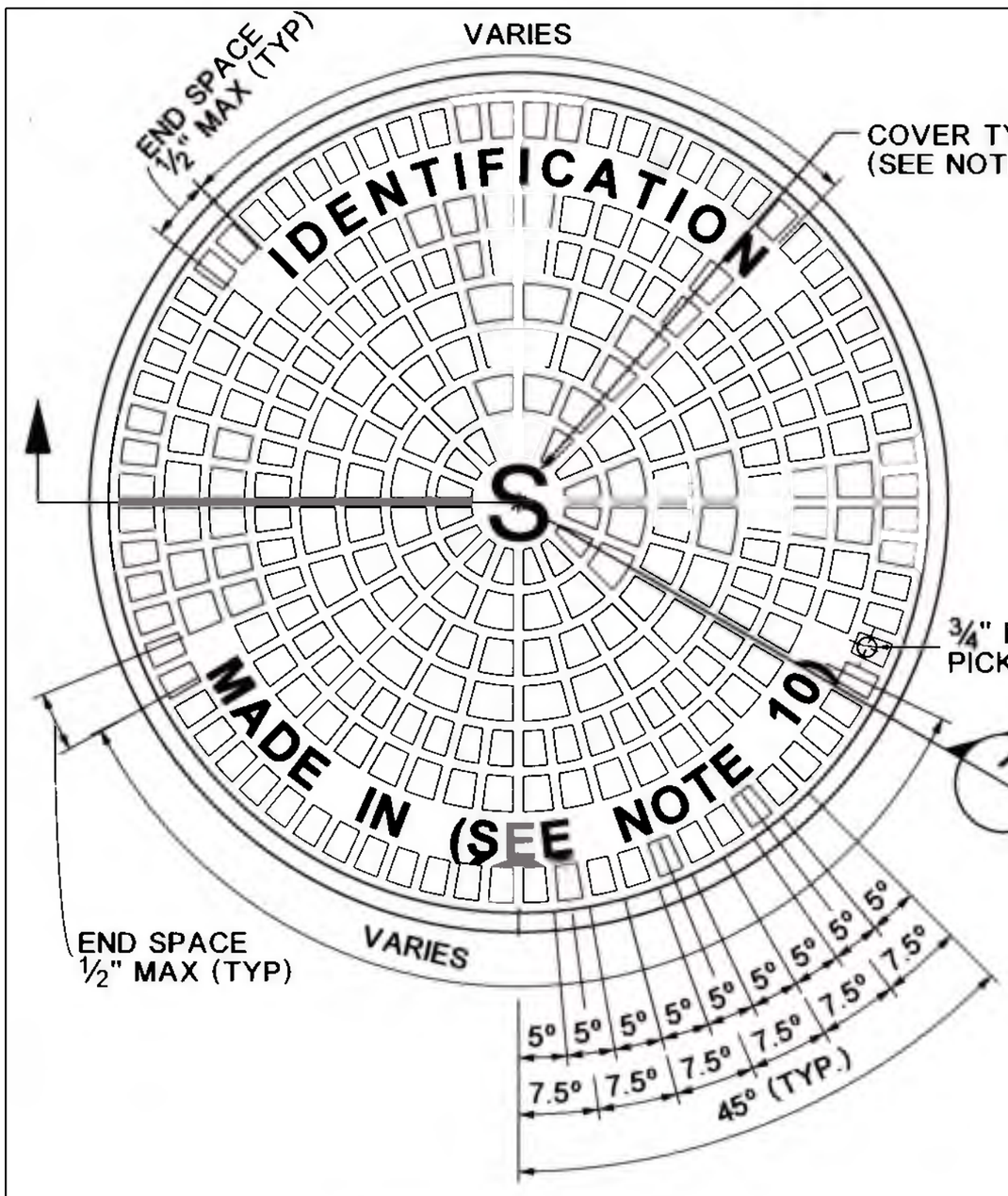

PLAN - TOP OF COVER

(TRAFFIC SIDE)

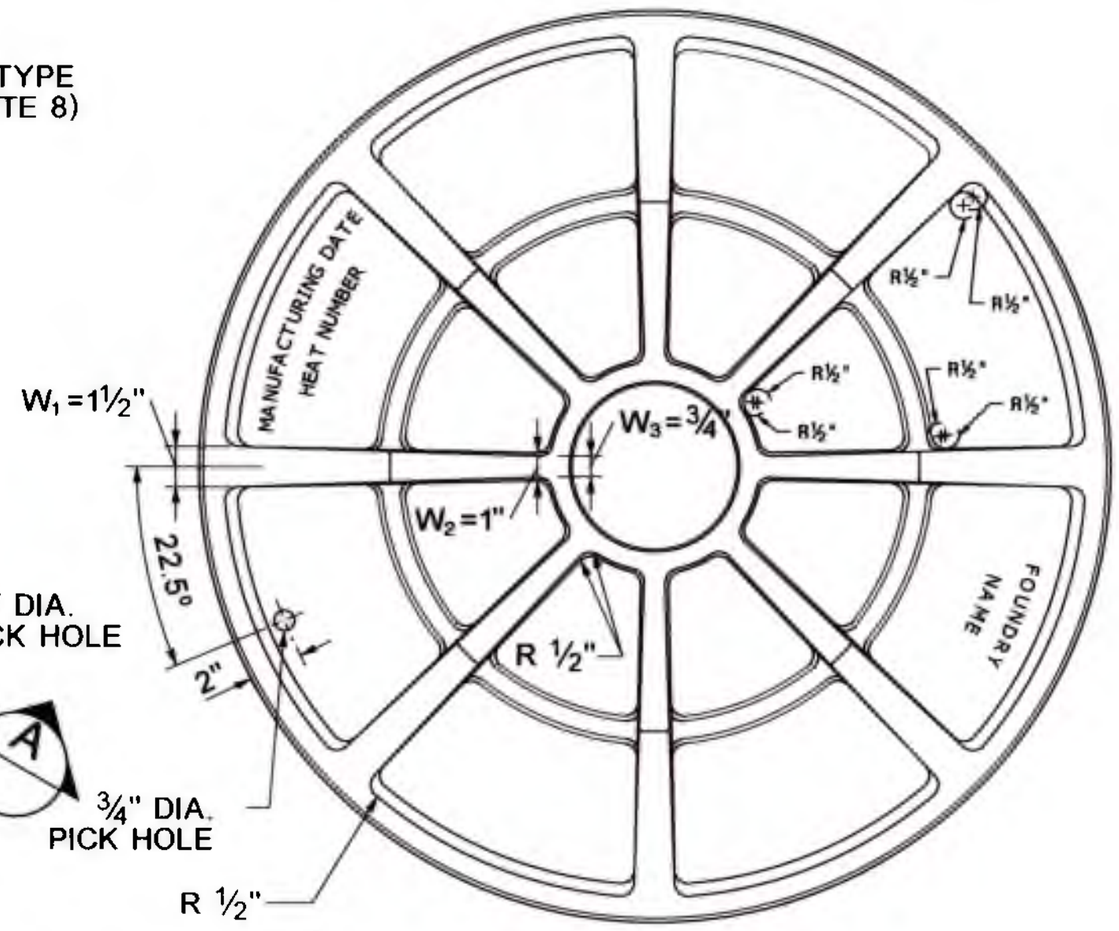

PLAN - BOTTOM OF COVER

(SOFFIT / UNDERSIDE)

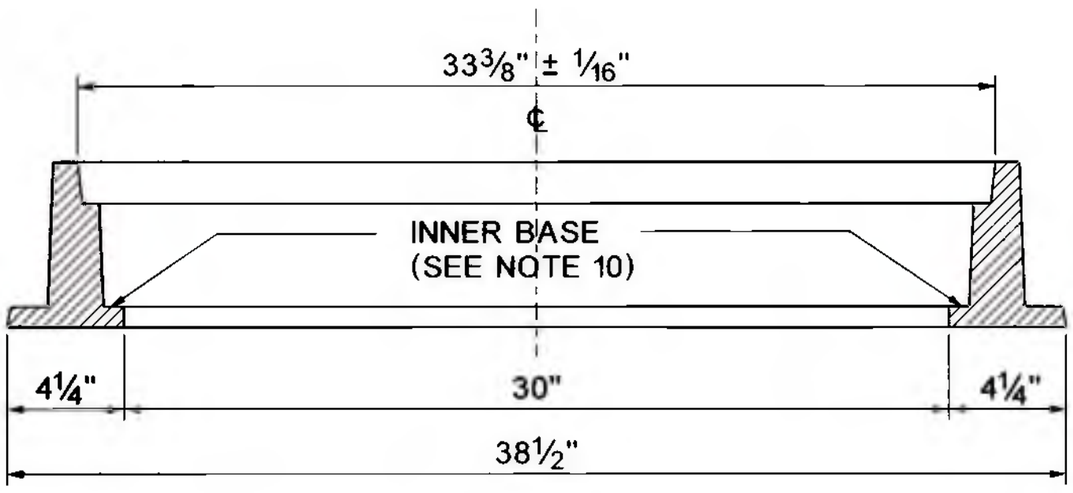

SECTION THRU FRAME

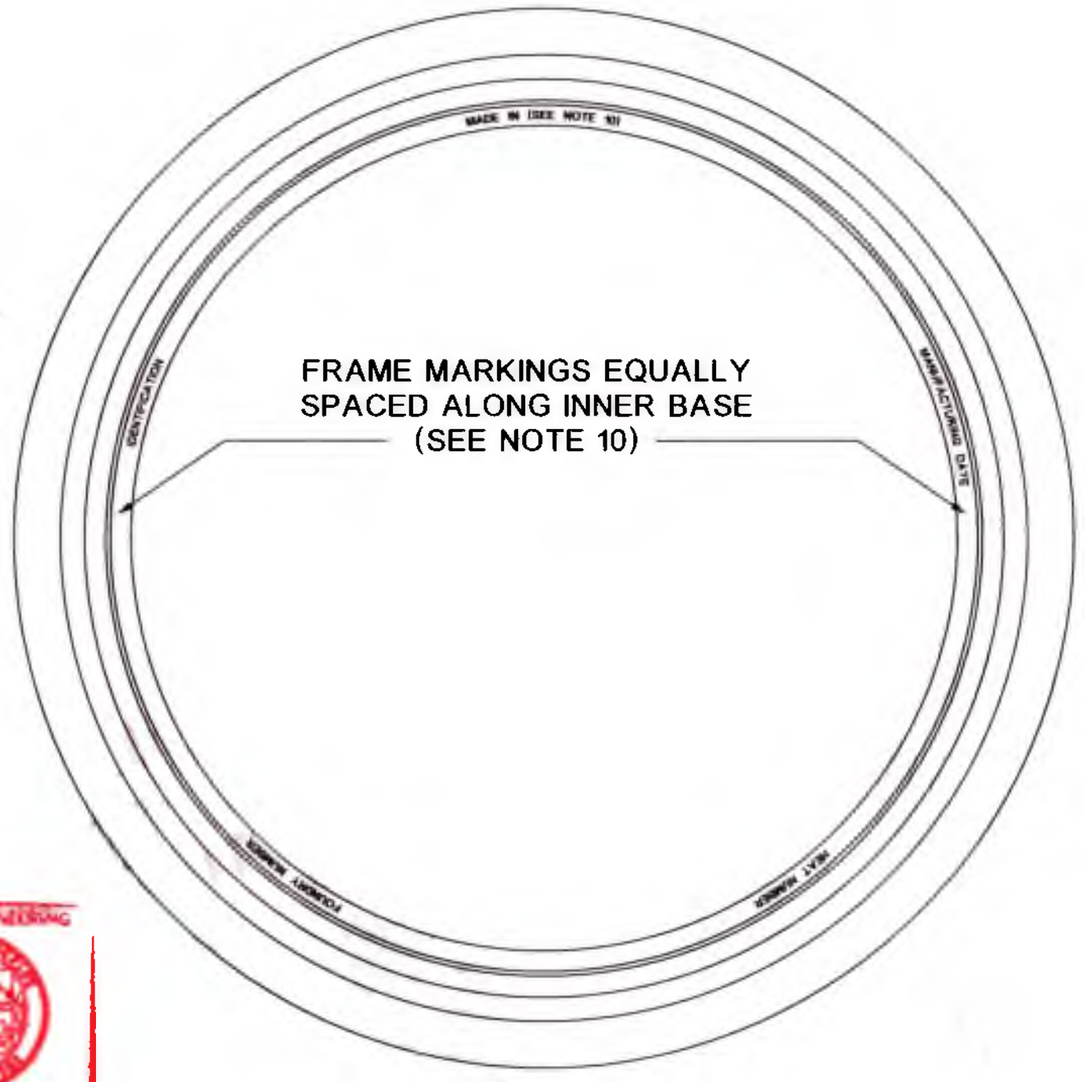

PLAN - TOP OF FRAME

MACHINE FINISH

BUREAU OF ENGINEERING — DEPARTMENT OF PUBLIC WORKS — CITY OF LOS ANGELES

MAINTENANCE HOLE FRAME AND COVER 30-INCH

STANDARD PLAN
S-283-3

PREPARED	SUBMITTED	APPROVED
JONATHAN DE LEON BUREAU OF ENGINEERING CHECKED RAFFI A. MASSABKI, P.E. BUREAU OF ENGINEERING	6/16/11 SAMARA ALI-AHMAD, P.E. DATE ENGINEER OF DESIGN 6/16/11 KENNETH R. REDD, P.E. DATE DEPUTY CITY ENGINEER	6-16-11 GARY LEE MOORE, P.E. DATE CITY ENGINEER

REGISTERED PROFESSIONAL ENGINEER — GARY LEE MOORE — No. C-49446 — Exp. 9.30.12 — CIVIL — STATE OF CALIFORNIA

SUPERSEDES	REFERENCES
B-4119	S - 601

VAULT INDEX NUMBER B - 4665

SHEET 1 OF 3 SHEETS

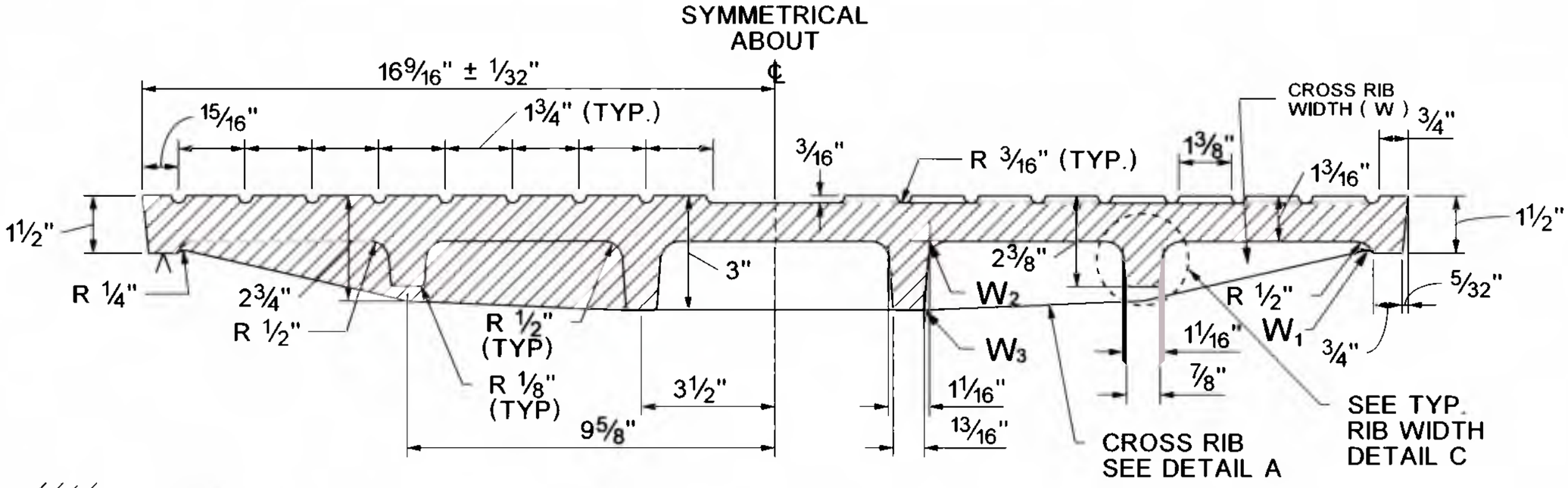

MACHINE FINISH

SECTION " A " COVER

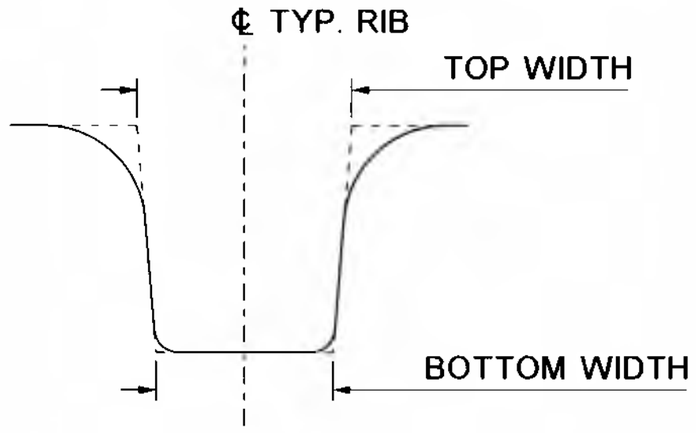

DETAIL C

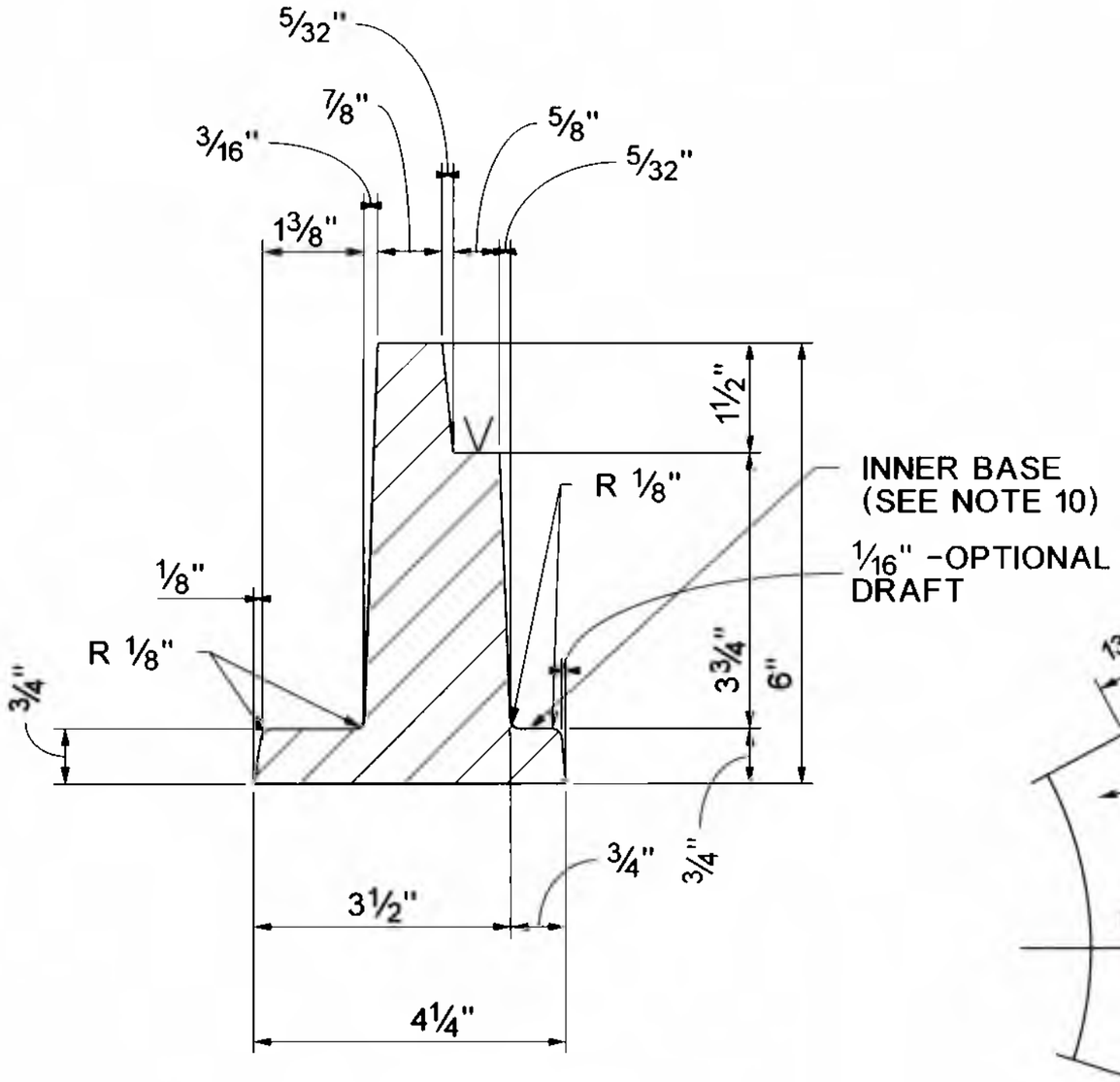

DETAIL OF FRAME

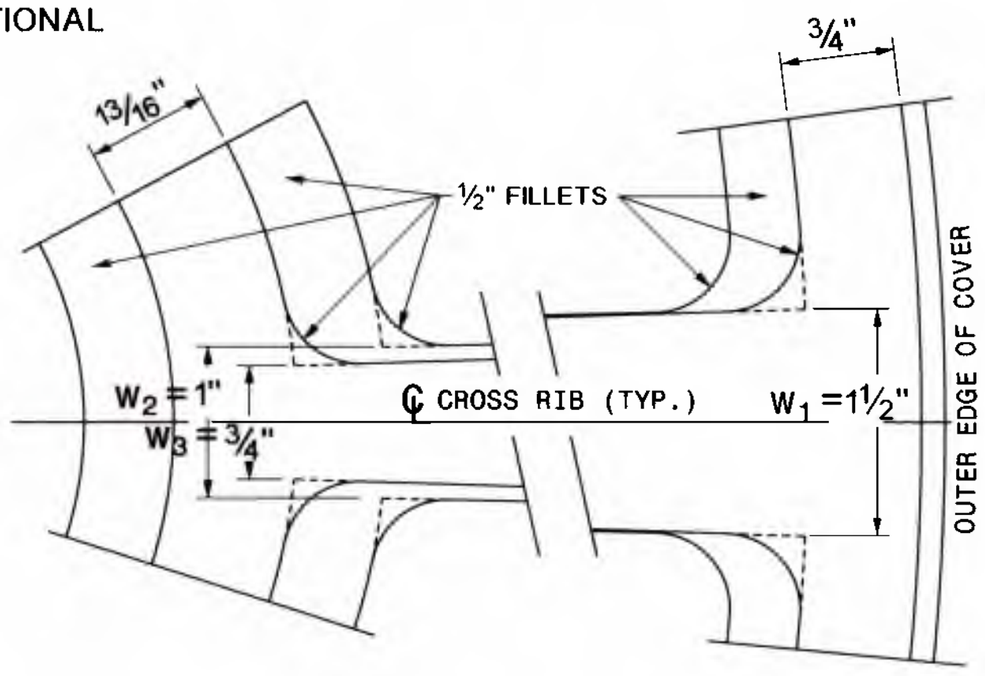

DETAIL A - CROSS RIB

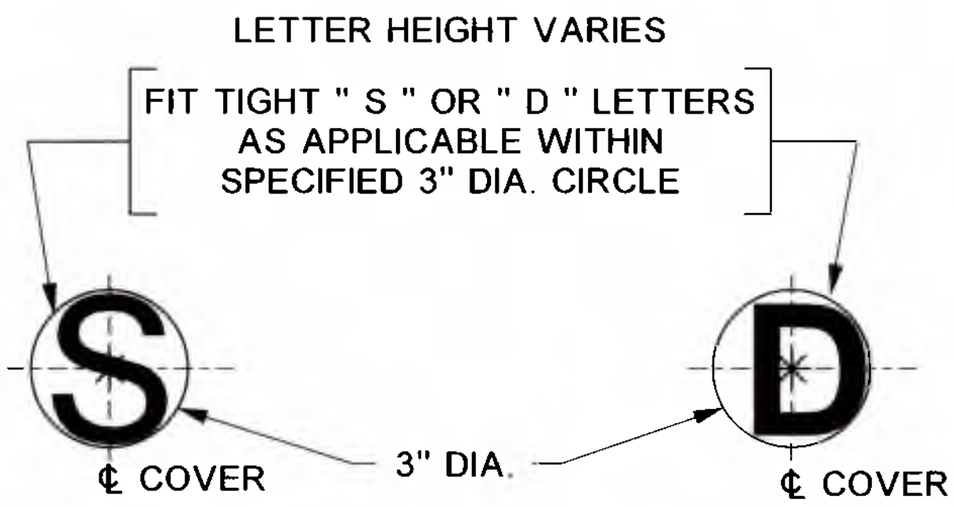

DETAIL B

BUREAU OF ENGINEERING
OFFICIAL RECORD

STANDARD PLAN NO. S - 283 - 3	VAULT INDEX NUMBER B - 4665	SHEET 2 OF 3 SHEETS

B - 4665

NOTES

GENERAL

1. MAINTENANCE HOLE FRAME AND COVER SHALL CONFORM TO THE STANDARD SPECIFICATIONS, BROWN BOOK AND THE CITY OF LOS ANGELES STANDARD PLAN S-601 LATEST EDITION. IN CASE OF A CONFLICT BETWEEN THIS STANDARD PLAN "S-283-3" AND OTHER CITY OF LOS ANGELES STANDARD PLANS INCLUDING BUT NOT LIMITED TO STANDARD PLAN "S-601" LATEST EDITION, THIS STANDARD PLAN "S-283-3" SHALL GOVERN.

2. MAINTENANCE HOLE FRAME AND COVER SHALL BE CAST IRON CONFORMING TO SECTION 206-3 OF THE STANDARD SPECIFICATIONS AND SHALL RECEIVE AN ASPHALTIC COATING, AFTER FABRICATION EXCEPT MACHINED SURFACES, CONFORMING TO SECTION 206-3.6 OF THE STANDARD SPECIFICATIONS.

3. ALL HOLES IN CAST IRON SHALL BE DRILLED AFTER CASTING OR PLUGGED PRIOR TO CASTING. THEY SHALL NOT BE PUNCHED.

4. WEIGHT OF MAINTENANCE HOLE FRAME AND COVER SHALL BE PER THE FOLLOWING TABLE :

WEIGHT RANGE	**MINIMUM**		**MAXIMUM**
FRAME	305 LBS	-	335 LBS
COVER	305 LBS	-	335 LBS

TESTING

5. MAINTENANCE HOLE FRAME AND COVER SHALL BE TESTED FOR ACCURATE FIT, AND MARKED IN SETS PRIOR TO DELIVERY TO THE JOB SITE.

6. MAINTENANCE HOLE FRAME AND COVER SHALL BE TESTED FOR STRUCTURAL AND IMPACT LOADING, DEFLECTION, LONG TERM ABRASION AND SLIP RESISTANCE IN ACCORDANCE WITH THE CITY OF LOS ANGELES STANDARD PLAN S-601, LATEST EDITION.

7. PROVIDE FABRICATION / BATCH INSPECTION PER SUBSECTION 206-3.2 OF THE STANDARD SPECIFICATION. THE PROOF-LOAD FOR TEST METHOD B, SUBSECTION 206-3.2 OF THE STANDARD SPECIFICATION IS 52,000 LBS.

MARKINGS

8. MAINTENANCE HOLE COVERS FOR USE ON SEWER STRUCTURES SHALL BEAR THE LETTER "S" AND ON STORM DRAIN STRUCTURES THE LETTER "D" LOCATED AT THE CENTER OF THE COVER. SEE DETAIL B ON SHEET 2.

9. MARKINGS LOCATED ON FRAME AND TOP OF COVER SHALL BE FLUSH WITH FINISHED SURFACE. MARKINGS LOCATED ON THE COVER SOFFIT SHALL BE RAISED ABOVE THE ADJACENT FINISHED SURFACE. ETCHING, DIE STAMPING, ENGRAVING OR WELDING ON MARKINGS WILL NOT BE ACCEPTED.

10. COVER TYPE, IDENTIFICATION, FOUNDRY, HEAT NUMBER, MANUFACTURING DATE AND THE ENGLISH NAME OF COUNTRY OF ORIGIN PRECEDED BY "MADE IN" MARKINGS SHALL BE PER THE FOLLOWING TABLE. ALL MARKINGS SHALL BE RAISED, FLAT FACE LETTERS MARKED BY MEANS OF CAST-IN-MOLD LETTERING.

COVER		MARKINGS	FRAME
TOP SURFACE (Traffic side)	**BOTTOM SURFACE** (Soffit/ Underside)	DESCRIPTION, LOCATION AND SIZE * (**Height** x Line Width x Depth)	**INNER BASE** (Exposed side)
IDENTIFICATION			
1-1/2" X 1/4" X 3/16"		" **PRIVATE** " or " **CITY OF LOS ANGELES** "	**5/16"** X 3/16" X 3/16"
COUNTRY OF ORIGIN			
1-1/2" X 1/4" X 3/16"		**MADE IN** " **THE ENGLISH NAME OF COUNTRY OF ORIGIN** "	**5/16"** X 3/16" X 3/16"
TYPE of MAINTENANCE HOLE			
Height X 1/4" X 3/16" (See Detail B)		" **S** " for Sewer MH " **D** " for Storm Drain MH	
OTHER			
	5/16" X 3/16" X 3/16"	**FOUNDRY NAME** **MANUFACTURING DATE** and/ **HEAT NUMBER**	**5/16"** X 3/16" X 3/16"

*** Adjust spacing, kerning and/or mortising of letters as needed such that letters appear evenly spaced. The minimum spacing between words shall be ½ of the letter height specified.**

BUREAU OF ENGINEERING
OFFICIAL RECORD

B - 4665
B - 4665

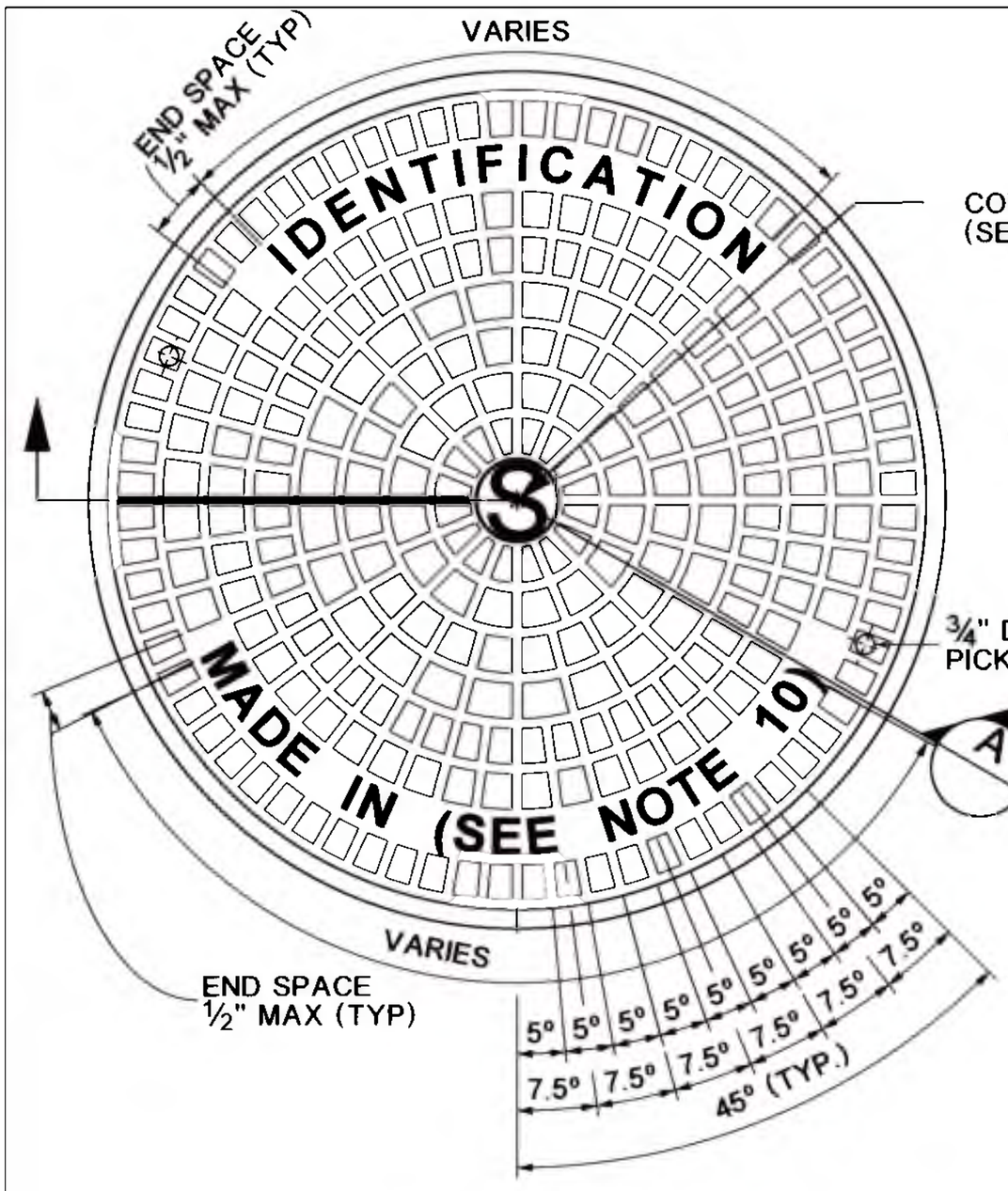

PLAN - TOP OF COVER

(TRAFFIC SIDE)

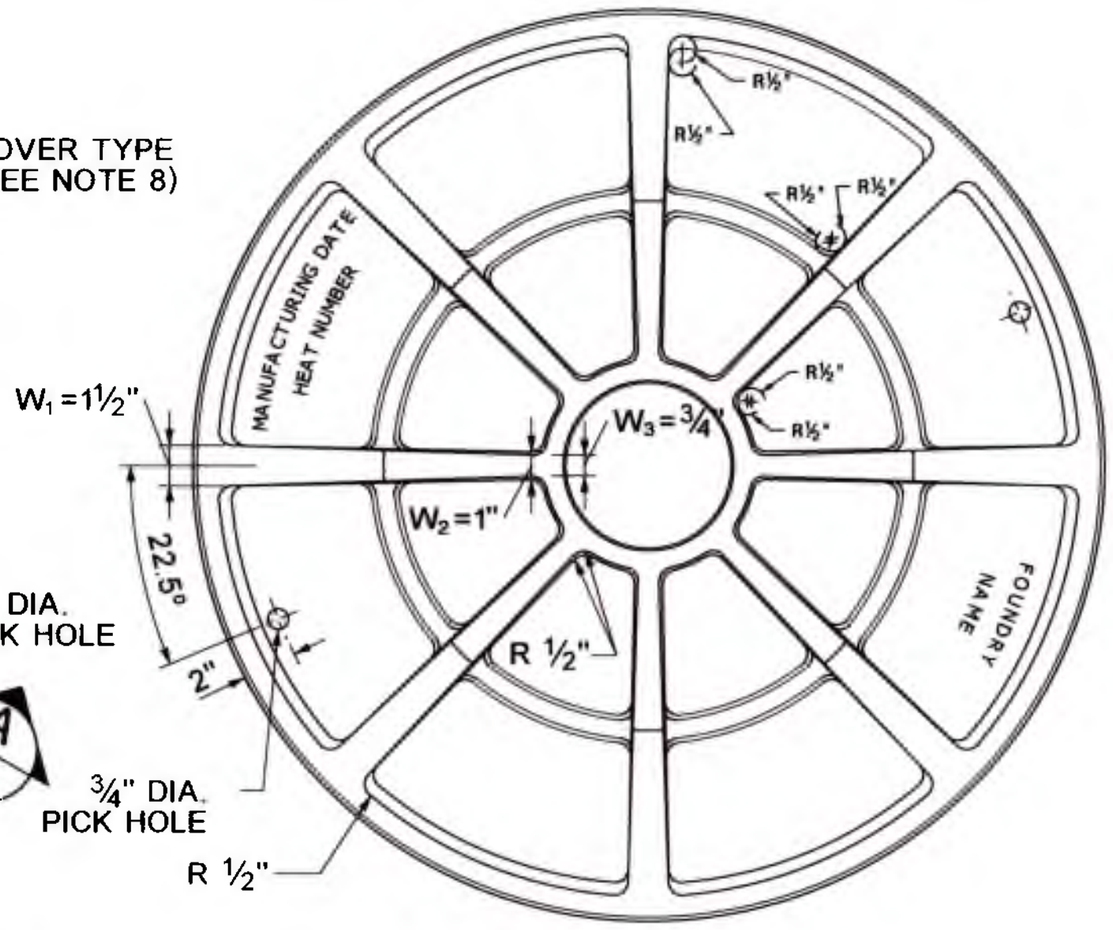

PLAN - BOTTOM OF COVER

(SOFFIT / UNDERSIDE)

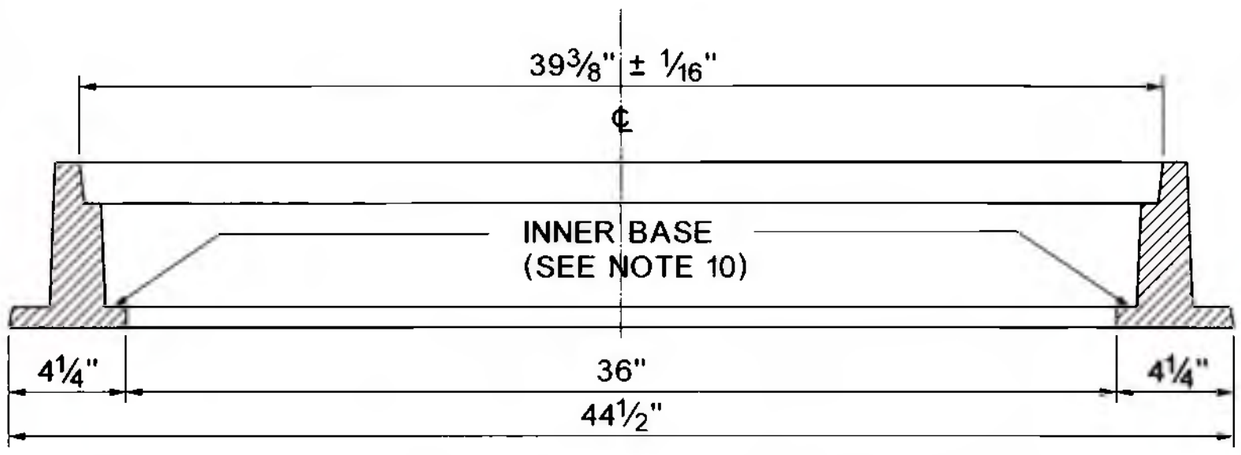

SECTION THRU FRAME

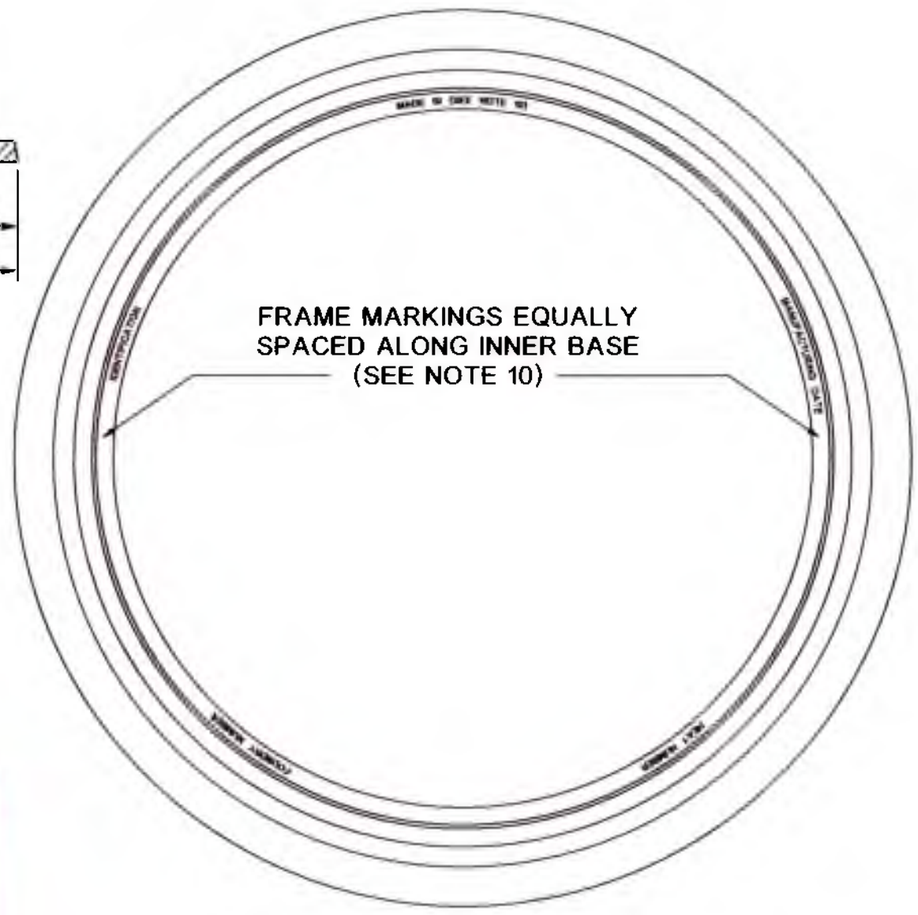

PLAN - TOP OF FRAME

MACHINE FINISH

BUREAU OF ENGINEERING — OFFICIAL RECORD

DEPARTMENT OF PUBLIC WORKS

BUREAU OF ENGINEERING

CITY OF LOS ANGELES

MAINTENANCE HOLE FRAME AND COVER 36-INCH

STANDARD PLAN
S-286-2

PREPARED	SUBMITTED	APPROVED
JONATHAN DE LEON BUREAU OF ENGINEERING CHECKED RAFFI A. MASSABKI, P.E. BUREAU OF ENGINEERING	6/16/11 SAMARA ALI-AHMAD, P.E. DATE ENGINEER OF DESIGN 6/16/11 KENNETH R. REDD, P.E. DATE DEPUTY CITY ENGINEER	6-16-11 GARY LEE MOORE, P.E. DATE CITY ENGINEER

REGISTERED PROFESSIONAL ENGINEER — GARY LEE MOORE — No. C-49446 — Exp. 9.30.12 — CIVIL — STATE OF CALIFORNIA

SUPERSEDES	REFERENCES
B-4120	S - 601

VAULT INDEX NUMBER B - 4666

SHEET 1 OF 3 SHEETS

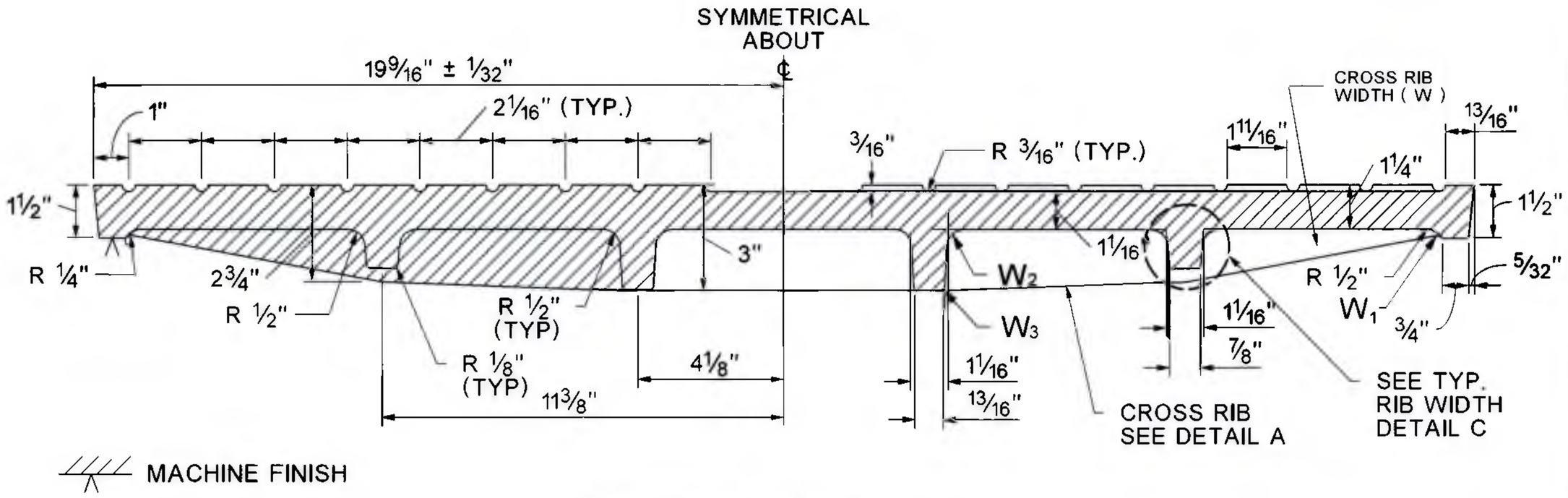

SECTION " A " COVER

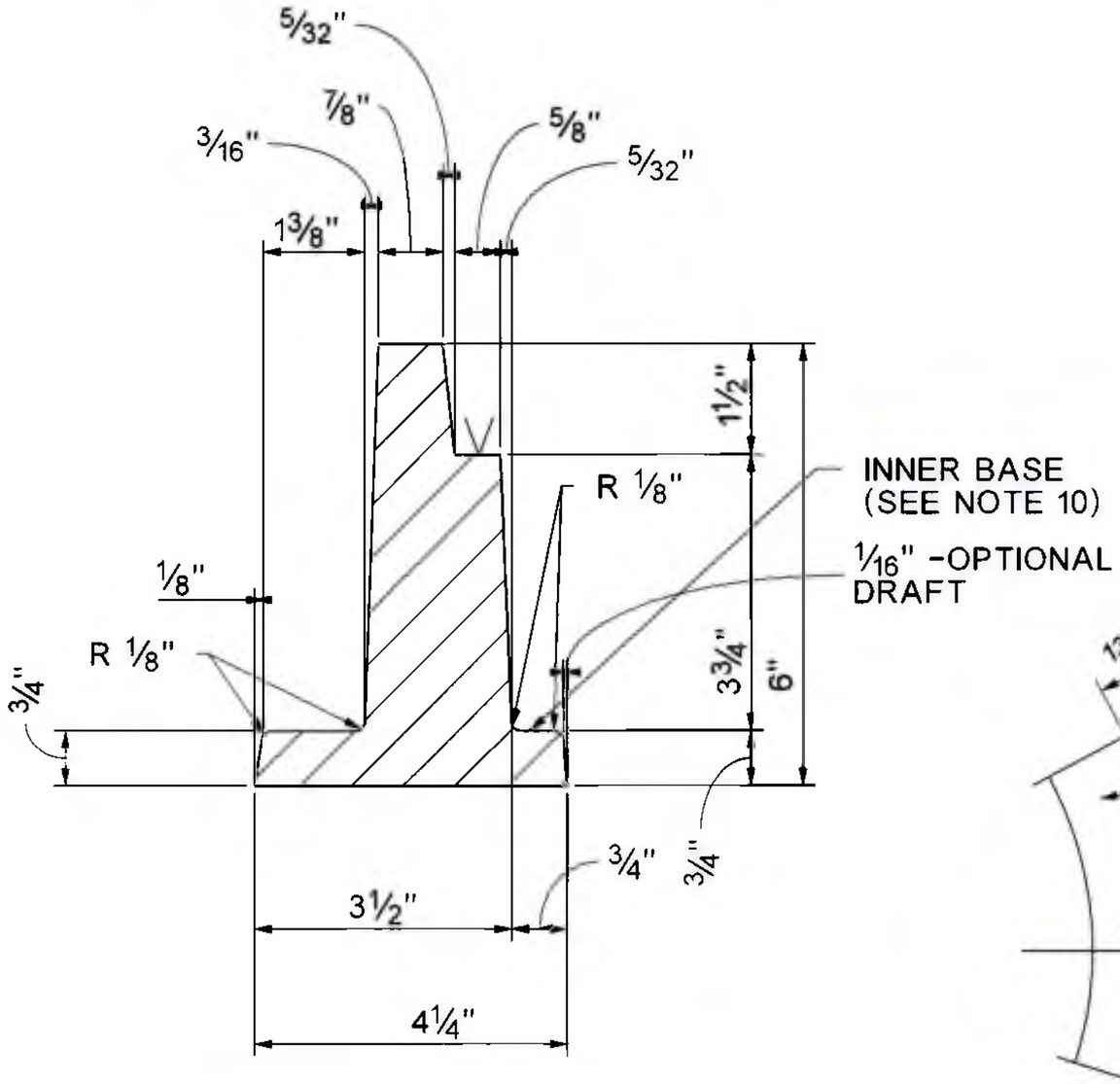

DETAIL OF FRAME

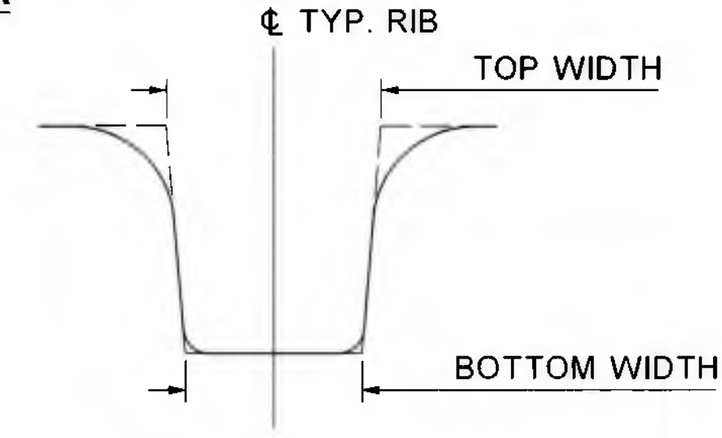

DETAIL C

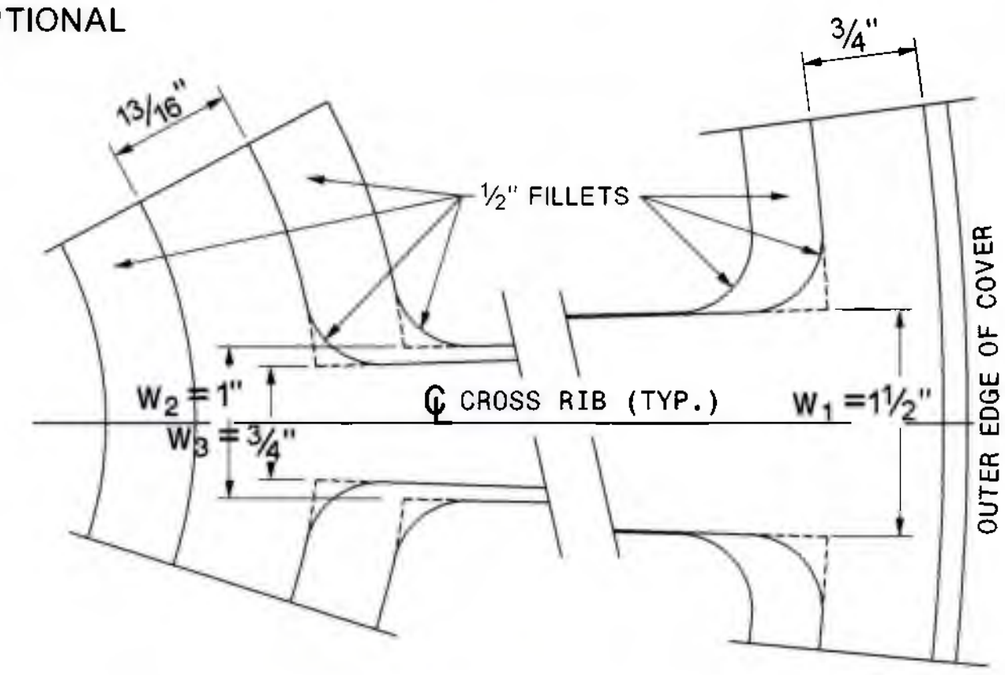

DETAIL A - CROSS RIB

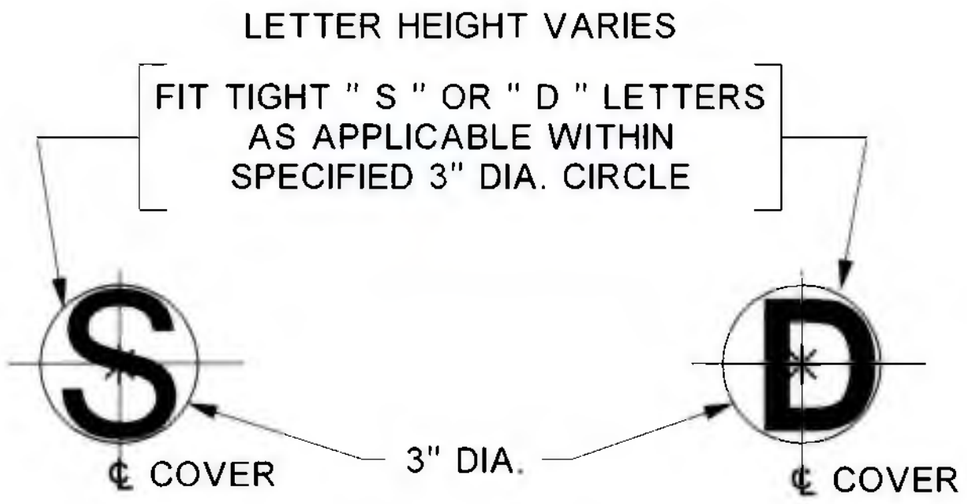

DETAIL B

BUREAU OF ENGINEERING
OFFICIAL RECORD

B - 4666

NOTES

GENERAL

1. MAINTENANCE HOLE FRAME AND COVER SHALL CONFORM TO THE STANDARD SPECIFICATIONS, BROWN BOOK AND THE CITY OF LOS ANGELES STANDARD PLAN S-601 LATEST EDITION. IN CASE OF A CONFLICT BETWEEN THIS STANDARD PLAN "S-286-2" AND OTHER CITY OF LOS ANGELES STANDARD PLANS INCLUDING BUT NOT LIMITED TO STANDARD PLAN "S-601" LATEST EDITION, THIS STANDARD PLAN "S-286-2" SHALL GOVERN.

2. MAINTENANCE HOLE FRAME AND COVER SHALL BE CAST IRON CONFORMING TO SECTION 206-3 OF THE STANDARD SPECIFICATIONS AND SHALL RECEIVE AN ASPHALTIC COATING, AFTER FABRICATION EXCEPT MACHINED SURFACES, CONFORMING TO SECTION 206-3.6 OF THE STANDARD SPECIFICATIONS.

3. ALL HOLES IN CAST IRON SHALL BE DRILLED AFTER CASTING OR PLUGGED PRIOR TO CASTING. THEY SHALL NOT BE PUNCHED.

4. WEIGHT OF MAINTENANCE HOLE FRAME AND COVER SHALL BE PER THE FOLLOWING TABLE :

WEIGHT RANGE	**MINIMUM**		**MAXIMUM**
FRAME	360 LBS	-	395 LBS
COVER	425 LBS	-	470 LBS

TESTING

5. MAINTENANCE HOLE FRAME AND COVER SHALL BE TESTED FOR ACCURATE FIT, AND MARKED IN SETS PRIOR TO DELIVERY TO THE JOB SITE.

6. MAINTENANCE HOLE FRAME AND COVER SHALL BE TESTED FOR STRUCTURAL AND IMPACT LOADING, DEFLECTION, LONG TERM ABRASION AND SLIP RESISTANCE IN ACCORDANCE WITH THE CITY OF LOS ANGELES STANDARD PLAN S-601, LATEST EDITION.

7. PROVIDE FABRICATION / BATCH INSPECTION PER SUBSECTION 206-3.2 OF THE STANDARD SPECIFICATION. THE PROOF-LOAD FOR TEST METHOD B, SUBSECTION 206-3.2 OF THE STANDARD SPECIFICATION IS 52,000 LBS.

MARKINGS

8. MAINTENANCE HOLE COVERS FOR USE ON SEWER STRUCTURES SHALL BEAR THE LETTER "S" AND ON STORM DRAIN STRUCTURES THE LETTER "D" LOCATED AT THE CENTER OF THE COVER. SEE DETAIL B ON SHEET 2.

9. MARKINGS LOCATED ON FRAME AND TOP OF COVER SHALL BE FLUSH WITH FINISHED SURFACE. MARKINGS LOCATED ON THE COVER SOFFIT SHALL BE RAISED ABOVE THE ADJACENT FINISHED SURFACE. ETCHING, DIE STAMPING, ENGRAVING OR WELDING ON MARKINGS WILL NOT BE ACCEPTED.

10. COVER TYPE, IDENTIFICATION, FOUNDRY, HEAT NUMBER, MANUFACTURING DATE AND THE ENGLISH NAME OF COUNTRY OF ORIGIN PRECEDED BY "MADE IN" MARKINGS SHALL BE PER THE FOLLOWING TABLE. ALL MARKINGS SHALL BE RAISED, FLAT FACE LETTERS MARKED BY MEANS OF CAST-IN-MOLD LETTERING.

COVER		MARKINGS	FRAME
TOP SURFACE (Traffic side)	**BOTTOM SURFACE** (Soffit/ Underside)	DESCRIPTION, LOCATION AND SIZE * (**Height** x Line Width x Depth)	**INNER BASE** (Exposed side)
		IDENTIFICATION	
1-1/2" X 1/4" X 3/16"		" **PRIVATE** " or " **CITY OF LOS ANGELES** "	**5/16"** X 3/16" X 3/16"
		COUNTRY OF ORIGIN	
1-1/2" X 1/4" X 3/16"		**MADE IN** " **THE ENGLISH NAME OF COUNTRY OF ORIGIN** "	**5/16"** X 3/16" X 3/16"
		TYPE of MAINTENANCE HOLE	
Height X 1/4" X 3/16" (See Detail B)		" **S** " for Sewer MH " **D** " for Storm Drain MH	
		OTHER	
	5/16" X 3/16" X 3/16"	**FOUNDRY NAME** **MANUFACTURING DATE** and/ **HEAT NUMBER**	**5/16"** X 3/16" X 3/16"

*** Adjust spacing, kerning and/or mortising of letters as needed such that letters appear evenly spaced. The minimum spacing between words shall be ½ of the letter height specified.**

BUREAU OF ENGINEERING
OFFICIAL RECORD

STANDARD PLAN NO. S - 286 - 2	VAULT INDEX NUMBER B - 4666	SHEET 3 OF 3 SHEETS

B - 4666

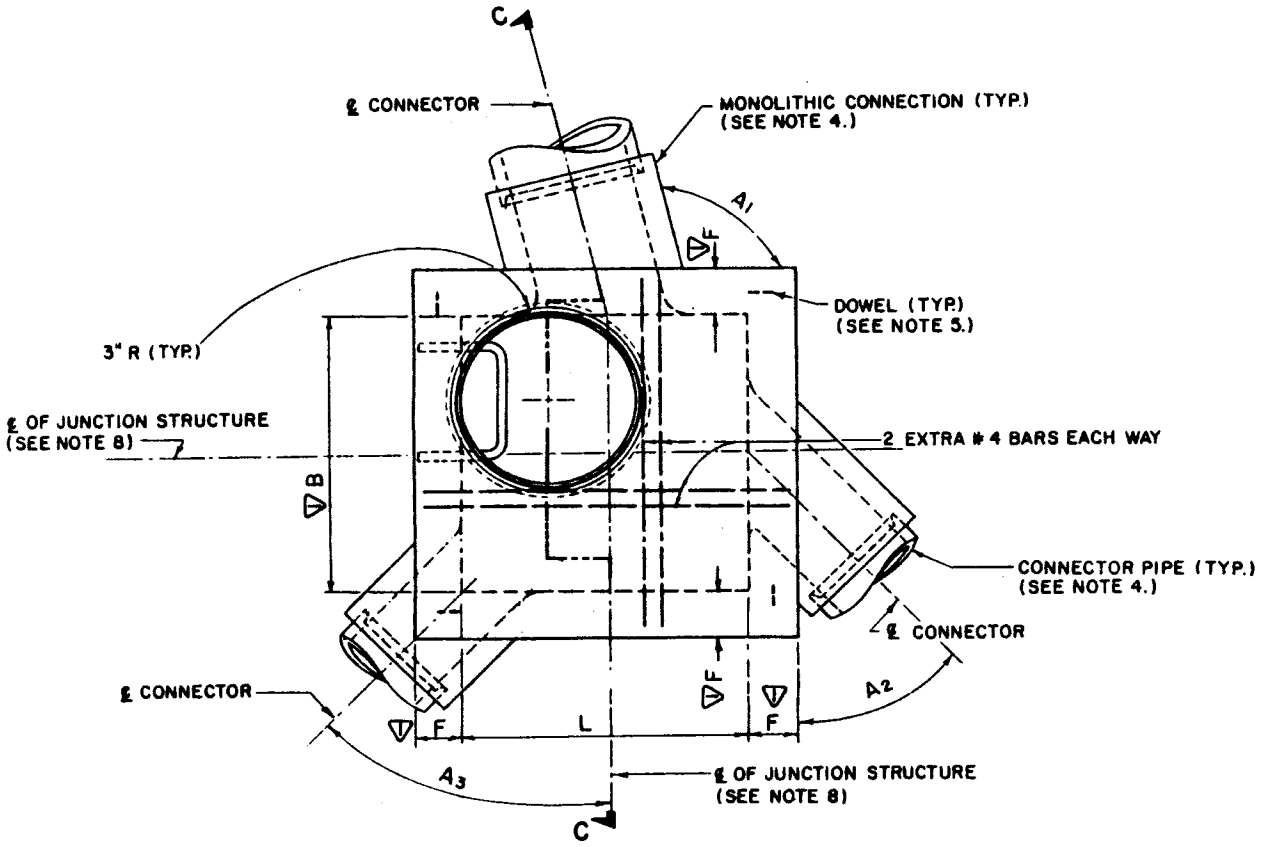

PLAN

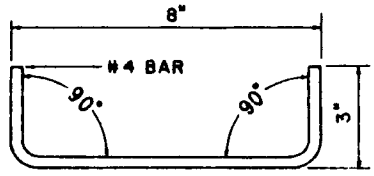

DOWEL DETAIL

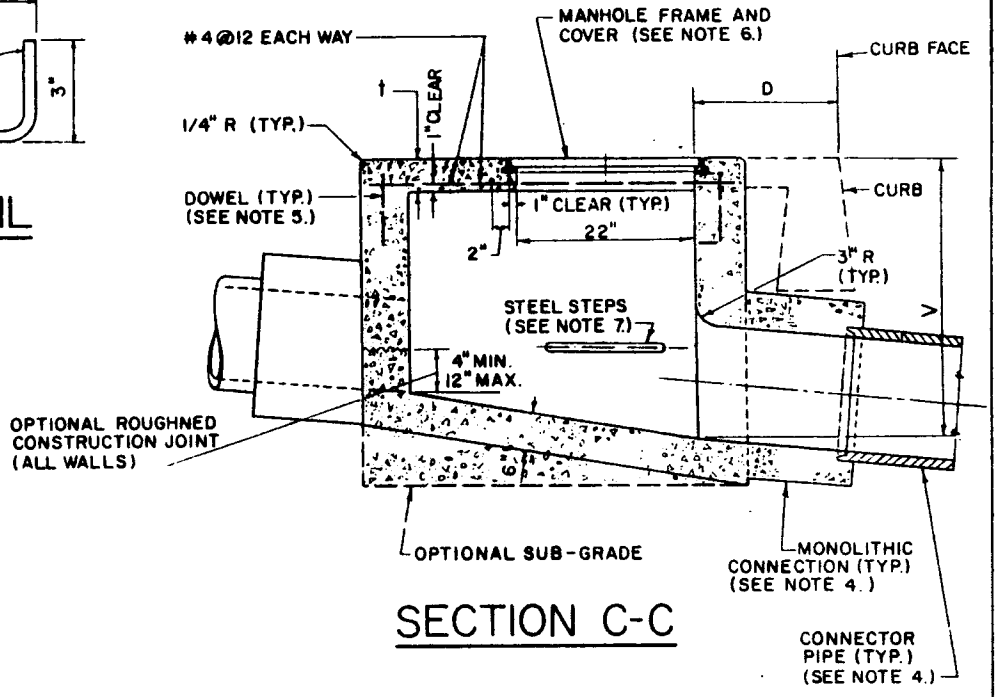

SECTION C-C

DEPARTMENT OF PUBLIC WORKS

BUREAU OF ENGINEERING

CITY OF LOS ANGELES

JUNCTION STRUCTURE "A"

STANDARD PLAN
S-300-1

SUBMITTED Jan 2 1981
Alyson F. Luce
ENGINEER OF DESIGN
Robert E. Glaus
DEPUTY ENGINEER

APPROVED Jan. 16 1981
Donald C. Tillman
CITY ENGINEER

DESIGNED BY	DRAWN BY	CHECKED BY
LIE	RGM	LJM

REVISIONS

NO	DATE	DESCRIPTION	ENG'R OF DESIGN	CITY ENG'R
▽	10-1-81	REDEFINE "B", CHANGE THICKNESS TO "F"	Alyson F. Luce	D.C. Tillman

SUPERSEDES	REFERENCES
B-2869 B-4009	S-331 S-345 S-346 S-348

VAULT INDEX NUMBER B-4024

SHEET 1 OF 2 SHEETS

NOTES

1. CONCRETE SHALL BE CLASS 560-C-3250 PER SECTION 201 OF THE STANDARD SPECIFICATIONS. WHERE THE JUNCTION STRUCTURE IS TO BE CONSTRUCTED WITHIN THE LIMITS OF OR IS CONTIGUOUS TO A PROPOSED SIDEWALK, THE TOP SLAB OF THE JUNCTION STRUCTURE SHALL BE PLACED MONOLITHIC WITH THE SIDEWALK, AND THE SIDEWALK SHALL BE PROVIDED WITH A WEAKENED PLANE OR A CONTINUOUS 1-INCH DEEP SAW CUT AROUND THE EXTERNAL PERIMETER OF THE JUNCTION STRUCTURE WALLS, INCLUDING ACROSS THE FULL WIDTH OF THE SIDEWALK. THE SURFACE OF ALL EXPOSED CONCRETE SHALL CONFORM IN SLOPE, GRADE, COLOR, FINISH, AND SCORING TO EXISTING OR PROPOSED SIDEWALK ADJACENT TO THE JUNCTION STRUCTURE.
2. ALL CURVED CONCRETE SURFACES SHALL BE FORMED BY CURVED FORMS, AND SHALL NOT BE SHAPED BY PLASTERING.
3. THE FLOOR OF THE JUNCTION STRUCTURE SHALL BE GIVEN A STEEL TROWEL FINISH AND SHALL HAVE A SLOPE OF 1:12 IN EACH DIRECTION AND SLOPED TO THE OUTLET.
4. CONNECTOR PIPES SHALL BE PLACED AS INDICATED ON THE PROJECT PLANS. THE CONNECTOR PIPE CENTER LINE SHALL INTERSECT THE MIDPOINT OF THE INSIDE FACE OF THE INDICATED JUNCTION STRUCTURE WALL, OR IF INDICATED AT A CORNER, IT SHALL INTERSECT THE INSIDE CORNER. PIPE MAY BE CUT AND TRIMMED AT A SKEW NECESSARY TO INSURE MINIMUM 3-INCH EMBEDMENT, ALL AROUND, WITHIN THE JUNCTION STRUCTURE WALLS, AND 3-INCH RADIUS OF ROUNDING OF STRUCTURE CONCRETE, ALL AROUND, ADJACENT TO PIPE ENDS. A MONOLITHIC CONNECTION PER STANDARD PLAN S-331 SHALL BE USED TO JOIN THE CONNECTOR PIPE TO THE JUNCTION STRUCTURE WHENEVER ANGLE "A" IS LESS THAN 70 DEGREES OR GREATER THAN 110 DEGREES, OR WHENEVER THE CONNECTOR PIPE IS LOCATED AT A CORNER. THE OPTIONAL USE OF A MONOLITHIC CONNECTION IN ANY CASE IS PERMITTED. MONOLITHIC CONNECTIONS MAY BE EXTENDED UP TO 4 FEET IN LENGTH TO AVOID CUTTING STANDARD LENGTHS OF PIPE. CONNECTOR PIPE MAY NOT BE CUT FOR ANY REASON EXCEPT TO AVOID CONSTRUCTION OF A MONOLITHIC CONNECTION.
5. DOWELS SHALL BE REQUIRED AT EACH CORNER WHEN THE TOP SLAB IS NOT PLACED MONOLITHICALLY WITH A SIDEWALK. WHEN THE TOP SLAB IS PLACED MONOLITHIC WITH ADJACENT SIDEWALK, THE DOWELS MAY BE OMITTED.
6. THE MANHOLE FRAME AND COVER SHALL CONFORM TO STANDARD PLAN S-346, EXCEPT THAT, WHERE THE PROJECT PLANS INDICATE SPECIAL SIDEWALK, SQUARE MANHOLE FRAME AND PAN COVER AND IDENTIFICATION PLATE CONFORMING TO STANDARD PLAN S-345 SHALL BE INSTALLED. THE FRAME AND COVER SHALL BE INSTALLED IN A CORNER AS SHOWN HEREON, AND IN SUCH A MANNER THAT THE INSIDE OF THE FRAME SHALL BE FLUSH WITH THE INSIDE OF TWO WALLS, ONE OF WHICH SHALL CONTAIN THE OUTLET PIPE CONNECTION.
7. STEPS SHALL CONFORM TO STANDARD PLAN S-348 AND SHALL BE DIRECTLY BELOW THE MANHOLE FRAME AND COVER.
8. THE INTERSECTION OF THE CENTER LINES OF THE STRUCTURE SHALL BE CONSTRUCTED AT THE LOCATION INDICATED ON THE PROJECT PLANS. WHEN THE STRUCTURE IS CONSTRUCTED ADJACENT TO A CURB ON A CURVE, ONE OF THE STRUCTURE CENTER LINES SHALL BE RADIAL TO THE CURVE.
9. DIMENSIONS:
   B = 3'-0", L = 3'-0"
   F = 6"
   V = 3'-6"
   D = 1'-6"
   A = THE ANGLE, IN DEGREES, FORMED BY THE CENTER LINE OF THE CONNECTOR PIPE AND THE JUNCTION STRUCTURE WALL TO WHICH THE CONNECTOR PIPE IS ATTACHED. (SEE PROJECT PLANS.)
   t = 4-1/2" FOR STANDARD SIDEWALK, AND 6" FOR SPECIAL SIDEWALK. (SEE PROJECT PLANS.)

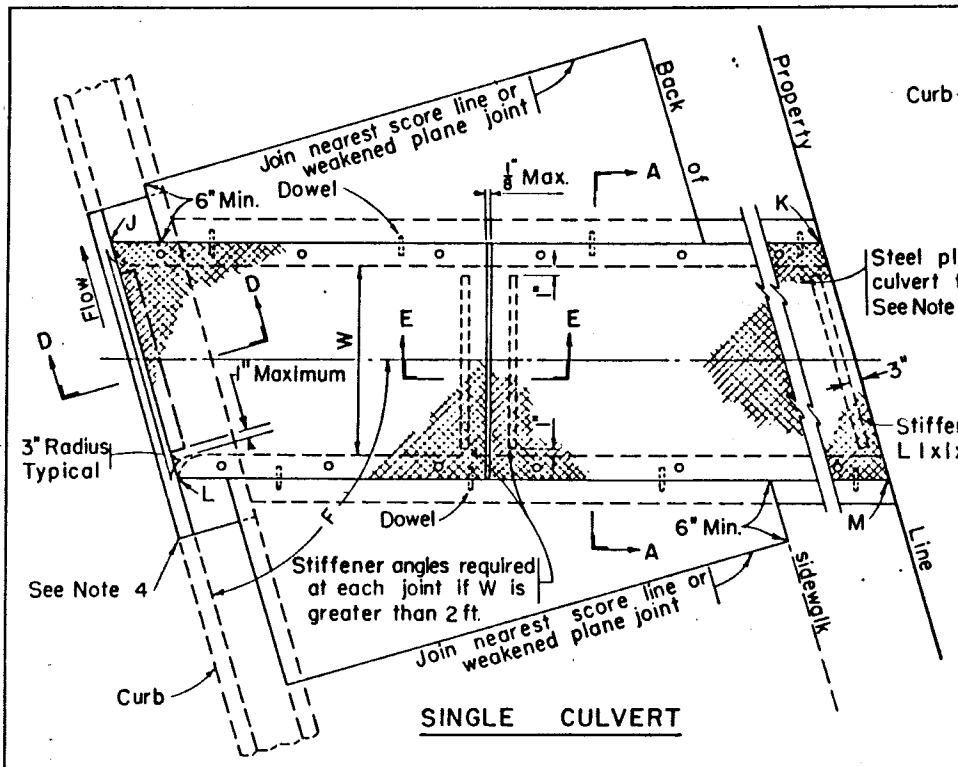

SINGLE CULVERT

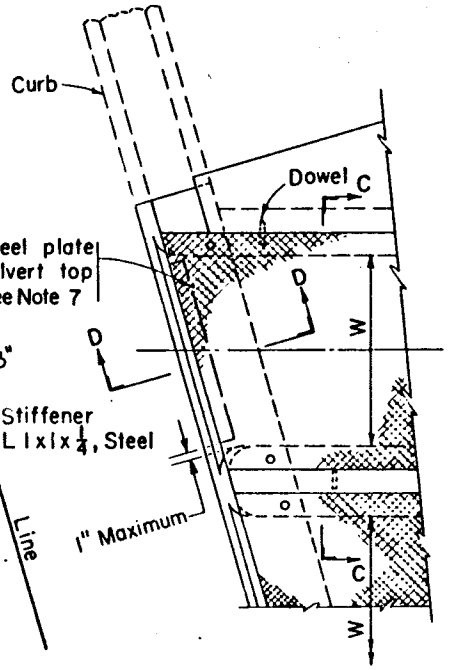

MULTIPLE CULVERTS

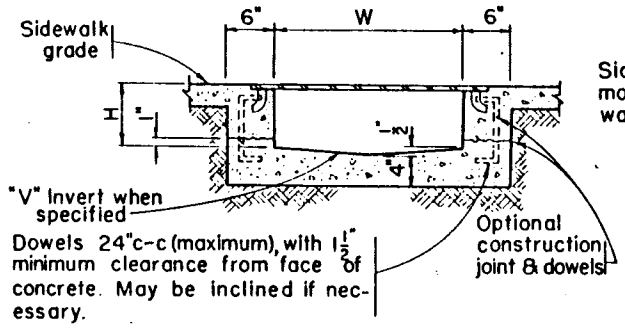

SECTION A-A

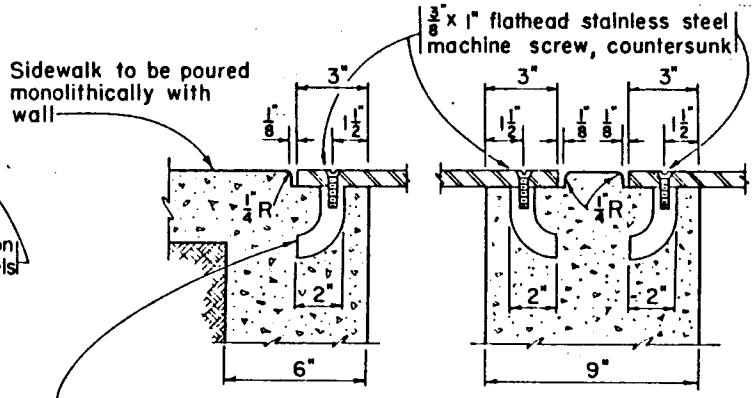

SECTION C-C

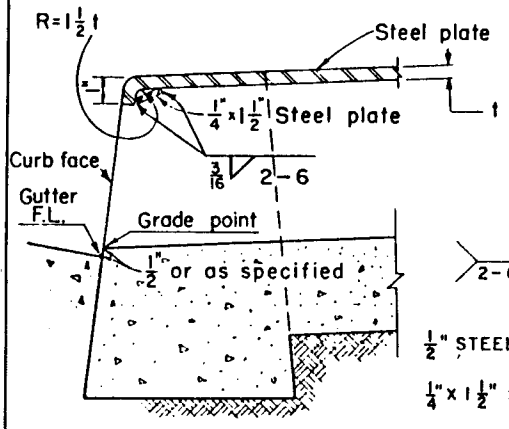

ALTERNATE 1

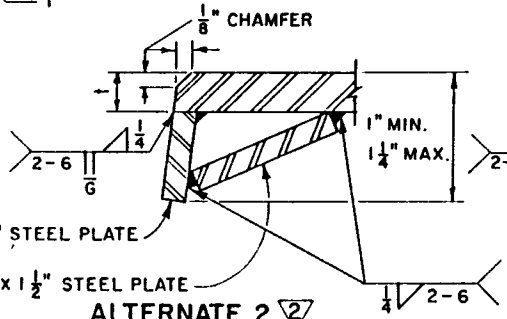

ALTERNATE 2 [2]

SECTION D-D [2]

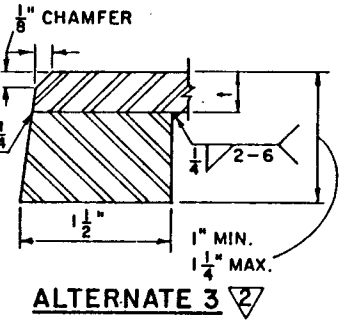

ALTERNATE 3 [2]

DEPARTMENT OF PUBLIC WORKS

BUREAU OF ENGINEERING

CITY OF LOS ANGELES

SIDEWALK CULVERT WITH STEEL PLATE TOP

STANDARD PLAN S-322-2

SUBMITTED Aug 12 1974

APPROVED Sept 4 1974

DESIGNED BY	DRAWN BY	CHECKED BY
L.A.W.	O.R.	L.S.Y.

REVISIONS

NO.	DATE	DESCRIPTION DESCRIPTION	ENG'R OF DESIGN	CITY ENG'R.
2		REVISED SECTION D-D AND ADDED NOTE 9 TO ALLOW ALTERNATES TO THE BEND IN THE STEEL PLATE AT THE CURB FACE; REVISED NOTE 7 TO ALLOW CERTIFICATION BY A REGISTERED		
	11-14-85	MECHANICAL ENGINEER.		

SUPERSEDES	REFERENCES
B-4070	

VAULT INDEX NO. B-4083

SHEET 1 OF 2 SHEETS

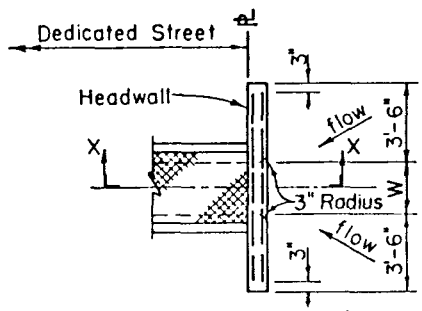

PLAN – ALTERNATE X

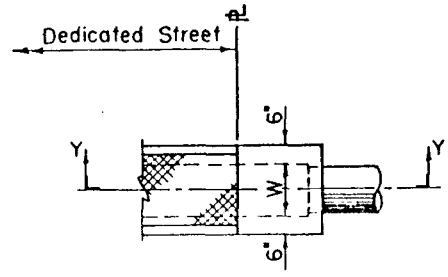

PLAN – ALTERNATE Y

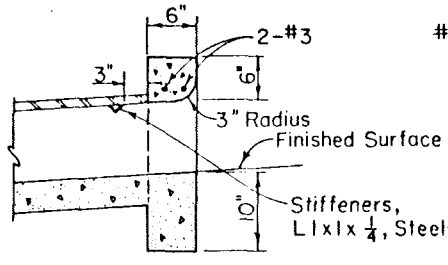

SECTION X–X

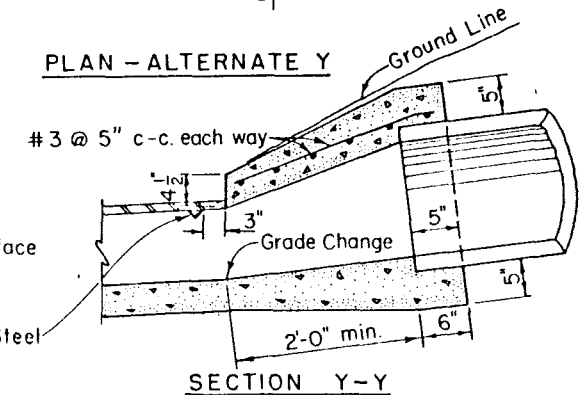

SECTION Y–Y

ALTERNATE INLETS

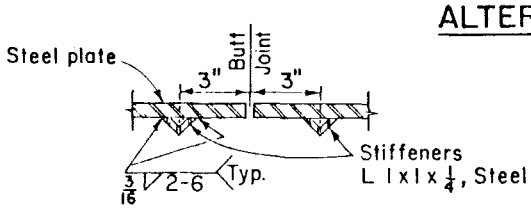

SECTION E-E

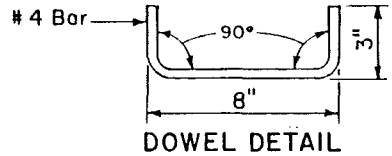

DOWEL DETAIL

NOTES

1. Values for Angle F and dimensions J-K, L-M, W and H are shown on the improvement plan.
2. Concrete shall be 560-C-3250.
3. Surface of all exposed concrete shall match grade, color, finish and scoring of adjacent curb and walk.
4. Any curb replaced during construction shall be poured monolithically with the culvert walls.
5. The bottom slab of the culvert shall be poured monolithically with new gutter or as a cold joint where joining existing gutter.
6. Invert shall be troweled and retroweled to produce a hard polished surface of maximum density and smoothness. If "V" invert is specified, it shall be V-shaped to within 3' of the outlet and warped from this point to the outlet. The invert at the outlet shall parallel the gutter flow line unless otherwise shown on the improvement plan.

▽2 7. Culvert steel top plates shall be as follows:

   A. t = 1/4" for W ≤ 2'; 3/8" for 2' < W ≤ 3'; 1/2" for 3' < W ≤ 4'.
   B. Cut perpendicular to culvert walls unless otherwise specified.
   C. Lengths shall be such that the weight per plate does not exceed 300 pounds.
   D. They shall be stress relieved and straightened after fabrication and then galvanized.
   E. Top of steel plate shall have a minimum coefficient of static friction of 0.5, for either wet or dry conditions, when tested for any shoe sole material. Testing and certification of the friction factor shall be conducted by an independant testing laboratory approved by the Engineer under the direction of a registered Civil, Mechanical or Quality Engineer. Testing shall conform to ASTM D2047 or F 489 or F 609 or other procedure approved by the Engineer.

8. Stainless steel rod anchors shall be spaced a maximum of 24" c-c with a minimum of two per side per plate. There shall be an anchor within 6" of each end. The anchors shall be attached to the plates and the plates secured in place prior to pouring the walls.

▽2 9. The contractor may, at his option, utilize any of the three alternates for the fabrication of the steel plate at the curb face shown in section D-D.

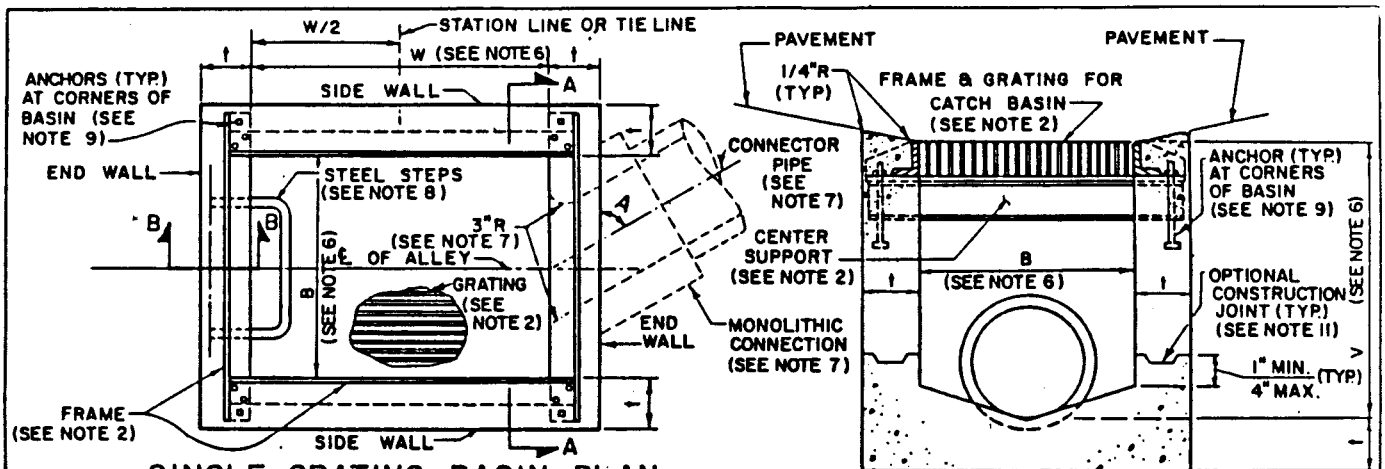

SINGLE GRATING BASIN PLAN

SECTION A-A

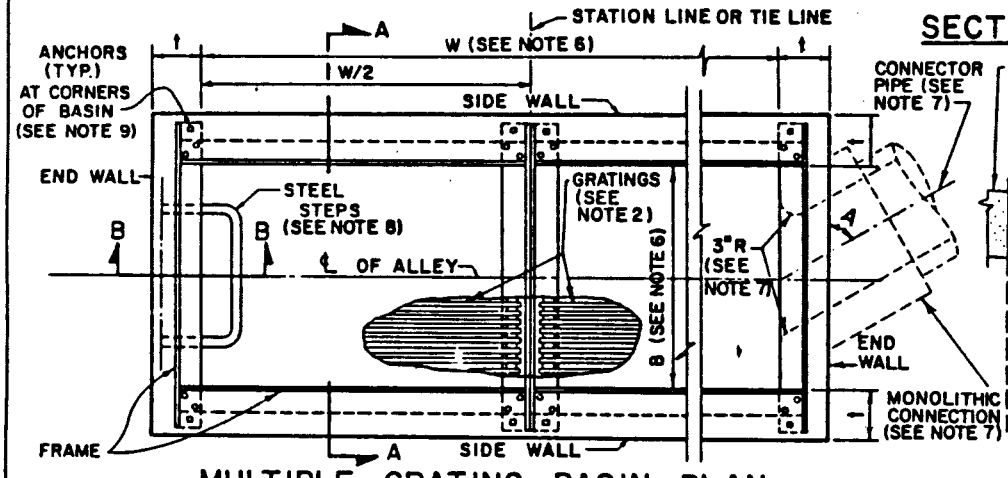

MULTIPLE GRATING BASIN PLAN

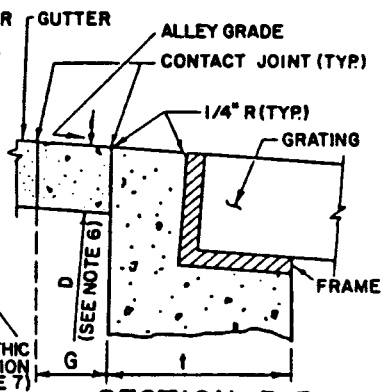

SECTION B-B

STRUCTURAL DATA			
MAX. "W"	MAX. "V"	t	REINF.
7'	6'	6"	NONE
7'	12'	8"	NONE
FOR "W" > 7' OR "V" > 12' SEE PROJECT PLANS			

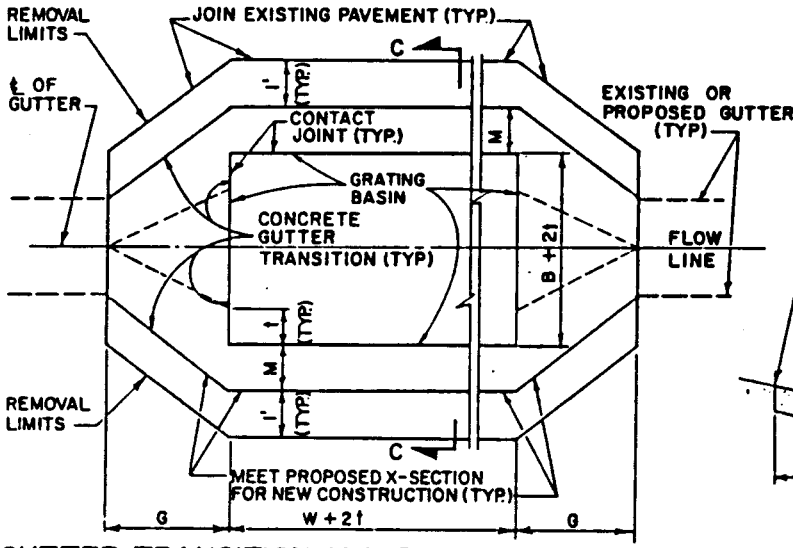

GUTTER TRANSITION AND PAVEMENT REMODELING

(SEE NOTES 2, 3, 6, 10 & 12)

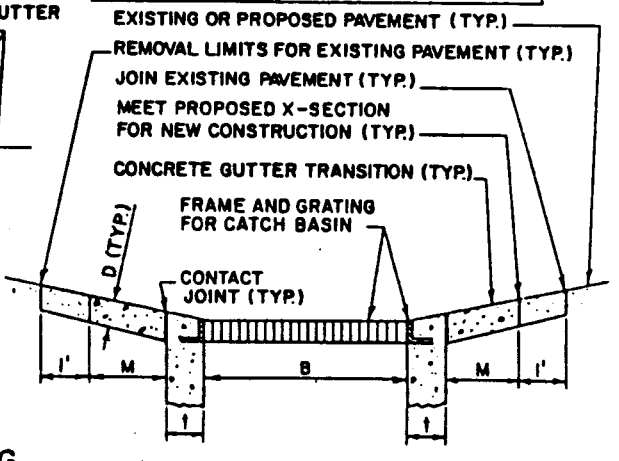

SECTION C-C

(SEE NOTES 2, 3, 6, 10 & 12)

DEPARTMENT OF PUBLIC WORKS

BUREAU OF ENGINEERING

CITY OF LOS ANGELES

ALLEY GRATING BASIN

STANDARD PLAN S-355-0

SUBMITTED JUNE 19 1979

Clifford M. Albright
ENGINEER OF DESIGN

Robert L. Sauer
DEPUTY ENGINEER

APPROVED JUNE 27 1979

[illegible]
CITY ENGINEER

DESIGNED BY	DRAWN BY	CHECKED BY

REVISIONS

NO	DATE	DESCRIPTION	ENG'R OF DESIGN	CITY ENG'R.

SUPERSEDES	REFERENCES
B-2034	S-331 S-342 S-348

VAULT INDEX NUMBER B-3976

NOTES FOR ALLEY GRATING BASIN

1. THE BASIN SHALL BE CONSTRUCTED WITH ONE GRATING UNLESS OTHERWISE INDICATED ON THE PROJECT PLANS.
2. INSTALL FRAME AND GRATING AT THE GRADE OF THE GUTTER. FRAMES AND GRATINGS SHALL CONFORM TO STANDARD PLAN S-342. WHEN MORE THAN ONE GRATING IS SPECIFIED ON THE PROJECT PLANS, INSTALL A CENTER SUPPORT ASSEMBLY CONFORMING TO STANDARD PLAN S-342 BETWEEN ADJACENT FRAMES.
3. CONCRETE SHALL BE THE CLASS SPECIFIED IN SECTION 201 OF THE STANDARD SPECIFICATIONS. SURFACE OF ALL EXPOSED CONCRETE SHALL CONFORM IN SLOPE, GRADE, COLOR, AND FINISH TO ANY EXISTING OR PROPOSED CONCRETE ADJACENT TO THE BASIN.
4. ALL CURVED CONCRETE SURFACES SHALL BE FORMED BY CURVED FORMS AND SHALL NOT BE SHAPED BY PLASTERING.
5. THE FLOOR OF THE BASIN SHALL BE GIVEN A STEEL TROWEL FINISH AND SHALL HAVE A LONGITUDINAL AND LATERAL SLOPE OF 1:12, EXCEPT WHERE THE ALLEY GRADE EXCEEDS 8 PERCENT, IN WHICH CASE THE LONGITUDINAL SLOPE OF THE FLOOR SHALL BE THE SAME AS THE ALLEY GRADE. SLOPE FLOOR FROM ALL DIRECTIONS TO THE OUTLET.
6. DIMENSIONS:

   W = 2 FEET 11-3/8 INCHES FOR ONE GRATING. ADD 3 FEET 5-3/8 INCHES FOR EACH ADDITIONAL GRATING.
   B = 2 FEET 1-1/2 INCHES
   V = 4.5 FEET. WHERE CATCH BASINS ARE IN SERIES, "V_0" SHALL BE THE DEPTH TO THE INVERT OF THE INLET PIPE, AND "V" SHALL BE THE DEPTH TO THE INVERT OF THE OUTLET PIPE.
   M = 1 FOOT
   G = 3 FEET
   D = 8 INCHES
   I - SEE STRUCTURAL DATA HEREON.
   A = THE ANGLE, IN DEGREES, INTERCEPTED BY THE CENTERLINE OF THE CONNECTOR PIPE AND THE CATCH BASIN WALL TO WHICH THE CONNECTOR PIPE IS ATTACHED.

7. PLACE CONNECTOR PIPES AS INDICATED ON THE PROJECT PLANS. UNLESS OTHERWISE DETAILED ON THE PROJECT PLANS, A CONNECTOR PIPE CENTERLINE SHALL INTERSECT THE MID POINT OF THE INSIDE FACE OF THE INDICATED CATCH BASIN WALL, OR IF INDICATED AT A CORNER, IT SHALL INTERSECT THE INSIDE CORNER. THE PIPE MAY BE CUT AND TRIMMED AT A SKEW NECESSARY TO INSURE MINIMUM 3 INCH PIPE EMBEDMENT, ALL AROUND, WITHIN THE CATCH BASIN WALL, AND 3 INCH RADIUS OF ROUNDING OF STRUCTURE CONCRETE, ALL AROUND, ADJACENT TO PIPE ENDS. A MONOLITHIC CONNECTION PER STANDARD PLAN S-331 SHALL BE USED TO JOIN THE CONNECTOR PIPE TO THE CATCH BASIN WHENEVER ANGLE "A" IS LESS THAN 70 DEGREES OR GREATER THAN 110 DEGREES, OR WHENEVER THE CONNECTOR PIPE IS LOCATED IN A CORNER. THE OPTIONAL USE OF A MONOLITHIC CONNECTION IN ANY CASE IS PERMITTED. MONOLITHIC CONNECTIONS MAY BE EXTENDED UP TO 4 FEET IN LENGTH TO AVOID CUTTING STANDARD LENGTHS OF PIPE. CONNECTOR PIPE MAY NOT BE CUT FOR ANY REASON EXCEPT TO AVOID CONSTRUCTION OF A MONOLITHIC CONNECTION.
8. STEPS SHALL CONFORM TO STANDARD PLAN S-348.
9. ANCHORS SHALL CONFORM TO STANDARD PLAN S-342, AND SHALL BE INSTALLED AS SHOWN HEREON.
10. CONSTRUCT CONCRETE GUTTER TRANSITIONS AS SHOWN HEREON.
11. ALL CONSTRUCTION JOINTS SHALL HAVE ROUGH SURFACES. (SEE SECTION 303-1.8.6 OF THE STANDARD SPECIFICATIONS.)
12. REMOVE EXISTING PAVEMENT WITHIN REMOVAL LIMITS SHOWN HEREON AND RECONSTRUCT IN CONFORMANCE WITH SECTION 306-1.5 OF THE STANDARD SPECIFICATIONS.

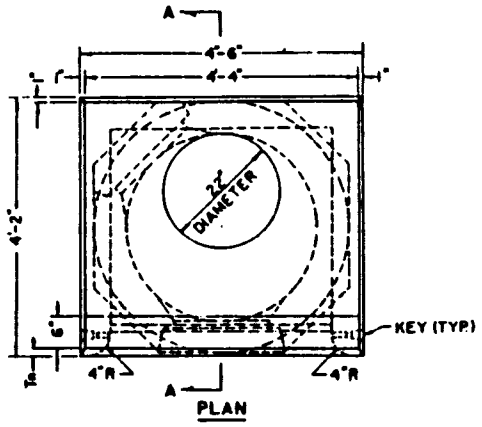

PLAN

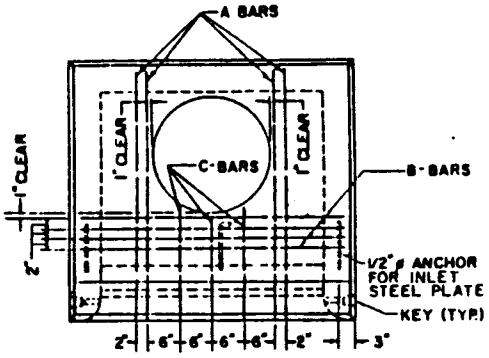

TOP SLAB REINFORCING PLAN

NOTE : A-BARS & C-BARS SHALL TERMINATE AT INLET STEEL PLATE. DO NOT WELD.

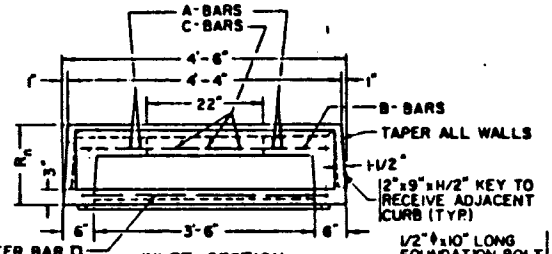

INLET SECTION

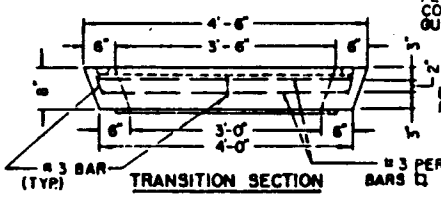

TRANSITION SECTION

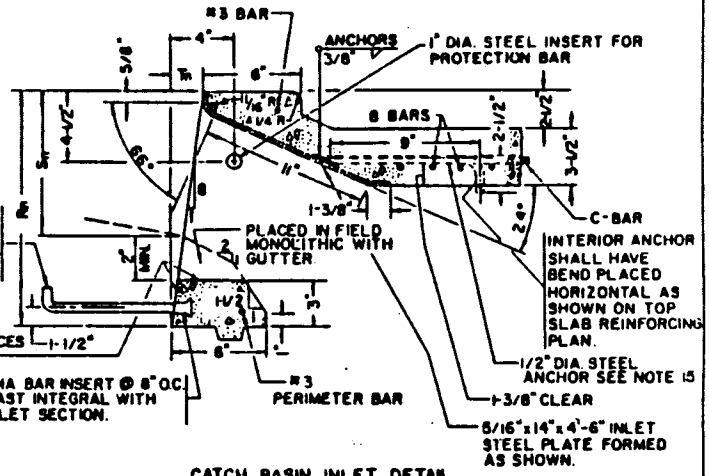

CATCH BASIN INLET DETAIL

NOTE : SEE TOP SLAB REINFORCING PLAN FOR TOP SLAB STEEL DETAILS.

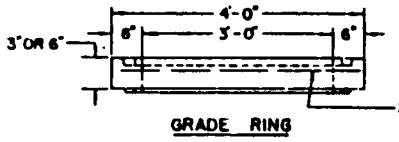

GRADE RING

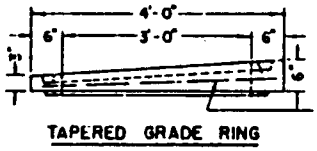

TAPERED GRADE RING

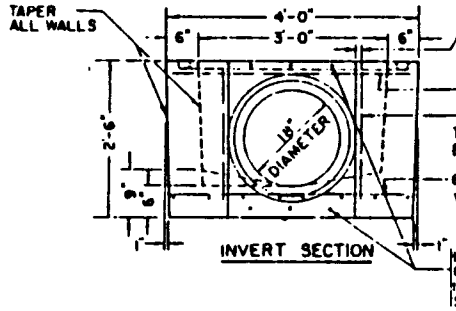

INVERT SECTION

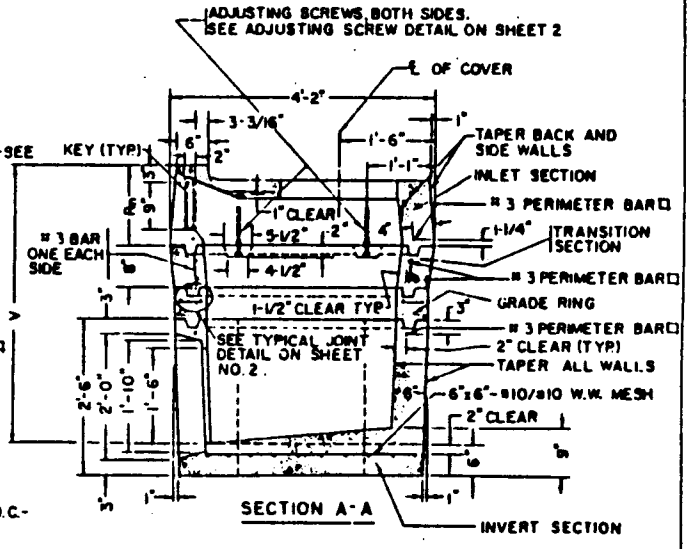

DEPARTMENT OF PUBLIC WORKS

BUREAU OF ENGINEERING — CITY OF LOS ANGELES.

CATCH BASIN NO. 61 - PRECAST

STANDARD PLAN
S-361-0

SUBMITTED: May 5, 1972

APPROVED: June 21, 1972

DESIGNED BY	DRAWN BY	CHECKED BY
MJY/WRG	MJY/HCW	JWH/JPO

REVISIONS

NO.	DATE	DESCRIPTION	DIV. ENG'R.	CITY ENG'R.

REFERENCES

VAULT INDEX NUMBER B-3806

SHEET 1 OF 4 SHEETS

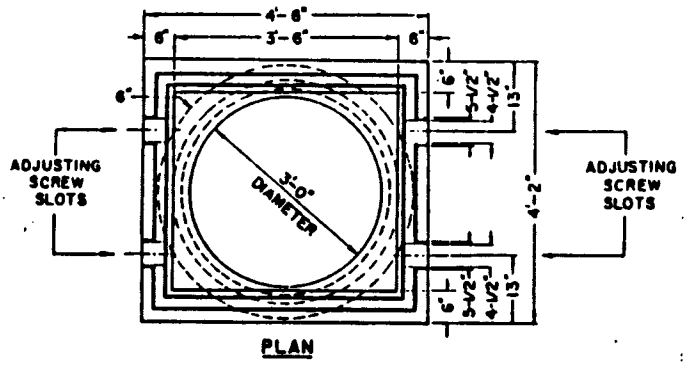

PLAN

TRANSITION SECTION DETAIL

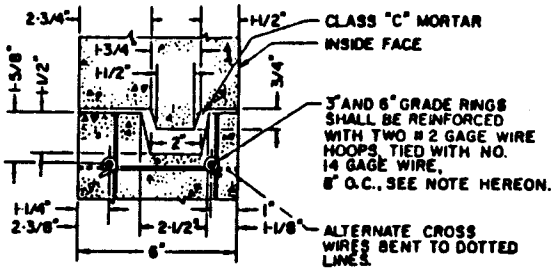

TYPICAL JOINT DETAIL

NOTE : REINFORCEMENT STEEL SHOWN SHALL APPLY TO GRADE RINGS ONLY.

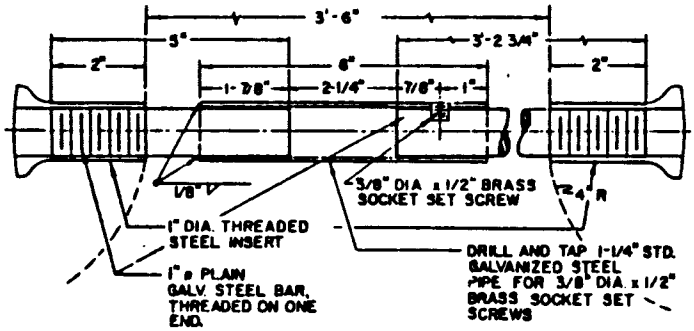

PROTECTION BAR DETAIL

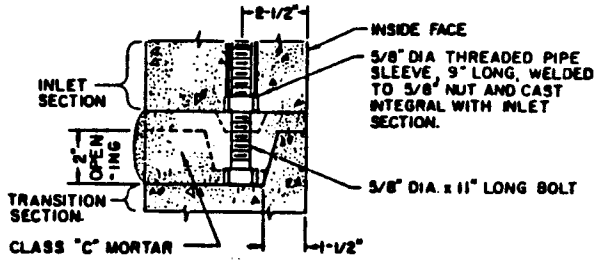

ADJUSTING SCREW DETAIL

NOTE: ALLOWABLE OFFSET BETWEEN SECTIONS IS 3/8-INCHES.

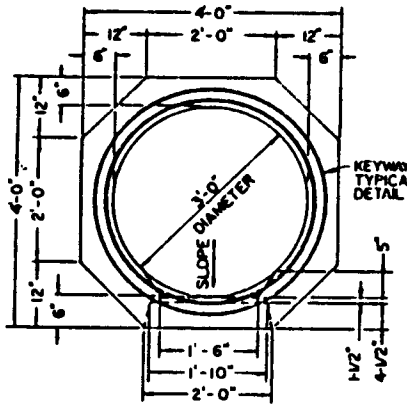

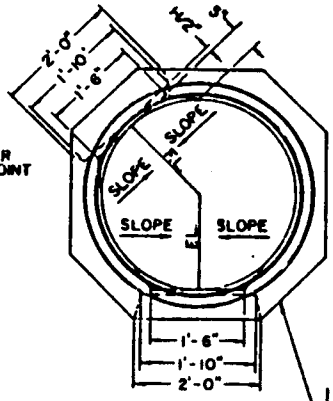

PLAN

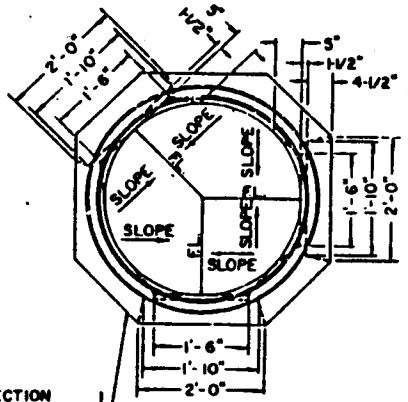

INVERT SECTION DIMENSIONS TYPICAL AS CASE I EXCEPT AS DETAILED HEREON

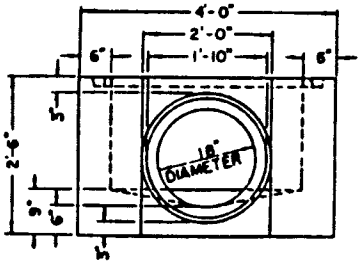

CASE 1

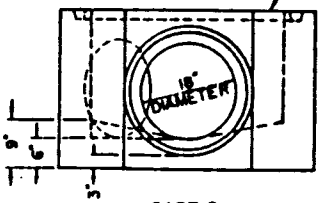

CASE 2

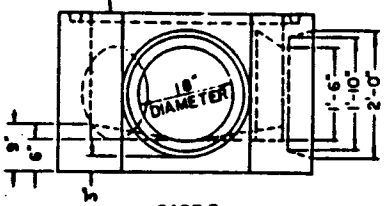

CASE 3

ELEVATION

INVERT SECTION

STEEL LIST

	ITEM AND LENGTH	QUANTITY
A-BARS	#4 deformed bars, 3'-2" Long	4
B-BARS	#4 deformed bars, 4'-2" Long	4
C-BARS	#3 deformed bars, 0'-10" Long	3
PERIMETER BARS	#3 deformed bars, Varies	4
VERTICAL BARS		
TRANS. SECT.	#3 deformed bars, 0'-5" Long	4
INVERT SECT.	#3 deformed bars, 2'-2½" Long	2 Each Opening
	1" ϕ plain galvanized protection bar	See Notes
	¾" ϕ plain galvanized steps	See Notes
	Inlet Steel Plate with 2 each ½" ϕ Anchors	1 (See Detail)
	Manhole Frame and Cover Set	1

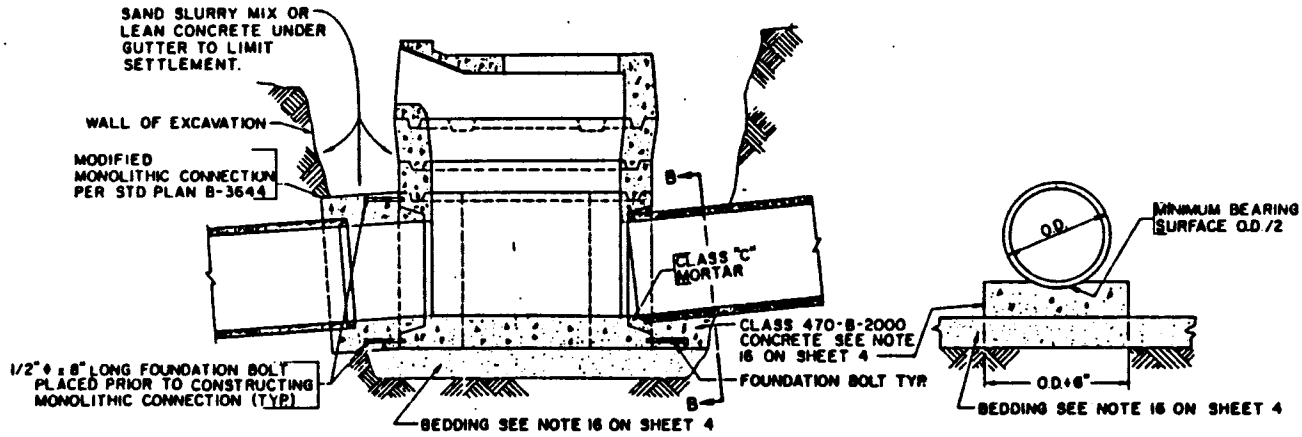

TYPICAL SECTION
CONNECTION AND BEDDING DETAILS

SECTION B-B

NOTES FOR CATCH BASIN NO. 61 (PRECAST)

1. Catch Basin No. 61 may be installed in lieu of Catch Basin No. 38 when the curb face is 10-inches or less and the V-dimension shown on the project drawings is equal to or larger than the minimum shown hereon.
2. Inlet Steel Plate shall be fabricated from 5/16" x 14" Universal Mill Plate and galvanized.
3. Protection Bar:
   a. When the curb face exceeds 9¼-inches, a 1-inch diameter plain round galvanized steel protection bar shall be placed horizontally across the opening of the basin.
   b. One-inch diameter galvanized steel inserts for the protection bar, Burke High Tensile Threaded Insert or equal, shall be cast in each sidewall of the Inlet Section.
   c. The galvanized steel pipe sleeve shall be installed at the downstream end of the catch basin opening. The brass socket set screw shall not be visible in a frontal view of the catch basin opening.
4. Gutter Depression shall be constructed in accordance with the detail for warped gutter per Standard Plan B-3746 unless otherwise specified.
5. Invert Section Floor shall be given a steel trowel finish. Where construction methods do not permit trowelling, Class 658-B-3750 concrete shall be used. Invert shall be sloped toward the outlet for Case 1, and toward the flow lines for Cases 2 and 3. The maximum difference in elevation between flow lines and the edge of the floor shall not exceed 3-inches.

NOTES FOR CATCH BASIN NO. 61 CONTINUED (PRECAST)

6. Concrete for the precast sections shall be Class 564-B-3250. When the basin is to be assembled within the limits of a proposed sidewalk, the top 2½-inches of the basin shall be poured monolithic with the sidewalk using the same class of concrete as the sidewalk and shall conform in slope, grade, color, finish and scoring to existing or proposed walk adjacent to the basin.
7. Standard Manhole Frame and Cover per Standard Plan B-2189 shall be placed at grade prior to pouring the catch basin top slab and shall be located as shown herein. Install Manhole Cover Locking Device per Standard Plan B-3233.
8. Dimensions:

Minimum V	3'-11"	3'-8"	3'-5"
Connector Pipe Diameter	18"	15"	12"

R_n=1'-3" unless otherwise specified
S_n=0'-9" unless otherwise specified
T_n=0'-1 ⅜" unless otherwise specified
— See Catch Basin Inlet Detail on Sheet No. 1

9. Joints of Inlet Section, Transition Section, Grade Rings, and Invert Section shall be filled with Class "C" mortar and neatly pointed on the inside of basin.
10. Curvature of the Inlet Section sidewalls shall be formed by curved forms and shall not be made by plastering.
11. Junction of Invert Section and connector pipe(s) shall be filled with Class "C" mortar. Interior surface of the connection shall be smooth, clean and free from pockets and protuberances.
12. Precast section shall have handling devices to provide mechanical placement of the sections. The Inlet Section shall have a Superior Concrete Accessories' 1"x3½" Type "S" Coil or equal centered on the exterior of each sidewall. The Transition and Invert Sections shall have slots integrally cast in the interior walls for lifting bars.
13. Alignment: The top frontal edge of the Inlet Section shall be aligned with the top frontal edge of the adjacent curb.
14. Steps are required 12-inches apart when "V" is greater than 4 feet 6 inches. The top step shall be 2-inches below the soffit and 2½-inches from the wall. Only one step 12-inches from the bottom is required for "V" less than 4 feet 6 inches. Steps shall be 4-bend, ¾-inch round galvanized steel, 14-inches wide, with 10-inch legs; Alhambra Foundry Company's Step No. A-3309 or equal. The steps shall be 6-inches from the wall of the basin, with the exception of the top step as above. Install steps in basin wall in 1-inch diameter drilled holes and grout.
15. Anchors shall be ½-inch round steel anchors or Nelson H4F Head Anchors, or equal, electrically welded, ½-inch in diameter by 8-inches long.
16. Bedding Material for the catch basin or any material conforming to the Standard Specification requirements for select material for base shall be spread to a minimum depth of 6-inches over the bottom of the excavation. Bedding for the inlet and outlet pipes shall be Class 470-B-2000 concrete poured between wall of excavation and wall of catch basin per detail on Sheet 3.
17. Epoxy that is approved by the Engineer shall be placed on surfaces of Inlet Section before placing gutter.
18. Monolithic Connection shall be tied to catch basin with ½-inch diameter by 8-inch long foundation bolts.

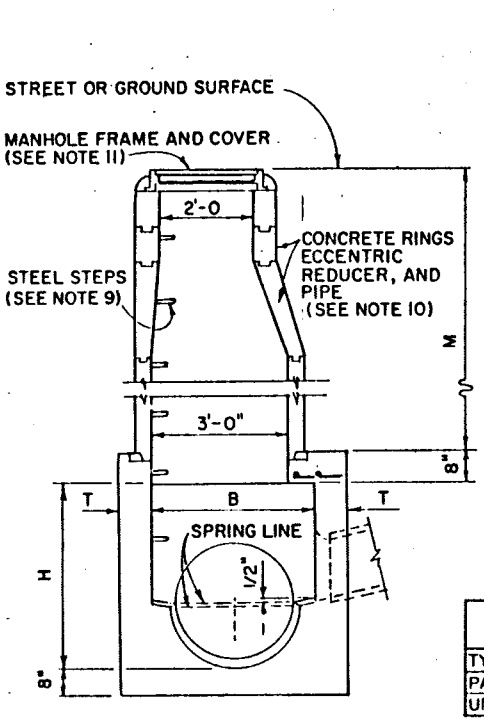

SECTION A-A

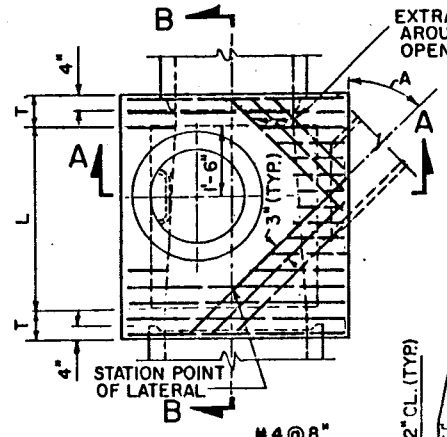

PLAN

(SHAFT NOT SHOWN)

TABLE OF DATA FOR "M"	
TYPE OF SURFACE	M (MIN.)
PAVED STREETS	2'-9"
UNPAVED STREETS	3'-3"

TYPE I

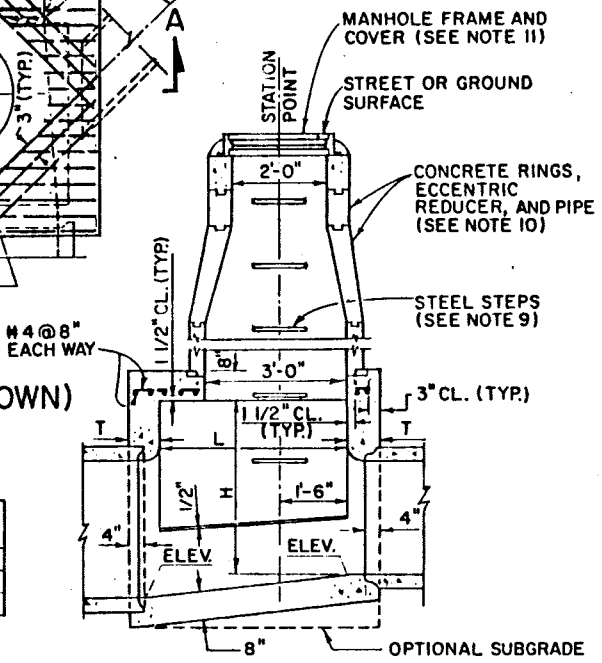

SECTION B-B

TABLE OF DATA FOR "P"		
TYPE OF SURFACE	P MAX.	P MIN.
PAVED STREETS	11"	9"
UNPAVED STREETS	16"	15"

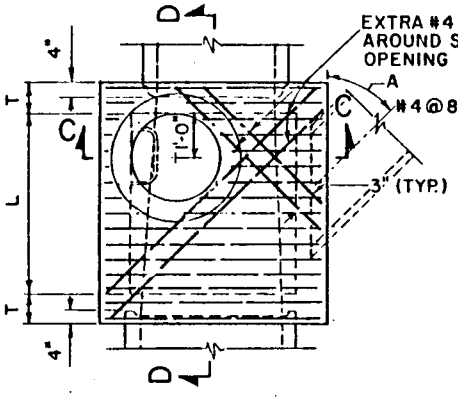

PLAN

(SHAFT NOT SHOWN)

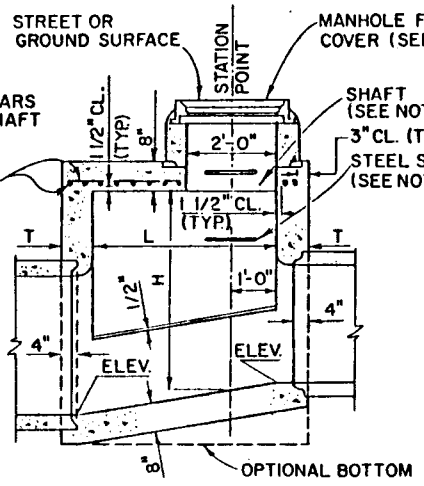

SECTION D-D

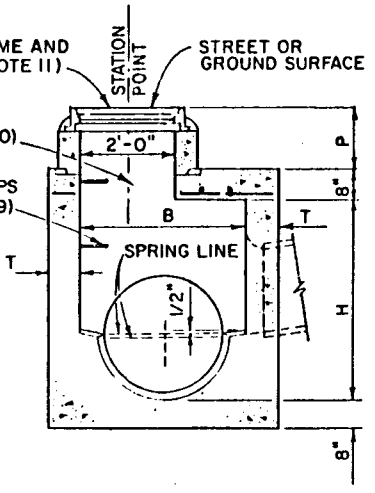

SECTION C-C

TYPE II

DEPARTMENT OF PUBLIC WORKS

BUREAU OF ENGINEERING — CITY OF LOS ANGELES

MANHOLE "EZ"

STANDARD PLAN S-381-0

SUBMITTED June 3 1982

ENGINEER OF DESIGN

DEPUTY ENGINEER

APPROVED June 18 1982

ACTING CITY ENGINEER

DESIGNED BY	DRAWN BY	CHECKED BY
LIE	RGM	GF

REVISIONS					SUPERSEDES	REFERENCES
NO.	DATE	DESCRIPTION	ENG'R OF DESIGN	CITY ENG'R	B-1532	S-281, S-331, S-348, S-387

VAULT INDEX NUMBER B-4035

SHEET 1 OF 2 SHEETS

NOTES

1. UNLESS OTHERWISE INDICATED ON THE PROJECT PLANS, TYPE I MANHOLE SHALL BE CONSTRUCTED.

2. CONCRETE SHALL BE CLASS 560-C-3250 PER SECTION 201 OF THE STANDARD SPECIFICATIONS.

3. DIMENSIONS

   H = 4'0". (SUBJECT TO THE APPROVAL OF THE ENGINEER, THE CONTRACTOR MAY INCREASE "H" PROVIDED THE MINIMUM REQUIREMENTS OF "M" AND "P" ARE MET.)

   L = 4'0". (SUBJECT TO THE APPROVAL OF THE ENGINEER, THE CONTRACTOR MAY INCREASE "L" OR CHANGE THE LOCATION OF THE STATION POINT IN ORDER TO MEET PIPE ENDS OR OTHER FIELD CONDITION.)

   P = AS INDICATED HEREON. (SUBJECT TO THE APPROVAL OF THE ENGINEER, "P" MAY BE REDUCED TO NOT LESS THAN 6-INCHES WHEN A LARGER VALUE OF "P" WOULD CAUSE "H" TO BE LESS THAN 3'6".)

   B = 3'6"

   T = 8" FOR $H \leq 8'-0"$; T = 10" WHEN $H > 8'-0"$

   M = SEE PROJECT PLANS

   A = SEE PROJECT PLANS

4. REINFORCEMENT SHALL CONFORM TO SECTION 201 OF THE STANDARD SPECIFICATIONS AND AS SHOWN HEREON.

5. A STEEL TROWEL SURFACE SHALL BE PROVIDED FOR THE CONCRETE FLOOR OF THE STRUCTURE AND TO THE INSIDE CONCRETE WALLS FROM THE INVERT TO THE SPRING LINE.

6. CONCRETE FOR THE STRUCTURE SHALL BE PLACED IN ONE CONTINUOUS OPERATION, EXCEPT THAT THE CONTRACTOR MAY, AT HIS OPTION, PLACE AT THE SPRING LINE A CONSTRUCTION JOINT WITH A 2-INCH BY 4-INCH HORIZONTAL KEYWAY.

7. WHERE LATERALS ENTER ON BOTH SIDES OF THE STRUCTURE, THEY SHALL BE DESIGNATED ON THE PROJECT PLANS AS RIGHT OR LEFT, FACING IN THE DIRECTION OF STATIONING.

8. MANHOLES SHALL BE LOCATED SO THAT THE VERTICAL SIDE OF THE MANHOLE SHAFT AND THE ECCENTRIC REDUCER SHALL BE LOCATED ABOVE AND IN LINE WITH THE SIDE OF THE MAINLINE BELOW THE MANHOLE AND ON THE SIDE OPPOSITE THE LATERAL. IF LATERALS ENTER BOTH SIDES OF THE STRUCTURE, THE MANHOLE SHALL BE LOCATED ON THE SAME SIDE AS THE SMALLER LATERAL.

9. INSTALL STEPS CONFORMING TO STANDARD PLAN S-348.

10. RINGS, REDUCER, PIPE AND PIPE SEAT FOR MANHOLE SHAFT SHALL CONFORM TO STANDARD PLAN S-387.

11. INSTALL MANHOLE FRAME AND COVER CONFORMING TO STANDARD PLAN S-281.

12. PLACE PIPES AS INDICATED ON THE PROJECT PLANS. UNLESS OTHERWISE DETAILED ON THE PROJECT PLANS, THE PIPE CENTERLINE SHALL INTERSECT THE MIDPOINT OF THE INSIDE FACE OF THE INDICATED MANHOLE WALL. THE PIPE MAY BE CUT AND TRIMMED AT A SKEW NECESSARY TO INSURE MINIMUM 3 INCH PIPE EMBEDMENT, ALL AROUND, WITHIN THE MANHOLE WALL, AND 3 INCH RADIUS OF ROUNDING OF STRUCTURE CONCRETE, ALL AROUND, ADJACENT TO PIPE ENDS. A MONOLITHIC CONNECTION PER STANDARD PLAN S-331 SHALL BE USED TO JOIN THE PIPE TO THE MANHOLE WHENEVER ANGLE "A" IS LESS THAN 70 DEGREES OR GREATER THAN 110 DEGREES. THE OPTIONAL USE OF A MONOLITHIC CONNECTION IN ANY CASE IS PERMITTED. MONOLITHIC CONNECTIONS MAY BE EXTENDED UP TO 4 FEET IN LENGTH TO AVOID CUTTING STANDARD LENGTHS OF PIPE.

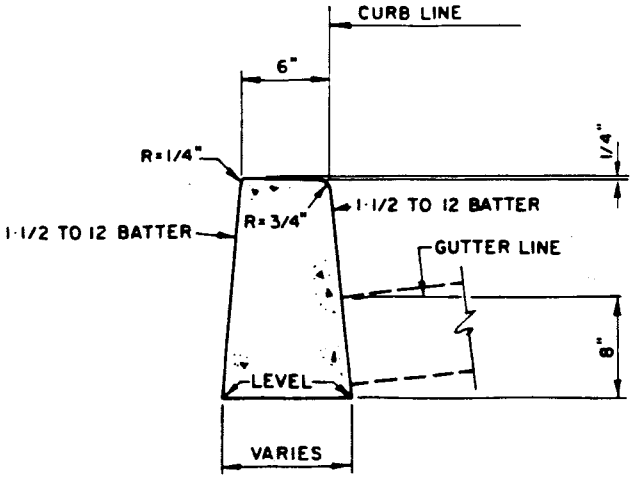

▽2 TYPE A CURB

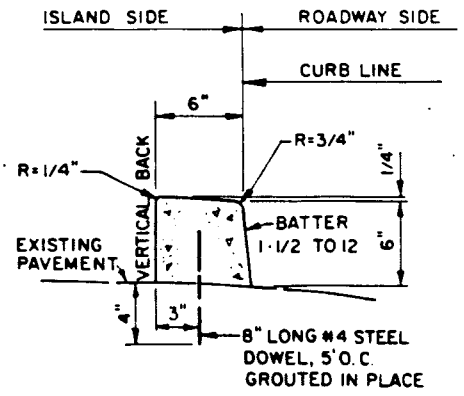

TYPE C DOWELED CURB

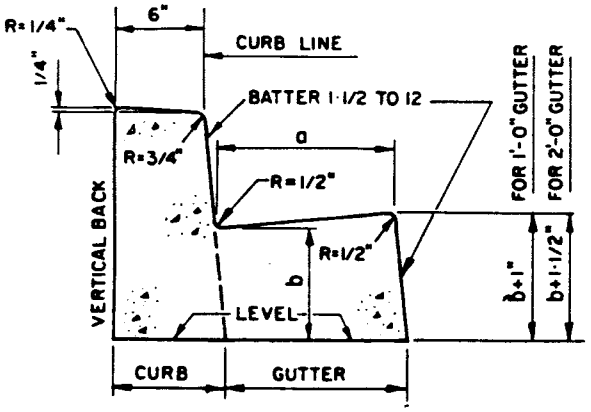

TYPE C INTEGRAL CURB AND GUTTER

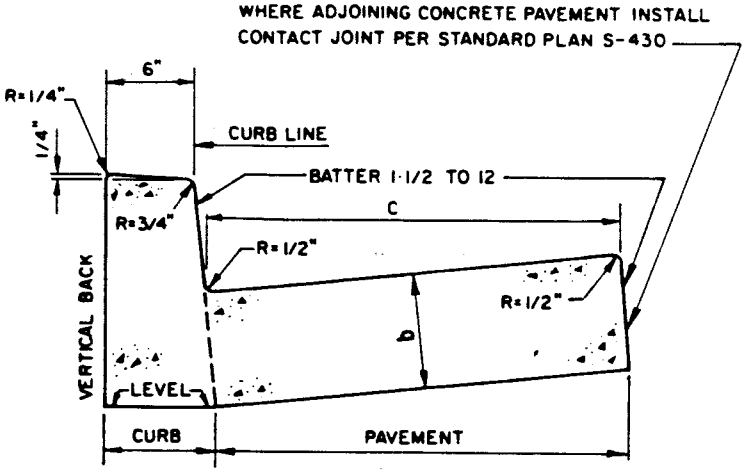

TYPE C INTEGRAL CURB AND CONCRETE PAVEMENT

BARRIER CURBS

DEPARTMENT OF PUBLIC WORKS

BUREAU OF ENGINEERING — CITY OF LOS ANGELES

TYPES OF CURB AND GUTTER

STANDARD PLAN S-410-2

SUBMITTED June 28, 1982
ENGINEER OF DESIGN
DEPUTY ENGINEER

APPROVED July 21, 1982
CITY ENGINEER

DESIGNED BY	DRAWN BY	CHECKED BY
RAB	RGM	RGS

REGISTERED PROFESSIONAL ENGINEER — RALPH E. VALENZUELA — Exp 3/31/91 — No 12450 — CIVIL — STATE OF CALIFORNIA

▽ NO.	REVISIONS DESCRIPTION
2	REVISED TYPE A CURB AND ALL NOTES. DELETED TYPE B CURB.
	ADDED TYPE E AND F CURB AND GUTTER.

SUPERSEDES	REFERENCES

VAULT INDEX NUMBER B-4102

SHEET 1 OF 4 SHEETS

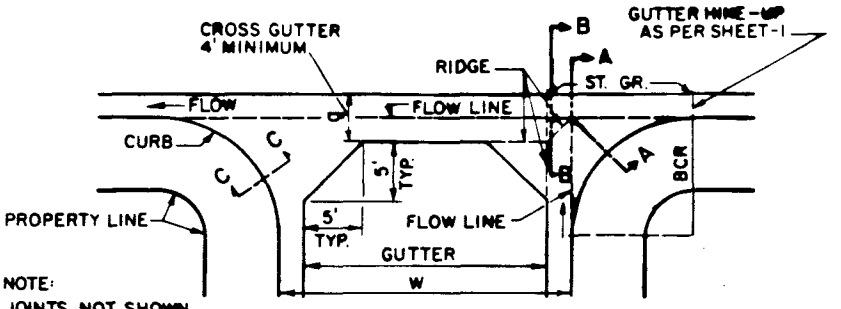

TYPICAL INTERSECTION GUTTER PLAN

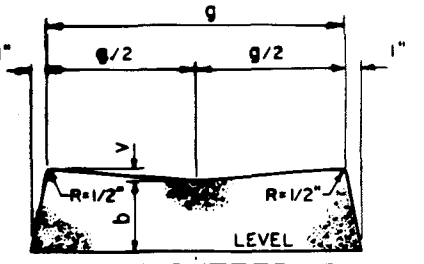

CROSS GUTTER OR LONGITUDINAL GUTTER

CROSS GUTTER		LONGITUDINAL GUTTER	
g	v	g	v
		2'	3/4"
4'	3/8"	4'	1-1/2"
4'+TO 6'	5/8"	4'+TO 6'	2"

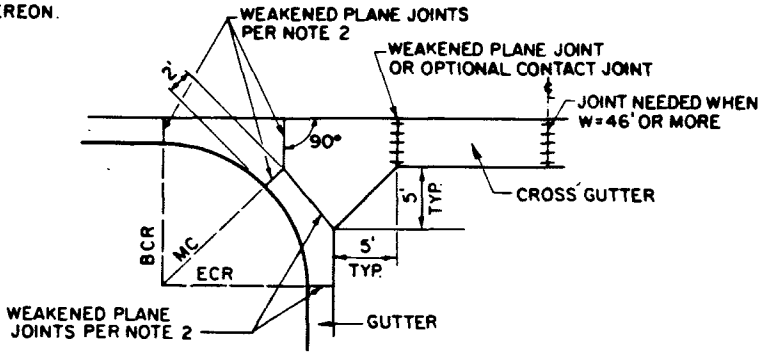

TYPICAL JOINT PLAN

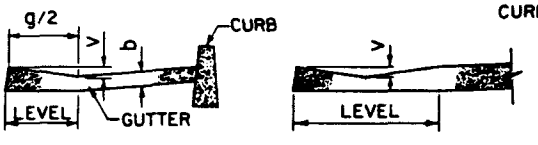

SECTION A-A

SECTION B-B

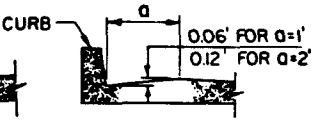

SECTION C-C

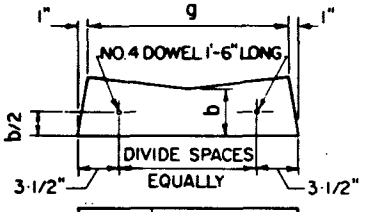

g	NO. OF DOWELS
2'	2
4'	4
6'	6

DOWELS FOR GUTTER CONTACT JOINTS

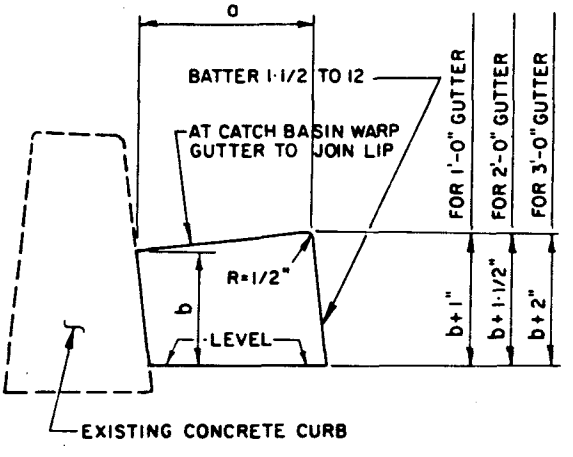

CONCRETE GUTTER

GUTTERS

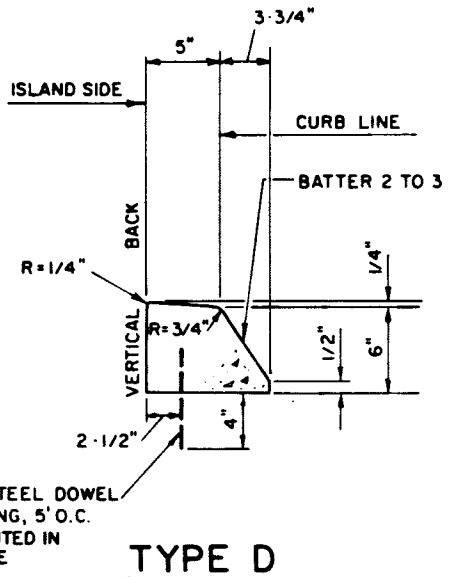

TYPE D
DOWELED CURB

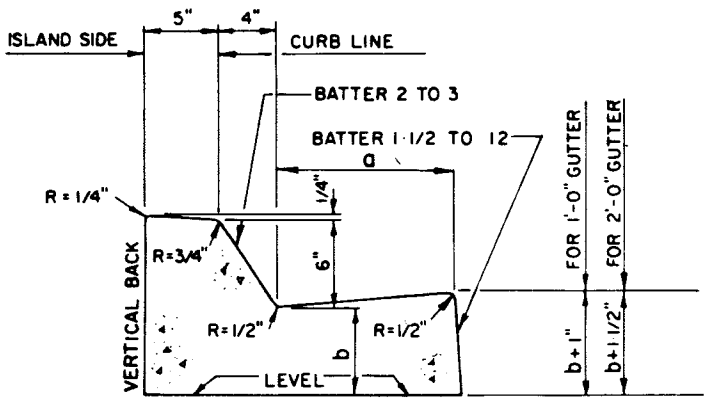

TYPE D
INTEGRAL CURB AND GUTTER

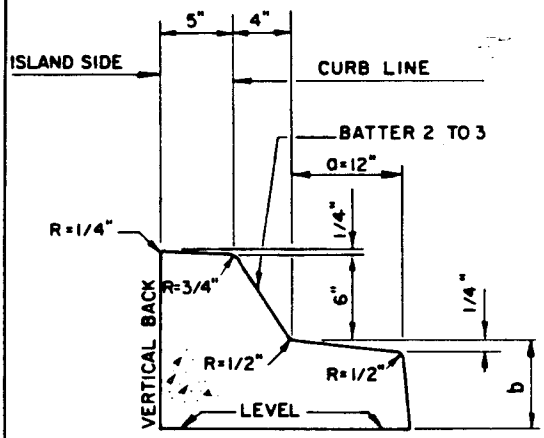

② TYPE E
INTEGRAL CURB AND GUTTER

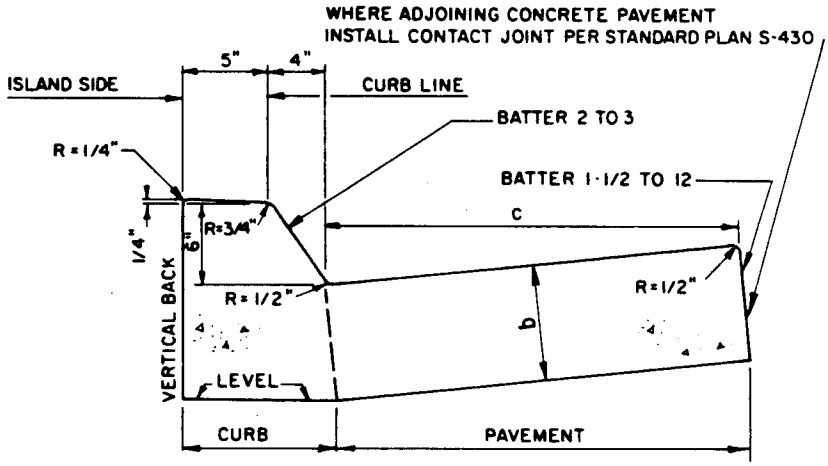

② TYPE F
INTEGRAL CURB AND CONCRETE PAVEMENT

MOUNTABLE CURBS

NOTES

2 1. CURBS AND GUTTERS SHALL BE CONSTRUCTED OF PCC CONFORMING TO SUBSECTION 201-1 AND 303-5.

2 2. WEAKENED-PLANE JOINTS IN CURB AND GUTTER SHALL CONFORM TO STANDARD SPECIFICATIONS FOR PUBLIC WORKS CONSTRUCTION SUBSECTION 303-5.4.3 (C) OR SHALL BE 1-1/2 INCH DEEP SAWCUTS MADE WITHIN 10 TO 24 HOURS AFTER CONCRETE IS PLACED AND SHALL BE PLACED AT LOCATIONS SHOWN ON THE TYPICAL JOINT PLAN HEREON AND AT REGULAR INTERVALS NOT EXCEEDING 20 FEET BETWEEN RETURNS. THEY SHALL ALSO BE LOCATED AT THE E.C. OF ALLEY RETURNS WHERE WALK IS FULL WIDTH. WHERE CROSS GUTTER TRANSITION EXTENDS BEYOND THE CURB RETURN, THE JOINTS SHALL NORMALLY BE PLACED AT THE ENDS OF THE TRANSITION. HOWEVER, JOINTS SHALL ALSO BE PLACED AT THE ENDS OF THE CURB RETURN WHEN THE CROSS GUTTER TRANSITION EXTENDS MORE THAN 5 FEET BEYOND THE RETURN. WHERE GUTTER IS ADJACENT TO CONCRETE PAVEMENT, THE JOINT SHALL BE ALIGNED WITH THE PAVEMENT JOINTS WHERE PRACTICAL.

2 3. A CONTACT JOINT SHALL BE PLACED IN LONGITUDINAL ALLEY GUTTER WHERE IT JOINS CONCRETE ALLEY INTERSECTION.

2 4. CURBS CONSTRUCTED ADJACENT TO EXISTING CURBS HAVING A BATTER OTHER THAN SPECIFIED FOR THE NEW CURBS SHALL BE CONSTRUCTED WITH A TRANSITION SECTION BETWEEN THE CURBS HAVING DIFFERENT BATTERS. THE MINIMUM TRANSITION LENGTH SHALL BE:

TYPE OF CURB	MINIMUM TRANSITION LENGTH
BARRIER CURB TO BARRIER CURB	5'
MOUNTABLE CURB TO MOUNTABLE CURB	10'
BARRIER CURB TO MOUNTABLE CURB	20'

2 5. THE DOWELS IN THE DOWELED CURB MAY BE DELETED AND THE CURB BONDED TO THE SURFACE BY A BONDING AGENT APPROVED BY THE ENGINEER.

2 6. MOUNTABLE CURBS SHALL NOT BE USED ADJACENT TO PEDESTRIAN WALKWAYS.

2 7. DIMENSIONS: (UNLESS OTHERWISE SPECIFIED)

a=2'-0"
b=0'-6"
c=10'-0"

1 STANDARD HEIGHT OF CROWN

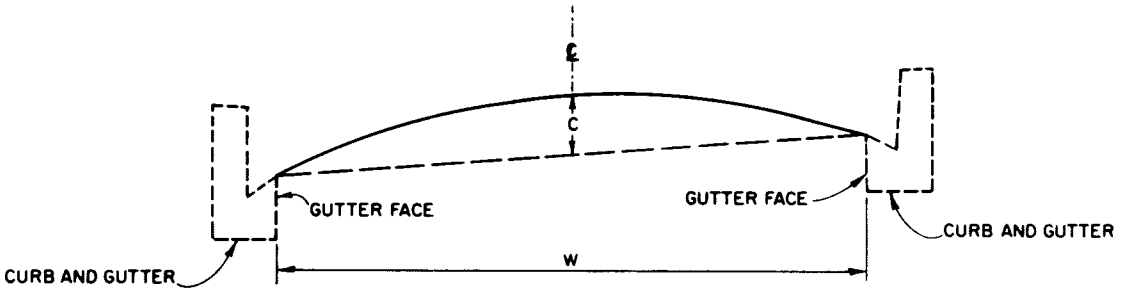

C = 0.006 W + 0.10' WHERE
C = CROWN IN FEET
W = ROADWAY WIDTH LESS
WIDTH OF GUTTERS

T SECTIONS

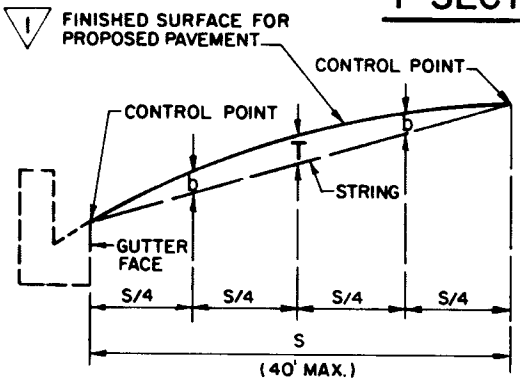

1

T (in.)	b (in.)
0	0
1/2	3/8
1	3/4
1·1/2	1·1/8
2	1·1/2
2·1/2	1·7/8
3	2·1/4
3·1/2	2·5/8
4	3

1 NOTES

1. S IS THE HORIZONTAL SPAN IN FEET.
2. FOR SPANS OF 5 FEET OR LESS, T=0 INCHES.
3. T IS LOCATED AT THE MIDPOINT OF THE SPAN. T IS THE VERTICAL DISTANCE BETWEEN THE STRING AND THE FINISHED SURFACE OF THE PROPOSED PAVEMENT. A T SECTION WITH A VALUE OF T=N INCHES SHALL BE INDICATED AS (TN) ON THE PLAN.
4. THE CONTROL POINT SHALL BE: a, THE TOP EDGE OF THE GUTTER FACE; b, THE FLOW LINE AT THE CURB FACE, IF THE PCC GUTTER IS NOT EXISTING OR PROPOSED; c, THE TOP OF A SURVEY STAKE; d, THE TOP OF A WOOD HEADER; OR e, THE TOP OF EXISTING PAVEMENT TO BE JOINED.
5. A T SECTION MAY BE USED FOR EACH HALF ROADWAY WIDTH.

DEPARTMENT OF PUBLIC WORKS

BUREAU OF ENGINEERING — CITY OF LOS ANGELES

STANDARD STREET CROWN SECTIONS

STANDARD PLAN
S-432-1

SUBMITTED Aug. 29, 1989
ENGINEER OF DESIGN
DEPUTY ENGINEER

APPROVED Aug. 15, 1989
CITY ENGINEER

DES.GNED BY	DRAWN BY	CHECKED BY
RAB	RGM	RGS

REGISTERED PROFESSIONAL ENGINEER — RALPH E. VALENZUELA — Exp 3/31/93 — No 12458 — CIVIL — STATE OF CALIFORNIA

1 REVISIONS	
NO.	DESCRIPTION
1	DELETED NUMBERED SECTIONS. ADDED STANDARD HEIGHT OF CROWN. REVISED T SECTION GRAPHIC AND TABLE. ADDED NOTES.

SUPERSEDES	REFERENCES
29781	

VAULT INDEX NUMBER B-4104

SHEET 1 OF 1 SHEETS

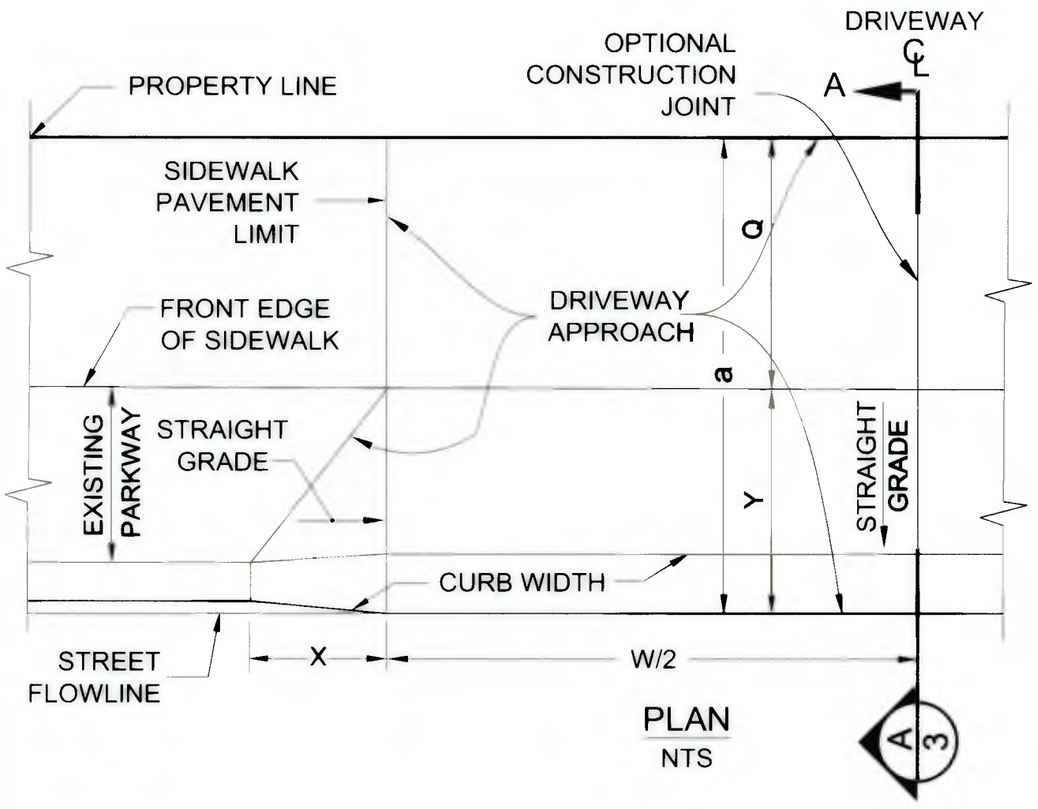

PLAN
NTS

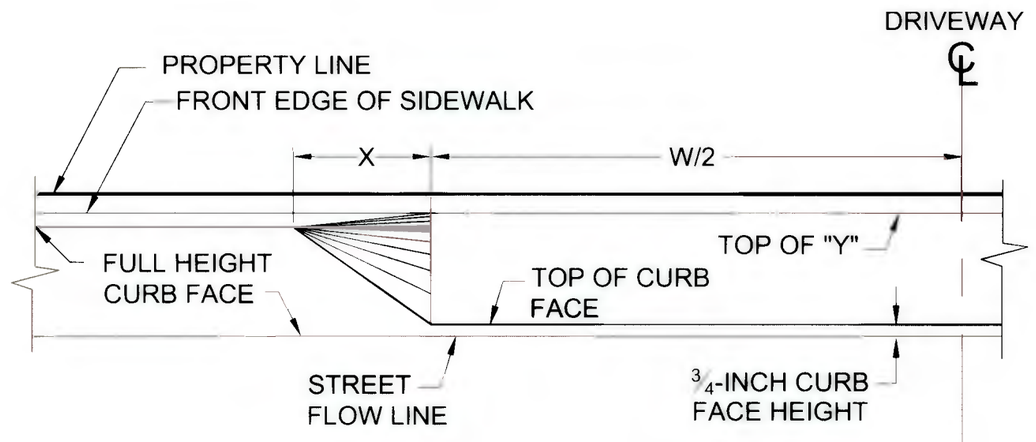

HALF DRIVEWAY APPROACH ELEVATION
NTS

CASE 1

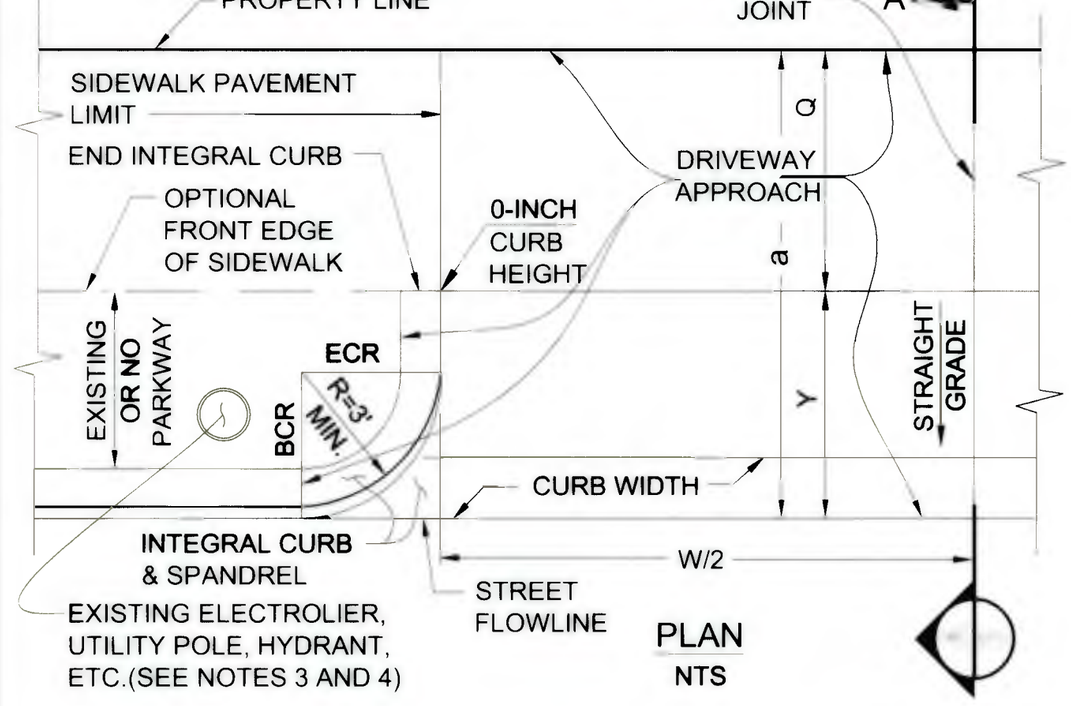

PLAN
NTS

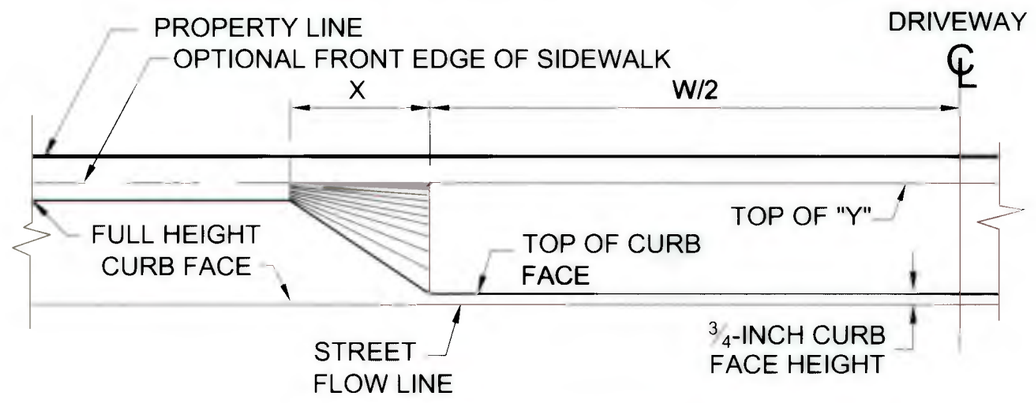

HALF DRIVEWAY APPROACH ELEVATION
NTS

CASE 2

PLAN
NTS

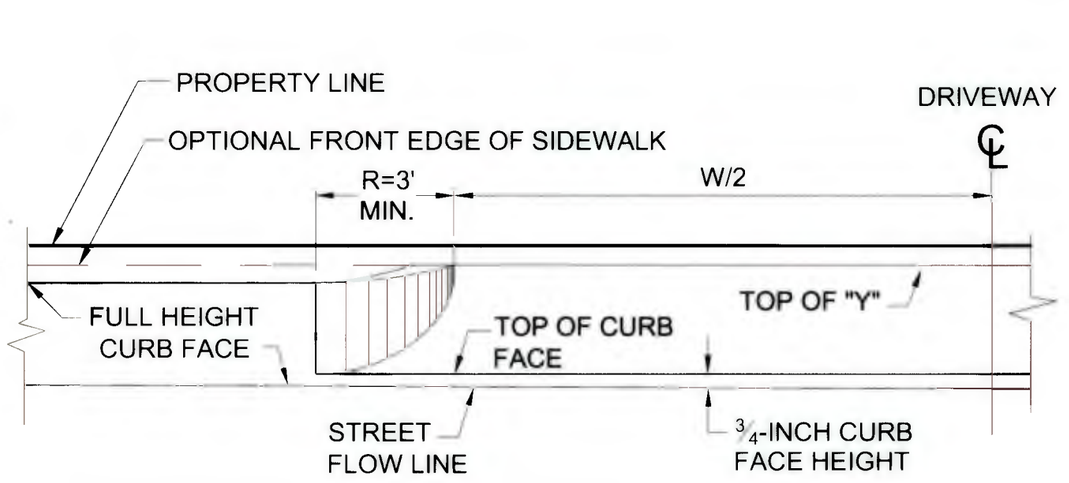

HALF DRIVEWAY APPROACH ELEVATION
NTS

CASE 3

BUREAU OF ENGINEERING

BUREAU OF ENGINEERING — CITY OF LOS ANGELES

DEPARTMENT OF PUBLIC WORKS

DRIVEWAYS

STANDARD PLAN
S-440-4

PREPARED	SUBMITTED	APPROVED
MARK CHMIELOWIEC, P.E. BUREAU OF ENGINEERING CHECKED RAFFI MASSABKI, P.E. BUREAU OF ENGINEERING	C-24-14 SAMARA ALI-AHMAD, P.E. DATE ENGINEER OF DESIGN BUREAU OF ENGINEERING 6/25/14 KENNETH REDD, P.E. DATE DEPUTY CITY ENGINEER	6-25-14 GARY LEE MOORE, P.E. DATE CITY ENGINEER

REGISTERED PROFESSIONAL ENGINEER — GARY LEE MOORE — No. C-49446 — Exp. — CIVIL — STATE OF CALIFORNIA

SUPERSEDES	REFERENCES
B-3890	S-410 S-444

VAULT INDEX NUMBER: B - 473

SHEET 1 OF 4 SHEETS

BUREAU OF ENGINEERING — OFFICIAL RECORD

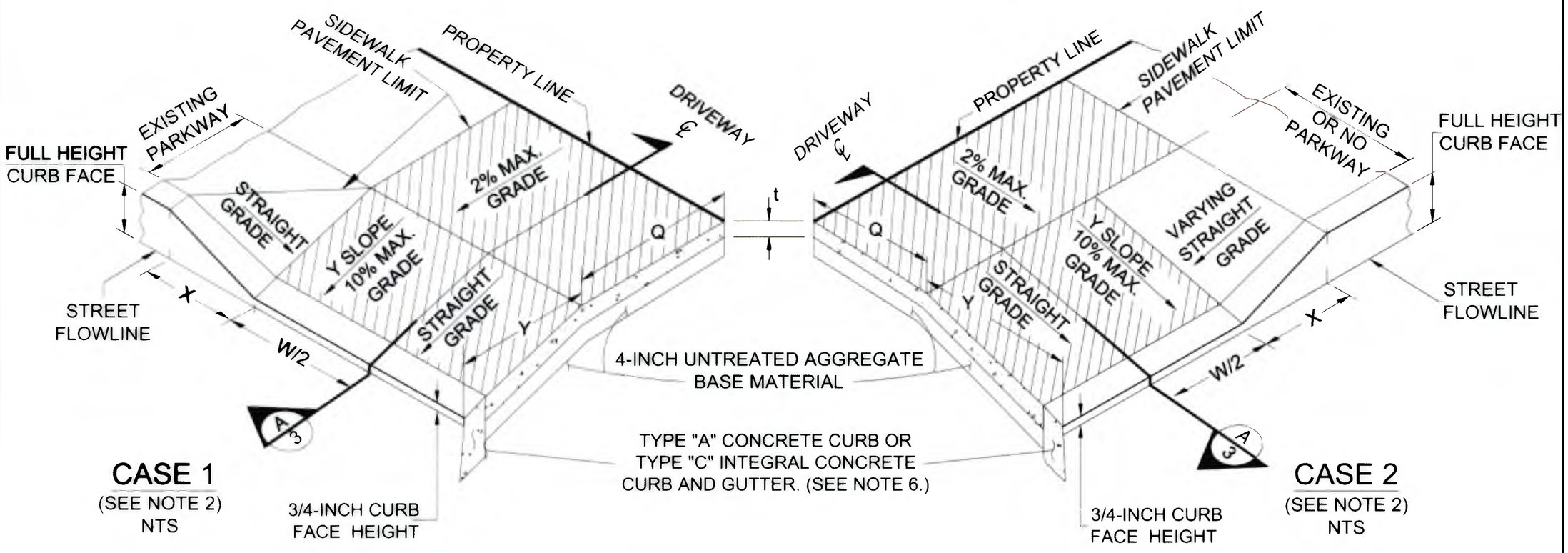

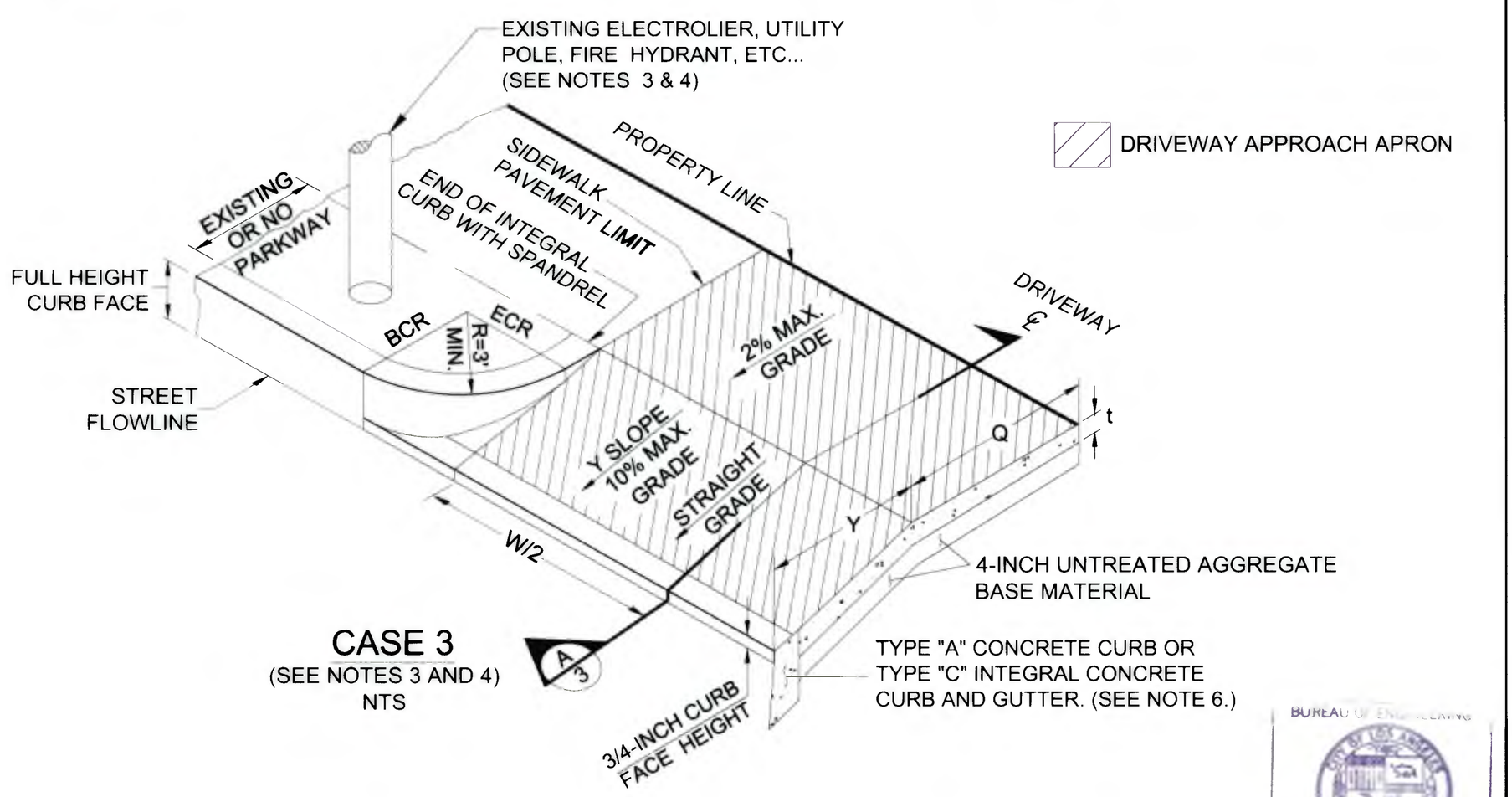

BUREAU OF ENGINEERING
OFFICIAL RECORD

NOTES

1. ALL WORK SHALL BE CONSTRUCTED IN ACCORDANCE WITH THE LATEST STANDARD SPECIFICATIONS FOR PUBLIC WORKS CONSTRUCTION ADOPTED BY THE BOARD OF PUBLIC WORKS AS MODIFIED BY THE CORRESPONDING ISSUE OF THE CITY OF LOS ANGELES DEPARTMENT OF PUBLIC WORKS BROWN BOOK.

2. CASE 2 SHALL BE USED IN MOST CIRCUMSTANCES EXCEPT THAT CASE 1 MAY BE USED TO SERVICE R-1 OR R-2 PROPERTY WITH A PARKWAY AND PROVIDED THE Y-SLOPE DOES NOT ENCROACH INTO THE PORTION OF THE DRIVEWAY APPROACH APRON FOR PEDESTRIANS TO CROSS THE DRIVEWAY.

3. CASE 3 SHALL BE USED IN LIEU OF CASE 1 OR CASE 2 RESPECTIVELY TO PRECLUDE THE FOLLOWING CONDITIONS:

   A. A DISTANCE OF LESS THAN 5 FEET BETWEEN A PROPOSED TOP OF "X" AND THE CENTER LINE OF AN ELECTROLIER OR FIRE HYDRANT.

   B. TRAFFIC SIGNALS, UTILITY POLES AND SIGN POSTS IN THE "X" AREA OF A PROPOSED DRIVEWAY.

4. WHERE CASE 3 IS USED, AN ELECTROLIER OR HYDRANT SHALL NOT BE CLOSER THAN 18-INCHES FROM THE DRIVEWAY BCR, AND A TRAFFIC SIGNAL, UTILITY POLE OR SIGN POST SHALL NOT BE CLOSER THAN THE DRIVEWAY BCR.

5. WHERE THERE IS EXISTING INTEGRAL CONCRETE CURB AND GUTTER, BOTH CURB AND GUTTER MUST BE REMOVED. OPTIONAL, IF THE GUTTER IS IN GOOD CONDITION, THE GUTTER MAY BE SAW CUT 4 INCHES TO 6 INCHES FROM THE STREET FLOW LINE AND THE OUTSIDE PORTION LEFT IN PLACE, PROVIDING THAT IT IS NOT LESS THAN 18 INCHES.

6. EITHER TYPE "A" CONCRETE CURB OR TYPE "C" INTEGRAL CONCRETE CURB AND GUTTER SHALL BE EXISTING OR CONSTRUCTED FOR ALL DRIVEWAY APPROACHES. SEE THE LATEST STANDARD PLAN S-410 FOR TYPES OF CURBS. IF EXISTING CURB REQUIRES REMOVAL AND REPLACEMENT, RECONSTRUCT CURB TO MATCH EXISTING CURB TYPE. CITY ENGINEER SHALL DETERMINE THE TYPE OF CURB FOR ALL NEW CURB CONSTRUCTION.

7. WEAKENED PLANE CONTROL JOINTS SHALL BE INSTALLED ALONG BOTH SIDES OF A DRIVEWAY APPROACH APRON AND AT APPROXIMATELY 10 FEET INTERVALS WITHIN THE DRIVEWAY. WHERE THE DISTANCE BETWEEN THE SIDES OF THE DRIVEWAY APPROACH APRON DOES NOT EXCEED 15 FEET, AN INTERMEDIATE WEAKENED PLANE CONTROL JOINT WILL NOT BE REQUIRED.

8. THE AREA INCLUDED WITHIN THE "X" AND "Y" SLOPES (INCLUDING TOP OF CURB) OF THE DRIVEWAY APPROACH SHALL BE FINISHED WITH A WOOD FLOAT. THE BALANCE OF THE DRIVEWAY APPROACH SHALL BE FINISHED IN ACCORDANCE WITH THE LATEST SPECIFICATIONS FOR SIDEWALK.

9. DEFINITIONS AND DIMENSIONS:

DRIVEWAY APPROACH : AREA OF A DRIVEWAY LYING IN THE PUBLIC RIGHT OF WAY BETWEEN THE STREET FLOW LINE AND THE PROPERTY LINE, INCLUDING THE APRON, SIDE SLOPES AND CURB RETURNS WITH SPANDRELS.

DRIVEWAY APPROACH APRON : PORTION OF A DRIVEWAY APPROACH, EXCLUDING THE SIDE SLOPES AND CURB RETURNS WITH SPANDRELS EXTENDING FROM THE STREET FLOW LINE TO THE PROPERTY LINE AND BETWEEN THE ADJOINING SIDEWALK PAVEMENTS.

a = HORIZONTAL LENGTH OF DRIVEWAY APPROACH APRON MEASURED ALONG THE CENTERLINE FROM THE STREET FLOW LINE TO THE PROPERTY LINE.

Q = PORTION OF THE APPROACH APRON FOR PEDESTRIANS TO CROSS THE DRIVEWAY HAVING 4 FEET MINIMUM TRANSVERSE WIDTH AND MAXIMUM TRANSVERSE GRADE OF 2 PERCENT TOWARD THE STREET, INCLUDING THE 1/4-INCH VERTICAL CONSTRUCTION TOLERANCE.

R = DRIVEWAY CURB RETURN RADIUS, 3-FEET MINIMUM, PROVIDING TRANSITION FROM FULL HEIGHT CURB TO THE GRADE OF THE APPROACH APRON.

t = THICKNESS OF CONCRETE DRIVEWAY PAVEMENT, INCLUDING SIDE SLOPES AND CURB RETURN SPANDRELS. A "t" OF 4-INCHES MAY BE USED FOR DRIVEWAYS SERVING NOT MORE THAN FOUR RESIDENTIAL UNITS AND A "t" OF 6 INCHES SHALL BE USE FOR ALL OTHER DRIVEWAYS.

W = WIDTH OF DRIVEWAY APPROACH APRON MEASURED ALONG THE STREET FLOW LINE, EXCLUDING SIDE SLOPES AND CURB RETURNS WITH SPANDRELS. FOR THE "W" WIDTH OF DRIVEWAYS, SEE SECTION 62.105.2 OF THE LOS ANGELES MUNICIPAL CODE.

X = HORIZONTAL LENGTH OF THE SIDE SLOPING PORTION OF THE DRIVEWAY APPROACH, MEASURED ALONG THE STREET FLOW LINE PROVIDING TRANSITION FROM FULL HEIGHT CURB TO THE GRADE OF THE APPROACH APRON.

Y = HORIZONTAL LENGTH OF THE RAMPED PORTION OF THE APPROACH APRON MEASURED ALONG THE DRIVEWAY CENTERLINE FROM THE STREET FLOW LINE TO THE FRONT EDGE OF THE 2 PERCENT TRANSVERSE GRADE FOR PEDESTRIANS.

Y-SLOPE = DIFFERENCE IN ELEVATION ALONG THE DRIVEWAY CENTERLINE BETWEEN THE TOP OF CURB FACE AND THE FRONT EDGE OF THE 2 PERCENT TRANSVERSE GRADE FOR PEDESTRIANS DIVIDED BY THE HORIZONTAL LENGTH OF THE RAMPED PORTION OF DRIVEWAY APPROACH APRON (Y).

FULL HEIGHT CURB FACE (INCHES)		5 (or Less)	6	7	8	9	10**	11**	12** (or more)
MINIMUM DIMENSIONS (FEET)									
CASE 1	X	3	3	3	3	3	3	3	3
CASE 2		3	3	3.5	4	4.5	5	5.5	6
CASE 3	R	3	3	3	3	3	3	3	3
ALL CASES	Y	4.5	5.5	6.5	7.5	8.75	9.75	10.75	11.75
	Q	4	4	4	4	4	4	4	4
	a	8.5	9.5	10.5	11.5	12.75	13.75	14.75	15.75

** FOR EXISTING FULL HEIGHT CURB FACE ONLY

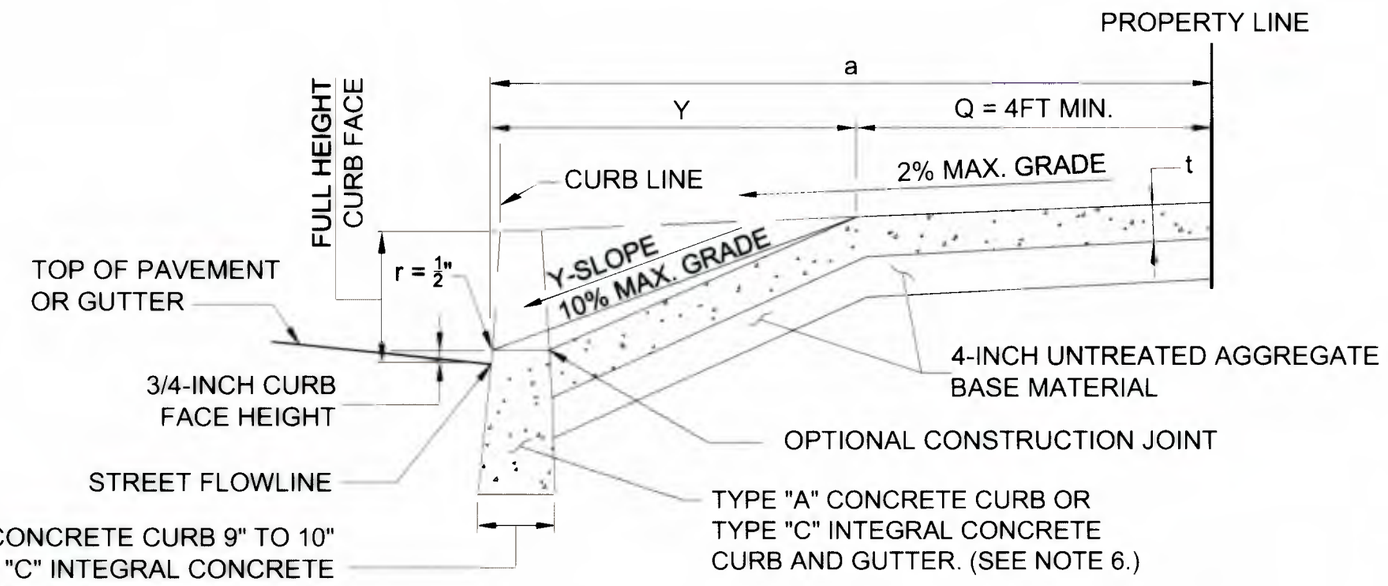

TYPICAL DRIVEWAY SECTION @ CENTERLINE — A

NTS

BUREAU OF ENGINEERING
OFFICIAL RECORD

10. THE DEPRESSED CURB FACE HEIGHT ALONG THE DRIVEWAY APPROACH APRON SHALL BE 3/4-INCH WITH NEGLIGIBLE BATTER.

11. 4-INCH UNTREATED AGGREGATE BASE MATERIAL SHALL BE INSTALLED UNDER NEW CONCRETE DRIVEWAYS.

12. THE PORTION OF THE APPROACH APRON FOR PEDESTRIANS TO CROSS THE DRIVEWAY SHALL HAVE A MINIMUM WIDTH "Q" OF 4 FEET AND BE GRADED TOWARD THE STREET FLOW LINE. THE MAXIMUM TRAVERSE GRADE SHALL BE 2 PERCENT AND THE MINIMUM SHALL BE 0.5 PERCENT BOTH INCLUDING THE 1/4-INCH VERTICAL CONSTRUCTION TOLERANCE. "Q" LESS THAN 4 FEET SHALL REQUIRE APPROVAL BY THE CITY ENGINEER.

13. THE RAMPED PORTION OF THE DRIVEWAY APPROACH APRON (Y) SHALL HAVE A MAXIMUM GRADE OF 10 PERCENT. GRADES STEEPER THAN 10 PERCENT SHALL REQUIRE APPROVAL BY THE CITY ENGINEER. (SEE AUTOMOBILE TEMPLATES ON SHEET 4)

14. FOR DRIVEWAY DESIGNS EXTENDING ON PRIVATE PROPERTY SEE LOS ANGELES DEPARTMENT OF BUILDING AND SAFETY INFORMATION BULLETIN P/ZC2002-001. THIS STANDARD PLAN SHALL GOVERN WHERE INFORMATION IN THIS BULLETIN CONFLICTS WITH INFORMATION FROM THIS STANDARD PLAN.

15. DEPRESSED SIDEWALKS ADJACENT TO DRIVEWAY APPROACH APRONS SHALL REQUIRE APPROVAL BY THE CITY ENGINEER.

16. AT LOCATIONS WHERE ANY S-440-4 REQUIREMENTS CANNOT BE MET, THE DESIGNER AND/OR CONTRACTOR SHALL REQUEST DIRECTION FROM THE CITY ENGINEER PRIOR TO THE COMPLETION OF DESIGN.

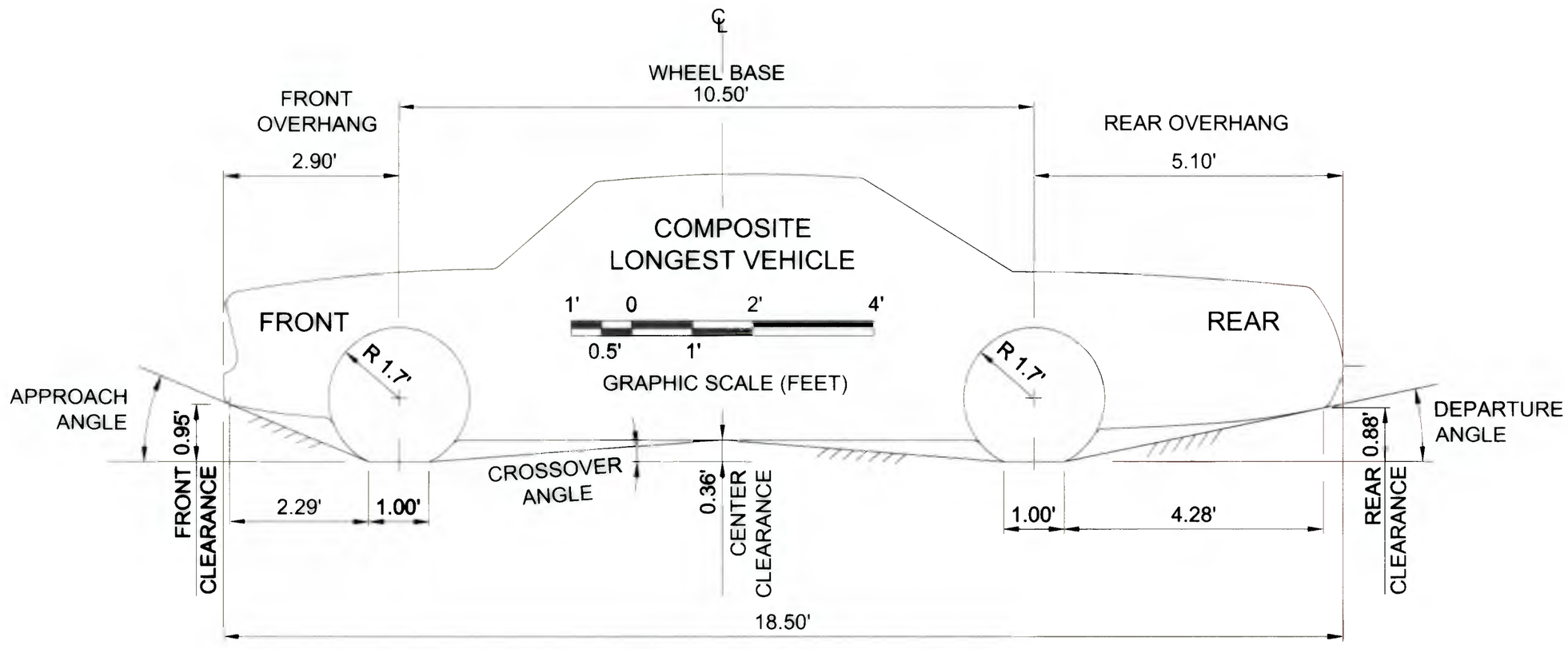

COMPOSITE LONGEST VEHICLE

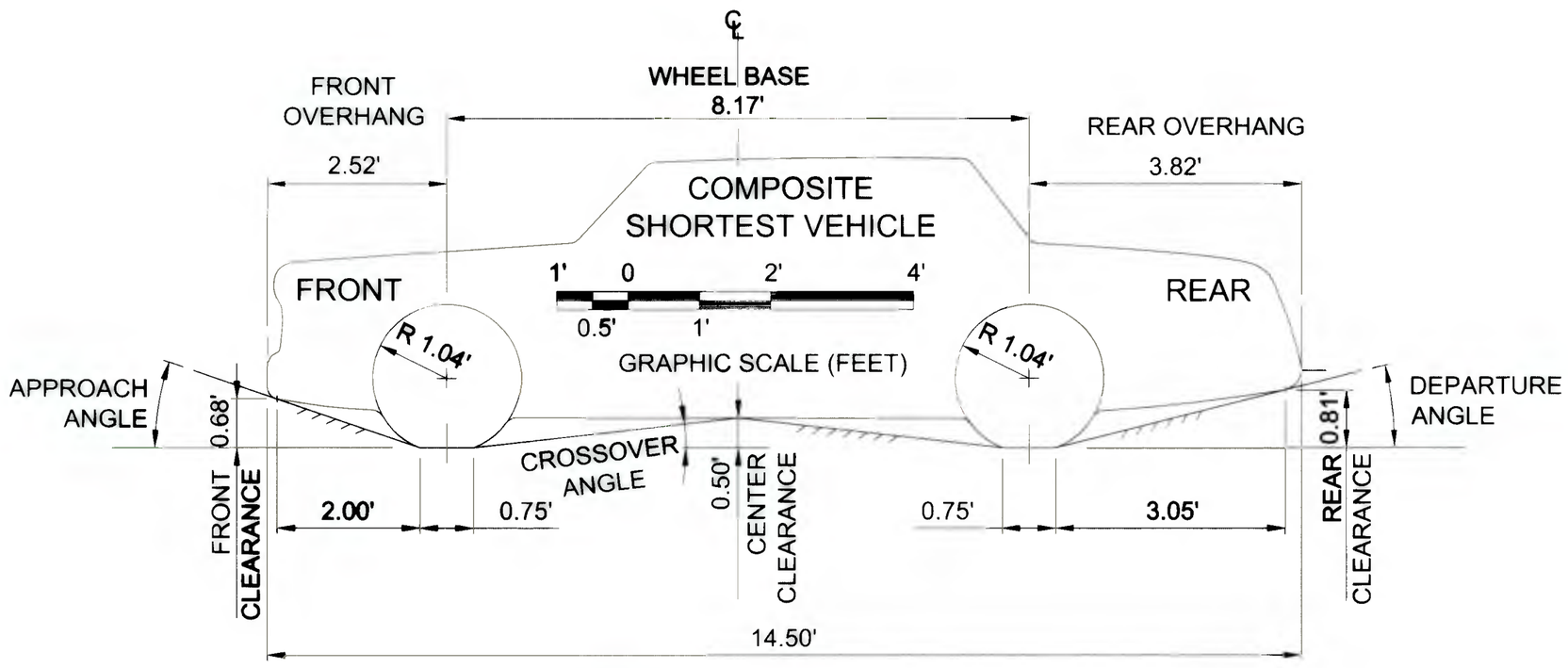

COMPOSITE SHORTEST VEHICLE

AUTOMOBILE TEMPLATES

FOR CHECKING VERTICAL CLEARANCE ALONG DRIVEWAY CENTERLINE

NOTES

THE DRIVEWAY CENTERLINE SHOULD BE PLOTTED TO SCALE (1-INCH EQUALS 2-FEET BOTH HORIZONTALLY AND VERTICALLY) AND EXTEND FROM THE STREET CENTERLINE TO A SUFFICIENT LENGTH BEYOND THE PROPERTY LINE ONTO THE ABUTTING PROPERTY.

BUREAU OF ENGINEERING
CITY OF LOS ANGELES
FOUNDED 1781
OFFICIAL RECORD

STANDARD DUAL UNI-DIRECTIONAL CURB RAMPS

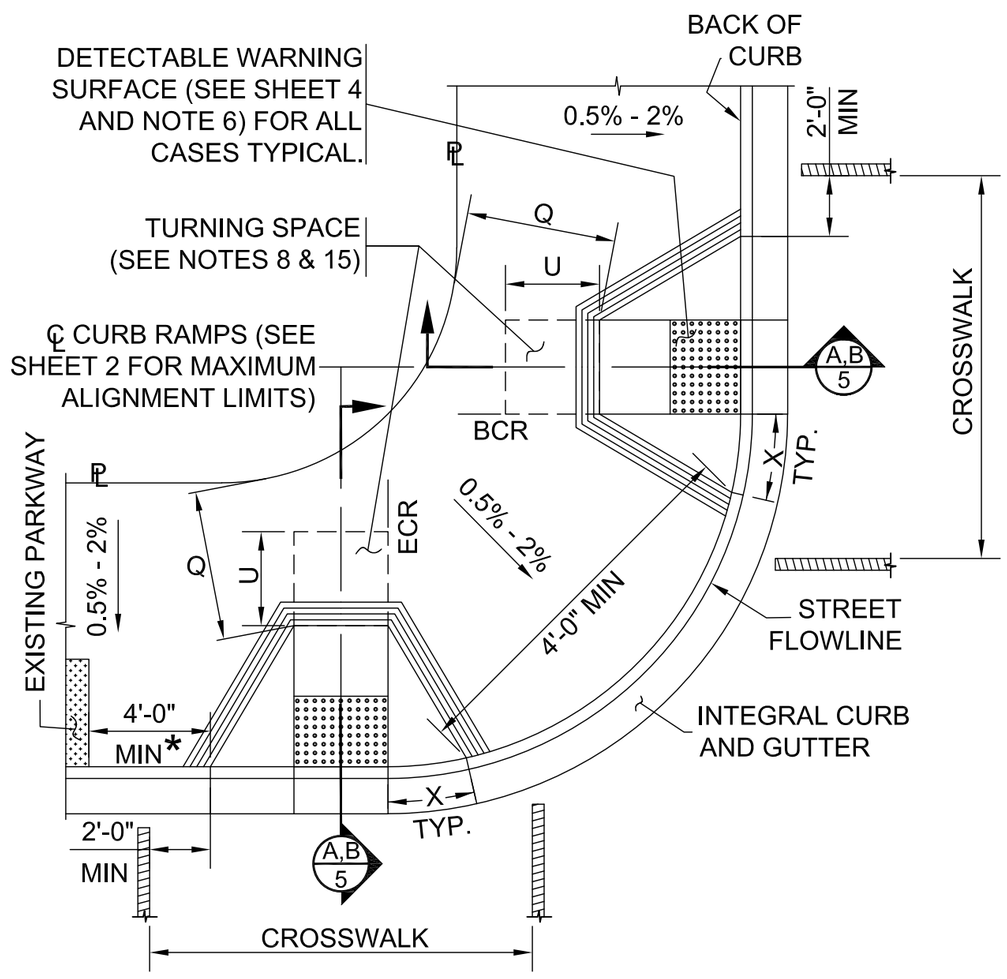

CASE A
(SEE NOTE 9)

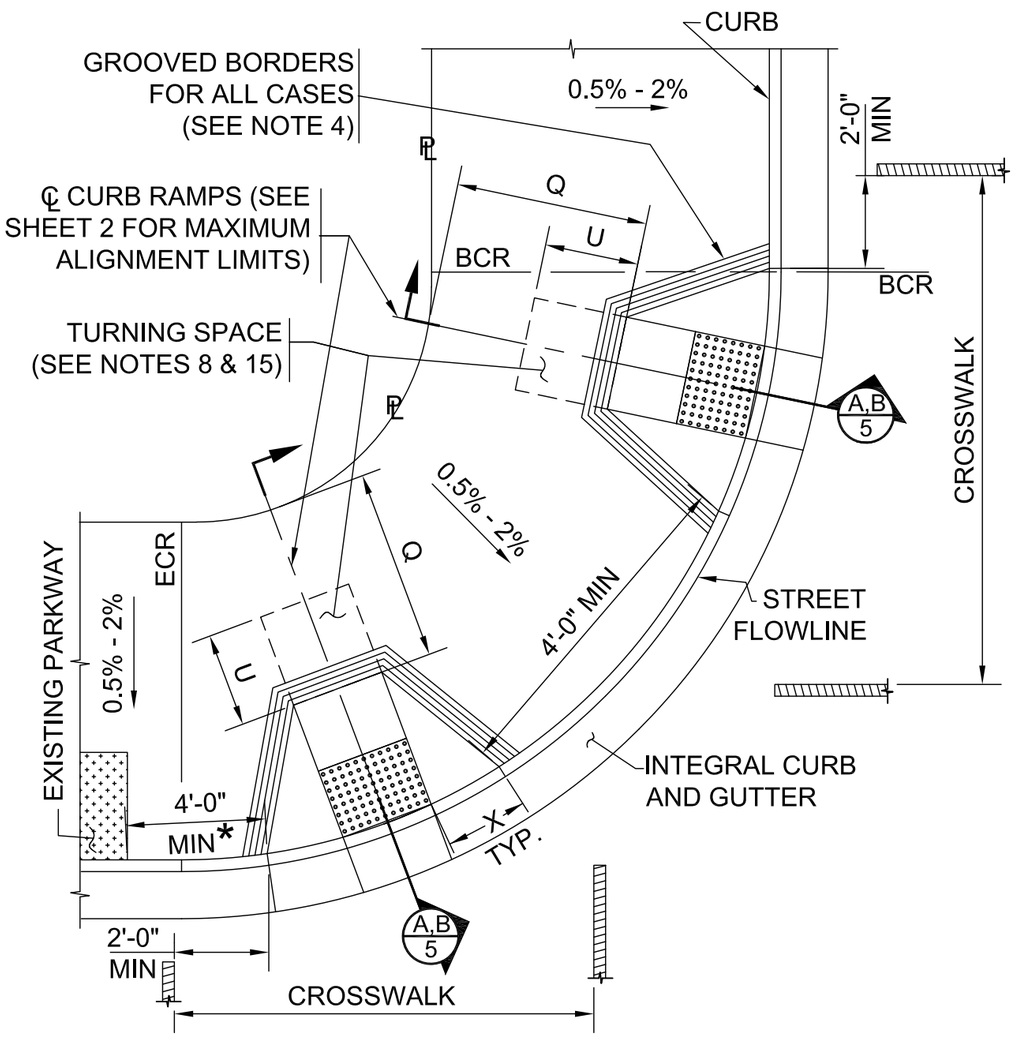

CASE B
(SEE NOTE 9)

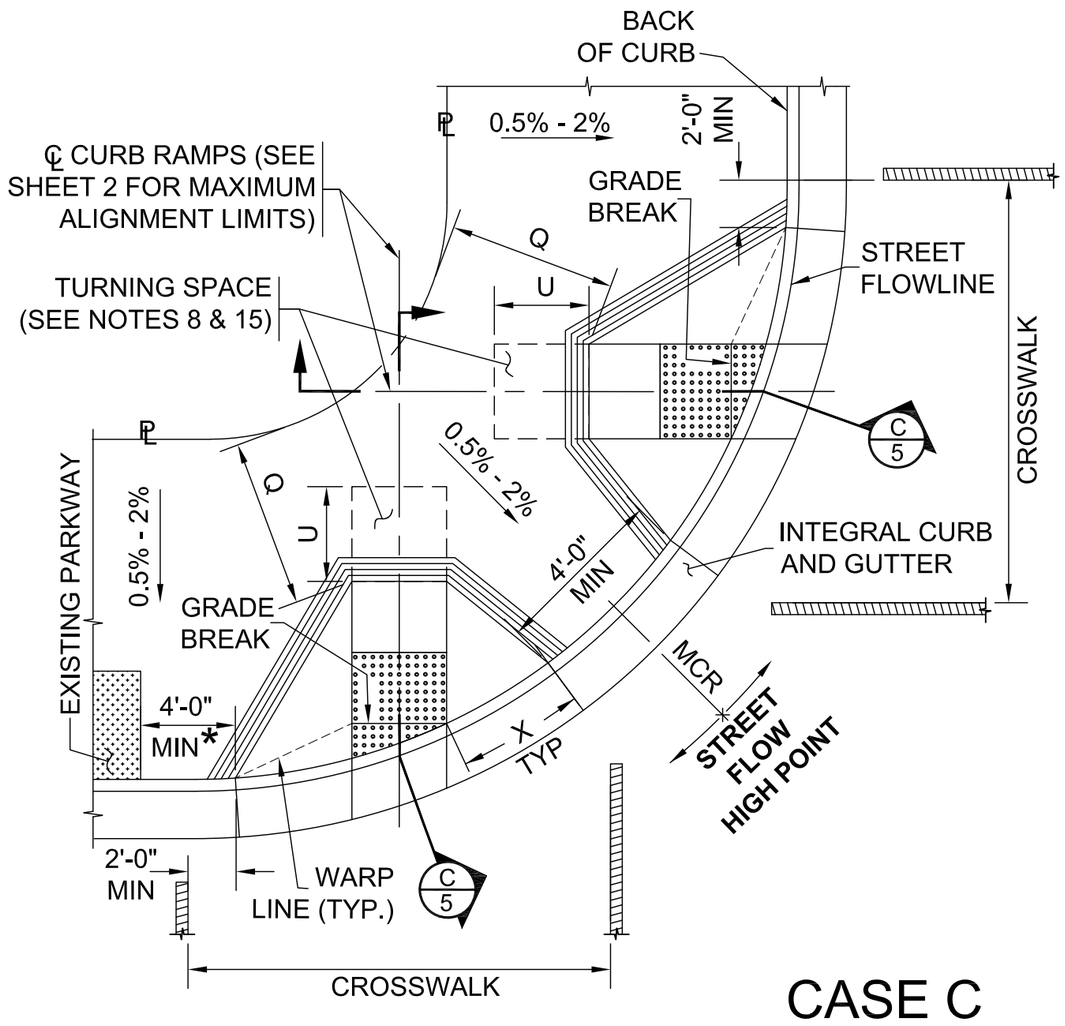

CASE C
(SEE NOTE 9)
(USE WHEN STREET FLOW HIGH POINT EXISTS AT MCR OR UPSTREAM STORM DRAIN EXISTS ADJACENT TO CURB RETURN)

NOTES

a. INDIVIDUAL CURB RAMPS SHOWN IN CASES A, B AND C MAY BE CONSIDERED AND USED IN COMBINATION (SEE SHEET 3 FOR ADDITIONAL DETAILS).

b. THE 4'-0" MINIMUM SET BACK (DENOTED HEREON WITH AN *) FROM THE CURB RAMP FLARE TO AN EXISTING PARKWAY MAY BE REDUCED TO 2'-0" IN RESIDENTIAL ZONES.

BUREAU OF ENGINEERING
OFFICIAL RECORD

NOT TO SCALE

BUREAU OF ENGINEERING — DEPARTMENT OF PUBLIC WORKS — CITY OF LOS ANGELES

CURB RAMPS

STANDARD PLAN
S-442-6

PREPARED	SUBMITTED	APPROVED
CARLOS CUEVA, P.E. BUREAU OF ENGINEERING	Electronically Signed by Edward Arrington, S.E. on 03/09/2020 EDWARD ARRINGTON, S.E. ENGINEER OF DESIGN	03/27/2020 Electronically signed by 21866 on 03/27/2020 at 7:38:48 AM GARY LEE MOORE, P.E. CITY ENGINEER
CHECKED RAFFI MASSABKI, P.E. BUREAU OF ENGINEERING	Electronically Signed by Ken Redd on 03/24/2020 12:53:04 PM KENNETH R. REDD, P.E. DEPUTY CITY ENGINEER	

REGISTERED PROFESSIONAL ENGINEER — GARY LEE MOORE — No. C-49446 — CIVIL — STATE OF CALIFORNIA

SUPERSEDES	REFERENCES
B-4761	S-410 S-420 S-444 S-601

VAULT INDEX NUMBER: **B-4786**

SHEET 1 OF 9 SHEETS

CURB RAMPS TRANSITIONS ALIGNMENT LIMITS

FOR CASES A THRU G

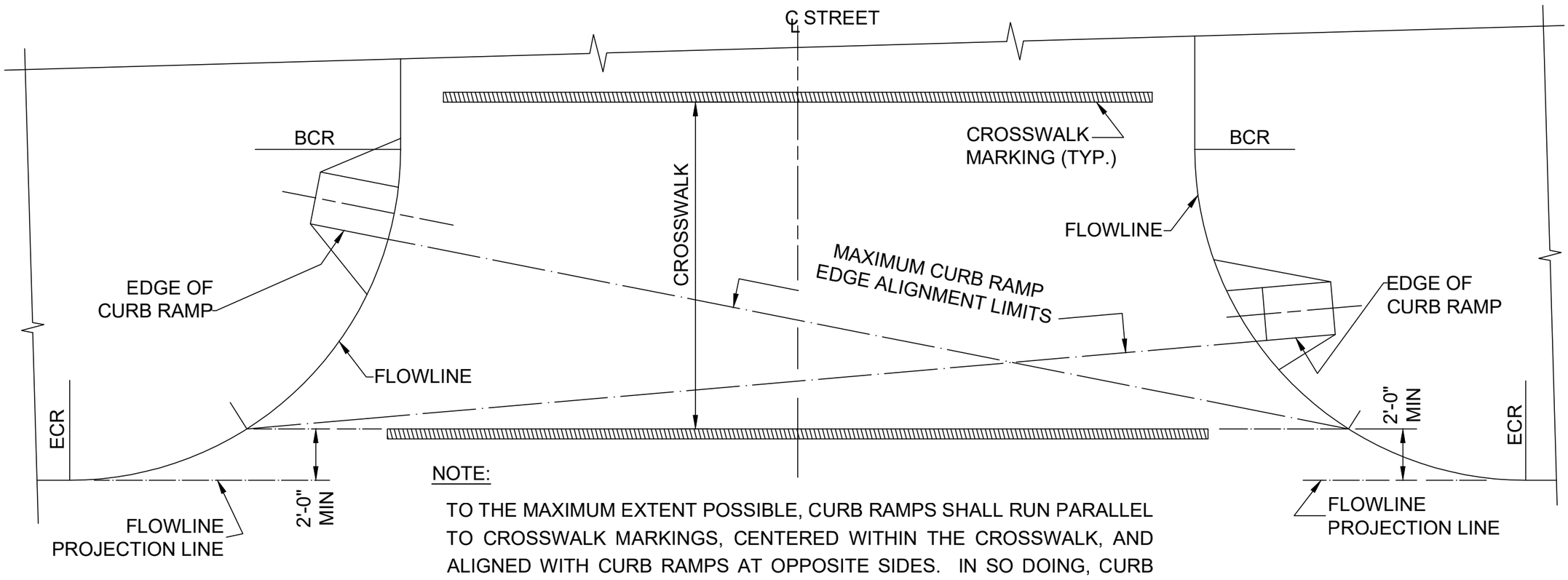

NOTE:

TO THE MAXIMUM EXTENT POSSIBLE, CURB RAMPS SHALL RUN PARALLEL TO CROSSWALK MARKINGS, CENTERED WITHIN THE CROSSWALK, AND ALIGNED WITH CURB RAMPS AT OPPOSITE SIDES. IN SO DOING, CURB RETURNS PLACED ON EITHER ONE OR BOTH SIDES OF CURB RAMPS SHALL BE CONSIDERED.

MID-BLOCK UNI-DIRECTIONAL CURB RAMPS

(UNLESS NOTED HEREIN, SEE APPLICABLE DETAILS ON SHEET 3)

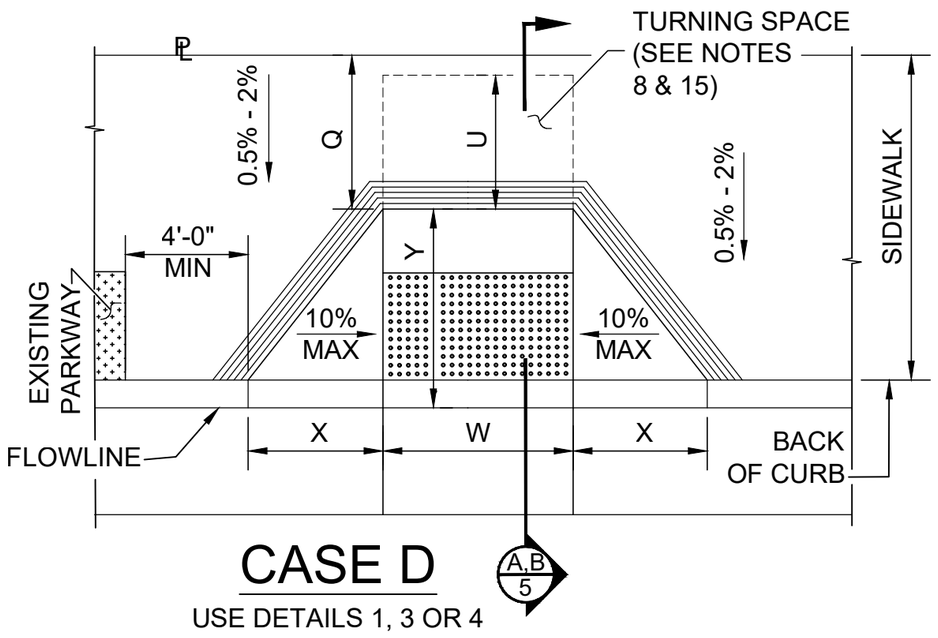

CASE D

USE DETAILS 1, 3 OR 4
ON SHEET 3 AS APPLICABLE (SEE NOTE 9)

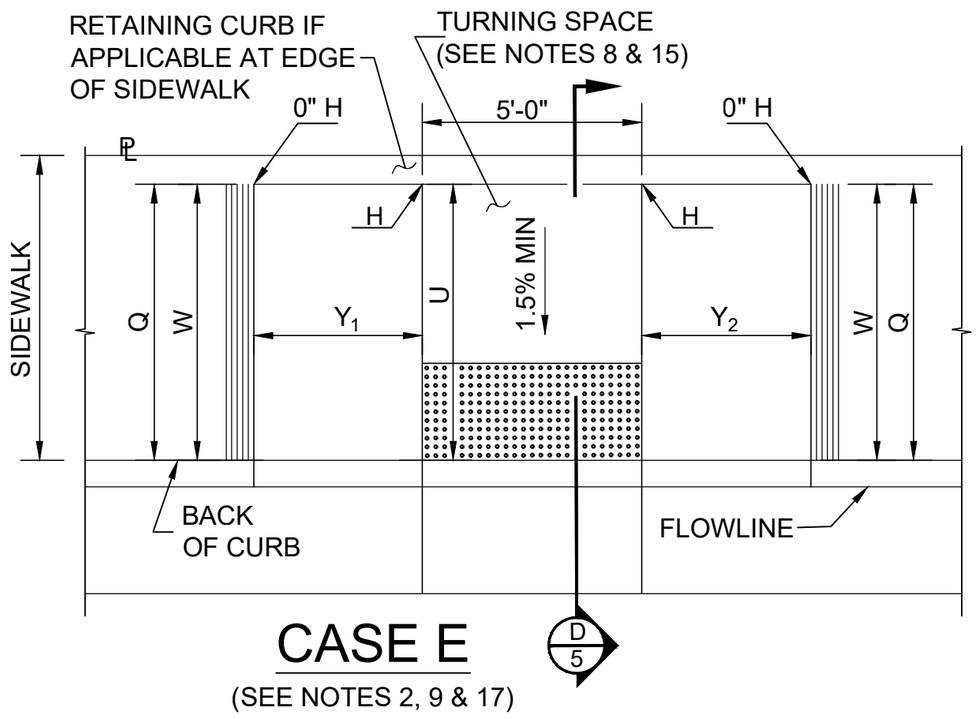

CASE E

(SEE NOTES 2, 9 & 17)

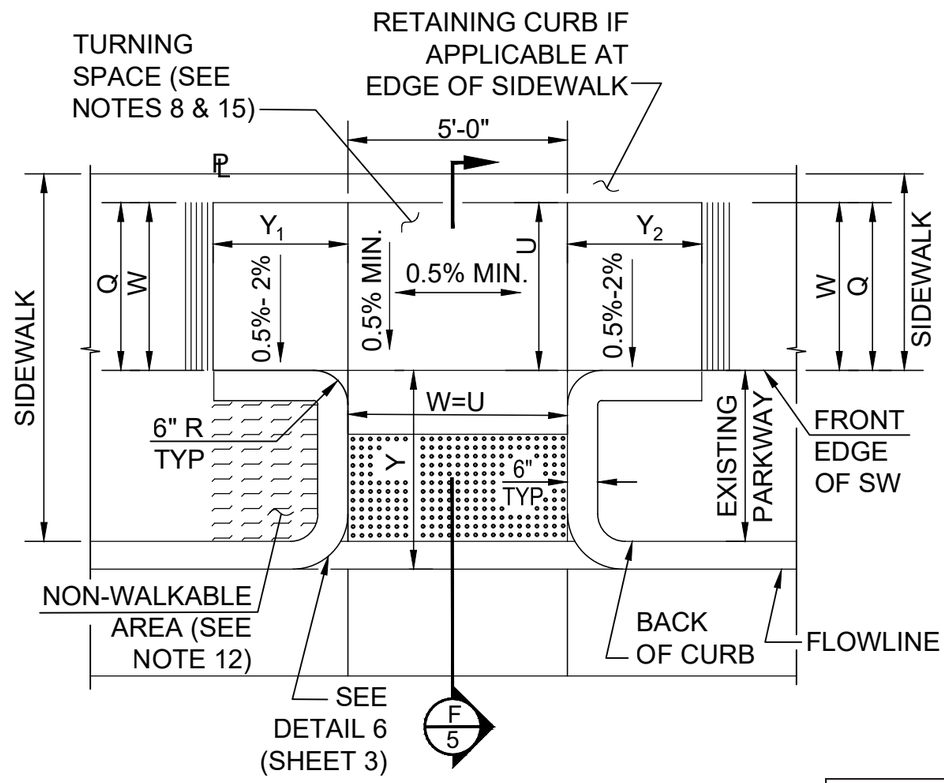

CASE F

(SEE NOTE 9)

SPECIAL UNI-DIRECTIONAL CURB RAMP

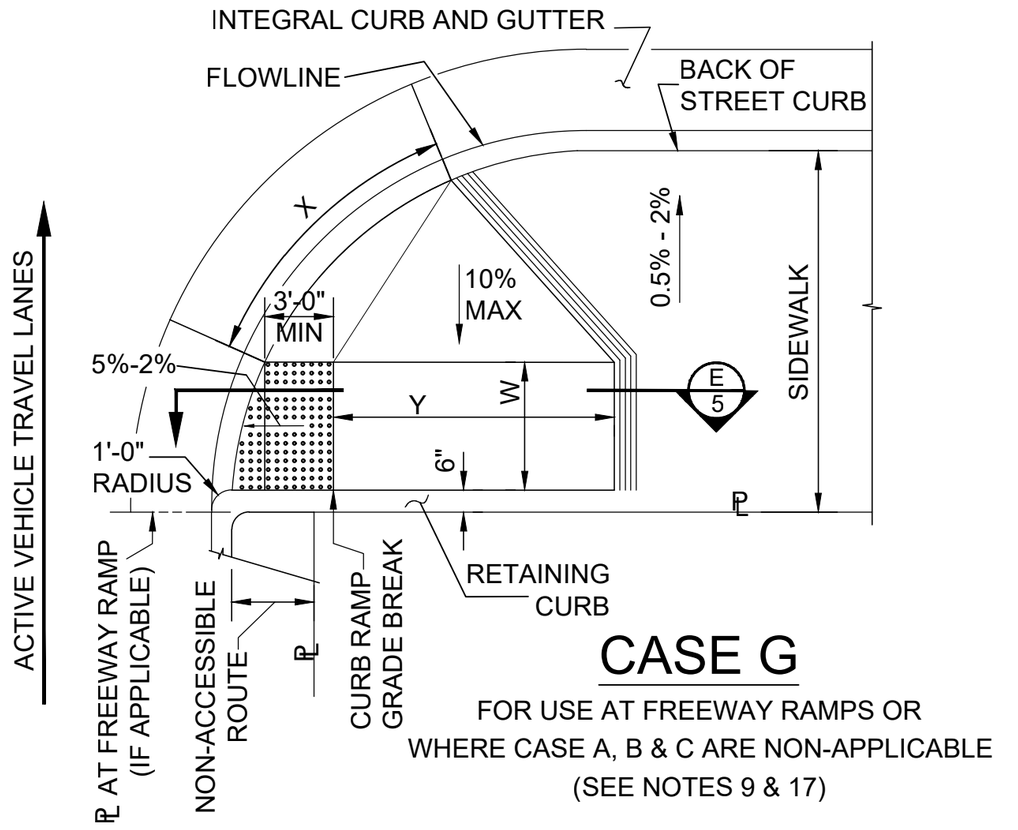

CASE G

FOR USE AT FREEWAY RAMPS OR
WHERE CASE A, B & C ARE NON-APPLICABLE
(SEE NOTES 9 & 17)

NOT TO SCALE

BUREAU OF ENGINEERING
OFFICIAL RECORD

STANDARD PLAN NO. S-442-6 | VAULT INDEX NUMBER **B-4786** | SHEET 2 OF 9 SHEETS

CURB RAMPS DETAILS

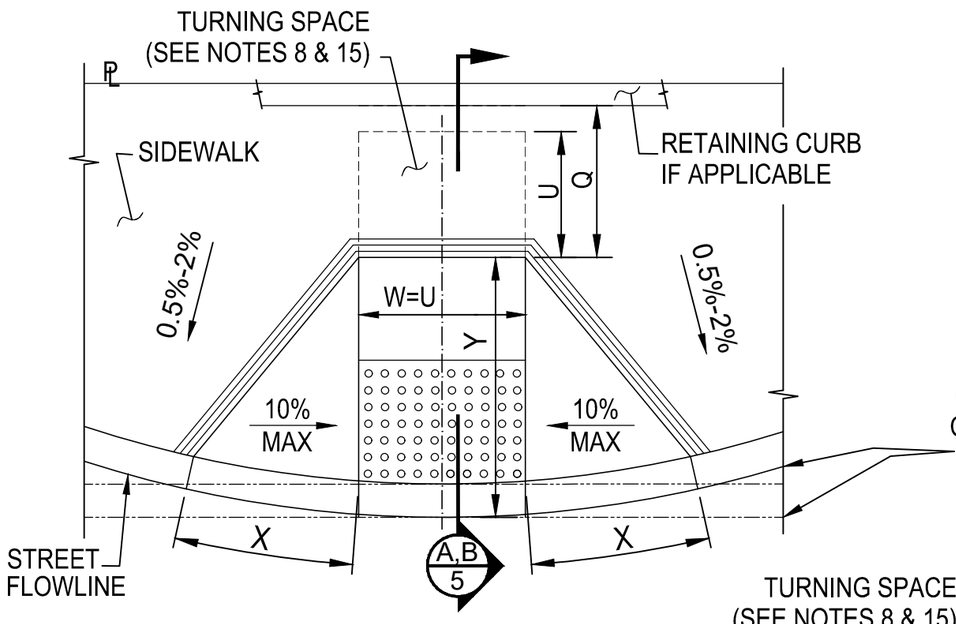

DETAIL 1

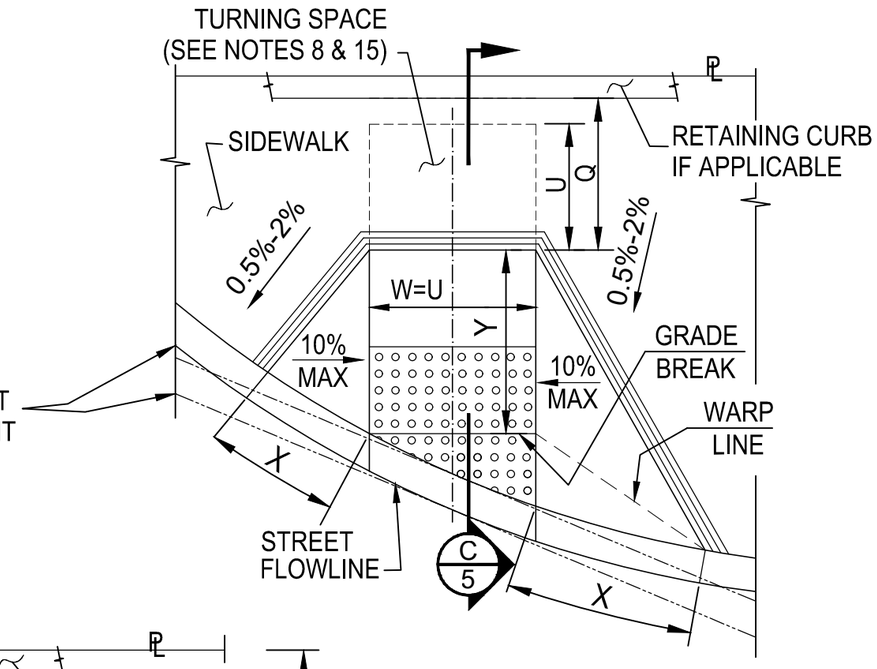

DETAIL 2

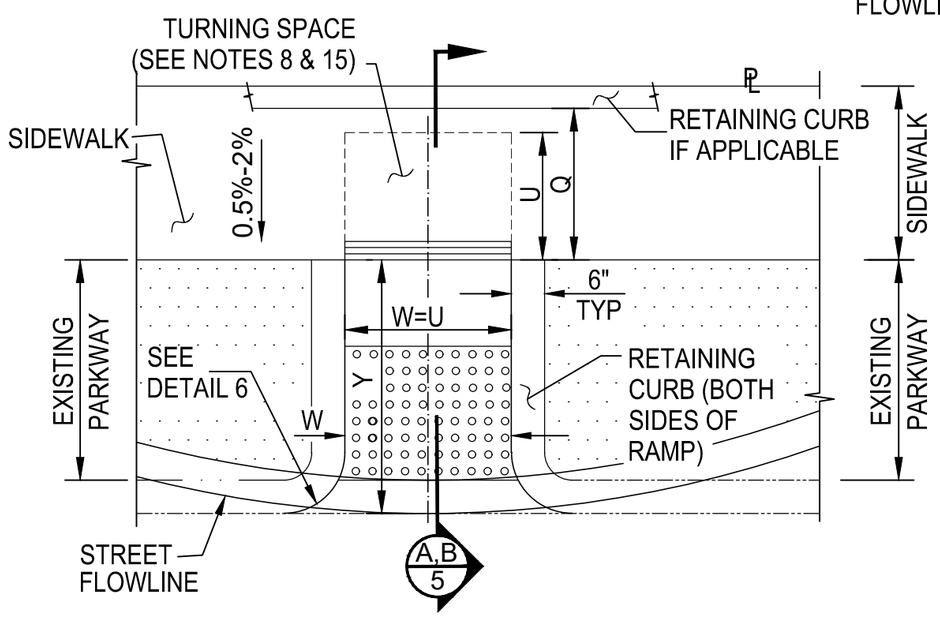

DETAIL 3

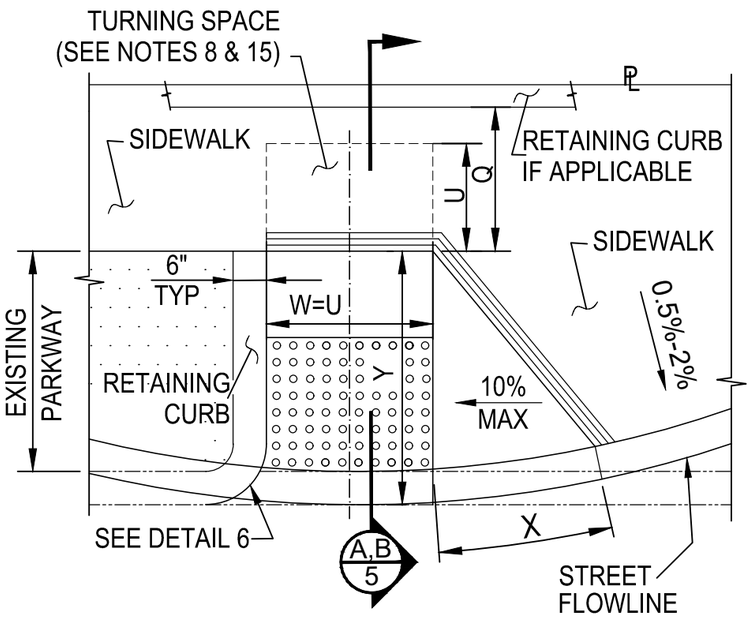

DETAIL 4

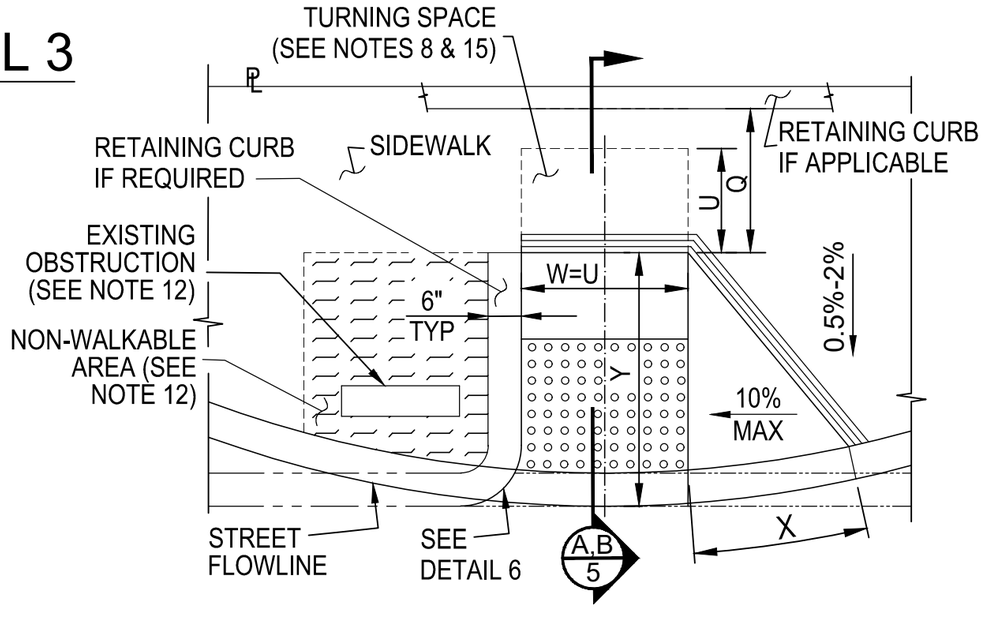

DETAIL 5

CURB DETAILS

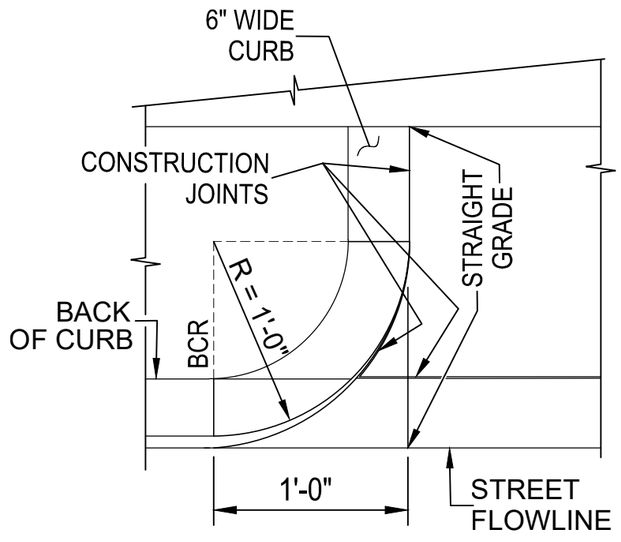

PLAN

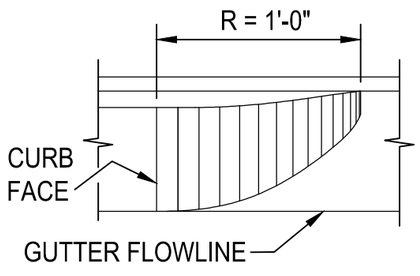

ELEVATION

DETAIL 6

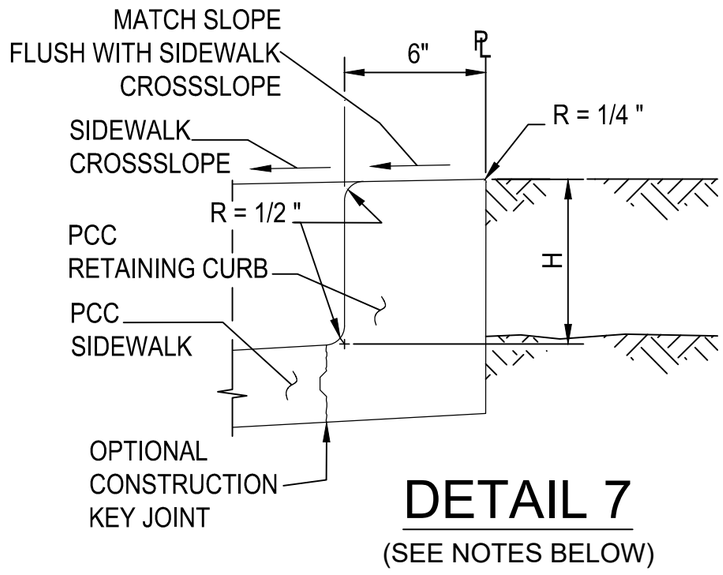

DETAIL 7

(SEE NOTES BELOW)

NOTES:

a. "H"=2.5 INCHES MINIMUM. FOR "H" EXCEEDING 9 INCHES, DESIGN CURB AS AN ISOLATED REINFORCED CONCRETE RETAINING CURB.

b. TEMPORARY CONSTRUCTION EASEMENT OR RIGHT OF ENTRY SHALL BE OBTAINED FROM AFFECTED PROPERTY OWNERS PRIOR TO PLACING FORMWORK FOR BACK OF SIDEWALK OR RETAINING CURB/WALL ALONG PROPERTY LINES.

NOT TO SCALE

BUREAU OF ENGINEERING

OFFICIAL RECORD

STANDARD PLAN NO. S- 442-6	VAULT INDEX NUMBER **B-4786**	SHEET 3 OF 9 SHEETS

SPECIAL CURB RAMPS FOR NARROW SIDEWALKS
6-0" TO 7'-6" IN WIDTH
(SEE NOTES 2, 9 & 17)

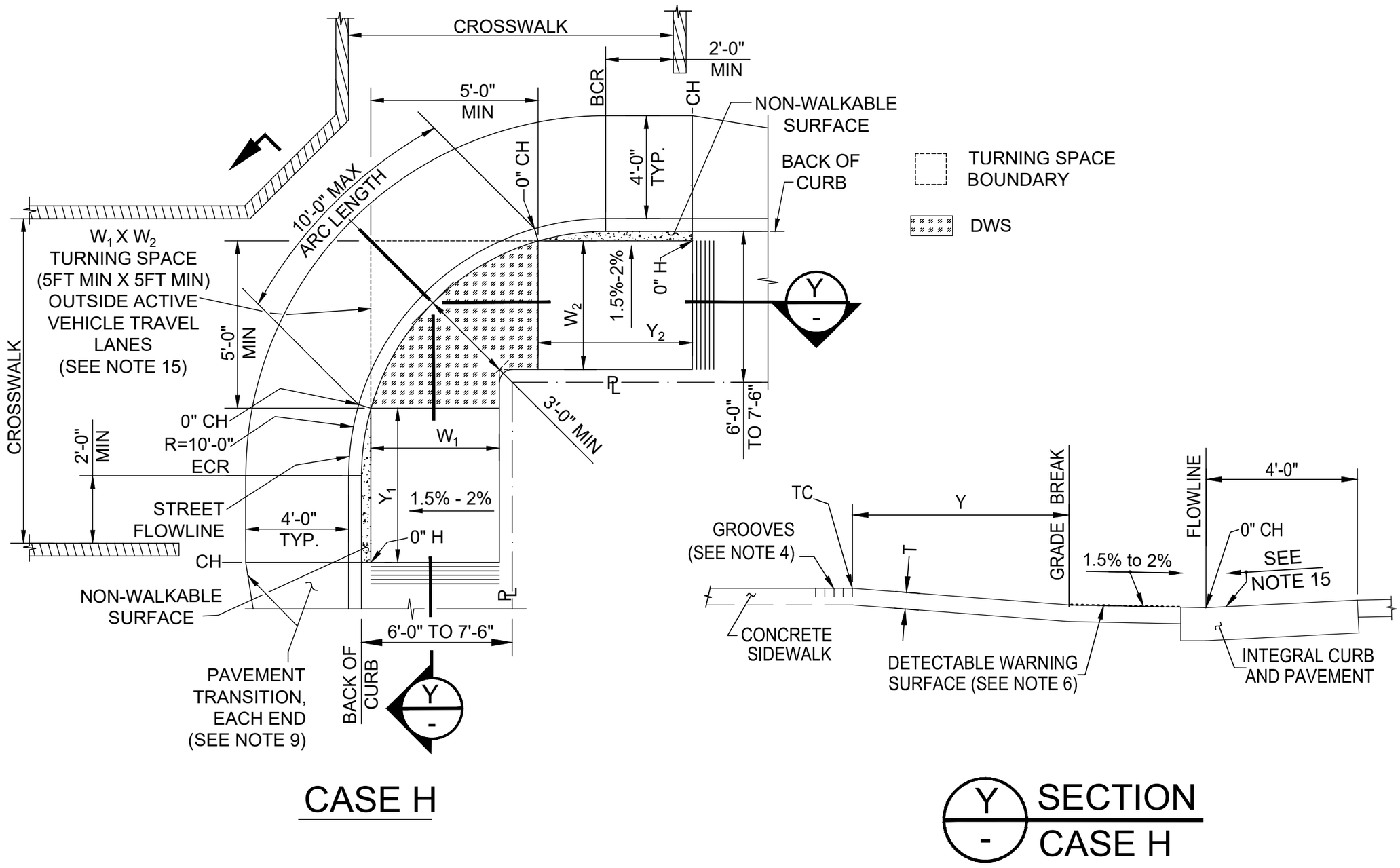

CASE H

Y / - SECTION CASE H

DETECTABLE WARNING SURFACE (DWS)
(SEE NOTE 6)

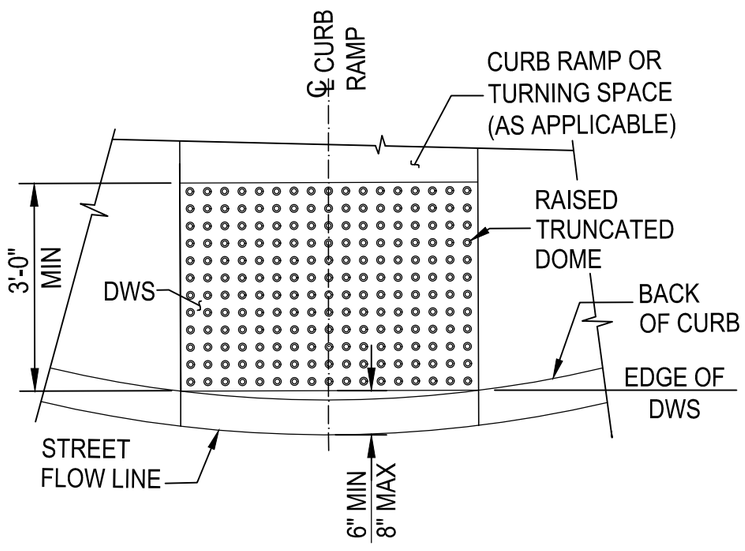

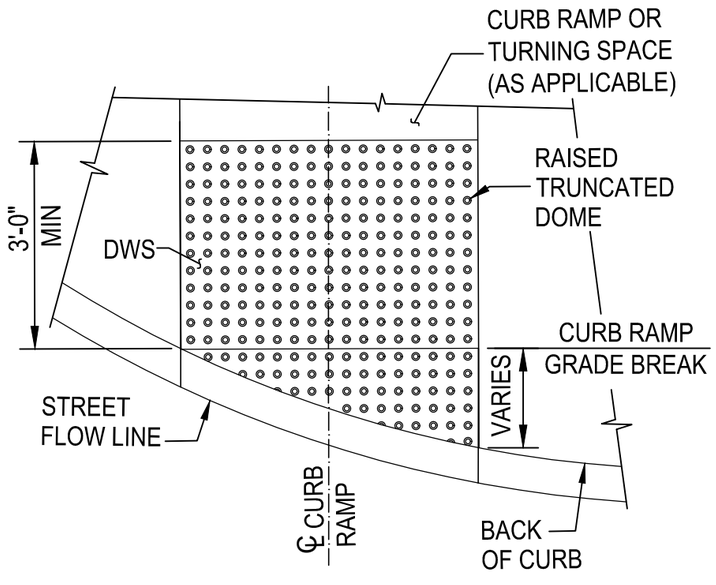

DWS LAYOUT EXAMPLES

DWS NOTES:

a. WHERE INSTALLED IN A RADIAL PATTERN, TRUNCATED DOMES SHALL HAVE A CENTER TO CENTER SPACING OF 2.3 INCHES MINIMUM TO 2.4 INCHES MAXIMUM AND A BASE TO BASE SPACING OF 0.65 INCHES MINIMUM.

b. WHEN A DETECTABLE WARNING SURFACE EDGE IS CUT AND THE RESULTING EDGE IS NOT FLUSH WITH THE SURFACE OF THE CURB RAMP, THE EDGE SHALL BE BEVELED AT A SLOPE NOT STEEPER THAN 2 (HORIZONTAL) : 1 (VERTICAL) AND ALL REMAINING PARTIALLY CUT RAISED TRUNCATED DOMES SHALL BE GROUND FLUSH WITH THE DETECTABLE WARNING SURFACE.

c. FOR ADDITIONAL DWS REQUIREMENTS SEE S-601 AND THE APPROVED DWS MANUFACTURER REQUIREMENTS.

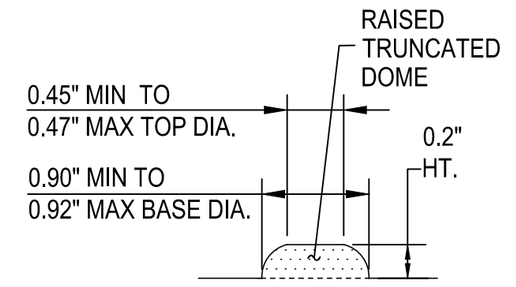

TYPICAL SECTION T-T

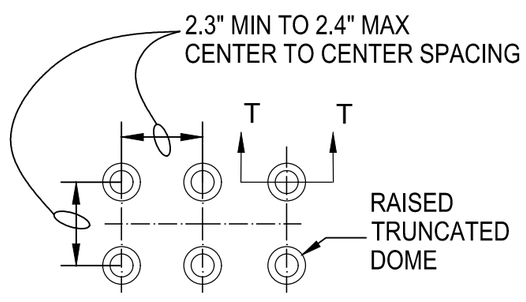

RAISED TRUNCATED DOME PATTERN (IN-LINE)

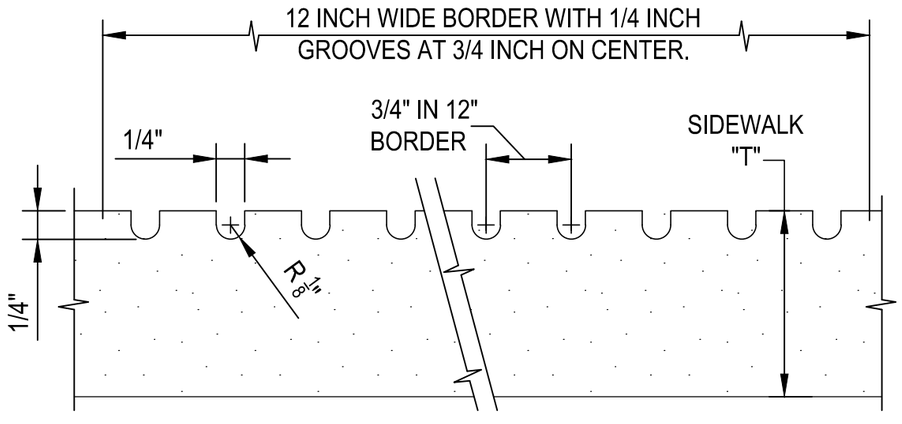

GROOVED BORDER DETAIL
FOR ALL CASES (SEE NOTE 4)

BUREAU OF ENGINEERING
OFFICIAL RECORD

NOT TO SCALE

STANDARD PLAN NO. S-442-6 | VAULT INDEX NUMBER **B-4786** | SHEET 4 OF 9 SHEETS

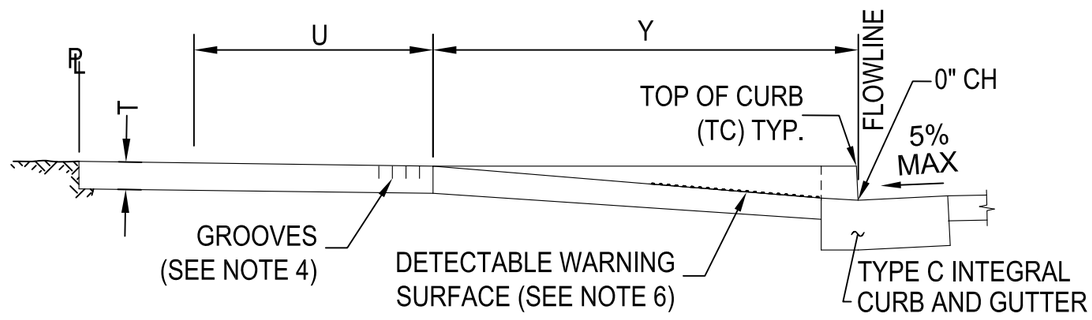

A 1-3 SECTION CASES A, B & D

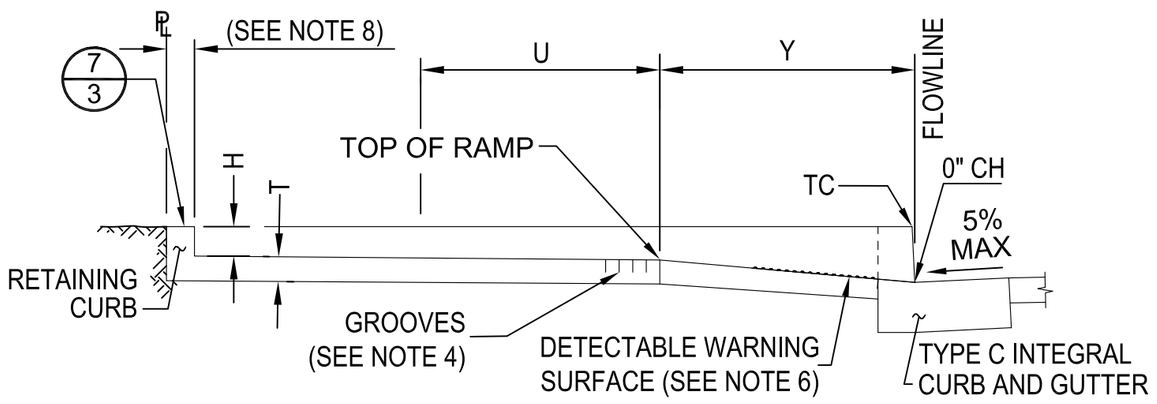

B 1-3 SECTION CASES A, B & D

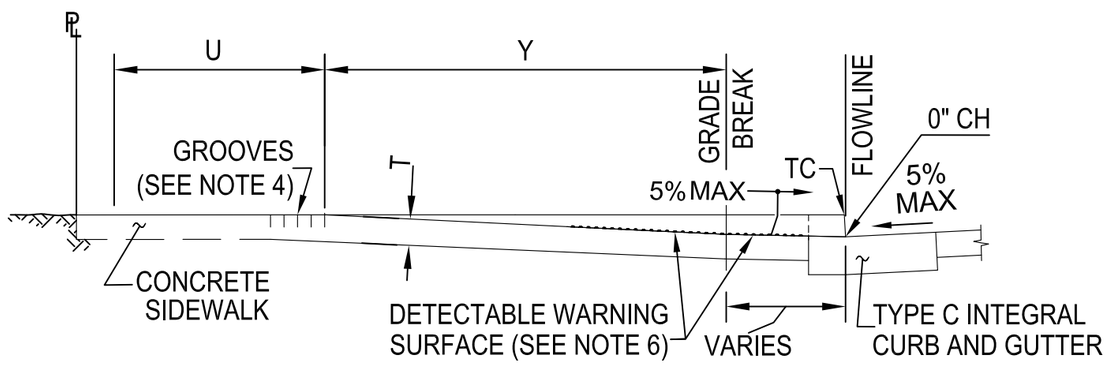

C 1,3 SECTION CASE C

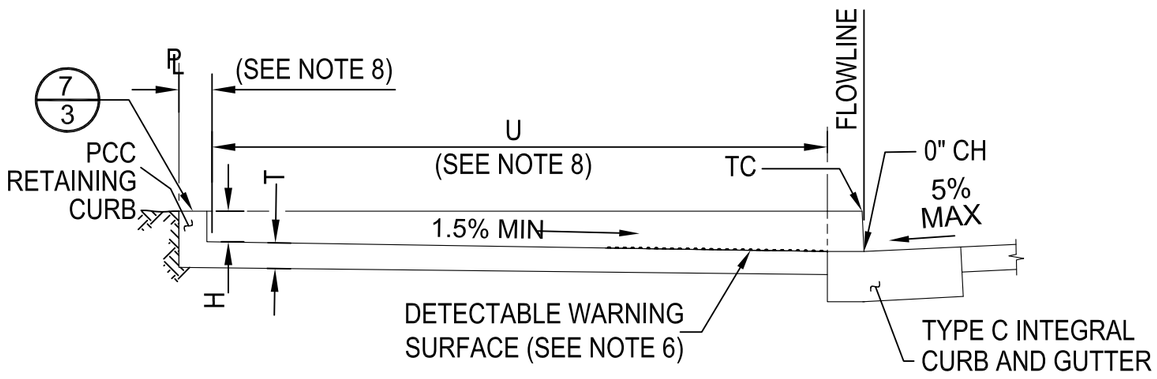

D 2 SECTION CASE E

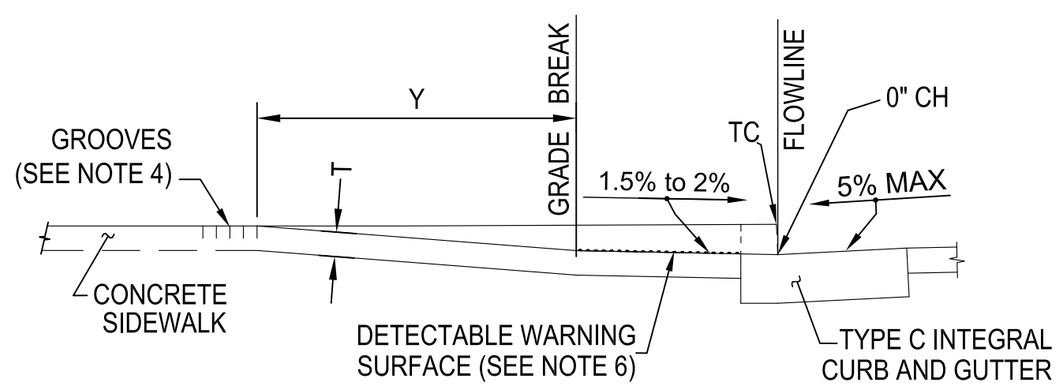

E 2 SECTION CASE G

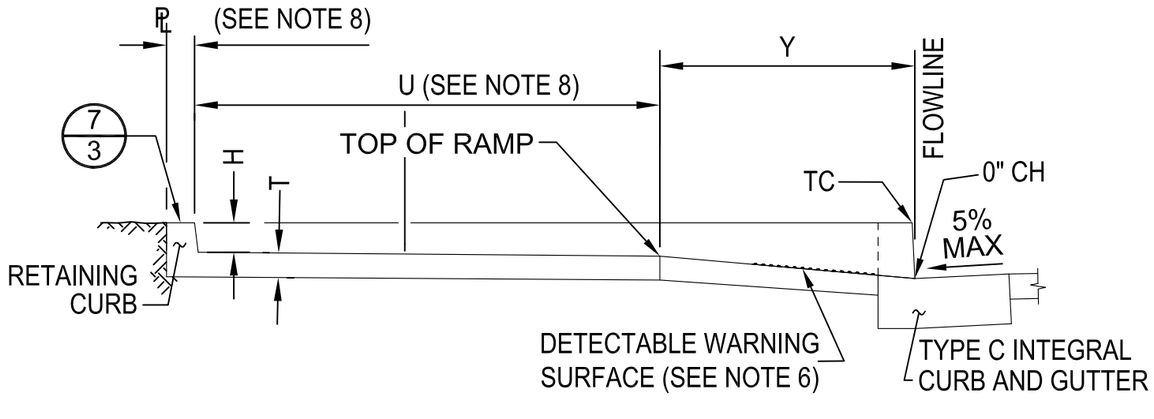

F 2 SECTION CASE F

BUREAU OF ENGINEERING
CITY OF LOS ANGELES
FOUNDED 1781
OFFICIAL RECORD

NOT TO SCALE

STANDARD PLAN NO. S-442-6	VAULT INDEX NUMBER **B-4786**	SHEET 5 OF 9 SHEETS

ALTERNATE BI-DIRECTIONAL CURB RAMPS

SEE TURNING SPACE DETAILS (SHEET 7 OF 9)

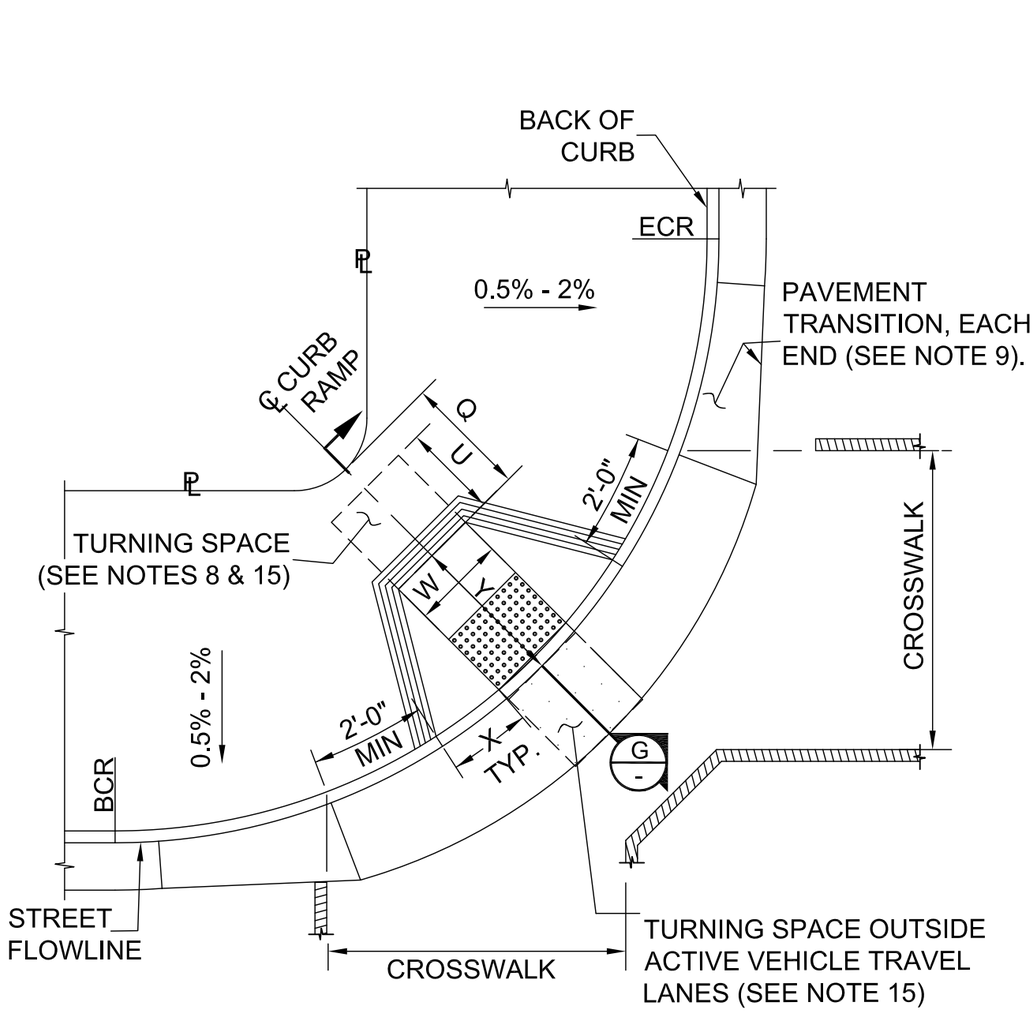

CASE I

USE DETAILS ON SHEET 3 AS APPLICABLE
(SEE NOTES 1, 9 & 17)

NOTE:
THE TURNING SPACE DIMENSION LENGTH OF 5'-0" AS SHOWN IN CASE J SHALL NOT BE EXCEEDED.

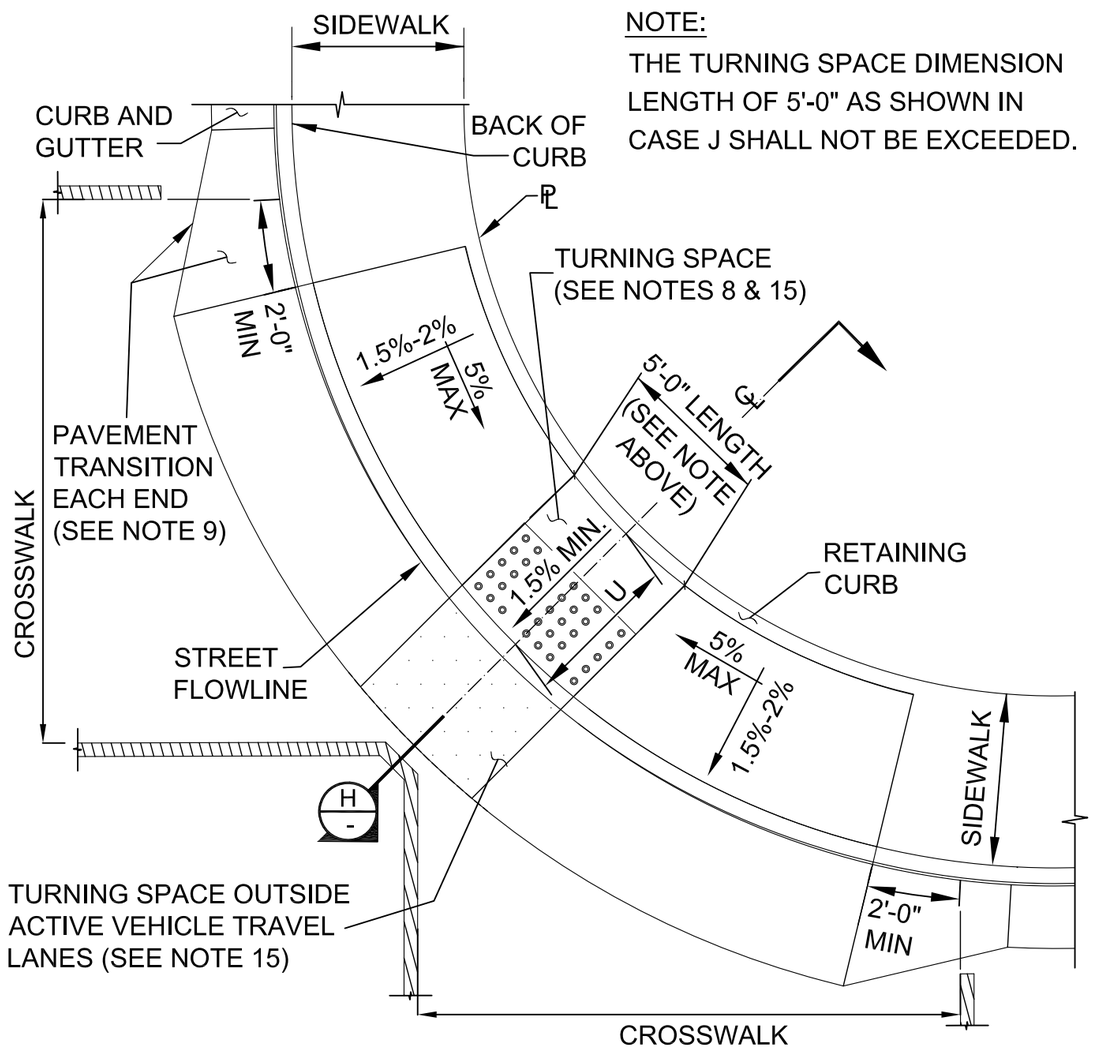

CASE J

(SEE NOTES 2, 9 & 17)

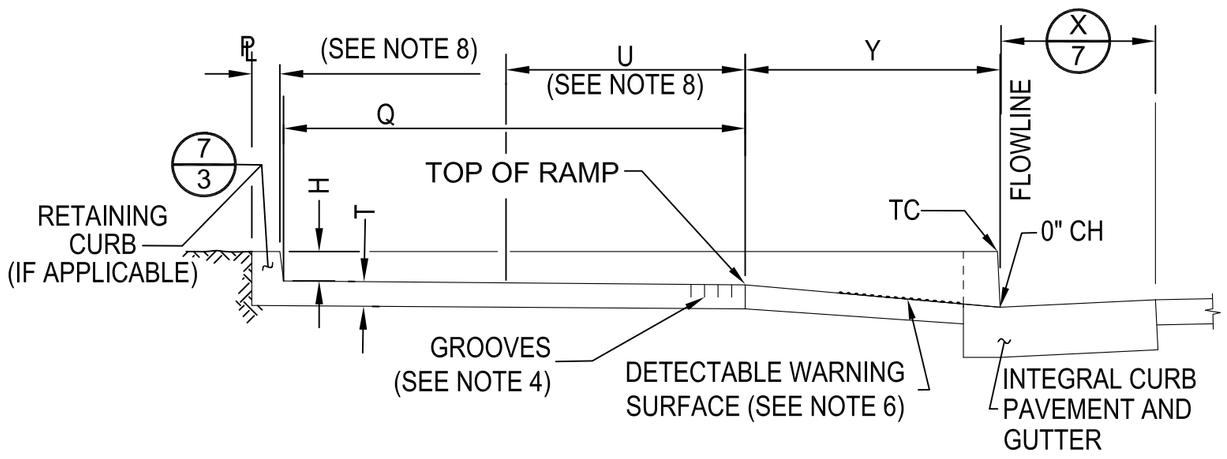

G / - SECTION
CASE I
(RETAINING CURB SHOWN)

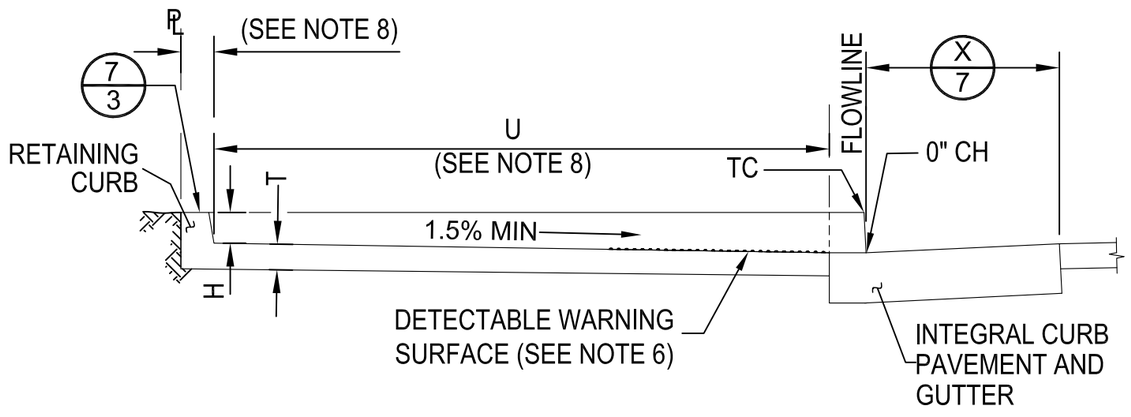

H / - SECTION
CASE J

BUREAU OF ENGINEERING
OFFICIAL RECORD

NOT TO SCALE

STANDARD PLAN NO. S-442-6	VAULT INDEX NUMBER **B-4786**	SHEET 6 OF 9 SHEETS

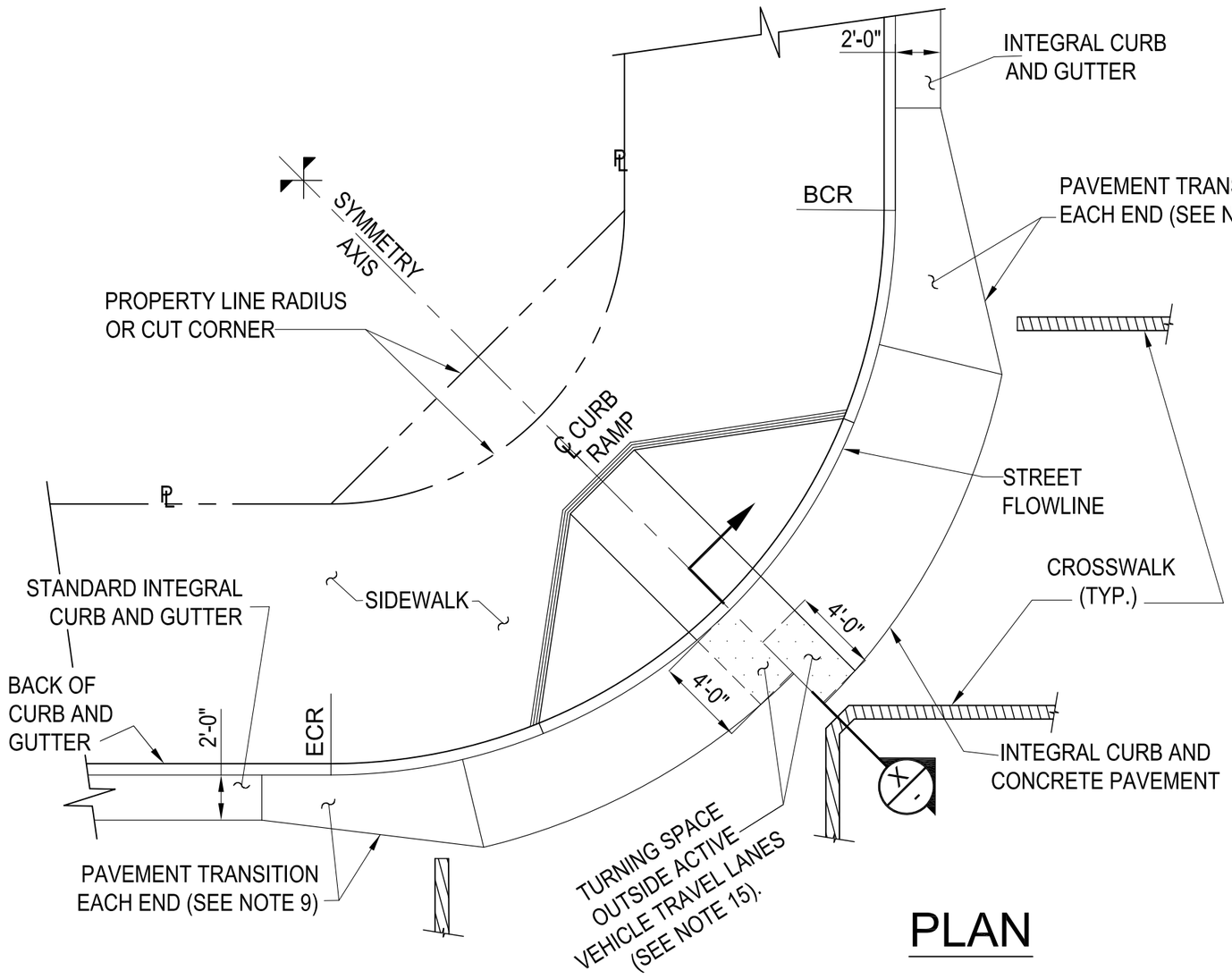

PLAN

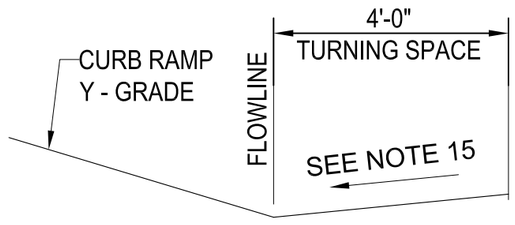

A. WHEN DRAINAGE IS NOT IMPACTED

(AS APPROVED BY THE CITY ENGINEER PER NOTE 14)

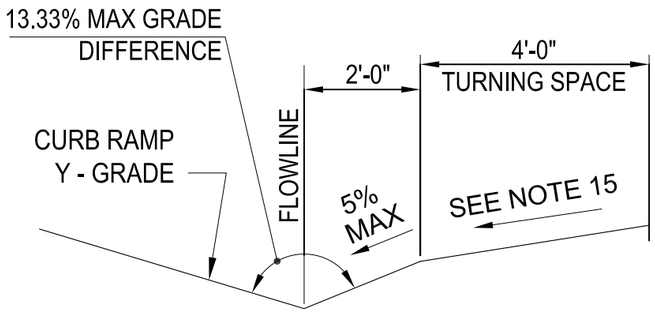

B. WHEN DRAINAGE IS IMPACTED

SECTION X

TURNING SPACE DETAILS FOR CASES I & J

(CASE I SHOWN FOR ILLUSTRATION PURPOSES)

NOTE TO DESIGNER: (SEE NOTE 17)

DRAINAGE CONTROL SHALL BE ASSUMED TO BE IMPACTED WHEN THE PROPOSED CURB HEIGHT FOR A CURB RAMP IS LESS THAN THE EXISTING STREET CURB HEIGHT AT THE CORRESPONDING JOIN LINE. UNDER SUCH CASES, A HYDRAULIC CALCULATION SHALL BE MADE THAT SHOWS THE ANTICIPATED FLOW DEPTH IN THE STREET GUTTER WILL NOT CREST THE PROPOSED CURB HEIGHT WHEN EVALUATING THE PROPOSED CURB RAMP FOR A 10 YEAR STORM EVENT OR A 50 YEAR STORM EVENT IN A SUMP LOCATION. THE DEPTH OF FLOW CALCULATIONS SHALL BE SUBMITTED FOR REVIEW FOR APPROVAL BY THE CITY ENGINEER IN WRITING AND DOCUMENT RECORDED. A WRITTEN EVALUATION SHALL ALSO BE PROVIDED TO THE CITY ENGINEER DOCUMENTING ESTABLISHED STREET FLOW PATTERNS AND AVAILABLE STORM DRAIN FACILITIES IN AND NEAR THE CURB RAMP SITE TO MITIGATE POTENTIAL FLOODING.

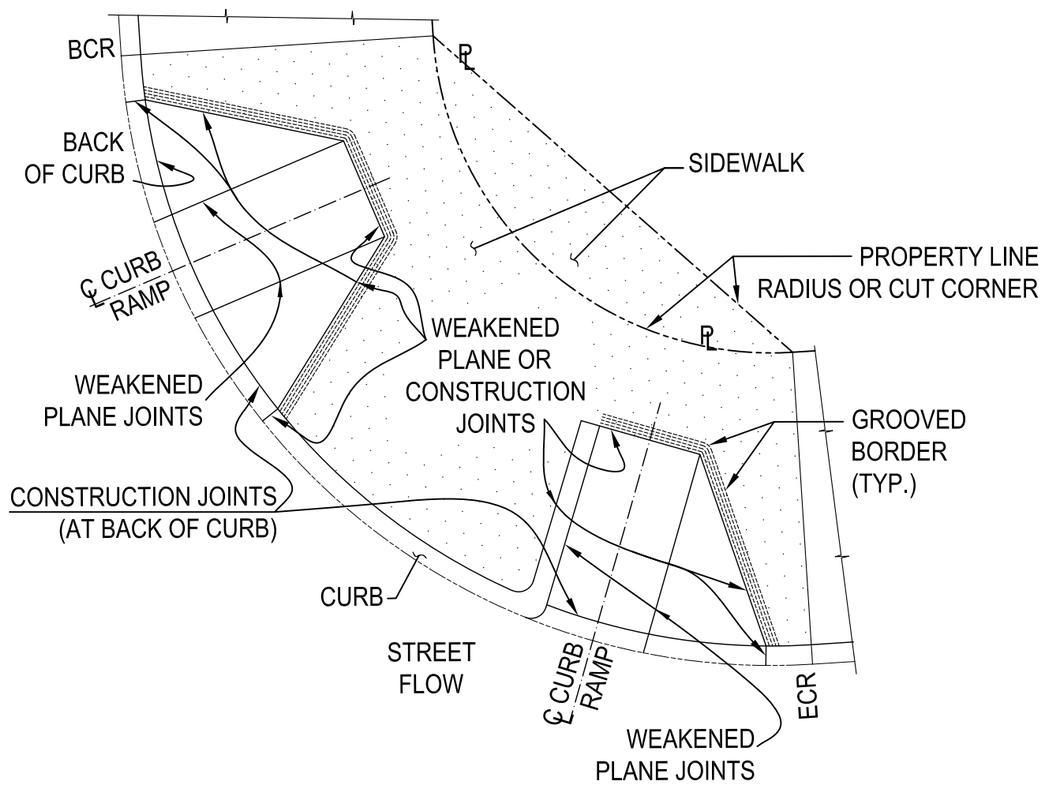

AT CORNER

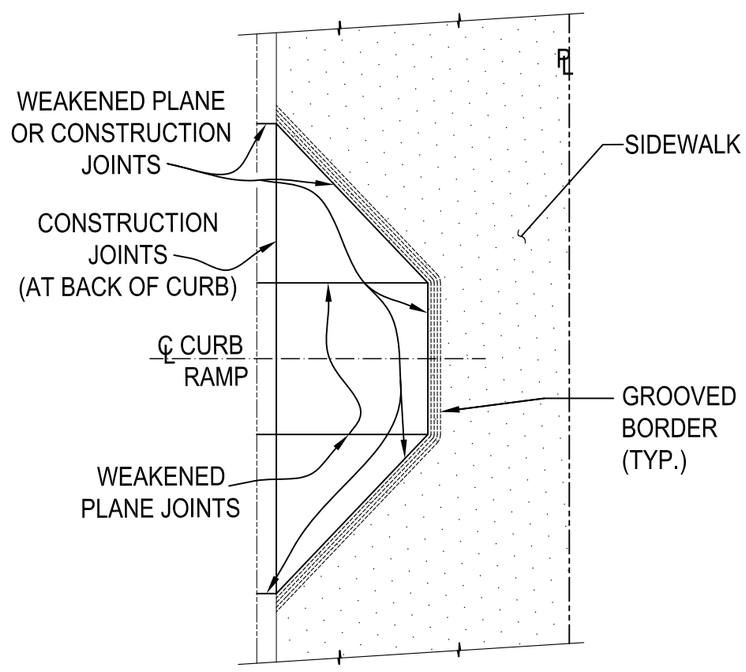

AT MID BLOCK

TYPICAL JOINTS

(CURB RAMPS EXAMPLES)

BUREAU OF ENGINEERING

OFFICIAL RECORD

NOT TO SCALE

STANDARD PLAN NO. S-442-6	VAULT INDEX NUMBER **B-4786**	SHEET 7 OF 9 SHEETS

NOTES

ALL WORK SHALL BE CONSTRUCTED IN ACCORDANCE WITH THE LATEST STANDARD SPECIFICATIONS FOR PUBLIC WORKS CONSTRUCTION (SSPWC) ADOPTED BY THE BOARD OF PUBLIC WORKS AS AMENDED BY THE LATEST CORRESPONDING CITY OF LOS ANGELES DEPARTMENT OF PUBLIC WORKS BROWN BOOK.

1. PROVIDE “STANDARD DUAL UNI-DIRECTIONAL CURB RAMPS” CASES A, B OR C WITH THE INTENT OF PROVIDING IN-LINE STREET CROSSING FOR PEDESTRIANS. TO THE MAXIMUM EXTENT POSSIBLE, INDIVIDUAL CURB RAMPS IN CASES A, B AND C SHALL BE ALIGNED WITH THE CROSSWALK MARKINGS, CENTERED WITHIN THE CROSSWALK AND SHALL BE ALIGNED WITH THE CURB RAMPS AT THE OPPOSITE SIDES. OTHER ALIGNING DUAL CONFIGURATIONS IN GENERAL CONFORMANCE TO THIS STANDARD PLAN MAY BE PROPOSED FOR APPROVAL PER NOTE 14. "ALTERNATE BI-DIRECTIONAL CURB RAMP" CASE I MAY BE USED AS APPROVED PER NOTE 14, WHEN EXISTING CONDITIONS OR CONSTRAINTS DO NOT ALLOW FOR "STANDARD DUAL CURB RAMPS" CONSTRUCTION.
2. "SPECIAL CURB RAMPS FOR NARROW SIDEWALKS" CASE H AND "MID-BLOCK UNI-DIRECTIONAL CURB RAMP" CASE E MAY ONLY BE USED FOR NARROW SIDEWALKS 6.0 TO 7.5 FEET IN WIDTH (SIDEWALK WIDTH SHOWN EXCLUDES THE STREET CURB WIDTH). AS APPROVED PER NOTE 14, "ALTERNATE BI-DIRECTIONAL CURB RAMP" CASE J MAY ONLY BE USED WHEN EXISTING FIELD CONDITIONS OR CONSTRAINTS DO NOT ALLOW FOR "SPECIAL CURB RAMPS FOR NARROW SIDEWALKS" CASE H CONSTRUCTION.
3. ALL NOTED SLOPES AND GRADES SHALL BE MEASURED RELATIVE TO THE HORIZONTAL PLANE AND SHALL INCLUDE ALL ALLOWABLE CONSTRUCTION TOLERANCES.
4. PROVIDE A 12 INCH WIDE BORDER IN THE PLANE OF THE SIDEWALK AT CURB RAMPS AS SHOWN WITH 1/4 INCH GROOVES APPROXIMATELY 3/4 INCH ON CENTER. SEE GROOVED BORDER DETAIL ON SHEET 4. THE SURFACE OF THE GROOVED BORDER SHALL HAVE A FINE HAIR BROOMED FINISH.
5. UNLESS OTHERWISE APPROVED PER NOTE 14, CONCRETE CURB RAMPS SHALL BE CONSTRUCTED WITH CLASS 520-C-2500.
6. THE DETECTABLE WARNING SURFACE (DWS) COLOR SHALL CONFORM TO FEDERAL STANDARD 595C COLOR NUMBER FS 33538 (YELLOW) AND SHALL BE INTEGRAL WITH THE DWS. SURFACE COATINGS SUCH AS PAINT SHALL NOT BE ALLOWED TO BE APPLIED ON THE DWS. THE TRUNCATED DOMES OF THE DWS SHALL HAVE IN-LINE PATTERN AND SHALL BE PART OF A PREFABRICATED SURFACE PANEL.
7. CURB RAMPS FINAL SURFACE FINISH WITHIN THE GROOVED BORDERS SHALL BE DONE BY HAND WITH A WOOD FLOAT AND SHALL BE GIVEN A ROTARY SURFACE TEXTURE.
8. STANDARD DIMENSIONS AND DEFINITIONS:

BUREAU OF ENGINEERING
OFFICIAL RECORD

BCR = BEGINNING OF CURB RETURN.
CH = CURB HEIGHT (ALONG THE STREET).
ECR = END OF CURB RETURN.
PL = PROPERTY LINE (PUBLIC RIGHT-OF-WAY LINE).
Q = THE PEDESTRIAN ACCESS ROUTE "Q" SHALL HAVE A MINIMUM CONTINUOUS CLEAR AND UNOBSTRUCTED WIDTH OF 5 FT.
T = THICKNESS OF CONCRETE PAVEMENT. FOR "T" & ASSOCIATED SUBGRADE REQUIREMENTS SEE S-444.
U = TURNING SPACE LENGTH "U" SHALL BE 4 FT MINIMUM. WHERE THE TURNING SPACE IS CONSTRAINED AT THE BACK OF SIDEWALK, LENGTH "U" SHALL BE 5 FT MINIMUM. FOR TURNING SPACE SURFACE SLOPES AND GRADES SEE NOTE 15.
W = UNLESS OTHERWISE SPECIFIED ON THIS STANDARD PLAN, THE WIDTH OF CURB RAMP "W" SHALL BE 4 FT MINIMUM AT 2% MAXIMUM CROSS SLOPE MEASURED PERPENDICULAR TO THE DIRECTION OF CURB RAMP TRAVEL (SEE NOTE 16).
X = THE "X" LENGTH IS THE FLARED CURB TRANSITION TANGENT OR ARC LENGTH MEASURED ALONG THE BOTTOM FACE OF THE STREET CURB. THE GRADE WITHIN THE FLARED TRANSITION AREAS OF CURB RAMPS SHALL NOT EXCEED 10%. THE X LENGTH SHALL BE WITHIN THE RANGE OF VALUES PER TABLE BELOW, INTERMEDIATE VALUES MAY BE INTERPOLATED.

CH (IN)	"X" MIN (FT-IN)	"X" MAX (FT-IN)
6	5'-0"	5'-10 $\frac{1}{2}$"
6.5	5'-5"	6'-4 $\frac{1}{4}$"
7	5'-10"	6'-10 $\frac{1}{2}$"
7.5	6'-3"	7'-4 $\frac{1}{4}$"
8	6'-8"	7'-10"

* CURB HEIGHT LESS THAN 6 INCHES OR MORE THAN 8 INCHES SHALL BE APPROVED PER NOTE 14.

Y = THE MINIMUM "Y" LENGTH IS 3.5 FEET AND THE MAXIMUM "Y" LENGTH IS 15 FEET. THE "Y" GRADE SHALL BE GREATER THAN 5% AND SHALL NOT EXCEED 8.33% UNLESS OTHERWISE APPROVED PER NOTE 14.

NOTES (CONTINUED)

9. FOR CASES A, B, C, D, E, F AND G, THE ADJACENT GUTTER TRANSITION TO THE CITY STANDARD CURB AND GUTTER SHALL HAVE A MINIMUM LENGTH OF 5 FT STARTING FROM THE EDGE OF THE CURB RAMP WIDTH “W” OR THE "X" LENGTH OF THE FLARE WHICHEVER IS LONGER. FOR CASES H, I AND J, SEE PROJECT PLANS FOR ADJACENT GUTTER AND/OR PAVEMENT TRANSITION LENGTH AND STARTING LOCATION AS APPROVED PER NOTE 14, THE TRANSITION LENGTH FOR CASES H, I AND J SHALL BE 10 FT MINIMUM.

10. FOR EACH CURB RAMP, THE FOLLOWING DESIGN INFORMATION SHALL BE PROVIDED BUT NOT LIMITED TO: CURB RAMP CASE LETTER DESIGNATION, CURB RAMP ALIGNMENT AND CENTERLINE LOCATION REFERENCE, SECTIONS, DETAILS, AND PROFILE, DIMENSION X AS APPLICABLE, DIMENSIONS, CROSS SLOPES AND GRADES FOR Y AND W AS APPLICABLE, CURB HEIGHT, AND ELEVATIONS AT BOTTOM AND TOP OF CURB RAMP AND AT TOP OF FLARE, BCR AND ECR AS APPLICABLE.

11. PULL BOXES, METER BOXES, MAINTENANCE HOLE COVERS, VAULT LIDS, POWER POLES, ETC. ARE NOT PERMITTED WITHIN ANY PART OF CURB RAMPS, INCLUDING FLARED TRANSITIONS AND TURNING SPACES AT THE TOP AND BOTTOM OF CURB RAMPS. WHERE AN EXISTING CURB RAMP IS BEING UPGRADED OR, WHERE AN EXISTING BI-DIRECTIONAL CURB RAMP IS BEING CONVERTED TO STANDARD DUAL UNI-DIRECTIONAL CURB RAMPS, EXISTING BOXES, COVERS, AND LIDS THAT END UP WITHIN THE CURB RAMP FLARED TRANSITION AREAS MAY BE PERMITTED TO REMAIN IN-PLACE, PER NOTE 14. HOWEVER, THEY SHALL BE PRE-APPROVED AND INSTALLED FLUSH ALL AROUND WITH THE ADJACENT SURFACE, AND THEIR SURFACE SHALL HAVE A MINIMUM STATIC COEFFICIENT OF FRICTION OF 0.80 WHEN TESTED PER ASTM C1028. THE USE OF CURB RETURNS IN LIEU OF FLARES SHALL ALSO BE CONSIDERED BY THE APPLICANT.

12. A NON-WALKABLE SURFACE OR BARRIER SHALL BE PROVIDED WHERE EXISTING CATCH BASINS, MAINTENANCE HOLE COVERS, OR ANY OTHER FIXED STRUCTURES DO NOT PERMIT CONSTRUCTING A FLARED CURB TRANSITION FOR A CURB RAMP. THE NON-WALKABLE SURFACE OR BARRIER SHALL BE CONSTRUCTED TO PREVENT PEDESTRIAN TRAVEL ACROSS A RADIAL CURB TRANSITION FOR A CURB RAMP. ALL NON-WALKABLE SURFACES OR BARRIERS INCLUDING BUT NOT LIMITED TO: COBBLES EMBEDDED IN CONCRETE, AN AREA ENCLOSED BY A 6 INCH HIGH MINIMUM CURB HEIGHT, LANDSCAPING, OR ANY OTHER NON-WALKABLE SURFACES OR BARRIERS, SHALL BE APPROVED PER NOTE 14.

13. FOR DISCRETIONARY PROJECTS THAT ENCOMPASS CURB RETURNS REQUIRING PUBLIC WORKS IMPROVEMENTS FROM THE DEPARTMENT OF CITY PLANNING OR COUNCIL OFFICE, PERMITTEE SHALL PROVIDE ADEQUATE DEDICATION OR EASEMENT FOR DESIGNING CURB RAMP CASES A, B, C, D, OR G USING SECTIONS A, C, OR E ONLY. CURB RAMP DESIGNS USING SECTIONS B, D, F, G AND H OR USE OF EXCEPTIONS ALLOWED ON BUREAU OF ENGINEERING SPECIAL ORDERS, ARE NOT PERMITTED.

14. CURB RAMP DESIGN EXCEPTIONS IDENTIFIED IN NOTES 1, 2, 5, 8, 9, 11 AND 12 SHALL BE APPROVED BY THE CITY ENGINEER AND DOCUMENTATIONS RECORDED IN WRITING IN THE CONSTRUCTION DRAWINGS.

15. EXCEPT WHERE NOTE 16 (HEREON BELOW) APPLIES, THE TURNING SPACE SHALL BE A PLANAR SURFACE WITH 2% MAXIMUM SLOPES AND GRADES IN ALL DIRECTIONS.

16. AT MIDBLOCK PEDESTRIAN STREET CROSSINGS, CROSS SLOPES OF UNI-DIRECTIONAL CURB RAMPS, AND ASSOCIATED TURNING SPACES SLOPES AND GRADES THAT ARE PARALLEL TO THE STREET GRADE MAY BE EQUAL TO THE PREVAILING STREET GRADE. AT ALL OTHER PEDESTRIAN STREET CROSSINGS, THAT HAVE NO YIELD OR STOP CONTROLS OR WHERE THERE IS A TRAFFIC SIGNAL THAT IS DESIGNED FOR THE GREEN PHASE (WHERE VEHICLES CAN PROCEED THROUGH THE CROSSING WITHOUT SLOWING OR STOPPING), THE CROSS SLOPES OF UNI-DIRECTIONAL CURB RAMPS, AND ASSOCIATED TURNING SPACES SLOPES AND GRADES THAT ARE PARALLEL TO THE STREET GRADE MAY BE EQUAL TO THE PREVAILING STREET GRADE BUT NOT TO EXCEED 5%. THIS NOTE IS NOT APPLICABLE TO CROSS SLOPES OF BI-DIRECTIONAL CURB RAMPS AND THEIR ASSOCIATED BOTTOM TURNING SPACE SLOPES AND GRADES.

17. FOR CASES E, G, H, I AND J, DRAINAGE CONTROL AND FLOODING SHALL BE ASSUMED TO BE IMPACTED. CONFORM TO REQUIREMENTS LISTED IN "NOTE TO DESIGNER" ON SHEET 7 OF 9.

18. FOR WORK FALLING WITHIN ADJOINING JURISDICTIONS SUCH AS THE CALIFORNIA DEPARTMENT OF TRANSPORTATION (CALTRANS), THE MOST STRINGENT CURB RAMPS STANDARDS REQUIREMENTS SHALL GOVERN.

BUREAU OF ENGINEERING

OFFICIAL RECORD

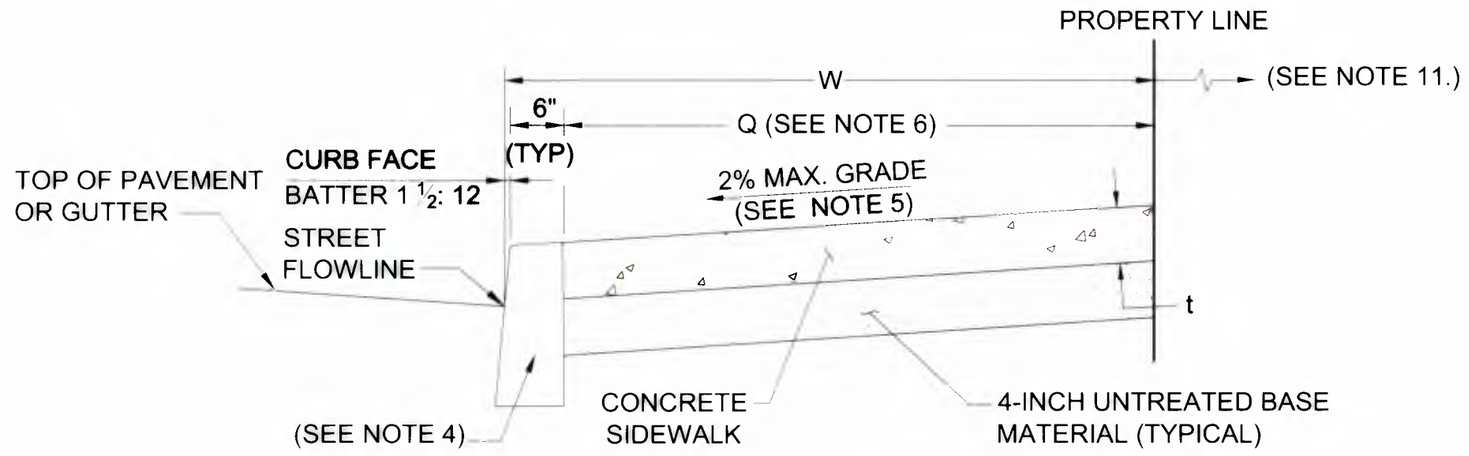

BORDER WITH FULL WIDTH SIDEWALK

NTS

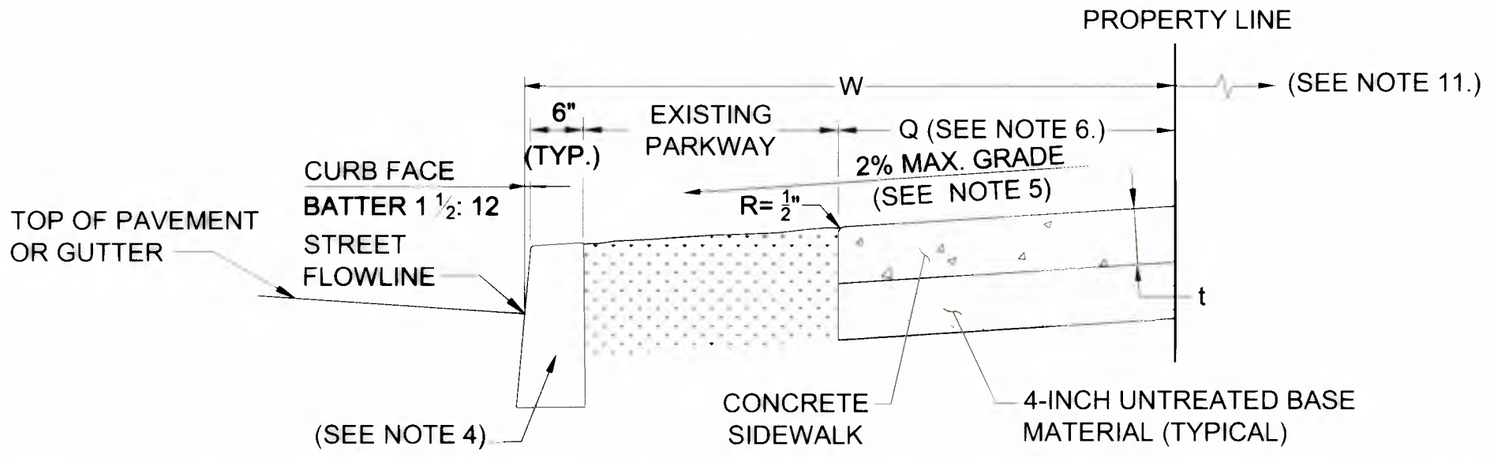

BORDER WITH SIDEWALK AND PARKWAY

NTS

NOTES

1. ALL WORK SHALL BE CONSTRUCTED IN ACCORDANCE WITH THE LATEST STANDARD SPECIFICATIONS FOR PUBLIC WORKS CONSTRUCTION ADOPTED BY THE BOARD OF PUBLIC WORKS AS MODIFIED BY THE CORRESPONDING ISSUE OF THE CITY OF LOS ANGELES DEPARTMENT OF PUBLIC WORKS BROWN BOOK.
2. CONCRETE SIDEWALK SHALL HAVE A MINIMUM THICKNESS (t) OF 3 INCHES.
3. MINIMUM 4-INCH UNTREATED BASE MATERIAL SHALL BE INSTALLED UNDER CONCRETE SIDEWALK.
4. EITHER TYPE "A" CONCRETE CURB OR TYPE "C" INTEGRAL CONCRETE CURB AND GUTTER SHALL BE CONSTRUCTED ADJACENT TO ALL SIDEWALKS. SEE THE LATEST VERSION OF STANDARD PLAN S-410 FOR TYPES OF CURBS. IF EXISTING CURB REQUIRES REMOVAL AND REPLACEMENT, RECONSTRUCT CURB TO MATCH EXISTING CURB TYPE. CITY ENGINEER SHALL DETERMINE THE TYPE OF CURB FOR ALL NEW CURB CONSTRUCTION.
5. THE SIDEWALK SHALL HAVE A MINIMUM WIDTH "Q" OF 5 FEET AND BE SLOPED TOWARD THE STREET FLOW LINE. THE MAXIMUM SIDEWALK GRADE INCLUDING THE 1/4-INCH CONSTRUCTION TOLERANCE IS 2 PERCENT. THE MINIMUM SIDEWALK GRADE INCLUDING THE 1/4-INCH CONSTRUCTION TOLERANCE IS 0.5 PERCENT.
6. SIDEWALK WIDTH "Q" OF LESS THAN 5 FEET SHALL REQUIRE APPROVAL BY THE CITY ENGINEER (A MINIMUM 5 BY 5 FEET SQUARE PASSING SPACES SHALL BE REQUIRED AT INTERVALS OF NO GREATER THAN 200 FEET).
7. THE STREET BORDER (W) SHALL BE IN ACCORDANCE WITH DIMENSIONS LISTED ON THE LATEST VERSION OF STANDARD PLAN S-470.
8. AS AN ELEMENT OF THE SIDEWALKS, CURB RAMPS SHALL BE CONSTRUCTED AT ALL STREET CORNERS AND MID-BLOCK CROSSWALKS IN ACCORDANCE WITH THE LATEST VERSION OF STANDARD PLAN S-442, UNLESS CROSSING IS PROHIBITED AT A PARTICULAR LOCATION.
9. THE ESTABLISHMENT OF NEW PARKWAYS SHALL REQUIRE APPROVAL BY THE CITY ENGINEER.
10. RECONSTRUCTION OF SIDEWALKS MAY REQUIRE REMODELING ON PRIVATE PROPERTY TO JOIN CONSTRUCTION OF NEW SIDEWALK TO PRIVATE IMPROVEMENTS.
11. AT LOCATIONS WHERE ANY REQUIREMENTS OF THIS STANDARD PLAN S-444-0 CANNOT BE MET, THE DESIGNER AND/OR CONTRACTOR SHALL REQUEST DIRECTION FROM THE CITY ENGINEER PRIOR TO THE COMPLETION OF DESIGN.

BUREAU OF ENGINEERING
OFFICIAL RECORD

BUREAU OF ENGINEERING — DEPARTMENT OF PUBLIC WORKS — CITY OF LOS ANGELES

SIDEWALKS

STANDARD PLAN
S-444-0

PREPARED	SUBMITTED	APPROVED	SUPERSEDES	REFERENCES
MARK CHMIELOWIEC, P.E. BUREAU OF ENGINEERING CHECKED RAFFI MASSABKI, P.E. BUREAU OF ENGINEERING	6-24-14 SAMARA ALI-AHMAD, P.E. DATE ENGINEER OF DESIGN BUREAU OF ENGINEERING 6/25/14 KENNETH REDD, P.E. DATE DEPUTY CITY ENGINEER	6-25-14 GARY LEE MOORE, P.E. DATE CITY ENGINEER REGISTERED PROFESSIONAL ENGINEER GARY LEE MOORE No. C-49446 Exp. CIVIL STATE OF CALIFORNIA	S-442 S-440	

VAULT INDEX NUMBER: B - 4726

SHEET 1 OF 1 SHEET

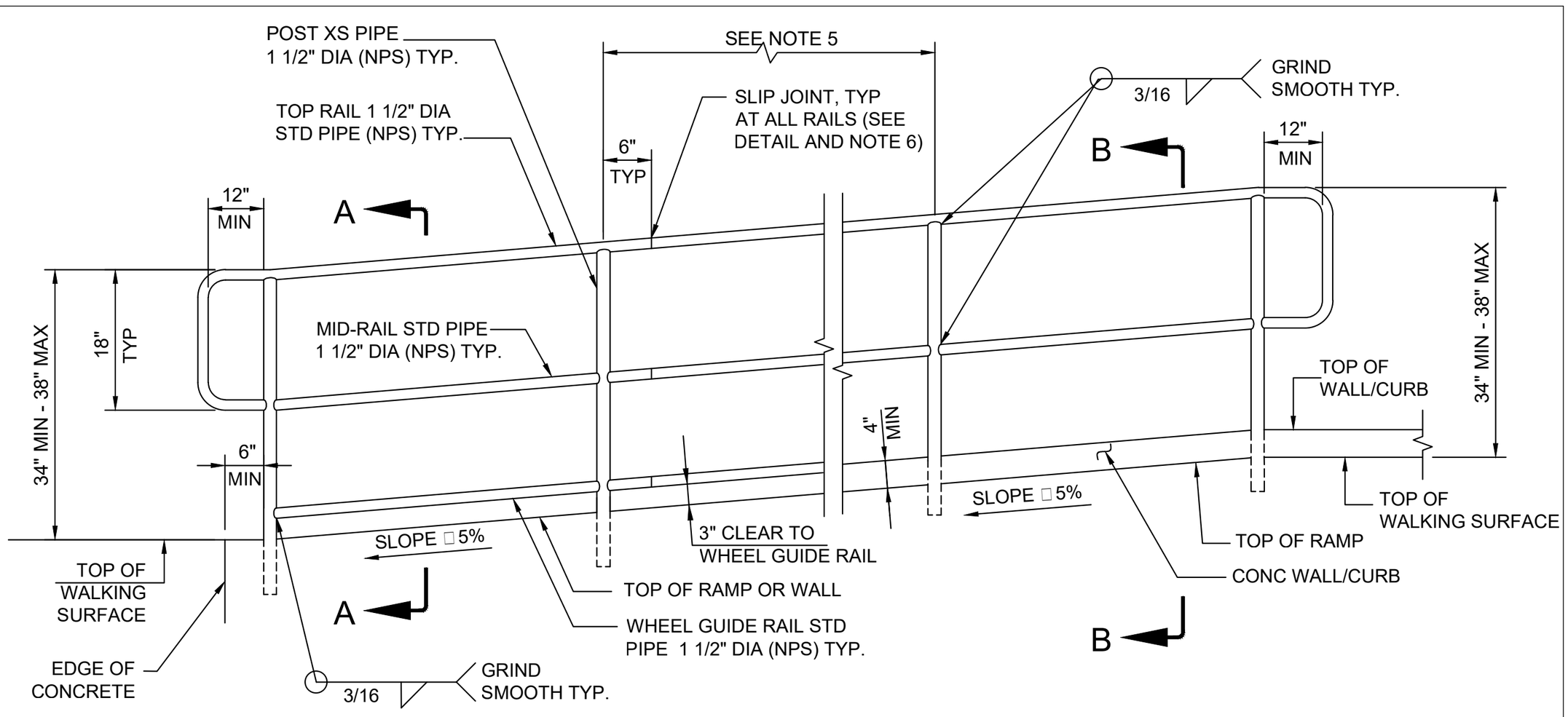

TYPE A1 - HANDRAIL ON RAMPS LESS THAN 2'-6" ABOVE THE ADJACENT GRADE

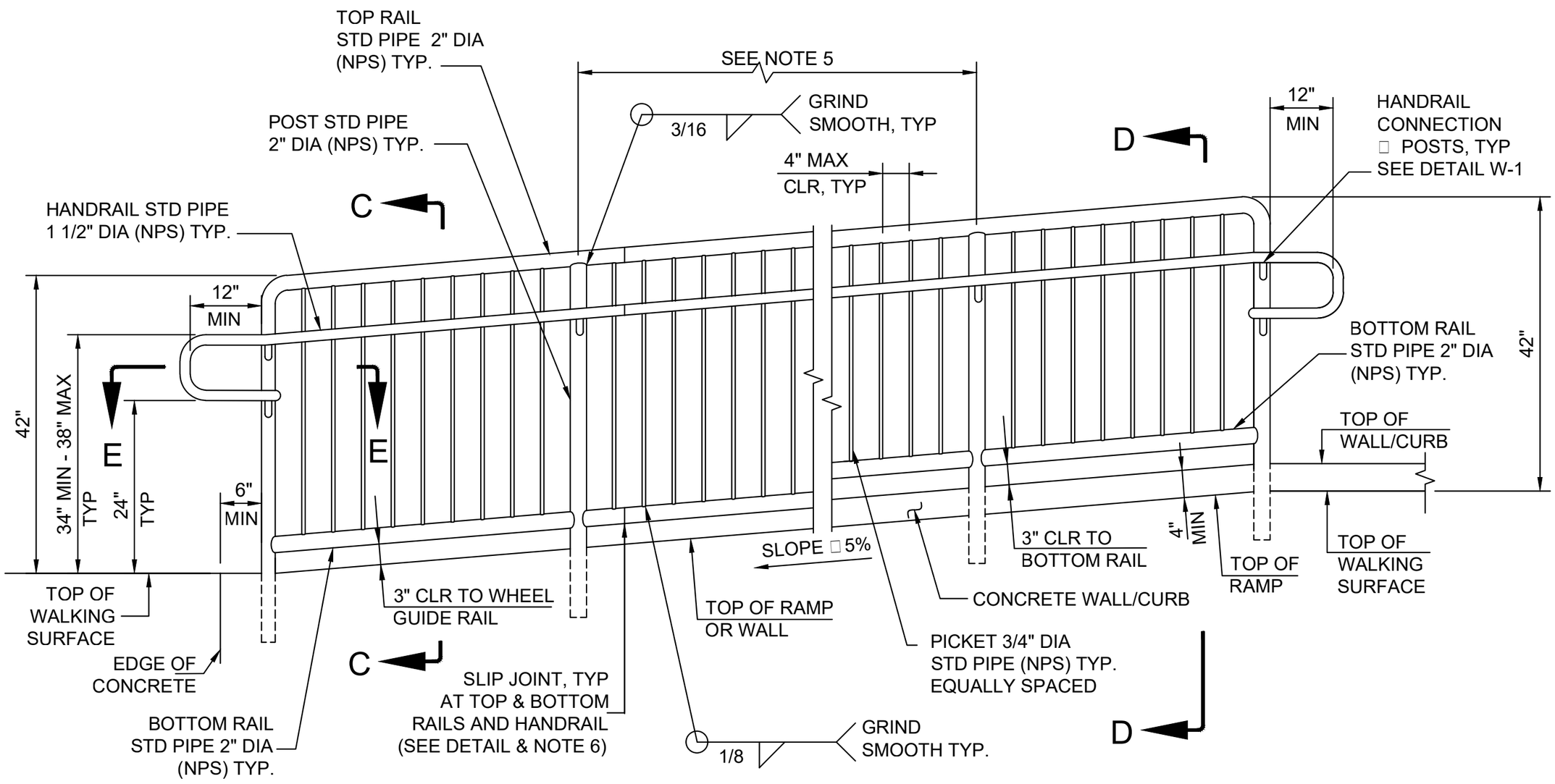

TYPE A2 - GUARDRAIL AND HANDRAIL ON RAMPS 2'-6" OR MORE ABOVE THE ADJACENT GRADE

BUREAU OF ENGINEERING
OFFICIAL RECORD

HANDRAIL AND GUARDRAIL ON RAMPS

(WALKING SURFACE SLOPE 5%)

NOT TO SCALE

BUREAU OF ENGINEERING — DEPARTMENT OF PUBLIC WORKS — CITY OF LOS ANGELES

PEDESTRIAN PIPE GUARDRAILS & HANDRAILS

STANDARD PLAN
S-463-3

PREPARED	SUBMITTED	APPROVED	SUPERSEDES	REFERENCES
ROBERT LOMELIN BUREAU OF ENGINEERING CHECKED RAFFI MASSABKI BUREAU OF ENGINEERING	Electronically signed by Edward Arrington, S.E. on 08/09/2018 EDWARD ARRINGTON, S.E. ENGINEER OF DESIGN Electronically Signed by Ken Redd on 08/14/2018 11:27:29 AM KENNETH R. REDD, P.E. DEPUTY CITY ENGINEER	Electronically signed by 21866 on 08/15/2018 at 9:47:29 AM GARY LEE MOORE, P.E. CITY ENGINEER 08/15/2018 DATE	B-4633	

VAULT INDEX NUMBER: **B-4774**

SHEET 1 OF 4 SHEETS

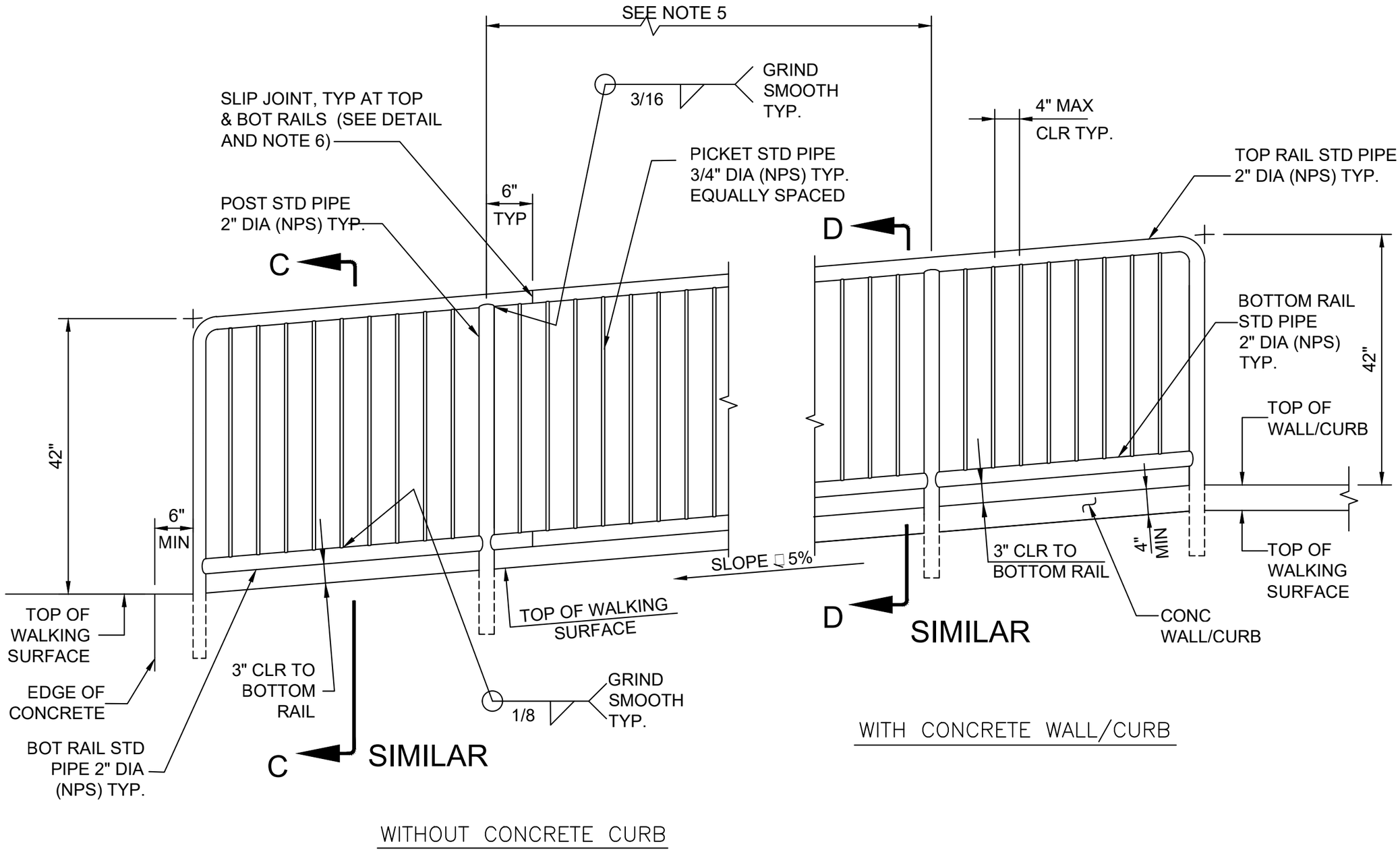

TYPE B1 - GUARDRAIL ALONG WALKWAYS 2'-6" OR MORE ABOVE THE ADJACENT GRADE

GUARDRAIL ON OPEN SIDE OF WALKWAYS

(WALKING SURFACE SLOPE ≤ 5%)

BUREAU OF ENGINEERING

OFFICIAL RECORD

NOT TO SCALE

STANDARD PLAN NO. S-463-3	VAULT INDEX NUMBER **B-4774**	SHEET 2 OF 4 SHEETS

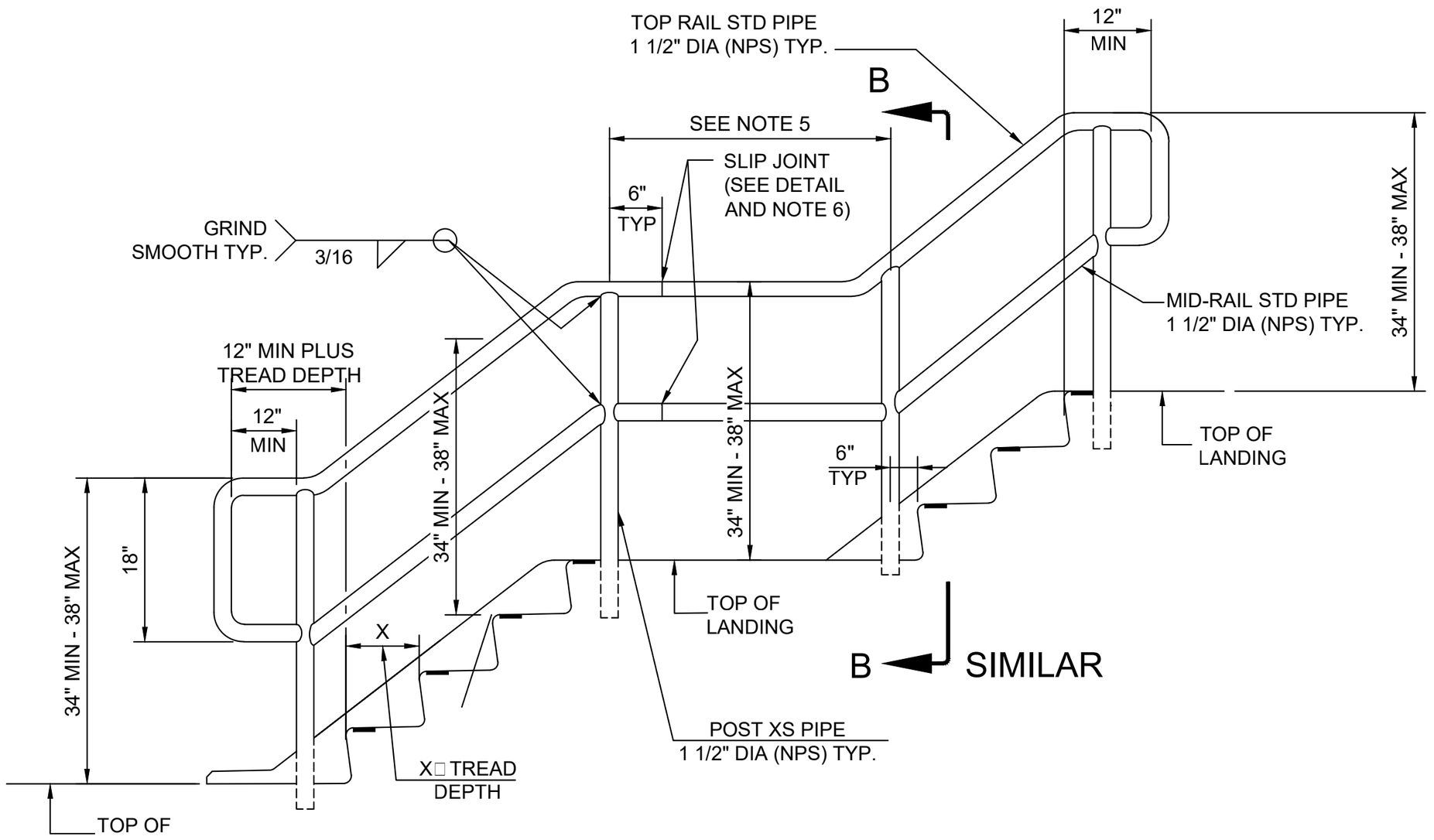

TYPE C1 - HANDRAIL ON STAIRWAYS LESS THAN 2'-6" ABOVE THE ADJACENT GRADE

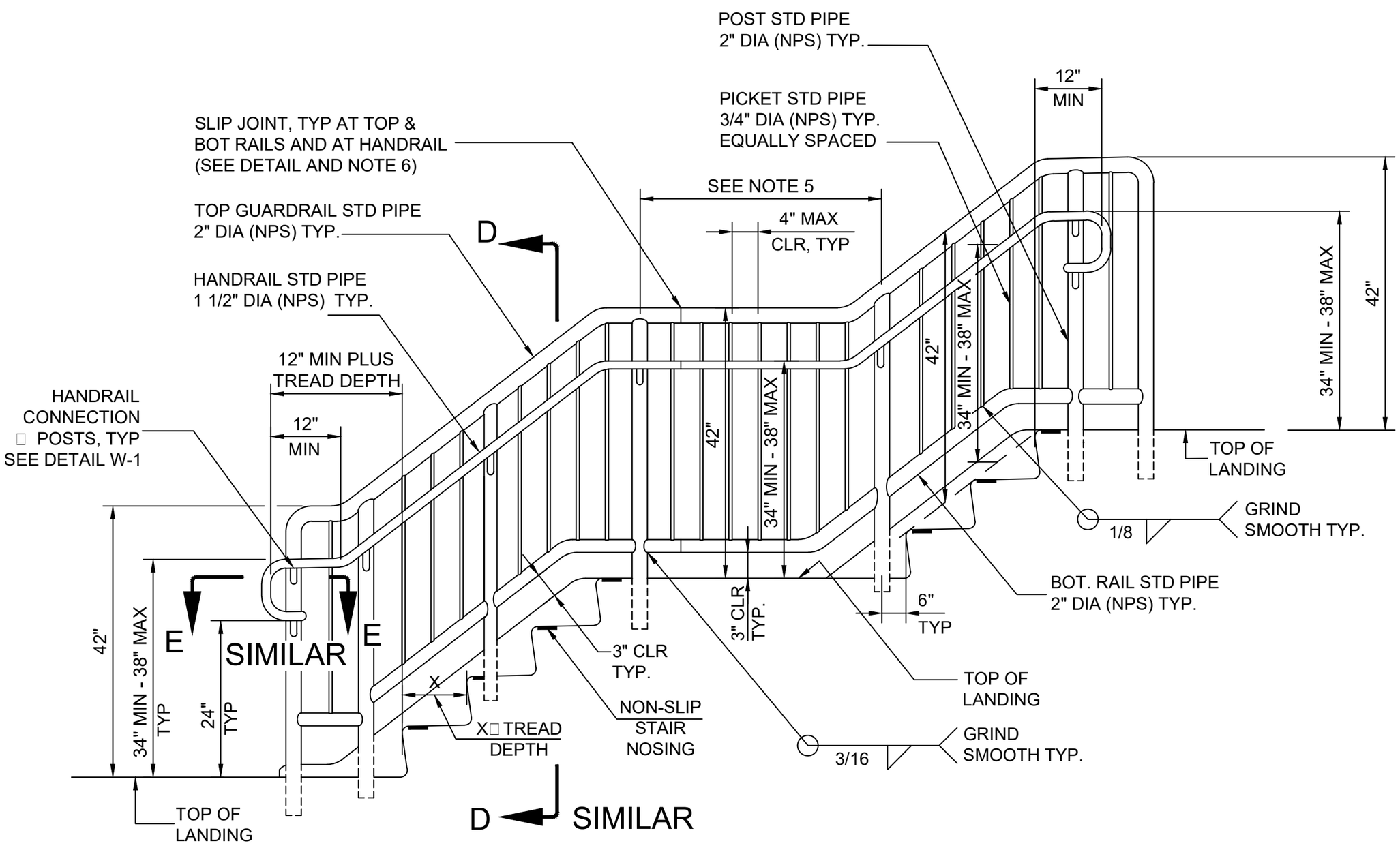

TYPE C2 - GUARDRAIL AND HANDRAIL ON STAIRWAYS 2'-6" OR MORE ABOVE THE ADJACENT GRADE

HANDRAIL AND GUARDRAIL ON STAIRWAYS

BUREAU OF ENGINEERING

OFFICIAL RECORD

NOT TO SCALE

STANDARD PLAN NO. S-463-3	VAULT INDEX NUMBER **B-4774**	SHEET 3 OF 4 SHEETS

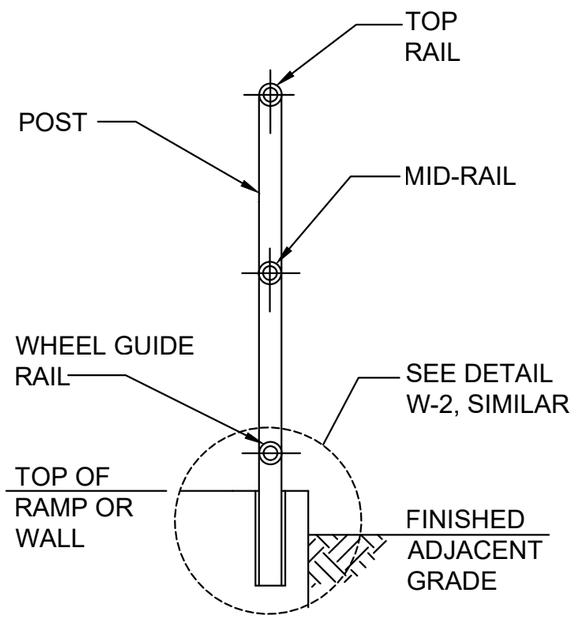

SECTION A–A

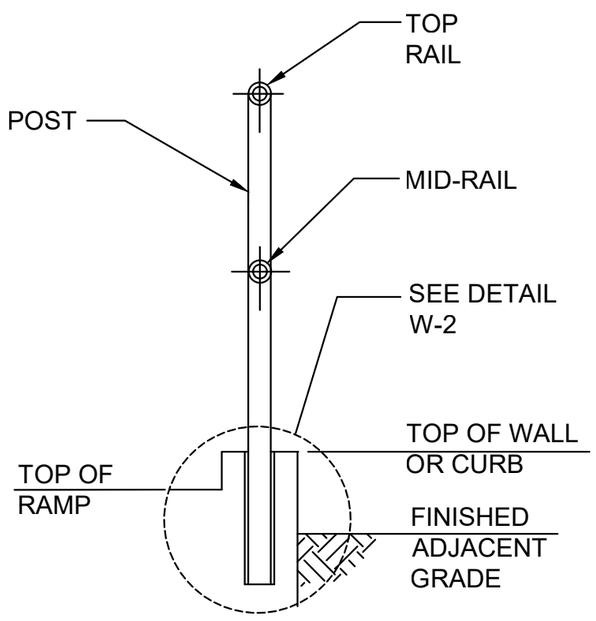

SECTION B–B

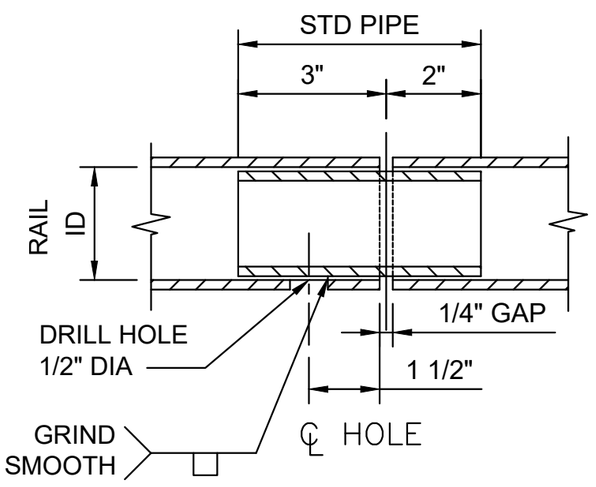

SLIP JOINT DETAIL

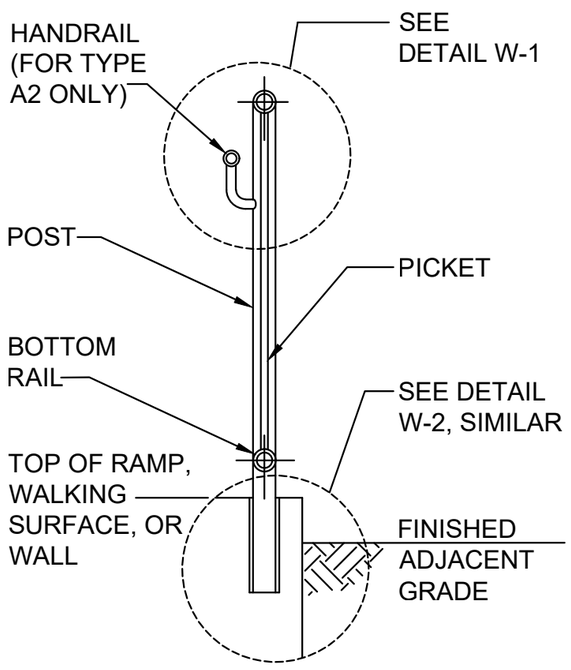

SECTION C–C

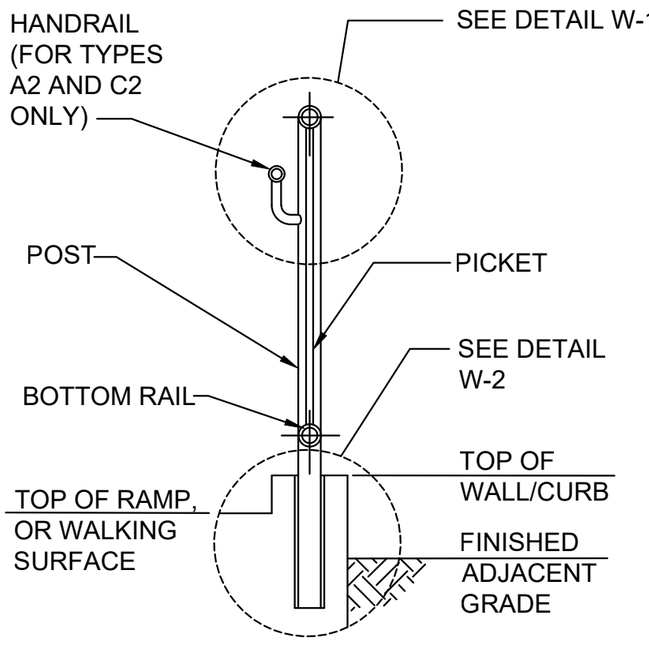

SECTION D–D

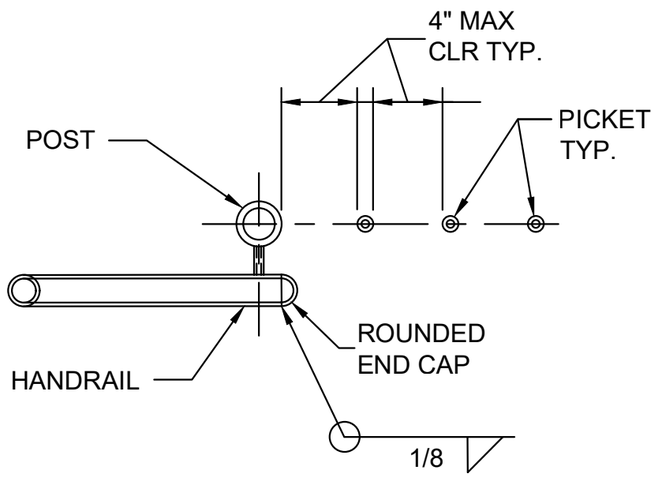

SECTION E–E

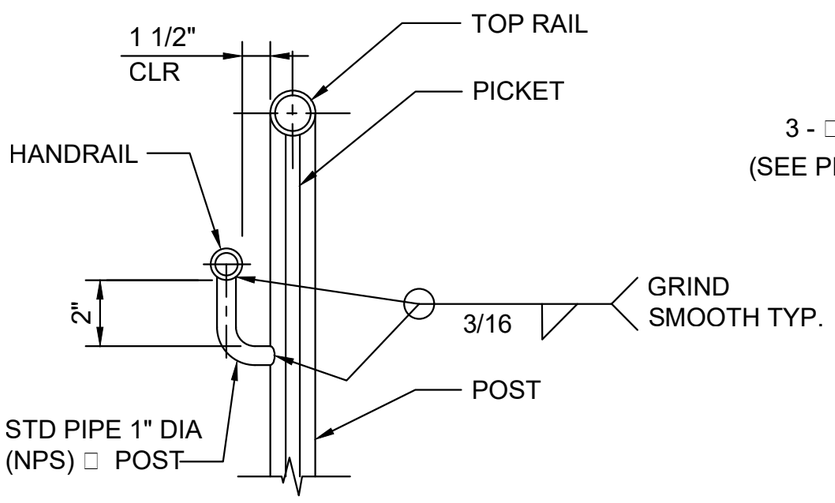

DETAIL W-1

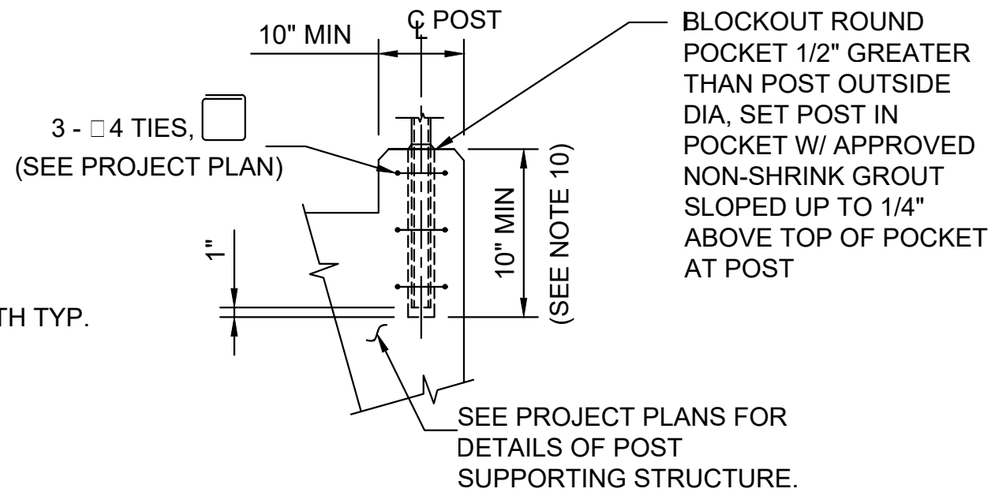

DETAIL W-2

BUREAU OF ENGINEERING
OFFICIAL RECORD

NOTES:

ALL WORK SHALL BE CONSTRUCTED IN ACCORDANCE WITH THE LATEST STANDARD SPECIFICATIONS FOR PUBLIC WORKS CONSTRUCTION (SSPWC) ADOPTED BY THE BOARD OF PUBLIC WORKS AS AMENDED BY THE LATEST CORRESPONDING CITY OF LOS ANGELES DEPARTMENT OF PUBLIC WORKS BROWN BOOK.

1. STRUCTURAL PIPES SHALL CONFORM TO ASTM A53, GRADE B (F□□35 KSI) AND STRUCTURAL STEEL PLATE SHALL CONFORM TO ASTM A36. PIPE SIZES SHOWN ARE NOMINAL PIPE SIZE (NPS), THE ACTUAL OUTSIDE PIPE DIAMETER IS LARGER THAN THE DESIGNATED NPS.
2. STEEL SHALL BE FABRICATED AND ERECTED IN CONFORMANCE WITH THE LATEST AISC SPECIFICATIONS AND CODE OF STANDARD PRACTICE.
3. WELDING SHALL BE APPROVED E70XX ELECTRODES. WELDING SHALL CONFORM TO APPLICABLE AWS WELDING CODES, LATEST EDITION.
4. ALL STEEL STRUCTURAL COMPONENTS SHALL BE HOT-DIPPED GALVANIZED AFTER FABRICATION.
5. MAXIMUM SPACING OF POSTS SHALL BE 5 FEET ON STRAIGHT ALIGNMENTS AND 4 FEET ON CURVED ALIGNMENTS LESS THAN 30 FEET RADIUS. SPACING SHALL BE UNIFORM BETWEEN CHANGES IN ALIGNMENT.
6. PROVIDE SLIP JOINTS AT STAIRWAY AND RAMP EXPANSION JOINTS OR AT EVERY 24 FEET ON CENTER MAXIMUM.
7. ALL RAILS AND ANY ADJACENT SURFACES TO IT SHALL BE FREE OF ANY SHARP OR ABRASIVE ELEMENTS. EDGES SHALL HAVE A MINIMUM RADIUS OF 1/8 IN.
8. ALL FIELD WELDS AS REQUIRED SHALL BE GROUND SMOOTH. GALVANIZED COATING SHALL BE REPAIRED AFTER FIELD WELDING.
9. 90 DEGREE BEND RADIUS TO THE CENTER OF PIPE SHALL BE WITHIN TWO (2) TO THREE (3) TIMES OF NOMINAL DIAMETER OF THE PIPE.
10. SEE PROJECT PLANS FOR DETAILS OF POST SUPPORTING STRUCTURE.

NOT TO SCALE

STANDARD PLAN NO. S-463-3	VAULT INDEX NUMBER **B-4774**	SHEET 4 OF 4 SHEETS

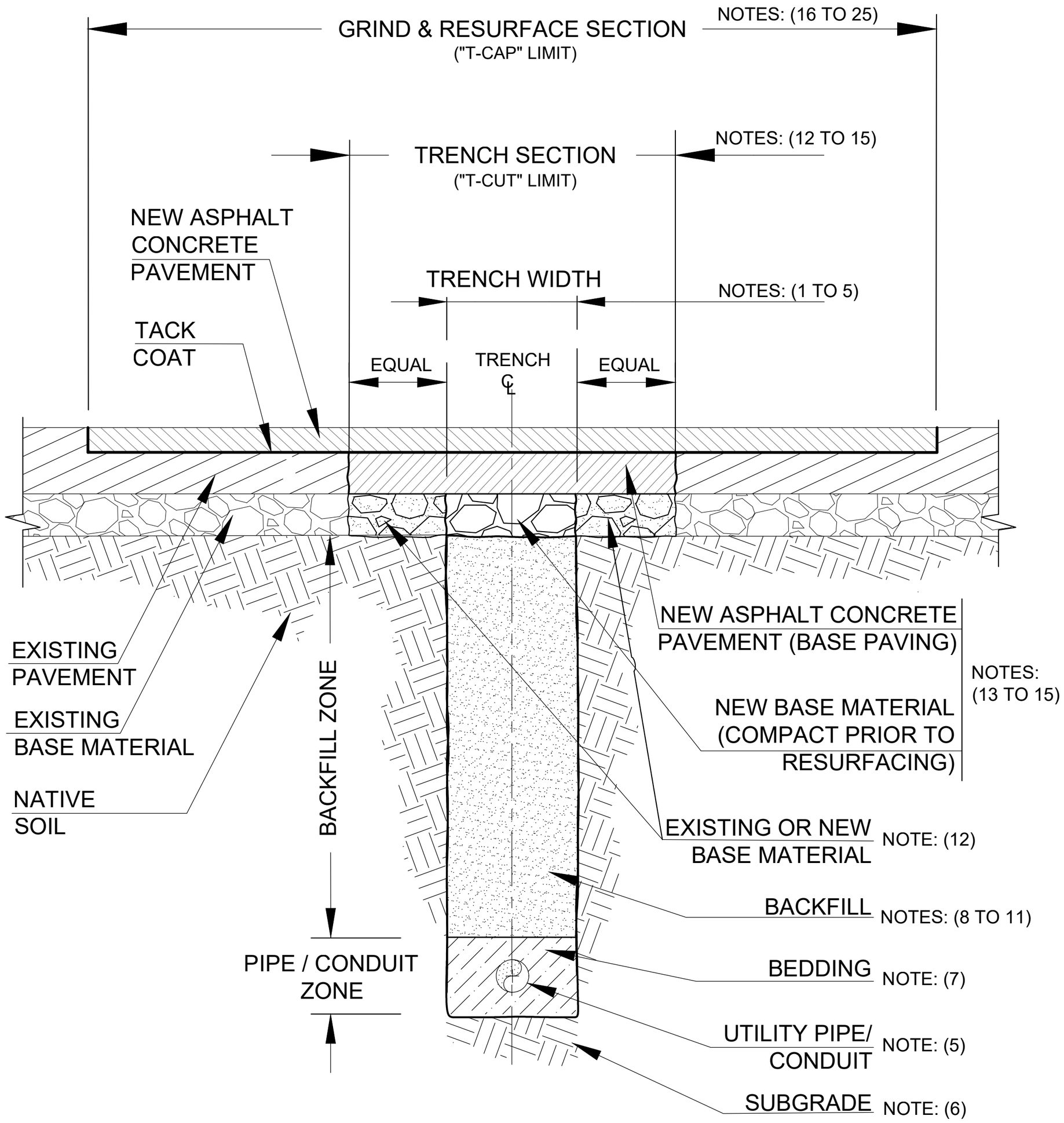

[redacted]

BUREAU OF ENGINEERING
OFFICIAL RECORD

NOT TO SCALE

BUREAU OF ENGINEERING | DEPARTMENT OF PUBLIC WORKS | CITY OF LOS ANGELES

[redacted]

STANDARD PLAN
S-477-2

PREPARED	SUBMITTED	APPROVED
AURORA R. GADBURY BUREAU OF ENGINEERING CHECKED MATI LAAN BUREAU OF ENGINEERING	Electronically signed by Edward Arrington, S.E. on 02/01/2019 EDWARD ARRINGTON, S.E. ENGINEER OF DESIGN Electronically Signed by Ken Redd on 02/06/2019 10:58:55 AM KENNETH R. REDD, P.E. DEPUTY CITY ENGINEER	Electronically signed by 21866 on 02/07/2019 at 7:59:21 AM GARY LEE MOORE, P.E. CITY ENGINEER 02/07/2019 REGISTERED PROFESSIONAL ENGINEER GARY LEE MOORE No. C-49446 CIVIL STATE OF CALIFORNIA

SUPERSEDES	REFERENCES
B-4768	

VAULT INDEX NUMBER: **B-4778**

SHEET 1 OF 4 SHEETS

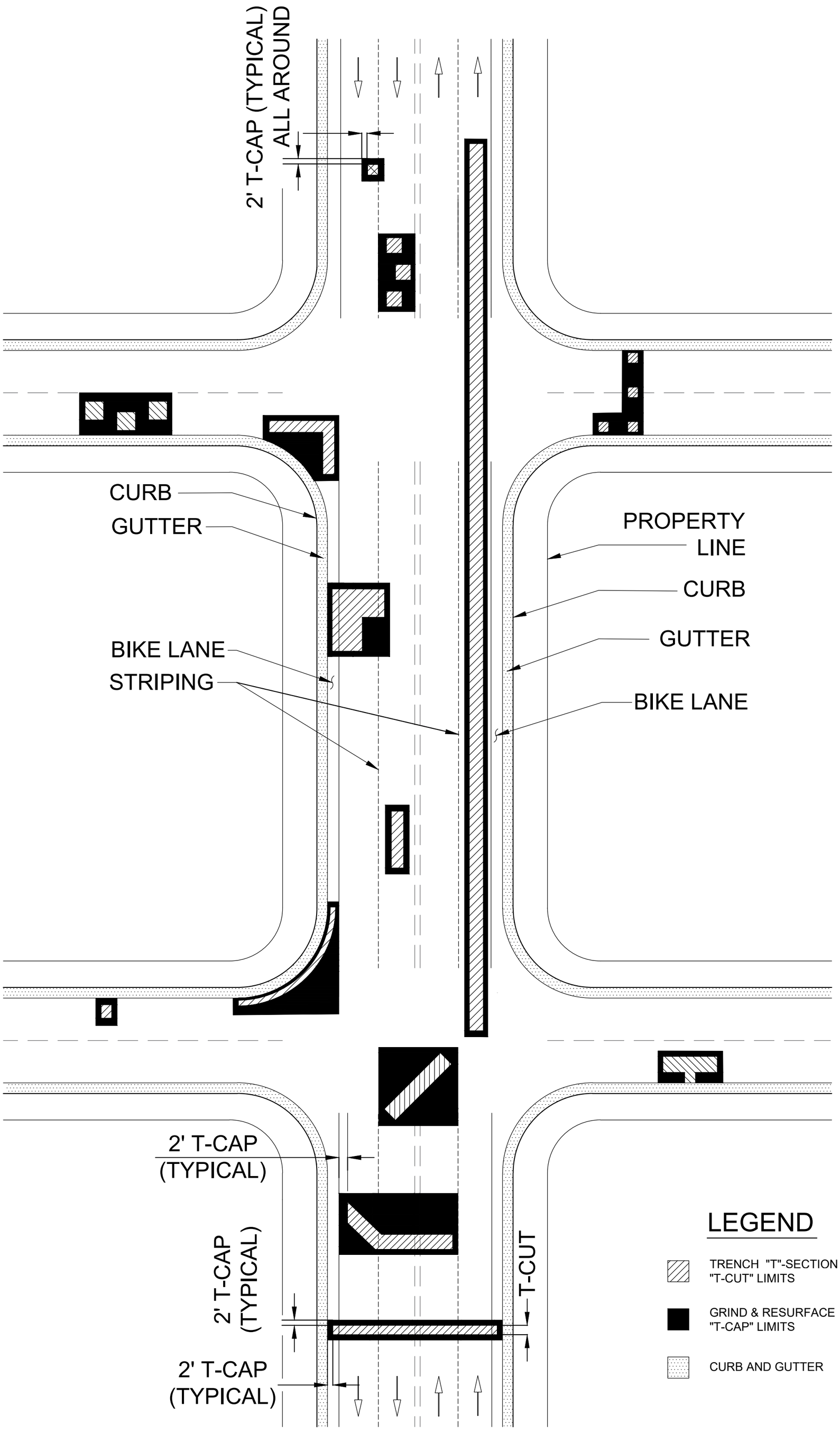

BUREAU OF ENGINEERING

OFFICIAL RECORD

NOT TO SCALE

STANDARD PLAN NO. S-477-2	VAULT INDEX NUMBER **B-4778**	SHEET 2 OF 4 SHEETS

NOTES:

ALL WORK SHALL BE CONSTRUCTED IN ACCORDANCE WITH THE LATEST STANDARD SPECIFICATIONS FOR PUBLIC WORKS CONSTRUCTION (SSPWC) "GREENBOOK" ADOPTED BY THE BOARD OF PUBLIC WORKS AS AMENDED BY THE LATEST CORRESPONDING CITY OF LOS ANGELES DEPARTMENT OF PUBLIC WORKS "BROWNBOOK".

LIMITS OF REMOVALS, TRENCH WIDTH:

1. ALL PAVEMENT REMOVED SHALL HAVE STRAIGHT EDGES. CUTS SHALL BE MADE TO A MINIMUM DEPTH OF ONE AND A HALF (1-1/2) INCHES. ALL CUTS SHALL BE NEAT, STRAIGHT, VERTICAL CUTS WITH NO BROKEN EDGES.
2. ALL LONGITUDINAL PAVEMENT CUTS SHALL BE UNINTERRUPTED APPROXIMATELY PARALLEL TO THE TRENCH (MAX. 1:6 LONGITUDINAL VARIANCE).
3. IF A SAW CUT IN PAVEMENT FALLS WITHIN 1 FOOT OF AN EXISTING CURB, GUTTER, OR EDGE OF PAVEMENT, THE ADDITIONAL PAVEMENT SHALL BE REMOVED AND RECONSTRUCTED.
4. WHEN SAW CUTTING PAVEMENT, THE MAXIMUM OVERRUN ALLOWED FOR ANY SAW CUT BEYOND THE BOUNDARY REMOVAL LIMITS OF EXISTING PAVEMENT SHALL BE 2 INCHES.
5. TRENCH WIDTH SHALL BE MINIMUM 24 INCHES, UNLESS SLURRY BACKFILL AND BEDDING IS USED, IN WHICH CASE MINIMUM SHALL BE 4 INCHES. MINIMUM 3 INCH SEPARATION SHALL BE MAINTAINED BETWEEN ALL CONDUITS, PIPES, AND TRENCH WALLS. IF SLURRY BEDDING MATERIAL IS USED, 1 INCH IS ACCEPTABLE IN A SINGLE LAYER INSTALLATION, OTHERWISE 2 INCH SEPARATION IS REQUIRED. UNDERCUTTING TRENCH WALLS TO ACQUIRE CLEARANCES IS NOT PERMITTED.

BEDDING:

6. BEDDING MATERIAL SHALL BE PLACED ON FIRM AND UNYIELDING SUBGRADE PER GREENBOOK SECTION 306. SOFT, SPONGY, UNSTABLE, UNSUITABLE MATERIAL SHALL BE REMOVED AND REPLACED.
7. BEDDING SHALL CONFORM TO GREENBOOK REQUIREMENTS AND OTHER APPLICABLE STANDARDS.

BACKFILL:

8. EXCAVATIONS SHALL BE BACKFILLED WITH AN APPROVED SLURRY MIX, CLSM, CMB, OR CAB. NATIVE SOIL MAY ONLY BE USED WITH CITY ENGINEER'S APPROVAL. CMB, CAB, SOIL SHALL BE COMPACTED TO 90% RELATIVE DENSITY. CMB, CAB SHALL BE WELL GRADED AND HANDLED IN A MANNER TO PREVENT SEGREGATION BY PARTICLE SIZE. SOIL TESTING MAY BE REQUIRED TO BE PROVIDED TO THE FIELD INSPECTOR ON A CASE-BY-CASE BASIS.
9. BACKFILL SLURRY MATERIAL SHALL BE PROPERLY CONSOLIDATED. SLURRY MATERIAL FOR TRENCHES DEEPER THAN 5 FEET AND/OR NARROWER THAN 12 INCHES SHALL BE CONSOLIDATED WITH VIBRATION.
10. BACKFILL MATERIAL SHALL BE MADE SMOOTH AND LEVEL BEFORE PLACING BASE AND PAVEMENT.
11. JETTING IS NOT AN APPROVED DENSIFICATION METHOD.

TRENCH SECTION:

12. AFTER THE EXCAVATION HAS BEEN BACKFILLED, THE EXISTING PAVEMENT SHALL BE REMOVED TO A LINE AT LEAST 12-INCHES BACK OF THE FIRM BANKS OF THE TRENCH (“T-CUT”). EXISTING CMB OR CAB BASE MATERIAL IN THIS AREA SHALL BE COMPACTED TO 95% RELATIVE DENSITY AND NEW BASE MATERIALS SHALL BE PROVIDED TO MATCH THE SURROUNDING BASE THICKNESS AS NECESSARY. WHERE NO BASE MATERIAL EXISTS IN THIS AREA, THE NEW BASE MATERIAL SHALL EXTEND BEYOND THE TRENCH WIDTH TO COVER THE ENTIRE TRENCH "T-CUT" AREA.

BUREAU OF ENGINEERING
OFFICIAL RECORD

NOTES: (CONTINUED)

13. NEW BASE MATERIAL OF CMB, OR CAB, SHALL MATCH THE EXISTING BASE THICKNESS, OR 4-INCHES, WHICHEVER IS GREATER AND SHALL BE COMPACTED TO 95% RELATIVE DENSITY. THIS REQUIREMENT SHALL ALSO APPLY OVER SLURRY BACKFILLS UNLESS OTHERWISE APPROVED BY THE ENGINEER. “T-CUT” IS NOT REQUIRED IF AN APPROVED SLURRY MIX BACKFILL IS USED, UNLESS UNDERMINING OF ADJACENT PAVEMENT IS PRESENT. IF SLURRY TRENCH WIDTH IS LESS THAN 12 INCHES, EXISTING PAVEMENT SHALL BE REMOVED TO PROVIDE AT LEAST A 12 INCH WIDE TRENCH SECTION FOR PROPER COMPACTION OF THE BASE MATERIAL.
14. NEW ASPHALT CONCRETE SECTION SHALL MATCH EXISTING PAVEMENT THICKNESS, OR 6 INCHES, WHICHEVER IS GREATER.
15. ASPHALT CONCRETE PAVING WILL OCCUR NO SOONER THAN 42 HOURS AFTER SLURRY BACKFILL OF TRENCH.

GRIND AND RESURFACE SECTION:

WITHIN 30 CALENDAR DAYS AFTER BACKFILLING, ASPHALT CONCRETE SHALL BE COLD MILLED AND RESURFACED AS FOLLOWS:

16. EXISTING ASPHALT CONCRETE SHALL BE GROUND DOWN ONE AND ONE HALF (1-1/2) INCHES, OR ONE HALF THE EXISTING PAVEMENT THICKNESS, WHICHEVER IS LESS, TO THE “T-CAP” LIMITS.
17. WHERE POSSIBLE, “T-CAP” LIMITS SHALL BE FROM FIGURE 1, "EXAMPLES OF GRIND AND RESURFACE “T-CAP” LIMITS". “T-CAP” IS NOT REQUIRED IN STREETS THAT HAVE NOT BEEN RESURFACED WITHIN THE PAST 8 YEARS AND DO NOT IMPACT BIKE LANES.
18. “T-CAP” LIMITS SHALL EXTEND AT LEAST 2 FEET BEYOND THE TRENCH SECTION ("T-CUT" LIMITS). MINIMUM “T-CAP” DIMENSIONS SHALL BE 5 FEET x 5 FEET.
19. “T-CUT” AND CORRESPONDING “T-CAP” (AS APPLICABLE) IS REQUIRED FOR ALL EXCAVATIONS WITH A SURFACE AREA OF 3 SQ. FT OR GREATER.
20. WHERE LIMITS OF "T-CUT"S, "T-CAP"S, POT HOLES OR CORED HOLES ARE WITHIN 4FT OF EACH OTHER, THE PAVEMENT SURFACE RESTORATION SHALL BE COMBINED, BLENDED AND SQUARED USING "T-CAP"S TO ENCOMPASS ALL AREAS IN BETWEEN AS SHOWN IN FIGURE 1. "T-CAP" LIMITS FOR POT HOLES AND CORE HOLES SHALL EXTEND A MINIMUM OF 1-FOOT ALL AROUND BEYOND THE HOLES.
21. IMPACTED BIKE LANES - “T-CAP” LIMITS SHALL FULLY ENCOMPASS ANY BIKE LANE IMPACTED BY THE TRENCH, AND SHALL HAVE A LENGTH THAT EXTENDS AT LEAST 2 FEET BEYOND THE ASPHALT REMOVAL LIMITS IN THE DIRECTION OF BIKE TRAFFIC.
22. WHEN THE “T-CAP” LIMIT IS WITHIN 2 FEET OR LESS FROM A CURB OR GUTTER, THE “T-CAP” LIMIT SHALL EXTEND TO THE CURB OR GUTTER.
23. PAVEMENT SHALL BE LEVEL WITH ADJACENT ROADWAY ELEVATIONS AND SHALL PROVIDE A SMOOTH SURFACE PER GREENBOOK SECTION 302-5 AND SUBJECT TO ACCEPTANCE BY THE CITY PUBLIC WORKS INSPECTOR.
24. "T-CAP" AND PERMANENT BASE PAVING MAY BE PERFORMED ON THE SAME DAY WHEN FEASIBLE.

IDENTIFICATION:

25. EACH RESURFACING SHALL BE IDENTIFIED WITH A METAL IDENTIFICATION TAG IDENTIFYING THE OWNER, AND YEAR OF CONSTRUCTION. IF THE RESURFACING IS MORE THAN 50 FEET IN LENGTH, PLACE THE TAG NEAR EACH END OF THE RESURFACING AND AT INTERVALS NOT TO EXCEED 50 FEET.

BUREAU OF ENGINEERING

OFFICIAL RECORD

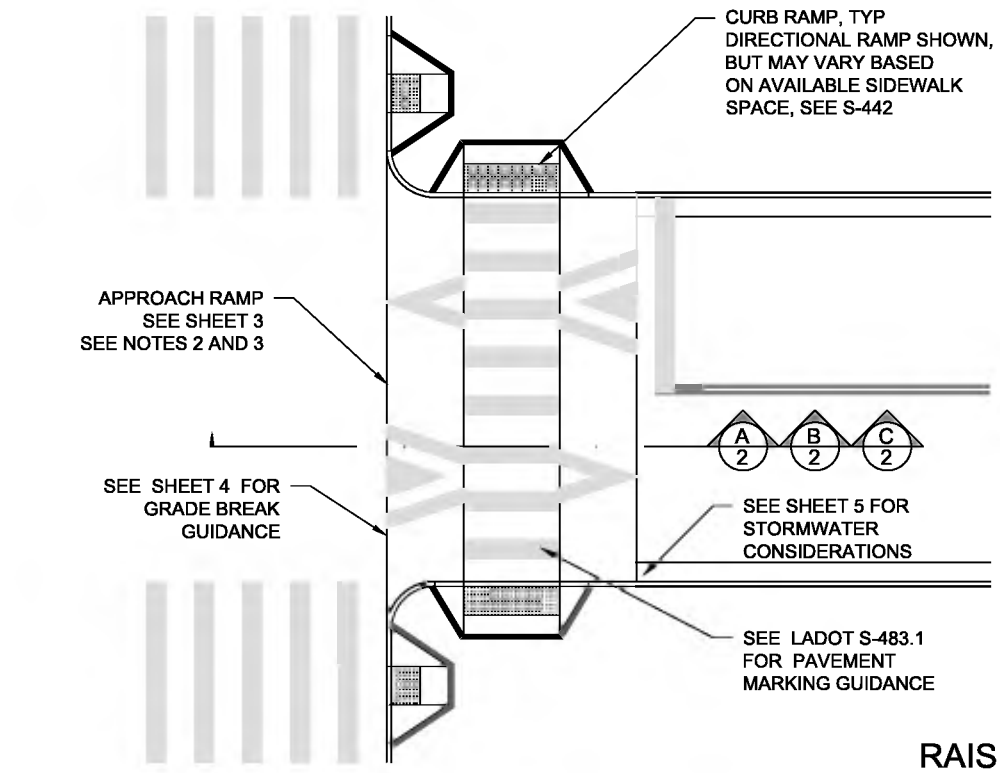

RAISED SIDE STREET

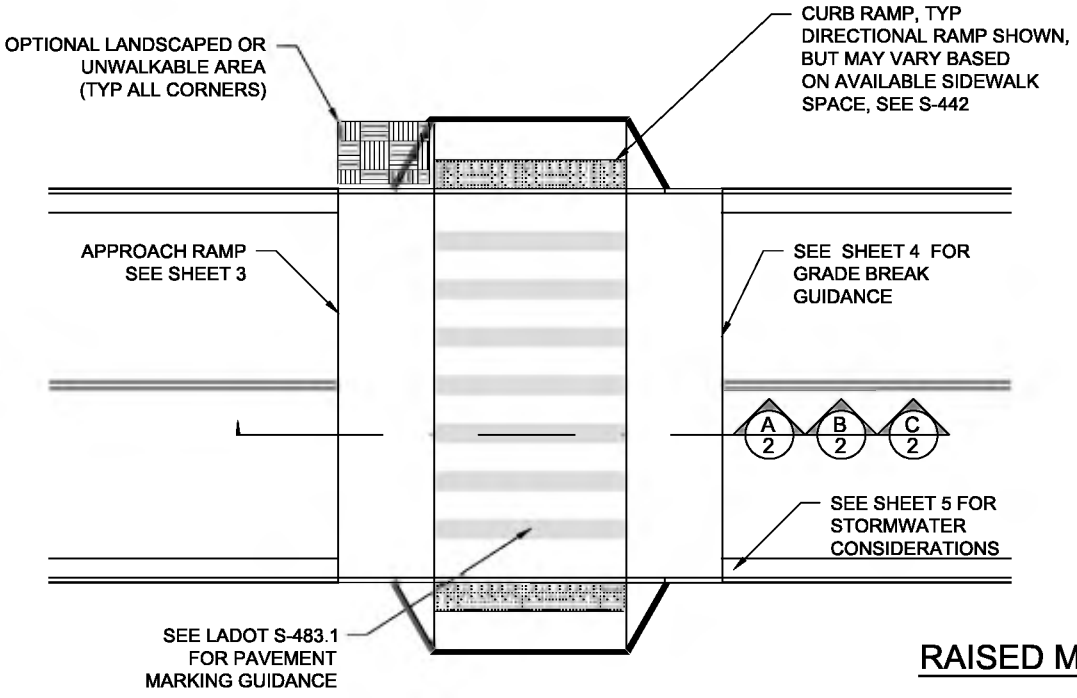

RAISED MID-BLOCK

RAISED CROSSINGS

SUPPLEMENTAL DESIGN GUIDE

DETAIL 600

SHEET 1 OF 8

C:\Users\ccueva\Desktop\Carlos\SSD\Supplemental Design\Final\Raised Crossings_BOE-040220.dwg
4/2/2020 9:14 PM

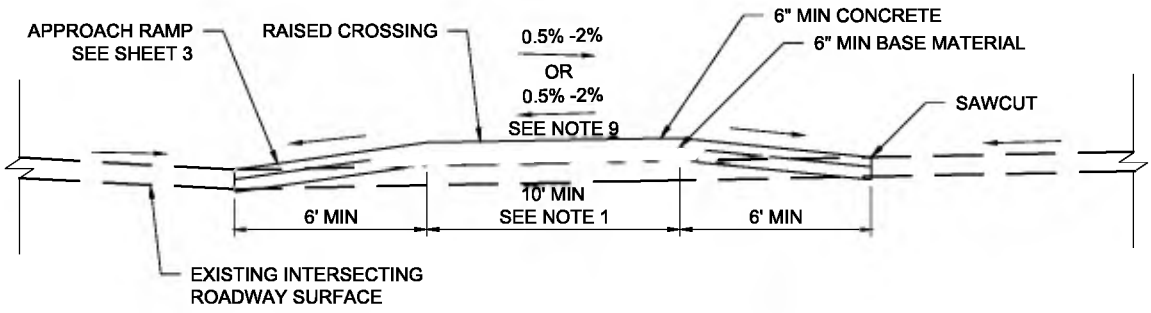

A 1,7 CONCRETE RAISED CROSSING
N.T.S.

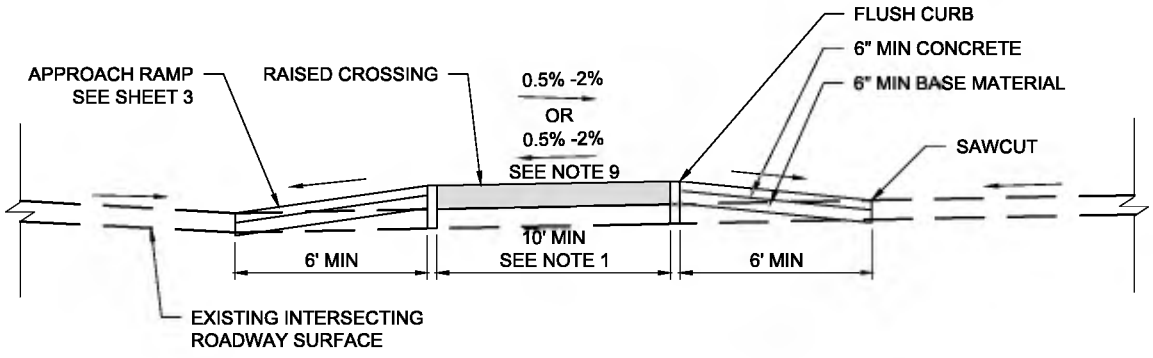

B 1,7 CONCRETE RAMPS AND ASPHALT CROSSWALK
N.T.S.

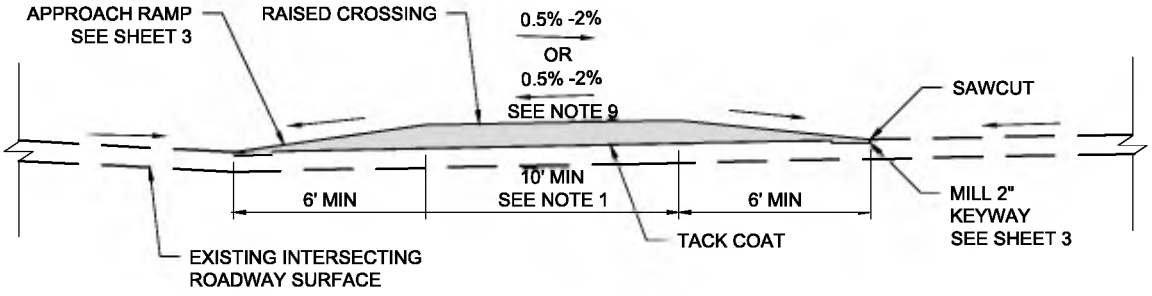

C 1,7 ASPHALT RAISED CROSSING
N.T.S.

RAISED CROSSING SECTIONS

C:\Users\ccuevas\Desktop\Carlos\SSD\Supplemental Design\Final\Raised Crossings_BOE-040220.dwg
4/2/2020 9:14 PM

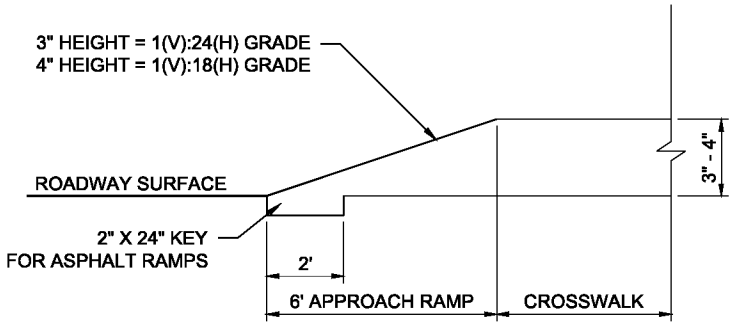

STRAIGHT APPROACH RAMP

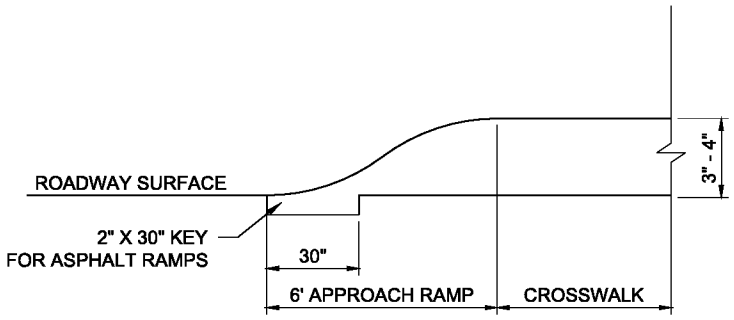

SINUSOIDAL APPROACH RAMP

3" HEIGHT - PARABOLIC APPROACH RAMP

DISTANCE (FEET)	0	0.5	1.0	1.5	2.0	2.5	3.0	3.5	4.0	4.5	5.0	5.5	6.0
FINISHED HEIGHT (INCHES)	0	0.05	0.20	0.44	0.75	1.11	1.50	1.89	2.25	2.56	2.80	2.95	3.00

4" HEIGHT - PARABOLIC APPROACH RAMP

DISTANCE (FEET)	0	0.5	1.0	1.5	2.0	2.5	3.0	3.5	4.0	4.5	5.0	5.5	6.0
FINISHED HEIGHT (INCHES)	0	0.07	0.27	0.59	1.00	1.48	2.00	2.52	3.00	3.41	3.73	3.93	4.00

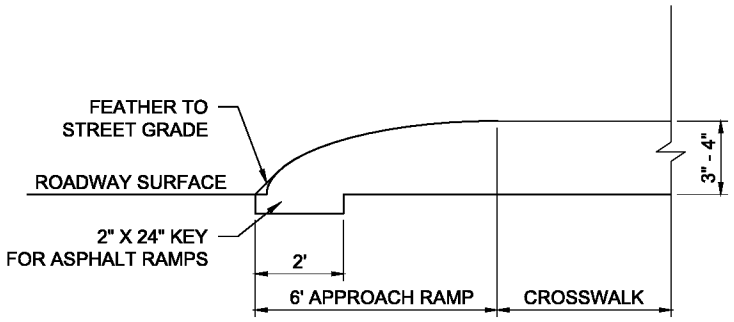

PARABOLIC APPROACH RAMP

3" HEIGHT - SINUSOIDAL APPROACH RAMP

DISTANCE (FEET)	0	1.0	2.0	3.0	4.0	5.0	6.0
FINISHED HEIGHT (INCHES)	0	1.2	1.7	2.1	2.4	2.7	3.0

4" HEIGHT - SINUSOIDAL APPROACH RAMP

DISTANCE (FEET)	0	1.0	2.0	3.0	4.0	5.0	6.0
FINISHED HEIGHT (INCHES)	0	1.6	2.3	2.8	3.3	3.7	4.0

APPROACH RAMP PROFILES

C:\Users\ccuevas\Desktop\Carlos\SSD\Supplemental Design\Final\Raised Crossings_BOE-040220.dwg
4/2/2020 9:14 PM

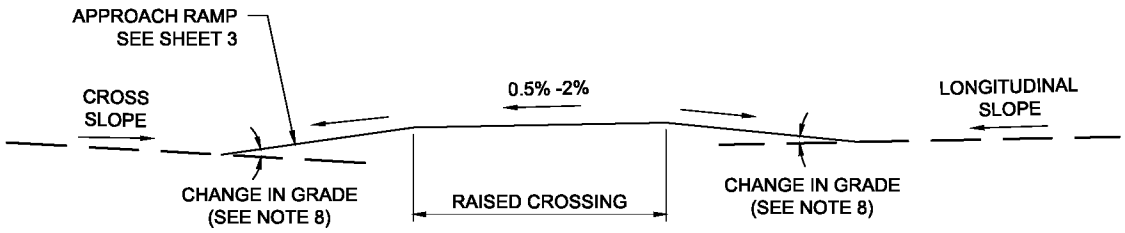

RAISED SIDE STREET

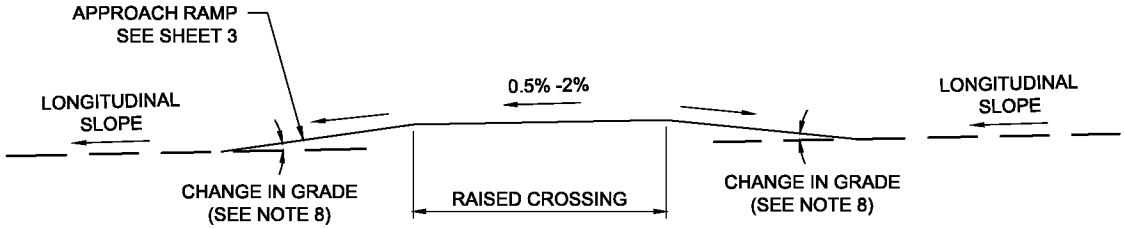

RAISED MID-BLOCK

C:\Users\ccuevas\Desktop\Carlos\SSD\Supplemental Design\Final\Raised Crossings_BOE-040220.dwg
4/2/2020 9:14 PM

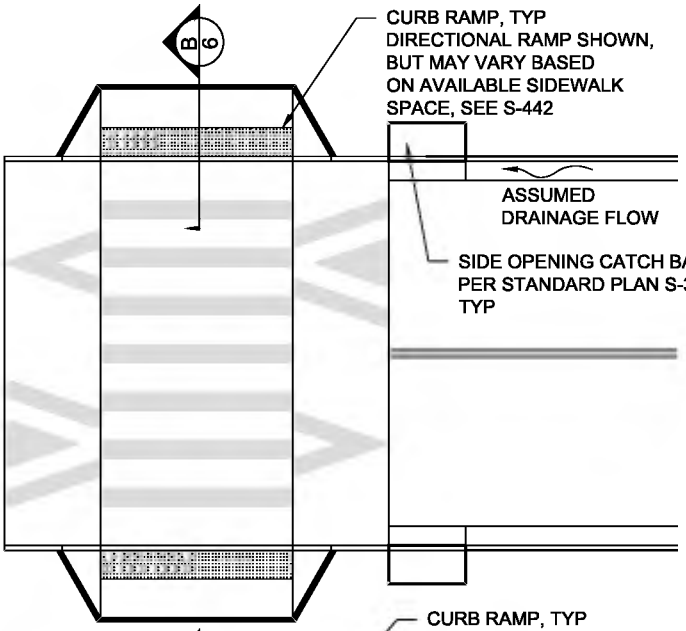

CASE A
NEW CATCH BASIN

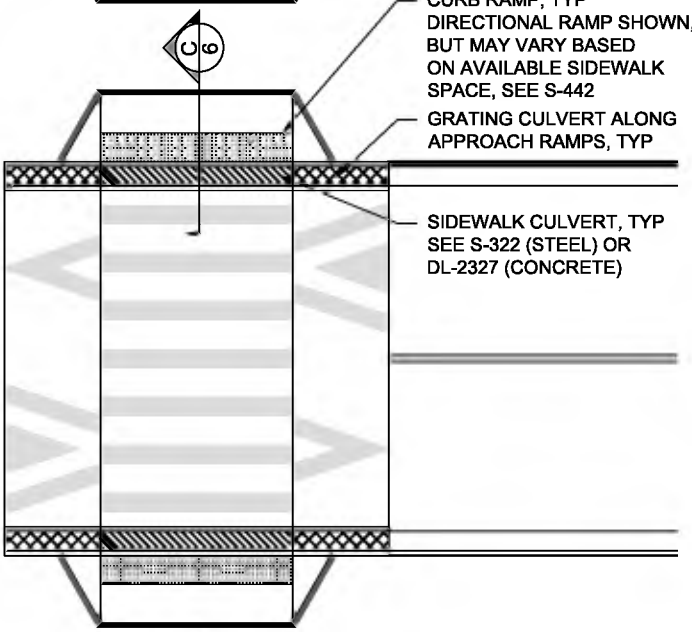

CASE B
SIDEWALK CULVERT

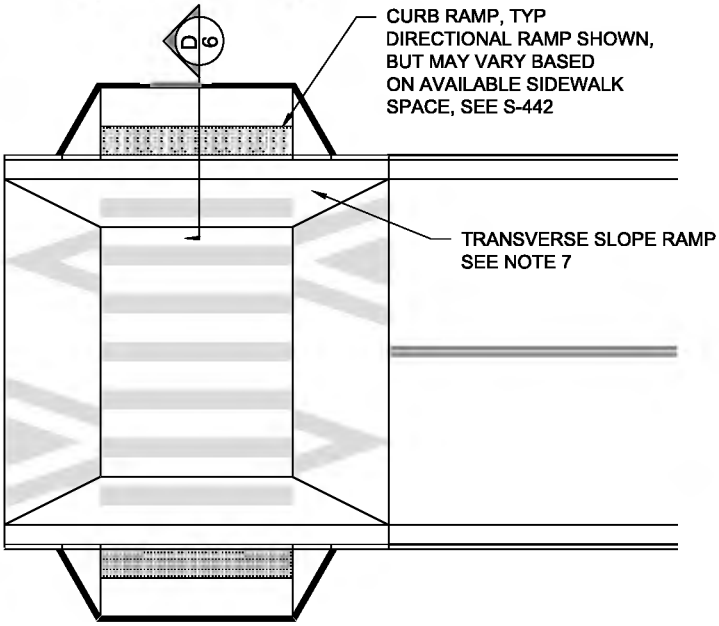

CASE C
EXISTING GUTTER FLOW

STORMWATER CONSIDERATIONS

C:\Users\ccueva\Desktop\Carlos\SSD\Supplemental Design\Final\Raised Crossings_BOE-040220.dwg
4/2/2020 9:15 PM

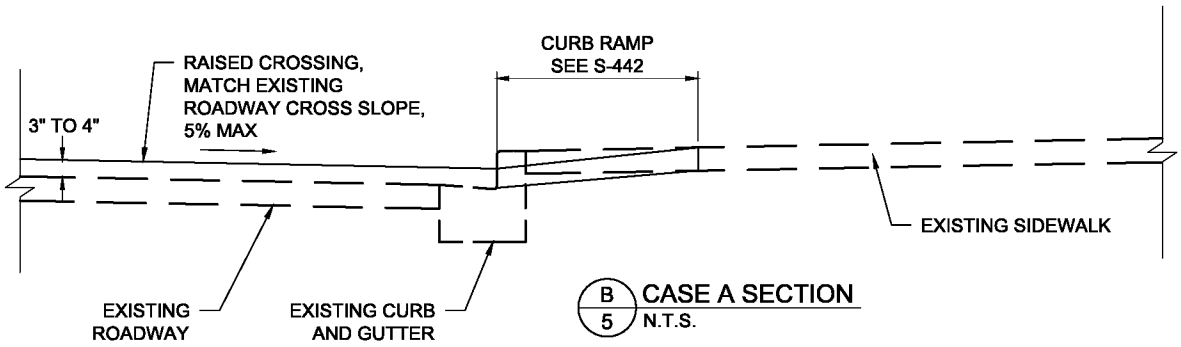

B/5 CASE A SECTION
N.T.S.

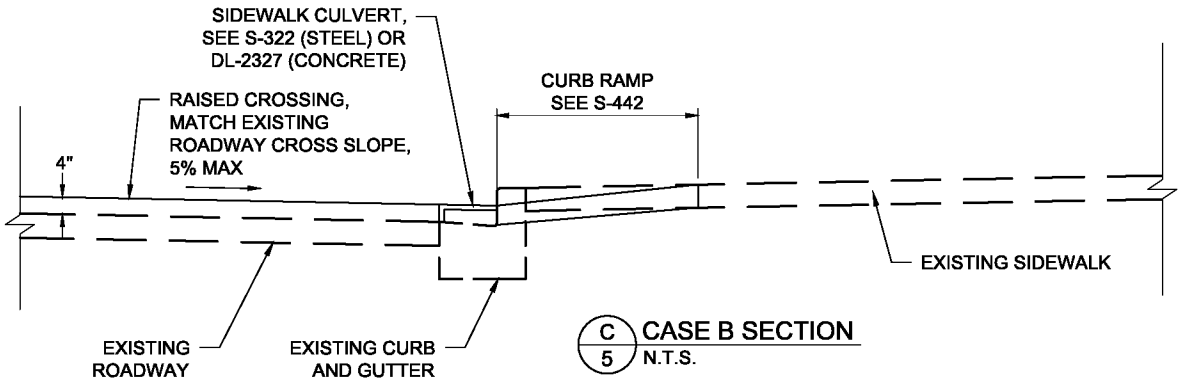

C/5 CASE B SECTION
N.T.S.

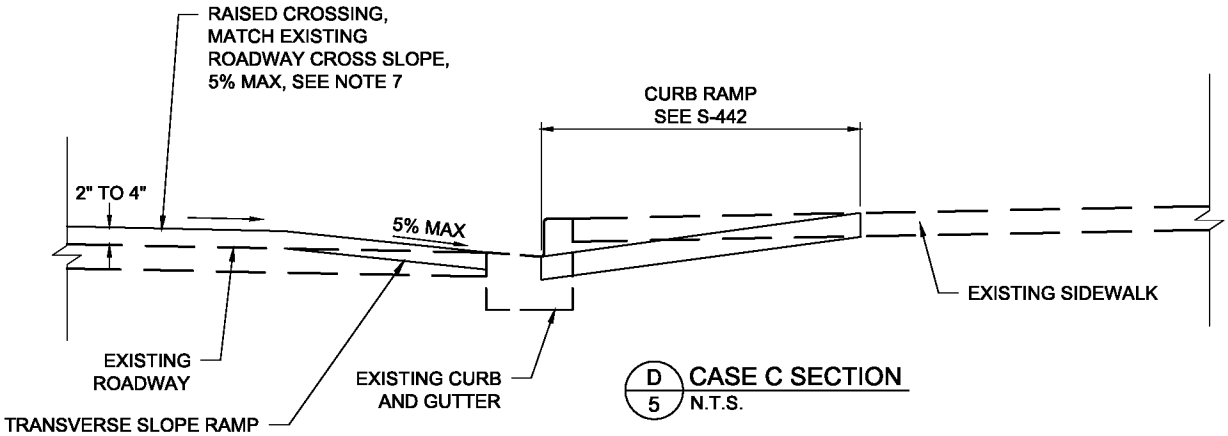

D/5 CASE C SECTION
N.T.S.

C:\Users\ccuevas\Desktop\Carlos\SSD\Supplemental Design\Final\Raised Crossings_BOE-040220.dwg
4/2/2020 9:15 PM

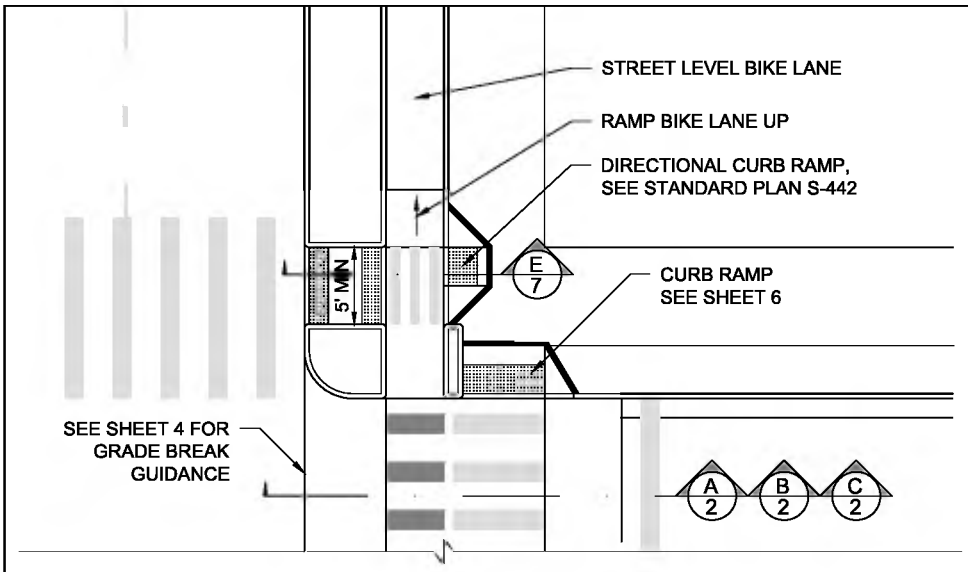

RAISED SIDE STREET WITH PROTECTED BIKE LANE CURB RAMP APPROACH

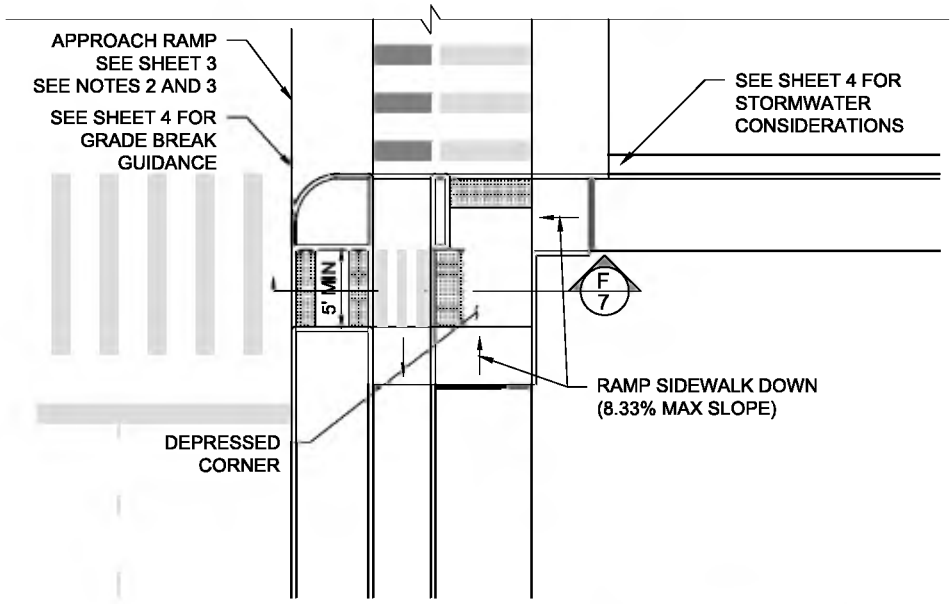

RAISED SIDE STREET WITH PROTECTED BIKE LANE DEPRESSED CORNER APPROACH

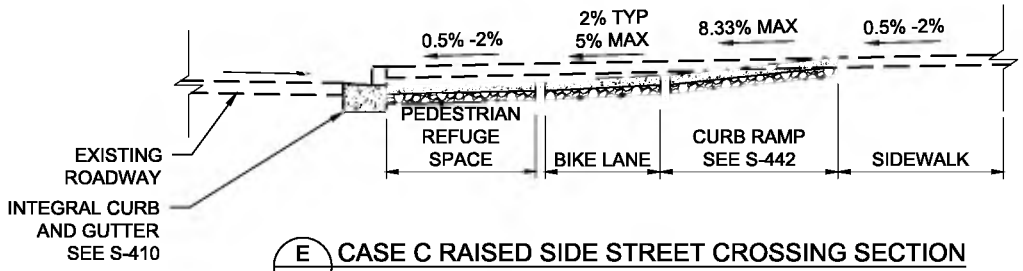

E 7 CASE C RAISED SIDE STREET CROSSING SECTION
N.T.S.

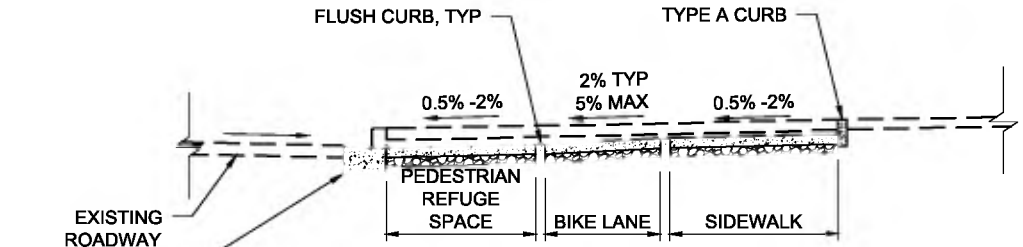

F 7 CASE D RAISED SIDE STREET CROSSING
N.T.S.

C:\Users\ccuevas\Desktop\Carlos\SSD\Supplemental Design\Final\Raised Crossings_BOE-040220.dwg
4/2/2020 9:15 PM

NOTES

1. THE WIDTH OF THE TOP OF RAISED CROSSWALKS SHOULD MATCH THE WIDTH OF THE CONNECTING SIDEWALK, SHARED USE PATH, OR DESIRED CROSSWALK, BUT NOT LESS THAN 10' IN WIDTH.

2. BOTTOM EDGE OF RAISED CROSSING APPROACH RAMP TO BE ALIGNED WITH CURB LINE OF INTERSECTING STREET TO MINIMIZE IMPACTS TO SURFACE STORMWATER FLOWLINE.

3. MODIFICATIONS TO EXISTING STREET PAVING, COLD PLANE AND OVERLAY ASPHALT OR COMPLETELY RECONSTRUCT PAVING AS NECESSARY TO RESTORE A SMOOTH TRANSITION AND STREET CROWN (STANDARD PLAN S-433, SIMILAR), MATCH PAVING MATERIALS AND THICKNESS, SEE S-410 FOR STANDARD CURBS & GUTTERS, AND WARP NEW GUTTER TO JOIN INVERT AT INLET.

4. WHERE POSITIVE DRAINAGE CANNOT BE ACHIEVED, INSTALL SIDE-OPENING CATCH BASIN PER STANDARD PLAN S-351, AND CONNECT TO EXISTING STORMWATER CONVEYANCE SYSTEM.

5. A RAISED CROSSING SET BACK FROM THE MAIN STREET MAY CREATE A NEW LOW POINT IN FRONT OF THE RAISED CROSSING. DRAINAGE AND CATCH BASIN PLACEMENT WILL NEED TO BE CONSIDERED.

6. PLACE CROSSWALK 2' (MIN) FROM POLES, HYDRANTS, OR OTHER VERTICAL OBSTRUCTIONS.

7. THE CASE C SECTION (SEE SHEET 5) IS APPROPRIATE ON ROADWAYS WITH PARKING. THE RAISED CROSSING SHOULD REACH FULL HEIGHT OUTSIDE OF ACTIVE TRAVEL LANES. THE CASE 3 SECTION MAY NOT BE APPROPRIATE ON ABNORMALLY CROWNED ROADWAYS, WHERE THE CROSS SLOPE EXCEEDS 3.3%.

8. FOR STOP CONTROLLED SIDE STREET, THE MAXIMUM CHANGE IN GRADE IS 8%. FOR UNCONTROLLED OR SIGNALIZED INTERSECTIONS, OR FOR MID-BLOCK LOCATIONS, THE MAXIMUM CHANGE IN GRADE IS 5%.

9. CROSSWALK CROSS SLOPES SHOULD BE NO GREATER THAN 2%, HOWEVER, AT LOCATIONS WITHOUT STOP CONTROL THE CROSS SLOPES MAY BE 5% MAX. AND AT MIDBLOCK LOCATIONS THE CROSS SLOPE MAY MATCH THE EXISTING STREET GRADE.

C:\Users\ccuevas\Desktop\Carlos\SSD\Supplemental Design\Final\Raised Crossings_BOE-040220.dwg
4/2/2020 9:19 PM

CUMULATIVE SUPPLEMENT
to "Standard Plan S-601-3"

HANDHOLES, MAINTENANCE HOLE COVERS AND FRAMES, DETECTABLE WARNING SURFACE, TREE WELL COVERS, PAVERS AND SIMILAR INSTALLATIONS

Section 2-1.1(a) REVISE AS**:** (*Effective June 1st 2016*)
~~Standard Specifications for Highway Bridges (17th Edition) of American Association of State Highway and Transportation Officials (AASHTO)~~ Latest AASHTO LRFD Bridge Design Specifications adopted by Caltrans, with corresponding latest California Amendments (AASHTO and LRFD shall be respectively known as American Association of State Highway and Transportation Officials and Load and Resistance Factor Design).

Section 2-2.2.1 (a) REVISE AS**:** (*Effective June 1st 2016*)
~~For effect of impact:~~
~~0 to 12 inches below ground, increase live load by 30%~~
~~13 to 24 inches below ground, increase live load by 20%~~
~~25 to 35 inches below ground, increase live load by 10%~~
~~36 inches or more below ground, no increase.~~
For effect of impact, see Latest AASHTO LRFD Bridge Design Specifications adopted by Caltrans, with corresponding latest California Amendments.

* * *

California Amendments (to the AASHTO LRFD Bridge Design Specifications Sixth Edition): (*Effective June 1st 2016*)

http://www.dot.ca.gov/hq/esc/techpubs/manual/bridgemanuals/ca-to-aashto-lrfd-bds/caalbds_v6.html

* * *

Design Standards & Investigations Group
WCED | Bureau of Engineering, Department of Public Works
1149 S. Broadway, Suite 635 Los Angeles, CA 90015

TABLE OF CONTENTS

SUBJECT		SHEET NO.
PART 1	**TERMS AND DEFINITIONS**	
Section 1	TERMS AND DEFINITIONS	2
PART 2	**GENERAL REQUIREMENTS**	
Section 1	SCOPE	4
Section 2	STRUCTURAL DESIGN	8
PART 3	**PHYSICAL PROPERTIES AND CONDITIONS, STRUCTURAL STRENGTHS AND PERFORMANCE CHARACTERISTICS**	
Section 1	GENERAL REQUIREMENTS	22
Section 2	HANDHOLES, PRECAST MAINTENANCE HOLES, AND SIMILAR STRUCTURES OR INSTALLATIONS	24
Section 3	COVERS AND FRAMES AND SIMILAR INSTALLATIONS	30
Section 4	TEMPORARY TRENCH PLATES, TREE WELL COVERINGS, VENT GRATES, AND SIMILAR INSTALLATIONS	32
Section 5	DETECTABLE WARNING SURFACE	35
Section 6	BRICK, CONCRETE OR OTHER DECORATIVE PAVERS	43

L.A.C.E.
INDEX

BUREAU OF ENGINEERING — DEPARTMENT OF PUBLIC WORKS — CITY OF LOS ANGELES

HANDHOLES, MAINTENANCE HOLE COVERS AND FRAMES, DETECTABLE WARNING SURFACE, TREE WELL COVERS, PAVERS AND SIMILAR INSTALLATIONS

STANDARD PLAN S-601-3

SUBMITTED Sept 9 2008

ENGINEER OF DESIGN

DEPUTY CITY ENGINEER

APPROVED Sept. 9 2008

Gary Lee Moore
CITY ENGINEER

DESIGNED BY	DRAWN BY	CHECKED BY
PHL	RHL	PHL

REGISTERED PROFESSIONAL ENGINEER
GARY LEE MOORE
No. C-49446
Exp. 9-30-10
CIVIL
STATE OF CALIFORNIA

REVISIONS	SUPERCEDES	REFERENCES
DESCRIPTION		
REVISED TITLE AND REQUIREMENTS	B-4093 B-4099	

B-4608

SHEET 1 OF 50 SHEETS

PART 1
TERMS AND DEFINITIONS

SECTION 1
TERMS AND DEFINITIONS

1-1.1 Terms.

In this standard plan and other referenced standards:

(a) Unless otherwise stated, the words, "directed," "required," "permitted," "ordered," "instructed," "designated," "considered necessary," "prescribed," "approved," "acceptable," "satisfactory," or words of like meaning, refer to, expressions, and prerogatives of the City.

(b) The word "shall" is used to describe specific conditions. To clarify the meaning intended by this word "shall", the following definitions apply:

Shall: A mandatory condition. Where certain requirements are described with the "shall" stipulation, the requirements are mandatory. The City Engineer can approve exceptions to these conditions on a case by case bases.

(c) "Standard Plans" shall mean the City of Los Angeles, Department of Public Works, Bureau of Engineering standard plans and applicable American Public Works Association's Standard Plans For Public Works Construction (SPPWC) adopted by the City.

1-1.2 Definitions.

In this standard plan and other referenced standards:

(a) **APPLICANT - See Permittee.**

(b) **BASE** - The lowest section with floor or slab for closing the bottom opening of a handhole. Base shall be designed for the bearing pressure.

(c) **PERMIT ENGINEER** - Representative of the City Engineer who enforces the municipal code requirements as described herein by issuing various types of construction and Product Approval permits.

(d) **BOX** - Main section or the upper section of handhole consisting of vertical walls supporting the top slab when multiple sections are used. Other sections that are added to the center of the handhole are referred as extensions.

(e) **CONTRACTOR** - The individual, partnership, corporation, joint venture, or other legal entity having a contract or permit with the City that allows them to perform work

in the public right of way. The Contractor may perform work for an individual permittee.

(f) **COVER AND FRAME** - Cover and its supporting frame (also referred to as "ring") are used to close an access or top opening to the box or maintenance hole.

(g) **EXTENSION** - Intermediate or center section that may be used to increase depth of a handhole.

(h) **HANDHOLE** - Complete box and frame and cover, extension and base if provided, used at grade level and/or below-grade. Includes pull boxes, enclosure, vaults and similar installations.

(i) **MAINTENANCE HOLE** - Precast structure that typically consists of frame and cover that may be set in a concrete curb or collar, grade (adjustment) rings, cone or taper top section (or sometimes referred as "vault neck"), riser sections; and to provide access from existing pavement to below-grade handhole or structure.

(j) **MANUFACTURER** - The individual, partnership, corporation, joint venture, or their legal entity that manufactures the product and material in a plant.

(k) **PAVER** - Any stone, brick or tile unit suitable for sidewalk surfaces, and driveway if permitted by City Engineer.

(l) **PERMANENT DEFLECTION** - The difference between the deflection at the start of proof loading testing (after preload) and the end of testing (at end of 10 cycles).

(m) **PERMITTEE** - A permit applicant who can be a person, a contractor, local utility company or a manufacturer seeking the approval of the testing and analysis by the City of Los Angeles, Department of Public Works (DPW) of any material, product, service, process or technology used in construction of curb, sidewalk, gutter, driveway, approach, roadway surface, pavement, sanitary sewer, sewer work, storm drain, culvert, stairway, retaining wall or any similar structure over the City's right of way in accordance with Los Angeles Municipal Code Sections 62.105 and 62.105.6.

(n) **PULL BOX** - A non-person entry handhole commonly used in conjunction with street light and traffic signal systems, water meters, irrigation controls and valves within the pedestrian way. See Handhole.

(o) **TOP SLAB** - The upper horizontal portion of the box.

(p) **TREE WELL COVERING** - The cover or grate that is placed over a tree well with or without frame.

(q) **ZERO LOAD DEFLECTION READINGS** - The difference between the deflection readings before preload and after preload.

(r) **VAULT** - A person-entry handhole. Also see Handhole.

L.A.C.E.
INDEX

PART 2
GENERAL REQUIREMENTS

SECTION 1
SCOPE

2-1.1 General.

This standard plan covers the design criteria, the testing and the approval requirements for the materials and products placed in the public right-of-way. The testing and approvals are required by Los Angeles City Municipal Code Section 62.105 and the testing and approval responsibilities have been delegated to the City Engineer under Section 62.105.6 of the code. Many of the testing and approvals are also required by the Greenbook and its supplements, and the Brown Book used as the specifications for the works constructed in the public right-of-way. The materials and products approved under this standard plan shall be utilized in all Bureau of Engineering (BOE) projects. (Note: Any installation over the below-grade building or basement located under the sidewalk area or the public right of way shall also conform with the building code requirements and shall be approved by Los Angeles City Department of Building and Safety.)

(a) Portions of this standard plan were extracted from the Western Underground Committee's "Recommended Guide No. 3.6, Non-concrete Handholes." References shall also be made to ANSI/SCTE 77 2007 Specification for Underground Enclosure Integrity, Standard Specifications for Highway Bridges (17th Edition) of American Association of State Highway and Transportation Officials (AASHTO), and Bureau of Engineering (BOE) Structural Design Manual Part H. It shall be the permittee's responsibilities that the materials and products are also in conformance with other applicable standards or code requirements.

(b) The brick, concrete or other decorative pavers and their requirements specified herein or as listed in the Citywide-Use approval lists do not intend to replace the standard concrete sidewalk pavement as required in the City of Los Angeles or to replace the existing standard installation details or other standard plan requirements for concrete sidewalk. The brick, concrete or other decorative pavers shall not be allowed in existing improved local street or residential area. The brick, concrete or other decorative pavers may be allowed in non-local street or commercial area or new driveway apron in unimproved local street or residential area at the discretion of the

L.A.C.E.
INDEX

City Engineer. The information provided herein shall be used as reference information only and as a guide to review the materials and products submitted in accordance with the municipal code. All materials and products must be reviewed, tested and approved by the City Engineer and other applicable governing City departments.

2-1.2 Types of Approvals and Usages.

(a) The City grants the following types of approvals:
Approval for use at a specific location in conjunction with a specific project and a Citywide-Use approval that pre-approves and pre-qualifies the materials and products to be used at any location within the City if the project location meets the conditions of the approval, the applicable code, law and regulation. The permittee for the Citywide-Use approval must be the manufacturer or their authorized representative.

(b) Types of Usage. This standard plan includes materials and products for the following usages:
(1) Those suitable for installation in sidewalks, parkways, and other pedestrian traffic areas.
(2) Those suitable for installation in streets, alleys, driveways and other vehicular traffic areas.

(c) The final approvals of the use of the Citywide-Use approved materials and products to be installed under the required permits shall be made by BOE permit engineer and other applicable governing City departments. Uses of the approved materials or products shall not release the permittee of the responsibilities to provide design and/or obtain structural calculations to verify for their proper use under the project site conditions, to verify for the availabilities of the materials or products, and to obtain the approvals of the installations from the BOE permit engineer and other applicable City departments.

2-1.3 Types of Materials and Products.

The materials and products covered by this standard plan consist of the following:

(a) All handholes, precast maintenance holes and similar installations.

(b) Covers with or without frames. (It is noted that only covers and frames that conforms to the applicable standard plans can be used for City sewer or storm drain maintenance holes.)

(c) Trench plates, tree well coverings, vent grates and other similar installations.

(d) Detectable warning surface.

L.A.C.E. INDEX

(e) Brick, concrete or other decorative pavers.

This standard plan does not include the testing requirements or the criteria for sanitary sewer or storm drain materials or products. Refer to Greenbook and Brown Book for the acceptance criteria for the sanitary sewer or storm drain products.
(See http://eng.lacity.org/techdocs/product_material/Product_materials.htm.)

2-1.4 Approved Material and Product List(s).

The City Engineer will maintain and issue current list(s) of Citywide-Use approved handholes, covers and frames, tree well coverings, vent grates, trench plates, brick, concrete or other decorative pavers, and other similar installation. The list(s) will indicate the name of the manufacturer, the limits of the approved use, the material each product consists of, the manufacturer's model number or other identifying designation, and the expiration date of the approval. The list(s) of approved products for Citywide-Use can be found on the Technical Document Center of the BOE website.
(See http://eng.lacity.org/techdocs/products/index.cfm.)

2-1.4.1 Duration of Approvals.

The duration of approvals, from the date of the approval letter, for the materials and products included in this standard plan, are as follows:

	Type of Product	Duration of Approval
(a)	Handholes, precast maintenance holes, covers and frames, and similar structures or installations	2 years*
(b)	Trench plates, tree well coverings and grates, catch basin gratings and similar installations	4 years
(c)	Brick, concrete or other decorative pavers	4 years
(d)	Detectable warning surface	4 years
(e)	Other materials and products not included above	2 years

The manufacturer shall certify in writing to the City Engineer 60 days before the expiration date that no change of ownership or manufacturing plant has been made and the product is made of the same material and other approved components. If the manufacturer fails to provide the certification, the City Engineer will remove the product from the approved list and the approval shall be deemed to have expired. The City Engineer has the right to temporarily or permanently suspend any approval when the materials or the

L.A.C.E.
INDEX

products are discovered or detected with flaws or deflects during manufacturing or construction which may cause harm to the public. Any change of the governing code requirements, referenced standards or any part of this standard plan that are affecting the approval and testing requirements shall deem the existing approval has been obsolete and the manufacturer shall be notified and to resubmit for new approval to the new requirements.

(* Maximum total duration of the approval with extensions is eight years provided there is no change of the materials and product fabrication, governing code, referenced standards or any part of this standard plan. The manufacturer shall provide written certification every two years as described above. The manufacturer shall provide new submittals with material and product information, fabrication and/or engineering drawings as described herein for review at the end of eight years. The manufacturer shall provide additional testing as required by the City Engineer when deemed necessary.)

2-1.5 Application and Approval Process.

The permittee shall submit a request for approval of the material or product for use in the City's public right of way and provide all necessary testing and/or structural calculations in accordance with the Public Works Products Approval Procedures published in Technical Document Center of the BOE website.
(See http://eng.lacity.org/techdocs/product_material/Product_materials.htm.)

In accordance with the published Public Works Products Approval Procedures, three main processes are available for determining the acceptability of a material or product. They consist of the following:

(a) Submission of laboratory test results that are performed at the City's approved laboratory with the testing analysis that demonstrates the material or product meets or exceeds the strengths and the physical characteristics specified in this standard plan. (Note: Handholes, precast maintenance holes and similar structures or installations that exceed 48 inches in any size shall be submitted with the structural calculations as described below in lieu of the structural loading test. All covers and frames shall be performed with structural loading tests with the exception as indicated in 2-2.3.1(b).)

(b) Submission of drawings and calculations that demonstrates the product meets or exceeds the structural loadings specified in this standard plan. The drawings and calculations shall be prepared by a Civil or a Structural Engineer licensed in the State of California.

(c) A combination of both submissions described above. In addition to the structural drawings and calculations, other evaluation of the physical characteristics of the product

L.A.C.E.
INDEX

performed by laboratory tests may be required.

SECTION 2
STRUCTURAL DESIGN

2-2.1 General.

When the materials or products are placed in the public right of way or utilized in BOE projects are subjected to vehicular and/or pedestrian loadings, they shall demonstrate in the approval process that they are designed, fabricated and installed to meet these loading requirements. When the permittee submits structural drawings and calculations as part of approval process specified in 2-1.5, the structural drawings and calculations shall conform to the following, but not necessarily limited to:

(a) Unless otherwise specified, allowable deflections and stresses or structural capacity shall be computed in accordance with the Standard Specifications for Highway Bridges (17th edition) of AASHTO. For materials or products made of reinforced concrete, long term deflection resulting from creep and shrinkage with time-dependent factor for the sustained loads shall be computed with the safety factor of 2.0. For materials or products made of structural steel, allowable stress shall be computed by considering the effects of repeated loading with loading condition of four as specified in Manual of Steel Construction published by American Institute of Steel Construction (AISC).

(b) When future street widening or other modification which might affect the loading on any of this material or product or structure is planned, that material or product or structure shall be designed to accommodate the future loading.

2-2.2 Structural Loadings.

The structural loadings shall be the most stringent combination of the applicable live and dead loads applied vertically and laterally.

2-2.2.1 Live Loads.

The live loads can be from vehicular load or pedestrian load depending on the location the material or product is used. The following live loads shall be used:

(a) Live Loads-Vertical.

Structure Location	Vertical Live Load
(1) Roadways, Alleys or Driveways (Existing or Future).	H20 - wheel loading including Impact.

L.A.C.E. INDEX

For effect of impact:
0 to 12 inches below ground, increase live load by 30%
13 to 24 inches below ground, increase live load by 20%
25 to 35 inches below ground, increase live load by 10%
36 inches or more below ground, no increase.

(2) Parkway/Sidewalk — 300 psf (see Section 56.09 of Los Angeles Municipal Code)

(b) Live Loads-Lateral.

(1) Lateral live loads shall be those to which the structure is exposed to. When walls are located closer than ½ of the wall height from the nearest wheel load, a wheel load surcharge of two feet shall be assumed to approximate the effects of lateral live loadings.

(2) Any structure containing wall height of less than two feet can be installed in any sidewalk and parkway, with the exception of driveway, without considering wheel load surcharge.

2-2.2.2 Dead Loads.

The following dead loads shall be used:

(a) Dead Loads-Vertical.

(1) Minimum unit weight of the earth cover shall be taken as 120 pcf.

(2) Actual weights of concrete, access cover, grade rings, riser sections, appurtenances and stored contents shall be used.

(b) Dead Loads-Lateral.

(1) Horizontal soil pressure from the earth backfill below ground level and hydrostatic pressure developed from the ground water.

(2) For earth surface, above ground level, containing slope greater than 5:1, two feet of earth surcharge shall be assumed.

(3) Minimum equivalent fluid pressure of 36 pcf shall be used to determine the soil pressure and earth surcharge. Where saturated earth or high groundwater is anticipated, equivalent fluid pressure of 80 pcf shall be used.

(4) Cylindrical Structures. The lateral loads on cylindrical structures shall be unbalanced with the loads as shown below:

L.A.C.E.
INDEX

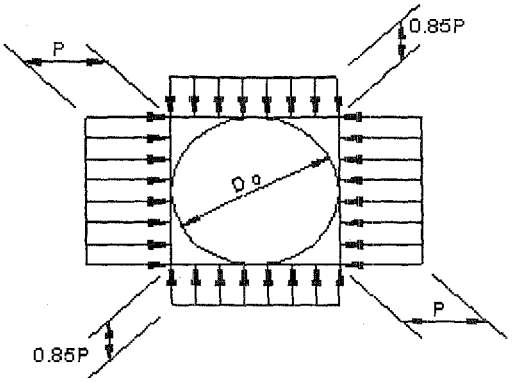

Where:

P= The lateral loads from horizontal soil pressure and the earth surcharge, and/or hydrostatic pressure described above.

D_o= The outside diameter of the structure.

The coefficients for moments and thrust calculations shall be from recognized and accepted theories.

2-2.2.2 Soil Bearing Pressure.

Any handhole, precast maintenance hole, metal frame and similar structure or installation without a bottom, a floor slab, or a solid support shall be submitted with structural calculations indicating the resultant soil pressures due to the structural loadings do not exceed 1,000 psf.

2-2.2.3 Allowable Deflection by Structural Calculations.

The computed deflection by the structural calculations submitted for the approval shall not exceed the allowable deflection as described in 2-2.3.3.

2-2.3 Structural Loading Test.

2-2.3.1 General.

(a) In addition to other property and performance testing specified in this standard plan, all materials and products including those that are located below-grade, or at grade level and spanned over an opening shall be designed and tested to withstand the live and/or dead loads listed above. If the material or product is submitted for approval with the required testing as a part of the approval process, written descriptions of the structural loadings, the testing methods and the procedures shall be included along with the manufacture drawings

required herein.

(b) Structural loading test shall be applied to handholes, precast maintenance holes, and similar structures or installations, and all covers and frames used over these structures and installations with the following conditions and other requirements specified herein.

(1) For handholes, precast maintenance holes and similar structures or installations that contain any wall dimension greater than 48 inches, structural calculations are required to be submitted for approval in addition to impact load test specified herein.

(2) Structural loading test shall be applied to all covers and frames used over the handholes, precast maintenance holes, or similar structures except for covers and frames that are made of steel or reinforced concrete. For covers and frames that are made of steel or reinforced concrete, the permittee shall have the option to submit for the structural loading test or structural calculations for approval.

(3) For handholes, precast maintenance holes and similar structures or installations that contain open bottom (without any bottom or floor slab), additional structural calculations shall be required to demonstrate that the maximum allowable pressure is not exceeded.

(4) The City Engineer may require structural loading test if the product has an unusual configuration or is manufactured of material other than steel or reinforced concrete.

(c) Materials made of iron castings shall require structural loading test, as specified in the Greenbook including the supplements, the Brown Book, and in this and other applicable standard plans. No structural calculation shall be used as substitution.

2-2.3.2 Structural Loading and Deflection Tests.

(a) Structural load testing on handholes, precast maintenance holes, covers and frames, and tree well coverings, shall be done in a standard laboratory atmosphere with the approved testing procedures. The testing laboratory shall certify that the handholes, precast maintenance holes, covers and frames, and tree well coverings tested are within the dimensions and manufacturing tolerances shown on the manufacturing drawings.

(1) All handholes, precast maintenance holes, and similar structures or installations shall be tested with the appropriate top sections, covers and frames in place and supported as they would be in the field.

(b) Covers and Frames, Tree well Coverings, Vent Grates and Frames. Unless otherwise specified, all covers and grates described in this standard plan shall be tested with the appropriate frames in place and supported. For covers without any frame or support information submitted for testing or approval, structural loading test shall be applied to the covers with two shortest sides supported.

(1) All sewer and storm drain maintenance hole covers and frames used by City of Los Angeles shall be tested to proof loads established in the related standard plans. All other maintenance hole covers and frames utilized by other utility companies shall also be tested to structural loading as specified in this standard plan.

(c) The structural loadings for the testing can be the combination of the live loads (either the vehicular traffic loading or the pedestrian traffic loading), the dead loads and applicable impact loads and wheel load surcharge. The structural loadings in the vehicular traffic and pedestrian traffic areas shall be increased by a factor of safety of 2.5 and 2.0, respectively, for the testing. For material or product that is applicable in both traffic areas, the most stringent structural loading with the designated factor of safety shall be used. When the structural loadings are applied, they shall be distributed or loaded with preload and proof load at the applicable positions as specified in this standard plan without any failure, crack, damage, permanent deformation or exceeded deflection. If multiple loading positions apply, the applicant shall furnish minimum one specimen for each loading position.

(1) Preload. The preload shall be 5% of the proof load and shall be applied for a duration of one minute $\pm$ 15 seconds, unloading for one minute $\pm$15 seconds and waiting one minute $\pm$ 15 seconds at zero load before proceeding with the test.

(2) Proof Load. Uniform proof load or equivalent concentrated load (ECL) for one minute and shall be repeated 10 times with the corresponding deflection recorded, without failure, cracks or permanent deformation. After the inspection, the specimen shall then be loaded to failure with ultimate proof load and deflection recorded if directed by the City Engineer.

(3) Uniform Proof Load. Loading determined in 2-2.2 or specified in this and other applicable standard plans.

(4) Equivalent Concentrated Proof Load. An equivalent concentrated proof load shall be equal to the uniform proof load described above and can be used instead of the uniform proof load.

i. Unless otherwise specified, the equivalent concentrated proof load applied vertically shall be applied to a 9" x 9" x 1" thick steel bearing plate over a 9" x 9" x ½" thick piece of rubber, with a Shore A Hardness of 80, in the applicable locations of the tested surfaces on the Figures as shown herein. For material or product composed of concrete or other non-concrete or non-metal materials, the size of steel bearing plate and rubber shall be 10" x 10" x 1" and 10" x 10" x ½" thick, respectively. For any handhole or similar structure or installation which has

L.A.C.E.
INDEX

a top surface area smaller than the area of 9" x 9" or 10" x 10", whichever is applicable, a steel bearing plate and rubber which have the equivalent amounts of surface areas may be used.

ii. For vertical (sidewall) loading location, the load shall be distributed over a 4 ½" x 9" x 1" thick or 5" x10" x1" thick steel bearing plate, whichever is applicable, and rubber with appropriate thickness specified herein.

iii. For lateral sidewall loading tests, the load shall be distributed and applied to the top surface of the structure or installation on the longest wall. The load shall be transmitted a flat and rigid plate, 18" x 24", at the center of the wall.

(5) During the structural loading tests, a vertical brace may be used across from the load plate if required for stability.

(6) Loading Locations. Unless otherwise specified, equivalent concentrated loads shall be applied to the locations indicated on the following figures where applicable:

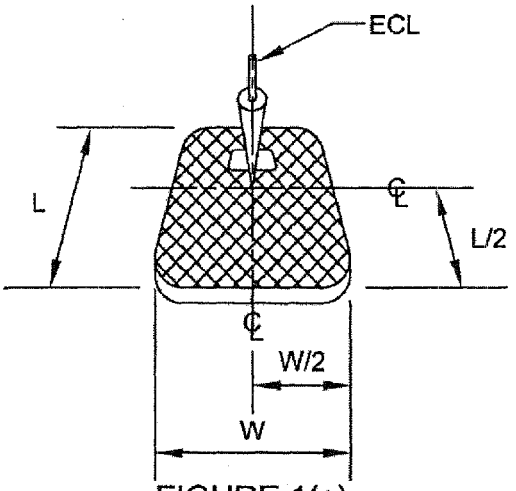

FIGURE 1(a)

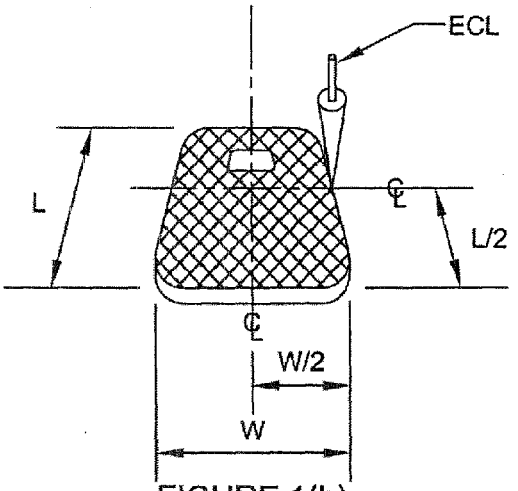

FIGURE 1(b)

L.A.C.E.
INDEX

STANDARD PLAN S-601-3	B-4608	SHEET 13 OF 50

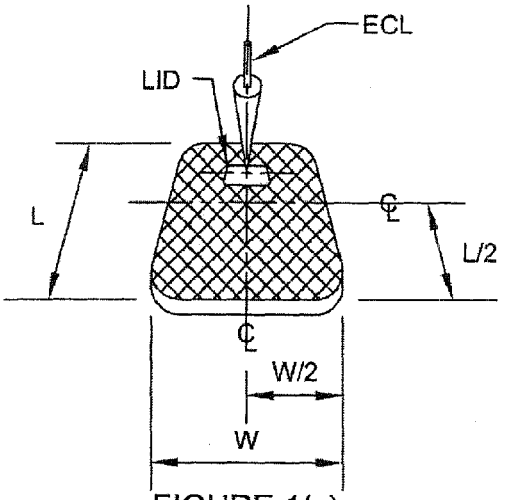

FIGURE 1(c)
(WHEN APPLICABLE)

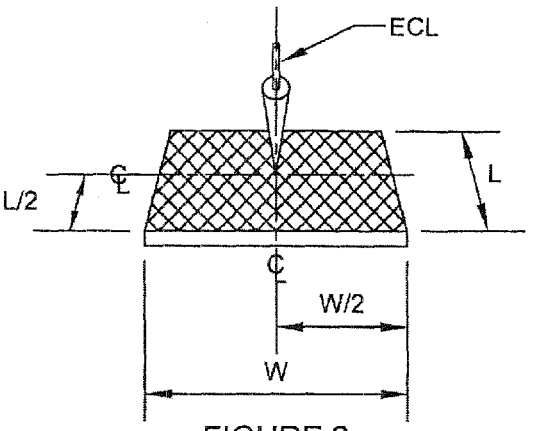

FIGURE 2

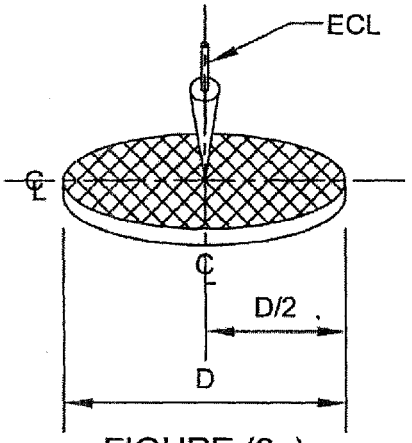

FIGURE (3a)

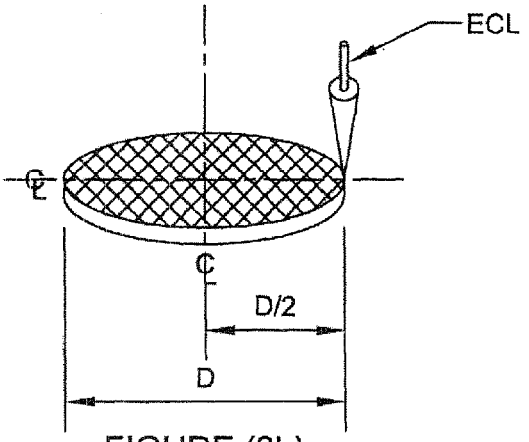

FIGURE (3b)
(WHEN APPLICABLE)

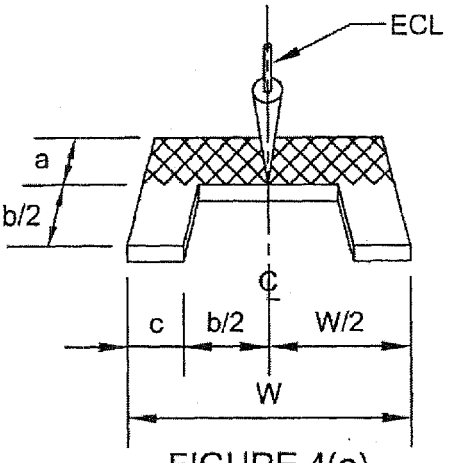

FIGURE 4(a)

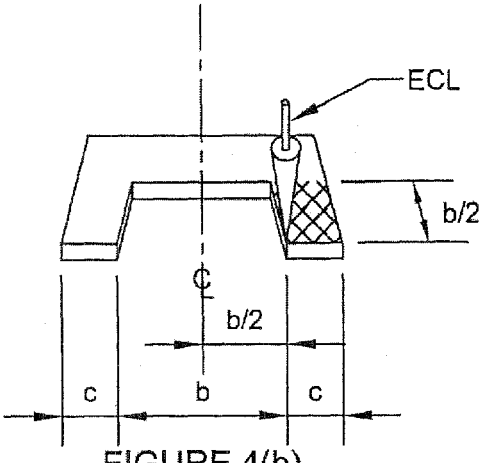

FIGURE 4(b)

L.A.C.E.
INDEX

STANDARD PLAN S-601-3	B-4608	SHEET 14 OF 50

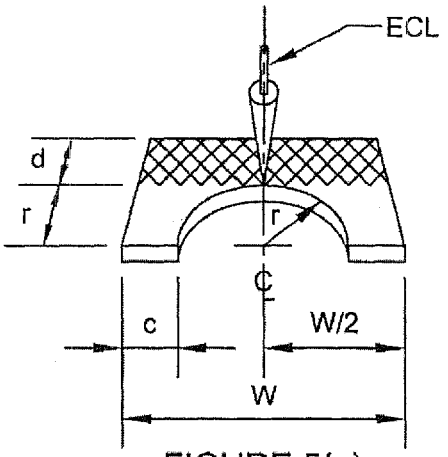

FIGURE 5(a)

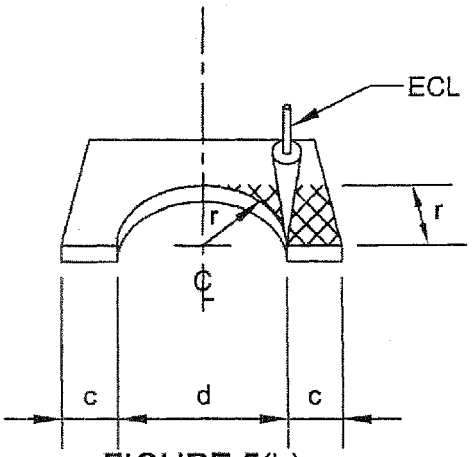

FIGURE 5(b)

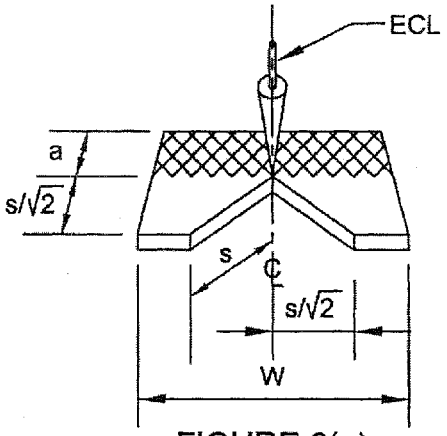

FIGURE 6(a)

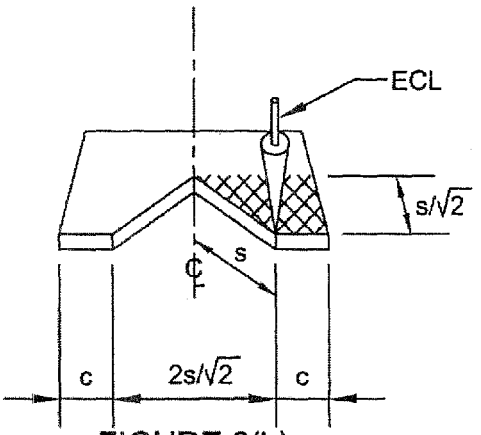

FIGURE 6(b)

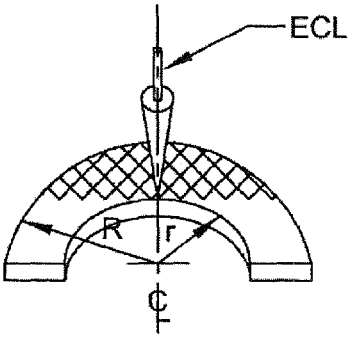

FIGURE 7(a)

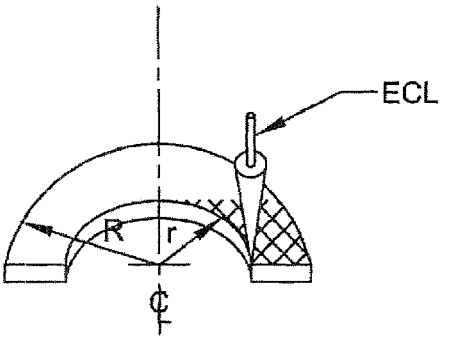

FIGURE 7(b)

L.A.C.E.
INDEX

STANDARD PLAN S-601-3	B-4608	SHEET 15 OF 50

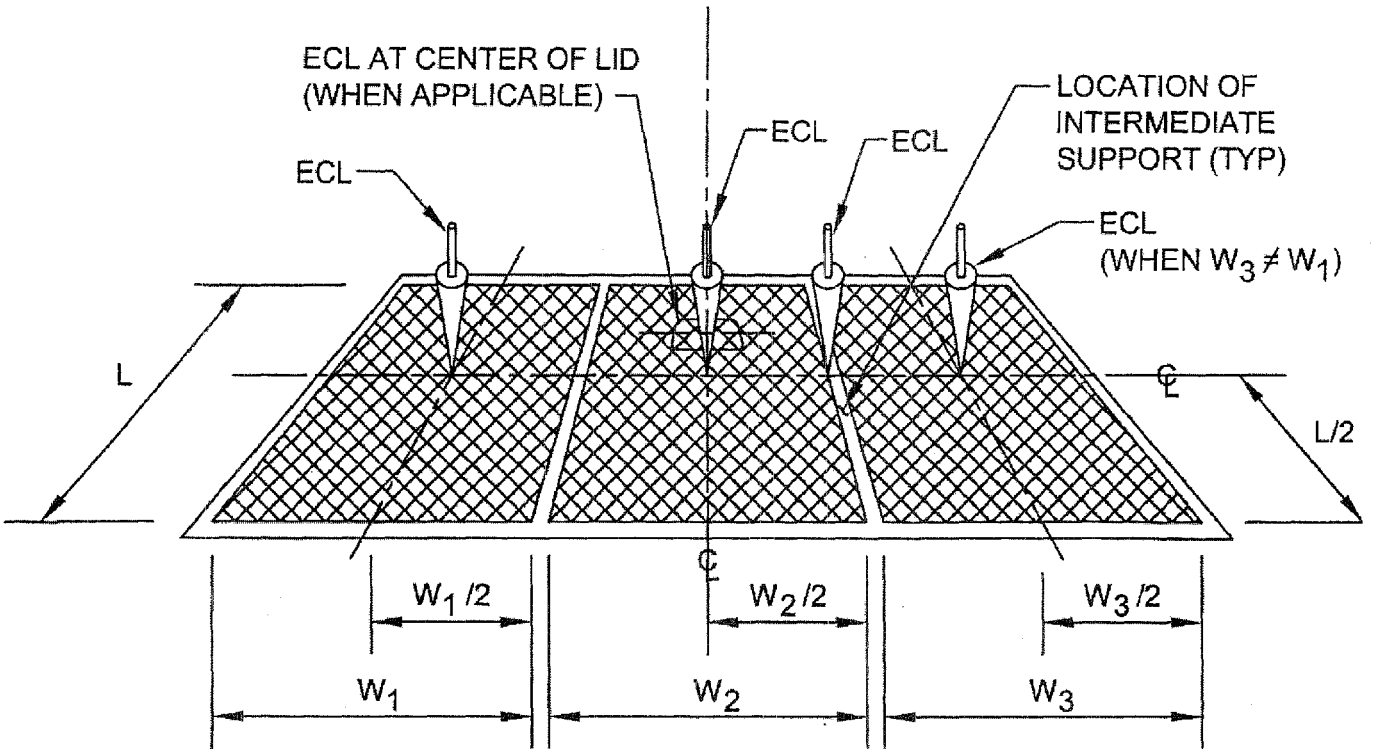

FIGURE 8

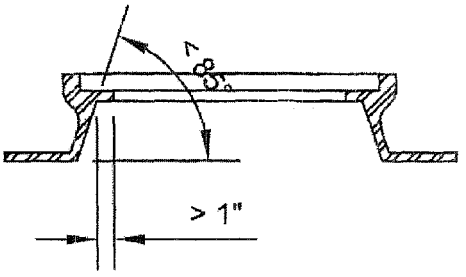

FIGURE 9

Notes for Figure 1 through Figure 9:

(1) The handholes, frames and intermediate supports may not be completely shown on all the figures. All structural loading and deflection tests shall be in accordance with 2-2.3.2.

(2) Unless otherwise specified, all lids shall be applied with structural loading and deflection tests in addition to other testing locations as indicated. If the center of the lid to the center of the cover is less than the size of the bearing plate, nine or ten inches, whichever is applicable, the structural loading and deflection tests to the center of the lid shall be exempted.

(3) For all handholes and similar structures which are equal to or less than 48 inches in

L.A.C.E.
INDEX

length, their applicable covers and frames shall be applied with additional vertical (sidewall) loading test at similar location as indicated in Figure 1(b).

(4) For multiple solid covers similar to those as shown in Figure 8, the covers, frames, access lid and the intermediate cover supports shall be applied with structural loading and deflection tests at loading locations as indicated. For pedestrian traffic areas, the loading at the intermediate cover support shall be determined by considering the pedestrian load over the tributary areas of the adjacent covers. If the size of the cover section No. 3 as shown in Figure 8 is the same as cover section No. 1, the structural loading and deflection tests on cover section No. 3 shall be exempted.

(5) If any part of interior wall of the maintenance hole cover and frame with a inclined plane and an angle from the base less than 85 degrees, or if the ring seat, where cover rests, is projected beyond the vertical plane of the frame by more than one inch as shown in Figure 9, the maintenance hole cover and frame shall be applied with additional vertical (sidewall) loading tests at similar location as indicated in Figure 3(b). There shall not be any bending stresses within the frame wall caused by the vertical live and/or dead loads through the cover. Unless otherwise specified, no resultant live and/or dead load shall be within the kern (middle 1/3) of the base of the maintenance hole frame.

(6) For materials or products which have different configurations than the figures as shown herein, the City Engineer shall determine the appropriate structural loading and deflection tests and the loading locations.

(c) Vehicular Traffic Loading-Vertical.

(1) General. All handholes, precast maintenance holes, and similar structures or installations that are constructed at grade level and within the area subject to vehicular traffic including the driveway area as specified in 2-2.1 and within the distance and the dimensions as specified in 2-2.2.1(b)(1) and 2-2.3.1(b), respectively, shall be tested for vehicular traffic loading. Handholes, precast maintenance holes, and similar structures or installations that are constructed for below-grade use shall be tested based on the most stringent structural loadings as determined in 2-2.2 and herein. All the covers and frames that are constructed over these structures conforming with the conditions as specified in 2-2.3.1(b) shall be tested for the vehicular traffic loading.

(2) Iron castings shall be manufactured, identified and tested in accordance with the testing method specified in the latest adopted edition of the Greenbook including the supplements, the Brown Book and in applicable standard plans as defined in 2-2.3.2.

(d) Vehicular Traffic Loading-Lateral.

(1) For handholes, precast maintenance holes and similar structures or installations that are constructed at grade level and within the distance and the dimensions as specified in 2-2.2.1(b)(1) and 2-2.3.1(b), respectively, and is subject to structural loading test with a minimum lateral (sidewall) structural loading of 400 psf shall be applied. For handholes, precast maintenance holes and similar structures or installations that are constructed below-grade, the most stringent lateral (sidewall) structural loadings as determined in 2-2.2 shall be used. For top surfaces of handholes, precast maintenance holes and similar structures or installations that are less than eight feet below the grade surfaces, the lateral (sidewall) structural loadings shall not be less than 400 psf.

(2) The load shall be applied parallel to the top surface of the structure centered on the sidewall with the longest dimension. The load shall be applied to a flat, steel plate one inch thick, 18 inches x 24 inches wide at the center of the wall. The steel plate shall bear against any suitable medium (such as sand) that will conform to the shape and surface angle of the structure sidewall to achieve a uniform loading.

(e) Pedestrian Traffic Loading (Vertical).

(1) General. Top section of the handholes, precast maintenance holes and similar installations, covers and frames, tree well coverings, vent grates and frames, and other similar installation that are located at grade level within the sidewalks and the parkways, excluding the driveways, subject to pedestrian traffic loading shall be tested through the preload load and proof load. Handholes, precast maintenance holes and similar installations that are constructed for below-grade use shall be tested based on the most stringent structural loadings as determined in 2-2.2 and herein.

i. Uniform Proof Load. An uniform proof load of 600 psf which is equivalent to 300 psf (per Section 56.09 of Los Angeles Municipal code) times a factor of safety of 2.0 shall be applied on the surface area of the top section of the handholes, precast maintenance holes, covers, tree well coverings, vent grates and frames and other similar installations.

ii. Equivalent Concentrated Proof Load. An equivalent concentrated proof load equal to the 600 psf uniform proof load described above may be used instead of the uniform proof load. The equivalent concentrated proof load shall be calculated based on the examples shown in this standard plan.

iii. Example 1-For handholes or precast maintenance hole covers and frames constructed at grade level, 30" wide x 48" long with pedestrian traffic loading. Using Figures 1(a), (b) and (c) of 2-2.3.2(b)(6):

Equivalent Concentrated Load (ECL) at Load Locations 1 and 3 (Figure 1(a) and (c), respectively).
Proof load=(W x L) x uniform load 600 psf=(2 ½' x 4') x 600 psf=6,000 lbs.

ECL at Load Location 2 (Figure 1 (b) - Vertical (Sidewall) location.
Proof load=(W x L) x uniform load 600 psf=(2 ½' x 4')/2 x 600 psf=3,000 lbs.

iv. Example 2-For tree well covers, 4' x 4' with 16 inches center square opening (Note: Dimensions shown for tree well covers represent two-two feet half covers with two feet in length), constructed at grade level with 600 psf pedestrian traffic loading. Using Figures 4(a) and 4(b) of 2-2.3.2(b):

ECL At Load Location 1(Figure 4(a)).
Proof load=(a x W) x 600 psf=(1.33' x 4') x 600 psf =3,200 lbs.

ECL At Load Location 2 (Figure 4(b)).
Proof load=(b/2 x c) x 600 psf=(0.67' x 1.33') x 600 psf =535 lbs.

v. Example 3-For handhole with three equal sectional steel covers with a combined dimension of 4' x 6' constructed at grade level with 600 psf pedestrian traffic loading. Using Figure 8 of 2-2.3.2(b):

ECL at Load Location 1 and 2. (ECL at Load Location 3 is exempted.)
Proof load=[(W1 x L) or (W2 x L)] x 600 psf=(2' x 4') x 600 psf=4,800 lbs.

(f) Pedestrian Traffic Loading (Lateral) for the Sidewalls of Handholes, Precast Maintenance Holes and Similar Structures or Installations.

(1) The sidewalls of the handholes, precast maintenance holes and similar structures or installations shall be subject to a uniform load equivalent to the horizontal soil pressure and/or surcharge inserted on the structure.

i. For any structure, constructed at grade level, with an overall height of 18 inches and less and without any structural calculations submitted; a minimum uniform load of 100 psf shall be applied over a sidewall of the structure which shall be uniformly supported on the opposite side. For any structure constructed below-grade, the most stringent lateral (sidewall) structural loadings as determined in 2-2.2 shall be used.

No lateral (sidewall) structural loading to below-grade structure shall be less than 100 psf.

ii. The load shall be applied in accordance with 2-2.3.2(d).

2-2.3.3 Deflection.

A deflection measuring device shall be positioned to measure the relative deflection between the testing machine table and the specimen. All deflection readings shall be recorded during the preload, and the loading and unloading of each cycle at a minimum of three increments for proof load less than 10,000 lbs, or at 5,000 lbs intervals for proof load equal to or exceeding 10,000 lbs. If the compressible medium is used for a reaction base, its deflection shall be measured and subtracted from the total to determine the deflection.

(a) Vertical Deflection.

(1) For handholes, precast maintenance holes, covers and frames, a deflection measuring device shall be positioned so as to measure only the deflection of the top portion of the specimen after preload and the end of 10 cycles of proof load.

(2) For sidewall (vertical) loading, a deflection measuring device shall be positioned to indicate the deflection of the sidewall of the specimen or the wall of maintenance hole frame, whichever is applicable.

(b) Lateral Deflection. A deflection measuring device shall be positioned to indicate lateral deflection wherever maximum deflection occurs after the preload and the end of 10 cycles of proof load.

(c) Allowable Deflection. Maximum deflection due to, vehicular or pedestrian traffic loadings, and any other proof loading specified in other standard plans shall be as follows.

(1) Vertical.

i. Handholes, Precast Maintenance Holes, and Similar Structures or Installations. For top slab or section made of any concrete with reinforcing steels or other non-metal materials, maximum deflection in any loading cycle shall not exceed 1/8 inch.

ii. Covers and Frames, Tree well Coverings. For steel or cast iron covers and frames, maximum deflection shall not exceed ½ inch. For concrete and non-metal material, deflection shall not exceed 1/8 inch.

(2) Lateral.

i. Handholes, Precast Maintenance Holes, and Similar Structures and Installations. Sidewall deflection shall not exceed 1/4 inch per foot of length of the sidewall.

(3) No permanent deflection due to vertical or lateral loading shall exceed 10% of the

deflection measured at the applicable proof load or the maximum allowable deflection value as specified herein, whichever is lesser.

L.A.C.E.
INDEX

PART 3

PHYSICAL PROPERTIES AND CONDITIONS, STRUCTURAL STRENGTHS AND PERFORMANCE CHARACTERISTICS

SECTION 1
GENERAL REQUIREMENTS

3-1.1 General.

(a) Not all materials and products listed in same categories or have similar installations are subject to same requirements. The materials and products shall conform to the physical properties and conditions, structural strengths and performance characteristics specified in this standard plan, the Greenbook and its supplements, and the referenced industry and testing standards. If there is any conflict, the most stringent requirements shall be applied.

(b) Other tests that would be conducted in an identical manner for both control and test specimens for each property sought can be considered by the City Engineer.

3-1.2 Physical Properties and Conditions.

3-1.2.1 General Standards and Requirements.

(a) All materials and products shall be new. Unless approved by the City Engineer, no product shall be made of used or scrap parts.

(b) All material and products shall have consistent dimension, thickness and color and within the allowable manufacturing tolerance specified in the submittal or referenced standards.

(c) Unless otherwise specified, all materials and products shall be designed for use through an ambient temperature range of -18 °C (0 °F) to 66 °C (150 °F) or tested in accordance with the environmental conditions specified herein.

(d) All materials and products including, but not necessarily limited to, the mortar or the grout, anchor, fastener, adhesive, caulking and/or sealant shall have resistance to corrosion, ultraviolet light, chemical exposure, growth of fungus or mildew and other environmental conditions specified herein. All cementitious materials shall be free of any efflorescence.

(e) All testing samples or specimens shall be taken from the finished materials or final products, that are produced under the same heat or lot, randomly selected and tagged by

the City Engineer from the manufacturing plant or local supplier's distribution yard.

(f) No installation shall result in any difference in level with adjacent improvement in pedestrian traffic area exceeding 1/8 inch. No installation shall result in any ponding or interruption of surface flow.

(g) Unless otherwise specified, all materials or products constructed at grade shall be tested for abrasion and slip resistance with minimum values specified. Unless otherwise directed by the City Engineer, all materials or products made of only concrete or cementitious materials with broom finish shall be exempted. The broom finish must be specified on the approved submittal and/or installation details. All non-concrete materials or products constructed shall be tested.

(1) Initial Slip Resistance Tests: Three sets of specimens, with sizes cut to fit the Gardner Abrasion apparatus for the abrasion resistance test and mechanically held together to form the specimens for the slip resistance test, shall have average static coefficient of friction not less than 0.6 when tested per ASTM C 1028 for uses in pedestrian traffic area and average dynamic coefficient of friction of 0.35 when tested per Calif Test Method No. 342 for uses in vehicular traffic area. For materials or products allowed to be installed in sloped or inclined pedestrian traffic area including the curb ramp area and other area containing slope exceeded 2%, the average static coefficient of friction shall not be less than 0.8. No more than one individual specimen shall have coefficient of friction less than the values specified above. It is noted that the sizes of the specimens to be tested for coefficient of friction, ASTM C 1028 and Calif Test Method No. 342 are different.

(2) Initial Abrasion Resistance: After Initial Slip Resistance test described above, test for Initial Abrasion Resistance with average wear (loss) not to exceed the values as specified in this Standard Plan when tested by ASTM C 418 or modified ASTM D 2486. When tested per ASTM D 2486, the specimens with sizes cut to fit the Gardner abrasion apparatus with abrasive medium (Norton metallic 40 grit sand paper) fixed to the sled and wood block with combined mass of 3.2 lbs and with reciprocating linear motion of 37$\pm$ cycles per minute over a 10 inches travel of 1,000 cycles. One cycle shall consist of one complete forward and backward motion. Unless otherwise specified, measurements shall be taken on the top surface. Forced air or other approved mean shall be used to clean the sand paper and area to be scrubbed before and during testing. Cleaning and inspection of sand paper shall be performed as frequent as necessary or no less than once every 250 cycles.

(3) Long Term Abrasion and Slip Resistance Tests: Three sets of the specimens from the Initial Abrasion test shall be used to continue for the long term abrasion and slip

resistance tests. Each specimen shall be subject to abrasive medium (Norton metallic 150 grit sand paper) for additional 3,500 cycles per modified ASTM D 2486 and slip resistance test per ASTM C 1028 for uses in pedestrian areas or Calif Test Method No. 342 for uses in vehicular traffic areas. The average slip resistance of the three acceptable specimens shall not be less than 90% of initial tested coefficient of friction. No more than one individual specimen shall have long term slip resistance less than the 90 % of the initial tested coefficient of friction specified above.

(h) No material and product shall be constructed or installed over any utility facility or driveway apron without the approval of the owner and BOE permit engineer.

(i) All works including all necessary coordination and inspections shall be in conformance with the requirements as specified in Greenbook and its supplements, Brown Book, this and other standard plans.

SECTION 2
HANDHOLES, PRECAST MAINTENANCE HOLES AND SIMILAR STRUCTURES OR INSTALLATIONS

3-2.1 Handholes, Precast Maintenance Holes and Similar Structures or Installations.

3-2.1.1 General.

(a) Handholes, precast maintenance holes, and similar structures or installations shall be commercially available and of the highest quality consistent with their intended uses.

(b) All top sections of handholes and similar structures or installations shall not be constructed exceeding the permanent street grades without the uses of approved adjustment or riser rings. The permittee must submit street grades obtained from the City street plans for approval.

(c) Handholes, precast maintenance holes and similar structures or installations shall have adequate soil bearing surface, in firm soil, to prevent settling.

(d) Handholes, precast maintenance holes and similar structures or installations shall be made in the following two major categories of materials with other metal components or attachments:

(1) Concrete with reinforcing steels.

(2) Plastic resin, fiberglass reinforced plastic (FRP), reinforced plastic mortar (RPM), polymer or vitrified polymer composite, or any combination thereof.

(e) Manufacturer identification mark, product model number and manufacturing date shall be

made on the exposed side of the opening of the handhole, precast maintenance hole and similar structure or installation. Markings can be made on metal identification tag installed on the exposed side of the opening without any interference or blockage of the maintenance hole cover and frame and/or access to structure or installation. The marking shall have lettering of ½ inch high with line width of 1/8 inch or sizes otherwise approved by the City Engineer.

3-2.2 Required Information and Submittal.

In addition to the information as required in Public Works Products Approval Procedures, the following information shall be submitted to the City Engineer before any testing or approval can be granted:

(a) For materials and products consisting of plastic resin, fiberglass material, fiberglass reinforced plastic (FRP), reinforced plastic mortar (RPM), polymer concrete or vitrified polymer composite, or any combination thereof.

(1) A description of any felt or other fabric used to manufacture the products.

(2) Woven, non-woven or punched.

(3) Properties of aggregates, chopped glass fibers or other reinforcing required.

i. The amount, location and orientation of the chopped glass fibers.

ii. The grade of the glass fibers.

iii. The type and gradation of any aggregates or sands used.

3-2.3 Testing Requirements and Procedures.

3-2.3.1 Reinforced Concrete.

(a) If directed by the City Engineer or the Inspector, sample of reinforced concrete used to manufacture the handholes, precast maintenance holes and similar structures or installations shall be tested in accordance with requirements specified in the Greenbook and its supplement, Brown Book and in this and other applicable standard plans.

3-2.3.2 Plastic Resin, Fiberglass, Fiberglass Reinforced Plastic (FRP), Reinforced Plastic Mortar (RPM), Polymer Concrete or Vitrified Polymer Composite.

(a) Tests of plastic resin/fiberglass, fiberglass reinforced plastic (FRP), reinforced plastic mortar (RPM), vitrified polymer composite materials used in the manufacture of the handholes, precast maintenance holes, and similar structures or installations shall be performed on specimens taken from the finished materials or final products. The permittee shall provide adequate number of specimens required for the weight change test, the tensile strength test or the flexural strength test.

(b) The size of the weight change specimens shall be ½ inch x 1 inch x 3 inches. The size of the tensile strength specimens shall be "Dogbones" 1 inch (+1/32 inch, -1/16 inch) x 3 inches (+1/32 inch, -1/16 inch) x ¼ inch (+/- 1/32 inch) per ASTM D 638. The size of the flexural testing samples shall be ¼ inch x ½ inch x 6 inches.

(c) Control Specimens. Six specimens shall be cut from the finished product for testing. The specimens shall have the geometry specified herein and shall be designated as control specimens. The methods of testing for tensile or flexural strength shall be at the option of the manufacturer with the provision that the tests shall be conducted in an identical manner for both control and test specimens for each property sought. The control specimens shall be tested for ultimate flexural or tensile strength. The load versus deflection readings shall be taken and the values of load and deflection, at failure, for each specimen shall be averaged to establish the control value.

(d) Accelerated Service Conditions. Three specimens shall be taken from the finished materials or final products for testing under simulated accelerated service conditions. The specimens shall have the geometry specified herein. The specimens shall be weighed and measured for length, width, and thickness.

(1) Unless otherwise specified, the specimens, prior to any physical testing, shall be subject to accelerated service exposures and conditionings in accordance with ASTM D 756, Procedure E.

(2) After the exposure cycle has been completed, the test specimens shall be weighed, measured and visually examined for changes. The specimens shall then be tested for ultimate flexural or tensile strength under the identical conditions used for the control specimens.

(3) The average of the strength values for the test specimens shall be determined shall conform to the following:

i. No more than one individual specimen shall have less than retention of 75% of the control specimen values for ultimate flexural or tensile strength. The average retention of the three specimens shall not be less than 75% of the control specimen values.

ii. No more than one individual specimen shall have more than 2% change in weight or any dimension. The average change in weight or any dimension of the three specimens shall not be more than 2%.

iii. No specimens shall have cracking, delamination, crazing, checking, blistering, or surface pitting.

iv. Changes in color of specimens will be permitted only if the change does not

L.A.C.E. INDEX

indicate degradation of the material, and the change will not in the opinion of the City Engineer be detrimental to the overall appearance of the product.

(e) Chemical Resistance. Twenty-seven specimens shall be cut from the finished materials or final products and prepared in accordance with procedures described herein. Each specimen shall be weighed and measured as in 3-2.3.2.

(1) Three of the specimens shall be exposed to each of the chemical reagents listed below. The specimens shall be exposed to the chemicals in accordance with ASTM D 543, Immersion Test, Practice A, Procedures 1 and 2 with both conducted at room temperature, using standard laboratory atmosphere for 7 days.

CHEMICAL SOLUTIONS	**CONCENTRATION**
Sodium Chloride	5%
Sulfuric Acid	0.1 N
Sodium Carbonate	0.1 N
Sodium Sulfate	0.1 N
Hydrochloric Acid	0.2 N
Sodium Hydroxide	0.1 N
Acetic Acid	5%
Kerosene	Per ASTM D 543
Transformer Oil	Per ASTM D 543

(2) After the exposure cycle has been completed, each specimen shall be dried, weighed, measured, and tested for ultimate flexural or tensile strength in accordance with 3-2.3.2.

(3) The values of load and deflection at failure for each of the three specimens from each reagent exposure shall be recorded and averaged to establish the test values. Each specimen shall be visually examined for changes in appearance and conform to the following acceptance criteria:

i. Average retention of the control specimen values for ultimate flexural or tensile strength per procedures as described in 3-2.3.2(d)(3)i.

ii. Average change of weight or dimension per procedures as described in 3-2.3.2(d)(3)ii.

iii. No stain, etched mark, acid burn shall be present.

iv. No other defect or change in color as described in 3-2.3.2(d)(3)iii and iv.

L.A.C.E. INDEX

(4) All chemical solutions shall be made, mixed, stirred and maintained in accordance with the testing standards. (If requested by the City Engineer, obtain samples of each

solution to verify for the required concentration at the 1st day and the 7th day of the testing. If allowed by the City Engineer, no sample shall have concentration deviating more than 2.5% from the specified amount. Copies of the testing results shall be a part of the testing report.)

(f) Simulated Sunlight Exposure. If the material or product is used below grade and no part will be exposed to sunlight after installation and the material or the product will not be produced more than two months prior to its use and they will be properly stored and protected from any exposure of sunlight prior to start of construction by the manufacturer, the test may be exempted by the City Engineer.

(1) Three specimens cut from the finished materials or final products shall be prepared, weighed and measured in accordance with 3-2.3.2. The specimens shall be exposed under a fluorescent lamp in accordance with ASTM G 154, Cycle No. 1 of Appendix X2, which will be operating at 340 nM wavelength to simulate direct solar UV radiation for a period of 2,000 hours. After exposure, the specimens shall be measured, weighed, and visually examined for changes, and tested for ultimate flexural or tensile strength in accordance with 3-2.3.2.

(2) The values of load and deflection at failure for each of the three specimens of each set from the exposure shall be recorded and averaged to establish the test value. Each specimen shall be visually examined for changes in appearance. The specimens shall conform to the following acceptance criteria:

i. Average retention values for ultimate flexural or tensile strength per procedures as described in 3-2.3.2(d)(3)i.

ii. Average change of weight or dimension per procedures as described in 3-2.3.2(d)(3)ii.

iii. No other defect or change in color as described in 3-2.3.2(d)(3)iii and iv.

(g) Water Absorption.

(1) Three specimens shall be cut in accordance with 3-2.3.2 and weighed and measured. The specimens shall be exposed to water environments in accordances with ASTM D 570, Sections 6, 7.1 and 7.5.

(2) After the exposures are complete, the specimens shall be weighed, measured, and visually examined for changes and tested for ultimate flexural or tensile strength in accordance with 3-2.3.2 and conform to the following acceptance criteria:

i. Average retention values for ultimate flexural or tensile strength per procedures as described in 3-2.3.2(d)(3)i.

ii. Average change of weight or dimension per procedures as described in 3-

L.A.C.E. INDEX

2.3.2(d)(3)ii.

iii. No other defect or change in color as described in 3-2.3.2(d)(3)iii and iv.

(h) Flammability. Three specimens shall be tested per ASTM D 635 and have the following values:

(1) Flammability tests shall be conducted on specimens 1" wide x 4" long x finished product thickness. Each specimen shall be held in a horizontal position, be ignited on one end and the rate of burning along the length shall not be less than 0.3 inch per minute for each 0.1 inch of thickness.

3-2.3.3 Performance and Durability Test.

The handholes, precast maintenance holes, and similar structures or installations shall be tested in accordance with requirements specified below.

(a) Structural Loading and Deflection Test, if applicable, in accordance with 2-2.3.

(b) Impact Load Test. Any point on the top portions of the handholes, precast maintenance holes, and similar structures or installations, and the covers and frames shall withstand an impact administered with a weight having a "C" tup when tested with ASTM D 2444 without puncturing, cracking, delaminating or splitting. For covers and frames, the test shall be conducted with the covers and frames resting on a flat, rigid surface, such as concrete or an one inch thick steel plate.

(1) For installation used for electrical application or installation used for other usage but within the vehicular traffic area, the impact load shall be equal to 70 ft-lbs. Unless otherwise specified, for installation used for non-electrical application and within pedestrian traffic area, the impact load shall be equal to 45 ft-lbs.

(2) For handhole, precast maintenance hole, and similar structure or other installation that contain any wall dimension greater than 48 inches, the impact load test can be performed by the approved independent testing laboratory at the manufacturing plant or distribution yard if permitted by the City Engineer.

(c) Long Term Abrasion and Slip Resistance Test in accordance with 3-1.2.1(g). All materials or products made of reinforced concrete or cementitious materials and with broom finishing shall be exempted. The average wear (loss) of the Initial Abrasion Test shall not exceed 0.92 in^3/7.75 in^2 for non-concrete products and 0.46 in^3/7.75 in^2 for metal products when tested per ASTM C 418, and not to exceed 0.05 inch for non-concrete materials and 0.03 inch for metal materials when tested per ASTM D 2486. The average slip resistance shall not be less than 90% of the initial tested coefficient of friction.

L.A.C.E.
INDEX

SECTION 3
COVERS AND FRAMES AND SIMILAR INSTALLATIONS

3-3.1 Covers and Frames and Similar Installations.

3-3.1.1 General.

Covers shall be solid and contain no slot or opening without any approved protective lid. Covers can be either round, square or rectangular provided with slip resistant surfaces and comply with the American's with Disabilities Act (ADA) requirements. Unless otherwise approved by the City Engineer, covers shall be placed on the handholes, precast maintenance holes and similar structures or installations and solidly supported on all sides or installed in concrete pavement or over an approved concrete footing. If a frame is required to support the cover, it shall be tested with the cover in place and supported as it will be in use.

(a) Covers and frames or other supports may be manufactured from steel, cast iron, reinforced concrete, aluminum, plastic resin or fiberglass, FRP, RPM, vitrified polymer composite. If covers, frames or supports are made of dissimilar materials, approved protective coatings shall be in all contact surface areas.

(b) All steel covers and frames shall be hot-dip galvanized. All other metal covers and frames shall have approved asphaltic paint, coal tar epoxy or non-corrosive coating in accordance with Greenbook and its supplements, Brown Book or applicable standard plans before testing and fabrication inspection. All bearing surfaces of the covers and frames shall be machined and the covers shall seat firmly into the frame without rocking. All metal covers shall have slip resistance texture treatment if necessary to comply with the slip resistance requirements described herein. All non-concrete or non-metal material or product shall be in grayish color.

(c) Covers weighing less than 200 lbs attached to the handholes, precast maintenance holes, and similar structures or installations that have inside clear height dimension of 18 inches or more shall be provided with a vandal-proof fastening devices. The fastening devices shall require a commercially available tool to open and remove the cover. The fastening devices shall be made of a non-corrosive material. When applicable, such devices shall have a minimum torque strength of 30 ft-lbs and a pullout strength of 750 lbs.

(d) The perimeters of the covers shall be flush with the tops of the supporting frames or adjacent pavements. All covers shall not contain any crown or top surfaces exceeding 1/8 inch above the supporting frames or adjacent pavements.

(e) (1) All metal covers, except the maintenance hole covers, shall have owner and manufacturer identification stamped or placed over a tag that is made of similar metal

and finish surface and welded at the center of the cover. The surface area or the metal tag shall be within two inches wide with text size of one inch for the owner identification and text size of 1/2 inch for the manufacturer identification. Additional metal tag, of reduced size if approved by the City Engineer, with the manufacturer identification shall be welded or placed at the inside face of the support frame in accordance with the method approved by the City Engineer.

(2) All cast iron covers shall be cast with the letters for the type of covers, and the owner's identification in accordance with the instruction approved by the City Engineer. The letters shall be 2 ½ inches high with ½ inch line width, and placed in the center of the cover. All letters shall be flush with the finished surface of the cover. No area of the finished surface shall have any groove or depression deeper than 3/16 inch and/or wider than ½ inch.

i. Foundry identifying mark, heat number and manufacturing date shall be cast on the bottom of the cover and on the inside of the frame. Additional foundry identifying mark with text of ½ inch high shall be cast on the top of the frame or at the location on top of the cover approved by the City Engineer.

ii. For imported covers and frames and whenever is applicable, the owner's identification and the marking of the country of origin shall have letters in compliance sizes in accordance with Sec.134.46 of Title 19-Custom Duties of the Code of Federal Regulations. All markings shall have text of 1 3/16 inches high and 3/16 inch wide on the cover. Provide additional manufacturer identification with letters ½ in high with line width of 1/8 inch on the upper portion of the frame which remains exposed.

(i) During fabrication and or installation, samples of all concrete and metal covers shall be taken and tested with the properties conforming to the requirements indicated in the Greenbook and its supplement, Brown Book, and applicable standard plans.

(j) Covers and frames with materials that are made of plastic resin, fiberglass, FRP, RPM, polymer concrete or vitrified polymer composite shall not be used in vehicular traffic area.

3-3.1.2 Performance and Durability Test. Unless otherwise specified, all covers and frames shall be tested in accordance with the requirements specified below.

(a) Structural loading and deflection test, if applicable, in accordance with 2-2.3.

(b) Impact load test in accordance with 3-2.3.3.

L.A.C.E. INDEX

(c) Long term abrasion and slip resistance test in accordance with 3-2.3.3. All materials or products made of only concrete or cementitious materials and with broom finish shall be exempted unless it is required by the City Engineer. All non-concrete materials or

products shall be tested.

SECTION 4
TEMPORARY TRENCH PLATES, TREE WELL COVERINGS, VENT GRATES AND SIMILAR INSTALLATIONS

3-4.1 Temporary Trench Plates.

(a) General. Whenever trenches and excavations within City's public right-of-way cannot be completely backfilled or resurfaced within the same work day, they shall be bridged with temporary trench plates made of steel to permit an unobstructed flow of vehicular and pedestrian traffic. The permittee shall provide, install and maintain the temporary trench plates.

(1) The temporary trench plates shall be secured against movement by using holding devices such as adjustable cleats, angles, bolts, tack welding or other devices.

(2) The temporary trench plates shall be installed to operate with a minimum of noise.

(3) The temporary trench plates shall be extended minimum one foot beyond the edges of the trench.

(4) When the temporary trench plates are removed, the dowel holes in the pavement shall be backfilled with either fine graded asphalt concrete mix, concrete slurry or an equivalent material approved by the City Engineer. The contractor shall be responsible for maintenance of the temporary trench plates and the asphalt concrete ramps.

(5) The contractor shall be responsible for maintenance of the temporary trench plates and the asphalt concrete ramps.

(6) The temporary trench bridge shall be installed in accordance with the following methods and details:

i. Method 1. For speeds more than 45 mph, the pavement shall be cold planed to a depth equal to the thickness of the trench plate and to a width and length equal to the dimensions of the trench plate.

ii. Method 2. For speeds less than 45 mph, the approach plate and ending plate (if longitudinal placement) shall be attached to the roadway by a minimum of two dowels pre-drilled into the corners of the plate and drilled two inches into the pavement. Subsequent plates may be butted to each other. (The permittee has the option of installing temporary trench plates using Method 1 for speeds less than 45

mph.)

(7) The trench shall be adequately shored to support the temporary trench plates, vehicular and/or pedestrian loads. Temporary paving materials shall be used to feather the edges of the temporary trench plates to minimize wheel impacts and comply with ADA requirements. Temporary paving material placed in the roadway shall be placed with four inch run for each one inch thickness of temporary trench plate if the plate is installed per Method 2. Fine graded temporary paving material placed in the pedestrian areas including the crosswalks shall be placed and compacted to form ramps with a maximum slope of 8.50% or a 12 inch run for each one inch thickness of trench plate, and to comply with ADA requirements if the trench plate is installed per Method 2.

(8) Advanced traffic warning signs are required when temporary trench plates are used in the traveled way. The signs shall be type with letters "Steel Plates Ahead" and shall be placed in conformance with the latest edition of the "WATCH" adopted by the City.

(b) The temporary trench plates shall have the following:

(1) One inch thick for trenches up to three feet span and 1 1/4 inches thick for up to a four feet span. For spans greater than four feet, a structural design by a registered Civil or Structural Engineer shall be submitted and approved in accordance with Greenbook Section 2-5.3 and submittal procedures specified in this standard plan.

(2) Each temporary trench plate shall have a leveled surface without deformation and an approved non-skid surface for the vehicular or pedestrian traffic. The surface shall have dynamic coefficient of friction a 0.35 for vehicular traffic when tested per Calif Test No. 342, and the static coefficient of friction of 0.6 for pedestrian traffic when tested per ASTM C 1028. For temporary trench plates serving for both traffic, they shall be tested and conform to both requirements.

(3) Temporary trench plates shall be made of ASTM A 36 steel. Temporary trench plates and non-skid surfaces shall have a minimum abrasion resistance and coefficient of friction as specified on 3-1.2.1(g).

(4) Proper identification of the type of coefficient of friction, the manufacturing date and the name of non-skid surface fabricator shall be provided on the surfaces of the temporary trench plates.

(5) The inspector may determine the trueness of the temporary trench plate by using a straight edge and will reject any plate that is permanently deflected. When requested by the Inspector, the temporary trench plate and the non-skid surface shall be tested for the coefficient of friction.

3-4.2 Tree Well Coverings and Vent Grates.

(a) General. Tree well coverings and vent grates within the pedestrian traffic area shall comply with the ADA requirements. Opening shall not be greater than ½ inch in the direction of travel.

(1) Vent grates shall be bicycle safe and shall not have any slot or opening greater than ½ inch wide.

(2) Tree well coverings shall be made from cast iron, steel, and reinforced concrete with dimensions conforming to current standard plans. Non-standard sized coverings and unreinforced concrete coverings shall not be allowed.

(3) Vent grates shall be made from cast iron, steel or aluminum.

(4) Tree well coverings and vent grates, utilizing any intermediate or non-composite support system for structural purposes shall have the support system permanently attached in such a manner as to prevent removal or disassembly.

3-4.2.1 Performance and Durability Test.

In addition to the physical property tests as required by the Greenbook and its supplements, and the Brown Book, all covers and frames shall be tested in accordance with requirements specified below.

(a) Structural loading and deflection test, if applicable, in accordance with 2-2.3.

(b) Impact load test in accordance with 3-2.3.3.

(c) Long term abrasion and slip resistance test in accordance with 3-1.2.1(g). All covers or grates made of only reinforced concrete or cementitious materials with broom finish shall be exempted unless it is required by the City Engineer. All tree well coverings and vent grates made of metal materials with ½ inch wide bicycle proof slot openings shall be exempted from the slip resistance test. All other concrete materials or products without broom finish, metal and non-concrete materials or products as described in 3-2.1.1(d)(2) shall be tested in accordance with 3-1.2.1(g).

L.A.C.E.
INDEX

SECTION 5
DETECTABLE WARNING SURFACE

3-5.1 General

(a) The material and testing requirements specified herein are for detectable warning surface used for exterior and pedestrian traffic applications. They are not considered for vehicular traffic areas.

(1) All installers shall be manufacturer's certified or authorized installers. Certification shall be accomplished by participating in onsite training provided by the manufacturer or its representative. Proof of certification or authorization shall be submitted as part of the submittal prior to the start of any installation work.

(b) The truncated domes and the non-slip surfaces shall be made of homogeneous material. Any use of used or scrap part of the detectable warning surface from other projects is not allowed. Any repair method or repair material of the detectable warning surface shall not be allowed unless they are tested and approved by the City Engineer. If considered by the City Engineer, the repair method and materials shall be separately submitted and tested.

(c) The detectable warning surface shall have consistent dimension, thickness and color as specified in this standard plan. The surface shall have uniform flatness without warping or sagging. (For area requiring multiple sections of detectable warning surface, the sections shall be equally sized and spaced.) All detectable warning surface shall be inspected for defects, damage, cracks, scratches, warping, etc. prior to installation.

(d) For new concrete ramp, cast in place type of detectable warning surface shall be used. All detectable warning surface shall be constructed on approved mortar or adhesive material solidly supported over a minimum four inch thick concrete slab if cast in place detectable warning surface is used or over a minimum three inch thick concrete slab if surface-mounted type of detectable warning surface is used. No cavity or void shall be allowed within the installation.

(e) The detectable warning surface shall be constructed in dimensions over the curb ramps as shown in S-442, latest edition. No detectable warning surface shall exceed the overall surface dimensions by $\pm 1/2$ inch. Additional area of detectable warning surface beyond the limits allowed under S-442 and this standard plan which may reduce the negotiability and the safety of the users shall not be allowed. The detectable warning surface shall have the radius where required.

(1) The detectable warning surface shall also be installed over the curb ramps located in the center medians where required in accordance with approved details.

(f) No detectable warning surface shall be installed over non-standard curb ramps. All non-standard curb ramps shall be removed and reconstructed prior to the installation of the detectable warning surface. No detectable warning surface shall be constructed over any maintenance hole and cover.

(g) All material including the mortar and grout and any adhesive system used in the installation shall be free of efflorescence and have resistance to ultraviolet light, chemical exposure, corrosion, growth of fungus or mildew and other environmental conditions specified herein.

(h) Any cement mortar or grout used as part of the installation shall be in conformance with the Greenbook and its supplements and the Brown Book, and shall be fungus and mildew resistant. Cement mortar bed with latex admixture used as thin set method and the uses of other adhesive or sealant materials shall be submitted for review and testing prior to any installation.

(i) The width of the mortar joint to the adjacent concrete pavement shall be minimum 1/8 inch wide and not to exceed ¼ inch. The width of the joint to the abutting detectable warning surface shall not exceed 1/8 inch.

(j) No installation of any adjoining detectable warning surfaces shall result in any difference in level of 1/16 inch or the spacing of the adjoining truncated domes to exceed the maximum spacing as specified herein. No installation of the cast-in-placed detectable warning surface shall result in any difference in level with adjacent slab or pavement exceeding 1/8 inch.

(k) Detectable warning surface shall not be installed over expansion or control joint without the approval of the City Engineer.

(l) Any fastener used as part of the installation shall be made of corrosion resistant material and shall be recessed within the truncated dome or the detectable warning surface. No fastener or any part thereof shall be used as a substitute of the truncated dome or be completely exposed or extended above any truncated dome or other portion of the surface that would reduce the durability and slip resistance of the surface, and the detectability and effective use of wheelchair or cane/crutch.

(m) Cutting of the detectable warning surface shall be avoided. If cutting is considered as part of installation method, the cutting method and patching procedures shall be submitted for review and approval by the City Engineer. No detectable warning surface less than 6 inches in any dimension or partially cut truncated dome shall be allowed. No detectable warning surface with two adjoining cut edges shall be allowed for any installation without the approval of City Engineer. Cut edge shall be sealed or patched in

accordance with the approved manufacturer's recommended procedures. Samples of detectable warning surface with cut edges shall be used for testing specified in this standard plan.

(n) All detectable warning surface shall have manufacturer name or identification and manufacturing date with maximum text size of 1/2 inch but not less than ¼ inch on minimum two sides or approved locations of the panel.

(o) The contractor shall provide product and labor warranty for the detectable warning surface against any defect, cracking, deformation, discoloration, corrosion and movement for minimum five years or duration as specified on the permit by the BOE permit engineer, whichever is most stringent.

(p) (1) The nominal thickness of the surface-mounted type of detectable warning surface shall be 1/8 inch exclusive of the height of the truncated domes. The perimeter edge shall be tapered with bevel lip in accordance with Standard Plan No. S-442. Any detectable warning surface greater than 1/8 inch thick, but not to exceed ¼ inch, shall have bevel lip and edge treatment not exceeding 1/8 inch high. The width of perimeter edges to the centers of the truncated domes shall not exceed 1.65 inches.

(2) The cast-in-place type of detectable warning surface including the embedment flange or tile rib shall not exceed 1 3/8 inches thick and no bevel or chamfer shall be allowed. From edges of the detectable warning surface to the centers of the truncated domes shall not exceed 1.65 inches.

(q) The truncated domes of the detectable warning surface shall have in-line pattern and shall be consistently aligned in the horizontal and the vertical directions. The truncated domes shall have consistent spacing and height. The truncated domes shall be completely formed domes and measured 0.20 inch in height from top of surface, 0.45 inch diameter at the top of the dome and 0.90 inch diameter at the base. The top and base of the dome dimensions shall form a 50% ratio. The truncated domes shall be spaced 1.65 inches from center to center horizontally and 2.35 inches from center to center diagonally. For areas where adjoining detectable warning surface are required, the spacing between the first rows of the truncated domes of any two adjoining detectable warning surface shall not exceed 2.35 inches. No truncated dome shall be made completely of metal fastener or other substituted material as indicated in 3-5.1(l). (Truncated domes in staggered pattern used for positioning surface shall not be used in the curb ramp.)

(r) The truncated domes, tile or panel surfaces shall not consist of any raised points or micro-textures greater than 0.045 inch in height. The height of truncated dome shall be measured from the top of surface, without any raised points or micro-textures, to the top of the truncated dome and not to the raised points or micro-textures of the dome. Any

use of the raised points or micro-textures shall not reduce the 0.20 inch height requirement for the truncated domes.

(s) The detectable warning surface shall also have physical properties and performance values from testing as specified herein.

(1) The detectable warning surface completely constructed of the concrete or cementitious materials without the use of any resin or plastic shall have minimum properties and performance values as indicated in Greenbook. (Truncated domes produced by molding or stamping the top surface of freshly poured or precasted concrete or surfaced applied products are not an approved installation and are not permitted.)

The concrete or cementitious materials shall also have the following:

i. Hardness: Moh's Hardness Scale of 6 or higher when tested per Mohs Scale Testing.

ii. Water Absorption: Maximum 0.30% when tested per ASTM D 570, C 97 or equivalent.

(2) Any part of the detectable warning surface that is manufactured with glass, carbon, plastic or polymer resin, fiberglass, fiberglass reinforced plastic (FRP), reinforced plastic mortar (RPM), vitrified polymer composite, or any combination thereof shall have the following properties and performance values:

Polymer Concrete

i. Ultimate Compressive Strength: Minimum 7,500 psi when tested per ASTM C 39, D 695 or approved equivalent.

ii. Ultimate Tensile Strength: Minimum 1,700 psi when tested per ASTM C 496, D 638 or approved equivalent.

iii. Ultimate Flexural Strength: Minimum 2,400 psi when tested per ASTM C 947, D 790 or approved equivalent.

iv. Hardness: Shore (Durometer) Test, minimum 75 Shore D Hardness when tested per ASTM D 2240.

v. Water Absorption: Maximum 0.50% when tested per ASTM D 570, C 97 or approved equivalent.

vi. Flammability: As described in 3-2.3.2(h)(1).

Vitrified Polymre Composite (with or without reinforced fiber or woven roving).

i. Ultimate Compressive Strength: Minimum 18,000 psi when tested by ASTM D 695.

L.A.C.E. INDEX

ii. Ultimate Tensile Strength: Minimum 12,000 psi when tested per ASTM D 638.

iii. Ultimate Flexural Strength: Minimum 24,000 psi when tested per ASTM D 790.

iv. Hardness: Shore (Durometer) Test, minimum 75 Shore D when tested per ASTM D 2240.

v. Water Absorption: Maximum 0.10% when tested per ASTM D 570.

vi. Flammability: As described in 3-2.3.2(h)(1).

(t) Color: Surface shall have Federal Color No. 33538 in accordance with Federal Standard No. 595A/595B and shall contrast with adjacent concrete surface, either light–on-dark or dark-on-light, with contrast value greater than 70% in accordance with Appendix Note A4.29.2 of the Accessibility Guidelines For Buildings and Facilities (ADAAG) developed by United States Access Board. Color shall be integral with the detectable warning surface and shall not be surface applied. Paint or surface applied coating shall not be used. No loss of color after abrasion resistance test or environmental conditioning as indicated in this standard plan shall be allowed.

(u) Efflorsecence Test: No efflorescence when tested per modified ASTM C 67.

(v) Fungal and Mold Resistance: No growth or with the Rating of 10 when tested per ASTM D 3274.

(w) Chemical Stain Resistance: No change of weight and dimension. No appearance of discoloration, stain, deformation or etch mark when tested for Standard Dirt, Bleach, Gums, Inks (and graffiti), 5% Urea, Turpentine and 1% Soap Solution by ASTM D 650 or C 1378 for 24 hours.

(x) All detectable warning surface shall be inspected for defect, damage, crack, scratch and warping prior to installation. All detectable warning surfaces with the deficiencies shall be removed from the job site immediately.

3-5.2 Basic Physical Property Tests.

(a) Unless otherwise specified, all detectable warning surface shall be tested for the property values as specified in 3-5.1(s) through (w) in accordance with the applicable material standards specified. The permittee shall coordinate with the testing laboratory for the numbers and the sizes of specimens and/or coupons for the testing.

(b) After the detectable warning surface has been satisfactorily completed the tests listed above and has met the property requirements, all detectable warning surface shall also be tested for the following values in accordance with 3-1.2.1(g). (Unless otherwise specified, all specimens shall be minimum 12" x 12" detectable warning surface embedded in concrete pavement with applicable thickness as specified in 3-5.1(d), approved cement bed or adhesive system and perimeter sealing.) For cast in place type of

L.A.C.E. INDEX

detectable warning surface and if applicable, one embedment flange (also referred as "tile rib") shall be embedded in each specimen. If any fastener or anchoring system that has no structural value is used in the material or product, the number of the fastener or anchoring system used in each specimen shall be proportioned to the total number of the fastener or anchoring system used over the actual material or product surface area, but not to exceed one.

(1) Initial Slip Resistance Tests in accordance with 3-1.2.1(g). Three 12" x 12" (or specimens, with sizes cut to fit the Gardner abrasion apparatus for the abrasion resistance test, mechanically held together to form 12" x 12" specimens) shall have minimum static coefficient of friction of 0.8 for ramp and 0.6 for level surface when tested per ASTM C1028. (Unless the manufacturers can distinguish their products for ramp or level surface application, all detectable warning surface shall be tested for the ramp application with the most stringent value.)

(2) Initial Abrasion Resistance: After Initial Slip Resistance test described above, test for Initial Abrasion Resistance with average wear (loss) not to exceed 0.05 inch when tested per modified ASTM D 2486. Height measurements shall be taken on each of the minimum six dome locations from the top surface to the top of truncated dome, excluding the raised points or micro-textures as discussed in 3-5.1(r), before and after the Initial Abrasion Resistance test. The wear (loss) of each truncated dome shall be computed by subtracting the final measurement from the initial measurement.

(3) Long Term Abrasion and Slip Resistance Tests: Three sets of specimens from the Initial abrasion test shall be used to continue for the long term abrasion and slip resistance tests. The average slip resistance shall not be less than 90% of initial tested coefficient of friction, and not less than 0.5.

3-5.3 Performance and Durability Tests.

(a) In addition to the physical properties listed above, the detectable warning surface shall be subject to the following performance and durability testing after exposed to the environmental conditioning specified below:

L.A.C.E. INDEX

(1) Environmental Conditioning.

i. Chemical Exposure Test per ASTM D 543 and procedures as described in 3-2.3.2(e)(4) with exposures for the duration of seven days. (Note: If detectable warning surface is completely made of concrete or cementitious materials and with cementitious mortar bed and grout and without any use of resin or plastic, and no adhesive or perimeter edge treatment is used during installation; the

Chemical Exposure Test shall not apply.)

CHEMICAL SOLUTIONS	CONCENTRATION
Sodium Chloride	5%
Sulfuric Acid	0.1 N
Sodium Sulfate	0.1 N
Hydrochloric Acid	0.2 N
Sodium Hydroxide	0.1 N
Ammonium Hydroxide	10%
Acetic Acid	5%
Kerosene	Per ASTM D 543
Diesel Oil	Per ASTM D 543

ii. Accelerated Weathering Test per ASTM G 151 with exposure period of 2,000 hours of xenon arc ultraviolet light and water spray. The specimens shall not show any deterioration, fading, chalking, color change or cracking. (If the detectable warning surface is completely made of concrete or cementitious materials with cementitious mortar bed and grout and without any use of resin or plastic, and without any use of adhesive or no perimeter edge treatment during installation, the Accelerated Weathering test shall not apply.)

iii. Elevated Temperature Test with specimens to be conditioned at 80 °C (176 °F) in accordance with procedures as specified in ASTM D 756, Procedure E. Specimens shall not show any deterioration, fading, chalking, color change or cracking. Specimens shall be allowed to cool to room temperature before next cycle of testing. If detectable warning surface is completely made of concrete or cementitious materials with cementitious mortar bed and grout and no adhesive or perimeter edge treatment is used, the Elevated Temperature Test shall not apply.

iv. Salt and Spray Performance Test per ASTM B 117 (and evaluation of rusting by ASTM D 610, and Blistering by ASTM D 714) with exposure period of 200 hours. No appearance of any defect, discoloring, scaling or rusting shall be present.

L.A.C.E. INDEX

(2) Performance and Durability Tests:

i. Compression Strength Test per ASTM C 936 or C 648 with a 1000 lbs of force over the center of a truncated dome. No appearance of any crack, failure, damage or permanent deformation shall be detected.

ii. Impact Resistance (Weight Drop) Test per modified ASTM D 2444. A selected

truncated dome and a location of beveled edge of the detectable warning surface shall be subject to 24 ft-lb impact achieved by dropping a steel rod of 12 lbs with "B" Tup from an approximate height of two feet. A failure is noted if any appearance of crack or hairline fracture, chipping, failure, damage or permanent deformation of the truncated dome is visible in the specimen. Localized indentation is not considered as a failure.

iii. Sidewalk Traffic Impact Test per modified ASTM D 2794 with each specimen supported at a 60 degree angle from horizontal and subject to a 4 ft-lb impact force from a metal cylinder weight with similar "B" Tup end, dropped from a predetermined height and positioned by guide tube, at the side of the truncated dome. No appearance of any crack, failure, chipping, damage or permanent deformation shall be detected.

iv. Bond Strength or Adhesive Test per modified ASTM C 1583 with bond strength not less than 100 psi. (For any detectable warning surface that consists of structural fastener or anchoring system with or without the use of adhesive in the installation, full size product sample (minimum 3 feet x 4 feet) with actual amount of fasteners and anchoring system can be used in lieu of sample size as described in 3-5.2(b) for the Bond Strength or Adhesive Test.)

(b) Performance and Durability Testing Procedures.

(1) With the chemical exposure conditioning per ASTM D 543 as described above, four groups of specimens and each group containing a total of 27-12" x 12" specimens with a minimum four inches thick concrete base and applicable mortar base or adhesive (with three specimens for the exposure to each of the nine chemical reagents listed) after exposure, perform the following tests with number of specimens specified:

i. Compression Strength Test as described above-One group of specimens exposed to each of the nine chemical reagents.

ii. Impact Resistance (Weight Drop) Test as described above-One group of specimens exposed to each of the nine chemical reagents.

iii. Sidewalk Traffic Impact Test as described above-One group of specimens exposed to each of the nine chemical reagents.

L.A.C.E. INDEX

iv. Bond Strength or Adhesive Test as described above-One group of specimens exposed to each of the nine chemical reagents.

(2) Provide number of specimen as specified below for the Accelerated Weathering conditioning per ASTM G 151 as described in 3-5.3(a)(1)ii and perform the following

tests after the exposure:

i. Compression Strength Test as described above-Three specimens.
ii. Impact Resistance (Weight Drop) Test as described above-Three specimens.
iii. Sidewalk Traffic Impact Test as described above-Three specimens.
iv. Bond Strength or Adhesive Test as described above-Three specimens.

(3) After the Elevated Temperature conditioning described above, perform the following tests with number of specimens specified:

i. Compression Strength Test as described above-Three specimens.
ii. Impact Resistance (Weight Drop) Test as described above-Three specimens.
iii. Sidewalk Traffic Impact Test as described above-Three specimens.
iv. Bond Strength or Adhesive Test as described above-Three specimens.

(4) After the Salt and Spray conditioning per ASTM B 117 as described above, perform the following tests with number of specimens specified:

i. Compression Strength Test as described above-Three specimens.
ii. Impact Resistance (Weight Drop) Test as described above-Three specimens.
iii. Sidewalk Traffic Impact Test as described above-Three specimens.
iv. Bond Strength or Adhesive Test as described above-Three specimens.

SECTION 6
BRICK, CONCRETE OR OTHER DECORATIVE PAVERS

3-6.1 General.

(a) All pavers shall be submitted with the Manufacturing or Quarry Certificate indicating the physical properties of the pavers to the City Engineer for review and approval. The physical properties of the materials shall conform to the minimum physical properties specified herein.

(b) The pavers covered in this standard plan are for exterior application and with pedestrian traffic. If considered by the City Engineer, any pavers intended for the driveway apron shall be submitted for appropriate testing as determined by the City Engineer and with structural calculations for the vehicular traffic loadings. All paver surfaces shall be level and shall not be made of or contain any split face, cobble or pebble stone. All pavers shall not be acid sensitive or have any iron or rust stains or etch marks.

(c) Unless otherwise specified and wherever is applicable, all pavers shall be impervious and have minimum wear rating of Group V or equivalent in accordance with Porcelain Enamel Institute (PEI).

(d) Unless otherwise specified, all pavers shall be tested per Mohs Scale Testing and have Mohs Hardness Scale of 6 or higher. All pavers shall be tested per ASTM C 648 and have breaking strength not less than 250 lbs when the paver actually breaks into two or more pieces. All pavers shall be tested per ASTM C 482 or C 1583 with minimum bond strength of 100 psi to the mortar base and to rigid concrete pavement.

(e) No pavers shall be allowed on the top of concrete curb or curb ramp.

(f) All pavers shall be installed over mortar base and slip sheet (if required by the City Engineer) on top of minimum three inches thick rigid concrete pavement and compacted aggregate bases and subgrade. If paver is approved to be installed over driveway apron, the rigid concrete pavement support shall conform with the minimum thickness as determined by structural calculations but not less than the thickness as specified for driveways shown in Standard Plan No. S-440. When requested by the City Engineer, the rigid concrete pavement shall have one inch diameter weep hole to the bottom of the pavement every five feet covered with approved filter cloth. For locations where high water table existed, install approved moisture barrier below rigid concrete pavement and weep hole over the aggregate bases and subgrade. Turn the moisture barrier up or down against the back of concrete curb, abutting building wall or foundation and seal all openings and around the weep holes, from moisture penetration.

(g) Unless otherwise specified, all pavers shall have cementitious mortar beds, grout joints or approved bond coats. All grout joints shall be a minimum of 1/8 inch but not to exceed 3/8 inch wide.

(h) Sand joint is not allowed in any installation. All pavers, mortar beds, grout joints and approved bond coats shall have the resistances to the following:

(1) Paver, mortar bed and grout joint materials shall have resistance to fungus and growth of mold, and efflorescence when tested per ASTM D 3273 and ASTM C 67, respectively. Any installation using a polymer adhesive as the bonding or grout joint material shall be tested for the bond strengths with each of the environmental conditioning as specified in 3-5.3(a)(1).

(2) Paver shall have the chemical resistance when tested per ASTM C 650.

(i) Size of the pavers if different unit pavers are used, size of grout joint, thickness of the mortar bed and all installation method and procedures must be provided and submitted for the City Engineer's review and approval.

(j) All style and color of the paver shall be final-approved by Los Angeles City Cultural Affairs Department and BOE permit engineer.

(k) No paver shall have coating or sealer before and after the installation without the review

and testing by the City Engineer. If requested by the City Engineer, pavers shall be tested for presence of any coating by ASTM C 216.

(l) All pavers shall have static coefficient of friction not less than 0.6 when tested per ASTM C 1028 for pedestrian area containing slope less than 2%. For pedestrian area containing slope greater than 2% and driveway apron area where allowed by the City Engineer, the pavers shall have static coefficient of friction not less than 0.8 when tested per ASTM C 1028. In addition, all pavers in the driveway apron area shall have dynamic coefficient of friction not less than 0.35 when tested per Calif Test Method No. 342.

(m) All pavers shall have no rounded or beveled edges or chamfers.

(n) All pavers shall have minimum six inch wide concrete collars constructed around all maintenance holes, tree wells, street lighting standards or similar installations. All pavers shall have approved expansion joints at the footings of parking meters, bicycle racks, newspaper stands, control cabinet and other similar installations. No other installations shall be allowed directly on top of the pavers. Construct concrete footings for such installations where necessary before paver installation.

(o) All unit pavers shall have approved concrete rigid edge restraints to secure the whole paving system laterally including the area along the parkway. Concrete rigid edge restraints shall be built before pavers are laid.

(p) No paver smaller than 1/3 of the whole paver in width shall be used any installation.

(q) Patterns of the pavers shall be arranged on the submittal and/or in the field. All narrow gaps between the pavers and concrete curbs or concrete rigid edge restraints or collars shall be filled by mortar. Care should be given to adopt an appropriate pattern conforming to the any curving character of the surface area or round corners.

(r) All pavers and rigid concrete pavement shall have expansion joints in spacing not to exceed 15 feet. All pavers shall have expansion joints at the changes of bond pattern, paving slope or direction, at separation of dissimilar materials, along the perimeter such as the adjacent walls, foundation or fixed objects, and shall correspond with the control or expansion joints in the mortar bed and the rigid concrete pavement below. Expansion joint filler shall be highly compressible and durable when exposed to weather or abrasion and conform to the Greenbook and its supplements and the Brown Book.

(s) All pavers shall be laid in accordance with standard bricklaying or tile setting procedures. No paver shall be laid in mortar setting bed with more than two feet ahead of the laying of the pavers.

(t) The edges of any paver shall not vary from the plane of adjacent pavers and surfaces more than 1/8 inch.

(u) Unless otherwise specified, all grout joints shall be tooled with a concave finish.

L.A.C.E.
INDEX

(v) No installation shall result in any ponding or interruption of surface flow. Larger paved areas or areas containing planting beds higher than the paving surface shall have intermediate or area drains, or scupper approved by the BOE permit engineer.

(w) All pavers shall be protected from mortar or grout stains.

(x) When deemed necessary, it shall be the City Engineer's discretion to request the permittee to perform additional testing in addition to those specified in this standard plan for verification of the physical properties of the pavers at the permittee's expense.

(y) All construction shall conform to the requirements as indicated in this standard plan and the standard industry practices as recommended by the Brick Institute of America, BIA (2815 Frampton Ave, Torrance, Calif 90501, http://www.masonryinstitute.org), Brick Industry Association (11490 Commerce Park Drive, Reston, Virginia 20191, http://www.brickinfo.org), Ceramic Tile Institute of America, Inc. (12061 Jefferson Blvd., Culver City, Calif 90230-6219, http://www.ctioa.org.), the Interlocking Concrete Pavement Institute, ICPI, (14441 I Street, NW, Suite 700, Washington, D.C. 20005-6542, http://www.icpi.org), and Porcelain Enamel Institute, PEI (3700 Mansell Road, Suite 220, Alpharetta, GA 30022, http://www.porcelainenamel.com), whichever is applicable. If there are any conflicts, the most stringent requirements shall govern.

(z) It shall be the permittee's responsibilities to ensure the future availability of the approved paver and/or maintain adequate amount of spare paver for the future maintenance and repair. No substituted paver shall be allowed for any change or repair.

(aa) Unless otherwise specified, all pavers or pavings consisted of exposed aggregates shall be tested per modified ASTM C 627 with 300 lbs weight per each steel wheel for a total of 450 cycles. The number of loss or damaged aggregates along the wheel path shall not be greater than 1%.

3-6.2 Brick Pavers.

(a) Brick paver shall be unglazed paving brick to support pedestrian traffic. All brick paver shall be non-effloresced brick paver with Class SX, Type 1 Traffic, and Application PX as described in ASTM C 902 and shall have a minimum a 2 5/8 inch thickness.

(b) Brick paver shall have minimum compressive strength of 8,000 psi, maximum water absorption rate of 5% and weathering index less than 50 when tested with ASTM C 67. Brick paver shall be within the allowable dimensional tolerances (± 1/16 inch in length, width and depth) and have the range of chippage less than 1/4 inch in edge and 3/8 inch in corner as described in ASTM C 902.

(c) Brick paver shall have minimum abrasion resistance of 35 when tested per modified

L.A.C.E. INDEX

ASTM C 241; minimum abrasion wear value of 35 when tested per ASTM C 501; or maximum Abrasion Index of 0.11, or a maximum volume abrasion loss of 0.10 in^3/0.16 in^2 (or maximum abrasion loss of 0.67 inch) when tested in accordance with ASTM C 418.

(d) Mortar bed shall be Type M mortar with minimum compressive strength of 1,800 psi and conform with ASTM C 270.

(e) The brick pavers shall meet the required minimum coefficient of friction as specified herein before and after the abrasion resistance test.

(f) Brick paver shall be constructed in 90-degree Herringbone pattern.

(g) If a manufacturing certificate is submitted with all the physical property data and the data conform with the requirements specified herein, only the abrasion wear test and the slip resistance test shall be performed for the physical property test. If a manufacturing certificate is not provided with the submittal, the brick paver shall be tested per the ASTM C 902 and other testing standards specified herein to verify for all the physical requirements. The City Engineer has the right to order any additional tests to verify the physical properties of the material or product.

3-6.3 Concrete Pavers.

(a) Concrete pavers shall be uncoated and non-effloresced paver conforming to the requirements as specified in ASTM C 936 and shall have a minimum thickness of 2 3/8 inches.

(b) Concrete pavers shall have minimum compressive strength of 8,000 psi, maximum water absorption rate of 5% and weathering index less than 50 when tested with ASTM C 140.

(c) Concrete pavers shall have a minimum abrasion resistance of 35 when tested with modified ASTM C 241, minimum abrasion wear value of 35 when tested with ASTM C 501, or maximum abrasion volume loss of 0.92 in^3/7.75 in^2 (or a thickness loss not more than 1/8 inch) when tested per ASTM C 418.

(d) Concrete pavers shall be within the allowable dimensional tolerances as described in ASTM C 936.

(e) Polymer adhesive for the concrete pavers shall not be used without the environmental conditioning test and the approval the City Engineer.

(f) Concrete pavers shall be constructed in 90-degree Herringbone pattern.

(g) The concrete pavers shall meet the required minimum coefficient of friction as specified hereinbefore and after the abrasion resistance test has been completed.

(h) If a manufacturing certificate is submitted with all the required physical property data and the data conform with the requirements specified herein, only the abrasion wear test and

L.A.C.E. INDEX

the slip resistance test shall be performed for the physical property test. If a manufacturing certificate is not provided with the submittal, the concrete paver shall be tested per the ASTM C 936 and other testing standards specified herein to verify for all the physical requirements.

3-6.4 Granite, Sandstone, Marble and Limestone Pavers.

3-6.4.1 General.

(a) All granite, sandstone, marble pavers including limestone pavers shall be natural stones and for exterior application, in accordance with ASTM C 119-Standard Terminology Relating To Dimension Stone, that are sawed, cut, split and shall exclude molded, cast, or artificially aggregated nits composed of fragments and crushed or broken. Unless otherwise specified, all pavers shall have a minimum thickness of 1 ¼ inch. All pavers shall be submitted with a Quarry Certificate indicating the physical properties of the materials to the City Engineer for review and approval. The physical properties of the materials shall conform to the minimum physical properties specified herein. Abrasion resistance wear test and slip resistance test shall be performed for the physical property test. If a Quarry Certificate is not provided, the material or product shall be tested per the ASTM C 615-Standard Specification for Granite Dimension Stone, ASTM C 616-Standard Specification For Quartz-Based Dimension Stone, ASTM C 1526-Standard Specification for Serpentine Dimension Stone, ASTM C 1527-Standard Specifications for Travertine Dimension Stone or ASTM C 568-Standard Specification for Limestone Dimension Stone, whichever is applicable, to verify the physical requirements.

(b) If requested by the City Engineer, the pavers shall be tested for compressive strengths per ASTM C 170.

3-6.4.2 Granite.

(a) Granite paver shall be vitreous type and have minimum compressive strength of 19,000 psi when tested per ASTM C 170, maximum absorption rate of 0.4% when tested with ASTM C 97, and shall have minimum abrasion resistance or wear value of 75 conforming to ASTM C 501 when tested with ASTM C 241 or C 1353, or maximum abrasion volume loss of 0.92 in^3/ 7.75 in^2 (or a thickness loss not more than 1/8 inch) when tested per ASTM C 418.

L.A.C.E.
INDEX

3-6.4.3 Sandstone.

(a) Sandstone pavers shall be either Type II Quartzitic Sandstone or Type III Quartzite Sandstone with minimum compressive strength of 10,000 psi or 20,000 psi, respectively,

when tested per ASTM C 170; maximum absorption rate of 3% and 1%, respectively, when tested per ASTM C 97. All sandstone pavers shall have a minimum 1½ inch thickness and shall conform to ASTM C 616 and have minimum abrasion resistance value (Ha) or wear valve of 18.5 when tested per ASTM C 241.

3-6.4.4 Marble and Limestone.

(a) Marble pavers shall be Class III Serpentine or Class IV Travertine marble as defined in ASTM C 119-Definitions of Terms Relating to Dimension Stone or have Marble Soundness Classification of Group C in accordance with the Marble Institute of America (28901 Clemens Road, Suite 100, Cleveland, Ohio 44145, http://www.marble-institute.com), or better. Class III Serpentine or Class IV Travertine marble is also referred to as limestone with equitable class as defined in ASTM C 568.

(b) Class III Serpentine and Class IV Travertine Marble Pavers. Class III Serpentine and Class Travertine marble pavers shall have the following properties in conformance with ASTM C 1526 and C 1527, respectively.

(1) Class III Serpentine and Class IV Travertine marble pavers shall have minimum compressive strengths of 10,000 psi and 7,500 psi when tested with ASTM C 170, and maximum water absorption rate of 0.2% and 2.5% when tested with ASTM C 241, respectively. Class III Serpentine and Class IV marble pavers shall have minimum thickness of 1 1/4 inches and with minimum abrasion resistance value (Ha) of 12.0 when tested per ASTM C 241.

(c) Limestone other than those indicated above shall be minimum Class III high density limestone as defined in ASTM C 568. Class III high density limestone shall have a minimum thickness of 1 ¼ inches, minimum compressive strengths of 8,000 psi when tested with ASTM C 170, maximum water absorption rate of 3.0% when tested with ASTM C 97 and minimum abrasion resistance value (Ha) of 12.0 when tested per ASTM C 241.

L.A.C.E.
INDEX

3-6.5 Performance and Durability Test.

In addition to the physical property tests as indicated herein, all pavers shall be tested in accordance with requirements indicated below unless otherwise specified. All testing specimens shall be made in accordance with the approved installation details and/or specified testing standards. Unless otherwise specified, all specimens shall have rigid concrete pavement support with minimum thickness as specified in 3-6.1(f), and approved mortar base or adhesive material.

(a) Impact load test in accordance with 3-2.3.3 hereinbefore. Unless otherwise specified, the

impact load shall be minimum 24 ft-lb by a metal weight having "B" Tup.

(b) Bond Strength or Adhesive Test in accordance with 3-5.3(a)(2)iv with sample size as described in the ASTM C 482 or C 1583 standards. If polymer adhesive is used as bonding and grout joint material, perform bond strength or adhesive test with specimens exposed to environment conditionings per 3-5.3(a)(1).

(c) Paver and Grout Joint Performance Test in accordance with modified ASTM C 627 with 300 lbs weight per each steel weight for a total of 450 cycles. No chippage of tile or paver and any grout joint loss along the wheel path shall exceed 3.0%. Unless otherwise directed by the City Engineer, any installation of tile or paver located in residential area or local street, and commercial area or non-local street with a total combined area of less than 50 sq. ft. and 100 sq. ft., respectively, shall be exempted from the paver and grout joint performance test. This exemption is not applicable to the materials or products made with exposed aggregates.

L.A.C.E.
INDEX

CONSTRUCTION SYMBOLS

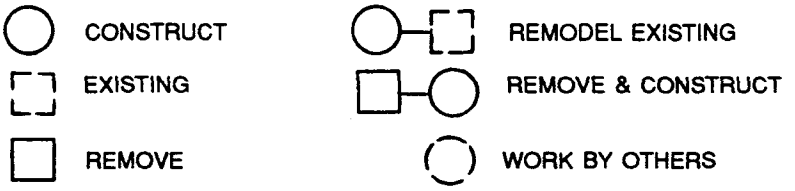

NOTE: WHEN ONE CHOOSES TO USE CONSTRUCTION SYMBOLS, THE USE OF THIS STANDARD PLAN IS MANDATORY. PERTINENT ITEM NUMBERS AND DESCRIPTIONS SHALL BE SHOWN ON EACH SHEET.

ITEM NUMBER	DESCRIPTION	DATA TO BE SHOWN ON LEADER
1.	CONCRETE CURB	TYPE
2.	TYPE C INTEGRAL CURB & GUTTER	b,a
3.	TYPE C INTEGRAL CURB & PAVEMENT	b,c
4.	CONCRETE GUTTER	b,a
5.	CONCRETE LONGITUDINAL GUTTER	b,g
6.	CONCRETE INTERSECTION GUTTER	b,a,g
7.	BUS PAD	W,t,P,L
8.	CONCRETE PAVEMENT	THICKNESS,CLASS
9.	STREET OR ALLEY PER TYPICAL SECTION	
10.	CONCRETE DRIVEWAY	CASE,W,X,Y,a,t
11.	CONCRETE ALLEY INTERSECTION	W,R,t
12.	CONCRETE WALK	THICKNESS
13.	CURB RAMP	CASE,W,X,Y
14.	ASPHALT CONCRETE PAVEMENT	THICKNESS
15.	ASPHALT CONCRETE BERM PER DETAIL	
16.	UNTREATED BASE MATERIAL	THICKNESS,TYPE
17.	ADJUST MANHOLE TO GRADE	TYPE,+(RAISE)',-(LOWER)'
18.	METAL BEAM GUARDRAIL	LIN. FT.
19.	RECONSTRUCT MANHOLE TO GRADE	TYPE,+(RAISE)',-(LOWER)'

BUREAU OF ENGINEERING — DEPARTMENT OF PUBLIC WORKS — CITY OF LOS ANGELES

SYMBOLS FOR CONSTRUCTION NOTES

STANDARD PLAN S-627-0

SUBMITTED 11/8 1989

ENGINEER OF DESIGN L. L. Lewis

DEPUTY ENGINEER

APPROVED 11/21 1989

CITY ENGINEER Robert S. Horii

DESIGN BY	DRAWN BY	CHECK BY
RAB	G MCD	RGS

REGISTERED PROFESSIONAL ENGINEER — ROBERT S. HORII — EXP. 12/31/92 — NO. 11782 — CIVIL — STATE OF CALIFORNIA

REVISIONS		SUPERSEDES	REFERENCES
NO.	DESCRIPTION		

VAULT INDEX NO. B-4106

SHEET 1 OF 3 SHEETS

ITEM NUMBER	DESCRIPTION	DATA TO BE SHOWN ON LEADER
20.	REMOVE TREE	DIA.,STATION,OFFSET TO CL
21.	COLDPLANE (MILL) AC PAVEMENT	
22.	EXTRUDED ASPHALT CONCRETE (AC) CURB	HEIGHT
23.	GRADE ONLY	
24.	PLANT TREE	SPECIES,GALLON SIZE
25.	TREE WELL COVER - TYPE A	(A-1,OR A-2)
26.	TREE WELL	TYPE(1 OR 2)
27.	GEOTEXTILE	TYPE,WOVEN OR NONWOVEN
28.	JOINT	TYPE
29.	CURB DRAIN	INSIDE DIMENSIONS,MATERIAL
30.	WOODEN WARNING RAIL	LIN. FT.
31.	PIPE HANDRAIL	
32.	GRIND CONCRETE PAVEMENT	
33.	RELOCATE PARKING METER	
34.	VARIABLE THICKNESS ASPHALT CONCRETE PAVEMENT	
35.	INSTALL GUIDE MARKER	
36.	RELOCATE UTILITY POLE	POLE NUMBER
37.	RELOCATE POLE ANCHOR	
38.	RELOCATE AND/OR ADJUST STREET LIGHTING PULL BOX TO GRADE	
39.	RELOCATE AND/OR ADJUST TRAFFIC SIGNAL PULL BOX TO GRADE	
40.	RELOCATE AND/OR ADJUST CATV PULL BOX TO GRADE	
41.	RELOCATE AND/OR ADJUST FIRE HYDRANT TO GRADE	
42.	RELOCATE AND/OR ADJUST ELECTROLIER TO GRADE	
43.	RELOCATE AND/OR ADJUST DWPPS VENT TO GRADE	
44.	RELOCATE AND/OF ADJUST DWPPS MANHOLE TO GRADE	
45.	RELOCATE AND/OR ADJUST DWPWS MANHOLE TO GRADE	
46.	RELOCATE AND/OR ADJUST WATER METER TO GRADE	
47.	RELOCATE STREET SIGN	
48.	TO 77 RESERVED FOR STREET RELATED ITEMS.	
78.	ALLEY GRATING BASIN (AGB)	NO. GRATING ,V
79.	REINFORCED CONCRETE PIPE (RCP)	DIAMETER,D-LOAD
80.	PAVEMENT REMODELING AT CATCH BASIN	X,Y,M
81.	CURBSIDE GRATING BASIN (CGB)	NO. GRATING ,V
82.	JUNCTION STRUCTURE (J.S.)	TYPE
83.	CORRUGATED STEEL PIPE (CSP)	TYPE, DIA ,GAGE
84.	REINFORCED CONCRETE BOX	W BY H
85.	STORM DRAIN MANHOLE	TYPE
86.	WARPED GUTTER AT CATCH BASIN	DIMENSIONS
87.	CATCH BASIN NO.36	NO. GRATING ,V

ITEM NUMBER	DESCRIPTION	DATA TO BE SHOWM ON LEADER
88.	CATCH BASIN NO. 44	W,H,U,S
89.	CATCH BASIN NO. 47	DIMENSIONS
90.	LOW FLOW INLET STRUCTURE	L,X,A
91.	LOW FLOW OUTLET STRUCTURE	L,X,A
92.	SIDEWALK OUTLET STRUCTURE	DIMENSIONS
93.	SIDEWALK CULVERT WITH STEEL PLATE COVER	F,W,H,(J-K),(L-M)
94.	SEAL PER DETAIL	
95.	REINFORCED CONCRETE PIPE-LINED	DIA,D ITEM NUMBER
96.	SEAL WITH 8" BRICK & MORTAR	
97.	CONCRETE COLLAR	
98.	MONOLITHIC CONNECTION	
99.	SIDE OPENING CATCH BASIN	W,V,B
100. TO 130.	RESERVED FOR STORM DRAIN RELATED ITEMS.	
131.	SEWER PIPE	DIMENSIONS
132.	VITRIFIED CLAY PIPE(VCP)	DIMENSIONS
133.	SUPPORT OF PIPES ACROSS TRENCH	CASE
134.	IRON PIPE	DIA.,CAST OR DUCTILE,THICKNESS, CLASS
135.	MANHOLE INNER COVER	B OR C
136.	SEWER MANHOLE	STD. PLAN DESIGNATION, DM,H,SHALLOW
137.	HOUSE CONNECTION SEWER (H.C.)	TYPE,DIA
138.	SADDLE	
139.	CHIMNEYS	TYPE, DIA,H,H_1,H_2
140.	TERMINAL CLEANOUT STRUCTURE "Y" (TCS"Y")	D
141.	CONCRETE BLANKET	LIN.FT.
142.	PIPE ANCHOR	L,Z
143.	TUNNEL	LIN.FT.
144.	JACK PIPE	LIN.FT.
145.	SPECIAL MANHOLE FOR R.C.P. PER DETAIL	
146. TO 176.	RESERVED FOR SEWER RELATED AND MISCELLANEOUS ITEMS.	



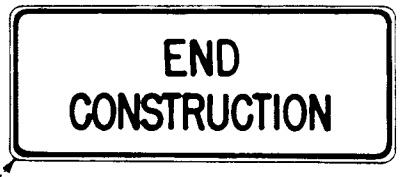

C18 (36"x 36")
PLACED AT BEGINNING OF THE WORK AND AT LEAST ONE PER BLOCK, AND AT CROSS STREETS.

1 C13, C18 AND C19 SIGNS SHALL BE REFLECTORIZED WITH BLACK LETTERS ON AN ORANGE BACKGROUND (SEE MOUNTING AND PLACEMENT DETAILS AT LOWER RIGHT). LETTERS SHALL BE 5" SERIES C.

C13 (48"x 24")
PLACED AT END OF WORK



C19 (36"x 36")
FOR STREET CLOSURES PLACED AS SPECIFIED FOR C18 SIGNS

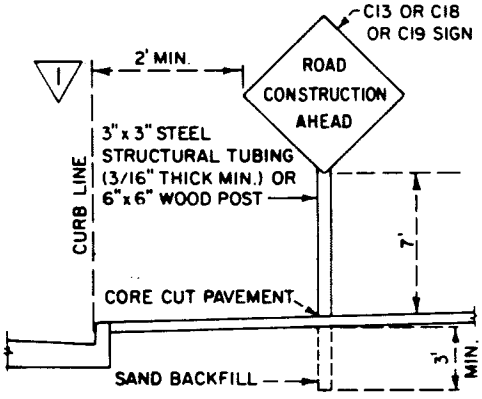

1 

"TIME SIGN" (48"x 24") WITH BLACK LETTERS (5" SERIES C) ON AN ORANGE BACKGROUND. (SEE MOUNTING AND PLACEMENT DETAILS AT RIGHT.) (SEE NOTE 6 FOR WORDING)

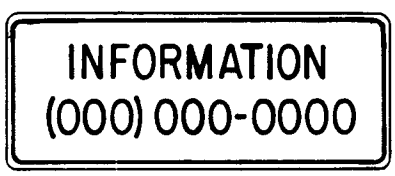

"INFORMATION SIGN" (48"x 24") WITH BLACK LETTERS (5" SERIES C) ON AN ORANGE BACKGROUND. (SEE MOUNTING AND PLACEMENT DETAILS AT RIGHT.) (SEE NOTE 5 FOR TELEPHONE NUMBER.)

1 **INFORMATION SIGN**
TO BE MOUNTED BELOW TIME SIGN AND C13 SIGN

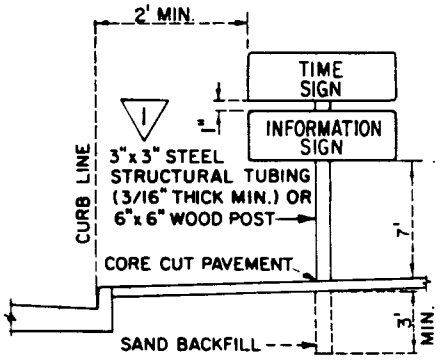

TYPICAL MOUNTING AND PLACEMENT DETAILS
NOT TO SCALE

DEPARTMENT OF PUBLIC WORKS

BUREAU OF ENGINEERING — CITY OF LOS ANGELES

ADVANCE CONSTRUCTION NOTICE SIGNS

STANDARD PLAN
S-791-1

SUBMITTED June 15 1989
ENGINEER OF DESIGN
Lawrence H. Burks
DEPUTY ENGINEER

APPROVED July 11 1989
Robert E. Horii
CITY ENGINEER

DESIGNED BY	DRAWN BY	CHECKED BY
RAB	RGM/GMcD	RGS

REGISTERED PROFESSIONAL ENGINEER ROBERT E. HORII EXP 12/31/92 NO. 11162 CIVIL STATE OF CALIFORNIA

REVISIONS		SUPERSEDES	REFERENCES
NO.	DESCRIPTION	B-4097	
1	REVISED: NOTES, TITLE OF SIGNS, TYPICAL MOUNTING AND PLACEMENT DETAILS, CREDIT SIGNS, AND ADDED TIME SIGN.		

VAULT INDEX NUMBER B-4100

SHEET 1 OF 4 SHEETS

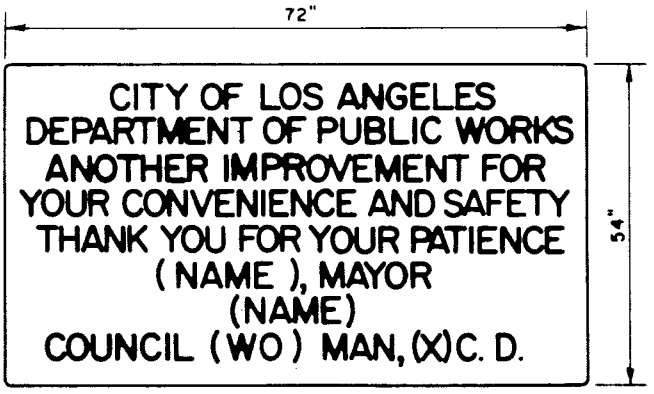

1 TYPE I CREDIT SIGN

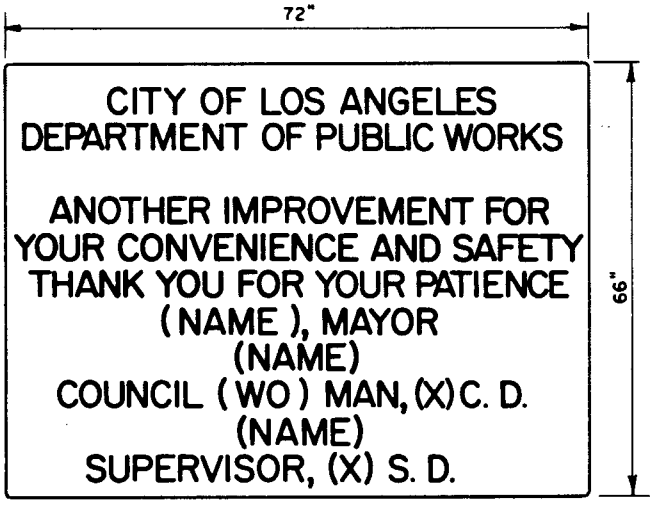

1 TYPE II CREDIT SIGN

1 ALL CREDIT SIGNS PLACED 100 FEET IN ADVANCE OF BEGINNING OF WORK.

1 CREDIT SIGNS (72" x 66" MAXIMUM) WITH WHITE LETTERS (4" SERIES C) ON A BLUE BACKGROUND WITH A WHITE BORDER. (SEE MOUNTING AND PLACEMENT DETAILS AT RIGHT.)

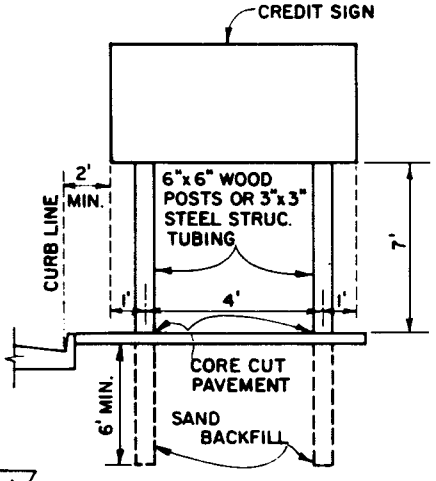

1 TYPICAL MOUNTING AND PLACEMENT DETAILS

NOT TO SCALE

NOTES

1. THESE SIGNS ARE IN ADDITION TO THOSE REQUIRED BY, AND SHALL CONFORM TO, THE PROVISIONS OF THE LATEST ADOPTED EDITION OF THE "WORK AREA TRAFFIC CONTROL HANDBOOK" (**WATCH**).

2. ALL SIGN AND PLATE PANELS SHALL CONSIST OF HIGH QUALITY REFLECTORIZED SHEETING APPLIED TO A BASE OF ALUMINUM OR PLYWOOD. BASE MATERIAL SHALL BE EXTERIOR GRADE PLYWOOD NOT LESS THAN 3/8 INCH THICK OR SHEET ALUMINUM NOT LESS THAN 0.063 INCH THICK FOR WIDTHS UP TO 42 INCHES AND NOT LESS THAN 0.080 INCH THICK FOR WIDTHS GREATER THAN 42 INCHES. ALL PANELS SHALL BE THE PRODUCT OF A COMMERICIAL TRAFFIC SIGN MANUFACTURER.

3. SIGN PANELS SHALL FACE AND BE VISIBLE TO ONCOMING TRAFFIC AND BE SECURELY FASTENED TO POSTS WITH COMMERICIAL BOLTS, NUTS AND WASHERS SO AS TO RESIST DISPLACEMENT.

▽1 4. THE SIGNS SHALL BE PLACED AT LEAST **7** DAYS BEFORE START OF CONSTRUCTION. PRIOR TO INSTALLATION OF ANY SIGNS, THE CONTRACTOR SHALL HAVE APPLICABLE INSURANCE ON FILE WITH THE CITY ATTORNEY'S OFFICE. UNLESS OTHERWISE SPECIFIED ON THE PLANS, THE SIGNS SHALL BE PLACED AS FOLLOWS:

   A. **C18 SIGNS** SHALL BE PLACED AT THE BEGINNING OF THE WORK AND ONE PER BLOCK WITHIN THE LIMITS OF THE WORK. HOWEVER, NO TWO SUCCESSIVE SIGNS SHALL BE SPACED GREATER THAN 1000 FEET APART. **C18 SIGNS** SHALL ALSO BE PLACED ON CROSS STREETS ONE BLOCK PRECEEDING THE WORK.

   B. **C13 SIGNS** SHALL BE PLACED AT THE END OF THE WORK.

   C. WHEN A STREET CLOSURE IS ALLOWED, **C19 SIGNS** SHALL BE PLACED AS SPECIFIED FOR **C18 SIGNS.**

   D. THE **CREDIT SIGN** SHALL BE PLACED 100 FEET IN ADVANCE OF BEGINNING OF WORK, TWO SIGNS IF WORK INVOLVES BOTH SIDES OF STREET. **CREDIT SIGNS** SHALL BE REQUIRED ON ALL PROJECTS EXCEPT PERMIT PROJECTS. SEE PLANS FOR TYPE AND NAMES.

   E. THE COMBINATION **TIME AND INFORMATION SIGN** SHALL BE PLACED **20** FEET BEHIND THE FIRST **C18 SIGN** AND 20 FEET BEHIND ALL **C13 SIGNS** AND **C19 SIGNS.**

5. FOR CASH AND ASSESSMENT ACT CONTRACTS, THE INFORMATION TELEPHONE NUMBER SHALL BE THE NUMBER OF THE DESIGN OFFICE SPECIFIED ON THE PROJECT PLANS. FOR PERMIT PROJECTS, IT SHALL BE THE NUMBER OF THE PERMITTEE OR ITS RESPONSIBLE DESIGNEE. FOR PROJECTS PERFORMED BY CITY FORCES, THE TELEPHONE NUMBER SHALL BE THAT OF THE BUREAU PERFORMING THE WORK.

▽1 6. FOR WORDING OF THE **TIME SIGN**, CONTACT THE ENGINEER, THE PERMITTEE OR THE RESPONSIBLE DESIGNEE.

7. ALL COSTS INCURRED IN FURNISHING, INSTALLING, MAINTAINING, AND REMOVING THE SIGNS SHALL BE INCLUDED IN OTHER ITEMS FOR WHICH BIDS ARE ENTERED.

▽1 8. SIGNS AT THE BEGINNING AND END OF THE PROJECT SHALL BE LOCATED CLOSE TO, BUT SHALL NOT INTERFERE WITH, THE CONSTRUCTION.

Client Department Logo

[PROJECT TITLE]
[FUNDING SOURCE]

[NAME], MAYOR

[NAME]
COUNCILMEMBER, [X] DISTRICT

[CLIENT NAME]
[TITLE–CLIENT GENERAL MANAGER]

DEPARTMENT OF PUBLIC WORKS
[NAME]
Board President

[NAME], P.E.
City Engineer

[NAME]
Inspector of Public Works

["BUREAU OF ENGINEERING" or CONSULTANT FIRM]
Design Architect and Engineer

["BUREAU OF ENGINEERING" or CONSULTANT FIRM]
Construction Management

For questions, please call the Project Manager at [(XXX) XXX–XXXX]

225 mm (9") color logos

75 mm (3") Bold Caps
65 mm (2-1/2") Caps
65 mm (2-1/2") Caps
55 mm (2-1/4") Caps
55 mm (2-1/4") Caps
55 mm (2-1/4") Caps
50 mm (2") Caps
50 mm (2") Caps & LC
50 mm (2") Caps
50 mm (2") Caps & LC
50 mm (2") Caps
50 mm (2") Caps & LC
50 mm (2") Caps
50 mm (2") Caps & LC
50 mm (2") Caps
50 mm (2") Caps & LC
45 mm (1-3/4") Caps & LC

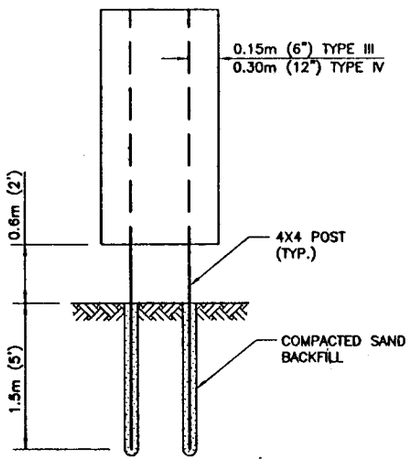

TYPICAL MOUNTING DETAILS

BUILDING CREDIT SIGN TYPE III

[PROJECT TITLE]
[FUNDING SOURCE]

Client Department Logo

[NAME], Mayor
[NAME], Councilmember – [X] District

DEPARTMENT OF PUBLIC WORKS
[NAME], Board President
[NAME], P.E., City Engineer
[NAME], Inspector of Public Works

[CLIENT DEPARTMENT NAME]
[NAME], [Title/General Manager]

["BUREAU OF ENGINEERING" OR CONSULTANT FIRM], Design Architect and Engineer

["BUREAU OF ENGINEERING" OR CONSULTANT FIRM], Construction Management

For questions, please call the Project Manager at [(XXX) XXX–XXXX]

75 mm (3") Bold Caps
Logo: 225mm (9") color
65 mm (2-1/2") Caps
65 mm (2-1/2") Caps & LC
55 mm (2-1/4") Caps & LC
55 mm (2-1/4") Caps
50 mm (2") Caps & LC
50 mm (2") Caps & LC
50 mm (2") Caps & LC
50 mm (2") Caps & LC
50 mm (2") Caps & LC
45 mm (1-3/4") Caps & LC

BUILDING CREDIT SIGN TYPE IV

NOTES:

1. SIGN BOARD: 1200MM X 2400MM X 19MM (4'X8'X3/4") PLYWOOD (MEDIUM OR HIGH DENSITY OVERLAY, OR MARINE GRADE); PAINT ALL AROUND WITH ONE COAT EXTERIOR PRIMER AND TWO COATS EXTERIOR SEMI-GLOSS WHITE. UNLESS OTHERWISE NOTED, USE TYPE IV.
2. LETTERING: EXTERIOR BLACK PAINT; APPLY BY BRUSH, SILKSCREENING OR EQUIVALENT; DO NOT USE STICKERED, SELF-ADHESIVE OR GLUED LETTERING.
3. LOGOS: OBTAIN SELF-ADHESIVE DECALS FROM ENGINEER; PAINT "CLIENT DEPT. LOGO" PER NOTE 2 UNLESS DECAL IS AVAILABLE.
4. SUBMIT SCALE DRAWING OF SIGN WITH LETTERING TO ENGINEER FOR APPROVAL PRIOR TO FABRICATION.
5. CONTRACTOR OPTION: PAINT NAMES ON 1.5MM (16 GA) ALUMINUM PLACARDS PAINTED PER NOTE 1; SECURELY FASTEN PLACARDS TO SIGN BOARD WITH SCREWS.

BUREAU OF ENGINEERING | DEPARTMENT OF PUBLIC WORKS | CITY OF LOS ANGELES

BUILDING CREDIT SIGNS

STANDARD PLAN
S-792-0

SUBMITTED Apr. 4 2002
ENGINEER OF DESIGN
DEPUTY CITY ENGINEER

APPROVED 4/5 2002
CITY ENGINEER

DESIGNED	DRAWN	CHECKED
P. LEE	A. HSU	H. LEE

REGISTERED PROFESSIONAL ENGINEER VITALY B. TROYAN, PE No. C-29228 Exp. 9-30-05 CIVIL STATE OF CALIFORNIA

REVISIONS				
NO.	DATE	DESCRIPTION	ENGR. OF DESIGN	CITY ENGR.

SUPERSEDES	REFERENCES

VAULT INDEX NUMBER B-4501

SHEET 1 OF 1 SHEETS

CITY OF LOS ANGELES

STANDARD SADDLE CONNECTION

A.C. HANSEN, CITY ENGINEER

Approved 3-15-, 1918.

A.C. Hansen
City Engineer.

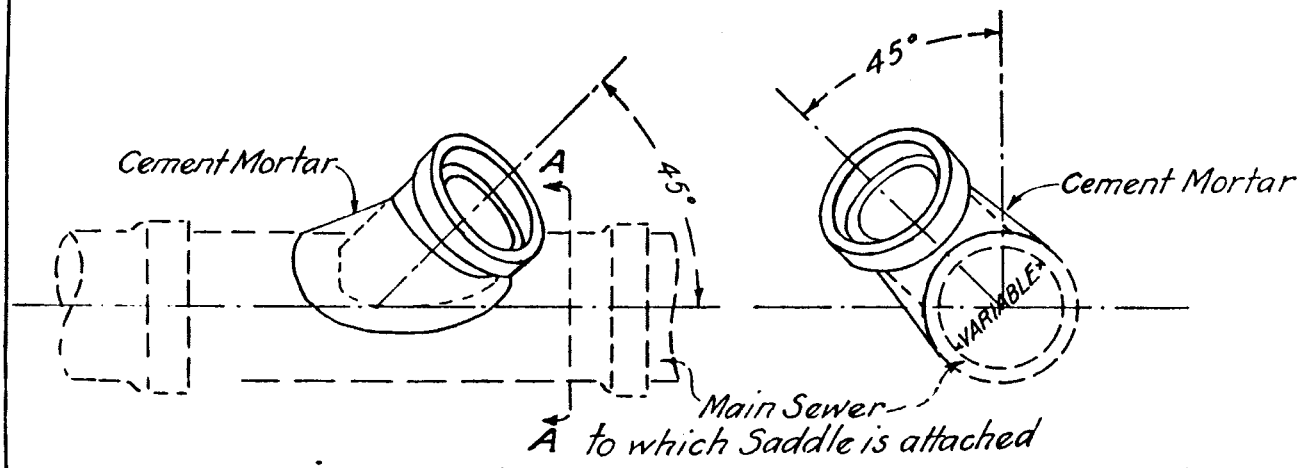

ELEVATIONS

Showing method of placing Saddle.

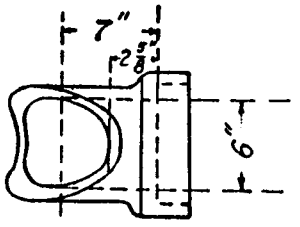

PLAN OF SADDLE
Showing Contact Opening

—NOTE—

Opening in Main Sewer shall be cut to exactly fit the saddle which latter shall be properly bedded and enveloped with cement mortar as shown.

Drawn by B.W.P.
Checked. LCM 2-5-18
Approved. WTK 3-15-18

27983

BUREAU OF ENGINEERING

SIXTH STREET PARK, ARTS AND RIVER CONNECTIVITY IMPROVEMENTS (PARC)
WORK ORDER NO. E700235D

ATTACHMENT NO. 8
HISTORIC LIGHT POLE AS-BUILT PLANS

BID SUBMITTAL
JULY 2022

City of Los Angeles
California

Department of Public Works
Bureau of Engineering

SIDE ELEVATION OF BRACKET
SCALE 1½"=1'0"

SIDE ELEVATION OF BRACKET LAMP
SCALE 1½"=1'0"

ELEV. OF LANTERN
SINGLE STANDARD
SCALE 1½"=1'0"

SECTION THROUGH LOWER PART OF GLASS PANELS
SCALE FULL SIZE

DETAIL OF CORNER
SCALE FULL SIZE

DETAIL OF BASE OF BRACKET LANTERN
SCALE 3"=1'0"

SECTION THROUGH LANTERN AT SINGLE STD BASE AND SUCH BASES REQUIRED
SCALE 3"=1'0"

PLAN OF LOWER BRACKET

ELEV. OF BRACKET PLATE
12 REQUIRED
SCALE 1½"=1'0"

SECTION "A A"
UPPER BRACKET
SCALE 3"=1'0"

ELEV. OF HINGES
SCALE FULL SIZE

PLAN OF CORNER
SCALE FULL SIZE

ELEV. OF INSULATOR BRACKET
SCALE FULL SIZE

SECTION THROUGH TROLLEY SUSPENSION

SECTION "A A"

SECTION "B B"

SECTION "C C"

SECTION "A A"

BASE MOULDS
SCALE FULL SIZE

PLAN
SCALE FULL SIZE

STANDARD
SHOWING FUSE BOX
SCALE 1½"=1'0"

LIGHTING STANDARD
SECTION
SCALE 1½"=1'0"

Up To This Point "Octagonal" (With Side Wings) Above This Point "Round"

"These elevations are based on U.S.C.&G.S. Datum. Adopted July 1st, 1896. Bearings No. 53.206."
"Figures & Ills feet to agree to datum plane in use prior to said date."

SIXTH STREET VIADUCT

ACROSS THE
LOS ANGELES RIVER
AND
A.T.&S.F. AND U.P. RAILWAY TRACKS
BETWEEN
MATEO ST. AND BOYLE AVE.

CITY OF LOS ANGELES
J.J. JESSUP CITY ENGINEER

SHEET NO 78 OF 82 SHEETS — LIGHTING STANDARD AND LIGHTING UNITS
SCALE: AS NOTED — FEBRUARY 1931

SUBMITTED MAR. 3, 1931
BY Worrell Bath
ENGINEER OF BRIDGES & STRUCTURES

DESIGNED BY JNSC.
DRAWN BY JNSC.
TRACED BY MOCK.
CHECKED BY ALLEY.

APPROVED MAR. 3 1931
CITY ENGINEER

REVISIONS			
DATE	DESCRIPTION	BY	CHECKED
1931	CHANGES IN BASE DWG	MOCK	ALLEY

DL-1078

DL 1078

DL 1078

PDF compression, OCR, web-optimization with CVISION's PdfCompressor

BUREAU OF ENGINEERING

SIXTH STREET PARK, ARTS AND RIVER CONNECTIVITY IMPROVEMENTS (PARC) WORK ORDER NO. E700235D

ATTACHMENT NO. 9
SIXTH STREET VIADUCT AS-BUILT PLANS

BID SUBMITTAL
JULY 2022

City of Los Angeles
California

Department of Public Works
Bureau of Engineering

ERIC GARCETTI
MAYOR

CITY OF LOS ANGELES
CALIFORNIA

Addendum No. 1

August 25, 2022

ENGINEERING
CITY OF LOS ANGELES

TED ALLEN, PE
CITY ENGINEER

Sixth Street Viaduct – Park, Arts, and River Connectivity (PARC) Improvements; Department of Cultural Affairs LA Hands Art Piece Foundations; and CBD Sewer Rehab Unit 11A – 6th Street Siphon to Santa Fe Avenue
W.O. E700235F & SZC14224

Bidders are required to acknowledge receipt of this addendum in the space provided on page 1-4 of the Bid Proposal. This addendum consists of this two-page transmittal and 4 attachments totaling 21 pages.

Bidders are hereby notified of the following changes:

I. MODIFICATIONS TO BID PROPOSAL:

1. Important Notice Section C, found in Part I of the Bid Proposal, **should read as follows**:

"C. JOB WALK

A job walk will be conducted by the Project Manager to familiarize bidders with the existing conditions that may affect the bids. The job walk will be held September 1, 2022 at 10:00 a.m. at 589 S. Santa Fe Avenue, Los Angeles, CA 90013."

2. The **City Engineer's Estimate** for this project has changed from $36,839,023.00 to **$36,979,003.00.**

3. **Replace** the Table of Contents in Part I of the Bid Proposal with the ***attached revised*** Table of Contents (3 pages).

4. **All** references to "CBD Sewer Rehab Unit 11A – 6th Street Siphon to Santa Fe Avenue" will be understood to be the same as "Central Business District (CBD) Sewer Rehab Unit 11A – 6th Street Siphon to Santa Fe Avenue"

II. MODIFICATIONS TO SPECIFICATIONS:

1. **Replace** the following section in the Specifications: Department of Cultural Affairs LA Hands Art Piece Foundations – General Requirements Section 01212 with the ***attached revised*** Section 01212. (W.O. E700235F) (1 page).

2. **Replace** the following section in the Specifications: Department of Cultural Affairs LA Hands Art Piece Foundations – General Requirements Section 01280 with the ***attached revised*** Section 01280 (W.O. E700235F) (3 pages).

Sixth Street Viaduct – Park, Arts, and River Connectivity (PARC) Improvements; Department of Cultural Affairs LA Hands Art Piece Foundations; and CBD Sewer Rehab Unit 11A – 6th Street Siphon to Santa Fe Avenue
W.O. E700235F & SZC14224

3. **Replace** the following section in the Specifications: Sixth Street Viaduct – Park, Arts, and River Connectivity (PARC) Improvements – General Requirements Section 01721 with the ***attached revised*** Section 01721 (W.O. E700235F) (12 pages).

Sincerely,

Gregg Vandergriff, P.E.
Division Engineer
Project Award and Control
DivisionBureau of Engineering

BID PROPOSAL

TABLE OF CONTENTS

	PAGE
Table of Contents	3 pages
Important Notice	6 pages

PART I

Bid Proposal	1-1		
Schedule of Work and Prices	1-2a	thru	1-2c
Responsibility Questionnaire	1-3a	thru	1-3m
Bidder Certification Form 50	1-3n		
Signature Sheet and Affidavit	1-4		
Bid Bond	1-5		
List of Subcontractors	1-6	and	1-7
Vendor and/or Supplier and Broker Participation Recognition	1-8		
Certification of Compliance with Child Support Obligations	1-9		
Equal Benefits Ordinance/First Source Hiring Ordinance	1-10		
Iran Contracting Act of 2010 Compliance Affidavit or NOT USED	1-11a	Thru	1-11c
Liner Installer's Minimum Qualifications	1-12		

PART II

City of Los Angeles Non-Discrimination, Equal Employment Practices, Affirmative Action Requirements for Construction Contractors	2-1	and	2-2

PART III

Board of Public Works Business Inclusion Program (BIP) Outreach	3-1	thru	3-22

PART IV

General Instructions and Information for Bidders	4-1	thru	4-7
Senate Bill 854	1 page		
Required Insurance and Minimum Limits	1 page		
Summary of First-Notice Replies	2 pages		
Department of Water & Power Standard Drawing	6 pages		
Holiday Season Excavation Restrictions	11 pages		

PART IV (Cont.)

Board of Public Works Mandatory Subcontracting Minimum……	2 pages
Board of Public Works "Zero Sanitary Sewer Overflows" Policy…….…	3 pages
City of Los Angeles Labor Compliance Manual……	13 pages
Important Notice Section……	1 page
Equal Benefits Ordinance……	4 pages
Municipal Lobbying Ordinance……..……	24 pages
Disclosure Ordinances Affidavit……..……	1 page
Local Business Preference Program……	7 pages
Construction & Demolition Waste Recycling Ordinance Compliance Packet (supersedes General Conditions, Article 00221 and General Requirements, Section 01572) ……	32 pages
Contractors' Use of Criminal History for Consideration of Employment Applications Ordinance……..……..	1 page
Contractor Evaluation Program…….. ……..……	1 page
Contractor Special Recognition Program.. ……..……	1 page
Buy Clean California Act Implementation……	2 pages
COVID-19 Vaccination Requirements – Ordinance No. 187134……	6 pages

ATTACHMENTS

1. Plan Drawings, Index No. MF300501 (295 sheets), D-35602 (17 sheets)
2. Specifications
    a. General Conditions
    b. General Requirements
        i. Sixth Street Viaduct – Park, Arts, and River Connectivity (PARC) Improvement General Requirements and Attachments
        ii. Department of Cultural Affairs LA Hands Art Piece Foundations General Requirements
        iii. CBD Sewer Rehab Unit 11A – 6th Street Siphon to Santa Fe Avenue General Requirements
    c. Technical Specifications
        i. Sixth Street Viaduct – Park, Arts, and River Connectivity

(PARC) Improvement Technical Specifications

ii. CBD Sewer Rehab Unit 11A – 6th Street Siphon to Santa Fe Avenue Technical Specifications

d. Geotechnical Engineering Report

i. CBD Sewer Rehab Unit 11A – 6th Street Siphon to Santa Fe Avenue - W.O. SZC14224

SECTION 01212
FIXED CASH ALLOWANCE ITEMS

1.1 THE REQUIREMENT

A. A fixed cash allowance has been allocated to each of the following items of the Bid Breakdown (see Bid Proposal). Requirements for each Fixed Cash Allowance Item are specified in the GENERAL REQUIREMENTS (GR) section referenced below. Overhead and Profit, at the rates listed below, shall be added to the actual invoiced amount.

Bid Item No.	Description	Overhead and Profit
30.	Allowance to furnish all labor, tools, equipment, and materials for the installation of accent lighting for the two (2) art pieces (by ARTIST) (GR Section 01112)	Per Sec. 01254

B. If these items are not executed, or are only partially executed, or the allowance for any item is not expended or partially expended, then a deductive Change Order shall be issued for the amount that is not expended. If, however, these items are over expended (with ENGINEER'S prior approval), then an appropriate Change Order shall be executed in accordance with the provisions of the GENERAL REQUIREMENTS Section 01254 –- CHANGE ORDERS, except for Overhead and Profit wherein the above listed rates shall apply.

(END OF SECTION)

SECTION 01280
MEASUREMENT AND PAYMENT

PART 1 - GENERAL

1.01 PAYMENT

A. Upon Contract award, the accepted Schedule of Work and Prices shall become the Payment Schedule. Payment for Work under the Contract shall be made at the unit prices listed in the Payment Schedule. For lump sum bid items, payment shall be made in accordance with Section 01298.

B. Payment for the measured quantities of Work performed shall be considered full compensation for all of the CONTRACTOR's costs associated with the performance of the Work. These costs comprise direct labor, materials, tools, equipment, transportation, supplies, incidentals, and subcontract Work; and indirect costs such as field and home office overhead, consulting and design services, establishment, operation and removal of general plant, taxes, insurance, permits, bond, profit, and contingencies for the performance of all Work specified.

C. The costs for conforming to the requirements for measuring quantities shall be considered included in the fixed, unit, or lump-sum prices paid for the quantities being measured, and no additional compensation will be made therefore.

D. Except for items subject to the Variation in Quantities clause, the unit prices listed in the Payment Schedule shall be applicable for calculating the amount payable under each item of the Schedule. Estimated quantities indicated in the Payment Schedule are for bidding purposes only. Payment will be determined by actual measured quantities of the Work installed/performed as verified by the INSPECTOR.

E. Work specified or shown on the drawings for which the Payment Schedule does not provide a separate lump sum or unit price is considered incidental and is not separately paid. The cost for such Work is compensated in the prices bid for other Work items and no additional compensation shall be allowed.

1.02 MEASUREMENT OF QUANTITIES

A. Measure quantities in accordance with standard industry practice and as specified herein. The CITY will verify measurements. Measure quantities to the nearest whole number of units. Round down fractional units less than one-half; round up fractional units one-half or greater.

1. Measure sewer debris volumes by weight as described herein.

2. Measure areas in two mutually perpendicular axes in the plane of the surface being measured.

3. Measure linear quantities along the longitudinal centerline of the item, except as otherwise specified.

B. Measurement of a lump sum item shall be for the entire item, unit of Work, structure, or combination thereof, as listed or indicated in the Payment Schedule, except as otherwise

specified. Progress payments for lump sum items in the Payment Schedule shall be made in accordance with Section 01298.

C. Determine quantities of Work performed for payment purposes and submit them to the INSPECTOR for approval. Assist the INSPECTOR in the taking of measurements by providing equipment, workers, and survey crews as required to verify quantities in accordance with the provisions for measurement specified herein.

1.03 REJECTED, EXCESS, AND WASTED MATERIALS

A. The following shall not be measured for payment:

1. Quantities of material wasted or otherwise disposed.

2. Rejected loads of material, including material rejected after it has been placed for failure to comply with specified requirements.

3. Material remaining on the transporting vehicle or in the pipeline.

4. Muck material not removed from designated location.

5. Material placed outside specified or indicated lines or limits.

6. Material not incorporated into the Work.

7. Material remaining on hand after completion of the Work.

B. No payment will be made for loading, hauling, and disposing of rejected material.

1.04 PAYMENT SCHEDULE FOR LA HANDS ART SCULPTURE FOUNDATIONS

A. **BID ITEM 29: Art Piece Foundation and Pedestal** (Lump Sum)

1. This lump sum bid item compensates the CONTRACTOR for the necessary labor, tools, equipment and materials for the construction of two (2) foundations and pedestals. Installation of the ARTWORK is by other (refer to Sections 01112 and 01120 for more information).

B. **BID ITEM 30: Allowance Items**

1. Allowance items have been established in the Bid Schedule to compensate the CONTRACTOR for the cost of performing such items as the CITY may require for the construction of the Work, but for which it is impracticable to ascertain the scope prior to bid. If the total cost compensable under each allowance item differs from the amount set forth in the SCHEDULE OF WORK AND PRICES, the Contract Price shall be adjusted by a Change Order for the difference between the total actual costs and the allowance amount as an additional amount due the CONTRACTOR or a credit to the CITY, as appropriate.

2. Reimbursement for all allowance items shall be as determined by Section 01212.

3. The allowance items are as follows:

a. **Bid Item 30: Allowance for Art Piece Accent Lighting**

This allowance shall be used to compensate the CONTRACTOR for the necessary labor, tools, equipment and materials for the installation of electrical conduit, wiring, and accent lighting fixture(s) for each art piece. For further details refer to section 01112.

(END OF SECTION)

SECTION 01721
MOBILIZATION

1.1 THE REQUIREMENT

A. General

Whether Mobilization is included as a Contract Bid Item in the Bid Proposal Form or specified as part of the lump sum in the Contract Documents, the cost of labor, equipment, materials and incidentals for doing all the work in mobilization (in advance of construction operations and not directly attributable to any specific bid item) shall be included in the Contract Price Breakdown and progress payment estimate. If there is no mobilization bid item the CONTRACTOR shall submit to the INSPECTOR for approval the Contract Price Breakdown with the amount established for mobilization.

Mobilization shall include, but not be limited to, the following items, all as required for the proper performance and completion of the Work:

1. Obtaining all permits, licenses, insurance, and bonds. Providing copies to the ENGINEER.

2. Moving onto the Jobsite all of CONTRACTOR'S plant and equipment as required.

3. Erecting temporary buildings and other construction facilities.

4. Installing temporary construction power and wiring.

5. Establishing fire protection system for its temporary facilities.

6. Developing construction water supply.

7. Providing field office trailers for the CONTRACTOR, complete with all specified equipment, furnishings and utility services.

8. Providing sanitary facilities or connecting to onsite sanitary facilities as specified.

9. Providing for potable water facilities as specified. This includes a means by which all on site CONTRACTOR, Subcontractor or supplier personnel can wash their hands with soap.

10. Arranging for, and erection of, CONTRACTOR'S work and storage yards and sheds.

11. Submitting all required Subcontractor insurance certificates and bonds.

12. Posting all CAL/OSHA required notices and establishment of safety programs.

13. Having the CONTRACTOR'S representative at the Jobsite full time.

14. Furnishing of Construction Schedule, Contract Price Breakdown and Submittal Schedules.

15. Erecting all temporary fencing including removal and disposal of existing temporary fencing.

16. Erecting CONTRACTOR signs. The names, addresses, and specialties of CONTRACTORS, subcontractors, engineers or architects may be displayed on removable signs. The size and location shall be subject to the ENGINEER'S approval. Commercial advertising matter shall not be attached to or painted on the surfaces of buildings, fences, canopies or barricades.

17. Installing Building Credit signs and Advance Construction Notice signs. The Building Credit sign shall be submitted to the ENGINEER for approval prior to installation. Refer to GR Section 01581 – Project Signs, for additional requirements.

18. Providing an air-conditioned meeting room with a conference table, a minimum of 10 chairs and utilities for construction meetings within the ENGINEER'S field office.

19. Furnishing and set up of separate field office(s) for the ENGINEER and INSPECTOR. If it is necessary to relocate the ENGINEER'S or INSPECTOR'S job office to a new facility or relocation during the Contract provide the required labor and equipment at no additional cost. The new facility shall be properly equipped and conform to the requirements shown in Subsection B.2, Field Offices herein. The CONTRACTOR shall obtain the ENGINEER'S approval of the new location thirty (30) days in advance.

B. Field Offices For The Inspector And The Engineer

1. Unless specified otherwise, the CONTRACTOR shall, at no cost to the CITY, furnish, install, maintain, and remove all temporary light, telephone, power and water (including piping, wiring, lamps and other equipment necessary for the field offices).

2. The CONTRACTOR shall furnish the ENGINEER and the INSPECTOR, for the duration of the contract, and through the STARTUP ASSISTANCE period, at no additional cost to the CITY furnished field offices with janitorial services and maintenance agreements for all equipment provided under this Section. The offices shall have a minimum floor space of 720 square feet, door(s), and windows. All exterior doors and windows shall be provided with screens. All exterior doors shall be provided with door handles with double dead bolt locks and the CONTRACTOR shall provide the INSPECTOR and ENGINEER keys as requested by the INSPECTOR and ENGINEER. Each field office shall be furnished as follows:

   a. ENGINEER and INSPECTOR'S offices: 1 - 12' conference table, 14 - padded folding chairs (10 minimum for conference table), 1 - 6' folding table, 2 - L-shaped office desks with a minimum of 30 square feet of work surface, 2 - office chairs (adjustable height

and armrests, reclining), 1 - plan rack, 1 - plan table (minimum 42"H 34"Wx72"L work surface. Contractor may build onsite. Work surface shall be smooth, 3/4-inch medium density fiberboard (MDF) with finish trim on all edges. Provide storage shelves under plan counter), 2 - 4-drawer filing cabinets suitable to hold letter or legal size hanging file folders, 2 - book shelves with minimum of 4 adjustable shelves, and 3 - 36"x48" minimum white boards (or dry erase wallpaper).

b. ENGINEER'S Equipment: 2 - 27" minimum computer monitors with at least 1 HDMI port, 2 - laptops (15" min display, Windows 10 minimum, Intel processor, 16GB RAM minimum, 1TB HD minimum, WiFi, Bluetooth, HDMI port, USB port, USB-C port, built in webcam & speakers, Internet Security software), 2 - Bluetooth computer mouse, 2 - Bluebeam Revu licenses (latest version), and 1 - Color printer/copier/scanner with WiFi capable of printing and scanning 11x17 documents. Maintenance, paper (letter and tabloid sizes) and ink to be provided throughout the duration of the contract.

c. Heating and air conditioning of sufficient capacity shall be provided at no expense to the CITY to adequately control the temperature at all times.

d. Bottled drinking water shall be provided within the office. Sanitary facilities shall be provided directly adjoining the office for the sole use of the ENGINEER and the INSPECTOR. Sanitary facilities shall include a toilet and wash basin with hot and cold running water.

e. Extended area, non-coin operated telephone service shall be provided within the office area. The installation shall include 1 - individual telephone lines and 1 - cordless telephone for each Section.

f. 12 - Duplex convenience outlets for electrical power a minimum of four per staff person.

g. Outdoor lighting fixtures with 300 Watt bulb to effectively light the area around the office facility.

h. Maintenance and service agreements for all office equipment during the contract period.

i. The CONTRACTOR shall provide janitorial services weekly for the field offices for the duration of the Contract Work.

j. Any computer equipment or software furnished under this section or under an Allowance for City Field Offices shall be the property of the City at the end of the project.

k. The CONTRACTOR shall provide a high speed internet connection for the duration of the Contract and through the start up assistance period.

C. Temporary Construction Utilities

1. Construction Water:

a. Potable water will be made available for the CONTRACTOR'S use from the existing fire hydrant system, as located on the Plans, or as directed by the ENGINEER. The CONTRACTOR shall meter water usage and pay for the cost of water consumption. The CONTRACTOR shall make arrangements with the servicing water utility company. A backflow preventer shall be provided as per the Plumbing Code.

2. Construction Power:

a. The CONTRACTOR shall provide all electrical power required in performance of the Work and shall pay all installation charges and monthly bills in connection therewith. The CONTRACTOR shall provide and maintain all temporary and permanent power. The CONTRACTOR shall pay for all permits. All temporary connections for electricity shall be subject to approval of the ENGINEER and the power company representative, and shall be removed in like manner at the CONTRACTOR'S expense prior to final acceptance of the Work.

3. Telephones:

a. The CONTRACTOR shall provide and maintain at all times during the progress of the Work, at its own expense, not less than three (3) telephones in good working order, at its own field construction office. Each such telephone shall be connected to an established exchange for toll service and with all other telephones utilized by the CONTRACTOR.

4. Temporary Ventilation:

a. The CONTRACTOR shall provide adequate means to furnish temporary ventilation within Work areas at CONTRACTOR'S own expense and conforming to applicable requirements and standards of Federal, State, County and the 2020 Los Angeles CITY Building Codes and Amendments.

D. Contractor's Temporary Storage Facilities

1. The CONTRACTOR shall provide an adequate temporary shed on the site in a location designated by the ENGINEER for the safe storage of material and equipment. The shed shall be weathertight with a wood floor above grade. The shed shall be removed upon completion of the Work, or when so ordered by the ENGINEER.

E. Sanitary Facilities

1. The CONTRACTOR shall provide adequate sanitary conveniences of an approved type for the use of persons employed on the Work, and properly secluded from public observation, shall be provided and maintained by the CONTRACTOR in such a manner and at such points as shall be required or approved by the INSPECTOR. These conveniences shall be maintained at all times without nuisances and their use shall be strictly enforced. Upon completion of the Contracted Work, they shall be removed from the premises, leaving the premises clean and free from a nuisance.

F. Job Bulletin Board

1. The CONTRACTOR shall provide and mount on the CONTRACTOR'S Field Office, where it can be readily seen by the CONTRACTOR'S employees, a substantially built 3-feet high x 4-feet wide bulletin board, with a framed glass door protected on the outside with a 2-inch x 2-inch galvanized mesh and lock.

G. Protection Enclosures

1. Precautions shall be exercised by the CONTRACTOR at all times for the protection of persons and property.

2. CONTRACTOR shall furnish (or cause to be furnished) and maintain for the duration of Contracted Work, all scaffolds, covers, tarpaulins, canopies, warning signs, steps, bridges and other temporary construction and other protective devices as required by the INSPECTOR and the Local and State Rules, Ordinances and/or Regulations necessary for protection of public and private property and public safety.

3. Such enclosures shall be of reasonably good appearance and shall be maintained free of signs, posters, writing, markings and any other thing which would detract from a reasonably good appearance.

H. Temporary Fencing and Gates

1. Provide and maintain for the duration of the Contracted Work temporary chain link fencing of design and type needed to prevent entry onto the Jobsite and exterior Work area by the public. The CONTRACTOR may utilize the existing temporary chain link fence furnished by the CITY. The CONTRACTOR may provide additional chain link fencing, or modify the existing chain link fence, where necessary to seal any openings to the Jobsite.

2. Construction shall conform to the 2020 Los Angeles City Building Codes and Amendments where adjacent to any public way.

3. Chain Link Fence:

a. Where required, conform to the 2020 Los Angeles City Building Codes and Amendments and Standard Specifications for Public Works Construction.

b. Provide an approved 8-foot high chain link fence. All vertical poles and horizontal rails, tension bars, etc. shall be in conformance with the Standard Specifications for Public Works Construction.

4. Chain Link Fence with an Opening Along Property Lines:

a. Provide an approved 8-foot high chain link fence and gate with metal supports along the property lines and/or at openings to prevent access to the Jobsite.

5. Chain Link Fence Outside Of Property Lines:

a. CONTRACTOR shall obtain all necessary written approvals from the ENGINEER and the local authorities having jurisdiction prior to erecting and temporary chain link fencing. CONTRACTOR shall remove all chain link fencing and repair all sidewalks or existing improvements after completion of Contract.

I. Plan Box

1. CONTRACTOR shall provide a plan box to store a full set of contract drawings and the project manual for the duration of the project. The box shall be of the appropriate size to contain the contract drawings and the project manual, and shall be temporary, weather tight, and include a cover, lock, and proper identification.

J. Construction Sign

1. Design: Refer to Section 01581 – PROJECT SIGNS.

2. Materials:

a. Posts: 4-inch x 6-inch redwood, C.R.A. Foundation grade.

b. Frame: Douglas fir solid stock, W.C.L.B., and Better, V.G. Finish.

c. Metal Panel: No. 22 gauge sheet steel.

d. CITY Seal: Provided by ENGINEER.

3. Fabrication:

a. Securely attach frame to posts with adequate fasteners.

b. Miter and nail frames, conceal fastenings and set nails.

c. Secure a sheet metal panel to frame with wood stops as indicated on the Contract Documents.

4. Painting:

   a. By sign painters.

   b. On all surfaces of posts, panel and frame, 1 coat of primer and 1 coat of finish paint on concealed surfaces not glued; 1 coat of primer and 2 coats of finish paint on exposed surfaces, and anti-graffiti coating.

   c. With exterior wood primer and exterior oil paint as specified in Section 09900.

   d. White finish on all surfaces; black letters and black frames reveal.

5. Installation:

   a. Set posts into natural ground; location as directed by the ENGINEER.

6. Removal:

   a. Upon completion of Contracted Work or when directed by the ENGINEER.

7. Modifications:

   a. During the course of the Contract, the CONTRACTOR may be required to make changes to lettering, as directed by the ENGINEER, up to forty (40) letters regardless of the letter size, without additional cost to the CITY.

   b. Repair and recoat the modified area in a manner that will eliminate the evidence of the changes.

K. Permits

1. The CONTRACTOR shall be responsible for obtaining and paying for all permits, licenses and fees in a timely manner, in accordance with Section 00217 of the General Conditions. The CONTRACTOR shall be aware of the expiration date of all permits, plan checks and/or extensions when the ENGINEER turns over such documents to the CONTRACTOR for construction use. If the CONTRACTOR does not obtain the permits in a timely manner, the CONTRACTOR shall be responsible for the delay, and the additional cost incurred as a result of the delay, in obtaining and paying for the permits or licenses (such as costs to re-plan check, plan modification due to code changes, etc).

2. The CONTRACTOR shall be familiar with all aspects of the Project. For the Project which requires a haul route hearing and haul route bonding as part of the Grading Permit approval process, CONTRACTOR shall

prepare and secure the Grading Permit as soon as the construction contract is awarded in order to mitigate any possible delays due to the haul route hearing, The haul route map preparations shall be as required by the Los Angeles CITY Department of Building and Safety, Grading Division, and Section 02220 – EARTHWORK of the Project Manual.

3. The CONTRACTOR shall obtain and pay for the following:

   a. Permits to Use Street Space and Deposit Building Materials

   b. Sewer Connection Permit

   c. Grading Permit

   d. Plumbing Permit

   e. Demolition Permit

   f. Heating, Ventilating, Air Conditioning

   g. Electrical Permit

   h. Fire Protection Permit for Fire Alarm System

   i. Shoring Permit

   j. Sign Permit

   k. Lead-Based Paint, Contaminated Soil Removal Notification Permit

   l. California General Construction Activity Stormwater Permit and Stormwater Pollution Prevention Plant (SWPPP) for stormwater pollution control measures for construction activities

   m. California Department of Transportation Permits (CITY will submit for plan check and pay for owner's permit. CONTRACTOR shall submit and pay for work permit)

   n. Work adjacent to and parallel to the railroad tracks will require coordination with Metro or appropriate agency. Flag men may be required during grading operations and other work deemed by Metro of having a possibility to foul the tracks. Contractor shall be responsible for all coordination with Metro, including but not limited to obtaining any required permits, paying any required fees, and paying all flagging costs.

L. Utility Services Connections

1. Within five (5) days after the Notice-to-Proceed, notify the serving utilities that the Project is under construction and furnish them dates on which

the services will be required. Furnish the ENGINEER a duplicate copy of all service requests.

2. Should any major changes to the Work indicated be necessary to complete the utility installation, notify the ENGINEER in writing at once and cease all the Work affected until approval for the required modifications has been obtained from the ENGINEER.

3. Water Service Connections: Make all arrangements with the proper authorities for the domestic water service, including the check valve and vault installations. See Civil Utility Sheets for coordination. The CONTRACTOR will pay for all fees and charges. Construction water is to be separately arranged and paid for by the CONTRACTOR. CONTRACTOR shall contact Los Angeles Department of Water and Power at 1-800-499-8840. If the CONTRACTOR uses an existing water supply for construction the billing shall be transferred to the CONTRACTOR prior to the start of construction. A duplicate of the transfer documentation shall be provided to the ENGINEER.

4. Power Service Connections: Make all arrangements with the proper authorities for the new power service connections and testing of electrical equipment and control as part of the contract. See Electrical (E) Sheets for coordination. The CONTRACTOR will pay for all fees and charges. Power for construction and testing equipment to be separately arranged and paid for by the CONTRACTOR. The CONTRACTOR shall contact Los Angeles Department of Water and Power at 1-800-499-8840.

5. Telephone Service Connections: Make all arrangements with the proper authorities for the telephone system connections to nearest telephone service manhole or pole of the serving agency as part of the Contract, see Electrical Sheets for coordination. The CONTRACTOR will pay for all fees and charges. Construction telephones to be separately arranged and paid for by the CONTRACTOR. The CONTRACTOR shall be responsible for all coordination with the local utility provider.

7. After all utility services are completed, all street improvements shall be repaired. CONTRACTOR shall include in the contract and pay for street damage restoration fee as indicated in Section 02510 - YARD WORK AND STREET WORK and attachment shown herein.

8. If the CONTRACTOR is delayed during the inspections by local authorized agencies or work by utility companies, not the fault of the CONTRACTOR and a critical path is impacted, the CONTRACTOR shall be entitled to a non-compensable time extension and shall have no claim for any other compensation for such delay.

(END OF SECTION)

(SEE ATTACHMENT)

ATTACHMENTS TO SECTION 01721

Attachments to General Requirements Section 01721 consists of one (1) document, as follows:

ATTACHMENT NUMBER	TITLE OF ATTACHMENT	NUMBER OF PAGES IN THIS ATTACHMENT
01721-A1	Construction Water Supply Schematic	1
2	Trailer Sample	1

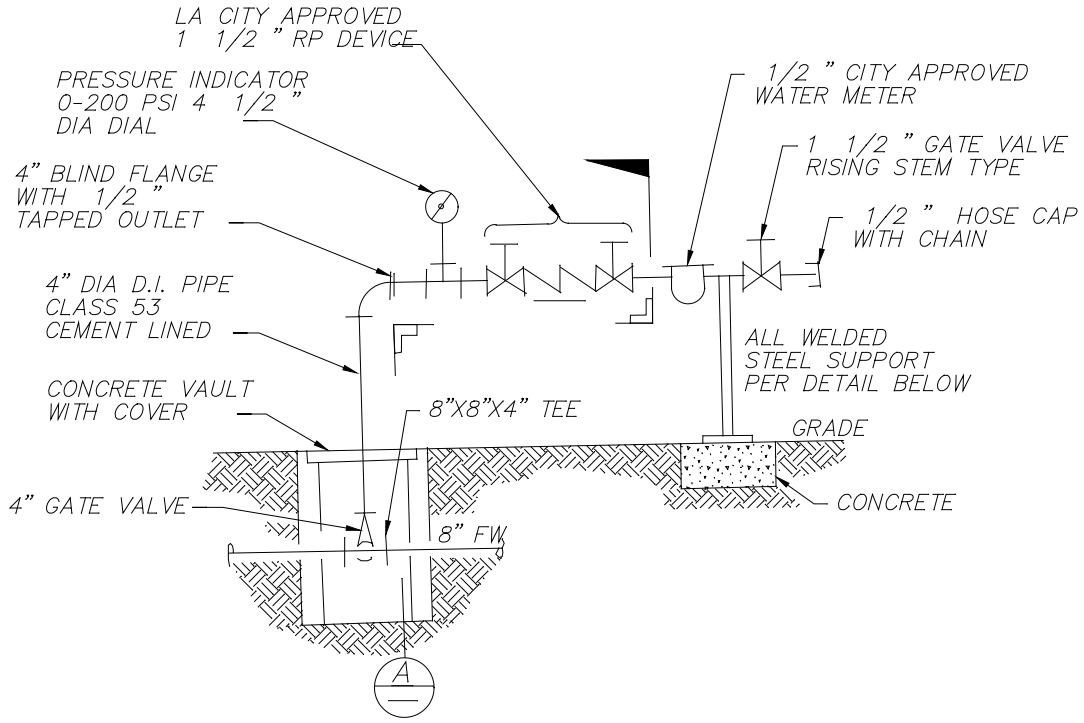

CONSTRUCTION WATER SUPPLY DETAIL
NTS

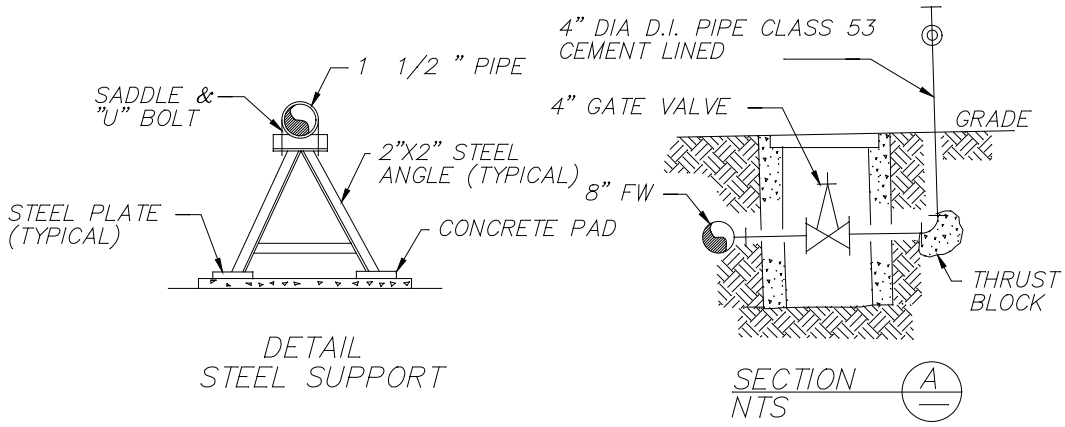

CONSTRUCTION WATER SUPPLY SCHEMATICS
NTS

SAMPLE

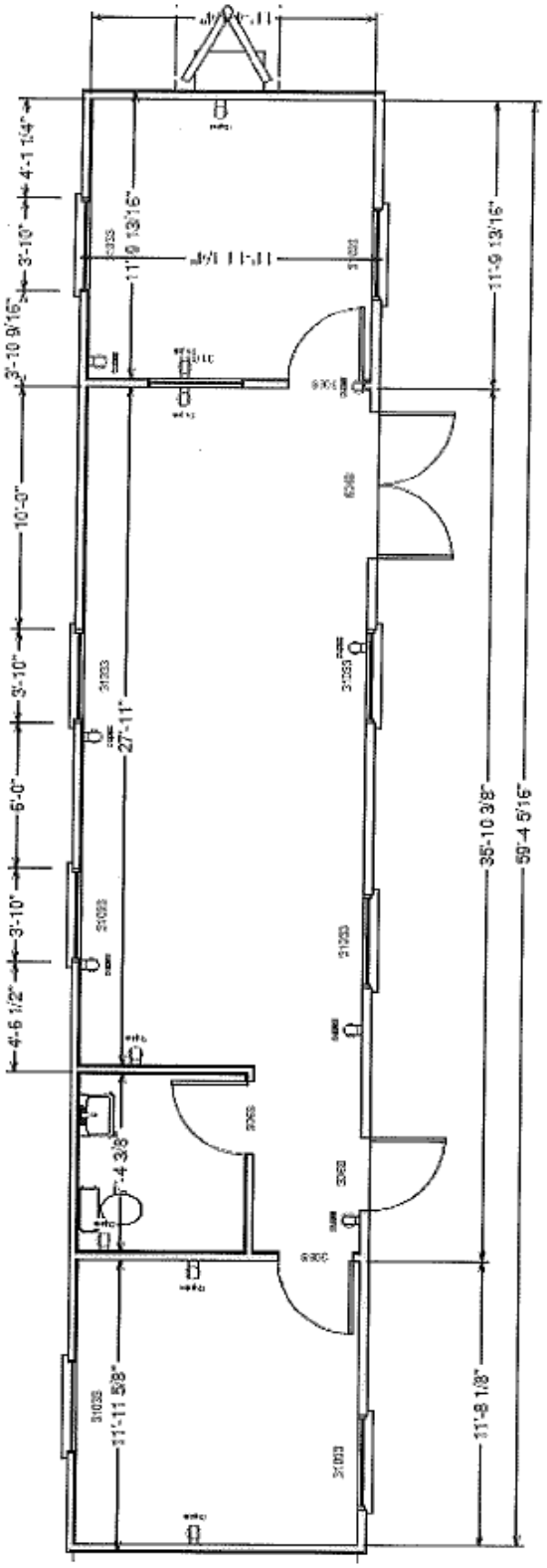
4'-1 1/4"
3'-10"
3'-10 9/16"
10'-0"
3'-10"
6'-0"
3'-10"
4'-6 1/2"
11'-9 13/16"
27'-11"
4'-4 3/8"
11'-11 5/8"
35'-10 3/8"
59'-4 5/16"
11'-8 1/8"

ERIC GARCETTI
MAYOR

CITY OF LOS ANGELES
CALIFORNIA

Addendum No. 2

August 26, 2022

ENGINEERING
CITY OF LOS ANGELES

TED ALLEN, PE
CITY ENGINEER

Sixth Street Viaduct – Park, Arts, and River Connectivity (PARC) Improvements; Department of Cultural Affairs LA Hands Art Piece Foundations; and CBD Sewer Rehab Unit 11A – 6th Street Siphon to Santa Fe Avenue
W.O. E700235F & SZC14224

Bidders are required to acknowledge receipt of this addendum in the space provided on page 1-4 of the Bid Proposal. This addendum consists of this one-page transmittal and 1 attachment totaling 4 pages.

Bidders are hereby notified of the following changes:

I. MODIFICATIONS TO BID PROPOSAL:

1. **Replace** the **Schedule of Work and Prices** in **Part I** of the Bid Proposal with **attached revised Schedule of Work and Prices** (3 Pages).

   FAILURE BY THE BIDDER TO COMPLETE AND SUBMIT THE ATTACHED SCHEDULE OF WORK AND PRICES SPECIFIED HEREIN MAY RESULT IN THE BOARD OF PUBLIC WORKS DECLARING THE BID NON-RESPONSIVE.

2. There was no change on **City Engineer's Estimate**.

Sincerely,

Digitally signed by Jonathan Carroll
Date: 2022.08.26 12:51:13 -07'00'

Gregg Vandergriff, P.E.
Division Engineer
Project Award and Control Division
Bureau of Engineering

SCHEDULE OF WORK AND PRICES

City of Los Angeles - Department of Public Works - Bureau of Engineering

Sixth Street Viaduct – Park, Arts, and River Connectivity (PARC) Improvements; Department of Cultural Affairs LA Hands Art Piece Foundations; and CBD Sewer Rehab Unit 11A – 6th Street Siphon to Santa Fe Avenue

W.O. E700235F, SZC14224

ITEM	DESCRIPTION	UNIT	QTY.	UNIT PRICE	ITEM TOTAL
	Sixth Street Viaduct – Park, Arts, and River Connectivity (PARC) ImprovementsW.O. E700235F				
1	General Mobilization	LS			
2	**ALLOWANCE for Electrical and Water Service Fees**				**$225,000**
3	**ALLOWANCE for Engineer's and Inspector's Field Office Supplies**				**$14,172**
4	**ALLOWANCE for Differing Site Conditions**				**$600,000**
5	**ALLOWANCE for Permits**				**$175,000**
6	**ALLOWANCE for Opportunity to Partner**				**$30,000**
7	**ALLOWANCE for City Inspection**				**$115,000**
8	**ALLOWANCE for Sewer Bypass**				**$50,000**
9	**ALLOWANCE for Additional Potholing**				**$30,000**
10	**ALLOWANCE for Archaeological Monitoring**				**$50,000**
11	**ALLOWANCE for Street Damage Restoration Fee**				**$25,000**
12	**ALLOWANCE for Urban Forest**				**$140,000**
13	West Park Improvements	LS			
14	Arts Plaza and Los Angeles River Tunnel Improvements	LS			
15	East Park Improvements	LS			
16	Roadway Improvements	LS			
17	Security Camera Infrastructure	LS			
18	Remedial Action Plan Permitting and Regulatory Compliance	LS			
19	Remedial Action Plan Preliminary Activities	LS			
20	Remedial Action Plan Engineering Oversight	LS			
21	Remedial Action Plan Soil Excavation	CY	16150		
22	Remedial Action Plan RCRA-Hazardous Waste Soil Removal	TON	8910		
23	Remedial Action Plan Non-RCRA-Hazardous Waste Soil Removal	TON	14924		
24	Remedial Action Plan Non-Hazardous Waste Soil Removal	TON	149		
25	Remedial Action Plan Soil Vapor Extraction Pilot Test in AOC 8	LS			
26	Remedial Action Plan Soil Vapor Extraction in AOC 7	LS			

SCHEDULE OF WORK AND PRICES

City of Los Angeles - Department of Public Works - Bureau of Engineering

Sixth Street Viaduct – Park, Arts, and River Connectivity (PARC) Improvements; Department of Cultural Affairs LA Hands Art Piece Foundations; and CBD Sewer Rehab Unit 11A – 6th Street Siphon to Santa Fe Avenue

W.O. E700235F, SZC14224

ITEM	DESCRIPTION	UNIT	QTY.	UNIT PRICE	ITEM TOTAL
27	Remedial Action Plan Waste Stabilization Analysis	LS			
28	Methane Testing	LS			
	SUBTOTAL (BID ITEMS 1-28)				**$**
	Department of Cultural Affairs LA Hands Art Piece Foundations W.O. NO. E700235F				
29	Art Piece Foundation and Pedestal	LS			
30	**ALLOWANCE for Art Piece Accent Lighting per GRs 01112 & 01212**				**$10,000**
	SUBTOTAL (BID ITEMS 29-30)				**$**
	CBD Sewer Rehab Unit 11A – 6th Street Siphon to Santa Fe Avenue W.O. SZC14224				
31	General Mobilization	LS			
32	**Allowance for Payment for Permits per GRs 01212 & 01292**				**$10,000**
33	**Allowance for Differing Site Conditions per GRs 01212 & 01253**				**$40,000**
34	**Allowance for Community Impact Mitigation**				**$50,000**
35	Temporary Sewer Bypass	LS			
36	Worksite Traffic Control	LS			
37	Pre and Post CCTV of existing host pipe	LF	932		
38	Sewer Cleaning & Debris Removal	LF	466		
39	Storing, hauling and disposal of debris - Non hazardous / Contaminated	TON	28		
40	Storing, hauling and disposal of debris - Incremental Cost (hazardous / Contaminated)	TON	28		
41	Rehabilitate Existing 36" Circular Sewer by CIPP	LF	466		
42	Construct & Backfill Pit #1, and remove and replace 36" VCP	LS			
43	Partially Remove and Reconstruct and Rehabilitate (Type I Liner) Existing Maintenance Hole (51509157)	LS			
44	Partially Remove and Reconstruct and Rehabilitate (Type I liner) Existing Chamber (51509108)	LS			
45	Rehabilitate Exisitng Siphon Outlet Structure (51509151) by Type 1 Liner	LS			
46	Reconnect existing Lateral sewer (CN 51509149)	LS			
47	Grind One (1) Protruding 8" Lateral sewer at CN 51509149 and Two Protruding House Connections near stations 223+97 and 223+98	LS			
	SUBTOTAL (BID ITEMS 31-47)				

SCHEDULE OF WORK AND PRICES

City of Los Angeles - Department of Public Works - Bureau of Engineering

Sixth Street Viaduct – Park, Arts, and River Connectivity (PARC) Improvements; Department of Cultural Affairs LA Hands Art Piece Foundations; and CBD Sewer Rehab Unit 11A – 6th Street Siphon to Santa Fe Avenue

W.O. E700235F, SZC14224

ITEM	DESCRIPTION	UNIT	QTY.	UNIT PRICE	ITEM TOTAL
	TOTAL BID AMOUNT (BID ITEMS 1-47):				**$**

Unit abbreviation: EA=Each, BIN=Bin, GAL=Gallon, LF=Linear Foot, LS=Lump Sum, MOS=Months, TON=Ton.

NOTES

A. MOBILIZATION: If the successful bidder shows an amount in excess of $1,353,538 for Mobilization **(Bid Item No. 1)**, amount in excess of $40,000 for Mobilization **(Bid Item No. 31)**, the bidder will be paid $1,353,538 **(Bid Item No. 1)** and $40,000 **(Bid Item No. 31)** per Specification Section 01292 of the General Requirements. The difference between the Contractor's bid amount for **Bid Item No. 1 and $1,353,538** and **Bid Item No. 31 and $40,000** will be paid after the Statement of Completion has been issued.

B. FIXED COST ITEMS: Bid Item Nos. **2-12, 30, and 32-34** are considered Fixed Cost Items at the time of bid. The pre-printed dollar amounts in figures listed in the SCHEDULE OF WORK AND PRICES shall not be changed or deleted.

C. SPECIALTY ITEMS: Bid Items Nos. **6, 8, 10, 17, 20, 22, 25-28, 30, and 34-47** are designated as "Specialty Items."

ERIC GARCETTI
MAYOR

CITY OF LOS ANGELES
CALIFORNIA

Addendum No. 3

August 31, 2022

ENGINEERING
CITY OF LOS ANGELES

TED ALLEN, PE
CITY ENGINEER

Sixth Street Viaduct – Park, Arts, and River Connectivity (PARC) Improvements; Department of Cultural Affairs LA Hands Art Piece Foundations; and CBD Sewer Rehab Unit 11A – 6th Street Siphon to Santa Fe Avenue
W.O. E700235F & SZC14224

Bidders are required to acknowledge receipt of this addendum in the space provided on page 1-4 of the Bid Proposal. This addendum consists of this one-page transmittal and 2 attachments totaling 84 pages.

Bidders are hereby notified of the following changes:

I. MODIFICATIONS TO BID PROPOSAL:

1. The Board of Public Works (Board) approved the use of the Project Labor Agreement (PLA) for this project on August 31, 2022. Please refer to the PLA documents attached to this Addendum.

2. **Add** the following to the end of the **Table of Contents, Part IV:**

   "Project Labor Agreement Information
   - Project Labor Agreement (PLA)…… 68 pages
   - Public Works Infrastructure Stabilization Policy…… 15 pages"

3. **Add** the attached Project Labor Agreement Information to Part IV of the Bid Proposal.
   - Project Labor Agreement (PLA) (68 pages).
   - Public Works Infrastructure Stabilization Policy (15 pages).

4. **Add** the following language to Important Notice:

   "Q. PROJECT LABOR AGREEMENT INFORMATION

   The contractor needs to abide by the Project Labor Agreement Information contained in Part IV of this Bid Proposal."

Sincerely,

Gregg Vandergriff, P.E.
Division Engineer
Project Award and Control Division
Bureau of Engineering

ADDENDUM 3

CITY OF LOS ANGELES

Department of Public Works

Project Labor Agreement (PLA)

2020 - 2030

WITH

LOS ANGELES/ORANGE COUNTIES
BUILDING AND CONSTRUCTION TRADES COUNCIL
Affiliated with the Building & Construction Trades Department (AFL/CIO)
Craft International Unions and any other craft labor Unions signatory to this Agreement

PROJECT LABOR AGREEMENT
CITY OF LOS ANGELES DEPARTMENT OF PUBLIC WORKS

TABLE OF CONTENTS

Introduction/Findings 3
I. Definitions 6
II. Scope of Agreement 11
III. Effect of Agreement.....16
IV. Work Stoppages, Strikes, Sympathy Strikes and Lockouts 17
V. No Discrimination.....24
VI. Union Security.....25
VII. Referral.....25
VIII. Wages & Benefits 36
IX. Employee Grievance Procedure 38
X. Department Policies and Procedures.....38
XI. Compliance 39
XII. Joint Administrative Committee 40
XIII. Grievance Arbitration Procedure 41
XIV. Jurisdictional Disputes / Pre-Job Conference.....43
XV. Management Rights 45
XVI. Safety, Protection of Person and Property.....47
XVII. Savings Clause.....48
XVIII. Steward 49
XIX. Term.....50

Attachment "A" – Letter of Assent
Attachment "B" – Los Angeles/Orange Counties Building and Construction Trades Council Approved Drug and Alcohol Testing Policy
Attachment "C" – Craft Request Form
Attachment "D" – Trade Union Contact Numbers
Attachment "E" – Public Infrastructure Project Series (PIPS) List

PROJECT LABOR AGREEMENT
CITY OF LOS ANGELES

DEPARTMENT OF PUBLIC WORKS

INTRODUCTION AND FINDINGS

The purpose of this Project Labor Agreement ("Agreement") is to promote efficiency of construction operations during the construction of various projects within the Public Works' Capital Improvement Program (CIP) and provide for the orderly settlement of labor disputes and grievances without strikes or lockouts, thereby promoting the public interest in assuring timely and economical completion of these Projects.

WHEREAS, the Department of Public Works (DPW) is responsible for construction, renovation, maintenance and operation of City of Los Angeles (City) facilities and infrastructure, including capital improvement projects for major public facilities and systems throughout the City; and

WHEREAS, the safe, timely and successful completion of these projects with a trained workforce is of utmost importance to the DPW and the general public in the City; and

WHEREAS, the work to be done will require maximum cooperation from the many Parties who will be involved; and

WHEREAS, it is recognized that projects of a certain magnitude with multiple contractors and bargaining units on the job site at the same time over an extended period of time create the potential for work disruption without there being an overriding commitment to maintain continuity of work; and

WHEREAS, the interests of the general public, the City, the Unions, contractors, subcontractors, employers and workers would be best served if the construction work

proceeded in an orderly manner free of disruption because of strikes, sympathy strikes, work stoppages, picketing, lockout, slowdowns or other interferences with work; and

WHEREAS, large numbers of workers of various skills will be required in the performance of the construction work, including those to be represented by the Unions affiliated with the Los Angeles/Orange Counties Building and Construction Trades Council and any other craft labor organization which are signatory to this Agreement, employed by contractors and subcontractors who are signatory to agreements with said labor organizations; and

WHEREAS, the Contractor/Subcontractor/Employer(s) (C/S/E) and the Unions desire to mutually establish and stabilize wages, hours and working conditions for the workers employed on these Projects by the C/S/Es, and further, to encourage close cooperation among the C/S/Es, and the Unions to the end that a satisfactory, continuous and harmonious relationship will exist among the Parties to this Agreement; and

WHEREAS, this Agreement is not intended to replace, interfere with, abrogate, diminish, or modify existing local or national collective bargaining agreements in effect during the duration of this Agreement, insofar as a legally binding agreement exists between the C/S/Es and the affected Unions, except to the extent that the provisions of this Agreement are inconsistent with said collective bargaining agreements, in which event, the provisions of this Agreement shall prevail; and further, it is understood that C/S/Es are bound and shall remain bound, for the duration of this Agreement by the terms of this Agreement and applicable local and national collective bargaining agreements for the craft work performed, established between the signatory Unions and C/S/Es, in effect and covering the area of these Projects; and

WHEREAS, this Agreement is not intended to have an adverse impact on the policy of the City to maximize business opportunities for minority, women and other business enterprises in City contracts; and

WHEREAS, increasing access to employment opportunities with prevailing wages is one way for the City to directly combat poverty and stimulate economic reinvestment; and

WHEREAS, the City has adopted the City Contractor's Use of Criminal History for Consideration of Employment Applications Ordinance to help ensure a discrimination-free, diverse and equitable hiring environment; and

WHEREAS, the DPW has adopted a departmental Agreement which will provide construction employment and training opportunities in ways calculated to mitigate the harms caused by poverty, unemployment and underemployment; and

WHEREAS, this Agreement reflects the City's adoption of policy to promote diversity, inclusion and racial equity in and around all working environments of City business and operations, including, but not limited to recruitment, hiring, retention, training and contracting; and

WHEREAS, this Agreement reflects a commitment by all parties to the diversity in the workforce hiring that reflect levels of minority, women and other worker utilization at levels which are representative of the relevant workforce of these groups in the Greater Los Angeles Area as determined by the U.S. Census Bureau; and

WHEREAS, the contracts for the construction of Projects will be awarded in accordance with the applicable provisions of the DPW's Administrative Policies and Procedures; and

WHEREAS, the Parties signatory to this Agreement pledge to work towards a mutually satisfactory completion of Projects;

NOW, THEREFORE, IT IS AGREED BETWEEN AND AMONG THE PARTIES HERETO, AS FOLLOWS:

ARTICLE I

DEFINITIONS

1.1 "Agreement" is defined as this Department of Public Works Project Labor Agreement and its applicability to all Projects.

1.2 "Apprentice" is defined as any worker who is indentured in a bona fide Labor/Management construction apprenticeship program, registered and approved by the State of California Department of Industrial Relations (DIR) Division of Apprenticeship Standards (DAS) or in the case of Projects with federal funding, indentured in a bona fide Labor/Management construction apprenticeship program, approved by the US Department of Labor (DOL) and California DAS.

1.3 "Apprenticeship Program" is defined as any Labor/Management construction apprenticeship program certified and approved by the California Division of Apprenticeship Standards (DAS) or in the case of Projects with federal funding, approved by the US DOL and California DAS.

1.4 "Awarding Authority" is defined as any board or commission of the City, or any employee or officer of the City, that is authorized to award or enter into any contract on behalf of the City.

1.5 "Board" is defined as the City of Los Angeles Board of Public Works.

1.6 "Bureau of Contract Administration" (BCA) is defined as the designated bureau

within the City's DPW responsible for administering this Agreement.

1.7 "City" is defined as the City of Los Angeles, a municipal corporation, and all City awarding authorities.

1.8 "Construction contract" is defined as a City contract which has been certified by the City Controller, awarded by the Board, and is necessary to complete the DPW Project.

1.9 "Contractor/Subcontractor/Employer(s)" (C/S/E) is defined as any individual firm, partnership, owner operator, or corporation, or combination thereof, including joint ventures, which is an independent business enterprise, and which is properly licensed for the work intended, and has entered into a contract covered under this Agreement or any of its contractors or subcontractors/owner operators of any tier, with respect to the construction of any part of the Project(s) under contract terms and conditions approved by the Board and incorporated within this Agreement.

1.10 "Core Worker" is defined as a verifiable member of a C/S/E's core workforce for the purpose of this Agreement if the worker's name appears on the C/S/E's active payroll for 60 of 100 working days immediately prior to the award of the construction contract; who has worked at least two-thousand (2,000) hours in the construction craft in which they are employed, during the prior four (4) years; and meets all standards required by applicable local, state or federal law or regulation.

1.11 "Covered Project(s)" or "Project" is defined as a project or projects which have been included within the Public Infrastructure Program Series List ("PIPS") and covered by this Agreement or so designated by the Board of Public Works. The Board may identify additional projects that are appropriate for coverage by the

Agreement for inclusion under the PIPS and include such projects by Board Resolution. The Board shall request an annual review of the DPW Capital Improvement Program to identify any new projects appropriate for inclusion within the PIPS.

1.12 "Employment Hiring Plan" (EHP) is defined as a C/S/E's detailed hiring plan as described in BCA's Targeted Hiring Guidelines for Contractors and the Policy.

1.13 "Engineer" is defined as the City Engineer or his/her authorized representative.

1.14 "FHWA Project" is defined as a DPW Project that is funded in whole or in part by the Federal Highway Administration (FHWA).

1.15 "Jobs Coordinator" is defined as the Prime Contractor's designated person, agent or agency that will coordinate a covered project's local hire referral process with the C/S/E, Unions and other referral organization, such as those listed in BCA's Targeted Hiring Guidelines for Contractors. The Jobs Coordinator will be responsible for documenting the hiring process of all workers on a covered project, and must be able to demonstrate or document to the BCA that it has the requisite qualification and/or experience to fulfill the duties and responsibilities as outlined in the Policy.

1.16 "Joint Administrative Committee" (JAC) is defined as described in Article XII of this Agreement.

1/.17 "LA/OCBTC" (Trades Council) is defined as the Los Angeles/Orange Counties Building and Construction Trades Council.

1.18 "Letter of Assent" is defined as the document that each C/S/E (of any tier) must sign and submit to the City's Inspector of Public Works, which formally binds them

to adherence to all the forms, requirements and conditions of this Agreement and Policy.

1.19 "Local Resident" is defined as either an individual whose primary residence is within Tier 1 or 2 zip code areas, or an individual whose primary place of residence is within the City of Los Angeles and has been identified as a Transitional Worker.

1.20 "Long-Term Unemployment" is defined as being jobless for 27 weeks or more, or as otherwise defined by the Bureau of Labor Statistics.

1.21 "Master Labor Agreement" is defined as the local area collective bargaining agreements negotiated and executed from time to time by (i) the applicable employer associations and (ii) Local Unions having jurisdiction over Covered Projects.

1.22 "Plan" is defined as the Plan for the Settlement of Jurisdictional Disputes in the Construction Industry as referenced in Article XIV of this Agreement.

1.23 "Policy" is defined as the DPW Public Works Infrastructure Stabilization Policy.

1.24 "Public Infrastructure Program Series List" (PIPS) is defined as all projects contained in the adopted PIPS (Attachment "E") that are covered under this Agreement.

1.25 "Subscription Agreement" is defined as the contract between a C/S/E and a Union's Labor/Management Trust Fund(s) that allows the C/S/E to make the appropriate fringe benefit contributions in accordance with the contract terms.

1.26 "Targeted Hiring Guidelines for Contractors" is defined as the document provided by the BCA to assist C/S/E's in implementing the targeted hiring procedures.

1.27 "Tier 1" is defined as zip codes within the City, identified in Article 7.4 of this

Agreement, having at least 2 census tracts (or portion thereof) in which the median household income is less than 50% of the County of Los Angeles' median annual household income, and/or where the unemployment rate exceeds 200% of the County of Los Angeles' unemployment rate as reported by the most recent available U.S Census Bureau data.

1.28 "Tier 2" is defined as zip codes within the City, identified in Article 7.5 of this Agreement, having at least 2 census tracts (or portion thereof) in which the median household income is less than the County of Los Angeles' median annual household income, and/or where the unemployment rate exceeds 100% of the County of Los Angeles' unemployment rate as reported by the most recent Census Bureau data.

1.29 "Transitional Worker" is defined as an individual whose primary place of residence is within the City of Los Angeles and who prior to commencing work on a Project has been certified as satisfying at least one of the following Criteria: (1) having Veteran status; having a documented history of involvement with the criminal justice system; or being homeless. If the Jobs Coordinator or Employer is not able to identify anyone using Criteria (1), then Criteria (2) may be used. Criteria (2) is an individual that is either a graduate of an LA/OCBTC approved MC3 pre-apprenticeship program or facing two of the following barriers to employment: having a household income less than 50% of the Los Angeles County's median annual household income, receiving public assistance, lacking a GED or high school diploma, being a custodial single parent, suffering from long-term unemployment, being emancipated from the foster care system, or being an

apprentice with less than 15% of the apprenticeship hours required to graduate to journey level in a program as described in Section 1.3 above.

1.30 "Union(s)" or "Signatory Unions" is defined as the Los Angeles/Orange Counties Building and Construction Trades Council affiliated with the Building & Construction Trades Department (AFL/CIO) Craft International Unions or any other craft labor organization signatory to this Agreement, acting in their own behalf and on behalf of their respective affiliates and member organizations whose names are subscribed hereto and who have through their officers executed this Agreement.

ARTICLE II

SCOPE OF AGREEMENT

2.1 Parties: The Agreement shall apply and is limited to all C/S/Es performing construction on a DPW Project, the Board, and the Unions.

2.2 Project Description: The Agreement shall apply to all PIPS construction contracts awarded by either the Board or the Awarding Authority. The Board has the absolute right to combine, consolidate or cancel contracts or portions of contracts identified as part of the Project. Should the Board remove any contract from the Project and thereafter authorize that construction work be commenced on the contract, the contract may, at the discretion of the Board, be performed under the terms of the Agreement. After the fourth (4th) year of this Agreement, the parties shall meet and discuss additional and newer projects to be listed on a revised Attachment E, which projects shall be covered under this Agreement. Additionally, it is understood by the Parties that the Board may at any time, and at its sole

discretion, add additional projects under this Agreement not otherwise described in this Section 2.2.

2.3 Project Labor Disputes: The provisions of this Agreement, including the Master Labor Agreements ("MLA"), (which are the local collective bargaining agreements of the signatory Unions having jurisdiction over the work on the Project, as such may be changed from time-to-time and which are incorporated herein by reference) shall apply to the work covered by this Agreement. It is understood that this is a self-contained, stand alone Agreement and that by virtue of having become bound to this Project Labor Agreement, neither the Prime Contractor, Employer, nor the Subcontractor (of any tier) or owner-operator will be obligated to sign any other local, area, or national agreement, except as may be provided in Section 8.2, below. It is further agreed that, where there is conflict, the terms and conditions of this Agreement shall supersede and override terms and conditions of any MLA and all other national, area, or local collective bargaining agreements except for all work performed under the NTL Articles of Agreement, the National Stack/Chimney Agreement, the National Cooling Tower Agreement, all instrument calibration work and loop checking shall be performed under the terms of the UA/IBEW Joint National Agreement for Instrument and control systems Technicians, and the National Agreement of the International Union of Elevator Constructors, with the exception of Article IV (Work Stoppages, Strikes, Sympathy Strikes and Lockouts), Article XIII (Grievance and Arbitration Procedure) and Article XIV (Jurisdictional Disputes) of this Agreement, which shall apply to such work. All disputes relating to the interpretation or application of this Agreement

shall be subject to resolution by the grievance arbitration procedure set forth in Article XIII of this Agreement, except for those disputes exempted from the grievance procedure pursuant to Section 13.1. Where a subject is covered by a provision in an MLA and not covered by this Agreement, the provision of the MLA shall prevail. Any dispute as to the applicable source between this Agreement and any MLA for determining the wages, hours or working conditions of employees on a Project shall be resolved under the grievance procedures established in this Agreement.

2.4 Exclusions:

(1) The Agreement shall be limited to construction work on a Project which is approved by the Board, and is not intended to, and shall not apply to any construction work performed at any time prior to the effective date, or after the expiration or termination of the Agreement, or on other City projects.

(2) The Agreement is not intended to, and shall not, affect or govern the award of contracts by the Board, which are outside the approved scope of the Project.

(3) The Agreement is not intended to, and shall not, affect the operation or maintenance of any facilities whether related or not to Projects.

(4) The Agreement shall not apply to a C/S/E's executives, managerial employees, engineering employees, supervisors (except those covered by the MLAs), office and clerical employees, or any other employee not performing construction craftwork.

(5) Notwithstanding the foregoing, it is understood and agreed that

Building/Construction Inspector and Field Soils and Material Testers (inspectors) are a covered craft under this Agreement. This inclusion applies to the scope of work defined in the State of California Wage Determination for that Craft. This shall not cover quality assurance work performed by or on behalf of the DPW. Every Inspector performing under the wage classification of Building/Construction Inspector and Field Soils and Material Tester under a professional services agreement or a construction contract shall be bound to all applicable requirements of this Agreement. Notwithstanding the provisions of this sub-section, the DPW may engage consultants for limited periods of time in the event of an urgent need for specialized inspection services. The DPW must provide prior notice to the Trades Council that despite good faith efforts, it is unable to obtain qualified inspector(s) under the provisions of this Agreement. Such engagement shall be only to meet immediate and limited needs until such qualified inspectors working under this Agreement are available.

(6) This Agreement shall not apply to material suppliers or delivery by any means of material, supplies, or equipment required to any point of delivery, except that the hauling/delivery of soil, sand, gravel, aggregate, rocks, concrete, asphalt, excavation materials, fill material and construction debris shall be covered by this Agreement.

(7) This Agreement shall not apply to City employees.

(8) This Agreement shall not apply to the work of persons, firms and other entities that perform consulting, planning, scheduling, management or other

supervisory services on the Project, provided such entities do not perform craft employee construction work on the Project with their own employees or to customer service work performed post completion by an entity other than the C/S/E that performed the original construction work.

(9) This Agreement shall not apply to DPW construction contracts or Projects, if such Project has federal funding and the federal funding source has established provisions or rules that forbid the inclusion of a Project Labor Agreement.

(10) For FHWA Projects, this Agreement shall apply to the covered project, in accord with the policies and conditions under which the FHWA funds are received from the U.S. Department of Transportation.

(11) Out-of-State Workers: Hours worked by residents of states other than California shall not be included in calculation of total hours of Project work for purposes of the percentage requirements set forth by the Agreement.

(12) Notwithstanding the foregoing, demolition and asbestos abatement shall constitute work covered by the Project Labor Agreement when such work is part of a Covered Project.

2.5 The DPW and/or the C/S/Es, as appropriate, have the absolute right to award contracts or subcontracts on this Project to any C/S/E notwithstanding the existence or non-existence of any agreements between such C/S/E and any Union parties, provided only that such C/S/E is ready, willing and able to execute and comply with this Agreement should such C/S/E be awarded work covered by this Agreement.

ARTICLE III

EFFECT OF AGREEMENT

3.1 By executing the Agreement, the Unions and the Board agree to be bound by each and all of the provisions of the Agreement.

3.2 By accepting the award of a construction contract for a Project, each C/S/E agrees to be bound by each and every provision of the Agreement.

3.3 At the time that any C/S/E enters into a subcontract with any subcontractor of any tier providing for the performance of construction for a Covered Project, the C/S/E shall provide a copy of this Agreement to said subcontractor and shall require the subcontractor as a part of accepting the award of a construction subcontract to agree in writing in the form of a Letter of Assent to be bound by each and every provision of this Agreement prior to the commencement of work. See Attachment "A" for a sample Letter of Assent. Approval of any C/S/E to perform work on the Project will be contingent upon the submittal of its Letter of Assent and its Employment Hiring Plan.

3.4 This Agreement shall only be binding on the signatory C/S/Es hereto and shall not apply to the parents, affiliates, subsidiaries, or other ventures of any construction contract prior to the execution of this Agreement.

ARTICLE IV

WORK STOPPAGES, STRIKES, SYMPATHY STRIKES AND LOCKOUTS

4.1 The Unions, Board and C/S/Es agree:

(1) During the existence of this Agreement, there shall be no strike, sympathy strike, picketing, hand billing, slowdown, withholding of work, refusal to work, lockout, sick-out, walk-off, sit-down, stand-in, wobble, boycott, or other work stoppage, disruption, advising the public that a labor dispute exists, or other impairment of any kind for any reason by the Unions or employees employed on the Project, at the job site of the Project, or at any other facility of the City because of a dispute on this Project.

(2) As to employees employed on the Project, there shall be no lockout of any kind by any C/S/E(s) covered by the Agreement. The C/S/E(s) may lay off employees for lack of work or delay of work on the Project.

(3) The Unions agree that they shall not sanction in any way any picket line or other impairment of the work on the Project and will affirmatively take all measures necessary to effectively induce their respective members to cross any and all picket lines and report for work as scheduled and that responsible representatives of the Unions who are employed on the Covered Project will also do so themselves.

(4) The Unions agree that they shall not sanction, aid, abet, encourage or continue any work stoppage, strike, picketing or other disruptive activity at the Project site or C/S/E's business site that will economically and/or materially affect the completion of the Project. Any such costs that

economically and/or materially harm the City shall be borne by the affected Union and made payable to the City.

(5) Notwithstanding any provision of this Agreement to the contrary, it shall not be a violation of this Agreement for any Union to withhold the services of its members (but not the right to picket) from a particular C/S/E who:

(i) fails to timely pay its weekly payroll; or

(ii) fails to make timely payments to the Union's Labor/Management Trust Funds in accordance with the provisions of the applicable MLA. Prior to withholding its members services for the C/S/E's failure to make timely payments to the Union's Labor/Management Trust Funds, the Union shall give at least ten (10) days (unless a lesser period of time is provided in the Union's MLA, but in no event less than forty-eight (48) hours) written notice of such failure to pay by registered or certified mail, return receipt requested, and by either email or facsimile transmission to the involved contractor, the prime contractor, and the BCA. Union will meet within the ten (10) day period to attempt to resolve the dispute.

(iii) Upon the payment of the delinquent C/S/E of all monies due and then owing for wages and/or fringe benefit contributions, the Union shall direct its members to return to work; the C/S/E shall return all such members back to work.

4.2 Expiration of Local Agreements: If the MLA, or any local, regional, and other applicable collective bargaining agreements expire during the term of the Covered

Project, the Union(s) agree that there shall be no work disruption of any kind as described in Section 4.1 above as a result of the expiration of any such agreement(s) having application on this Covered Project and/or failure of the involved Parties to that agreement to reach a new contract. For C/S/Es which are not independently signatory to an MLA, terms and conditions of employment established and set for purposes of prevailing wage requirements under this Agreement at the time of bid shall remain established and set. Otherwise to the extent that such agreement does expire and the Parties to that agreement have failed to reach concurrence on a new contract, work will continue on the Covered Project on one of the following two (2) options, both of which will be offered by the Unions involved to the C/S/Es affected:

(1) Each of the Unions with a contract expiring must offer to continue working on the Covered Project under interim agreements that retain all the terms of the expiring contract, except that the Unions involved in such expiring contract may each propose wage rates and employer contribution rates to employee benefit funds under the prior contract different from what those wage rates and employer contributions rates were under the expiring contracts. The terms of the Union's interim agreement offered to C/S/Es will be no less favorable than the terms offered by the Union to any other employer or group of employers covering the same type of construction work in Los Angeles County.

(2) Each of the Unions with a contract expiring must offer to continue working on the Project under all the terms of the expiring contract, including the

wage rates and employer contribution rates to the employee benefit funds, if the C/S/E affected by that expiring contract agrees to the following retroactive provisions: if a new MLA, local, regional or other applicable labor agreement for the industry having application at the Covered Project is ratified and signed during the term of this Agreement and if such new labor agreement provides for retroactive wage increases, then each affected C/S/E shall pay to its employees who performed work covered by this Agreement at the Project during the hiatus between the effective dates of such expired and new labor agreements, an amount equal to any such retroactive wage increase established by such new labor agreement, retroactive to whatever date is provided by the new labor agreement for such increase to go into effect, for each employee's hours worked on the Project during the retroactive period. All Parties agree that such affected C/S/Es shall be solely responsible for any retroactive payment to its employees and that neither the Project, nor the Board, nor the Board's designee, nor any other C/S/E has any obligation, responsibility or liability whatsoever for any such retroactive payments or collection of any such retroactive payments, from any such C/S/E.

(3) Some C/S/Es may elect to continue to work on the Project under the terms of the interim agreement option offered under paragraph (1) above and other C/S/Es may elect to continue to work on the Project under the retroactivity option offered under paragraph (2) above. To decide between the two options, C/S/Es will be given one week after the particular labor

agreement has expired or one week after the Union has personally delivered to the C/S/Es in writing its specific offer of terms of the interim agreement pursuant to paragraph (1) above, whichever date is later. If the C/S/E fails to timely select one of the above options, the C/S/E will be deemed to have selected paragraph (2), above.

4.3 Expedited Arbitration will be utilized for all work stoppages and lockouts. In lieu of or in addition to any other action at law or equity, any party may institute the following procedure when a breach or violation of Section 4.1 is alleged to have occurred:

(1) The party invoking this procedure shall notify the permanent arbitrator next in sequence from the following list:

1. Christopher David Ruiz Cameron
2. Michael Rappaport
3. Walter Daugherty
4. Paul Greenberg
5. Lou Zigman

The DPW and the Unions agree these shall be the five permanent Arbitrators under this procedure. In the event that none of the five permanent Arbitrators are available for a hearing within 24 hours, the party invoking the procedure shall have the option of delaying until one of the five permanent Arbitrators is available or of asking the permanent Arbitrator that would normally hear the matter to designate an arbitrator to sit as a substitute Arbitrator for this dispute. If any of the permanent Arbitrators ask

to be relieved from their status as a permanent Arbitrator, the DPW and the Unions shall mutually select a new permanent Arbitrator from the following list of arbitrators:

1. John Kagel
2. Fred Horowitz
3. Wayne Estes

The selection of a new permanent Arbitrator shall be made by each party alternately striking from the foregoing list until one name remains who shall be the replacement permanent Arbitrator. Expenses incurred in arbitration shall be borne equally by the Union and the Contractor involved and the decision of the Arbitrator shall be final and binding on both Parties, provided, however, that the Arbitrator shall not have the authority to alter or amend or add to or delete from the provisions of this Agreement in any way. Notice to the Arbitrator shall be by the most expeditious means available, including by telephone and by facsimile or email to the party alleged to be in violation and to the Trades Council and involved local Union if a Union is alleged to be in violation.

(2) Upon receipt of said notice, the Arbitrator shall convene a hearing within twenty-four (24) hours if it is contended that the violation still exists.

(3) The Arbitrator shall notify the Parties to the Arbitration by telephone and by facsimile or email of the place and time for the hearing. Notice shall be given to the individual Unions alleged to be involved. Said hearing shall be completed in one session, which, with appropriate recesses at the

Arbitrator's discretion, shall not exceed twenty-four (24) hours unless otherwise agreed upon by all Parties. A failure of any party to attend said hearings shall not delay the hearing of evidence or the issuance of any decision by the Arbitrator.

(4) The sole issue at the hearing shall be whether or not a violation of Sections 4.1 or 4.2 of this Article IV has in fact occurred. The Arbitrator shall have no authority to consider any matter of justification, explanation or mitigation of such violation or to award damages, which issue is reserved for court proceedings, if any. The decision shall be issued in writing within three (3) hours after the close of the hearing, and may be issued without a written opinion. If any party desires a written opinion, one shall be issued within fifteen (15) days, but its issuance shall not delay compliance with or enforcement of the decision. The Arbitrator may order cessation of the violation of this Article and other appropriate relief and such decision shall be served on all Parties by hand or registered mail upon issuance.

(5) Such decision may be enforced by any Court of competent jurisdiction upon the filing of this Agreement and all other relevant documents referred to above in the following manner. Written notice of the filing of such enforcement proceedings shall be given to the other party. In the proceeding to obtain a temporary order enforcing the Arbitrator's decision as issued under Section 4.3(3) of this Article, all Parties waive the right to a hearing and agree that such proceedings may be ex parte. Such agreement does not waive any party's right to participate in a hearing for a final order

of enforcement. The Court's order or orders enforcing the Arbitrator's decision shall be served on all Parties by hand or delivered by registered mail.

(6) Any rights created by statute or law governing arbitration proceedings inconsistent with the above procedure or which interfere with compliance therewith are hereby waived by the Parties to whom they accrue.

(7) The fees and expenses incurred in arbitration shall be divided equally by the parties (the applicable Union and Contractor) to the arbitration.

4.4 The procedures contained in Section 4.3 shall be applicable to alleged violations of Article IV to the extent any conduct described in Sections 4.1 or 4.2 occurs on the Project. Disputes alleging violation of any other provision of this Agreement's other provisions, including any underlying disputes alleged to be in justification, explanation, or mitigation of any violation of Sections 4.1 or 4.2 shall be resolved under the applicable grievance adjudication procedures for these other Articles.

ARTICLE V

NO DISCRIMINATION

5.1 The C/S/Es and Unions agree not to engage in any form of discrimination, including in the hiring and dispatching of workers, on the grounds of, or because of, race, religion, national origin, ancestry, sex, sexual orientation, age, physical handicap, domestic partner status, medical condition, political affiliation, membership in a labor organization, being a party to a collective bargaining agreement, color or disability.

ARTICLE VI

UNION SECURITY

6.1 The C/S/Es recognize the Unions as the respective sole bargaining representatives for all craft employees working within the scope of this Agreement.

6.2 Employees are not required to become or remain union members or pay dues or fees as a condition of performing Covered Work under this Agreement. Employers shall make and transmit all deductions for union dues, fees, and assessments that have been voluntarily authorized by employees in writing in accordance with the applicable Master Labor Agreement. Nothing in this Section 6.2 is intended to supersede independent requirements of applicable Master Labor Agreements as to those Employers otherwise signatory to such Master Labor Agreements and as to the employees of those Employers who are performing Covered Work.

ARTICLE VII

REFERRAL

7.1 The Union(s) shall be the primary source of all craft labor employed on the Project(s) and will exert their best efforts to recruit and identify individuals, particularly residents of the City residing in the Tier 1 or Tier 2 zip code areas, as well as those referred by the Jobs Coordinator, for entrance into joining labor/management apprenticeship programs, and to assist individuals in qualifying and becoming eligible for such programs. In the event that the C/S/E has it's own Core Worker(s), and wishes to employ such workers to perform covered work, the C/S/E shall employ such workers in accord with the provisions of this Article VII.

The following process shall govern the employment of workers at the Project:

(1) A worker shall be considered a member of a C/S/E's core workforce for the purposes of this Article if the worker meets the required definition stated in Section 1.10 of this Agreement. The C/S/E shall identify Core Workers in their Employment Hiring Plan and shall provide payroll records evidencing the worker's qualification as a Core Worker upon request by the City. Prior to each C/S/E, which utilizes any core employees, performing any work on Covered Project(s), each such C/S/E shall provide a list of its core employees to the BCA and the Trades Council. Failure to do so will prohibit the C/S/E from using any core employees. The number of Core Workers on this Project shall be governed by the following procedure: one Core Worker shall be selected and one worker from the hiring hall of the affected trade or craft and this process shall repeat until such C/S/E's requirements are met or until such C/S/E has hired five (5) such Core Workers for that craft, whichever occurs first. Thereafter, all additional employees in the affected trade or craft shall first be requisitioned from the hiring hall in accordance with other provisions in Article VII.

(2) In the event of a reduction-in-force or layoff, such will take place in a manner to assure that the number of Core Workers in the affected craft does not exceed, at any time, the number of others working in that craft who were employed pursuant to other procedures available to the C/S/E under this Agreement. This provision applies only to C/S/Es which are not independently signatory to a current MLA for the craft workers under their

employ and is not intended to limit the transfer provisions of the MLAs of any Union.

7.2 C/S/Es shall be bound by and utilize the registration facilities and referral systems established or authorized by the signatory Unions for all job site craft employee(s) before such employee(s) begin work, when such procedures are not in violation of Federal or State law or in conflict with provisions set forth in this Agreement.

7.3 In the event that the referral facilities maintained by the Unions are unable to fill the requisition of a C/S/E for Local Residents and/or Transitional Workers within a forty-eight (48) hour period after such requisition is made by the C/S/E (Saturdays, Sundays and holidays excepted), the C/S/E shall be free to obtain Local Residents and/or Transitional Workers from any source. However, for all other requisitions by a C/S/E for non-Local Residents or non-Transitional Workers, only after a forty-eight (48) hour period (Saturdays, Sundays and holidays excepted) after such requisition is made by the C/S/E, shall the C/S/E be free to obtain work persons from any source if the Unions are unable to fill the requisition. However, the C/S/E is still responsible for complying with conditions and requirements of the Targeted Hiring Guidelines for Contractors and the Policy.

(1) The C/S/E's must document, from the applicable Tiers, all efforts made to comply with the targeted hiring process to locate and hire Local Residents and/or Transitional Workers. The C/S/E may employ Local Residents and/or Transitional Workers referred by the Jobs Coordinator. However, in the event the Jobs Coordinator is unable to fill the requisition of a C/S/E for Local Residents and/or Transitional Workers, the C/S/E may utilize any

organization, such as those listed in the Targeted Hiring Guidelines for Contractors, to assist them in satisfying the requirements of the Targeted Hiring Guidelines for Contractors and the Policy.

(2) The C/S/E shall inform the Unions, Job Coordinator and the BCA of the name, address, worker craft classification and social security number of any worker hired from other sources upon their employment on the Project(s).

(3) No Local Resident and/or Transitional Worker, having been pre-screened and/or pre-qualified by the Jobs Coordinator, and employed by the C/S/E to work on the Project, shall be required to participate in any Joint Labor/Management "boot camp" or pre-apprentice program that will unnecessarily delay the Local Resident and/or Transitional Worker's start of work or cause said worker's termination due to having to participate in such "boot camps" or pre-apprentice programs.

(4) Any work person hired under this Section 7.3, as well as all other workers hired under this Article VII, shall be obligated to register with the appropriate Union hiring hall, prior to their first day of employment on the Project.

7.4 The Unions will exert their best efforts to refer/recruit sufficient numbers of skilled craft Local Residents and Transitional Workers to fulfill the requirements of the C/S/E(s). In recognition of the fact that the communities within the boundaries of the City will be impacted by the construction of the Project(s), the Parties agree to support the development and graduation of Transitional construction apprentices and workers from residents within Tier 1 or Tier 2 zip code areas. Towards that end, the Unions agree to encourage and provide referrals and utilization of

qualified workers residing preferably within the Tier 1 zip code areas identified in the following:

Tier 1 Zip Codes

90001	90013	90028	90044	90068	91402
90002	90014	90029	90046	90077	
90003	90015	90031	90047	90089	
90005	90016	90032	90049	90248	
90006	90017	90033	90056	90731	
90007	90018	90037	90057	90744	
90008	90020	90038	90058	90810	
90010	90021	90039	90059	90813	
90011	90023	90042	90063	91205	
90012	90024	90043	90065	91331	

7.5 Wherein the Unions cannot provide the C/S/Es, having documented their efforts in the attainment of Local Residents and/or Transitional Workers within the Tier 1 zip code areas as listed in Section 7.4 above, the Unions will exert their best efforts to recruit and identify Local Residents and/or Transitional Workers within Tier 2 zip code areas identified in the following and Transitional Workers in the remaining zip code areas of the City:

Tier 2 Zip Codes

90004	90048	90265	90710	91304	91342	91405	91605
90019	90061	90272	90717	91306	91343	91406	91606
90025	90062	90290	90732	91307	91344	91411	91607
90026	90064	90291	90745	91311	91345	91423	
90027	90066	90292	91040	91316	91352	91504	
90034	90067	90305	91042	91324	91356	91505	
90035	90095	90402	91201	91325	91364	91506	
90036	90230	90405	91206	91330	91367	91601	
90041	90232	90501	91302	91335	91401	91602	
90045	90247	90502	91303	91340	91403	91604	

The Unions will exert their best efforts to recruit and identify Local Residents and/or Transitional Workers of the City and assist individuals in qualifying and becoming eligible for such apprenticeship programs.

7.6 The Prime Contractor is responsible for ensuring compliance with the targeted hiring process for the Project(s) to achieve the following anticipated levels of participation:

(1) The following percentages shall be the targeted hiring for the Project:

(a) At least 30% of total work hours shall be performed by Local Residents residing within Tier 1 described in Article 7.4. If the 30% local hire is not attained utilizing the Tier 1, the outreach shall expand to the Tier 2 as described in Article 7.5 of this Agreement.

(b) At least 10% of total work hours shall be performed by Transitional Workers residing within Tier 1 or Tier 2 zip code areas described in Articles 7.4 and 7.5 respectively and the remaining zip code areas within the City of Los Angeles. These hours shall be applied towards the 30% Local Resident targeted hiring.

(c) Apprentices must be employed on each project in accordance with the requirements mandated by Section 1777.5 of the California Labor Code. The Parties agree that City residents in the Tier 1 or Tier 2 zip code areas, as well as Transitional Workers, will perform 50% of all apprenticeship hours worked on the Project.

An apprentice who begins his/her period of apprenticeship as a City resident in the Tier 1 or Tier 2 zip code areas, or an apprentice

Transitional Worker, will retain that status for the entire apprenticeship, regardless of any changes in the apprentice's residence provided the Unions submit to BCA the necessary identifying information to enable the tracking of such apprentices, if requested by BCA.

(d) The C/S/Es shall coordinate with their designated Jobs Coordinator to document their compliance efforts through the utilization of the Craft Request Form, hiring hall procedures, the resources of organizations listed in BCA's Targeted Hiring Guidelines for Contractors, or any other organization/agency that can assist the C/S/E in meeting this requirement. The provisions to address the non-attainment of the targeted hiring participation and/or apprenticeship hiring participation levels on a Project are addressed in the Policy.

(2) The employer retains authority in making individual hiring decisions.

(3) Hours worked by residents of states other than California shall not be included in calculation of total hours of Project work for purposes of the percentage requirements set forth above.

(4) The above referenced targeted hiring shall apply to FHWA projects in accord with the policies and conditions under which the FHWA funds are received from the U.S. Department of Transportation.

7.7 The Transitional Workers may be referred to the Unions from the Jobs Coordinator or Employer. The Jobs Coordinator or Employer shall pre-screen and/or pre-

qualify any applicant prior to referral to the Unions. Drug screening will be a prerequisite to employment. The following criteria will be used to identify the Transitional Worker, with first priority given to Group 1:

(1) Satisfies one of the following criteria:

a. Being a veteran;

b. Having a documented history of involvement with the justice system;

c. Being homeless; or

(2) Is an LA/OCBTC approved MC3 pre-apprenticeship program graduate

OR

Faces at least two of the following barriers to employment:

a. Having a household income below 50% of the Los Angeles County's median annual household income;

b. Emancipated from the foster care system;

c. Receiving public assistance;

d. Lacking a GED or high school diploma;

e. Being an apprentice with less than 15% of the apprentice hours required to graduate to journey level in a program as described in Section 1.3;

f. Being a custodial single parent;

g. Suffering from long-term unemployment, as described in Section 1.20;

To qualify under this section, the Jobs Coordinator shall verify and certify that the individual's primary place of residence is within the City and that such individual

satisfies the criteria set forth above.

7.8 The C/S/Es and the Unions recognize a desire to facilitate the entry into the building and construction trades of veterans who are interested in careers in the building and construction industry. The C/S/Es and Unions agree to utilize the services of the Center for Military Recruitment, Assessment and Veterans Employment (hereinafter "Center") and the Center's "Helmets to Hardhats" program to serve as a resource for preliminary orientation, assessment of construction aptitude, referral to apprenticeship programs or hiring halls, counseling and mentoring, support network, employment opportunities and other needs as identified by the Parties.

7.9 The Unions and C/S/Es agree to coordinate with the Center to create and maintain an integrated database of veterans interested in working on a Project and of apprenticeship and employment opportunities for a Project. To the extent permitted by law, the Unions will give credit to such veterans for bona fide, provable past experience.

7.10 The C/S/Es shall use the Craft Request Form (See Attachment C) and the procedures written therein to request any and all workers from Unions with a concurrent transmittal of such request to the Jobs Coordinator, including workers qualified as Local Residents, Transitional Workers, and/or general dispatch.

(1) When Local Residents and/or Transitional Workers are requested by the C/S/Es, the Unions will refer such workers regardless of their place in the Unions' hiring halls' list and normal referral procedures.

(2) In the event that a C/S/E, having not achieved its targeted hiring participation levels, requests a Local Resident and/or Transitional Worker from the Union hiring facility, and is referred a worker who is not a Local Resident and/or Transitional Worker, the C/S/E is under no obligation to hire the referred worker for the Project work and shall notify the Union hiring facility and the Jobs Coordinator.

(3) The C/S/Es, Unions and Jobs Coordinator agree to maintain copies of all Craft Request Forms used on the Project submitted or received including transmission verification reports that are date/time imprinted. All Craft Request Forms and transmission verification reports shall be available for inspection and copies provided, upon request by the City representative as described in Article XI of this Agreement.

7.11 Apprentices

(1) The Parties recognize the need to maintain continuing support of the programs designed to develop adequate numbers of competent workers in the construction industry, the obligation to capitalize on the availability of the City's local work force, and the opportunities to provide continuing work for Projects covered by this Agreement. To these ends, the Parties shall facilitate, encourage, and assist Local Residents and/or Transitional Workers to commence and progress in Labor/Management apprenticeship and/or training programs in the construction industry leading to participation in such apprenticeship programs. The City, Jobs Coordinator, Work Source Centers, other non-profit entities, organizations and the Unions, will work

cooperatively to identify, or establish and maintain effective programs and procedures for persons interested in entering the construction industry and which will help prepare them for the formal joint Labor/Management apprenticeship programs maintained by the signatory unions.

(2) Unions shall track retention of Apprentices hired through this program for so long as those Apprentices participate in a joint labor/management apprenticeship program. The DPW shall provide a list of all Apprentices who have worked on City of Los Angeles PLA projects to the apprenticeship coordinators of the signatory unions on a quarterly basis. In turn, the signatory unions shall collect and compile information on the retention of these Apprentices and submit this information to the DPW on a quarterly basis. The DPW will use the information provided to generate a quarterly report on retention of Apprentices on the City's PLA projects.

(3) All apprentices shall work under the direct supervision of a journeyman from the trade in which the apprentice is indentured. A journeyman shall be defined as set forth in the California Code of Regulations, Title 8 [apprenticeship] section 205, which defines a journeyman as a person who has either completed an accredited apprenticeship in his or her craft, or has completed the equivalent of an apprenticeship in length and content of work experience and all other requirements in the craft which has workers classified as journeyman in the apprenticeable occupation. Should a question arise as to a journeyman's qualification under this subsection, the

C/S/E shall provide adequate proof evidencing the worker's qualification as a journeyman.

ARTICLE VIII

WAGES AND BENEFITS

8.1 Wages.

All employees covered by this Agreement shall be classified in accordance with work performed and paid the hourly wage rates for those classifications in compliance with the applicable prevailing wage rate determination established pursuant to the California Labor Code by the Department of Industrial Relations or as established by the US DOL if applicable. If a prevailing rate increases during the term of this Agreement under State law or Federal law, the Contractor shall pay the rate as of its effective date under the applicable law. The C/S/Es directly signatory to one or more of the MLAs are required to pay all wages set forth in those MLAs without reference to the forgoing. If the prevailing wage laws are repealed during the term of this Agreement, the contractor shall pay the wage rates established under the MLAs, except as otherwise provided in this Agreement.

8.2 Benefits.

(1) All C/S/Es not signatory to the established Labor/Management Trust Fund agreements, as specified in the MLAs for the craft workers in their employ, shall sign a "Subscription Agreement" with the appropriate Labor/Management Trust Fund covering the work performed under this agreement.

(2) All C/S/Es shall pay contributions to the established employee benefit funds on behalf of all employees performing Project work under this Agreement in the amounts designated in the appropriate MLA and make all employee-authorized deductions in the amounts designated in the appropriate MLA; provided, however, that such contributions shall not exceed the contribution amounts set forth in the applicable prevailing wage determination. The C/S/Es directly Signatory to one or more of the MLAs are required to make all contributions set forth in those MLAs without reference to the forgoing. Bona fide jointly-trusteed benefit plans or authorized employee deductions programs established or negotiated under the applicable MLA or by the Parties to this Agreement during the life of this Agreement may be added, provided that the contributions do not exceed the amounts set forth in the applicable prevailing wage determination.

(3) The C/S/E adopts and agrees to be bound by the written terms of the applicable, legally established, trust agreement(s) specifying the detailed basis on which payments are to be made into, and benefits paid out of, such trust funds for its employees. The C/S/E authorizes the Parties to such trust funds to appoint trustees and successors' trustees to administer the trust funds and hereby ratifies and accepts the trustees so appointed as if made by the C/S/E.

ARTICLE IX

EMPLOYEE GRIEVANCE PROCEDURE

9.1 Should a grievance arise regarding the imposition of discipline of an employee, or the dismissal of an employee, working on Project work, all such grievance(s) shall be processed, exclusively, under the grievance procedure contained in the applicable MLA for the craft Union representing such employee(s) and not under the provisions of the Grievance Arbitration provisions of Article XIII.

9.2 The C/S/Es shall not discipline or dismiss its employees except for good cause.

ARTICLE X

DEPARTMENT POLICIES AND PROCEDURES

10.1 All construction contracts identified by the DPW as part of the Projects shall include the following provisions. Such provisions include, but are not limited to:

(1) All persons who perform labor in the execution of a construction contract shall be paid the prevailing rate of wages applicable to the classification as provided in Article III, Section 377 of the Los Angeles City Charter.

(2) All C/S/Es shall provide information concerning their experience, financial qualifications, including proof of a current State Contractor's License, Business Tax Registration Certificate, and ability to perform said contract or subcontract.

10.2 In addition to the above requirements, the C/S/Es and Unions understand and agree that all construction contracts shall be awarded in accordance with other applicable provisions of the Los Angeles City Charter ("Charter") (effective July 1,

2000), and the Los Angeles Administrative Code ("Administrative Code") (and any future amendments applicable thereto), including, but not limited to:

(1) Los Angeles City Charter Article III, Section 371 (award of construction contracts to the lowest responsible bidder);

(2) Administrative Code Sections, 10.8-1 0.13 (prohibition of discrimination); and Mayor's Executive Directive No. 2001-26 (City of Los Angeles Minority, Women, and Other Business Enterprise Program).

ARTICLE XI

COMPLIANCE

11.1 It shall be the responsibility of the C/S/Es and Unions to investigate and monitor compliance with the provisions of the Agreement contained in Article VIII (Wages and Benefits). The Board shall appoint the BCA or its designee to investigate and monitor compliance with Article VIII, the applicable provisions of the Charter and the Administrative Code, including, but not limited to, the prevailing wage requirements of the Charter, Local Residents, and Transitional Worker hiring compliance and the Policy, and the affirmative action provisions of the Administrative Code, and to recommend to the Board or designee enforcement measures to ensure the C/S/E's compliance with the general conditions of a construction contract and the Policy. At the conclusion of any six-month period, the Parties to the Agreement shall report to the Board with a status update on the Agreement with regard to that Project, including a description of any obstacles or barriers faced. The provisions of this Article shall not substitute for or preclude any

employee or Union from filing a grievance for any violation of Article VIII under the provisions of the Grievance Arbitration Procedure provisions of Article XIII.

11.2 Each C/S/E shall cooperate fully and promptly with any inquiry or investigation the City or its designated representatives deems necessary in order to monitor compliance with the provisions in this Agreement and the Policy.

ARTICLE XII

JOINT ADMINISTRATIVE COMMITTEE

12.1 The Parties to this Agreement may establish an eight (8) person Joint Administrative Committee (JAC). This JAC shall be comprised of one (1) representative selected by the Board; one (1) representative of the City Inspector of Public Works; one (1) representative of the City Engineer; one (1) representative of the prime contractor, and four (4) representatives of the signatory Unions to be appointed by the Trades Council, to be chaired jointly by a representative of the City Inspector of Public Works and the Council. Each representative shall designate an alternate who shall serve in his or her absence.

12.2 The JAC shall meet at the call of either of the joint chairs to discuss the implementation and administration of this Agreement, the progress of the Project, general labor management problems that may arise, and any other matters consistent with this Agreement. A unanimous decision of the JAC shall be final and binding upon all Parties. However, the JAC shall have no authority to make determinations upon or to decide grievances arising under this Agreement.

12.3 A quorum will consist of at least two (2) City and two (2) signatory union

representatives. For voting purposes, only an equal number of City and signatory union representatives present may constitute a voting quorum.

ARTICLE XIII

GRIEVANCE ARBITRATION PROCEDURE

13.1 The Parties hereby agree that all grievances and disputes that may arise concerning the meaning, application or the interpretation of the terms of this Agreement, other than disputes arising from conduct described in Sections 4.1 and 4.2, Article IX (Employee Grievance Procedure) and Sections 14.1, 14.2, 14.3 and 14.4 shall be settled in accordance with the following procedures set out herein. Grieving parties are encouraged to meet as soon as possible and try to resolve the dispute. However, if a resolution cannot be reached, the following procedure shall be used.

13.2 Grievances and disputes shall be settled according to the following procedures:

Step 1: The business representative of the local Union involved shall first attempt to settle the matter by oral discussion with the particular C/S/E's representative no later than five (5) working days after the Union submitting the grievance first became aware of, or by the use of reasonable diligence should have been aware of, the occurrence first giving rise to the dispute or grievance. If the matter is not resolved with the C/S/E's representative within five (5) working days after the oral discussion with said C/S/E's representative, the dispute or grievance shall be reduced to writing by the grieving Union.

Step 2: In the event that the representatives (C/S/E and Union) are unable to resolve

the grievance after its referral to Step 1, either involved party may submit the grievance, within five (5) business days of the Step 1 meeting of the parties to the grievance, to the Joint Administrative Committee (JAC), which shall meet within five (5) business days after such referral (or such longer time as is mutually agreed upon by all representatives of the JAC), to confer in an attempt to resolve the grievance. If the grievance is not resolved by the parties to the grievance within five (5) business days after its referral (or such longer time as is mutually agreed on by all representatives of the JAC) to the JAC, it may be referred within five (5) business days by either party to Step 3 by written notice of the submittal of the grievance to arbitration in accordance with the provisions set forth below.

Step 3: After notice by any party of intent to submit a grievance to arbitration, the Parties shall have five (5) working days to attempt, by mutual agreement, to select as the Arbitrator to hear the dispute, one of the Arbitrators listed under the Expedited Arbitration provisions of Article IV, Section 4.3 of this Agreement. If the Parties are unable to reach such agreement, the first arbitrator from the list, on a rotational basis, shall be the arbitrator to hear the dispute. The decision of the Arbitrator shall not have the authority to alter, amend, add to or delete from the provisions of this Agreement in any way. A failure of any party to attend said hearing shall not delay the hearing of evidence or the issuance of any decision by the Arbitrator. The fees and expenses incurred in arbitration shall be divided equally by the parties (the applicable Union and Contractor) to the arbitration. Should any party seek

confirmation of the Award made by the Arbitrator, the prevailing party shall be entitled to receive its reasonable attorney fees and costs.

13.3 The time limits specified in any step of the Grievance Arbitration Procedure set forth in Section 13.2 may be extended by mutual agreement of the Parties. However, failure to process a grievance, or failure to respond in writing within the time limits provided above, without a request for an extension of time, shall be deemed a waiver of such grievance without prejudice, or without precedent to the processing and/or resolution of like or similar grievances.

13.4 Grievances which are settled directly by the Parties to such grievance shall not be precedent setting.

13.5 The City or its designated representative shall be given advance notification of all proceedings of all actions at Steps 2 and 3 and may observe such proceedings upon request.

ARTICLE XIV

JURISDICTIONAL DISPUTES / PRE-JOB CONFERENCE

14.1 The assignment of work will be solely the responsibility of the C/S/E performing the work involved; and such work assignments will be in accordance with the Plan for the Settlement of Jurisdictional Disputes in the Construction Industry (the "Plan") or any successor plan.

14.2 All jurisdictional disputes on this Project, between or among Building and Construction Trades Unions and employers shall be settled and adjusted according to the present Plan established by the Building and Construction Trades

Department or any other plan or method of procedure that may be adopted in the future by the Building and Construction Trades Department. Decisions rendered shall be final, binding and conclusive on the C/S/Es and Unions. A decision shall not award back pay or any other damages for a misassignment of work, nor may any party bring an independent action for back pay or any other damages based upon a decision.

14.3 If a dispute arising under this Article involves the Southwest Regional Council of Carpenters or any of its subordinate bodies, an Arbitrator shall be chosen by the procedures specified in Article V, Section 5, of the Plan from a list composed of John Kagel, Thomas Angelo, Robert Hirsch and Thomas Pagan. The Arbitrator's hearing on the dispute shall be held at the offices of the Council within fourteen (14) days of the selection of the Arbitrator. All other procedures shall be as specified in the Plan.

14.4 No Work Disruption Over Jurisdiction. All jurisdictional disputes shall be resolved without the occurrence of any strike, work stoppage, disruption, or slowdown of any nature and the C/S/E's assignments shall be adhered to until the dispute is resolved. Individuals violating this section shall be subject to immediate discharge.

14.5 Pre-Job Conference. A pre-job conference shall be held with all parties prior to the start of work by the prime contractor for the Covered Project covered by this Agreement. The purpose of the conference will be to, among other things, determine craft manpower needs, schedule of work for the contract and project work rules/owner rules. The subcontractors/owner operators of any tier will be advised in advance of all such conferences and shall participate. The Trades

Council and the BCA's Office of Contract Compliance shall be advised in advance of all such conferences and may participate if they wish. All work assignments shall be disclosed by the C/S/E at a pre-job conference. Any formal jurisdictional dispute raised under Article XIV must be raised at the pre-job conference upon disclosure of the work assignments. If the C/S/E intends to change the work assignment after the pre-job conference or to make an assignment of work not previously known, the C/S/E must notify the appropriate affected craft union(s) prior to the commencement of work. The C/S/E performing all project work that was not previously assigned at the pre-job conference will conduct a separate pre-job conference for such newly assigned work prior to commencing such work.

ARTICLE XV

MANAGEMENT RIGHTS

15.1 The C/S/Es shall retain full and exclusive authority for the management of their operations, as set forth in this Article, unless expressly limited or required by the other Articles of this Agreement on an MLA. This includes, but is not limited to, the right to direct their working force and to establish coordinated working hours and starting times.

15.2 There shall be no limit on production by workers or restrictions on the full use of tools or equipment. Craftsmen using tools shall perform any of the work of the trades and shall work under the direction of the craft foremen. There shall be no restrictions on efficient use of manpower other than as may be required by safety regulations. The C/S/Es may utilize the most efficient methods or techniques of

construction, tools or other labor-saving devices to accomplish the work. Restrictive practices not a part of the terms and conditions of this Agreement will not be recognized.

15.3 The C/S/Es shall be the sole judge of the number and classifications of employees required to perform work subject to this Agreement. The C/S/Es shall have the absolute right to hire, promote, suspend, discharge or lay off employees at their discretion and to reject any applicant for employment, subject to the provisions of the respective craft collective bargaining agreement between the particular C/S/E and Union and pursuant to this Agreement.

15.4 Nothing in this Agreement shall be construed to limit the right of any of the C/S/Es to select the lowest bidder they deem qualified for the award of contracts or subcontracts or material, supplies, or equipment purchase orders on the Covered Project. The right of ultimate selection remains solely with the C/S/E in accordance with the construction contract.

15.5 It is recognized that certain materials, equipment and systems of a highly technical and specialized nature will have to be installed at the Covered Project. The nature of the materials or the nature of the equipment and systems, together with requirements of manufacturer's warranty, may dictate that it will be pre-fabricated, pre-piped, pre-wired and/or installed under the supervision and direction of the DPW, City and/or manufacturer's personnel. The Unions agree that such materials, equipment and systems shall be installed without the occurrence of any conduct described in Sections 4.1 or 4.2.

ARTICLE XVI

SAFETY, PROTECTION OF PERSON AND PROPERTY

16.1 It shall be the responsibility of each C/S/E to ensure safe working conditions and employee compliance with any safety rules contained herein or established by the DPW, City, the state and the C/S/E. It is understood that the employees have an individual obligation to use diligent care to perform their work in safe manner and to protect themselves and the property of the C/S/E, the City and the DPW.

16.2 Employees shall be bound by the safety, security and visitor rules established by the C/S/E and the DPW. These rules will be published and posted in conspicuous places throughout the work site. An employee's failure to satisfy his or her obligations under this Section will subject him or her to discipline, including discharge.

16.3 The Parties acknowledge that the City and the C/S/E have a policy, which prohibits the use, sale, transfer, purchase and/or possession of a controlled substance, alcohol and/or firearms while on the City's premises. Additionally, the C/S/E has a "drug free" work place policy, which prohibits those working on the City's premises from having a level of alcohol in their system, which could indicate impairment, and/or any level of controlled substances (i.e., illegal drugs) in their system.

16.4 To that end, the Parties agree to adopt the Los Angeles/Orange Counties Building and Construction Trades Council Approved Drug and Alcohol Testing Policy, a copy of which is attached hereto as Attachment B which shall be the policy and procedure utilized under this Agreement.

ARTICLE XVII

SAVINGS CLAUSE

17.1 The Parties agree that in the event any article, provision, clause, sentence or work of the Agreement is determined to be illegal or void as being in contravention of any applicable law, by a court of competent jurisdiction, the remainder of this Agreement shall remain in full force and effect. The Parties further agree that if any article, provision, clause, sentence or word of this Agreement is determined to be illegal or void, by a court of competent jurisdiction, the Parties shall substitute, by mutual agreement, in its place and stead, an article, provision, sentence or word which will meet the objections to its validity and which will be in accordance with the intent and purpose of the article, provision, clause, sentence or word in question.

17.2 The Parties also agree that in the event that a decision of a court of competent jurisdiction materially alters the terms of this Agreement such that the intent of the Parties is defeated, then the entire Agreement shall be null and void.

17.3 If a court of competent jurisdiction determines that all or part of the Agreement is invalid and/or enjoins the City or DPW from complying with all or part of its provisions and the Board accordingly determines that the Agreement will not be required as part of an award to a C/S/E, the Unions will no longer be bound by the provisions of Article IV to the extent that such C/S/E is no longer bound. The Unions and their members shall remain bound to Article IV with respect to all other C/S/Es who remain bound to this Agreement, and no action taken by the Unions or their members shall disrupt the work of such C/S/Es.

17.4 The provisions of this Agreement shall not be applicable where prohibited by Presidential Executive Order, Federal or State law, or where the application would be inconsistent with terms and conditions of a grant or a contract with the agency of the United States, State of California, or the instruction of an authorized representative of any of these agencies with respect to any grant or contract.

ARTICLE XVIII

STEWARD

18.1 Each Union shall have the right to designate a working craft employee as steward for each C/S/E employing such craft on the Project. Such designated steward shall be a qualified workman assigned to a crew and shall perform the work of the craft. The steward shall not perform supervisory duties. Under no circumstances shall there be nonworking stewards. Stewards shall be permitted a reasonable amount of time during working hours to perform applicable Union duties related to the work being performed by the craft employees of his/her C/S/E and not to the work being performed by other C/S/Es or their employees.

18.2 Authorized representatives of the Union(s) shall have access to the Covered Project, provided that such representatives fully comply with posted visitor, security, and safety rules and the environmental compliance requirements of the Covered Project, provided that they do not unnecessarily interfere with the employees or cause them to neglect their work. The Contractor recognizes the right of access set forth in this Section and such access will not be unreasonably withheld from an authorized representative of the Union.

ARTICLE XIX

TERM

19.1 This Agreement shall commence upon execution by all Parties (the City of Los Angeles Department of Public Works and the Los Angeles/Orange Counties Building and Construction Trades Council and the Craft Unions signatory to this Agreement) and shall continue in full force and effect from the date of execution by all Parties for a period of ten years. During the term of this Agreement, upon request by either Party or by mutual consent, the Parties will meet to discuss the application of, and their experience with, this Agreement. As a result of any such meeting, the Parties may, but shall not be obligated to, mutually agree to amendments or modification of this Agreement.

19.2 The Agreement shall continue in full force and effect for each covered Project until project acceptance by the Board. Either party desiring to renew, extend or to negotiate changes to this Agreement upon expiration, shall make such intention known to the other party by written notice thereof not less than six (6) months prior to the expiration of this Agreement.

19.3 Any covered Project awarded during the term of this Agreement shall continue to be covered hereunder, until completion of the Project, notwithstanding the expiration date of this Agreement.

IN WITNESS WHEREOF, the Parties hereto have executed this Agreement on the day and year written below. THE UNION OFFICIALS signing this Agreement warrant and represent that they are authorized to collectively bargain on behalf of the organizations whom they represent and the members of such organizations.

APPROVED AS TO FORM:

Michael N. Feuer, City Attorney

By: _____ Date: 08/25/21

Edward M. Jordan
Assistant City Attorney

THE CITY OF LOS ANGELES DEPARTMENT OF PUBLIC WORKS

By: _____ Date: 8/18/21

Greg Good
President, Board of Public Works

LOS ANGELES/ORANGE COUNTY BUILDING AND CONSTRUCTION TRADES COUNCIL

By: _____ Date: 8-18-2021

Chris Hannan
Executive Secretary
Los Angeles/Orange County Building
And Construction Trades Council

DocuSign Envelope ID: 605F8A59-AB86-4A83-A0F3-FB4D3420C3FB

Union Signatory Page

ADDENDUM 3

Asbestos Heat & Frost Insulators (Local 5)	DocuSigned by: Mike Patterson 11199ACC98CF44A...
Boilermakers (Local 92)	DocuSigned by: Luis Miramontes 83A563BEFB6E4BF...
Bricklayers & Allied Craftworkers (Local 4)	DocuSigned by: Lupe Aldaco EA7AF8519EAE486...
Cement Masons (Local 500)	DocuSigned by: Jack Alvarado 5C861A00E44B47F...
Cement Masons (Local 600)	DocuSigned by: Fitzgerald Jacobs 11D37668D2404C2...
Electricians (Local 11)	DocuSigned by: Joel Barton 0B2719AFC830491...
Elevator Constructors (Local 18)	DocuSigned by: Tony Gazzaniga 859D63C5C38B417...
Gunite Workers (Local 345)	DocuSigned by: Ed Learn (Gunite#345) AE8FEA548C1F413...
Iron Workers (Reinforced – Local 416)	DocuSigned by: 8D6889688F6042C...
Iron Workers (Structural – Local 433)	DocuSigned by: K A R CE4172C82FEB4CC...
Laborers (Local 300)	DocuSigned by: SERGIO RASCON 6D9520D1C3F9449...
Laborers (Local 1309)	DocuSigned by: Mario Scales LiUNA Local 1309 D7E1A203FEB4485...
Laborers (Local 1184)	DocuSigned by: B589A3D2C62940C...
Operating Engineers (Local 12)	DocuSigned by: Ron Sikorski 5D003BB73A404FA...
Operating Engineers (Local 12)	DocuSigned by: Larry Davison 5D003BB73A404FA...
Operating Engineers (Local 12)	DocuSigned by: David Sikorski 5D003BB73A404FA...
Painters & Allied Trades DC 36	DocuSigned by: Mark Bartlett 4C5D0B45A248484...
Pipe Trades (Plumbers Local 78)	DocuSigned by: Jeremy Diaz 8C908D2564A148A...
Pipe Trades (Pipe Fitters Local 250)	DocuSigned by: Glenn Santa Cruz EE234144314245D...
Pipe Trades (Local 345)	DocuSigned by: Ricardo Perez 8C124FFD6F5F464...
Pipe Trades (Plumbers/Fitters Local 761)	DocuSigned by: Greg Lewis 5496394F0F9C40F...
Pipe Trades (Sprinkler Fitters Local 709)	DocuSigned by: Todd Golden 6D95CFF26138497...
Plasterers (Local 200)	DocuSigned by: Tom Castleman CAB4C75A182544C...
Plaster Tenders (Local 1414)	DocuSigned by: Jim Preciado F2AB8D6BA0D54E8...
Roofers & Waterproofers (Local 36)	DocuSigned by: Cliff Smith E6074B80D99147F...
Sheet Metal Workers (Local 105)	DocuSigned by: Luther Medina 0265ZCEE45734FE...
Teamsters (Local 986)	DocuSigned by: Caesar Borgas (Teamsters#986) B9F79ED2514D410...
Southwest Regional Council of Carpenters	DocuSigned by: Stephen Aranda 866C6F622624439...
District Council of Laborers	DocuSigned by: Jon Preciado 9D151D075BAB44A...
Department of Public Works	

ATTACHMENT "A"

COMPANY LETTERHEAD

Date: _____

Mr. John L. Reamer, Jr., Inspector of Public Works
City of Los Angeles
Bureau of Contract Administration
1149 S. Broadway, Suite 300
Los Angeles, CA 90015

PROJECT NAME: _____

Dear Mr. Reamer:

This is to certify that the undersigned Contractor/Subcontractor/Employer (C/S/E) has read and understood the Project Labor Agreement (PLA) entered into by and between the City of Los Angeles Department of Public Works (DPW) and the Los Angeles/Orange Counties Building and Construction Trades Councils and Unions dated _____ and the DPW Public Works Infrastructure Stabilization Policy (Policy). The undersigned C/S/E hereby agrees to comply with all of the terms and conditions of the aforementioned duly signed PLA and DPW Policy.

The undersigned C/S/E acknowledges that compliance with the provisions relating to Local Hire and Transitional Workers (Articles 7.3, 7.6, 7.7 & 7.10), Workforce Referral and Development (Articles 7.1, 7.4, 7.5, 7.8 & 7.10), and Apprenticeship Participation (Article 7.7 & 7.11) is of particular importance.

It is understood that the signing of the Letter of Assent shall be as binding on the undersigned C/S/E as though the C/S/E had signed the DPW PLA and shall require all its subcontractors, of whatever tier, to become similarly bound for all work within the scope of this PLA and the DPW Policy.

This further certifies (per Articles 3, 11.2 & the Policy) that the undersigned C/S/E understands that submission of this Letter of Assent and employment hiring plan will be required prior to the commencement of any work in relation to this contract. Non-submittal of this letter and all required hiring plan documentation may preclude the C/S/E from being approved to work on this project.

This Letter of Assent shall become effective and binding upon the undersigned C/S/E the _____ day of _____, _____, and shall remain in full force and effect until the completion of the above stated project.

Sincerely,
(Name of Construction Company)

By: _____
(Name and Title of Authorized Executive)

_____
(Contractor's State License No.)

ATTACHMENT "B"

LOS ANGELES/ORANGE COUNTIES

BUILDING AND CONSTRUCTION TRADES COUNCIL

APPROVED

DRUG AND ALCOHOL TESTING POLICY

(rev. December 2019)

The Parties recognize the problems which drug and alcohol abuse have created in the construction industry and the need to develop drug and alcohol abuse prevention programs. Accordingly, the Parties agree that in order to enhance the safety of the workplace and to maintain a drug and alcohol-free work environment, individual Employers may require applicants or employees to undergo drug and alcohol testing.

1. It is understood that the use, possession, transfer or sale of illegal drugs, narcotics, or other unlawful substances, as well as being under the influence of alcohol and the possession or consuming alcohol is absolutely prohibited while employees are on the Employer's job premises or while working on any jobsite in connection with work performed under the Project Labor Agreement ("PLA").

2. No Employer may implement a drug testing program which does not conform in all respects to the provisions of this Policy.

3. No Employer may implement drug testing at any jobsite unless written notice is given to the Union setting forth the location of the jobsite, a description of the project under construction, and the name and telephone number of the Project Supervisor. Said notice shall be addressed to the office of each Union signing the CWA. Said notice shall be sent by email or by registered mail before the implementation of drug testing. Failure to give such notice shall make any drug testing engaged in by the Employer a violation of the CWA, and the Employer may not implement any form of drug testing at such jobsite for the following six months.

4. An Employer who elects to implement drug testing pursuant to this Agreement shall require all employees on the Project to be tested. With respect to individuals who become employed on the Project subsequent to the proper implementation of a valid drug testing program, such test shall be administered upon the commencement of employment on the project, whether by referral from a Union Dispatch Office, transfer from another project, or another method. Individuals who were employed on the project prior to the proper implementation of a valid drug testing program may only be subjected to testing for the reasons set forth in paragraphs 5(g)(l) through 5(g)(3) and paragraphs 6(a) through 6(e) of this Policy. Refusal to undergo such testing shall be considered sufficient grounds to deny employment on the project.

5. The following procedure shall apply to all drug testing:

a. The Employer may request urine samples only. The applicant or employee shall not be observed when the urine specimen is given. An applicant or employee, at his or her sole option, shall, upon request, receive a blood test in lieu of a urine test. No employee of the Employer shall draw blood from a bargaining unit employee, touch or handle urine specimens, or in any way become involved in the chain of custody of urine or blood specimens. A Union Business Representative, subject to the approval of the individual applicant or employee, shall be permitted to accompany the applicant or employee to the collection facility to observe the collection, bottling, and sealing of the specimen.

b. An employer may request an applicant to perform an alcohol breathalyzer test, at a certified laboratory only and cutoff levels shall be those mandated by applicable state or federal law.

c. The testing shall be done by a laboratory approved by the Substance Abuse & Mental Health Services Administration (SAMHSA), which is chosen by the Employer and the Union.

d. An initial test shall be performed using the Enzyme Multiplied Immunoassay Technique (EMIT). In the event a question or positive result arises from the initial test, a confirmation test must be utilized before action can be taken against the applicant or employee. The confirmation test will be by Gas Chromatography/Mass Spectrometry (GC/MS). Cutoff levels for both the initial test and confirmation test will be those established by SAMHSA. Should these SAMHSA levels be changed during the course of this Agreement or new testing procedures are approved, then these new regulations will be deemed as part of this existing Agreement. Confirmed positive samples will be retained by the testing laboratory in secured long-term frozen storage for a minimum of one year. Handling and transportation of each sample must be documented through strict chain of custody procedures.

e. In the event of a confirmed positive test result the applicant or employee may request, within forty-eight (48) hours, a sample of his/her specimen from the testing laboratory for purposes of a second test to be performed at a second laboratory, designated by the Union and approved by SAMHSA. The retest must be performed within ten (10) days of the request. Chain of custody for this sample shall be maintained by the Employer between the original testing laboratory and the Union's designated laboratory. Retesting shall be performed at the applicant's or employee's expense. In the event of conflicting test results the Employer may require a third test.

f. If, as a result of the above testing procedure, it is determined that an applicant or employee has tested positive, this shall be considered sufficient grounds to

deny the applicant or employee his/her employment on the project.

g. No individual who tests negative for drugs pursuant to the above procedure and becomes employed on the project shall again be subjected to drug testing with the following exceptions:

1. Employees who are involved in industrial accidents resulting in damage to plant, property or equipment or injury to him/her or others may be tested for drug or alcohol pursuant to the procedures stated hereinabove.

2. The Employer may test employees following thirty (30) days advance written notice to the employee(s) to be tested and to the applicable Union. Notice to the applicable Union shall be as set forth in paragraph 3 above and such testing shall be pursuant to the procedures stated hereinabove.

3. The Employer may test an employee where the Employer has reasonable cause to believe that the employee is impaired from performing his/her job. Reasonable cause shall be defined as being aberrant or unusual behavior, the type of which is a recognized and accepted symptom of impairment (i.e., slurred speech, unusual lack of muscular coordination, etc.). Such behavior must be actually observed by at least two persons, one of whom shall be a supervisor who has been trained to recognize the symptoms of drug abuse or impairment and the other of whom shall be the Job Steward. If the Job Steward is unavailable or there is no Job Steward on the project the other person shall be a member of the applicable Union's bargaining unit. Testing shall be pursuant to the procedures stated hereinabove. Employees who are tested pursuant to the exceptions set forth in this paragraph and who test positive will be removed from the Employer's payroll.

h. Applicants or employees who do not test positive shall be paid for all time lost while undergoing drug testing. Payment shall be at the applicable wage and benefit rates set forth in the applicable Union's Master Labor Agreement. Applicants who have been dispatched from the Union and who are not put to work pending the results of a test will be paid waiting time until such time as they are put to work. It is understood that an applicant must pass the test as a condition of employment. Applicants who are put to work pending the results of a test will be considered probationary employees.

6. The Employers will be allowed to conduct periodic jobsite drug testing on the Project under the following conditions:

a. The entire jobsite must be tested, including any employee or subcontractor's employee who worked on that project three (3) working days before or after the date of the test;

b. Jobsite testing cannot commence sooner than fifteen (15) days after start of the work on the project;

c. Prior to start of periodic testing, a Business Representative will be allowed to conduct an educational period on company time to explain periodic jobsite testing program to affected employees;

d. Testing shall be conducted by a SAMHSA certified laboratory, pursuant to the provisions set forth in paragraph 5 hereinabove.

e. Only two (2) periodic tests may be performed in a twelve (12) month period.

7. It is understood that the unsafe use of prescribed medication, or where the use of prescribed medication impairs the employee's ability to perform work, is a basis for the Employer to remove the employee from the jobsite.

8. Any grievance or dispute which may arise out of the application of this Agreement shall be subject to the grievance and arbitration procedures set forth in the CWA.

9. The establishment or operation of this Policy shall not curtail any right of any employee found in any law, rule or regulation. Should any part of this Agreement be found unlawful by a court of competent jurisdiction or a public agency having jurisdiction over the parties, the remaining portions of the Agreement shall be unaffected, and the parties shall enter negotiations to replace the affected provision.

10. Present employees, if tested positive, shall have the prerogative for rehabilitation program at the employee's expense. When such program has been successfully completed the Employer shall not discriminate in any way against the employee. If work for which the employee is qualified exists, he/she shall be reinstated.

11. The Employer agrees that results of urine and blood tests performed hereunder will be considered medical records held confidential to the extent permitted or required by law. Such records shall not be released to any persons or entities other than designated Employer representatives and the applicable Union. Such release to the applicable Union shall only be allowed upon the signing of a written release and the information contained therein shall not be used to discourage the employment of the individual applicant or employee on any subsequent occasion.

12. The Employer shall indemnify and hold the Union harmless against any and all claims, demands, suits, or liabilities that may arise out of the application of this Agreement and/or any program permitted hereunder.

13. Employees who seek voluntary assistance for substance abuse may not be disciplined for seeking such assistance. Requests from employees for such assistance shall remain confidential and shall not be revealed to other employees or management personnel without the employee's consent. Employees enrolled in substance abuse programs will be subject to all Employer rules, regulations and job performance standards with the understanding that an employee enrolled in such a program is receiving

treatment for an illness.

14. The parties agree to develop and implement a drug abuse prevention and testing program for all apprentices entering the industry.

15. This Memorandum of Understanding shall constitute the only Agreement in effect between the parties concerning drug and alcohol abuse, prevention and testing. Any modifications thereto must be accomplished pursuant to collective bargaining negotiations between the parties.

APPENDIX A: SPECIMEN REPORTING CRITERIA

Initial Test Analyte	Initial Test Cutoff [1]	Confirmatory Test Analyte	Confirmatory Test Cutoff Concentration
Marijuana metabolites (THCA)[2]	50 ng/ml [3]	THCA	15 ng/ml
Cocaine metabolite (Benzoylecgonine)	150 ng/ml [3]	Benzoylecgonine	100 ng/ml
Codeine/ Morphine	2000 ng/ml	Codeine Morphine	2000 ng/ml 2000 ng/ml
Hydrocodone/ Hydromorphone	300 ng/ml	Hydrocodone Hydromorphone	100 ng/ml 100 ng/ml
Alcohol	0.02%	Ethanol	0.02%
Oxycodone/ Oxymorphone	100 ng/ml	Oxycodone Oxymorphone	100 ng/ml 100 ng/ml
6-Acetylmorphine	10 ng/ml	6-Acetylmorphine	10 ng/ml
Phencyclidine	25 ng/ml	Phencyclidine	25 ng/ml
Amphetamine/ Methamphetamine	500 ng/ml	Amphetamine Methamphetamine	250 ng/ml 250 ng/ml

---

[1] For grouped analytes (i.e., two or more analytes that are in the same drug class and have the same initial test cutoff):

Immunoassay: The test must be calibrated with one analyte from the group identified as the target analyte. The cross-reactivity of the immunoassay to the other analyte(s) within the group must be 80 percent or greater; if not, separate immunoassays must be used for the analytes within the group.

Alternate technology: Either one analyte or all analytes from the group must be used for calibration, depending on the technology. At least one analyte within the group must have a concentration equal to or greater than the initial test cutoff or, alternatively, the sum of the analytes present (i.e., equal to or greater than the laboratory's validated limit of quantification) must be equal to or greater than the initial test cutoff.

[2] An immunoassay must be calibrated with the target analyte, 9-tetrahydrocannabinoJ-9- carboxylic acid (THCA).

[3] **Alternate technology (THCA and benzoylecgonine):** The confirmatory test cutoff must be used for an alternate technology initial test that is specific for the target analyte (i.e., 15 ng/ml for THCA, 100 ng/ ml for benzoylecgonine).

MDMA[4]/MDA[5]	500 ng/ml	MDMA MDA	250 ng/ml 250 ng/ml
Initial Test Analyte	Initial Test Cutoff	Confirmatory Test Analyte	Confirmatory Test Cutoff Concentration
Barbiturates	300 ng/ml	Barbiturates	200 ng/ml
Benzodiazepines	300 ng/ml	Benzodiazepines	300 ng/ml
Methadone	300 ng/ml	Methadone	100 ng/ml
Methaqualone	300 ng/ml	Methaqualone	300 ng/ml
Propoxyphene	300 ng/ml	Propoxyphene	100 ng/ml

[4] Methylenedioxymethamphetamine (MDMA)
[5] Methylenedioxyamphetamine (MDA)

ADDENDUM 3

SIDE LETTER OF AGREEMENT
TESTING POLICY FOR DRUG ABUSE

It is hereby agreed between the parties hereto that an Employer who has otherwise properly implemented drug testing, as set forth in the Testing Policy for Drug Abuse, shall have the right to offer an applicant or employee a "quick" drug screening test. This “quick” screen test shall consist either of the “ICUP” urine screen or similar test or an oral screen test. The applicant or employee shall have the absolute right to select either of the two “quick” screen tests, or to reject both and request a full drug test.

An applicant or employee who selects one of the "quick" screen tests, and who passes the test, shall be put to work immediately. An applicant or employee who fails the "quick" screen test, or who rejects the "quick" screen tests, shall be tested pursuant to the procedures set forth in the Testing Policy for Drug Abuse. The sample used for the "quick" screen test shall be discarded immediately upon conclusion of the test. An applicant or employee shall not be deprived of any rights granted to them by the Testing Policy for Drug Abuse as a result of any occurrence related to the “quick” screen test.

ATTACHMENT "C"

CITY OF LOS ANGELES DEPARTMENT OF PUBLIC WORKS
BUREAU OF CONTRACT ADMINISTRATION
REQUEST/VERIFICATION FOR CRAFT EMPLOYEES

(*Project:* _____)

INSTRUCTIONS

To the Contractor:

Please complete and fax this form to the applicable union to request craft workers that fulfill all hiring requirements for the City of Los Angeles project. After faxing your request, call the Local to verify receipt and substantiate their capacity to furnish local, transitional or general dispatch as requested. Contact information for Locals is listed on back of form. Please print your Fax Transmission Verification Report and keep a copy of this request for your records.

To the Union:

Please complete the "Union Use Only" section and fax form back to the requesting contractor. Retain form for your records.

To:	Local	Fax# ( )	Date:
From – Company Name			
Person Sending:		Contact Phone: ( )	

Please provide me with union craft workers per the City of Los Angeles Department of Public Works PLA that fulfills the requirements for this project as defined below:

30% Local Requirement (Union craft employees, including apprentices, who reside in the local metropolitan area zip codes listed below. If unavailable, can be dispatched from any one of the zip codes listed in Attachment).

SEE ATTACHED TIER 1 AND TIER 2 ZIP CODES

10% "Transitional Worker" Requirement (Union craft employees, including apprentices, who live in one of the zip codes listed in Attachment, and are certified to fulfill the "Transitional worker" hiring requirement).

General Dispatch (Union craft employees dispatched per normal dispatch procedures, not including the 30% Local or 10% Transitional Worker requirements)

Employee Name	Address	Zip Code

Craft Employees Requested						
Job/Craft Description	Journeyman / Apprenticeship Level	Number(s) Requested			Report Date	Report Time
		30% Local	10% Transitional	General Dispatch		

Total Workers Requested_____

Please have worker(s) report to the following address indicated below:

Site Address: _____ **Report to (On-Site Contact):** _____

On-Site Tel.#: ( ) **Fax: ( )** _____

Comments or special requirements:

Union Use Only

(Fax the Completed Form Back to Contractor)

Reception Date:	Dispatch Date:	Received By:
Requested Dispatch	**Available for Dispatch**	**Unavailable for Dispatch**
30% Local	☐	☐
10% Transitional	☐	☐
General Dispatch	☐	☐

Comments:

ATTACHMENT "D"

Los Angeles Department of Public Works
PLA Construction Trade Unions Contact Numbers

Asbestos Heat & Frost Insulators Local 5
3833 Ebony St.
Ontario, CA 91761
Telephone: (909) 390-3401
Fax: (909) 390-3405

Boilermakers Local 92
2260 S. Riverside Avenue
Bloomington, CA 92316
Telephone: (909) 877-9382
Fax: (909) 877-8318

Bricklayers & Allied Craftworkers Local 4
2679 Sierra Way
LA Verne, CA 91750
Telephone: (626) 739-5600
Fax: (626) 739-5610

Drywall Finishers Local 1136
1155 Corporate Center Drive
Monterey Park, CA 91754
Telephone: (626) 296-8003
Fax: (626) 296-8076

Electricians Local 11
297 N. Marengo Avenue
Pasadena, CA 91101
Telephone: (626) 243-9700
Fax: (626) 793-9750

Elevator Constructors Local 18
2011 E Financial Way
Glendora, CA 91741
Telephone: (800) 428-5226
Fax: None

Operating Engineers Local 12
150 E. Corson
Pasadena, CA 91103
Telephone: (626) 792-8900
Fax: (626) 792-9039

Glaziers Local 636
1155 Corporate Center Dr.
Monterey Park, CA 91754
Telephone: (626) 448-1565
Fax: (626) 797-5998

Gunite Workers Local 345
P.O. Box 3339
Burbank, CA 91508
Telephone: (818) 846-1303
Fax: (818) 846-1226

Iron Workers (Reinforced) Local 416
13830 San Antonio Dr.
Norwalk, CA 90650
Telephone: (562) 868-1251
Fax: (562) 868-1429

Iron Workers (Structural) Local 433
17495 Hurley St. East
City of Industry, CA 91744
Telephone: (626) 964-2500
Fax: (626) 964-1754

Laborers Local 300
2005 W. Pico Blvd.
Los Angeles, CA 90006
Telephone: (213) 385-3550
Fax: (213) 385-6985

Laborers Local 1184
1128 La Cadena Dr.
Riverside, CA 92507
Telephone: (951) 684-1484
Fax: (951) 779-1445

Laborers Local 1309
3971 Pixie Ave.
Lakewood, CA 90712
Telephone: (562) 421-9346
Fax: (562) 421-5964

Painters & Allied Trades DC 36
1155 Corporate Center Drive
Monterey Park, CA 91754
Telephone: (626) 584-9925
Fax: (626) 584-1949

Plaster Tenders Local 1414
1055 W. Second Street
Pomona, CA
Telephone: (909) 622-8500
Fax: (909) 623-5244

Pipe Trades Local 250
Steamfitters/Air Conditioning/ Refrigeration / Industrial Pipefitters
18355 S. Figueroa St.
Gardena, CA 90248
Steamfitters: Tel: (310) 660-0035
AC/Refrig. Tel: (310) 660-0045
FAX: (310) 329-2465

Pipe Trades Local 345
Landscape, Irrigation, Underground & Specialty Piping
1430 Huntington Dr.
Duarte, CA 91010
Telephone: (626) 357-9345
Fax: (626) 359-0359

Pipe Trades Local 709
Sprinkler Fitters
12140 Rivera Road
Whittier, CA 90606
Telephone: (562) 698-9909
Fax: (562) 698-7255

Plumbers Local 78
1111 W. James Wood Blvd.
Los Angeles, CA 90015
Telephone: (213) 688-9090
Fax: (213) 627-4624

Plumbers Local 761
1305 N. Niagara St.
Burbank, CA 91505
Telephone: (818) 843-8670
Fax: (818) 843-5209

Plasterers Local 200
1610 W. Holt Ave
Pomona, CA 91768
Telephone: (909) 865-2240
Fax: (909) 865-9392

Cement Masons Local 500
331 Corporate Terrace Circle
Corona, CA 92879
Telephone: (714) 554-0730
Fax: (714) 265-0780

Cement Masons Local 600
5811 E. Florence Ave.
Bell Gardens, CA 90201
Telephone: (323) 771-0991
Fax: (323) 771-2631

Resilient Floor & Decorative Covering Local 1247
1155 Corporate Center Dr.
Monterey Park, CA 91754
Telephone: (626) 296-8048
Fax: (626) 296-8058

Roofers & Waterproofers Local 36
5380 Poplar Blvd.
Los Angeles, CA 90032
Telephone: (323) 222-0251
Fax: (323) 222-3585

Sheet Metal Workers Local 105
2120 Auto Centre Dr., Suite 105
Glendora, CA 91740
Telephone: (909) 305-2800
Fax: (909) 305-2822

Teamsters Local 986
1430 E. Holt Avenue
Covina, CA 91724
Telephone: (626) 350-9860
Fax: (626) 448-0986

Tradeshow and Sign Crafts
1155 Corporate Center Drive
Monterey Park, CA 91754
Telephone: (626) 296-8086
Fax: (626) 296-8087

Southwest Regional Council of Carpenters
533 S. Freemont Avenue, 10th Floor
Los Angeles, CA 90071
Telephone: (213) 385-1457
Fax: (213) 385-3759

ATTACHMENT "E"

Public Infrastructure Project Series (PIPS)
Department of Public Works
Public Infrastructure Stabilization Program Project List

	Project Title	Program Name	Est. Start
1	Vision Zero - Phase 2E Traffic Signal Improvements	Street Improvement	9/1/2021
2	LA Streetcar Project	Street Improvement	4/1/2025
3	Clean Water Campus (CWC)	TBD	4/2/2022
4	Hollywood Walk of Fame Renovation	Municipal Facilities Architect	7/24/2022
5	East West Valley Interceptor Sewer	Wastewater - CSP	7/31/2022
6	San Fernando Relief Sewer - Doran St to Division St	Wastewater - CSP	7/31/2023
7	North Hollywood Park Stormwater Capture	Stormwater	3/31/2022
8	HWRP- Solids Handling & Truck Load Facility	Wastewater - TPP	TBD
9	LAGWRP - Primary Effluent Equalization Storage	Wastewater - TPP	10/31/2021
10	NOS Rehab Unit 10 - 101 Fwy to Cardinal St.	Wastewater - CSP	2/2/2022
11	LA River Way - SF Valley Completion (Vanalden to Balboa)	Municipal Facilities Rec & Parks	6/30/2022
12	DCTWRP- Maintenance and Warehouse Facility Replacement	Wastewater - TPP	10/1/2021
13	LACERS' Building Buildout Analysis	Municipal Facilities Architect	2/1/2022
14	LAGWRP- Personnel Building	Wastewater - TPP	10/31/2021
15	First and Broadway Civic Center Park	Recreational & Cultural Facilities	8/1/2022
16	Channel 35 Studio Phase 1	Municipal Facilities Architect	TBD
17	NOS Rehab Unit 16 - Rigali Ave & Finch St	Wastewater - CSP	3/31/2026
18	NOS Rehab Unit 11 - Humboldt St to Cardinal St	Wastewater - CSP	7/31/2023
19	Valley Plaza Park North Stormwater Capture	Stormwater	3/31/2022
20	NOS Rehab Unit 15 - Petite Ct to Marsh St	Wastewater - CSP	2/28/2022
21	Paseo Del Mar (White Point) Permanent Restoration	Street Improvement	2/13/2022
22	HWRP- Co-Digestion Implementation Improvements	Wastewater - TPP	12/30/2021
23	DCTWRP- Multi-Purpose and Office Building	Wastewater - TPP	3/31/2023
24	DCTWRP- Primary Treatment Upgrades	Wastewater - TPP	3/31/2024
25	Warner Grand Theatre	Recreational & Cultural Facilities	4/1/2022
26	NOS Rehab Unit 33 - Magnolia Blvd to Woodman Ave	Wastewater - CSP	7/31/2023
27	Boyle Heights Sports Center - Gymnasium	Prop K	TBD
28	Venice Auxiliary Pumping Plant	Wastewater - TPP	7/17/2022
29	HTP- FOG Receiving Station North	Wastewater - TPP	7/2/2022
30	NOS Rehab Unit 20 & 21 - Zoo Dr. R/W to Doran St.	Wastewater - CSP	3/31/2023
31	CBD Sewer Rehab Unit 12 - Alameda to 14th Pl	Wastewater - CSP	7/31/2024
32	Venice High School Pool & Bathhouse Replacement	Municipal Facilities Rec & Parks	12/30/2022
33	David M. Gonzales Recreation Center Stormwater Capture	Stormwater	3/31/2022
34	Reseda Blvd, Reconstruction, Between Parthenia St. & Victory Blvd.	Street Improvement	TBD
35	Ballona Creek Water Quality Improvement	Wastewater - TPP	3/20/2022
36	CBD Sewer Rehab Unit 5 - Wisconsin St to Denker Ave	Wastewater - CSP	12/31/2023
37	Alameda St. Widening from Harry Bridges to Anaheim	Street Improvement	1/29/2022
38	ATP 4: Liechty Middle and Neighborhood ES	Street Improvement	6/7/2023
39	Hollywood Recreation Center - Modern Gym.	Prop K	3/1/2022

	Project Title (cont.)	Program Name	Est. Start
40	Reseda Skate Facility Development	Prop K	7/1/2022
41	Channel 35 Studio Phase 2	Municipal Facilities Architect	7/4/2022
42	CBD Sewer Rehab Unit 6 - Denker Ave to Van Ness Ave	Wastewater - CSP	12/31/2023
43	Highland Park Old Bank Building	Municipal Facilities Architect	3/1/2023
44	NOS Rehab Unit 35 - Noble to Cedros	Wastewater - CSP	10/2/2022
45	Highland Park Jr. Arts Center (Renovate Bldg)	Prop K	TBD
46	Asilomar Bl Landslide Mitigation (tie-back wall and grading)	Gas Tax	7/22/2022
47	Alameda St. Widening from Anaheim to PCH	Street Improvement	8/30/2022
48	CBD Sewer Rehab Unit 11 - 6th to Bay	Wastewater - CSP	8/31/2023
49	TIWRP- Digester Insulation Replacement	Wastewater - TPP	1/2/2022
50	Pershing Square Modernization - Phase 1B	Municipal Facilities Rec & Parks	3/1/2022
51	TIWRP- Phase I AWPF MF System Replacement	Wastewater - TPP	1/1/2024
52	HWRP- Digester Battery E Improvements	Wastewater - TPP	8/1/2021
53	Strathern Park North Stormwater Capture	Stormwater	3/31/2022
54	TIWRP- Service Maintenance & Warehouse Facility	Wastewater - TPP	12/3/2023
55	NOS Rehab Unit 29 - Beck Ave to Colfax Ave R/W	Wastewater - CSP	9/30/2021
56	Hollywood Sanitation Yard	Municipal Facilities Architect	1/3/2023
57	Highland Ave Street Improvements, Complete Streets	Street Improvement	1/1/2023
58	Avalon Blvd., Reconstruction, Between San Pedro St. and 120th St.	Street Improvement	6/15/2022
59	East Wilmington Sewer Project - Area A	Wastewater - CSP	7/31/2022
60	Aliso Creek - Limekiln Creek Restoration Project	Proposition O	7/13/2022
61	Studio City Recreation Center - Gymnasium	Prop K	7/2/2022
62	NOS Rehab Unit 27 - Vineland Ave to Forman Ave	Wastewater - CSP	12/31/2025
63	NOS Rehab Unit 30 - Colfax to Whitsett	Wastewater - CSP	1/2/2023
64	Fernangeles Park Stormwater Capture	Stormwater	3/31/2022
65	Exposition - West Bikeway - Northvale Segment	Street Improvement	6/2/2022
66	74th Street Sewer Rehab Unit 3 - Vermont Ave to 67th St	Wastewater - CSP	3/31/2022
67	HWRP- TSF Mechanical Equipment Upgrades	Wastewater - TPP	9/30/2021
68	CBD Sewer Rehab Unit 13 - 14th Pl to Main (CBD Unit 14)	Wastewater - CSP	8/31/2024
69	Whitsett Fields Park North Stormwater Capture	Stormwater	3/31/2022
70	TIWRP- Final Tanks Skimmer System Upgrade	Wastewater - TPP	7/2/2021
71	La Brea Ave Street Improvements, Complete Streets	Street Improvement	3/31/2023
72	Pio Pico Library Pocket Park and Underground Parking Structure	Municipal Facilities Rec & Parks	9/1/2021
73	South LA Wetlands - Building Demolition Assessment	Municipal Facilities Rec & Parks	2/28/2022
74	TIWRP- Primary Treatment Tanks Improvements	Wastewater - TPP	7/1/2024
75	NOS Rehab Unit 26 - Forman Ave & Olive Ave	Wastewater - CSP	12/31/2025
76	ATP Cycle 3- Arts District Pedestrian and Cyclist Safety Project	Street Improvement	6/1/2022
77	Victory Blvd (Phase 2) - De Soto to Canoga Ave	Street Improvement	7/2/2022
78	LAGWRP- Blower Air Cleanup System	Wastewater - TPP	10/4/2024
79	TIWRP- AWPF Emergency Generators	Wastewater - TPP	7/1/2021
80	LAGWRP- Headworks Improvements	Wastewater - TPP	1/2/2024
81	Burbank Blvd - Lankershim Blvd to Cleon Ave	Street Improvement	2/2/2022
82	Vermont Avenue East Primary Sewer Rehabilitation-Florence to 83rd	Wastewater - CSP	1/31/2023
83	Alexandria Park Stormwater Capture	Stormwater	3/31/2022

	Project Title (cont.)	Program Name	Est. Start
84	TIWRP- TIRE Facility Enhancement	Wastewater - TPP	7/31/2022
85	AHSC Round 4 - Weingart	Street Improvement	12/21/2022
86	HWRP- Equipment Storage Facility	Wastewater - TPP	10/3/2022
87	Figueroa Primary Sewer Rehabilitation-87th to 108th	Wastewater - CSP	1/31/2023
88	TIWRP- Headworks Biotrickling Filter Facility	Wastewater - TPP	8/1/2021
89	Potrero Canyon Pedestrian Bridge over Pacific Coast Highway	Municipal Facilities Architect	TBD
90	PP- 669 Harris Place Pumping Plant Rehab	Wastewater - TPP	11/30/2022
91	Rory Shaw/Strathern Wetlands Park (LA County)	Proposition O	TBD
92	Naomi Ave Sewer Upsizing	Wastewater - CSP	11/2/2022
93	Old Washington Irving Library Building Renovation	Recreational & Cultural Facilities	3/30/2023
94	CBD Sewer Rehab Unit 16 - Broadway 4th to 7th	Wastewater - CSP	8/31/2023
95	SSRP D CON 01 (P02)	Wastewater - CSP	11/2/2021
96	74th Street Sewer Rehab Unit 2 - 67th St to Western Ave	Wastewater - CSP	7/17/2025
97	DAR 08 Westchester and Wilshire	Wastewater - CSP	9/30/2022
98	Asphalt Plant No. 1 - Phase 2	Municipal Facilities Architect	1/1/2022
99	HWRP- Dilute Polymer System Improvements	Wastewater - TPP	3/1/2022
100	CIP-Branford St at Arleta Ave SD	Stormwater	10/6/2022
101	Topanga CPS Solar PV System	Municipal Facilities Architect	TBD
102	Pershing Square Implementation - Phase 1	Municipal Facilities Rec & Parks	8/1/2021
103	Culver Blvd Improvements, Complete Streets	Street Improvement	9/1/2022
104	Silver Lake Reservoir Stormwater Capture	Stormwater	3/3/2022
105	SSRP D CON 05 (H10 & N10)	Wastewater - CSP	2/28/2023
106	Zelzah Ave Street Improvements	Street Improvement	6/1/2023
107	Valley Plaza Park South Stormwater Capture	Stormwater	3/31/2022
108	CBD Sewer Rehab Unit 15 - James M. Wood Blvd to 11th St	Wastewater - CSP	8/31/2023
109	Sepulveda Channel Low Flow Treatment Facility (LFTF #2)	Wastewater - TPP	3/20/2022
110	Granada Hills Pool & Bathhouse Replacement	Municipal Facilities Rec & Parks	TBD
111	Magnolia Blvd (North) - Cahuenga Blvd to Vineland Ave	Street Improvement	3/17/2022
112	Madrid Theatre Renovations	Municipal Facilities Architect	1/3/2022
113	BSS Yard Relocation	Municipal Facilities Architect	3/28/2022
114	TIWRP- AWPF AOP Effluent Recirculation	Wastewater - TPP	1/29/2023
115	PP 648 Thompson Pumping Plant Rehab	Wastewater - TPP	11/30/2022
116	SSRP D CON 07 (H17A-E)	Wastewater - CSP	2/28/2022
117	7th Street Body Shop Replacement	Municipal Facilities Architect	2/1/2022
118	AHSC Round 3 - Elden Elms STI & TRA Improvements	Street Improvement	3/21/2022
119	HWRP- DSF Improvements	Wastewater - TPP	9/30/2022
120	ATP Cycle 3: Jefferson Blvd Complete Streets	Street Improvement	4/2/2022
121	HWRP- Ferric Chloride Facility Replacement	Wastewater - TPP	7/2/2021
122	North Central Yard Locker Improvement	Municipal Facilities Architect	TBD
123	DAR 07A North Hollywood / Sunland / Hollywood	Wastewater - CSP	TBD
124	WLAIS Rehab - Unit 1 - National & Barrington to Clover & Barry	Wastewater - CSP	7/31/2022
125	Valley Village Park Stormwater Capture	Stormwater	3/31/2022
126	CBD Sewer Rehab Unit 14 - Main to Grand (CBD Unit 13)	Wastewater - CSP	8/31/2024
127	SSRP D CON 02 (E20)	Wastewater - CSP	2/28/2022

	Project Title (cont.)	Program Name	Est. Start
128	Mission CPS Solar PV System	Municipal Facilities Architect	TBD
129	Anaheim Street Widening from Farragut Ave. to Dominguez Channel	Street Improvement	1/31/2022
130	PP 616 Cahuenga Pumping Plant Rehab	Wastewater - TPP	11/30/2022
131	Alameda St. Widening from Anaheim St. to 300 S/O PCH - East side Improvements	Street Improvement	2/21/2022
132	SSRP P02 Cesar Chavez Ave & Soto St	Wastewater - CSP	11/2/2021
133	ATP 4: 112th St. and Flournoy ES Safety IMPR Project	Street Improvement	6/7/2023
134	Concord Street Relief Sewer	Wastewater - CSP	5/31/2022
135	Cesar Chavez Ave/Lorena St/Indiana St - Roundabout	Street Improvement	3/1/2022
136	Boyle Heights/Cesar Chavez Great Streets -Brittania St. to Evergreen Ave. (DOT Proj)	Street Improvement	12/29/2021
137	SSRP H17D Adams Blvd & Budlong Ave	Wastewater - CSP	7/31/2022
138	HWRP- One Mile Chamber Pump Station	Wastewater - TPP	3/28/2022
139	LAGWRP- Sodium Hypochlorite Facility Relocation	Wastewater - TPP	10/3/2024
140	Culinary Arts Building Improvements	Municipal Facilities Architect	TBD
141	Rosecrans Recreation Child Care Center	Prop K	TBD
142	Taylor Yard Paseo del Rio Project	Municipal Facilities Architect	8/31/2022
143	GREEK THEATRE TERRACE DECK REPLACEMENT	TBD	TBD
144	SSRP H17C Arlington Av & 10 Freeway	Wastewater - CSP	3/2/2022
145	NCOS Jefferson/Holdrege Condensate Vault Rehab.	Wastewater - CSP	7/31/2022
146	AHSC Round 4 - Manchester Urban	Street Improvement	12/21/2022
147	Southern Pacific Trails	Prop K	TBD
148	AHSC Round 4 - Vermont and Manchester	Street Improvement	12/21/2022
149	SSRP H17B Pico Blvd and Vermont Ave	Wastewater - CSP	3/2/2022
150	DAR 07C North Hollywood / Sunland / Hollywood	Wastewater - CSP	4/30/2022
151	Devonshire PS Solar PV System	Municipal Facilities Architect	TBD
152	ATP Cycle 2- Boyle Heights Pedestrian Linkage	Street Improvement	8/1/2021
153	San Pedro City Hall Little Italy Plaza	Municipal Facilities Architect	2/1/2022
154	Sepulveda Basin HJELTE Field	Prop K	9/1/2023
155	DCTWRP- Ancillary Warehouse Facility Installation	Wastewater - TPP	9/30/2021
156	TIWRP- Polymer System Replacement	Wastewater - TPP	3/30/2022
157	HWRP- Abrasive Blast & Steam Cleaning Facility	Wastewater - TPP	9/30/2025
158	ATP 4: Alexandria Avenue ES Neighborhood Safety IMPR Project	Street Improvement	6/7/2023
159	HWRP- Headworks Fire Sprinkler System Replacement	Wastewater - TPP	TBD
160	SSRP H17A Gramercy Pl & Venice Blvd	Wastewater - CSP	3/2/2022
161	DAR 07D North Hollywood / Sunland / Hollywood	Wastewater - CSP	TBD
162	AHSC Round 3 - PATH Villas Hollywood STI and TRA Improvements	Street Improvement	5/1/2022
163	SSRP H17E Denker Av & Jefferson Bl	Wastewater - CSP	3/2/2022
164	Sheldon Arleta Phase III C - Baseball Field & Picnic Area	Prop K	2/1/2022
165	CIP - Hawwiian-Opp Storm Drain	Stormwater	9/30/2022
166	Sheldon Arleta Park - Arleta Ave. Street Improvement	Prop K	2/1/2022
167	TIWRP- Flaring System Replacement	Wastewater - TPP	12/1/2023
168	Sheldon Arleta Park - Sharp Ave	Prop K	2/1/2022
169	Las Palmas Senior Citizen Center - Renovation	Recreational & Cultural Facilities	9/1/2023
170	LA Street Civic Building	Municipal Facilities Architect	TBD

ADDENDUM 3

City of Los Angeles

Department of Public Works

Public Works Infrastructure Stabilization Policy

Project Labor Agreement

2020 - 2030

Department of Public Works

RESOLUTION NO. _____

RESOLUTION ADOPTING A POLICY REGARDING PUBLIC WORKS INFRASTRUCTURE STABLIZATION

WHEREAS, the Department of Public Works continues to lead the way to advance, achieve and maintain the City's vital infrastructure facilities, resources and services through its Capital Improvement Program (CIP) that serve over four million residents covering a geographic area of 465 square miles; and

WHEREAS, the Department of Public Works is responsible for the engineering, design and construction of municipal facilities affecting the public right of way and public properties as well as the maintenance and repair of the City's streets, street lighting systems, medians, embankments, roadways and bridges that provide safety for pedestrians, vehicles and the safe flow of goods and services throughout the City; and

WHEREAS, the Department of Public Works is responsible for the collection, treatment, disposal and recycling of sewage, urban runoff, refuse and household hazardous waste; and

WHEREAS, the Department of Public Works protects the City and public interest by ensuring that all public works projects are constructed and administered in accordance with the plans, specifications, contract provisions, and necessary safety provisions in the project sites; and

WHEREAS, the successful completion of covered projects is also of utmost importance to the Department of Public Works and the general public in the City and as such the Project Labor Agreement will facilitate the prompt, safe and on-time delivery of projects within the Department of Public Works' CIP; and

WHEREAS, the work to be done will require maximum cooperation from the many parties who will be involved to mitigate the negative impact to the public right of way, minimize the disruptions to City residents that affect quality of life and ensure timely completion of public work projects; and

WHEREAS, it is recognized that projects of a certain magnitude with multiple contractors and bargaining units on the job site at the same time over an extended period of time create the potential for work disruption without an overriding commitment to maintain continuity of work; and

WHEREAS, the interests of the general public, the City, the unions, contractors, subcontractors, employers and workers will be best served when construction work proceeds in an orderly manner free of disruption caused by strikes, sympathy strikes, work stoppages, picketing, lockouts, slowdowns or other interferences; and

WHEREAS, the PLA will provide a pool of skilled craft workers to help ensure the delivery of quality and safe projects; and

WHEREAS, the Department of Public Works (DPW) has adopted a departmental Project Labor Agreement (PLA) which will provide construction employment and training opportunities in ways calculated to mitigate the harms caused by geographically concentrated poverty, unemployment and underemployment in concentrated poverty neighborhoods; and

WHEREAS, employment of City residents in high unemployment and/or Concentrated Poverty Neighborhood areas affects the City as a whole and positively impacts the social wellbeing of residents and to that end, the City has taken action to promote City residents receiving employment opportunities at City public work projects; and

WHEREAS, increasing access to employment opportunities with prevailing wages is one way for the City to directly combat poverty and stimulate economic reinvestment; and

WHEREAS, the DPW-PLA is not intended to have an adverse impact on the policy of the City to maximize business opportunities for minority, women and other business enterprises in City contracts; and

WHEREAS, the DPW-PLA reflects a commitment by all parties to the diversity in the workforce hiring that reflect levels of minority, women and other worker utilization at levels which are representative of the relevant workforce of these groups in the Greater Los Angeles Area as determined by the U.S. Census Bureau; and

WHEREAS, the DPW-PLA is in accordance with City policies to ensure discrimination-free, diverse and equitable workforce hiring practices; and

WHEREAS, the DPW-PLA will help advance the skills of the local labor pool, especially the youth, by maximizing opportunities to be indentured into federal- and/or state-certified joint labor/management apprenticeship programs; and

WHEREAS, the Department of Public Works through the PLA, seeks to create career opportunities through apprenticeship participation, retention, and graduation; and

WHEREAS, the Board of Public Works wishes to adopt a policy to promote the above objectives and protect the proprietary interests described above.

NOW, THEREFORE, BE IT RESOLVED BY THE BOARD OF PUBLIC WORKS OF THE CITY OF LOS ANGELES, CALIFORNIA,

AS FOLLOWS:

The Department of Public Works (DPW) adopts the following Public Works Infrastructure Stabilization Policy:

SECTION I. DEFINITIONS

1. "Apprentice" means any worker who is indentured in a bona fide Labor/Management construction apprenticeship program, registered and approved by the State of California Department of Industrial Relations, Division of Apprenticeship Standards (DAS) or in the case of Projects with federal funding, indentured in a bona fide Labor/Management apprenticeship program approved by the US Department of Labor (DOL) and California DAS.

2. "Apprenticeship Program" means any Labor/Management construction apprenticeship program certified and approved by the California DAS or in the case of Projects with federal funding, approved by the US Department of Labor (DOL) and California DAS.

3. "Awarding Authority" means any board or commission of the City, or any employee or officer of the City that is authorized to award or enter into any contract on behalf of the City.

4. "Board" means the City of Los Angeles Board of Public Works.

5. "Bureau of Contract Administration (BCA)" means the designated bureau within the City's DPW responsible for administering this Agreement.

6. "City" means the City of Los Angeles, a municipal corporation, and all City Awarding Authorities.

7. "Construction Contract" means a City contract which has been certified by the City Controller, awarded by the Board, and is necessary to complete the DPW Project.

8. "Contractor/Subcontractor/Employer (C/S/E)" means any individual firm, partnership, owner operator, or corporation, or combination thereof, including joint ventures, which is an independent business enterprise and which has entered into a contract with the DPW or any of its contractors or subcontractors/owner operators of any tier, with respect to the construction of any part of a Covered Project.

9. "Core Worker" means a verifiable member of a C/S/E's core workforce for the purpose of the DPW-PLA and this Policy if the worker's name appears on the C/S/E's active payroll for 60 of 100 working days immediately prior to award of the construction contract and meets all standards required by applicable local, state or federal law or regulation.

10. "Covered Project(s) or Project" means a project or projects which have been included within the Public Infrastructure Program Series (PIPS) and covered by the DPW-PLA or so designated by the Board of Public Works. The Board may identify additional projects that are appropriate for coverage by the DPW-PLA and the Policy by Board resolution.

11. "Craft Request Form" means the document through which a C/S/E shall request workers from the Union and/or Jobs Coordinator, in the form set forth in the DPW-PLA and/or Policy.

12. "Transitional Worker" means an individual whose primary place of residence is within the City of Los Angeles and who prior to commencing work on a Project has been certified as

satisfying at least one of the following criteria: (1) having Veteran status; having a documented history of involvement with the criminal justice system; or being homeless. If the Jobs Coordinator or Employer is not able to identify anyone using criteria (1), criteria (2) may be used. Criteria (2) is an individual that is either a graduate of an LA/OCBTC approved MC3 pre-apprenticeship program or facing two of the following barriers to employment: having a household income less than 50% of the Los Angeles County's median annual household income, receiving public assistance, lacking a GED or high school diploma, being a custodial single parent, suffering from long-term unemployment, being emancipated from the foster care system, or being an apprentice with less than 15% of the apprenticeship hours required to graduate to journey level in a program.

13. "DPW-PLA" means the Project Labor Agreement entered into between the Department of Public Works and Unions, applicable to Covered Projects.

14. "Employment Hiring Plan" (EHP) means a C/S/E's detailed hiring plan in achieving the targeted hiring percentages as described in Article 7 of the DPW-PLA and Policy.

15. "Engineer" means the City Engineer or his/her authorized representative.

16. "FHWA Project" means a DPW Project that is funded in whole or in part by the Federal Highway Administration (FHWA).

17. "Public Infrastructure Program Series List (PIPS) means all projects contained in the adopted PIPS (Attachment E of the DPW-PLA), along with any other projects, as approved by the Board of Public Works, that will operate under the DPW-PLA.

18. "Jobs Coordinator" means the Prime Contractor's designated person, agent or agency that will facilitate the local hire referral process with the C/S/E, Unions and other referral organizations.

19. "LA/OCBTC" (Trades Council) means the Los Angeles /Orange Counties Building and Construction Trades Council.

20. "Letter of Assent" means the document that each C/S/E (of any tier) must sign and submit to the City's Inspector of Public Works, which formally binds them to adherence to all the forms, requirements and conditions of the DPW-PLA and Policy.

21. "Liquidated Damages" means disputed funds withheld from the Prime Contractor until they are found to be in compliance, the contract is terminated, or the Covered Project is completed.

22. "Local Resident" means an individual whose primary residence is within Tier 1 or 2 zip code areas. The following are acceptable forms of proof of residency: (i) Copy of a current residential lease with the eligible household member's name listed on it; or (ii) Valid driver's license or State ID card with a City of Los Angeles address; or (iii) Medical card with current address; or (iv) Utility bill with eligible household member's name on it; or (v) Voter's registration card; or (vi) Other proof of residence address deemed acceptable by BCA.

23. "Long-Term Unemployment" as defined by the Bureau of Labor Statistics means being jobless for 27 weeks or more, or as defined.

24. "Policy" means the DPW Public Works Infrastructure Stabilization Policy.

25. "Project Work" means construction work performed as part of a Covered Project.

26. "Prime Contractor" means any individual firm, partnership, owner-operator, or corporation, or combination thereof, including joint-ventures, that is an independent business enterprise and that has entered into a Construction Contract.

27. "Reporting Period" means the BCA's indicated reporting period for measuring the targeted hiring efforts of the C/S/E(s). These reporting periods shall be at the BCA's determination of 10%, 30%, 50%, 70% and 90% construction completion phases.

28. "Tier 1" means the zip codes within the City, identified in Article 7.4 of the DPW-PLA, having at least 2 census tracts (or portion thereof) in which the median household income is less than 50% of the County of Los Angeles' median annual household income, and/or where the unemployment rate exceeds 200% of the County of Los Angeles' unemployment rate as reported by the most recent available U.S. Census Bureau data.

29. "Tier 2" means zip codes within the City, identified in Article 7.5 of the DPW-PLA, having at least 2 census tracts (or portion thereof) in which the median household income is less than the County of Los Angeles' median annual household income, and/or where the unemployment rate exceeds 100% of the County of Los Angeles' unemployment rate as reported by the most recent U.S. Census Bureau data.

30. "Underemployment" means a situation in which a worker (i) is employed only part-time when one needs and desires full-time employment, and/or (ii) is inadequately employed at a low-paying job that requires less skill or training than one possesses.

31. "Unemployment" means, in accordance with the Bureau of Labor Statistics definition, a situation in which a person does not have a job, has actively looked for work in the prior 4 weeks, and is currently available for work and chronic Unemployment means unemployment lasting 27 weeks or longer.

32. "Union(s)" or "Signatory Unions" means the Los Angeles/Orange Counties Building and Construction Trades Council affiliated with the Building & Construction Trades Department (AFL/CIO) Craft International Unions or any other craft labor organization signatory to the DPW-PLA, acting in their own behalf and on behalf of their respective affiliates and member organizations whose names are subscribed in the DPW-PLA and who have through their officers executed the DPW-PLA.

SECTION II. COVERAGE OF PROJECTS

1. Covered Projects: Except as provided otherwise herein, this Policy applies to all projects contained in the Public Infrastructure Programs Series List, awarded by the Board, and covered by the DPW-PLA. The Board may designate additional projects for coverage under the Policy and DPW-PLA based on specific findings that coverage will advance the City's legitimate proprietary and policy interests and promote the public interest in assuring completion of the project in question in a safe and cost-effective manner while minimizing or negating any adverse impact to the public welfare.

2. FHWA Projects: In the event that DPW determines that a project to which this Policy applies is an FHWA project, DPW shall modify or not enforce any aspect of the Policy or DPW-PLA in accordance with a valid and binding instruction from the U.S. Department of Transportation.

SECTION III. IMPLEMENTATION

Prior to bid, DPW staff shall review each Covered Project's bid specifications to ensure the following provisions are incorporated:

1. That the Request for Bid Package Authorization from the Board specifies that the Covered Project contains the DPW-PLA and Policy;

2. That the Bid specifications require all contractors submitting bids or proposals agree to the terms of the DPW-PLA and Policy;

3. That a provision exists in the prime contract obligating the Prime Contractor and all its C/S/Es (of any tier) to comply with the terms of the DPW-PLA and Policy and/or require compliance with the DPW-PLA and Policy terms through a Letter of Assent or any other form or legally enforceable obligation to the City.

4. That the Construction Contract shall include provisions establishing liquidated damages amounts as described in Section VIII of this Policy.

SECTION IV. EXCLUSIONS AND/OR MODIFICATIONS

1. Funding Source: this Policy shall not apply to DPW construction contracts or projects, if the funding source has established provisions or rules that forbid the inclusion of a PLA and/or Local Hire provision. If the project is listed as part of the PIPS, DPW staff must present the reason(s) to the Board prior to final determination to exclude the Covered Project.

2. This Policy shall not apply to work performed by a C/S/E's executives, managerial employees, engineering employees, supervisors (except those covered by State or Federal Prevailing Wage rates and/or Schedule A collective bargaining agreements), office and clerical employees, or any other employee not performing construction craftwork.

3. Out-of-State Workers: hours worked by residents of states other than California shall not be included in calculation of total hours of project work for purposes of determining compliance with the Section 5 below.

SECTION V. TARGETED HIRING

1. Requirements for Covered Projects:

   The Prime Contractor shall ensure that the following targeted hiring requirements are met for each Covered Project:

   a) At least 30% of total hours worked on each project shall be performed by Local Residents. For any hour of Project Work for which a C/S/E seeks to meet this 30% requirement, the C/S/E, Unions and the Jobs Coordinator must first refer individuals whose primary place of residence is within a Tier 1 zip code. After Unions, C/S/Es and the Jobs Coordinator have exhausted the available pool of Local Residents whose primary place of residence is within a Tier 1 zip code, they may refer Local Residents whose primary place of residence is within a Tier 2 zip code.

   b) Apprentices must be employed on each project in accordance with the requirements mandated by Section 1777.5 of the California Labor Code. The hours performed by apprentices in each individual craft shall not exceed the ratio to journeyperson established by the applicable craft union's State DAS approved apprenticeship standards. A minimum of 50% of all apprentice hours shall be performed by Local Residents.

   c) At least 10% of total hours worked on each project shall be performed by Transitional Workers residing within Tier 1 or Tier 2 zip code areas described in Articles 7.4 and 7.5 of the DPW-PLA respectively and the remaining zip codes within the City of Los Angeles. Hours of project work performed by Transitional Workers may be applied towards the 30% requirement of the DPW-PLA and/or this Policy. Additionally, apprentice work hours performed by Transitional Workers may be applied towards the 50% local apprentice requirement of the DPW-PLA.

SECTION VI. RESPONSIBILITIES OF BCA, C/S/Es, UNIONS, and JOBS COORDINATOR

1. BCA Responsibilities:

   a) Monitor and enforce the targeted hiring measures of the DPW-PLA and Policy and issue Notices of Non-Compliance where appropriate.

   b) Review, approve or disapprove submitted Employment Hiring Plans prior to a C/S/E(s)' estimated start of work. Approval of a C/S/E to work on a Covered Project is contingent on the C/S/E(s)' submittal of an approved EHP plan.

c) Ensure, prior to a C/S/E's approval to work on a Covered Project, its submittal of a duly signed Letter of Assent.

d) Ensure targeted hiring dashboards for Covered Projects on the BCA website (http://bca.lacity.org/pla_documents) are accurate and reflective of the most recent data received from C/S/E(s) and Jobs Coordinators.

e) Conduct timely Reporting Period Meetings for Covered Projects with C/S/E(s) and Jobs Coordinators.

f) Report to the Board on a quarterly basis the status of all Covered Projects, or as otherwise directed by the Board.

g) Determine the withhold amount from payment(s) as disputed funds and make recommendation(s) for assessment of Liquidated Damages.

2. Prime Contractor and C/S/Es:

a) Employment Hiring Plan (EHP): Prime Contractor shall ensure that its C/S/Es (of any tier), at least 20 business days prior to starting their work on the Covered Project, shall submit their plan(s) to the BCA for approval by the BCA Director or his/her designee. Each C/S/E shall also complete an EHP Acknowledgement that describes how it will meet the targeted hiring requirements set forth in the DPW-PLA and Policy. No C/S/E (of any tier) shall be approved to work on a Covered Project without an approved EHP.

b) PLA and Policy: Prime Contractor shall ensure that its C/S/Es (of any tier), prior to start of work, (i) read and understand the requirements of the DPW-PLA and Policy; (ii) submit their Employment Hiring Plans at least 20 business days prior to their subcontractors' start of work and (iii) sign and submit their Letters of Assent prior to start of work. No C/S/E (of any tier) shall be approved to work on a Covered Project without having submitted a signed Letter of Assent.

c) Prior to start of work on the project, the Prime Contractor shall:

- Recommend a Jobs Coordinator for approval by the BCA.
- Upon BCA's approval of its Jobs Coordinator, notify its subcontractors (of any tier) who the Jobs Coordinator is.
- Provide within 10-calendar days upon request by the BCA or its designated representative, documentation of their Jobs Coordinator's qualifications.

d) The Prime Contractor and its C/S/Es (of any tier) shall coordinate with the Jobs Coordinator for services to support their efforts in meeting the targeted hiring percentages as described in Article 7 of the DPW-PLA and the Policy.

e) Pre-Job Conference: The Prime Contractor and its C/S/Es (of any tier), prior to start of work, shall hold a pre-job conference. The purpose of the pre-job conference is to determine craft personnel needs, schedule of work for the contract and all other matters as described in the DPW-PLA and the Policy. All work assignments shall be disclosed by the Prime Contractor and/or C/S/Es (of any tier) at the pre-job

conference. Any formal jurisdictional dispute(s) raised under Article 14 of the DPW-PLA must be raised at the pre-job conference upon disclosure of the work assignments. If the Prime Contractor and/or C/S/Es intend to change the work assignment after the pre-job conference or to make an assignment of work not previously known, the Prime Contractor and/or C/S/Es must notify the appropriate affected craft union(s) prior to the commencement of work.

f) Craft Request Form: The Prime Contractor and its C/S/Es (of any tier) shall only use the Craft Request Form (Attachment "C" of the DPW-PLA) and the procedures written therein to request workers from the affected Union(s). All C/S/Es must transmit a concurrent Craft Request transmittal of such request to the Jobs Coordinator.

g) The Prime Contractor and its C/S/Es (of any tier) must satisfactorily document their contact with the Jobs Coordinator when the Unions have not been able to refer a Local Resident and/or Transitional Worker within the 48-hour window of referral.

h) The Prime Contractor and its C/S/Es (of any tier) shall maintain proof of transmittal of the Craft Request forms to the Union hiring halls and Jobs Coordinator. Upon request by the BCA or its designated representative, copies shall be provided within 10-calendar days of request.

i) The Prime Contractor and its C/S/Es (of any tier) shall make available to the BCA or its designated representatives records and information that are deemed relevant to monitoring and enforcement of the provisions of the DPW-PLA and the Policy.

j) The Prime Contractor and its C/S/Es (of any tier) shall cooperate fully and promptly with any inquiry or investigation the BCA or its designated representatives deem necessary in order to monitor compliance with the provisions of the DPW-PLA and the Policy.

k) The Prime Contractor and its C/S/Es (of any tier), within 60 calendar days after concluding work on the Covered Project, shall submit to the BCA a verified statement of the number of journeypersons and apprentices who worked on the project, their classifications and the hours worked. (Per California Labor Code 1777.5(e).)

Upon request of the BCA or its designated representatives, the Prime Contractor and its C/S/Es (of any tier) must provide documentation of their Local Resident, Apprentice and Transitional Workers targeted hiring participation level efforts within 10-calendar days of the request for documentation.

3. Union Responsibilities:

a) Ensure that its dispatchers properly adhere to the use of the Craft Request Form and the procedures written therein.

b) Refer Local Residents and/or Transitional Workers requested through the Craft Request Form, regardless of their place on the hiring hall list and normal referral procedures.

c) Exert their best efforts to recruit and identify Local Residents residing in Tier 1, and then Tier 2 zip code areas, as well as those referred by the Jobs Coordinator for entrance, indentureship into a union apprenticeship program, and assisting such individuals in graduating into eligible journeypersons.

d) Upon receiving a request from a C/S/E for a Local Resident, exhaust the available list of individuals residing the Tier 1 zip codes before referring an individual residing in the Tier 2 zip codes.

e) Track retention of Local Residents and/or Transitional Worker apprentices participating in joint Labor/Management apprenticeship programs and provide BCA with the necessary information as requested.

4. Jobs Coordinator:

a) Criteria for Selecting a Jobs Coordinator: The Jobs Coordinator plays an integral part in the success of its partners in obtaining the targeted hiring percentages. It is the responsibility of the Prime Contractor to designate a Jobs Coordinator possessing, but not limited to, the following demonstrable experience and qualifications:

i. Developing, creating, designing and marketing specific programs targeting Local Residents and/or Transitional Workers for construction opportunities at the Covered Project (e.g. handouts and fliers for "walk-ins" demonstrating program entrance procedures).

ii. Coordinating services for contractors to assist in their local worker, transitional worker and apprentice utilization.

iii. Educating and assisting contractors on incentives provided by State or federal programs for On-the-Job Training and employer tax credits.

iv. Conducting orientations, job fairs and community outreach meetings to the local community.

v. Providing supportive services such as skills training, child care, transportation, education remediation, assistance with union fees and tools.

vi. Screening and certifying the transitional (formerly known as disadvantaged) status of workers.

vii. Establishing a referral and retention tracking mechanism for placed local and/or transitional workers and apprentices.

viii. Networking with the various Work Source Centers, community and faith based organizations and other non-profit entities that provide qualified local workers and/or transitional workers.

ix. Liaising with the various building trades crafts for referral and placement of local hire and/or transitional workers.

b) Jobs Coordinator Affirmation. While not mandatory, it is strongly suggested that each covered project employ a Jobs Coordinator.

i. The BCA will affirm the Jobs Coordinator on an individual project basis, utilizing its existing Jobs Coordinator review process.

ii. The review process consists of BCA reviewing the Jobs Coordinator's requisite experience and qualifications to assist the DPW-PLA's covered project to meet, if not exceed the targeted hiring requirements.

c) Jobs Coordinator Responsibilities. On each covered project in which they are employed, the Jobs Coordinator shall:

i. Coordinate the covered project's local hire referral process with the C/S/Es, Unions, City Work Source Centers, Faith and Community Based Organizations, and other organizations that can provide qualified local hire referrals.

ii. Coordinate the covered project's overall hiring process with all C/S/Es to help ensure that no PLA hiring and referral violations occur and the targeted hiring requirement percentages remain in compliance.

iii. Certify any Transitional Worker's status and maintain written proof of that certification for the duration of the covered project.

iv. Maintain a database of pre-qualified local residents for referral to work on a Covered Project and/or indentureship into a bona fide Labor/Management apprenticeship program.

v. Facilitate relationships among approved MC3 pre-apprenticeship and apprenticeship programs and the C/S/Es' to enable prompt referral.

vi. Be the point of contact to provide information about available job opportunities.

vii. Educate and provide financial incentives information to the C/S/Es' who hire eligible workers under Work Opportunity Tax Credit (WOTC) and On-the-Job Training (OJT) and other benefits for which a C/S/E may be eligible based on their implementation of the Local Hire requirements.

viii. Coordinate the C/S/Es' local hire effort documentations and other reports as it relates to their Local Resident and/or Transitional Worker targeted hiring requirements.

ix. Work closely with BCA staff, the building trades and C/S/Es in achieving the targeted hiring.

x. Attend all mandatory DPW-PLA related meetings, including, but not limited to Pre-Bid Conferences, Quarterly Jobs Coordinator meetings and Reporting Period Meetings. Jobs Coordinators will be individually notified when any scheduled meeting has been designated as mandatory.

Parties with responsibilities under the DPW-PLA and/or Policy, shall maintain those responsibilities regardless of the performance of the Jobs Coordinator at the tasks described in the DPW-PLA and the Policy.

SECTION VII. COMPLIANCE

The BCA or its authorized representatives shall determine whether a Prime Contractor and its C/S/Es have complied with the requirements of the DPW-PLA and the Policy. The Prime Contractor is ultimately responsible for it and its C/S/Es (of any tier) compliance with the DPW-PLA and Policy requirements.

1. If, after taking into account all hours of project work performed up to that point in time of the Reporting Period, the targeted hiring requirements of the DPW-PLA and Policy have been satisfied for a Covered Project, then the Prime Contractor and its subcontractors (of any tier) working on that Covered Project shall be deemed to be in compliance.

2. If the targeted hiring requirements of the DPW-PLA and the Policy have not been satisfied for a Covered Project, the Prime Contractor nonetheless may be deemed to be in compliance if it demonstrates both (a) that it and each of its C/S/Es (of any tier) have complied with all other requirements of the DPW-PLA and the Policy, and (b) that it and each C/S/E (of any tier) have either (i) satisfied the targeted hiring requirements of the DPW-PLA and this Policy with regard to the project work that it has performed or (ii) satisfactorily demonstrated the following:

    a) Adherence to procedures contained in its Employment Hiring Plan as approved by the BCA.

    b) Requests to Unions, through Craft Request Forms, of sufficient numbers of Local Residents and Transitional Workers.

    c) Documented contact with the Jobs Coordinator in each instance when the relevant Union did not refer qualified Local Residents or Transitional Workers within the 48 hours following the C/S/E's request and the C/S/E's fair consideration of any Local Resident or Transitional Worker subsequently referred by the Jobs Coordinator.

    d) Accurate records documenting the C/S/E's compliance efforts that include (but not limited to):
        i. A listing by name and address of all local recruitment sources contacted by the C/S/E;

        ii. The date of the local recruitment contact and the identity of the person contacted, the trade and classification and number of hire referrals requested;

iii. The number of Local Residents and/or Transitional Workers hires made as a result of the contact;

iv. The identity and address of the worker(s) hired pursuant to the contact;

v. Documentation when a referral was not hired (reason for non-hire) and/or premature termination.

3. Any Covered Project that fully satisfies the terms and conditions of this section will be deemed to have complied with the PLA's Targeted Hiring Requirements and will not be subject to Liquidated Damages. Furthermore, the employed Jobs Coordinator's Affirmation status will not be affected.

SECTION VIII. ENFORCEMENT

The Prime Contractor for every Covered Project agrees:

1. To be liable to the City for Liquidated Damages as provided in this section;

2. That the Prime Contractor and its C/S/Es (of any tier) commitment to comply with the targeted hiring requirements of DPW-PLA and Policy is a material element of the Covered Project;

3. That the failure of the Prime Contractor and its C/S/Es (of any tier) to comply with the targeted hiring requirements will cause harm to the City and the public which is significant and substantial but extremely difficult to quantify. The harm to the City includes the difficult-to-quantify harm that the community and its families suffer as a result of high unemployment and concentrated poverty;

4. Liquidated Damages: Due to the difficulty of estimation of damages for violation(s) of requirements of this Policy, Construction Contracts shall have provisions establishing liquidated damage to be assessed as follows:

   a) The Prime Contractor shall pay liquidated damages equal to the average journeyperson project wage for each hour the Covered Project fell short of the targeted hiring, or $500 per day, whichever is greater.

   b) If the Covered Project's targeted hiring requirements are out of compliance during any Reporting Period, the Prime Contractor shall meet with the BCA to develop a plan for compliance. The Prime Contractor has until the next Reporting Period to effectuate compliance or Liquidated Damages shall be withheld.

   c) Before Liquidated Damages are sought, the Prime Contractor shall be notified of the proposed Liquidated Damages and served with a summary of the information upon which the Liquidated Damages are based.

   d) Liquidated Damages shall be withheld from all subsequent monthly progress payment request(s) as disputed funds until such time as Prime Contractor is found

to be in compliance, the Covered Project contract is terminated, or the Covered Project is completed.

e) Should the Covered Project be terminated or completed before the Prime Contractor is found to be in compliance, recommendation shall be made to the Board to assess Liquidated Damages and the amount of the Liquidated Damages shall be returned to the fund from whence they came.

5. Liquidated Damages Appeal:

a) The Prime Contractor may appeal the assessment of Liquidated Damages before the Board. Prior to the Board hearing to address assessment of Liquidated Damages, the Prime Contractor shall be provided a summary of the information upon which the recommendation assessment is based.

b) The Prime Contractor must request an appeal in writing within 10-calendar days of receipt of the Liquidated Damages assessment summary. At the Board hearing to determine assessment of Liquidated Damages, the Prime Contractor will be allowed to provide evidence that it has made all of the showings required under Section VII of the Policy. Failure to submit a written request for an appeal within the time frame stipulated in this Section will be deemed a waiver of the right to appeal and the recommendation for assessment of Liquidated Damages will be implemented.

6. Termination of Contract(s): Consistent, substantial violations of the DPW-PLA and/or Policy by any Prime Contractor and/or C/S/E may result in a recommendation to the Board that the contract of the offending Prime Contractor and/or C/S/E be terminated per Section 00405 of the Master General Conditions.

SECTION IX. APPLICABLE LAW AND SEVERABILITY

The provisions of this Policy shall not be applicable where prohibited by federal or state law, or where the application would violate or be inconsistent with the terms and conditions of a grant or a contract with an agency of the United States or the State of California, or the valid instructions of an authorized representative of any of these agencies with respect to any grant or contract. If enforcement of any provision of this Policy is enjoined by a court of competent jurisdiction, the remaining provisions shall remain in full force and effect.

CITY OF LOS ANGELES
CALIFORNIA

Addendum No. 4

September 2, 2022

ERIC GARCETTI
MAYOR

ENGINEERING
CITY OF LOS ANGELES

TED ALLEN, PE
CITY ENGINEER

Sixth Street Viaduct – Park, Arts, and River Connectivity (PARC) Improvements; Department of Cultural Affairs LA Hands Art Piece Foundations; and CBD Sewer Rehab Unit 11A – 6th Street Siphon to Santa Fe Avenue

W.O. E700235F & SZC14224

Bidders are required to acknowledge receipt of this addendum in the space provided on page 1-4 of the Bid Proposal. This addendum consists of this one-page transmittal and 5 attachments totaling 11 pages.

Bidders are hereby notified of the following changes:

I. MISCELLANEOUS:

1. Sign in sheet for the Job Walk Meeting on 9/1/2022 at 10:00am at 589 S. Santa Fe Avenue, Los Angeles, CA 90013 (1 page).

2. Sign in sheet for the Pre-Bid Teleconference Meeting on 9/1/2022 at 1:00pm via Google Meet due to the Pandemic (1 page).

3. Pre-Bid Meeting Agenda (1 page).

4. Pre-Bid Meeting Minutes (2 pages).

5. Bond Assistance Program Power Point Presentation (5 pages).

Sincerely,

Digitally signed by Jonathan Carroll
Date: 2022.09.02 11:06:28 -07'00'

Gregg Vandergriff, P.E.
Division Engineer
Project Award and Control Division
Bureau of Engineering

ADDENDUM 4

JOB WALK MEETING SIGN-IN SHEET

Project Title SIXTH STREET VIADUCT – PARC; LA HANDS FOUNDATION PIECES; CBD UNIT 11A REHAB **W.O. No.** E700235F; SZC14224

Location 589 S. SANTA FE AVE, LOS ANGELES, CA 90013 **Date** 9/1/2022 **Time** 10:00 AM

Note: By signing this attendance roster, the signee agrees to disseminate all information presented in-meeting, including but not limited to the project's Business Inclusion Program (BIP) or Disadvantaged Business Enterprise (DBE) requirements as they relate to the project, to all interested persons within their organization.

NAME	ORGANIZATION	PHONE	EMAIL	SIGNATURE
April Galindo	Rain For Rent	562 3052260	agalindo@rainforrent.com	
Christian Meza	Liberty Rebar	323 4744171	cm@libertyrebar.net	
Joe Williams	CSI Electric	562-946-0700	Joe.Williams@CSIelectric.com	
Craig Fish	Marina Landscape	949 254 4039	cfish@marinaco.com	
Ridwan Yt.	ICON West	213-385-0027	ridwan@icon-west.com	
Brenton Owens	Electro Construction	213-305-0052	Brenton@electroconstruction.com	
Matt Larrick	Electric Service & Supply Co.	626-523-4437	matt@essco electric.com	
Kristen Adams	P.H. Hagopian Contractors	714-543-4185	kadams@phhagopian.com	
Sara Mattison	P.H. Hagopian Contractors	714-543-4185	Builders@phhagopian.com	
ED Chicolia	Conner Communications	310 756 6610	EP@Conner3.com	
EDGAR GARCIA	Conner COMMUNICATIONS	310-756-6610	edgar@conner3.com	
Sam Manla	OHLA USA	949-242-4432	ca.est@OHLA-USA.com	
Sohrab Farahani	Ford E.C. Inc	310-474-7999	Sohrab@Fordecinc.com	

ADDENDUM 4

PRE-BID MEETING SIGN-IN SHEET

Project Title: SIXTH STREET VIADUCT – PARC; LA HANDS FOUNDATION PIECES; CBD UNIT 11A REHAB

W.O. No. E700235F; SZC14224

Location TELECONFERENCE MEETING DUE TO COVID19 **Date** 9/1/2022 **Time** 1:00 PM

Note: By signing this attendance roster, the signee agrees to disseminate all information presented in-meeting, including but not limited to the project's Business Inclusion Program (BIP) or Disadvantaged Business Enterprise (DBE) requirements as they relate to the project, to all interested persons within their organization.

NAME	ORGANIZATION	PHONE	EMAIL	SIGNATURE
Elizabeth Juarez	Merriwether & Williams	213-223-9574	ejuarez@imwis.com	
Lisa Adams	BCA	213-847-2635	lisa.adams@lacity.org	
Kristin Adams	PH Hagopian Contractor	714-543-4185	builders@phhagopian.com	
Jessica Greer	LA Engineering	626-454-5222	bids@laeng.net	
Grace Hernal	Icon West, Inc.	213-385-0027	grace@icon-west.com	
Nicole Kennedy	Blois Construction	805-656-1432	bidinfo@bloisconstruction.com	
Susan Hott	JR Pipeline Co., Inc.	951-940-5090	Vhott@jrpipeline.com	
Jose Castillo	Granite Construction	279-444-9869	Jose.castillo@gcinc.com	
John Butler	BCA / OCC	213-847-2600	john.m.butler@lacity.org	
Susan Corkill	Granite construction	805-765-6855	susan.corkill@gcinc.com	
Matt Larrick	Electric Service & Supply Co.	626-523-4437	matt@esscoelectric.com	
Christian Meza	Liberty Rebar	562-608-8468	CM@libertyrebar.net	
Isabelle Toulis	OHLA USA, Inc.	949-242-4432	ca.est@ohla-usa.com	
Veronica Alvarez	Redzone	310-986-9890	valvarez@redzone.com	
Dave Martinez	Granite Construction	760-421-8168	dave.martinez@gcinc.com	
Sara Mattison	PH Hagopian Contractor, Inc.	714-543-4185	builders@phhagopian.com	
Farnaz Vakili	Ford EC., Inc	310-474-7999	~~farnaz~~ farnaz@fordecinc.com	

ADDENDUM 4

ENGINEERING
CITY OF LOS ANGELES

Agenda

Sixth Street Viaduct – Park, Arts, and River Connectivity (PARC) Improvements;
Department of Cultural Affairs LA Hands Art Piece Foundations;
and CBD Sewer Rehab Unit 11A – 6th Street Siphon to Santa Fe Avenue
(W.O. E700235F and SZC14224)

Virtual Pre-Bid Meeting
1pm
Google Meet
Meeting ID
meet.google.com/ueo-zykc-ofh

Phone Numbers
(US)+1 262-674-7882
PIN: 578 737 688#

I. Introduction
- -Meeting Attendance
- -Welcoming Remarks

II. General Project Overview

III. Bureau of Contract Administration
- -Business Inclusion Program (BIP)
- -Project Labor Agreement (PLA)

IV. Contractor Development Technical Assistance and Bonding Program
- -Merriwether & Williams

Meeting Minutes

Sixth Street Viaduct – Park, Arts, and River Connectivity (PARC) Improvements (E700235F);Department of Cultural Affairs LA Hands Art Piece Foundations; and CBD Sewer Rehab Unit 11A – 6th Street Siphon to Santa Fe Avenue (SZC14224)

Pre-Bid Meeting
1pm
Google Meet
Meeting ID
meet.google.com/ueo-zykc-ofh

Phone Numbers
(US)+1 262-674-7882
PIN: 578 737 688#

I. Introduction

The BOE project manager introduced City staff and informed participants to provide their information in order to record attendance.

II. General Project Overview

A description of the three projects was provided, including City Engineer's estimate, liquidated damages, project duration, and interim milestone.

The Sixth Street Viaduct PARC project will develop a new 12-acre park underneath and adjacent to the Sixth Street Viaduct from Mateo Street on the west to the US101 freeway to the east. The park features walking/jogging paths, dog parks, restroom buildings, Rec & Park staff building, cafe building, performance arts plaza, adult fitness equipment, synthetic soccer field, multi-purpose fields, basketball court, children's mister area, picnicking/grilling areas, general landscaping and irrigation, fencing, lighting, and tunnel improvements.

The Dept. of Cultural Affairs LA Hands Art Piece Foundations project will construct the two foundations to support the commissioned artist's art work.

Rehabilitate approximately 477 linear feet of existing 36-inch circular sewers in the Central Business District by ultra violet cured-in-place pipe (UV CIPP). The alignment of the reach begins at the 6th Street Siphon outlet structure continuing west on 6th Street towards Santa Fe Avenue, then south on Santa Fe Avenue. Rehabilitate 6th Street Siphon outlet structure and existing maintenance holes.

City Engineer's Estimate: $36,979,003.00
Duration: 730 calendar days
Liquidated Damages: $5,000 per day
Interim Milestone: 555 calendar days.
Interim Milestone Liquidated Damages: $12,000 per day
Refer to the General Requirements Section 01112 for detailed information regarding the interim milestone.

III. Bureau of Contract Administration

A. Business Inclusion Program

Lisa Adams from the Bureau of Contract Administration (BCA) described the Business Inclusion Program (BIP) and explained the steps to fulfill the BIP obligations. Questions can be sent to bca.biphelp@lacity.org

B. Project Labor Agreement

John Butler from BCA discussed the Project Labor Agreement (PLA) that will be implemented for this project and provided information on how it will evaluate labor compliance. Questions can be sent to ocps.help@lacity.org

IV. Contractor Development Technical Assistance and Bonding Assistance

Elizabeth Juarez from Merriwether & Williams presented the various resources it has available to assist contractors for technical development and bonding assistance. Questions can be addressed to Elizabeth at ejuarez@imwis.com.

V. Questions

The meeting was opened for questions. None were received. The project manager informed the group to submit technical questions as Requests for Information (RFI) which will be addressed via an addendum. Send questions to gary.lam@lacity.org.

Meeting Adjourned

ADDENDUM 4

Los Angeles Regional Contractor Development and Bonding Program (CDABP)

Sixth Street Viaduct– Park Arts & River Connectivity (PARC); LA Hands Art Piece Foundations; & CBD Sewer Rehab Unit 11A

Pre-Bid Meeting



September 01, 2022

Merriwether & Williams
INSURANCE SERVICES

. . . Of Like Minds

CITY OF LOS ANGELES
FOUNDED 1781

Contractor Development Program Services

PROGRAM PURPOSE

To reduce the barriers of access to public construction contract opportunities and help build small local and diverse contractor capacity.

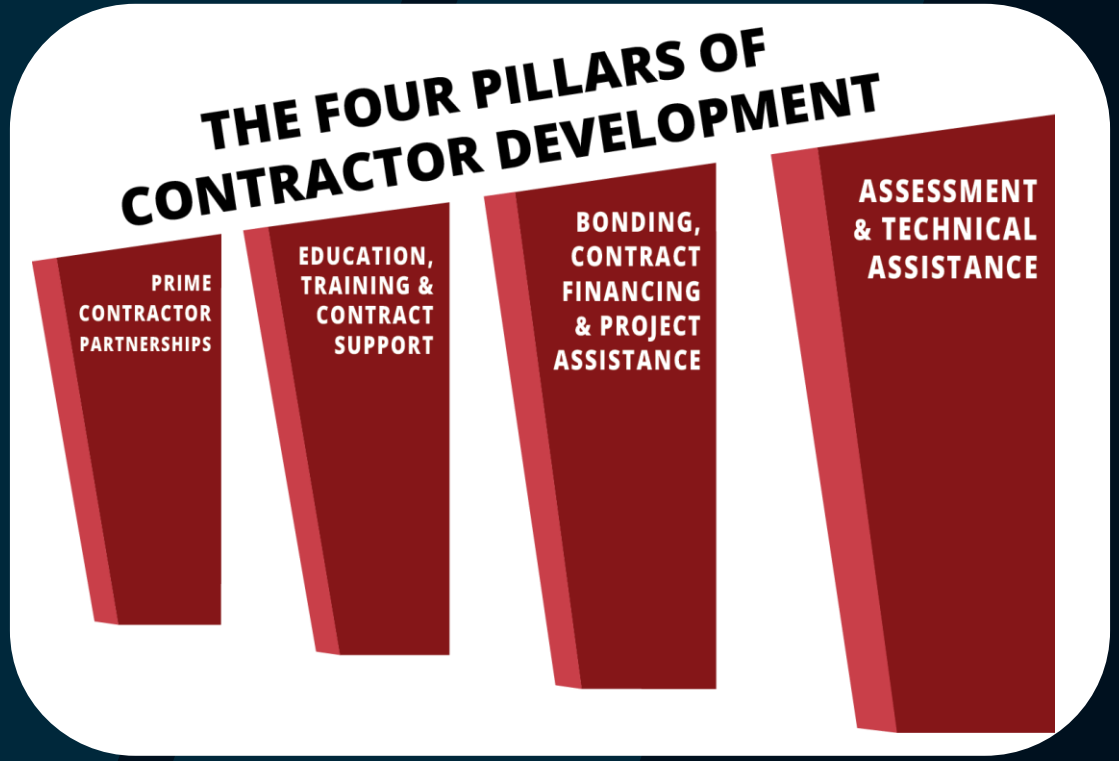

Merriwether & Williams
INSURANCE SERVICES
. . . Of Like Minds

Contractor Development Program Services

- Obtaining or Increasing Bonding Capacity
- Access to CITY collateral support for bid, performance and payment bonds for qualified contractors
- Contractor Development, Capacity Building and Technical Services
- Contract Based Financing Program - Contract Financing Assistance Program (CFAP)
- Dedicated Account Manager (Business Development)
- Accounting Cost Subsidy
  - $3,200 for CPA Prepared Financial Statements
- Weekly Bid Opportunities, Projects, and Events Email Alerts

Contractor Development Technical Assistance

- ❑ Assessment & Work Plan
- ❑ Contractor Profile
- ❑ Certifications
- ❑ Bid Document Review
- ❑ Contract Completion Support
- ❑ Monthly Trainings/Workshops & Coaching
- ❑ Construction Training Academy
  - ❑ Bidding & Estimating
  - ❑ Contract Award Management
- ❑ Prime Partnership

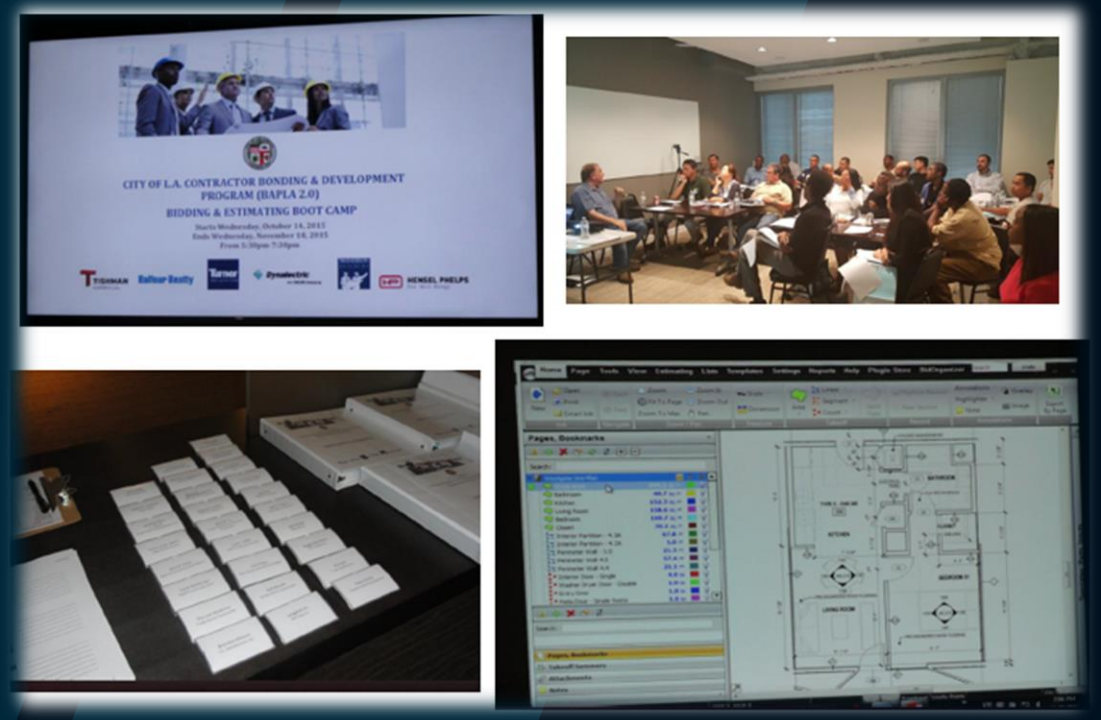

Merriwether & Williams
INSURANCE SERVICES
. . . Of Like Minds

City of Los Angeles Contractor Development and Bonding Program

For More Information On the Program, Please Contact

Merriwether & Williams Insurance Services

L.A. Regional Contractor Development and Bonding Program

Elizabeth Juarez, Construction Account Manager

Tel. (213) 223-8575 | ejuarez@imwis.com

Merriwether & Williams
INSURANCE SERVICES
. . . Of Like Minds

ERIC GARCETTI
MAYOR

CITY OF LOS ANGELES
CALIFORNIA

Addendum No. 5
September 20, 2022

ENGINEERING
CITY OF LOS ANGELES

TED ALLEN, PE
CITY ENGINEER

Sixth Street Viaduct – Park, Arts, and River Connectivity (PARC) Improvements; Department of Cultural Affairs LA Hands Art Piece Foundations; and CBD Sewer Rehab Unit 11A – 6th Street Siphon to Santa Fe Avenue
W.O. E700235F & SZC14224

Bidders are required to acknowledge receipt of this addendum in the space provided on page 1-4 of the Bid Proposal. This addendum consists of this one-page transmittal and an attachment totaling 527 pages.

Bidders are hereby notified of the following changes:

I. MODIFICATIONS TO BID PROPOSAL:

1. **REPLACE AND ADD** the plan sheets in Attachment No. 9 with the **attached revised Attachment 9**. (526 pages)

2. **REPLACE** Section **F of the Important Notice to read as follows:**

F. CONTRACTOR PARTICIPATION

The Prime Contractor shall perform, with its own organization, contract work amounting to at least **35%** of the contract price. Any items designated as specialty items by the City and performed by Subcontractors shall be deducted from the contract price before computing the amount of the work required to be performed by the Prime Contractor with its own forces. This percentage shall be based upon the original contract price, exclusive of specialty items performed by Subcontractors, but include the cost of materials and manufactured products purchased or produced by the Prime Contractor.

Sincerely,

_____
Gregg Vandergriff, P.E.
Division Engineer
Project Award and Control Division
Bureau of Engineering

ADDENDUM 5

BUREAU OF ENGINEERING

SIXTH STREET VIADUCT – PARK, ARTS AND RIVER CONNECTIVITY (PARC) IMPROVEMENTS
WORK ORDER NO. E700235F

ATTACHMENT NO. 9
SIXTH STREET VIADUCT AS-BUILT PLANS

BID SUBMITTAL
JULY 2022

City of Los Angeles
California

Department of Public Works
Bureau of Engineering

ADDENDUM 5

BUREAU OF ENGINEERING
DEPARTMENT OF PUBLIC WORKS
CITY OF LOS ANGELES

SIXTH STREET VIADUCT REPLACEMENT PROJECT
NEW VIADUCT
FEDERAL PROJECT NO: BRLSZD 5006 (839)



CONSTRUCTION MANAGER/ GENERAL CONTRACTOR PROJECT DELIVERY:

SKANSKA Stacy and Witbeck
A Joint Venture

SKANSKA
STACY & WITBECK
1995 AGUA MANSA ROAD
RIVERSIDE, CA 92509

CONSTRUCTION TASK ORDER PACKAGES:

1. OFFSITE INTERSECTIONS FOR VIADUCT DETOUR
2. VIADUCT DEMOLITION
3. TEST SHAFT
4. NEW VIADUCT FOUNDATIONS
5. NEW VIADUCT

PROGRAM MANAGEMENT CONSULTANT:

CH2MHILL

CH2MHILL
1000 WILSHIRE BOULEVARD, SUITE 2100
LOS ANGELES, CA 90017

CONSTRUCTION MANAGEMENT CONSULTANT:

T.Y.LIN INTERNATIONAL

T.Y. LIN INTERNATIONAL
660 S. FIGUEROA STREET, SUITE 1750
LOS ANGELES, CA 90017

FUNDING PARTNERS:

CITY OF LOS ANGELES FOUNDED 1781 · Caltrans CALIFORNIA DEPARTMENT OF TRANSPORTATION · U.S. Department of Transportation Federal Highway Administration

PROJECT TEAM

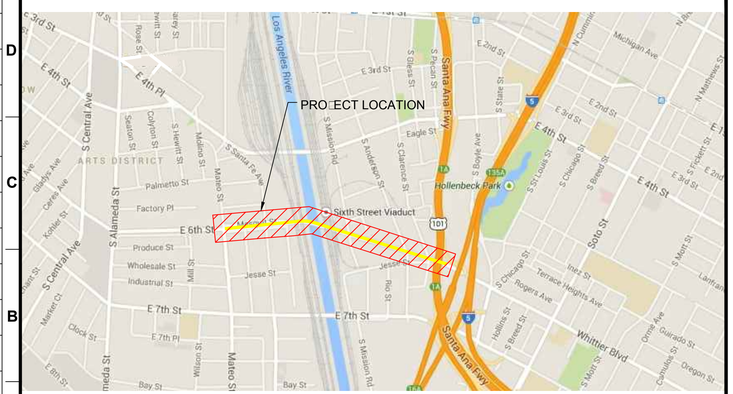

VICINITY MAP
NOT TO SCALE

CITY OF LOS ANGELES

PROJECT MANAGEMENT: SIXTH STREET VIADUCT DIVISION
- JULIE ALLEN, P.E. — DIVISION MANAGER
- JOHN KOO, S.E. — PROJECT MANAGER
- AL BAZZI, P.E. — PROJECT ENGINEER
- JULIA MOYE, P.E. — PROJECT ENGINEER

BID AND AWARD: PROJECT AWARD AND CONTROL DIVISION
- JULIE SAUTER, P.E. — PRINCIPAL CIVIL ENGINEER
- JAMES ZABALA — SENIOR MANAGEMENT ANALYST II

REAL ESTATE: REAL ESTATE DIVISION
- URIEL JIMENEZ — DIVISION MANAGER

STREET: STREET IMPROVEMENT DIVISION
- STEVEN CHEN P.E. — DIVISION MANAGER
- CURTIS TRAN, P.E. — CIVIL ENGINEER

SURVEY: SURVEY DIVISION
- JIM LANTRY, P.L.S. — CHIEF SURVEYOR
- CESAR BREGAUDIT, P.L.S. — SURVEYOR SUPERVISOR
- SHAWN STEVENS, P.L.S. — PARTY CHIEF

STREET LIGHTING: BUREAU OF STREET LIGHTING
- ED EBRAHIMIAN, P.E. — DIRECTOR BUREAU OF STREET LIGHTING
- HAGOP TUJIAN, P.E. — STREET LIGHTING ENGINEER
- DIEP NGUYEN, P.E. — STREET LIGHTING ENGINEER ASSOCIATE. III

TRAFFIC: DEPARTMENT OF TRANSPORTATION
- SELETA REYNOLDS, P.E. — GENERAL MANAGER
- MANOOCHEHR ADHAMI, P.E. — SENIOR TRANSPORTATION ENGINEER
- BEARJ SARKIS, Ph.D, P.E.,P.T.O.E. — TRANSPORTATION ENGINEER□PROJECT MANAGER

DESIGN CONSULTANTS

PRIME CONSULTANT: HNTB CORPORATION

SUB CONSULTANTS:
- MICHAEL MALTZAN ARCHITECTURE
- VALLE & ASSOCIATES,INC.
- MGE ENGINEERING, INC
- HARGREAVES ASSOCIATES
- EARTH MECHANICS, INC.

REGISTERED PROFESSIONAL ENGINEER — FRANCE T. PAO — No. C 63433 — Expires 9-30-2016 — CIVIL — STATE OF CALIFORNIA

HNTB
HNTB Corporation
601 W. 5TH STREET SUITE 1000
LOS ANGELES, CALIFORNIA 90071
TEL (213) 403-1000 FAX (213) 403-1001

BUREAU OF ENGINEERING

ENGINEERING — CITY OF LOS ANGELES

NO.	REVISIONS:	DATE	BY:

SERIAL NO.

WORK ACCEPTED

STRUCTURE NO. 53C-2329

INDEX NO. P-38113

GARY LEE MOORE, P.E. — CITY ENGINEER

ACCEPTED BY:

DEPUTY CITY ENGINEER / PROGRAM MANAGER — DATE 7/15/16

CITY ENGINEER — DATE

CITY OF LOS ANGELES — DEPARTMENT OF PUBLIC WORKS

VERTICAL CONTROL: BM 14-00870, 2000 ADJ.NAVD 1988
HORIZONTAL CONTROL: GPS, PID AE 1704, EPOCH 1991.35

SHEET TITLE: COVER SHEET

PROJECT: SIXTH STREET VIADUCT REPLACEMENT

ADDRESS: SIXTH STREET VIADUCT (WHITTIER BLVD) LOS ANGELES, CA.

WORK ORDER NO. E700224F

DRAWING NO. T-401

SHEET 1 OF 560 SHEETS

REVISION DATES
DESIGN STAGE ONLY□

THE CITY OF LOS ANGELES OR ITS OFFICERS OR AGENTS SHALL NOT BE RESPONSIBLE FOR THE ACCURACY OR COMPLETENESS OF ELECTRONIC COPIES OF THIS PLAN SHEET.

Sheet Version 3.0

ADDENDUM 5

GENERAL SHEETS		
1	T-401	COVER SHEET
2	G-401	INDEX OF PLANS
3	G-402	NOTICE TO CONTRACTORS SHEET 1 OF 2
4	G-403	NOTICE TO CONTRACTORS SHEET 2 OF 2
5	G-404	KEY MAP
6	G-405	ABBREVIATIONS & SYMBOLS SHEET 1 OF 4
7	G-406	ABBREVIATIONS & SYMBOLS SHEET 2 OF 4
8	G-407	ABBREVIATIONS & SYMBOLS SHEET 3 OF 4
9	G-408	ABBREVIATIONS & SYMBOLS SHEET 4 OF 4
10	G-409	CONSTRUCTION SYMBOLS AND NOTES
11	G-410	RAILROAD GENERAL NOTES
12	G-411	RAILROAD GENERAL NOTES

CIVIL ROADWAY		
13	CX-201	MESQUIT STREET CROSS SECTIONS
14	CX-202	EAST SIXTH STREET CROSS SECTIONS
15	CX-203	EAST SIXTH STREET CROSS SECTIONS
16	CX-204	SANTA FE AVENUE CROSS SECTIONS
17	CX-401	MATEO STREET CROSS SECTIONS
18	CX-402	MATEO STREET CROSS SECTIONS
19	CX-403	SIXTH STREET CROSS SECTIONS
20	CX-404	SIXTH STREET CROSS SECTIONS
21	CX-405	SIXTH STREET & MATEO STREET CROSS SECTIONS
22	CX-406	SIXTH STREET & MATEO STREET CROSS SECTIONS
23	CX-407	SIXTH STREET CROSS SECTIONS
24	CX-408	SIXTH STREET CROSS SECTIONS
25	CX-409	SOUTH FRONTAGE ROAD CROSS SECTIONS
26	CX-410	SOUTH FRONTAGE ROAD CROSS SECTIONS
27	CX-411	SOUTH FRONTAGE ROAD CROSS SECTIONS
28	CX-412	SOUTH FRONTAGE ROAD CROSS SECTIONS
29	CX-413	MAINTENANCE ROAD CROSS SECTIONS
30	CX-414	NORTH & SOUTH PEDESTRIAN RAMP CROSS SECTIONS
31	C-201	EAST SIXTH STREET PLAN & PROFILE
32	C-202	MESQUIT STREET PLAN & PROFILE
33	C-203	EAST SIXTH STREET GRID ELEVATIONS
34	C-401	MATEO STREET PLAN & PROFILE
35	C-402	WEST PEDESTRIAN RAMP PLAN
36	C-403	WEST PEDESTRIAN RAMP PROFILE
37	C-404	SIXTH STREET VIADUCT PLAN & PROFILE
38	C-405	SIXTH STREET VIADUCT PLAN & PROFILE
39	C-406	SIXTH STREET VIADUCT PLAN & PROFILE
40	C-407	SIXTH STREET VIADUCT PLAN & PROFILE
41	C-408	SIXTH STREET VIADUCT PLAN & PROFILE
42	C-409	SIXTH STREET VIADUCT PLAN & PROFILE
43	C-410	SIXTH STREET VIADUCT PLAN & PROFILE
44	C-411	SIXTH STREET VIADUCT PLAN & PROFILE
45	C-412	SIXTH STREET VIADUCT PLAN & PROFILE
46	C-413	SIXTH STREET VIADUCT PLAN & PROFILE
47	C-418	EAST PEDESTRIAN RAMP PLAN
48	C-419	SOUTH EAST PEDESTRIAN RAMP PROFILE
49	C-420	SOUTH EAST PEDESTRIAN RAMP PROFILE
50	C-421	NORTH EAST PEDESTRIAN RAMP PROFILE
51	C-422	NORTH EAST PEDESTRIAN RAMP PROFILE
52	C-423	SOUTH FRONTAGE ROAD PLAN & PROFILE
53	C-424	E 6TH ST MAINTENANCE ROAD PLAN
54	C-425	SERVICE VEHICLE ACCESS ROAD PLAN & PROFILE
55	C-426	SERVICE VEHICLE ACCESS ROAD PLAN & PROFILE
56	CC-201	EAST SIXTH STREET CURB RAMP DETAILS
57	CC-401	SIXTH STREET & MATEO STREET CURB RAMP DETAILS
58	CC-402	SIXTH STREET RAMP DETAILS
59	CC-403	DETAILS

DRAINAGE		
60	D-400	KEY MAP AND GENERAL NOTES
61	D-401	VIADUCT DRAINAGE PLAN AND PROFILE LINES "D", "E", & "F"
62	D-402	VIADUCT DRAINAGE PLAN AND PROFILE LINES "D", "E", & "F"
63	D-403	VIADUCT DRAINAGE - ART PLAZA AREA
64	D-404	VIADUCT DRAINAGE - LA RIVER AREA
65	D-405	VIADUCT DRAINAGE PLAN AND PROFILE LINES "G", & "H"
66	D-406	VIADUCT DRAINAGE PLAN AND PROFILE LINES "H", & "I"
67	D-407	VIADUCT DRAINAGE PLAN AND PROFILE LINES "J"
68	D-408	VIADUCT DRAINAGE PLAN AND PROFILE LINES "K", & "L"
69	D-409	VIADUCT DRAINAGE PLAN AND PROFILE LINES "L", & "M"
70	D-411	LA RIVER CHANNEL MODIFICATION GENERAL PLAN
71	D-412	LA RIVER CHANNEL MODIFICATION WEST BANK
72	D-413	LA RIVER CHANNEL MODIFICATION EAST PLAN
73	D-414	LA RIVER CHANNEL MODIFICATION DEMOLITION PLAN
74	D-415	LA RIVER CHANNEL MODIFICATION CONSTRUCTION STAGING
75	D-416	LA RIVER CHANNEL MODIFICATION CROSS SECTIONS 1
76	D-417	LA RIVER CHANNEL MODIFICATION CROSS SECTIONS 2
77	D-418	LA RIVER CHANNEL MODIFICATION CROSS SECTIONS AND DETAILS 1
78	D-419	LA RIVER CHANNEL MODIFICATION CROSS SECTIONS AND DETAILS 2
79	D-431	VIADUCT DRAINAGE DETAILS

SIGNING & STRIPING, TRAFFIC SIGNAL		
80	GEO-201	E.6TH STREET - SANTA FE TO MESQUIT ST
81	GEO-401	6TH ST. AND MATEO ST.
82	GEO-402	6TH ST. VIADUCT
83	GEO-403	6TH ST. VIADUCT
84	GEO-404	WHITTIER BLVD. AND BOYLE AVE.
85	TS-401	6TH ST AND MATEO ST.
86	TS-402	WHITTIER BLVD. AND BOYLE AVE.

LIGHTING		
87	BSL-110	SIXTH STREET AND MATEO STREET LIGHTING PLAN
88-89	BSL-201 TO BSL-202	EAST SIXTH STREET LIGHTING PLAN
90-124	SL-001 TO SL-408	SIXTH STREET VIADUCT STREET LIGHTING PLAN
125-136	SL-2001 TO SL-2400	SIXTH STREET VIADUCT RAMPS AND STAIRS LIGHTING PLAN
137-159	SL-1001 TO SL-1405	SIXTH STREET VIADUCT STRUCTURE ACCENT LIGHTING PLAN

US-101 IMPROVEMENTS		
160		CALTRANS TITLE AND LOCATION MAP
161	X-1	TYPICAL CROSS SECTIONS
162	L-1	LAYOUT PLAN (101 FWY) - MEDIAN
163	P-1	PROFILE (101 FWY) - CONCRETE BARRIER
164	C-1	CONSTRUCTION DETAILS - AERIALLY DEPOSITED LEAD REMOVAL PLAN
165	C-2	CONSTRUCTION DETAILS - CONCRETE BARRIER TRANSITION
166	TWPC-1	TEMPORARY WATER POLLUTION CONTROL PLAN
167	EC-1	EROSION CONTROL PLAN
168	G-1	CONTOUR GRADING
169	D-1	DRAINAGE PLAN
170	DP-1	DRAINAGE PROFILE
171	SC-1	STAGE CONSTRUCTION PLAN
172	SC-2	STAGE CONSTRUCTION PLAN
173	THD-1	TRAFFIC HANDLING DETAILS 1
174	THD-2	TRAFFIC HANDLING DETAILS 2
175	THD-3	TRAFFIC HANDLING DETAILS 3
176	THD-4	TRAFFIC HANDLING DETAILS 4
177	THD-5	TRAFFIC HANDLING DETAILS 5
178	PD-1	TRAFFIC HANDLING DETAILS 5
179	S0-10	STRUCTURAL PLAN NO. 6 - CONSTRUCTION WITHIN CALTRANS R/W

STRUCTURES		
180-456	S0-01 TO S9-70	SIXTH STREET VIADUCT STRUCTURAL PLANS
457-478	S1 TO S26	NORTH EAST PEDESTRIAN RAMP
479-493	S31 TO S45	SOUTH EAST PEDESTRIAN RAMP
494-514	S61 TO S83	WEST PEDESTRIAN RAMP

ARCHITECTURE		
515	A-S01	SITE PLAN VIADUCT LEVEL
516	A-201	OVERALL ELEVATIONS
517	A-310	ENLARGED ELEVATION - TYPICAL ARCHES
518	A-311	ENLARGED ELEVATION - TYPICAL PIER
519	A-312	PARTIAL PLAN / ELEVATION - SOUTH STAIR
520	A-313	PARTIAL PLAN / ELEVATION - SOUTH STAIR
521	A-314	PARTIAL PLAN / ELEVATION - NORTH STAIR
522	A-315	PARTIAL PLAN / ELEVATION - NORTH STAIR
523	A-316	ENLARGED PLAN / ELEVATION - WEST STAIR
524	A-317	ENLARGED ELEVATION - WEST STAIR RAILING
525	A-318	ENLARGED OVERALL ELEVATIONS - STAIR RAILINGS
526	A-319	ENLARGED PARTIAL ELEVATIONS - TYPICAL STAIR RAILINGS
527	A-320	ENLARGED PARTIAL ELEVATIONS - TYPICAL STAIR RAILINGS
528	A-401	ENLARGED SECTION - TYPICAL BENT AND ARCH SPAN
529	A-402	ENLARGED SECTIONS - RAILROAD AND 101 FWY ARCH SPAN
530	A-403	ENLARGED PARTIAL SECTIONS - STAIRS
531	A-404	ENLARGED PARTIAL SECTIONS - STAIRS
532	A-405	ENLARGED PARTIAL SECTIONS - STAIRS
533	A-406	ENLARGED PARTIAL SECTIONS - STAIRS
534	A-410	ENLARGED PARTIAL SECTIONS - PEDESTRIAN RAMPS
535	A-420	ENLARGED PARTIAL SECTIONS - ARCH RIB FLOOR BEAM GEOMETRY
536	A-421	ENLARGED PARTIAL SECTIONS - ARCH RIB FLOOR BEAM GEOMETRY (PLAN)
537	A-501	ENLARGED PLAN - VIADUCT WEST APPROACH
538	A-502	ENLARGED PLAN - VIADUCT SPANS 3-5
539	A-503	ENLARGED PLAN - VIADUCT SPANS 6-7
540	A-504	ENLARGED PLAN - VIADUCT SPANS 8-9
541	A-505	ENLARGED PLAN - VIADUCT SPANS 10-12
542	A-506	ENLARGED PLAN - TYPICAL RAILING LAY-OUT
543	A-507	ENLARGED PLAN - RAILING LAY-OUT @ EAST RAMP JUMP SPANS
544	A-520	ENLARGED PARTIAL PLANS - STAIRS
545	A-530	ENLARGED PLAN - WEST APPROACH
546	A-531	ENLARGED PLAN - EAST APPROACH
547	A-532	ENLARGED PLAN - EAST RAMP HELIX LVL 4
548	A-533	ENLARGED PLAN - EAST RAMP HELIX LVL 3
549	A-534	ENLARGED PLAN - EAST RAMP HELIX LVL 2
550	A-535	ENLARGED PLAN - EAST RAMP HELIX LVL 1
551	A-540	ENLARGED PARTIAL PLANS - PEDESTRIAN RAMPS
552	A-541	ENLARGED PARTIAL PLANS - PEDESTRIAN RAMPS
553	A-602	DETAILS - RAILINGS
554	A-603	DETAILS - RAILINGS
555	A-604	DETAILS - RAILINGS
556	A-605	DETAILS - RAILINGS
557	A-606	DETAILS - RAILINGS
558	A-607	DETAILS - RAILINGS
559	A-608	DETAILS -BARRIER-MOUNTED RAILINGS
560	A-609	DETAILS -BARRIER-MOUNTED RAILINGS

Note: Added sheets due to RFI's, Change Orders, Etc, not noted on this plan page.
Added sheets should be incorporated into this sheet as needed.

THE CITY OF LOS ANGELES OR ITS OFFICERS OR AGENTS SHALL NOT BE RESPONSIBLE FOR THE ACCURACY OR COMPLETENESS OF ELECTRONIC COPIES OF THIS PLAN SHEET.

C:\caddlib\pw\pwwestcoast\vespinosa\dms68011\G-401.dwg 7/01/16 09:44

REVISION DATES: DESIGN STAGE ONLY:

Sheet Version 3.0

BUREAU OF ENGINEERING
OFFICIAL RECORD

HNTB
HNTB Corporation
601 W. 5TH STREET SUITE 1000
LOS ANGELES, CALIFORNIA 90071
TEL (213) 403-1000 FAX (213) 403-1001

CITY OF LOS ANGELES DEPARTMENT OF PUBLIC WORKS BUREAU OF ENGINEERING

ENGINEERING
CITY OF LOS ANGELES

STRUCTURE NO. 53C-2329

INDEX NO. P-38113

NO.	REVISIONS:	DATE	BY:

THIS PLAN WAS ELECTRONICALLY SIGNED AND STAMPED

REGISTERED PROFESSIONAL ENGINEER
TERENCE T. PAO
No. C 63433
Expires 6-30-2016
CIVIL
STATE OF CALIFORNIA

GARY LEE MOORE, P.E. CITY ENGINEER
DATE:
LIC. NO. 63433
DESIGN GROUP

ENGINEER: TERENCE PAO
DESIGNED BY: XAVIER ESPINOSA
DRAWN BY: XAVIER ESPINOSA
CHECKED BY: TERENCE PAO
APPROVED BY:

VERTICAL CONTROL: BM 12-04070,1929 (NGVD 29) - 1985 ADJUSTMENT
HORIZONTAL CONTROL: GPS; PID AE 1704, EPOCH 1991.35

SHEET TITLE: INDEX OF PLANS

PROJECT: SIXTH STREET VIADUCT REPLACEMENT

ADDRESS: SIXTH STREET VIADUCT (WHITTIER BLVD) LOS ANGELES, CA

WORK ORDER NO. E70022□F

DRAWING NO. G-401

SHEET 2 OF 560 SHEETS

ADDENDUM 5

NOTICE TO CONTRACTORS

1. SPECIFICATIONS: ALL WORK SHALL CONFORM TO THE LATEST EDITION AND SUPPLEMENTS OF "THE STANDARD SPECIFICATIONS FOR PUBLIC WORKS CONSTRUCTION" (GREENBOOK), AND THE CORRESPONDING "ADDITIONS AND AMENDMENTS TO THE LATEST EDITION OF THE STANDARD SPECIFICATIONS FOR THE PUBLIC WORKS CONSTRUCTION" (BROWN BOOK) AND THE CITY STANDARD PLANS.
2. THIS IMPROVEMENT CONSISTS OF WORK CALLED FOR ONLY ON THIS PLAN.
3. INSPECTION: ALL PUBLIC WORKS CONSTRUCTION AND MATERIAL ARE SUBJECT TO INSPECTION, BY THE CITY OF LOS ANGELES PURSUANT TO SECTION 2-11 OF THE CITY OF LOS ANGELES DEPARTMENT OF PUBLIC WORKS (BROWN BOOK), CALL (213) 485-5080 BEFORE NOON OF THE WORKING DAY, BEFORE THE INSPECTION IS REQUIRED.
4. SURVEY MONUMENT PRESERVATION IS REQUIRED, AND SHALL INCLUDE SUBMITTAL OF MONUMENT TIES TO THE ENGINEER, AS NOTED BY SECTION 2-9.3 OF THE "BROWN BOOK".
5. NOTIFICATION:
   AT LEAST TEN (10) DAYS BEFORE THE START OF CONSTRUCTION, THE CONTRACTOR SHALL NOTIFY, IN WRITING, ABUTTING PROPERTY OCCUPANTS OF THE PROPOSED CONSTRUCTION START DATE. A COPY OF SAID WRITTEN NOTIFICATION SHALL BE PROVIDED TO THE INSPECTOR FOR APPROVAL BEFORE THEY ARE DISTRIBUTED TO THE OCCUPANTS OF THE ABUTTING PROPERTY.
6. THE CONTRACTOR SHALL REESTABLISH ALL PERTINENT SURVEY MARKERS AS PER SSPWC 2-9.1.
7. THE CONTRACTOR SHALL PROVIDE AN ALTERNATIVE ACCESSIBLE ROUTE FOR DISABLED PEDESTRIANS WHENEVER AN EXISTING ROUTE IS BLOCKED DUE TO SIDEWALK OR ROADWAY CONSTRUCTION. THE ALTERNATIVE ROUTE SHALL BE PROVIDED AT ALL TIMES EXCEPT AS APPROVED BY THE INSPECTOR OR ENGINEER. THE FOLLOWING TEMPORARY ALTERNATIVES MAY BE EMPLOYED, SUBJECT TO PRIOR APPROVAL BY THE INSPECTOR OR ENGINEER ON A SPECIFIC LOCATION BASIS.
   A. PROVIDE A MINIMUM 5-FOOT WIDE WALK.
   B. PROVIDE TEMPORARY SIGNING WITH A DISABLED ACCESS LOGO POINTING TO AN ALTERNATIVE ACCESSIBLE ROUTE WITHIN 300 FEET.
   C. A 5-FOOT WIDE CLEAR WALKWAY IN A PARKING OR CLOSED CURB LANE, SHALL CONFORM TO THE LATEST CALIFORNIA MUTCD (SEPTEMBER 2006).
   D. TEMPORARY AC CURB RAMPS IN A PARKING OR CLOSED CURB LANE NEXT TO THE CURB. THEY SHALL BE 4-FEET WIDE, PARALLEL TO THE STREET, WITH A 4 FOOT BY 4 FOOT LEVEL CLEAR LANDING AT THE TOP AND A MAXIMUM RAMP SLOPE OF 1:12. ALL PEDESTRIAN DETOURS SHALL CONFORM TO THE LATEST CALIFORNIA MUTCD (SEPTEMBER 2006).
   E. MOVABLE WOODEN CURB RAMPS AS IN "D" ABOVE SHALL HAVE WOODEN OR METAL HAND RAILS ON THE NONRAMP STREET SIDES.
   F. OTHER TEMPORARY ARRANGEMENTS AS THE INSPECTOR OR ENGINEER MAY AUTHORIZE.
8. PAVING: PAVING OF ROADWAY AREAS SHALL BE WITHHELD UNTIL COMPLETED UTILITY CHANGES OR INSTALLATIONS HAVE BEEN MADE UNDER CITY PERMIT. ACWS SHALL NOT BE PLACED UNTIL ALL AC BASE IS PLACED.
9. REPAIR AND/OR REPLACE ANY EXISTING BROKEN OR OFFGRADE CONCRETE CURB, CONCRETE GUTTER OR CONCRETE SIDEWALK AND/OR PAVEMENT IMMEDIATELY ADJACENT TO OR WITHIN THE AREA OF REQUIRED IMPROVEMENTS TO THE SATISFACTION OF THE CITY ENGINEER PER SPECIFICATIONS.
10. CONSTRUCTION STAKES FOR CURB AND LONGITUDINAL GUTTER, WITH GRADE LESS THAN 0.50%, SHALL BE SET 12.5 FEET ON THE CENTER.
11. THE CONTRACTOR IN CONFORMANCE WITH LOS ANGELES CITY ORDINANCE NO. 150,478, SHALL POTHOLE EXISTING SUBSURFACE INSTALLATIONS CARRYING UNSTABLE SUBSTANCES TO DETERMINE THEIR LOCATIONS AND ELEVATIONS PRIOR TO COMMENCING EXCAVATION. NO POWER TOOLS ARE PERMITTED, ECXEPT TO BREAK THE PAVEMENT.
12. THE CURB FACE SHALL BE 8 INCHES OR MATCH THE EXISTING.
13. IN ADDITION TO THE CONSTRUCTION OF PAVEMENT SHOWN HEREON, WORK REQUIRED UNDER THIS PLAN WILL ALSO INCLUDE THE CONSTRUCTION OF PERMANENT TRENCH RESURFACING IN ALL AREAS WHERE UTILITY LINES HAVE BEEN INSTALLED TO SERVE THIS PROJECT. CONDITIONS OF TRENCH BACKFILL AND RESURFACING SHALL BE AS SPECIFIED ON THE EXCAVATION PERMIT.
14. 4" CMB UNDER ALL SIDEWALKS AND CURB RAMPS. CURBS & GUTTERS, DRIVEWAYS, AND PAVEMENT SHALL BE PLACED IN ACCORDANCE WITH CITY STREET DESIGN MANUAL, PER PAVEMENT CALCULATIONS AND AS SHOWN ON TYPICAL CROSS SECTIONS.
15. TEMPORARY AC PAVEMENT SHALL BE PLACED ADJACENT TO ALL CONCRETE EDGES AND OTHER ROUGH AREAS WITHIN THE AREA OF REMOVAL, SO AS TO PROVIDE A SMOOTH SURFACE FOR VEHICULAR TRAFFIC.
16. SIGNS REQUIRED BY THE LADOT WORKSITE TRAFFIC CONTROL PLAN (S-488.0), AND APPROVED SITE SPECIFIC WORKSITE TRAFFIC CONTROL PLANS, THE CONTRACTOR SHALL FURNISH AND POST "ADVANCE NOTICE" CONSTRUCTION SIGNS AS PART OF THIS PROJECT IN ACCORDANCE WITH STANDARD PLAN S-791-1. TRAFFIC CONTROL SIGNS NEED TO BE COORDINATED THROUGH LADOT BEFORE INSTALLATION.
17. REMOVALS:
   A. REMOVE EXISTING IMPROVEMENTS THAT INTERFERE WITH THE CONSTRUCTION OF THIS PROJECT AND COORDINATE WITH ALL OWNERS OF EXISTING FACILITIES.
   B. ALL IMPACTED UTILITIES EXCEPT TRAFFIC SIGNALS AND STREET LIGHTING FACILITIES SHALL BE REMOVED OR RELOCATED ACCORDING TO THE DRAWINGS, EITHER BY THE CONTRACTOR OR BY OTHERS. CONTRACTOR MUST COORDINATE WITH UTILITY OWNER REGARDING WORK TO BE PERFORMED BY OTHERS.
   C. LADOT WILL INSTALL, REMOVE AND/OR COVER PARKING METER HEADS AS APPROPRIATE. THE CONTRACTOR SHALL BE RESPONSIBLE FOR REMOVING THE PARKING METER POSTS AFFECTED BY CONSTRUCTION ONLY AFTER THE PARKING METER HEADS HAVE BEEN REMOVED BY LADOT. THE CONTRACTOR SHALL CONTACT LADOT (213) 485-2610, 10 WORKING DAYS PRIOR TO PARKING METER REMOVAL.
18. UNDERGROUND SERVICE ALERT:
   BEFORE COMMENCING ANY EXCAVATION, THE CONTRACTOR SHALL OBTAIN AN UNDERGROUND SERVICE ALERT (USA) INQUIRY I.D. NUMBER BY CALLING (800) 227-2600. TWO WORKING DAYS SHALL BE ALLOWED AFTER THE I.D. NUMBER IS OBTAINED AND BEFORE THE CONTRACTOR STARTS THE EXCAVATION WORK SO THAT UTILITY OWNERS CAN BE NOTIFIED. IF THE UTILITY OWNER IS THE CITY OF LOS ANGELES, A CONFIRMATION NUMBER INDICATING THE CITY HAS BEEN NOTIFIED SHALL BE OBTAINED BY USA AND/ OR THE CONTRACTOR FROM THE APPROPRIATE CITY DEPARTMENT. THE I.D. NUMBER TOGETHER WITH THE DATE ACQUIRED SHALL BE REPORTED TO THE BUREAU OF CONTRACT ADMINISTRATION WHEN CALLING FOR INSPECTION. I.D. NUMBERS WILL NOT BE GIVEN MORE THAN 10 DAYS BEFORE STARTING EXCAVATION WORK.
19. ALL POWER POLES AND POWER FACILITIES WILL BE REPLACED AND/OR ADJUSTED BY LADWP. CONTRACTOR SHALL NOT DISTURB NOR DAMAGE OVERHEAD FACILITIES.
20. TRAFFIC SIGNAL EQUIPMENT (POLES, CONDUITS, PULLBOXES, LOOPS) INTERFERING WITH CONSTRUCTION MAY BE RELOCATED ONLY WITH PRIOR APPROVAL BY LADOT. IN THE EVENT OF DAMAGE TO TRAFFIC SIGNAL EQUIPMENT, THE CONTRACTOR SHALL IMMEDIATELY NOTIFY THE LADOT INSPECTOR FERNANDO ALEGRIA AT (213) 792-7637 AND SHALL BE RESPONSIBLE FOR IMMEDIATE REPAIR/REPLACEMENT AT NO COST TO THE CITY. REPAIRED OR REPLACED TRAFFIC SIGNAL EQUIPMENT SHALL BE INSPECTED BY THE LADOT INSPECTOR BEFORE SIGNAL CIRCUITS ARE ENERGIZED.
21. LOCATION OF EXISTING TRAFFIC SIGNAL CONDUIT SHOWN ON THE PLANS IS APPROXIMATE ONLY. CONTRACTOR SHALL DETERMINE IN ADVANCE OF THE WORK THE LOCATION OF TRAFFIC SIGNAL CONDUIT OR OTHER TRAFFIC SIGNAL EQUIPMENT WHICH MAY INTERFERE WITH THE WORK OR WHICH MAY BE DAMAGED BY HIS OPERATIONS.
22. PRIOR TO WORKING WITHIN THE PUBLIC RIGHT-OF-WAY, NOTIFY LADOT 5 WORKING DAYS IN ADVANCE, (213) 485-2610, FOR APPROVAL TO CLOSE TRAFFIC LANES AND/OR SIDEWALKS. THE CONTRACTOR WILL BE REQUIRED TO MEET WITH LADOT TO DETERMINE THE NEED FOR WORKSITE TRAFFIC CONTROLS PER STANDARD PLANS S-488, AND/OR SITE-SPECIFIC WORKSITE TRAFFIC CONTROL PLANS AND DETOUR PLANS. HOURS AND DURATION OF TRAFFIC LANE CLOSURES SHALL COMPLY WITH TRAFFIC LANE REQUIREMENTS PREVIOUSLY ESTABLISHED AND PROVIDED BY LADOT.
23. THE CONTRACTOR SHALL PROTECT ALL EXISTING DRAINAGE STRUCTURES DURING CONSTRUCTION AND KEEP THEM FREE OF CONCRETE, TRASH AND OTHER CONSTRUCTION DEBRIS.
24. ALL STORMDRAIN FACILITIES IN CALTRANS R/W ARE OWNED AND MAINTAINED BY CALTRANS.
25. CONTRACTOR SHALL COMPLY WITH "SEWAGE SPILL PREVENTION RESPONSE PLAN" PER CITY OF LOS ANGELES BROWN BOOK, 7-8.4.
26. ALL EXISTING SANITARY SEWER & STORM DRAIN MAINTENANCE HOLES WITHIN THE WORK AREA THAT WILL REMAIN IN OPERATION AFTER CONSTRUCTION SHALL BE ADJUSTED TO GRADE.
27. UNLESS OTHERWISE NOTED, THE CONTRACTOR SHALL ADJUST WATER SERVICES AND WATER GATE VALVES TO GRADE AFTER NOTIFYING AND COORDINATING WITH DWP-WS.
28. LIMITS OF COLD PLANE AND OVERLAY TO BE DETERMINED BY THE CITY ENGINEER PRIOR TO CONSTRUCTION.
29. ALL CURB RAMPS SHALL HAVE TRUNCATED DOMES ON THE "W" PORTION. SEE STD PLAN S-442-3.
30. PRE-CONSTRUCTION MEETING IS REQUIRED PRIOR TO START OF CONSTRUCTION, PRE AND POST INSTALLATION CCTV INSPECTION OF THE LINE IS REQUIRED BETWEEN MH'S TO CONFIRM NUMBER OF EXISTING LATERALS AND TO VERIFY THAT NO DAMAGE WAS DONE TO THE PIPE.
31. CONTRACTOR SHALL BACKFILL TRENCHES WITH SLURRY TO BOTTOM OF PAVEMENT SECTION PER SSPWC 100-E-100 WITHIN CITY STREETS. JETTED BACKFILL ALLOWED PER CITY STANDARD PLAN 251-1 RFI 0101
32. CONTRACTOR SHALL COORDINATE ALL UTILITY RELOCATIONS WITH THE FINAL DESIGN OF TRACK, SYSTEMS, FACILITIES AND DUCT BANKS.

SURVEY CONTROL

BASIS OF BEARING

BASIS OF BEARING S 77° 38' 27" E :
COORDINATES, BEARINGS AND DISTANCES SHOWN ON THIS SURVEY ARE BASED ON THE ICM COORDINATES SHOWN ON NAVIGATE LA HOLDING THE COORDINATE (N=1836387.06 , E=6491165.61) AT THE INTERSECTION OF 6TH ST. AND MATEO ST. FOR POSITION AND HOLDING THE COORDINATE (N=1835473.68 , E=6495334.11) AT THE INTERSECTION OF BOYLE AVE. AND WHITTIER BLVD. FOR DIRECTION OR BEARING.

BENCHMARKS

BM#	ELEVATION IN FT	DESCRIPTION/LOCATION
12-04070	247.26	CUT SPIKE 7FT S OF S CURB LINE 7TH ST; 0.8FT W OF W END OF HANDRAIL TO BRIDGE 25FT E OF SANTA FE AVE.
11-02339	318.86	WIRE SPK IN W CURB CHICAGO ST; 5FT N OF N P.L. WHITTIER BLVD; N END CB

THE VERTICAL DATUM IS BASED UPON THE CITY OF LOS ANGELES PRECISE BENCH BOOK, NATIONAL GEODETIC VERTICAL DATUM OF 1929 (NGVD 29) - 1985 ADJUSTMENT IN FEET.

COMPLIANCE WITH THE GENERAL PERMIT FOR STORM WATER DISCHARGES ASSOCIATED WITH CONSTRUCTION ACTIVITIES

1. THE CONTRACTOR IS REQUIRED TO MEET THE FOLLOWING MINIMUM STANDARDS OF GOOD HOUSEKEEPING:
   a. ERODED SEDIMENTS AND OTHER POLLUTANTS MUST BE RETAINED ON SITE AND MAY NOT BE TRANSPORTED FROM THE SITE VIA SHEETFLOW, SWALES, AREA DRAINS, NATURAL DRAINAGE, OR WIND.
   b. STOCKPILES OF EARTH AND OTHER CONSTRUCTION-REALATED MATERIALS MUST BE PROTECTED FROM BEING TRANSPORTED FROM THE SITE BY WIND OR WATER.
   c. FUELS, OILS, SOLVENTS, AND OTHER TOXIC MATERIALS MUST BE STORED IN ACCORDANCE WITH THEIR LISTING AND ARE NOT TO CONTAMINATE THE SOIL NOR THE SURFACE WATERS. ALL APPROVED TOXIC STORAGE CONTAINERS ARE TO BE PROTECTED FROM THE WEATHER. SPILLS MUST BE CLEANED UP IMMEDIATELY AND DISPOSED OF IN A PROPER MANNER. SPILLS SHALL NOT BE WASHED INTO DRAINAGE SYSTEM.
   d. EXCESS OR WASTE CONCRETE SHALL NOT BE WASHED INTO THE PUBLIC WAY OR ANY DRAINAGE SYSTEM. PROVISIONS SHALL BE MADE TO RETAIN CONCRETE WASTES ON-SITE UNTIL THEY CAN BE APPROPRIATELY DISPOSED OF OR RECYCLED.
   e. TRASH AND CONSTRUCTION-RELATED SOLID WASTES MUST BE DEPOSITED INTO A COVERED RECEPTACLE TO PREVENT CONTAMINATION OF RAINWATER AND DISPERSAL BY WIND.
   f. SEDIMENTS AND OTHER MATERIALS MAY NOT BE TRACKED FROM THE SITE BY VEHICLE TRAFFIC. THE CONSTRUCTION ENTRANCE ROADWAYS MUST BE STABILIZED SO AS TO INHIBIT SEDIMENTS FROM BEING DEPOSITED INTO THE PUBLIC WAYS. ACCIDENTAL DEPOSITS MUST BE SWEPT UP IMMEDIATELY AND MAY NOT BE WASHED DOWN BY RAIN OR BY ANY OTHER MEANS.
2. WET WEATHER EROSION CONTROL PLAN (WWECP)
   PURSUANT TO SECTION 61.02 OF THE LAMC, WHENEVER IT APPEARS THAT THE CONSTRUCTION SITE WILL HAVE GRADING BETWEEN OCTOBER 1 AND APRIL 15, THE CONTRACTOR SHALL SUBMIT A WWECP TO THE PROJECT MANAGER FOR APPROVAL WITHIN 30 DAYS AFTER AWARD OF CONTRACT OR GET APPROVAL 30 DAYS PRIOR TO THE BEGINNING OF THE RAINY SEASON, WHICHEVER IS LONGER.
   GUIDANCE ON PREPARING THE WWECP CAN BE FOUND IN THE DEVELOPMENT BEST MANAGEMENT PRACTICES HANDBOOK - PART A, CONSTRUCTION ACTIVITIES ADOPTED BY THE BOARD OF PUBLIC WORKS, AS AUTHORIZED BY SECTION 64.72 OF IN LOS ANGELES MUNICIPAL CODE. THIS HANDBOOK CAN BE OBTAINED AT COST AT THE PUBLIC/PERMIT COUNTERS OF THE BUREAU OF ENGINEERING.
3. NOTICE OF INTENT
   THE CONTRACTOR SHALL FILE A "NOTICE OF INTENT" (NOI) WITH THE STATE WATER RESOURCES CONTROL BOARD TO COMPLY WITH THE CALIFORNIA GENERAL CONSTRUCTION ACTIVITY STORMWATER PERMIT AND PREPARE AND IMPLEMENT A STORMWATER POLLUTION PREVENTION PLAN (SWPPP). WHENEVER THE CONTRACTOR IS REQUIRED TO GET ANY TYPE OF PERMIT FROM THE DEPARTMENT OF BUILDING AND SAFETY (DBAS), THE CONTRACTOR SHALL SHOW A WASTE DISCHARGE IDENTIFICATION NUMBER (WDID) TO DBS AS PROOF OF SUBMITTAL OF THE NOI. IF THE CONTRACTOR DOES NOT NEED ANY TYPE OF PERMIT FROM THE DBAS, THE CONTRACTOR SHALL SHOW THE WDID TO THE PROJECT MANAGER. OWNER RECOGNIZES THAT THE PHYSICAL CHARACTERISTICS OF THE PROJECT SITE, THE PLANNED SITE IMPROVEMENTS, AND THE MEANS, METHODS, AND SEQUENCE OF WORK SELECTED BY THE CONTRACTOR MAY AFFECT THE QUALITY OF STORM WATER DISCHARGES FROM THE SITE, BOTH DURING AND AFTER CONSTRUCTION ACTIVITY. ACCORDINGLY, THE SWPPP FOR THE PROJECT SHALL REQUIRE IMPLEMENTATION OF POLLUTANT CONTROL PRACTICES AT THREE LEVELS : 1) SPECIFIC MANDATORY PRACTICES THAT MUST BE IMPLEMENTED AS SPECIFIED; 2) ALTERNATIVE MANDATORY PRACTICES WHERE THE CONTRACTOR SELECTS FROM LISTED PRACTICES THE ALTERNATIVE THAT BEST FITS THE MEANS, METHODS, AND SEQUENCE OF WORK; AND 3) PRACTICES WHERE THE CONTRACTOR SELECTS THE CONTROL PRACTICES THAT BEST FIT THE MEANS, METHODS, AND SEQUENCE OF WORK SO AS TO CONTROL POLLUTANTS IN A MANNER CONSISTENT WITH THE GENERAL PERMIT. CONTRACTOR, IN ASSUMING SOLE, COMPLETE, AND CONTINUOUS RESPONSIBILITY FOR THE CONDITIONS AT THE JOB SITE DURING CONSTRUCTION, SHALL FULLY COMPLY WITH ALL REQUIREMENTS, TERMS, AND CONDITIONS IN THE NOTICE TO INTENT AND GENERAL PERMIT AND SHALL IMPLEMENT THE SWPPP.
   OWNER RETAINS THE RIGHTS AND POWERS TO EFFECT PROMPT CORRECTIVE ACTION UPON FAILURE BY THE CONTRACTOR TO COMPLY WITH ANY REQUIREMENTS, TERMS, OR CONDITIONS IN THE NOI, GENERAL PERMIT, OR SWPPP; HOWEVER, OWNER'S RETAINING OF THESE RIGHTS DOES NOT OBLIGATE THE OWNER TO EFFECT SAID CORRECTIVE ACTION OR TO NOTIFY CONTRACTOR THAT CORRECTIVE ACTION IS REQUIRED, NOR DOES IT RELIEVE THE CONTRACTOR FROM THE FULL RESPONSIBILITY TO COMPLY. CONDITIONS OF NON-COMPLIANCE DUE TO ANY ACTION OR INACTION OF ANY SUBCONTRACTOR, MATERIAL SUPPLIER, PROVIDER OF SERVICE, OR WORKER ON THE ACCOUNT OF THE CONTRACTOR SHALL BE CONSIDERED A FAILURE BY THE CONTRACTOR TO COMPLY. CONTRACTOR SHALL DESIGNATE IN WRITING THE NAME AND TELEPHONE NUMBER OF THE PERSON RESPONSIBLE FOR IMPLEMENTING THE SWPPP. THE DESIGNATED PERSON SHALL BE AVAILABLE 24 HOURS PER DAY, SEVEN DAYS PER WEEK AND SHALL HAVE THE AUTHORITY TO RESPOND TO STORM WATER POLLUTION ISSUES AND TO IMPLEMENT CORRECTIVE AND PREVENTATIVE MEASURES AS REQUIRED. THE DESIGNATED PERSON AND THE TELEPHONE NUMBER SHALL BECOME PART OF THE SWPPP, A DOCUMENT AVAILABLE TO THE PUBLIC.

APPROVED FOR CONSTRUCTION

METRO TRANSIT DIVISION
BUREAU OF ENGINEERING
CITY OF LOS ANGELES

City of Los Angeles Bureau of Engineering's review of these submittals, plans, specifications, and shop drawings shall not relieve HNTB, its consultants, and its contractors of the responsibility for errors, or omissions in the submitted documents. HNTB is responsible to insure and confirm that the City of Los Angeles Standards (Standards) are used to perform all work on or effecting City facilities. The Standards shall be the current edition in use upon the date City receives such submittal or per an effective date as specified in the agreement (if any).

BUREAU OF ENGINEERING
OFFICIAL RECORD

HNTB
HNTB Corporation
601 W. 5TH STREET SUITE 1000
LOS ANGELES, CALIFORNIA 90071
TEL (213) 403-1000 FAX (213) 403-1001

CITY OF LOS ANGELES DEPARTMENT OF PUBLIC WORKS BUREAU OF ENGINEERING

ENGINEERING
CITY OF LOS ANGELES

STRUCTURE NO. 53C-2329

INDEX NO. P-38113

NO.	REVISIONS:	DATE:	BY:

THIS PLAN WAS ELECTRONICALLY SIGNED AND STAMPED

REGISTERED PROFESSIONAL ENGINEER
LAWRENCE T. PAO
No. C 63433
Expires 9-30-2016
CIVIL
STATE OF CALIFORNIA

GARY LEE MOORE, P.E.
CITY ENGINEER
DATE:
LIC. NO. 63433

ENGINEER:	TERENCE PAO
DESIGNED BY:	XAVIER ESPINOSA
DRAWN BY:	XAVIER ESPINOSA
CHECKED BY:	TERENCE PAO
APPROVED BY:	

VERTICAL CONTROL: BM 12-04070 1929 (NGVD 29) - 1985 ADJUSTMENT
HORIZONTAL CONTROL: GPS; PID AE 1704, EPOCH 1991.35

SHEET TITLE: NOTICE TO CONTRACTORS 1 OF 2
PROJECT: SIXTH STREET VIADUCT REPLACEMENT
ADDRESS: SIXTH STREET VIADUCT (WHITTIER BLVD) LOS ANGELES, CA

WORK ORDER NO. E700224F
DRAWING NO. G-402
SHEET 3 OF 560 SHEETS

REVISION DATES (DESIGN STAGE ONLY)

THE CITY OF LOS ANGELES OR ITS OFFICERS OR AGENTS SHALL NOT BE RESPONSIBLE FOR THE ACCURACY OR COMPLETENESS OF ELECTRONIC COPIES OF THIS PLAN SHEET.

C:\caddlib\pw\pwwestcoast\yespinosa\dms68011\G-402.dwg 4/21/16 16:04

Sheet Version 3.0

ADDENDUM 5

NOTICE TO CONTRACTORS

GENERAL NOTES

1. NOTIFY THE METROPOLITAN TRANSIT AUTHORITY, (213) 922-4632, 48 HOURS PRIOR TO ANY WORK WHICH WILL AFFECT NORMAL BUS OPERATIONS.

2. TO ENSURE SURVEY MONUMENT PRESERVATION, CONTRACTOR SHALL PROTECT AND/ OR PERPETUATE ANY CITY/ COUNTY SURVEY FACILITY AFFECTED BY THE PROJECT INCLUDING, BUT NOT LIMITED TO, BENCHMARKS, MONUMENTS, CORNER TIES, NAIL AND TINS, RIGHT OF WAY CORNERS, BOUNDARY MONUMENTS, BRASS DISKS, ETC. AS ACCEPTED BY THE CITY. PRIOR TO DISTURBANCE, THE CITY SHALL BE NOTIFIED AND A CORNER RECORD OR RECORD OF SURVEY MUST BE FILED WITH THE COUNTY SURVEYOR PRIOR TO CONSTRUCTION. IN ADDITION, CITY MONUMENT TIE NOTES SHALL BE FILED IN ORDER APPROPRIATELY TO ACHIEVE FULL COMPLIANCE WITH STATE LAW.

STREET IMPROVEMENTS - ADDITIONAL NOTES

1. GRADING REQUIRED ON PRIVATE PROPERTY OUTSIDE THE STREET AND ALLEY DEDICATION, IN CONNECTION WITH THIS IMPROVEMENT, SHALL BE PERFORMED EITHER WITHIN DEDICATED SLOPE EASEMENTS OR IN AREAS FOR WHICH SATISFACTORY RIGHTS-OF-ENTRY HAVE BEEN OBTAINED.

2. DRAINAGE FROM ALL LOTS SHALL BE CARRIED TO THE IMPROVED GUTTER BY MEANS OF A DRIVEWAY, APPROVED OUTLET STRUCTURE, OR SIDEWALK DRAIN (SECTION 306-7 GREENBOOK).

3. PAVING OF ROADWAY AREAS SHALL BE WITHHELD UNTIL THE SEWER AND STORM DRAIN WORK HAS BEEN APPROVED BY UNDERGROUND FINAL INSPECTION.

4. WHERE TWO STREETS OF UNEQUAL BASE AND PAVEMENT THICKNESS INTERSECT, THE ENTIRE INTERSECTION TO THE ECR SHALL BE PAVED WITH THE GREATER THICKNESS OF BASE AND PAVEMENT.

STORM DRAIN CONSTRUCTION NOTES:

1. WHERE THE STORM DRAIN IS TO BE PLACED WITHIN A FILL, THE CONTRACTOR SHALL FIRST COMPACT THE FILL A MINIMUM OF 12" ABOVE THE TOP OF PIPE BEFORE TRENCH EXCAVATION TO LAY PIPE.

2. TRENCH BACKFILL FOR ALL STORM DRAINS CONSTRUCTED IN DRAINAGE EASEMENTS SHALL BE MECHANICALLY COMPACTED TO A RELATIVE DENSITY OF 90%.

3. PROTECTION BARS SHALL BE INSTALLED ON ALL SIDE OPENING CATCH BASINS UNLESS INDICATED OTHERWISE ON PLAN.

4. LOCATIONS OF EXISTING HOUSE CONNECTION SEWERS SHOWN HEREON ARE APPROXIMATE. IF INTERFERENCE IS ENCOUNTERED, REMODEL THE HOUSE CONNECTION IN CONFORMANCE WITH THE APPLICABLE DETAIL ON STANDARD PLAN S-111-0.

5. THE CONTRACTOR SHALL VERIFY THE ELEVATION OF ANY SUBSTRUCTURE INDICATED WITH AN ASTERISK (*) AND SHALL SECURE CLEARANCE OF THE PRIVATE ENGINEER BEFORE PROCEEDING WITH INSTALLATION OF THE PIPE.

6. SPPWC PER BUREAU OF ENGINEERING SPECIAL ORDER NO. 007-0701, DATED JULY 16, 2001.

7. SPACE BETWEEN THE BACK OF SIDE OPENING CATCH BASINS AND EXISTING SIDEWALK, IF LESS THAN 2 FEET, SHALL BE FILLED WITH 4" CONCRETE SIDEWALK PLACED MONOLITHICALLY WITH THE TOP SLAB OF THE CATCH BASIN.

8. SPECIFICATIONS: ALL DRAINAGE WORK SHALL CONFORM TO THE LATEST EDITION AND SUPPLEMENTS OF THE STANDARD SPECIFICATIONS FOR PUBLIC WORKS CONSTRUCTION (SSPWC) THE GREEN BOOK AS MODIFIED BY THE CORRESPONDING ISSUE OF THE BROWN BOOK AND ANY SPECIAL PROVISIONS.

9. THE GRATES FURNISHED FOR ALL SURFACE DRAINAGE INLETS SHALL BE GRAY CAST IRON. GRATES SHALL BE CAPABLE OF SUPPORTING HS20-44 WHEEL LOADING FOR HEAVY-DUTY TRAFFIC AND H-10 LOADING FOR PEDESTRIAN TRAFFIC. GRATES SHALL CONFORM TO STANDARD PLANS S-601-0.

10. ALL PVC PIPE SHALL CONFORM TO ASTM D3034 SDR 35.

11. ALL PROPOSED & REMODELED CATCH BASINS SHALL INCLUDE CATCH BASIN INSERTS, CATCH BASIN OPENING SCREEN COVER, SEE SPECIFICATIONS.

12. ALL NEW AND REMOLDED OR REPLACED CATCH BASINS UNDER THIS PROJECT SHALL BE STENCILED WITH PROHIBITIVE LANGUAGE SUCH AS "NO DUMPING DRAINS TO OCEAN".

TREES AND TREE WELLS

1. TREE WELL COVERS, TYPE A, PER STANDARD PLAN S-450-3 SHALL BE PROVIDED FOR TREES PLANTED WITHIN THE SIDEWALK AREA. WHEN EXISTING CURB TO BACK OF WALK IS LESS THAN 8' USE TYPE A-2 TREE WELLS, AND IF 8' OR GREATER USE TYPE A-1 TREE WELLS.

2. PLANT _____ IN THE TREE WELLS WITH ROOT CONTROL BARRIER'S PER STANDARD PLAN S-456-2. STAKE THE TREES PER STANDARD PLAN S-663-1.

3. THE CONTRACTOR SHALL NOTIFY THE URBAN FORESTRY DIVISION FIVE WORKING DAYS PRIOR TO CONSTRUCTING THE SIDEWALK FOR THE MARKING OF THE TREE LOCATIONS. CALL (213) 847-0833.

4. TREE REMOVAL: PRIOR TO THE REMOVAL OF ANY STREET TREE, A BOARD REPORT MUST BE SUBMITTED AND APPROVED BY THE BOARD OF PUBLIC WORKS (30-60 DAYS FROM RECEIPT OF A WRITING FORMAL REQUEST,) A COPY OF THE PERMIT IS REQUIRED TO BE ON THE JOB SITE WHILE THE TREE WORK IS TAKING PLACE.

5. ROOT TRIMMING: TREE(S) MUST BE TRIMMED PRIOR TO ROOT PRUNING TO COMPENSATE FOR THE ROOT LOSS AND TO STABILIZE THE TREE. THE CROWN OF THE TREE IS TO BE REDUCED BY NO MORE THAN 25% OF FOLIAGE (UNLESS APPROVED OTHERWISE BY AN URBAN FORESTRY ARBORIST). PRUNE THE ROOTS ON ONE SIDE OF THE ROOT SYSTEM ONLY (UNLESS APPROVED OTHERWISE BY AN URBAN FORESTRY ARBORIST). DO NOT PRUNE ROOTS LARGER THAN 4" DIAMETER (PERMIT IS REQUIRED).
   - CONTRACTOR IS TO TRIM THE TREE(S) TO THE SATISFACTION OF THE URBAN FORESTRY DIVISION USING A.N.S.I. A300 STANDARDS AND/OR I.S.A. PRUNING GUIDELINES. (PERMIT IS REQUIRED).
   - NOTIFY THE URBAN FORESTRY DIVISION AT (213) 485-5675, FIVE WORKING DAYS PRIOR TO TRIMMING AND/OR ROOT PRUNING FOR A REPRESENTATIVE TO INSPECT AND ISSUE THE NECESSARY PERMITS.

APPROVED FOR CONSTRUCTION

METRO TRANSIT DIVISION
BUREAU OF ENGINEERING
CITY OF LOS ANGELES

City of Los Angeles Bureau of Engineering's review of these submittals, plans, specifications, and shop drawings shall not relieve HNTB, its consultants, and its contractors of the responsibility for errors, or omissions in the submitted documents. HNTB is responsible to insure and confirm that the City of Los Angeles Standards (Standards) are used to perform all work on or effecting City facilities. The Standards shall be the current edition in use upon the date City receives such submittal or per an effective date as specified in the agreement (if any).

BUREAU OF ENGINEERING
OFFICIAL RECORD

HNTB
HNTB Corporation
601 W. 5TH STREET SUITE 1000
LOS ANGELES, CALIFORNIA 90071
TEL (213) 403-1000 FAX (213) 403-1001

CITY OF LOS ANGELES DEPARTMENT OF PUBLIC WORKS
BUREAU OF ENGINEERING

ENGINEERING
CITY OF LOS ANGELES

STRUCTURE NO. 53C-2329

INDEX NO. P-38113

NO.	REVISIONS:	DATE	BY:

THIS PLAN WAS ELECTRONICALLY SIGNED AND STAMPED

REGISTERED PROFESSIONAL ENGINEER
TERENCE T. PAO
No. C 63433
Expires 6-30-2016
CIVIL
STATE OF CALIFORNIA

CITY ENGINEER
GARY LEE MOORE, P.E.
DATE:

ENGINEER:	TERENCE PAO	DESIGN GROUP	LIC. NO. 63433
DESIGNED BY:	XAVIER ESPINOSA		
DRAWN BY:	XAVIER ESPINOSA		
CHECKED BY:	TERENCE PAO		
APPROVED BY:			

VERTICAL CONTROL: BM 12-04070, 1929 (NGVD 29) - 1985 ADJUSTMENT
HORIZONTAL CONTROL: GPS; PID AE 1704, EPOCH 1991.35

SHEET TITLE: NOTICE TO CONTRACTORS 2 OF 2

PROJECT: SIXTH STREET VIADUCT REPLACEMENT

ADDRESS: SIXTH STREET VIADUCT (WHITTIER BLVD) LOS ANGELES, CA

WORK ORDER NO. E700224F

DRAWING NO. G-403

SHEET 4 OF 560 SHEETS

THE CITY OF LOS ANGELES OR ITS OFFICERS OR AGENTS SHALL NOT BE RESPONSIBLE FOR THE ACCURACY OR COMPLETENESS OF ELECTRONIC COPIES OF THIS PLAN SHEET.

REVISION DATES (DESIGN STAGE ONLY)

C:\caddlib\pw\pwwestcoast\xespinosa\dms68011\G-403.dwg 4/21/16 16:05

Sheet Version 3.0

ADDENDUM 5



APPROVED FOR CONSTRUCTION

METRO TRANSIT DIVISION

BUREAU OF ENGINEERING
CITY OF LOS ANGELES

City of Los Angeles Bureau of Engineering's review of these submittals, plans, specifications, and shop drawings shall not relieve HNTB, its consultants, and its contractors of the responsibility for errors, or omissions in the submitted documents. HNTB is responsible to insure and confirm that the City of Los Angeles Standards (Standards) are used to perform all work on or effecting City facilities. The Standards shall be the current edition in use upon the date City receives such submittal or per an effective date as specified in the agreement (if any).

BUREAU OF ENGINEERING
OFFICIAL RECORD

HNTB
HNTB Corporation
601 W. 5TH STREET SUITE 1000
LOS ANGELES, CALIFORNIA 90071
TEL (213) 403-1000 FAX (213) 403-1001

WORK ORDER NO.
E700224F

DRAWING NO.
G-404

SHEET 5 OF 560 SHEETS

CITY OF LOS ANGELES DEPARTMENT OF PUBLIC WORKS BUREAU OF ENGINEERING

ENGINEERING
CITY OF LOS ANGELES

NO.	REVISIONS:	DATE:	BY:

STRUCTURE NO.
53C-2329

INDEX NO.
P-38113

REGISTERED PROFESSIONAL ENGINEER
TERENCE T. PAO
No. C 63433
Expires 6-30-2016
CIVIL
STATE OF CALIFORNIA

THIS PLAN WAS ELECTRONICALLY SIGNED AND STAMPED

CITY ENGINEER
GARY LEE MOORE, P.E.
DATE:
LIC. NO. 63433

DESIGN GROUP

ENGINEER:	TERENCE PAO
DESIGNED BY:	XAVIER ESPINOSA
DRAWN BY:	XAVIER ESPINOSA
CHECKED BY:	TERENCE PAO
APPROVED BY:	

VERTICAL CONTROL: BM 12-04070,1929 (NGVD 29)- 1985 ADJUSTMENT
HORIZONTAL CONTROL: GPS; PID AE 1704, EPOCH 1991.35

SHEET TITLE: KEY MAP

PROJECT: SIXTH STREET VIADUCT REPLACEMENT

ADDRESS: SIXTH STREET VIADUCT (WHITTIER BLVD)
LOS ANGELES, CA

REVISION DATES (DESIGN STAGE ONLY)

C:\caddlib\pw\pwwestcoast\xespinosa\dms68011\G-404.dwg 4/21/16 16:08

Sheet Version 3.0

THE CITY OF LOS ANGELES OR ITS OFFICERS OR AGENTS SHALL NOT BE RESPONSIBLE FOR THE ACCURACY OR COMPLETENESS OF ELECTRONIC COPIES OF THIS PLAN SHEET.

ADDENDUM 5

ABBREVIATIONS

UTILITY COMPANY / AGENCY ABBREVIATIONS

&	AND
AAR	ASSOCIATION OF AMERICAN RAILROADS
AASHTO	AMERICAN ASSOCIATION OF STATE HIGHWAY AND TRANSPORTATION OFFICIALS
ABAN	TO BE ABANDONED
ACI	AMERICAN CONCRETE INSTITUTE
ADA	AMERICAN WITH DISABILITY ACT
AM STATE	W. AMERICAN STATES WATER COMPANY (NOW LACOW)
ARCO	ATLANTIC RICHFIELD COMPANY (NOW FOUR CORNERS PIPELINE COMPANY)
AREMA	AMERICAN RAILWAY ENGINEERING AND MAINTENANCE OF WAY ASSOCIATION
ASCE	AMERICAN SOCIETY OF CIVIL ENGINEERS
ASTM	AMERICAN SOCIETY FOR TESTING AND MATERIALS
BNSF	BURLINGTON NORTHERN SANTA FE
BPL	BUREAU OF POWER AND LIGHT (NOW LA DWPPS)
BWS	BUREAU OF WATER SUPPLIES (NOW LA DWPWS)
CON WCO	CONSERVATIVE WATER COMPANY (NOW LACOW)
CALTRANS	STATE OF CALIFORNIA DEPARTMENT OF TRANSPORTATION
CPUC	CALIFORNIA PUBLIC UTILITIES COMMISSION
DWPPS	CITY OF LOS ANGELES, DEPARTMENT OF WATER AND POWER, POWER SYSTEM
FHWA	FEDERAL HIGHWAY ADMINISTRATION
FTA	FEDERAL TRANSPORTATION ADMINISTRATION
GP	GENERAL PETROLEUM (NOW MOBIL OIL)
GSD	CITY OF LOS ANGELES, GENERAL SERVICES DIVISION
GTE	GENERAL TELEPHONE COMPANY
LA	CITY OF LOS ANGELES
LACFCD	LOS ANGELES COUNTY FLOOD CONTROL DISTRICT
LACMTA	LOS ANGELES COUNTY METROPOLITAN TRANSPORTATION AUTHORITY
LACO	COUNTY OF LOS ANGELES
LACOW	LOS ANGELES COUNTY WATER WORKS
LACSD	LOS ANGELES COUNTY SANITATION DISTRICTS
LACTC	LOS ANGELES COUNTY TRANSPORTATION COMMISSION (NOW LACMTA)
LADOT	CITY OF LOS ANGELES, DEPARTMENT OF TRANSPORTATION
LADWP-PS	CITY OF LOS ANGELES, DEPARTMENT OF WATER & POWER, POWER SYSTEMS
LADWP-WS	CITY OF LOS ANGELES, DEPARTMENT OF WATER & POWER, WATER SYSTEMS
LAG	LOS ANGELES GAS (NOW SCG OR TGC)
LAG&E	LOS ANGELES GAS & ELECTRIC (NOW SCG, TGC AND DWPPS)
LAWD	LOS ANGELES WATER DEPARTMENT (NOW DWPWS)
MWD	METROPOLITAN WATER DISTRICT OF SOUTHERN CALIFORNIA
PAC BELL,PB	PACIFIC BELL COMPANY
PACTEL, PTT	PACIFIC TELEPHONE & TELEGRAPH COMPANY
SCAL W	SOUTHERN CALIFORNIA WATER COMPANY (NOW LACOW)
SCE	SOUTHERN CALIFORNIA EDISON COMPANY
SCG	SOUTHERN CALIFORNIA GAS COMPANY(NOW THE GAS COMPANY)
SCRTD	SOUTHERN CALIFORNIA RAPID TRANSIT DISTRICT (NOW LACMTA)
SCT	SOUTHERN CALIFORNIA TELEPHONE COMPANY (NOW PACIFIC BELL)
SCWCO	SOUTHERN CALIFORNIA WATER COMPANY
SO PAC P	SOUTHERN PACIFIC PIPELINE COMPANY
SPPWC	STANDARD PLANS FOR PUBLIC WORKS CONSTRUCTION
SPTC OR SP	SOUTHERN PACIFIC TRANSPORTATION COMPANY
STD OIL CO	STANDARD OIL COMPANY OF CALIFORNIA
TGC	THE GAS COMPANY(FORMERLY SOUTHERN CALIFORNIA GAS COMPANY)
TM-CATV	TIMES MIRROR CABLE TELEVISION (NOW SIMMONS CABLE TELEVISION)
UBC	UNIFORM BUILDING CODE
UPRR	UNION PACIFIC RAILROAD
US	UNITED STATES
USC & GS	UNITED STATES COAST AND GEODETIC SURVEY
WUT	WESTERN UNION TELEGRAPH COMPANY(NOW ATS PART OF MCI)

MISCELLANEOUS

@	AT
AB	AGGREGATE BASE
ABND, ABAND	ABANDONED
ABS	ACRYLONITRILE-BUTADIENE-STYRENE
ABUT	ABUTMENT
AC	ASPHALT CONCRETE OR ASBESTOS CEMENT
ACC	ASPHALT CEMENT CONDUIT
ACD	ASPHALTIC CONCRETE DUCT
ACL	AUXILIARY CONTROL LINE
ACP	ASBESTOS CEMENT PIPE
ACWS	ASPHALT CONCRETE WEARING SURFACE
AGGR	AGGREGATE
AHD	AHEAD
AL	ALUMINUM
ALIGN	ALIGNMENT
ALT	ALTERNATE
AMER STD	AMERICAN STANDARD
APP	APPROVED (REF)
APPROX, APP	APPROXIMATELY
APRV	APPROVED
AS	AGGREGATE SUB-BASE
ASB	ASBESTOS
ASPH	ASPHALT
AVE	AVENUE
AWG	AMERICAN WIRE GAUGE (GAGE)
A/R	AS REQUIRED
BB	BILLBOARD
BC	BEGIN CURVE
BCOP	BARE COPPER
BCR	BEGIN CURB RETURN
BDRY	BOUNDARY
BEG	BEGIN OR BEGINNING
BF	BOTTOM FACE, BOTTOM OF FOOTING
BFP	BACKFLOW PREVENTER
BIT	BITUMINOUS
BK	BACK
BL	BASELINE, BUILDING LINE OR LEFT TRACK-LINE B
BLDG	BUILDING
BLS	BLUE LIGHT STATION
BLVD	BOULEVARD
BM	BENCH MARK
BO	BLOW-OFF
BOC	BOTTOM OF CURB
BOP	BOTTOM OF PIPE
BORW	BOTTOM OF RETAINING WALL
BOS	BOTTOM OF SLOPE
BP	BEGIN PLATFORM
BRDG	BRIDGE
BRG	BEARING
BRK	BRICK
BRS	BLAST RELIEF SHAFT
BS	BELL AND SPIGOT
BSMT	BASEMENT
BUR CA	BURIED CABLE
BVC	BEGINNING OF VERTICAL CURVE
BW, B/W	BACK OF WALK
B TO B	BACK TO BACK
B-PC	SCHEDULE B - PLASTIC CONDUIT
Cb	CURB
CA	CABLE OR COMPRESSED AIR
CAB	CRUSHED AGGREGATE BASE
CB	CATCH BASIN
CBD	CENTRAL BUSINESS DISTRICT
CC-B	CONCRETE CONDUIT-TYPE B
CC-C	CONCRETE CONDUIT-TYPE C
CD	CURB DRAIN
CE	CONCRETE ENCASED
CF	CURB FACE, CUBIC FOOT
CFS	CUBIC FEET PER SECOND
C & G	CURB AND GUTTER
CAL/OSHA	CALIFORNIA OCCUPATIONAL SAFETY AND HEALTH ADMINISTRATION
CAP	CORRUGATED ALUMINUM PIPE
CBP	CATCH BASIN CONNECTION PIPE
CBR	CALIFORNIA BEARING RATIO
CCR	CALIFORNIA CODE OF REGULATIONS
CCTV	CLOSED CIRCUT TV
CFR	CODE OF FEDERAL REGULATIONS
CGS	CENTER OF GRAVITY, STRAND
CHEM	CHEMICAL
CI	CAST IRON OR CURB INLET
CICLP, CIP(CL)	CAST-IRON CEMENT LINED PIPE
CIP	CAST IRON PIPE
CIPP	CAST-IN PLACE PIPE
CIRCUM	CIRCUMFERENCE
CISP(ES)	CAST IRON SOIL PIPE (EXTRA STRENGTH)
CJ	CONSTRUCTION JOINT
C/L	CONTROL LINE
CL	CURB LINE OR CLASS, CLEARANCE
℄	CENTERLINE
CLF	CHAIN LINK FENCE
CLG	CEILING
CLR	CLEARANCE OR CLEAR
CMB	CRUSHED MISCELLANEOUS BASE
CMC	CEMENT MORTAR-COATED
CML	CEMENT MORTAR-LINED
CMP	CORRUGATED METAL PIPE
CO	CLEANOUT, COUNTY, OR COMPANY
COL	COLUMN
COMM	COMMUNICATION
CONC	CONCRETE
CONC BL	CONCRETE BLOCK
COND	CONDUIT
CONF	CONFERENCE
CONN	CONNECT, CONNECTION, OR CONNECTOR
CONST	CONSTRUCT OR CONSTRUCTION
CONT	CONTINUED, CONTINUOUS, OR CONTINUATION
COORD	COORDINATE
COP	COPPER
COR	CORNER
CORR	CORRUGATE OR CORRUGATED
CP	CONCRETE PIPE OR CEMENT PIPE
CPC	CORRUGATED PLASTIC CONDUIT
C/S	COMMUNICATIONS/SIGNALS
CSG	CASING
CSP	CORRUGATED STEEL PIPE
CSW	CONCRETE SIDEWALK
CTA	CENTRAL TANGENT ANGLE
CTB	CEMENT TREATED BASE
CU FT, CF	CUBIC FOOT
CU IN	CUBIC INCH
CU YD, CY	CUBIC YARD
CULV	CULVERT
CV	CHECK VALVE
CWD	CREOSOTED WOOD DUCT
CWR	CONTINUOUS WELDED RAIL
C/C	CENTER TO CENTER
C-PC	SCHEDULE C - PLASTIC CONDUIT
D, d	DEPTH, LOAD OF PIPE
D, DU, DCT	DUCT
DB	DUCT BANK
dB	DECIBELS
DBL	DOUBLE
DEF	DEFLECTION
DEG	DEGREES
DEPT	DEPARTMENT
DESC	DESCRIPTION
DET	DETAIL
DF	DIRECT FIXATION, DOUGLAS FIR
DG	DIESEL GAS OR DRY GAS
DI	DUCTILE IRON, DROP INLET
DIA OR 0/	DIAMETER
DIAG	DIAGRAM
DIM	DIMENSION
DIP(L)	DUCTILE IRON PIPE (LINED)
DIST	DISTRICT OR DISTANCE
DL	DEAD LOAD
DMD	DIAMOND
DMH	DRAINAGE MAINTENANCE HOLE
DML	DEMOLITION
DN	DOWN
DT	DRAIN TILE
DW	DOMESTIC WATER
DWG	DRAWING
DWL	DOWEL
DWLG	DOWELLING
DWY	DRIVEWAY
DWY APPR	DRIVEWAY APPROACH
E	EAST OR ELECTRIC
E'TERLY	EASTERLY
EA	EACH
EB	EASTBOUND
EC	END CURVE or END CURB
ECR	END CURB RETURN
E/E	EAST OF EAST RIGHT-OF-WAY LINE
EF	EACH FACE
EG	EDGE OF GUTTER
EGL	ENERGY GRADE LINE
EHH	ELECTRICAL HANDHOLE
EL	ELEVATION
ELC	ELECTROLIER LIGHING CONDUIT
ELEC	ELECTRIC OR ELECTRICAL
ELT	EXTRA LONG TON OF SLURRY
ELEV	ELEVATOR OR ELEVATION
EMB	EMBANKMENT
EMH	ELECTRICAL MAINTENANCE HOLE
ENGR	ENGINEER, ENGINEERING
E/O	EAST OF
EOR	END OF ROAD
EP	EDGE OF PAVEMENT OR END PLATFORM
EQ	EQUAL, EQUATION OR EQUALITY
ES	EXTRA STRENGTH
ESMT	EASEMENT
ET	END TRACK
ETB	EMULSION-TREATED BASE
ETC	ET CETERA
ETS	EMERGENCY TRIP STATION
EVC	END OF VERTICAL CURVE
EW	EACH WAY
E/W	EAST OF WEST RIGHT-OF-WAY LINE
EXC	EXCAVATION
EXST, EX OR EXIST	EXISTING
EXP	EXPANSION
EXP JT	EXPANSION JOINT
EXT	EXTERIOR
F	FIBER, FARENHEIT
FA	FIRE ALARM
FAC	FIRE ALARM CONDUIT
F&C	FRAME AND COVER
F&I	FURNISH AND INSTALL

APPROVED FOR CONSTRUCTION

METRO TRANSIT DIVISION
BUREAU OF ENGINEERING
CITY OF LOS ANGELES

City of Los Angeles Bureau of Engineering's review of these submittals, plans, specifications, and shop drawings shall not relieve HNTB, its consultants, and its contractors of the responsibility for errors, or omissions in the submitted documents. HNTB is responsible to insure and confirm that the City of Los Angeles Standards (Standards) are used to perform all work on or effecting City facilities. The Standards shall be the current edition in use upon the date City receives such submittal or per an effective date as specified in the agreement (if any).

BUREAU OF ENGINEERING
OFFICIAL RECORD

HNTB
HNTB Corporation
601 W. 5TH STREET SUITE 1000
LOS ANGELES, CALIFORNIA 90071
TEL (213) 403-1000 FAX (213) 403-1001

CITY OF LOS ANGELES DEPARTMENT OF PUBLIC WORKS
BUREAU OF ENGINEERING

ENGINEERING
CITY OF LOS ANGELES

STRUCTURE NO.
53C-2329

INDEX NO. **P-38113**

NO.	REVISIONS:	DATE	BY:

THIS PLAN WAS ELECTRONICALLY SIGNED AND STAMPED

REGISTERED PROFESSIONAL ENGINEER
TERENCE T. PAO
No. C 63433
Expires 9-30-2016
CIVIL
STATE OF CALIFORNIA

GARY LEE MOORE, P.E. CITY ENGINEER

		DATE:
ENGINEER:	TERENCE PAO	LIC. NO. 63433
DESIGNED BY:	XAVIER ESPINOSA	
DRAWN BY:	XAVIER ESPINOSA	
CHECKED BY:	TERENCE PAO	
APPROVED BY:		

DESIGN GROUP

VERTICAL CONTROL: BM 12-04070, 1929 (NGVD 29) - 1985 ADJUSTMENT
HORIZONTAL CONTROL: GPS; PID AE 1704, EPOCH 1991.35

SHEET TITLE: ABBREVIATIONS AND SYMBOLS 1 OF 4

PROJECT: SIXTH STREET VIADUCT REPLACEMENT

ADDRESS: SIXTH STREET VIADUCT (WHITTIER BLVD) LOS ANGELES, CA

WORK ORDER NO.
E700224F

DRAWING NO.
G-405

SHEET 6 OF 560 SHEETS

REVISION DATES (DESIGN STAGE ONLY)

C:\caddlib\pw\pwwestcoast\yespinosa\dms68011\G-405-G408 - G603-G606.dwg 4/21/16 16:10

THE CITY OF LOS ANGELES OR ITS OFFICERS OR AGENTS SHALL NOT BE RESPONSIBLE FOR THE ACCURACY OR COMPLETENESS OF ELECTRONIC COPIES OF THIS PLAN SHEET.

Sheet Version 3.0

ADDENDUM 5

ABBREVIATIONS

FAB	FABRICATE
FAI	FRESH AIR INTAKE
FAS	FLASHING ARROW SIGN
FB	FIRE ALARM BOX
FBM	FOOT BOARD MEASUREMENT
FBP	FUTURE BEGIN PLATFORM
FC	FIBER CONDUIT OR FIRE CONNECTION
FD	FIBER DUCT, FLOOR DRAIN OR FIRE DEPARTMENT
FDN	FOUNDATION
FE	FLANGED END
FED SPEC	FEDERAL SPECIFICATION
FEP	FUTURE END PLATFORM
FF	FINISHED FLOOR OR FAR FACE
FFE	FINISH FLOOR ELEVATION
FG	FROG GAUGE PLATE OR FINISH GRADE
FH	FIRE HYDRANT
FIN	FINISH
FL	FLOW LINE, FUEL
FLG	FLANGE
FLP	FLOW LINE PIPE
FLR	FLOOR
FO	FIBER OPTICS
FP	FIRE PROTECTION
FPS	FEET PER SECOND
FR	FRAME
FS	FIRE SERVICE, FINISHED SURFACE, OR FAR SIDE
FT	FOOT OR FEET
F TO F	FACE TO FACE
FT-LB	FOOT-POUND
FTG	FOOTING
FW	FACE OF WALL
FWL	FIRE WATER LINE
FWY	FREEWAY
G	GAS OR GAS LINE
GA	GAUGE (GAGE)
GALV	GALVANIZE OR GALVANIZED
GAL(S)	GALLON(S)
GB	GRADE BREAK
GIP	GALVANIZED IRON PIPE
GL	GROUND LINE OR GRADE LINE
GM	GAS METER
GND	GROUND
GP	GUY POLE, GENERAL PACKAGE, GAUGE PLATE OR GRADING PLAN
GR	GRADE, GROUND OR GUARD RAIL PLATE
GRTG	GRATING
GRS	GALVANIZED RIGID STEEL
GS	GASOLINE
GSC	GALVANIZED STEEL CONDUIT
GSP	GALVANIZED STEEL PIPE
GUY	POWER POLE ANCHOR
GV	GATE VALVE
GW	GUY WIRE
H	HEIGHT
HAP	HORIZONTAL ANGLE POINT
HB	HOSE BIB
HC	HANDICAP OR SANITARY SEWER HOUSE CONNECTION
HDWL	HEADWALL
HGL	HYDRAULIC GRADE LINE
HH	HANDHOLE
HMWPE	HIGH MOLECULAR WEIGHT POLYETHYLENE
HORIZ	HORIZONTAL
HOV	HIGH OCCUPANCY VEHICLE
HP	HIGH PRESSURE, HORSE POWER, HEEL PLATE OR HIGH POINT
Hp	HORSEPOWER
HR	HEADROOM OR HOUR
HPG	HIGH PRESSURE GAS
HPS	HIGH PRESSURE SODIUM (LIGHT)
HS	HIGH STRENGTH STEEL ASTM 432
HWY	HIGHWAY
HYDR	HYDRAULIC
ID	INSIDE DIAMETER
IJ	INSULATED JOINT
IMPVT	IMPROVEMENT
IN	INCH
INV	INVERT
INCL	INCLUDING
INSP	INSPECTION
IP	IRON PIPE
JC	JUNCTION CHAMBER
JCT	JUNCTION
JS	JUNCTION STRUCTURE
JT	JOINT
K	KIP OR KIPS
KF	KIP-FOOT
KLF	KIPS PER LINEAR FOOT
KSF	KIPS PER SQUARE FOOT
KV	KILOVOLT
L	LINE, LINING, OR LENGTH
LAB	LABORATORY
LAT	LATERAL
LBS, #	POUND(S)
LD	LEAD, LOCAL DEPRESSION
LF	LINEAR FOOT (FEET)
LG	LONG OR LENGTH
LGT	LIGHT (REF)
LH	LEFT HAND, LAMP HOLE
LIN FT	LINEAR FEET
LJ	LEADED JOINT
LL	LIVE LOAD
LOC	LOCATE, LOCATED, OR LOCATION
LOL	LAYOUT LINE
LONG	LONGITUDINAL
LPS	LOW PRESSURE SODIUM (LIGHT)
LP	LOW PRESSURE OR LOW POINT, LAMP POST
LPT	LOW POINT
LRT	LIGHT RAIL TRANSIT
LRW	LATERAL RETAINING WALL
LS	LUMP SUM
LT	LEFT
LTG	LIGHTING
LTS	LIME TREATED SOIL
M	MAIN
MACH	MACHINE OR MACHINERY
MAG	MAGNESIUM OR MAGNETIC
MAINT	MAINTENANCE
MAX	MAXIMUM
MBL	METRO BLUE LINE
MCD	MULTIPLE CONCRETE DUCT
MCR	MIDDLE OF CURB RETURN
MCWD	MULTIPLE CREOSOTED WOOD DUCTS
MEAS	MEASURE
MECH	MECHANICAL
METRO	METROPOLITAN TRANSPORTATION AUTHORITY (MTA)
METRO R/W	LACMTA
MGL	METRO GREEN LINE
MH	MAINTENANCE HOLE
MIL SPEC	MILITARY SPECIFICATION
MIN	MINIMUM, MINUTES
MISC	MISCELLANEOUS
MJ	MECHANICAL JOINT
ML	MORTAR LINED
ML & C	MORTAR LINED & COATED
MOD	MODIFIED, MODIFY
MON	MONUMENT
MP	MEDIUM PRESSURE
MPH	MILES PER HOUR
MRL	METRO RED LINE
MTA	METROPOLITAN TRANSPORTATION AUTHORITY
MTC	MULTI-TILE CONDUIT
MTD	MULTI-TILE DUCT
MULT	MULTIPLE
MVL	MERCURY VAPOR LIGHT
N	NORTH
N/A	NOT APPLICABLE
NB	NORTHBOUND
NF	NEAR FACE
NIC	NOT IN CONTRACT
N/N	NORTH OF NORTH RIGHT-OF-WAY LINE
N/O	NORTH OF
NO. OR #	NUMBER
NRC	NON-REVENUE CONNECTOR
NRCP	NON-REINFORCED CONCRETE PIPE
NS	NEAR SIDE
N/S	NORTH OF SOUTH RIGHT-OF-WAY LINE
NTS	NOT TO SCALE
O	OIL LINE
OBS	OBSOLETE
OC	ON CENTER(S) or ON CURVE or OVERCROSSING
OCS	OVERHEAD CONTACT SYSTEM
OD	OUTSIDE DIAMETER
OE	OUTER EDGE
OFC	ORANGEBURG FIBER CONDUIT
OG	ORIGINAL GROUND
OH	OVERHEAD
OPP	OPPOSITE
ORIG	ORIGINAL
ORL	ORNAMENTAL LIGHTING
OTM	OTHER TRACK MATERIAL
P	PIPE
PA	POLICE ALARM OR PUBLIC ADDRESS
PB	PULL BOX
PC	POINT OF CURVATURE
PCC	PORTLAND CEMENT CONCRETE OR POINT OF COMPOUND CURVATURE
PCCP	PRE-STRESSED CONCRETE CYLINDER PIPE
PCL	PRIMARY CONTROL LINE
PCS	PIECES
PCVC	POINT OF COMPOUND VERTICAL CURVE
PD	PAPER DUCT
PE	POLYETHYLENE OR PLAIN END
PED	PEDESTRIAN
PEM	POLYETHYLENE MAIN
PGL	PROFILE GRADE LINE
PI	POINT OF INTERSECTION
PITO	POINT OF INTERSECTION OF TURNOUT
PIV	POST INDICATOR VALVE
PL	PLATE
ℙ	PROPERTY LINE
PLD	PLASTIC DUCT
PLT	PLASTIC TILE
PM	PARKING METER
PMB	PROCESSED MISCELLANEOUS BASE
PO	PUSH-ON JOINT
POC	POINT OF CONNECTION, POINT OF CURVE
POL	POLICE
POT	POINT ON TANGENT
PP	POWER POLE OR PAPER PIPE
PPD	PAPER PIPE DUCT
PRC	POINT OF REVERSE CURVE
PROD	PRODUCT
PROP	PROPERTY OR PROPOSED
PRVC	POINT OF REVERSE VERTICAL CURVE
PS	POINT OF SWITCH
PSF	POUNDS PER SQUARE FOOT
PSI	POUNDS PER SQUARE INCH
PSP	PAINT SHOP
PT(S)	POINT(S)
PUE	PUBLIC UTILITY EASEMENT
PV	PLUG VALVE
PVC	POINT OF VERTICAL CURVATURE OR POLYVINYL CHLORIDE
PVI	POINT OF VERTICAL INTERSECTION
PVCC	POINT OF VERTICAL COMPOUND CURVE
PVCP	POLYVINYL CHLORIDE PIPE
PVMT	PAVEMENT
PVRC	POINT OF VERTICAL REVERSE CURVE
PVT	POINT OF VERTICAL TANGENT
PVT R/W	PRIVIATE RIGHT-OF-WAY
PWR	POWER
Q	RATE OF FLOW IN CUBIC FEET PER SECOND
QTY	QUANTITY
QUAD	QUADRANGLE, QUADRANT
R	RADIUS, RIGHT
R&O	ROCK AND OIL
RA	RECYCLING AGENT
RAC	RECYCLED ASPHALT CONCRETE
RAP	RECLAIMED ASPHALT PAVEMENT
RBAC	RUBBERIZED ASPHALT CONCRETE
RBM	RAILBOUND MANGANESE
RC	REINFORCED CONCRETE
RCB	REINFORCED CONCRETE BOX (CULVERT)
RCP	REINFORCED CONCRETE PIPE
RCE	REGISTERED CIVIL ENGINEER
RCV	REMOTE CONTROL VALVE
RD	ROAD
RECT	RECTANGLE OR RECTIFIER
REF	REFERENCE
REINF	REINFORCE, REINFORCED, OR REINFORCEMENT
REQD	REQUIRED OR REQUIRE
RES	RESERVOIR
RET	RETAINING
RW, RET W	RETAINING WALL
REV	REVISE, REVISED, OR REVISION
RGE	REGISTERED GEOTECHNICAL ENGINEER
RGS	RIGID GALVANIZED STEEL
RH	RIGHT HAND
RR	RAILROAD
ROS	RECORD OF SURVEY
RSE	REGISTERED STRUCTURAL ENGINEER
RT	RIGHT
RTE	REGISTERED TRAFFIC ENGINEER
RTP	RAIL TRANSIT PROJECT
RY	RAILWAY
R/W	RIGHT-OF-WAY
S	SOUTH, SLOPE, OR SIGN
SA	SERVICE AISLE
SB	SOUTHBOUND OR SPLICE BOX
SCC, SCCP	STEEL CYLINDER CONCRETE (PIPE)
SCL	SECONDARY CONTROL LINE
SCWD	SINGLE CREOSOTED WOOD DUCT
SD	STORM DRAIN
SDMH	STORM DRAIN MAINTENANCE HOLE
SDR	STANDARD THERMOPLASTIC PIPE DIMENSION RATIO (RATIO OF PIPE O.D. TO MINIMUM WALL THICKNESS)
SE	SAND EQUIVALENT
SEC	SECONDS
SECT, SEC	SECTION
SF	SQUARE FOOT
SFP	SITE FINISH PLAN

APPROVED FOR CONSTRUCTION

METRO TRANSIT DIVISION

BUREAU OF ENGINEERING
CITY OF LOS ANGELES

City of Los Angeles Bureau of Engineering's review of these submittals, plans, specifications, and shop drawings shall not relieve HNTB, its consultants, and its contractors of the responsibility for errors, or omissions in the submitted documents. HNTB is responsible to insure and confirm that the City of Los Angeles Standards (Standards) are used to perform all work on or effecting City facilities. The Standards shall be the current edition in use upon the date City receives such submittal or per an effective date as specified in the agreement (if any).

BUREAU OF ENGINEERING
OFFICIAL RECORD

HNTB
HNTB Corporation
601 W. 5TH STREET SUITE 1000
LOS ANGELES, CALIFORNIA 90071
TEL (213) 403-1000 FAX (213) 403-1001

CITY OF LOS ANGELES DEPARTMENT OF PUBLIC WORKS BUREAU OF ENGINEERING

ENGINEERING
CITY OF LOS ANGELES

NO.	REVISIONS:	DATE:	BY:

STRUCTURE NO.
53C-2329

INDEX NO. **P-38113**

REGISTERED PROFESSIONAL ENGINEER
TERENCE T. PAO
No. C 63433
Expires 3-30-2016
CIVIL
STATE OF CALIFORNIA

THIS PLAN WAS ELECTRONICALLY SIGNED AND STAMPED

CITY ENGINEER

GARY LEE MOORE, P.E.	DATE:
DESIGN GROUP	LIC. NO. 63433
ENGINEER: TERENCE PAO	
DESIGNED BY: XAVIER ESPINOSA	
DRAWN BY: XAVIER ESPINOSA	
CHECKED BY: TERENCE PAO	
APPROVED BY:	

VERTICAL CONTROL:	BM 12-04070 1929 (NGVD 29) - 1985 ADJUSTMENT
HORIZONTAL CONTROL:	GPS; PID AE 1704; EPOCH 1991.35
SHEET TITLE:	ABBREVIATIONS AND SYMBOLS 2 OF 4
PROJECT:	SIXTH STREET VIADUCT REPLACEMENT
ADDRESS:	SIXTH STREET VIADUCT (WHITTIER BLVD) LOS ANGELES, CA

WORK ORDER NO.
E700224F

DRAWING NO.
G-406

SHEET 7 OF 560 SHEETS

THE CITY OF LOS ANGELES OR ITS OFFICERS OR AGENTS SHALL NOT BE RESPONSIBLE FOR THE ACCURACY OR COMPLETENESS OF ELECTRONIC COPIES OF THIS PLAN SHEET.

REVISION DATES (DESIGN STAGE ONLY)

C:\caddlib\pw\jmartinez\west\dms68011\G-405-0408 - 0603-0606.dwg 6/06/16 16:36

Sheet Version 3.0

ADDENDUM 5

ABBREVIATIONS

SG	SUB GRADE
SHT	SHEET
SI	INTERNATIONAL SYSTEM OF UNITS (METRIC)
SIG	SIGNAL
SIM	SIMILAR
SIP	SUPPORT IN PLACE
SL	STREET LIGHT
SLC	STREET LIGHT CONDUIT
SLPB	STREET LIGHT PULL BOX
SMH	SEWER MANHOLE
S/N	SOUTH OF NORTH RIGHT-OF-WAY LINE
SPEC	SPECIFICATION(S) (REF)
SP	SPACE, SPACING, OR SITE PLAN
SPR	SPRINKLER
SQ	SQUARE
SR	STANDARD RATIO
S/S	SOUTH OF SOUTH RIGHT-OF-WAY LINE
SS	SANITARY SEWER OR STOP SIGN
SSB	SELECT SUB-BASE
SSD	SANDSTONE CEMENT DUCT
SSMH	SANITARY SEWER MANHOLE
ST	STREET
ST HWY	STATE HIGHWAY
STA	STATION
STD	STANDARD OR SEWER TILED DUCT
STL	STEEL
STM	STEAM
STOR	STORAGE
STP	STEEL PIPE
STR	STRAIGHT
STR GR	STRAIGHT GRADE
STRUCT	STRUCTURE
STY	STYRENE
SUB	SUBMITTED
SUPV	SUPERVISE OR SUPERVISOR
SURF	SURFACE
SW	SWITCH OR SOUNDWALL OR SIDEWALK
SWD	SIDEWALK DRAIN
SY	SQUARE YARD
SYM	SYMMETRICAL
TAN	TANGENT
T & B	TOP AND BOTTOM
TC	TILE CONDUIT, TOP OF CURB, TRACK CENTER, OR TRAIN CONTROL
TCC	TRAIN CONTROL/COMMUNICATIONS
TCCB	TRAIN CONTROL/COMMUNICATIONS BUILDING
TCCR	TRAIN CONTROL/COMMUNICATIONS ROOM
TD	TILE DUCT OR TILE DRAIN
TEL, T	TELEPHONE
TELE	TELESCOPING
TEMP	TEMPERATURE OR TEMPORARY
TERM	TERMINAL
TF	TOP OF FACE, TOP OF FOOTING
TG	TOP OF GRADE, TOP OF GRATE, OR TELEGRAPH
THEO	THEORETICAL
THK	THICK OR THICKNESS
TL	TRAFFIC LIGHT OR TOE LENGTH
TMH	TELEPHONE MANHOLE
TO	TURNOUT
TOP	TOP OF PIPE
TOPO	TOPOGRAPHY
TORW	TOP OF RETAINING WALL
TOS	TOP OF SLOPE
TOSW	TOP OF SOUND WALL
TP	POLICE TELEPHONE OR TRACTION POWER
TPS	TRACTION POWER SUBSTATION
TPSS	TRACTION POWER SUPPLY SYSTEM
T/R	TOP OF RAIL
TR	TRACT
TRANS	TRANSITION
TRD	TRANSIT DUCT
TRK	TRACK
TRPB	TRANSIT SHELTER PULLBOX
TS	TRAFFIC SIGNAL, TRANSITION STRUCTURE
TSC	TRAFFIC SIGNAL CONDUIT
TSCB	TRAFFIC SIGNAL CONTROL BOX
TSPB	TRAFFIC SIGNAL PULLBOX
TSS	TRAFFIC SIGNAL STANDARD
TV	TELEVISION
TVCC	TRANSPORTED VITRIFIED CLAY CONDUIT
TVM	TICKET VENDING MACHINE
T/W	TOP OF WALL
TYP	TYPICAL
UC	UNDERCROSSING OR UNDER CONSTRUCTION
UD	UNDERDRAIN
UG	UNDERGROUND
UNK	UNKNOWN
UNO	UNLESS NOTED OTHERWISE
UP	UNDERPASS OR COMBINATION POWER/TELEPHONE POLE
UPE	UNDER PLATFORM EXHAUST
UPRR	UNION PACIFIC RAILROAD
USA	UNDERGROUND SERVICE ALERT
V	VALVE, RATE OF SPEED, OR DESIGN SPEED
VAC	VACUUM
VAP	VERTICAL ANGLE POINT
VAR	VARIES OR VARIABLE
VB	VALVE BOX
VC	VERTICAL CURVE
VCC	VITRIFIED CLAY CONDUIT
VCD	VITRIFIED CLAY DUCT
VCP	VITRIFIED CLAY PIPE
VCP(ES)	VITRIFIED CLAY PIPE (EXTRA STRENGTH)
VCT	VITRIFIED CLAY TILE
VERT	VERTICAL
VLT	VAULT
VOL	VOLUME
W	WEST OR WATER, WIDER
W/	WITH
WATCH	WORK AREA TRAFFIC CONTROL HANDBOOK
WB	WESTBOUND
WD	WATER DETECTOR
W/E	WEST OF EAST RIGHT-OF-WAY LINE
WG	WHITE GAS
WHH	WATER HANDHOLE
WHSE	WAREHOUSE
WI	WROUGHT IRON
WID	WIDTH
WIP	WROUGHT IRON PIPE
WL	WATER LEVEL
WLKY	WALKWAY
WLN	WATER LINE
WM	WATER METER
WMH	WATER MAINTENANCE HOLE
W/O	WITHOUT
WP	WORKING POINT OR WORK POINT
WPJ	WEAKENED PLANE JOINT
WSP	WELDED STEEL PIPE
WSP(L)	WELDED STEEL PIPE (CEMENT LINED)
W'TERLY WTR	WESTERLY WATER
WTW	WALL TO WALL
WV	WATER VALVE
WW	WASTEWATER
W/W	WEST TO WEST RIGHT-OF-WAY LINE
X-DRAIN	CROSS DRAIN
X-ING	CROSSING
X-MITER	TRANSMITTER
X-OVER	CROSS OVER
X-SECT, XSEC	CROSS SECTION
XCONN	CROSS CONNECTION

SYMBOLS

ASPHALT CONCRETE PAVEMENT

AUTOMATIC GATE INTO PARKING AREA

BALLAST

BARRICADE POSTS, BOLLARDS

BASE COURSE

BEGIN OR END PLATFORM — BP OR EP

BENCH MARK

BILLBOARD

BLOCK WALL/ SOUNDWALL

BORING & NUMBER — BOR 17

BOX

BREAK LINE

BRIDGE

BUILDING

BUMPING POST

BUMPING POST NUMBER — 000

CANOPY

CATCH BASIN

CENTERLINE

CLEANOUT — CO

COLUMN, BENT

CONCRETE

CONCRETE BARRIER

CONCRETE CHANNEL

CONSTRUCTION EASEMENT (TEMPORARY)

CONTOUR LINES — 40 / 50

CONTROL POINT OR STREET INTERSECTION POINT — 4-7-1

COORDINATE GRID CROSSHAIR — E174000 / N87000

CURB

CURB AND GUTTER

CURVE NUMBER — XXXX

CURVE POINT — PC,PT,PCC

DEPRESSION

DRAINAGE DITCH OR SWALE

DRAINAGE INLET

EXISTING DRIVEWAY / RAMP

PROPOSED DRIVEWAY

EDGE OF PAVEMENT — EP

EARTH

ELASTOMER

ELECTROLIER

ELEVATION (EXISTING) — (175.20)

EMBANKMENT OR SLOPE — TOP OF SLOPE / BOTTOM OF SLOPE

EXISTING GROUND LINE

FENCE (CHAIN LINK)

FENCE (OTHER THAN CHAIN LINK)

FIRE HYDRANT (EXISTING)

FIRE HYDRANT (RELOCATED)

FLAGPOLE — FP

FOUNDATION OR RUIN

GATE

GUARD RAIL — PIPE POST / WOOD POST

GRAVEL OR DIRT ROAD

GROUND ROD IN WELL

GUY POLE — GP

GUY WIRE

HANDICAPPED PARKING

HEDGE

HEADSPAN

HIGH VOLTAGE VAULT — HVV

HOSE BIB

LANE LINES

LIGHT POLE (EXISTING)

LIGHT POLE (RELOCATED)

LRT TCC SYSTEM HANDHOLE — CSE00

LRT TCC SYSTEM MAINTENANCE HOLE — CSE050

LINEWEIGHT VARIES PER PLAN

APPROVED FOR CONSTRUCTION

METRO TRANSIT DIVISION

BUREAU OF ENGINEERING
CITY OF LOS ANGELES

City of Los Angeles Bureau of Engineering's review of these submittals, plans, specifications, and shop drawings shall not relieve HNTB, its consultants, and its contractors of the responsibility for errors, or omissions in the submitted documents. HNTB is responsible to insure and confirm that the City of Los Angeles Standards (Standards) are used to perform all work on or effecting City facilities. The Standards shall be the current edition in use upon the date City receives such submittal or per an effective date as specified in the agreement (if any).

BUREAU OF ENGINEERING
OFFICIAL RECORD

HNTB
HNTB Corporation
601 W. 5TH STREET SUITE 1000
LOS ANGELES, CALIFORNIA 90071
TEL (213) 403-1000 FAX (213) 403-1001

CITY OF LOS ANGELES DEPARTMENT OF PUBLIC WORKS
BUREAU OF ENGINEERING

ENGINEERING — CITY OF LOS ANGELES

GARY LEE MOORE, P.E. — CITY ENGINEER
DATE:
LIC. NO. 63433

DESIGN GROUP
ENGINEER: TERENCE PAO
DESIGNED BY: XAVIER ESPINOSA
DRAWN BY: XAVIER ESPINOSA
CHECKED BY: TERENCE PAO
APPROVED BY:

NO. | REVISIONS: | DATE | BY:

STRUCTURE NO. 53C-2329

INDEX NO. P-38113

THIS PLAN WAS ELECTRONICALLY SIGNED AND STAMPED

REGISTERED PROFESSIONAL ENGINEER — TERENCE T. PAO — No. C 63433 — Exp. 3-30-2016 — CIVIL — STATE OF CALIFORNIA

VERTICAL CONTROL: BM 12-04070 1929 (NGVD 29) - 1985 ADJUSTMENT
HORIZONTAL CONTROL: GPS; PID AE 1704, EPOCH 1991.35

SHEET TITLE: ABBREVIATIONS AND SYMBOLS 3 OF 4
PROJECT: SIXTH STREET VIADUCT REPLACEMENT
ADDRESS: SIXTH STREET VIADUCT (WHITTIER BLVD) LOS ANGELES, CA

WORK ORDER NO. E700224F
DRAWING NO. G-407
SHEET 8 OF 560 SHEETS

THE CITY OF LOS ANGELES OR ITS OFFICERS OR AGENTS SHALL NOT BE RESPONSIBLE FOR THE ACCURACY OR COMPLETENESS OF ELECTRONIC COPIES OF THIS PLAN SHEET.

REVISION DATES (DESIGN STAGE ONLY)

C:\caddlib\pw\ymartinez\west\dms68011\G-405-0408 - 0603-0606.dwg 6/06/16 16:41

Sheet Version 3.0

ADDENDUM 5

SYMBOLS

MAINTENANCE HOLE	SMH, EMH / TMH ETC
MATCH LINE	
METER BOX	WM
OIL WELL	
ORCHARD	
OVERHEAD SIGN	
OVERHEAD WIRES AND CABLES	
PARKING METER	
PARKING SPACES	
PEDESTRIAN PUSH BUTTON STD	
PERFORATED SUBDRAIN	
PICTURE CENTER	P C 1 4
PLANTER	
PLATFORM / STATION	
POST WITH LIGHT & TRAFFIC SIGNAL (EXISTING)	
POST WITH LIGHT & TRAFFIC SIGNAL (RELOCATED)	
POWER POLE (EXISTING)	
POWER POLE (RELOCATED)	
PULLBOX	E T CATV
RAILROAD CROSSING GATE	
RIDGE	R
RIGHT-OF-WAY	R/W

SAND	
SEWER, WATER OR GAS ENCASEMENT	
SIDEWALK, CONCRETE	
SOUNDWALL	
SPA	S
SPOT ELEVATION	175.2
STANDPIPE	SP
STEEL	
STREET LIGHT	
SUBBALLAST	
SUBGRADE EARTH	
SURVEY MONUMENT	
TANK	T
TRACK	
TRACTION POWER MANHOLE	TPN000
TRACTION POWER SUBSTATION	TPS
TRAFFIC SIGNAL (EXISTING)	
TRAFFIC SIGNAL (RELOCATED)	
TRANSIT SIGNAL	
TREE (OTHER THAN PALM)	

UNDERDRAIN	UD
UTILITY BOX	UB
UTILITY POLE (EXISTING)	
UTILITY POLE (RELOCATED)	
VALVE, VENT	V, WV
WATER OR GAS VALVE COVER	GV
VINEYARD	
WALL (EXISTING)	
NEW WALL	
WELL	WELL
WOOD	
WORK POINT	
EXIST	— E —
PROPOSED	

LINEWEIGHT VARIES PER PLAN

APPROVED FOR CONSTRUCTION

METRO TRANSIT DIVISION
BUREAU OF ENGINEERING
CITY OF LOS ANGELES

City of Los Angeles Bureau of Engineering's review of these submittals, plans, specifications, and shop drawings shall not relieve HNTB, its consultants, and its contractors of the responsibility for errors, or omissions in the submitted documents. HNTB is responsible to insure and confirm that the City of Los Angeles Standards (Standards) are used to perform all work on or effecting City facilities. The Standards shall be the current edition in use upon the date City receives such submittal or per an effective date as specified in the agreement (if any).

BUREAU OF ENGINEERING
OFFICIAL RECORD

HNTB
HNTB Corporation
601 W. 5TH STREET SUITE 1000
LOS ANGELES, CALIFORNIA 90071
TEL (213) 403-1000 FAX (213) 403-1001

CITY OF LOS ANGELES DEPARTMENT OF PUBLIC WORKS
BUREAU OF ENGINEERING
CITY OF LOS ANGELES ENGINEERING

STRUCTURE NO. 53C-2329
INDEX NO. P-38113

REVISIONS: NO. | DATE | BY:

THIS PLAN WAS ELECTRONICALLY SIGNED AND STAMPED

REGISTERED PROFESSIONAL ENGINEER TERENCE T. PAO No. C 63433 Exp. 3-30-2016 CIVIL STATE OF CALIFORNIA

GARY LEE MOORE, P.E. CITY ENGINEER
DATE:
LIC. NO. 63433

ENGINEER:	DESIGN GROUP
DESIGNED BY:	TERENCE PAO
DRAWN BY:	XAVIER ESPINOSA
CHECKED BY:	XAVIER ESPINOSA
APPROVED BY:	TERENCE PAO

VERTICAL CONTROL: BM 12-04070, 1929 (NGVD 29) - 1985 ADJUSTMENT
HORIZONTAL CONTROL: GPS; PID AE 1704, EPOCH 1991.35

SHEET TITLE: ABBREVIATIONS AND SYMBOLS 4 OF 4
PROJECT: SIXTH STREET VIADUCT REPLACEMENT
ADDRESS: SIXTH STREET VIADUCT (WHITTIER BLVD) LOS ANGELES, CA

WORK ORDER NO. E700224F
DRAWING NO. G-408
SHEET 9 OF 560 SHEETS

THE CITY OF LOS ANGELES OR ITS OFFICERS OR AGENTS SHALL NOT BE RESPONSIBLE FOR THE ACCURACY OR COMPLETENESS OF ELECTRONIC COPIES OF THIS PLAN SHEET.

REVISION DATES (DESIGN STAGE ONLY)

C:\caddlb\pw\jmartinez\west\dms68011\G-405-G408 - G603-G606.dwg 6/08/16 13:46

Sheet Version 3.0

ADDENDUM 5

CONSTRUCTION NOTES

NO.	DESCRIPTION	DATA	STANDARD PLAN (IF APPLICABLE)
1	CONCRETE CURB (TYPE A CURB)	CF & b AS SHOWN ON PLANS	S-410-2
1A	CONCRETE ROLLED CURB	AS SHOWN ON PLANS	PER PLAN DETAIL
2	TYPE C INTEGRAL CURB & GUTTER	a = 2', b = 8" UNLESS SHOWN OTHERWISE	S-410-2
2A	TYPE E INTEGRAL CURB & GUTTER	a = 1', b = 8" & CF= 8"	S-410-2
3	TYPE F INTEGRAL CURB & PAVEMENT	b = 8", c = 2'	S-410-2
3A	TYPE C (MOD) REVERSED INTEGRAL CURB & GUTTER	a = 2', b = 8", CF AS SHOWN ON PLANS	S-410-2 (PER PLAN DETAIL)
4	CONCRETE GUTTER	a = 2', b = 8"	S-410-2
5	CONCRETE LONGITUDINAL GUTTER	b = 8" , g AS SHOWN ON PLANS	S-410-2
6	CONCRETE INTERSECTION GUTTER	a = 2', b = 8", g AS SHOWN ON PLANS	S-410-2
7	BUS PAD	L=90', P=12', t=8", W=12'	S-433-0
8	CONCRETE PAVEMENT	t=AS SHOWN ON PLANS, CLASS	S-430-1
9	STREET OR ALLEY PER TYPICAL SECTION		
10	CONCRETE DRIVEWAY	t=6", ¾" LIP, CASE, W, X , Y, a	S-440-4
11	CONCRETE ALLEY INTERSECTION	w, R, t	S-420-2
12	CONCRETE WALK	t=4"	S-444
13	CURB RAMP	CASE AS SHOWN ON PLAN, 0"=CF (LIP), W=4' TRUNCATED DOME ON "W", X, Y	S-442-3
14	ASPHALT CONCRETE PAVEMENT	t=AS SHOWN ON PLAN	
16	UNTREATED BASE MATERIAL	t=SEE PLAN, TYPE	
17	ADJUST MAINTENANCE HOLE TO GRADE	SEE PLAN, TYPE, + (RAISE), - (LOWER)	
18	METAL BEAM GUARDRAIL	LIN FT	S-462-2
19	RECONSTRUCT MAINTENANCE HOLE TO GRADE	TYPE, + (RAISE), - (LOWER)	
20	REMOVE TREE	DIA, STATION, OFFSET TO CL	
21	COLD PLANE (MILL) AC PAVEMENT TO 2" MIN AT GRINDING LIMITS AND\OR 2" MIN BELOW FINAL GRADE.	t=2"	
22	EXTRUDED ASPHALT CONCRETE (AC) CURB	HEIGHT	S-412-0
23	GRADE ONLY		
24	PLANT TREE	SPECIES, GALLON SIZE	
25	TREE WELL COVER - TYPE A	TYPE A-2	S-450-3
26	TREE WELL	TYPE 2	S-456-2
27	GEOTEXTILE	TYPE, WOVEN OR NON-WOVEN	
28	JOINT IN CONCRETE	AS SHOWN ON PLAN, TYPE	S-430-1
29	CURB DRAIN	CASE, A, N, INSIDE DIMENSIONS, MATERIAL	SPPWC 150-2
30	WOODEN WARNING RAILING	LIN. FT.	S-464-0
31	PIPE HANDRAIL		S-463-2
32	GRIND CONCRETE PAVEMENT		
33	RELOCATE PARKING METER		
34	VARIABLE THICKNESS ASPHALT CONCRETE PAVEMENT	t=2" MIN	
35	INSTALL GUIDE MARKER	POLE NUMBER	
36	RELOCATE UTILITY POLE	POLE NUMBER	
37	RELOCATE POLE ANCHOR		
38	RELOCATE AND/OR ADJUST STREET LIGHTING PULL BOX TO GRADE		
39	RELOCATE AND/OR ADJUST TRAFFIC SIGNAL PULL BOX TO GRADE		
40	RELOCATE AND/OR ADJUST CATV PULL BOX TO GRADE		
41	RELOCATE AND/OR ADJUST FIRE HYDRANT TO GRADE		
42	RELOCATE AND/OR ADJUST ELECTROLIER TO GRADE		
43	RELOCATE AND/OR ADJUST DWPPS VENT TO GRADE		
44	RELOCATE AND/OR ADJUST DWPPS MAINTENANCE HOLE TO GRADE		
45	RELOCATE AND/OR ADJUST DWPWS MAINTENANCE HOLE TO GRADE		
46	RELOCATE AND/OR ADJUST WATER METER TO GRADE		
47	RELOCATE STREET SIGN (SEE TRAFFIC SIGNAL PLANS)		
48	3.0' RADIUS WRAP AROUND CURB		S-440-4 CASE 3
48A	BUILDING		
49	TRAFFIC SIGNAL CABINET		
50	TELEPHONE MAINTENANCE HOLE		
51	ELECTRICAL VAULT		
52	ELECTRICAL MAINTENANCE HOLE		
53	GAS VALVE		
54	RAILROAD CROSSING EQUIPMENT		
55	ADJUST WATER VALVE COVER TO FINAL GRADE		
56	RELOCATE AND/OR ADJUST DWPPS POLE TO GRADE		
57	RELOCATE AND/OR ADJUST STREET LIGHTING POLE TO GRADE		
58	RELOCATE AND/OR ADJUST TRAFFIC SIGNAL POLE TO GRADE		
59	ELECTROLIER--SEE STREET LIGHTING PLANS		
60	TRUNCATED DOMES		
61	MAIL BOX		
62	TELEPHONE BOX		
63	GUY WIRE		
64	RETAINING WALL		
65	CHAIN LINK FENCE		
65A	WROUGHT IRON FENCE		
66	CONCRETE MASONRY BLOCK WALL		
67	CONCRETE STEPS		
68	CHAIN LINK GATE		
69	DETECTABLE WARNING SURFACE		S-442-3
70	SIGN AND POST		
71	CONCRETE BARRIER	SEE PLAN	CALTRANS STD PLAN B11-60
72	MOUNTABLE EMBEDDED CURB.		PER DETAIL ON DWG CC-A-210
73	NOT IN USE		
74	BILLBOARD		
75	WATER VALVE & COVER		
76	REMOVE STRUCTURAL CONCRETE SLAB		
77	SAWCUT LINE & JOIN		

CONSTRUCTION NOTES CONT:

NO.	DESCRIPTION	DATA	STANDARD PLAN (IF APPLICABLE)
81	CURBSIDE GRATING CATCH BASIN (CGB)	NO. OF GRATINGS, V	S-354-0
86	WARPED GUTTER AT CATCH BASIN	CASE, H, H1, H2, H3	SPPWC 313-2
126	CRASH CUSHION		QUADGUARD II TL-2 W-2' OR APPROVED EQUAL
127	MANUAL LOCKABLE SWING GATE		
136	SEWER MAINTENANCE HOLE (PRECAST)	STD PLAN DESIGNATION	S-140-0, S-142-0, S-150-0
186	GATE LOOPS		

APPROVED FOR CONSTRUCTION

METRO TRANSIT DIVISION
BUREAU OF ENGINEERING
CITY OF LOS ANGELES

City of Los Angeles Bureau of Engineering's review of these submittals, plans, specifications, and shop drawings shall not relieve HNTB, its consultants, and its contractors of the responsibility for errors, or omissions in the submitted documents. HNTB is responsible to insure and confirm that the City of Los Angeles Standards (Standards) are used to perform all work on or effecting City facilities. The Standards shall be the current edition in use upon the date City receives such submittal or per an effective date as specified in the agreement (if any).

BUREAU OF ENGINEERING
OFFICIAL RECORD

HNTB
HNTB Corporation
601 W. 5TH STREET SUITE 1000
LOS ANGELES, CALIFORNIA 90071
TEL (213) 403-1000 FAX (213) 403-1001

CITY OF LOS ANGELES DEPARTMENT OF PUBLIC WORKS BUREAU OF ENGINEERING

ENGINEERING
CITY OF LOS ANGELES

NO.	REVISIONS:	DATE	BY:

STRUCTURE NO.
53C-2329

INDEX NO. **P-38113**

THIS PLAN WAS ELECTRONICALLY SIGNED AND STAMPED

REGISTERED PROFESSIONAL ENGINEER
TERENCE T. PAO
No. C 63433
Expires 6-30-2016
CIVIL
STATE OF CALIFORNIA

GARY LEE MOORE, P.E. CITY ENGINEER
DATE:
LIC. NO. 63433
DESIGN GROUP
ENGINEER: TERENCE PAO
DESIGNED BY: XAVIER ESPINOSA
DRAWN BY: XAVIER ESPINOSA
CHECKED BY: TERENCE PAO
APPROVED BY:

SHEET TITLE: CONSTRUCTION SYMBOLS AND NOTES

PROJECT: SIXTH STREET VIADUCT REPLACEMENT

ADDRESS: SIXTH STREET VIADUCT (WHITTIER BLVD)
LOS ANGELES, CA

VERTICAL CONTROL: BM 12-04070, 1929 (NGVD 29) - 1985 ADJUSTMENT
HORIZONTAL CONTROL: GPS; PID AE 1704, EPOCH 1991.35

WORK ORDER NO.
E700224F

DRAWING NO.
G-409

SHEET 10 OF 560 SHEETS

THE CITY OF LOS ANGELES OR ITS OFFICERS OR AGENTS SHALL NOT BE RESPONSIBLE FOR THE ACCURACY OR COMPLETENESS OF ELECTRONIC COPIES OF THIS PLAN SHEET.

REVISION DATES (DESIGN STAGE ONLY)

C:\caddlib\pw\pwwestcoast\vespinosa\dms68011\G-409 - 6607.dwg 6/23/16 08:59

Sheet Version 3.0

ADDENDUM 5

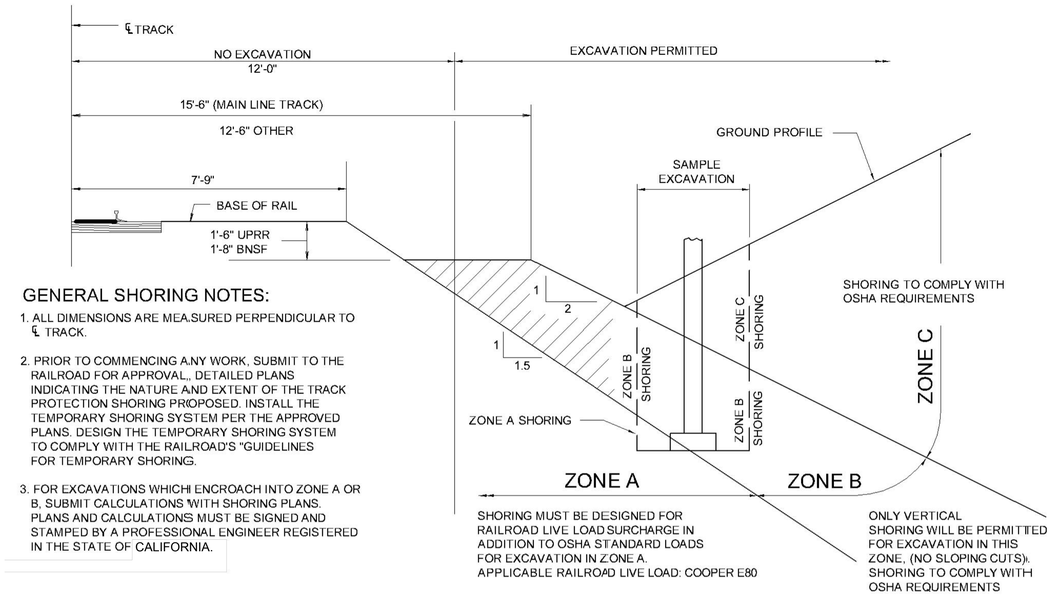

GENERAL EXCAVATION ZONES

GENERAL SHORING NOTES:

1. ALL DIMENSIONS ARE MEASURED PERPENDICULAR TO ℄ TRACK.
2. PRIOR TO COMMENCING ANY WORK, SUBMIT TO THE RAILROAD FOR APPROVAL,, DETAILED PLANS INDICATING THE NATURE AND EXTENT OF THE TRACK PROTECTION SHORING PROPOSED. INSTALL THE TEMPORARY SHORING SYSTEM PER THE APPROVED PLANS. DESIGN THE TEMPORARY SHORING SYSTEM TO COMPLY WITH THE RAILROAD'S "GUIDELINES FOR TEMPORARY SHORING.
3. FOR EXCAVATIONS WHICH ENCROACH INTO ZONE A OR B, SUBMIT CALCULATIONS WITH SHORING PLANS. PLANS AND CALCULATIONS MUST BE SIGNED AND STAMPED BY A PROFESSIONAL ENGINEER REGISTERED IN THE STATE OF CALIFORNIA.

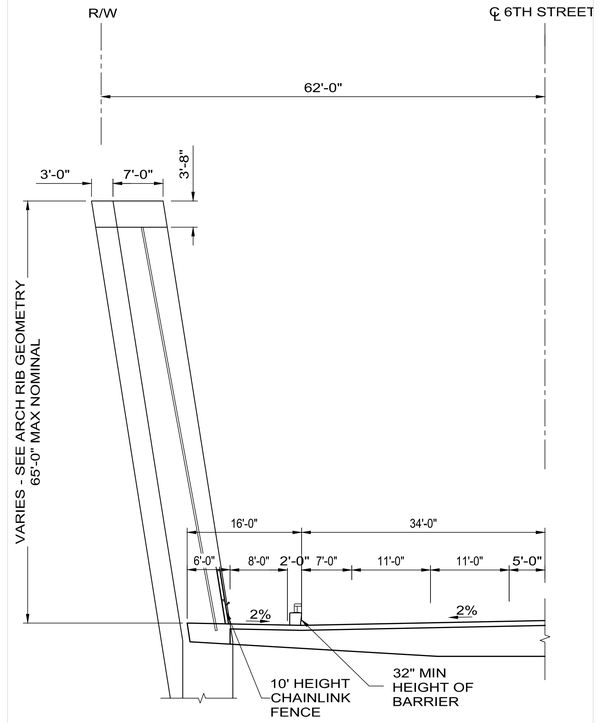

TYPICAL SECTION AT RAILROAD ARCH SPANS

SCALE: 1" = 10'

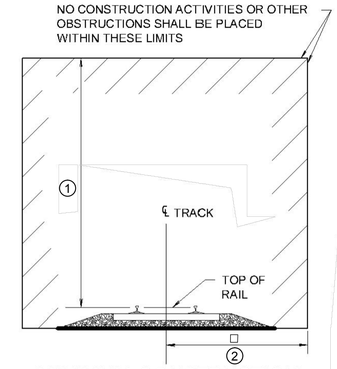

MINIMUM CONSTRUCTION CLEARANCE ENVELOPE

(NORMAL TO RAILROAD)

	1	2
MTA	21'-0"	15'-0"
AMTRAK	21'-0"	8'-6"
BNSF	21'-0"	15'-0"
METROLINK EAST	22'-6"	15'-0"
METROLINK WEST	22'-6"	15'-0"
UPRR	21'-6"	12'-0"

RAILROAD GENERAL NOTES:

1. RAILROAD REVIEW AND APPROVAL OF SHORING, ERECTION, DEMOLITION, AND FALSEWORK IS REQUIRED. ALLOW A MINIMUM OF FOUR WEEKS FOR THE REVIEW AND APPROVAL OF EACH SUBMITTAL.
2. THE PROPOSED GRADE SEPARATION PROJECT SHALL NOT INCREASE THE QUANTITY AND/OR CHARACTERISTICS OF THE FLOW IN THE RAILROAD'S DITCHES AND/OR DRAINAGE STRUCTURES.
3. THE ELEVATION OF THE EXISTING TOP-OF-RAIL PROFILE SHALL BE VERIFIED BEFORE BEGINNING CONSTRUCTION. ALL DISCREPANCIES SHALL BE BROUGHT TO THE ATTENTION OF THE RAILROAD PRIOR TO CONSTRUCTION.
4. THE CONTRACTOR MUST SUBMIT A PROPOSED METHOD OF EROSION AND SEDIMENT CONTROL AND HAVE THE METHOD APPROVED BY THE RAILROAD.
5. ALL SHORING SYSTEMS THAT IMPACT THE RAILROAD'S OPERATIONS AND/OR SUPPORTS THE RAILROAD'S EMBANKMENT SHALL BE DESIGNED AND CONSTRUCTED PER CURRENT RAILROAD GUIDELINES FOR TEMPORARY SHORING.
6. ALL DEMOLITIONS WITHIN THE RAILROAD'S RIGHT-OF-WAY AND/OR DEMOLITION THAT MAY IMPACT THE RAILROAD'S TRACKS OR OPERATIONS SHALL BE IN COMPLIANCE WITH THE RAILROAD'S DEMOLITION GUIDELINES.
7. ERECTION OVER THE RAILROAD'S RIGHT-OF-WAY SHALL BE DESIGNED TO CAUSE NO INTERRUPTION TO THE RAILROAD'S OPERATION, ENABLING THE TRACK(S) TO REMAIN OPEN TO TRAFFIC PER THE RAILROAD'S REQUIREMENTS.
8. ALL CONSTRUCTION PHASING THAT MAY IMPACT THE RAILROAD OPERATIONS SHALL BE DESIGNED TO CAUSE NO INTERRUPTION TO THE RAILROAD'S OPERATION, ENABLING THE TRACK(S) TO REMAIN OPEN TO TRAFFIC PER THE RAILROAD'S REQUIREMENTS.
9. FALSE-WORK CLEARANCES SHALL COMPLY WITH MINIMUM CONSTRUCTION CLEARANCES.
10. ALL PERMANENT CLEARANCES SHALL BE VERIFIED BEFORE PROJECT CLOSING.
11. FOR RAILROAD COORDINATION REFER TO THE RAILROAD COORDINATION REQUIREMENTS AS PART OF SPECIAL PROVISIONS.
12. SUBSEQUENT STAGES, UP TO AND INCLUDING THE FINAL SIGNED AND STAMPED PLANS, OF THIS PROJECT ARE SUBJECT TO THE REVIEW AND APPROVAL OF UPRR. REFER TO UPRR / BNSF GUIDE LINES.

1. RAILROAD REVIEW AND APPROVAL OF SHORING, DEMOLITION AND FALSE WORK PLANS ARE REQUIRED PRIOR TO THEIR COMMENCEMENT.

1. DETAILED DEMOLITION PLANS SHALL BE SUBMITTED TO UPRR FOR REVIEW AND APPROVAL.
   A. DEMOLITION PLANS SHALL BE PLANNED TO AVOID INTERRUPTING RAILROAD OPERATIONS
   B. DEBRIS WILL NOT BE PERMITTED TO FALL DIRECTLY ONTO RAILROAD RIGHT-OF-WAY. TEMPORARY TRACK SHIELDS SHALL BE PROVIDED FOR SECONDARY PROTECTION ONLY. DEBRIS SHALL BE CONTAINED WITHIN PRIMARY PROTECTION SYSTEM AND/OR BRIDGE COMPONENTS SHALL BE CUT INTO SECTIONS AND REMOVED.
   C. FURTHER COORDINATION WITH THE LOCAL SERVICE UNIT WILL BE NECESSARY FOR CONSTRUCTION ACCESS, AC PAVEMENT INSTALLATION, TEMPORARY CROSSINGS OVER YARD TRACK, TRACK PROTECTION, ETC.

FOR WORK WITHIN AMTRAK ROW

2

1. ALL UNDERGROUND UTILITIES, CABLE, AND FACILITIES MUST BE LOCATED AND PROTECTED BEFORE ANY EXCAVATING, DRILLING, BORING,DIRECTIONAL DRILLING, GROUND PENETRATING ACTIVITIES, OR CONSTRUCTION TASKS PLACE. THIS INCLUDE RAILROAD AND COMMERCIAL UTILITIES, CABLES, DUCT LINES, AND FACILITIES. THESE ACTIVITIES WILL NOT BE PERFORMED IN CLOSE PROXIMITY TO THE AMTRAK DUCT LINES UNLESS MONITORED BY ON-SITE AMTRAK COMMUNICATIONS AND SIGNAL (C&S) DEPARTMENT PERSONNEL. HAND DIGGING MAY BE REQUIRED, AS DIRECTED BY AMTRAK THROUGH THE ON-SITE AMTRAK C&S SUPPORT PERSONNEL. AMTRAK MAINTAINS THE RIGHT TO ACCESS ALL EXISTING CABLES AND CONDUITS THROUGHOUT CONSTRUCTION. AMTRAK ALSO RESERVES THE RIGHT TO UPGRADE AND INSTALL NEW CABLES AND CONDUITS IN THE AFFECTED AREA. THE "ONE CALL" PROCESS MUST BE FOLLOWED. PLEASE NOTE THAT AMTRAK IS NOT A PART OF THE ONE-CALL PROCESS.CONTACT AMTRAK ENGINEERING TO HAVE ALL AMTRAK UNDERGROUND UTILITIES AND ASSETS LOCATED. PRECAUTIONS MUST BE TAKEN TO PREVENT ANY INTERRUPTION TO AMTRAK'S OPERATION.
2. CONTRACTOR SHALL PERFORM ALL WORK ON AMTRAK RIGHT OF WAY AND ADJACENT TO AMTRAK TRACKS IN ACCORDANCE WITH THE PROCEDURES PROVIDED IN THE ATTACHED AMTRAK ENGINEERING PRACTICE NUMBER EP 01, MAINTENANCE AND PROTECTION OF RAILROAD TRAFFIC DURING CONTRACTOR OPERATIONS.
3. EXCAVATION AND SHORING ADJACENT TO AMTRAK RAILROAD TRACKS SHALL BE DESIGNED AND CONSTRUCTED IN ACCORDANCE WITH THE ATTACHED AMTRAK I & C SPECIFICATIONS SECTION 02261A, REQUIREMENTS FOR TEMPORARY SHEETING AND SHORING TO SUPPORT AMTRAK TRACKS.
4. HOISTING OPERATIONS OVER AMTRAK TRACKS SHALL BE DESIGNED IN ACCORDANCE WITH THE ATTACHED AMTRAK'S I&C SPECIFICATIONS SECTION 01152A - SUBMISSION DOCUMENTATION REQUIRED FOR AMTRAK REVIEW AND APPROVAL OF PLANS FOR BRIDGE ERECTION, DEMOLITION AND OTHER CRANE/HOISTING OPERATIONS OVER RAILROAD RIGHT-OF-WAY.
5. TEMPORARY SHIELDS FOR CONSTRUCTION ABOVE AMTRAK TRACKS SHALL BE DESIGNED IN ACCORDANCE WITH THE ATTACHED AMTRAK'S I&C SPECIFICATIONS SECTION 01520 - REQUIREMENTS FOR TEMPORARY PROTECTION SHIELDS FOR DEMOLITION AND CONSTRUCTION OF OVERHEAD BRIDGES AND OTHER STRUCTURES.

FOR WORK WITHIN SCRRA ROW

1. CONTRACTOR SHALL NOTIFY SCRRA'S CONTRACTOR AT (714) 920-9107 A MINIMUM OF 15 DAYS PRIOR TO BEGINNING WORK ON THE RIGHT OF WAY TO ARRANGE FOR FLAGGING SERVICES. PRIOR TO NOTIFICATION FOR SAFETY PROTECTION DOES NOT GUARANTEE THE AVAILABILITY OF PROTECTIVE SERVICES FOR THE PROPOSED DATE OF WORK.
2. TEMPORARY RIGHT OF ENTRY AGREEMENT, SCRRA FORM 6, IS A REQUIREMENT OF WORKING ON OR ADJACENT TO THE SCRRA RIGHT OF WAY. THE CONTRACTOR SHALL CONTACT SCRRA PERMIT AND ROW ENCROACHMENTS COORDINATOR
   SOUTHERN CALIFORNIA REGIONAL RAIL AUTHORITY (METROLINK)
   255 SUPPLY STREET, POMONA, CALIFORNIA 91767
   (909) 392-3136
3. SCRRA IS NOT A MEMBER OF DIGALERT, CONTRACTOR SHALL CALL SCRRA'S SIGNAL DEPARTMENT AT (909) 592-1236 A MINIMUM OF 5 WORKING DAYS PRIOR TO BEGINNING CONSTRUCTION TO MARK SIGNAL AND COMMUNICATION CABLES AND CONDUITS. TO ASSURE CABLES AND CONDUITS HAVE BEEN MARKED, NO WORK MAY PROCEED UNTIL YOU HAVE BEEN PROVIDED WITH AN SCRRA DIG NUMBER. IN CASE OF SIGNAL EMERGENCIES OR GRADE CROSSING PROBLEMS, THE CONTRACTOR SHALL CALL SCRRA'S 24-HOUR SIGNAL EMERGENCY NUMBER 1-800-336-9721
4. THE CONTRACTOR AND HIS SUBCONTRACTORS CITY AND THEIR CONSULTANTS AND INSPECTORS AND OTHER INTERESTED PARTIES HAVING A NEED TO ENTER THE RIGHT OF WAY SHALL BE REQUIRED TO ATTEND A SCRRA SAFETY ORIENTATION CLASS PRIOR TO RECEIVING PERMISSION TO ENTER THE RIGHT OF WAY. CONTRACTOR SHALL NOTIFY SCRRA'S CONTRACTOR AT 1-877-452-0205 TO ARRANGE FOR THIRD PARTY SAFETY TRAINING.
5. MAXIMUM ALLOWABLE TRAIN SPEEDS ARE WEST BAN 79 MPH PASSENGER & 40 MPH FREIGHT AND EAST BAN 70 MPH PASSENGER & 40 MPH FREIGHT.
6. NO EQUIPMENT, TRUCKS OR MATERIAL ARE ALLOWED TO BE STORED ON THE RAILROAD RIGHT-OF-WAY.
7. THE APPLICANT AND/OR THE CONTRACTOR SHALL FOLLOW SCRRA RULES AND REGULATIONS ADDRESSED IN "RULES AND REQUIREMENTS FOR CONSTRUCTION ON RAILWAY PROPERTY" SCRRA FORM 57.
8. THE CONTRACTOR WILL BE REQUIRED TO MONITOR THE EXCAVATION AND SHORING OPERATIONS TO ENSURE THAT THE TRACKS ARE NOT MOVING IN ACCORDANCE WITH SECTION 9 OF THE SCRRA EXCAVATION SUPPORT GUIDELINES.

HNTB
HNTB Corporation
600 WEST 7TH STREET, SUITE 1000
LOS ANGELES, CALIFORNIA 90071
TEL (213) 403-1000 FAX (213) 403-1001

CITY OF LOS ANGELES DEPARTMENT OF PUBLIC WORKS
BUREAU OF ENGINEERING
ENGINEERING CITY OF LOS ANGELES

NO.	REVISIONS:	DATE:	BY:
1	ADDED NOTES		

STRUCTURE NO. 53C-2329
INDEX NO. P-38113

THIS PLAN WAS ELECTRONICALLY SIGNED AND STAMPED

REGISTERED PROFESSIONAL ENGINEER GARY LEE MOORE No. 53033 EXP: 03-31-16 STRUCTURAL STATE OF CALIFORNIA

GARY LEE MOORE, P.E. C.E.
CITY ENGINEER
DESIGN GROUP
ENGINEER: TERRENCE PAO
DESIGNED BY: MICHAEL JONES
DRAWN BY: TAYLOR HENDERSON
CHECKED BY: TERRENCE PAO
APPROVED BY:
DATE:
LIC NO. 63433

VERTICAL CONTROL: BM 12-04070,1929 (NGVD 29) - 1988 ADJUSTMENT
HORIZONTAL CONTROL: GPS; PID AE 1704, EPOCH 1991.35

SHEET TITLE: RAILROAD GENERAL NOTES
PROJECT: SIXTH STREET VIADUCT REPLACEMENT
ADDRESS: SIXTH STREET VIADUCT (WHITTIER BLVD) LOS ANGELES, CA

WORK ORDER NO. E70022F
DRAWING NO. G-410
SHEET OF SHEETS

REVISION DATES DESIGN STAGE ONLY:

C:\caddlib\pw\pwwestcoast\wespinosa\dms68011\G-410-G-210-G608.dwg 9/14/16 11:47

THE CITY OF LOS ANGELES OR ITS OFFICERS OR AGENTS SHALL NOT BE RESPONSIBLE FOR THE ACCURACY OR COMPLETENESS OF ELECTRONIC COPIES OF THIS PLAN SHEET.

Sheet Version 3.0

Basic Excavation Requirements

Any proposed excavation that may occur in SCRRA Right-of-Way or that may affect operations on SCRRA tracks must adhere to the design, submittal and review requirements presented in these Guidelines and shall not proceed without acceptance by SCRRA.

RAILROAD ZONE OF INFLUENCE

The Railroad Zone of Influence is defined on Figure 2-1. The area below the Influence Line is divided into four zones. Requirements and limitations for excavation and temporary excavation support systems within each zone are described in detail below. Excavation requirements apply on or off of SCRRA Right-of-Way. Excavation beyond the Railroad Zone of Influence shall satisfy OSHA and other applicable requirements.

ZONE 1:

- **Excavation is prohibited.**
- Alternates to shored excavations shall be utilized. Potential alternates include temporary relocation of the tracks away from the area of excavation or completion of excavation and backfilling work during an Exclusive Track Window that has been planned and approved in advance by SCRRA. Requirements for requesting an Exclusive Track Window are provided in Section 10.2. Minimum requirements for excavation and backfill work within Zone 1 are provided in Section 2.2. Prior to beginning any shoring SCRRA will typically require that the track be removed and hot mix asphalt concrete (HMAC) sub-ballast layer be placed, 8 inches thick, 12 feet wide (centered on the track centerline) and extending 20 feet in each direction past the length of the shored excavation. SCRRA shoofly requirements are provided in the SCRRA Design Criteria Manual.

ZONE 2:

- **No excavation or temporary shoring installation will be allowed without the special written permission of SCRRA.** Requirements for requesting a variance are provided in Section 10.3. Additional requirements for excavation and shoring within Zone 2 are provided in Section 2.2.
- Alternates to shored excavations shall be utilized when practical.
- If SCRRA grants a variance to allow excavation, vertical excavation with continuous shoring walls is required. Shoring installation shall be complete prior to any excavation. Design of the shoring system shall include lateral surcharge due to railroad live load.
- Prior to beginning any shoring SCRRA will typically require that the track be removed and hot mix asphalt concrete (HMAC) sub-ballast layer be placed, 8 inches thick, 12 feet wide (centered on the track centerline) and extending 20 feet in each direction past the length of the shored excavation.
- Examples of continuous shoring wall types include interlocked sheet piling or diaphragm walls. Diaphragm wall types include deep soil mix walls, secant pile walls, tangent pile walls, and slurry walls. Soldier piles and lagging are not allowed if excavation is necessary to install lagging.

ZONE 3:

- **Excavation requires temporary shoring.** Excavations shall be vertical. Continuous shoring walls installed prior to any excavation are preferred. Maximum excavation lifts shall be limited to five (5) feet for each stage of excavation for soldier pile and lagging walls or any other type of shoring that requires excavation of an open soil face prior to installing continuous support elements.
- If the shored excavation is 15 feet or less from the centerline of the track, prior to beginning any shoring SCRRA may require that the track be removed and hot mix asphalt concrete (HMAC) sub-ballast layer be placed, 8 inches thick, 12 feet wide (centered on the track centerline) and extending 20 feet in each direction past the length of the shored excavation.
- **Design of the shoring system shall include lateral surcharge due to railroad live load.**

ZONE 4:

- Excavation requires temporary shoring.
- Lateral surcharge due to railroad live load need not be considered in the shoring design.
- The excavation shall be provided with a shoring system that actively supports the sides of the excavation and prevents the excavation faces from unraveling or moving. Sloped excavations are not permitted.
- Hydraulic and mechanical trench shores with sheeting, trench shields, and timber shoring may be utilized. However, installation of the shoring system must be completed before movement of trains is allowed on the adjacent track. Work Windows within which the shoring system installation must be completed shall be coordinated with SCRRA.

EXCAVATIONS BEYOND INFLUENCE LINE:

- Lateral surcharge due to railroad live load need not be considered in the shoring design.
- Shored vertical excavations are preferred. Sloped excavations are discouraged. SCRRA may require slope stability analysis for sloped excavations.
- Excavation and temporary shoring shall comply with Cal/OSHA and other applicable requirements.

Excavations shall also comply with the following:

- Finished excavation surfaces shall be in uniform planes, with no abrupt breaks.
- Positive drainage shall be maintained away from the tracks and track subgrade at all times.
- Backfilling materials, procedures, placement and performance criteria shall meet the requirements of SCRRA Standard Specifications for Earthwork Section 02300 and other applicable specification including hot mix asphalt concrete sub-ballast and aggregate base sub-ballast.

Jacking and receiving pits for installation of culverts or utility casings shall be a minimum of 25 feet from centerline of the nearest active track. Construction activities on SCRRA Right-of-Way and excavations for jacking and/or boring operations shall comply with all other provisions of these Guidelines as applicable.

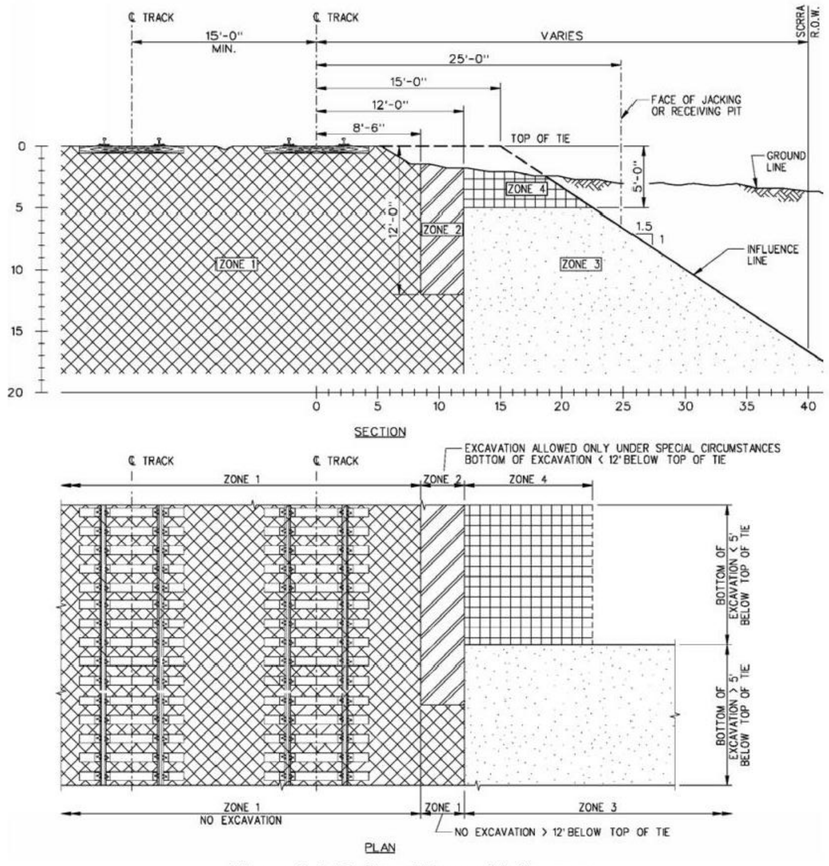

Figure 2-1: Railroad Zone of Influence

THE CITY OF LOS ANGELES OR ITS OFFICERS OR AGENTS SHALL NOT BE RESPONSIBLE FOR THE ACCURACY OR COMPLETENESS OF ELECTRONIC COPIES OF THIS PLAN SHEET.
C:\caddlib\pw\pwwestcoast\xespinosa\dms68011\G-411-G-211-0609.dwg 6/30/16 15:36
REVISION DATES:
DESIGN STAGE ONLY:
Sheet Version 3.0

HNTB
HNTB Corporation
601 W. 5TH STREET SUITE 1000
LOS ANGELES, CALIFORNIA 90071
TEL (213) 403-1000 FAX (213) 403-1001

BUREAU OF ENGINEERING
OFFICIAL RECORD

BUREAU OF ENGINEERING
ENGINEERING
CITY OF LOS ANGELES
NO. REVISIONS: DATE: BY:
STRUCTURE NO. 53C-2329
INDEX NO. P-38113
REGISTERED PROFESSIONAL ENGINEER TERENCE T. PAO No. C 63433 Expires 3-30-2016 STATE OF CALIFORNIA
THIS PLAN WAS ELECTRONICALLY SIGNED AND STAMPED
CITY OF LOS ANGELES DEPARTMENT OF PUBLIC WORKS
GARY LEE MOORE, P.E. CITY ENGINEER
DESIGN GROUP
ENGINEER: TERENCE PAO LIC. NO. 63433 DATE:
DESIGNED BY: MICHAEL JONES
DRAWN BY: XAVIER ESPINOSA
CHECKED BY: TERENCE PAO
APPROVED BY:
VERTICAL CONTROL: BM 12-04070,1929 (NGVD 29) - 1985 ADJUSTMENT
HORIZONTAL CONTROL: GPS; PID AE 1704; EPOCH 1991.35
SHEET TITLE: RAILROAD GENERAL NOTES
PROJECT: SIXTH STREET VIADUCT REPLACEMENT
ADDRESS: SIXTH STREET VIADUCT (WHITTIER BLVD) LOS ANGELES, CA
WORK ORDER NO. E70022□F
DRAWING NO. G-411
SHEET 12 OF 560 SHEETS

ADDENDUM 5

CONSTRUCTION SYMBOLS

- CONSTRUCT
- EXISTING
- REMOVE
- REMODEL EXISTING
- REMOVE AND RECONSTRUCT
- WORK BY OTHERS

CONSTRUCTION NOTES

2 TYPE C INTEGRAL CURB AND GUTTER
10 CONCRETE DRIVEWAY
12 CONCRETE WALK
14 ASPHALT CONCRETE PAVEMENT
16 UNTREATED BASE MATERIAL

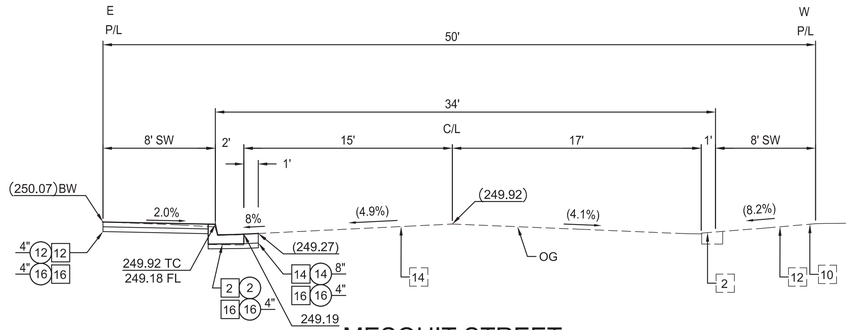

MESQUIT STREET

STA 11+00
SEE SHEET C-202
NTS

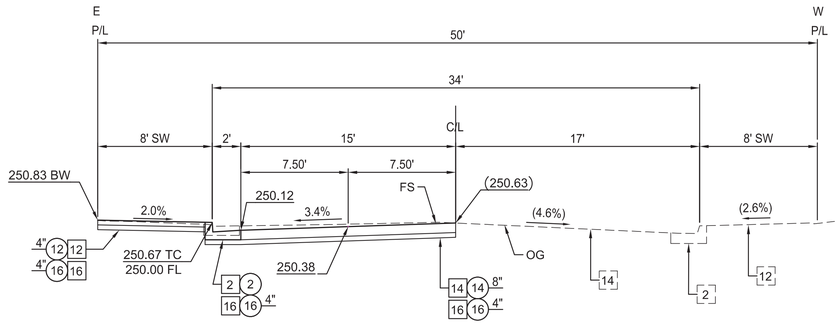

MESQUIT STREET

STA 12+00
SEE SHEET C-202
NTS

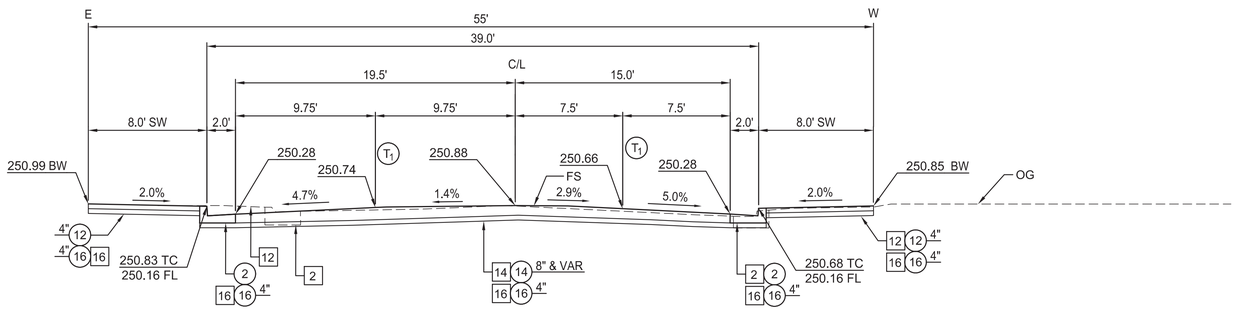

MESQUIT STREET

STA 12+38.50 BCR
SEE SHEET C-201
NTS

APPROVED FOR CONSTRUCTION

METRO TRANSIT DIVISION
BUREAU OF ENGINEERING
CITY OF LOS ANGELES

City of Los Angeles Bureau of Engineering's review of these submittals, plans, specifications, and shop drawings shall not relieve HNTB, its consultants, and its contractors of the responsibility for errors, or omissions in the submitted documents. HNTB is responsible to insure and confirm that the City of Los Angeles Standards (Standards) are used to perform all work on or effecting City facilities. The Standards shall be the current edition in use upon the date City receives such submittal or per an effective date as specified in the agreement (if any).

BUREAU OF ENGINEERING
OFFICIAL RECORD

HNTB
HNTB Corporation
601 W. 5TH STREET SUITE 1000
LOS ANGELES, CALIFORNIA 90071
TEL (213) 403-1000 FAX (213) 403-1001

CITY OF LOS ANGELES DEPARTMENT OF PUBLIC WORKS
BUREAU OF ENGINEERING

ENGINEERING
CITY OF LOS ANGELES

NO. | REVISIONS: | DATE | BY:

STRUCTURE NO. 53C-2329

INDEX NO. P-38113

THIS PLAN WAS ELECTRONICALLY SIGNED AND STAMPED

REGISTERED PROFESSIONAL ENGINEER
TERENCE T. PAO
No. C 63433
Expires 9-30-2016
CIVIL
STATE OF CALIFORNIA

GARY LEE MOORE, P.E.
CITY ENGINEER
DATE:
LIC. NO. 63433

DESIGN GROUP

ENGINEER:	TERENCE PAO
DESIGNED BY:	XAVIER ESPINOSA
DRAWN BY:	XAVIER ESPINOSA
CHECKED BY:	TERENCE PAO
APPROVED BY:	TERENCE PAO

VERTICAL CONTROL: BM 12-04070, 1929 (NGVD 29) - 1985 ADJUSTMENT
HORIZONTAL CONTROL: GPS; PID AE 1704, EPOCH 1991.35

SHEET TITLE: MESQUIT STREET TYPICAL SECTIONS

PROJECT: SIXTH STREET VIADUCT REPLACEMENT

ADDRESS: SIXTH STREET VIADUCT (WHITTIER BLVD) LOS ANGELES, CA

WORK ORDER NO. E700224F

DRAWING NO. CX-201

SHEET 13 OF 560 SHEETS

THE CITY OF LOS ANGELES OR ITS OFFICERS OR AGENTS SHALL NOT BE RESPONSIBLE FOR THE ACCURACY OR COMPLETENESS OF ELECTRONIC COPIES OF THIS PLAN SHEET.

C:\caddlib\pw\pwwestcoast\xespinosa\dms75953\C-002-CX201-CX202.dwg 6/22/16 17:19

REVISION DATES (DESIGN STAGE ONLY)

Sheet Version 3.0

ADDENDUM 5

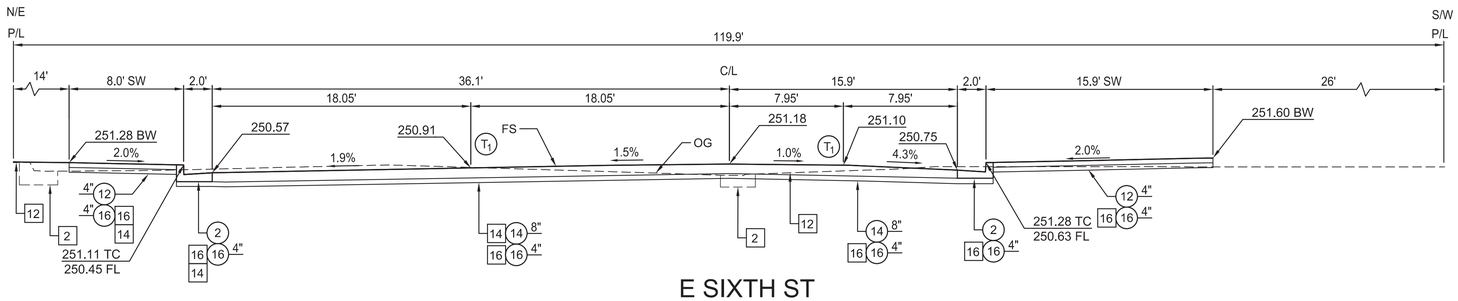

E SIXTH ST

STA 12+81.68 MCR
SEE SHEET C-201
NTS

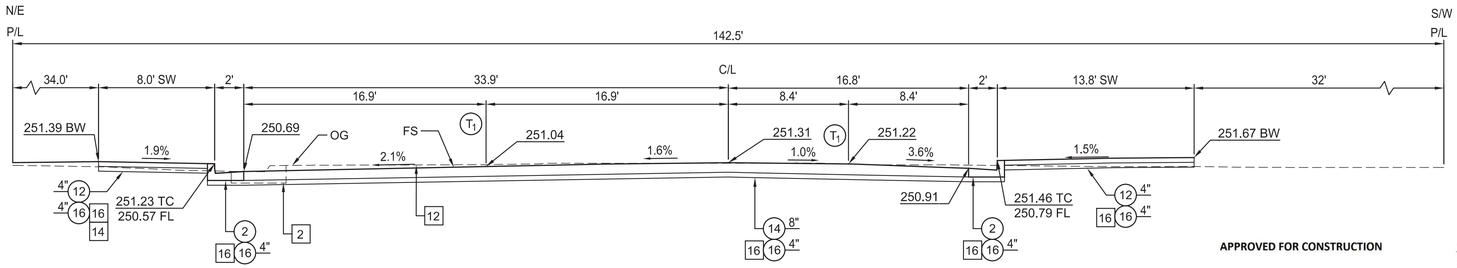

E SIXTH ST

STA 13+00
SEE SHEET C-201
NTS

APPROVED FOR CONSTRUCTION

METRO TRANSIT DIVISION
BUREAU OF ENGINEERING
CITY OF LOS ANGELES

City of Los Angeles Bureau of Engineering's review of these submittals, plans, specifications, and shop drawings shall not relieve HNTB, its consultants, and its contractors of the responsibility for errors, or omissions in the submitted documents. HNTB is responsible to insure and confirm that the City of Los Angeles Standards (Standards) are used to perform all work on or effecting City facilities. The Standards shall be the current edition in use upon the date City receives such submittal or per an effective date as specified in the agreement (if any).

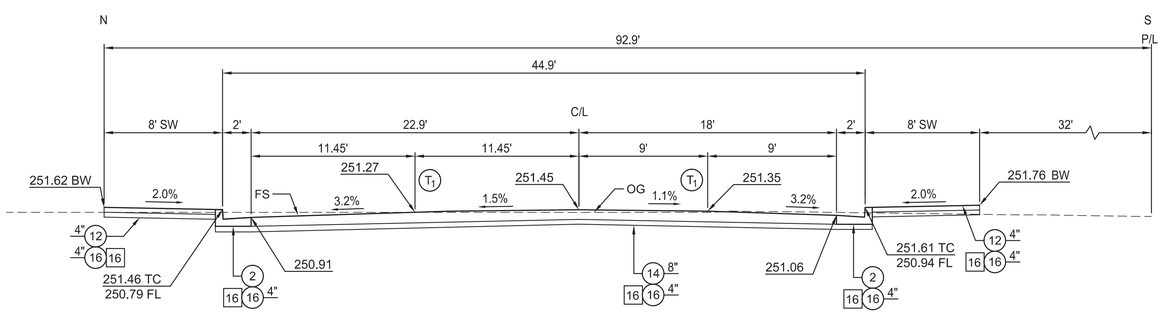

E SIXTH ST

STA 13+24.86 EC
SEE SHEET C-201
NTS

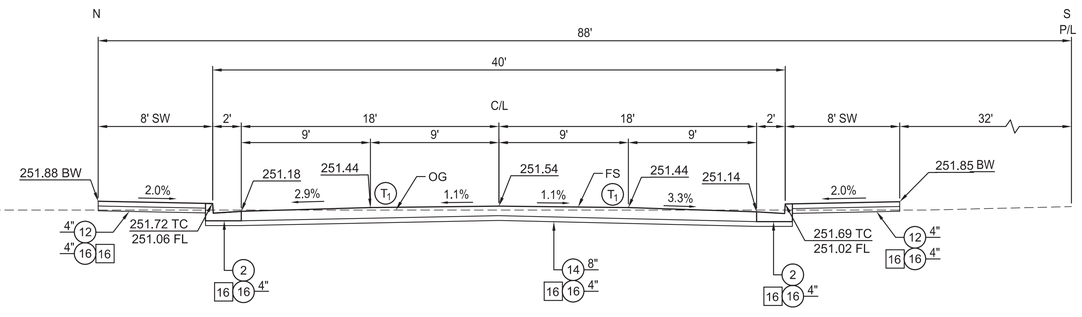

E SIXTH ST

STA 14+00
SEE SHEET C-201
NTS

CONSTRUCTION SYMBOLS

- CONSTRUCT
- EXISTING
- REMOVE
- REMODEL EXISTING
- REMOVE AND RECONSTRUCT
- WORK BY OTHERS

CONSTRUCTION NOTES

2 TYPE C INTEGRAL CURB AND GUTTER
12 CONCRETE WALK
14 ASPHALT CONCRETE PAVEMENT
16 UNTREATED BASE MATERIAL

BUREAU OF ENGINEERING
OFFICIAL RECORD

HNTB
HNTB Corporation
601 W. 5TH STREET SUITE 1000
LOS ANGELES, CALIFORNIA 90071
TEL (213) 403-1000 FAX (213) 403-1001

CITY OF LOS ANGELES DEPARTMENT OF PUBLIC WORKS
BUREAU OF ENGINEERING

ENGINEERING
CITY OF LOS ANGELES

NO. | REVISIONS: | DATE: | BY:

STRUCTURE NO. 53C-2329

INDEX NO. P-38113

THIS PLAN WAS ELECTRONICALLY SIGNED AND STAMPED

REGISTERED PROFESSIONAL ENGINEER
TERENCE T. PAO
No. C 63433
Expires 6-30-2016
CIVIL
STATE OF CALIFORNIA

GARY LEE MOORE, P.E.
CITY ENGINEER
DATE:
LIC. NO. 63433

DESIGN GROUP	
ENGINEER:	TERENCE PAO
DESIGNED BY:	XAVIER ESPINOSA
DRAWN BY:	XAVIER ESPINOSA
CHECKED BY:	TERENCE PAO
APPROVED BY:	TERENCE PAO

VERTICAL CONTROL: BM 12-04070, 1929 (NGVD 29) - 1985 ADJUSTMENT
HORIZONTAL CONTROL: GPS; PID AE 1704, EPOCH 1991.35

SHEET TITLE: EAST SIXTH STREET TYPICAL SECTIONS

PROJECT: SIXTH STREET VIADUCT REPLACEMENT

ADDRESS: SIXTH STREET VIADUCT (WHITTIER BLVD) LOS ANGELES, CA

WORK ORDER NO. E700224F

DRAWING NO. CX-202

SHEET 14 OF 560 SHEETS

REVISION DATES (DESIGN STAGE ONLY)

C:\caddlib\pw\pwwestcoast\vespinosa\dms75953\C-002-CX201-CX202.dwg 6/22/16 17:19

THE CITY OF LOS ANGELES OR ITS OFFICERS OR AGENTS SHALL NOT BE RESPONSIBLE FOR THE ACCURACY OR COMPLETENESS OF ELECTRONIC COPIES OF THIS PLAN SHEET.

Sheet Version 3.0

ADDENDUM 5

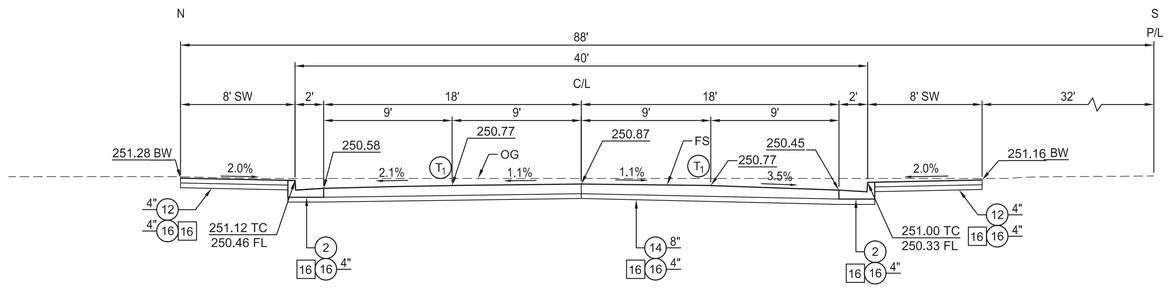

E SIXTH ST

STA 15+00
SEE SHEET C-201
NTS

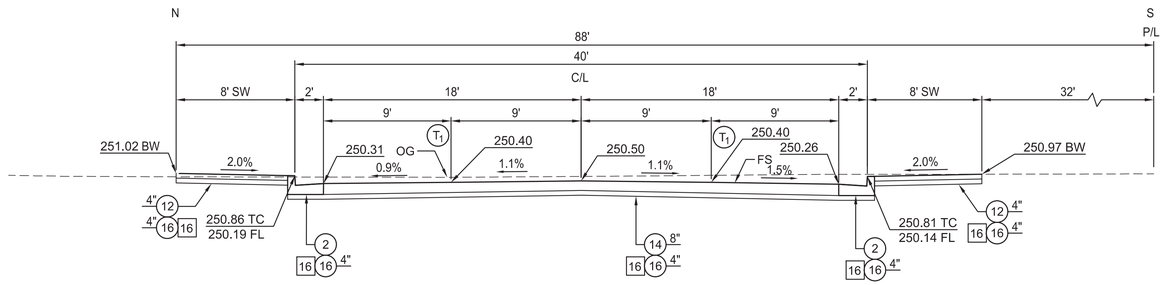

E SIXTH ST

STA 15+33.04 BCR
SEE SHEET C-201
NTS

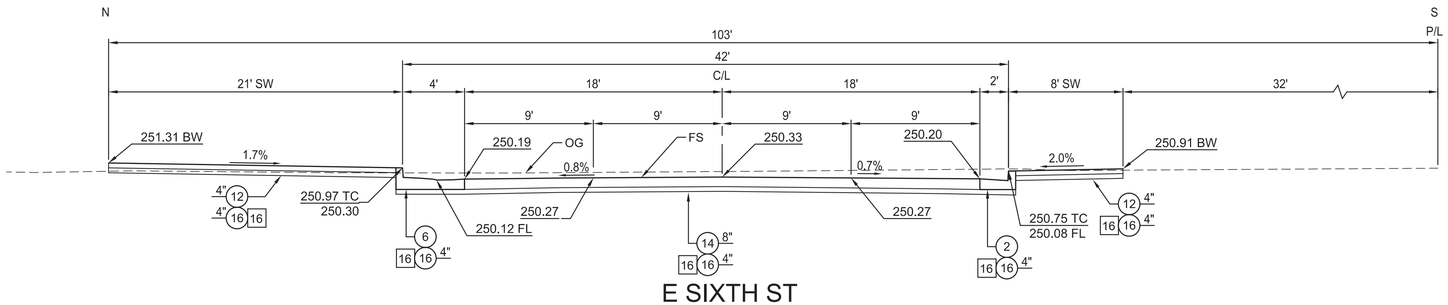

E SIXTH ST

STA 15+47.92 BCR
SEE SHEET C-201
NTS

CONSTRUCTION SYMBOLS

- CONSTRUCT
- EXISTING
- REMOVE
- REMODEL EXISTING
- REMOVE AND RECONSTRUCT
- WORK BY OTHERS

CONSTRUCTION NOTES

2 TYPE C INTEGRAL CURB AND GUTTER
5 CONCRETE LONGITUDINAL GUTTER
6 CONCRETE INTERSECTION GUTTER
12 CONCRETE WALK
14 ASPHALT CONCRETE PAVEMENT
16 UNTREATED BASE MATERIAL

APPROVED FOR CONSTRUCTION

METRO TRANSIT DIVISION
BUREAU OF ENGINEERING
CITY OF LOS ANGELES

City of Los Angeles Bureau of Engineering's review of these submittals, plans, specifications, and shop drawings shall not relieve HNTB, its consultants, and its contractors of the responsibility for errors, or omissions in the submitted documents. HNTB is responsible to insure and confirm that the City of Los Angeles Standards (Standards) are used to perform all work on or effecting City facilities. The Standards shall be the current edition in use upon the date City receives such submittal or per an effective date as specified in the agreement (if any).

BUREAU OF ENGINEERING
OFFICIAL RECORD

HNTB
HNTB Corporation
601 W. 5TH STREET SUITE 1000
LOS ANGELES, CALIFORNIA 90071
TEL (213) 403-1000 FAX (213) 403-1001

CITY OF LOS ANGELES DEPARTMENT OF PUBLIC WORKS
BUREAU OF ENGINEERING

ENGINEERING
CITY OF LOS ANGELES

NO.	REVISIONS:	DATE:	BY:

STRUCTURE NO. 53C-2329

INDEX NO. P-38113

REGISTERED PROFESSIONAL ENGINEER
TERENCE T. PAO
No. C 63433
Expires 6-30-2016
CIVIL
STATE OF CALIFORNIA

THIS PLAN WAS ELECTRONICALLY SIGNED AND STAMPED

GARY LEE MOORE, P.E.
CITY ENGINEER
DATE:
LIC. NO. 63433

DESIGN GROUP	
ENGINEER:	TERENCE PAO
DESIGNED BY:	XAVIER ESPINOSA
DRAWN BY:	XAVIER ESPINOSA
CHECKED BY:	TERENCE PAO
APPROVED BY:	TERENCE PAO

VERTICAL CONTROL:	BM 12-04070,1929 (NGVD 29) - 1985 ADJUSTMENT
HORIZONTAL CONTROL:	GPS; PID AE 1704; EPOCH 1991.35
SHEET TITLE:	EAST SIXTH STREET TYPICAL SECTIONS
PROJECT:	SIXTH STREET VIADUCT REPLACEMENT
ADDRESS:	SIXTH STREET VIADUCT (WHITTIER BLVD) LOS ANGELES, CA

WORK ORDER NO.
E700224F

DRAWING NO.
CX-203

SHEET 15 OF 560 SHEETS

THE CITY OF LOS ANGELES OR ITS OFFICERS OR AGENTS SHALL NOT BE RESPONSIBLE FOR THE ACCURACY OR COMPLETENESS OF ELECTRONIC COPIES OF THIS PLAN SHEET.

C:\caddlib\pw\pwwestcoast\xespinosa\dms75953\C-002-CX201-CX202.dwg 6/22/16 17:18

REVISION DATES (DESIGN STAGE ONLY)

Sheet Version 3.0

ADDENDUM 5

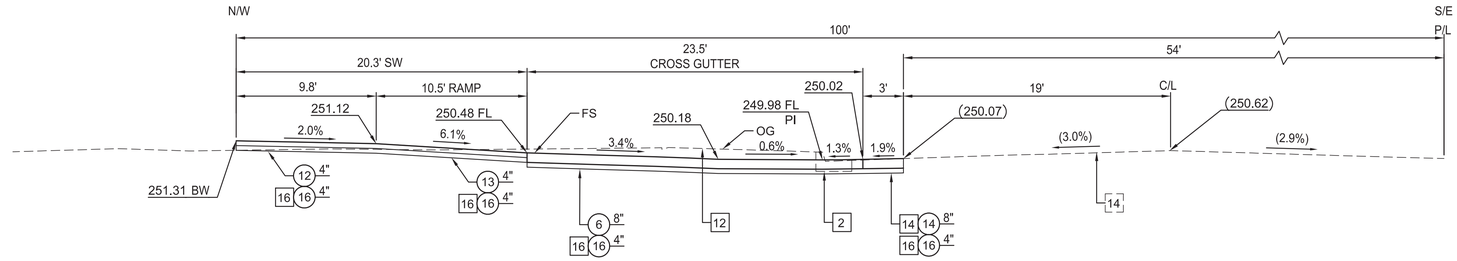

E SIXTH ST

STA 15+68.38 MCR
SEE SHEET C-201
NTS

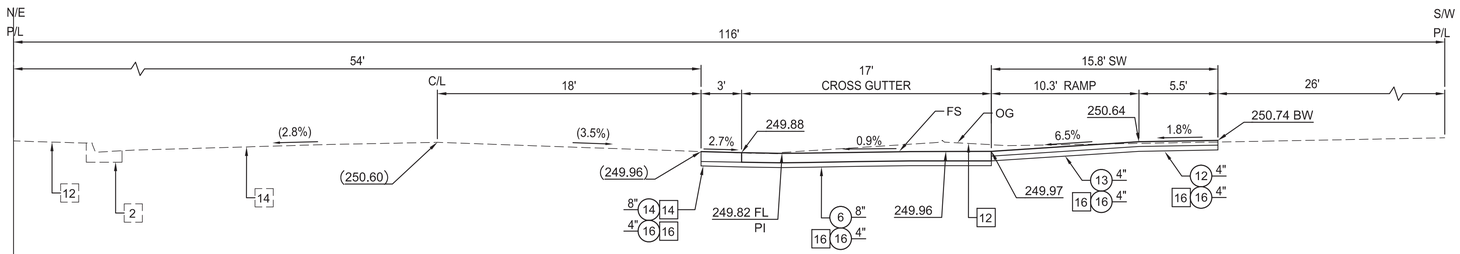

E SIXTH ST

STA 15+72.68 MCR
SEE SHEET C-201
NTS

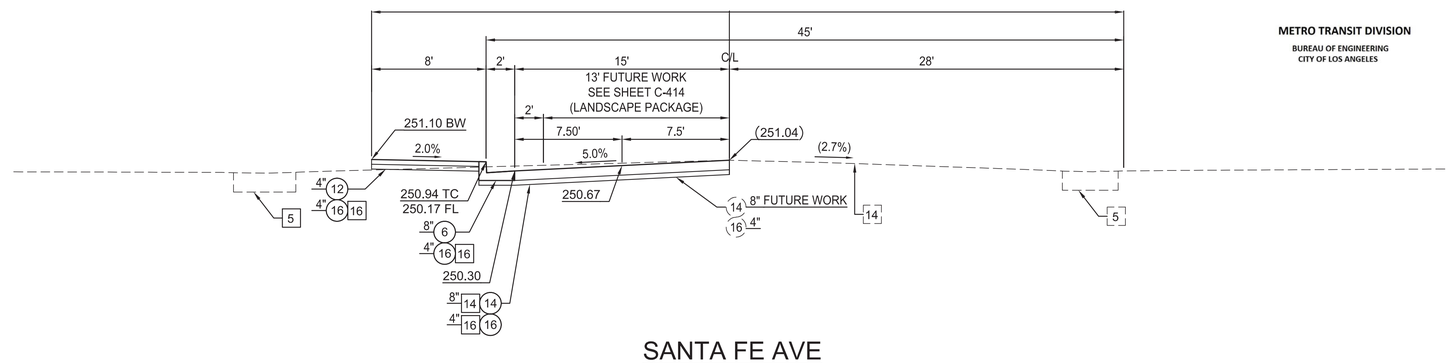

SANTA FE AVE

STA 24+88.65 ECR
SEE SHEET C-201 & C-414
NTS

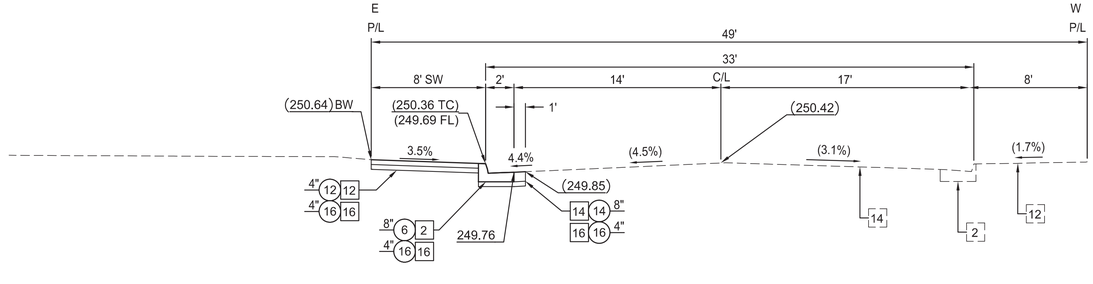

SANTA FE AVE

STA 26+13.64 ECR
SEE SHEET C-201
NTS

CONSTRUCTION SYMBOLS

- CONSTRUCT
- EXISTING
- REMOVE
- REMODEL EXISTING
- REMOVE AND RECONSTRUCT
- WORK BY OTHERS

CONSTRUCTION NOTES

2	TYPE C INTEGRAL CURB AND GUTTER
5	CONCRETE LONGITUDINAL GUTTER
6	CONCRETE INTERSECTION GUTTER
12	CONCRETE WALK
13	CURB RAMP
14	ASPHALT CONCRETE PAVEMENT
16	UNTREATED BASE MATERIAL

APPROVED FOR CONSTRUCTION

METRO TRANSIT DIVISION
BUREAU OF ENGINEERING
CITY OF LOS ANGELES

City of Los Angeles Bureau of Engineering's review of these submittals, plans, specifications, and shop drawings shall not relieve HNTB, its consultants, and its contractors of the responsibility for errors, or omissions in the submitted documents. HNTB is responsible to insure and confirm that the City of Los Angeles Standards (Standards) are used to perform all work on or effecting City facilities. The Standards shall be the current edition in use upon the date City receives such submittal or per an effective date as specified in the agreement (if any).

BUREAU OF ENGINEERING
OFFICIAL RECORD

HNTB
HNTB Corporation
601 W. 5TH STREET SUITE 1000
LOS ANGELES, CALIFORNIA 90071
TEL (213) 403-1000 FAX (213) 403-1001

CITY OF LOS ANGELES DEPARTMENT OF PUBLIC WORKS
BUREAU OF ENGINEERING

ENGINEERING
CITY OF LOS ANGELES

STRUCTURE NO. 53C-2329

INDEX NO. P-38113

NO.	REVISIONS:	DATE	BY:

THIS PLAN WAS ELECTRONICALLY SIGNED AND STAMPED

REGISTERED PROFESSIONAL ENGINEER
TERENCE T. PAO
No. C 63433
Expires 3-30-2016
CIVIL
STATE OF CALIFORNIA

GARY LEE MOORE, P.E. CITY ENGINEER

DESIGN GROUP		LIC NO. 63433	DATE:
ENGINEER:	TERENCE PAO		
DESIGNED BY:	XAVIER ESPINOSA		
DRAWN BY:	XAVIER ESPINOSA		
CHECKED BY:	TERENCE PAO		
APPROVED BY:	TERENCE PAO		

VERTICAL CONTROL: BM 12-04070, 1929 (NGVD 29) - 1985 ADJUSTMENT
HORIZONTAL CONTROL: GPS; PID AE 1704, EPOCH 1991.35

SHEET TITLE: SANTA FE AVE TYPICAL SECTIONS

PROJECT: SIXTH STREET VIADUCT REPLACEMENT

ADDRESS: SIXTH STREET VIADUCT (WHITTIER BLVD) LOS ANGELES, CA

WORK ORDER NO. E700224F

DRAWING NO. CX-204

SHEET 16 OF 560 SHEETS

REVISION DATES (DESIGN STAGE ONLY)

THE CITY OF LOS ANGELES OR ITS OFFICERS OR AGENTS SHALL NOT BE RESPONSIBLE FOR THE ACCURACY OR COMPLETENESS OF ELECTRONIC COPIES OF THIS PLAN SHEET.

C:\caddfiles\pw\pwwestcoast\vespinosa\dms75953\C-002-CX201-CX202.dwg 6/22/16 17:18

Sheet Version 3.0

ADDENDUM 5

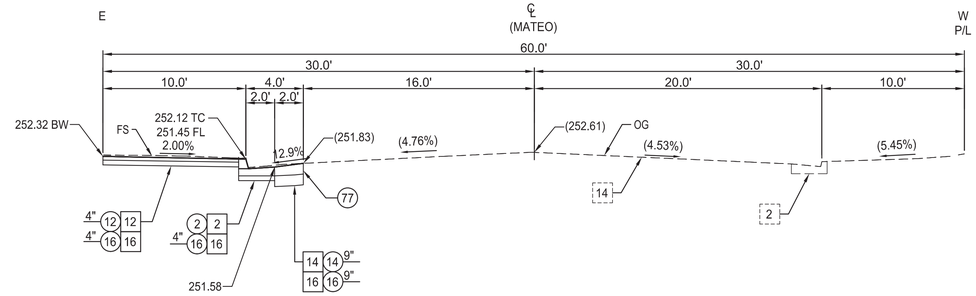

MATEO STA 35+50.00
SEE DWG C-401
NTS

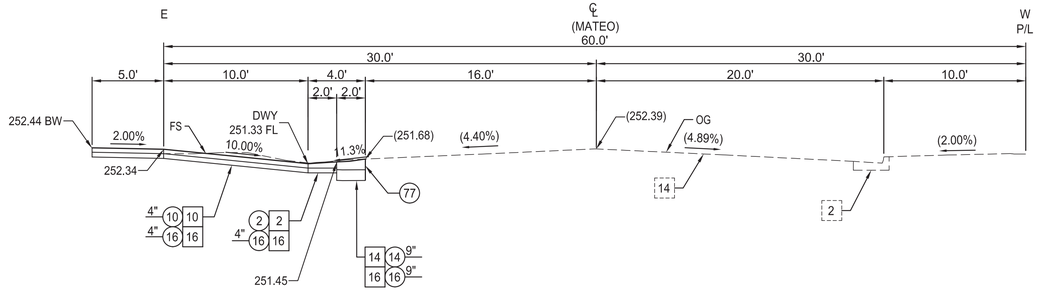

MATEO STA 36+00.00
SEE DWG C-401
NTS

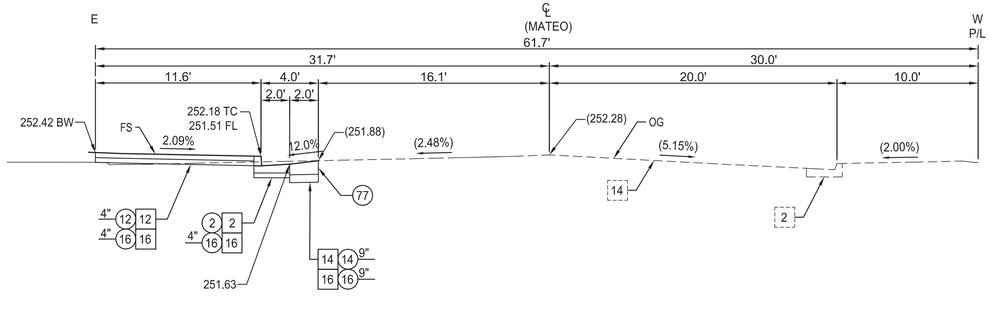

MATEO STA 36+30.23 ECR
SEE DWG C-401
NTS

APPROVED FOR CONSTRUCTION

METRO TRANSIT DIVISION
BUREAU OF ENGINEERING
CITY OF LOS ANGELES

City of Los Angeles Bureau of Engineering's review of these submittals, plans, specifications, and shop drawings shall not relieve HNTB, its consultants, and its contractors of the responsibility for errors, or omissions in the submitted documents. HNTB is responsible to insure and confirm that the City of Los Angeles Standards (Standards) are used to perform all work on or effecting City facilities. The Standards shall be the current edition in use upon the date City receives such submittal or per an effective date as specified in the agreement (if any).

CONSTRUCTION SYMBOLS

- CONSTRUCT
- EXISTING
- REMOVE
- REMODEL EXISTING
- REMOVE AND RECONSTRUCT
- WORK BY OTHERS

CONSTRUCTION NOTES

2 TYPE C INTEGRAL CURB AND GUTTER
12 CONCRETE WALK
14 ASPHALT CONCRETE PAVEMENT
16 UNTREATED BASE MATERIAL
77 SAWCUT LINE & JOIN

BUREAU OF ENGINEERING
OFFICIAL RECORD

HNTB
HNTB Corporation
601 W. 5TH STREET SUITE 1000
LOS ANGELES, CALIFORNIA 90071
TEL (213) 403-1000 FAX (213) 403-1001

BUREAU OF ENGINEERING
ENGINEERING
CITY OF LOS ANGELES

NO.	REVISIONS:	DATE:	BY:

STRUCTURE NO. 53C-2329

INDEX NO. P-38113

REGISTERED PROFESSIONAL ENGINEER
TERENCE T. PAO
No. C 63433
Expires 6-30-2016
CIVIL
STATE OF CALIFORNIA

THIS PLAN WAS ELECTRONICALLY SIGNED AND STAMPED

CITY OF LOS ANGELES DEPARTMENT OF PUBLIC WORKS
BUREAU OF ENGINEERING

GARY LEE MOORE, P.E. CITY ENGINEER
DATE:
LIC. NO. 63433

	DESIGN GROUP
ENGINEER:	TERENCE PAO
DESIGNED BY:	XAVIER ESPINOSA
DRAWN BY:	XAVIER ESPINOSA
CHECKED BY:	TERENCE PAO
APPROVED BY:	

VERTICAL CONTROL: BM 12-04070 1929 (NGVD 29) - 1985 ADJUSTMENT
HORIZONTAL CONTROL: GPS; PID AE 1704, EPOCH 1991.35

SHEET TITLE: MATEO STREET CROSS SECTIONS

PROJECT: SIXTH STREET VIADUCT REPLACEMENT

ADDRESS: SIXTH STREET VIADUCT (WHITTIER BLVD) LOS ANGELES, CA

WORK ORDER NO. E700224F

DRAWING NO. CX-401

SHEET 17 OF 560 SHEETS

REVISION DATES (DESIGN STAGE ONLY)

C:\caddlib\pw\pwwestcoast\vespinosa\dms57684\C-002-CX401-419.dwg 6/22/16 17:23

THE CITY OF LOS ANGELES OR ITS OFFICERS OR AGENTS SHALL NOT BE RESPONSIBLE FOR THE ACCURACY OR COMPLETENESS OF ELECTRONIC COPIES OF THIS PLAN SHEET.

Sheet Version 3.0

ADDENDUM 5

APPROVED FOR CONSTRUCTION

METRO TRANSIT DIVISION
BUREAU OF ENGINEERING
CITY OF LOS ANGELES

City of Los Angeles Bureau of Engineering's review of these submittals, plans, specifications, and shop drawings shall not relieve HNTB, its consultants, and its contractors of the responsibility for errors, or omissions in the submitted documents. HNTB is responsible to insure and confirm that the City of Los Angeles Standards (Standards) are used to perform all work on or effecting City facilities. The Standards shall be the current edition in use upon the date City receives such submittal or per an effective date as specified in the agreement (if any).

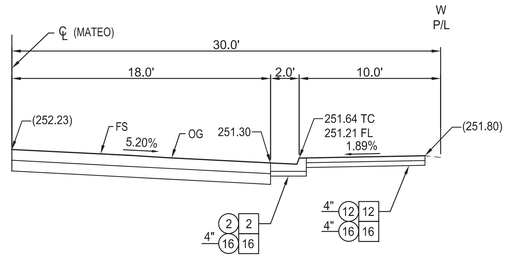

MATEO STA 36+37.06 ECR
SEE DWG C-401
NTS

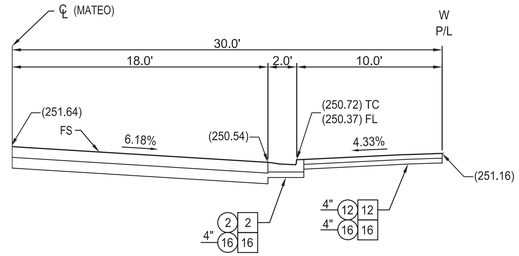

MATEO STA 37+57.14 ECR
SEE DWG C-401
NTS

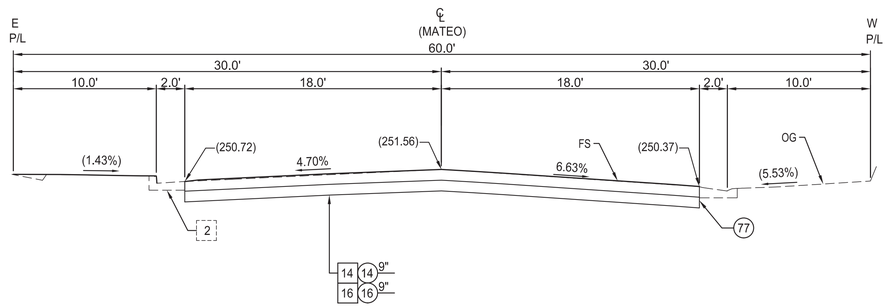

MATEO STA 37+79.26 BCR
SEE DWG C-401
NTS

CONSTRUCTION SYMBOLS

- CONSTRUCT
- EXISTING
- REMOVE
- REMODEL EXISTING
- REMOVE AND RECONSTRUCT
- WORK BY OTHERS

CONSTRUCTION NOTES

2 TYPE C INTEGRAL CURB AND GUTTER
12 CONCRETE WALK
14 ASPHALT CONCRETE PAVEMENT
16 UNTREATED BASE MATERIAL
77 SAWCUT LINE & JOIN

BUREAU OF ENGINEERING
OFFICIAL RECORD

HNTB
HNTB Corporation
601 W. 5TH STREET SUITE 1000
LOS ANGELES, CALIFORNIA 90071
TEL (213) 403-1000 FAX (213) 403-1001

CITY OF LOS ANGELES DEPARTMENT OF PUBLIC WORKS
BUREAU OF ENGINEERING

ENGINEERING
CITY OF LOS ANGELES

NO. | REVISIONS: | DATE | BY:

STRUCTURE NO. 53C-2329

INDEX NO. P-38113

REGISTERED PROFESSIONAL ENGINEER
TERENCE T. PAO
No. C 63433
Expires 6-30-2016
STATE OF CALIFORNIA

THIS PLAN WAS ELECTRONICALLY SIGNED AND STAMPED

GARY LEE MOORE, P.E. CITY ENGINEER DATE:
DESIGN GROUP LIC. NO. 63433
ENGINEER: TERENCE PAO
DESIGNED BY: XAVIER ESPINOSA
DRAWN BY: XAVIER ESPINOSA
CHECKED BY: TERENCE PAO
APPROVED BY:

VERTICAL CONTROL: BM 12-04070,1929 (NGVD 29) - 1985 ADJUSTMENT
HORIZONTAL CONTROL: GPS; PID AE 1704, EPOCH 1991.35

SHEET TITLE: MATEO STREET CROSS SECTIONS
PROJECT: SIXTH STREET VIADUCT REPLACEMENT
ADDRESS: SIXTH STREET VIADUCT (WHITTIER BLVD) LOS ANGELES, CA

WORK ORDER NO. E700224F
DRAWING NO. CX-402
SHEET 18 OF 560 SHEETS

THE CITY OF LOS ANGELES OR ITS OFFICERS OR AGENTS SHALL NOT BE RESPONSIBLE FOR THE ACCURACY OR COMPLETENESS OF ELECTRONIC COPIES OF THIS PLAN SHEET.

C:\caddlib\pw\pwwestcoast\vespinosa\dms57684\C-002-CX401-419.dwg 6/22/16 17:24

REVISION DATES (DESIGN STAGE ONLY)

Sheet Version 3.0

ADDENDUM 5

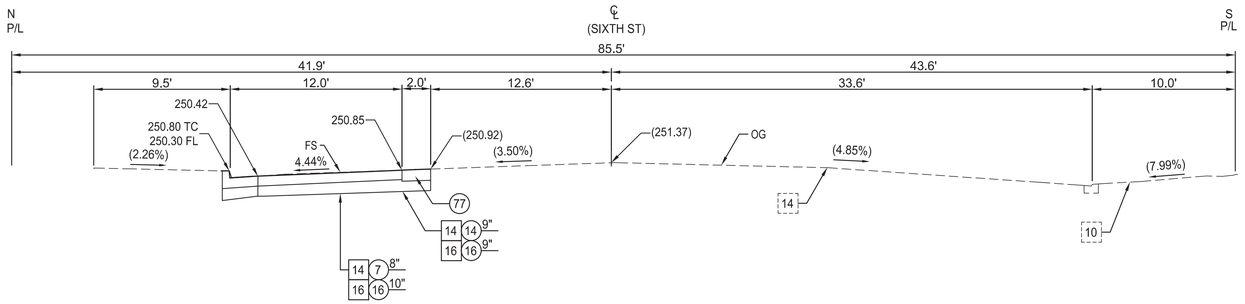

SIXTH ST. STA 8+50.00
SEE DWG C-404
NTS

APPROVED FOR CONSTRUCTION

METRO TRANSIT DIVISION
BUREAU OF ENGINEERING
CITY OF LOS ANGELES

City of Los Angeles Bureau of Engineering's review of these submittals, plans, specifications, and shop drawings shall not relieve HNTB, its consultants, and its contractors of the responsibility for errors, or omissions in the submitted documents. HNTB is responsible to insure and confirm that the City of Los Angeles Standards (Standards) are used to perform all work on or effecting City facilities. The Standards shall be the current edition in use upon the date City receives such submittal or per an effective date as specified in the agreement (if any).

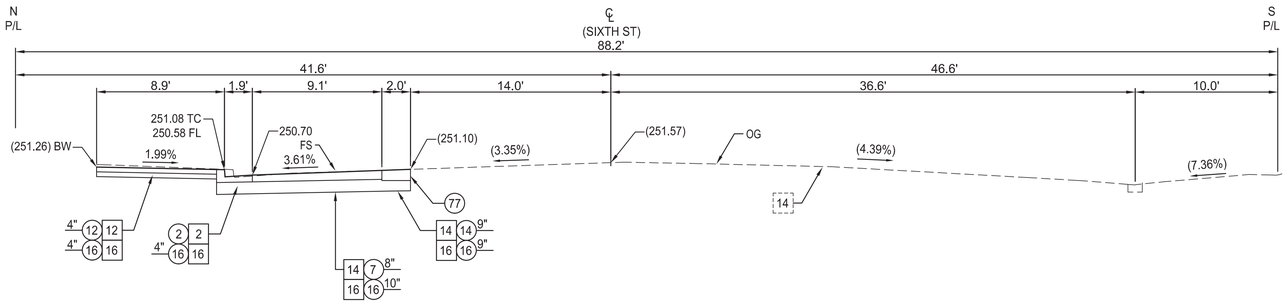

SIXTH ST. STA 9+00.00
SEE DWG C-404
NTS

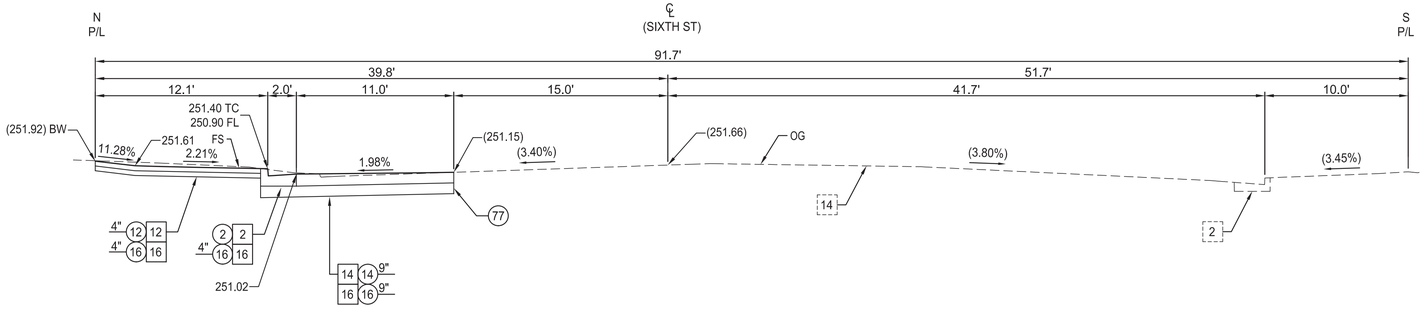

SIXTH ST. STA 9+54.68 BCR
SEE DWG C-404
NTS

CONSTRUCTION SYMBOLS

- CONSTRUCT
- EXISTING
- REMOVE
- REMODEL EXISTING
- REMOVE AND RECONSTRUCT
- WORK BY OTHERS

CONSTRUCTION NOTES

2 TYPE C INTEGRAL CURB AND GUTTER
7 BUS PAD
10 CONCRETE DRIVEWAY
12 CONCRETE WALK
14 ASPHALT CONCRETE PAVEMENT
16 UNTREATED BASE MATERIAL
77 SAWCUT LINE & JOIN

BUREAU OF ENGINEERING
OFFICIAL RECORD

HNTB
HNTB Corporation
601 W. 5TH STREET SUITE 1000
LOS ANGELES, CALIFORNIA 90071
TEL (213) 403-1000 FAX (213) 403-1001

CITY OF LOS ANGELES DEPARTMENT OF PUBLIC WORKS
BUREAU OF ENGINEERING

ENGINEERING
CITY OF LOS ANGELES

STRUCTURE NO. 53C-2329

INDEX NO. P-38113

NO.	REVISIONS:	DATE	BY:

REGISTERED PROFESSIONAL ENGINEER TERENCE T. PAO No. C 63433 Exp. 6-30-2016 CIVIL STATE OF CALIFORNIA

THIS PLAN WAS ELECTRONICALLY SIGNED AND STAMPED

GARY LEE MOORE, P.E. CITY ENGINEER DATE:
LIC. NO. 63433

DESIGN GROUP	
ENGINEER:	TERENCE PAO
DESIGNED BY:	XAVIER ESPINOSA
DRAWN BY:	XAVIER ESPINOSA
CHECKED BY:	TERENCE PAO
APPROVED BY:	

VERTICAL CONTROL: BM 12-04070,1929 (NGVD 29) - 1985 ADJUSTMENT
HORIZONTAL CONTROL: GPS; PID AE 1704, EPOCH 1991.35

SHEET TITLE: SIXTH STREET CROSS SECTIONS

PROJECT: SIXTH STREET VIADUCT REPLACEMENT

ADDRESS: SIXTH STREET VIADUCT (WHITTIER BLVD) LOS ANGELES, CA

WORK ORDER NO. E700224F

DRAWING NO. CX-403

SHEET 19 OF 560 SHEETS

REVISION DATES (DESIGN STAGE ONLY)

THE CITY OF LOS ANGELES OR ITS OFFICERS OR AGENTS SHALL NOT BE RESPONSIBLE FOR THE ACCURACY OR COMPLETENESS OF ELECTRONIC COPIES OF THIS PLAN SHEET.

C:\cadd\lb\pw\pwwestcoast\vespinosa\dms57684\C-002-CX401-419.dwg 6/22/16 17:24

Sheet Version 3.0

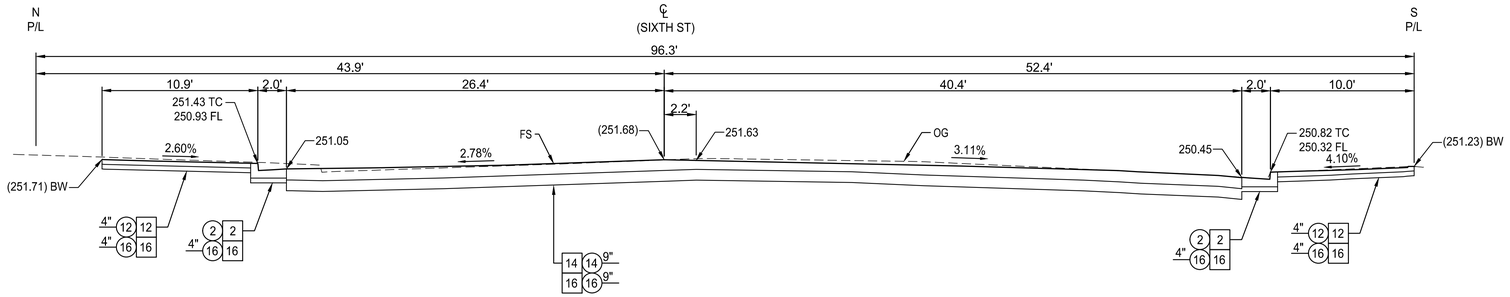

CONSTRUCTION SYMBOLS

- CONSTRUCT
- E□ISTING
- REMOVE
- REMODEL E□ISTING
- REMOVE AND RECONSTRUCT
- WOR□ BY OTHERS

CONSTRUCTION NOTES

2 TYPE C INTEGRAL CURB AND GUTTER
12 CONCRETE WALK
14 ASPHALT CONCRETE PAVEMENT
16 UNTREATED BASE MATERIAL

SIXTH ST. STA 9+59.20 BCR
SEE DWG C-404
NTS

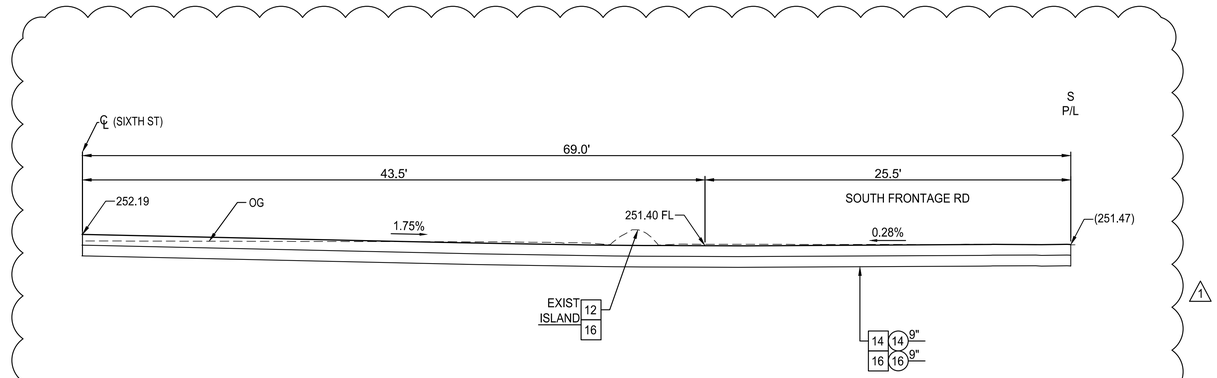

SIXTH ST. STA 10+40.03 BCR
SEE DWG C-404
NTS

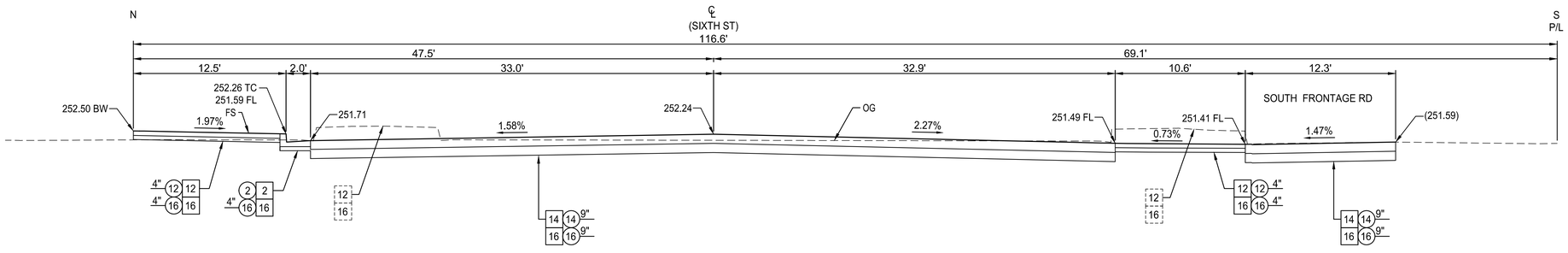

SIXTH ST. STA 10+45.03 BCR
SEE DWG C-404
NTS

HNTB
HNTB Corporation
601 WEST 5TH STREET, SUITE 1000
LOS ANGELES, CALIFORNIA 90071
TEL (213) 403-1000 FAX (213) 403-1001

CITY OF LOS ANGELES DEPARTMENT OF PUBLIC WORKS BUREAU OF ENGINEERING

ENGINEERING CITY OF LOS ANGELES

NO.	REVISIONS:	DATE:	BY:
1	RFI 0088, 0093, 0110	1/18/18	XE

STRUCTURE NO. 53C-2329

INDEX NO.

THIS PLAN WAS ELECTRONICALLY SIGNED AND STAMPED

REGISTERED PROFESSIONAL ENGINEER TERENCE T. PAO No. C 63433 Exp. 6-30-2019 CIVIL STATE OF CALIFORNIA

GARY LEE MOORE, P.E. CITY ENGINEER
LIC. NO. 63433 DATE:

DESIGN GROUP	
ENGINEER:	TERENCE PAO
DESIGNED BY:	XAVIER ESPINOSA
DRAWN BY:	XAVIER ESPINOSA
CHECKED BY:	TERENCE PAO
APPROVED BY:	

VERTICAL CONTROL: BM 12-04070,1929 (NGVD 29) - 1985 ADJUSTMENT
HORIZONTAL CONTROL: GPS; PID AE 1704, EPOCH 1991.35

SHEET TITLE: SIXTH STREET CROSS SECTIONS

PROJECT: SIXTH STREET VIADUCT REPLACEMENT

ADDRESS: SIXTH STREET VIADUCT (WHITTIER BLVD) LOS ANGELES, CA

WORK ORDER NO. E70022□F

DRAWING NO. CX-404

SHEET OF SHEETS

REVISION DATES DESIGN STAGE ONLY:

THE CITY OF LOS ANGELES OR ITS OFFICERS OR AGENTS SHALL NOT BE RESPONSIBLE FOR THE ACCURACY OR COMPLETENESS OF ELECTRONIC COPIES OF THIS PLAN SHEET.

C:\caddlib\pw\pwwestcoast\vespinosa\dms57684\C-002-CX401-419.dwg 1/18/18 10:50

Sheet Version 3.0

ADDENDUM 5

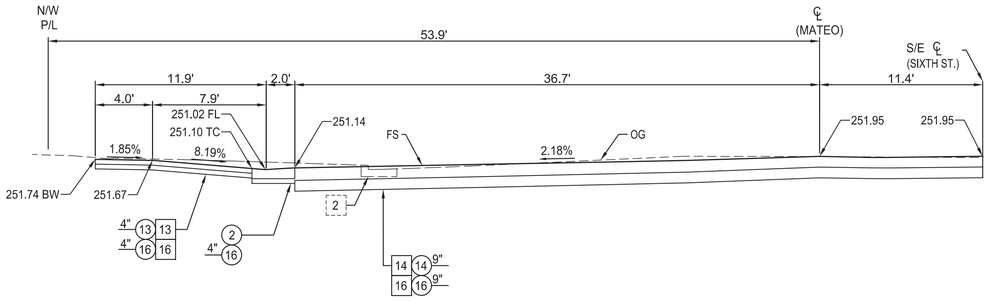

SIXTH ST. & MATEO ST - NW CORNER
SIXTH ST. STA 9+72.62 MCR
SEE DWG C-404 & CC-401
NTS

APPROVED FOR CONSTRUCTION

METRO TRANSIT DIVISION
BUREAU OF ENGINEERING
CITY OF LOS ANGELES

City of Los Angeles Bureau of Engineering's review of these submittals, plans, specifications, and shop drawings shall not relieve HNTB, its consultants, and its contractors of the responsibility for errors, or omissions in the submitted documents. HNTB is responsible to insure and confirm that the City of Los Angeles Standards (Standards) are used to perform all work on or effecting City facilities. The Standards shall be the current edition in use upon the date City receives such submittal or per an effective date as specified in the agreement (if any).

CONSTRUCTION SYMBOLS

- CONSTRUCT
- EXISTING
- REMOVE
- REMODEL EXISTING
- REMOVE AND RECONSTRUCT
- WORK BY OTHERS

CONSTRUCTION NOTES

2 TYPE C INTEGRAL CURB AND GUTTER
12 CONCRETE WALK
14 ASPHALT CONCRETE PAVEMENT
16 UNTREATED BASE MATERIAL

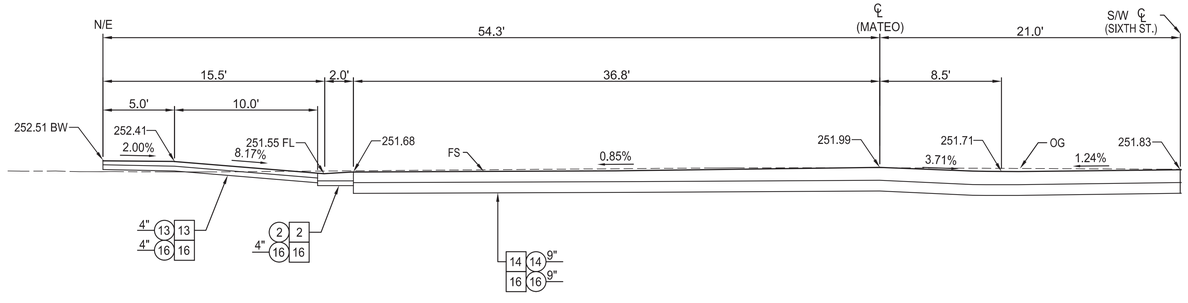

SIXTH ST. & MATEO ST - NE CORNER
SIXTH ST. STA 10+27.37 MCR
SEE DWG C-404 & CC-401
NTS

BUREAU OF ENGINEERING OFFICIAL RECORD

THIS PLAN WAS ELECTRONICALLY SIGNED AND STAMPED

REGISTERED PROFESSIONAL ENGINEER TERENCE T. PAO No. C 63433 Expires 6-30-2016 CIVIL STATE OF CALIFORNIA

BUREAU OF ENGINEERING

ENGINEERING
CITY OF LOS ANGELES

NO.	REVISIONS:	DATE	BY:

STRUCTURE NO. 53C-2329

INDEX NO. P-38113

CITY OF LOS ANGELES DEPARTMENT OF PUBLIC WORKS

GARY LEE MOORE, P.E. CITY ENGINEER
DATE:
LIC. NO. 63433

DESIGN GROUP	
ENGINEER:	TERENCE PAO
DESIGNED BY:	XAVIER ESPINOSA
DRAWN BY:	XAVIER ESPINOSA
CHECKED BY:	TERENCE PAO
APPROVED BY:	

VERTICAL CONTROL:	BM 12-04070,1929 (NGVD 29) - 1985 ADJUSTMENT
HORIZONTAL CONTROL:	GPS; PID AE 1704, EPOCH 1991.35
SHEET TITLE:	SIXTH STREET & MATEO STREET CROSS SECTIONS
PROJECT:	SIXTH STREET VIADUCT REPLACEMENT
ADDRESS:	SIXTH STREET VIADUCT (WHITTIER BLVD) LOS ANGELES, CA

HNTB
HNTB Corporation
601 W. 5TH STREET SUITE 1000
LOS ANGELES, CALIFORNIA 90071
TEL (213) 403-1000 FAX (213) 403-1001

WORK ORDER NO. E700224F

DRAWING NO. CX-405

SHEET 21 OF 560 SHEETS

THE CITY OF LOS ANGELES OR ITS OFFICERS OR AGENTS SHALL NOT BE RESPONSIBLE FOR THE ACCURACY OR COMPLETENESS OF ELECTRONIC COPIES OF THIS PLAN SHEET.

C:\caddlib\pw\pwwestcoast\xespinosa\dms57684\C-002-CX401-419.dwg 6/22/16 17:26

REVISION DATES (DESIGN STAGE ONLY)

Sheet Version 3.0

ADDENDUM 5

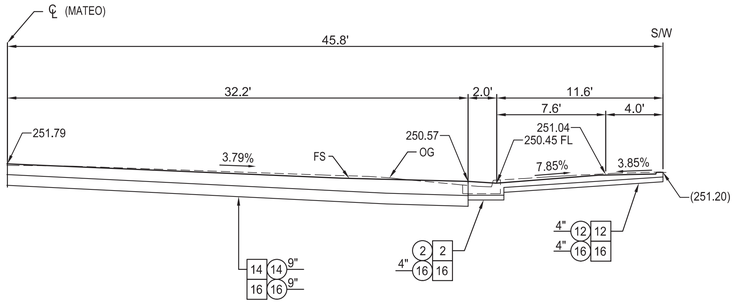

SIXTH ST. & MATEO ST. - SW CORNER
SIXTH ST. STA 9+74.18 MCR
SEE DWG C-404 & CC-401
NTS

CONSTRUCTION SYMBOLS

- CONSTRUCT
- EXISTING
- REMOVE
- REMODEL EXISTING
- REMOVE AND RECONSTRUCT
- WORK BY OTHERS

CONSTRUCTION NOTES

1 CONCRETE CURB (TYPE A CURB)
2 TYPE C INTEGRAL CURB & GUTTER
12 CONCRETE WALK
14 ASPHALT CONCRETE PAVEMENT
16 UNTREATED BASE MATERIAL

APPROVED FOR CONSTRUCTION

METRO TRANSIT DIVISION
BUREAU OF ENGINEERING
CITY OF LOS ANGELES

City of Los Angeles Bureau of Engineering's review of these submittals, plans, specifications, and shop drawings shall not relieve HNTB, its consultants, and its contractors of the responsibility for errors, or omissions in the submitted documents. HNTB is responsible to insure and confirm that the City of Los Angeles Standards (Standards) are used to perform all work on or effecting City facilities. The Standards shall be the current edition in use upon the date City receives such submittal or per an effective date as specified in the agreement (if any).

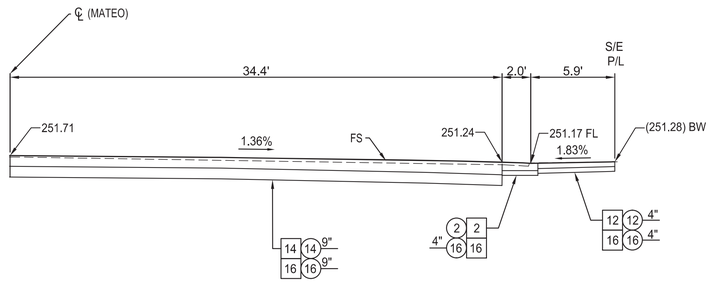

MATEO ST. STA 10+25.98 MCR
MATEO ST. & SOUTH FRONTAGE RD. - SE CORNER
SEE DWG C-404 & CC-401
NTS

BUREAU OF ENGINEERING
OFFICIAL RECORD

HNTB
HNTB Corporation
601 W. 5TH STREET SUITE 1000
LOS ANGELES, CALIFORNIA 90071
TEL (213) 403-1000 FAX (213) 403-1001

CITY OF LOS ANGELES DEPARTMENT OF PUBLIC WORKS
BUREAU OF ENGINEERING

ENGINEERING
CITY OF LOS ANGELES

STRUCTURE NO. 53C-2329

INDEX NO. P-38113

NO.	REVISIONS:	DATE	BY:

THIS PLAN WAS ELECTRONICALLY SIGNED AND STAMPED

REGISTERED PROFESSIONAL ENGINEER
TERENCE T. PAO
No. C 63433
Expires 3-30-2016
CIVIL
STATE OF CALIFORNIA

CITY ENGINEER
GARY LEE MOORE, P.E.
DATE:
LIC. NO. 63433

DESIGN GROUP	
ENGINEER:	TERENCE PAO
DESIGNED BY:	XAVIER ESPINOSA
DRAWN BY:	XAVIER ESPINOSA
CHECKED BY:	TERENCE PAO
APPROVED BY:	

VERTICAL CONTROL:	BM 12-04070,1929 (NGVD 29) - 1985 ADJUSTMENT
HORIZONTAL CONTROL:	GPS; PID AE 1704, EPOCH 1991.35
SHEET TITLE:	SIXTH STREET & MATEO STREET CROSS SECTIONS
PROJECT:	SIXTH STREET VIADUCT REPLACEMENT
ADDRESS:	SIXTH STREET VIADUCT (WHITTIER BLVD) LOS ANGELES, CA

WORK ORDER NO. E700224F

DRAWING NO. CX-406

SHEET 22 OF 560 SHEETS

REVISION DATES (DESIGN STAGE ONLY)

C:\caddlib\pw\pwwestcoast\vespinosa\dms57684\C-002-CX401-419.dwg 6/22/16 17:27

THE CITY OF LOS ANGELES OR ITS OFFICERS OR AGENTS SHALL NOT BE RESPONSIBLE FOR THE ACCURACY OR COMPLETENESS OF ELECTRONIC COPIES OF THIS PLAN SHEET.

Sheet Version 3.0

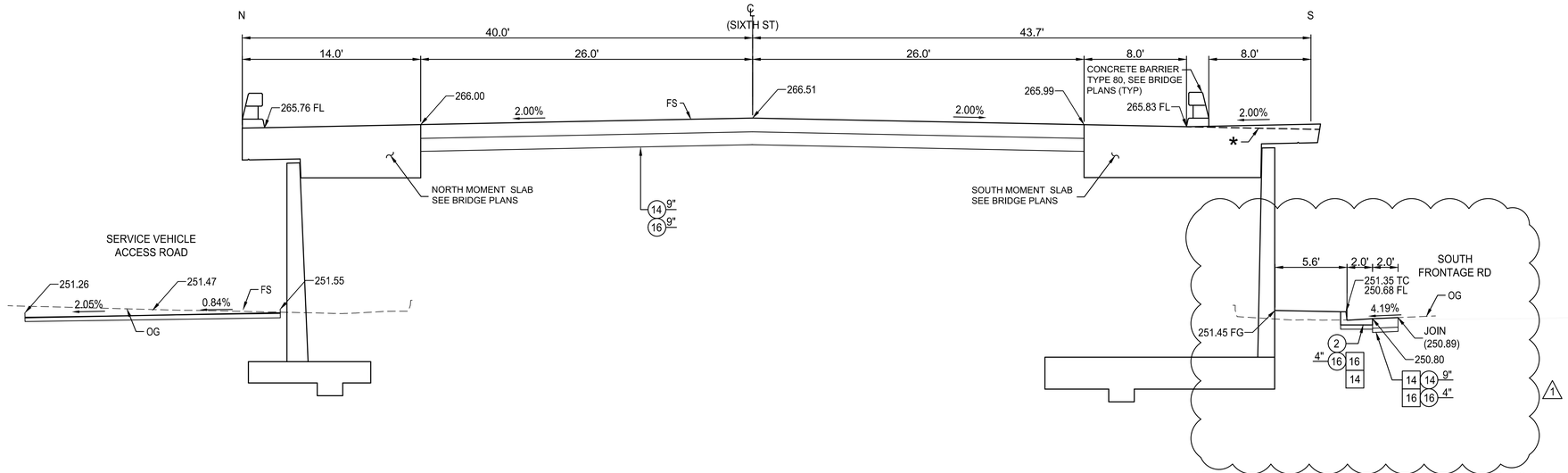

SIXTH ST. STA 15+40.00 EVC
SEE DWG C-405
NTS

CONSTRUCTION SYMBOLS

- CONSTRUCT
- E□ISTING
- REMOVE
- REMODEL E□ISTING
- REMOVE AND RECONSTRUCT
- WOR□ BY OTHERS

CONSTRUCTION NOTES

2 TYPE C INTEGRAL CURB AND GUTTER
12 CONCRETE WALK
14 ASPHALT CONCRETE PAVEMENT
16 UNTREATED BASE MATERIAL

*AT STA 15+40.00, BEGIN 15' SIDEWALK CROSS SLOPE TRANSITION TO 2% IN THE OPPOSITE DIRECTION TO MATCH THE STRUCTURE EXPANSION JOINT.

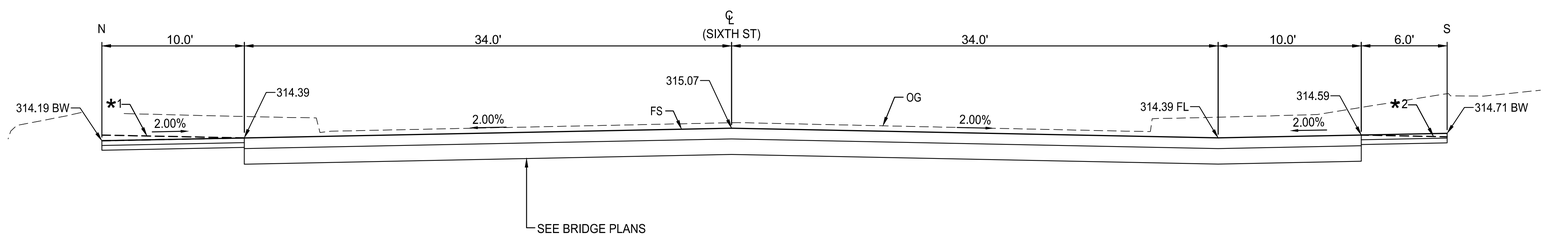

*1 AT STA 45+90.38, BEGIN 15' SIDEWALK CROSS SLOPE TRANSITION TO 2% IN THE OPPOSITE DIRECTION TO MATCH THE STRUCTURE EXPANSION JOINT.

*2 AT STA 46+15.00, BEGIN 15' SIDEWALK CROSS SLOPE TRANSITION TO 2% IN THE OPPOSITE DIRECTION TO MATCH THE STRUCTURE EXPANSION JOINT.

SIXTH ST. STA 46+15.00
SEE DWG C-413
NTS

THE CITY OF LOS ANGELES OR ITS OFFICERS OR AGENTS SHALL NOT BE RESPONSIBLE FOR THE ACCURACY OR COMPLETENESS OF ELECTRONIC COPIES OF THIS PLAN SHEET.

C:\caddlib\pw\pwwestcoast\xespinosa\dms57684\C-002-CX401-419.dwg 1/18/18 11:55

REVISION DATES DESIGN STAGE ONLY:

Sheet Version 3.0

BUREAU OF ENGINEERING
ENGINEERING
CITY OF LOS ANGELES

NO.	REVISIONS:	DATE:	BY:
1	RFI 0088, 0093, 0110	1/18/18	XE

STRUCTURE NO. 53C-2329

INDEX NO.

THIS PLAN WAS ELECTRONICALLY SIGNED AND STAMPED

REGISTERED PROFESSIONAL ENGINEER
TERENCE T. PAO
No. C 63433
Expires 6-30-2019
CIVIL
STATE OF CALIFORNIA

CITY OF LOS ANGELES DEPARTMENT OF PUBLIC WORKS

GARY LEE MOORE, P.E. CITY ENGINEER

DESIGN GROUP			DATE:
ENGINEER:	TERENCE PAO	LIC. NO. 63433	
DESIGNED BY:	XAVIER ESPINOSA		
DRAWN BY:	XAVIER ESPINOSA		
CHECKED BY:	TERENCE PAO		
APPROVED BY:			

VERTICAL CONTROL: BM 12-04070,1929 (NGVD 29) - 1985 ADJUSTMENT
HORIZONTAL CONTROL: GPS; FID AE 1704, EPOCH 1991.35

SHEET TITLE: SIXTH STREET CROSS SECTIONS

PROJECT: SIXTH STREET VIADUCT REPLACEMENT

ADDRESS: SIXTH STREET VIADUCT (WHITTIER BLVD) LOS ANGELES, CA

HNTB
HNTB Corporation
601 W. 5TH STREET SUITE 1000
LOS ANGELES, CALIFORNIA 90071
TEL (213) 403-1000 FAX (213) 403-1001

WORK ORDER NO.
E70022□F

DRAWING NO.
CX-407

SHEET OF SHEETS

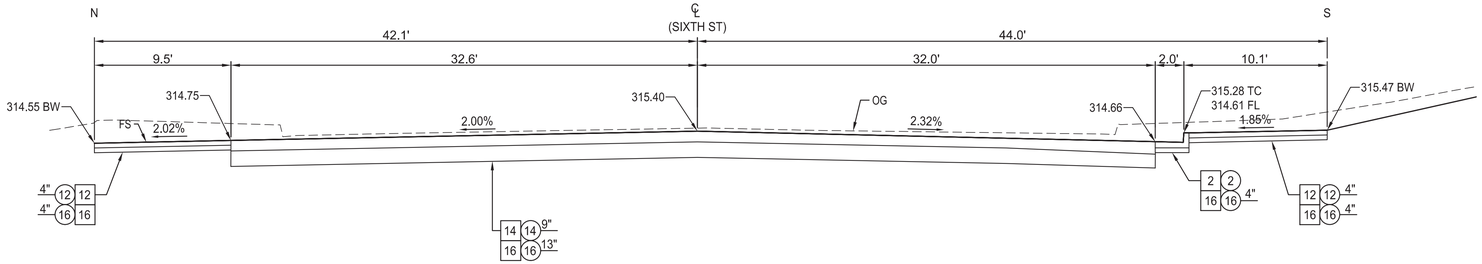

SIXTH ST STA 46+50.00
SEE DWG C-413
NTS

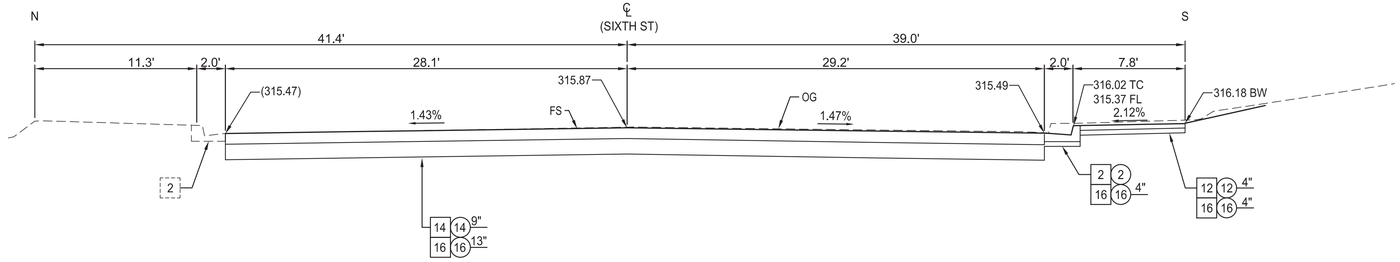

SIXTH ST. STA 47+00.00
SEE DWG C-413
NTS

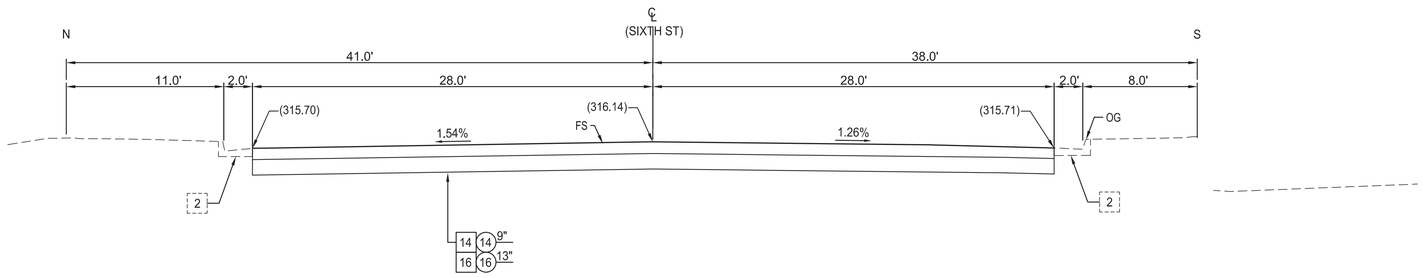

SIXTH ST. STA 47+30.00
SEE DWG C-413
NTS

CONSTRUCTION SYMBOLS

- CONSTRUCT
- EXISTING
- REMOVE
- REMODEL EXISTING
- REMOVE AND RECONSTRUCT
- WORK BY OTHERS

CONSTRUCTION NOTES

2 TYPE C INTEGRAL CURB AND GUTTER
12 CONCRETE WALK
14 ASPHALT CONCRETE PAVEMENT
16 UNTREATED BASE MATERIAL
77 SAWCUT LINE & JOIN

APPROVED FOR CONSTRUCTION

METRO TRANSIT DIVISION
BUREAU OF ENGINEERING
CITY OF LOS ANGELES

City of Los Angeles Bureau of Engineering's review of these submittals, plans, specifications, and shop drawings shall not relieve HNTB, its consultants, and its contractors of the responsibility for errors, or omissions in the submitted documents. HNTB is responsible to insure and confirm that the City of Los Angeles Standards (Standards) are used to perform all work on or effecting City facilities. The Standards shall be the current edition in use upon the date City receives such submittal or per an effective date as specified in the agreement (if any).

BUREAU OF ENGINEERING
OFFICIAL RECORD

HNTB
HNTB Corporation
601 W. 5TH STREET SUITE 1000
LOS ANGELES, CALIFORNIA 90071
TEL (213) 403-1000 FAX (213) 403-1001

CITY OF LOS ANGELES DEPARTMENT OF PUBLIC WORKS
BUREAU OF ENGINEERING

ENGINEERING
CITY OF LOS ANGELES

NO. | REVISIONS: | DATE | BY:

STRUCTURE NO.
53C-2329

INDEX NO. **P-38113**

THIS PLAN WAS ELECTRONICALLY SIGNED AND STAMPED

REGISTERED PROFESSIONAL ENGINEER
TERENCE T. PAO
No. C 63433
Expires 6-30-2016
CIVIL
STATE OF CALIFORNIA

GARY LEE MOORE, P.E. CITY ENGINEER

DESIGN GROUP
ENGINEER: TERENCE PAO LIC. NO. 63433
DESIGNED BY: XAVIER ESPINOSA DATE:
DRAWN BY: XAVIER ESPINOSA
CHECKED BY: TERENCE PAO
APPROVED BY:

VERTICAL CONTROL: BM 12-04070 1929 (NGVD 29) - 1985 ADJUSTMENT
HORIZONTAL CONTROL: GPS; PID AE 1704, EPOCH 1991.35

SHEET TITLE: SIXTH STREET CROSS SECTIONS

PROJECT: SIXTH STREET VIADUCT REPLACEMENT

ADDRESS: SIXTH STREET VIADUCT (WHITTIER BLVD) LOS ANGELES, CA

WORK ORDER NO.
E700224F

DRAWING NO.
CX-408

SHEET 24 OF 560 SHEETS

REVISION DATES
(DESIGN STAGE ONLY)

THE CITY OF LOS ANGELES OR ITS OFFICERS OR AGENTS SHALL NOT BE RESPONSIBLE FOR THE ACCURACY OR COMPLETENESS OF ELECTRONIC COPIES OF THIS PLAN SHEET.

C:\caddlib\pw\pwwestcoast\vespinosa\dms57684\C-002-CX401-419.dwg 6/22/16 17:28

Sheet Version 3.0

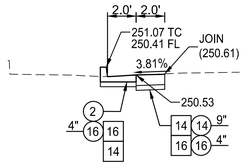

SOUTH FRONTAGE ROAD - CROSS SECTION STA 60+50
SEE DWG C-423
NTS

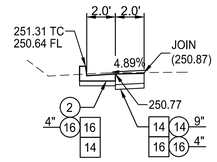

SOUTH FRONTAGE ROAD - CROSS SECTION STA 61+00
SEE DWG C-423
NTS

1

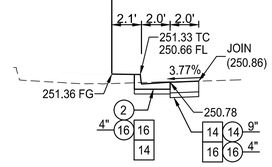

SOUTH FRONTAGE ROAD - CROSS SECTION STA 61+12.10
SEE DWG C-423
NTS

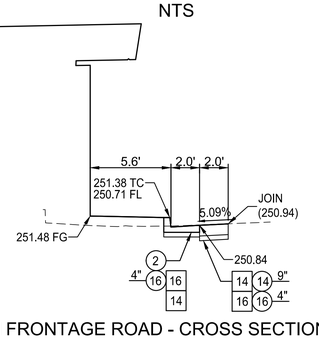

SOUTH FRONTAGE ROAD - CROSS SECTION STA 61+50
SEE DWG C-423
NTS

CONSTRUCTION SYMBOLS

- CONSTRUCT
- E□ISTING
- REMOVE
- REMODEL E□ISTING
- REMOVE AND RECONSTRUCT
- WOR□ BY OTHERS

CONSTRUCTION NOTES

1 TYPE A CURB
2 TYPE C INTEGRAL CURB AND GUTTER
12 CONCRETE WALK
14 ASPHALT CONCRETE PAVEMENT
16 UNTREATED BASE MATERIAL

THE CITY OF LOS ANGELES OR ITS OFFICERS OR AGENTS SHALL NOT BE RESPONSIBLE FOR THE ACCURACY OR COMPLETENESS OF ELECTRONIC COPIES OF THIS PLAN SHEET.

C:\caddlib\pw\pwwestcoast\xespinosa\dms57684\C-002-CX401-419.dwg 1/18/18 11:56

REVISION DATES
DESIGN STAGE ONLY:

Sheet Version 3.0

HNTB
HNTB Corporation
601 W. 5TH STREET SUITE 1000
LOS ANGELES, CAUFORNIA 90071
TEL (213) 403-1000 FAX (213) 403-1001

CITY OF LOS ANGELES DEPARTMENT OF PUBLIC WORKS BUREAU OF ENGINEERING

VERTICAL CONTROL:
HORIZONTAL CONTROL: BM 12-04070, 1929 (NGVD 29) - 1985 ADJUSTMENT
GPS: PID AE 1704, EPOCH 1991.35

SHEET TITLE: SOUTH FRONTAGE ROAD CROSS SECTIONS
PROJECT: SIXTH STREET VIADUCT REPLACEMENT
ADDRESS: SIXTH STREET VIADUCT (WHITTIER BLVD) LOS ANGELES, CA

WORK ORDER NO. E70022□F
DRAWING NO. CX-409
SHEET OF SHEETS

DESIGN GROUP	
ENGINEER:	TERENCE PAO
DESIGNED BY:	XAVIER ESPINOSA
DRAWN BY:	XAVIER ESPINOSA
CHECKED BY:	TERENCE PAO
APPROVED BY:	

GARY LEE MOORE, P.E. CITY ENGINEER
LIC NO. 63433 DATE

THIS PLAN WAS ELECTRONICALLY SIGNED AND STAMPED

REGISTERED PROFESSIONAL ENGINEER
TERENCE T. PAO
No. C 63433
Expires 6-30-2019
CIVIL
STATE OF CALIFORNIA

NO.	REVISIONS:	DATE:	BY:
1	RFI 0088, 0093, 0110	1/18/18	XE

STRUCTURE NO. 53C-2329

INDEX NO.

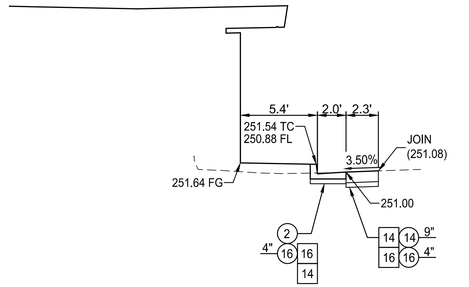

SOUTH FRONTAGE ROAD - CROSS SECTION STA 62+00
SEE DWG C-423
NTS

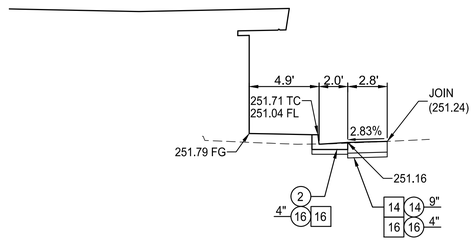

SOUTH FRONTAGE ROAD - CROSS SECTION STA 62+50
SEE DWG C-423
NTS

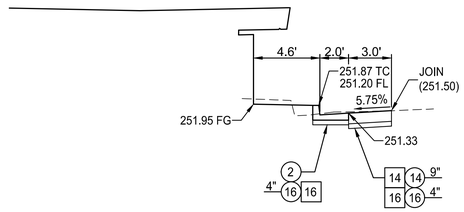

SOUTH FRONTAGE ROAD - CROSS SECTION STA 63+00
SEE DWG C-423
NTS

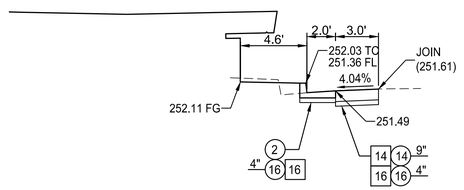

SOUTH FRONTAGE ROAD - CROSS SECTION STA 63+50
SEE DWG C-423
NTS

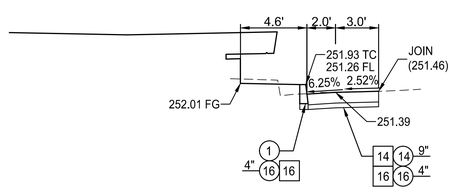

SOUTH FRONTAGE ROAD - CROSS SECTION STA 64+00
SEE DWG C-423
NTS

1

CONSTRUCTION SYMBOLS

- CONSTRUCT
- E□ISTING
- REMOVE
- REMODEL E□ISTING
- REMOVE AND RECONSTRUCT
- WOR□ BY OTHERS

CONSTRUCTION NOTES

1 TYPE A CURB
2 TYPE C INTEGRAL CURB AND GUTTER
12 CONCRETE WALK
14 ASPHALT CONCRETE PAVEMENT
16 UNTREATED BASE MATERIAL

THE CITY OF LOS ANGELES OR ITS OFFICERS OR AGENTS SHALL NOT BE RESPONSIBLE FOR THE ACCURACY OR COMPLETENESS OF ELECTRONIC COPIES OF THIS PLAN SHEET.

C:\caddlib\pw\pwwestcoast\xespinosa\dms57684\C-002-CX401-419.dwg 1/18/18 11:56

REVISION DATES
DESIGN STAGE ONLY:

Sheet Version 3.0

BUREAU OF ENGINEERING
ENGINEERING
CITY OF LOS ANGELES

NO.	REVISIONS:	DATE:	BY:
1	RFI 0088, 0093, 0110	1/18/18	XE

STRUCTURE NO.
53C-2329

INDEX NO.

THIS PLAN WAS ELECTRONICALLY SIGNED AND STAMPED

REGISTERED PROFESSIONAL ENGINEER
TERENCE T. PAO
No. C 63433
Expires 6-30-2019
CIVIL
STATE OF CALIFORNIA

DEPARTMENT OF PUBLIC WORKS
CITY OF LOS ANGELES

GARY LEE MOORE, P.E. CITY ENGINEER

		DATE:
DESIGN GROUP		
ENGINEER:	TERENCE PAO	LIC. NO. 63433
DESIGNED BY:	XAVIER ESPINOSA	
DRAWN BY:	XAVIER ESPINOSA	
CHECKED BY:	TERENCE PAO	
APPROVED BY:		

VERTICAL CONTROL: BM 12-04070,1929 (NGVD 29) - 1985 ADJUSTMENT
HORIZONTAL CONTROL: GPS; FID AE 1704, EPOCH 1991.35

SHEET TITLE: SOUTH FRONTAGE ROAD CROSS SECTIONS
PROJECT: SIXTH STREET VIADUCT REPLACEMENT
ADDRESS: SIXTH STREET VIADUCT (WHITTIER BLVD) LOS ANGELES, CA

HNTB
HNTB Corporation
601 W. 5TH STREET SUITE 1000
LOS ANGELES, CALIFORNIA 90071
TEL (213) 403-1000 FAX (213) 403-1001

WORK ORDER NO.
E70022□F

DRAWING NO.
CX-410

SHEET OF SHEETS

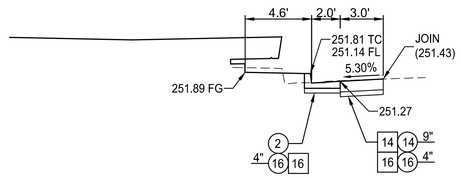

SOUTH FRONTAGE ROAD - CROSS SECTION STA 64+50
SEE DWG C-423
NTS

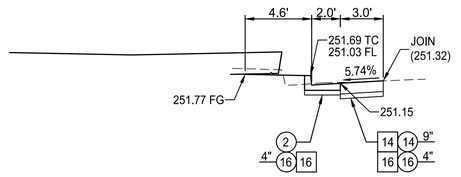

SOUTH FRONTAGE ROAD - CROSS SECTION STA 65+00
SEE DWG C-423
NTS

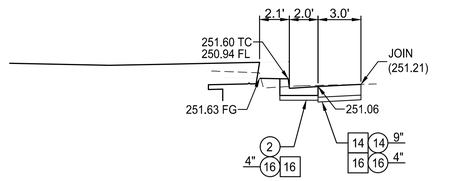

SOUTH FRONTAGE ROAD - CROSS SECTION STA 65+38.10
SEE DWG C-423
NTS

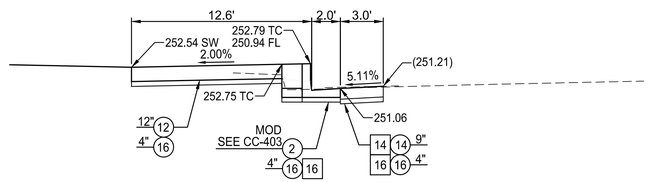

SOUTH FRONTAGE ROAD - CROSS SECTION STA 65+38.10
SEE DWG C-423
NTS

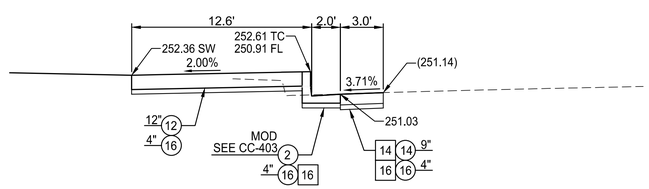

SOUTH FRONTAGE ROAD - CROSS SECTION STA 65+50
SEE DWG C-423
NTS

CONSTRUCTION SYMBOLS

- CONSTRUCT
- EXISTING
- REMOVE
- REMODEL EXISTING
- REMOVE AND RECONSTRUCT
- WORK BY OTHERS

CONSTRUCTION NOTES

1 TYPE A CURB
2 TYPE C INTEGRAL CURB AND GUTTER
12 CONCRETE WALK
14 ASPHALT CONCRETE PAVEMENT
16 UNTREATED BASE MATERIAL

1

THE CITY OF LOS ANGELES OR ITS OFFICERS OR AGENTS SHALL NOT BE RESPONSIBLE FOR THE ACCURACY OR COMPLETENESS OF ELECTRONIC COPIES OF THIS PLAN SHEET.

C:\caddlib\pw\pwwestcoast\vespinosa\dms57684\C-002-CX401-419.dwg 1/18/18 11:57

REVISION DATES
DESIGN STAGE ONLY:

Sheet Version 3.0

HNTB
HNTB Corporation
601 WEST 5TH STREET, SUITE 1000
LOS ANGELES, CALIFORNIA 90071
TEL (213) 403-1000 FAX (213) 403-1001

CITY OF LOS ANGELES DEPARTMENT OF PUBLIC WORKS BUREAU OF ENGINEERING

ENGINEERING
CITY OF LOS ANGELES

STRUCTURE NO.
53C-2329

INDEX NO.

NO.	REVISIONS:	DATE:	BY:
1	RFI 0088, 0093, 0110	1/18/18	XE

THIS PLAN WAS ELECTRONICALLY SIGNED AND STAMPED

REGISTERED PROFESSIONAL ENGINEER
TERENCE T. PAO
No. C 63433
Expires 6-30-2018
CIVIL
STATE OF CALIFORNIA

GARY LEE MOORE, P.E.
CITY ENGINEER
DATE:
LIC. NO. 63433

DESIGN GROUP
ENGINEER: TERENCE PAO
DESIGNED BY: XAVIER ESPINOSA
DRAWN BY: XAVIER ESPINOSA
CHECKED BY: TERENCE PAO
APPROVED BY:

VERTICAL CONTROL: BM 12-04070, 1929 (NGVD 29) – 1985 ADJUSTMENT
HORIZONTAL CONTROL: GPS, PID AE 7704, EPOCH 1991.35

SHEET TITLE: SOUTH FRONTAGE ROAD CROSS SECTIONS
PROJECT: SIXTH STREET VIADUCT REPLACEMENT
ADDRESS: SIXTH STREET VIADUCT (WHITTIER BLVD) LOS ANGELES, CA

WORK ORDER NO.
E70022□F
DRAWING NO.
CX-411
SHEET OF SHEETS

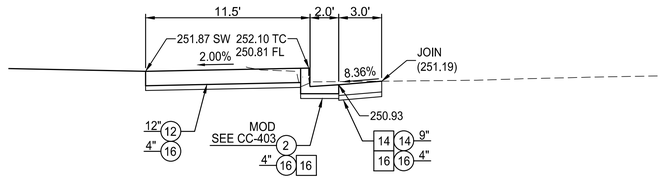

SOUTH FRONTAGE ROAD - CROSS SECTION STA 65+91.51
SEE DWG C-423
NTS

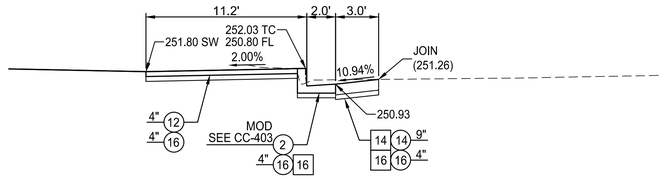

SOUTH FRONTAGE ROAD - CROSS SECTION STA 65+98.51
SEE DWG C-423
NTS

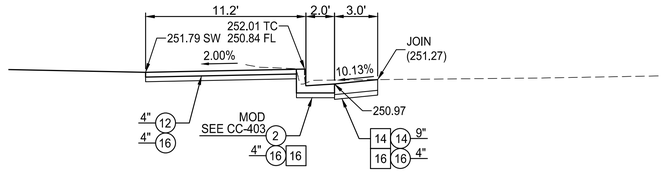

SOUTH FRONTAGE ROAD - CROSS SECTION STA 66+00
SEE DWG C-423
NTS

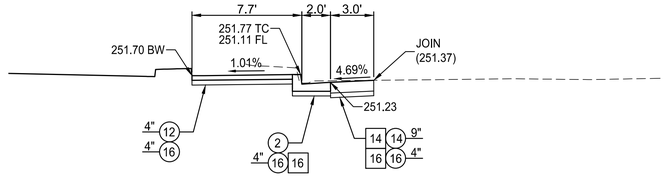

SOUTH FRONTAGE ROAD - CROSS SECTION STA 66+09.52
SEE DWG C-423

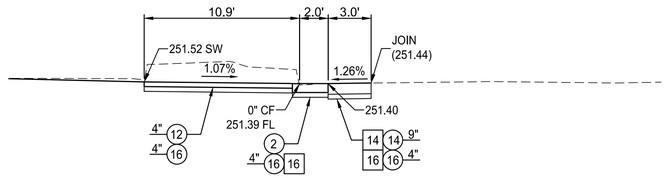

SOUTH FRONTAGE ROAD - CROSS SECTION STA 66+15.53
SEE DWG C-423
NTS

CONSTRUCTION SYMBOLS

- CONSTRUCT
- EXISTING
- REMOVE
- REMODEL EXISTING
- REMOVE AND RECONSTRUCT
- WORK BY OTHERS

CONSTRUCTION NOTES

1 TYPE A CURB
2 TYPE C INTEGRAL CURB AND GUTTER
12 CONCRETE WALK
14 ASPHALT CONCRETE PAVEMENT
16 UNTREATED BASE MATERIAL

BUREAU OF ENGINEERING
ENGINEERING
CITY OF LOS ANGELES

NO.	REVISIONS:	DATE:	BY:
1	RFI 0088, 0093, 0110	1/18/18	XE

STRUCTURE NO.
53C-2329

INDEX NO.

THIS PLAN WAS ELECTRONICALLY SIGNED AND STAMPED

REGISTERED PROFESSIONAL ENGINEER
TERENCE T. PAO
No. C 63433
Expires 6-30-2018
CIVIL
STATE OF CALIFORNIA

BUREAU OF PUBLIC WORKS
DEPARTMENT OF PUBLIC WORKS
CITY OF LOS ANGELES

GARY LEE MOORE, P.E. CITY ENGINEER
LIC. NO. 63433
DATE:

DESIGN GROUP	
ENGINEER:	TERENCE PAO
DESIGNED BY:	XAVIER ESPINOSA
DRAWN BY:	XAVIER ESPINOSA
CHECKED BY:	TERENCE PAO
APPROVED BY:	

VERTICAL CONTROL:
HORIZONTAL CONTROL: GPS; PID AE 1704, EPOCH 1991.35 BM 12-04070, 1929 (NGVD 29) - 1985 ADJUSTMENT

SHEET TITLE: SOUTH FRONTAGE ROAD CROSS SECTIONS
PROJECT: SIXTH STREET VIADUCT REPLACEMENT
ADDRESS: SIXTH STREET VIADUCT (WHITTIER BLVD) LOS ANGELES, CA

WORK ORDER NO.
E70022□F

DRAWING NO.
CX-412

SHEET OF SHEETS

HNTB
HNTB Corporation
601 W. 5TH STREET SUITE 1000
LOS ANGELES, CALIFORNIA 90071
TEL (213) 403-1000 FAX (213) 403-1001

REVISION DATES
DESIGN STAGE ONLY:

THE CITY OF LOS ANGELES OR ITS OFFICERS OR AGENTS SHALL NOT BE RESPONSIBLE FOR THE ACCURACY OR COMPLETENESS OF ELECTRONIC COPIES OF THIS PLAN SHEET.

C:\caddlib\pw\pwwestcoast\xespinosa\dms57684\C-002-CX401-419.dwg 1/18/18 11:58

Sheet Version 3.0

ADDENDUM 5

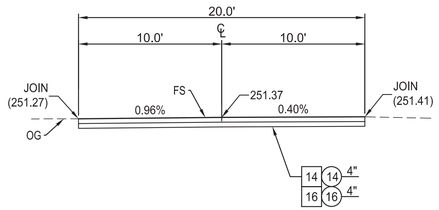

MAINTENANCE ROAD - CROSS SECTION STA 10+18.68
SEE DWG C-424
NTS

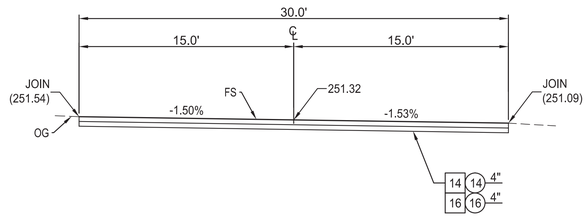

MAINTENANCE ROAD - CROSS SECTION STA 11+17.87
SEE DWG C-424
NTS

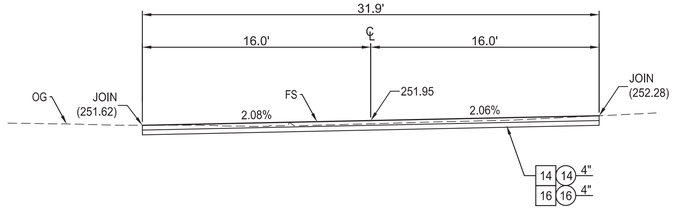

MAINTENANCE ROAD - CROSS SECTION STA 12+90.98
SEE DWG C-424
NTS

CONSTRUCTION SYMBOLS

- CONSTRUCT
- EXISTING
- REMOVE
- REMODEL EXISTING
- REMOVE AND RECONSTRUCT
- WORK BY OTHERS

CONSTRUCTION NOTES

14 ASPHALT CONCRETE PAVEMENT
16 CRUSHED MISCELLANEOUS BASE

APPROVED FOR CONSTRUCTION

METRO TRANSIT DIVISION
BUREAU OF ENGINEERING
CITY OF LOS ANGELES

City of Los Angeles Bureau of Engineering's review of these submittals, plans, specifications, and shop drawings shall not relieve HNTB, its consultants, and its contractors of the responsibility for errors, or omissions in the submitted documents. HNTB is responsible to insure and confirm that the City of Los Angeles Standards (Standards) are used to perform all work on or effecting City facilities. The Standards shall be the current edition in use upon the date City receives such submittal or per an effective date as specified in the agreement (if any).

BUREAU OF ENGINEERING
OFFICIAL RECORD

HNTB
HNTB Corporation
601 W. 5TH STREET SUITE 1000
LOS ANGELES, CALIFORNIA 90071
TEL (213) 403-1000 FAX (213) 403-1001

CITY OF LOS ANGELES DEPARTMENT OF PUBLIC WORKS
BUREAU OF ENGINEERING

ENGINEERING
CITY OF LOS ANGELES

NO.	REVISIONS:	DATE:	BY:

STRUCTURE NO.
53C-2329

INDEX NO. **P-38113**

THIS PLAN WAS ELECTRONICALLY SIGNED AND STAMPED

REGISTERED PROFESSIONAL ENGINEER
TERENCE T. PAO
No. C 63433
Expires 6-30-2016
CIVIL
STATE OF CALIFORNIA

CITY ENGINEER
GARY LEE MOORE, P.E.
DATE:
LIC. NO. 63433

DESIGN GROUP	
ENGINEER:	TERENCE PAO
DESIGNED BY:	XAVIER ESPINOSA
DRAWN BY:	XAVIER ESPINOSA
CHECKED BY:	TERENCE PAO
APPROVED BY:	

VERTICAL CONTROL: BM 12-04070, 1929 (NGVD 29) - 1985 ADJUSTMENT
HORIZONTAL CONTROL: GPS; PID AE 1704, EPOCH 1991.35

SHEET TITLE: MAINTENANCE ROAD CROSS SECTIONS
PROJECT: SIXTH STREET VIADUCT REPLACEMENT
ADDRESS: SIXTH STREET VIADUCT (WHITTIER BLVD) LOS ANGELES, CA

WORK ORDER NO.
E700224F

DRAWING NO.
CX-413

SHEET 29 OF 560 SHEETS

REVISION DATES (DESIGN STAGE ONLY)

THE CITY OF LOS ANGELES OR ITS OFFICERS OR AGENTS SHALL NOT BE RESPONSIBLE FOR THE ACCURACY OR COMPLETENESS OF ELECTRONIC COPIES OF THIS PLAN SHEET.

C:\caddlib\pw\pwwestcoast\xespinosa\dms57684\C-002-CX401-419.dwg 6/22/16 17:31

Sheet Version 3.0

ADDENDUM 5

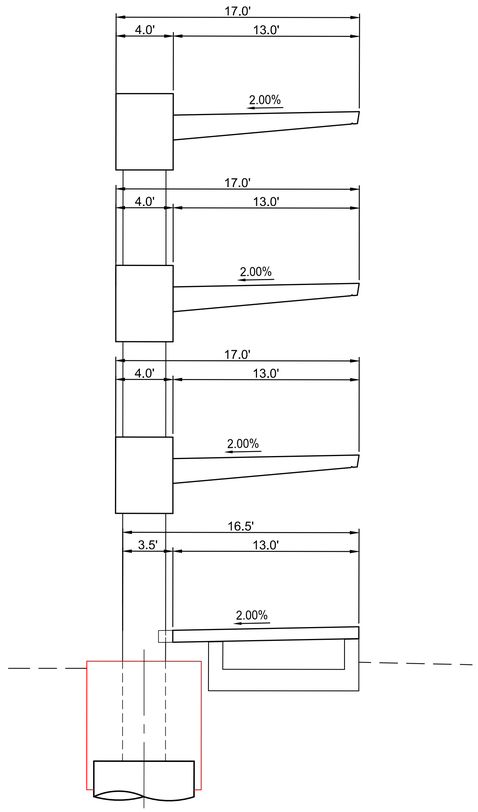

NORTH-EAST PEDESTRIAN HELICAL RAMP

SEE DWG C-418, C-421, C422 FOR GEOMETRY AND PROFILE

SEE STRUCTURAL SHEETS FOR MORE DETAILS

NTS

CONSTRUCTION SYMBOLS

- CONSTRUCT
- EXISTING
- REMOVE
- REMODEL EXISTING
- REMOVE AND RECONSTRUCT
- WORK BY OTHERS

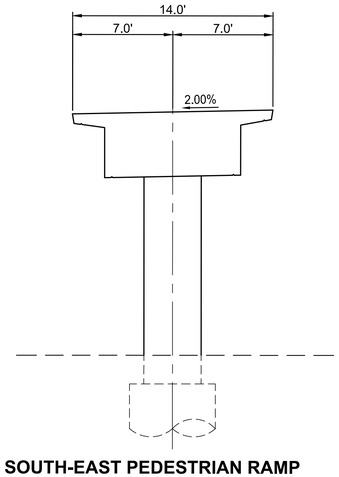

SOUTH-EAST PEDESTRIAN RAMP

SEE DWG C-418, C-419, C420 FOR GEOMETRY AND PROFILE

SEE STRUCTURAL SHEETS FOR MORE DETAILS

NTS

BUREAU OF ENGINEERING
OFFICIAL RECORD

HNTB
HNTB Corporation
601 W. 5TH STREET SUITE 1000
LOS ANGELES, CALIFORNIA 90071
TEL (213) 403-1000 FAX (213) 403-1001

BUREAU OF ENGINEERING

ENGINEERING
CITY OF LOS ANGELES

NO.	REVISIONS:	DATE	BY:

STRUCTURE NO. 53C-2329

INDEX NO. P-38113

REGISTERED PROFESSIONAL ENGINEER
TERENCE T. PAO
No. C 63433
Expires 3-30-2016
CIVIL
STATE OF CALIFORNIA

THIS PLAN WAS ELECTRONICALLY SIGNED AND STAMPED

CITY OF LOS ANGELES DEPARTMENT OF PUBLIC WORKS

GARY LEE MOORE, P.E.
CITY ENGINEER

DESIGN GROUP

ENGINEER:	TERENCE PAO
DESIGNED BY:	XAVIER ESPINOSA
DRAWN BY:	XAVIER ESPINOSA
CHECKED BY:	TERENCE PAO
APPROVED BY:	
DATE:	
LIC. NO.	63433

SHEET TITLE: NORTH & SOUTH PEDESTRIAN RAMPS CROSS SECTIONS

PROJECT: SIXTH STREET VIADUCT REPLACEMENT

ADDRESS: SIXTH STREET VIADUCT (WHITTIER BLVD) LOS ANGELES, CA

VERTICAL CONTROL: BM 12-04070,1929 (NGVD 29) - 1985 ADJUSTMENT
HORIZONTAL CONTROL: GPS; PID AE 1704; EPOCH 1991.35

WORK ORDER NO. E70022□F

DRAWING NO. CX-414

SHEET □0 OF 560 SHEETS

THE CITY OF LOS ANGELES OR ITS OFFICERS OR AGENTS SHALL NOT BE RESPONSIBLE FOR THE ACCURACY OR COMPLETENESS OF ELECTRONIC COPIES OF THIS PLAN SHEET.

REVISION DATES
DESIGN STAGE ONLY:

C:\caddlib\pw\pwwestcoast\xespinosa\dms57684\C-002-CX401-419.dwg 6/22/16 17:35

Sheet Version 3.0

ADDENDUM 5

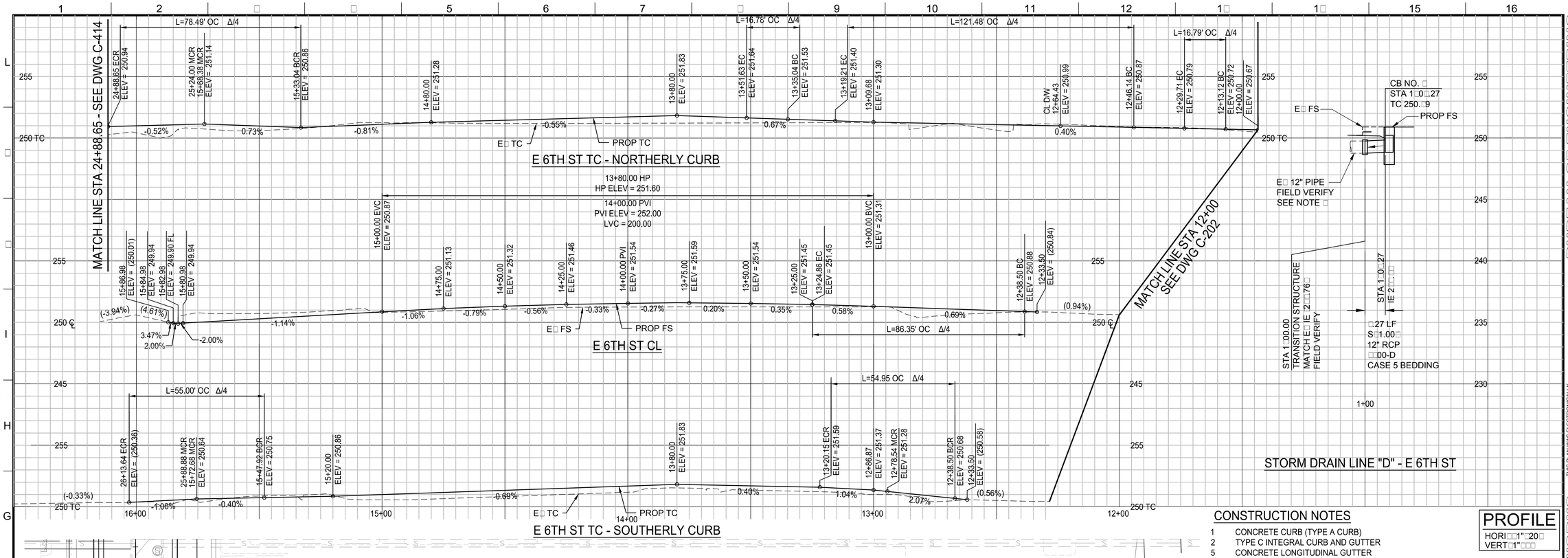

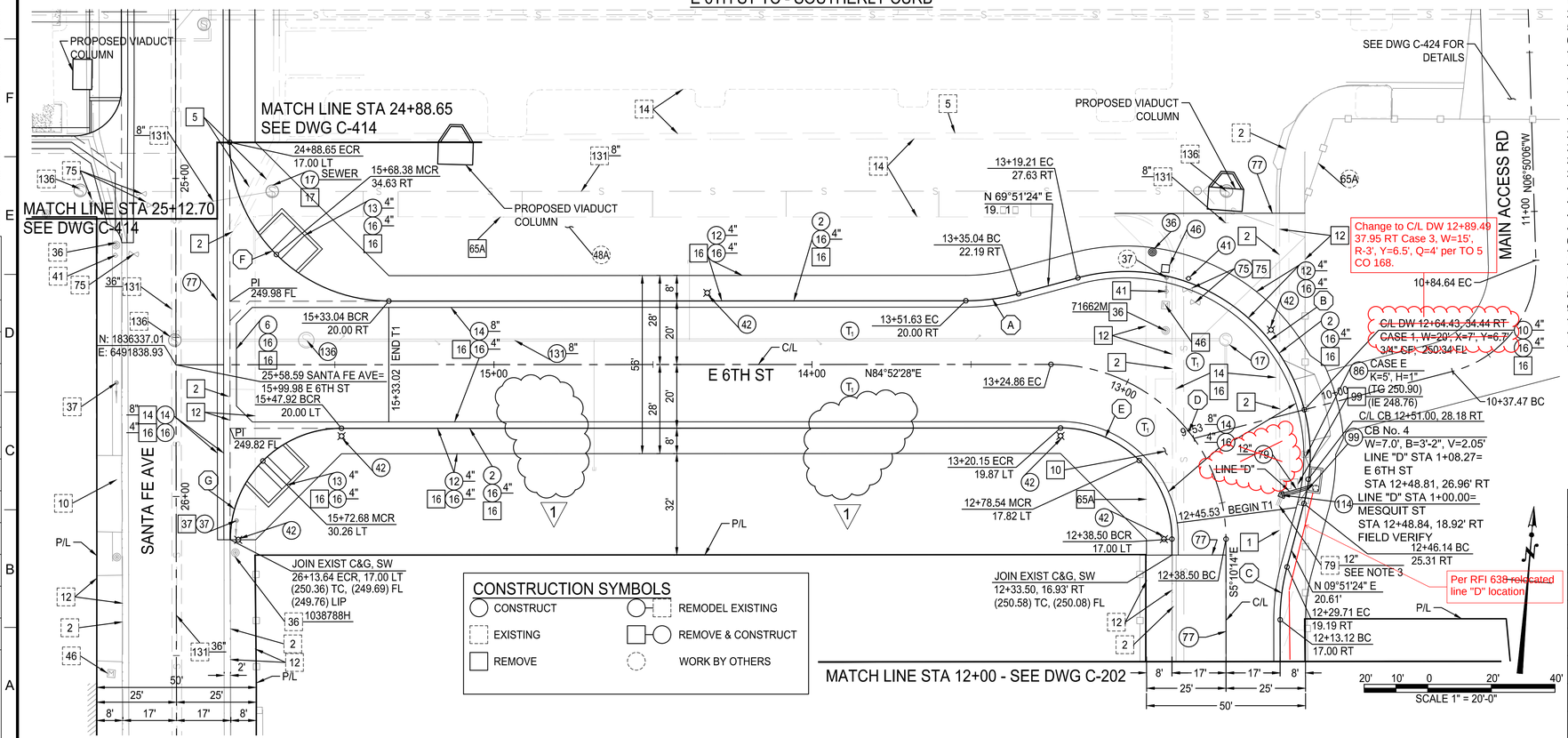

CONSTRUCTION NOTES

1	CONCRETE CURB (TYPE A CURB)
2	TYPE C INTEGRAL CURB AND GUTTER
5	CONCRETE LONGITUDINAL GUTTER
6	CONCRETE INTERSECTION GUTTER
10	CONCRETE DRIVEWAY
12	CONCRETE WALK
13	CURB RAMP
14	ASPHALT CONCRETE PAVEMENT
16	UNTREATED BASE MATERIAL
17	ADJUST MAINTENANCE HOLE TO GRADE
24	PLANT TREE
26	TREE WELL
36	RELOCATE UTILITY POLE
37	RELOCATE POLE ANCHOR
41	RELOCATE/ADJUST FIRE HYDRANT TO GRADE
42	ELECTROLIER
46	RELOCATE WATER METER TO GRADE
48A	BUILDING
65A	WROUGHT IRON FENCE
75	WATER VALVE & COVER
77	SAWCUT LINE & JOIN
79	REINFORCED CONCRETE PIPE (RCP)
86	LOCAL DEPRESSION AT CATCH BASIN
99	CURB OPENING CATCH BASIN
114	TRANSITION STRUCTURE "C" PER S-372-1
131	SEWER PIPE
136	SEWER MAINTENANCE HOLE (PRECAST)

NOTES:

1. CURB FACE SHALL BE 8" UNLESS OTHERWISE NOTED.
2. CMB UNDERNEATH CURB & GUTTER AND X-GUTTER SHALL MATCH PAVEMENT STRUCTURAL SECTION.
3. CONTRACTOR SHALL POTHOLE TO DETERMINE LOCATION AND ELEVATION OF EXISTING 12" DIA PIPE AND PERFORM CCTV TO CONFIRM PIPE CONDITION THROUGH EXISTING DOWNSTREAM CONNECTION. SUBMIT PLANS AND DETAILS TO ENGINEER FOR APPROVAL.

CURVE DATA TABLE

No.	RADIUS	DELTA	LENGTH	TANGENT
A	□□.00□	15°01'04"	16.7□□	□.□□□
B	5□.00□	120°00'00"	121.□□□	100.□6□
C	6□.00□	15°01'38"	16.79□	□.□□□
D	55.00□	89°57'18"	□6.□5□	5□.96□
E	□5.00□	89°57'18"	5□.95□	□□.97□
F	50.00□	89°56'46"	7□.□9□	□9.95□
G	□5.00□	90°02'37"	55.00□	□5.0□□

PROFILE

HORI□□1"□20□
VERT□1"□□□

THE CITY OF LOS ANGELES OR ITS OFFICERS OR AGENTS SHALL NOT BE RESPONSIBLE FOR THE ACCURACY OR COMPLETENESS OF ELECTRONIC COPIES OF THIS PLAN SHEET.

C:\cadd\b\pw\pwwestcoast\yespinosa\dms57684\C-002-C201-C202.dwg 9/26/16 16:54

REVISION DATES
DESIGN STAGE ONLY□

Sheet Version 3.0

HNTB
HNTB Corporation
601 W. 5TH STREET SUITE 1000
LOS ANGELES, CALIFORNIA 90071
TEL (213) 403-1000 FAX (213) 403-1001

CITY OF LOS ANGELES DEPARTMENT OF PUBLIC WORKS

BUREAU OF ENGINEERING

ENGINEERING
CITY OF LOS ANGELES

NO.	REVISIONS:	DATE	BY:
1	DELETE TREES (2), CONST NOTE 24 & 26	09/26/16	XE

STRUCTURE NO.
53C-2329

INDEX NO.

THIS PLAN WAS ELECTRONICALLY SIGNED AND STAMPED.

REGISTERED PROFESSIONAL ENGINEER
LAWRENCE T. PAO
No. C 63433
Expires 3-30-2018
CIVIL
STATE OF CALIFORNIA

CITY ENGINEER
GARY LEE MOORE, P.E.
DATE:
LIC. NO. 63433

DESIGN GROUP
ENGINEER: TERENCE PAO
DESIGNED BY: XAVIER ESPINOSA
DRAWN BY: XAVIER ESPINOSA
CHECKED BY: TERENCE PAO
APPROVED BY: TERENCE PAO

VERTICAL CONTROL: BM 12-04070, 1929 (NGVD 29) - 1985 ADJUSTMENT
HORIZONTAL CONTROL: GPS; FID AE 1704, EPOCH 1991.35

SHEET TITLE: EAST SIXTH STREET PLAN & PROFILE

PROJECT: SIXTH STREET VIADUCT REPLACEMENT

ADDRESS: SIXTH STREET VIADUCT (WHITTIER BLVD) LOS ANGELES, CA

WORK ORDER NO.
E700229F

DRAWING NO.
C-201

SHEET 15 OF 57 SHEETS

ADDENDUM 5

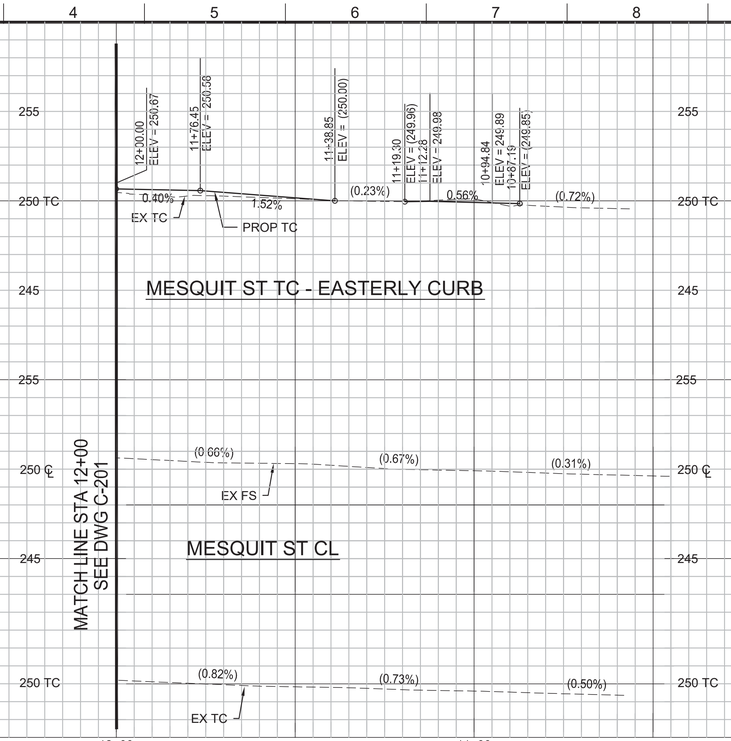

Per RFI 638 approx location of 12" SDR 35 storm drain line D.

Per RFI 638 connect new SDR 35 storm drain line here with S-333-0 Conc. Collar

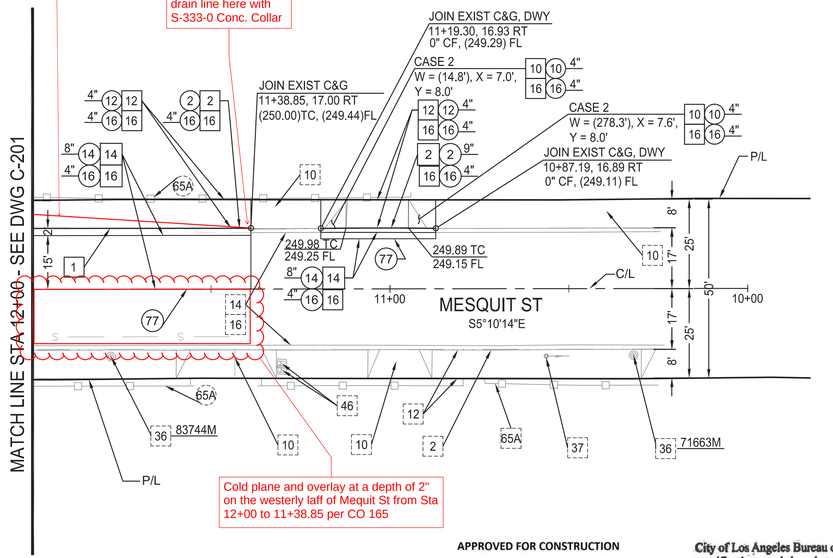

Cold plane and overlay at a depth of 2" on the westerly laff of Mequit St from Sta 12+00 to 11+38.85 per CO 165

APPROVED FOR CONSTRUCTION

METRO TRANSIT DIVISION
BUREAU OF ENGINEERING
CITY OF LOS ANGELES

City of Los Angeles Bureau of Engineering's review of these submittals, plans, specifications, and shop drawings shall not relieve HNTB, its consultants, and its contractors of the responsibility for errors, or omissions in the submitted documents. HNTB is responsible to insure and confirm that the City of Los Angeles Standards (Standards) are used to perform all work on or effecting City facilities. The Standards shall be the current edition in use upon the date City receives such submittal or per an effective date as specified in the agreement (if any).

CONSTRUCTION SYMBOLS

- CONSTRUCT
- EXISTING
- REMOVE
- REMODEL EXISTING
- REMOVE & CONSTRUCT
- WORK BY OTHERS

CONSTRUCTION NOTES

1	CONCRETE CURB (TYPE A CURB)
2	TYPE C INTEGRAL CURB AND GUTTER
10	CONCRETE DRIVEWAY
12	CONCRETE WALK
14	ASPHALT CONCRETE PAVEMENT
16	UNTREATED BASE MATERIAL
36	RELOCATE UTILITY POLE
37	RELOCATE POLE ANCHOR
46	RELOCATE WATER METER TO GRADE
65A	WROUGHT IRON FENCE
77	SAWCUT LINE & JOIN

NOTES:

1. CURB FACE SHALL BE 8" UNLESS OTHERWISE NOTED.
2. CMB UNDERNEATH CURB & GUTTER AND X-GUTTER SHALL MATCH PAVEMENT STRUCTURAL SECTION.

PROFILE

HORIZ: 1"=20'
VERT: 1"=4'

BUREAU OF ENGINEERING
OFFICIAL RECORD

HNTB
HNTB Corporation
601 W. 5TH STREET SUITE 1000
LOS ANGELES, CALIFORNIA 90071
TEL (213) 403-1000 FAX (213) 403-1001

20' 10' 0 20' 40'
SCALE 1" = 20'-0"

CITY OF LOS ANGELES DEPARTMENT OF PUBLIC WORKS
BUREAU OF ENGINEERING

ENGINEERING
CITY OF LOS ANGELES

STRUCTURE NO. 53C-2329

INDEX NO. P-38113

NO.	REVISIONS:	DATE:	BY:

REGISTERED PROFESSIONAL ENGINEER
LAWRENCE T. PAO
No. C 63433
Expires 3-31-2016
CIVIL
STATE OF CALIFORNIA

"THIS PLAN WAS ELECTRONICALLY SIGNED AND STAMPED"

CITY ENGINEER
GARY LEE MOORE, P.E.
DESIGN GROUP
ENGINEER: TERENCE PAO LIC. NO. 63433
DESIGNED BY: XAVIER ESPINOSA
DRAWN BY: XAVIER ESPINOSA
CHECKED BY: TERENCE PAO
APPROVED BY: TERENCE PAO

VERTICAL CONTROL: BM 12-04070,1929 (NGVD 29) - 1985 ADJUSTMENT
HORIZONTAL CONTROL: GPS; PID AE 1704; EPOCH 1991.35

SHEET TITLE: MESQUIT STREET PLAN & PROFILE

PROJECT: SIXTH STREET VIADUCT REPLACEMENT

ADDRESS: SIXTH STREET VIADUCT (WHITTIER BLVD) LOS ANGELES, CA

WORK ORDER NO. E700224F

DRAWING NO. C-202

SHEET 32 OF 560 SHEETS

REVISION DATES (DESIGN STAGE ONLY)

C:\caddlib\pw\pwwestcoast\snolsmith\dms57684\C-002-C201-C202.dwg 6/10/16 13:02

Sheet Version 3.0

THE CITY OF LOS ANGELES OR ITS OFFICERS OR AGENTS SHALL NOT BE RESPONSIBLE FOR THE ACCURACY OR COMPLETENESS OF ELECTRONIC COPIES OF THIS PLAN SHEET.

ADDENDUM 5

MATCH LINE STA 24+88.65 - SEE DWG C-414 (LANDSCAPE PACKAGE)

MATCH LINE STA 25+12.69
SEE DWG C-414
(LANDSCAPE
PACKAGE)

APPROVED FOR CONSTRUCTION

METRO TRANSIT DIVISION

BUREAU OF ENGINEERING
CITY OF LOS ANGELES

City of Los Angeles Bureau of Engineering's review of these submittals, plans, specifications, and shop drawings shall not relieve HNTB, its consultants, and its contractors of the responsibility for errors, or omissions in the submitted documents. HNTB is responsible to insure and confirm that the City of Los Angeles Standards (Standards) are used to perform all work on or effecting City facilities. The Standards shall be the current edition in use upon the date City receives such submittal or per an effective date as specified in the agreement (if any).

24+88.65 ECR
250.94 TC
250.17 FL

15+68.38 MCR
250.48 HP

PI
249.98 FL
250.02
(250.07)
249.96 FL

25+58.59
SANTA FE AVE =
15+99.98
E 6TH ST

SANTA FE AVE
N5°10'56"E

15+72.68 MCR
249.97 FL

26+13.64 ECR
(250.36) TC

15+47.92 BCR
250.75 TC
250.08 FL

15+33.04 BCR
250.86 TC
250.19 FL

250.30 TC
250.12 FL

12+13.12 BC
250.72 TC
250.06 FL

12+29.71 EC
250.79 TC
250.12 FL

12+38.50 BC
250.88

12+45.53 BEG T1
250.93

12+33.50
(250.84)

12+81.68 MC
251.18

13+00.00 BVC
251.31

13+24.86 EC
251.45

13+20.15 ECR

13+21.61
250.88

15+47.92
250.33

15+33.04 END T1
250.50

15+20.00
250.65

15+10.00
250.76

15+00.00 EVC
250.87

15+00

14+80.00
251.08

C/L

14+60.00
251.25

14+40.00
251.39

14+20.00
251.48

E 6TH ST
N84°52'28"E

14+00

14+00.00
251.54

13+80.00
251.60 HP

13+60.00
251.56

13+40.00
251.50

13+40

13+35.04
251.53 TC
250.86 FL

13+40.06
251.56 TC
250.90 FL

MESQUIT ST
S5°10'14"E

12+00

11+76.45
(250.40)

11+50.00
(250.31)

11+38.85
(250.21)

11+00

11+19.30
(249.35)

11+12.28
249.98 TC
249.25 FL

11+00.00
(249.27)

11+00.00
(249.92)

10+94.84
249.89 TC
249.15 FL

10+87.19
(249.22)

MATCHLINE STA 13+25.00
SEE BOTTOM LEFT

MATCHLINE STA 13+25.00
SEE ABOVE RIGHT

SCALE 1" = 10'-0"

SECTION
NTS
A
C-203

SEE C-201 AND C-202 FOR CONSTRUCTION
SYMBOLS & PROFILES

HNTB
HNTB Corporation
601 W. 5TH STREET SUITE 1000
LOS ANGELES, CALIFORNIA 90071
TEL (213) 403-1000 FAX (213) 403-1001

BUREAU OF ENGINEERING
OFFICIAL RECORD

THE CITY OF LOS ANGELES OR ITS OFFICERS OR AGENTS SHALL NOT BE RESPONSIBLE FOR THE ACCURACY OR COMPLETENESS OF ELECTRONIC COPIES OF THIS PLAN SHEET.

C:\caddlib\pw\pwwestcoast\vespinosa\dms57684\C-002-C203.dwg 6/23/16 09:05

REVISION DATES (DESIGN STAGE ONLY)

Sheet Version 3.0

CITY OF LOS ANGELES DEPARTMENT OF PUBLIC WORKS BUREAU OF ENGINEERING

ENGINEERING
CITY OF LOS ANGELES

NO. | REVISIONS: | DATE | BY:

STRUCTURE NO.
53C-2329

INDEX NO. P-38113

REGISTERED PROFESSIONAL ENGINEER
TERENCE T. PAO
No. C 63433
Expires 9-30-2016
CIVIL
STATE OF CALIFORNIA

THIS PLAN WAS ELECTRONICALLY SIGNED AND STAMPED

GARY LEE MOORE, P.E.
CITY ENGINEER
DATE:
LIC. NO. 63433

DESIGN GROUP

ENGINEER: TERENCE PAO
DESIGNED BY: XAVIER ESPINOSA
DRAWN BY: XAVIER ESPINOSA
CHECKED BY: TERENCE PAO
APPROVED BY: TERENCE PAO

VERTICAL CONTROL: BM 12-04070, 1929 (NGVD 29) - 1985 ADJUSTMENT
HORIZONTAL CONTROL: GPS; PID AE 1704, EPOCH 1991.35

SHEET TITLE: EAST SIXTH STREET GRID ELEVATIONS

PROJECT: SIXTH STREET VIADUCT REPLACEMENT

ADDRESS: SIXTH STREET VIADUCT (WHITTIER BLVD) LOS ANGELES, CA

WORK ORDER NO.
E700224F

DRAWING NO.
C-203

SHEET 33 OF 560 SHEETS

ADDENDUM 5

MATEO ST - WESTERLY CURB

37+57.14 ECR ELEV = 250.72
37+35.64 PI ELEV = 250.72
37+17.47 ELEV = 251.02
36+90.11 ELEV = 251.81
36+66.70 ELEV = 251.34
36+37.06 ECR ELEV = (251.64)
36+62.18 ELEV = 251.30
(0.29%) -1.71% -2.87% 1.99% 0.83% (0.51%) (0.37%)
PROP FS
E□ FS

MATEO ST - CL

37+82.45 ELEV 251.54
36+90.15 ELEV = 251.90
36+30.35 ELEV (252.28)
(-0.48%) -0.38% -0.63% (-0.42%) (-0.53%)
E□ FS
PROP FS

MATEO ST - EASTERLY CURB

L=31.28' OC Δ/4
37+79.26 BCR ELEV (251.10)
37+65.17 MCR 66+40.11 MCR
66+26.06 ECR ELEV (251.47)
37+08.89 ELEV = 251.66
36+90.19 ELEV = 252.04
36+61.68 ELEV = 251.74
36+30.23 ECR ELEV = 252.18
35+91.89 ELEV = 251.98
35+86.19 ELEV = 252.12
35+60.64 ELEV = 252.14
35+25.25 ELEV (252.31)
8" TO 10" CF TRANSITION
PROP TC
(-0.43%) -0.42% -1.92% -0.56% -2.04% 1.08% 0.71% -0.52% -0.48%
E□ FS
PROP FS
PROP TC
0" CF TO 6" CF TRANSITION
0" CF
37+59.27 PI ELEV = 251.38

Type A Curb per RFI 571

WEST PEDESTRIAN RAMP - NORTHERLY EDGE

16+43.49 ELEV = 252.48
16+93.13 ELEV = 252.82
15+50.00 ELEV = 253.16
PROP FS
EX FS
-0.92% -0.55%

WEST PEDESTRIAN RAMP - CL

16+45.49 ELEV 252.50
15+50.81 P.V.C. ELEV = 253.62
PROP FS
E□ FS
-0.54%

WEST PEDESTRIAN RAMP - SOUTHERLY EDGE

16+45.49 ELEV = 252.50
16+08.13 ELEV = 252.60
15+50.00 ELEV = 252.88
PROP FS
EX FS
-0.22% -0.54%

MATCH LINE STA 15+50.00 SEE DWG C-□

WEST PEDESTRIAN RAMP GRADING AND ALIGNMENT WEST OF STA 12+17.00 SHALL BE PER C-200 AND L-121 DISREGARD ITEMS IN RED HATCHED AREA

2" Cold plane and overlay per C O 165 typ 3 mark ups on this sheet

JOIN EXIST C&G, SW 9+58.34 BCR, 42.23 RT (250.80) TC, (250.32) FL
SEE CC-401 FOR DETAILS
JOIN EXIST C&G, SW 37+57.14 ECR, 19.87 RT (250.72) TC, (250.37) FL
9+59.20 BCR 42.35 RT
9+56.00 JOIN EXIST
9+68.01 EC N:1836389.68 E:6491133.25
SIXTH ST
9.72' 37.97' 88.52' 27.32' 13.86' 5.75'
9+54.68 BCR 27.96 LT
SEE CC-401 FOR DETAILS
JOIN EXIST C&G, SW 36+37.06 ECR, 19.98 RT (251.64) TC, (251.21) FL
36+90.15 MATEO ST □ 10+00.00 SIXTH ST 251.90
N84°52'28"E
36+62.18 PI 251.30 (251.34)
36+30.35 JOIN EXIST 252.28
37+82.45 JOIN EXIST 251.54 (250.35)
37+35.64 PI 250.72
MATEO ST S05°13'30"E
38+00 37+00 36+00 S05°13'17"E 35+00
VIADUCT CONSTRUCTION C/L
37+69.27 PI 251.38
36+55.19 PI 251.71
36+30.23 ECR 20.13 LT 252.18 TC 251.51 FL
(250.70) (251.88)
37+65.17 MCR 0" CF, 251.17 FL
INTERSECTION PAVEMENT LIMIT, 10+51.18
SEE CC-401 FOR DETAILS 10+45.03 BCR 35.00 LT 252.26 TC 251.60 FL
JOIN EXIST C&G 37+79.26 BCR, 20.03 LT (251.10) TC, (250.61) FL
JOIN EXIST C&G 35+86.19, 20.17 LT (252.12) TC, (251.29) FL
JOIN EXIST C&G 35+60.64, 20.13 LT (252.18) TC, (251.40) FL
JOIN EXIST C&G, SW 35+25.25, 20.12 LT (252.31) TC, (251.66) FL
SEE CC-401 FOR DETAILS
JOIN EXIST AC 66+26.06 ECR, 20.06 LT 0" CF, (251.47) FL
C:\ DW 35+98.17, 20.13 LT CASE 2, W=19', X4' Y=10' SEE CC401 FOR DETAILS
16+09.75 EC 15+99.71 BC
RELOCATE PEDESTRIAN PUSH BUTTON
SERVICE VEHICLE ACCESS ROAD SEE DWG C-425 & C-426
WEST PEDESTRIAN RAMP 15+73.40 SERVICE VEHICLE ACCESS ROAD 15+37.46
Install Case 2, W=18', X= 3', Y=10' per RFI 593.
SIXTH ST VIADUCT N84°52'28"E 11+00
45.5' 36.5 82'
S75°58'21"E 16+00 N75°58'21"W 20'
PEDESTRIAN RAMP MATCH LINE STA 15+50.00 SEE DWG C-□02

NOTES:
1. CURB FACE SHALL BE 8" UNLESS OTHERWISE NOTED.
2. MINIMUM 4" CMB SHALL BE PLACED UNDERNEATH SIDEWALKS AND CURB RAMPS.
3. CMB UNDERNEATH CURB & GUTTER AND X-GUTTER SHALL MATCH PAVEMENT STRUCTURAL SECTION.
4. SEE DRAINAGE PLANS FOR PROPOSED DRAINAGE.
5. FOR b THICKNESS, MATCH PAVEMENT STRUCTURAL SECTION.
6. ALL R VALUES WILL BE CONFIRMED DURING FIELD OPERATIONS.

CONSTRUCTION NOTES

1 CONCRETE CURB (TYPE A CURB)
2 TYPE C INTEGRAL CURB & GUTTER
10 CONCRETE DRIVEWAY
12 CONCRETE WALK
13 CURB RAMP
14 ASPHALT CONCRETE PAVEMENT
16 UNTREATED BASE MATERIAL
17 ADJUST MAINTENANCE HOLE TO GRADE
38 RELOCATE AND/OR ADJUST STREET LIGHTING PULL BOX TO GRADE
39 RELOCATE AND/OR ADJUST TRAFFIC SIGNAL PULL BOX TO GRADE
43 RELOCATE AND/OR ADJUST DWPPS VENT TO GRADE
46 RELOCATE AND/OR ADJUST WATER METER TO GRADE
49 TRAFFIC SIGNAL CABINET
53 GAS VALVE
56 RELOCATE AND/OR ADJUST DWPPS POLE TO GRADE
57 RELOCATE AND/OR ADJUST STREET LIGHTING POLE TO GRADE
58 RELOCATE AND/OR ADJUST TRAFFIC SIGNAL POLE TO GRADE
63 GUY WIRE
65 CHAIN LINK FENCE
66 CONCRETE MASONRY BLOCK WALL
70 SIGN AND POST
75 WATER VALVE & COVER
77 SAWCUT LINE & JOIN

CONSTRUCTION SYMBOLS

CONSTRUCT
EXISTING
REMOVE
REMODEL EXISTING
REMOVE & CONSTRUCT
WORK BY OTHERS

CURVE DATA TABLE				
No.	RADIUS	DELTA	LENGTH	TANGENT
A	1500.00□	3°49'49"	100.27□	50.16□
B	25.00□	90°05'53"	□9.□1□	25.0□□
C	25.00□	89°53'49"	□9.2□□	2□.96□
D1	□.29□	90°00'00"	6.75□	□.29□
D2	□.29□	90°00'00"	6.75□	□.29□
E	20.00□	89°36'46"	□1.2□□	19.□7□
F	25.00□	81°24'25"	□5.52□	21.51□
G	□0.00□	19°10'25"	10.0□□	5.07□

PROFILE
HORI□□1"□20□
VERT□1"□□□

SCALE 1" = 20'-0"

HNTB Corporation
601 W. 5TH STREET SUITE 1000
LOS ANGELES, CALIFORNIA 90071
TEL (213) 403-1000 FAX (213) 403-1001

CITY OF LOS ANGELES DEPARTMENT OF PUBLIC WORKS
BUREAU OF ENGINEERING
ENGINEERING
CITY OF LOS ANGELES

GARY LEE MOORE, P.E. CITY ENGINEER
DESIGN GROUP LIC. NO. 63433 DATE:
ENGINEER: TERENCE PAO
DESIGNED BY: XAVIER ESPINOSA
DRAWN BY: XAVIER ESPINOSA
CHECKED BY: TERENCE PAO
APPROVED BY:

NO. REVISIONS: DATE BY:
RFI 0088, 0093, 0110 1/18/18 XE

STRUCTURE NO. 53C-2329
INDEX NO.

REGISTERED PROFESSIONAL ENGINEER TERENCE T. PAO No. C 63433 Expires 9-30-2018 CIVIL STATE OF CALIFORNIA

THIS PLAN WAS ELECTRONICALLY SIGNED AND STAMPED.

VERTICAL CONTROL: BM 12-04070, 1929 (NGVD 29) - 1985 ADJUSTMENT
HORIZONTAL CONTROL: GPS; PID AE 1704, EPOCH 1991.35

SHEET TITLE: MATEO STREET & WEST PEDESTRIAN RAMP - PLAN & PROFILE
PROJECT: SIXTH STREET VIADUCT REPLACEMENT
ADDRESS: SIXTH STREET VIADUCT (WHITTIER BLVD) LOS ANGELES, CA

WORK ORDER NO. E70022□F
DRAWING NO. C-401
SHEET OF SHEETS

REVISION DATES DESIGN STAGE ONLY□

THE CITY OF LOS ANGELES OR ITS OFFICERS OR AGENTS SHALL NOT BE RESPONSIBLE FOR THE ACCURACY OR COMPLETENESS OF ELECTRONIC COPIES OF THIS PLAN SHEET.

C:\caddlb\pw\pwwestcoast\vespinosa\dms57684\C-002-C401.dwg 1/18/18 12:40

Sheet Version 3.0

ADDENDUM 5

WEST PEDESTRIAN RAMP GRADING AND ALIGNMENT WEST OF STA 12+17.00 SHALL BE PER C-200 AND L-121
DISREGARD ITEMS IN RED HATCHED AREA

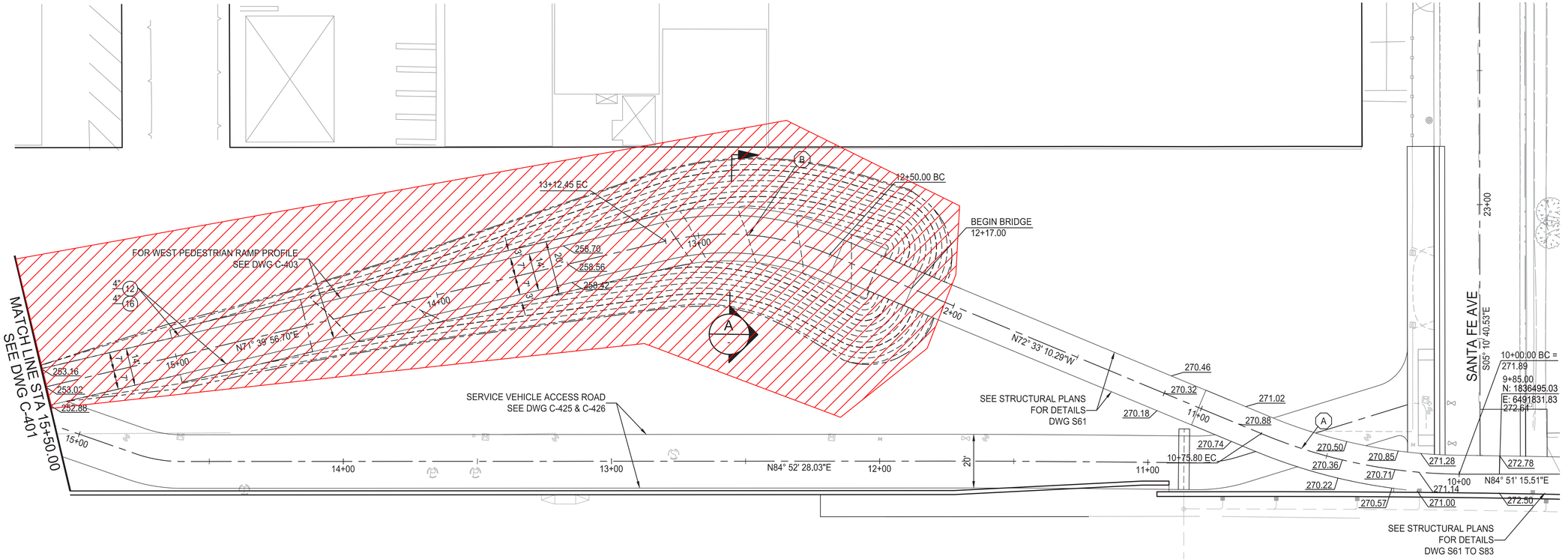

BUREAU OF ENGINEERING
OFFICIAL RECORD

CONSTRUCTION SYMBOLS

- CONSTRUCT
- EXISTING
- REMOVE
- REMODEL EXISTING
- REMOVE & CONSTRUCT
- WORK BY OTHERS

CONSTRUCTION NOTES

12 CONCRETE WALK
16 UNTREATED BASE MATERIAL

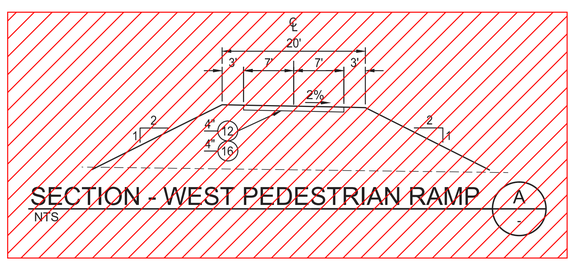

SECTION - WEST PEDESTRIAN RAMP A
NTS

CURVE DATA TABLE				
No.	RADIUS	DELTA	LENGTH	TANGENT
A	196.04'	22°09'08"	75.79'	38.38'
B	100.00'	35°46'53"	62.45'	32.28'

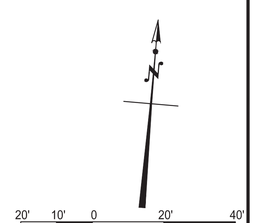

HNTB
HNTB Corporation
601 W. 5TH STREET SUITE 1000
LOS ANGELES, CALIFORNIA 90071
TEL (213) 403-1000 FAX (213) 403-1001

CITY OF LOS ANGELES DEPARTMENT OF PUBLIC WORKS
BUREAU OF ENGINEERING

ENGINEERING
CITY OF LOS ANGELES

GARY LEE MOORE, P.E.
CITY ENGINEER

DESIGN GROUP
ENGINEER: TERENCE PAO LIC NO. 81237 DATE:
DESIGNED BY: XAVIER ESPINOSA
DRAWN BY: XAVIER ESPINOSA
CHECKED BY: TERENCE PAO
APPROVED BY:

NO.	REVISIONS:	DATE:	BY:

STRUCTURE NO. 53C-2329
INDEX NO. P-38113

REGISTERED PROFESSIONAL ENGINEER
TERENCE T. PAO
No. C 63433
Expires 6-30-2018
CIVIL
STATE OF CALIFORNIA

THIS PLAN WAS ELECTRONICALLY SIGNED AND STAMPED

SHEET TITLE: WEST PEDESTRIAN RAMP PLAN VIEW
PROJECT: SIXTH STREET VIADUCT REPLACEMENT
ADDRESS: SIXTH STREET VIADUCT (WHITTIER BLVD) LOS ANGELES, CA

VERTICAL CONTROL: BM 12-04070,1929 (NGVD 29) - 1985 ADJUSTMENT
HORIZONTAL CONTROL: GPS, PID AE 7704, EPOCH 1991.35

WORK ORDER NO. E700224F
DRAWING NO. C-402
SHEET 35 OF 560 SHEETS

REVISION DATES (DESIGN STAGE ONLY)

THE CITY OF LOS ANGELES OR ITS OFFICERS OR AGENTS SHALL NOT BE RESPONSIBLE FOR THE ACCURACY OR COMPLETENESS OF ELECTRONIC COPIES OF THIS PLAN SHEET.

C:\caddlib\pw\skhvriz\s\west\dms57684\C-002-C402.dwg 6/10/16 15:49

Sheet Version 3.0

ADDENDUM 5

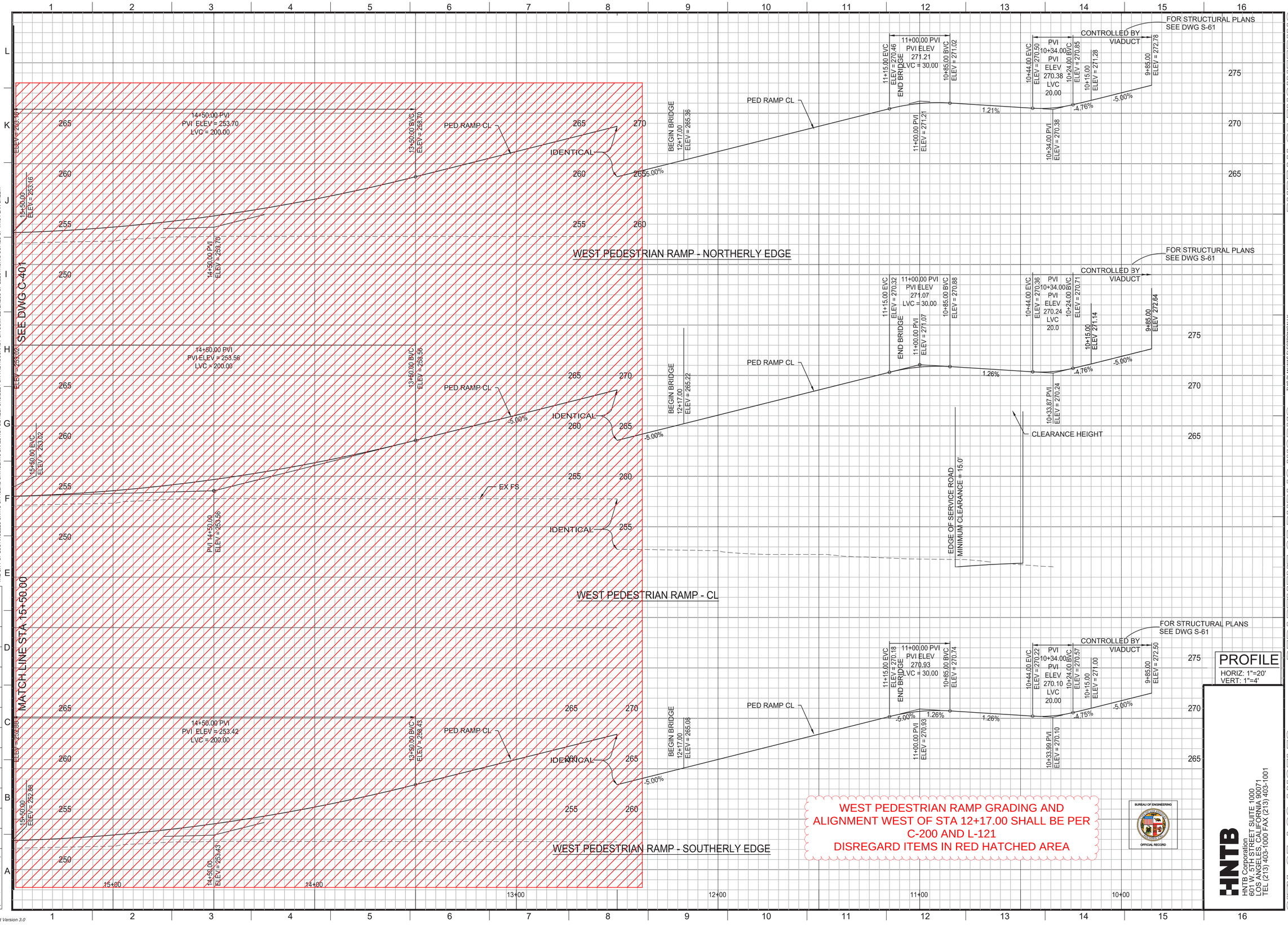

PROFILE
HORIZ: 1"=20'
VERT: 1"=4'

WEST PEDESTRIAN RAMP GRADING AND ALIGNMENT WEST OF STA 12+17.00 SHALL BE PER C-200 AND L-121
DISREGARD ITEMS IN RED HATCHED AREA

BUREAU OF ENGINEERING
OFFICIAL RECORD

HNTB
HNTB Corporation
601 W. 5TH STREET SUITE 1000
LOS ANGELES, CALIFORNIA 90071
TEL (213) 403-1000 FAX (213) 403-1001

CITY OF LOS ANGELES DEPARTMENT OF PUBLIC WORKS BUREAU OF ENGINEERING

ENGINEERING
CITY OF LOS ANGELES

NO.	REVISIONS:	DATE	BY:

STRUCTURE NO. 53C-2329

INDEX NO. P-38113

REGISTERED PROFESSIONAL ENGINEER TERENCE T. PAO No. C 63433 Exp. 3-30-2016 CIVIL STATE OF CALIFORNIA

THIS PLAN WAS ELECTRONICALLY SIGNED AND STAMPED

GARY LEE MOORE, P.E. CITY ENGINEER

DESIGN GROUP		DATE:
ENGINEER:	TERENCE PAO	LIC. NO. 63433
DESIGNED BY:	XAVIER ESPINOSA	
DRAWN BY:	XAVIER ESPINOSA	
CHECKED BY:	TERENCE PAO	
APPROVED BY:		

VERTICAL CONTROL:	BM 12-04070, 1929 (NGVD 29) - 1985 ADJUSTMENT
HORIZONTAL CONTROL:	GPS; PID AE 1704, EPOCH 1991.35
SHEET TITLE:	WEST PEDESTRIAN RAMP PROFILE
PROJECT:	SIXTH STREET VIADUCT REPLACEMENT
ADDRESS:	SIXTH STREET VIADUCT (WHITTIER BLVD) LOS ANGELES, CA

WORK ORDER NO. E700224F

DRAWING NO. C-403

SHEET 36 OF 560 SHEETS

REVISION DATES (DESIGN STAGE ONLY)

C:\caddlib\pw\pwwestcoast\yespinosa\dms57684\C-002-C403.dwg 6/09/16 17:51

Sheet Version 3.0

THE CITY OF LOS ANGELES OR ITS OFFICERS OR AGENTS SHALL NOT BE RESPONSIBLE FOR THE ACCURACY OR COMPLETENESS OF ELECTRONIC COPIES OF THIS PLAN SHEET.

ADDENDUM 5

L=66.85'
8+04.09 ELEV = 250.60
8+63.86 BC ELEV = 250.87
8+97.81 MCR ELEV = 251.07
9+31.84 EC ELEV = 251.27
CL D/W 9+35.26 EC ELEV = 251.29
L=39.31' OC Δ/4
9+54.88 BCR ELEV = 251.40
9+54.75 MCR ELEV = 251.52
9+74.34 MCR ELEV = 251.52
36+37.06 ECR ELEV = (251.84)
L=39.23' OC Δ/4
36+30.23 ECR ELEV = 252.18
36+47.89 MCR 10+25.42 MCR ELEV = 252.22
10+45.03 BCR ELEV = 252.26
TRANSITION
10+62.28 ELEV = 252.29
10+69.94 ELEV = 251.78
10+80.04 ELEV = 251.89
11+00.00 ELEV = 252.09
11+50.00 ELEV = 252.84
12+00.00 ELEV = 253.79
0.47%
0.60%
1.00%
1.50%
1.90%
PROP TC
EX FS
NORTH TC
PROPOSED VIADUCT FL
NORTH FL
PROP FS
VC=500'
SSD=503'
DS=50 mph
9+56.00 ELEV = 251.66
10+00.00 ELEV = 251.90
BVC 10+40.00 ELEV = 252.19
10+50.00 ELEV = 252.27
11+00.00 ELEV = 252.78
11+50.00 ELEV = 253.51
12+00.00 ELEV = 254.45
(0.39%)
(0.14%)
0.54%
0.73%
0.80%
1.03%
1.45%
1.89%
EX FS
6TH ST. CL
PROP FS
MATCH LINE STA 12+00
SEE DWG C-405
L=6.75' OC Δ/4
L=6.75' OC Δ/4
L=2.03'
L=35.52' OC Δ/4
9+58.34 ELEV = (250.80)
9+59.20 BCR ELEV = 250.81
37+40.84 MCR 9+74.18 MCR ELEV = 250.95
37+57.15 ECR ELEV = (250.72)
ECR ELEV = 252.04
10+44.43 BCR ELEV = 252.15
10+56.97 ELEV = 251.52
10+58.06 ELEV = 252.17
10+62.02 ELEV = 252.24
10+44.43 ELEV = 252.48
ECR FL ELEV = 252.41
10+60.90 ELEV = 251.74
11+00.00 ELEV = 252.13
11+50.00 ELEV = 252.88
12+00.00 ELEV = 253.83
0.72%
0.50%
2.11%
1.83%
1.00%
1.50%
1.91%
0.83%
-1.29%
(0.58%)
(0.30%)
(0.39%)
EX FS
SOUTH TC
PROP TC
SOUTH FL
EX FS
PROP FS
□00
9□00
10□00
11□00
12□00
255

WEST PEDESTRIAN RAMP GRADING AND ALIGNMENT WEST OF STA 12+17.00 SHALL BE PER C-200 AND L-121
DISREGARD ITEMS IN RED HATCHED AREA

16+09.75 BC
FOR CURVE DATA SEE C-425 & C-426 (TYP)
SERVICE VEHICLE ACCESS ROAD SEE DWG C-425 & C-426
WEST PEDESTRIAN RAMP SEE DWG C-401, C-402, & C-403
15+73.40
~~PEDESTRIAN RAMP WEST =~~
~~15+37.46~~
Service Vehicle Access Road
N: 1836471.89
E: 6491266.72
15+99.71 EC
N71°39'57"E
N75°58'21"W
14+77.38 BC
14+60.67 EC
C/L D/W 35+98.17, 20.13 LT
SEE DWG C-401 & CC-401 FOR DETAILS
36+30.23 ECR, 20.13 LT
252.18 TC, 251.52 FL
JOIN EXIST SW
8+63.85 BC, 26.70 LT
250.89
C/L BUS PAD 8+49.08 BCR, 14.70 LT
CASE 2, L=90', t=8", W=12', P=12" MIN 15" MAX
JOIN EXIST C&G
8+04.09, 26.70 LT
(250.60) TC, (250.05) FL
JOIN EXIST C&G, SW
36+37.06 ECR, 19.98 RT
(251.64) TC,(251.21) FL
9+54.68 BCR, 27.96 LT
251.40 TC, 250.91 FL
C/L DW 9+35.26 BCR, 27.67 LT
CASE 2, W=22', X=3', Y=4'
0" CF, 250.80 FL
SEE CC-401 FOR DETAILS
9+31.84 EC
27.59 LT
8+84.81
250.55
(250.61)
8+00
N88°42'17"E
N: 1836382.53
E: 6490965.43
8+67.74 BC
251.44
250.72 FL
250.94 FL
251.02
(251.11)
9+00
9+68.01 EC
251.77
(251.15)
BEGIN RECONSTRUCTION
9+56.00
251.66
10+00
251.90
252.19
252.27
252.78
253.51
10+00.00 SIXTH ST =
36+90.15 MATEO ST
37+00
MATEO ST
S05°13'17"E
SI□TH ST
N84°52'28"E
MOD SEE CC-403
10+72.06
BEG TYPE 80 BARRIER (MOD) SEE DETAIL ON CC-403
252.13 FL
11+28.00
END TYPE 80 BARRIER (MOD)
BEG TYPE 80 BARRIER
252.88 FL
C/L CB 10+81.94
29.54 RT, CASE F
K=5', H=1", H2=1.6"
11+28.00
BEG RET WALL
PROP MOMENT SLAB
SEE STRUCTURE PLANS
SEE C-423 FOR DETAILS
JOIN EXIST C&G, SW
9+58.34, 42.23 RT
(250.80) TC, (250.32) FL
9+59.20 BCR, 42.35 RT
250.81 TC, 250.33 FL
(250.44)
JOIN EXIST C&G, SW
37+57.15 ECR, 19.87 RT
(250.72) TC ,(250.37) FL
JOIN EXIST AC
10+40.03 BCR, 69.05 RT
0" CF, (251.47) FL
JOIN EXIST C&G, SW
37+79.26 ECR, 20.03 LT
(251.10) TC, (250.60) FL
SOUTH FRONTAGE RD
10+45.03 BCR, 35.00 LT
252.26 TC, 251.60 FL
END C&G, BEGIN CURB
10+62.28, 35.00 LT
252.29 TC, 251.63 FL
Plan Clarification No. 2
11+00
11+05.47
BEG RET WALL
10+69.20
0" CF, BEG TYPE 80 BARRIER (MOD) SEE CC-403 FOR DETAIL
251.78 FL
C/L CB 10+71.16
31.54 LT, CASE F
K=5', H=1", H2=1.6"
252.09 FL
252.84 FL
25□.79 FL
25□.□□ FL
MATCH LINE STA 12+00
SEE DWG C-405
254.45
79
12
Cold plane and overlay 2" A C paving per Change Order 165

CONSTRUCTION NOTES

1 CONCRETE CURB (TYPE A CURB)
2 TYPE C INTEGRAL CURB & GUTTER
7 BUS PAD
10 CONCRETE DRIVEWAY
12 CONCRETE WALK
13 CURB RAMP
14 ASPHALT CONCRETE PAVEMENT
16 UNTREATED BASE MATERIAL
17 ADJUST MAINTENANCE HOLE TO GRADE
20 TREE
24 PLANT TREE
26 TREE WELL
38 RELOCATE AND/OR ADJUST STREET LIGHTING PULL BOX TO GRADE
39 RELOCATE AND/OR ADJUST TRAFFIC SIGNAL PULL BOX TO GRADE
41 RELOCATE AND/OR ADJUST FIRE HYDRANT TO GRADE
56 RELOCATE AND/OR ADJUST DWPPS POLE TO GRADE
57 RELOCATE AND/OR ADJUST STREET LIGHTING POLE TO GRADE
58 RELOCATE AND/OR ADJUST TRAFFIC SIGNAL POLE TO GRADE
64 RETAINING WALL
66 CONCRETE MASONRY BLOCK WALL
71 CONCRETE BARRIER
75 WATER VALVE & COVER
77 SAWCUT LINE & JOIN
81 CURBSIDE GRATING CATCH BASIN (CGB)
86 LOCAL DEPRESSION AT CATCH BASIN
126 CRASH CUSHION
186 GATE LOOPS

CONSTRUCTION SYMBOLS

CONSTRUCT
EXISTING
REMOVE
REMODEL EXISTING
REMOVE AND RECONSTRUCT
WORK BY OTHERS

TYPE □0 BARRIER TANGENT DATA TABLE

No.	BEARING	LENGTH
L	N84°52'28"E	□19.□5□
M	N84°52'28"E	□50.06□

CURVE DATA TABLE

No.	RADIUS	DELTA	LENGTH	TANGENT
A	1500.00□	3°49'49"	100.27□	50.16□
B	25.00□	90°05'53"	□9.□1□	25.0□□
C	25.00□	89°53'49"	□9.2□□	2□.96□
D1	□.29□	90°00'00"	6.75□	□.29□
D2	□.29□	90°00'00"	6.75□	□.29□
E	20.00□	89°36'46"	□1.2□□	19.□7□
F	25.00□	81°24'25"	□5.52□	21.51□
G	50.00□	19°09'11"	16.71□	□.□□□
H	□0.00□	19°10'25"	10.0□□	5.07□
□	1000.00□	3°49'49"	66.□5□	□□.□□□

NOTES

1. SEE STRUCTURE PLANS FOR RETAINING WALLS
2. SEE ARCHITECTURAL PLANS FOR RAILING

PROFILE
HORI□□1"□20□
VERT□1"□□□

SCALE 1" = 20'-0"

HNTB
HNTB Corporation
601 W. 5TH STREET SUITE 1000
LOS ANGELES, CALIFORNIA 90071
TEL (213) 403-1000 FAX (213) 403-1001

CITY OF LOS ANGELES DEPARTMENT OF PUBLIC WORKS
BUREAU OF ENGINEERING
ENGINEERING
CITY OF LOS ANGELES

GARY LEE MOORE, P.E.
CITY ENGINEER
DATE:
LIC. NO. 63433

NO.	REVISIONS:	DATE	BY:
1	RFI 23 NOT ISSUED	4/19/17	XE
2	RFI 0088, 0093, 0110	11/16/18	XE

REGISTERED PROFESSIONAL ENGINEER TERENCE T. PAO No. C 63433 Expires 9-30-2018 CIVIL STATE OF CALIFORNIA

THIS PLAN WAS ELECTRONICALLY SIGNED AND STAMPED

STRUCTURE NO. 53C-2329

INDEX NO.

ENGINEER:	TERENCE PAO
DESIGNED BY:	XAVIER ESPINOSA
DRAWN BY:	XAVIER ESPINOSA
CHECKED BY:	TERENCE PAO
APPROVED BY:	

DESIGN GROUP

VERTICAL CONTROL:	BM 12-04070, 1929 (NGVD 29) - 1985 ADJUSTMENT
HORIZONTAL CONTROL:	GPS; PID AE 1704, EPOCH 1991.35
SHEET TITLE:	SIXTH STREET VIADUCT PLAN & PROFILE
PROJECT:	SIXTH STREET VIADUCT REPLACEMENT
ADDRESS:	SIXTH STREET VIADUCT (WHITTIER BLVD) LOS ANGELES, CA

WORK ORDER NO.
E70022□F
DRAWING NO.
C-404
SHEET OF SHEETS

REVISION DATES DESIGN STAGE ONLY□

C:\caddlib\pw\pwwestcoast\xespinosa\dms57684\C-002-C404-C413.dwg 1/18/18 13:09

Sheet Version 3.0

THE CITY OF LOS ANGELES OR ITS OFFICERS OR AGENTS SHALL NOT BE RESPONSIBLE FOR THE ACCURACY OR COMPLETENESS OF ELECTRONIC COPIES OF THIS PLAN SHEET.

ADDENDUM 5

MATCH LINE STA 12□00
SEE DWG C-□0□

MATCH LINE STA 16□00
SEE DWG C-□06

12+00.00 ELEV = 253.79
12+50.00 ELEV = 254.94
13+00.00 ELEV = 256.29
13+50.00 ELEV = 257.86
14+00.00 ELEV = 259.68
14+50.00 ELEV = 261.70
15+00.00 ELEV = 263.93
16+00.00 ELEV = 268.83

2.30% 2.70% 3.13% 3.64% 4.04% 4.46% 4.79% 4.97%

NORTH

E.LEV = 260.35

IDENTICAL

12+00.00 ELEV = 254.45
12+50.00 ELEV = 255.61
13+00.00 ELEV = 256.97
13+50.00 ELEV = 258.56
14+00.00 ELEV = 260.35
14+50.00 ELEV = 262.36
15+00.00 ELEV = 264.58
15+40.00 ELEV = 265.84
16+00.00 ELEV = 269.51

2.31% 2.74% 3.16% 3.59% 4.02% 4.45% 4.82% 5.00%

IDENTICAL

PROP FS

13.34'

VC=500'
SSD=503'
DS=50 mph

6TH ST. CL

PVI 12+90.00
ELEV = 254.01

EVC 15+40.00
ELEV = 266.51

12+00.00 ELEV = 253.83
12+50.00 ELEV = 254.98
13+00.00 ELEV = 256.33
13+50.00 ELEV = 257.90
14+00.00 ELEV = 259.72
14+50.00 ELEV = 261.73
15+00.00 ELEV = 263.94
15+40.00 ELEV = 265.83
16+00.00 ELEV = 268.84

2.30% 2.70% 3.13% 3.64% 4.02% 4.42% 4.73% 5.03%

SOUTH

255 255 255 265 270 270

WEST PEDESTRIAN RAMP GRADING AND ALIGNMENT WEST OF STA 12+17.00 SHALL BE PER C-200 AND L-121
DISREGARD ITEMS IN RED HATCHED AREA

12□00 1□00 1□□00 15□00 16□00

14+00 12+00 11+00

WEST PEDESTRIAN RAMP
SEE DWG C-401, C-402, & C-403

15+50.01
34.25 LT

SERVICE
PEDESTRIAN RAMP
SEE DWG C-425 & C-426

12+27.50
35.00 LT

13+52.56
35.00 LT
257.94

15+30.70
38.04 LT
265.31

15+50.00
END TYPE 80
BARRIER

15+92.13 BC

25□79 FL

26□□□ FL

254.94 FL 256.29 FL 256.84 FL 257.35 FL 257.39 FL 257.86 FL 259.68 FL 261.70 FL 263.93 FL 265.84 FL 266.33 FL

256.84 257.02 257.26

262.54

12+00 14+69.96
ANGLE POINT TYPE 80 BARRIER

MOD
SEE CC-403

C/L CB 13+24.87
31.54 LT, CASE F
K=5', H=1", H2=1.6"

14+20.00
END TYPE 80 BARRIER (MOD)
BEG TYPE 80 BARRIER

PROP MOMENT SLAB
SEE STRUCTURE PLANS

15+45.50
BEG TYPE 80
BARRIER

FACE OF
ABUTMENT

BEGIN BRIDGE
15+50.00
267.01

15+92.13 BC
269.12

13+00 14+00 15+00 16

N84°52'28"E

C/L SIXTH ST

255.61 256.97 260.35 262.36 264.58 266.51 269.51

254.45

PROP MOMENT SLAB
SEE STRUCTURE PLANS

C/L CB 13+24.87
29.54 RT, CASE F
K=5', H=1", H2=1.6"

13+91.91, 33.00 RT
ANGLE POINT TYPE 80 BARRIER

APPROACH SLAB
SEE STRUCTURE PLANS

15+64.00
BEG TYPE 80
BARRIER

15+40.01
34.00 RT
265.83

15+41.00
END TYPE 80
BARRIER

254.98 FL 256.33 FL 256.88 257.43 257.90 FL 259.72 FL 261.73 FL 263.94 FL

256.84 FL 257.06 257.30 257.39 FL

266.34 FL

W = 4.30' W = 4.30'

14+91.91, 34.00 RT
ANGLE POINT TYPE 80 BARRIER

15+92.13 BC

SOUTH FRONTAGE RD

IMPERIAL ST

17□ 17□

CONSTRUCTION SYMBOLS

- CONSTRUCT
- EXISTING
- REMOVE
- REMODEL EXISTING
- REMOVE AND RECONSTRUCT
- WORK BY OTHERS

CONSTRUCTION NOTES

12	CONCRETE WAL□
1□	ASPHALT CONCRETE PAVEMENT
16	UNTREATED BASE MATERIAL
51	ELECTRICAL VAULT
56	AD□UST DWPPS POLE TO GRADE
6□	RETAINING WALL
71	CONCRETE BARRIER
□1	CURBSIDE GRATING CATCH BASIN □CGB□
□6	LOCAL DEPRESSION AT CATCH BASIN
126	CRASH CUSHION

CURVE DATA TABLE				
No.	RADIUS	DELTA	LENGTH	TANGENT
G	50□□.00□	14°21'42"	1261.□1□	6□□.2□□
B	5000.00□	32°30'52"	2□□7.□2□	1□5□.05□
H	□966.00□	14°38'52"	1269.57□	6□□.27□

TYPE □0 BARRIER TANGENT DATA TABLE		
No.	BEARING	LENGTH
L	N84°52'28"E	□19.□5□
M	N84°52'28"E	□50.06□
N	N85°26'51"E	100.00□
O	N84°52'28"E	□9.09□
P	N82°00'50"E	70.1□□
□	N84°52'12"E	10.00□
R	N84°52'28"E	□6.6□□
S	N84°52'28"E	2□.1□□

NOTES

1. SEE STRUCTURE PLANS FOR RETAINING WALLS
2. SEE ARCHITECTURAL PLANS FOR RAILING

20' 10' 0 20' 40'
SCALE 1" = 20'-0"

PROFILE

HORI□□1"□20□
VERT□1"□□□

BUREAU OF ENGINEERING

ENGINEERING
CITY OF LOS ANGELES

NO.	REVISIONS:	DATE:	BY:
1	RFI 19	4/12/17	XE
2	RFI 0068, 0093, 0110	11/16/18	XE

STRUCTURE NO.
53C-2329

INDEX NO.

REGISTERED PROFESSIONAL ENGINEER
TERENCE T. PAO
No. C 63433
Expires 6-30-2018
CIVIL
STATE OF CALIFORNIA

THIS PLAN WAS ELECTRONICALLY SIGNED AND STAMPED

CITY OF LOS ANGELES DEPARTMENT OF PUBLIC WORKS

GARY LEE MOORE, P.E. CITY ENGINEER

DESIGN GROUP
ENGINEER: TERENCE PAO LIC. NO. 63433 DATE:
DESIGNED BY: XAVIER ESPINOSA
DRAWN BY: XAVIER ESPINOSA
CHECKED BY: TERENCE PAO
APPROVED BY:

VERTICAL CONTROL: BM 12-04070,1929 (NGVD 29) - 1985 ADJUSTMENT
HORIZONTAL CONTROL: GPS, PID AE 1704, EPOCH 1991.35

SHEET TITLE: SIXTH STREET VIADUCT PLAN & PROFILE

PROJECT: SIXTH STREET VIADUCT REPLACEMENT

ADDRESS: SIXTH STREET VIADUCT (WHITTIER BLVD) LOS ANGELES, CA

HNTB
HNTB Corporation
601 W. 5TH STREET SUITE 1000
LOS ANGELES, CALIFORNIA 90071
TEL (213) 403-1000 FAX (213) 403-1001

WORK ORDER NO.
E70022□F

DRAWING NO.
C-405

SHEET OF SHEETS

REVISION DATES:
DESIGN STAGE ONLY:

THE CITY OF LOS ANGELES OR ITS OFFICERS OR AGENTS SHALL NOT BE RESPONSIBLE FOR THE ACCURACY OR COMPLETENESS OF ELECTRONIC COPIES OF THIS PLAN SHEET.

C:\caddlib\pw\pwwestcoast\vespinosa\dms57684\C-002-C404-C413.dwg 1/18/18 13:06

Sheet Version 3.0

ADDENDUM 5

PROFILE

HORI□□1"=20□
VERT□1"□□□

MATCH LINE STA 16□00
SEE DWG C-□05

MATCH LINE STA 20□00
SEE DWG C-□07

16+00.00 ELEV = 268.83
16+00.00 ELEV = 269.51
16+00.00 ELEV = 268.84
17+25.00 ELEV = 275.08
17+50.00 ELEV = 276.27
BVC 17+25.00 ELEV = 275.76
17+50.00 ELEV = 276.99
18+00.00 ELEV = 279.32
18+00.00 ELEV = 278.64
18+50.00 ELEV = 280.76
19+00.00 ELEV = 283.47
19+00.00 ELEV = 282.75
19+50.00 ELEV = 285.30
19+50.00 ELEV = 284.62
20+00.00 ELEV = 286.95
20+00.00 ELEV = 286.23

4.97% 4.72% 4.71% 3.96% 3.70% 3.20%
5.00% 4.90% 4.67% 4.32% 3.99% 3.65% 3.30%
5.03% 4.78% 4.78% 4.27% 4.01% 3.76% 3.25%

IDENTICAL
IDENTICAL

NORTH FL
6TH ST. CL
SOUTH FL

VC=600'
SSD=443'
DS=50 mph

PROP FS

℄ SANTA FE AVE

270
290

SEE DWG C-□1□

SANTA FE AVE

SEE STRUCTURE PLANS

SEE STRUCTURE PLANS

SIXTH ST

26□.□□ FL

10+00 9+50 17+00 18+00 19+00

14' 14' 8' 9 9 2 2 6 0 2 1 1 2 0 9 9 2 2 1 5 0

71 71 G H B 1

275.08 FL 276.27 FL 278.64 FL 280.76 FL 282.75 FL 284.62 FL
275.76 276.99 279.32 281.48 283.47 285.30
269.51 286.95

2□6.2□ FL

SEE DWG C-□22

CONSTRUCTION SYMBOLS

- CONSTRUCT
- EXISTING
- REMOVE
- REMODEL EXISTING
- REMOVE AND RECONSTRUCT
- WORK BY OTHERS

CONSTRUCTION NOTES

9 STREET PER TYPICAL SECTION
71 CONCRETE BARRIER

CURVE DATA TABLE				
No.	RADIUS	DELTA	LENGTH	TANGENT
G	50□□.00□	14°21'42"	1261.□1□	6□□.2□□
B	5000.00□	32°30'52"	2□□7.□2□	1□5□.05□
H	□966.00□	14°38'52"	1269.57□	6□□.27□

20' 10' 0 20' 40'
SCALE 1" = 20'-0"

BUREAU OF ENGINEERING

ENGINEERING
CITY OF LOS ANGELES

NO.	REVISIONS:	DATE	BY:
1	RFI 0068, 0093, 0110	1/18/18	XE

STRUCTURE NO.
53C-2329

INDEX NO.

REGISTERED PROFESSIONAL ENGINEER
TERENCE T. PAO
No. C 63433
Expires 6-30-2018
CIVIL
STATE OF CALIFORNIA

"THIS PLAN WAS ELECTRONICALLY SIGNED AND STAMPED"

CITY OF LOS ANGELES DEPARTMENT OF PUBLIC WORKS

GARY LEE MOORE, P.E. CITY ENGINEER

ENGINEER: TERENCE PAO LIC. NO. 63433 DESIGN GROUP
DESIGNED BY: XAVIER ESPINOSA
DRAWN BY: XAVIER ESPINOSA
CHECKED BY: TERENCE PAO
APPROVED BY:
DATE:

VERTICAL CONTROL: BM 12-04070, 1929 (NGVD 29) - 1985 ADJUSTMENT
HORIZONTAL CONTROL: GPS; PID AE 1704, EPOCH 1991.35

SHEET TITLE: SIXTH STREET VIADUCT PLAN & PROFILE

PROJECT: SIXTH STREET VIADUCT REPLACEMENT

ADDRESS: SIXTH STREET VIADUCT (WHITTIER BLVD) LOS ANGELES, CA

HNTB
HNTB Corporation
601 W. 5TH STREET SUITE 1000
LOS ANGELES, CALIFORNIA 90071
TEL (213) 403-1000 FAX (213) 403-1001

WORK ORDER NO.
E70022□F

DRAWING NO.
C-406

SHEET OF SHEETS

REVISION DATES
DESIGN STAGE ONLY□

C:\caddlib\pw\pwwestcoast\xespinosa\dms5768#\C-002-C404-C413.dwg 1/18/18 13:02

Sheet Version 3.0

THE CITY OF LOS ANGELES OR ITS OFFICERS OR AGENTS SHALL NOT BE RESPONSIBLE FOR THE ACCURACY OR COMPLETENESS OF ELECTRONIC COPIES OF THIS PLAN SHEET.

ADDENDUM 5



PROFILE

HORI□□1"□20□
VERT□1"□□□

CONSTRUCTION SYMBOLS

- CONSTRUCT
- EXISTING
- REMOVE
- REMODEL EXISTING
- REMOVE AND RECONSTRUCT
- WORK BY OTHERS

CONSTRUCTION NOTES

9 STREET PER TYPICAL SECTION
71 CONCRETE BARRIER

CURVE DATA TABLE				
No.	RADIUS	DELTA	LENGTH	TANGENT
G	50□□.00□	14°21'42"	1261.□1□	6□□.2□□
B	5000.00□	32°30'52"	2□□7.□2□	1□5□.05□
H	□966.00□	14°38'52"	1269.57□	6□□.27□

20' 10' 0 20' 40'
SCALE 1" = 20'-0"

BUREAU OF ENGINEERING
OFFICIAL RECORD

HNTB
HNTB Corporation
601 W. 5TH STREET SUITE 1000
LOS ANGELES, CALIFORNIA 90071
TEL (213) 403-1000 FAX (213) 403-1001

CITY OF LOS ANGELES DEPARTMENT OF PUBLIC WORKS BUREAU OF ENGINEERING

ENGINEERING
CITY OF LOS ANGELES

NO.	REVISIONS:	DATE	BY:

STRUCTURE NO. 53C-2329

INDEX NO. P-38113

"THIS PLAN WAS ELECTRONICALLY SIGNED AND STAMPED"

REGISTERED PROFESSIONAL ENGINEER
TERENCE T. PAO
No. C 63433
Expires 6-30-2016
CIVIL
STATE OF CALIFORNIA

CITY ENGINEER: GARY LEE MOORE, P.E.
LIC NO. 63433
DESIGN GROUP
ENGINEER: TERENCE PAO
DESIGNED BY: XAVIER ESPINOSA
DRAWN BY: XAVIER ESPINOSA
CHECKED BY: TERENCE PAO
APPROVED BY:
DATE:

VERTICAL CONTROL: BM 12-04070, 1929 (NGVD 29) - 1985 ADJUSTMENT
HORIZONTAL CONTROL: GPS; PID AE 1704, EPOCH 1991.35

SHEET TITLE: SIXTH STREET VIADUCT PLAN & PROFILE

PROJECT: SIXTH STREET VIADUCT REPLACEMENT

ADDRESS: SIXTH STREET VIADUCT (WHITTIER BLVD) LOS ANGELES, CA

WORK ORDER NO. E70022□F

DRAWING NO. C-407

SHEET □0 OF 560 SHEETS

REVISION DATES
DESIGN STAGE ONLY□

C:\caddlib\pw\pwwestcoast\yespinosa\dms57684\C-002-C404-C413.dwg 6/17/16 08:34

THE CITY OF LOS ANGELES OR ITS OFFICERS OR AGENTS SHALL NOT BE RESPONSIBLE FOR THE ACCURACY OR COMPLETENESS OF ELECTRONIC COPIES OF THIS PLAN SHEET.

Sheet Version 3.0

ADDENDUM 5

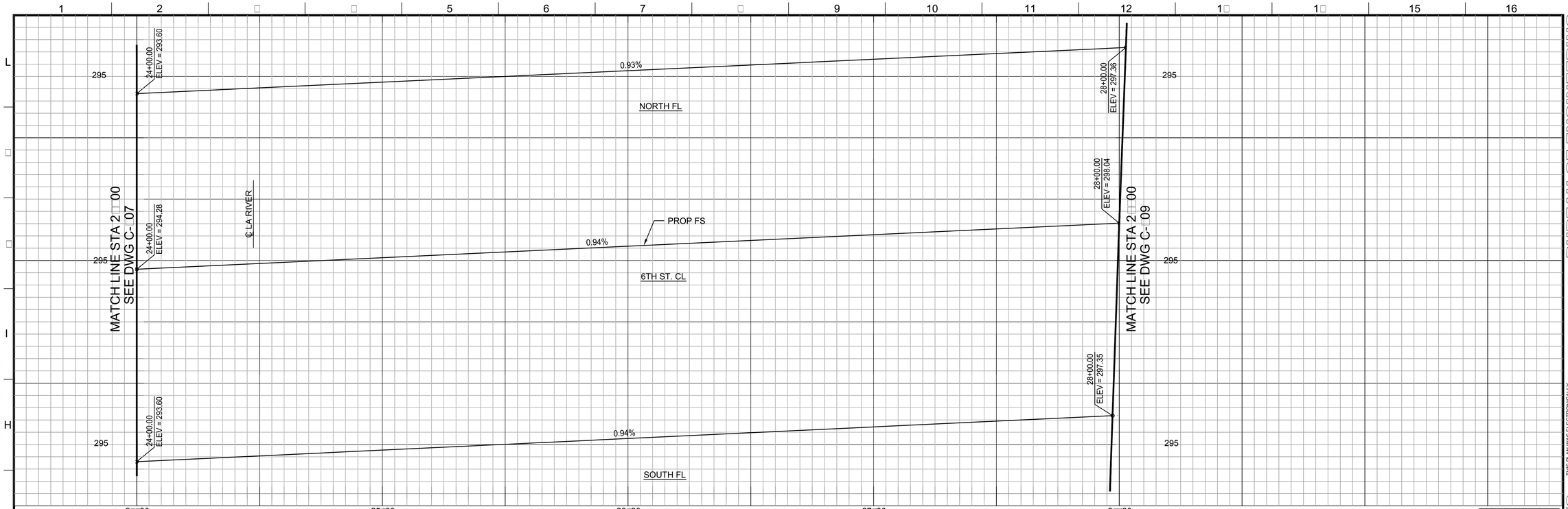

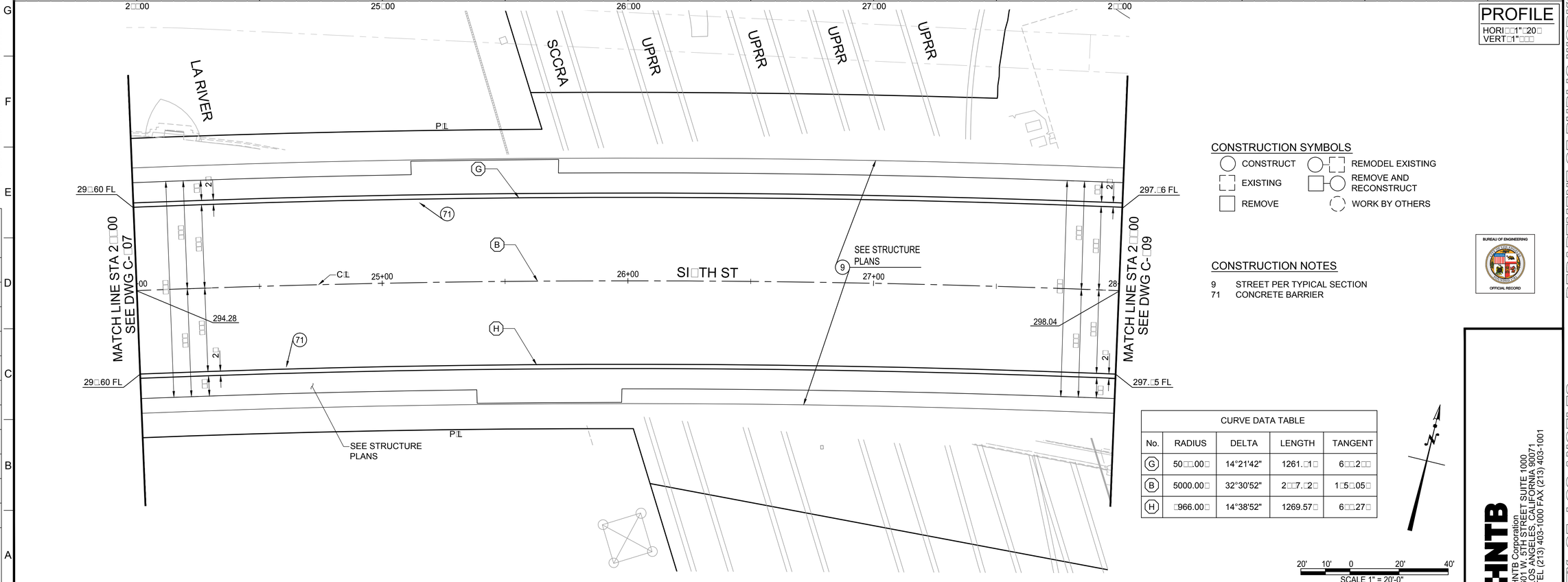

PROFILE

HORI□□1"□20□
VERT□1"□□□

CONSTRUCTION SYMBOLS

- CONSTRUCT
- EXISTING
- REMOVE
- REMODEL EXISTING
- REMOVE AND RECONSTRUCT
- WORK BY OTHERS

CONSTRUCTION NOTES

9 STREET PER TYPICAL SECTION
71 CONCRETE BARRIER

CURVE DATA TABLE				
No.	RADIUS	DELTA	LENGTH	TANGENT
G	50□□00□	14°21'42"	1261.□1□	6□□.2□□
B	5000.00□	32°30'52"	2□□7.□2□	1□5□05□
H	□966.00□	14°38'52"	1269.57□	6□□.27□

20' 10' 0 20' 40'
SCALE 1" = 20'-0"

BUREAU OF ENGINEERING
OFFICIAL RECORD

HNTB
HNTB Corporation
601 W. 5TH STREET SUITE 1000
LOS ANGELES, CALIFORNIA 90071
TEL (213) 403-1000 FAX (213) 403-1001

CITY OF LOS ANGELES DEPARTMENT OF PUBLIC WORKS
BUREAU OF ENGINEERING

ENGINEERING
CITY OF LOS ANGELES

NO.	REVISIONS:	DATE	BY:

STRUCTURE NO.
53C-2329

INDEX NO.
P-38113

REGISTERED PROFESSIONAL ENGINEER
TERENCE T. PAO
No. C 63433
Expires 3-30-2016
CIVIL
STATE OF CALIFORNIA

THIS PLAN WAS ELECTRONICALLY SIGNED AND STAMPED

GARY LEE MOORE, P.E.
CITY ENGINEER
DATE:
LIC. NO. 63433

ENGINEER:	TERENCE PAO
DESIGN GROUP	
DESIGNED BY:	XAVIER ESPINOSA
DRAWN BY:	XAVIER ESPINOSA
CHECKED BY:	TERENCE PAO
APPROVED BY:	

VERTICAL CONTROL: BM 12-04070, 1929 (NGVD 29) - 1985 ADJUSTMENT
HORIZONTAL CONTROL: GPS; PID AE 1704, EPOCH 1991.35

SHEET TITLE: SIXTH STREET VIADUCT PLAN & PROFILE

PROJECT: SIXTH STREET VIADUCT REPLACEMENT

ADDRESS: SIXTH STREET VIADUCT (WHITTIER BLVD) LOS ANGELES, CA

WORK ORDER NO.
E70022□F

DRAWING NO.
C-408

SHEET □1 OF 560 SHEETS

REVISION DATES
DESIGN STAGE ONLY□

C:\caddlib\pw\pwwestcoast\xespinosa\dms57684\C-002-C404-C413.dwg 6/17/16 08:35

Sheet Version 3.0

THE CITY OF LOS ANGELES OR ITS OFFICERS OR AGENTS SHALL NOT BE RESPONSIBLE FOR THE ACCURACY OR COMPLETENESS OF ELECTRONIC COPIES OF THIS PLAN SHEET.

ADDENDUM 5

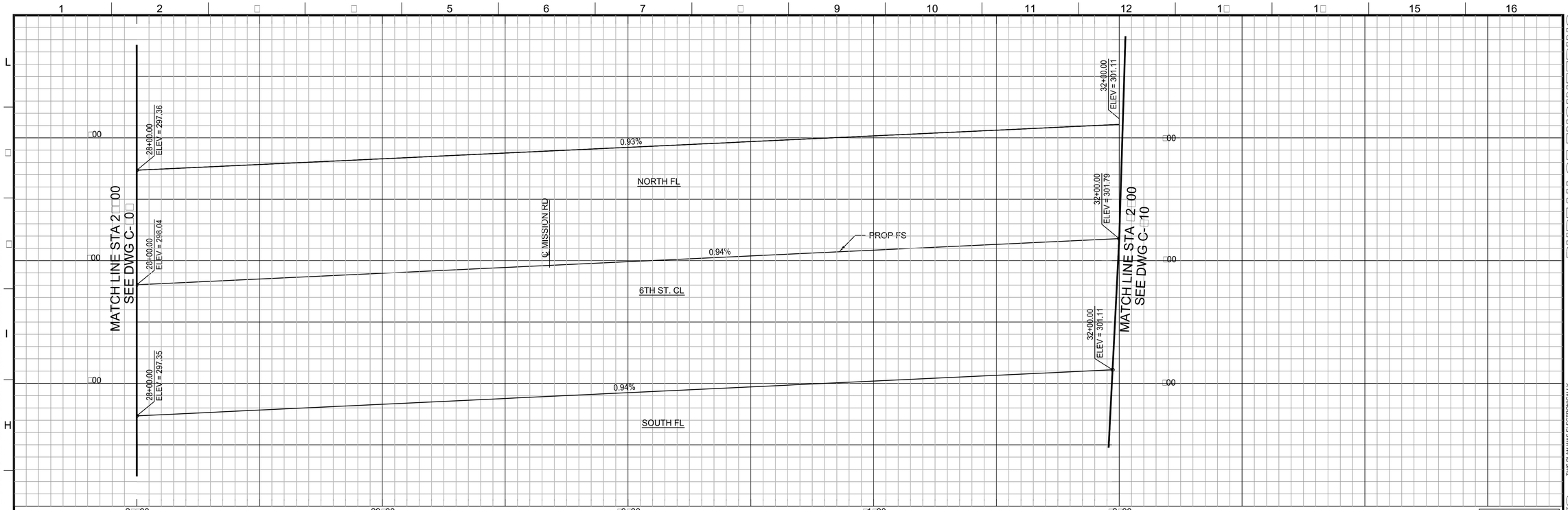

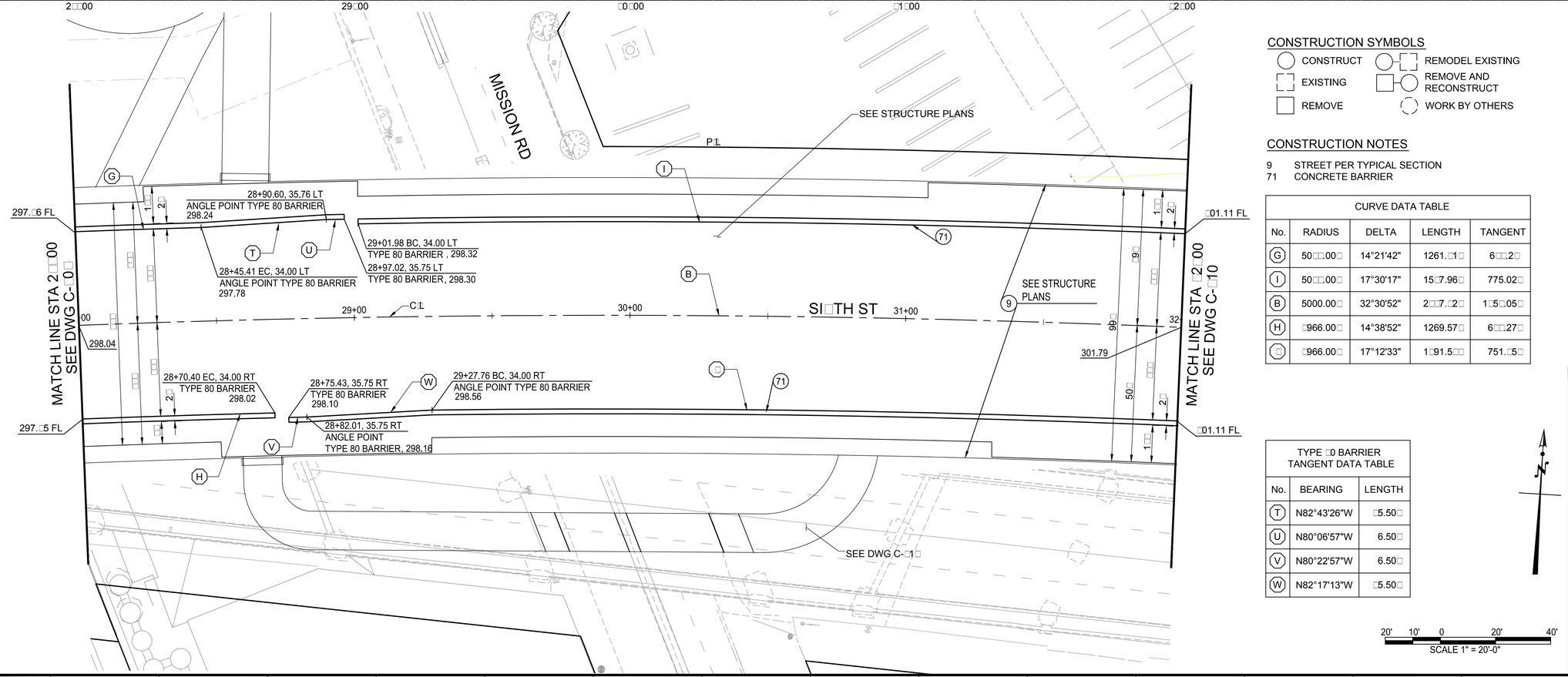

PROFILE

HORI□□1"□20□
VERT□1"□□□

CONSTRUCTION SYMBOLS

- CONSTRUCT
- EXISTING
- REMOVE
- REMODEL EXISTING
- REMOVE AND RECONSTRUCT
- WORK BY OTHERS

CONSTRUCTION NOTES

9 STREET PER TYPICAL SECTION
71 CONCRETE BARRIER

CURVE DATA TABLE				
No.	RADIUS	DELTA	LENGTH	TANGENT
G	50□□.00□	14°21'42"	1261.□1□	6□□.2□
I	50□□.00□	17°30'17"	15□7.96□	775.02□
B	5000.00□	32°30'52"	2□□7.□2□	1□5□.05□
H	□966.00□	14°38'52"	1269.57□	6□□.27□
□	□966.00□	17°12'33"	1□91.5□□	751.□5□

TYPE □0 BARRIER TANGENT DATA TABLE		
No.	BEARING	LENGTH
T	N82°43'26"W	□5.50□
U	N80°06'57"W	6.50□
V	N80°22'57"W	6.50□
W	N82°17'13"W	□5.50□

20' 10' 0 20' 40'
SCALE 1" = 20'-0"

HNTB
HNTB Corporation
601 W. 5TH STREET SUITE 1000
LOS ANGELES, CALIFORNIA 90071
TEL (213) 403-1000 FAX (213) 403-1001

BUREAU OF ENGINEERING
OFFICIAL RECORD

ENGINEERING
CITY OF LOS ANGELES

BUREAU OF ENGINEERING

NO.	REVISIONS:	DATE	BY:

STRUCTURE NO.
53C-2329

INDEX NO.
P-38113

REGISTERED PROFESSIONAL ENGINEER
TERENCE T. PAO
No. C 63433
Exp. 3-30-2016
CIVIL
STATE OF CALIFORNIA

THIS PLAN WAS ELECTRONICALLY SIGNED AND STAMPED

CITY OF LOS ANGELES DEPARTMENT OF PUBLIC WORKS

GARY LEE MOORE, P.E. CITY ENGINEER
DATE:
LIC. NO. 63433

DESIGN GROUP	
ENGINEER:	TERENCE PAO
DESIGNED BY:	XAVIER ESPINOSA
DRAWN BY:	XAVIER ESPINOSA
CHECKED BY:	TERENCE PAO
APPROVED BY:	

VERTICAL CONTROL: BM 12-04070, 1929 (NGVD 29) - 1985 ADJUSTMENT
HORIZONTAL CONTROL: GPS, PID AE 1704, EPOCH 1991.35

SHEET TITLE: SIXTH STREET VIADUCT PLAN & PROFILE

PROJECT: SIXTH STREET VIADUCT REPLACEMENT

ADDRESS: SIXTH STREET VIADUCT (WHITTIER BLVD) LOS ANGELES, CA

WORK ORDER NO.
E70022□F

DRAWING NO.
C-409

SHEET □2 OF 560 SHEETS

REVISION DATES:
DESIGN STAGE ONLY:

THE CITY OF LOS ANGELES OR ITS OFFICERS OR AGENTS SHALL NOT BE RESPONSIBLE FOR THE ACCURACY OR COMPLETENESS OF ELECTRONIC COPIES OF THIS PLAN SHEET.

C:\caddlib\pw\pwwestcoast\vespinosa\dms57684\C-002-C404-C413.dwg 6/17/16 08:36

Sheet Version 3.0

ADDENDUM 5

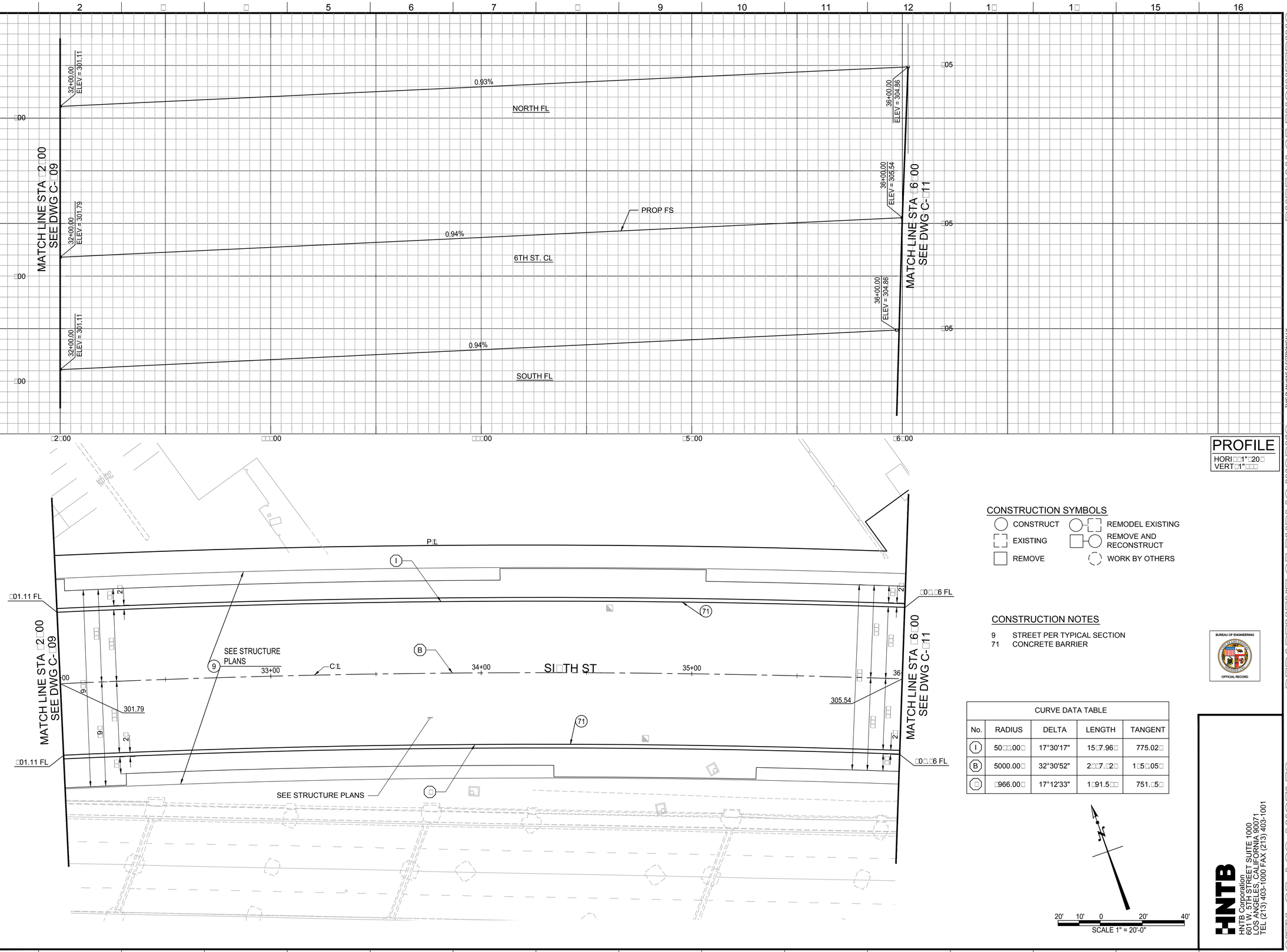

CONSTRUCTION SYMBOLS

- CONSTRUCT
- EXISTING
- REMOVE
- REMODEL EXISTING
- REMOVE AND RECONSTRUCT
- WORK BY OTHERS

CONSTRUCTION NOTES

9 STREET PER TYPICAL SECTION
71 CONCRETE BARRIER

BUREAU OF ENGINEERING
OFFICIAL RECORD

CURVE DATA TABLE				
No.	RADIUS	DELTA	LENGTH	TANGENT
I	50□□.00□	17°30'17"	15□7.96□	775.02□
B	5000.00□	32°30'52"	2□□7.□2□	1□5□.05□
□	□966.00□	17°12'33"	1□91.5□□	751.□5□

HNTB
HNTB Corporation
601 W. 5TH STREET SUITE 1000
LOS ANGELES, CALIFORNIA 90071
TEL (213) 403-1000 FAX (213) 403-1001

BUREAU OF ENGINEERING

ENGINEERING
CITY OF LOS ANGELES

NO.	REVISIONS:	DATE:	BY:

STRUCTURE NO. 53C-2329

INDEX NO. P-38113

REGISTERED PROFESSIONAL ENGINEER
TERENCE T. PAO
No. C 63433
Expires 3-30-2016
CIVIL
STATE OF CALIFORNIA

THIS PLAN WAS ELECTRONICALLY SIGNED AND STAMPED

CITY OF LOS ANGELES DEPARTMENT OF PUBLIC WORKS

GARY LEE MOORE, P.E. CITY ENGINEER

DESIGN GROUP		DATE:	
ENGINEER:	TERENCE PAO	LIC. NO.	63433
DESIGNED BY:	XAVIER ESPINOSA		
DRAWN BY:	XAVIER ESPINOSA		
CHECKED BY:	TERENCE PAO		
APPROVED BY:			

VERTICAL CONTROL: BM 12-04070, 1929 (NGVD 29) - 1985 ADJUSTMENT
HORIZONTAL CONTROL: GPS; PID AE 1704, EPOCH 1991.35

SHEET TITLE: SIXTH STREET VIADUCT PLAN & PROFILE

PROJECT: SIXTH STREET VIADUCT REPLACEMENT

ADDRESS: SIXTH STREET VIADUCT (WHITTIER BLVD) LOS ANGELES, CA

WORK ORDER NO. E70022□F

DRAWING NO. C-410

SHEET □□ OF 560 SHEETS

REVISION DATES
DESIGN STAGE ONLY□

THE CITY OF LOS ANGELES OR ITS OFFICERS OR AGENTS SHALL NOT BE RESPONSIBLE FOR THE ACCURACY OR COMPLETENESS OF ELECTRONIC COPIES OF THIS PLAN SHEET.

C:\caddlib\pw\pwwestcoast\xespinosa\dms5768#\C-002-C404-C413.dwg 6/17/16 08:38

Sheet Version 3.0

ADDENDUM 5

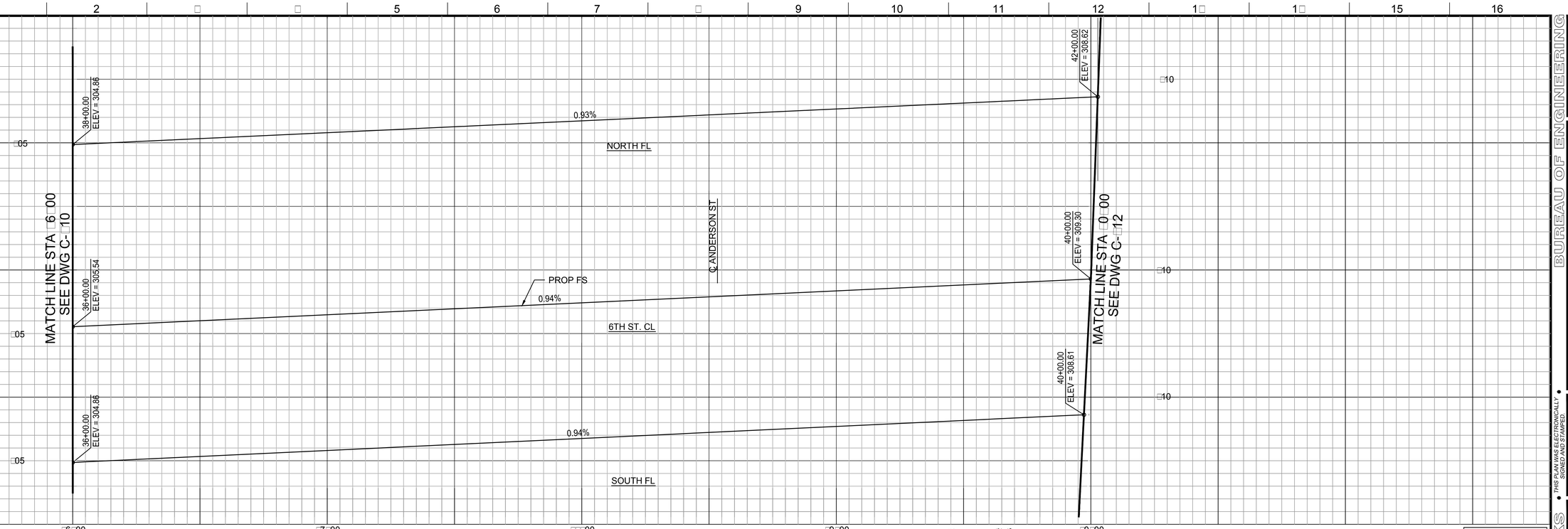

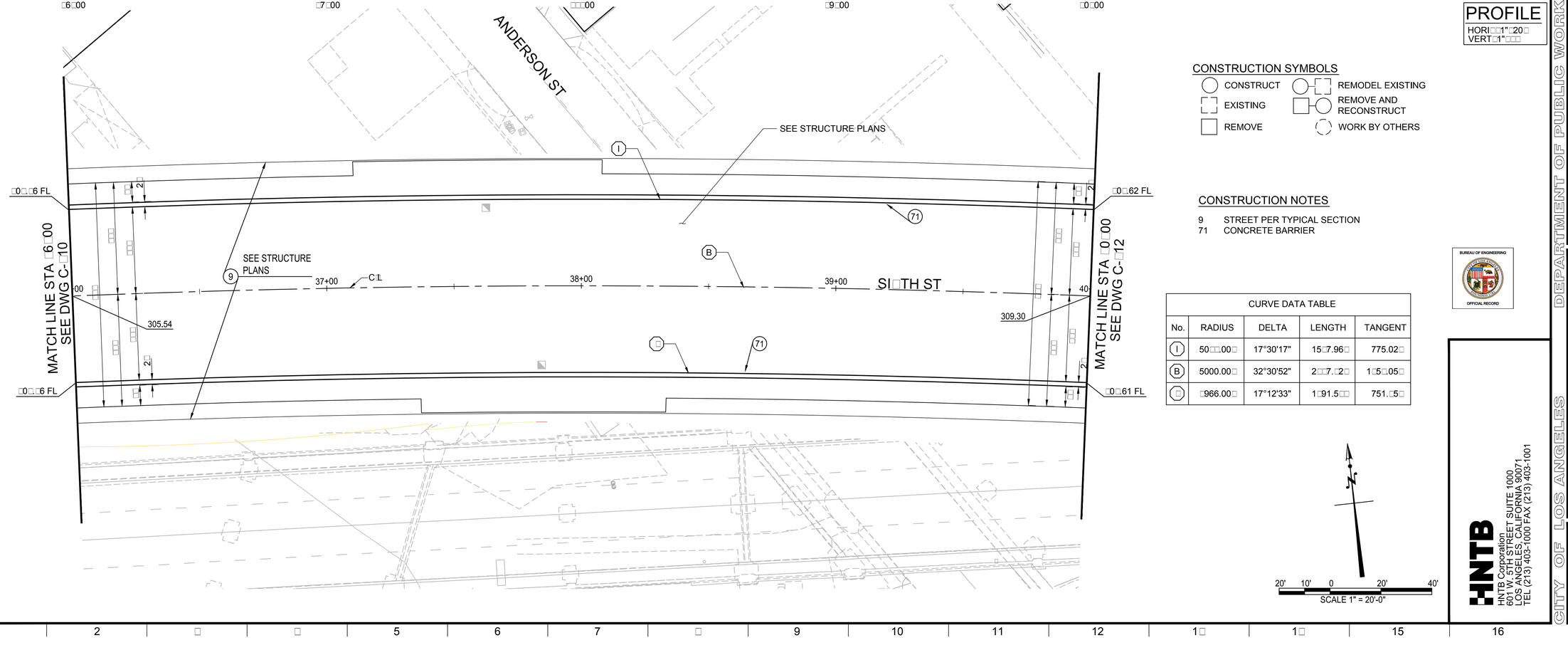

PROFILE

HORI 1"=20'
VERT 1"=10'

CONSTRUCTION SYMBOLS

- CONSTRUCT
- EXISTING
- REMOVE
- REMODEL EXISTING
- REMOVE AND RECONSTRUCT
- WORK BY OTHERS

CONSTRUCTION NOTES

9 STREET PER TYPICAL SECTION
71 CONCRETE BARRIER

CURVE DATA TABLE				
No.	RADIUS	DELTA	LENGTH	TANGENT
I	50.00'	17°30'17"	15.96'	775.02'
B	5000.00'	32°30'52"	2.7.2'	1.5.05'
⬡	966.00'	17°12'33"	1.91.5'	751..5'

20' 10' 0 20' 40'
SCALE 1" = 20'-0"

BUREAU OF ENGINEERING
OFFICIAL RECORD

HNTB
HNTB Corporation
601 W. 5TH STREET SUITE 1000
LOS ANGELES, CALIFORNIA 90071
TEL (213) 403-1000 FAX (213) 403-1001

CITY OF LOS ANGELES DEPARTMENT OF PUBLIC WORKS
BUREAU OF ENGINEERING

ENGINEERING
CITY OF LOS ANGELES

STRUCTURE NO. 53C-2329

INDEX NO. P-38113

NO. | REVISIONS: | DATE | BY:

REGISTERED PROFESSIONAL ENGINEER
TERENCE T. PAO
No. C 63433
Expires 3-30-2016
STATE OF CALIFORNIA

THIS PLAN WAS ELECTRONICALLY SIGNED AND STAMPED

GARY LEE MOORE, P.E. CITY ENGINEER
DATE:
LIC. NO. 63433

DESIGN GROUP
ENGINEER: TERENCE PAO
DESIGNED BY: XAVIER ESPINOSA
DRAWN BY: XAVIER ESPINOSA
CHECKED BY: TERENCE PAO
APPROVED BY:

VERTICAL CONTROL: BM 12-04070, 1925 (NGVD 29) - 1985 ADJUSTMENT
HORIZONTAL CONTROL: GPS; PID AE 1704, EPOCH 1991.35

SHEET TITLE: SIXTH STREET VIADUCT PLAN & PROFILE
PROJECT: SIXTH STREET VIADUCT REPLACEMENT
ADDRESS: SIXTH STREET VIADUCT (WHITTIER BLVD) LOS ANGELES, CA

WORK ORDER NO. E70022.F
DRAWING NO. C-411
SHEET .. OF 560 SHEETS

REVISION DATES: DESIGN STAGE ONLY:

THE CITY OF LOS ANGELES OR ITS OFFICERS OR AGENTS SHALL NOT BE RESPONSIBLE FOR THE ACCURACY OR COMPLETENESS OF ELECTRONIC COPIES OF THIS PLAN SHEET.

C:\caddlib\pw\pwwestcoast\vespinosa\dms57684\C-002-C404-C413.dwg 6/17/16 08:39

Sheet Version 3.0

ADDENDUM 5

THE CITY OF LOS ANGELES OR ITS OFFICERS OR AGENTS SHALL NOT BE RESPONSIBLE FOR THE ACCURACY OR COMPLETENESS OF ELECTRONIC COPIES OF THIS PLAN SHEET.

MATCH LINE STA □0□00
SEE DWG C-□11

40+00.00
ELEV = 308.62

40+00.00
ELEV = 309.30

40+00.00
ELEV = 308.61

0.93%

0.94%

0.94%

NORTH FL

6TH ST. CL

SOUTH FL

℄ CLARENCE ST

PROP FS

44+00.00
ELEV = 312.37

44+00.00
ELEV = 313.05

44+00.00
ELEV = 312.38

MATCH LINE STA □□00
SEE DWG C-□1□

□0□00 □1□00 □2□00 □□00 □□00

PROFILE

HORI□□1"□20□
VERT□1"□□□

CLARENCE ST

CALTRANS R/W

SEE STRUCTURE PLANS

SEE STRUCTURE PLANS

SI□TH ST

□0□.62 FL

□0□.61 FL

□12.□7 FL

□12.□□ FL

309.30

313.05

41+00

42+00

43+00

C℄L

MATCH LINE STA □0□00
SEE DWG C-□11

MATCH LINE STA □□00
SEE DWG C-□1□

CONSTRUCTION SYMBOLS

- CONSTRUCT
- EXISTING
- REMOVE
- REMODEL EXISTING
- REMOVE AND RECONSTRUCT
- WORK BY OTHERS

CONSTRUCTION NOTES

9 STREET PER TYPICAL SECTION
71 CONCRETE BARRIER

CURVE DATA TABLE				
No.	RADIUS	DELTA	LENGTH	TANGENT
(I)	50□□.00□	17°30'17"	15□7.96□	775.02□
(B)	5000.00□	32°30'52"	2□□7.□2□	1□5□.05□
(□)	□966.00□	17°12'33"	1□91.5□□	751.□5□

20' 10' 0 20' 40'
SCALE 1" = 20'-0"

BUREAU OF ENGINEERING
OFFICIAL RECORD

HNTB
HNTB Corporation
601 W. 5TH STREET SUITE 1000
LOS ANGELES, CALIFORNIA 90071
TEL (213) 403-1000 FAX (213) 403-1001

CITY OF LOS ANGELES DEPARTMENT OF PUBLIC WORKS
BUREAU OF ENGINEERING

ENGINEERING
CITY OF LOS ANGELES

GARY LEE MOORE, P.E. CITY ENGINEER
DESIGN GROUP
ENGINEER: TERENCE PAO LIC. NO. 63433 DATE:
DESIGNED BY: XAVIER ESPINOSA
DRAWN BY: XAVIER ESPINOSA
CHECKED BY: TERENCE PAO
APPROVED BY:

NO. REVISIONS: DATE: BY:

STRUCTURE NO. 53C-2329

INDEX NO. P-38113

REGISTERED PROFESSIONAL ENGINEER
TERENCE T. PAO
No. C 63433
Exp. 3-30-2016
CIVIL
STATE OF CALIFORNIA

THIS PLAN WAS ELECTRONICALLY SIGNED AND STAMPED

VERTICAL CONTROL: BM 12-04070, 1929 (NGVD 29) - 1985 ADJUSTMENT
HORIZONTAL CONTROL: GPS; PID AE 1704, EPOCH 1991.35

SHEET TITLE: SIXTH STREET VIADUCT PLAN & PROFILE

PROJECT: SIXTH STREET VIADUCT REPLACEMENT

ADDRESS: SIXTH STREET VIADUCT (WHITTIER BLVD) LOS ANGELES, CA

WORK ORDER NO. E70022□F

DRAWING NO. C-412

SHEET □5 OF 560 SHEETS

REVISION DATES DESIGN STAGE ONLY□

C:\caddlib\pw\pwwestcoast\vespinosa\dms57684\C-002-C404-C413.dwg 6/17/16 08:40

Sheet Version 3.0

ADDENDUM 5

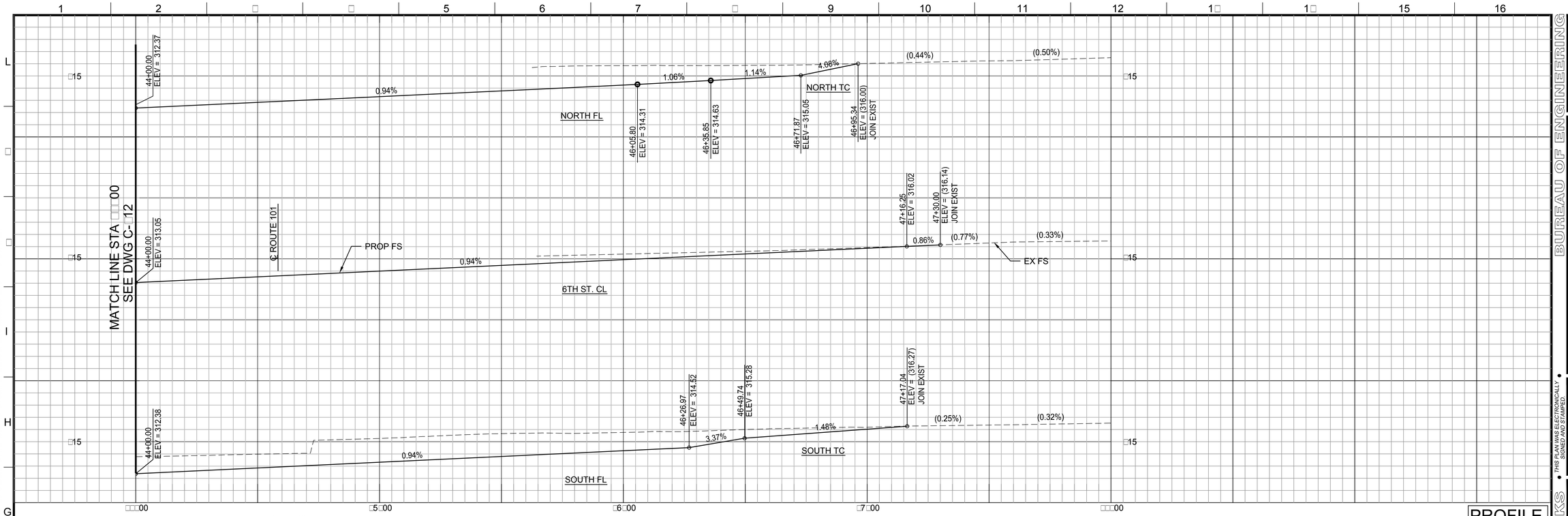

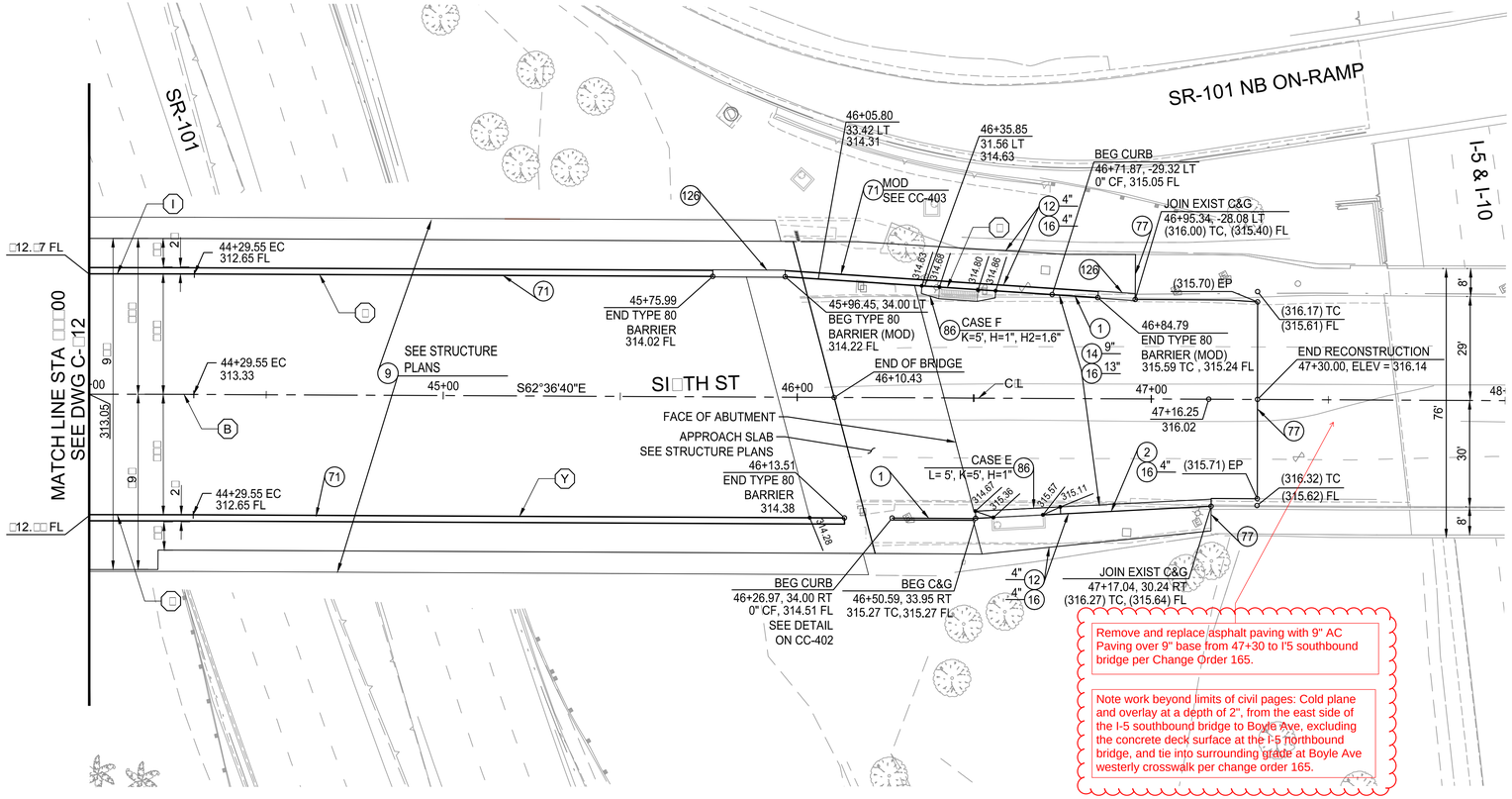

PROFILE

HORI□□1"□20□
VERT□1"□□□

CONSTRUCTION SYMBOLS

- CONSTRUCT
- EXISTING
- REMOVE
- REMODEL EXISTING
- REMOVE AND RECONSTRUCT
- WORK BY OTHERS

CONSTRUCTION NOTES

1 CONCRETE CURB □TYPE A CURB□
2 TYPE C INTEGRAL CURB & GUTTER
9 STREET PER TYPICAL SECTION
12 CONCRETE WAL□
1□ ASPHALT CONCRETE PAVEMENT
16 UNTREATED BASE MATERIAL
71 CONCRETE BARRIER
77 SAWCUT LINE & □OIN
□6 LOCAL DEPRESSION AT CATCH BASIN
126 CRASH CUSHION

CURVE DATA TABLE				
No.	RADIUS	DELTA	LENGTH	TANGENT
I	50□□.00□	17°30'17"	15□7.96□	775.02□
B	5000.00□	32°30'52"	2□□7.□2□	1□5□.05□
□	□966.00□	17°12'33"	1□91.5□□	751.□5□

TYPE □0 BARRIER TANGENT DATA TABLE		
No.	BEARING	LENGTH
□	N62°36'40"W	1□6.□□□
Y	N62°36'40"W	1□□.96□
□	N59°03'39"W	□□.50□

20' 10' 0 20' 40'
SCALE 1" = 20'-0"

BUREAU OF ENGINEERING
OFFICIAL RECORD

HNTB
HNTB Corporation
601 W. 5TH STREET SUITE 1000
LOS ANGELES, CALIFORNIA 90071
TEL (213) 403-1000 FAX (213) 403-1001

CITY OF LOS ANGELES DEPARTMENT OF PUBLIC WORKS
BUREAU OF ENGINEERING

ENGINEERING
CITY OF LOS ANGELES

NO.	REVISIONS:	DATE	BY:

STRUCTURE NO.
53C-2329

INDEX NO.
P-38113

THIS PLAN WAS ELECTRONICALLY SIGNED AND STAMPED

REGISTERED PROFESSIONAL ENGINEER
TERENCE T. PAO
No. C 63433
Expires 3-30-2016
CIVIL
STATE OF CALIFORNIA

GARY LEE MOORE, P.E. CITY ENGINEER

ENGINEER:	TERENCE PAO	LIC. NO. 63433	DATE:
DESIGNED BY:	XAVIER ESPINOSA		
DRAWN BY:	XAVIER ESPINOSA		
CHECKED BY:	TERENCE PAO		
APPROVED BY:			

DESIGN GROUP

SHEET TITLE: SIXTH STREET VIADUCT PLAN & PROFILE

PROJECT: SIXTH STREET VIADUCT REPLACEMENT

ADDRESS: SIXTH STREET VIADUCT (WHITTIER BLVD) LOS ANGELES, CA

VERTICAL CONTROL: BM 12-04070 1929 (NGVD 29) - 1985 ADJUSTMENT
HORIZONTAL CONTROL: GPS; PID AE 1704, EPOCH 1991.35

WORK ORDER NO.
E70022□F

DRAWING NO.
C-413

SHEET □6 OF 560 SHEETS

REVISION DATES
DESIGN STAGE ONLY□

C:\caddlib\pw\pwwestcoast\vespinosa\dms57684\C-002-C404-C413.dwg 6/17/16 09:45

Sheet Version 3.0

THE CITY OF LOS ANGELES OR ITS OFFICERS OR AGENTS SHALL NOT BE RESPONSIBLE FOR THE ACCURACY OR COMPLETENESS OF ELECTRONIC COPIES OF THIS PLAN SHEET.

ADDENDUM 5

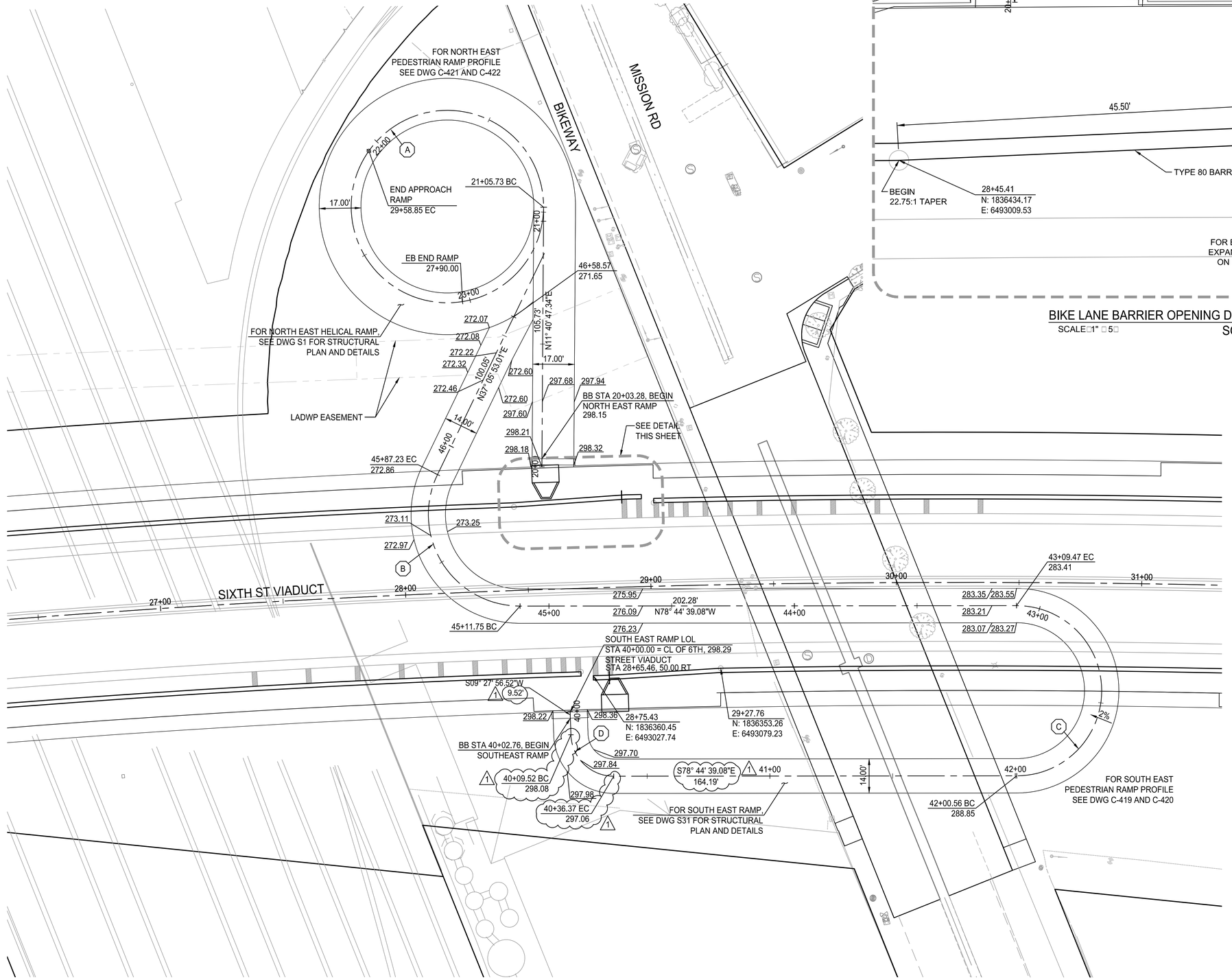

BIKE LANE BARRIER OPENING DETAIL, NORTH SIDE
SCALE 1" = 5'
SOUTH SIDE SIMILAR

CURVE DATA TABLE				
No.	RADIUS	DELTA	LENGTH	TANGENT
A	9.20'	1208°11'55"	6.95'	-
B	7.00'	115°50'32"	75.00'	59.56'
C	67.00'	180°00'00"	10.91'	-
D	17.00'	88°12'36"	26.05'	16.90'

1

SCALE 1" = 20'-0"

T.O. 5 - Change Order Serial Sketch No. 35 - Page 1 of 4

HNTB
HNTB Corporation
600 W. 7TH STREET SUITE 1000
LOS ANGELES, CALIFORNIA 90071
TEL (213) 403-1000 FAX (213) 403-1001

CITY OF LOS ANGELES DEPARTMENT OF PUBLIC WORKS
BUREAU OF ENGINEERING
ENGINEERING
CITY OF LOS ANGELES

NO.	REVISIONS:	DATE:	BY:
1	RFI 00038	6/21/17	XE

STRUCTURE NO. 53C-2329

INDEX NO.

THIS PLAN WAS ELECTRONICALLY SIGNED AND STAMPED

REGISTERED PROFESSIONAL ENGINEER TERENCE T. PAO No. C 63433 Expires 6-30-2018 CIVIL STATE OF CALIFORNIA

CITY OF LOS ANGELES
GARY LEE MOORE, P.E. CITY ENGINEER
DESIGN GROUP
ENGINEER: TERENCE PAO LIC NO. 63433
DESIGNED BY: XAVIER ESPINOSA
DRAWN BY: XAVIER ESPINOSA
CHECKED BY: TERENCE PAO
APPROVED BY:
DATE:

VERTICAL CONTROL: BM 12-04070,1929 (NGVD 29) - 1985 ADJUSTMENT
HORIZONTAL CONTROL: GPS, PID AE 7704, EPOCH 1991.35

SHEET TITLE: EAST PEDESTRIAN RAMP PLAN VIEW
PROJECT: SIXTH STREET VIADUCT REPLACEMENT
ADDRESS: SIXTH STREET VIADUCT (WHITTIER BLVD) LOS ANGELES, CA

WORK ORDER NO. E70022F
DRAWING NO. C-418
SHEET OF SHEETS

REVISION DATES
DESIGN STAGE ONLY:

C:\caddlib\pw\pwwestcoast\xespinosa\dms57684\C-002-C418-C422.dwg 6/21/17 11:11

Sheet Version 3.0

THE CITY OF LOS ANGELES OR ITS OFFICERS OR AGENTS SHALL NOT BE RESPONSIBLE FOR THE ACCURACY OR COMPLETENESS OF ELECTRONIC COPIES OF THIS PLAN SHEET.

ADDENDUM 5

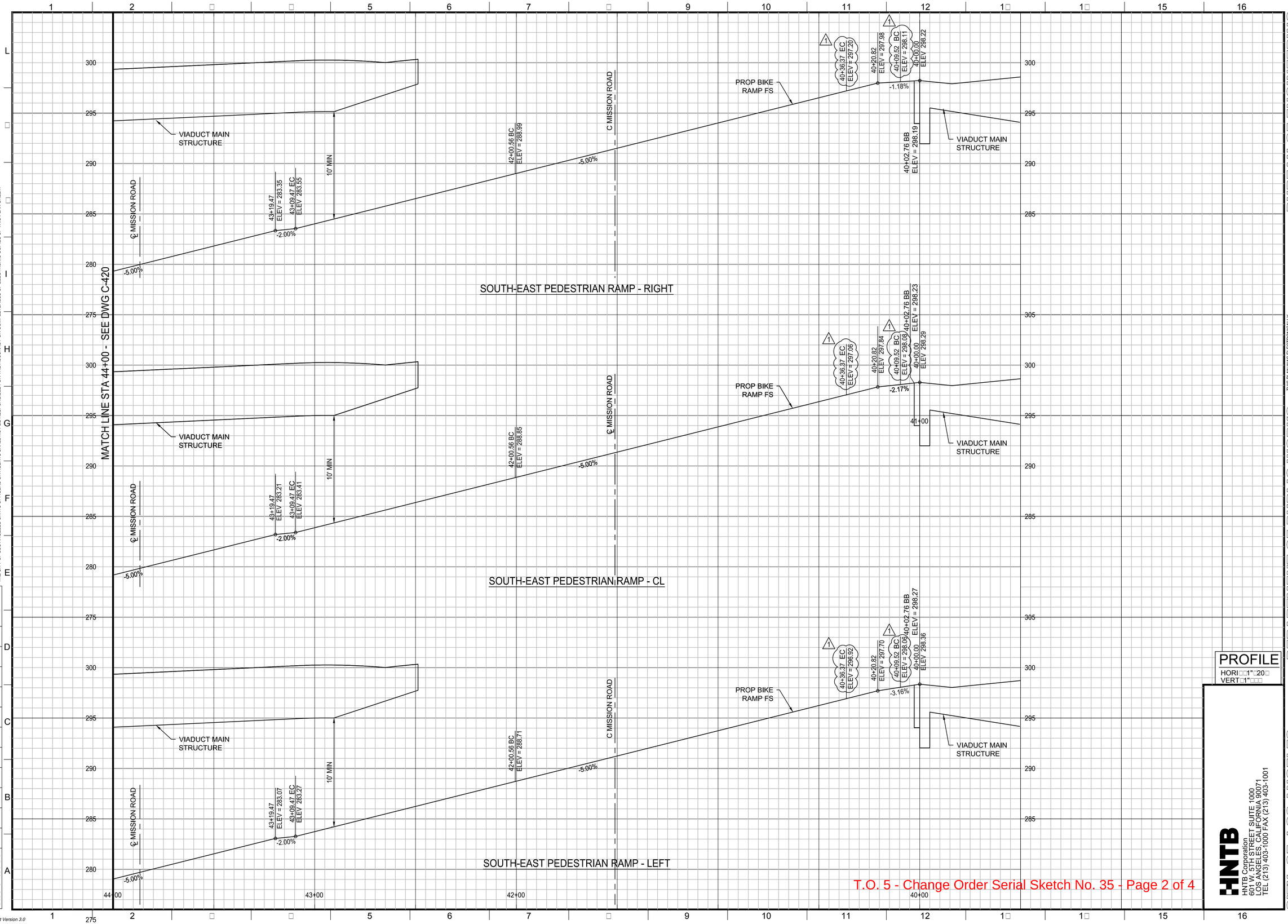

T.O. 5 - Change Order Serial Sketch No. 35 - Page 2 of 4

THE CITY OF LOS ANGELES OR ITS OFFICERS OR AGENTS SHALL NOT BE RESPONSIBLE FOR THE ACCURACY OR COMPLETENESS OF ELECTRONIC COPIES OF THIS PLAN SHEET.

C:\caddlib\pw\pwwestcoast\xespinosa\dms57684\C-002-C418-C422.dwg 6/21/17 11:12

Sheet Version 3.0

REVISION DATES
DESIGN STAGE ONLY:

BUREAU OF ENGINEERING
CITY OF LOS ANGELES

NO.	REVISIONS:	DATE:	BY:
1	RFI 00038	6/21/17	XE

STRUCTURE NO.
53C-2329

INDEX NO.

THIS PLAN WAS ELECTRONICALLY SIGNED AND STAMPED

REGISTERED PROFESSIONAL ENGINEER
TERENCE T. PAO
No. C 63433
Expires 6-30-2018
CIVIL
STATE OF CALIFORNIA

CITY OF LOS ANGELES
DEPARTMENT OF PUBLIC WORKS

CITY ENGINEER: GARY LEE MOORE, P.E.
LIC NO. 63433
DATE:

DESIGN GROUP		
ENGINEER:	TERENCE PAO	
DESIGNED BY:	XAVIER ESPINOSA	
DRAWN BY:	XAVIER ESPINOSA	
CHECKED BY:	TERENCE PAO	
APPROVED BY:		

VERTICAL CONTROL: BM 12-04070, 1929 (NGVD 29) - 1985 ADJUSTMENT
HORIZONTAL CONTROL: GPS, PID AE 7704, EPOCH 1991.35

SHEET TITLE: SOUTH EAST PEDESTRIAN RAMP PROFILE
PROJECT: SIXTH STREET VIADUCT REPLACEMENT
ADDRESS: SIXTH STREET VIADUCT (WHITTIER BLVD) LOS ANGELES, CA

HNTB
HNTB Corporation
601 W. 5TH STREET SUITE 1000
LOS ANGELES, CALIFORNIA 90071
TEL (213) 403-1000 FAX (213) 403-1001

WORK ORDER NO.
E70022□F

DRAWING NO.
C-419

SHEET OF SHEETS

ADDENDUM 5

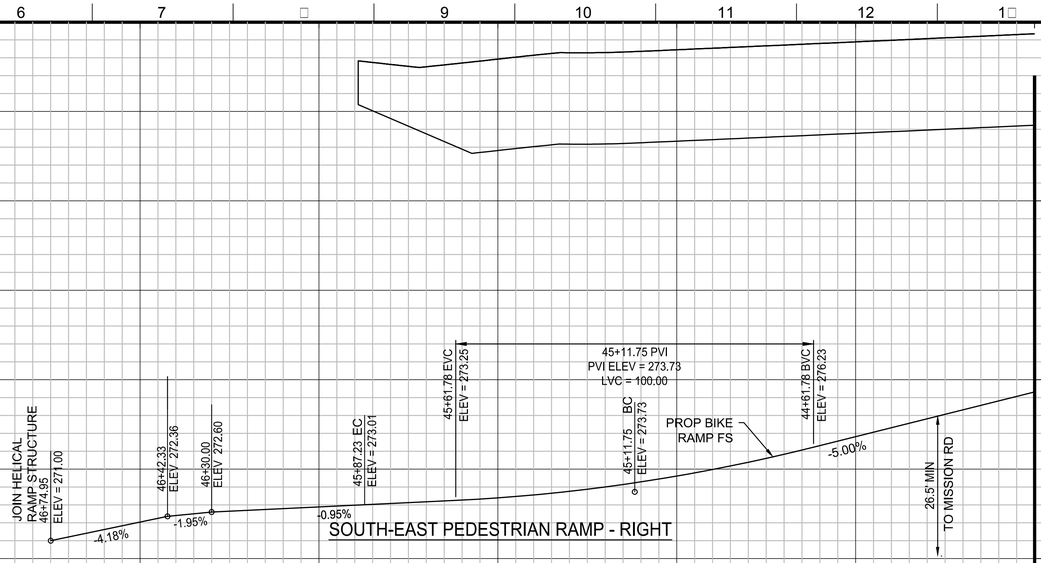

THE CITY OF LOS ANGELES OR ITS OFFICERS OR AGENTS SHALL NOT BE RESPONSIBLE FOR THE ACCURACY OR COMPLETENESS OF ELECTRONIC COPIES OF THIS PLAN SHEET.

C:\caddlib\pw\pwwestcoast\yespinosa\dms576841\C-002-C418-C422.dwg 6/10/16 10:33

REVISION DATES
DESIGN STAGE ONLY□

Sheet Version 3.0

CITY OF LOS ANGELES DEPARTMENT OF PUBLIC WORKS

BUREAU OF ENGINEERING

ENGINEERING
CITY OF LOS ANGELES

NO.	REVISIONS:	DATE	BY:

STRUCTURE NO.
53C-2329

INDEX NO. **P-38113**

REGISTERED PROFESSIONAL ENGINEER
TERENCE T. PAO
No. C 63433
Exp. 3-30-2016
CIVIL
STATE OF CALIFORNIA

THIS PLAN WAS ELECTRONICALLY SIGNED AND STAMPED

CITY ENGINEER	
DATE:	
LIC. NO. 63433	

GARY LEE MOORE, P.E.	CITY ENGINEER
ENGINEER:	TERENCE PAO
DESIGN GROUP	
DESIGNED BY:	XAVIER ESPINOSA
DRAWN BY:	XAVIER ESPINOSA
CHECKED BY:	TERENCE PAO
APPROVED BY:	

VERTICAL CONTROL: BM 12-04/070, 1929 (NGVD 29) - 1985 ADJUSTMENT
HORIZONTAL CONTROL: GPS; FID AE 1704, EPOCH 1991.35

SHEET TITLE: SOUTH EAST PEDESTRIAN RAMP PROFILE

PROJECT: SIXTH STREET VIADUCT REPLACEMENT

ADDRESS: SIXTH STREET VIADUCT (WHITTIER BLVD) LOS ANGELES, CA

PROFILE
HORI□□1"□20□
VERT□1"□□□

HNTB
HNTB Corporation
601 W. 5TH STREET SUITE 1000
LOS ANGELES, CALIFORNIA 90071
TEL (213) 403-1000 FAX (213) 403-1001

BUREAU OF ENGINEERING
OFFICIAL RECORD

WORK ORDER NO.
E70022□F

DRAWING NO.
C-420

SHEET □9 OF 560 SHEETS

ADDENDUM 5

THE CITY OF LOS ANGELES OR ITS OFFICERS OR AGENTS SHALL NOT BE RESPONSIBLE FOR THE ACCURACY OR COMPLETENESS OF ELECTRONIC COPIES OF THIS PLAN SHEET.

C:\coddlib\pw\pwwestcoast\xespinosa\dms57684\C-002-C418-C422.dwg 6/10/16 11:04

REVISION DATES:
DESIGN STAGE ONLY:

Sheet Version 3.0

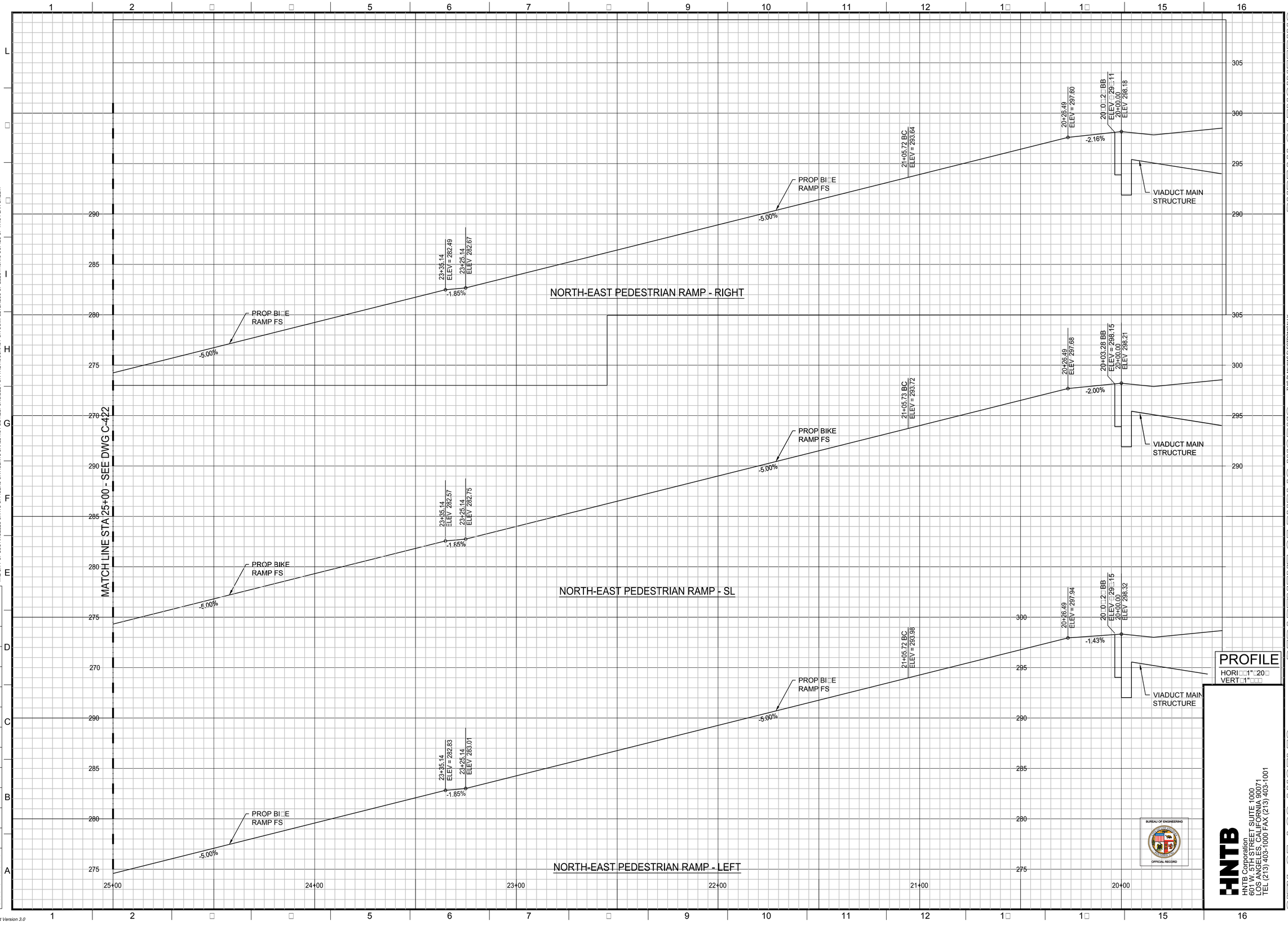

PROFILE
HORI 1" = 20'
VERT 1" = 5'

BUREAU OF ENGINEERING
OFFICIAL RECORD

HNTB
HNTB Corporation
601 W. 5TH STREET SUITE 1000
LOS ANGELES, CALIFORNIA 90071
TEL (213) 403-1000 FAX (213) 403-1001

WORK ORDER NO.
E70022□F

DRAWING NO.
C-421

SHEET 50 OF 560 SHEETS

CITY OF LOS ANGELES DEPARTMENT OF PUBLIC WORKS
BUREAU OF ENGINEERING

GARY LEE MOORE, P.E. CITY ENGINEER
LIC. NO. 63433
DATE:

ENGINEER:	TERENCE PAO
DESIGNED BY:	XAVIER ESPINOSA
DRAWN BY:	XAVIER ESPINOSA
CHECKED BY:	TERENCE PAO
APPROVED BY:	

DESIGN GROUP

NO.	REVISIONS:	DATE:	BY:

THIS PLAN WAS ELECTRONICALLY SIGNED AND STAMPED

REGISTERED PROFESSIONAL ENGINEER
TERENCE T. PAO
No. C 63433
Expires 3-30-2018
CIVIL
STATE OF CALIFORNIA

STRUCTURE NO.
53C-2329

INDEX NO. P-38113

VERTICAL CONTROL:	BM 12-04070.1929 (NGVD 29) - 1985 ADJUSTMENT
HORIZONTAL CONTROL:	GPS; PID AE 1704; EPOCH 1991.35
SHEET TITLE:	NORTH EAST PEDESTRIAN RAMP PROFILE
PROJECT:	SIXTH STREET VIADUCT REPLACEMENT
ADDRESS:	SIXTH STREET VIADUCT (WHITTIER BLVD) LOS ANGELES, CA

ADDENDUM 5

THE CITY OF LOS ANGELES OR ITS OFFICERS OR AGENTS SHALL NOT BE RESPONSIBLE FOR THE ACCURACY OR COMPLETENESS OF ELECTRONIC COPIES OF THIS PLAN SHEET.

C:\coddlib\pw\pwwestcoast\vespinosa\dms57684\C-002-C418-C422.dwg 6/09/16 18:39

REVISION DATES:
DESIGN STAGE ONLY:

Sheet Version 3.0

NORTH-EAST & HELICAL PEDESTRIAN RAMP - RIGHT

END APPROACH RAMP 29+42.88 EC ELEV 252.74
PROP BI□E RAMP FS
-5.00%
E□ FS
28+27.74 ELEV = 258.49
28+17.74 ELEV 258.67
-1.85%
END RAMP STRUCTURE 27+90.00 ELEV = 260.06
PROP BI□E RAMP FS
-5.00%
□OIN SOUTH RAMP STRUCTURE 25+81.44 ELEV = 270.49
25+71.44 ELEV 270.67
-1.85%

NORTH-EAST & HELICAL PEDESTRIAN RAMP - SL

END APPROACH RAMP 29+42.88 EC ELEV 252.82
PROP BIKE RAMP FS
-5.00%
EX FS
28+27.74 ELEV 258.57
28+17.74 ELEV 258.75
-1.85%
END RAMP STRUCTURE 27+90.00 ELEV = 260.13
PROP BIKE RAMP FS
-5.00%
JOIN SOUTH RAMP STRUCTURE 25+81.44 ELEV 270.57
25+71.44 ELEV 270.75
-1.85%
EX FS

NORTH-EAST & HELICAL PEDESTRIAN RAMP - LEFT

END APPROACH RAMP 29+42.88 EC ELEV 253.08
PROP BI□E RAMP FS
-5.00%
E□ FS
28+27.74 ELEV = 258.83
28+17.74 ELEV 259.01
-1.85%
END RAMP STRUCTURE 27+90.00 ELEV = 260.40
PROP BI□E RAMP FS
-5.00%
□OIN SOUTH RAMP STRUCTURE 25+81.44 ELEV = 270.83
25+71.44 ELEV 271.01
-1.85%

MATCH LINE STA 25+00 - SEE DWG C-421

30+00 29+00 28+00 27+00 26+00 25+00

PROFILE
HORI□□1"□20□
VERT□1"□□□

OFFICIAL RECORD

HNTB
HNTB Corporation
601 W. 5TH STREET SUITE 1000
LOS ANGELES, CALIFORNIA 90071
TEL (213) 403-1000 FAX (213) 403-1001

CITY OF LOS ANGELES DEPARTMENT OF PUBLIC WORKS BUREAU OF ENGINEERING

ENGINEERING
CITY OF LOS ANGELES

STRUCTURE NO. 53C-2329

INDEX NO. P-38113

NO. REVISIONS: DATE: BY:

THIS PLAN WAS ELECTRONICALLY SIGNED AND STAMPED

REGISTERED PROFESSIONAL ENGINEER
TERENCE T. PAO
No. C 63433
Expires 3-31-2016
CIVIL
STATE OF CALIFORNIA

GARY LEE MOORE, P.E. CITY ENGINEER
LIC. NO. 63433 DATE:

ENGINEER:	TERENCE PAO	DESIGN GROUP
DESIGNED BY:	XAVIER ESPINOSA	
DRAWN BY:	XAVIER ESPINOSA	
CHECKED BY:	TERENCE PAO	
APPROVED BY:		

VERTICAL CONTROL: BM 12-24070.1929 (NGVD 29) - 1985 ADJUSTMENT
HORIZONTAL CONTROL: GPS; PID AE 1704; EPOCH 1991.35

SHEET TITLE: NORTH EAST PEDESTRIAN RAMP PROFILE
PROJECT: SIXTH STREET VIADUCT REPLACEMENT
ADDRESS: SIXTH STREET VIADUCT (WHITTIER BLVD) LOS ANGELES, CA

WORK ORDER NO. E70022□F
DRAWING NO. C-422
SHEET 51 OF 560 SHEETS

ADDENDUM 5

PROP RETAINING C&G
SEE CC-403 FOR DETAIL

PROP CATCH BASIN

ELEV = 251.41
66+15.53
ELEV = 251.39
66+09.52
ELEV = 251.77
66+06.98
ELEV = 251.94
66+03.57
65+98.57
ELEV = 252.03
65+91.51
ELEV = 252.10
65+63.60
ELEV = 252.40
65+38.10
ELEV = 252.79
65+38.10
ELEV = 251.60

255
250 TC
245

0.31% 4.71% 2.76% -0.08% -1.06% -0.24% -1.55% 0.24% 0.33% 0.14% 0.72%

66+09.52
ELEV = 251.11
65+98.57
ELEV = 250.80
65+91.51
ELEV = 250.81
65+38.10
ELEV = 250.94

PROP FL

60+52.39
ELEV = 252.04
PROP TC
61+49.91
ELEV 251.38
60+78.60
ELEV = 251.26
60+32.04 ECR
ELEV = 250.94

EX FS

SOUTH FRONTAGE RD - NORTHERLY CURB

66+06.83
ELEV = 251.34
65+98.66
ELEV = 251.24
65+91.66
ELEV = 251.15
65+78.18
ELEV = 251.05
65+38.03
ELEV = 251.13

255
250 ℄
245

(1.24%) 1.05% -0.22% 0.23% 0.34% 0.11% 0.26% (0.79%)

EX FS
63+52.39
ELEV = 251.55
PROP TC
61+49.91
ELEV = 250.86
60+78.60
ELEV = 250.78
60+66.31
ELEV = 250.75

SOUTH FRONTAGE RD - CL

66+00 65+00 64+00 63+00 62+00 61+00

PROFILE
HORIZ: 1"=20'
VERT: 1"=4'

CONFIRMED
BEG RET C&G, FACE GUTTER
WEST UNTIL 90° ANGLE POINT
65+38.10, 5.51 RT
252.75 TOP OF RET CURB
251.63 OG
END C&G
ANGLE POINT RET C&G
65+38.10, 3.42 RT
251.60 TC, 250.94 FL
252.79 TOP OF RET CURB
RFI 0169

END C&G
66+15.53, 5.50 RT
0° CF, 251.39 FL

11+00 12+00 13+00 SIXTH ST 14+00 15+00 16+00

END RET C&G
BEG C&G
66+09.52, 5.11 RT
251.77 TC, 251.11 FL
MODIFIED
SEE CC-403
250.94 FL
250.80 FL
250.81 FL
250.82 FL
SEE STRUCTURE PLANS
END CURB, BEG C&G
64+04.29, 3.44 RT
251.92 TC, 251.25 FL
END C&G, BEG CURB
63+79.29, 3.45 RT
251.98 TC, 251.31 FL
252.04 TC
251.37 FL
VAR
61+74.02, 2.45 RT
251.46 TC, 250.79 FL
61+01.89, 2.45 RT
251.31 TC, 250.64 FL
BEG C&G
60+32.04 ECR, 5.50 RT
250.94 TC, 250.27 FL
PROPOSED VIADUCT COLUMN

66+21.67
5.49 RT
0° CF
251.41
66+15.53
3.30 RT
251.40
66+03.57
2.92 RT
251.07
66+00
65+86.59
2.37 RT
250.95
65+56.70, 3.50 RT
252.51 TOP OF RET CURB
250.89 FL
335.89
S84°52'59"W
65+00
SOUTH FRONTAGE RD
64+00
63+00
62+00
330.12
S84°52'18"W
61+00
251.38 TC
250.71 FL
62+74.23, 3.45 RT
251.78 TC, 251.12 FL
251.28 TC
250.61 FL
23.3'
19.8'
22.4'
19.9'

N: 1836373.71
E: 6491504.12
63+30.12 S FRONTAGE RD =
40+43.52 IMPRIAL ST

C/L CB 65+95.02
4.64 RT, CASE E
K=5', H=1"

41+00 40+00
IMPERIAL ST

MATCH LINE - SEE DWG C-414

CONSTRUCTION SYMBOLS
- CONSTRUCT
- EXISTING
- REMOVE
- REMODEL EXISTING
- REMOVE & CONSTRUCT
- WORK BY OTHERS

CONSTRUCTION NOTES
1 CONCRETE CURB (TYPE A CURB)
2 TYPE C INTEGRAL CURB AND GUTTER
12 CONCRETE WALK
14 ASPHALT CONCRETE PAVEMENT
16 UNTREATED BASE MATERIAL
36 RELOCATE UTILITY POLE
37 RELOCATE POLE ANCHOR
41 RELOCATE/ADJUST FIRE HYDRANT TO GRADE
44 RELOCATE AND/OR ADJUST DWPPS MAINTENANCE HOLE TO GRADE
46 RELOCATE WATER METER TO GRADE
56 ADJUST DWPPS POLE TO GRADE
64 RETAINING WALL
75 WATER VALVE & COVER
77 SAWCUT LINE & JOIN
86 LOCAL DEPRESSION AT CATCH BASIN PER SPPWC 313-3
136 SEWER MAINTENANCE HOLE (PRECAST)

NOTES:
1. SEE SHEET C-401 FOR 6TH AND MATEO CONSTRUCTION
2. SEE SHEET C-414 FOR SANTA FE AVE CONSTRUCTION

20' 10' 0 20' 40'
SCALE 1" = 20'-0"

HNTB
HNTB Corporation
601 W. 5TH STREET SUITE 1000
LOS ANGELES, CALIFORNIA 90071
TEL (213) 403-1000 FAX (213) 403-1001

THE CITY OF LOS ANGELES OR ITS OFFICERS OR AGENTS SHALL NOT BE RESPONSIBLE FOR THE ACCURACY OR COMPLETENESS OF ELECTRONIC COPIES OF THIS PLAN SHEET.

C:\caddlib\pw\pwwestcoast\vespinosa\dms5768#\C-002-C423-C424.dwg 7/16/18 17:10

REVISION DATES (DESIGN STAGE ONLY)

Sheet Version 3.0

BUREAU OF ENGINEERING
ENGINEERING
CITY OF LOS ANGELES

NO.	REVISIONS:	DATE:	BY:
1	RFI 0068, (0093, 0110 CO-46	11/8/18	XE
2	RFI 0169	7/16/18	TP

STRUCTURE NO.
53C-2329

INDEX NO.

THIS PLAN WAS ELECTRONICALLY SIGNED AND STAMPED

REGISTERED PROFESSIONAL ENGINEER
TERENCE T. PAO
No. C 63433
Expires 3-31-2018
CIVIL
STATE OF CALIFORNIA

CITY OF LOS ANGELES DEPARTMENT OF PUBLIC WORKS

GARY LEE MOORE, P.E. CITY ENGINEER
LIC. NO. 63433 DATE:

ENGINEER:	TERENCE PAO	DESIGN GROUP
DESIGNED BY:	XAVIER ESPINOSA	
DRAWN BY:	XAVIER ESPINOSA	
CHECKED BY:	TERENCE PAO	
APPROVED BY:		

VERTICAL CONTROL: BM 12-04070, 1929 (NGVD 29) - 1985 ADJUSTMENT
HORIZONTAL CONTROL: GPS; PID AE 1704, EPOCH 1991.35

SHEET TITLE: SOUTH FRONTAGE ROAD PLAN & PROFILE
PROJECT: SIXTH STREET VIADUCT REPLACEMENT
ADDRESS: SIXTH STREET VIADUCT (WHITTIER BLVD) LOS ANGELES, CA

WORK ORDER NO.
E700224F
DRAWING NO.
C-423
SHEET OF SHEETS

ADDENDUM 5

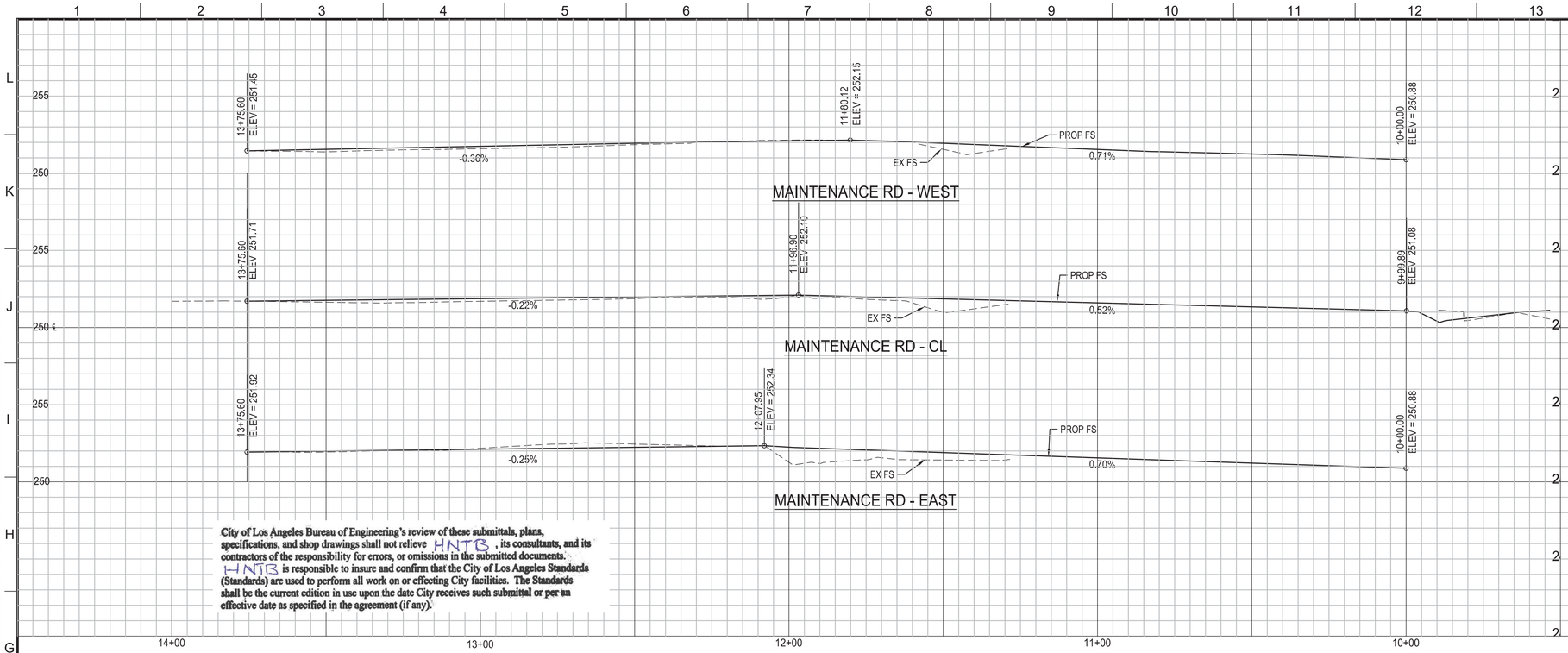

City of Los Angeles Bureau of Engineering's review of these submittals, plans, specifications, and shop drawings shall not relieve HNTB, its consultants, and its contractors of the responsibility for errors, or omissions in the submitted documents. HNTB is responsible to insure and confirm that the City of Los Angeles Standards (Standards) are used to perform all work on or effecting City facilities. The Standards shall be the current edition in use upon the date City receives such submittal or per an effective date as specified in the agreement (if any).

APPROVED FOR CONSTRUCTION

METRO TRANSIT DIVISION

BUREAU OF ENGINEERING
CITY OF LOS ANGELES

PROFILE

HORIZ: 1"=20'
VERT: 1"=4'

CONSTRUCTION SYMBOLS

- CONSTRUCT
- EXISTING
- REMOVE
- REMODEL EXISTING
- REMOVE & CONSTRUCT
- WORK BY OTHERS

CONSTRUCTION NOTES

2	TYPE C INTEGRAL CURB AND GUTTER
5	CONCRETE LONGITUDINAL GUTTER
10	CONCRETE DRIVEWAY
14	ASPHALT CONCRETE PAVEMENT
16	UNTREATED BASE MATERIAL
44	RELOCATE AND/OR ADJUST DWPPS MAINTENANCE HOLE TO GRADE
75	WATER VALVE & COVER
77	SAWCUT LINE & JOIN
136	SEWER MAINTENANCE HOLE (PRECAST)

BUREAU OF ENGINEERING
OFFICIAL RECORD

CURVE DATA TABLE				
No.	RADIUS	DELTA	LENGTH	TANGENT
A	35.00'	77°13'08"	47.170'	27.95'
B	40.00'	88°09'48"	61.550'	38.74'

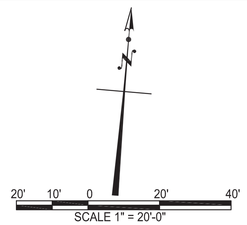

HNTB
HNTB Corporation
601 W. 5TH STREET SUITE 1000
LOS ANGELES, CALIFORNIA 90071
TEL (213) 403-1000 FAX (213) 403-1001

ENGINEERING
CITY OF LOS ANGELES

BUREAU OF ENGINEERING

NO.	REVISIONS:	DATE	BY:

STRUCTURE NO.
53C-2329

INDEX NO.
P-38113

REGISTERED PROFESSIONAL ENGINEER
TERENCE T. PAO
No. C 63433
Expires 3-30-2016
CIVIL
STATE OF CALIFORNIA

THIS PLAN WAS ELECTRONICALLY SIGNED AND STAMPED

CITY OF LOS ANGELES DEPARTMENT OF PUBLIC WORKS

GARY LEE MOORE, P.E. CITY ENGINEER

		DATE:
ENGINEER:	TERENCE PAO	LIC. NO. 63433
DESIGNED BY:	XAVIER ESPINOSA	
DRAWN BY:	XAVIER ESPINOSA	
CHECKED BY:	TERENCE PAO	
APPROVED BY:		

DESIGN GROUP

VERTICAL CONTROL: BM 12-04070, 1929 (NGVD 29) - 1985 ADJUSTMENT
HORIZONTAL CONTROL: GPS; PID AE 1704, EPOCH 1991.35

SHEET TITLE: E 6TH ST MAINTENANCE ROAD PLAN

PROJECT: SIXTH STREET VIADUCT REPLACEMENT

ADDRESS: SIXTH STREET VIADUCT (WHITTIER BLVD) LOS ANGELES, CA

WORK ORDER NO.
E700224F

DRAWING NO.
C-424

SHEET 53 OF 560 SHEETS

THE CITY OF LOS ANGELES OR ITS OFFICERS OR AGENTS SHALL NOT BE RESPONSIBLE FOR THE ACCURACY OR COMPLETENESS OF ELECTRONIC COPIES OF THIS PLAN SHEET.

C:\caddlib\pw\pwwestcoast\yespinosa\dms57684\C-002-C423-C424.dwg 6/22/16 17:56

REVISION DATES (DESIGN STAGE ONLY)

Sheet Version 3.0

ADDENDUM 5

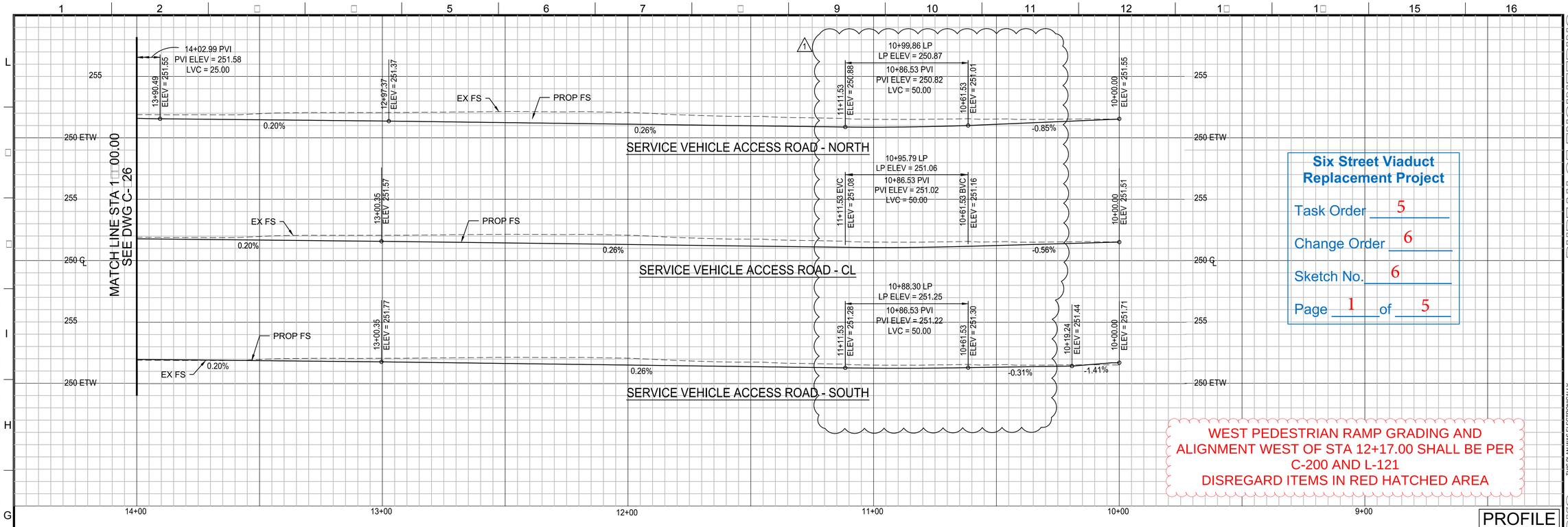

Six Street Viaduct Replacement Project

Task Order 5

Change Order 6

Sketch No. 6

Page 1 of 5

WEST PEDESTRIAN RAMP GRADING AND ALIGNMENT WEST OF STA 12+17.00 SHALL BE PER C-200 AND L-121
DISREGARD ITEMS IN RED HATCHED AREA

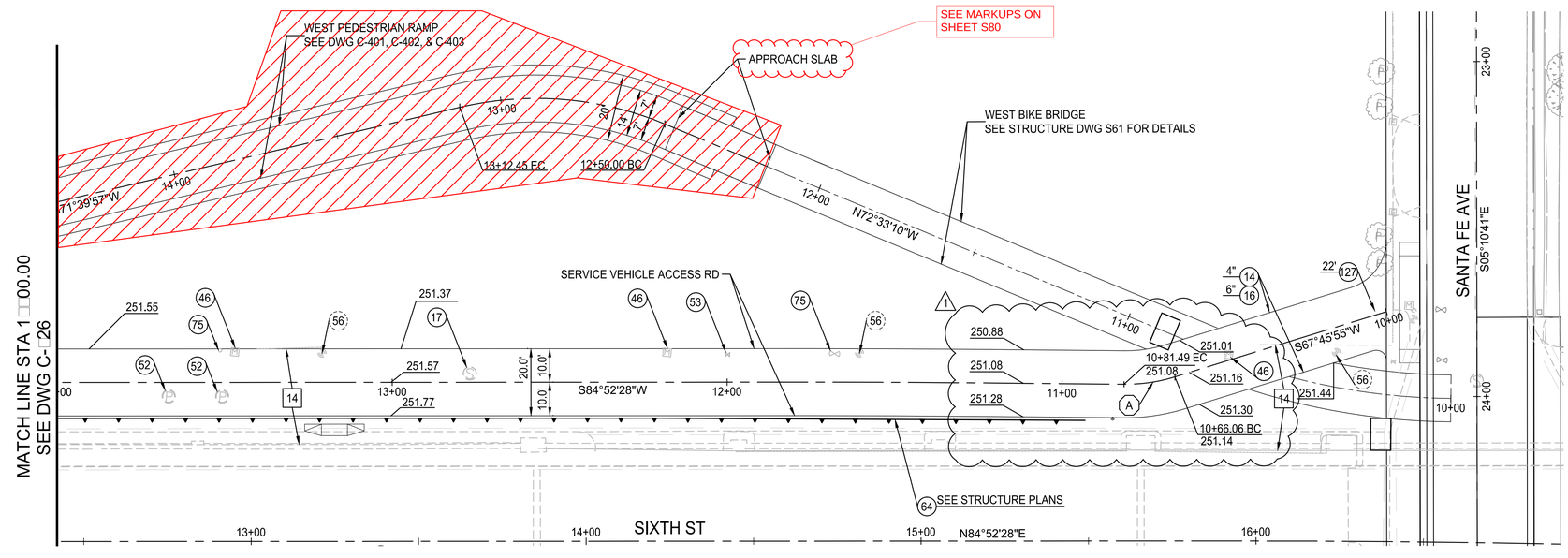

CONSTRUCTION NOTES

2 TYPE C INTEGRAL CURB AND GUTTER
12 CONCRETE WALK
14 ASPHALT CONCRETE PAVEMENT
16 UNTREATED BASE MATERIAL
17 ADJUST MAINTENANCE HOLE TO GRADE
46 RELOCATE WATER METER TO GRADE
52 ELECTRICAL MAINTENANCE HOLE
53 GAS VALVE
56 ADJUST DWPPS POLE TO GRADE
64 RETAINING WALL
75 WATER VALVE & COVER
127 MANUAL LOCKABLE SWING GATE

NOTES:

1. SEE SHEET C-401 & C-404 FOR 6TH AND MATEO CONSTRUCTION
2. SEE SHEET C-414 FOR SANTA FE AVE CONSTRUCTION

CONSTRUCTION SYMBOLS

- CONSTRUCT
- EXISTING
- REMOVE
- REMODEL EXISTING
- REMOVE & CONSTRUCT
- WORK BY OTHERS

CURVE DATA TABLE				
No.	RADIUS	DELTA	LENGTH	TANGENT
A	50.00□	17°40'55"	15.□□□	7.7□□

SCALE 1" = 20'-0"

PROFILE
HORI□□1"□20□
VERT□1"□□□

HNTB
HNTB Corporation
601 W. 5TH STREET SUITE 1000
LOS ANGELES, CALIFORNIA 90071
TEL (213) 403-1000 FAX (213) 403-1001

CITY OF LOS ANGELES DEPARTMENT OF PUBLIC WORKS
BUREAU OF ENGINEERING
ENGINEERING — CITY OF LOS ANGELES

GARY LEE MOORE, P.E. CITY ENGINEER
DATE:
LIC. NO. 63433

ENGINEER:	TERENCE PAO
DESIGN GROUP	
DESIGNED BY:	XAVIER ESPINOSA
DRAWN BY:	XAVIER ESPINOSA
CHECKED BY:	TERENCE PAO
APPROVED BY:	

NO.	REVISIONS:	DATE	BY:
1	RFI 0008 DRAINAGE	2/13/17	XE

STRUCTURE NO. 53C-2329

INDEX NO.

THIS PLAN WAS ELECTRONICALLY SIGNED AND STAMPED

VERTICAL CONTROL: BM 12-04070, 1929 (NGVD 29) - 1985 ADJUSTMENT
HORIZONTAL CONTROL: GPS; PID AE 1704, EPOCH 1991.35

SHEET TITLE: SERVICE VEHICLE ACCESS ROAD PLAN & PROFILE

PROJECT: SIXTH STREET VIADUCT REPLACEMENT

ADDRESS: SIXTH STREET VIADUCT (WHITTIER BLVD) LOS ANGELES, CA

WORK ORDER NO. E70022□F

DRAWING NO. C-425

SHEET OF SHEETS

THE CITY OF LOS ANGELES OR ITS OFFICERS OR AGENTS SHALL NOT BE RESPONSIBLE FOR THE ACCURACY OR COMPLETENESS OF ELECTRONIC COPIES OF THIS PLAN SHEET.

REVISION DATES DESIGN STAGE ONLY:

C:\cadlib\pw\pwwestcoast\vespinosa\dms57684\C-002-C424-C425.dwg 2/14/17 16:48

Sheet Version 3.0

ADDENDUM 5

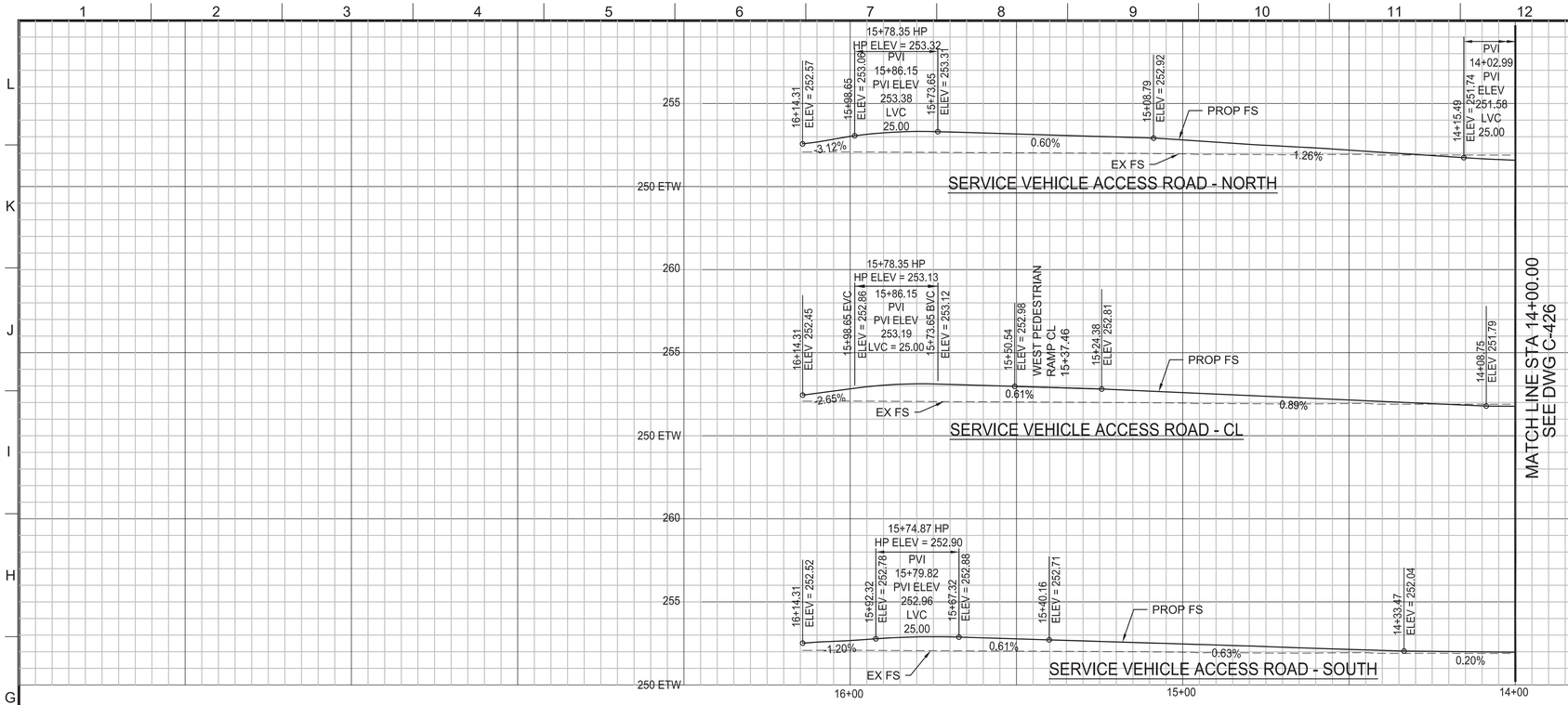

WEST PEDESTRIAN RAMP GRADING AND ALIGNMENT WEST OF STA 12+17.00 SHALL BE PER C-200 AND L-121
DISREGARD ITEMS IN RED HATCHED AREA

PROFILE
HORIZ: 1"=20'
VERT: 1"=4'

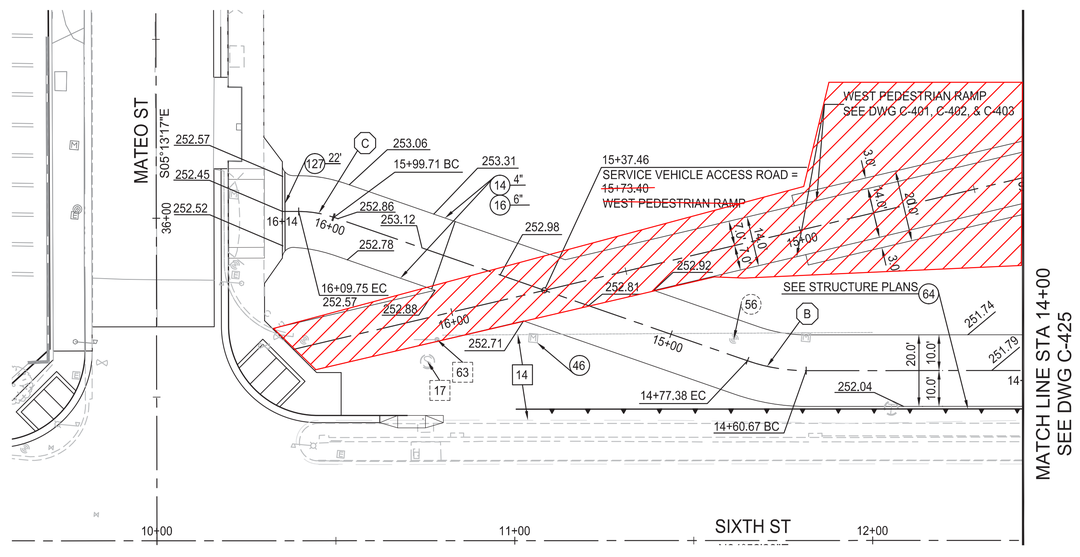

CONSTRUCTION NOTES

14 ASPHALT CONCRETE PAVEMENT
16 UNTREATED BASE MATERIAL
17 ADJUST MAINTENANCE HOLE TO GRADE
56 ADJUST DWPPS POLE TO GRADE
64 RETAINING WALL
127 MANUAL LOCKABLE SWING GATE

NOTES:

1. SEE SHEET C-401 & C-404 FOR 6TH AND MATEO CONSTRUCTION
2. SEE SHEET C-414 FOR SANTA FE AVE CONSTRUCTION

BUREAU OF ENGINEERING
OFFICIAL RECORD

APPROVED FOR CONSTRUCTION

METRO TRANSIT DIVISION
BUREAU OF ENGINEERING
CITY OF LOS ANGELES

City of Los Angeles Bureau of Engineering's review of these submittals, plans, specifications, and shop drawings shall not relieve HNTB, its consultants, and its contractors of the responsibility for errors, or omissions in the submitted documents. HNTB is responsible to insure and confirm that the City of Los Angeles Standards (Standards) are used to perform all work on or effecting City facilities. The Standards shall be the current edition in use upon the date City receives such submittal or per an effective date as specified in the agreement (if any).

CONSTRUCTION SYMBOLS

- CONSTRUCT
- EXISTING
- REMOVE
- REMODEL EXISTING
- REMOVE & CONSTRUCT
- WORK BY OTHERS

CURVE DATA TABLE				
No.	RADIUS	DELTA	LENGTH	TANGENT
B	50.00'	19°09'11"	16.71'	8.44'
C	30.00'	19°10'25"	10.04'	5.07'

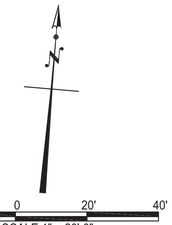

HNTB
HNTB Corporation
601 W. 5TH STREET SUITE 1000
LOS ANGELES, CALIFORNIA 90071
TEL (213) 403-1000 FAX (213) 403-1001

ENGINEERING
CITY OF LOS ANGELES

BUREAU OF ENGINEERING

NO.	REVISIONS:	DATE:	BY:

STRUCTURE NO.
53C-2329

INDEX NO. **P-38113**

REGISTERED PROFESSIONAL ENGINEER
TERENCE T. PAO
No. C 63433
Expires 3-30-2016
CIVIL
STATE OF CALIFORNIA

THIS PLAN WAS ELECTRONICALLY SIGNED AND STAMPED

CITY OF LOS ANGELES DEPARTMENT OF PUBLIC WORKS

CITY ENGINEER
GARY LEE MOORE, P.E.
DATE:
LIC. NO. 63433

DESIGN GROUP	
ENGINEER:	TERENCE PAO
DESIGNED BY:	XAVIER ESPINOSA
DRAWN BY:	XAVIER ESPINOSA
CHECKED BY:	TERENCE PAO
APPROVED BY:	

VERTICAL CONTROL: BM 12-04070, 1929 (NGVD 29) - 1985 ADJUSTMENT
HORIZONTAL CONTROL: GPS; PID AE 1704, EPOCH 1991.35

SHEET TITLE: SERVICE VEHICLE ACCESS ROAD PLAN & PROFILE
PROJECT: SIXTH STREET VIADUCT REPLACEMENT
ADDRESS: SIXTH STREET VIADUCT (WHITTIER BLVD) LOS ANGELES, CA

WORK ORDER NO.
E700224F
DRAWING NO.
C-426
SHEET 55 OF 560 SHEETS

REVISION DATES (DESIGN STAGE ONLY)

C:\caddlib\pw\skivinzis\west\dms57684\C-002-C424-C425.dwg 6/10/16 14:13

Sheet Version 3.0

THE CITY OF LOS ANGELES OR ITS OFFICERS OR AGENTS SHALL NOT BE RESPONSIBLE FOR THE ACCURACY OR COMPLETENESS OF ELECTRONIC COPIES OF THIS PLAN SHEET.

ADDENDUM 5

APPROVED FOR CONSTRUCTION

METRO TRANSIT DIVISION
BUREAU OF ENGINEERING
CITY OF LOS ANGELES

City of Los Angeles Bureau of Engineering's review of these submittals, plans, specifications, and shop drawings shall not relieve HNTB, its consultants, and its contractors of the responsibility for errors, or omissions in the submitted documents. HNTB is responsible to insure and confirm that the City of Los Angeles Standards (Standards) are used to perform all work on or effecting City facilities. The Standards shall be the current edition in use upon the date City receives such submittal or per an effective date as specified in the agreement (if any).

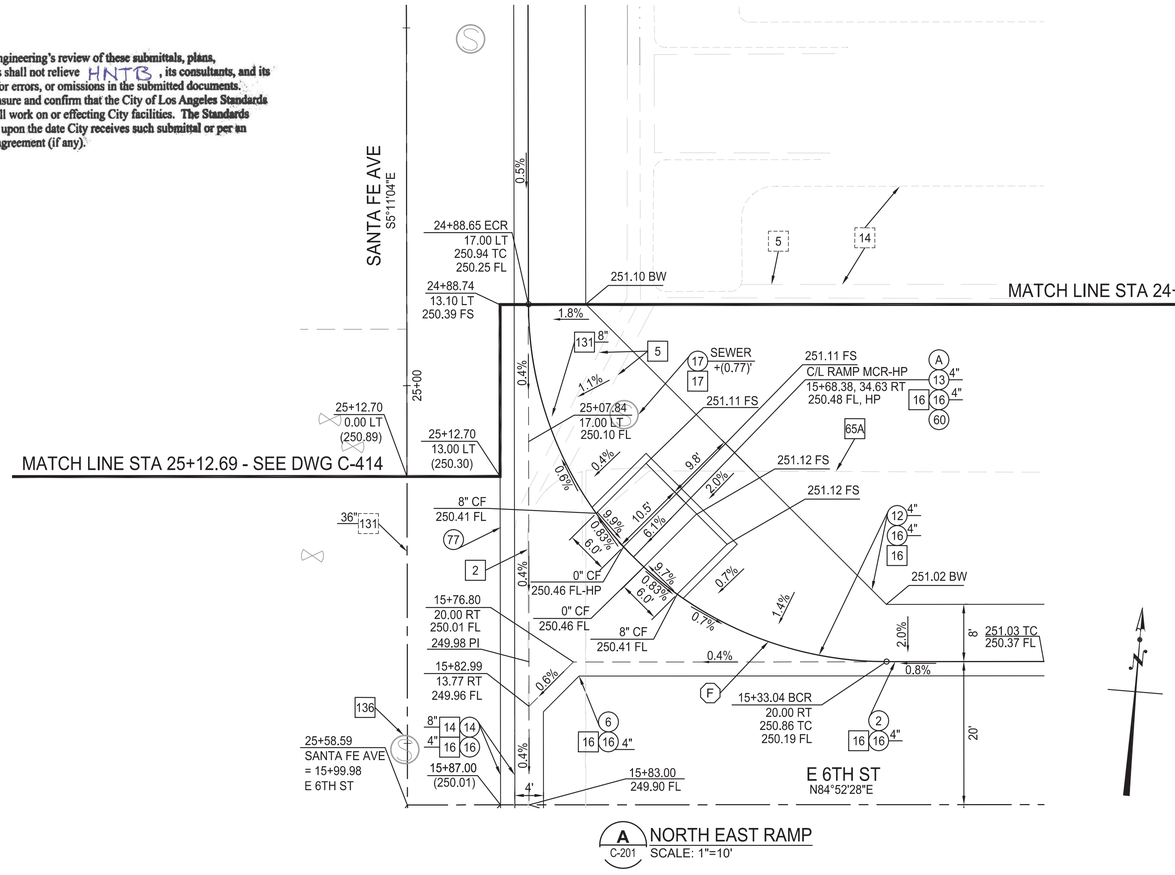

CONSTRUCTION SYMBOLS

- CONSTRUCT
- EXISTING
- REMOVE
- REMODEL EXISTING
- REMOVE & CONSTRUCT
- WORK BY OTHERS

CONSTRUCTION NOTES

2	TYPE C INTEGRAL CURB AND GUTTER
6	CONCRETE INTERSECTION GUTTER, g=4", V=⅜"
12	CONCRETE WALK
13	CURB RAMP
14	ASPHALT CONCRETE PAVEMENT
16	UNTREATED BASE MATERIAL
17	ADJUST MAINTENANCE HOLE TO GRADE
36	UTILITY POLE
37	POLE ANCHOR
42	ELECTROLIER
60	TRUNCATED DOMES
65A	WROUGHT IRON FENCE
77	SAWCUT LINE & JOIN
131	SEWER PIPE
136	SEWER MAINTENANCE HOLE (PRECAST)

NOTES:

1. CURB FACE SHALL BE 8" UNLESS OTHERWISE NOTED.
2. CMB UNDERNEATH CURB & GUTTER AND X-GUTTER SHALL MATCH PAVEMENT STRUCTURAL SECTION.

CURB RAMP DATA TABLE								
	STATION	OFFSET	CASE	Q	W	X	Y	H
A	"E 6TH ST" 15+68.38	34.63' RT	B	9.8'	4.0'	6.0'	10.5'	-
B	"E 6TH ST" 15+72.68	30.26' LT	B	5.4'	4.0'	6.0'	10.5'	-

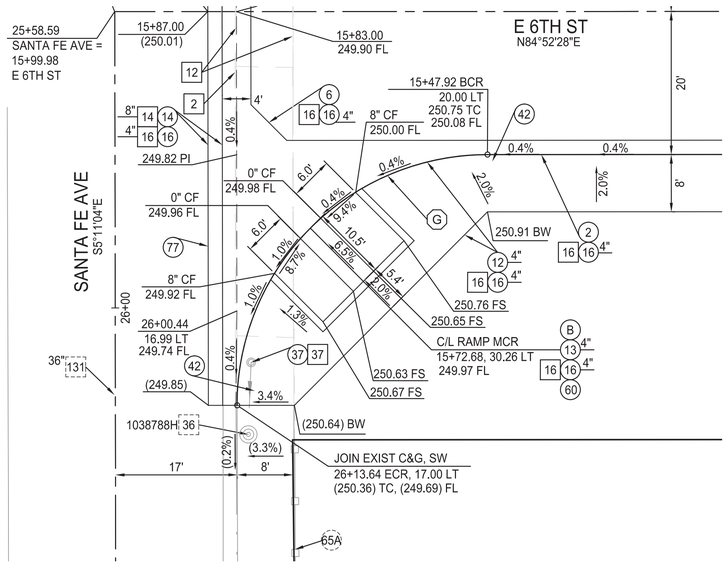

CURVE DATA TABLE				
No.	RADIUS	DELTA	LENGTH	TANGENT
F	50.00'	89°56'46"	78.49'	49.95'
G	35.00'	90°02'37"	55.00'	35.03'

BUREAU OF ENGINEERING
OFFICIAL RECORD

HNTB
HNTB Corporation
601 W. 5TH STREET SUITE 1000
LOS ANGELES, CALIFORNIA 90071
TEL (213) 403-1000 FAX (213) 403-1001

ENGINEERING
CITY OF LOS ANGELES

BUREAU OF ENGINEERING

NO.	REVISIONS:	DATE	BY:

STRUCTURE NO.
53C-2329

INDEX NO. P-38113

THIS PLAN WAS ELECTRONICALLY SIGNED AND STAMPED

REGISTERED PROFESSIONAL ENGINEER
TERENCE T. PAO
No. C 63433
Exp 6-30-2016
CIVIL
STATE OF CALIFORNIA

PUBLIC WORKS

GARY LEE MOORE, P.E.
CITY ENGINEER
LIC. NO. 63433

DESIGN GROUP	
ENGINEER:	TERENCE PAO
DESIGNED BY:	XAVIER ESPINOSA
DRAWN BY:	XAVIER ESPINOSA
CHECKED BY:	TERENCE PAO
APPROVED BY:	TERENCE PAO

DEPARTMENT OF

CITY OF LOS ANGELES

VERTICAL CONTROL: BM 12-24070, 1929 (NGVD 29) - 1985 ADJUSTMENT
HORIZONTAL CONTROL: GPS, FID AE 1704, EPOCH 1991.35

SHEET TITLE: EAST SIXTH STREET CURB RAMP DETAILS

PROJECT: SIXTH STREET VIADUCT REPLACEMENT

ADDRESS: SIXTH STREET VIADUCT (WHITTIER BLVD) LOS ANGELES, CA

WORK ORDER NO.
E700224F

DRAWING NO.
CC-201

SHEET 56 OF 560 SHEETS

REVISION DATES (DESIGN STAGE ONLY)

THE CITY OF LOS ANGELES OR ITS OFFICERS OR AGENTS SHALL NOT BE RESPONSIBLE FOR THE ACCURACY OR COMPLETENESS OF ELECTRONIC COPIES OF THIS PLAN SHEET.

C:\caddlib\pw\pwwestcoast\snaismith\dms57684\C-002-CC201.dwg 6/10/16 13:17

Sheet Version 3.0

ADDENDUM 5

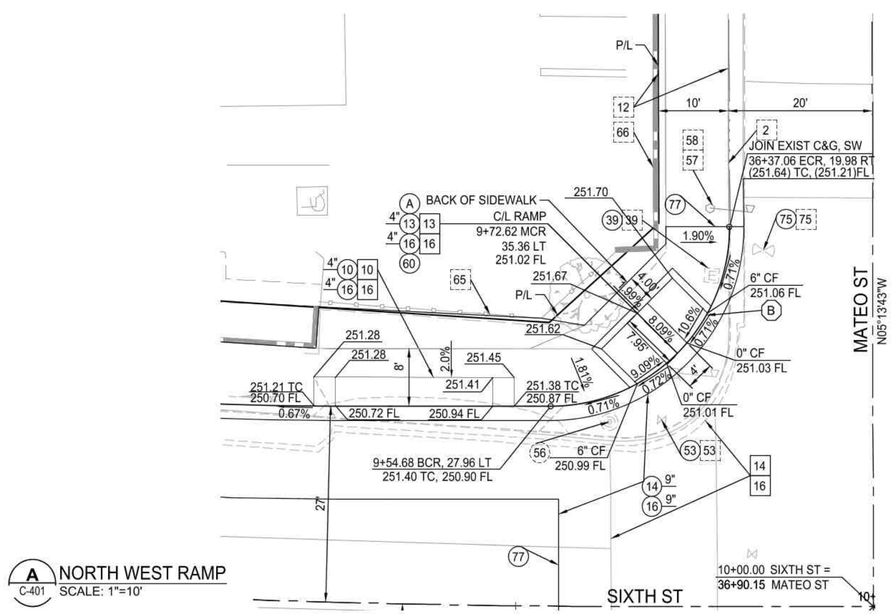

A C-401 NORTH WEST RAMP
SCALE: 1"=10'

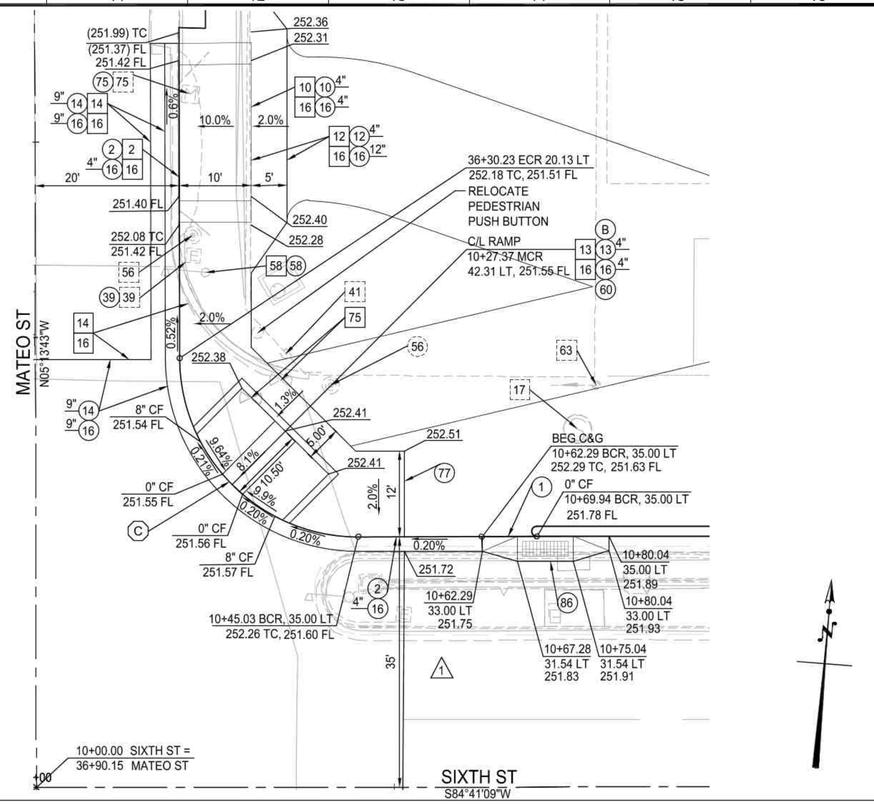

B C-401 NORTH EAST RAMP
SCALE: 1"=10'

CURB RAMP DATA TABLE									
	STATION	OFFSET	CASE	Q	W	X	Y	H	CURB H
A	"SIXTH ST" 9+72.62	27.32' RT	E*	4.0'	4.0'	5.0'	7.95'	-	6"
B	"SIXTH ST" 10+27.37	42.31' LT	E*	5.0'	4.0'	6.5'	10.5'	-	8"
C	"SIXTH ST" 9+74.18	86.67' RT	E*	3.5'	4.0'	5.0'	7.11'	-	6"
D	"MATEO ST" 37+65.17	25.85' LT	CUSTOM	-	-	-	-	-	8"
E	"SIXTH ST" 10+47.50	34.87' RT	CUSTOM	-	6.14'	-	-	-	6"

*MODIFIED STANDARD CURB RAMP TYPE

CONSTRUCTION SYMBOLS

- CONSTRUCT
- EXISTING
- REMOVE
- REMODEL EXISTING
- REMOVE & CONSTRUCT
- WORK BY OTHERS

CURVE DATA TABLE				
No.	RADIUS	DELTA	LENGTH	TANGENT
B	25.00'	90°05'53"	39.31'	25.04'
C	25.00'	89°53'49"	39.23'	24.96'
D1	4.29'	90°00'00"	6.75'	4.29'
D2	4.29'	90°00'00"	6.75'	4.29'
E	20.00'	89°36'46"	31.28'	19.87'
F	25.00'	81°24'25"	35.52'	21.51'

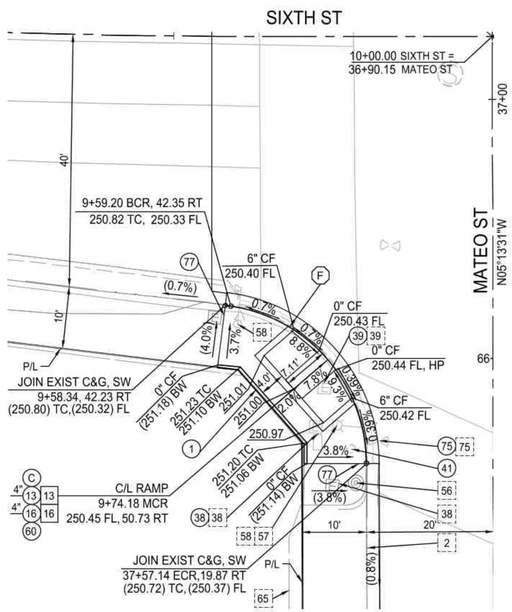

C C-401 SOUTH WEST RAMP
SCALE: 1"=10'

CONSTRUCTION NOTES

1 CONCRETE CURB (TYPE A CURB)
2 TYPE C INTEGRAL CURB AND GUTTER
10 CONCRETE DRIVEWAY
12 CONCRETE WALK
13 CURB RAMP
14 ASPHALT CONCRETE PAVEMENT
16 UNTREATED BASE MATERIAL
17 ADJUST MAINTENANCE HOLE TO GRADE
38 STREET LIGHTING PULL BOX
39 TRAFFIC SIGNAL PULL BOX TO GRADE
41 FIRE HYDRANT
49 TRAFFIC SIGNAL CABINET
53 GAS VALVE
56 ADJUST DWPPS POLE TO GRADE
57 STREET LIGHTING POLE TO GRADE
58 TRAFFIC SIGNAL POLE TO GRADE
60 TRUNCATED DOMES
63 GUY WIRE
65 CHAIN LINK FENCE
66 CONCRETE MASONRY BLOCK WALL
75 WATER VALVE & COVER
77 SAWCUT LINE & JOIN
81 CURBSIDE GRATING CATCH BASIN (CGB)
86 LOCAL DEPRESSION AT CATCH BASIN
126 CRASH CUSHION

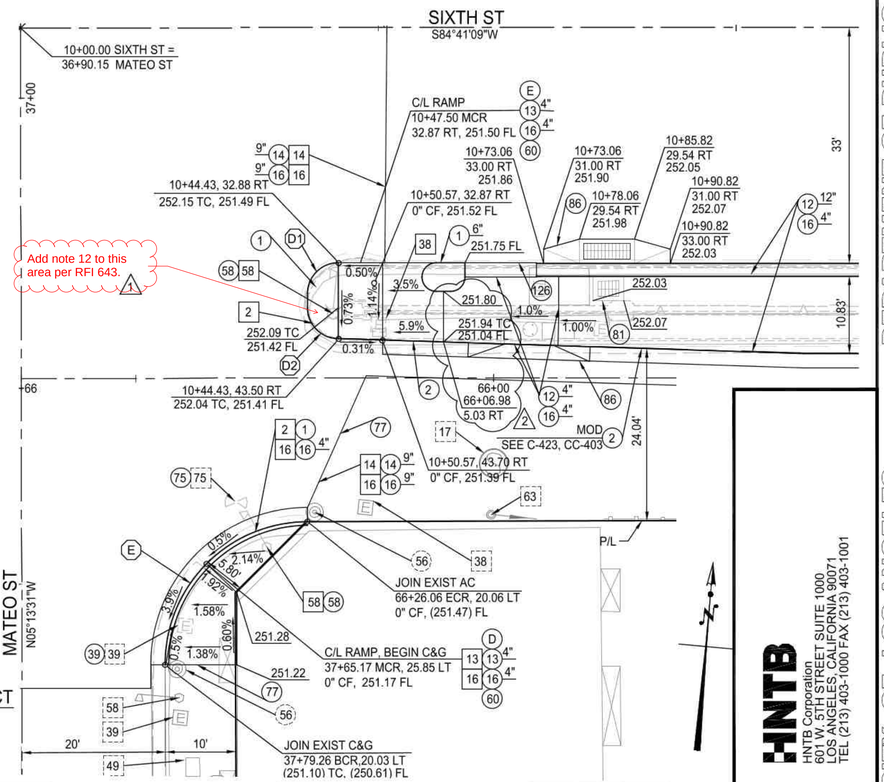

D-E C-401 SOUTH EAST RAMP TO VIADUCT
SOUTH EAST RAMP
SCALE: 1"=10'

HNTB
HNTB Corporation
600 WILSHIRE BOULEVARD, SUITE 1000
LOS ANGELES, CALIFORNIA 90071
TEL (213) 403-1000 FAX (213) 403-1001

CITY OF LOS ANGELES DEPARTMENT OF PUBLIC WORKS
BUREAU OF ENGINEERING
ENGINEERING CITY OF LOS ANGELES

GARY LEE MOORE, P.E. CITY ENGINEER

DESIGN GROUP	
ENGINEER:	TERENCE PAO
DESIGNED BY:	XAVIER ESPINOSA
DRAWN BY:	XAVIER ESPINOSA
CHECKED BY:	TERENCE PAO
APPROVED BY:	

LIC. NO. 63433 DATE:

NO.	REVISIONS:	DATE:	BY:
1	RFI 0088, 0093, 0110 CO 46	1/18/18	XE
2	RFI 0188	7/16/18	TP

STRUCTURE NO. 53C-2329

INDEX NO.

REGISTERED PROFESSIONAL ENGINEER TERENCE T. PAO No. C 63433 Exp. 6-30-2018 CIVIL STATE OF CALIFORNIA

THIS PLAN WAS ELECTRONICALLY SIGNED AND STAMPED

VERTICAL CONTROL:	BM 12-04070 1929 (NGVD 29) - 1985 ADJUSTMENT
HORIZONTAL CONTROL:	GPS; PID AE 1704, EPOCH 1991.35
SHEET TITLE:	SIXTH STREET & MATEO STREET CURB RAMP DETAILS
PROJECT:	SIXTH STREET VIADUCT REPLACEMENT
ADDRESS:	SIXTH STREET VIADUCT (WHITTIER BLVD) LOS ANGELES, CA

WORK ORDER NO. E700224F

DRAWING NO. CC-401

SHEET OF SHEETS

REVISION DATES [DESIGN STAGE ONLY]

THE CITY OF LOS ANGELES OR ITS OFFICERS OR AGENTS SHALL NOT BE RESPONSIBLE FOR THE ACCURACY OR COMPLETENESS OF ELECTRONIC COPIES OF THIS PLAN SHEET.

C:\caddlib\pw\pwwestcoast\vespino\dms576841\C-002-CC401-CC402.dwg 7/16/18 16:48

Sheet Version 3.0

ADDENDUM 5

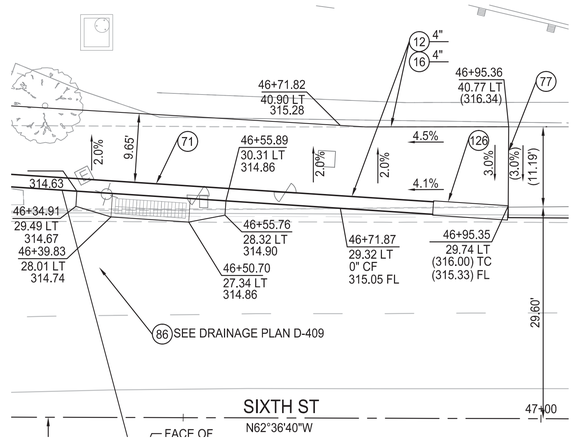

F C-413 NORTH SIDE SIXTH STREET VIADUCT
SCALE: 1"=10'

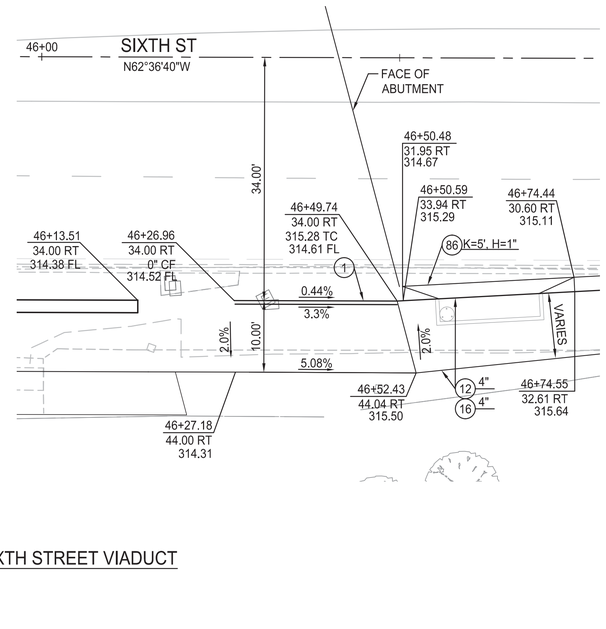

F C-413 SOUTH SIDE SIXTH STREET VIADUCT
SCALE: 1"=10'

CONSTRUCTION SYMBOLS

- CONSTRUCT
- EXISTING
- REMOVE
- REMODEL EXISTING
- REMOVE & CONSTRUCT
- WORK BY OTHERS

CONSTRUCTION NOTES

1 CONCRETE CURB (TYPE A CURB)
12 CONCRETE WALK
14 ASPHALT CONCRETE PAVEMENT
16 UNTREATED BASE MATERIAL
71 CONCRETE BARRIER
77 SAWCUT LINE & JOIN
86 LOCAL DEPRESSION AT CATCH BASIN
126 CRASH CUSHION

APPROVED FOR CONSTRUCTION

METRO TRANSIT DIVISION
BUREAU OF ENGINEERING
CITY OF LOS ANGELES

City of Los Angeles Bureau of Engineering's review of these submittals, plans, specifications, and shop drawings shall not relieve HNTB, its consultants, and its contractors of the responsibility for errors, or omissions in the submitted documents. HNTB is responsible to insure and confirm that the City of Los Angeles Standards (Standards) are used to perform all work on or effecting City facilities. The Standards shall be the current edition in use upon the date City receives such submittal or per an effective date as specified in the agreement (if any).

BUREAU OF ENGINEERING
OFFICIAL RECORD

HNTB
HNTB Corporation
601 W. 5TH STREET SUITE 1000
LOS ANGELES, CALIFORNIA 90071
TEL (213) 403-1000 FAX (213) 403-1001

CITY OF LOS ANGELES DEPARTMENT OF PUBLIC WORKS
BUREAU OF ENGINEERING

ENGINEERING
CITY OF LOS ANGELES

NO.	REVISIONS:	DATE:	BY:

INDEX NO. P-38113

STRUCTURE NO. 53C-2329

THIS PLAN WAS ELECTRONICALLY SIGNED AND STAMPED

REGISTERED PROFESSIONAL ENGINEER TERENCE T. PAO No. C 63433 Expires 6-30-2018 CIVIL STATE OF CALIFORNIA

GARY LEE MOORE, P.E. CITY ENGINEER DATE:
LIC NO. 81237

DESIGN GROUP
ENGINEER: TERENCE PAO LIC NO.
DESIGNED BY: XAVIER ESPINOSA
DRAWN BY: XAVIER ESPINOSA
CHECKED BY: XAVIER ESPINOSA
APPROVED BY:

VERTICAL CONTROL: BM 12-04070,1929 (NGVD 29) - 1985 ADJUSTMENT
HORIZONTAL CONTROL: GPS; PID AE 1704, EPOCH 1991.35

SHEET TITLE: SANTA FE AVENUE & 6TH ST CURB RAMP DETAILS
PROJECT: SIXTH STREET VIADUCT REPLACEMENT
ADDRESS: SIXTH STREET VIADUCT (WHITTIER BLVD) LOS ANGELES, CA

WORK ORDER NO. E700224F
DRAWING NO. CC-402
SHEET 58 OF 560 SHEETS

REVISION DATES (DESIGN STAGE ONLY)

THE CITY OF LOS ANGELES OR ITS OFFICERS OR AGENTS SHALL NOT BE RESPONSIBLE FOR THE ACCURACY OR COMPLETENESS OF ELECTRONIC COPIES OF THIS PLAN SHEET.

C:\caddlib\pw\skivirzis\west\dms57684\C-002-CC401-CC402.dwg 6/10/16 14:07

Sheet Version 3.0

ADDENDUM 5

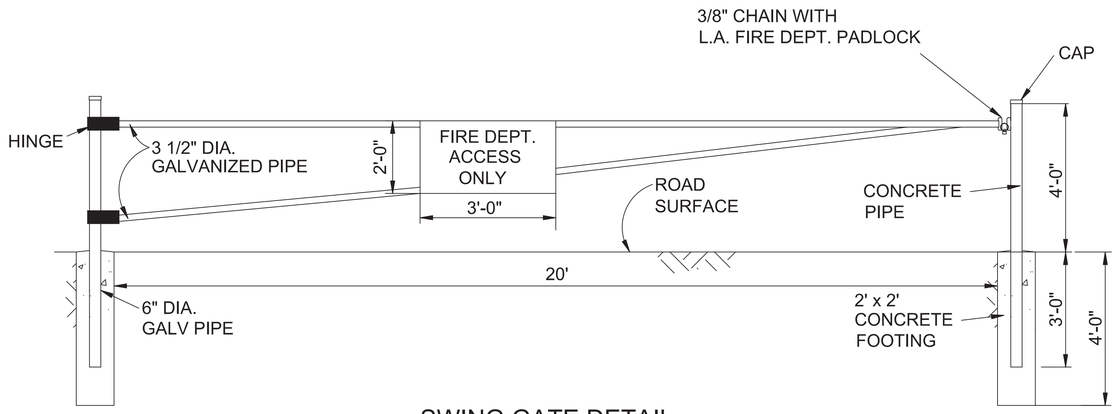

SWING GATE DETAIL

NTS

NOTES:

1. PIPE SHALL BE STANDARD WEIGHT, PER AISC STANDARDS.
2. PIPE POSTS SHALL BE FILLED WITH CONCRETE.
3. USE 100% PENETRATION WELDS FOR PIPE CONNECTIONS.
4. ALL SURFACES SHALL BE GALVANIZED.
5. SECURE NUTS AT U BOLT ENDS FROM REMOVAL BY WELDING OR PEENING

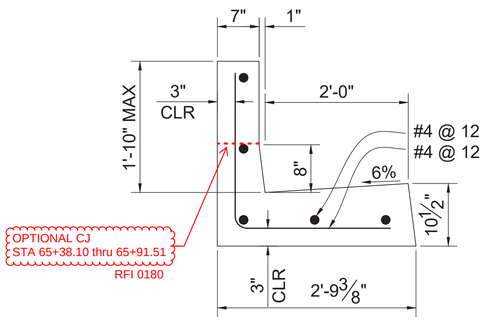

TYPE C MODIFIED RETAINING CURB & GUTTER

SCALE: 1" =1'-0"

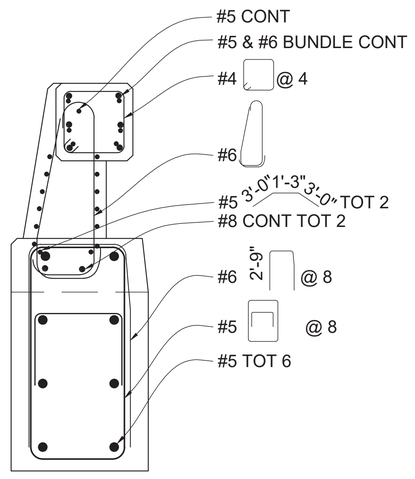

CONCRETE BARRIER TYPE 80 (MOD)

SCALE: 1" =1'-0"

APPROVED FOR CONSTRUCTION

METRO TRANSIT DIVISION
BUREAU OF ENGINEERING
CITY OF LOS ANGELES

City of Los Angeles Bureau of Engineering's review of these submittals, plans, specifications, and shop drawings shall not relieve HNTB, its consultants, and its contractors of the responsibility for errors, or omissions in the submitted documents. HNTB is responsible to insure and confirm that the City of Los Angeles Standards (Standards) are used to perform all work on or effecting City facilities. The Standards shall be the current edition in use upon the date City receives such submittal or per an effective date as specified in the agreement (if any).

BUREAU OF ENGINEERING
OFFICIAL RECORD

HNTB
HNTB Corporation
601 W. 5TH STREET SUITE 1000
LOS ANGELES, CALIFORNIA 90071
TEL (213) 403-1000 FAX (213) 403-1001

CITY OF LOS ANGELES DEPARTMENT OF PUBLIC WORKS BUREAU OF ENGINEERING

ENGINEERING
CITY OF LOS ANGELES

STRUCTURE NO. 53C-2329

INDEX NO. P-38113

NO. | REVISIONS: | DATE | BY:

THIS PLAN WAS ELECTRONICALLY SIGNED AND STAMPED.

REGISTERED PROFESSIONAL ENGINEER
TERENCE T. PAO
No. C 63433
Expires 3-30-2016
CIVIL
STATE OF CALIFORNIA

GARY LEE MOORE, P.E. CITY ENGINEER

		DESIGN GROUP	LIC. NO. 63433	DATE:
ENGINEER:	TERENCE PAO			
DESIGNED BY:	XAVIER ESPINOSA			
DRAWN BY:	XAVIER ESPINOSA			
CHECKED BY:	TERENCE PAO			
APPROVED BY:				

VERTICAL CONTROL: BM 12-04070 1929 (NGVD 29) - 1985 ADJUSTMENT
HORIZONTAL CONTROL: GPS; PID AE 1704; EPOCH 1991.35

SHEET TITLE: DETAILS

PROJECT: SIXTH STREET VIADUCT REPLACEMENT

ADDRESS: SIXTH STREET VIADUCT (WHITTIER BLVD)
LOS ANGELES, CA

WORK ORDER NO. E700224F

DRAWING NO. CC-403

SHEET 59 OF 560 SHEETS

THE CITY OF LOS ANGELES OR ITS OFFICERS OR AGENTS SHALL NOT BE RESPONSIBLE FOR THE ACCURACY OR COMPLETENESS OF ELECTRONIC COPIES OF THIS PLAN SHEET.

C:\coddlib\pw\pwwestcoast\xespinosa\dms57684\C-002-CC403.dwg 6/10/16 11:56

REVISION DATES (DESIGN STAGE ONLY)

Sheet Version 3.0

ADDENDUM 5

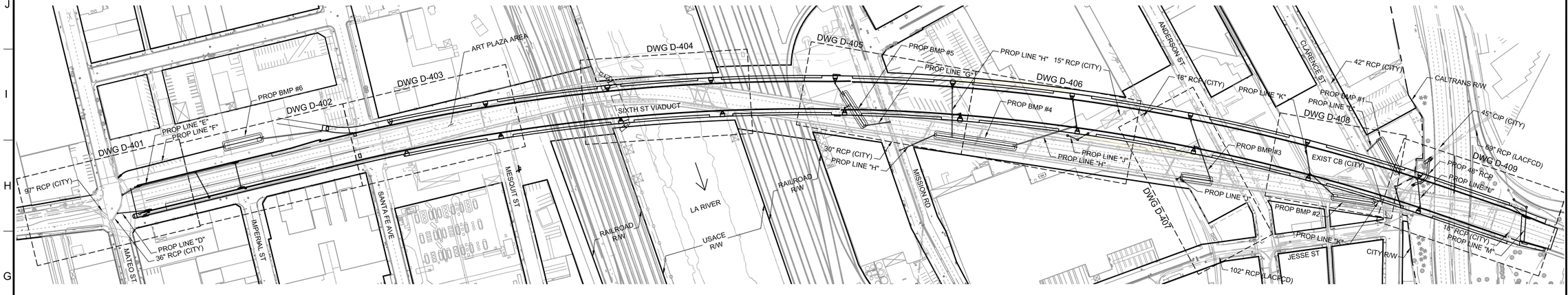

KEY MAP

NOT TO SCALE

INDEX TO DRAINAGE DRAWINGS	
DWG NO.	DESCRIPTION
D-400	KEY MAP AND GENERAL NOTES
D-401	VIADUCT DRAINAGE PLAN AND PROFILE LINES "D", "E", & "F"
D-402	VIADUCT DRAINAGE PLAN AND PROFILE LINES "D", "E", & "F"
D-403	VIADUCT DRAINAGE PLAN - ART PLAZA AREA
D-404	VIADUCT DRAINAGE PLAN - LA RIVER AREA
D-405	VIADUCT DRAINAGE PLAN AND PROFILE LINES "G", & "H"
D-406	VIADUCT DRAINAGE PLAN AND PROFILE LINES "H", & "J"
D-407	VIADUCT DRAINAGE PLAN AND PROFILE LINES "J"
D-408	VIADUCT DRAINAGE PLAN AND PROFILE LINES "K", & "L"
D-409	VIADUCT DRAINAGE PLAN AND PROFILE LINES "L", & "M"
D-431	VIADUCT DRAINAGE DETAILS

GENERAL NOTES

1. ALL PROPOSED & REMODELED CATCH BASINS SHALL INCLUDE CATCH BASIN INSERTS, CATCH BASIN OPENING SCREEN COVER, SEE SPECIFICATIONS.
2. ALL NEW AND REMOLDED OR REPLACED CATCH BASINS UNDER THIS PROJECT SHALL BE STENCILED WITH PROHIBITIVE LANGUAGE SUCH AS "NO DUMPING DRAINS TO OCEAN".
3. CONTRACTOR SHALL REFER TO THE CURRENT CITY OF LOS ANGELES, BUREAU OF ENGINEERING STANDARD PLANS AND 2009 APWA STANDARD PLANS FOR PUBLIC WORK CONSTRUCTION (SPPWC).
4. CONTRACTOR SHALL POTHOLE AND VERIFY DEPTH AND SIZE OF EXISTING UTILITIES PRIOR TO CONSTRUCTION.
5. VERIFY IN FIELD AND AS-BUILT EXISTING SD SYSTEM. SUBMIT PLANS FOR APPROVAL.
6. STREET LIGHTING REMOVAL OR RELOCATION SEE STREET LIGHTING PLANS.
7. FOR DISPOSITION OF EXISTING UTILITIES SEE UTILITY PLANS. EXISTING UTILITIES TO BE PROTECTED IN PLACE UNLESS OTHERWISE NOTED.
8. ABANDONMENT OF EXISTING STORM DRAINS SHALL CONFORM TO "GREEN BOOK" SECTION 306-5 AS MODIFIED BY "BROWN BOOK". FILL ABANDONED PIPES WITH CLSM.
9. FRAME AND GRATING FOR CATCH BASIN ADA COMPLIANCE SEE SPECIFICATIONS FOR BRIDGE DECK DRAIN.
10. FOR ADDITIONAL STORM DRAIN CONSTRUCTION NOTES SEE G-403
11. FOR NOTICE TO CONTRACTOR SEE G-402
12. FOR LIST OF ABBREVIATIONS AND LEGENS SEE G-405 THROUGH G-408
13. FOR LIST OF CONSTRUCTION NOTES SEE G-409

RFI No.: 26 The City takes no exception to the Contractor abandoning the storm drain pipe(s) in place conforming to Green Book Section 306-5 as modified by the Brown Book. Where existing pipe that has been noted for removal conflicts with elements of the proposed viaduct, it is recommended that the Contractor partially remove the portion of pipe in conflict.

The Contractor shall as-built the lines/locations where the storm drain pipes have been abandoned in place vs. removed. The Contractor shall remove abandoned portions of pipe at no cost to the City if found to be in conflict with future contract, temporary, or change order work.

City of Los Angeles Bureau of Engineering's review of these submittals, plans, specifications, and shop drawings shall not relieve HNTB, its consultants, and its contractors of the responsibility for errors, or omissions in the submitted documents. HNTB is responsible to insure and confirm that the City of Los Angeles Standards (Standards) are used to perform all work on or effecting City facilities. The Standards shall be the current edition in use upon the date City receives such submittal or per an effective date as specified in the agreement (if any).

APPROVED FOR CONSTRUCTION
06-10-2016
METRO TRANSIT DIVISION
BUREAU OF ENGINEERING
CITY OF LOS ANGELES

BUREAU OF ENGINEERING
OFFICIAL RECORD

HNTB
HNTB Corporation
601 W. 5TH STREET SUITE 1000
LOS ANGELES, CALIFORNIA 90071
TEL (213) 403-1000 FAX (213) 403-1001

CITY OF LOS ANGELES DEPARTMENT OF PUBLIC WORKS BUREAU OF ENGINEERING

ENGINEERING
CITY OF LOS ANGELES

NO.	REVISIONS:	DATE:	BY:

STRUCTURE NO.
53C-2329

INDEX NO.
P_38113

PROFESSIONAL ENGINEER
KOUROSH SAMENI
No. C 45318
9/30/16
REGISTERED CIVIL ENGINEER
STATE OF CALIFORNIA

"THIS PLAN WAS ELECTRONICALLY SIGNED AND STAMPED."

CITY ENGINEER: GARY LEE MOORE, P.E.
DESIGN GROUP — DATE:
ENGINEER: KOUROSH SAMENI — LIC. NO. 45318
DESIGNED BY: XAVIER ESPINOSA
DRAWN BY: XAVIER ESPINOSA
CHECKED BY: ROBERT MCFADDEN
APPROVED BY: TERENCE PAO

VERTICAL CONTROL: BM 12-04070 1929 (NGVD 29) - 1985 ADJUSTMENT
HORIZONTAL CONTROL: GPS; PID AE 1704; EPOCH 1991.35

SHEET TITLE: VIADUCT DRAINAGE KEY MAP AND GENERAL NOTES
PROJECT: SIXTH STREET VIADUCT REPLACEMENT
ADDRESS: SIXTH STREET VIADUCT (WHITTIER BLVD) LOS ANGELES, CA

WORK ORDER NO.
E700224F

DRAWING NO.
D-400

SHEET 60 OF 560 SHEETS

REVISION DATES (DESIGN STAGE ONLY)

C:\caddlib\pw\pwwestcoast\xsameni\dms57684\C-002-D400.dwg 6/10/16 16:31

Sheet Version 3.0

THE CITY OF LOS ANGELES OR ITS OFFICERS OR AGENTS SHALL NOT BE RESPONSIBLE FOR THE ACCURACY OR COMPLETENESS OF ELECTRONIC COPIES OF THIS PLAN SHEET.

ADDENDUM 5

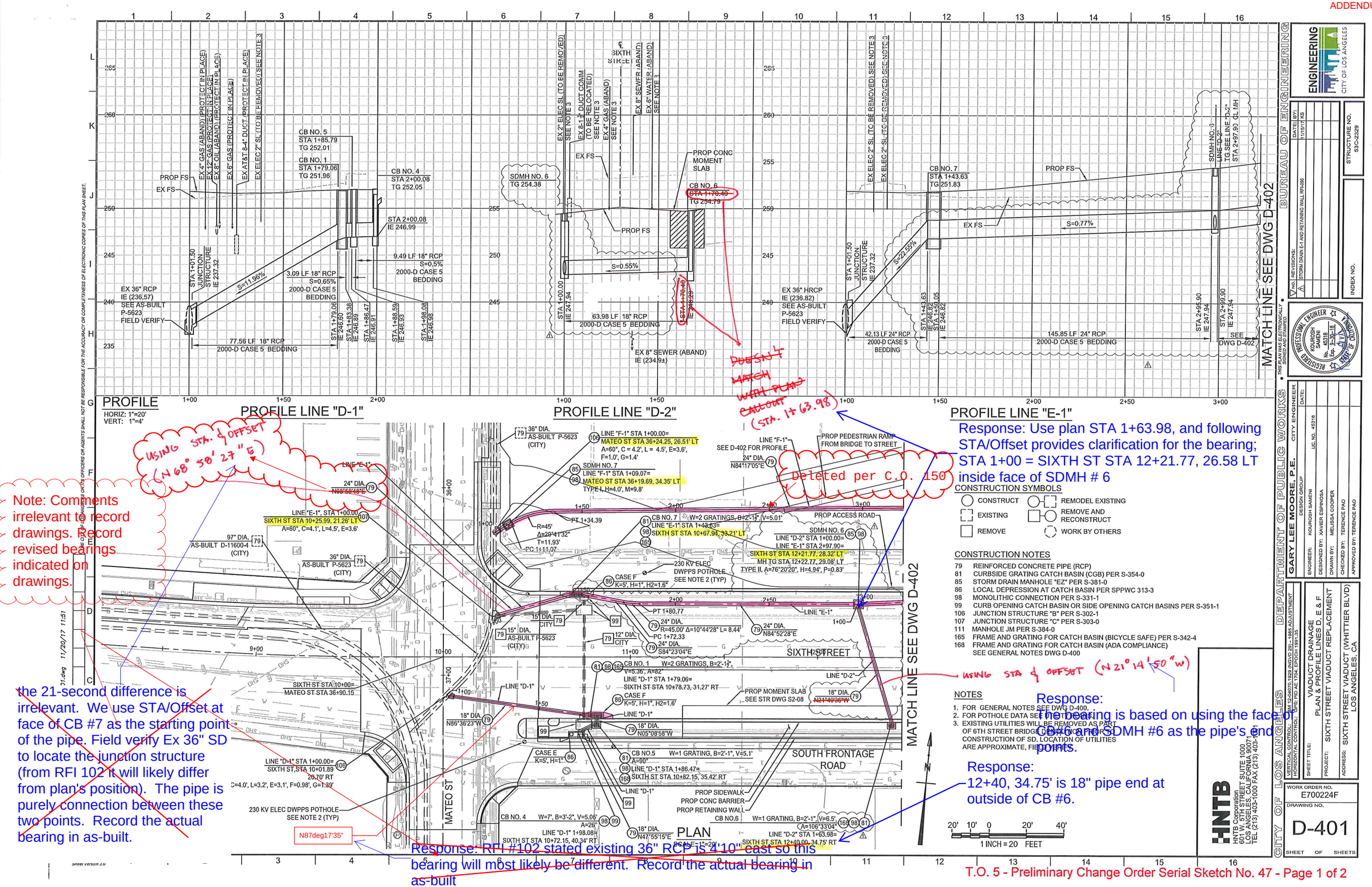

Note: Comments irrelevant to record drawings. Record revised bearings indicated on drawings.

the 21-second difference is irrelevant. We use STA/Offset at face of CB #7 as the starting point of the pipe. Field verify Ex 36" SD to locate the junction structure (from RFI 102 it will likely differ from plan's position). The pipe is purely connection between these two points. Record the actual bearing in as-built.

Response: RFI #102 stated existing 36" RCP is 4'10" east so this bearing will most likely be different. Record the actual bearing in as-built

Response: Use plan STA 1+63.98, and following STA/Offset provides clarification for the bearing; STA 1+00 = SIXTH ST STA 12+21.77, 26.58 LT inside face of SDMH # 6

Response: The bearing is based on using the face of CB #6 and SDMH #6 as the pipe's end points.

Response: 12+40, 34.75' is 18" pipe end at outside of CB #6.

Deleted per C.O. 150

USING STA. & OFFSET (N 68° 58' 27" E)

USING STA & OFFSET (N 21° 14' 50" W)

DOESN'T MATCH WITH PLAN CALLOUT (STA. 1+63.98)

N87deg17'35"

ENGINEERING CITY OF LOS ANGELES

BUREAU OF ENGINEERING

REGISTERED PROFESSIONAL ENGINEER KOUROSH SAMENI No. 45318 Exp. 9-30-18 STATE OF CALIFORNIA

GARY LEE MOORE, P.E. CITY ENGINEER

ENGINEER: KOUROSH SAMENI
DESIGNED BY: XAVIER ESPINOSA
DRAWN BY: MELISSA COOPER
CHECKED BY: TERENCE PAO
APPROVED BY: TERENCE PAO

VIADUCT DRAINAGE PLAN & PROFILE LINES D, E & F

PROJECT: SIXTH STREET VIADUCT REPLACEMENT

ADDRESS: SIXTH STREET VIADUCT (WHITTIER BLVD) LOS ANGELES, CA

CITY OF LOS ANGELES DEPARTMENT OF PUBLIC WORKS

WORK ORDER NO. E700224F

DRAWING NO. D-401

SHEET OF SHEETS

HNTB HNTB Corporation 601 W. 5TH STREET SUITE 1000 LOS ANGELES, CALIFORNIA 90071 TEL (213) 403-1000 FAX (213) 403-1001

T.O. 5 - Preliminary Change Order Serial Sketch No. 47 - Page 1 of 2

ADDENDUM 5

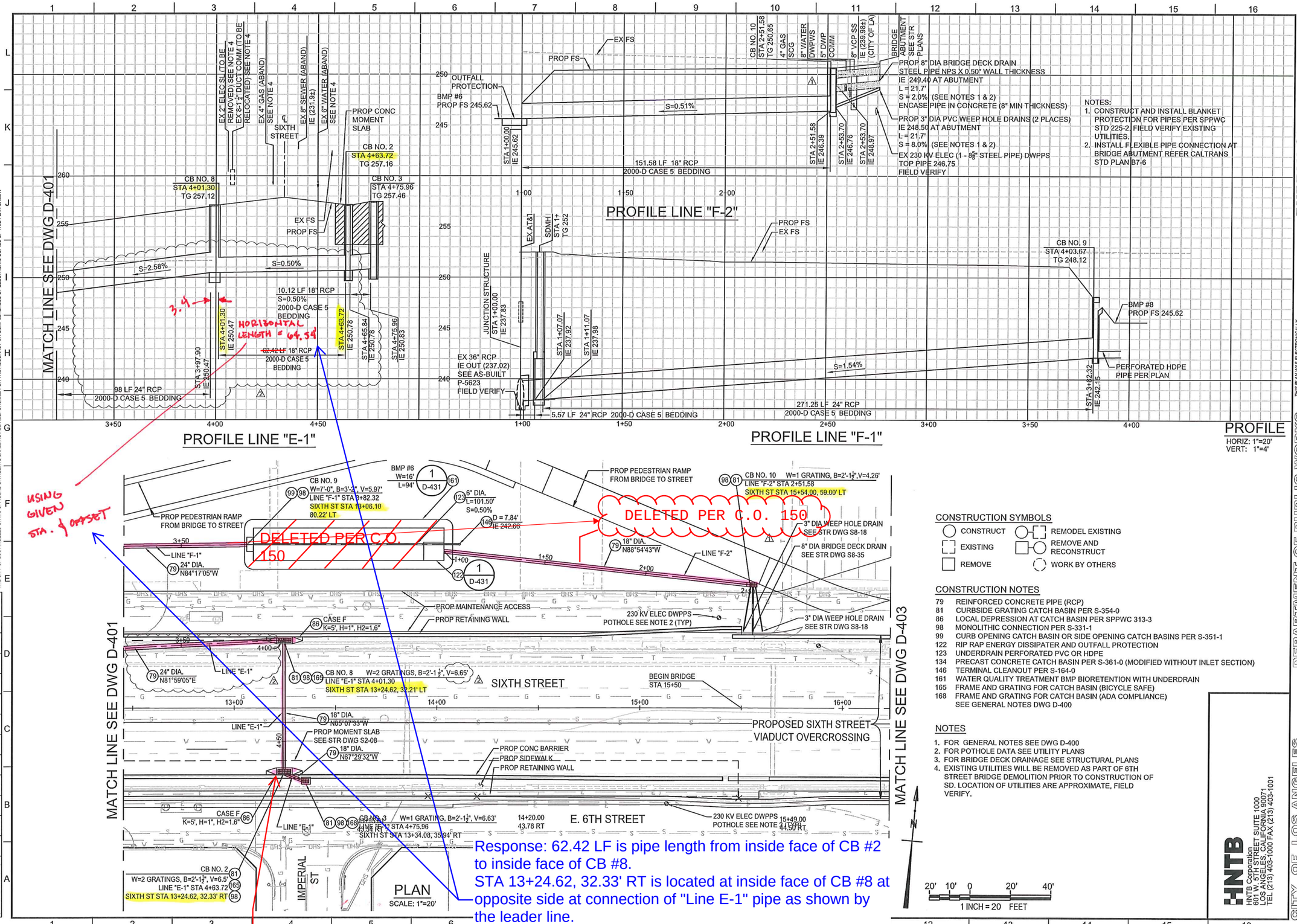

Response: 62.42 LF is pipe length from inside face of CB #2 to inside face of CB #8.
STA 13+24.62, 32.33' RT is located at inside face of CB #8 at opposite side at connection of "Line E-1" pipe as shown by the leader line.
STA 13+24.62, 32.21' LT is at inside face of CB #8 as shown by the leader line.

CONSTRUCTION SYMBOLS

CONSTRUCT	REMODEL EXISTING
EXISTING	REMOVE AND RECONSTRUCT
REMOVE	WORK BY OTHERS

CONSTRUCTION NOTES

79 REINFORCED CONCRETE PIPE (RCP)
81 CURBSIDE GRATING CATCH BASIN PER S-354-0
86 LOCAL DEPRESSION AT CATCH BASIN PER SPPWC 313-3
98 MONOLITHIC CONNECTION PER S-331-1
99 CURB OPENING CATCH BASIN OR SIDE OPENING CATCH BASINS PER S-351-1
122 RIP RAP ENERGY DISSIPATER AND OUTFALL PROTECTION
123 UNDERDRAIN PERFORATED PVC OR HDPE
134 PRECAST CONCRETE CATCH BASIN PER S-361-0 (MODIFIED WITHOUT INLET SECTION)
146 TERMINAL CLEANOUT PER S-164-0
161 WATER QUALITY TREATMENT BMP BIORETENTION WITH UNDERDRAIN
165 FRAME AND GRATING FOR CATCH BASIN (BICYCLE SAFE)
168 FRAME AND GRATING FOR CATCH BASIN (ADA COMPLIANCE) SEE GENERAL NOTES DWG D-400

NOTES

1. FOR GENERAL NOTES SEE DWG D-400
2. FOR POTHOLE DATA SEE UTILITY PLANS
3. FOR BRIDGE DECK DRAINAGE SEE STRUCTURAL PLANS
4. EXISTING UTILITIES WILL BE REMOVED AS PART OF 6TH STREET BRIDGE DEMOLITION PRIOR TO CONSTRUCTION OF SD. LOCATION OF UTILITIES ARE APPROXIMATE, FIELD VERIFY.

20' 10' 0 20' 40'
1 INCH = 20 FEET

HNTB
HNTB Corporation
601 W. 5TH STREET SUITE 1000
LOS ANGELES, CALIFORNIA 90071
TEL (213) 403-1000 FAX (213) 403-1001

T.O. 5 - Preliminary Change Order Serial Sketch No. 47 - Page 2 of 2

CITY OF LOS ANGELES DEPARTMENT OF PUBLIC WORKS
BUREAU OF ENGINEERING
ENGINEERING CITY OF LOS ANGELES
GARY LEE MOORE, P.E. CITY ENGINEER
DESIGN GROUP
ENGINEER: KOUROSH SAMENI LIC. NO. 45318
DESIGNED BY: XAVIER ESPINOSA
DRAWN BY: MELISSA COOPER
CHECKED BY: TERENCE PAO
APPROVED BY: TERENCE PAO
DATE: 2/13/17 KS; 1/15/17 KS
NO. REVISIONS: RFI 0308 DRAINAGE; STORM DRAIN E-1 AND RETAINING WALL RFI-096
STRUCTURE NO. 53C-2329
INDEX NO.
REGISTERED PROFESSIONAL ENGINEER KOUROSH SAMENI No. 45318 Exp. 6-30-18 CIVIL
THIS PLAN WAS ELECTRONICALLY SIGNED AND STAMPED
VERTICAL CONTROL: BM 12-04070.1929 (NGVD 29) - 1985 ADJUSTMENT
HORIZONTAL CONTROL: GPS; PID AE 1704, EPOCH 1991.35
SHEET TITLE: VIADUCT DRAINAGE PLAN & PROFILE LINES D, E & F
PROJECT: SIXTH STREET VIADUCT REPLACEMENT
ADDRESS: SIXTH STREET VIADUCT (WHITTIER BLVD) LOS ANGELES, CA
WORK ORDER NO. E700224F
DRAWING NO. D-402
SHEET OF SHEETS

C:\cadd\a\pw\pwwestcoast\xsameni\dms57684\C-002-D402.dwg 11/20/17 11:55
Sheet Version 3.0
REVISION DATE (FOR DESIGN STAGE ONLY)
THE CITY OF LOS ANGELES OR ITS OFFICERS OR AGENTS SHALL NOT BE RESPONSIBLE FOR THE ACCURACY OR COMPLETENESS OF ELECTRONIC COPIES OF THIS PLAN SHEET.

ADDENDUM 5

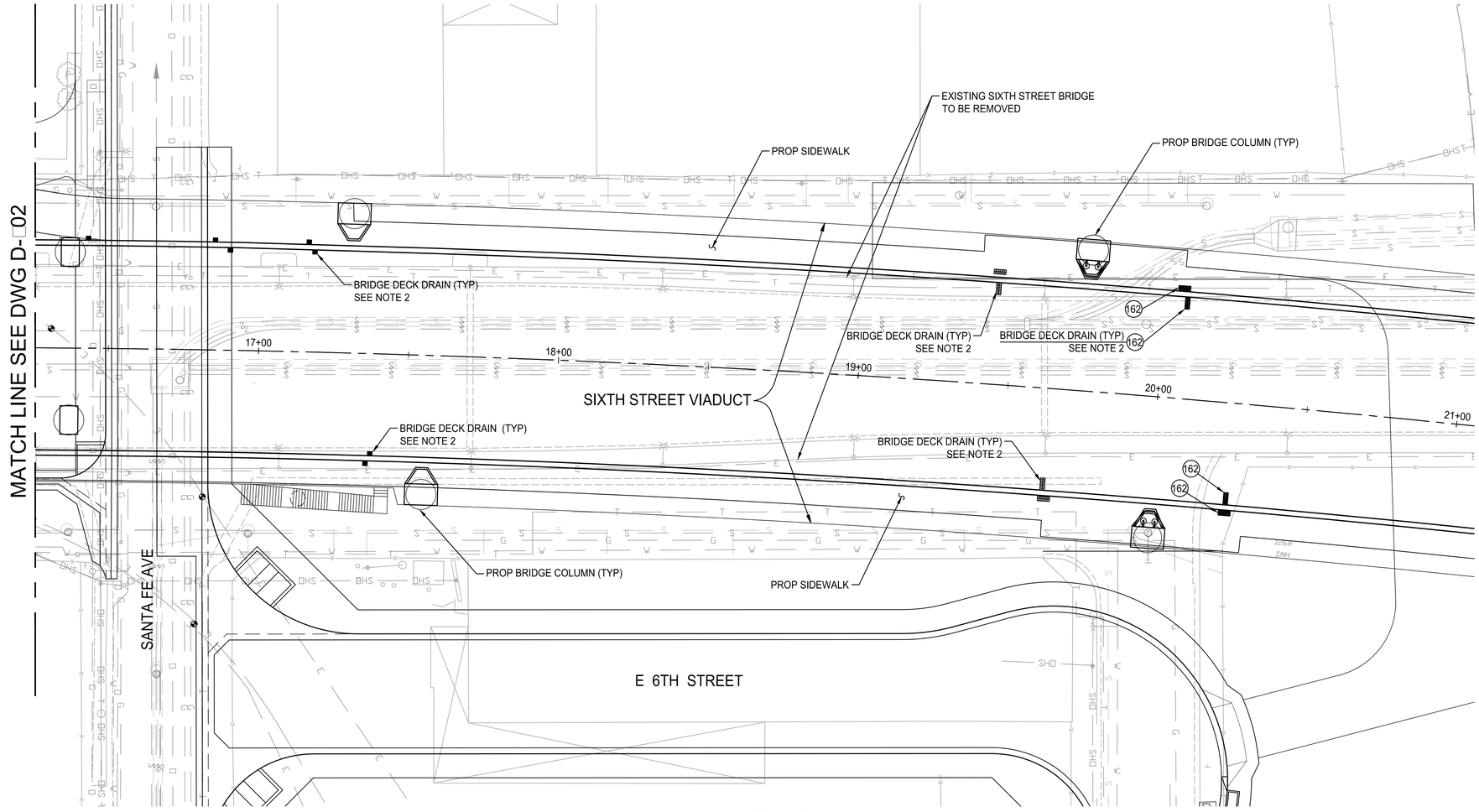

PLAN
SCALE□1"□20□

CONSTRUCTION SYMBOLS

CONSTRUCT	REMODEL EXISTING
EXISTING	REMOVE AND RECONSTRUCT
REMOVE	WORK BY OTHERS

CONSTRUCTION NOTE

162 WATER □UALITY TREATMENT BMP INLET INSERT IN DEC□ DRAIN SEE SPECIFICATIONS

NOTES

1. FOR GENERAL NOTES SEE DWG D-□00.
2. FOR BRIDGE DEC□ DRAINAGE SEE STRUCTURAL PLAN S0-06.

City of Los Angeles Bureau of Engineering's review of these submittals, plans, specifications, and shop drawings shall not relieve HNTB, its consultants, and its contractors of the responsibility for errors, or omissions in the submitted documents. HNTB is responsible to insure and confirm that the City of Los Angeles Standards (Standards) are used to perform all work on or effecting City facilities. The Standards shall be the current edition in use upon the date City receives such submittal or per an effective date as specified in the agreement (if any).

APPROVED FOR CONSTRUCTION
06-10-2016
METRO TRANSIT DIVISION
BUREAU OF ENGINEERING
CITY OF LOS ANGELES

20□ 10□ 0 20□ □0□
1 INCH = 20 FEET

BUREAU OF ENGINEERING OFFICIAL RECORD

HNTB
HNTB Corporation
600 WILSHIRE STREET SUITE 1000
LOS ANGELES, CALIFORNIA 90071
TEL (213) 403-1000 FAX (213) 403-1001

CITY OF LOS ANGELES DEPARTMENT OF PUBLIC WORKS
BUREAU OF ENGINEERING

ENGINEERING
CITY OF LOS ANGELES

STRUCTURE NO. 53C-2329

INDEX NO. P_38113

NO.	REVISIONS:	DATE:	BY:

THIS PLAN WAS ELECTRONICALLY SIGNED AND STAMPED

REGISTERED PROFESSIONAL ENGINEER KOUROSH SAMENI No. C 45318 CIVIL STATE OF CALIFORNIA 6/30/16

GARY LEE MOORE, P.E. CITY ENGINEER

DESIGN GROUP			DATE:
ENGINEER:	KOUROSH SAMENI	LIC. NO. 45318	
DESIGNED BY:	XAVIER ESPINOSA		
DRAWN BY:	MELISSA COOPER		
CHECKED BY:	KOUROSH SAMENI		
APPROVED BY:	TERENCE PAO		

CITY OF LOS ANGELES
VERTICAL CONTROL: BM 12-04070,1929 (NGVD 29) - 1985 ADJUSTMENT
HORIZONTAL CONTROL: GPS, PID AE 1704, EPOCH 1991.35

SHEET TITLE: VIADUCT DRAINAGE PLAN VIEW ART PLAZA AREA
PROJECT: SIXTH STREET VIADUCT REPLACEMENT
ADDRESS: SIXTH STREET VIADUCT (WHITTIER BLVD) LOS ANGELES, CA

WORK ORDER NO. E70022□F
DRAWING NO. D-403
SHEET 63 OF 560 SHEETS

REVISION DATES DESIGN STAGE ONLY:

THE CITY OF LOS ANGELES OR ITS OFFICERS OR AGENTS SHALL NOT BE RESPONSIBLE FOR THE ACCURACY OR COMPLETENESS OF ELECTRONIC COPIES OF THIS PLAN SHEET.

C:\caddlib\pw\pwwestcoast\lyalkobusch\dms57684\C-002-D403.dwg 4/22/16 11:32

Sheet Version 3.0

ADDENDUM 5

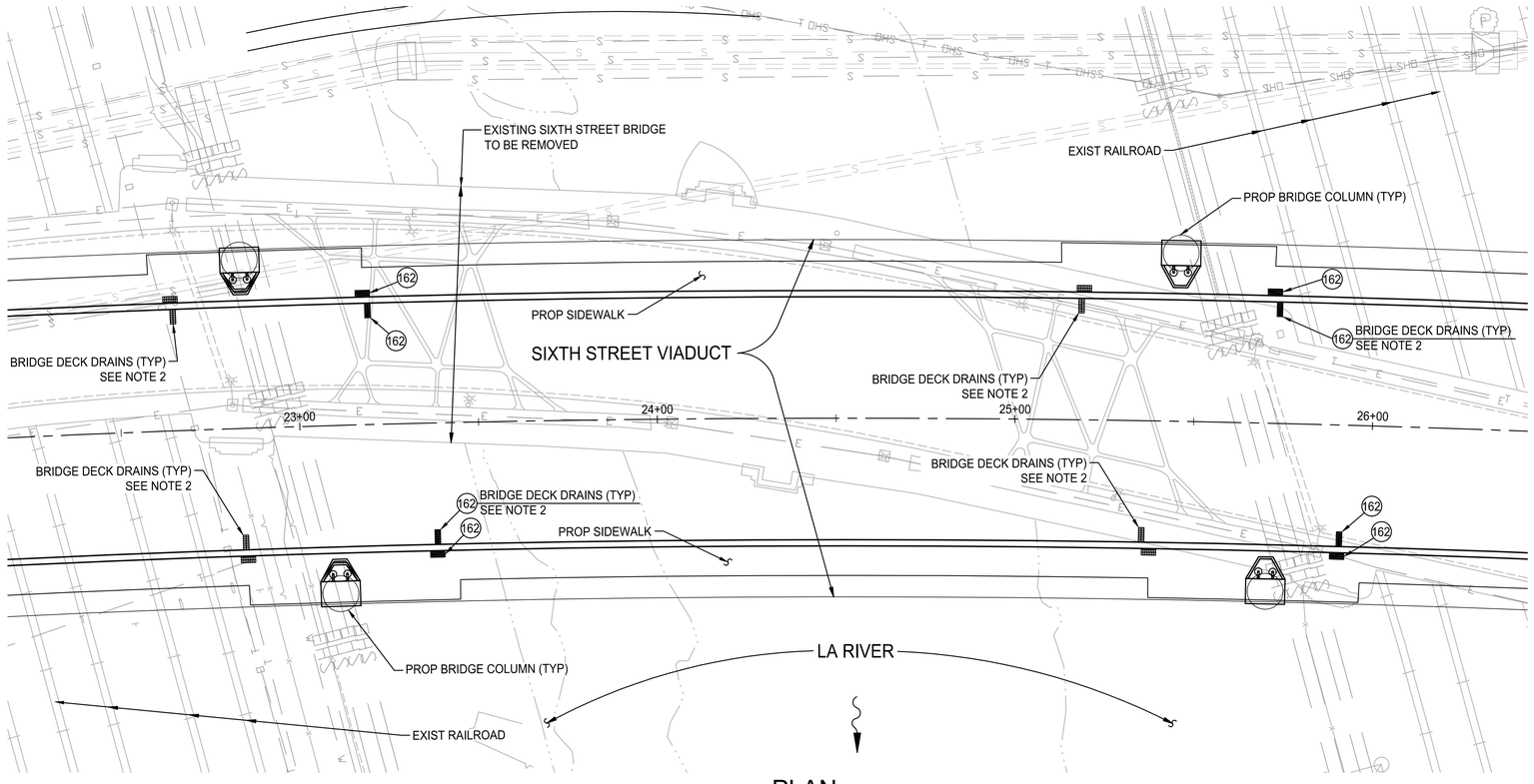

PLAN
SCALE□1"□20□

CONSTRUCTION SYMBOLS

- CONSTRUCT
- EXISTING
- REMOVE
- REMODEL EXISTING
- REMOVE AND RECONSTRUCT
- WORK BY OTHERS

CONSTRUCTION NOTE

162 WATER □UALITY TREATMENT BMP INLET INSERT IN DEC□ DRAIN SEE SPECIFICATIONS

NOTES

1. FOR GENERAL NOTES SEE DWG D-□00.
2. FOR BRIDGE DEC□ DRAINAGE SEE STRUCTURAL PLAN S0-07.

City of Los Angeles Bureau of Engineering's review of these submittals, plans, specifications, and shop drawings shall not relieve HNTB, its consultants, and its contractors of the responsibility for errors, or omissions in the submitted documents. HNTB is responsible to insure and confirm that the City of Los Angeles Standards (Standards) are used to perform all work on or effecting City facilities. The Standards shall be the current edition in use upon the date City receives such submittal or per an effective date as specified in the agreement (if any).

APPROVED FOR CONSTRUCTION
06-10-2016
METRO TRANSIT DIVISION
BUREAU OF ENGINEERING
CITY OF LOS ANGELES

20□ 10□ 0 20□ □0□
1 INCH = 20 FEET

BUREAU OF ENGINEERING
OFFICIAL RECORD

HNTB
HNTB Corporation
601 W. 5TH STREET SUITE 1000
LOS ANGELES, CALIFORNIA 90071
TEL (213) 403-1000 FAX (213) 403-1001

BUREAU OF ENGINEERING
ENGINEERING
CITY OF LOS ANGELES

NO.	REVISIONS:	DATE:	BY:

INDEX NO. P_38113
STRUCTURE NO. 53C-2329

• THIS PLAN WAS ELECTRONICALLY SIGNED AND STAMPED

REGISTERED PROFESSIONAL ENGINEER
KOUROSH SAMENI
No. C 45318
CIVIL
STATE OF CALIFORNIA
6/30/16

DEPARTMENT OF PUBLIC WORKS
CITY OF LOS ANGELES

GARY LEE MOORE, P.E. CITY ENGINEER

DESIGN GROUP	LIC. NO. 45318	DATE
ENGINEER: KOUROSH SAMENI		
DESIGNED BY: XAVIER ESPINOSA		
DRAWN BY: MELISSA COOPER		
CHECKED BY: KOUROSH SAMENI		
APPROVED BY: TERENCE PAO		

VERTICAL CONTROL: BM 12-04070, 1929 (NGVD 29) – 1985 ADJUSTMENT
HORIZONTAL CONTROL: GPS; PID AE 1704, EPOCH 1991.35

SHEET TITLE: VIADUCT DRAINAGE PLAN VIEW LA RIVER AREA
PROJECT: SIXTH STREET VIADUCT REPLACEMENT
ADDRESS: SIXTH STREET VIADUCT (WHITTIER BLVD) LOS ANGELES, CA

WORK ORDER NO. E70022□F
DRAWING NO. D-404
SHEET 64 OF 560 SHEETS

REVISION DATES DESIGN STAGE ONLY:

THE CITY OF LOS ANGELES OR ITS OFFICERS OR AGENTS SHALL NOT BE RESPONSIBLE FOR THE ACCURACY OR COMPLETENESS OF ELECTRONIC COPIES OF THIS PLAN SHEET.

C:\caddlib\pw\pwwestcoast\lyalkobusch\dms57684\C-002-D404.dwg 4/22/16 11:35

Sheet Version 3.0

ADDENDUM 5

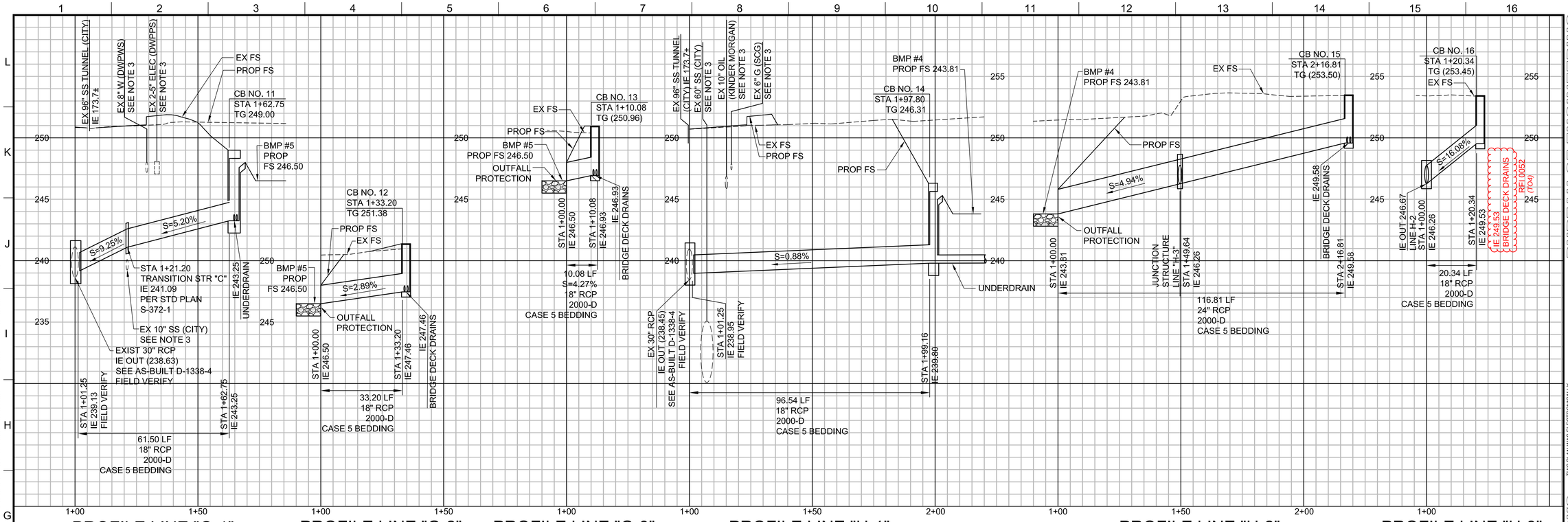

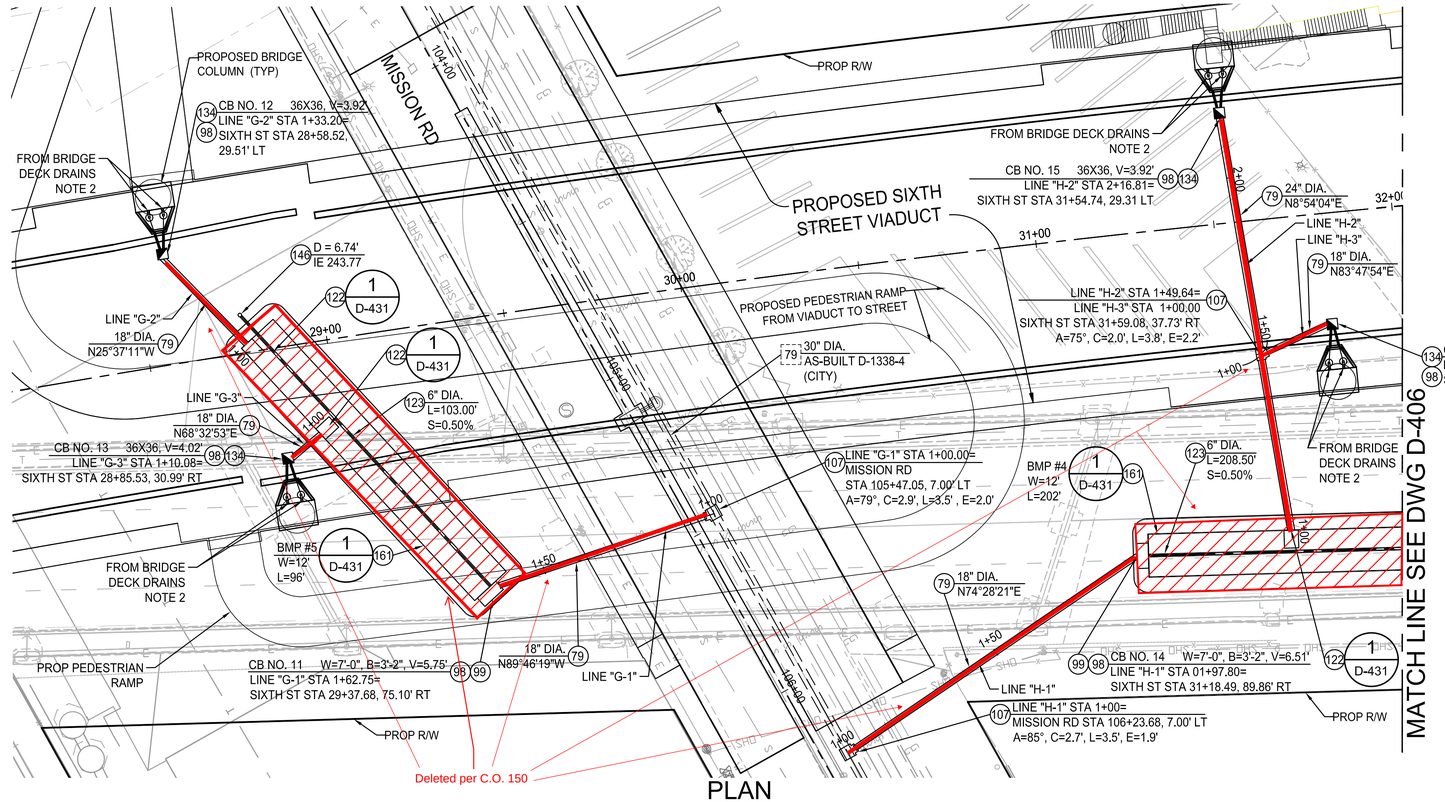

CONSTRUCTION SYMBOLS

- CONSTRUCT
- EXISTING
- REMOVE
- REMODEL EXISTING
- REMOVE AND RECONSTRUCT
- WORK BY OTHERS

PROFILE

HORIZ: 1"=20'
VERT: 1"=4'

CONSTRUCTION NOTES

79 REINFORCED CONCRETE PIPE
98 MONOLITHIC CONNECTION PER S-331-1
99 CURB OPENING CATCH BASIN PER S-354-0
107 JUNCTION STRUCTURE "C" PER S-303-0
122 RIP RAP ENERGY DISSIPATER AND OUTFALL PROTECTION
123 UNDERDRAIN PERFORATED PVC OR HDPE
134 PRECAST CONCRETE CATCH BASIN PER S-361-0 (MODIFIED WITHOUT INLET SECTION)
146 TERMINAL CLEANOUT PER S-164-0
161 WATER QUALITY TREATMENT BMP BIORETENTION WITH UNDERDRAIN

NOTES:

1. FOR GENERAL NOTES SEE DWG D-400.
2. FOR BRIDGE DECK DRAINAGE SEE STRUCTURAL PLANS.
3. EXISTING UTILITIES SHALL BE PROTECTED IN PLACE. LOCATION OF EXISTING UTILITIES ARE APPROXIMATE, FIELD VERIFY PRIOR TO CONSTRUCTION OR SD.
4. PROVIDE MINIMUM 2% SLOPE DECK DRAIN OUTLET TO CATCH BASIN.

5. Per CO 150 Storm drain system below grade removed from contract. Bridge deck drain piping installed to outlet in bent below grade.

City of Los Angeles Bureau of Engineering's review of these submittals, plans, specifications, and shop drawings shall not relieve HNTB, its consultants, and its contractors of the responsibility for errors, or omissions in the submitted documents. HNTB is responsible to insure and confirm that the City of Los Angeles Standards (Standards) are used to perform all work on or effecting City facilities. The Standards shall be the current edition in use upon the date City receives such submittal or per an effective date as specified in the agreement (if any).

APPROVED FOR CONSTRUCTION
06-10-2016
METRO TRANSIT DIVISION
BUREAU OF ENGINEERING
CITY OF LOS ANGELES

BUREAU OF ENGINEERING OFFICIAL RECORD

HNTB
HNTB Corporation
601 W. 5TH STREET SUITE 1000
LOS ANGELES, CALIFORNIA 90071
TEL (213) 403-1000 FAX (213) 403-1001

CITY OF LOS ANGELES DEPARTMENT OF PUBLIC WORKS
BUREAU OF ENGINEERING
GARY LEE MOORE, P.E. CITY ENGINEER

ENGINEER: KOUROSH SAMENI
DESIGNED BY: XAVIER ESPINOSA
DRAWN BY: MELISSA COOPER
CHECKED BY: KOUROSH SAMENI
APPROVED BY: TERENCE PAO
DESIGN GROUP
LIC. NO. 45318
DATE:

NO. | REVISIONS: | DATE | BY:

STRUCTURE NO. 53C-2329
INDEX NO. P_38113

"THIS PLAN WAS ELECTRONICALLY SIGNED AND STAMPED."
PROFESSIONAL ENGINEER KOUROSH SAMENI No. C 45318 9/30/16 CIVIL REGISTERED STATE OF CALIFORNIA

VERTICAL CONTROL: BM 12-04070, 1929 (NGVD 29) – 1985 ADJUSTMENT
HORIZONTAL CONTROL: GPS; PID AE 1704, EPOCH 1991.35

SHEET TITLE: VIADUCT DRAINAGE PLAN & PROFILE LINE G & H
PROJECT: SIXTH STREET VIADUCT REPLACEMENT
ADDRESS: SIXTH STREET VIADUCT (WHITTIER BLVD) LOS ANGELES, CA

WORK ORDER NO. E700224F
DRAWING NO. D-405
SHEET 65 OF 560 SHEETS

THE CITY OF LOS ANGELES OR ITS OFFICERS OR AGENTS SHALL NOT BE RESPONSIBLE FOR THE ACCURACY OR COMPLETENESS OF ELECTRONIC COPIES OF THIS PLAN SHEET.

REVISION DATES (DESIGN STAGE ONLY)

C:\caddlib\pw\pwwestcoast\ksamen\dms57684\C-002-D405.dwg 6/09/16 17:01

Sheet Version 3.0

ADDENDUM 5

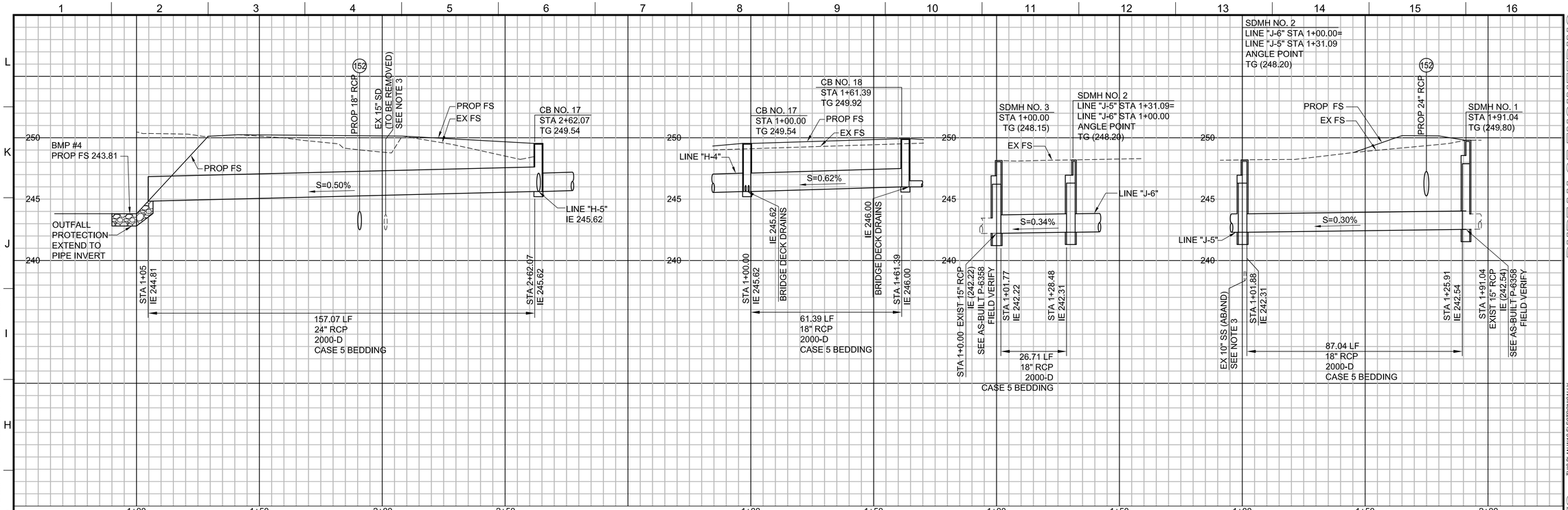

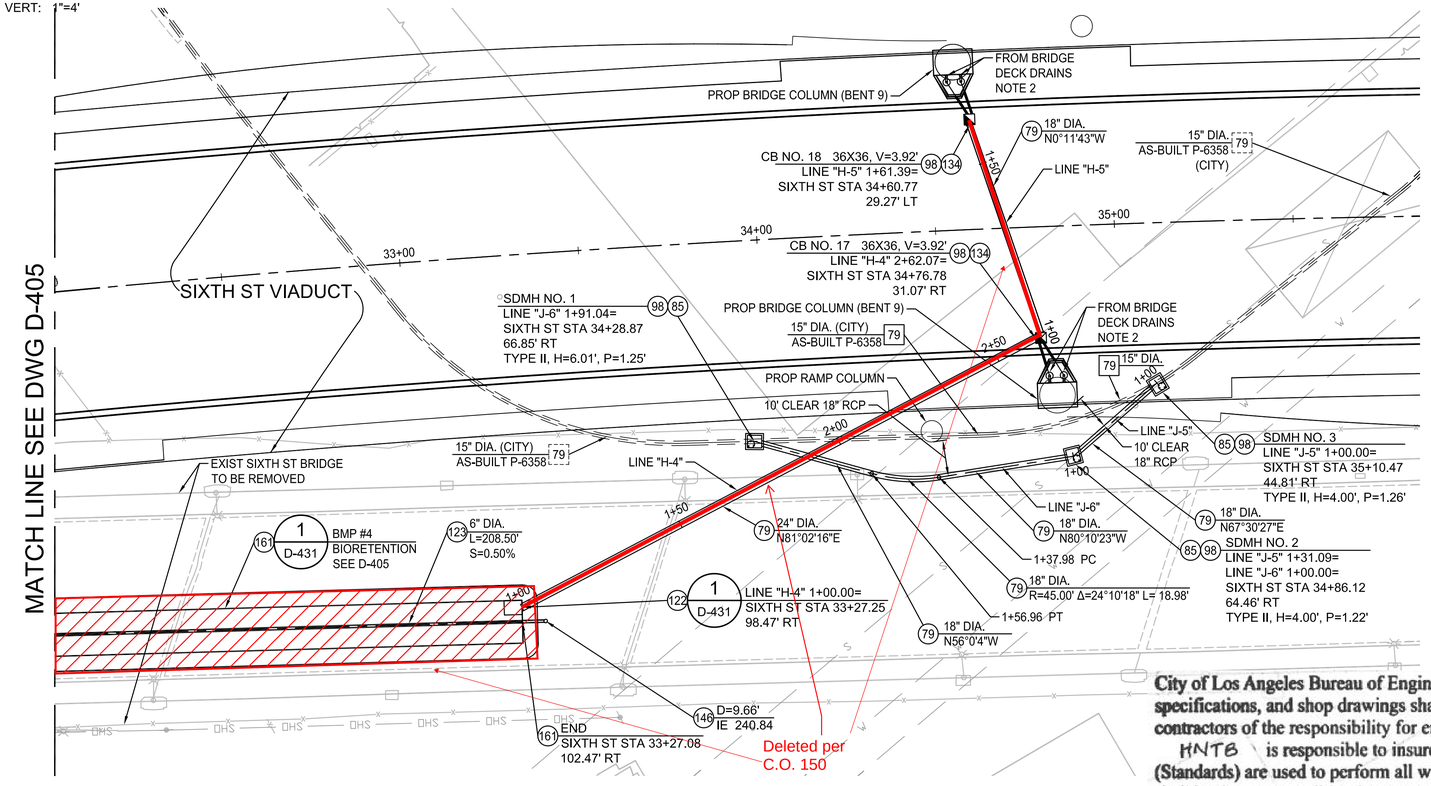

CONSTRUCTION SYMBOLS

- CONSTRUCT
- EXISTING
- REMOVE
- REMODEL EXISTING
- REMOVE AND RECONSTRUCT
- WORK BY OTHERS

CONSTRUCTION NOTES

79 REINFORCED CONCRETE PIPE
85 STORM DRAIN MANHOLE "EZ" PER S-381-0
98 MONOLITHIC CONNECTION PER S-331-1
122 RIP RAP ENERGY DISSIPATER AND OUTFALL PROTECTION
123 UNDERDRAIN PERFORATED PVC OR HDPE PIPE
134 PRECAST CONCRETE CATCH BASIN PER S-361-0 (MODIFIED WITHOUT INLET SECTION)
146 TERMINAL CLEANOUT STRUCTURE PER S-164-0
152 BLANKET PIPE PROTECTION FOR PIPE PER S-255-1
161 WATER QUALITY TREATMENT BMP BIORETENTION WITH UNDERDRAIN

NOTES:

1. FOR GENERAL NOTES SEE DWG D-400
2. FOR BRIDGE DECK DRAINAGE SEE STRUCTURAL PLANS.
3. EXISTING UTILITIES SHALL BE PROTECTED IN PLACE. LOCATION OF EXISTING UTILITIES ARE APPROXIMATE, FIELD VERIFY PRIOR TO CONSTRUCTION OF SD.
4. PROVIDE MINIMUM 2% SLOPE DECK DRAIN OUTLET TO CATCH BASIN.

5. Per CO 150 Storm drain system below grade removed from contract. Bridge deck drain piping installed to outlet in bent below grade.

APPROVED FOR CONSTRUCTION

JUN 15 2016

METRO TRANSIT DIVISION
BUREAU OF ENGINEERING
CITY OF LOS ANGELES

BUREAU OF ENGINEERING OFFICIAL RECORD

City of Los Angeles Bureau of Engineering's review of these submittals, plans, specifications, and shop drawings shall not relieve HNTB, its consultants, and its contractors of the responsibility for errors, or omissions in the submitted documents. HNTB is responsible to insure and confirm that the City of Los Angeles Standards (Standards) are used to perform all work on or effecting City facilities. The Standards shall be the current edition in use upon the date City receives such submittal or per an effective date as specified in the agreement (if any).

20' 10' 0 20' 40'
1 INCH = 20 FEET

HNTB
HNTB Corporation
601 W. 5TH STREET SUITE 1000
LOS ANGELES, CALIFORNIA 90071
TEL (213) 403-1000 FAX (213) 403-1001

CITY OF LOS ANGELES DEPARTMENT OF PUBLIC WORKS
BUREAU OF ENGINEERING

ENGINEERING
CITY OF LOS ANGELES

STRUCTURE NO. 53C-2329

INDEX NO. P_38113

NO. REVISIONS: DATE: BY:

THIS PLAN WAS ELECTRONICALLY SIGNED AND STAMPED.

REGISTERED PROFESSIONAL ENGINEER KOUROSH SAMENI No. C 45318 CIVIL STATE OF CALIFORNIA 9/30/16

GARY LEE MOORE, P.E. CITY ENGINEER

ENGINEER:	KOUROSH SAMENI	DESIGN GROUP
DESIGNED BY:	XAVIER ESPINOSA	LIC. NO. 45318
DRAWN BY:	MELISSA COOPER	DATE:
CHECKED BY:	KOUROSH SAMENI	
APPROVED BY:	TERENCE PAO	

VERTICAL CONTROL: BM 12-04070 1929 (NGVD 29) - 1985 ADJUSTMENT
HORIZONTAL CONTROL: GPS; PID AE 1704, EPOCH 1991.35

SHEET TITLE: VIADUCT DRAINAGE PLAN & PROFILE LINES H & J

PROJECT: SIXTH STREET VIADUCT REPLACEMENT

ADDRESS: SIXTH STREET VIADUCT (WHITTIER BLVD) LOS ANGELES, CA

WORK ORDER NO. E700224F

DRAWING NO. D-406

SHEET 66 OF 560 SHEETS

THE CITY OF LOS ANGELES OR ITS OFFICERS OR AGENTS SHALL NOT BE RESPONSIBLE FOR THE ACCURACY OR COMPLETENESS OF ELECTRONIC COPIES OF THIS PLAN SHEET.

C:\caddlib\pw\pwwestcoast\xsameni\dms57684\C-002-D406.dwg 6/14/16 18:59

REVISION DATES (DESIGN STAGE ONLY)

Sheet Version 3.0

ADDENDUM 5

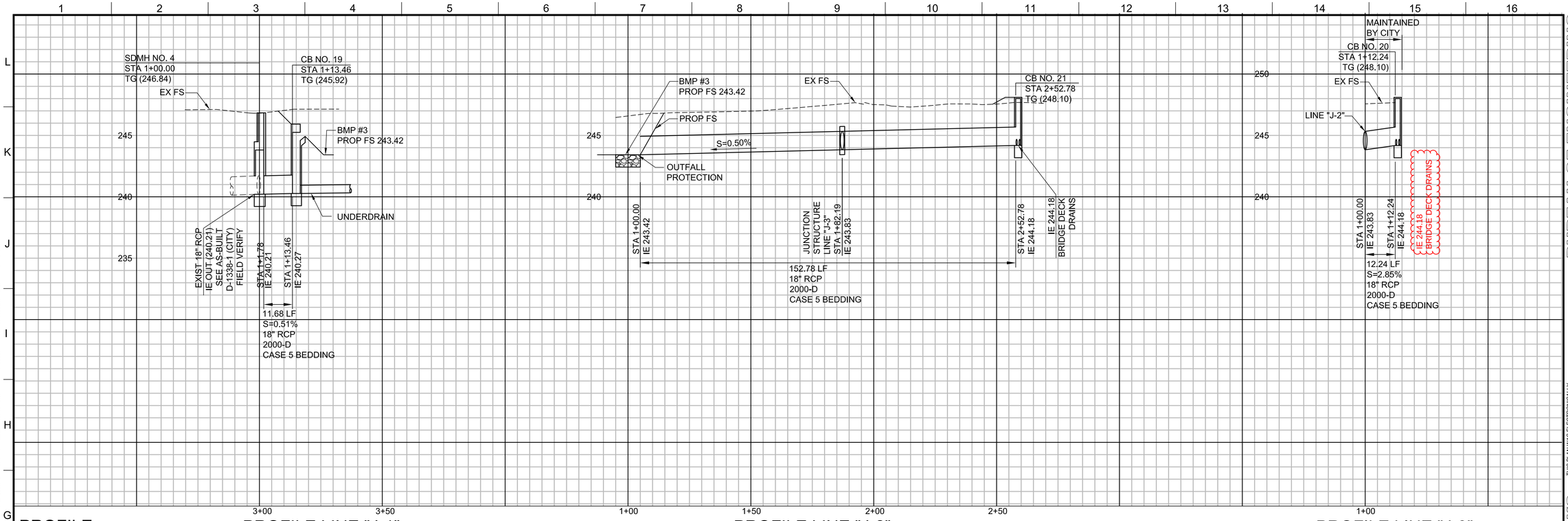

PROFILE
HORIZ: 1"=20'
VERT: 1"=4'

PROFILE LINE "J-1"

PROFILE LINE "J-2"

PROFILE LINE "J-3"

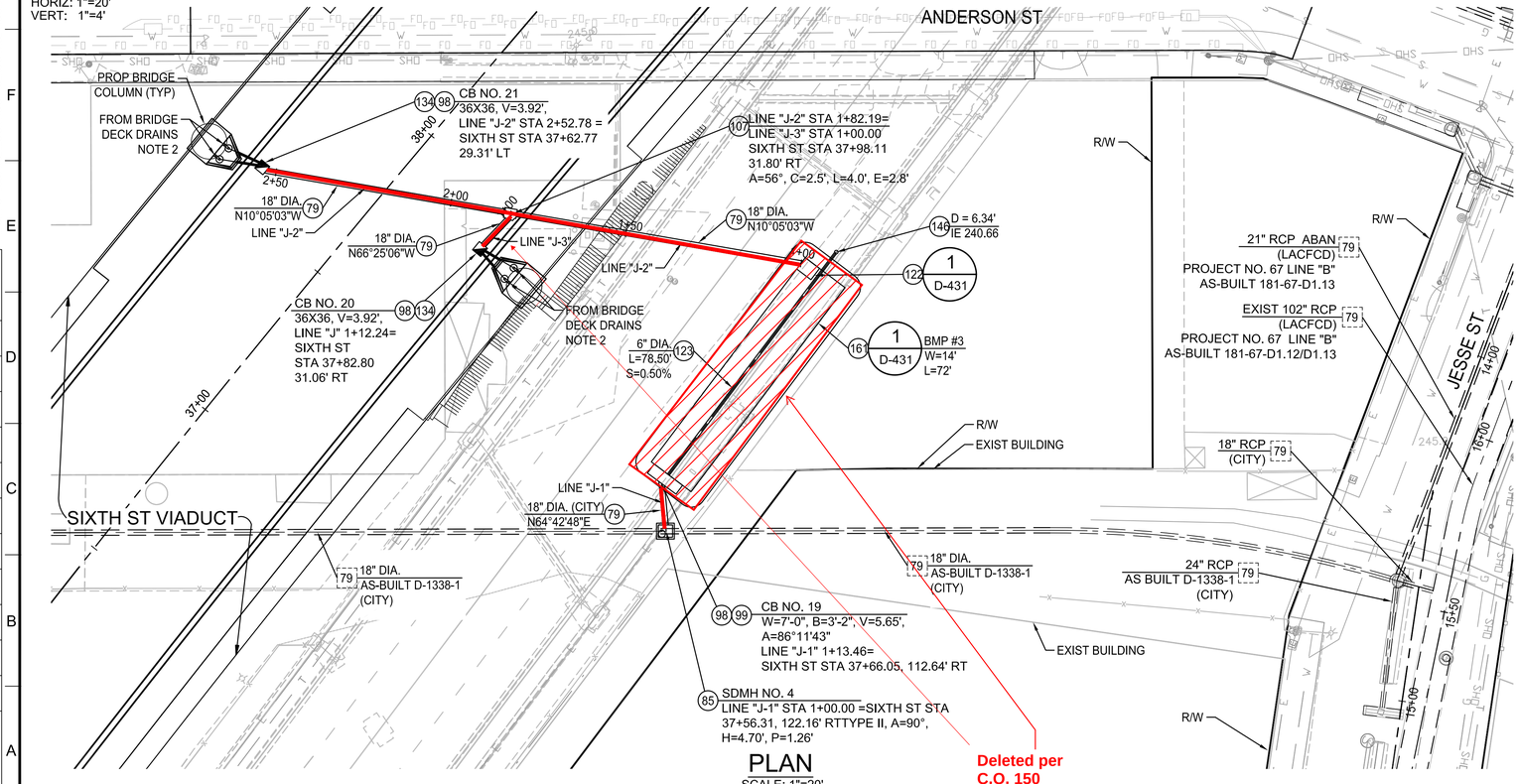

PLAN
SCALE: 1"=20'

Deleted per C.O. 150

CONSTRUCTION SYMBOLS

CONSTRUCT	REMODEL EXISTING
EXISTING	REMOVE AND RECONSTRUCT
REMOVE	WORK BY OTHERS

CONSTRUCTION NOTES

79	REINFORCED CONCRETE PIPE
85	STORM DRAIN MANHOLE "EZ" PER S-381-0
98	MONOLITHIC CONNECTION PER S-331-1
99	SIDE OPENING CATCH BASIN PER S-351-1
106	JUNCTION STRUCTURE - PIPE TO PIPE (INLET 1D> 24" OR OD> 1/2 MAIN LINE ID) PER SPPWC 331-2
107	JUNCTION STRUCTURE "C" PER S-303-0
122	RIP RAP ENERGY DISSIPATER AND OUTFALL PROTECTION
123	UNDERDRAIN PERFORATED PVC OR HDPE PIPE
134	PRECAST CONCRETE CATCH BASIN PER S-361-0 (MODIFIED WITHOUT INLET SECTION)
146	TERMINAL CLEANOUT STRUCTURE PER S-164-0
161	WATER QUALITY TREATMENT BMP BIORETENTION WITH UNDERDRAIN
185	PIPE ANCHORS AND BACKFILL STABILIZERS PER S-252-1

NOTES:

1. FOR GENERAL NOTES SEE DWG D-400.
2. FOR BRIDGE DECK DRAINAGE SEE STRUCTURAL PLANS.
3. PROVIDE MINIMUM 2% SLOPE DECK DRAIN OUTLET TO CATCH BASIN

5. Per CO 150 Storm drain system below grade removed from contract. Bridge deck drain piping installed to outlet in bent below grade.

City of Los Angeles Bureau of Engineering's review of these submittals, plans, specifications, and shop drawings shall not relieve HNTB, its consultants, and its contractors of the responsibility for errors, or omissions in the submitted documents. HNTB is responsible to insure and confirm that the City of Los Angeles Standards (Standards) are used to perform all work on or effecting City facilities. The Standards shall be the current edition in use upon the date City receives such submittal or per an effective date as specified in the agreement (if any).

APPROVED FOR CONSTRUCTION
06-10-2016
METRO TRANSIT DIVISION
BUREAU OF ENGINEERING
CITY OF LOS ANGELES

BUREAU OF ENGINEERING OFFICIAL RECORD

20' 10' 0 20' 40'
1 INCH = 20 FEET

HNTB
HNTB Corporation
601 W. 5TH STREET SUITE 1000
LOS ANGELES, CALIFORNIA 90071
TEL (213) 403-1000 FAX (213) 403-1001

CITY OF LOS ANGELES DEPARTMENT OF PUBLIC WORKS
BUREAU OF ENGINEERING

ENGINEERING
CITY OF LOS ANGELES

GARY LEE MOORE, P.E. CITY ENGINEER

ENGINEER:	KOUROSH SAMENI	DESIGN GROUP	
DESIGNED BY:	XAVIER ESPINOSA	LIC. NO.	45318
DRAWN BY:	MELISSA COOPER		
CHECKED BY:	KOUROSH SAMENI		
APPROVED BY:	TERENCE PAO		

DATE: BY:

NO. REVISIONS:

STRUCTURE NO. 53C-2329

INDEX NO. P_38113

PROFESSIONAL ENGINEER REGISTERED KOUROSH SAMENI No. C 45318 9/30/16 CIVIL STATE OF CALIFORNIA

THIS PLAN WAS ELECTRONICALLY SIGNED AND STAMPED

VERTICAL CONTROL: BM 12-04070, 1929 (NGVD 29) - 1985 ADJUSTMENT
HORIZONTAL CONTROL: GPS; PID AE 1704, EPOCH 1991.35

SHEET TITLE: VIADUCT DRAINAGE PLAN & PROFILE LINE "J"

PROJECT: SIXTH STREET VIADUCT REPLACEMENT

ADDRESS: SIXTH STREET VIADUCT (WHITTIER BLVD) LOS ANGELES, CA

WORK ORDER NO. E700224F

DRAWING NO. D-407

SHEET 67 OF 560 SHEETS

REVISION DATES (DESIGN STAGE ONLY)

C:\caddfiles\pw\pwwestcoast\Vsameni\dms57684\C-002-D407.dwg 6/09/16 18:37

Sheet Version 3.0

THE CITY OF LOS ANGELES OR ITS OFFICERS OR AGENTS SHALL NOT BE RESPONSIBLE FOR THE ACCURACY OR COMPLETENESS OF ELECTRONIC COPIES OF THIS PLAN SHEET.

ADDENDUM 5

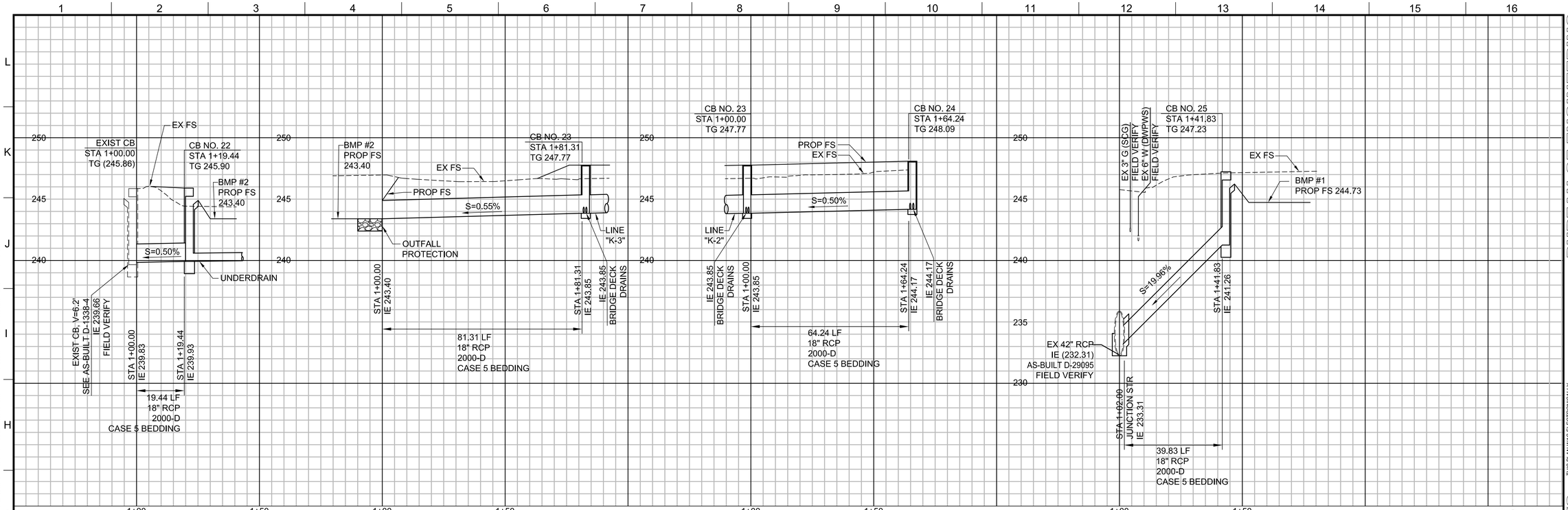

PROFILE LINE "K-1"

PROFILE LINE "K-2"

PROFILE LINE "K-3"

PROFILE LINE "L-1"

PROFILE

HORIZ: 1"=20'
VERT: 1"=4'

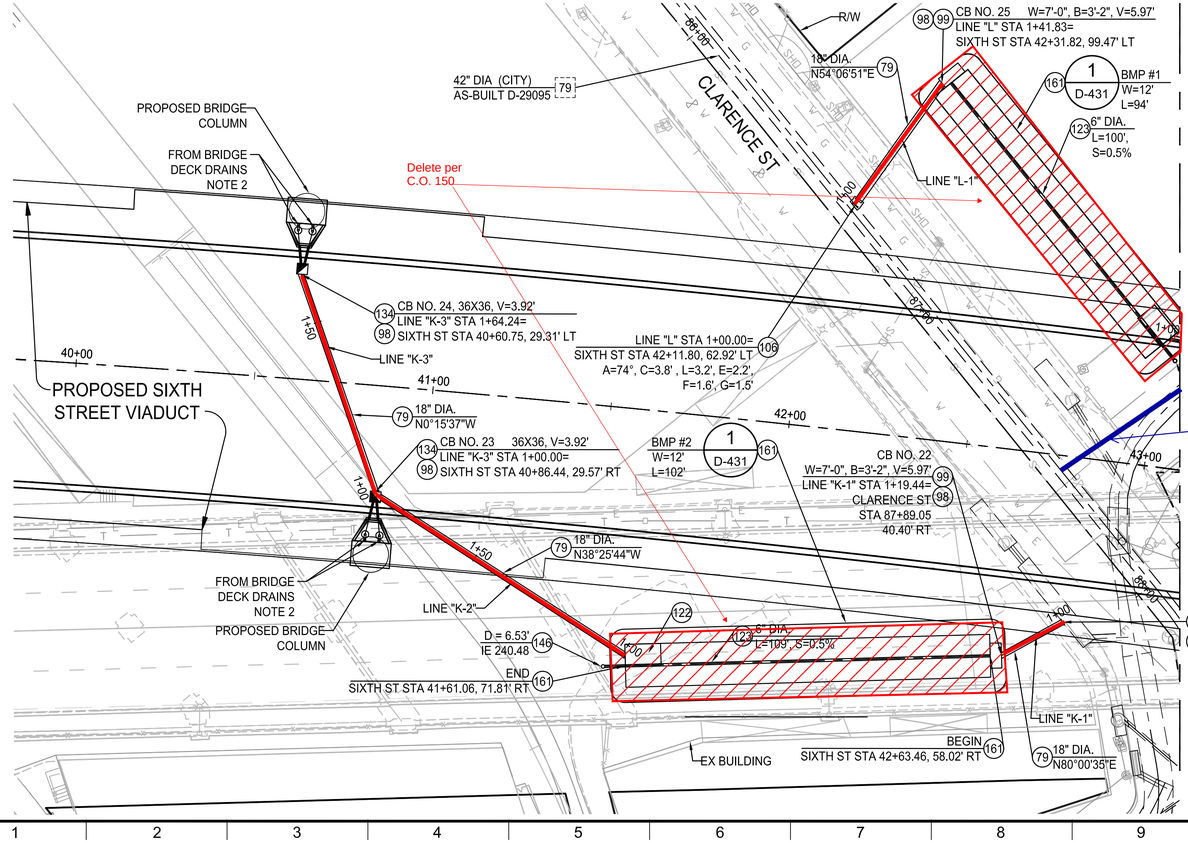

PLAN

SCALE: 1"=20'

CONSTRUCTION SYMBOLS

- CONSTRUCT
- EXISTING
- REMOVE
- REMODEL EXISTING
- REMOVE AND RECONSTRUCT
- WORK BY OTHERS

CONSTRUCTION NOTES

79 REINFORCED CONCRETE PIPE
98 MONOLITHIC CONNECTION PER S-331-1
99 SIDE OPENING CATCH BASIN PER S-351-1
106 JUNCTION STRUCTURE "B" PER S-302-1
112 PIPE CONNECTIONS TO EXISTING STORM DRAINS PER SPPWC 335-25
122 RIP RAP ENERGY DISSIPATER AND OUTFALL PROTECTION
123 UNDERDRAIN PERFORATED PVC OR HDPE PIPE
134 PRECAST CONCRETE CATCH BASIN PER S-361-0 (MODIFIED WITHOUT INLET SECTION)
146 TERMINAL CLEANOUT STRUCTURE PER S-164-0
161 WATER QUALITY TREATMENT BMP BIORETENTION WITH UNDERDRAIN

Two 3" PVC at 24" +/- below grade deck drain lines installed from bent outlet to drain through curb face per RFI 573.

4. Per CO 150 Storm drain system below grade removed from contract. Bridge deck drain piping installed to outlet in bent below grade.

NOTES:

1. FOR GENERAL NOTES SEE DWG D-400.
2. FOR BRIDGE DECK DRAINAGE SEE STRUCTURAL PLANS.
3. PROVIDE MINIMUM 2% SLOPE DECK DRAIN OUTLET TO CATCH BASIN.

City of Los Angeles Bureau of Engineering's review of these submittals, plans, specifications, and shop drawings shall not relieve HNTB, its consultants, and its contractors of the responsibility for errors, or omissions in the submitted documents. HNTB is responsible to insure and confirm that the City of Los Angeles Standards (Standards) are used to perform all work on or effecting City facilities. The Standards shall be the current edition in use upon the date City receives such submittal or per an effective date as specified in the agreement (if any).

APPROVED FOR CONSTRUCTION
06-10-2016
METRO TRANSIT DIVISION
BUREAU OF ENGINEERING
CITY OF LOS ANGELES

BUREAU OF ENGINEERING
OFFICIAL RECORD

20' 10' 0 20' 40'
1 INCH = 20 FEET

HNTB
HNTB Corporation
601 W. 5TH STREET SUITE 1000
LOS ANGELES, CALIFORNIA 90071
TEL (213) 403-1000 FAX (213) 403-1001

CITY OF LOS ANGELES DEPARTMENT OF PUBLIC WORKS BUREAU OF ENGINEERING

ENGINEERING
CITY OF LOS ANGELES

STRUCTURE NO. 53C-2329

INDEX NO. P_38113

NO.	REVISIONS:	DATE	BY:

THIS PLAN WAS ELECTRONICALLY SIGNED AND STAMPED.

PROFESSIONAL ENGINEER
KOUROSH SAMENI
No. C 45318
9/30/16
REGISTERED CIVIL ENGINEER
STATE OF CALIFORNIA

CITY ENGINEER
GARY LEE MOORE, P.E.
DATE:
LIC. NO. 45318

DESIGN GROUP	
ENGINEER:	KOUROSH SAMENI
DESIGNED BY:	XAVIER ESPINOSA
DRAWN BY:	XAVIER ESPINOSA
CHECKED BY:	KOUROSH SAMENI
APPROVED BY:	TERENCE PAO

SHEET TITLE: VIADUCT DRAINAGE PLAN & PROFILE LINES K & L

PROJECT: SIXTH STREET VIADUCT REPLACEMENT

ADDRESS: SIXTH STREET VIADUCT (WHITTIER BLVD) LOS ANGELES, CA

HORIZONTAL CONTROL: GPS; PID AE 1704, EPOCH 1991.35
VERTICAL CONTROL: BM 12-04070, 1929 (NGVD 29) - 1985 ADJUSTMENT

WORK ORDER NO. E700224F

DRAWING NO. D-408

SHEET 68 OF 560 SHEETS

REVISION DATES (DESIGN STAGE ONLY)

C:\caddlib\pw\pwwestcoast\asmeni\dms57684\C-002-0408.dwg 6/09/16 19:28

Sheet Version 3.0

THE CITY OF LOS ANGELES OR ITS OFFICERS OR AGENTS SHALL NOT BE RESPONSIBLE FOR THE ACCURACY OR COMPLETENESS OF ELECTRONIC COPIES OF THIS PLAN SHEET.

ADDENDUM 5

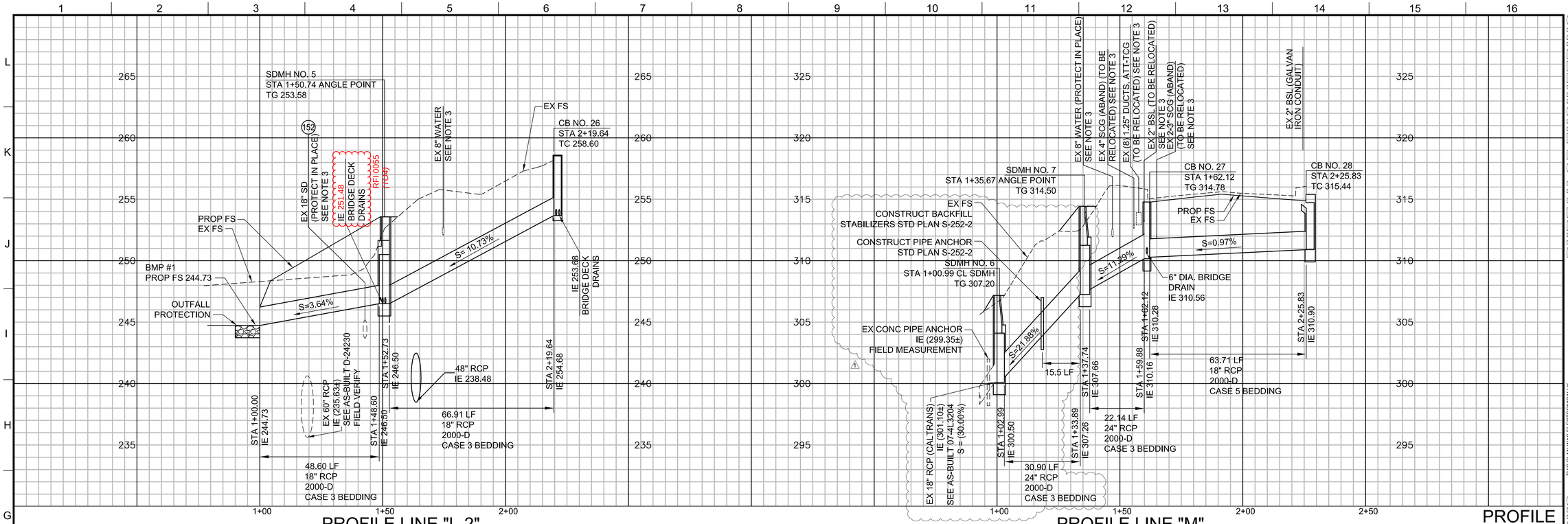

PROFILE

HORIZ: 1"=20'
VERT: 1"=4'

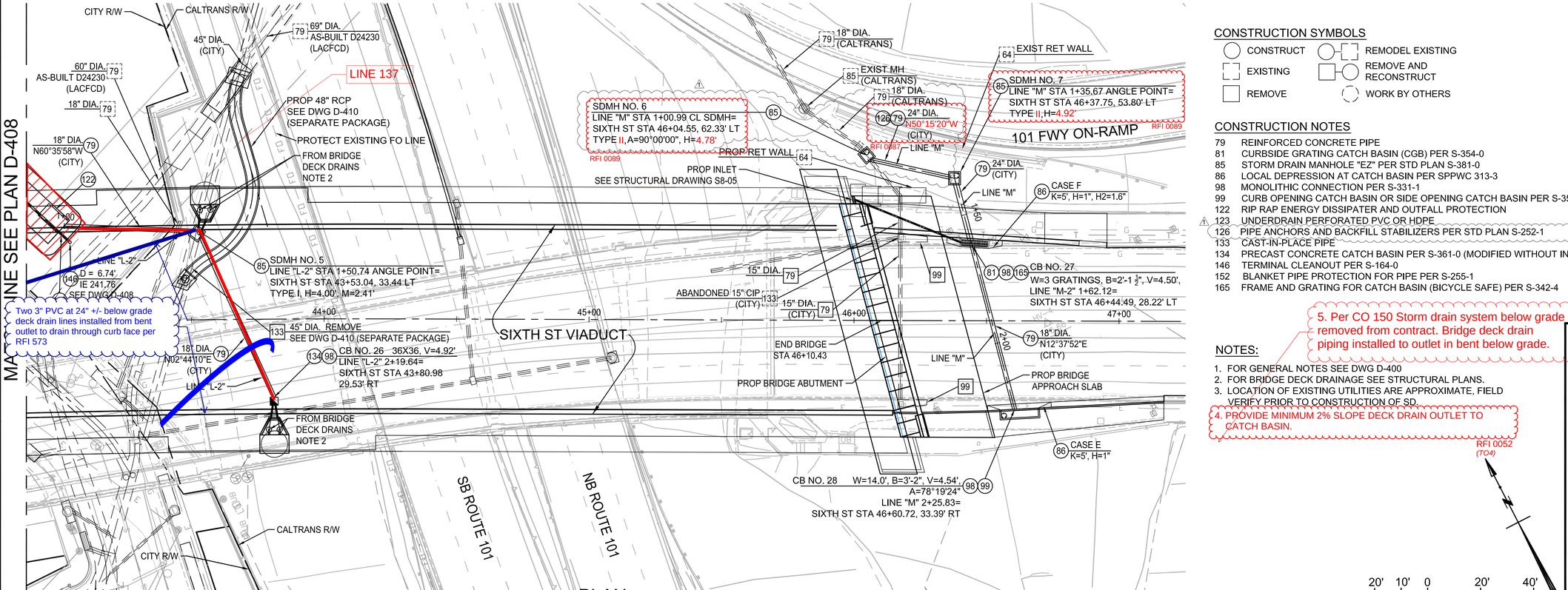

PLAN

SCALE: 1"=20'

CONSTRUCTION SYMBOLS

- CONSTRUCT
- EXISTING
- REMOVE
- REMODEL EXISTING
- REMOVE AND RECONSTRUCT
- WORK BY OTHERS

CONSTRUCTION NOTES

79 REINFORCED CONCRETE PIPE
81 CURBSIDE GRATING CATCH BASIN (CGB) PER S-354-0
85 STORM DRAIN MANHOLE "EZ" PER STD PLAN S-381-0
86 LOCAL DEPRESSION AT CATCH BASIN PER SPPWC 313-3
98 MONOLITHIC CONNECTION PER S-331-1
99 CURB OPENING CATCH BASIN OR SIDE OPENING CATCH BASIN PER S-351-1
122 RIP RAP ENERGY DISSIPATER AND OUTFALL PROTECTION
123 UNDERDRAIN PERFORATED PVC OR HDPE
126 PIPE ANCHORS AND BACKFILL STABILIZERS PER STD PLAN S-252-1
133 CAST-IN-PLACE PIPE
134 PRECAST CONCRETE CATCH BASIN PER S-361-0 (MODIFIED WITHOUT INLET SECTION)
146 TERMINAL CLEANOUT PER S-164-0
152 BLANKET PIPE PROTECTION FOR PIPE PER S-255-1
165 FRAME AND GRATING FOR CATCH BASIN (BICYCLE SAFE) PER S-342-4

5. Per CO 150 Storm drain system below grade removed from contract. Bridge deck drain piping installed to outlet in bent below grade.

NOTES:

1. FOR GENERAL NOTES SEE DWG D-400
2. FOR BRIDGE DECK DRAINAGE SEE STRUCTURAL PLANS.
3. LOCATION OF EXISTING UTILITIES ARE APPROXIMATE, FIELD VERIFY PRIOR TO CONSTRUCTION OF SD.
4. PROVIDE MINIMUM 2% SLOPE DECK DRAIN OUTLET TO CATCH BASIN.

RFI 0052 (TO4)

20' 10' 0 20' 40'
1 INCH = 20 FEET

T.O. 5 - Change Order Serial Sketch No. 33 - Page 1 of 1

HNTB
HNTB Corporation
801 W. 5TH STREET SUITE 1000
LOS ANGELES, CALIFORNIA 90071
TEL (213) 403-1000 FAX (213) 403-1001

CITY OF LOS ANGELES DEPARTMENT OF PUBLIC WORKS
BUREAU OF ENGINEERING

ENGINEERING
CITY OF LOS ANGELES

NO.	REVISIONS:	DATE	BY:
1	RFI 0034 STORM DRAIN LINE M TIE-IN EXISTING CONDITION	06/12/17	KS

STRUCTURE NO.
53C-2329

INDEX NO.

THIS PLAN WAS ELECTRONICALLY SIGNED AND STAMPED.

REGISTERED PROFESSIONAL ENGINEER
KOUROSH SAMENI
No. 45318
Exp. 9-30-18
STATE OF CALIFORNIA

CITY ENGINEER
GARY LEE MOORE, P.E.
DESIGN GROUP
ENGINEER: KOUROSH SAMENI LIC. NO. 45318
DESIGNED BY: XAVIER ESPINOSA
DRAWN BY: XAVIER ESPINOSA
CHECKED BY: KOUROSH SAMENI
APPROVED BY: TERENCE PAO
DATE:

VERTICAL CONTROL: BM 12-04070, 1929 (NGVD 29) - 1985 ADJUSTMENT
HORIZONTAL CONTROL: GPS; PID AE 1704, EPOCH 1991.35

SHEET TITLE: VIADUCT DRAINAGE PLAN & PROFILE LINE "L" & "M"
PROJECT: SIXTH STREET VIADUCT REPLACEMENT
ADDRESS: SIXTH STREET VIADUCT (WHITTIER BLVD) LOS ANGELES, CA

WORK ORDER NO.
E700224F

DRAWING NO.
D-409

SHEET OF SHEETS

THE CITY OF LOS ANGELES OR ITS OFFICERS OR AGENTS SHALL NOT BE RESPONSIBLE FOR THE ACCURACY OR COMPLETENESS OF ELECTRONIC COPIES OF THIS PLAN SHEET.

C:\caddlib\pw\pwwestcoast\ksameni\dms57684\C-002-D409.dwg 6/14/17 17:08

REVISION DATES (DESIGN STAGE ONLY)

Sheet Version 3.0

ADDENDUM 5

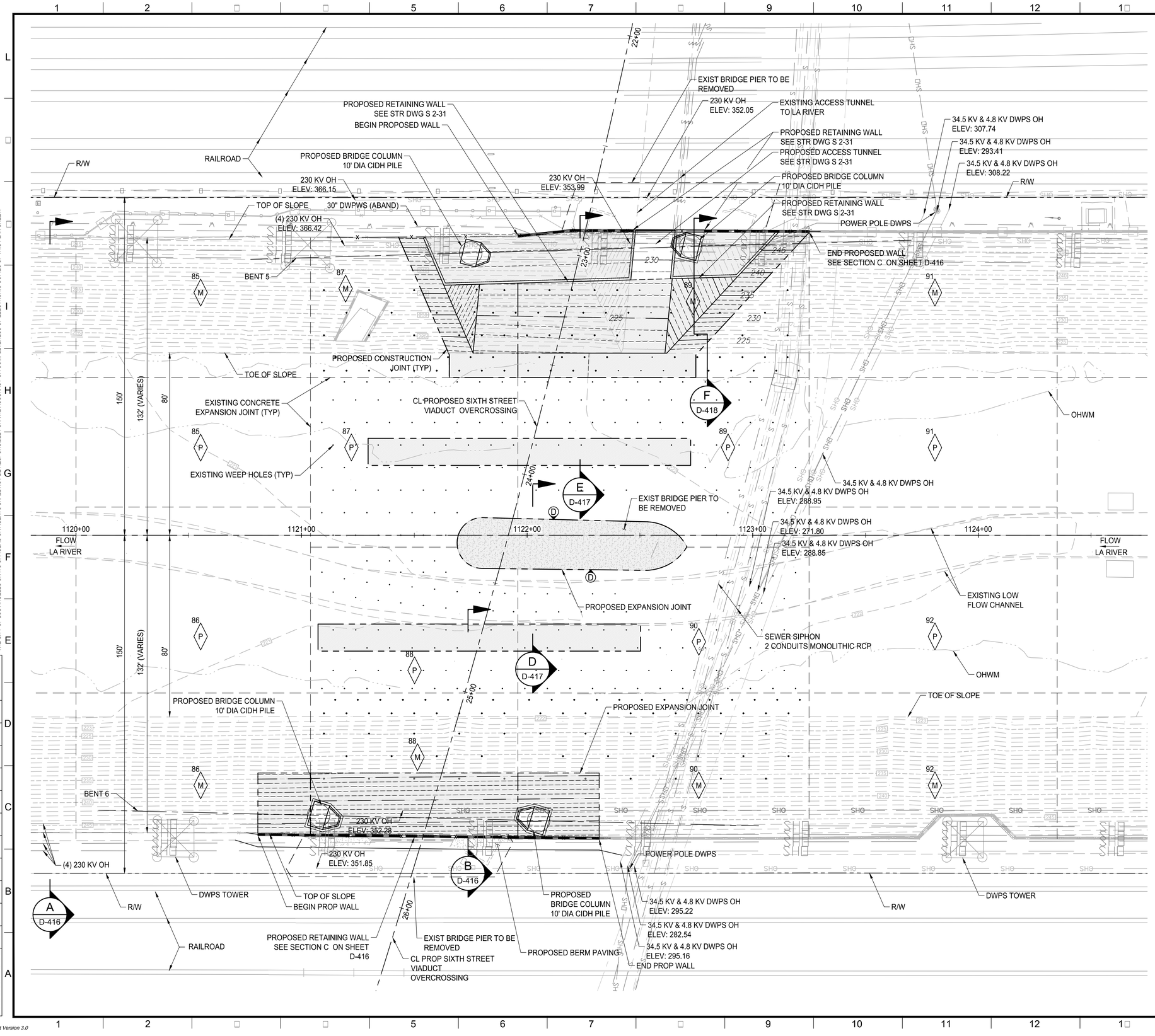

LEGEND

- INVERT SLAB IDENTIFIER
- MONOLITHIC PANEL IDENTIFIER
- EXISTING JOINT
- PROPOSED JOINT
- PROPOSED CONCRETE CHANNEL LINING
- ORDINARY HIGH WATER MARK (OHWM)
- TYPE D JOINT, SEE D-419

GENERAL NOTES:

1. FOR ENLARGED PLAN OF WEST BANK SEE DRAWING D-412.
2. FOR ENLARGED PLAN OF EAST BANK SEE DRAWING D-413.

USACE GENERAL NOTES:

1. PROTECT UTILITY WITHIN THE USACE RIGHT-OF-WAY.
2. PROVISIONS SHALL BE MADE TO PREVENT DEBRIS FROM FALLING INTO THE CHANNEL DURING CONSTRUCTION.
3. COMPACTION EQUIPMENT USED TO PLACE BACKFILL BEHIND CHANNEL WALL MUST NOT EXCEED 35,000 POUNDS INCLUDING DYNAMIC FORCED FROM VIBRATOR COMPACTOR.
4. NO EQUIPMENT IN EXCESS OF H-10 HIGHWAY LOADING (AASHTO), AND NO STOCKPILING OF MATERIAL WILL BE PERMITTED ALONG THE CHANNEL WITHIN A DISTANCE OF ONE-HALF WALL HEIGHT.
5. NO EQUIPMENT IN EXCESS OF H-20 HIGHWAY LOADING WILL BE PERMITTED TO OPERATE ON THE INVERT OF THE CHANNEL. ONLY RUBBER-TIRED, LEGALLY LOADED EQUIPMENT SHALL BE OPERATED ON THE EXPOSED CHANNEL INVERT. IF STEEL CRAWLER TYPE EQUIPMENT IS USED, WOODEN MATTING SHALL BE PROVIDED OVER THE INVERT IN THE OPERATING AREA. LOADS FROM TRACK VEHICLES SHALL NOT EXCEED 300 PSF ON A SURFACE AT THE BOTTOM OF THE INVERT SLAB.

BUREAU OF ENGINEERING
OFFICIAL RECORD

HNTB
HNTB Corporation
601 W. 5TH STREET SUITE 1000
LOS ANGELES, CALIFORNIA 90071
TEL (213) 403-1000 FAX (213) 403-1001

CITY OF LOS ANGELES DEPARTMENT OF PUBLIC WORKS
BUREAU OF ENGINEERING

ENGINEERING
CITY OF LOS ANGELES

NO. | REVISIONS: | DATE | BY:

STRUCTURE NO. 53C-2329

INDEX NO. P_38113

THIS PLAN WAS ELECTRONICALLY SIGNED AND STAMPED

PROFESSIONAL ENGINEER
KOUROSH SAMENI
No. C 45318
9/29/16
REGISTERED CIVIL ENGINEER
STATE OF CALIFORNIA

GARY LEE MOORE, P.E.
CITY ENGINEER

		DATE:
ENGINEER:	KOUROSH SAMENI	LIC. NO. 45318
DESIGNED BY:	XAVIER ESPINOSA	DESIGN GROUP
DRAWN BY:	XAVIER ESPINOSA	
CHECKED BY:	KOUROSH SAMENI	
APPROVED BY:	TERENCE PAO	

VERTICAL CONTROL: BM 12-04070, 1929 (NGVD 29) - 1985 ADJUSTMENT
HORIZONTAL CONTROL: GPS; PID AE 1704, EPOCH 1991.35

SHEET TITLE: LA RIVER CHANNEL MODIFICATION GENERAL PLAN

PROJECT: SIXTH STREET VIADUCT REPLACEMENT

ADDRESS: SIXTH STREET VIADUCT (WHITTIER BLVD) LOS ANGELES, CA

WORK ORDER NO. E70022□F

DRAWING NO. D-411

SHEET 70 OF 560 SHEETS

REVISION DATES
DESIGN STAGE ONLY□

C:\caddlib\pw\pwwestcoast\vespinosa\dms5768#\C-002-D411.dwg 7/05/16 10:21

Sheet Version 3.0

THE CITY OF LOS ANGELES OR ITS OFFICERS OR AGENTS SHALL NOT BE RESPONSIBLE FOR THE ACCURACY OR COMPLETENESS OF ELECTRONIC COPIES OF THIS PLAN SHEET.

ADDENDUM 5

Per RFI 647 follow detail C/D-416 without retaining wall between 121+41.33 and 1121+95.86

EXIST BRIDGE PIER TO BE REMOVED

230 KV OH ELEV: 352.05

EXISTING ACCESS TUNNEL TO LA RIVER

RAILROAD

PROPOSED ACCESS TUNNEL RECONSTRUCTION SEE STR DWG S 2-31

230 KV OH ELEV: 366.15

PROPOSED RETAINING WALL STR DWG S 2-31

PROPOSED CHAIN LINK FENCE

(4) 230 KV OH

PROPOSED BRIDGE COLUMN 10' DIA CIDH PILE

EXIST FENCE

PROPOSED BRIDGE COLUMN 10' DIA CIDH PILE

30" DWPWS (ABAND)

TW 248.60
BW 247.85
1121+95.86
132.67 LT

TW 251.00
BW 248.20
1122+20.00
135.18 LT

TW 253.20
BW 248.20
1122+48.04
135.07 LT

PROPOSED RETAINING WALL SEE STR DWG S 2-31

TYPE "D" CONNECTION SEE DWG D-419

RFI 0071

230 KV OH ELEV: 353.99

TW 254.80
BW 248.00
1122+65.59
134.99 LT

PROPOSED RETAINING WALL SEE STR DWG S 2-31

TW 254.60
BW 248.86
1123+24.23
134.86 LT

PROPOSED 4'-0" CHAIN LINK FENCE

TW (254.48)
BW (248.90)
1123+31.16
134.22 LT
JOIN EXIST WALL

R/W

(247.18)
1121+34.45
132.22 LT

TW 247.25
1121+41.33
131.43 LT

RFI 0090

230 KV OH ELEV: 366.42

BENT 5

12" MIN

TW 245.00
BW 228.32
1122+45.94
113.28 LT

TW 245.00
BW 228.42
1122+63.54
113.79 LT

12" MIN

EX 12" CMP (TO REMAIN)

BENT 5

(104) PC SIXTH ST STA 22+77.47, 79.41' LT
EX 12" CMP IE (241.15) FIELD VERIFIED

(79) 12" DIA., L=6.83', R=22.5', D=17°23'15"
2000-D, CASE 5 BEDDING

EX 12" CMP (TO REMOVE)

PT SIXTH ST STA 22+77.47, 79.54' LT

(79) 12" DIA., L=6.56', N79°39'11"W
2000-D, CASE 5 BEDDING
IE OUT 240.30; SIXTH ST STA 22+90.57, 78.68' LT

PROPOSED CONCRETE JOINT (TYP)

87

89

91

TW 245.00
BW 236.50
1121+50.35
110.52 LT

236.50
1121+ 54.35
110.64 LT

239.33
1123+1.90
114.90 LT

TW 245.00
BW 239.33
1123+05.90
115.01 LT

228.46
1122+73.64
114.08 LT

BO-1
1-4

RFI 0071

10'-0" (TYP)

222.13
1122+42.80
80.80 LT

(221.65)
1121+56.60
80.80 LT

228.04
1121+ 70.07
111.09 LT

2.72'

10'-0" (TYP)

4.93'

(222.22)
1122+81.78
80.80 LT

(222.22)
1122+70.37
80.78 LT

EXISTING TOE OF SLOPE

(221.68)
1121+67.20
80.80 LT

(221.65)
1121+67.20
70.00 LT

6" DIA WEEP HOLE (TYP)

3" DIA WEEP HOLE (TYP)

(222.23)
1122+70.37
70.00 LT

EXIST JOINT

EXISTING CONCRETE EXPANSION JOINT (TYP)

CL PROP SIXTH STREET VIADUCT OVERCROSSING

OHWM

EXISTING WEEP HOLES (TYP)

221.38
1121+29.50
42.99 LT

2.99' (TYP)

4.50'

3" DIA WEEP HOLE (TYP)

10.00' (TYP)

222.17
1122+72.50
42.99 LT

EXISTING CONCRETE JOINT (TYP)

221.31
1121+29.50
30.99 LT

222.06
1122+72.50
30.99 LT

24+00

SEWER SIPHON
2 CONDUCTS MONOLITHIC RCP

PROPOSED CONCRETE JOINT (TYP)

LA RIVER FLOW

34.5 KV & 4.8 KV DWPS OH

EXIST BRIDGE PIER TO BE REMOVED SEE DWG D-411

CL LA RIVER

1122+00

1123+00

1124+00

LEGEND

- XX (P) — INVERT SLAB IDENTIFIER
- XX (M) — MONOLITHIC PANEL IDENTIFIER
- EXISTING JOINT
- PROPOSED JOINT
- WEEP HOLE

LEGEND

- PROPOSED CONCRETE CHANNEL LINING
- ORDINARY HIGH WATER MARK (OHWM)
- (A) TYPE A JOINT, SEE D-419
- (B) TYPE B JOINT, SEE D-419
- (C) TYPE C JOINT, SEE D-419
- (D) TYPE D JOINT, SEE D-419

ABBREVIATION

TW	TOP OF WALL
BW	BASE OF WALL

GENERAL NOTE:

1. FOR ADDITIONAL GENERAL NOTES SEE D-411 AND D-400.

CONSTRUCTION SYMBOLS

- CONSTRUCT
- EXISTING
- REMOVE
- REMODEL EXISTING
- REMOVE AND RECONSTRUCT
- WORK BY OTHERS

CONSTRUCTION NOTES

79 REINFORCED CONCRETE PIPE
104 CONCRETE COLLAR PER S-333-0

SCALE 1" = 10'-0"

T.O. 5 - Emergency Change Order Serial Sketch No. 40 - Page 1 of 1

THE CITY OF LOS ANGELES OR ITS OFFICERS OR AGENTS SHALL NOT BE RESPONSIBLE FOR THE ACCURACY OR COMPLETENESS OF ELECTRONIC COPIES OF THIS PLAN SHEET.

C:\caddlib\pw\pwwestcoast\ksameni\dms57684\C-002-D412.dwg 9/01/17 15:59

REVISION DATES (DESIGN STAGE ONLY)

Sheet Version 3.0

BUREAU OF ENGINEERING

ENGINEERING
CITY OF LOS ANGELES

NO.	REVISIONS:	DATE:	BY:
1.	CHANNEL RW BENT 5 CHANGES DUE TO CONSTRUCTION LOADING	6/24/17	KS
2.	BENT 5 RETAINING WALL STORM DRAIN	09/01/17	KS

STRUCTURE NO. 53C-2329

INDEX NO.

THIS PLAN WAS ELECTRONICALLY SIGNED AND STAMPED

REGISTERED PROFESSIONAL ENGINEER KOUROSH SAMENI No. 45318 Exp. 9-30-18 CIVIL STATE OF CALIFORNIA

GARY LEE MOORE, P.E.
CITY ENGINEER

		DATE:
DESIGN GROUP		
ENGINEER:	KOUROSH SAMENI	LIC. NO. 45318
DESIGNED BY:	XAVIER ESPINOSA	
DRAWN BY:	XAVIER ESPINOSA	
CHECKED BY:	KOUROSH SAMENI	
APPROVED BY:	TERENCE PAO	

DEPARTMENT OF PUBLIC WORKS
CITY OF LOS ANGELES

VERTICAL CONTROL: BM 12-04070,1929 (NGVD 29) - 1985 ADJUSTMENT
HORIZONTAL CONTROL: GPS, PID AE 1704, EPOCH 1991.35

SHEET TITLE: LA RIVER CHANNEL MODIFICATION WEST BANK
PROJECT: SIXTH STREET VIADUCT REPLACEMENT
ADDRESS: SIXTH STREET VIADUCT (WHITTIER BLVD) LOS ANGELES, CA

HNTB
HNTB Corporation
601 W. 5TH STREET SUITE 1000
LOS ANGELES, CALIFORNIA 90071
TEL (213) 403-1000 FAX (213) 403-1001

WORK ORDER NO.
E700224F

DRAWING NO.
D-412

SHEET OF SHEETS

ADDENDUM 5

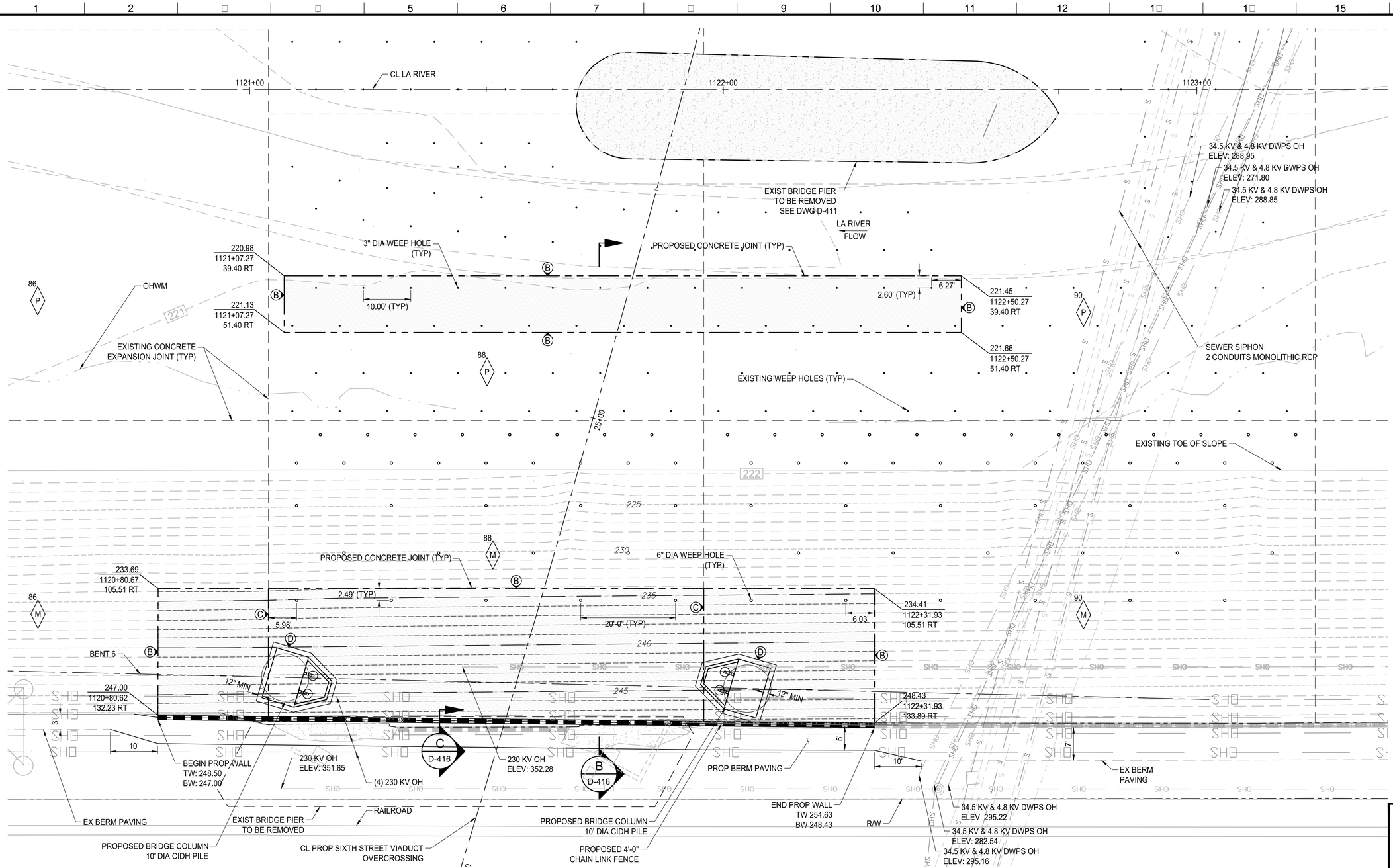

LEGEND

- XX / P — INVERT SLAB IDENTIFIER
- XX / M — MONOLITHIC PANEL IDENTIFIER
- EXISTING JOINT
- PROPOSED JOINT
- WEEP HOLE

LEGEND

- PROPOSED CONCRETE CHANNEL LINING
- ORDINARY HIGH WATER MARK (OHWM)
- A — TYPE A JOINT, SEE D-419
- B — TYPE B JOINT, SEE D-419
- C — TYPE C JOINT, SEE D-419
- D — TYPE D JOINT, SEE D-419 (EXCLUDE FILLER MATERIAL AT BENT 6)

ABBREVIATION

TW	TOP OF WALL
BW	BASE OF WALL

GENERAL NOTE:

1. FOR ADDITIONAL GENERAL NOTES SEE D-411.

THE CITY OF LOS ANGELES OR ITS OFFICERS OR AGENTS SHALL NOT BE RESPONSIBLE FOR THE ACCURACY OR COMPLETENESS OF ELECTRONIC COPIES OF THIS PLAN SHEET.

REVISION DATES
DESIGN STAGE ONLY:

C:\caddlib\pw\pwwestcoast\xespinosa\dms57684\C-002-D413.dwg 7/05/16 10:41

Sheet Version 3.0

BUREAU OF ENGINEERING

ENGINEERING
CITY OF LOS ANGELES

NO. | REVISIONS: | DATE | BY:

STRUCTURE NO.
53C-2329

INDEX NO.
P_38113

THIS PLAN WAS ELECTRONICALLY SIGNED AND STAMPED

PROFESSIONAL ENGINEER
KOUROSH SAMENI
No. C 45318
9/29/16
REGISTERED
STATE OF CALIFORNIA
CIVIL

BUREAU OF ENGINEERING
OFFICIAL RECORD

HNTB
HNTB Corporation
601 W. 5TH STREET SUITE 1000
LOS ANGELES, CALIFORNIA 90071
TEL (213) 403-1000 FAX (213) 403-1001

CITY OF LOS ANGELES DEPARTMENT OF PUBLIC WORKS
BUREAU OF ENGINEERING

GARY LEE MOORE, P.E.
CITY ENGINEER
DATE:
LIC. NO. 45318

DESIGN GROUP

ENGINEER:	KOUROSH SAMENI
DESIGNED BY:	XAVIER ESPINOSA
DRAWN BY:	XAVIER ESPINOSA
CHECKED BY:	KOUROSH SAMENI
APPROVED BY:	TERENCE PAO

VERTICAL CONTROL: BM 12-04070,1929 (NGVD 29) - 1985 ADJUSTMENT
HORIZONTAL CONTROL: GPS; PID AE 1704; EPOCH 1991.35

SHEET TITLE: LA RIVER CHANNEL MODIFICATION EAST BANK

PROJECT: SIXTH STREET VIADUCT REPLACEMENT

ADDRESS: SIXTH STREET VIADUCT (WHITTIER BLVD) LOS ANGELES, CA

WORK ORDER NO.
E70022□F

DRAWING NO.
D-413

SHEET 72 OF 560 SHEETS

ADDENDUM 5

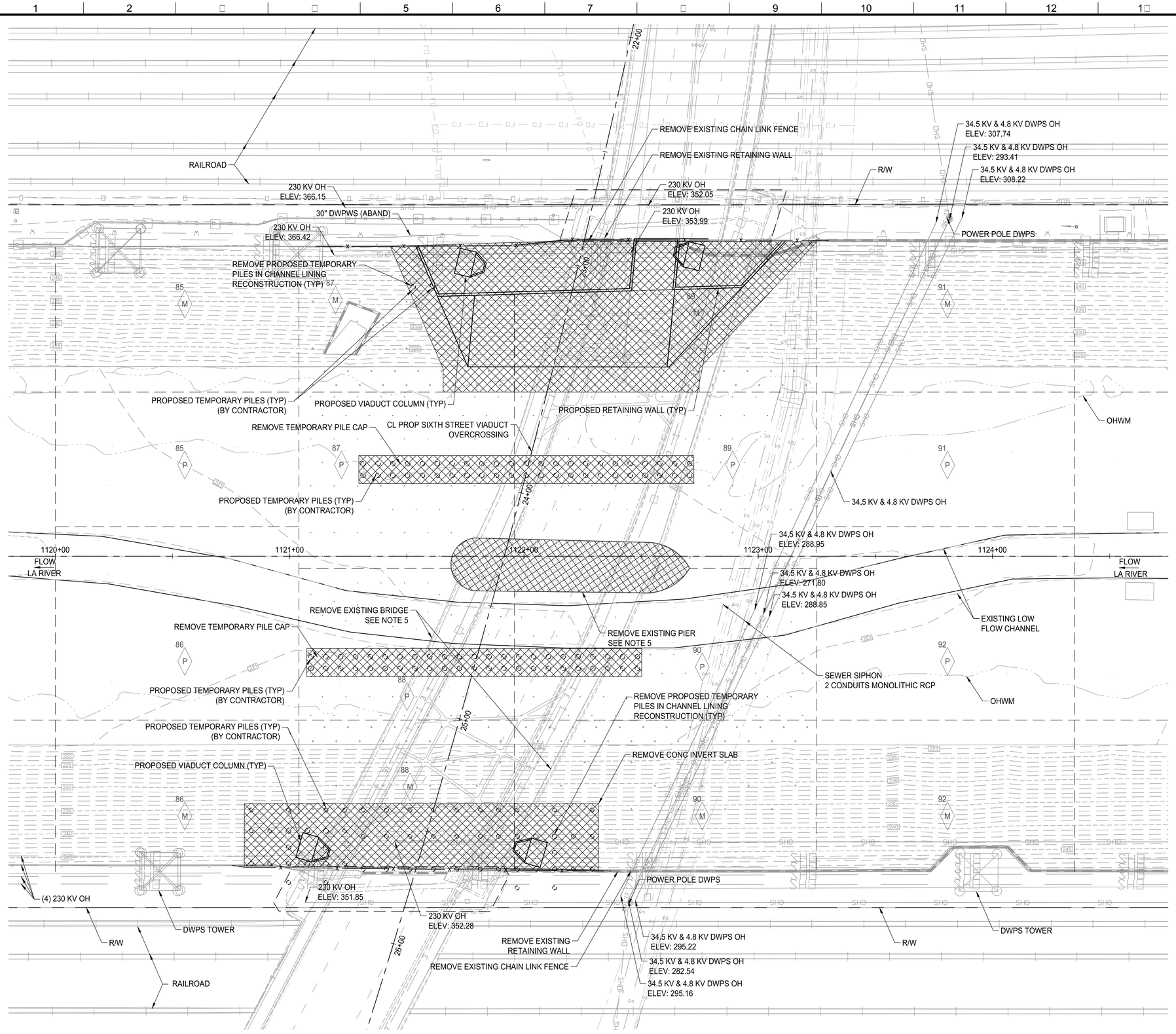

LEGEND

- EXISTING JOINT
- DEMOLITION OF CONCRETE CHANNEL LINING
- ORDINARY HIGH WATER MARK (OHWM)

GENERAL NOTES:

1. FOR LA RIVER CONSTRUCTION PHASING SEE DWG D-415.
2. CONTRACTOR SHALL SUBMIT ALL CONSTRUCTION SEQUENCES AND DETAILS IN ACCORDANCE WITH THE SPECIFICATION TO THE ENGINEER FOR APPROVAL PRIOR TO ANY REMOVAL AND CONSTRUCTION. USACE PERMIT IS REQUIRED FOR ANY MODIFICATION TO LA RIVER CHANNEL AND ACCESS RAMP.
3. CONTRACTOR SHALL PROVIDE TEMPORARY WORKS WHICH ALLOW FOR THE PASSAGE OF STORM AND DRAINAGE WATER IN A MANNER EQUIVALENT TO THE EXISTING SYSTEM. THE CAPACITY OF THE CHANNEL SHALL BE MAINTAINED FOR DESIGN Q (104,000 CFS) AS FOLLOWS: 5% OF DESIGN Q FOR JUNE 1 TO AUGUST 31, 33% OF DESIGN Q FOR APRIL 15 TO MAY 31 AND SEPTEMBER 1 TO OCTOBER 15, AND 100% OF DESIGN Q OCTOBER 16 TO APRIL 14. ANY WORK IN THE FLOOD CONTROL CHANNEL SHALL BE PERFORMED DURING THE PERIOD BETWEEN APRIL 15 AND OCTOBER 15. ANY WORK STARTED AFTER APRIL 15 SHALL BE COMPLETED PRIOR TO THE FOLLOWING OCTOBER 15 AND SHALL BE COORDINATED WITH THE AGENCY.
4. CONTRACTOR SHALL MAINTAIN EXISTING ACCESS TUNNEL OPEN FOR USACE OPERATIONS DURING DEMOLITION AND CONSTRUCTION.
5. FOR DEMOLITION OF EXISTING SIXTH STREET BRIDGE SEE DEMOLITION PLANS IN DEMOLITION PACKAGE SUBMITTAL.
6. FOR LA RIVER CHANNEL MODIFICATIONS SEE D-411, D-412, AND D-413.

20' 10' 0 20' 40'
SCALE 1" = 20'-0"

BUREAU OF ENGINEERING
OFFICIAL RECORD

HNTB
HNTB Corporation
601 W. 5TH STREET SUITE 1000
LOS ANGELES, CALIFORNIA 90071
TEL (213) 403-1000 FAX (213) 403-1001

CITY OF LOS ANGELES DEPARTMENT OF PUBLIC WORKS BUREAU OF ENGINEERING

ENGINEERING
CITY OF LOS ANGELES

NO.	REVISIONS:	DATE	BY:

STRUCTURE NO.
53C-2329

INDEX NO. P_38113

THIS PLAN WAS ELECTRONICALLY SIGNED AND STAMPED

PROFESSIONAL ENGINEER
KOUROSH SAMENI
No. C 45318
9/29/16
REGISTERED CIVIL ENGINEER
STATE OF CALIFORNIA

GARY LEE MOORE, P.E. CITY ENGINEER

		LIC. NO. 45318 DATE:
ENGINEER:	KOUROSH SAMENI	
DESIGNED BY:	XAVIER ESPINOSA	
DRAWN BY:	XAVIER ESPINOSA	
CHECKED BY:	KOUROSH SAMENI	
APPROVED BY:	TERENCE PAO	

DESIGN GROUP

VERTICAL CONTROL: BM 12-04070, 1929 (NGVD 29) - 1985 ADJUSTMENT
HORIZONTAL CONTROL: GPS; PID AE 1704, EPOCH 1991.35

SHEET TITLE: LA RIVER CHANNEL MODIFICATION DEMOLITION PLAN

PROJECT: SIXTH STREET VIADUCT REPLACEMENT

ADDRESS: SIXTH STREET VIADUCT (WHITTIER BLVD) LOS ANGELES, CA

WORK ORDER NO.
E70022□F

DRAWING NO.
D-414

SHEET 7□ OF 560 SHEETS

REVISION DATES
DESIGN STAGE ONLY□

C:\caddlib\pw\pwwestcoast\yespinosa\dms57684\C-002-0414.dwg 6/30/16 16:13

Sheet Version 3.0

THE CITY OF LOS ANGELES OR ITS OFFICERS OR AGENTS SHALL NOT BE RESPONSIBLE FOR THE ACCURACY OR COMPLETENESS OF ELECTRONIC COPIES OF THIS PLAN SHEET.

ADDENDUM 5

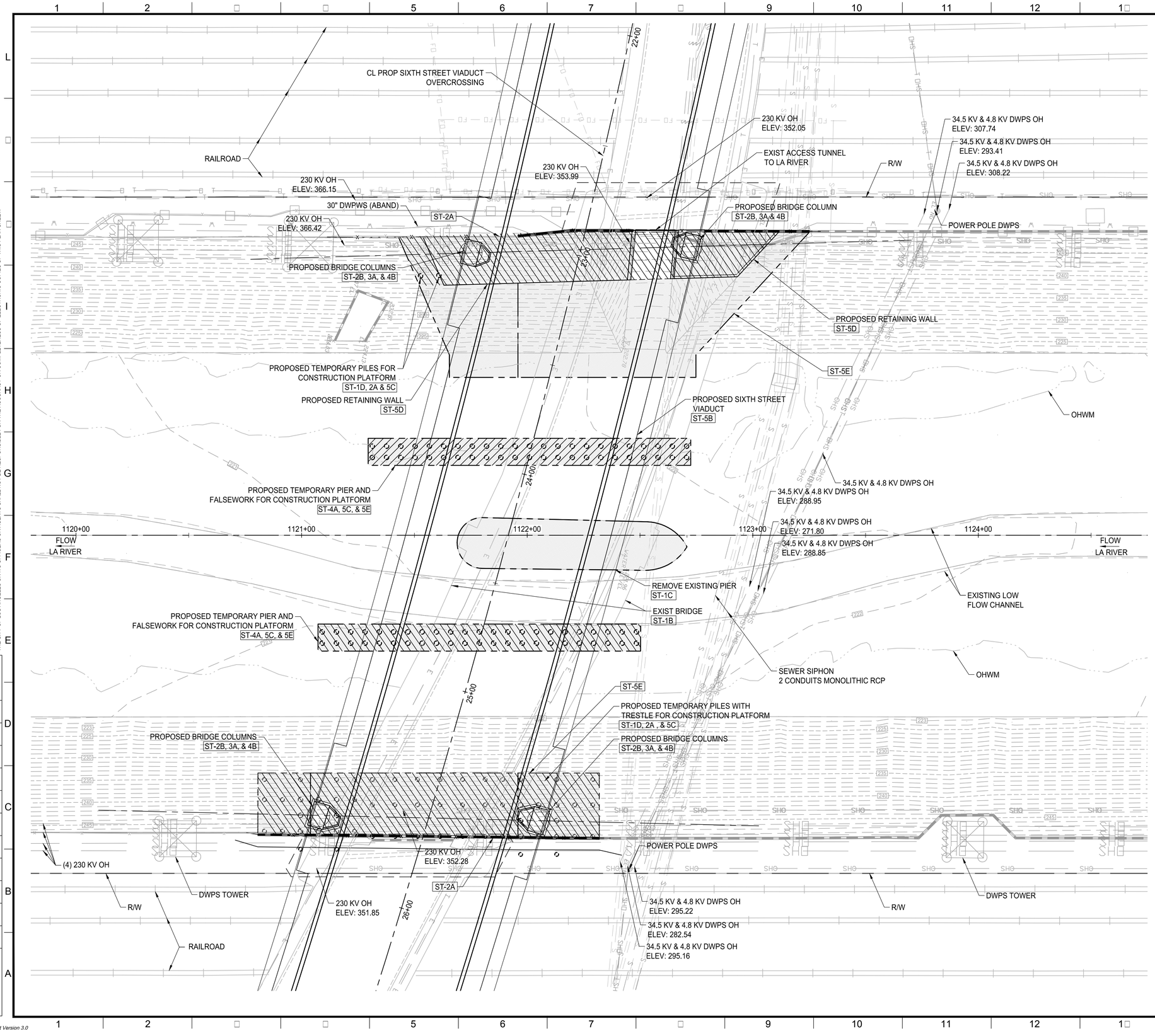

LEGEND

- PROPOSED PCC PAVEMENT
- TEMPORARY CONSTRUCTION PLATFORM
- ORDINARY HIGH WATER MARK (OHWM)
- LIMITS OF CHANNEL RECONSTRUCTION
- ST-2B — CONSTRUCTION STAGING (STAGE 2 B)

GENERAL NOTES:

1. SUGGESTED STAGE CONSTRUCTION SEQUENCES ARE FOR INFORMATION ONLY. CONTRACTOR CAN ALTER, DELETE, OR ADD ANY SUGGESTED SEQUENCES, STEPS, METHODS TO FIT HIS OWN PLANS, SCHEDULE FOR A SAFER AND RELIABLE CONSTRUCTION.
2. TEMPORARY PLATFORMS AND PIERS ARE TO BE DESIGNED AND DETAILED BY A CALIFORNIA LICENSED ENGINEER WITH CONTRACTOR. ALL DETAILS AND SHOP DRAWINGS SHALL BE SUBMITTED TO BOE FOR APPROVAL PRIOR TO CONSTRUCTION.
3. CONTRACTOR SHALL DESIGN SWPPP. INSTALL TEMPORARY BMPS PRIOR TO CONSTRUCTION, MAINTAIN BMPS THROUGHOUT CONSTRUCTION AND REMOVE AT COMPLETION OF THE PROJECT.
4. FOR ADDITIONAL NOTES SEE DEMOLITION PLAN D-414

SUGGESTED CONSTRUCTION SEQUENCES:

STAGE-1:
- A. IMPLEMENT SWPPP AND INSTALL BMPS
- B. DEMOLISH EXISTING BRIDGE SUPERSTRUCTURE
- C. REMOVE EXISTING BRIDGE CENTER PIER AND CONSTRUCT CONCRETE CHANNEL LINING
- D. CONSTRUCT TEMPORARY PLATFORMS AT THE EASTSIDE AND WESTSIDE

STAGE-2:
- A. COMPLETE DEMOLITION OF EXISTING BRIDGE OVER LA RIVER AND REMOVE EXISTING BRIDGE FOUNDATIONS
- B. DRILL PROPOSED BRIDGE COLUMN FTGS

STAGE-3:
- A. CONSTRUCT LOWER PORTION OF PROPOSED BRIDGE COLUMNS

STAGE-4:
- A. CONSTRUCT TEMPORARY PIER WALLS AT MIDDLE OF CHANNEL (2 LOCATIONS) AND INSTALL FALSEWORK. BOTH PIERS WILL REMAIN IN LA RIVER FULL SEASON DURING CONSTRUCTION
- B. CONSTRUCT UPPER PORTION OF COLUMNS AND BRIDGE SUPERSTRUCTURE

STAGE-5:
- A. CONSTRUCT BRIDGE SUPERSTRUCTURE
- B. REMOVE TEMPORARY PLATFORMS AND PIER WALLS
- C. CONSTRUCT PROPOSED RETAINING WALLS AT WESTSIDE
- D. RECONSTRUCT CHANNEL INVERT SLAB

20' 10' 0 20' 40'
SCALE 1" = 20'-0"

BUREAU OF ENGINEERING
OFFICIAL RECORD

HNTB
HNTB Corporation
601 W. 5TH STREET SUITE 1000
LOS ANGELES, CALIFORNIA 90071
TEL (213) 403-1000 FAX (213) 403-1001

BUREAU OF ENGINEERING
ENGINEERING
CITY OF LOS ANGELES

NO.	REVISIONS:	DATE	BY:

STRUCTURE NO. 53C-2329

INDEX NO. P_38113

PROFESSIONAL ENGINEER — KOUROSH SAMENI — No. C 45318 — 9/30/16 — REGISTERED — STATE OF CALIFORNIA — CIVIL

THIS PLAN WAS ELECTRONICALLY SIGNED AND STAMPED

CITY OF LOS ANGELES DEPARTMENT OF PUBLIC WORKS

GARY LEE MOORE, P.E. CITY ENGINEER

ENGINEER:	KOUROSH SAMENI	DESIGN GROUP	LIC. NO. 45318
DESIGNED BY:	XAVIER ESPINOSA		
DRAWN BY:	XAVIER ESPINOSA		
CHECKED BY:	KOUROSH SAMENI		
APPROVED BY:	TERENCE PAO		

VERTICAL CONTROL: BM 12-04070, 1929 (NGVD 29) - 1985 ADJUSTMENT
HORIZONTAL CONTROL: GPS; PID AE 1704, EPOCH 1991.35

SHEET TITLE: LA RIVER CHANNEL MODIFICATION CONSTRUCTION STAGING

PROJECT: SIXTH STREET VIADUCT REPLACEMENT

ADDRESS: SIXTH STREET VIADUCT (WHITTIER BLVD) LOS ANGELES, CA

WORK ORDER NO. E70022□F

DRAWING NO. D-415

SHEET 7□ OF 560 SHEETS

THE CITY OF LOS ANGELES OR ITS OFFICERS OR AGENTS SHALL NOT BE RESPONSIBLE FOR THE ACCURACY OR COMPLETENESS OF ELECTRONIC COPIES OF THIS PLAN SHEET.

C:\caddlib\pw\pwwestcoast\vespinosa\dms5768#\C-002-0415.dwg 7/05/16 10:45

REVISION DATES DESIGN STAGE ONLY□

Sheet Version 3.0

ADDENDUM 5

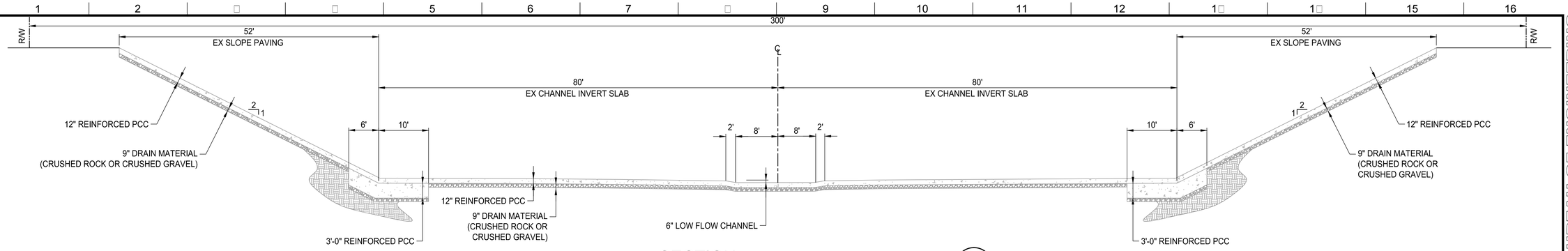

SECTION
NTS

A
D-□11

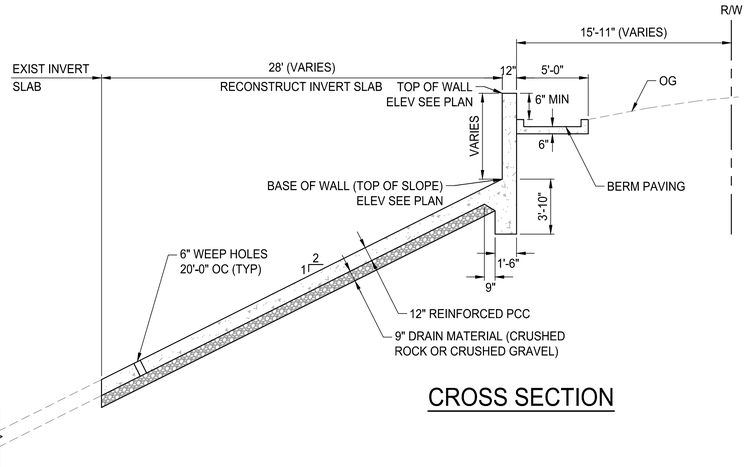

CROSS SECTION

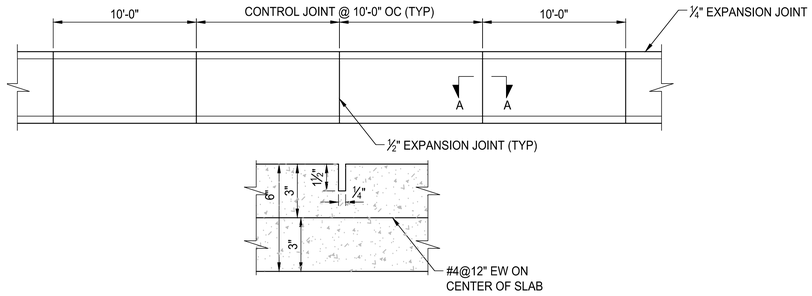

SECTION A-A

BERM PAVING CONTROL JOINT DETAIL (TYP)

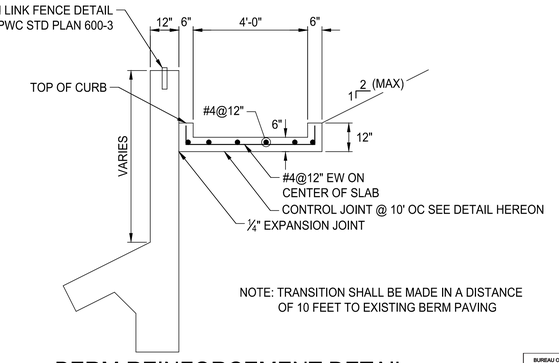

NOTE: TRANSITION SHALL BE MADE IN A DISTANCE OF 10 FEET TO EXISTING BERM PAVING

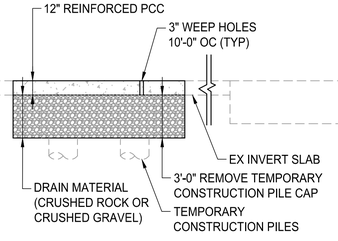

SECTION
NTS

B
D-□11
D-□12

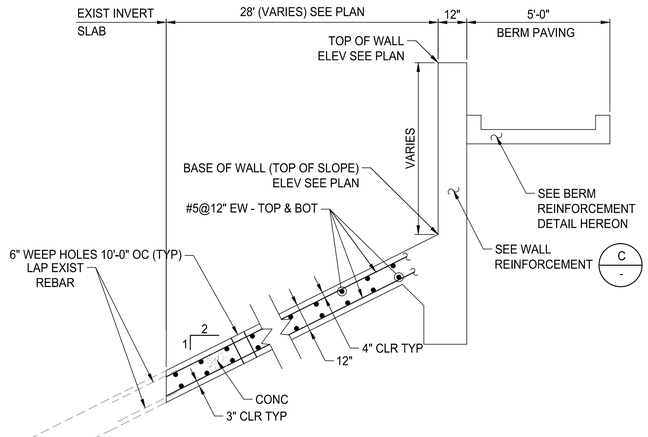

REINFORCEMENT DETAIL

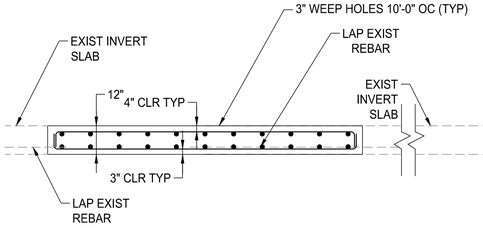

NOTES:

1. CONCRETE SHALL BE 4,000 PSI AT 28 DAYS
2. STEEL BARS SHALL BE GRADE 60

BERM REINFORCEMENT DETAIL

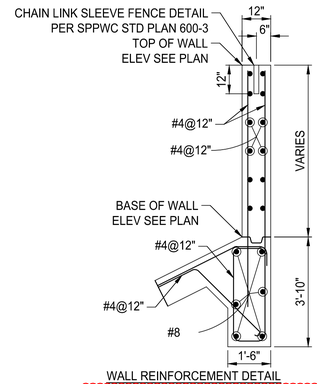

WALL REINFORCEMENT DETAIL

STA 1121+34.45, 132.22' LT to STA 1121+41.33, 131.43' LT
Provide Thickened Edge without Wall
RFI 0090

SECTION
NTS

C
D-□10
D-□12

BUREAU OF ENGINEERING
OFFICIAL RECORD

HNTB
HNTB Corporation
601 W. 5TH STREET SUITE 1000
LOS ANGELES, CALIFORNIA 90071
TEL (213) 403-1000 FAX (213) 403-1001

CITY OF LOS ANGELES DEPARTMENT OF PUBLIC WORKS BUREAU OF ENGINEERING

ENGINEERING
CITY OF LOS ANGELES

NO.	REVISIONS:	DATE	BY:

STRUCTURE NO.
53C-2329

INDEX NO.
P_38113

THIS PLAN WAS ELECTRONICALLY SIGNED AND STAMPED

PROFESSIONAL ENGINEER
KOUROSH SAMENI
No. C 45318
9/29/16
REGISTERED
CIVIL
STATE OF CALIFORNIA

GARY LEE MOORE, P.E.
CITY ENGINEER
DATE:
LIC. NO. 45318

DESIGN GROUP	
ENGINEER:	KOUROSH SAMENI
DESIGNED BY:	XAVIER ESPINOSA
DRAWN BY:	XAVIER ESPINOSA
CHECKED BY:	KOUROSH SAMENI
APPROVED BY:	TERRENCE PAO

SHEET TITLE: LA RIVER CHANNEL MODIFICATION CROSS SECTIONS No. 1

PROJECT: SIXTH STREET VIADUCT REPLACEMENT

ADDRESS: SIXTH STREET VIADUCT (WHITTIER BLVD) LOS ANGELES, CA

VERTICAL CONTROL: BM 12-04070, 1929 (NGVD 29) - 1985 ADJUSTMENT
HORIZONTAL CONTROL: GPS; PID AE 1704, EPOCH 1991.35

WORK ORDER NO.
E70022□F

DRAWING NO.
D-416

SHEET 75 OF 560 SHEETS

THE CITY OF LOS ANGELES OR ITS OFFICERS OR AGENTS SHALL NOT BE RESPONSIBLE FOR THE ACCURACY OR COMPLETENESS OF ELECTRONIC COPIES OF THIS PLAN SHEET.

REVISION DATES DESIGN STAGE ONLY:

C:\caddlib\pw\pwwestcoast\xespinosa\dms57684\C-002-D416.dwg 6/30/16 16:19

Sheet Version 3.0

ADDENDUM 5

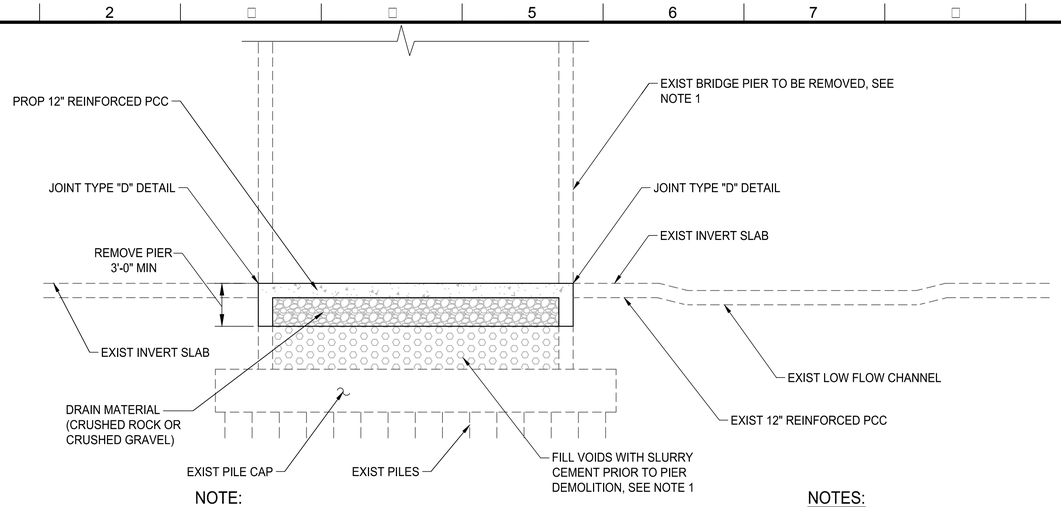

NOTE:

1. FOR REMOVAL OF EXIST PIER AND BRIDGE SEE BRIDGE DEMOLITION PLAN

CROSS SECTION

NOTES:

1. CONCRETE SHALL BE 4,000 PSI AT 28 DAYS
2. STEEL BARS SHALL BE GRADE 60

SECTION

NTS

D / D-□11

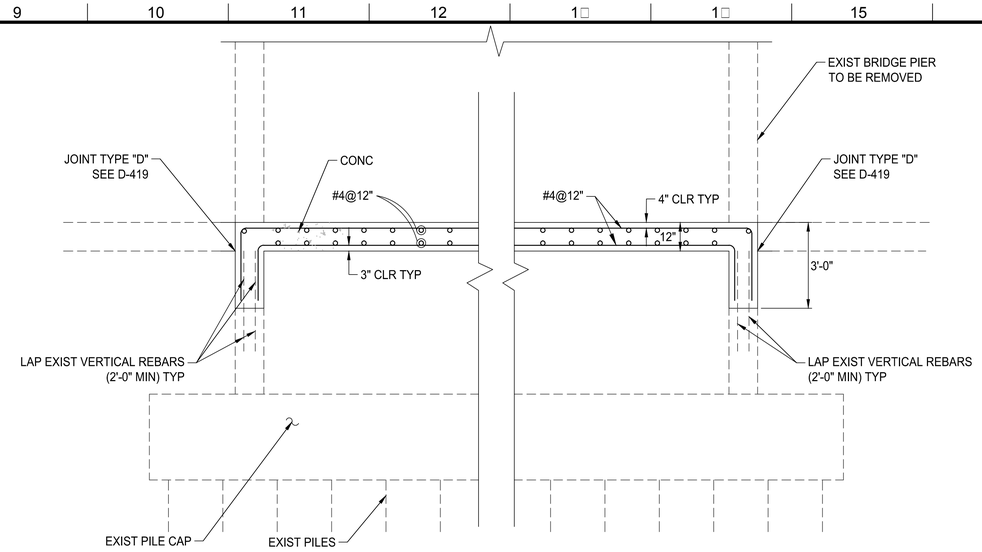

REINFORCEMENT DETAIL

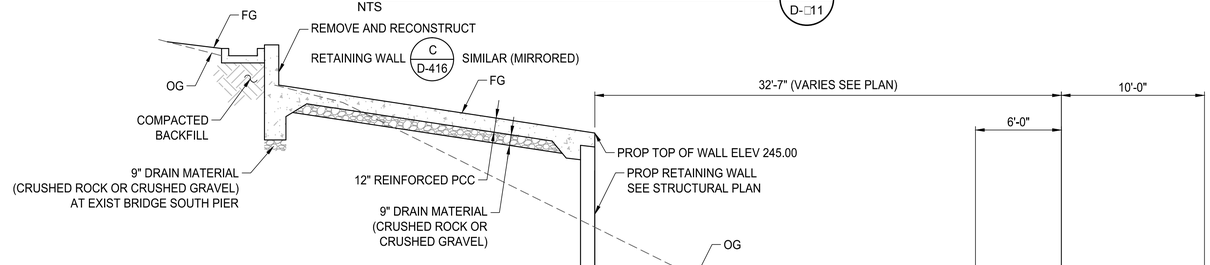

CROSS SECTION

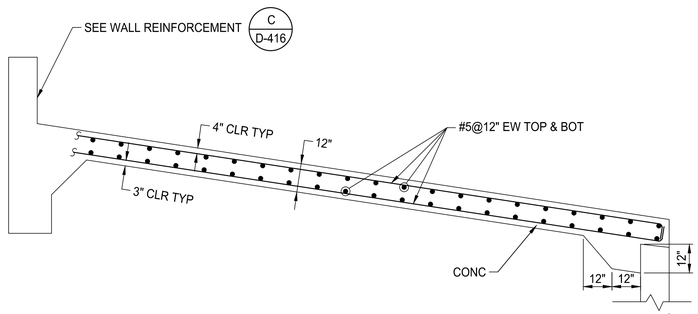

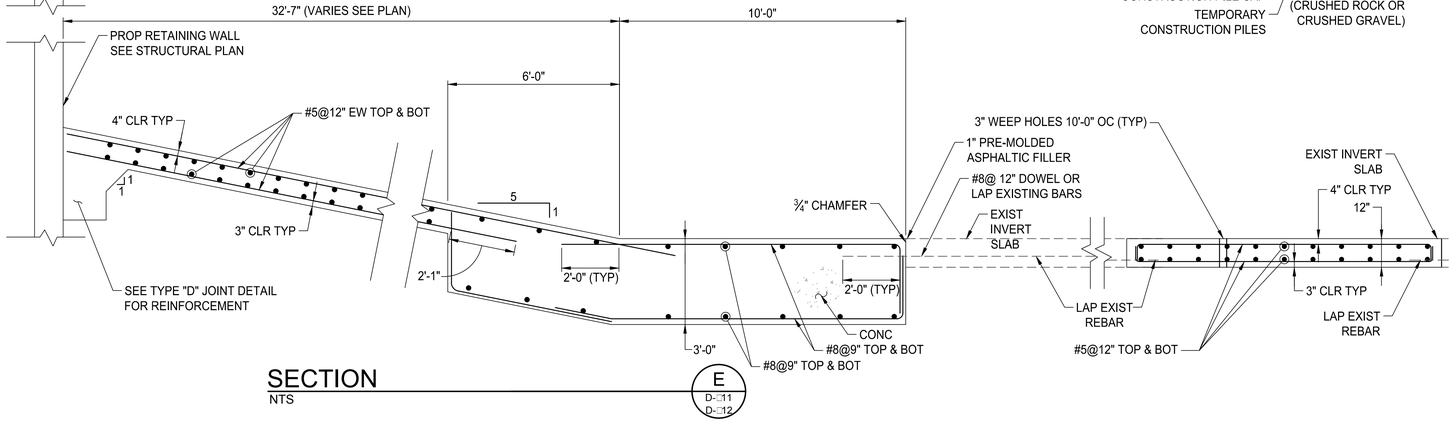

REINFORCEMENT DETAIL

NOTES:

1. CONCRETE SHALL BE 4,000 PSI AT 28 DAYS
2. STEEL BARS SHALL BE GRADE 60

SECTION

NTS

E / D-□11 / D-□12

BUREAU OF ENGINEERING OFFICIAL RECORD

HNTB
HNTB Corporation
601 W. 5TH STREET SUITE 1000
LOS ANGELES, CALIFORNIA 90071
TEL (213) 403-1000 FAX (213) 403-1001

CITY OF LOS ANGELES DEPARTMENT OF PUBLIC WORKS
BUREAU OF ENGINEERING

ENGINEERING
CITY OF LOS ANGELES

GARY LEE MOORE, P.E.
CITY ENGINEER

DESIGN GROUP

ENGINEER:	KOUROSH SAMENI	LIC. NO. 45318
DESIGNED BY:	XAVIER ESPINOSA	
DRAWN BY:	XAVIER ESPINOSA	
CHECKED BY:	KOURSOH SAMENI	
APPROVED BY:	TERENCE PAO	

DATE:

NO.	REVISIONS:	DATE	BY:

STRUCTURE NO. 53C-2329

INDEX NO. P_38113

THIS PLAN WAS ELECTRONICALLY SIGNED AND STAMPED

PROFESSIONAL ENGINEER
KOUROSH SAMENI
No. C 45318
9/29/16
REGISTERED CIVIL ENGINEER
STATE OF CALIFORNIA

SHEET TITLE: LA RIVER CHANNEL MODIFICATION CROSS SECTIONS No. 2

PROJECT: SIXTH STREET VIADUCT REPLACEMENT

ADDRESS: SIXTH STREET VIADUCT (WHITTIER BLVD) LOS ANGELES, CA

VERTICAL CONTROL: BM 12-04070, 1929 (NGVD 29) - 1985 ADJUSTMENT
HORIZONTAL CONTROL: GPS; PID AE 1704, EPOCH 1991.35

WORK ORDER NO. E70022□F

DRAWING NO. D-417

SHEET 76 OF 560 SHEETS

THE CITY OF LOS ANGELES OR ITS OFFICERS OR AGENTS SHALL NOT BE RESPONSIBLE FOR THE ACCURACY OR COMPLETENESS OF ELECTRONIC COPIES OF THIS PLAN SHEET.

C:\caddlib\pw\pwwestcoast\vespinosa\dms57684\C-002-D417.dwg 6/30/16 16:21

REVISION DATES DESIGN STAGE ONLY:

Sheet Version 3.0

ADDENDUM 5

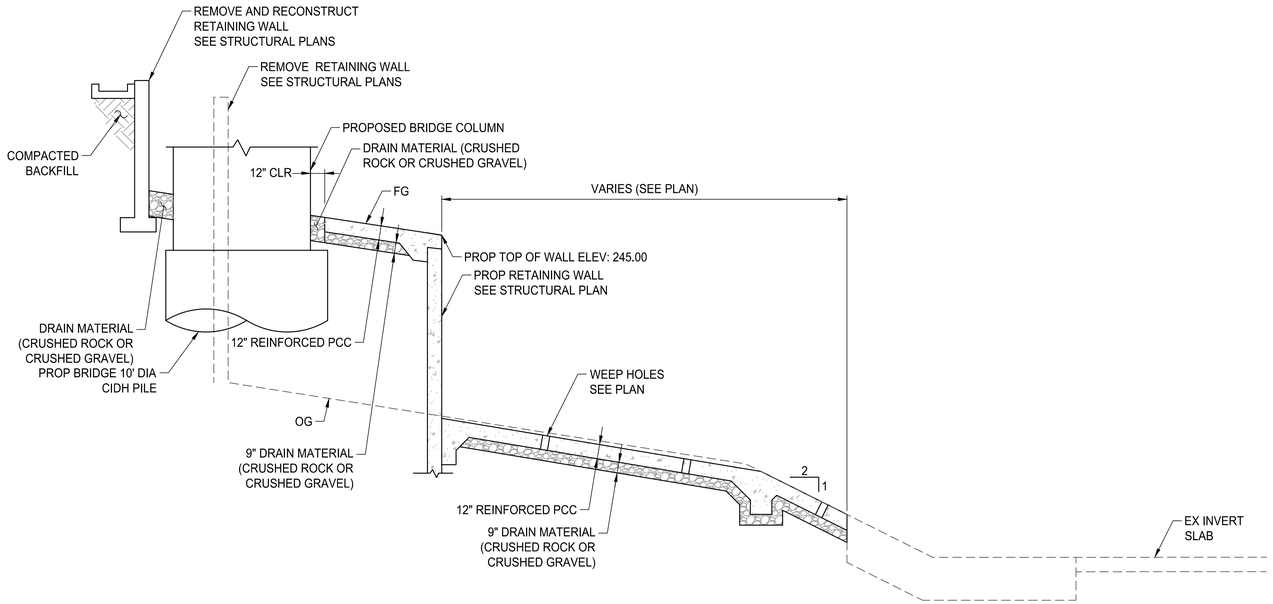

CROSS SECTION

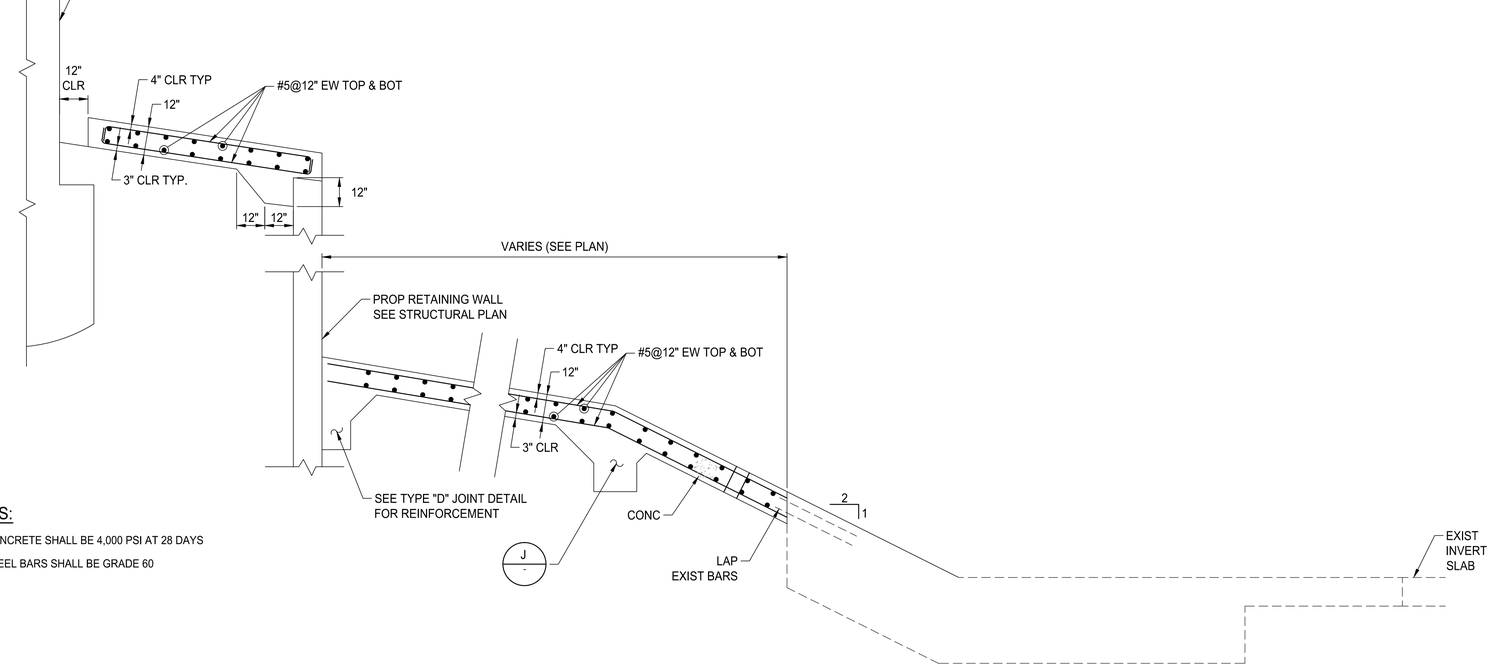

NOTES:

1. CONCRETE SHALL BE 4,000 PSI AT 28 DAYS
2. STEEL BARS SHALL BE GRADE 60

REINFORCEMENT DETAIL

SECTION F
NTS
D-411 D-412

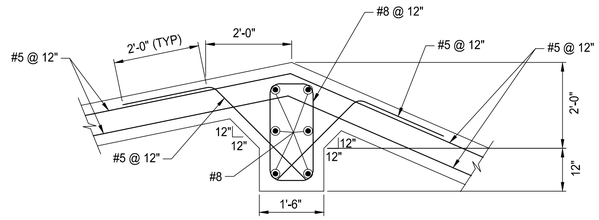

SECTION G
NTS
D-□12

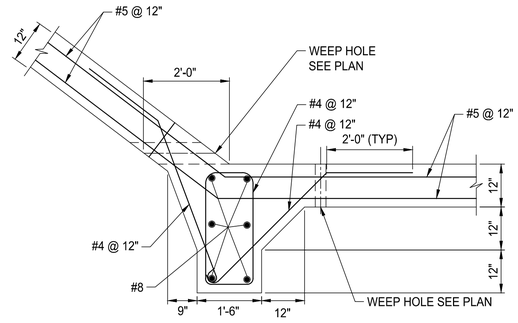

SECTION H
NTS
D-□12

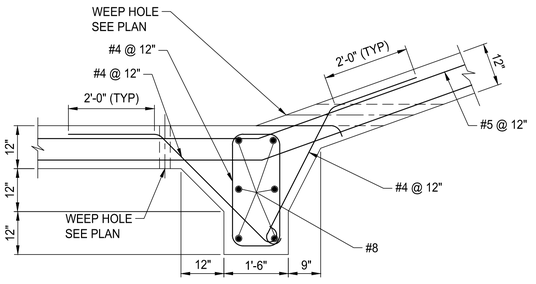

SECTION I
NTS
D-□12

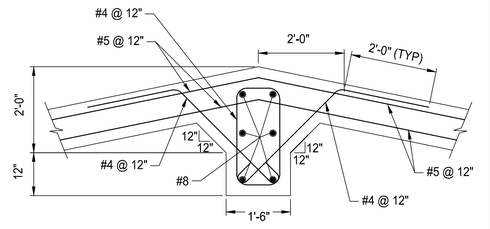

SECTION □
NTS
D-□12

BUREAU OF ENGINEERING
OFFICIAL RECORD

HNTB
HNTB Corporation
601 W. 5TH STREET SUITE 1000
LOS ANGELES, CALIFORNIA 90071
TEL (213) 403-1000 FAX (213) 403-1001

CITY OF LOS ANGELES DEPARTMENT OF PUBLIC WORKS
BUREAU OF ENGINEERING

ENGINEERING
CITY OF LOS ANGELES

NO.	REVISIONS:	DATE	BY:

STRUCTURE NO. 53C-2329

INDEX NO. P_38113

THIS PLAN WAS ELECTRONICALLY SIGNED AND STAMPED

PROFESSIONAL ENGINEER
KOUROSH SAMENI
No. C 45318
9/30/16
REGISTERED
STATE OF CALIFORNIA
CIVIL

GARY LEE MOORE, P.E.
CITY ENGINEER
DATE:
LIC. NO. 45318

DESIGN GROUP	
ENGINEER:	KOUROSH SAMENI
DESIGNED BY:	XAVIER ESPINOSA
DRAWN BY:	XAVIER ESPINOSA
CHECKED BY:	KOUROSH SAMENI
APPROVED BY:	TERENCE PAO

VERTICAL CONTROL:	BM 12-04070, 1929 (NGVD 29) - 1985 ADJUSTMENT
HORIZONTAL CONTROL:	GPS; PID AE 1704, EPOCH 1991.35
SHEET TITLE:	LA RIVER CHANNEL MODIFICATION CROSS SECTIONS & DETAILS No.3
PROJECT:	SIXTH STREET VIADUCT REPLACEMENT
ADDRESS:	SIXTH STREET VIADUCT (WHITTIER BLVD) LOS ANGELES, CA

WORK ORDER NO.
E70022□F

DRAWING NO.
D-418

SHEET 77 OF 560 SHEETS

REVISION DATES
DESIGN STAGE ONLY:

C:\caddlib\pw\pwwestcoast\vespinosa\dms57684\C-002-D418.dwg 6/30/16 16:23

THE CITY OF LOS ANGELES OR ITS OFFICERS OR AGENTS SHALL NOT BE RESPONSIBLE FOR THE ACCURACY OR COMPLETENESS OF ELECTRONIC COPIES OF THIS PLAN SHEET.

Sheet Version 3.0

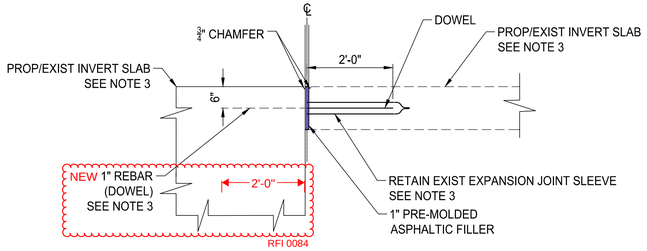

NOTES:
1. STEEL REINFORCEMENT OTHER THAN 1" REBAR NOT SHOWN.
2. RETAIN EX 1" REBARS (DOWELS) AND LAP WITH NEW INVERT SLAB REBARS. SUBMIT SHOP DRAWINGS FOR ENGINEER'S APPROVAL FOR REPLACEMENT OF DOWELS.
3. PLACE NEW 1" REBARS (DOWELS) WITH EXPANSION JOINT SLEEVE @ 12" OC WHERE BOTH INVERT SLABS ARE PROPOSED.

TYPE "A"

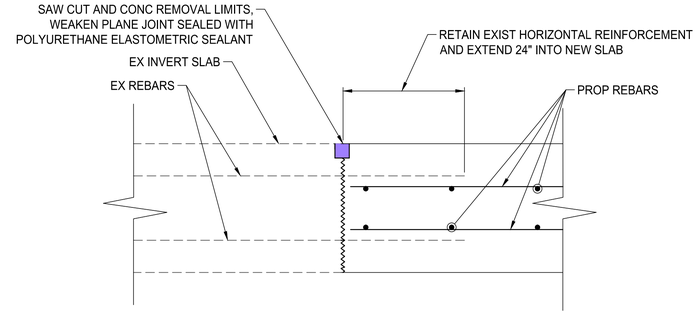

NOTE:
DURING EX CHANNEL INVERT SLAB REMOVAL:
- RETAIN EXIST REINF AND LAP WITH NEW INVERT SLAB REBARS AS SHOWN.
- ROUGHEN EX CONC SURFACE AND APPLY CONC BONDING EPOXY.
- FORM A ⅜" WIDE JOINT AND SEAL WITH ⅜" DEEP POLYURETHANE ELASTOMETRIC WATER-PROOF SEALANT.

TYPE "B"

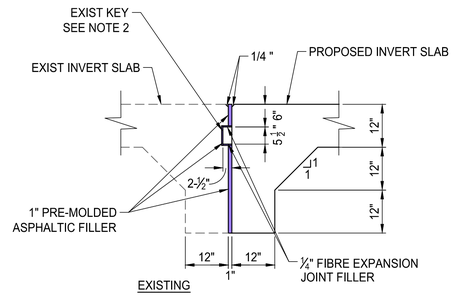

NOTES:
1. STEEL REINFORCEMENT NOT SHOWN.
2. SEE TYPICAL ELEVATION OF EXISTING TRANSVERSE JOINT, DETAIL HEREON

TYPE "C"

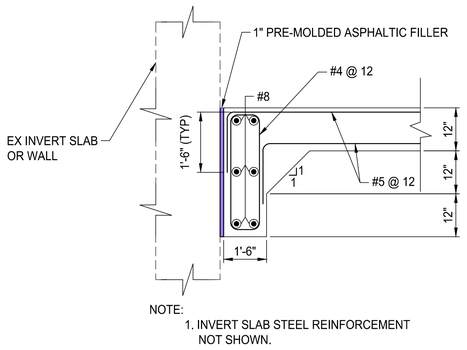

NOTE:
1. INVERT SLAB STEEL REINFORCEMENT NOT SHOWN.

TYPE "D"

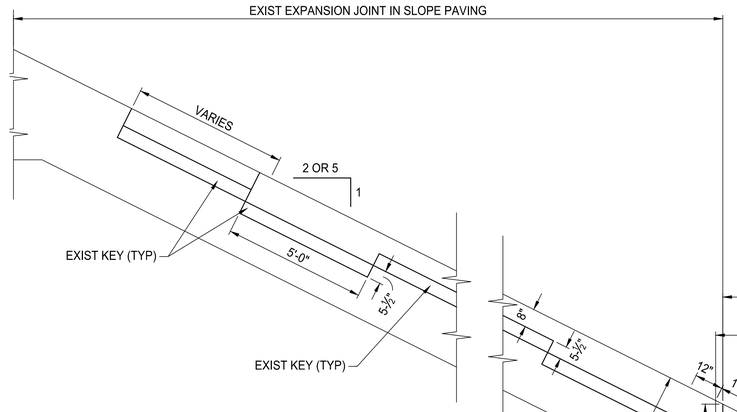

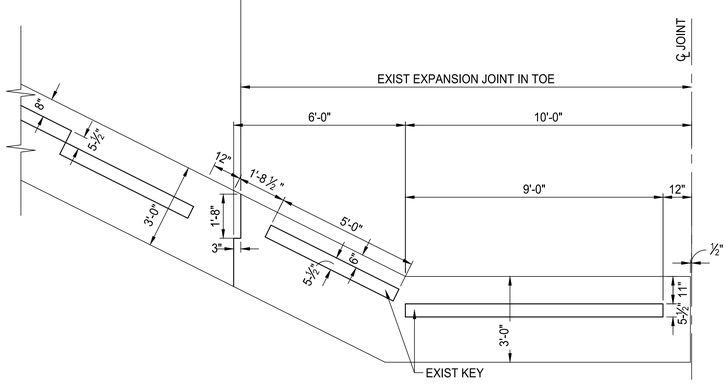

TYPICAL ELEVATION OF EXISTING TRANSVERSE JOINT

TYPICAL JOINT DETAILS

NTS

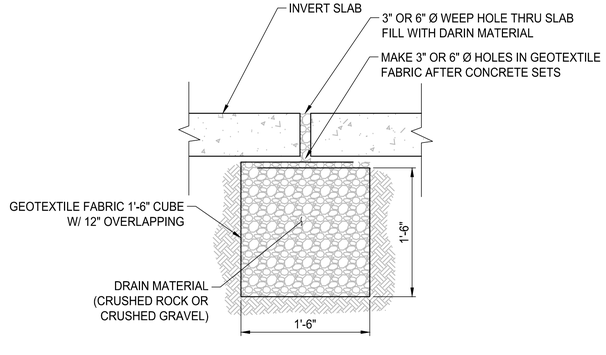

INVERT SLAB - WEEP HOLE DETAILS (TYP)

NTS

BUREAU OF ENGINEERING
OFFICIAL RECORD

HNTB
HNTB Corporation
601 W. 5TH STREET SUITE 1000
LOS ANGELES, CALIFORNIA 90071
TEL (213) 403-1000 FAX (213) 403-1001

WORK ORDER NO.
E70022□F
DRAWING NO.
D-419
SHEET 7□ OF 560 SHEETS

CITY OF LOS ANGELES DEPARTMENT OF PUBLIC WORKS
BUREAU OF ENGINEERING
ENGINEERING
CITY OF LOS ANGELES

NO.	REVISIONS:	DATE	BY:

STRUCTURE NO.
53C-2329
INDEX NO.
P_38113

THIS PLAN WAS ELECTRONICALLY SIGNED AND STAMPED

PROFESSIONAL ENGINEER
KOUROSH SAMENI
No. C 45318
REGISTERED
9/29/16
CIVIL
STATE OF CALIFORNIA

GARY LEE MOORE, P.E. CITY ENGINEER

DESIGN GROUP		LIC. NO.	45318
ENGINEER:	KOUROSH SAMENI	DATE:	
DESIGNED BY:	XAVIER ESPINOSA		
DRAWN BY:	XAVIER ESPINOSA		
CHECKED BY:	KOUROSH SAMENI		
APPROVED BY:	TERENCE PAO		

VERTICAL CONTROL: BM 12-04070,1929 (NGVD 29) - 1985 ADJUSTMENT
HORIZONTAL CONTROL: GPS; PID AE 1704, EPOCH 1991.35

SHEET TITLE: LA RIVER CHANNEL MODIFICATION
CROSS SECTIONS & DETAILS No.4

PROJECT: SIXTH STREET VIADUCT REPLACEMENT

ADDRESS: SIXTH STREET VIADUCT (WHITTIER BLVD)
LOS ANGELES, CA

THE CITY OF LOS ANGELES OR ITS OFFICERS OR AGENTS SHALL NOT BE RESPONSIBLE FOR THE ACCURACY OR COMPLETENESS OF ELECTRONIC COPIES OF THIS PLAN SHEET.

REVISION DATES:
DESIGN STAGE ONLY:

C:\caddlib\pw\pwwestcoast\vespinosa\dms57684\C-002-0419.dwg 6/30/16 16:26

Sheet Version 3.0

ADDENDUM 5

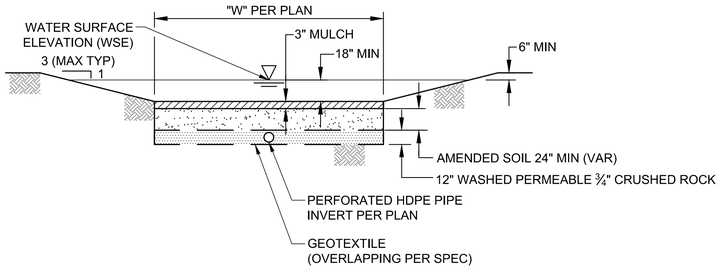

SECTION A
NTS

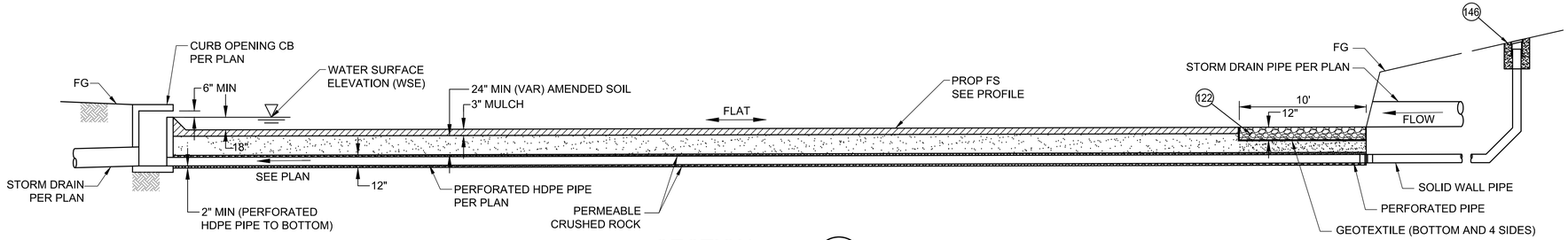

SECTION B
NTS

CONSTRUCTION SYMBOLS

- CONSTRUCT
- EXISTING
- REMOVE
- REMODEL EXISTING
- REMOVE & CONSTRUCT
- WORK BY OTHERS

CONSTRUCTION NOTES

79 REINFORCED CONCRETE PIPE □RCP□
99 SIDE OPENING CATCH BASIN PER S-□51-1
122 RIP RAP ENERGY DISSIPATER AND OUTFALL PROTECTION
12□ UNDERDRAIN PERFORATED PVC OR HDPE PIPE
1□6 TERMINAL CLEANOUT STRUCTURE PER S-16□-0
161 WATER □UALITY TREATMENT BMP BIORETENTION WITH UNDERDRAIN
~~162 PLANTING~~
RFI 0004

APPROVED FOR CONSTRUCTION
06-10-2016
METRO TRANSIT DIVISION
BUREAU OF ENGINEERING
CITY OF LOS ANGELES

City of Los Angeles Bureau of Engineering's review of these submittals, plans, specifications, and shop drawings shall not relieve HNTB, its consultants, and its contractors of the responsibility for errors, or omissions in the submitted documents. HNTB is responsible to insure and confirm that the City of Los Angeles Standards (Standards) are used to perform all work on or effecting City facilities. The Standards shall be the current edition in use upon the date City receives such submittal or per an effective date as specified in the agreement (if any).

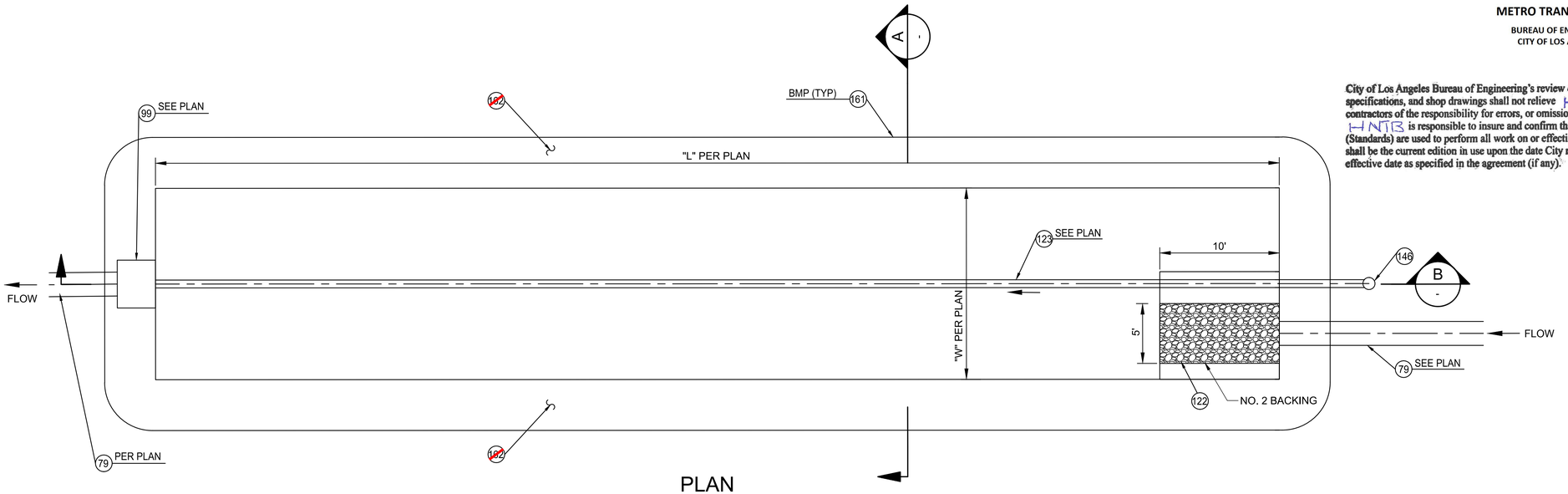

PLAN

1 TYPICAL DETAIL BIORETENTION WITH UNDERDRAIN BMP
NTS

D-□02, D-□05, D-□06, D-□07, D□0□, D-□09

BUREAU OF ENGINEERING OFFICIAL RECORD

HNTB
HNTB Corporation
601 W. 5TH STREET SUITE 1000
LOS ANGELES, CALIFORNIA 90071
TEL (213) 403-1000 FAX (213) 403-1001

BUREAU OF ENGINEERING
ENGINEERING
CITY OF LOS ANGELES

NO.	REVISIONS:	DATE:	BY:

STRUCTURE NO. 53C-2329
INDEX NO. P_38113

THIS PLAN WAS ELECTRONICALLY SIGNED AND STAMPED

REGISTERED PROFESSIONAL ENGINEER
KOUROSH SAMENI
No. C 45318
6/30/16
CIVIL
STATE OF CALIFORNIA

DEPARTMENT OF PUBLIC WORKS
CITY OF LOS ANGELES

GARY LEE MOORE, P.E. CITY ENGINEER

DESIGN GROUP	DATE
ENGINEER: KOUROSH SAMENI	LIC. NO. 45318
DESIGNED BY: XAVIER ESPINOSA	
DRAWN BY: MELISSA COOPER	
CHECKED BY: KOUROSH SAMENI	
APPROVED BY: TERENCE PAO	

VERTICAL CONTROL: BM 12-04070, 1929 (NGVD 29) - 1985 ADJUSTMENT
HORIZONTAL CONTROL: GPS; PID AE 1704, EPOCH 1991.35

SHEET TITLE: VIADUCT DRAINAGE DETAILS
PROJECT: SIXTH STREET VIADUCT REPLACEMENT
ADDRESS: SIXTH STREET VIADUCT (WHITTIER BLVD) LOS ANGELES, CA

WORK ORDER NO. E70022□F
DRAWING NO. D-431
SHEET 79 OF 560 SHEETS

REVISION DATES DESIGN STAGE ONLY:

C:\caddlib\pw\pwwestcoast\lyalkobusch\dms57684\C-002-D431.dwg 4/22/16 12:42

Sheet Version 3.0

THE CITY OF LOS ANGELES OR ITS OFFICERS OR AGENTS SHALL NOT BE RESPONSIBLE FOR THE ACCURACY OR COMPLETENESS OF ELECTRONIC COPIES OF THIS PLAN SHEET.

ADDENDUM 5

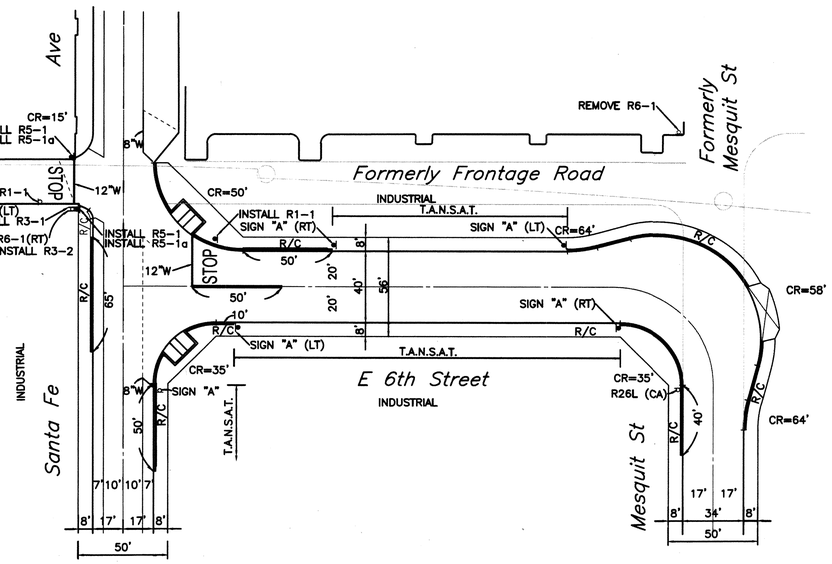

ONE WAY R6-1	DO NOT ENTER R5-1
STOP R1-1	WRONG WAY R5-1a
R3-1	R3-2
NO STOPPING ANY TIME SIGN "A"(LT)	NO STOPPING ANY TIME SIGN "A"(RT)

LEGEND

1. EXISTING STRIPING & MARKINGS TO REMAIN
   EXISTING STRIPING & MARKINGS TO BE REMOVED
   PROPOSED STRIPING & MARKINGS
2. EXISTING SIGNS
3. PROPOSED SIGNS
4. EXISTING SIGNS TO BE REMOVED
5. SIGNALIZED INTERSECTION
6. EXISTING RED CURB
   PROPOSED RED CURB
7. TANSAT TOW AWAY NO STOPPING ANY TIME

DELTA No.	DESCRIPTION OF REVISION	DATE	BY
1	REVISED PER LADOT REVIEW	4/7/2017	T.PAO

T.O. 5 - Change Order Serial Sketch No. 20 - page 1 of 7

SCALE: 1"=40'

6TH STREET VIADUCT REPLACEMENT PROJECT
MESQUIT ST RESTORATION STRIPING

GEO-201

REVIEWED March 15 2017
Transportation Engineer

ACCEPTED March 15 2017
Senior Transportation Engineer

INSTALLATION DATES
MARKOUT BEGAN:
MARKOUT COMPLETED:
STRIPING COMPLETED:
References: A-2580 FIELD CHECK
CONTRACT NO.

CITY OF LOS ANGELES
DEPARTMENT OF TRANSPORTATION
SELETA J. REYNOLDS, GENERAL MANAGER

E 6TH STREET
MESQUIT ST TO SANTA FE AVE

Thomas Guide	District	PROJECT NO.	DRAWING NO.	REV.	
634-4	CENTRAL	77176		0	8/8

REV	DATE	BY	APP	REG NO	EXPIRES	SEAL HOLDER	DESCRIPTION
0	3/14/2017	XE	TP	C 63433	09/30/18	TERENCE PAO	ISSUED FOR CONSTRUCTION

DESIGNED BY X. ESPINOSA
DRAWN BY X. ESPINOSA
CHECKED BY R. PUDIPEDOI
IN CHARGE TERENCE PAO
DATE 3/14/17

REGISTERED PROFESSIONAL ENGINEER TERENCE T. PAO No. C 63433 Expires 9-30-2018 CIVIL STATE OF CALIFORNIA

REGISTERED PROFESSIONAL ENGINEER RAVI S PUDIPEDDI No. 2658 Exp. 03/31/17 TRAFFIC STATE OF CALIFORNIA

SIXTH STREET VIADUCT REPLACEMENT

HNTB HNTB Corporation
One Bunker Hill Bldg.,
601 West 5th St., Ste 1000
Los Angeles, California 90071

V&A INC.
975 S. FAIR OAKS AVE
PASADENA, CA 91105
213.972.9700

CONSULTANT BUSINESS TAX REGISTRATION NUMBER : 0024996950-0001-2

1"=20' ORIGINAL MAP SCALE 1"=40'
20 10 0 20 40 60 80 100 FEET
40 20 0 40 80 120 160 200 FEET

SCALES
HORIZ. 1"=40'
VERT. 1"=NONE

SHEET 8 OF 8

INDEX NUMBER

FILENAME: C-002-GEO201.DWG

LEGEND

1. EXISTING STRIPING & MARKINGS TO REMAIN
2. PROPOSED STRIPING & MARKINGS
3. EXISTING STRIPING & MARKINGS TO BE REMOVED
4. EXISTING SIGNS
5. PROPOSED SIGNS
6. EXISTING SIGNS TO BE REMOVED
7. SIGNALIZED INTERSECTION
8. R/C EXISTING RED CURB
9. R/C PROPOSED RED CURB
10. R/C EXISTING RED CURB TO BE REMOVED
11. EXISTING CURB RAMP TO REMAIN
12. PROPOSED CURB RAMP
13. EXISTING CURB RAMP TO BE REMOVED
14. PROPOSED CONTINENTAL CROSSWALK
15. 6"X4' STRIPE @ 8' GAP

NOTES

1. LENGTH OF DESIGN: 6500' ±
2. PAINT REMOVAL REQUIRED.

RESTORATION STRIPING NOTES:

1. THE CONTRACTOR SHALL BE RESPONSIBLE FOR LABOR AND MATERIAL INVOLVED IN THE MARKOUT, AND INSTALLATION OF ALL RESTORATION STRIPING/PAVEMENT MARKINGS. THE CONTRACTOR SHALL ALSO BE RESPONSIBLE FOR REMOVAL OF ALL CONFLICTING DETOUR STRIPING, SIGNING, AND OTHER DETOUR-RELATED TRAFFIC CONTROL DEVICES PRIOR TO THE INSTALLATION OF THE FINAL STRIPING. IF THERE IS NO RESTORATION PLAN IN THIS PACKAGE, CONTRACTOR SHALL CONTACT LADOT GEOMETRIC DESIGN FOR THE LATEST STRIPING PLANS.
2. THE CONTRACTOR SHALL BE RESPONSIBLE FOR THE REPAINTING OF ALL EXISTING STRIPING THAT HAS BEEN DAMAGED DURING THE CONSTRUCTION PROCESS.
3. MARKOUT SHALL BE BY HEAVY PAINT BRUSH MARKINGS OVER A PULLED ROPE IN THE RESPECTIVE WHITE AND YELLOW COLORS OF THE PROPOSED STRIPING. STRIPING AND PAVEMENT MARKINGS SHALL BE IN HOT APPLIED ALKYD THERMOPLASTIC IN ACCORDANCE WITH LADOT SPECIFICATION NOS. 51-005-10 AND 76-012-16. PRIMER AND SEALERS ARE REQUIRED AND SHALL CONFORM TO LADOT SPECIFICATION NO. 76-012-16.
4. THE CONTRACTOR SHALL CONTACT LADOT BRIDGE PROGRAM SECTION AT (213) 972-8491 AT LEAST 10 WORKING DAYS BEFORE BEGINNING MARKOUT. THE CONTRACTOR SHALL CORRECT ALL ERRORS IN MARKOUT REQUESTED BY LADOT. THE INSTALLATION OF THERMOPLASTIC STRIPING MAY PROCEED ONLY AFTER APPROVAL OF MARKOUT BY THE LADOT DISTRICT ENGINEER.
5. TEMPORARY REFLECTIVE RAISED PAVEMENT MARKERS SHALL BE MAINTAINED ADJACENT TO ANY TEMPORARY CENTERLINE, MARKOUT CENTERLINE OR SCAR OF A SANDBLASTED CENTERLINE, AS APPLICABLE, AS PER LADOT STANDARD PLAN NO. S-453.0.

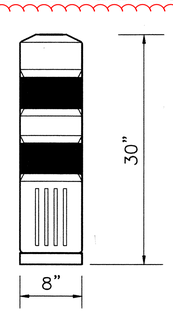

K-71 YELLOW FLEXIBLE POST
NOT TO SCALE
FOR ADDITIONAL INFORMATION
CONTACT SMART STREET SOLUTIONS/3S
4701 FIORE BELLA BLVD
LAS VEGAS, NV 89135
(866) 880-4880

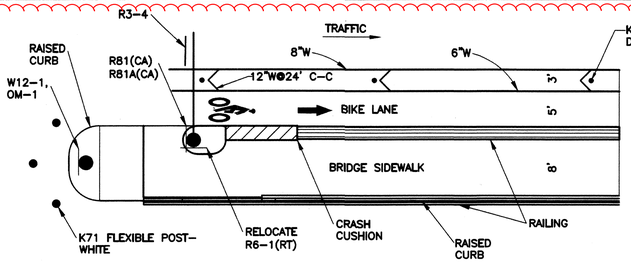

DETAIL "A"
NOT TO SCALE

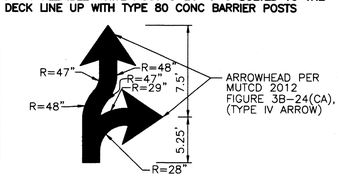

DETAIL "B"
NOT TO SCALE

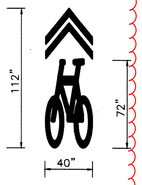

DETAIL "C"
NOT TO SCALE

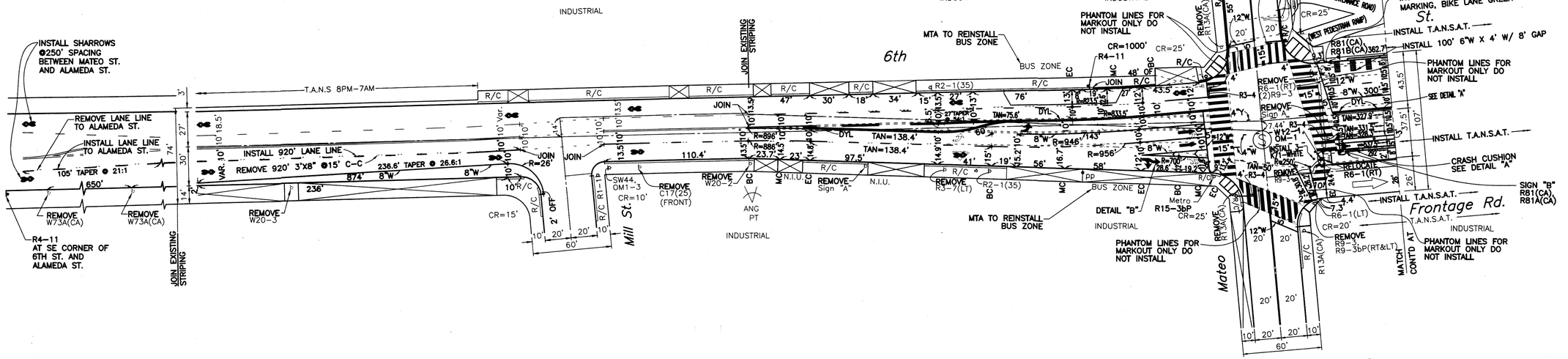

SCALE: 1"=40'

DELTA No.	DESCRIPTION OF REVISION	DATE	BY
1	REVISED PER LADOT REVIEW	4/7/2017	T.PAO

T.O. 5 - Change Order Serial Sketch No. 20 - page 2 of 7

6TH STREET VIADUCT REPLACEMENT PROJECT
RESTORATION SIGNING & STRIPING

GEO-401

REVIEWED March 15 2017
Transportation Engineer

ACCEPTED March 15 2017
Senior Transportation Engineer

INSTALLATION DATES
MARKOUT BEGAN:
MARKOUT COMPLETED:
STRIPING COMPLETED:
References: A-6892 FIELD CHECK
CONTRACT NO.

CITY OF LOS ANGELES
DEPARTMENT OF TRANSPORTATION
SELETA J. REYNOLDS, GENERAL MANAGER

6TH STREET/WHITTIER BLVD.
MATEO ST. TO BOYLE AVE.

Thomas Guide	District
634-H5,6	CENTRAL

PROJECT NO.	DRAWING NO.	REV.	
77176	A-6505	0	1/4

REV	DATE	BY	APP	REG NO	EXPIRES	SEAL HOLDER	DESCRIPTION
0	03/14/17	RM	NB	CA 65608	09/30/17	NOAH BUSCH	ISSUED FOR CONSTRUCTION

DESIGNED BY R. SHIMIZU
DRAWN BY R. SHIMIZU
CHECKED BY R. MORENO
IN CHARGE N. BUSCH
DATE 03/14/2017

REGISTERED PROFESSIONAL ENGINEER — NOAH L. BUSCH — No. 65608 — Exp. 09/30/17 — CIVIL — STATE OF CALIFORNIA

REGISTERED PROFESSIONAL ENGINEER — RAVI S. PUDIPEDDI — No. 72558 — Exp. 03/31/17 — TRAFFIC — STATE OF CALIFORNIA

6th STREET VIADUCT SEISMIC IMPROVEMENT

HNTB Corporation
One Bunker Hill Bldg.,
601 West 5th St., Ste 1000
Los Angeles, California 90071

V&A INC.
975 S. FAIR OAKS AVE.
PASADENA, CA 91105
213.972.9700

CONSULTANT BUSINESS TAX REGISTRATION NUMBER : 0002496950-0001-2

ORIGINAL MAP SCALE 1"=20' 1"=40'

20 10 0 20 40 60 80 100 FEET
40 20 0 40 80 120 160 200 FEET

SCALES
HORIZ. 1"=40'
VERT. 1"=NONE

SHEET 1 OF 4

INDEX NUMBER

Drawing File: C:\caddlib\pw\pwwestcoast\ramoreno\dms64847\58942-S-TR-GEO-401.dwg
Sheet Name: VAA / Printed: Mon 13-Mar-2017 - 04:40PM / Last Saved By: rshimizu / Plotted By: rshimizu

FILENAME: 58942-S-TR-GEO-401.DWG

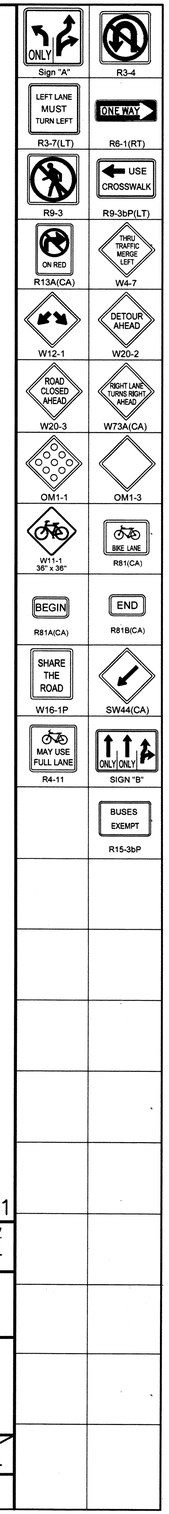

ADDENDUM 5

LEGEND

15. - - - - 6'X4' STRIPE @ 8' GAP

Corrected sign call out per RFI 624

Per RFI 645 Add Sign R2-1(35) <35 MPH speed sign>

Apex 8" Yellow Reflective Pavement Markers at 10' o.c. per CO 182

End Apex 8" Yellow Reflective Pavement Markers at 10' o.c. per CO 182

Change in bike lane protection per TO 5 CO 137.

T.O. 5 - Change Order Serial Sketch No. 20 - page 3 of 7

LEGEND

1. PROPOSED STRIPING & MARKINGS
2. EXISTING SIGNS
3. PROPOSED SIGNS
4. SIGNALIZED INTERSECTION
5. EXISTING RED CURB
6. PROPOSED RED CURB
7. K-71 FLEXIBLE POST

DETAIL "D"
NOT TO SCALE

FOR ADDITIONAL INFORMATION ON STAR CURB
CONTACT US REFLECTOR
610 N. MOUNTAIN RD
NEWINGTON, CT 06111
TEL: 860-289-8033
FAX: 860-289-8035

C O 137 Serial Sketch No 137R21

DETAIL "E"
K-71 YELLOW FLEXIBLE POST
NOT TO SCALE

DELTA No.	DESCRIPTION OF REVISION	DATE	BY
1	REVISED PER LADOT REVIEW	4/7/2017	T.PAO

SCALE: 1"=40'

6TH STREET VIADUCT REPLACEMENT PROJECT
RESTORATION SIGNING & STRIPING

GEO-402

REVIEWED MARCH 15 20 17
Transportation Engineer

ACCEPTED MARCH 15 20 17
Senior Transportation Engineer

INSTALLATION DATES

MARKOUT BEGAN:

MARKOUT COMPLETED:

STRIPING COMPLETED:

References:
A-3866
FIELD CHECK

CONTRACT NO.

CITY OF LOS ANGELES
DEPARTMENT OF TRANSPORTATION
SELETA J. REYNOLDS, GENERAL MANAGER

6TH STREET / WHITTIER BL
MATEO STREET TO BOYLE AVE

Thomas Guide	District	PROJECT NO.	DRAWING NO.	REV.	SHEET
634-4	CENTRAL	77176	A-6505	0	2 / 4

REV	DATE	BY	APP	REG NO	EXPIRES	SEAL HOLDER	DESCRIPTION
0	3/14/17	XE	TP	C 63433	9/30/18	TERENCE PAO	ISSUED FOR CONSTRUCTION

DESIGNED BY X. ESPINOSA
DRAWN BY X. ESPINOSA
CHECKED BY T. PAO
IN CHARGE T. PAO
DATE 3/14/17

REGISTERED PROFESSIONAL ENGINEER TERENCE T. PAO No. C 63433 Exp. 9-30-2018 CIVIL STATE OF CALIFORNIA

REGISTERED PROFESSIONAL ENGINEER RAVI S PUDIPEDDI No. 2858 Exp. 03/31/17 TRAFFIC STATE OF CALIFORNIA

SIXTH STREET VIADUCT REPLACEMENT

HNTB Corporation
One Bunker Hill Bldg.,
601 West 5th St., Ste 1000
Los Angeles, California 90071

V&A INC.
975 S. FAIR OAKS AVE
PASADENA, CA 91105
213.972.9700

CONSULTANT BUSINESS TAX REGISTRATION NUMBER : 0024996950-0001-2

ORIGINAL MAP SCALE 1"=20' 1"=40'

SCALES HORIZ. 1"=40' VERT. 1"=NONE

SHEET OF INDEX NUMBER

FILENAME: C-002-GEO402-GEO403.DWG

Drawing File: C:\caddlib\pw\pwwestcoast\xespinosa\dms57684\C-002-GEO402-GEO403.dwg
Sheet Name: GEO402 / Updated: Mar 14, 2017 - 9:10am / Last Saved By: xespinosa / Plotted By: xespinosa

ADDENDUM 5

LEGEND

15. - - - - 6'X4' STRIPE @ 8' GAP

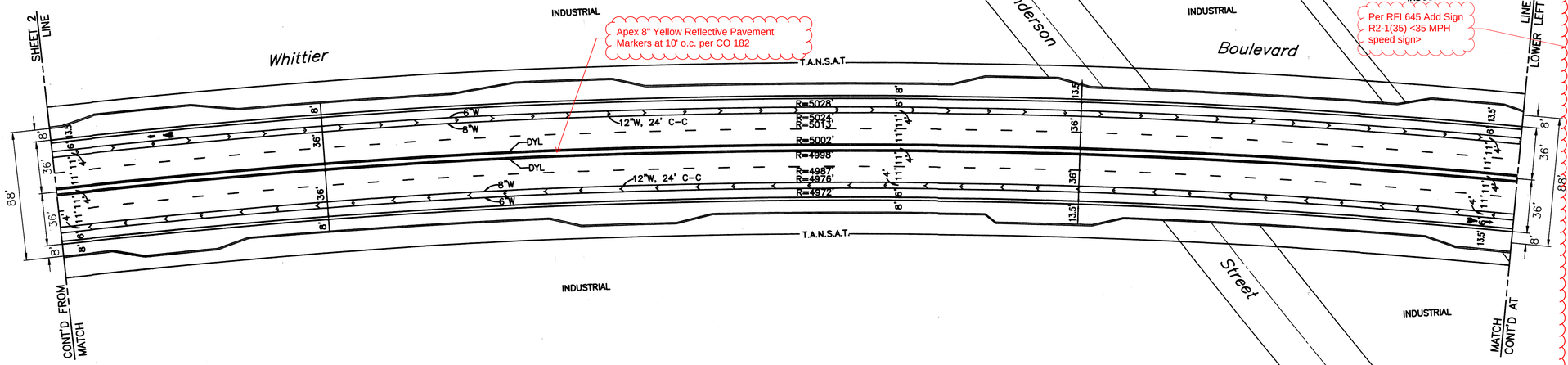

Per RFI 599

0" Curb
~~8" CURB~~

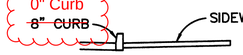

SECTION "A–A"
NOT TO SCALE

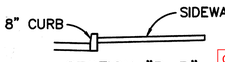

SECTION "B–B"
NOT TO SCALE

Omit steel curb per RFI 583

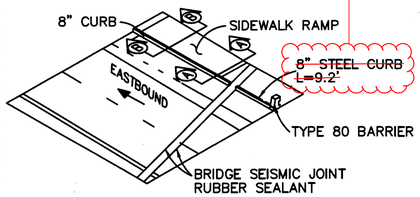

DETAIL "F"
NOT TO SCALE

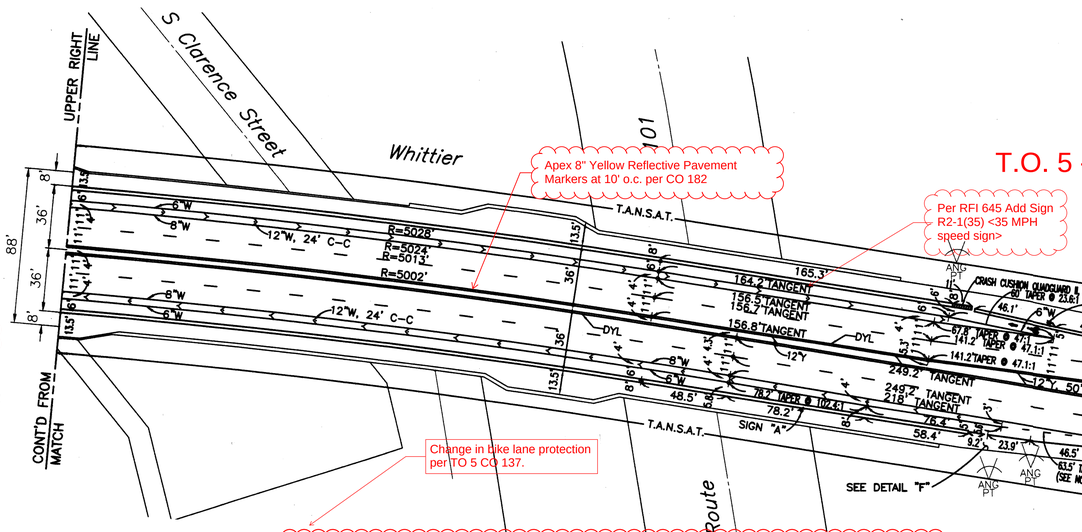

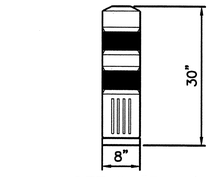

DETAIL "E"
K–71 YELLOW FLEXIBLE POST
NOT TO SCALE

LEGEND

1. EXISTING STRIPING & MARKINGS TO REMAIN
   EXISTING STRIPING & MARKINGS TO BE REMOVED
   PROPOSED STRIPING & MARKINGS
2. P EXISTING SIGNS
3. PROPOSED SIGNS
4. (S) SIGNALIZED INTERSECTION
5. R/C EXISTING RED CURB
   R/C PROPOSED RED CURB
6. K–71 FLEXIBLE POST

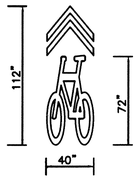

DETAIL "C"
NOT TO SCALE

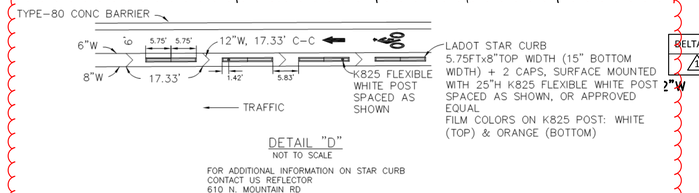

LADOT STAR CURB
5.75FTx8"TOP WIDTH (15" BOTTOM WIDTH) + 2 CAPS, SURFACE MOUNTED WITH 25"H K825 FLEXIBLE WHITE POST SPACED AS SHOWN, OR APPROVED EQUAL
FILM COLORS ON K825 POST: WHITE (TOP) & ORANGE (BOTTOM)

DETAIL "D"
NOT TO SCALE

FOR ADDITIONAL INFORMATION ON STAR CURB
CONTACT US REFLECTOR
610 N. MOUNTAIN RD
NEWINGTON, CT 06111
TEL: 860-289-8033
FAX: 860-289-8035

C O 137 Serial Sketch No 137R21

SIGN Y PER LADOT S-418.5

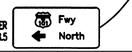

DELTA No.	DESCRIPTION OF REVISION	DATE	BY
1	REVISED PER LADOT REVIEW	4/7/2017	T.PAO



SCALE: 1"=40'

T.O. 5 - Change Order Serial Sketch No. 20 - page 4 of 7

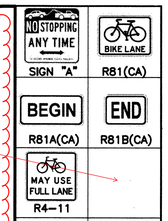

6TH STREET VIADUCT REPLACEMENT PROJECT
RESTORATION SIGNING & STRIPING

GEO–403

REVIEWED March 15 2017
Transportation Engineer

ACCEPTED MARCH 15 2017
Senior Transportation Engineer

INSTALLATION DATES
MARKOUT BEGAN:
MARKOUT COMPLETED:
STRIPING COMPLETED:
References: A–3866 FIELD CHECK
CONTRACT NO.

CITY OF LOS ANGELES
DEPARTMENT OF TRANSPORTATION
SELETA J. REYNOLDS, GENERAL MANAGER

6TH STREET / WHITTIER BL
MATEO STREET TO BOYLE AVE

Thomas Guide	District	PROJECT NO.	DRAWING NO.	REV.	
634–4	CENTRAL	77176	A–6505	0	3/4

REV	DATE	BY	APP	REG NO	EXPIRES	SEAL HOLDER	DESCRIPTION
0	3/14/17	XE	TP	C 63433	9/30/18	TERENCE PAO	ISSUED FOR CONSTRUCTION

DESIGNED BY X. ESPINOSA
DRAWN BY X. ESPINOSA
CHECKED BY T. PAO
IN CHARGE T. PAO
DATE 3/14/17

REGISTERED PROFESSIONAL ENGINEER TERENCE T. PAO No. C 63433 Exp. 9-30-2018 CIVIL STATE OF CALIFORNIA

REGISTERED PROFESSIONAL ENGINEER RAVI S PUDIPEDDI No. 2858 Exp. 03/31/17 TRAFFIC STATE OF CALIFORNIA

SIXTH STREET VIADUCT REPLACEMENT

HNTB Corporation
One Bunker Hill Bldg.,
601 West 5th St., Ste 1000
Los Angeles, California 90071

V&A INC.
975 S. FAIR OAKS AVE
PASADENA, CA 91105
213.972.9700

CONSULTANT BUSINESS TAX REGISTRATION NUMBER : 0024996950–0001–2

ORIGINAL MAP SCALE 1"=20' 1"=40'
20 10 0 20 40 60 80 100 FEET
40 20 0 40 80 120 160 200 FEET

SCALES
HORIZ. 1"=40'
VERT. 1"=NONE

SHEET OF INDEX NUMBER

FILENAME: C–002–GE0402–GE0403.DWG

Drawing File: C:\caddlib\pw\pwwestcoast\xespinosa\dms57684\C–002–GE0402–GE0403.dwg
Sheet Name: GE0403 / Updated: Mar 14, 2017 – 9:07am / Last Saved By: xespinosa / Plotted By: xespinosa

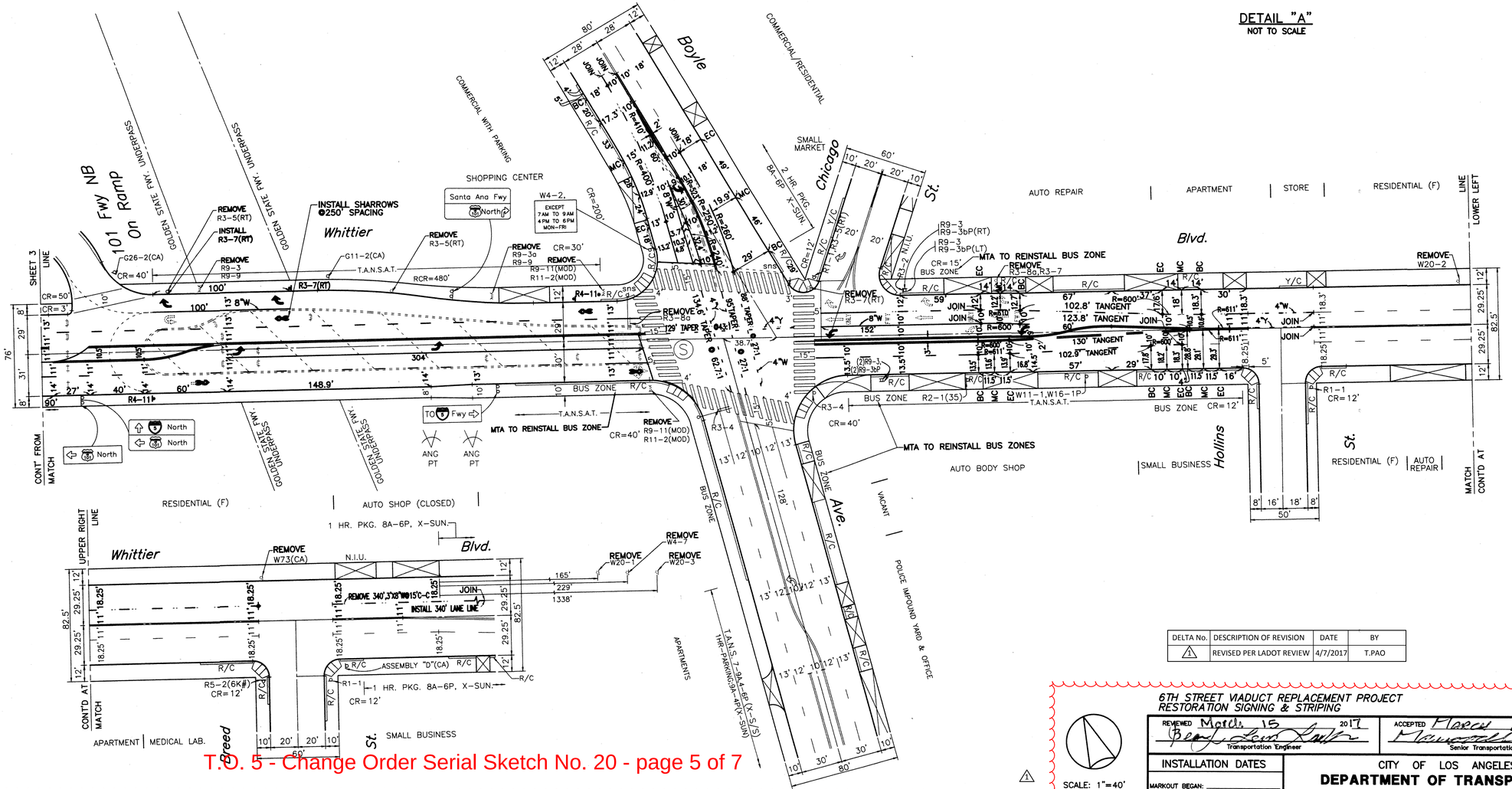

DELTA No.	DESCRIPTION OF REVISION	DATE	BY
1	REVISED PER LADOT REVIEW	4/7/2017	T.PAO

SCALE: 1"=40'

6TH STREET VIADUCT REPLACEMENT PROJECT
RESTORATION SIGNING & STRIPING

GEO-404

REVIEWED March 15 2017
Transportation Engineer

ACCEPTED March 15 2017
Senior Transportation Engineer

INSTALLATION DATES

MARKOUT BEGAN:

MARKOUT COMPLETED:

STRIPING COMPLETED:

References:
A-5666
FIELD CHECK

CONTRACT NO.

CITY OF LOS ANGELES
DEPARTMENT OF TRANSPORTATION
SELETA J. REYNOLDS, GENERAL MANAGER

6TH STREET/WHITTIER BLVD.
MATEO ST. TO BOYLE AVE.

Thomas Guide	District	PROJECT NO.	DRAWING NO.	REV.	
635-A6	CENTRAL	77176	A-6505	0	4/4

REV	DATE	BY	APP	REG NO	EXPIRES	SEAL HOLDER	DESCRIPTION
0	03/14/17	RM	NB	CA 65608	09/30/17	NOAH BUSCH	ISSUED FOR CONSTRUCTION

DESIGNED BY R. SHIMIZU
DRAWN BY R. SHIMIZU
CHECKED BY R. MORENO
IN CHARGE N. BUSCH
DATE 03/14/2017

REGISTERED PROFESSIONAL ENGINEER — NOAH L. BUSCH — No. CA 65608 — Exp. 09/30/17 — CIVIL — STATE OF CALIFORNIA

REGISTERED PROFESSIONAL ENGINEER — RAWLS PUDIPEDDI — No. 2805 — Exp. 03/31/17 — TRAFFIC — STATE OF CALIFORNIA

6th STREET VIADUCT SEISMIC IMPROVEMENT

HNTB Corporation
One Bunker Hill Bldg.,
601 West 5th St., Ste 1000
Los Angeles, California 90071

V&A INC.
975 S. FAIR OAKS AVE.
PASADENA, CA 91105
213.972.9700

CONSULTANT BUSINESS TAX REGISTRATION NUMBER : 0002496950-0001-2

ORIGINAL MAP SCALE 1"=20' (20 10 0 20 40 60 80 100 FEET) 1"=40' (40 20 0 40 80 120 160 200 FEET)

SCALES HORIZ. 1"=40' VERT. 1"=NONE

SHEET 2 OF 4

INDEX NUMBER

FILENAME: 58942-S-TR-GEO-404.DWG

T.O. 5 - Change Order Serial Sketch No. 20 - page 5 of 7

Drawing File: C:\caddlib\pw\pwwestcoast\ramoreno\dms64847\58942-S-TR-GEO-404.dwg
Sheet Name: VAA / Printed: Mon 13-Mar-2017 - 05:37PM / Last Saved By: rbecerra / Plotted By: rshimizu

ADDENDUM 5

SIGNAL STANDARD SCHEDULE

	No.	TYPE	FOUND. TYPE	PED. PUSH BUT'N TYPE	PHASE	REMARKS
	⊗ (1)	332 CAB.	F-332*			ATSAC 2070 CONTROLLER IN 332 CAB
*	⊗ (2)	CD954	F-2	APS(6P)		
***	⊗ (3)	CD953C	BSL	APS(4P)	4	INSTALL APS
**	⊗ (4)	17-3-100	CIDH	APS(4P)	4	INSTALL APS; 20' M.A.
***	⊗ (5)	CD953C	BSL	APS(2P)		INSTALL APS
**	⊗ (6)	17-3-100	CIDH	APS(2P)		INSTALL APS
***	⊗ (7)	CD953C	BSL	APS(8P)	8	INSTALL APS
**	⊗ (8)	19-4-100	CIDH	APS(8P)	8	CUSTOM 20' M.A.; W/ TWIN 6' LA.; INSTALL APS
*	⊗ (9)	1	F-1	APS(8P)	8	INSTALL APS
*	⊗ (10)	7	F-7	APS(6P)		
*	⊗ (11)	1	F-1			

* Existing

** PER LADOT STD. DWG. NO. S-52.1.6

*** FOR REFERENCE ONLY, SEE STREET LIGHTING SHEET.

(APS) ACCESSIBLE PEDESTRIAN SIGNAL

ESTIMATED MATERIAL FURNISHED BY LADOT

UNITS	MATERIAL

ESTIMATED SALVAGE MATERIAL TO BE RETURNED TO LADOT

UNITS	MATERIAL
ALL	REMOVED LED HEADS
ALL	REMOVED APS UNITS
1	2070 CONTROLLER

CONDUCTOR SCHEDULE

SIZE No.	CABLE / WIRE	RUN
MULTI	5 CONDUCTOR CABLE 5 X #14	3 3 2 3 1 4 5 4
	9 CONDUCTOR CABLE 8 X #14 & 1 X #10(COM)	
	13 CONDUCTOR CABLE 12 X #14 & 1 X #10(COM)	1
	28 CONDUCTOR CABLE 27 X #14 & 1 X #10(COM)	1 1 1 1 1 1 1
	5 CONDUCTOR CABLE (APS) 5 X #14	2 2 2 2 2 2 1 1 1 1 1
6	SERVICE	3 3 3 3
14	PED PUSH BUTTON	2 2 2 2 2 2 2 2
12	BUS DLC (1 PAIR)	1
18	DLC (2 PAIR)	1 1 1 2 2 1 1 3 4
18	DLC (3 PAIR)	
18	DLC (4 PAIR)	
14	INTERCONNECT (7 WIRE)	
22	INTERCONNECT (12 PAIR)	1 1 1 1 1
	V.F. (1-24SM)	
	V.F. (1-4SM)	
	CCTV CAMERA CABLE	
	CONDUIT SIZE	2" 2" 2" 3" 2" 3" 2" 3" * 2" 3" 2" 2" 3" 2" 2" 3" 2" 2" 3" 2" 1" 1" 3" 3" 3" 3"

* - EXISTING CONDUIT. THE CONTRACTOR SHALL ADD/INSTALL NEW CONDUCTORS/CABLES IN EXISTING CONDUIT AS DESIGNATED IN THE CONDUCTOR SCHEDULE. IF THE EXISTING CONDUIT IS IN POOR CONDITION OR THE CONDUIT CAPACITY EXCEEDS THIRTY-ONE PERCENT (>31%) THE CONTRACTOR SHALL PROVIDE A NEW CONDUIT TO ACCOMMODATE ALL CABLES AND CONDUCTORS. ALL OTHER EXISTING CONDUCTORS/CABLES SHALL BE PROTECTED AND MAINTAINED IN EXISTING CONDUIT.

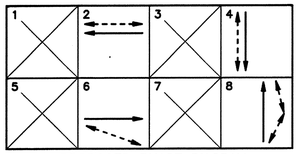

PROPOSED PHASE DIAGRAM

NOTES:

1. SEMI-ACTUATED OPERATION WITH TRANSIT PRIORITY (ATSAC 2070 CONTROLLER IN 332 CABINET)

   ø2 - 6th ST. WB & N/S PED. XING
   ø4 - MATEO ST. SB & W/S PED. XING
   ø6 - 6th ST. EB & S/S PED. XING
   ø8 - MATEO ST. NB & E/S PED. XING

   CENTRAL CITY EAST ATSAC SYSTEM - STAGE 1
   DIRECT WIRE (CABLE) INTERCONNECT

2. REMOVE TRAFFIC SIGNAL EQUIPMENT, FOUNDATION AND PULL BOX. ABANDON CONDUITS.

3. INSTALL ATSAC 2070 CONTROLLER IN 332 CABINET. THE CONTRACTOR SHALL PROVIDE A COMPLETE FUNCTIONING CONTROLLER ASSEMBLY AND CABINET CONFORMING TO THE LATEST LADOT SPECIFICATION FOR 2070 CONTROLLER AND 332 CABINET, AND SHALL INCLUDE ALL NECESSARY AUXILIARY EQUIPMENT TO PROVIDE A COMPLETE FUNCTIONING CONTROLLER. . CONTRACTOR TO DELIVERY COMPLETELY ASSEMBLED CONTROLLER FOR TESTING TO THE DEPARTMENT OF TRANSPORTATION GENERAL SHOP, PIPER TECHNICAL CENTER, 555 RAMIREZ STREET THIRTY (30) DAYS PRIOR TO INSTALLATION. CONTRACTOR TO PICK UP AND INSTALL CONTROLLER ASSEMBLY ON EXISTING F-332 FOUNDATION.

4. INSTALL DETECTOR LOOP(S) PER LADOT STD. DWG. NO. S-70.1A. & S-70.1D (CASE II). CONTRACTOR SHALL OBTAIN APPROVAL FROM LADOT INSPECTOR PRIOR TO INSTALLATION OF ANY LOOPS.

5. JOIN AND EXTEND CONDUIT(S) INTO PULL BOX.

6. ABANDON AND DISCONNECT DETECTOR LOOP(S) IN PULLBOX AS SHOWN.

7. CONTRACTOR SHALL RE-USE EXISTING STUB-OUT. IF STUB-OUT IS NOT IN PLACE, CONTRACTOR SHALL INSTALL NEW STUB-OUT PER LADOT STD. DWG. S-70.1A.

8. FURNISH AND INSTALL ACCESSIBLE PEDESTRIAN SIGNALS (APS) PER LADOT STD. DWG NO. S-73.3. CONTACT LADOT SIGNAL SHOP AT (213) 473-8468 PRIOR TO EQUIPMENT PURCHASE FOR APS SPECIFICATIONS.

9. INSTALL LARGE STREET NAME SIGN (SNS) ON MAST ARM PER LADOT STD. DWG. NOS. S-457.0 AND S-486.0. IF LARGE SNS IS INSTALLED ON SIGNAL POLE STANDARD, USE SIGNFIX CHANNELING. MOUNT WITH UNIVERSAL CLAMP SXQ220. IF LARGE SNS IS INSTALLED ON TYPE 1 OR 1A POLE, USE LADOT SADDLE BRACKET AND GUIDE. COORDINATE WITH MCTM CONSTRUCTION ENGINEER.

10. INSTALL PREFORMED DETECTOR LOOP(S) PER LADOT STD. DWG. NO. S-70.1E. CONTRACTOR SHALL OBTAIN APPROVAL FROM LADOT INSPECTOR PRIOR TO INSTALLATION OF ANY LOOPS.

11. CONTRACTOR SHALL DISCONNECT THE 12-PAIR INTERCONNECT IN THE EXISTING CONTROLLER CABINET (SEE LADOT SPECIAL PROVISIONS, SECTION 5 TITLED "NOTIFICATION", FOR INFORMATION REGARDING WORK AFFECTING MAJOR ATSAC COMMUNICATION FACILITIES). CONTRACTOR MAY REROUTE EXISTING CABLE TO THE PROPOSED CONDUIT ON THIS PLAN BY USING THE COILED SLACK IN THE CONTROLLER CABINET/COMMUNICATION CABINET AND INTERMEDIATE PULL BOXES. IN THE EVENT THAT THE SLACK IN THE CABLE IS NOT SUFFICIENT TO ACCOMPLISH THE PROPOSED INSTALLATION AS SHOWN ON THIS PLAN, THE CONTRACTOR SHALL BE REQUIRED TO INSTALL A NEW 12-PAIR INTERCONNECT FROM THE CONTROLLER CABINET/COMMUNICATION CABINET AT THIS INTERSECTION TO THE CONTROLLER AT: 6th ST. AND ALAMEDA ST. (APPROX. 1800').

12. REMOVE CONTROLLER AND CABINET. RETAIN FOUNDATION.

13. INSTALL TRANSIT PRIORITY LOOP(S) PER LADOT STD. DWG. NO. S-70.1F. CONTRACTOR SHALL OBTAIN APPROVAL FROM LADOT INSPECTOR PRIOR TO INSTALLATION OF ANY LOOPS.

14. INSTALL TRANSIT PRIORITY SENSOR UNITS AND COMMUNICATION CHANNEL CARDS IN CABINET.

15. PROTECT EXISTING DETECTOR LOOP(S).

16. INSTALL STANDARD 4' BEHIND CURB FACE.

17. CONTRACTOR MAY RE-USE THE EXISTING DLC IN THE PULLBOX AS DETERMINED BY THE TRAFFIC SIGNAL INSPECTOR. SHOULD THE CONTRACTOR DAMAGE THE EXISTING CABLE, NEW DLC CABLE SHALL BE INSTALLED FROM THE PULLBOX TO THE CONTROLLER AT THE CONTRACTOR'S EXPENSE.

18. MOUNT PUSHBUTTON AT 3' HEIGHT FROM TOP OF CURB.

19. THE CONTRACTOR SHALL BE RESPONSIBLE FOR LABOR AND MATERIAL INVOLVED IN THE REMOVAL, MARKOUT AND INSTALLATION OF ALL SIGNS, STRIPING AND PAVEMENT MARKINGS PER LADOT GEOMETRIC PLAN A-6505, GEO-401.

20. TRAFFIC CONSULTANT SHALL BE RESPONSIBLE FOR IDENTIFYING AND RESOLVING SUBSTRUCTURE CONFLICT WITH PROPOSED FOUNDATIONS DURING THE DESIGN AND IMPLEMENTATION PHASES OF TRAFFIC SIGNAL EQUIPMENT (SUBJECT TO LADOT APPROVAL).

21. TRAFFIC CONSULTANT SHALL BE RESPONSIBLE FOR IDENTIFYING AND RESOLVING ALL INTERCONNECT (I/C), VIDEO FIBER (V.F.) AND FIBER OPTIC (F.O.) DISCREPANCIES DURING THE DESIGN PHASE AND INSTALLATION OF TRAFFIC SIGNAL EQUIPMENT.

22. ALL VEHICLE HEADS SHOWN ARE 12-INCH UNLESS OTHERWISE NOTED.

23. CONTRACTOR SHALL CONTACT THE TRAFFIC CONSULTANT FOR ANY PROBLEMS ENCOUNTERED DURING CONSTRUCTION. THE TRAFFIC CONSULTANT SHALL CONTACT THE LADOT SIGNAL DESIGN SECTION, AT (213) 928-9640, FOR RESOLUTION OF SIGNAL RELATED CONSTRUCTION PROBLEMS.

24. ALL NEW VEHICLE AND COUNTDOWN PEDESTRIAN TRAFFIC SIGNALS SHALL BE LED MODULE, PER LADOT SPECIFICATION 92-088-07 (LATEST EDITION).

25. SEE STREET LIGHTING SHEET FOR WORK ON STREET LIGHTING FACILITIES.

26. CONTRACTOR SHALL OBSERVE ALL INDUSTRY SAFETY STANDARDS, PARTICULARLY SECTION 2946 AND 2948 OF TITLE 8 OF CAL-OSHA REGARDING WORK NEAR OVERHEAD LINES.

27. THE IMPLEMENTATION OF THIS PLAN SHALL BE IN CONFORMANCE WITH LADOT LATEST STANDARD.

DELTA No.	DESCRIPTION OF REVISION	DATE	BY
1	REVISED PER LADOT REVIEW	4/7/2017	T.PAO

Scale: 1" = 20'
North/South: MATEO ST.

T.O. 5 - Change Order Serial Sketch No. 20 - page 6 of 7

6TH STREET VIADUCT REPLACEMENT PROJECT
RESTORATION TRAFFIC SIGNAL

TS-401

REVIEWED March 24 20 17
Transportation Engineer

ACCEPTED March 29 20 17
Senior Transportation Engineer

AS BUILT

Date of Installation: _____
LADOT Inspector: _____
Condition As Of: _____
LADOT Engineer: _____
District CENTRAL
Thomas Guide 634-H5,H6

References
07160-L1
FIELD CHECK
07160-2014.DWG
A-6505
C-002-C401-C402.DWG

CITY OF LOS ANGELES
DEPARTMENT OF TRANSPORTATION
SELETA J. REYNOLDS, GENERAL MANAGER

TITLE
6TH ST. & MATEO ST.

File Name	Intersection No.	Project No.
07160-2017.DWG	07160	77176

NOTICE: IF PLAN HAS NOT BEEN IMPLEMENTED WITHIN TWO (2) YEARS OF THE APPROVAL DATE, IT MUST BE RESUBMITTED TO LADOT SIGNAL DESIGN SECTION FOR REVIEW AND APPROVAL.

CITY OF LOS ANGELES BUSINESS TAX REGISTRATION NO: 0002496950-0001-2

FILENAME: 58942-TR-TS-401.DWG

SCALES	
HORIZ.	1"= 20'
VERT.	1"= NONE

SHEET 1 OF 2

INDEX NUMBER

DATE	BY	CHECKED	1/25/17
	JX	TIMING	
		DISTRICT	
		GEOMETRIC	
		ATSAC	
		METRO RAIL	

DESIGNED BY	RS
DRAWN BY	RS
CHECKED BY	RM
IN CHARGE	NB
DATE	03/14/2017

PROFESSIONAL ENGINEER REGISTERED No. 20705 STATE OF CALIFORNIA — APPROVED for TRAFFIC 02/20/17

PROFESSIONAL ENGINEER REGISTERED No. 35180 STATE OF CALIFORNIA — CIVIL 08/20/17

NO.	REVISION	DESCRIPTION	DATE	ENGR.
0	ISSUED FOR CONSTRUCTION	NOAH BUSCH	03/14/17	

6th STREET VIADUCT SEISMIC IMPROVEMENT

V&A INC. 975 S. FAIR OAK AVE. PASADENA, CA 91105 213/972-0700

HNTB Corporation
One Bunker Hill Bldg.
601 West 5th St., Ste 1000
Los Angeles, California 90071

ORIGINAL MAPS SCALE 1" = 40'
1" = 20'

METERS (Approx.) 30 24 18 12 6 0 0 3 6
FEET 100 80 60 40 20 0 0 10 20

Drawing File: C:\caddlib\pw\rbecerra\west\dms58489\58942-TR-TS-401.dwg
Sheet Name: signal / Updated: Mar 13, 2017 - 4:52pm
Last Saved By: rbecerra / Plotted By: rbecerra

ADDENDUM 5

SIGNAL STANDARD SCHEDULE

	No.	TYPE	FOUND. TYPE	PED. PUSH BUT'N TYPE	PED. PUSH BUT'N PHASE	REMARKS
*	(1)	332 CAB.	F-332			ATSAC 2070 CONTROLLER IN 332 CAB
*	(2)	24-3-70	CIDH	APS(2P)		35' M.A.
*	(3)	1	F-1	APS(8P)	8	
*	(4)	CD954	F-2	APS(8P)	8	20' M.A.
*	(5)	1	F-1	APS(6P)		
*	(6)	CD929B-7	BSL			20' M.A.
*	(7)	7	F-7	APS(6P)		
*	(8)	1	F-1	APS(4P)	4	
*	(9)	CD929B-7	BSL	APS(4P)	4	
*	(10)	7	F-7	APS(2P)		
*	(11)	CD929B	BSL			

* Existing

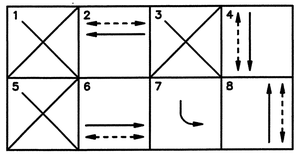

PROPOSED PHASE DIAGRAM

ESTIMATED SALVAGE MATERIAL TO BE RETURNED TO LADOT

UNITS	MATERIAL
ALL	REMOVED LED HEADS

CONDUCTOR SCHEDULE

SIZE No.	CABLE / WIRE	RUN
MULTI	5 CONDUCTOR CABLE 5 X #14	
MULTI	9 CONDUCTOR CABLE 8 X #14 & 1 X #12(COM)	
MULTI	13 CONDUCTOR CABLE 12 X #14 & 1 X #12(COM)	
MULTI	28 CONDUCTOR CABLE 27 X #14 & 1 X #10(COM)	
MULTI	5 CONDUCTOR CABLE (APS) 5 X #14	
6	SERVICE	
14	PED PUSH BUTTON	2 2 2 2
12	BUS DLC (1 PAIR)	
18	DLC (2 PAIR)	3 3
18	DLC (3 PAIR)	1 1 1 1
18	DLC (4 PAIR)	
14	INTERCONNECT (7 WIRE)	
22	INTERCONNECT (12 PAIR)	
	V.F. (1-24SM)	
	V.F. (1-4SM)	
	CCTV CAMERA CABLE	
	CONDUIT SIZE	* * * * * * * * *

* - EXISTING CONDUIT. THE CONTRACTOR SHALL ADD/INSTALL NEW CONDUCTORS/CABLES IN EXISTING CONDUIT AS DESIGNATED IN THE CONDUCTOR SCHEDULE. IF THE EXISTING CONDUIT IS IN POOR CONDITION OR THE CONDUIT CAPACITY EXCEEDS THIRTY-ONE PERCENT (>31%) THE CONTRACTOR SHALL PROVIDE A NEW CONDUIT TO ACCOMMODATE ALL CABLES AND CONDUCTORS. ALL OTHER EXISTING CONDUCTORS/CABLES SHALL BE PROTECTED AND MAINTAINED IN EXISTING CONDUIT.

NOTES:

1. SEMI-ACTUATED OPERATION WITH TRANSIT PRIORITY (ATSAC 2070 CONTROLLER IN 332 CABINET)

   ø2 - WHITTIER BLVD. WB, N/S PED. XING
   ø4 - BOYLE AVE. SB & W/S PED. XING
   ø6 - WHITTIER BLVD. EB & S/S PED. XING
   ø7 - BOYLE AVE. SB LT.
   ø8 - BOYLE AVE. NB & E/S PED. XING

   BOYLE HEIGHTS ATSAC SYSTEM
   DIRECT WIRE (CABLE) INTERCONNECT

2. FIELD MODIFICATION OF CONTROLLER REQUIRED. NOTIFY LADOT SIGNAL SHOP (213) 473-8463 FIFTEEN (15) WORKING DAYS PRIOR TO START OF CONTRUCTION TO OBTAIN NEW CONFLICT MONITOR AND CONTROLLER TIMING PACKAGE. LADOT WILL MAKE ALL CONTROLLER MODIFICATION AND INSTALL THE NEW CONFLICT MONITOR IN THE EXISTING CONTROLLER CABINET. COORDINATE WITH LADOT TRAFFIC SIGNAL INSPECTOR AT (213) 220-6597.
3. INSTALL DETECTOR LOOP(S) PER LADOT STD. DWG. NO. S-70.1A & S-70.1D (CASE II). CONTRACTOR SHALL OBTAIN APPROVAL FROM LADOT INSPECTOR PRIOR TO INSTALLATION OF ANY LOOPS.
4. REMOVE EXISTING DLC FROM PULLBOX TO CONTROLLER.
5. ABANDON AND DISCONNECT DETECTOR LOOP(S) IN PULLBOX AS SHOWN.
6. CONTRACTOR SHALL RE-USE EXISTING STUB-OUT. IF STUB-OUT IS NOT IN PLACE, CONTRACTOR SHALL INSTALL NEW STUB-OUT PER LADOT STD. DWG. S-70.1A.
7. THE CONTRACTOR SHALL BE RESPONSIBLE FOR LABOR AND MATERIAL INVOLVED IN THE REMOVAL, MARKOUT AND INSTALLATION OF ALL SIGNS, STRIPING AND PAVEMENT MARKINGS PER LADOT GEOMETRIC PLAN DWG. A-6505, GEO-404.
8. TRAFFIC CONSULTANT SHALL BE RESPONSIBLE FOR IDENTIFYING AND RESOLVING SUBSTRUCTURE CONFLICT WITH PROPOSED FOUNDATIONS DURING THE DESIGN AND IMPLEMENTATION PHASES OF TRAFFIC SIGNAL EQUIPMENT (SUBJECT TO LADOT APPROVAL).
9. TRAFFIC CONSULTANT SHALL BE RESPONSIBLE FOR IDENTIFYING AND RESOLVING ALL INTERCONNECT (I/C), VIDEO FIBER (V.F.) AND FIBER OPTIC (F.O.) DISCREPANCIES DURING THE DESIGN PHASE AND INSTALLATION OF TRAFFIC SIGNAL EQUIPMENT.
10. ALL VEHICLE HEADS SHOWN ARE 12-INCH UNLESS OTHERWISE NOTED.
11. CONTRACTOR SHALL CONTACT THE TRAFFIC CONSULTANT FOR ANY PROBLEMS ENCOUNTERED DURING CONSTRUCTION. THE TRAFFIC CONSULTANT SHALL CONTACT THE LADOT SIGNAL DESIGN SECTION, AT (213) 928-9640, FOR RESOLUTION OF SIGNAL RELATED CONSTRUCTION PROBLEMS.
12. ALL NEW VEHICLE AND COUNTDOWN PEDESTRIAN TRAFFIC SIGNALS SHALL BE LED MODULE, PER LADOT SPECIFICATION 92-088-07 (LATEST EDITION).
13. SEE STREET LIGHTING SHEET FOR WORK ON STREET LIGHTING FACILITIES.
14. CONTRACTOR SHALL OBSERVE ALL INDUSTRY SAFETY STANDARDS, PARTICULARLY SECTION 2946 AND 2948 OF TITLE 8 OF CAL-OSHA REGARDING WORK NEAR OVERHEAD LINES.
15. THE IMPLEMENTATION OF THIS PLAN SHALL BE IN CONFORMANCE WITH LADOT LATEST STANDARD.

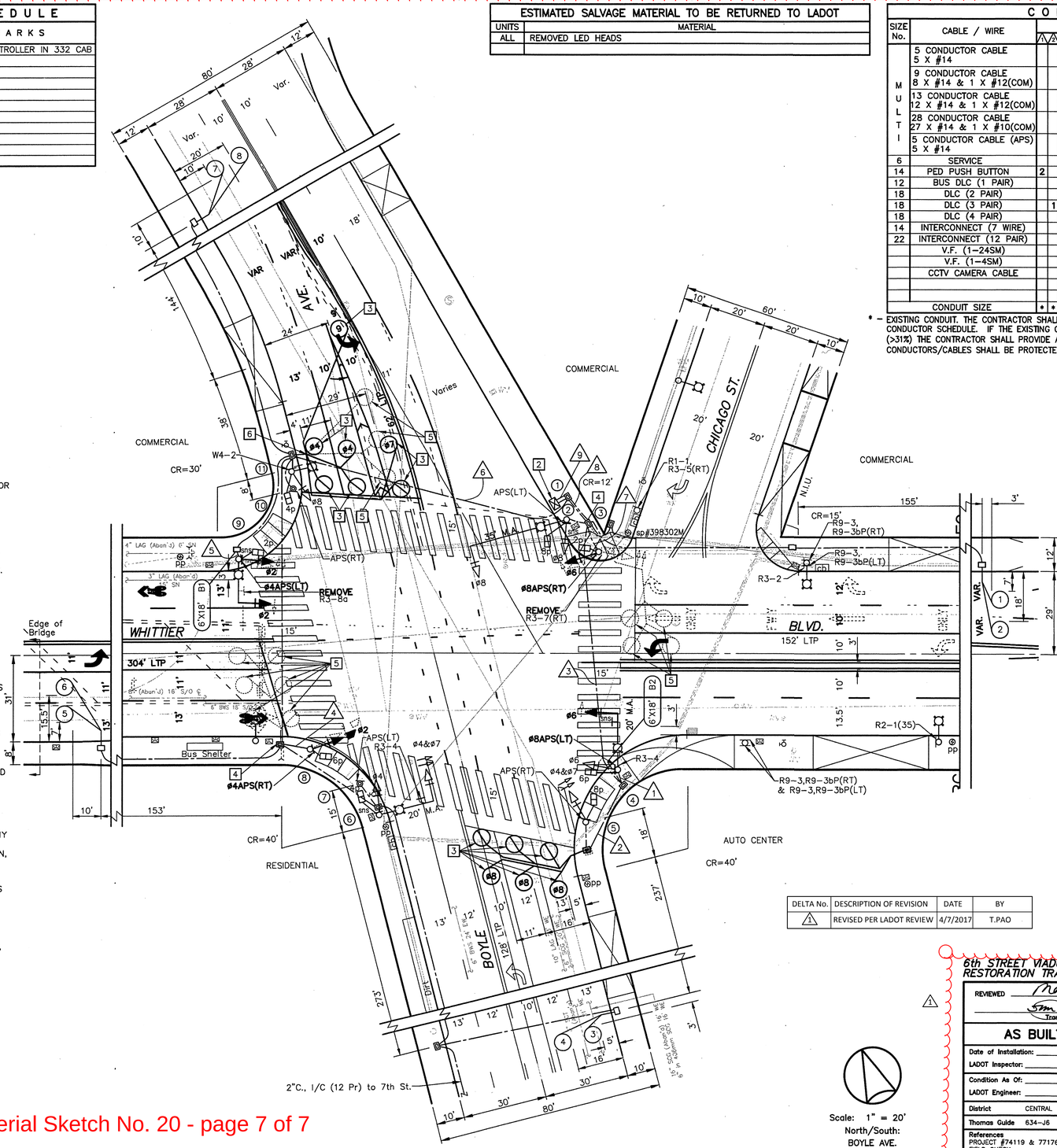

DELTA No.	DESCRIPTION OF REVISION	DATE	BY
1	REVISED PER LADOT REVIEW	4/7/2017	T.PAO

NOTICE TO CONTRACTOR

1. EXCEPT WHERE OTHERWISE INDICATED, MATERIALS AND INSTALLATION METHODS SHALL CONFORM TO THE LATEST EDITION, WITH SUPPLEMENTS, OF THE STANDARD SPECIFICATIONS FOR PUBLIC WORKS CONSTRUCTION, ADOPTED BY THE CITY OF LOS ANGELES BOARD OF PUBLIC WORKS (LABPW), INCLUDING THE LATEST VERSION OF THE "BROWN BOOK" ISSUED BY THE LABPW, AND THE LATEST EDITION, WITH AMENDMENTS, OF THE SPECIAL PROVISIONS AND STANDARD DRAWINGS FOR THE INSTALLATION AND MODIFICATION OF TRAFFIC SIGNALS, ISSUED BY THE CITY OF LOS ANGELES DEPARTMENT OF TRANSPORTATION (LADOT).
2. ALL TRAFFIC SIGNAL AND/OR RELATED ELECTRICAL WORK SHALL BE PERFORMED AND INSPECTED UNDER THE CONDITIONS OF THE MOST CURRENT AMENDED BOARD OF PUBLIC WORKS "ENHANCED ELECTRICAL SAFETY POLICY" AS REQUIRED IN LADOT'S SPECIAL PROVISIONS AND STANDARD DRAWINGS FOR THE INSTALLATION AND MODIFICATION OF TRAFFIC SIGNALS (RED BOOK), REGARDLESS OF CONTRACT COST.
3. THE LADOT TRAFFIC SIGNAL INSPECTOR AT (213) 485-1071 SHALL BE NOTIFIED THREE (3) WORKING DAYS PRIOR TO THE BEGINNING OF CONSTRUCTION. FOR WORK IN THE AUTOMATED TRAFFIC SURVEILLANCE AND CONTROL (ATSAC) PROJECT AREA, A FIELD MEETING SHALL BE SCHEDULED WITH THE SIGNAL SYSTEM SUPERVISOR AT (213) 473-8286 AND THE SIGNAL MAINTENANCE SUPERVISOR AT (213) 485-7721 THREE (3) WORKING DAYS PRIOR TO THE BEGINNING OF CONSTRUCTION. FULL RESTORATION OF THE ATSAC SYSTEM MUST OCCUR WITHIN FIVE (5) WORKING DAYS AFTER SHUT DOWN.
4. REGULAR TRAFFIC SIGNAL CONTROL SHALL BE MAINTAINED FROM 6:00 A.M. TO 9:00 A.M. AND 3:00 P.M. TO 7:00 P.M. ON WEEKDAYS, EXCEPT NATIONAL HOLIDAYS. FLASHING, DEACTIVATION AND ACTIVATION OF SIGNALS SHALL BE ACCOMPLISHED ONLY BY AN LADOT TRAFFIC SIGNAL ELECTRICIAN. ALL ARRANGEMENTS TO DEACTIVATE SIGNALS SHALL BE MADE 24 HOURS IN ADVANCE BY CONTACTING THE LADOT TRAFFIC SIGNAL DEDICATED LINE AT (213) 473-8478 BEFORE 9 A.M. ON NON-HOLIDAY WEEKDAYS. THE LADOT PROJECT NUMBER MUST BE GIVEN AT THIS TIME. THE CONTRACTOR WILL BE CHARGED FOR ALL ELECTRICAL AND TRAFFIC CONTROL SERVICE PROVIDED BY LADOT.
5. ARRANGEMENTS FOR OBTAINING ANY MATERIALS IDENTIFIED TO BE SUPPLIED BY LADOT SHALL BE MADE TEN (10) WORKING DAYS IN ADVANCE BY CONTACTING THE LADOT FIELD OPERATIONS DIVISION AT (213) 928-9603. HOWEVER, TRAFFIC SIGNAL CONTROLLERS REQUIRE THIRTY (30) WORKING DAYS ADVANCE NOTICE AND MUST BE PICKED UP WITHIN FIFTEEN (15) WORKING DAYS AFTER NOTIFICATION. CONTACT LADOT SIGNAL SHOP AT (213) 473-8468 TO COORDINATE CONTROLLER DELIVERY AND/OR PICKUP.
6. ALL IDENTIFIED TRAFFIC SIGNAL EQUIPMENT SHALL BE RETURNED TO LADOT. ARRANGEMENTS FOR RETURNING IDENTIFIED EQUIPMENT TO LADOT SHALL BE MADE FIVE (5) WORKING DAYS IN ADVANCE BY CONTACTING THE LADOT MATERIAL SERVICES DIVISION AT (213) 928-9636.
7. ALL EXISTING TRAFFIC CONTROL SIGNING SHALL BE MAINTAINED WITH STANDARD SIGN BRACKETS BY THE CONTRACTOR. EXCEPT WHERE OTHERWISE INDICATED, EXISTING LARGE STREET NAME SIGNS ON MAST ARM TYPE STANDARDS SHALL BE RELOCATED FROM THE VERTICAL POLE TO THE MAST ARM PER LADOT STANDARD DRAWING NO. S-457.0 & S-486.0. THE CONTRACTOR SHALL COORDINATE WITH LADOT SIGN SHOP AT (213) 473-7954 FOR ANY REQUIRED LARGE STREET NAME SIGNS. ANY TRAFFIC CONTROL SIGNING DAMAGED OR LOST BY THE CONTRACTOR SHALL BE REPLACED AT THE CONTRACTOR'S EXPENSE. SIGNAL CONTRACTOR SHALL INSTALL MAST ARM MOUNTED SIGNS.
8. THE CONTRACTOR SHALL FURNISH AND INSTALL, AS SHOWN ON THE PLANS, ALL TRAFFIC SIGNAL EQUIPMENT SUCH AS STANDARDS, MAST ARMS, SIGNAL HEADS, AND OTHER EQUIPMENT AS REQUIRED. ALL SUCH EQUIPMENT SHALL BE NEW. ALL VEHICLE HEAD EQUIPMENT SUPPLIED BY THE CONTRACTOR SHALL HAVE 1-1/2 INCH DIAMETER PIPE FIT MOUNTING HARDWARE, INCLUDING ALL TOP POST MOUNT HEADS. PED HEAD MODULE REPLACEMENTS SHOWN ON THE PLAN SHALL REQUIRE A COMPLETE INSTALLATION, INCLUDING NEW PED HEAD AND TERMINAL COMPARTMENT.

T.O. 5 - Change Order Serial Sketch No. 20 - page 7 of 7

6th STREET VIADUCT REPLACEMENT PROJECT
RESTORATION TRAFFIC SIGNAL MODIFICATION
TS-402

REVIEWED March 24 20 17
Tom Vaughn, Transportation Engineer

ACCEPTED March 29 20 17
Maxwell G. Obeso, Senior Transportation Engineer

AS BUILT
Date of Installation:
LADOT Inspector:
Condition As Of:
LADOT Engineer:
District CENTRAL
Thomas Guide 634-J6
References
PROJECT #74119 & 77176
FIELD CHECK
A-6705
07180-2014.DWG

CITY OF LOS ANGELES
DEPARTMENT OF TRANSPORTATION
SELETA J. REYNOLDS, GENERAL MANAGER

TITLE
BOYLE AVE. & WHITTIER BLVD.

File Name 07180-2017.DWG | Intersection No. 07180 | Project No. 77176

NOTICE: IF PLAN HAS NOT BEEN IMPLEMENTED WITHIN TWO (2) YEARS OF THE APPROVAL DATE, IT MUST BE RESUBMITTED TO LADOT SIGNAL DESIGN SECTION FOR REVIEW AND APPROVAL.

NO.	REVISION DESCRIPTION	DW./DIST. ENGR.	DATE
0	ISSUED FOR CONSTRUCTION	NOAH BUSCH	03/14/17

DESIGNED BY	RS
DRAWN BY	RS
CHECKED BY	RM
IN CHARGE	NB
DATE	03/14/2017

CHECKED	BY	DATE
TIMING	JX	1/25/17
DISTRICT		
GEOMETRIC		
ATSAC		
METRO RAIL		

6th STREET VIADUCT SEISMIC IMPROVEMENT

HNTB Corporation
One Bunker Hill Bldg.
601 West 5th St. Ste 1000
Los Angeles, California 90071

V&A INC.
975 S. FAIR OAK AVE
SUNNYVALE, CA 94086
213.972.9700

CITY OF LOS ANGELES BUSINESS TAX REGISTRATION NO: 0002496950-0001-2

FILENAME: 58942-TR-TS-402.DWG

SCALES	HORIZ. 1"= 20'
	VERT. 1"= NONE

SHEET 2 OF 2

INDEX NUMBER

Drawing File: C:\cadd8\pw\rbecerra\west\dms64848\58942-TR-TS-402.dwg
Sheet Name: BOYLE AND WHITTIER TS / Updated: Mar 13, 2017 - 4:42pm
Last Saved By: rbecerra / Plotted By: rbecerra

METERS (Approx.) 30 20 24 18 12 6 0 3' 0
FEET 100 80 60 40 20 0
METERS (Approx.) 60 48 36 24 12 0
FEET 200 160 120 80 40 0
ORIGINAL MAP'S SCALE 1" = 20' 1" = 40'

ADDENDUM 5

THE CITY OF LOS ANGELES OR ITS OFFICERS OR AGENTS SHALL NOT BE RESPONSIBLE FOR THE ACCURACY OR COMPLETENESS OF ELECTRONIC COPIES OF THIS PLAN SHEET.

NOTICE TO CONTRACTORS
GENERAL NOTES

1. ALL WORK SHALL CONFORM TO THE LATEST BOARD OF PUBLIC WORKS OF THE CITY OF LOS ANGELES ADOPTED EDITION AND SUPPLEMENTS TO THE "GREENBOOK STANDARD SPECIFICATIONS FOR PUBLIC WORKS CONSTRUCTION" AS MODIFIED BY THE CORRESPONDING ISSUE OF THE BROWN BOOK, THE LATEST EDITION OF THE BUREAU OF STREET LIGHTING "SPECIAL SPECIFICATIONS", AND THE SPECIAL PROVISIONS.
2. ELECTROLIERS SHALL BE INSTALLED WITH CENTERLINE 30" BEHIND THE CURB FACE, AND WITH LUMINAIRE ARM ORIENTED OVER THE STREET AND PERPENDICULAR TO ITS CENTER LINE, EXCEPT AS OTHERWISE SPECIFIED HEREON.
3. ELECTROLIERS SPECIFIED TO BE LOCATED INSIDE OF THE CURB RETURN SHALL BE INSTALLED WITH THE CENTER OF THE ELECTROLIER 30 INCHES BEHIND THE CURB FACE MEASURED RADIALLY, AND WITH THE LUMINAIRE ARM ORIENTED OVER THE STREET AND PERPENDICULAR TO THE STREET CENTERLINE.
4. ELECTROLIERS SHALL BE ERECTED SO THAT THE BASE DOOR IS PERPENDICULAR TO THE CURB AND LOCATED ON THE SIDE OF THE ELECTROLIER AWAY FROM ONCOMING TRAFFIC.
5. ALL EXISTING ELECTROLIERS SPECIFIED TO BE REMOVED OR MODIFIED ON THIS PLAN SHALL BE MAINTAINED IN SERVICE UNTIL THE NEW ELECTROLIER LIGHTING SYSTEM IS PLACED IN SERVICE, UNLESS OTHERWISE SPECIFIED HEREON. ALL OTHER ELECTROLIERS ON CIRCUITS AFFECTED BY THIS PLAN SHALL BE MAINTAINED IN SERVICE. CONTRACTOR MAY PROVIDE ALTERNATE LIGHTING IN LIEU OF MAINTAINING EXISTING ELECTROLIER LIGHTS IN SERVICE PROVIDED THAT SUCH ARRANGEMENTS ARE APPROVED BY THE ENGINEER.
6. ALL EQUIPMENT REQUIRED HEREON FOR FURNISHING ELECTRICAL SERVICE FOR EACH CIRCUIT SHALL BE INSTALLED AND INSPECTED PRIOR TO ANY OTHER CONSTRUCTION ON THAT CIRCUIT UNLESS OTHERWISE APPROVED BY THE ENGINEER.
7. THE CONTRACTOR SHALL GIVE WRITTEN NOTICE, 72 HOURS IN ADVANCE OF THE REMOVAL OF AN ELECTROLIER, TO ANY PUBLIC AGENCY MAINTAINING EQUIPMENT SUPPORTED BY THAT ELECTROLIER.
8. FOUNDATIONS AND PULLBOXES NOT REMAINING IN SERVICE SHALL BE REMOVED. THE RESULTING EXCAVATION SHALL BE FILLED WITH MATERIAL SIMILAR TO ADJACENT MATERIAL AND SATISFACTORILY COMPACTED WITH A MECHANICAL COMPACTOR IN LAYERS NOT EXCEEDING 12 INCHES. THE SURFACE SHALL BE FINISHED TO MATCH THE ADJACENT SURFACE.
9. THE CONTRACTOR SHALL REQUEST A BURN TEST BY NOTIFYING THE BUREAU OF CONTRACT ADMINISTRATION PROJECT INSPECTOR A MINIMUM OF 7 CALENDAR DAYS IN ADVANCE OF THE DATE ON WHICH A BURN TEST IS DESIRED.
10. CONTRACTOR SHALL GIVE THREE WORKING DAYS NOTICE (PHONE 323-913-4744) PRIOR TO DELIVERY OF ANY EQUIPMENT SPECIFIED TO BE DELIVERED TO THE BUREAU OF STREET LIGHTING YARD AT 4550 SANTA MONICA BLVD.. SUCH DELIVERIES SHALL BE BETWEEN 8:30 AM AND 3:00 PM AND SHALL INCLUDE ALL HANDLING AND LOADING FROM THE TRUCK BY THE CONTRACTOR. CONTRACTOR MUST SUPPLY A COPY OF THE STREET LIGHTING SHEETS WITH THE DELIVERY OF MATERIAL.
11. PULLBOXES LOCATED ADJACENT TO DRIVEWAYS AND ALLEYS SHALL BE INSTALLED AT A MINIMUM DISTANCE OF FIVE FEET FROM THE TOP OF THE "X" OF A CASE 1 OR CASE 2 DRIVEWAY OR AT A MINIMUM DISTANCE OF TWO FEET FROM THE B.C. OF A CASE 3 OR CASE 4 DRIVEWAY OR FIVE FEET FROM TRAVELLED WAY OF THE ALLEY.
12. PULLBOXES INSTALLED AT INTERSECTIONS OF LOCAL STREET SHALL BE INSTALLED NO CLOSER TO THE INTERSECTIONS THAN THE B.C.R. OF AN ASSUMED FUTURE 25' RADIUS CURB RETURN UNLESS OTHERWISE APPROVED BY THE ENGINEER. PULLBOXES INSTALLED AT INTERSECTIONS WHICH INVOLVE ONE OR MORE MAJOR OR SECONDARY STREETS SHALL BE INSTALLED NO CLOSER TO INTERSECTIONS THAN THE B.C.R. OF AN ASSUMED FUTURE 35' RADIUS CURB RETURN UNLESS OTHERWISE APPROVED BY THE ENGINEER.
13. CONDUIT SHALL BE INSTALLED AROUND ALL EXISTING AND/OR PROPOSED CATCH BASINS PER BUREAU OF STREET LIGHTING STANDARD DRAWING NO. L-304-0 UNLESS OTHERWISE SPECIFIED.
14. ALL SCREWS PROVIDED FOR ELECTROLIER STANDARD BASE DOORS AND BASE COVERS SHALL BE CADMIUM PLATED STEEL, 1/4-20NC MACHINE SCREWS, WITH PHILLIPS RECESSED ROUND HEADS.
15. WARNING: SAFETY CLEARANCE SHALL BE OBTAINED DAILY FROM THE AFFECTED UTILITY COMPANY BEFORE DOING ANY WORK IN CLOSE PROXIMITY TO ANY OVERHEAD ELECTRIC LINE. SEE SECTIONS 1643.0 AND 2100 OF SPECIAL SPECIFICATIONS.
16. UNLESS OTHERWISE SPECIFIED HEREON, LUMINAIRES SHALL PROVIDE A MEDIUM, CUTOFF, TYPE III, LIGHTING DISTRIBUTION PATTERN CONFORMING TO I.E.S DESIGNATION.
17. CONTRACTOR SHALL BE RESPONSIBLE FOR PRESERVING THE CONDITION OF ALL EXISTING EQUIPMENT TO BE REUSED, MODIFIED OR RETURNED TO THE BUREAU OF STREET LIGHTING YARD.
18. EQUIPMENT INDICATED "DISPOSE" SHALL BECOME THE PROPERTY OF THE CONTRACTOR AND BE DISPOSED OF BY THE CONTRACTOR.
19. STREET LIGHTING CONDUIT SHALL BE INSTALLED BY JACKING OR DRILLING METHODS. INSTALLATION OF CONDUIT BY OPEN TRENCHING IS NOT PERMITTED UNLESS APPROVED BY THE DIRECTOR, BUREAU OF STREET LIGHTING.
20. CONTRACTOR SHALL REPAIR AT HIS COST, THE DAMAGE CAUSED TO EXISTING SPRINKLER SYSTEMS DURING THE CONSTRUCTION OF THIS PROJECT. REPAIRS SHALL BE MADE WITHIN 5 WORKING DAYS AFTER DAMAGE OCCURS.
21. ALL ELECTROLIERS SPECIFIED HEREON SHALL INCLUDE A TYPE 2 PULLBOX, TO BE SUPPLIED AND INSTALLED, UNLESS OTHERWISE SPECIFIED.
22. CONTRACTOR SHALL BE RESPONSIBLE TO ALL EXISTING ELECTROLIERS SPECIFIED TO BE RELOCATED AND MODIFIED ON THIS PLAN. PRIOR TO REINSTALLATION, CONTRACTOR SHALL REPAIR OR REPLACE ALL EXISTING STREET LIGHTING FACILITIES FOUND TO BE DAMAGED PRIOR TO START OF OR DURING THE CONSTRUCTION OF THIS PROJECT AT NO COST TO THE CITY.

SUPPLEMENTAL NOTES

1. CONTRACTOR SHALL LOCATE & PROTECT SUBSTRUCTURE(S) SHOWN HEREON, & SHALL PROVIDE FOR A MINIMUM 12" HORIZONTAL CLEARANCE BETWEEN FOUNDATION & SUBSTRUCTURES. IN THE EVENT A 12" CLEARANCE CANNOT BE ACHIEVED, THE CONTRACTOR SHALL MAKE ARRANGEMENTS FOR RELOCATION OF SUBSTRUCTURES AT NO COST TO THE CITY.
2. IN THE EVENT OF OVERHEAD LINES CONFLICT WITH ELECTROLIERS THE CONTRACTOR SHALL MAKE NECESSARY ARRANGEMENTS WITH THE DEPT. OF WATER AND POWER TO RAISE THEIR OVERHEAD FACILITIES IN ORDER TO PROVIDE FOR THE FOLLOWING CLEARANCES WITH EXISTING AND/OR PROPOSED ELECTROLIERS.
   LOW VOLTAGE: MINIMUM 3' CLEARANCE BETWEEN OVERHEAD LINES AND ELECTROLIERS
   HIGH VOLTAGE: MINIMUM 6' CLEARANCE BETWEEN OVERHEAD LINES AND ELECTROLIERS
3. STREET TREES SHALL NOT BE PLANTED CLOSER THAN 20' FROM EXISTING OR PROPOSED ELECTROLIER, UNLESS OTHERWISE INDICATED.
4. IN THE EVENT OF OVERHEAD COMMUNICATION LINE CONFLICT WITH ELECTROLIERS, CONTRACTOR SHALL MAKE NECESSARY ARRANGEMENTS TO PROVIDE A MINIMUM 12" CLEARANCE.
5. PROPOSED ELECTROLIER FOUNDATIONS AND PULLBOXES SHALL BE INSTALLED OUTSIDE OF ACCESS RAMP AREAS. EXISTING FOUNDATIONS AND PULLBOXES SHALL BE RECONSTRUCTED TO CLEAR ACCESS RAMPS BY A MINIMUM OF 12". EXISTING CONDUIT SHALL BE LOWERED AS NECESSARY PER SEC. 307-2.5 OF THE STANDARD SPECIFICATIONS FOR PUBLIC WORKS CONSTRUCTION.
6. CONDUIT THAT IS TO BE ABANDONED SHALL HAVE WIRES REMOVED. THE CONDUIT SHALL BE REMOVED TO A DEPTH OF AT LEAST 12" BELOW THE SURFACE AND HAVE BOTH ENDS CRIMPED.
7. NOTWITHSTANDING SECTION 16950.2 OF THE SPECIAL SPECIFICATIONS FOR THE CONSTRUCTION STREET LIGHTING SYSTEMS MAGNETIC REGULATING BALLASTS ARE REQUIRED IN ALL COBRA-HEAD LUMINAIRES.
8. ALL #10 AWG WIRES USED FOR MULTIPLE CIRCUIT ELECTROLIER WIRING REFERENCED IN STANDARD DRAWING NO. L-301-1 SHALL BE #10 AWG SOLID COPPER CONDUCTORS.
9. AT LEAST TWO (2) WORKING DAYS PRIOR TO STARTING ANY EXCAVATION. THE CONTRACTOR MUST OBTAIN AN INQUIRY I.D. NUMBER FROM UNDERGROUND SERVICE ALERT BY CALLING (800) 422-4133 OR BY DIALING 811.
10. THE CONTRACTOR SHALL GIVE THE TRAFFIC SIGNAL SUPERINTENDENT (213-220-6597) THREE WORKING DAYS NOTICE BEFORE SCHEDULING WORK THAT WILL REQUIRE COORDINATION WITH THE DEPARTMENT OF TRANSPORTATION, THIS WILL INCLUDE, BUT NOT LIMITED TO, SPECIFIC WORK LOCATIONS INDICATED IN THESE PLANS.

SERIES CIRCUIT NOTES

1. WARNING: SAFETY CLEARANCE SHALL BE OBTAINED DAILY FROM THE SERVING COMPANY, AND "MEN AT WORK" SIGNS SHALL BE POSTED AT THE SERVICE POINT BEFORE ANY WORK IS DONE OR ANY CONNECTIONS MADE ON AN EXISTING CIRCUIT. SEE SECTIONS 1643.0 AND 2100 OF SPECIAL SPECIFICATIONS.
2. COMPOUND RATED FOR 5,000 VOLT OPERATION.
3. TWO OR MORE TURNS OF SELF-ADHESIVE COLORED TAPE WITH A MINIMUM WIDTH OF 1/2 INCH SHALL BE APPLIED TO EACH CABLE IN ALL SERIES CIRCUITS WHERE WORK IS BEING DONE AND WHERE TWO OR MORE CIRCUITS EXIST IN A COMMON PULLBOX OR POST BASE. THE TAPE SHALL BE APPLIED ON THE CABLE BETWEEN THE SPLICES AND THE CONDUIT, USING ONE COLOR FOR EACH CIRCUIT. THE COLORS WHITE, GRAY, GREEN,AND ORANGE SHALL NOT BE USED. SERIES CIRCUIT WIRE SHALL BE NO. 8 AWG STRANDED COPPER CONDUCTOR, INSULATED WITH 0.110" APPROVED POLYETHYLENE
4. CONTRACTOR SHALL GIVE THE BUREAU OF STREET LIGHTING YARD (PHONE 323-913-4744) TWO WORKING DAYS NOTICE BEFORE ANY WORK IS DONE ON AN EXISTING SERIES CIRCUIT.

CIRCUIT DIAGRAM LEGEND

NEW WIRE — NEW LAMP
EXISTING WIRE — EXISTING LAMP
DISCONNECT AND REMOVE WIRE — REMOVE EXISTING LAMP
CONNECT WIRE
DISCONNECT WIRE AND TAPE ENDS

MULTIPLE CIRCUIT NOTES

1. WARNING: SAFETY CLEARANCE SHALL BE OBTAINED DAILY FROM THE SERVING COMPANY BEFORE DOING ANY WORK OR MAKING ANY CONNECTIONS ON AN EXISTING CIRCUIT. SEE SECTIONS 1643.0 AND 2100 OF SPECIAL SPECIFICATIONS.
2. MULTIPLE CIRCUIT WIRE SHALL BE NO. 8 AWG STRANDED COPPER CONDUCTOR. TYPE THWN/THHN INSULATION, UL APPROVED FOR 600 VOLT OPERATION UNLESS OTHERWISE SPECIFIED HEREON.
3. THREE WIRES (COLOR CODE: 1-RED, 1-BLACK, 1-WHITE,) SHALL BE INSTALLED IN ALL MULTIPLE CIRCUIT CONDUIT UNLESS OTHERWISE PROVIDED FOR HEREON.
4. EVEN NUMBERED ELECTROLIERS SHALL BE CONNECTED TO RED AND WHITE WIRES AND ODD NUMBERED ELECTROLIERS SHALL BE CONNECTED TO BLACK AND WHITE WIRES.
5. ELECTROLIERS SHALL BE WIRED PER TYPICAL MULTIPLE CIRCUIT ELECTROLIER WIRING DETAIL, BUREAU OF STREET LIGHTING STANDARD DRAWING NO. L-301-1, UNLESS OTHERWISE SPECIFIED.
6. MULTIPLE CIRCUITS IN CONDUITS CONTAINING MORE THAN THREE CONDUCTORS SHALL BE APPROPRIATELY IDENTIFIED BY LABELING CONDUCTORS "A", "B", ETC. WITH APPROVED SELF-LAMINATING LETTER TAPE WRAPPED AT LEAST TWICE AROUND THE CONDUCTOR IN EACH PULLBOX. (W.H. BRADY, SPECIAL SELF-LAMINATING WIRE MARKERS OR EQUIVALENT)

LEGEND

- (R) EXISTING ELECTROLIER TO BE RELOCATED
- EXISTING UTILITARIAN LIGHTS ON WOODEN POLES WHICH SHALL BE MAINTAINED IN SERVICE UNTIL THE PERMANENT ELECTROLIER LIGHTING SYSTEM IS PLACED IN SERVICE. CONTRACTOR MAY PROVIDE ALTERNATE LIGHTING IN LIEU OF MAINTAINING EXISTING UTILITARIAN LIGHTS IN SERVICE PROVIDED THAT SUCH ARRANGEMENTS ARE APPROVED BY THE ENGINEER.
- EXISTING ELECTROLIER TO BE REMOVED. (SEE GENERAL NOTE 8)
- NEW ELECTROLIER
- EXISTING ELECTROLIER, NOT TO BE REMOVED OR MODIFIED
- PULLBOX TYPE 2 UNLESS OTHERWISE SHOWN HEREON. (SEE DELTA NOS. 25 & 26). ADDITIONAL PULLBOXES SHALL BE REQUIRED AS SPECIFIED.
- EXISTING PULLBOX
- EXISTING 1" CONDUIT
- EXISTING 1-1/2" CONDUIT
- EXISTING 2" CONDUIT
- NEW 1" CONDUIT
- NEW 1-1/2" CONDUIT
- NEW 2" CONDUIT
- ABANDON CONDUIT (SEE GENERAL NOTE NO.8 & SUPPLEMENTAL NOTE NO.7)
- EXISTING ELECTROLIER FOUNDATION
- FUTURE ELECTROLIER
- PROPOSED CATCH BASIN
- FOR PROP. 218 AND GIS SECTION USE ONLY. (GENERAL BENEFIT)

NOTICE TO CONTRACTORS

FOLLOWING IS A SUMMARY OF NEW ELECTROLIERS, LUMINAIRES, LAMPS, BALLASTS, MATERIAL LIST, FOUNDATIONS AND OTHER EQUIPMENT WHICH SHALL BE SUPPLIED AND INSTALLED BY THE CONTRACTOR. THIS IS NOT INTENDED TO BE A COMPLETE LIST OF ALL MATERIALS REQUIRED

SYMBOL	ITEM	QUANTITY	DESCRIPTION	STANDARD PLAN NO.	REV NO.	NOMINAL WATTAGE
(6)	LUMINAIRE	1	200W HPS EQ. LED (30)			89W
(1) (2) (3) (4) (5)	LUMINAIRE	7	250W HPS EQ. LED (30)			98W
(2)	ELECTROLIER	3	CD953C W/6' ARM & TYPE 2 PULLBOX	B-3685	3	
(3) (4)	ELECTROLIER	2	CAL TYPE 17-3-100 W/6' L.A. & 15' T.S.M.A. & TYPE 2 PULL BOX.	*		
(5) (6)	ELECTROLIER	1	CAL TYPE 19-4-100 W/ TWIN 6' L.A. & 20' T.S.M.A. & TYPE 2 PULL BOX.	*		

* REFER TO D.O.T. TRAFFIC SIGNAL SHEET (COMBINATION TRAFFIC SIGNAL/ST. LTG. POLE) FOR LOCATION AND FOUNDATION DETAILS.

MATERIAL LIST NOTES

1. ALL LUMINAIRES REGARDLESS OF WATTAGE ON LOW VOLTAGE, MULTIPLE CIRCUITS SHALL BE EQUIPPED WITH A MONITORING NODE. THE UNIT SHOULD BE PICKED UP AT THE BUREAU'S PLAN COUNTER AT 1149 S. BROADWAY, SUITE #200, LOS ANGELES, CA 90015. THE UNITS WILL BE PROVIDED FOR A NON-REFUNDABLE FEE (APPROXIMATELLY $155.00 PER UNIT). THE CONTRACTOR SHALL GIVE SEVEN WORKING DAYS NOTICE (TELEPHONE 231 847-1498) PRIOR TO PICKING UP THE MONITORING UNITS. NODES SHALL BE INSTALLED INTO THE PHOTOELECTRIC CONTROL STANDARD SOCKET PER INSI/NEMA C-136.10 AND SHALL BE ORIENTED IN A NORTHERLY DIRECTION. A SEPARATE P.E. CELL IS NOT REQUIRED FOR LUMINAIRES EQUIPPED WITH A REMOTE MONITORING NODE.

(R) INDICATES REMOVE EXISTING LED LUMINAIRE. REMOVED LED LUMINAIRE SHALL BE SALVAGED. SEE DELTA NOTE 27.
INSTALL NEW EQUIPMENT PER MATERIAL LIST. INSTALL AWG. #10 WIRES BETWEEN PULLBOX AND LUMINAIRE AND FUSE KIT HOLDER PER STD. DRAWING L-301-1.

INDICATES EXISTING ELECTROLIER, LUMINAIRE, AND LAMP TO BE REMOVED. REMOVED LED LUMINAIRE SHALL BE SALVAGED. SEE DELTA NOTE 27.

NOTICE TO CITY INSPECTOR/CONTRACTOR NO. 1

THE STREET LIGHTING EQUIPMENT ON THIS PLAN MAY BE SUBJECT TO CHANGE ("GREEN BOOK" 2006 §307-1.3). THE CONTRACTOR SHALL NOT ORDER ANY NEW STREET LIGHTING EQUIPMENT PRIOR TO APPROVAL BY THE BUREAU OF STREET LIGHTING, EQUIPMENT APPROVAL SECTION (M-40 FORM). CONTACT (213) 847-1831 FOR MORE INFORMATION.

NOTICE TO CITY INSPECTOR/CONTRACTOR NO. 2

CONTRACTOR SHALL NOTIFY THE STREET LIGHTING ENGINEER (TELEPHONE: 212-847-1459) A MINIMUM OF SEVEN (7) WORKING DAYS PRIOR TO WORKING ON ANY ELECTROLIER, WITH EXISTING TELECOMMUNICATION EQUIPMENT, WHICH REQUIRES REMOVAL AND/OR RELOCATION.

NOTICE TO CITY INSPECTOR/CONTRACTOR NO. 3
TEMPORARY STREET LIGHTING SYSTEM REQUIREMENT

TEMPORARY STREET LIGHTING SYSTEMS ARE REQUIRED FOR ALL PUBLIC, RIGHT-OF-WAY (ROADWAY, SIDEWALKS, WALKWAYS, UNDERPASSES, DETOUR ROADS, ETC.) WHERE EXISTING STREET LIGHTING SYSTEMS ARE BEING REPLACED OR NEW STREET LIGHTING SYSTEMS ARE BEING CONSTRUCTED.

PROCEDURE FOR STREET LIGHT CIRCUIT CLEARANCE

- HIGH VOLTAGE CIRCUIT CLEARANCE REQUESTS SHALL BE MADE TO THE BUREAU OF STREET LIGHTING AND WILL BE PERFORMED BY CITY CREWS.
- LOW VOLTAGE CIRCUIT CLEARANCE SHALL BE PERFORMED BY THE QUALIFIED CONTRACTOR RESPONSIBLE FOR CONSTRUCTION PROJECTS.
- PRIOR TO CONSTRUCTION, THE CONTRACTOR SHALL SUBMIT TWO (2) COPIES OF THE PLAN (24"X36") AND NOTIFY THE INSPECTOR TO SUBMIT "CONSTRUCTION START NOTICE" AND M-21 FORM TO LADWP STREET LIGHT SUPPORT (1141 W. SECOND STREET, BUILDING B, 3RD FLOOR LOS ANGELES, 90012)

FOR DETAILED PROCEDURES, SEE WWW.bsl.lacity.org
(CLICK ON THE BUSINESS/CONTRACTORS LINK).

(30) THE LUMINAIRE CATALOG NUMBERS ARE AS FOLLOWS OR BSL APPROVED EQUAL:
200W HPS EQ. (LEOTEK ECOBRA 11M) EC3-11M-MV-NW-3-GY-650-PCR7
250W HPS EQ. (LEOTEK ECOBRA 14M @ 530mA) EC4-14M-MV-NW-3-GY-530-PCR7

(29) THE CONTRACTOR SHALL VALIDATE THE CATALOG NUMBERS WITH THE BUREAU OF STREET LIGHTING (PHONE NO. 213-847-1347) PRIOR TO M-40 SUBMITTAL.

(28) INSTALL TYPE 3 PULLBOX. ALL TYPE 3 PULLBOXES SHALL BE OF "COMPOSITE/POLYMER" MATERIAL, W/BOLT-DOWN LID AND SHALL COMPLY WITH STANDARD PLAN "COMPOSITE TYPE 3_REV. A" AND APPROVED BY BUREAU OF STREET LIGHTING.

(27) THE CONTRACTOR SHALL MAKE NECESSARY ARRANGEMENT AND USE EXTREME CARE IN REMOVING AND TRANSPORTING EXISTING TO THE BUREAU OF STREET LIGHTING FIELD OPERATIONS DIVISION (FOD) YARD. REFER TO GENERAL NOTE 10.

(26) INSTALL FUSE HOLDER(S), FUSE(S) AND CONNECT WIRES INSIDE TYPE 2 PULLBOX.

(25) INSTALL TYPE 2 PULLBOX. ALL PULLBOXES SPECIFIED SHALL BE OF "COMPOSITE/POLYMER" MATERIAL WITH BOLT-DOWN LID AND SHALL COMPLY WITH STANDARD PLAN "COMPOSITE TYPE 2_REV. B" AND APPROVED BY BUREAU OF STREET LIGHTING.

(24) TAPE ENDS OF SPARE WIRE.

(23) INSTALL THREE MULTIPLE CIRCUIT WIRES. (COLOR CODE: 1-RED, 1-BLACK, 1-WHITE)

(22) REMOVE EXISTING STREET LIGHTING WIRES.

(21) MULTIPLE SERVICE LOCATION. INTERCEPT CONDUIT INSTALLED BY OTHERS AND INSTALL TYPE 3 SERVICE PULLBOX. VERIFY EXACT LOCATION OF CONDUIT. PHONE DEPT. OF WATER AND POWER UNDERGROUND ENGINEERING FIVE DAYS PRIOR TO START OF WORK AT THIS LOCATION. (PHONE: 213-367-9966).

(20) CONTRACTOR SHALL REQUEST A PERMIT TO PRUNE TREE FROM THE URBAN FORESTRY DIVISION (213) 847-3077, FIVE DAYS PRIOR TO THE INSTALLATION OF ELECTROLIER. ALL TREE WORK SHALL BE PERFORMED TO TREE CARE PROFESSION BEST MANAGEMENT PRACTICES AND TO THE SATISFACTION OF THE URBAN FORESTRY DIVISION.

(19) INSTALL APPROVED CONNECTING DEVICES PER DETAIL "B", BUREAU OF STREET LIGHTING STANDARD DRAWING NO. L-301-1.

(18) INSTALL APPROVED CONNECTING DEVICES PER DETAIL "A", BUREAU OF STREET LIGHTING STANDARD DRAWING NO. L-301-1.

(17) MULTIPLE SERVICE LOCATION. INSTALL 10' OF 2" GALVANIZED CONDUIT SERVICE RISER ON POLE. EXTEND CONDUIT TO THE ALLEY B.C. AND INSTALL TYPE 3 PULLBOX UNLESS OTHERWISE SPECIFIED. INSTALL PULLWIRE.

(16) INSTALL FIVE MULTIPLE CIRCUIT WIRES: (COLOR CODE: 2-RED, 2-BLACK, 1-WHITE)

(15) INSTALL TWO MULTIPLE CIRCUIT WIRES: (COLOR CODE: 1-BLACK, 1-WHITE)

(14) INSTALL TWO MULTIPLE CIRCUIT WIRES: (COLOR CODE: 1-RED, 1-WHITE)

(13) INSTALL 1" CONDUIT BEND.

(12) INSTALL ADDITIONAL 2" CONDUIT BEND FOR TRAFFIC SIGNAL WIRING.

(11) INSTALL ONE APPROVED FUSE HOLDER WITH 30 AMP FUSE BETWEEN EACH SERVICE WIRE (NOT NEUTRAL WIRE) OR SERVICE WIRE CONNECTING DEVICE AND STREET LIGHTING CIRCUIT WIRE. SERVING COMPANY WILL INSTALL SERVICE.

(10) JOIN CONDUIT

(9) MULTIPLE SERVICE LOCATION. INSTALL TYPE 3 PULLBOX UNLESS OTHERWISE SPECIFIED AND 10' OF 2" GALVANIZED CONDUIT SERVICE RISER ON POLE. INSTALL PULLBOX NO CLOSER THAN 5' AND NO FARTHER THAN 15' FROM THE SERVICE POLE.

(8) SERIES SERVICE POLE. INSTALL ONE TERMINAL CUTOFF BOX STANDARD PLAN B-3724 WITH ONE DISCONNECTING SWITCH FOR EACH CIRCUIT. SERVING COMPANY WILL INSTALL SERVICE.

(7) CONSTRUCT CASE 4 DRIVEWAY RETURN PER STANDARD PLAN NO. S-440

(6) CONSTRUCT CASE 3 DRIVEWAY RETURN PER STANDARD PLAN NO. S-440.

(5) INTERCEPT CONDUIT AND INSTALL PULLBOX.

(4) THREAD AND CAP CONDUIT AT END OF IMPROVEMENT.

(3) INSTALL CONDUIT ONLY.

(2) CONNECT WIRES (PER CIRCUIT DIAGRAM WHERE APPLICABLE).

(1) TERMINATE CONDUIT IN STREET LIGHTING PULLBOX.
THE ABOVE NOTES ARE APPLICABLE ONLY WHERE SPECIFIED ON THIS PLAN.

DELTA NOTES

TOTAL GENRAL BENEFIT STREETLIGHTS	
SYMBOL	QUANITY
⊗	8

PLANS ARE FINAL FOR CONSTRUCTION. ALL EQUIPMENT IS TO BE INSTALLED. PROJECT IS NOT SUBJECTED TO PROPOSITION 218 REQUIREMENTS. NEW STREET LIGHTS ARE DESIGNED AS GENERAL BENEFIT.

ALL CONSTRUCTION IS PROHIBITED ON MAJOR AND SECONDARY STREET BETWEEN:
6:00 A.M. TO 9:00 A.M.
3:30 P.M. TO 7:00 P.M.

PLAN OF ELECTROLIER LIGHTING SYSTEM

LADOT INT. NO.	BSL INT. NO.	BSL SHT. NO.	STREET (M)=MAJOR, (S)=SECONDARY, (L)=LOCAL, (C)=COLLECTOR	CROSS STREET (M)=MAJOR, (S)=SECONDARY, (L)=LOCAL, (C)=COLLECTOR
07160	1	BSL-110	6TH ST. (S)	MATEO ST. (M)

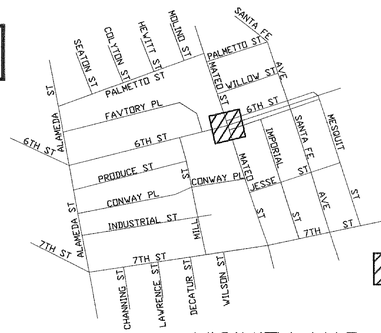

VICINITY MAP
NO SCLAE

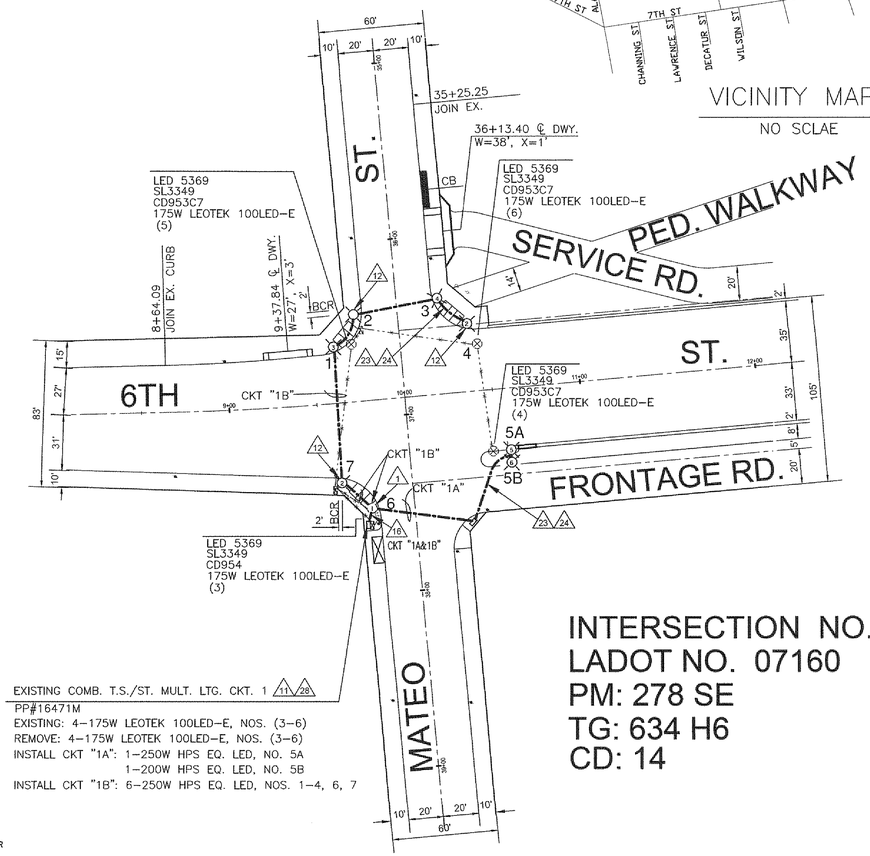

EXISTING COMB. T.S./ST. MULT. LTG. CKT. 1 (11) (28)
PP#16471M
EXISTING: 4-175W LEOTEK 100LED-E, NOS. (3-6)
REMOVE: 4-175W LEOTEK 100LED-E, NOS. (3-6)
INSTALL CKT "1A": 1-250W HPS EQ. LED, NO. 5A
1-200W HPS EQ. LED, NO. 5B
INSTALL CKT "1B": 6-250W HPS EQ. LED, NOS. 1-4, 6, 7

INTERSECTION NO. 1
LADOT NO. 07160
PM: 278 SE
TG: 634 H6
CD: 14

BUREAU OF ENGINEERING
OFFICIAL RECORD

40' 20' 0 20' 40'
1"=40' GRAPHIC SCALE

STREET LIGHTING PLANS
SIXTH STREET VIADUCT REPLACEMENT-6TH STREET AND MATEO STREET
W.O. E700224L (TASK 013) SL-8066

PLANS PREPARED BY:
V&A INC.
975 S. Fair Oaks Ave.
Pasadena, CA 91105
213.972.9700
SIGNATURE 05/18/16 DATE

REGISTERED PROFESSIONAL ENGINEER NOAH L. BUSCH No.CA 65608 Exp. 09/30/15 CIVIL STATE OF CALIFORNIA

CITY OF LOS ANGELES
ED EBRAHIMIAN, DIRECTOR BUREAU OF STREET LIGHTING

OTHER DEPARTMENT/BUREAU ACCEPTANCE			ACCEPTANCE	
DEPARTMENT OR BUREAU	ENGINEER	DATE		
ENGINEERING, DISTRICT OFFICE			STREET LIGHTING ENGINEER	5-24-2016 DATE
DEPT. OF TRANSPORTATION			for SENIOR STREET LIGHTING ENGINEER	5-24-2016 DATE
STREET SERVICES, URBAN FORESTRY			for DIRECTOR, BUREAU OF STREET LIGHTING	5-24-2016 DATE
ENGINEERING, STRUCTURAL				

DRAWING NO. BSL-110

SCALE OF ORIGINAL PLAN: 1"=40' | SHEET 87 OF 560 SHEET(S) | INDEX NUMBER P-38113

SIGNATURES		DATE
FIELD SURVEY BY	K. WONG	04-15-15
DRAWN BY	K. WONG	04-15-15
DESIGNED BY	K. WONG	04-15-15
CHECKED BY	K. WONG	04-15-15
SUPERVISED BY		

DM : N/A | P.M. NO.: 278SE
ELECTROLIER UNIT: ELECTROLIER 6 LUMINAIRE 8
SUPERSEDES PLAN NO.:
COUNCIL DISTRICT: 14
THOMAS GUIDE: PAGE 634-H6
COUNTY ASSESSOR'S PARCEL NO'S:

CONTRACTOR:	LAMPS:
INSPECTED BY:	ELECTS.: LAMPS:
DATE ENERGIZED	ELECTS.: LAMPS:
DATE ENERGIZED	ELECTS.: LAMPS:
CORRECTED TO "AS BUILT"	
BY	CHECKED

C:\caddlib\gw\kwong\west\dms64848\SL-110.dwg May 23, 2016 - 9:06am

CITY OF LOS ANGELES
DEPARTMENT OF PUBLIC WORKS
BUREAU OF STREET LIGHTING

ADDENDUM 5

THE CITY OF LOS ANGELES OR ITS OFFICERS OR AGENTS SHALL NOT BE RESPONSIBLE FOR THE ACCURACY OR COMPLETENESS OF ELECTRONIC COPIES OF THIS PLAN SHEET.

NOTICE TO CONTRACTORS GENERAL NOTES

1. ALL WORK SHALL CONFORM TO THE LATEST BOARD OF PUBLIC WORKS OF THE CITY OF LOS ANGELES ADOPTED EDITION AND SUPPLEMENTS TO THE "GREENBOOK STANDARD SPECIFICATIONS FOR PUBLIC WORKS CONSTRUCTION" AS MODIFIED BY THE CORRESPONDING ISSUE OF THE BROWN BOOK, THE LATEST EDITION OF THE BUREAU OF STREET LIGHTING "SPECIAL SPECIFICATIONS", AND THE SPECIAL PROVISIONS.
2. ELECTROLIERS SHALL BE INSTALLED WITH CENTERLINE 30" BEHIND THE CURB FACE, AND WITH LUMINAIRE ARM ORIENTED OVER THE STREET AND PERPENDICULAR TO ITS CENTER LINE, EXCEPT AS OTHERWISE SPECIFIED HEREON.
3. ELECTROLIERS SPECIFIED TO BE LOCATED INSIDE OF THE CURB RETURN SHALL BE INSTALLED WITH THE CENTER OF THE ELECTROLIER 30 INCHES BEHIND THE CURB FACE MEASURED RADIALLY, AND WITH THE LUMINAIRE ARM ORIENTED OVER THE STREET AND PERPENDICULAR TO THE STREET CENTERLINE.
4. ELECTROLIERS SHALL BE ERECTED SO THAT THE BASE DOOR IS PERPENDICULAR TO THE CURB AND LOCATED ON THE SIDE OF THE ELECTROLIER AWAY FROM ONCOMING TRAFFIC.
5. ALL EXISTING ELECTROLIERS SPECIFIED TO BE REMOVED OR MODIFIED ON THIS PLAN SHALL BE MAINTAINED IN SERVICE UNTIL THE NEW ELECTROLIER LIGHTING SYSTEM IS PLACED IN SERVICE, UNLESS OTHERWISE SPECIFIED HEREON. ALL OTHER ELECTROLIERS ON CIRCUITS AFFECTED BY THIS PLAN SHALL BE MAINTAINED IN SERVICE. CONTRACTOR MAY PROVIDE ALTERNATE LIGHTING IN LIEU OF MAINTAINING EXISTING ELECTROLIER LIGHTS IN SERVICE PROVIDED THAT SUCH ARRANGEMENTS ARE APPROVED BY THE ENGINEER.
6. ALL EQUIPMENT REQUIRED HEREON FOR FURNISHING ELECTRICAL SERVICE FOR EACH CIRCUIT SHALL BE INSTALLED AND INSPECTED PRIOR TO ANY OTHER CONSTRUCTION ON THAT CIRCUIT UNLESS OTHERWISE APPROVED BY THE ENGINEER.
7. THE CONTRACTOR SHALL GIVE WRITTEN NOTICE, 72 HOURS IN ADVANCE OF THE REMOVAL OF AN ELECTROLIER, TO ANY PUBLIC AGENCY MAINTAINING EQUIPMENT SUPPORTED BY THAT ELECTROLIER.
8. FOUNDATIONS AND PULLBOXES NOT REMAINING IN SERVICE SHALL BE REMOVED. THE RESULTING EXCAVATION SHALL BE FILLED WITH MATERIAL SIMILAR TO ADJACENT MATERIAL AND SATISFACTORILY COMPACTED WITH A MECHANICAL COMPACTOR IN LAYERS NOT EXCEEDING 12 INCHES. THE SURFACE SHALL BE FINISHED TO MATCH THE ADJACENT SURFACE.
9. THE CONTRACTOR SHALL REQUEST A BURN TEST BY NOTIFYING THE BUREAU OF CONTRACT ADMINISTRATION PROJECT INSPECTOR A MINIMUM OF 7 CALENDAR DAYS IN ADVANCE OF THE DATE ON WHICH A BURN TEST IS DESIRED.
10. CONTRACTOR SHALL GIVE THREE WORKING DAYS NOTICE (PHONE 323-913-4743) PRIOR TO DELIVERY OF ANY EQUIPMENT SPECIFIED TO BE DELIVERED TO THE BUREAU OF STREET LIGHTING YARD AT 4550 SANTA MONICA BLVD.. SUCH DELIVERIES SHALL BE BETWEEN 8:30 AM AND 3:00 PM AND SHALL INCLUDE ALL HANDLING AND LOADING FROM THE TRUCK BY THE CONTRACTOR. CONTRACTOR MUST SUPPLY A COPY OF THE STREET LIGHTING SHEETS WITH THE DELIVERY OF MATERIAL.
11. PULLBOXES LOCATED ADJACENT TO DRIVEWAYS AND ALLEYS SHALL BE INSTALLED AT A MINIMUM DISTANCE OF FIVE FEET FROM THE TOP OF THE "X" OF A CASE 1 OR CASE 2 DRIVEWAY OR AT A MINIMUM DISTANCE OF TWO FEET FROM THE B.C. OF A CASE 3 OR CASE 4 DRIVEWAY OR FIVE FEET FROM TRAVELLED WAY OF THE ALLEY.
12. PULLBOXES INSTALLED AT INTERSECTIONS OF LOCAL STREET SHALL BE INSTALLED NO CLOSER TO THE INTERSECTIONS THAN THE B.C.R. OF AN ASSUMED FUTURE 25' RADIUS CURB RETURN UNLESS OTHERWISE APPROVED BY THE ENGINEER. PULLBOXES INSTALLED AT INTERSECTIONS WHICH INVOLVE ONE OR MORE MAJOR OR SECONDARY STREETS SHALL BE INSTALLED NO CLOSER TO INTERSECTIONS THAN THE B.C.R. OF AN ASSUMED FUTURE 35' RADIUS CURB RETURN UNLESS OTHERWISE APPROVED BY THE ENGINEER.
13. CONDUIT SHALL BE INSTALLED AROUND ALL EXISTING AND/OR PROPOSED CATCH BASINS PER BUREAU OF STREET LIGHTING STANDARD DRAWING NO. L-304-0 UNLESS OTHERWISE SPECIFIED.
14. ALL SCREWS PROVIDED FOR ELECTROLIER STANDARD BASE DOORS AND BASE COVERS SHALL BE CADMIUM PLATED STEEL, 1/4-20NC MACHINE SCREWS, WITH PHILLIPS RECESSED ROUND HEADS.
15. WARNING: SAFETY CLEARANCE SHALL BE OBTAINED DAILY FROM THE AFFECTED UTILITY COMPANY BEFORE DOING ANY WORK IN CLOSE PROXIMITY TO ANY OVERHEAD ELECTRIC LINE. SEE SECTIONS 16430 AND 2100 OF SPECIAL SPECIFICATIONS.
16. UNLESS OTHERWISE SPECIFIED HEREON, LUMINAIRES SHALL PROVIDE A MEDIUM, CUTOFF, TYPE III, LIGHTING DISTRIBUTION PATTERN CONFORMING TO I.E.S DESIGNATION.
17. CONTRACTOR SHALL BE RESPONSIBLE FOR PRESERVING THE CONDITION OF ALL EXISTING EQUIPMENT TO BE REUSED, MODIFIED OR RETURNED TO THE BUREAU OF STREET LIGHTING YARD.
18. EQUIPMENT INDICATED "DISPOSE" SHALL BECOME THE PROPERTY OF THE CONTRACTOR AND BE DISPOSED OF BY THE CONTRACTOR.
19. STREET LIGHTING CONDUIT SHALL BE INSTALLED BY JACKING OR DRILLING METHODS. INSTALLATION OF CONDUIT BY OPEN TRENCHING IS NOT PERMITTED UNLESS APPROVED BY THE DIRECTOR, BUREAU OF STREET LIGHTING.
20. CONTRACTOR SHALL REPAIR AT HIS COST, THE DAMAGE CAUSED TO EXISTING SPRINKLER SYSTEMS DURING THE CONSTRUCTION OF THIS PROJECT. REPAIRS SHALL BE MADE WITHIN 5 WORKING DAYS AFTER DAMAGE OCCURS.
21. ALL ELECTROLIERS SPECIFIED HEREON SHALL INCLUDE A TYPE 2 PULLBOX, TO BE SUPPLIED AND INSTALLED, UNLESS OTHERWISE SPECIFIED.
22. CONTRACTOR SHALL BE RESPONSIBLE TO ALL EXISTING ELECTROLIERS SPECIFIED TO BE RELOCATED AND MODIFIED ON THIS PLAN. PRIOR TO REINSTALLATION, CONTRACTOR SHALL REPAIR OR REPLACE ALL EXISTING STREET LIGHTING FACILITIES FOUND TO BE DAMAGED PRIOR TO START OF OR DURING THE CONSTRUCTION OF THIS PROJECT AT NO COST TO THE CITY.

SUPPLEMENTAL NOTES

1. CONTRACTOR SHALL LOCATE & PROTECT SUBSTRUCTURE(S) SHOWN HEREON, & SHALL PROVIDE FOR A MINIMUM 12" HORIZONTAL CLEARANCE BETWEEN FOUNDATION & SUBSTRUCTURES. IN THE EVENT A 12" CLEARANCE CANNOT BE ACHIEVED, THE CONTRACTOR SHALL MAKE ARRANGEMENTS FOR RELOCATION OF SUBSTRUCTURES AT NO COST TO THE CITY.
2. IN THE EVENT OF OVERHEAD LINES CONFLICT WITH ELECTROLIERS THE CONTRACTOR SHALL MAKE NECESSARY ARRANGEMENTS WITH THE DEPT. OF WATER AND POWER TO RAISE THEIR OVERHEAD FACILITIES IN ORDER TO PROVIDE FOR THE FOLLOWING CLEARANCES WITH EXISTING AND/OR PROPOSED ELECTROLIERS.
   LOW VOLTAGE: MINIMUM 3' CLEARANCE BETWEEN OVERHEAD LINES AND ELECTROLIERS
   HIGH VOLTAGE: MINIMUM 6' CLEARANCE BETWEEN OVERHEAD LINES AND ELECTROLIERS
3. STREET TREES SHALL NOT BE PLANTED CLOSER THAN 20' FROM EXISTING OR PROPOSED ELECTROLIER, UNLESS OTHERWISE INDICATED.
4. IN THE EVENT OF OVERHEAD COMMUNICATION LINE CONFLICT WITH ELECTROLIERS, CONTRACTOR SHALL MAKE NECESSARY ARRANGEMENTS TO PROVIDE A MINIMUM 12" CLEARANCE.
5. PROPOSED ELECTROLIER FOUNDATIONS AND PULLBOXES SHALL BE INSTALLED OUTSIDE OF ACCESS RAMP AREAS. EXISTING FOUNDATIONS AND PULLBOXES SHALL BE RECONSTRUCTED TO CLEAR ACCESS RAMPS BY A MINIMUM OF 12". EXISTING CONDUIT SHALL BE LOWERED AS NECESSARY PER SEC. 307-2.5 OF THE STANDARD SPECIFICATIONS FOR PUBLIC WORKS CONSTRUCTION.
6. CONDUIT THAT IS TO BE ABANDONED SHALL HAVE WIRES REMOVED. THE CONDUIT SHALL BE REMOVED TO A DEPTH OF AT LEAST 12" BELOW THE SURFACE AND HAVE BOTH ENDS CRIMPED.
7. NOTWITHSTANDING SECTION 16950.2 OF THE SPECIAL SPECIFICATIONS FOR THE CONSTRUCTION STREET LIGHTING SYSTEMS MAGNETIC REGULATING BALLASTS ARE REQUIRED IN ALL COBRA-HEAD LUMINAIRES.
8. ALL #10 AWG WIRES USED FOR MULTIPLE CIRCUIT ELECTROLIER WIRING REFERENCED IN STANDARD DRAWING NO. L-301-1 SHALL BE #10 AWG SOLID COPPER CONDUCTORS.
9. AT LEAST TWO (2) WORKING DAYS PRIOR TO STARTING ANY EXCAVATION. THE CONTRACTOR MUST OBTAIN AN INQUIRY I.D. NUMBER FROM UNDERGROUND SERVICE ALERT BY CALLING (800) 422-4133 OR BY DIALING 811.

SERIES CIRCUIT NOTES

1. WARNING: SAFETY CLEARANCE SHALL BE OBTAINED DAILY FROM THE SERVING COMPANY, AND "MEN AT WORK" SIGNS SHALL BE POSTED AT THE SERVICE POINT BEFORE ANY WORK IS DONE OR ANY CONNECTIONS MADE ON AN EXISTING CIRCUIT. SEE SECTIONS 16430 AND 2100 OF SPECIAL SPECIFICATIONS.
2. SERIES CIRCUIT WIRE SHALL BE NO. 8 AWG STRANDED COPPER CONDUCTOR, INSULATED WITH 0.110" APPROVED POLYETHYLENE COMPOUND RATED FOR 5,000 VOLT OPERATION.
3. TWO OR MORE TURNS OF SELF-ADHESIVE COLORED TAPE WITH A MINIMUM WIDTH OF 1/2 INCH SHALL BE APPLIED TO EACH CABLE IN ALL SERIES CIRCUITS WHERE WORK IS BEING DONE AND WHERE TWO OR MORE CIRCUITS EXIST IN A COMMON PULLBOX OR POST BASE. THE TAPE SHALL BE APPLIED ON THE CABLE BETWEEN THE SPLICES AND THE CONDUIT, USING ONE COLOR FOR EACH CIRCUIT. THE COLORS WHITE, GRAY, GREEN,AND ORANGE SHALL NOT BE USED.
4. CONTRACTOR SHALL GIVE THE BUREAU OF STREET LIGHTING YARD (PHONE 323-913-4744) TWO WORKING DAYS NOTICE BEFORE ANY WORK IS DONE ON AN EXISTING SERIES CIRCUIT.

CIRCUIT DIAGRAM LEGEND

- NEW WIRE
- EXISTING WIRE
- DISCONNECT AND REMOVE WIRE
- CONNECT WIRE
- DISCONNECT WIRE AND TAPE ENDS
- NEW LAMP
- EXISTING LAMP
- REMOVE EXISTING LAMP

MULTIPLE CIRCUIT NOTES

1. WARNING: SAFETY CLEARANCE SHALL BE OBTAINED DAILY FROM THE SERVING COMPANY BEFORE DOING ANY WORK OR MAKING ANY CONNECTIONS ON AN EXISTING CIRCUIT. SEE SECTIONS 16430 AND 2100 OF SPECIAL SPECIFICATIONS.
2. MULTIPLE CIRCUIT WIRE SHALL BE NO. 8 AWG STRANDED COPPER CONDUCTOR. TYPE THWN/THHN INSULATION, UL APPROVED FOR 600 VOLT OPERATION UNLESS OTHERWISE SPECIFIED HEREON.
3. THREE WIRES (COLOR CODE: 1-RED, 1-BLACK, 1-WHITE,) SHALL BE INSTALLED IN ALL MULTIPLE CIRCUIT CONDUIT UNLESS OTHERWISE PROVIDED FOR HEREON.
4. EVEN NUMBERED ELECTROLIERS SHALL BE CONNECTED TO RED AND WHITE WIRES AND ODD NUMBERED ELECTROLIERS SHALL BE CONNECTED TO BLACK AND WHITE WIRES.
5. ELECTROLIERS SHALL BE WIRED PER TYPICAL MULTIPLE CIRCUIT ELECTROLIER WIRING DETAIL, BUREAU OF STREET LIGHTING STANDARD DRAWING NO. L-301-1, UNLESS OTHERWISE SPECIFIED.
6. MULTIPLE CIRCUITS IN CONDUITS CONTAINING MORE THAN THREE CONDUCTORS SHALL BE APPROPRIATELY IDENTIFIED BY LABELING CONDUCTORS "A", "B", ETC. WITH APPROVED SELF-LAMINATING LETTER TAPE WRAPPED AT LEAST TWICE AROUND THE CONDUCTOR IN EACH PULLBOX. (W.H. BRADY, SPECIAL SELF-LAMINATING WIRE MARKERS OR EQUIVALENT)

LEGEND

- EXISTING ELECTROLIER TO BE RELOCATED
- EXISTING UTILITARIAN LIGHTS ON WOODEN POLES WHICH SHALL BE MAINTAINED IN SERVICE UNTIL THE PERMANENT ELECTROLIER LIGHTING SYSTEM IS PLACED IN SERVICE. CONTRACTOR MAY PROVIDE ALTERNATE LIGHTING IN LIEU OF MAINTAINING EXISTING UTILITARIAN LIGHTS IN SERVICE PROVIDED THAT SUCH ARRANGEMENTS ARE APPROVED BY THE ENGINEER.
- EXISTING ELECTROLIER TO BE REMOVED. (SEE GENERAL NOTE 8)
- NEW ELECTROLIER
- EXISTING ELECTROLIER, NOT TO BE REMOVED OR MODIFIED
- PULLBOX TYPE 2 UNLESS OTHERWISE SHOWN HEREON. (SEE DELTA NO. 26). ADDITIONAL PULLBOXES SHALL BE REQUIRED AS SPECIFIED.
- EXISTING PULLBOX
- EXISTING 1" CONDUIT
- EXISTING 1-1/2" CONDUIT
- EXISTING 2" CONDUIT
- NEW 1" CONDUIT
- NEW 1-1/2" CONDUIT
- NEW 2" CONDUIT
- ABANDON CONDUIT (SEE GENERAL NOTE NO.8 & SUPPLEMENTAL NOTE NO.7)
- EXISTING ELECTROLIER FOUNDATION
- FUTURE ELECTROLIER
- PROPOSED CATCH BASIN
- FOR PROP. 218 AND GIS SECTION USE ONLY. (GENERAL BENEFIT)

NOTICE TO CONTRACTORS MATERIAL LIST

FOLLOWING IS A SUMMARY OF NEW ELECTROLIERS, LUMINAIRES, LAMPS, BALLASTS, FOUNDATIONS, AND OTHER EQUIPMENT WHICH SHALL BE SUPPLIED AND INSTALLED BY THE CONTRACTOR. THIS IS NOT INTENDED TO BE A COMPLETE LIST OF ALL MATERIALS REQUIRED

SYMBOL	ITEM	QUANTITY	DESCRIPTION	STANDARD PLAN NO.	REV. NO.	NOMINAL WATTAGE
① ②	ELECTROLIER	6	CD-953C WITH 4' LUMINAIRE ARM, TYPE 2 PULLBOX	B-3685	3	
①	LUMINAIRE	4	150W HPS EQ. LED △29			64W
②	LUMINAIRE	2	250W HPS EQ. LED △29			159W
① ②	ROAM	6	REMOTE MONITORING NODE △30			

△30 ALL COBRAHEAD LUMINAIRES REGARDLESS OF WATTAGE ON LOW VOLTAGE, MULTIPLE CIRCUITS SHALL BE EQUIPPED WITH A MONITORING NODE. THE UNIT SHOULD BE PICKED UP AT THE BUREAU'S PLAN COUNTER AT 1149 S. BROADWAY, SUITE #200, LOS ANGELES, CA 90015. THE UNITS WILL BE PROVIDED FOR A NON-REFUNDABLE FEE (APPROXIMATELY $ 100.00 PER UNIT). THE CONTRACTOR SHALL GIVE SEVEN WORKING DAYS NOTICE (TELEPHONE 231 847-1498) PRIOR TO PICKING UP THE MONITORING UNITS. NODES SHALL BE INSTALLED INTO THE PHOTOELECTRIC CONTROL STANDARD SOCKET PER INSI/NEMA C-136.10 AND SHALL BE ORIENTED IN A NORTHERLY DIRECTION. A SEPARATE P.E. CELL IS NOT REQUIRED FOR LUMINAIRES EQUIPPED WITH A REMOTE MONITORING NODE.

△29 THE LUMINAIRE CATALOG NUMBERS ARE AS FOLLOWS OR BSL APPROVED EQUAL:
150W HPS EQ. LED (CREE XSP2Φ€) CAT. # BXS9002$-E BXSPA03HE-USQR
250W HPS EQ. LED (LEOTEK GCOBRA 90E) CAT. # GC2-90E-MV-NW-3-GY-530

△28 INSTALL TYPE 3 PULLBOX FOR DWP SERVICE. ALL TYPE 3 PULLBOXES SHALL BE OF "COMPOSITE/POLYMER" MATERIAL, W/BOLT-DOWN LID AND SHALL COMPLY WITH STANDARD PLAN "COMPOSITE TYPE 3, REV A" AND APPROVED BY BUREAU OF STREETLIGHTING.

△27 CONTRACTOR SHALL LOCATE AND PROTECT STREET LIGHTING PULLBOX PRIOR TO TERMINATING NEW CONDUIT TO PULLBOX. IN THE EVENT THE PULLBOX DOES NOT EXIST OR IS MISSING, THE CONTRACTOR SHALL CONTACT THE PRIVATE ENGINEER (ENGINEER ON RECORD) AND BUREAU OF STREET LIGHTING TO OBTAIN AN APPROVAL FOR THE INSTALLATION OF NEW PULLBOX AT NO COST TO THE CITY.

△26 INSTALL FUSE HOLDER(S), FUSE(S) AND CONNECT WIRES INSIDE TYPE 2 PULLBOX.

△25 INSTALL TYPE 2 PULLBOX. ALL PULLBOXES SPECIFIED SHALL BE OF "COMPOSITE/POLYMER" MATERIAL WITH BOLT-DOWN LID AND SHALL COMPLY WITH STANDARD PLAN "COMPOSITE TYPE 2, REV B" AND APPROVED BY BUREAU OF STREETLIGHTING.

△24 TAPE ENDS OF SPARE WIRE.

△23 INSTALL THREE MULTIPLE CIRCUIT WIRES: (COLOR CODE: 1-RED, 1-BLACK, 1-WHITE)

△22 REMOVE EXISTING STREET LIGHTING WIRES.

△21 MULTIPLE SERVICE LOCATION. INTERCEPT CONDUIT INSTALLED BY OTHERS AND INSTALL TYPE 3 SERVICE PULLBOX. VERIFY EXACT LOCATION OF CONDUIT. PHONE DEPT. OF WATER AND POWER UNDERGROUND ENGINEERING FIVE DAYS PRIOR TO START OF WORK AT THIS LOCATION. (PHONE: 213-367-3003)

△20 CONTRACTOR SHALL REQUEST A PERMIT TO PRUNE TREE FROM THE URBAN FORESTRY DIVISION (213) 847-3077, FIVE DAYS PRIOR TO THE INSTALLATION OF ELECTROLIER. ALL TREE WORK SHALL BE PERFORMED TO TREE CARE PROFESSION BEST MANAGEMENT PRACTICES AND TO THE SATISFACTION OF THE URBAN FORESTRY DIVISION.

△19 INSTALL APPROVED CONNECTING DEVICES PER DETAIL "B", BUREAU OF STREET LIGHTING STANDARD DRAWING NO. L-301-1.

△18 INSTALL APPROVED CONNECTING DEVICES PER DETAIL "A", BUREAU OF STREET LIGHTING STANDARD DRAWING NO. L-301-1.

△17 MULTIPLE SERVICE LOCATION. INSTALL 10' OF 2" GALVANIZED CONDUIT SERVICE RISER ON POLE. EXTEND CONDUIT TO THE ALLEY B.C. AND INSTALL TYPE 3 PULLBOX UNLESS OTHERWISE SPECIFIED. INSTALL PULLWIRE.

△16 INSTALL FIVE MULTIPLE CIRCUIT WIRES: (COLOR CODE: 2-RED, 2-BLACK, 1-WHITE)

△15 INSTALL TWO MULTIPLE CIRCUIT WIRES: (COLOR CODE: 1-BLACK, 1-WHITE)

△14 INSTALL TWO MULTIPLE CIRCUIT WIRES: (COLOR CODE: 1-RED, 1-WHITE)

△13 INSTALL 1" CONDUIT BEND.

△12 INSTALL ADDITIONAL 2" CONDUIT BEND FOR TRAFFIC SIGNAL WIRING.

△11 INSTALL ONE APPROVED FUSE HOLDER WITH 30 AMP FUSE BETWEEN EACH SERVICE WIRE (NOT NEUTRAL WIRE) OR SERVICE WIRE CONNECTING DEVICE AND STREET LIGHTING CIRCUIT WIRE. SERVING COMPANY WILL INSTALL SERVICE.

△10 JOIN CONDUIT

△9 MULTIPLE SERVICE LOCATION. INSTALL TYPE 3 PULLBOX UNLESS OTHERWISE SPECIFIED AND 10' OF 2" GALVANIZED CONDUIT SERVICE RISER ON POLE. INSTALL PULLBOX NO CLOSER THAN 5' AND NO FARTHER THAN 15' FROM THE SERVICE POLE.

△8 SERIES SERVICE POLE. INSTALL ONE TERMINAL CUTOFF BOX STANDARD PLAN B-3724 WITH ONE DISCONNECTING SWITCH FOR EACH CIRCUIT. SERVING COMPANY WILL INSTALL SERVICE.

△7 CONSTRUCT CASE 4 DRIVEWAY RETURN PER STANDARD PLAN NO. S-440

△6 CONSTRUCT CASE 3 DRIVEWAY RETURN PER STANDARD PLAN NO. S-440.

△5 INTERCEPT CONDUIT AND INSTALL PULLBOX.

△4 THREAD AND CAP CONDUIT AT END OF IMPROVEMENT.

△3 INSTALL CONDUIT ONLY.

△2 CONNECT WIRES (PER CIRCUIT DIAGRAM WHERE APPLICABLE).

△1 TERMINATE CONDUIT IN STREET LIGHTING PULLBOX.

THE ABOVE NOTES ARE APPLICABLE ONLY WHERE SPECIFIED ON THIS PLAN.

DELTA NOTES

PLAN OF ELECTROLIER LIGHTING SYSTEM

(M)=MAJOR, (S)=SECONDARY, (L)=LOCAL, (C)=COLLECTOR STREET	FROM	TO
E. 6TH ST (C)	SANTA FE AVE (S)	MESQUIT ST (C)

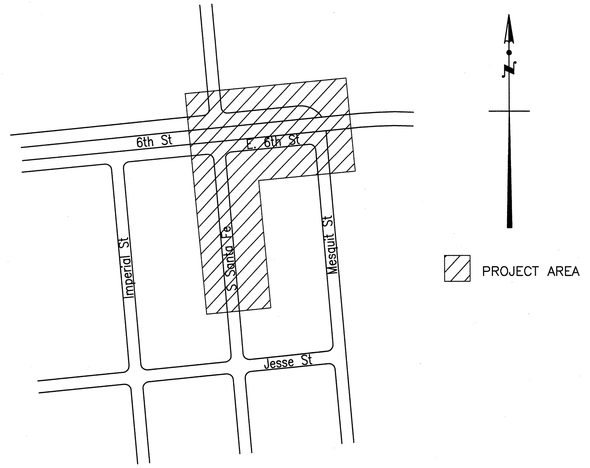

VICINITY MAP

NOT TO SCALE

ALL CONSTRUCTION IS PROHIBITED ON MAJOR AND SECONDARY STREET BETWEEN:
6:00 A.M. TO 9:00 A.M.
3:30 P.M. TO 7:00 P.M.

PROCEDURE FOR STREET LIGHT CIRCUIT CLEARANCE

- HIGH VOLTAGE CIRCUIT CLEARANCE REQUESTS SHALL BE MADE TO THE BUREAU OF STREET LIGHTING AND WILL BE PERFORMED BY CITY CREWS.
- LOW VOLTAGE CIRCUIT CLEARANCE SHALL BE PERFORMED BY THE QUALIFIED CONTRACTOR RESPONSIBLE FOR CONSTRUCTION PROJECTS.
- PRIOR TO CONSTRUCTION, THE CONTRACTOR SHALL SUBMIT TWO (2) COPIES OF THE PLAN (24"X36") AND NOTIFY THE INSPECTOR TO SUBMIT "CONSTRUCTION START NOTICE" AND M-21 FORM TO LADWP STREET LIGHT SUPPORT (111 N. HOPE STREET, RM 910, LOS ANGELES, CA 90012)

FOR DETAILED PROCEDURES, SEE WWW.bsl.lacity.org (CLICK ON THE BUSINESS/CONTRACTORS LINK).

THIS PROJECT IS IMPACTED BY PROPOSITION 218. ASSESSMENT RATES HAVE BEEN VERIFIED FOR THIS PROJECT BY THE PROPOSITION 218 COMPLIANCE SECTION.
APPROVED R.F Flamenco DATE 11/4/14
RUBEN FLAMENCO

NOTICE TO CITY INSPECTOR/CONTRACTOR NO. 1

THE STREET LIGHTING EQUIPMENT ON THIS PLAN MAY BE SUBJECT TO CHANGE ("GREEN BOOK" 2006 §307-1.3). THE CONTRACTOR SHALL NOT ORDER ANY NEW STREET LIGHTING EQUIPMENT PRIOR TO APPROVAL BY THE BUREAU OF STREET LIGHTING, EQUIPMENT APPROVAL SECTION (M-40 FORM). CONTACT (213) 847-1831 FOR MORE INFORMATION.

NOTICE TO CITY INSPECTOR/CONTRACTOR NO. 2

THIS PROJECT IS IMPACTED BY PROPOSITION 218

ELECTROLIER(S) SPECIFIED HEREON SHALL NOT BE INSTALLED UNTIL THE LEGAL REQUIREMENTS OF PROPOSITION 218 HAVE BEEN SATISFIED. THE CITY INSPECTOR SHALL CONTACT THE BUREAU OF STREET LIGHTING, ENGINEERING AND TECHNICAL SERVICES DIVISION AT (213) 847-1431 FOR CONSTRUCTION CLEARANCE. UNDERGROUND FACILITIES MAY BE INSTALLED PRIOR TO PROPOSITION 218 CONSTRUCTION CLEARANCE.

NOTICE TO CITY INSPECTOR/CONTRACTOR NO. 3

THIS PROJECT IS SUBJECT TO "BUY AMERICA" REQUIREMENTS OF TITLE 23 UNITED STATES CODE, SECTION 313. CERTIFICATION OF COMPLIANCE IS REQUIRED TO BE SUBMITTED TO THE PROJECT INSPECTOR. SEE PROJECT SPECIFICATIONS.

CONTRACTOR: ELECT'S: LAMPS:
INSPECTED BY: ELECT'S: LAMPS:
DATE ENERGIZED ELECT'S: LAMPS:
DATE ENERGIZED ELECT'S: LAMPS:
CORRECTED TO "AS BUILT" CHECKED
BY

DM : 124-5417 P.M. NO: 294
ELECTROLIER UNIT: #
SUPERCEDES PLAN NO:
THOMAS GUIDE: 634-H8
COUNTY ASSESSOR'S PARCEL NO'S: 5164-015-001, 5164-015-900, 5164-015-021

SIGNATURES		DATE
FIELD SURVEY BY	CITY OF LOS ANGELES SURVEY DEPT.	06/04/14
DRAWN BY	RYAN JOHNSON	10/24/14
DESIGNED BY	LEE BRAGG	10/24/14
CHECKED BY		10/25/14
SUPERVISED BY		

PLANS PREPARED BY:
HNTB Corporation
One Bunker Hill Bldg.,
601 West 5th St., Ste 1000
Los Angeles, California 90071
Lee Bragg 10/24/2014
SIGNATURE DATE

REGISTERED PROFESSIONAL ENGINEER LEE M. BRAGG No. E20781 Exp. 6/30/16 ELECTRICAL STATE OF CALIFORNIA

CITY OF LOS ANGELES
ED EBRAHIMIAN, DIRECTOR BUREAU OF STREET LIGHTING

OTHER DEPARTMENT/BUREAU ACCEPTANCE			ACCEPTANCE	
DEPARTMENT OR BUREAU	ENGINEER	DATE		
ENGINEERING, DISTRICT OFFICE			STREET LIGHTING ENGINEER	11-4-2014 DATE
DEPT. OF TRANSPORTATION			for SENIOR STREET LIGHTING ENGINEER	11-4-2014 DATE
STREET SERVICES, URBAN FORESTRY			for DIRECTOR, BUREAU OF STREET LIGHTING	11-4-2014 DATE
ENGINEERING, STRUCTURAL				

BUREAU OF ENGINEERING
OFFICIAL RECORD

STREET LIGHTING PLANS
SIXTH STREET VIADUCT REPLACEMENT – E. 6TH ST. IMPROVEMENTS
W.O. E700224L (TASK 013) SL-7470

DRAWING NO.
BSL-201

SCALE OF ORIGINAL PLAN: 1" = 40' SHEET 88 OF 560 SHEET(S) | INDEX NUMBER P-38113

CITY OF LOS ANGELES DEPARTMENT OF PUBLIC WORKS BUREAU OF STREET LIGHTING

C:\oaddib\pw\pwwestcoast\brogg\dms648481\BSL-201.dwg Oct 24, 2014 - 3:51pm

ADDENDUM 5

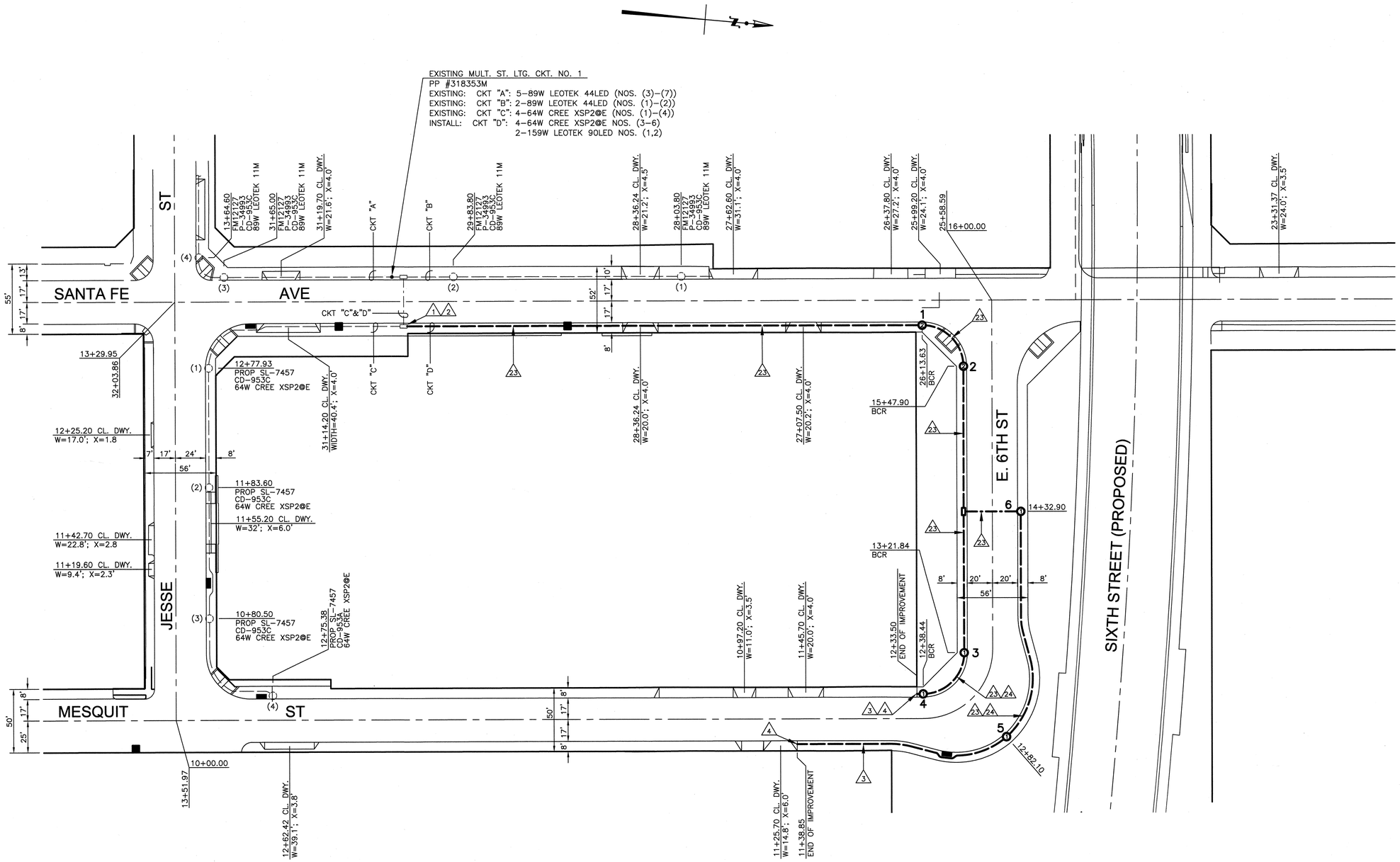

40' 10' 0 40' 80'
SCALE 1" = 40'-0"

PLANS PREPARED BY:
HNTB Corporation
One Bunker Hill Bldg.,
601 West 5th St., Ste 1000
Los Angeles, California 90071

Lee Bragg — SIGNATURE — 10/24/2014 — DATE

REGISTERED PROFESSIONAL ENGINEER — LEE M. BRAGG — No. E20761 — Exp. 6/30/16 — ELECTRICAL — STATE OF CALIFORNIA

STREET LIGHTING PLANS
SIXTH STREET VIADUCT REPLACEMENT – E. 6TH ST. IMPROVEMENTS
W.O. E700224L (TASK 013) SL-7470

CITY OF LOS ANGELES
ED EBRAHIMIAN, DIRECTOR BUREAU OF STREET LIGHTING

ACCEPTED: [signature] DIRECTOR, BUREAU OF STREET LIGHTING — 11-4-2014 DATE

BUREAU OF ENGINEERING — OFFICIAL RECORD

DRAWING NO.
BSL-202

SCALE OF ORIGINAL PLAN: 1" = 40'

SHEET 89 OF 560 SHEETS

INDEX NUMBER **P-38113**

CONTRACTOR:
INSPECTED BY:
DATE ENERGIZED
DATE ENERGIZED
CORRECTED TO "AS BUILT"
BY CHECKED

BUREAU OF STREET LIGHTING
DEPARTMENT OF PUBLIC WORKS
CITY OF LOS ANGELES

THE CITY OF LOS ANGELES OR ITS OFFICERS OR AGENTS SHALL NOT BE RESPONSIBLE FOR THE ACCURACY OR COMPLETENESS OF ELECTRONIC COPIES OF THIS PLAN SHEET.

C:\caddlib\pw\pwwestcoast\lbragg\dms64848\BSL-202.dwg Oct 24, 2014 - 3:48pm

ADDENDUM 5

NOTICE TO CONTRACTORS
GENERAL NOTES

1. ALL WORK SHALL CONFORM TO THE LATEST BOARD OF PUBLIC WORKS OF THE CITY OF LOS ANGELES ADOPTED EDITION AND SUPPLEMENTS TO THE "GREENBOOK" STANDARD SPECIFICATIONS FOR PUBLIC WORKS CONSTRUCTION" AS MODIFIED BY THE CORRESPONDING ISSUE OF THE BROWN BOOK, THE LATEST EDITION OF THE BUREAU OF STREET LIGHTING "SPECIAL SPECIFICATIONS", AND THE SPECIAL PROVISIONS.
2. ELECTROLIERS SHALL BE INSTALLED WITH CENTERLINE 30" BEHIND THE CURB FACE, AND WITH LUMINAIRE ARM ORIENTED OVER THE STREET AND PERPENDICULAR TO ITS CENTER LINE, EXCEPT AS OTHERWISE SPECIFIED HEREON.
3. ELECTROLIERS SPECIFIED TO BE LOCATED INSIDE OF THE CURB RETURN SHALL BE INSTALLED WITH THE CENTER OF THE ELECTROLIER 30 INCHES BEHIND THE CURB FACE MEASURED RADIALLY, AND WITH THE LUMINAIRE ARM ORIENTED OVER THE STREET AND PERPENDICULAR TO THE STREET CENTERLINE.
4. ELECTROLIERS SHALL BE ERECTED SO THAT THE BASE DOOR IS PERPENDICULAR TO THE CURB AND LOCATED ON THE SIDE OF THE ELECTROLIER AWAY FROM ONCOMING TRAFFIC.
5. ALL EXISTING ELECTROLIERS SPECIFIED TO BE REMOVED OR MODIFIED IN THESE PLANS SHALL BE MAINTAINED IN SERVICE UNTIL THE NEW ELECTROLIER LIGHTING SYSTEM IS PLACED IN SERVICE, UNLESS OTHERWISE SPECIFIED HEREON. ALL OTHER ELECTROLIERS ON CIRCUITS AFFECTED BY THESE PLANS SHALL BE MAINTAINED IN SERVICE. CONTRACTOR MAY PROVIDE ALTERNATE LIGHTING IN LIEU OF MAINTAINING EXISTING ELECTROLIER LIGHTS IN SERVICE PROVIDED THAT SUCH ARRANGEMENTS ARE APPROVED BY THE ENGINEER.
6. ALL EQUIPMENT REQUIRED HEREON FOR FURNISHING ELECTRICAL SERVICE FOR EACH CIRCUIT SHALL BE INSTALLED AND INSPECTED PRIOR TO ANY OTHER CONSTRUCTION ON THAT CIRCUIT UNLESS OTHERWISE APPROVED BY THE ENGINEER.
7. THE CONTRACTOR SHALL GIVE WRITTEN NOTICE, 72 HOURS IN ADVANCE OF THE REMOVAL OF AN ELECTROLIER, TO ANY PUBLIC AGENCY MAINTAINING EQUIPMENT SUPPORTED BY THAT ELECTROLIER.
8. FOUNDATIONS AND PULLBOXES NOT REMAINING IN SERVICE SHALL BE REMOVED. THE RESULTING EXCAVATION SHALL BE FILLED WITH MATERIAL SIMILAR TO ADJACENT MATERIAL AND SATISFACTORILY COMPACTED WITH A MECHANICAL COMPACTOR IN LAYERS NOT EXCEEDING 12 INCHES. THE SURFACE SHALL BE FINISHED TO MATCH THE ADJACENT SURFACE.
9. THE CONTRACTOR SHALL REQUEST A BURN TEST BY NOTIFYING THE BUREAU OF CONTRACT ADMINISTRATION PROJECT INSPECTOR A MINIMUM OF 7 CALENDAR DAYS IN ADVANCE OF THE DATE ON WHICH A BURN TEST IS DESIRED.
10. CONTRACTOR SHALL GIVE THREE WORKING DAYS NOTICE (PHONE 323-913-4744) PRIOR TO DELIVERY OF ANY EQUIPMENT SPECIFIED TO BE DELIVERED TO THE BUREAU OF STREET LIGHTING YARD AT 4550 SANTA MONICA BLVD., SUCH DELIVERIES SHALL BE BETWEEN 8:30 AM AND 3:00 PM AND SHALL INCLUDE ALL HANDLING AND LOADING FROM THE TRUCK BY THE CONTRACTOR. CONTRACTOR MUST SUPPLY A COPY OF THE STREET LIGHTING SHEETS WITH THE DELIVERY OF MATERIAL.
11. PULLBOXES LOCATED ADJACENT TO DRIVEWAYS AND ALLEYS SHALL BE INSTALLED AT A MINIMUM DISTANCE OF FIVE FEET FROM THE TOP OF THE "X" OF A CASE 1 OR CASE 2 DRIVEWAY OR AT A MINIMUM DISTANCE OF TWO FEET FROM THE B.C. OF A CASE 3 OR CASE 4 DRIVEWAY OR FIVE FEET FROM TRAVELLED WAY OF THE ALLEY.
12. PULLBOXES INSTALLED AT INTERSECTIONS OF LOCAL STREET SHALL BE INSTALLED NO CLOSER TO THE INTERSECTIONS THAN THE B.C.R. OF AN ASSUMED FUTURE 25' RADIUS CURB RETURN UNLESS OTHERWISE APPROVED BY THE ENGINEER. PULLBOXES INSTALLED AT INTERSECTIONS WHICH INVOLVE ONE OR MORE MAJOR OR SECONDARY STREETS SHALL BE INSTALLED NO CLOSER TO INTERSECTIONS THAN THE B.C.R. OF AN ASSUMED FUTURE 35' RADIUS CURB RETURN UNLESS OTHERWISE APPROVED BY THE ENGINEER.
13. CONDUIT SHALL BE INSTALLED AROUND ALL EXISTING AND/OR PROPOSED CATCH BASINS PER BUREAU OF STREET LIGHTING STANDARD DRAWING NO. L-304-0 UNLESS OTHERWISE SPECIFIED.
14. ALL SCREWS PROVIDED FOR ELECTROLIER STANDARD BASE DOORS AND BASE COVERS SHALL BE CADMIUM PLATED STEEL, 1/4-20NC MACHINE SCREWS, WITH PHILLIPS RECESSED ROUND HEADS.
15. WARNING: SAFETY CLEARANCE SHALL BE OBTAINED DAILY FROM THE AFFECTED UTILITY COMPANY BEFORE DOING ANY WORK IN CLOSE PROXIMITY TO ANY OVERHEAD ELECTRIC LINE. SEE SECTIONS 16430 AND 2100 OF SPECIAL SPECIFICATIONS.
16. UNLESS OTHERWISE SPECIFIED HEREON, LUMINAIRES SHALL PROVIDE A MEDIUM, CUTOFF, TYPE III, LIGHTING DISTRIBUTION PATTERN CONFORMING TO I.E.S DESIGNATION.
17. CONTRACTOR SHALL BE RESPONSIBLE FOR PRESERVING THE CONDITION OF ALL EXISTING EQUIPMENT TO BE REUSED, MODIFIED OR RETURNED TO THE BUREAU OF STREET LIGHTING YARD.
18. EQUIPMENT INDICATED "DISPOSE" SHALL BECOME THE PROPERTY OF THE CONTRACTOR AND BE DISPOSED OF BY THE CONTRACTOR.
19. STREET LIGHTING CONDUIT SHALL BE INSTALLED BY JACKING OR DRILLING METHODS. INSTALLATION OF CONDUIT BY OPEN TRENCHING IS NOT PERMITTED UNLESS APPROVED BY THE DIRECTOR, BUREAU OF STREET LIGHTING.
20. CONTRACTOR SHALL REPAIR AT HIS COST, THE DAMAGE CAUSED TO EXISTING SPRINKLER SYSTEMS DURING THE CONSTRUCTION OF THIS PROJECT. REPAIRS SHALL BE MADE WITHIN 5 WORKING DAYS AFTER DAMAGE OCCURS.
21. ALL ELECTROLIERS SPECIFIED HEREON SHALL INCLUDE A TYPE 2 PULLBOX, TO BE SUPPLIED AND INSTALLED, UNLESS OTHERWISE SPECIFIED.
22. CONTRACTOR SHALL BE RESPONSIBLE FOR ALL EXISTING ELECTROLIERS SPECIFIED TO BE RELOCATED AND MODIFIED IN THESE PLANS. PRIOR TO REINSTALLATION, CONTRACTOR SHALL REPAIR OR REPLACE ALL EXISTING STREET LIGHTING FACILITIES FOUND TO BE DAMAGED PRIOR TO START OF OR DURING THE CONSTRUCTION OF THIS PROJECT AT NO COST TO THE CITY.
23. UNLESS NOTED OTHERWISE, INSTALL CONDUIT COMBINATION EXPANSION-DEFLECTION FITTING PER CALTRANS STD. PLAN NO. ES-9B, DETAIL X-Y AT EACH BRIDGE EXPANSION JOINT, HINGE, OR ABUTMENT.

SUPPLEMENTAL NOTES

1. CONTRACTOR SHALL LOCATE & PROTECT SUBSTRUCTURE(S) SHOWN HEREON, & SHALL PROVIDE FOR A MINIMUM 12" HORIZONTAL CLEARANCE BETWEEN FOUNDATION & SUBSTRUCTURES. IN THE EVENT A 12" CLEARANCE CANNOT BE ACHIEVED, THE CONTRACTOR SHALL MAKE ARRANGEMENTS FOR RELOCATION OF SUBSTRUCTURES AT NO COST TO THE CITY.
2. IN THE EVENT OF OVERHEAD LINES CONFLICT WITH ELECTROLIERS THE CONTRACTOR SHALL MAKE NECESSARY ARRANGEMENTS WITH THE DEPT. OF WATER AND POWER TO RAISE THEIR OVERHEAD FACILITIES IN ORDER TO PROVIDE FOR THE FOLLOWING CLEARANCES WITH EXISTING AND/OR PROPOSED ELECTROLIERS.
   LOW VOLTAGE: MINIMUM 3' CLEARANCE BETWEEN OVERHEAD LINES AND ELECTROLIERS
   HIGH VOLTAGE: MINIMUM 6' CLEARANCE BETWEEN OVERHEAD LINES AND ELECTROLIERS
3. STREET TREES SHALL NOT BE PLANTED CLOSER THAN 20' FROM EXISTING OR PROPOSED ELECTROLIER, UNLESS OTHERWISE INDICATED.
4. IN THE EVENT OF OVERHEAD COMMUNICATION LINE CONFLICT WITH ELECTROLIERS, CONTRACTOR SHALL MAKE NECESSARY ARRANGEMENTS TO PROVIDE A MINIMUM 12" CLEARANCE.
5. PROPOSED ELECTROLIER FOUNDATIONS AND PULLBOXES SHALL BE INSTALLED OUTSIDE OF ACCESS RAMP AREAS. EXISTING FOUNDATIONS AND PULLBOXES SHALL BE RECONSTRUCTED TO CLEAR ACCESS RAMPS BY A MINIMUM OF 12". EXISTING CONDUIT SHALL BE LOWERED AS NECESSARY PER SEC. 307-2.5 OF THE STANDARD SPECIFICATIONS FOR PUBLIC WORKS CONSTRUCTION.
6. CONDUIT THAT IS TO BE ABANDONED SHALL HAVE WIRES REMOVED. THE CONDUIT SHALL BE REMOVED TO A DEPTH OF AT LEAST 12" BELOW THE SURFACE AND HAVE BOTH ENDS CRIMPED.
7. NOTWITHSTANDING SECTION 18950.2 OF THE SPECIAL SPECIFICATIONS FOR THE CONSTRUCTION STREET LIGHTING SYSTEMS MAGNETIC REGULATING BALLASTS ARE REQUIRED IN ALL COBRA-HEAD LUMINAIRES.
8. ALL #10 AWG WIRES USED FOR MULTIPLE CIRCUIT ELECTROLIER WIRING REFERENCED IN STANDARD DRAWING NO. L-301-1 SHALL BE #10 AWG SOLID COPPER CONDUCTORS.
9. AT LEAST TWO (2) WORKING DAYS PRIOR TO STARTING ANY EXCAVATION. THE CONTRACTOR MUST OBTAIN AN INQUIRY I.D. NUMBER FROM UNDERGROUND SERVICE ALERT BY CALLING (800) 422-4133 OR BY DIALING 811.

SERIES CIRCUIT NOTES

1. WARNING: SAFETY CLEARANCE SHALL BE OBTAINED DAILY FROM THE SERVING COMPANY, AND "MEN AT WORK" SIGNS SHALL BE POSTED AT THE SERVICE POINT BEFORE ANY WORK IS DONE OR ANY CONNECTIONS MADE ON AN EXISTING CIRCUIT. SEE SECTIONS 16430 AND 2100 OF SPECIAL SPECIFICATIONS.
2. SERIES CIRCUIT WIRE SHALL BE NO. 8 AWG STRANDED COPPER CONDUCTOR, INSULATED WITH 0.110" APPROVED POLYETHYLENE COMPOUND RATED FOR 5,000 VOLT OPERATION.
3. TWO OR MORE TURNS OF SELF-ADHESIVE COLORED TAPE WITH A MINIMUM WIDTH OF 1/2 INCH SHALL BE APPLIED TO EACH CABLE IN ALL SERIES CIRCUITS WHERE WORK IS BEING DONE AND WHERE TWO OR MORE CIRCUITS EXIST IN A COMMON PULLBOX OR POST BASE. THE TAPE SHALL BE APPLIED ON THE CABLE BETWEEN THE SPLICES AND THE CONDUIT, USING ONE COLOR FOR EACH CIRCUIT. THE COLORS WHITE, GRAY, GREEN, AND ORANGE SHALL NOT BE USED.
4. CONTRACTOR SHALL GIVE THE BUREAU OF STREET LIGHTING YARD (PHONE 323-913-4744) TWO WORKING DAYS NOTICE BEFORE ANY WORK IS DONE ON AN EXISTING SERIES CIRCUIT.

CIRCUIT DIAGRAM LEGEND

- NEW WIRE
- EXISTING WIRE
- DISCONNECT AND REMOVE WIRE
- CONNECT WIRE
- DISCONNECT WIRE AND TAPE ENDS
- NEW LAMP
- EXISTING LAMP
- REMOVE EXISTING LAMP

MULTIPLE CIRCUIT NOTES

1. WARNING: SAFETY CLEARANCE SHALL BE OBTAINED DAILY FROM THE SERVING COMPANY BEFORE DOING ANY WORK OR MAKING ANY CONNECTIONS ON AN EXISTING CIRCUIT. SEE SECTIONS 16430 AND 2100 OF SPECIAL SPECIFICATIONS.
2. MULTIPLE CIRCUIT WIRE SHALL BE NO. 8 AWG STRANDED COPPER CONDUCTOR. TYPE THWN/THHN INSULATION, UL APPROVED FOR 600 VOLT OPERATION UNLESS OTHERWISE SPECIFIED HEREON.
3. THREE WIRES (COLOR CODE: 1-RED, 1-BLACK, 1-WHITE,) SHALL BE INSTALLED IN ALL MULTIPLE CIRCUIT CONDUIT UNLESS OTHERWISE PROVIDED FOR HEREON.
4. EVEN NUMBERED ELECTROLIERS SHALL BE CONNECTED TO RED AND WHITE WIRES AND ODD NUMBERED ELECTROLIERS SHALL BE CONNECTED TO BLACK AND WHITE WIRES.
5. ELECTROLIERS SHALL BE WIRED PER TYPICAL MULTIPLE CIRCUIT ELECTROLIER WIRING DETAIL, BUREAU OF STREET LIGHTING STANDARD DRAWING NO. L-301-1, UNLESS OTHERWISE SPECIFIED.
6. MULTIPLE CIRCUITS IN CONDUITS CONTAINING MORE THAN THREE CONDUCTORS SHALL BE APPROPRIATELY IDENTIFIED BY LABELING CONDUCTORS "A", "B", ETC. WITH APPROVED SELF-LAMINATING LETTER TAPE WRAPPED AT LEAST TWICE AROUND THE CONDUCTOR IN EACH PULLBOX. (W.H. BRADY, SPECIAL SELF-LAMINATING WIRE MARKERS OR EQUIVALENT)

LEGEND

- EXISTING ELECTROLIER TO BE RELOCATED
- EXISTING UTILITARIAN LIGHTS ON WOODEN POLES WHICH SHALL BE MAINTAINED IN SERVICE UNTIL THE PERMANENT ELECTROLIER LIGHTING SYSTEM IS PLACED IN SERVICE. CONTRACTOR MAY PROVIDE ALTERNATE LIGHTING IN LIEU OF MAINTAINING EXISTING UTILITARIAN LIGHTS IN SERVICE PROVIDED THAT SUCH ARRANGEMENTS ARE APPROVED BY THE ENGINEER.
- EXISTING ELECTROLIER TO BE REMOVED. (SEE GENERAL NOTE 8)
- NEW ELECTROLIER
- EXISTING ELECTROLIER, NOT TO BE REMOVED OR MODIFIED
- PULLBOX TYPE 2 UNLESS OTHERWISE SHOWN HEREON. (SEE DELTA NOTE NO. 25). ADDITIONAL PULLBOXES SHALL BE REQUIRED AS SPECIFIED.
- EXISTING PULLBOX
- EXISTING 1" CONDUIT
- EXISTING 1-1/2" CONDUIT
- EXISTING 2" CONDUIT
- NEW 1" CONDUIT
- NEW 1-1/2" CONDUIT
- NEW 2" CONDUIT
- ABANDON CONDUIT (SEE GENERAL NOTE NO.8 & SUPPLEMENTAL NOTE NO.6)
- EXISTING ELECTROLIER FOUNDATION
- FUTURE ELECTROLIER
- PROPOSED CATCH BASIN
- FOR PROP. 218 AND GIS SECTION USE ONLY. (GENERAL BENEFIT)

NOTICE TO CONTRACTORS
MATERIAL LIST

FOLLOWING IS A SUMMARY OF NEW ELECTROLIERS, LUMINAIRES, LAMPS, BALLASTS, FOUNDATIONS, AND OTHER EQUIPMENT WHICH SHALL BE SUPPLIED AND INSTALLED BY THE CONTRACTOR. THIS IS NOT INTENDED TO BE A COMPLETE LIST OF ALL MATERIALS REQUIRED. UNLESS NOTED OTHERWISE, EQUIVALENT PRODUCTS BY OTHER MANUFACTURERS MAY BE SUBMITTED TO THE ENGINEER OF RECORD FOR REVIEW AND APPROVAL.

SYMBOL	ITEM	QUANTITY	DESCRIPTION	STANDARD PLAN NO.	REV. NO.	NOMINAL WATTAGE
	ELECTROLIER	2	20' OVERALL HEIGHT OF TAPERED ROUND STEEL POLE AND BRACKET (44,46,48)			
	LUMINAIRE	1	108W LED, TYPE III, SOLECITY ULM100 SERIES (31,43,46,48,53)			108W
	LUMINAIRE	1065 (+30 SPARE)	40W LINEAR LED, 4', PHILIPS eW GRAZE POWERCORE (43,46,47,48,53)			40W
	LUMINAIRE	10	45W LOW BAY LED, DIALIGHT DUROSITE (43,46,48,53)			45W
	LUMINAIRE	1	108W LED, TYPE IV, SOLECITY ULM100 SERIES (31,43,46,48,53)			108W
	LUMINAIRE	2	108W LED, TYPE III, SOLECITY ULM100 SERIES (31,43,46,48,53)			108W
	ELECTROLIER	2	16' OVERALL HEIGHT OF TAPERED ROUND STEEL POLE AND BRACKET (44,46,48)			
	LUMINAIRE	982 (+30 SPARE)	20W LINEAR LED, 2', PHILIPS eW GRAZE POWERCORE (43,46,47,48,53)			20W
	ELECTROLIER	4	30' OVERALL HEIGHT OF TAPERED ROUND STEEL POLE AND BRACKET (44,46,48,17)			
	LUMINAIRE	4	108W LED, TYPE III, SOLECITY ULM100 SERIES (31,43,46,48,53)			108W
	ROAM	8	REMOTE MONITORING NODE (29)			
	CTRL CAB	4	TIMECLOCK/RELAY CONTROL CABINET (46)			
	CTRL/SVC CAB	4	TIMECLOCK/RELAY CONTROL CABINET AND SERVICE BREAKER ENCLOSURE (46)			
	PULL BOX	537	CALTRANS TYPE 9A PULL BOX, STEEL	CALTRANS ES-9C		
	PULL BOX	25	LA BSL TYPE 2 PULL BOX (25)			
	PULL BOX	14	LA BSL TYPE 3 PULL BOX (28)			
	JUNCTION BOX	8	10"x16"x12" JUNCTION BOX, NEMA 4, LOCKABLE (46)			
	JUNCTION BOX	8	12"X12"X8" JUNCTION BOX, NEMA 4, LOCKABLE (46)			
	FOUNDATION	66	FUTURE ELECTROLIER FOUNDATION (36)	CT B11-61		

PLAN OF ELECTROLIER LIGHTING SYSTEM

(M)=MAJOR, (S)=SECONDARY, (L)=LOCAL, (C)=COLLECTOR

STREET	FROM	TO
6TH ST (M)	MATEO ST (S)	BOYLE AVE (S)

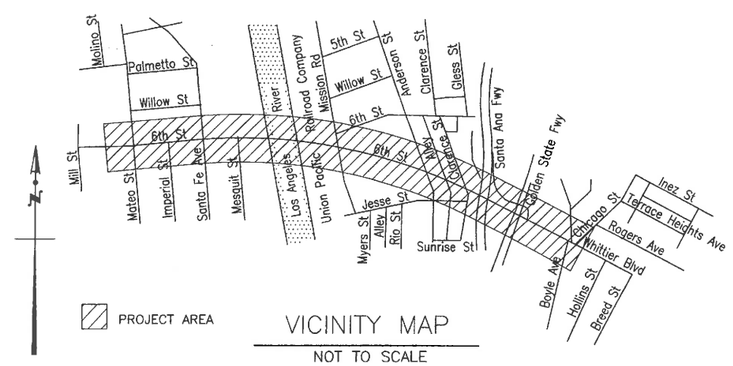

VICINITY MAP
NOT TO SCALE

ALL CONSTRUCTION IS PROHIBITED ON MAJOR AND SECONDARY STREET BETWEEN:
6:00 A.M. TO 9:00 A.M.
3:30 P.M. TO 7:00 P.M.

NOTICE TO CITY INSPECTOR/CONTRACTOR NO. 1

THE STREET LIGHTING EQUIPMENT ON THIS PLAN MAY BE SUBJECT TO CHANGE ("GREEN BOOK" 2006 §307-1.3). THE CONTRACTOR SHALL NOT ORDER ANY NEW STREET LIGHTING EQUIPMENT PRIOR TO APPROVAL BY THE BUREAU OF STREET LIGHTING, EQUIPMENT APPROVAL SECTION (M-40 FORM). CONTACT (213) 847-1831 FOR MORE INFORMATION.

NOTICE TO CITY INSPECTOR/CONTRACTOR NO. 2

THIS PROJECT IS IMPACTED BY PROPOSITION 218

ELECTROLIER(S) SPECIFIED HEREON SHALL NOT BE INSTALLED UNTIL THE LEGAL REQUIREMENTS OF PROPOSITION 218 HAVE BEEN SATISFIED. THE CITY INSPECTOR SHALL CONTACT THE BUREAU OF STREET LIGHTING, ENGINEERING AND TECHNICAL SERVICES DIVISION AT (213) 847-1431 FOR CONSTRUCTION CLEARANCE. UNDERGROUND FACILITIES MAY BE INSTALLED PRIOR TO PROPOSITION 218 CONSTRUCTION CLEARANCE.

NOTICE TO CITY INSPECTOR/CONTRACTOR NO. 3

THIS PROJECT IS SUBJECT TO "BUY AMERICA" REQUIREMENTS OF TITLE 23 UNITED STATES CODE, SECTION 313, AND THE REGULATIONS ADOPTED PURSUANT THERETO. CERTIFICATION OF COMPLIANCE IS REQUIRED TO BE SUBMITTED TO THE PROJECT INSPECTOR. SEE PROJECT SPECIFICATIONS.

PROCEDURE FOR STREET LIGHT CIRCUIT CLEARANCE

- HIGH VOLTAGE CIRCUIT CLEARANCE REQUESTS SHALL BE MADE TO THE BUREAU OF STREET LIGHTING AND WILL BE PERFORMED BY CITY CREWS.
- LOW VOLTAGE CIRCUIT CLEARANCE SHALL BE PERFORMED BY THE QUALIFIED CONTRACTOR RESPONSIBLE FOR CONSTRUCTION PROJECTS.
- PRIOR TO CONSTRUCTION, THE CONTRACTOR SHALL SUBMIT TWO (2) COPIES OF THE PLAN (24"X36") AND NOTIFY THE INSPECTOR TO SUBMIT "CONSTRUCTION START NOTICE" AND M-21 FORM TO LADWP STREET LIGHT SUPPORT (111 N. HOPE STREET, RM 910, LOS ANGELES, CA 90012)

FOR DETAILED PROCEDURES, SEE WWW.bsl.lacity.org (CLICK ON THE BUSINESS/CONTRACTORS LINK).

NOTICE TO CITY INSPECTOR/CONTRACTOR NO. 4

CONTRACTOR SHALL NOTIFY THE STREET LIGHTING ENGINEER (TELEPHONE:213-847-1459) A MINIMUM OF SEVEN (7) WORKING DAYS PRIOR TO WORKING ON ANY ELECTROLIER, WITH EXISTING TELECOMMUNICATION EQUIPMENT, WHICH REQUIRES REMOVAL AND/OR RELOCATION.

(38) INSTALL TYPE 80 BARRIER MODIFICATION FOR ELECTROLIER PER CALTRANS STANDARD PLAN B11-61. SEE DRAWING SL-405 DETAIL 2. LOCATION SHOWN ON PLANS MAY BE ADJUSTED SLIGHTLY IN ORDER TO ALIGN WITH NEAREST TYPE 80 BARRIER POST LOCATION.
(55) INSTALL APPROVED CONNECTING DEVICES PER DETAIL 4, DRAWING NO. SL-304.
(54) INSTALL ELEVEN MULTIPLE CIRCUIT WIRES: (COLOR CODE: 5-RED, 5-BLACK, 1-WHITE)
(53) SEE DRAWING SL-405 FOR CONDUIT INSTALLATION IN VIADUCT COLUMNS, AND DRAWING SL-408 FOR CONDUIT INSTALLATION IN VIADUCT FOUNDATIONS.
(52) INSTALL SEVEN MULTIPLE CIRCUIT WIRES: (COLOR CODE: 3-RED, 3-BLACK, 1-WHITE)
(51) INSTALL LUMINAIRE WITH SHORTING CAP.
(50) INSTALL NINE MULTIPLE CIRCUIT WIRES: (COLOR CODE: 4-RED, 4-BLACK, 1-WHITE)
(29) THE CONTRACTOR SHALL INSTALL PHILIPS CITY TOUCH OUTDOOR LUMINAIRE CONTROLLER LLC7260 ON ALL LOW VOLTAGE, MULTIPLE CIRCUITS LUMINAIRES. THE UNIT SHOULD BE PICKED UP AT THE BUREAU'S PLAN COUNTER AT 1149 S. BROADWAY STE. 200, LOS ANGELES, CA 90015. THE UNITS WILL BE PROVIDED FOR A NON-REFUNDABLE FEE (APPROXIMATELY $155 PER UNIT). THE CONTRACTOR SHALL GIVE SEVEN WORKING DAYS NOTICE (PHONE 213-847-1492) PRIOR TO PICKING UP THE REMOTE MONITORING UNITS. NODES SHALL BE INSTALLED INTO PHOTOELECTRIC CONTROL STANDARD SOCKET PER ANSI/NEMA C-136.10 AND SHALL BE ORIENTED IN A NORTHERLY DIRECTION. A SEPARATE P.E. CELL IS NOT NEEDED FOR LUMINAIRES EQUIPPED WITH A REMOTE MONITORING NODE.
(28) INSTALL TYPE 3 PULLBOX. ALL TYPE 3 PULLBOXES SHALL BE OF "COMPOSITE/POLYMER" MATERIAL W/BOLT-DOWN LID AND SHALL COMPLY WITH STANDARD PLAN "COMPOSITE TYPE 3, REV A" AND APPROVED BY BUREAU OF STREETLIGHTING.
(27) CONTRACTOR SHALL LOCATE AND PROTECT STREET LIGHTING PULLBOX PRIOR TO TERMINATING NEW CONDUIT TO PULLBOX. IN THE EVENT THE PULLBOX DOES NOT EXIST OR IS MISSING, THE CONTRACTOR SHALL CONTACT THE PRIVATE ENGINEER (ENGINEER ON RECORD) AND BUREAU OF STREET LIGHTING TO OBTAIN AN APPROVAL FOR THE INSTALLATION OF NEW PULLBOX AT NO COST TO THE CITY.
(26) INSTALL FUSE HOLDER(S), FUSE(S) AND CONNECT WIRES INSIDE TYPE 2 PULLBOX.
(25) INSTALL TYPE 2 PULLBOX. ALL PULLBOXES SPECIFIED SHALL BE OF "COMPOSITE/POLYMER" MATERIAL WITH BOLT-DOWN LID AND SHALL COMPLY WITH STANDARD PLAN "COMPOSITE TYPE 2, REV B" AND APPROVED BY BUREAU OF STREETLIGHTING.
(24) TAPE ENDS OF SPARE WIRE.
(23) INSTALL THREE MULTIPLE CIRCUIT WIRES: (COLOR CODE: 1-RED, 1-BLACK, 1-WHITE)
(22) REMOVE EXISTING STREET LIGHTING WIRES.
(21) MULTIPLE SERVICE LOCATION. INTERCEPT CONDUIT INSTALLED BY OTHERS AND INSTALL TYPE 3 SERVICE PULLBOX. VERIFY EXACT LOCATION OF CONDUIT. PHONE DEPT. OF WATER AND POWER UNDERGROUND ENGINEERING FIVE DAYS PRIOR TO START OF WORK AT THIS LOCATION. (PHONE: 213-367-3003)
(20) CONTRACTOR SHALL REQUEST A PERMIT TO PRUNE TREE FROM THE URBAN FORESTRY DIVISION (213) 847-3077, FIVE DAYS PRIOR TO THE INSTALLATION OF ELECTROLIER. ALL TREE WORK SHALL BE PERFORMED TO TREE CARE PROFESSION BEST MANAGEMENT PRACTICES AND TO THE SATISFACTION OF THE URBAN FORESTRY DIVISION.
(19) INSTALL APPROVED CONNECTING DEVICES PER DETAIL "B", BUREAU OF STREET LIGHTING STANDARD DRAWING NO. L-301-1.
(18) INSTALL APPROVED CONNECTING DEVICES PER DETAIL "A", BUREAU OF STREET LIGHTING STANDARD DRAWING NO. L-301-1.
(17) MULTIPLE SERVICE LOCATION. INSTALL 10' OF 2" GALVANIZED CONDUIT SERVICE RISER ON POLE. EXTEND CONDUIT TO THE ALLEY B.C. AND INSTALL TYPE 3 PULLBOX UNLESS OTHERWISE SPECIFIED. INSTALL PULLWIRE.
(16) INSTALL FIVE MULTIPLE CIRCUIT WIRES: (COLOR CODE: 2-RED, 2-BLACK, 1-WHITE)
(15) INSTALL TWO MULTIPLE CIRCUIT WIRES: (COLOR CODE: 1-BLACK, 1-WHITE)
(14) INSTALL TWO MULTIPLE CIRCUIT WIRES: (COLOR CODE: 1-RED, 1-WHITE)
(13) INSTALL 1" CONDUIT BEND.
(12) INSTALL ADDITIONAL 2" CONDUIT BEND FOR TRAFFIC SIGNAL WIRING.
(11) INSTALL ONE APPROVED FUSE HOLDER WITH 30 AMP FUSE BETWEEN EACH SERVICE WIRE (NOT NEUTRAL WIRE) OF SERVICE WIRE CONNECTING DEVICE AND STREET LIGHTING CIRCUIT WIRE. SERVING COMPANY WILL INSTALL SERVICE.
(10) JOIN CONDUIT
(9) MULTIPLE SERVICE LOCATION. INSTALL TYPE 3 PULLBOX UNLESS OTHERWISE SPECIFIED AND 10' OF 2" GALVANIZED CONDUIT SERVICE RISER ON POLE. INSTALL PULLBOX NO CLOSER THAN 5' AND NO FARTHER THAN 15' FROM THE SERVICE POLE.
(8) SERIES SERVICE POLE. INSTALL ONE TERMINAL CUTOFF BOX STANDARD PLAN B-3724 WITH ONE DISCONNECTING SWITCH FOR EACH CIRCUIT. SERVING COMPANY WILL INSTALL SERVICE.
(7) CONSTRUCT CASE 4 DRIVEWAY RETURN PER STANDARD PLAN NO. S-440
(6) CONSTRUCT CASE 3 DRIVEWAY RETURN PER STANDARD PLAN NO. S-440.
(5) INTERCEPT CONDUIT AND INSTALL PULLBOX.
(4) THREAD AND CAP CONDUIT AT END OF IMPROVEMENT.
(3) INSTALL CONDUIT ONLY.
(2) CONNECT WIRES (PER CIRCUIT DIAGRAM WHERE APPLICABLE).
(1) TERMINATE CONDUIT IN STREET LIGHTING PULLBOX.

(53) "OR EQUAL" IS DEFINED AS EQUIPMENT OTHER THAN WHAT IS NOTED HERE, BUT MUST BE ON THE BUREAU OF STREET LIGHTING'S (BSL) APPROVED EQUIPMENT LIST WHICH WAS IN EFFECT ON THE DATE THE CONSTRUCTION CONTRACT WAS AWARDED OR HAVE A LETTER OF APPROVAL FROM THE BSL DATED ON OR BEFORE THE DATE THE CONSTRUCTION CONTRACT WAS AWARDED.
(52) INSTALL TRAFFIC RATED PULLBOX TYPE 3.
(51) INSTALL APPROVED CONNECTING DEVICES PER DETAIL 3, DRAWING NO. SL-304.
(50) INTERCEPT POWER CIRCUITS AND INSTALL TIMECLOCK AND RELAY PER DETAIL 1 & 4, DRAWING NO. SL-305. DOWNSTREAM LIGHTING LOADS WILL BE CONTROLLED BY THE TIMECLOCK CONTROLLER.
(49) FOR ELECTROLIER FOUNDATION INSTALLATION AT THE WEST ABUTMENT, SEE DRAWING SL-408.
(48) CONTRACTOR SHALL DELIVER THE FOLLOWING SPARES AND EQUIPMENT TO BSL YARD AS SHOWN IN MATERIAL LIST.
(47) PROVIDE CAP ON LUMINAIRE LENS COVER SCREWS SUCH THAT THEY CANNOT BE REMOVED OR ADJUSTED WITH TOOLS THROUGH THE BARRIER LIGHTING ENCLOSURE BAFFLE OPENING. LENS COVER SCREWS MUST BE SUBMITTED TO BSL AND APPROVED PRIOR TO INSTALLATION.
(46) CONTRACTOR SHALL SUBMIT A PROTOTYPE, SHOP DRAWINGS, AND METHOD OF ATTACHMENT AND WINDLOAD (100MPH)/SEISMIC (WHICHEVER IS DOMINANT) CALCULATIONS BASED ON THE MOST CURRENT AASHTO SPECIFICATIONS, STAMPED AND SIGNED BY A LICENSED STRUCTURAL OR CIVIL ENGINEER REGISTERED IN THE STATE OF CALIFORNIA TO THE TESTING AND EQUIPMENT EVALUATION SECTION (TEE, NO. 213-847-1831) FOR REVIEW AND APPROVAL. THE CONTRACTOR WILL BE NOTIFIED OF REQUIRED CHANGES, IF ANY, WITHIN 30 DAYS AFTER SHOP DRAWINGS/CALCULATIONS ARE RECEIVED. WRITTEN APPROVAL FROM THE BUREAU ON THE SHOP DRAWINGS IS REQUIRED PRIOR TO FABRICATION OF EQUIPMENT.
(45) ALL LUMINAIRES, AND LUMINAIRE CAPITALS SHALL BE PRIMED AND PAINTED IN ACCORDANCE WITH SECTION 310-5.1 OF THE STANDARDS SPECIFICATION FOR PUBLIC WORKS CONSTRUCTION, 1997 EDITION, AND THE FOLLOWING SPECIFICATIONS:
   - PRIMER : ONE COAT OF AMERLOCK 400, 5 MILS MINIMUM DRY FILM THICKNESS OR BSL APPROVED EQUAL.
   - FINISH COAT: ONE COAT "PLATINUM GREY" (RAL 7036) OR BSL APPROVED EQUAL, 5 MILS MINIMUM DRY FILM THICKNESS.
   THE CONTRACTOR SHALL SUBMIT THREE COLOR SAMPLES ON 3"x5" (MIN.) METAL SHEET TO THE BSL TESTING AND EQUIPMENT (TEE) SECTION FOR APPROVAL. ALLOW 30 DAYS FOR REVIEW. WRITTEN APPROVAL FROM THE BUREAU OF STREET LIGHTING IS REQUIRED PRIOR TO APPLICATION. CONTACT 1-213-847-1831 FOR DETAILS.
(44) UNLESS CALLED OUT BY STANDARD PLAN NO., ELECTROLIER CATALOG NUMBERS ARE AS FOLLOWS OR BSL APPROVED EQUAL:
   16' OVERALL HEIGHT OF 8' STEEL POLE UPS100S-8 AND BRACKET UBS100-1A
   20' OVERALL HEIGHT OF 12' STEEL POLE UPS100S-12 AND BRACKET UBS100-1A
   30' OVERALL HEIGHT OF 22' STEEL POLE UPM100-22 AND BRACKET UBM100-1A
(43) THE LUMINAIRE CATALOG NUMBERS ARE AS FOLLOWS OR BSL APPROVED EQUAL:
   20W LED LINEAR (PHILIPS EW GRAZE) CAT. # 523-000081-25 (SEE SL-400 THRU SL-404 FOR INSTALLATION)
   * FIXTURE SHALL BE PROVIDED FROM PHILIPS WITH DIRECT CONDUIT CONNECTION POINT AND A 3' LONG #10 AWG COPPER PIGTAI

ADDENDUM 5

THE CITY OF LOS ANGELES OR ITS OFFICERS OR AGENTS SHALL NOT BE RESPONSIBLE FOR THE ACCURACY OR COMPLETENESS OF ELECTRONIC COPIES OF THIS PLAN SHEET.



STREET LIGHTING PLANS KEY MAP

SCALE: N.T.S

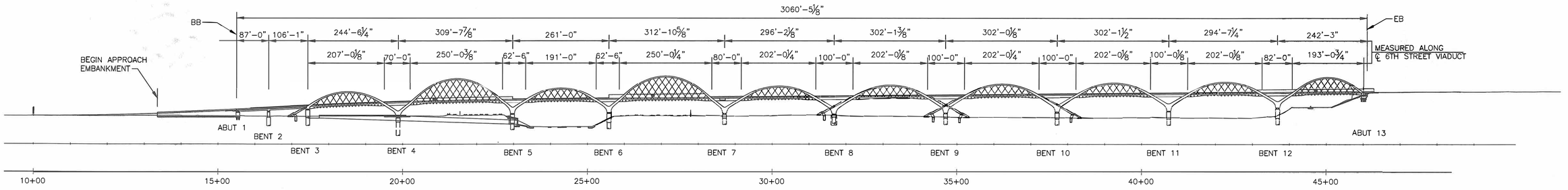

OVERALL ELEVATION

SCALE: N.T.S

PLANS PREPARED BY:

HNTB Corporation
One Bunker Hill Bldg.,
601 West 5th St., Ste 1000
Los Angeles, California 90071

SIGNATURE — 4/14/2016 DATE

REGISTERED PROFESSIONAL ENGINEER — PATRICIA L. TOMPKINS — NO. E14352 — EXP. 12/31/17 — ELECTRICAL — STATE OF CALIFORNIA — 5/27/16

BUREAU OF ENGINEERING — OFFICIAL RECORD

STREET LIGHTING PLANS
SIXTH STREET VIADUCT REPLACEMENT
W.O. E700224L (TASK 013) SL–7521

CITY OF LOS ANGELES
ED EBRAHIMIAN, DIRECTOR BUREAU OF STREET LIGHTING

ACCEPTED: _____ DIRECTOR, BUREAU OF STREET LIGHTING — 5-27-16 DATE

DRAWING NO. SL–101

SCALE OF ORIGINAL PLAN: N.T.S.

SHEET 91 OF 560 SHEETS

INDEX NUMBER **P-38113**

CITY OF LOS ANGELES
DEPARTMENT OF PUBLIC WORKS
BUREAU OF STREET LIGHTING

C:\coddlib\pw\pwwestcoast\vgreenlee\vms57861\SL-101.dwg May 19, 2016 - 10:19am

ADDENDUM 5

THE CITY OF LOS ANGELES OR ITS OFFICERS OR AGENTS SHALL NOT BE RESPONSIBLE FOR THE ACCURACY OR COMPLETENESS OF ELECTRONIC COPIES OF THIS PLAN SHEET.

C:\caddlib\pw\hntb_nchowdhury\west\dms57861\SL-102.dwg Feb 11, 2020 - 10:55am

PROPOSED INTERSECTION LIGHTING
SEE SL-8066 (1)

CONTINUED ON RAMP/STAIR LIGHTING PLANS. SEE SL-7947 DRAWING SL-2201.

BIKE RAMP

SERVICE VEHICLE ACCESS ROAD

SIXTH ST

SEE SL-200 FOR CONTINUATION

(SEE SL-200 & SL-201 FOR STREET LIGHTING ON WEST APPROACH)

MATEO ST

IMPERIAL ST

SANTA FE AVE

E 6TH ST

CKT "1C" (23)

CKT "1A","1B","1C" (32)

CKT "26B"

CKT "26A"

35+98.17 CL. DWY. W=19.0'; X=4.0'

36+90.15

37+39.15

66+66.00

40+43.52

63+30.14

15+50 BB

24+92.12

60+00.00

16+00.00

24+58.59

ABUT 1

BENT 2

BENT 3

BENT 4

NEW MULT. ST. LTG. SVC. NO. 1 (11)(28)(35)(37)
PP#318345M
INSTALL: CKT "1A": 74-40W LED PHILIPS eW GRAZE (NOS. (1)-(74))
CKT "1B": 74-40W LED PHILIPS eW GRAZE (NOS. (540A)-(613A))
74-20W PHILIPS eW GRAZE (NOS. (540B)-(613B))
CKT "1C": 400-2W LEDPOD (ESTIMATE)
INSTALL ALL #6 WIRE THROUGHOUT.

NEW U.G. MULT. ST. LTG. SVC. NO. 2 (11)(21)(28)(41)(37)(52)
MH: 1496 SIXTH ST
INSTALL: CKT "2A": 54-40W LED PHILIPS eW GRAZE (NOS. (76)-(84) & (85A)-(129A))
45-20W LED PHILIPS eW GRAZE (NOS. (85B)-(129B))
(1) 1-108W LED SOLECITY (NO. (75))
10-45W LED DIALIGHT DUROSITE (NOS. (1082)-(1091))
CKT "2B": 78-40W LED PHILIPS eW GRAZE (NOS. (130A)-(208A))
78-20W LED PHILIPS eW GRAZE (NOS. (130B)-(208B))
CKT "2C": 58-40W LED PHILIPS eW GRAZE (NOS. (615A)-(672A))
58-20W LED PHILIPS eW GRAZE (NOS. (615B)-(672B))
(1) 1-108W LED SOLECITY (NO. (614))
CKT "2D": 72-40W LED PHILIPS eW GRAZE (NOS. (673A)-(745A))
72-20W LED PHILIPS eW GRAZE (NOS. (673B)-(745B))
INSTALL ALL #6 WIRE THROUGHOUT.

Exist 5" conduit 12 or 24 utilized to serve CKT 2 pull box per RFI 603

Exist MH 1496 Sixth St

CONDUIT UP TO VIADUCT DECK, SEE SL-203 FOR CONTINUATION (33)

CKT "2A","2B","2C","2D","2E" (34)

CKT "2C","2D" (32)

CKT "2A","2B","2E" (32)

VIADUCT ABOVE

ST

MATCH LINE STA 21+50
SEE BELOW FOR CONTINUATION

CONDUIT UP TO VIADUCT DECK, SEE SL-203 FOR CONTINUATION (33)

14+32.90 CD-953C 64W CREE XSP2

15+47.90 CD-953C 64W CREE XSP2

13+21.84 CD-953C 64W CREE XSP2

NEW U.G. MULT. ST. LTG. SVC. NO. 3 (11)(21)(28)(41)
HH: 647 S. MISSION RD
INSTALL: CKT "3A": 69-40W LED PHILIPS eW GRAZE (NOS. (209A)-(277A))
69-20W LED PHILIPS eW GRAZE (NOS. (209B)-(277B))
1-108W LED SOLECITY (NO. (278)) (1)
CKT "3B": 62-40W LED PHILIPS eW GRAZE (NOS. (279A)-(340A))
62-20W LED PHILIPS eW GRAZE (NOS. (279B)-(340B))
CKT "3C": 62-40W LED PHILIPS eW GRAZE (NOS. (746A)-(809A))
62-20W LED PHILIPS eW GRAZE (NOS. (746B)-(809B))
CKT "3D": 65-40W LED PHILIPS eW GRAZE (NOS. (811A)-(875A))
65-20W LED PHILIPS eW GRAZE (NOS. (811B)-(875B))
1-108W LED SOLECITY (NO. (810))
INSTALL ALL #6 WIRE THROUGHOUT.

CKT "19C" CONTINUED ON RAMP/STAIR LIGHTING PLANS. SEE SL-7947 DRAWING SL-2202. (23)

CKT "19B"

CKT "19B"&"19C" (16)(22)

CKT "19C" (1)

Remove existing pull box and extend conduit

Install new pull box

Remove existing pull box (not shown)

MISSION

6TH ST.

CKT "19A"

CKT "19D" (23)

CKT "19B"&"19C" (16)(22)

Crossing relocated to the north in order to install with 30" cover min (typ)

103+05.59 D-25040 LED-0100 136W LEOTEK 60LED

129+58.31 D-25040 LED-0100 136W LEOTEK 60LED

EXIST U.G. MULT. ST. LTG. SVC. NO. 19 (11)(21)(40)
(TO BE CONNECTED FROM O.H. TO U.G.)
VL: 1600 E. SIXTH ST.
EXISTING: CKT "19A": 9-136W LEOTEK 60LED (NOS. (409)-(417))
CKT "19B": 10-136W LEOTEK 60LED (NOS. (418)-(427))
INSTALL: CKT "19C": 1400-2W LEDPOD (ESTIMATE)
CKT "19D": 700-2W LEDPOD (ESTIMATE)
INSTALL ALL #6 WIRE THROUGHOUT

CKT "3A"&"3B"

CKT "3C"&"3D"

CONDUIT UP TO VIADUCT DECK, SEE SL-206 FOR CONTINUATION (33)

CONDUIT UP TO VIADUCT DECK, SEE SL-206 FOR CONTINUATION (33)

103+89.36 D-25040 LED-0100 136W LEOTEK 60LED

105+25.50 D-25040 LED-0100 136W LEOTEK 60LED

CONTINUED ON RAMP/STAIR LIGHTING PLANS. SEE SL-7947 DRAWING SL-2203.

CKT "19D" (23)

LOS ANGELES RIVER

BENT 5

BENT 6

BENT 7

BENT 8

VIADUCT ABOVE

SIXTH

ST

MATCH LINE STA 21+50
SEE ABOVE FOR CONTINUATION

MATCH LINE STA 105+50
SEE SL-102 FOR CONTINUATION

BIKE RAMP

RD

GRADE LEVEL STREET LIGHTING PLAN (1) SL-101

SCALE 1" = 40'

DELTA No.	DESCRIPTION OF REVISION	DATE	BY
(1)	REVISED PER BSL REVIEW	4/7/2017	A. GOROVAYA
(2)	REVISED SERVICE CABINET LOCATION	4/12/2019	A. GOROVAYA
(3)	RELOCATE SERVICE NO. 1	2/12/2020	D. WOODWARD

SCALE 1" = 40'-0"

PLANS PREPARED BY:
HNTB Corporation
One Bunker Hill Bldg.,
601 West 5th St., Ste 1000
Los Angeles, California 90071

SIGNATURE — 1/20/2017 DATE

REGISTERED PROFESSIONAL ENGINEER — CARL A. AUGE — No. E17891 — Exp. 9/30/2020 — ELECTRICAL — STATE OF CALIFORNIA

CONTRACTOR:
INSPECTED BY:
DATE ENERGIZED
DATE ENERGIZED
CORRECTED TO "AS BUILT"
BY
CHECKED

T.O. 5 - Change Order Serial Sketch No. 116 - Page 2 of 4

STREET LIGHTING PLANS
SIXTH STREET VIADUCT REPLACEMENT
W.O. E700224L (TASK 013) SL-7521

CITY OF LOS ANGELES
ED EBRAHIMIAN, DIRECTOR BUREAU OF STREET LIGHTING

ACCEPTED: _____ DIRECTOR, BUREAU OF STREET LIGHTING _____ DATE

DRAWING NO. SL-102

SCALE OF ORIGINAL PLAN: 1" = 40' | SHEET OF SHEETS | INDEX NUMBER

CITY OF LOS ANGELES DEPARTMENT OF PUBLIC WORKS BUREAU OF STREET LIGHTING

ADDENDUM 5

Type 3 non-traffic rated pull box per RFI 587.

CONTINUED ON RAMP/STAIR LIGHTING PLANS. SEE SL-7947 DRAWING SL-2204.

CONDUIT UP TO VIADUCT DECK, SEE SL-209 FOR CONTINUATION

CKT "19D"

BENT 9

BENT 10

BENT 11

BENT 12

MATCH LINE STA 33+50 (SEE SL-102 FOR CONTINUATION)

SIXTH

ST

34+00 35+00 36+00 37+00 38+00 39+00 40+00 41+00 42+00 43+00 44+00 45+00

VIADUCT ABOVE

ANDERSON

ALLEY

CLARENCE

SANTA ANA

FWY

64+50.01 D-25040 LED-0100 136W LEOTEK 60LED

65+74.26 D-25040 LED-0100 136W LEOTEK 60LED

86+84.28 D-25040 LED-0100 136W LEOTEK 60LED

88+37.31 D-25040 LED-0100 136W LEOTEK 60LED

67+74.05 D-25040 LED-0100 136W LEOTEK 60LED

CKT "18E"&"18B"

CKT "18C"&"18D"

CKT "17C"

CKT "18B","18C","18D","18E"

CKT "18D"

CKT "5A"&"5B"

CKT "5C"&"5D"

CONDUIT UP TO VIADUCT DECK, SEE SL-211 FOR CONTINUATION

CONTINUED ON RAMP/STAIR LIGHTING PLANS. SEE SL-7947 DRAWING SL-2205.

CONTINUED ON RAMP/STAIR LIGHTING PLANS. SEE SL-7947 DRAWING SL-2206.

MATCH LINE STA 45+50 (SEE BELOW FOR CONTINUATION)

ANDERSON ST. SERVICE CONNECTION (SEE SL-104 FOR CONTINUATION)

NEW U.G. MULT. ST. LTG. SVC. NO. 5 11 21 28 41 37 52

VL: 670 CLARENCE ST.

INSTALL: CKT "5A": 58-40W LED PHILIPS eW GRAZE (NOS. (439A)-(496A))
58-20W LED PHILIPS eW GRAZE (NOS. (439B)-(496B))
CKT "5B": 43-40W LED PHILIPS eW GRAZE (NOS. (497A)-(539A))
~~43-20W LED PHILIPS eW GRAZE (NOS. (497B)-(539B))~~
1 2-108W LED SOLECITY (NOS. (1092)-(1093))
CKT "5C": ~~80-40W LED PHILIPS eW GRAZE (NOS. (974A)-(1033A))~~
60-20W LED PHILIPS eW GRAZE (NOS. (974B)-(1033B))
CKT "5D": 40-40W LED PHILIPS eW GRAZE (NOS. (1034A)-(1072A))
~~40-20W LED PHILIPS eW GRAZE (NOS. (1034B)-(1072B))~~
1 2-108W LED SOLECITY (NOS. (1094)-(1095))

CONTRACTOR:
INSPECTED BY:
DATE ENERGIZED
DATE ENERGIZED
CORRECTED TO "AS BUILT"
BY
CHECKED

STATE MAINTENANCE AGREEMENT. CITY CONTRACT NO. 65895. MAINTAINED BY CITY

FWY

ABUT 13

MATCH LINE STA 45+50 (SEE ABOVE FOR CONTINUATION)

WHITTIER

46+00 47+00 48+00 49+00 50+00 51+00 52+00 53+00 54+00

BLVD

GOLDEN STATE

AVE

BOYLE

48+05.30 D-28321 DL-1003 200 HPS

49+61.98 D-28321 DL-1003 200 HPS

51+25.36 D-28321 DL-1003 200 HPS

48+85.99 D-28321 DL-1003 200 HPS

50+39.51 D-28321 DL-1003 200 HPS

52+01.43 D-28321 DL-1003 200 HPS

68+99.38 SL1128-3 CD929B 310W HPS

52+97.05 SL1128-2 CD929B 310W HPS

69+62.47 SL5500-2 CAL TYPE 24-3-70 310W HPS

53+03.85 SL1128-6 CD910 310W HPS

70+50.17 SL1128-7 CD929B7 310W HPS

54+32.89 SL1128-8 CD929B7 310W HPS

71+46.41 D25040-528 LED5100 CD953C 82W LED

46+10.43 EB

(SEE SL-212 FOR STREET LIGHTING ON EAST APPROACH)

EXISTING SERIES CIRCUIT X-8851, 15KW
PP# 91047M (BOYLE AVE W/S 105' S/O WHITTIER BL)
EXISTING: 6-200W HPS (NOS. (84)-(89))
6-400W MV (NOS. (0-208)-(0-213))

GRADE LEVEL STREET LIGHTING PLAN

SCALE: 1" = 40'

1 SL-102

DELTA No.	DESCRIPTION OF REVISION	DATE	BY
1	REVISED PER BSL REVIEW	4/7/2017	A. GOROVAYA

PLANS PREPARED BY:
HNTB Corporation
One Bunker Hill Bldg.,
601 West 5th St., Ste 1000
Los Angeles, California 90071

SIGNATURE 1/20/2017 DATE

REGISTERED PROFESSIONAL ENGINEER CARL A. AYUB No. E17891 Exp. 9/30/2018 ELECTRICAL STATE OF CALIFORNIA

STREET LIGHTING PLANS
SIXTH STREET VIADUCT REPLACEMENT
W.O. E700224L (TASK 013) SL-7521

CITY OF LOS ANGELES
ED EBRAHIMIAN, DIRECTOR BUREAU OF STREET LIGHTING

ACCEPTED: for DIRECTOR, BUREAU OF STREET LIGHTING 3-22-17 DATE

DRAWING NO. SL-103

40' 20' 0 40' 80'
SCALE 1" = 40'-0"

SCALE OF ORIGINAL PLAN: 1" = 40' | SHEET OF SHEETS | INDEX NUMBER

T.O. 5 - Change Order Serial Sketch No. 17R3 - Page 3 of 16

THE CITY OF LOS ANGELES OR ITS OFFICERS OR AGENTS SHALL NOT BE RESPONSIBLE FOR THE ACCURACY OR COMPLETENESS OF ELECTRONIC COPIES OF THIS PLAN SHEET.

C:\caddlib\pw\pwwestcoast\rgreenlee\dms57861\SL-102.dwg Mar 14, 2017 - 12:56pm

CITY OF LOS ANGELES DEPARTMENT OF PUBLIC WORKS BUREAU OF STREET LIGHTING

ADDENDUM 5

THE CITY OF LOS ANGELES OR ITS OFFICERS OR AGENTS SHALL NOT BE RESPONSIBLE FOR THE ACCURACY OR COMPLETENESS OF ELECTRONIC COPIES OF THIS PLAN SHEET.

C:\cddlib\pw\pwwestcoast\rgreenlee\dms57861\SL-102.dwg May 19, 2016 - 12:39pm

2x Stacked Type 2 Pull Boxes

Callout #28 - "Install Type 3 Pullbox"

Bore a new 1.5" conduit from Service #14 pull box to street light pole 451 pull box.

RFI 350

Issue: Existing Condition is Double Stacked Type 2 Pull Boxes.

EXISTING MULTIPLE ST. LTG. SVC. NO. 17
PP #273578M
EXISTING: CKT "17A": 9-136W LEOTEK 60LED (NOS. (452)-(458) & (463)-(464))
CKT "17B": 3-136W LEOTEK 60LED (NOS. (449)-(451) & (459)-(460))
INSTALL: CKT "17C": 700-2W LED LEDPOD (ESTIMATE) 9-136W LEOTEK 60LED (NOS. (433)-(439))
TRANSFER TO CKT NO. 17C: CKT "17B": 2-136W LEOTEK 60LED (NOS. (449)-(450))

EXISTING MULTIPLE ST. LTG. SVC. NO. 18
PP #276537M
(CONVERT FROM 3 CKT. TO 5 CKT.)
EXISTING: CKT "18A": 7-136W LEOTEK 60LED (NOS. (440)-(446))
CKT "18B": 6-136W LEOTEK 60LED (NOS. (428)-(431) & (447)-(448))
CKT "18C": 8-136W LEOTEK 60LED (NOS. (432)-(439))
INSTALL: CKT "18B": 48-40W LED PHILIPS eW GRAZE (NOS. (391A)-(438A)) 48-20W LED PHILIPS eW GRAZE (NOS. (391B)-(438B))
CKT "18C": 50-40W LED PHILIPS eW GRAZE (NOS. (876A)-(925A)) 50-20W LED PHILIPS eW GRAZE (NOS. (876B)-(925B))
CKT "18D": 48-40W LED PHILIPS eW GRAZE (NOS. (926A)-(973A)) 48-20W LED PHILIPS eW GRAZE (NOS. (926B)-(973B))
CKT "18E": 50-40W LED PHILIPS eW GRAZE (NOS. (341A)-(390A)) 50-20W LED PHILIPS eW GRAZE (NOS. (341B)-(390B))
INSTALL ALL #6 THROUGHOUT.
TRANSFER TO CKT NO. 18A: CKT "18B" 6-136W LEOTEK 60LED (NOS. (428)-(431) & (447)-(448))
TRANSFER TO CKT NO. 18D: CKT "18C": 1-136W LEOTEK 60LED (NO. (432))
TRANSFER TO CKT NO. 17C: CKT "18C": 7-136W LEOTEK 60LED (NOS. (433)-(439))

TO 6TH ST VIADUCT (SEE SL-103 FOR CONTINUATION)

CONTRACTOR:
INSPECTED BY:
DATE EMERGIZED
DATE EMERGIZED
CORRECTED TO "AS BUILT"
BY
CHECKED

GRADE LEVEL STREET LIGHTING PLAN

SCALE: 1" = 10'

1 / SL-103

40' 20' 0 40' 80'
SCALE 1" = 40'-0"

PLANS PREPARED BY:
HNTB Corporation
One Bunker Hill Bldg.,
601 West 5th St., Ste 1000
Los Angeles, California 90071

SIGNATURE

4/14/2016
DATE

REGISTERED PROFESSIONAL ENGINEER PATRICIA L. FORCE No. E 14352 EXP. 12/31/17 ELECTRICAL STATE OF CALIFORNIA

BUREAU OF ENGINEERING OFFICIAL RECORD

STREET LIGHTING PLANS
SIXTH STREET VIADUCT REPLACEMENT
W.O. E700224L (TASK 013) SL-7521

CITY OF LOS ANGELES
ED EBRAHIMIAN, DIRECTOR BUREAU OF STREET LIGHTING

ACCEPTED: _____ DIRECTOR, BUREAU OF STREET LIGHTING
5-27-16 DATE

DRAWING NO. SL-104

SCALE OF ORIGINAL PLAN: 1" = 40'

SHEET 94 OF 560 SHEETS

INDEX NUMBER P-38113

CITY OF LOS ANGELES DEPARTMENT OF PUBLIC WORKS BUREAU OF STREET LIGHTING

ADDENDUM 5

THE CITY OF LOS ANGELES OR ITS OFFICERS OR AGENTS SHALL NOT BE RESPONSIBLE FOR THE ACCURACY OR COMPLETENESS OF ELECTRONIC COPIES OF THIS PLAN SHEET.

NOTES FOR SHEETS SL-200 THROUGH SL-212:

1. FOR LUMINOUS BARRIER INSTALLATION AND CONDUIT ROUTING DETAILS SEE DRAWING SL-404.
2. FOR ONE-LINE DIAGRAMS SEE SL-300 THROUGH SL-302.
3. SHADED CONDUIT AND PULLBOXES ARE FOR VIADUCT ACCENT LIGHTING. SEE ACCENT LIGHTING PACKAGE, DRAWINGS SL-1202 THRU SL-1212.
4. SOME CONDUIT/CONDUCTORS ARE NOT SHOWN FOR CLARITY. SEE DETAILS AND ONE-LINE DIAGRAMS FOR CLARIFICATION.
5. UNLESS NOTED OTHERWISE, INSTALL THREE MULTIPLE CIRCUIT WIRES IN ALL CONDUIT: (COLOR CODE: 1-RED, 1-BLACK, 1-WHITE).
6. UNLESS NOTED OTHERWISE, INSTALL CONDUIT COMBINATION EXPANSION-DEFLECTION FITTING PER CALTRANS STD. PLAN NO. ES-9B, DETAIL X-Y AT EACH BRIDGE EXPANSION JOINT, HINGE, OR ABUTMENT.
7. COORDINATE WITH BRIDGE STRUCTURE PLANS FOR INSTALLATION AND LOCATION OF STREET LIGHTING CONDUIT WITHIN THE BRIDGE.

CONTRACTOR:
INSPECTED BY:
DATE ENERGIZED
DATE ENERGIZED
CORRECTED TO "AS BUILT"
BY
CHECKED

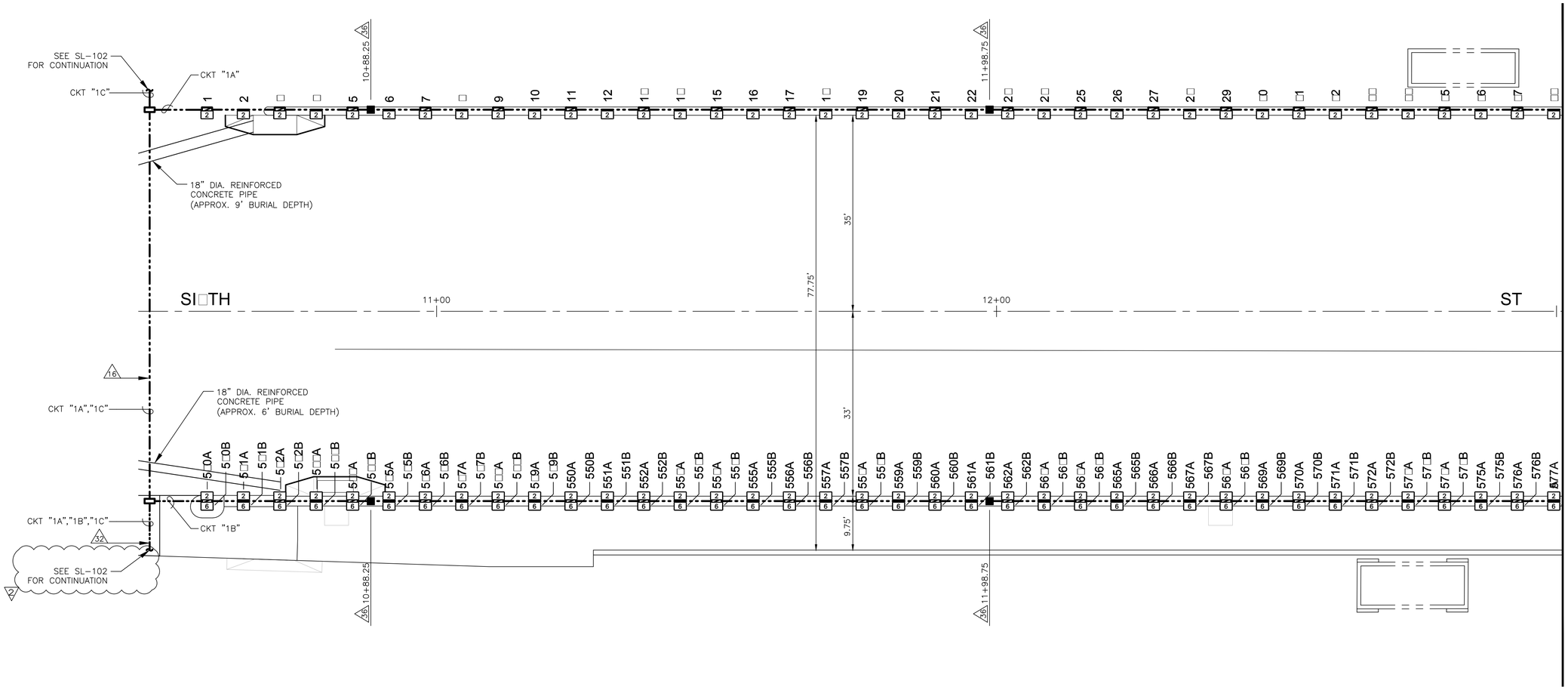

ENLARGED VIADUCT LEVEL STREET LIGHTING PLAN

SCALE□1" □ 10□

1
SL-100

DELTA No.	DESCRIPTION OF REVISION	DATE	BY
1	REVISED PER BSL REVIEW	4 / 7 / 2017	A. GOROVAYA
2	RELOCATE SERVICE NO. 1	2/12/2020	D. WOODWARD

T.O. 5 - Change Order Serial Sketch No. 116 - Page 3 of 4

10□ 5□ 0 10□ 20□
SCALE 1" □ 10□0"

PLANS PREPARED BY:
HNTB Corporation
One Bunker Hill Bldg.,
601 West 5th St., Ste 1000
Los Angeles, California 90071

SIGNATURE 1/20/2017 DATE

REGISTERED PROFESSIONAL ENGINEER
CARL A. AYUB
No. E17891
Exp. 9/30/2020
ELECTRICAL
STATE OF CALIFORNIA

STREET LIGHTING PLANS
SIXTH STREET VIADUCT REPLACEMENT
W.O. E700224L (TASK 013) SL-7521

CITY OF LOS ANGELES
ED EBRAHIMIAN, DIRECTOR BUREAU OF STREET LIGHTING

ACCEPTED: _____ DIRECTOR, BUREAU OF STREET LIGHTING _____ DATE

DRAWING NO.
SL-200

SCALE OF ORIGINAL PLAN: 1" = 10'

SHEET OF SHEETS

INDEX NUMBER

C:\cadlib\pw\hntb_nchowdhury\west\dms57861\SL-200.dwg Feb 11, 2020 - 10:54am

CITY OF LOS ANGELES DEPARTMENT OF PUBLIC WORKS BUREAU OF STREET LIGHTING

ADDENDUM 5

THE CITY OF LOS ANGELES OR ITS OFFICERS OR AGENTS SHALL NOT BE RESPONSIBLE FOR THE ACCURACY OR COMPLETENESS OF ELECTRONIC COPIES OF THIS PLAN SHEET.

C:\cadlib\pw\pwwestcoast\rgreenlee\dms57861\SL-200.dwg May 19, 2016 - 10:42am

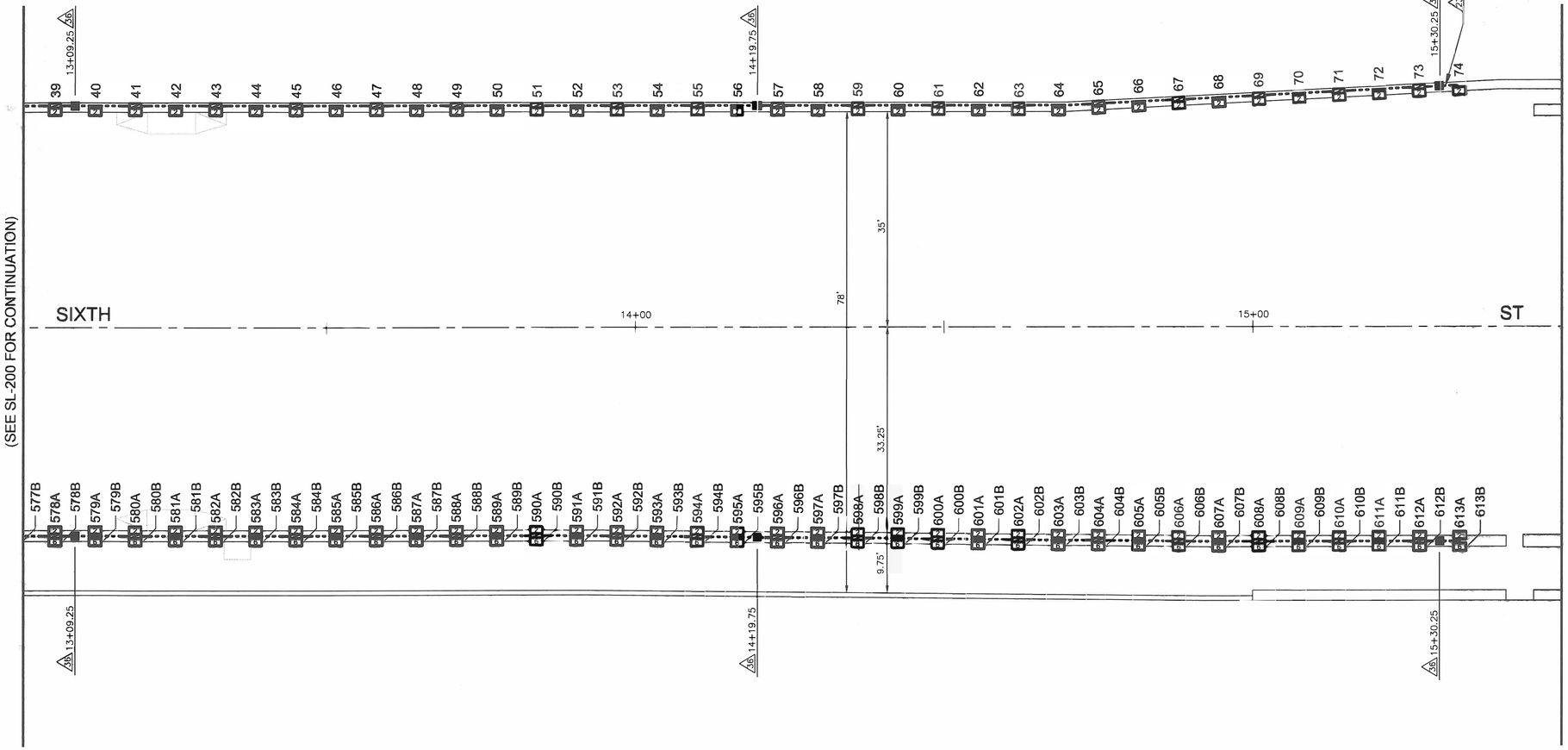

CONTRACTOR:
INSPECTED BY:
DATE ENERGIZED:
DATE ENERGIZED:
CORRECTED TO "AS BUILT"
BY CHECKED

BUREAU OF ENGINEERING
OFFICIAL RECORD

ENLARGED VIADUCT LEVEL STREET LIGHTING PLAN

SCALE: 1" = 10'

1 / SL-100

10' 5' 0 10' 20'
SCALE 1" = 10'-0"

PLANS PREPARED BY:
HNTB Corporation
One Bunker Hill Bldg.,
601 West 5th St., Ste 1000
Los Angeles, California 90071

SIGNATURE 4/14/2016 DATE

REGISTERED PROFESSIONAL ENGINEER
PATRICIA L. FORCE
No. EE4352
Exp. 12/31/17
ELECTRICAL
STATE OF CALIFORNIA
5/27/16

STREET LIGHTING PLANS
SIXTH STREET VIADUCT REPLACEMENT
W.O. E700224L (TASK 013) SL-7521

CITY OF LOS ANGELES
ED EBRAHIMIAN, DIRECTOR BUREAU OF STREET LIGHTING

ACCEPTED: _____ 5-27-16
DIRECTOR, BUREAU OF STREET LIGHTING DATE

DRAWING NO. SL-201

SCALE OF ORIGINAL PLAN: 1" = 10'

SHEET 96 OF 560 SHEETS

INDEX NUMBER **P-38113**

CITY OF LOS ANGELES
DEPARTMENT OF PUBLIC WORKS
BUREAU OF STREET LIGHTING

ADDENDUM 5

THE CITY OF LOS ANGELES OR ITS OFFICERS OR AGENTS SHALL NOT BE RESPONSIBLE FOR THE ACCURACY OR COMPLETENESS OF ELECTRONIC COPIES OF THIS PLAN SHEET.

C:\caddlib\pw\pwwestcoast\vgreenlee\dms57861\SL-200.dwg Mar 14, 2017 - 12:54pm

Omit installing light 76 and pull box per RFI 566.

BIKE RAMP

ABUT 1

BENT 2

BENT 3

CKT "2E"

CONTINUED TO SANTA FE AVE UNDERPASS LIGHTING. SEE SL-213

MATCH LINE STA 15+50 (SEE SL-201 FOR CONTINUATION)

MATCH LINE STA 18+50 (SEE SL-203 FOR CONTINUATION)

SIXTH ST

16+00 17+00 18+00

15+57.41 16+35.95 17+45.67

16+36.56 17+47.84

88'

34'

10'

CONTINUED TO WEST STAIR LIGHTING. SEE RAMP/STAIR LIGHTING PACKAGE DRAWING SL-2207.

CONTRACTOR:
INSPECTED BY:
DATE ENERGIZED
DATE ENERGIZED
CORRECTED TO "AS BUILT"
BY CHECKED

ENLARGED VIADUCT LEVEL STREET LIGHTING PLAN

SCALE: 1" = 10'

1 / SL-100

DELTA No.	DESCRIPTION OF REVISION	DATE	BY
1	REVISED PER BSL REVIEW	4/7/2017	A. GOROVAYA

PLANS PREPARED BY:
HNTB Corporation
One Bunker Hill Bldg.,
601 West 5th St., Ste 1000
Los Angeles, California 90071

SIGNATURE 1/20/2017 DATE

REGISTERED PROFESSIONAL ENGINEER CARL A. AYUBI No. E17891 Exp. 9/30/2018 ELECTRICAL STATE OF CALIFORNIA

SCALE 1" = 10'-0"

STREET LIGHTING PLANS
SIXTH STREET VIADUCT REPLACEMENT
W.O. E700224L (TASK 013) SL-7521

CITY OF LOS ANGELES
ED EBRAHIMIAN, DIRECTOR BUREAU OF STREET LIGHTING

ACCEPTED: DIRECTOR, BUREAU OF STREET LIGHTING 3-22-17 DATE

DRAWING NO. SL-202

SCALE OF ORIGINAL PLAN: 1" = 10' | SHEET OF SHEETS | INDEX NUMBER

T.O. 5 - Change Order Serial Sketch No. 17R3 - Page 5 of 16

CITY OF LOS ANGELES DEPARTMENT OF PUBLIC WORKS BUREAU OF STREET LIGHTING

ADDENDUM 5

THE CITY OF LOS ANGELES OR ITS OFFICERS OR AGENTS SHALL NOT BE RESPONSIBLE FOR THE ACCURACY OR COMPLETENESS OF ELECTRONIC COPIES OF THIS PLAN SHEET.

C:\coddlib\pw\pwwestcoast\rgreenlee\dms57861\SL-200.dwg Mar 14, 2017 - 12:54pm

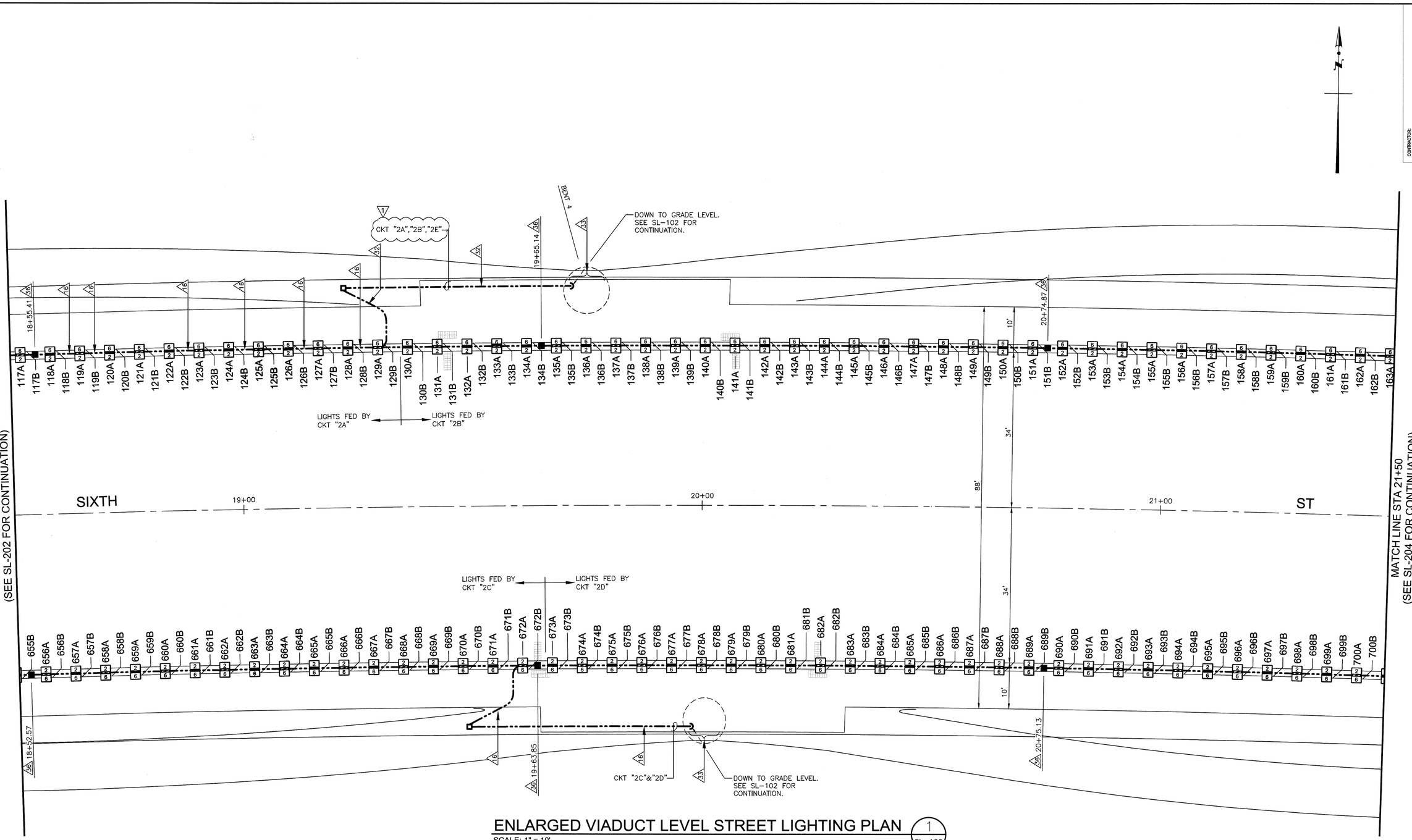

ENLARGED VIADUCT LEVEL STREET LIGHTING PLAN

SCALE: 1" = 10'

1 / SL-100

DELTA No.	DESCRIPTION OF REVISION	DATE	BY
1	REVISED PER BSL REVIEW	4/7/2017	A. GOROVAYA

PLANS PREPARED BY:

HNTB Corporation
One Bunker Hill Bldg.,
601 West 5th St., Ste 1000
Los Angeles, California 90071

SIGNATURE — 1/20/2017 DATE

REGISTERED PROFESSIONAL ENGINEER
CARL A. AYUBI
No. E17891
Exp. 9/30/2018
ELECTRICAL
STATE OF CALIFORNIA

10' 5' 0 10' 20'
SCALE 1" = 10'-0"

STREET LIGHTING PLANS
SIXTH STREET VIADUCT REPLACEMENT
W.O. E700224L (TASK 013) SL-7521

CITY OF LOS ANGELES
ED EBRAHIMIAN, DIRECTOR BUREAU OF STREET LIGHTING

ACCEPTED: _____ DIRECTOR, BUREAU OF STREET LIGHTING — 3-22-17 DATE

DRAWING NO. SL-203

CONTRACTOR:
INSPECTED BY:
DATE ENERGIZED
DATE ENERGIZED
CORRECTED TO "AS BUILT"
BY: CHECKED

SCALE OF ORIGINAL PLAN: 1" = 10' | SHEET OF SHEETS | INDEX NUMBER

BUREAU OF STREET LIGHTING
DEPARTMENT OF PUBLIC WORKS
CITY OF LOS ANGELES

ADDENDUM 5

THE CITY OF LOS ANGELES AND ITS OFFICERS OR AGENTS SHALL NOT BE RESPONSIBLE FOR THE ACCURACY OR COMPLETENESS OF ELECTRONIC COPIES OF THIS PLAN SHEET.

C:\caddlib\pw\pwwestcoast\ygreenlee\dms57861\SL-200.dwg May 19, 2016 - 10:43am

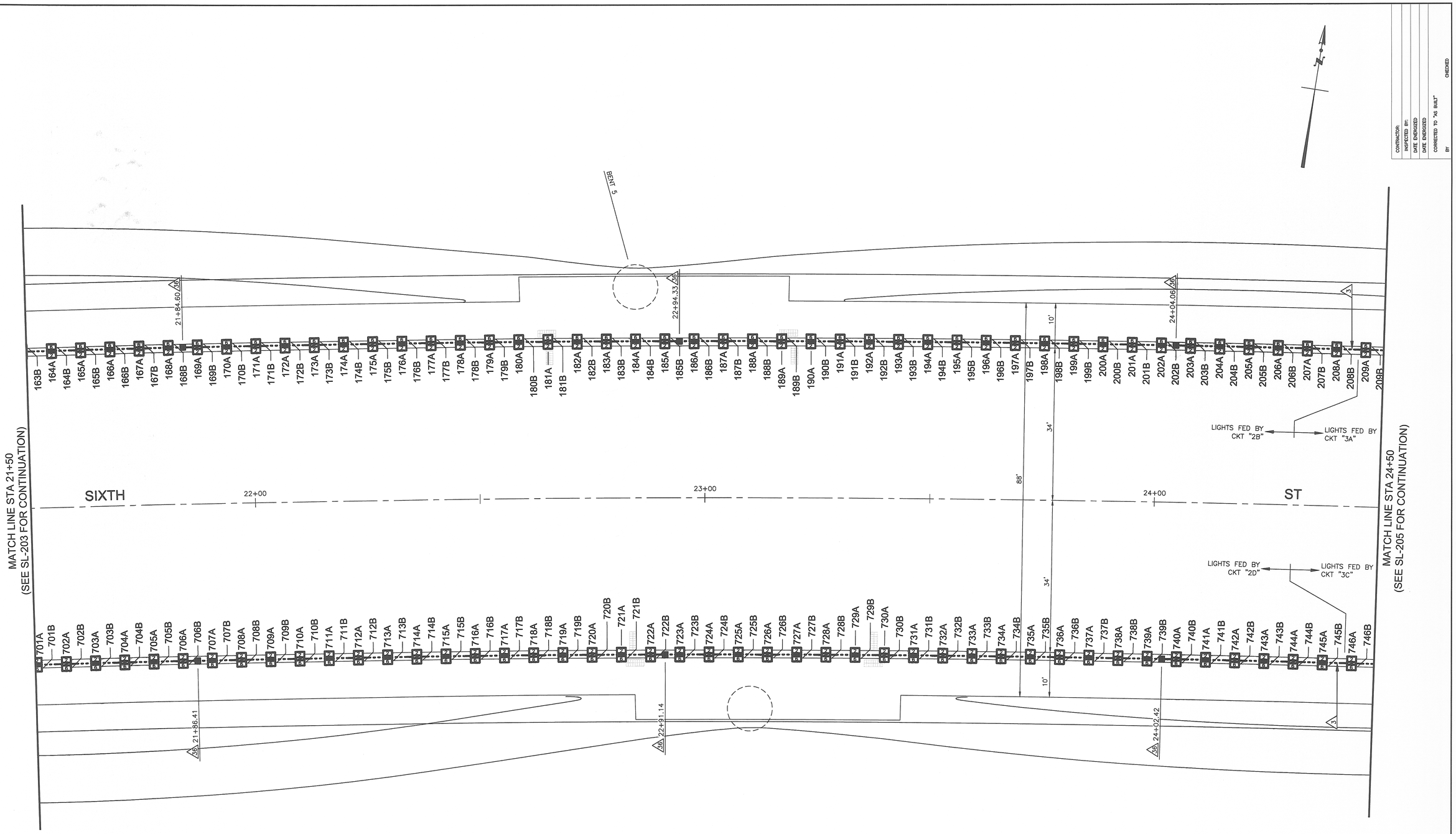

ENLARGED VIADUCT LEVEL STREET LIGHTING PLAN

(1 / SL-100)

SCALE: 1" = 10'

10' 5' 0 10' 20'

SCALE 1" = 10'-0"

PLANS PREPARED BY:

HNTB Corporation
One Bunker Hill Bldg.,
601 West 5th St., Ste 1000
Los Angeles, California 90071

SIGNATURE — 4/14/2016 DATE

REGISTERED PROFESSIONAL ENGINEER — PATRICIA L. FORNCE — No. E21352 — Exp. 12/31/17 — ELECTRICAL — STATE OF CALIFORNIA — 5/24/16

BUREAU OF ENGINEERING — OFFICIAL RECORD

STREET LIGHTING PLANS
SIXTH STREET VIADUCT REPLACEMENT
W.O. E700224L (TASK 013) SL-7521

CITY OF LOS ANGELES
ED EBRAHIMIAN, DIRECTOR BUREAU OF STREET LIGHTING

ACCEPTED: _____ DIRECTOR, BUREAU OF STREET LIGHTING — 5-27-16 DATE

DRAWING NO. SL-204

SCALE OF ORIGINAL PLAN: 1" = 10'

SHEET 99 OF 560 SHEETS

INDEX NUMBER P-38113

CITY OF LOS ANGELES
DEPARTMENT OF PUBLIC WORKS
BUREAU OF STREET LIGHTING

ADDENDUM 5

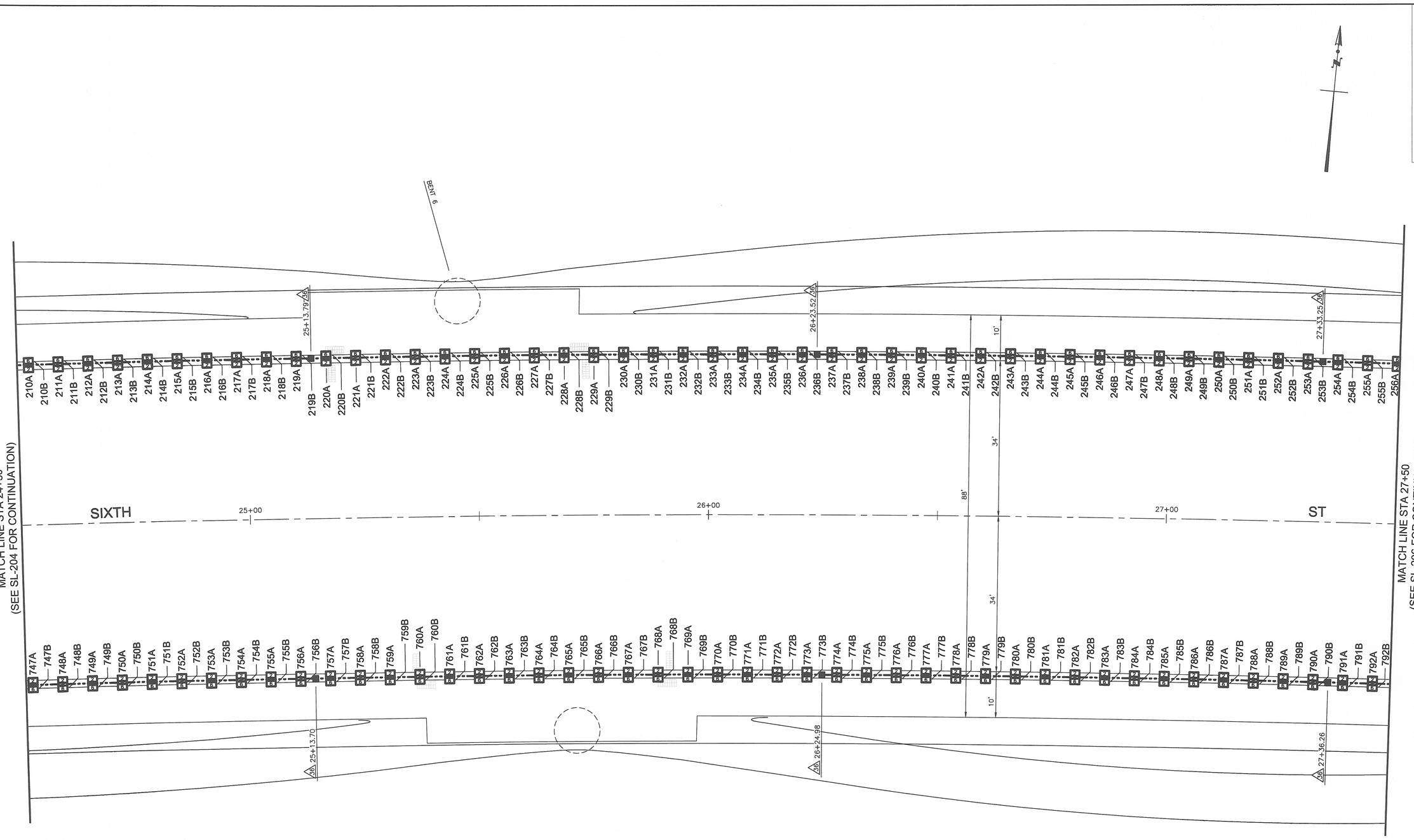

ENLARGED VIADUCT LEVEL STREET LIGHTING PLAN

1
SL-100

SCALE: 1" = 10'

10' 5' 0 10' 20'
SCALE 1" = 10'-0"

PLANS PREPARED BY:
HNTB Corporation
One Bunker Hill Bldg.,
601 West 5th St., Ste 1000
Los Angeles, California 90071

SIGNATURE 4/14/2016 DATE

REGISTERED PROFESSIONAL ENGINEER
PATRICIA L. FORGE
No. E14352
Exp. 12/31/17
ELECTRICAL
STATE OF CALIFORNIA
5/26/16

STREET LIGHTING PLANS
SIXTH STREET VIADUCT REPLACEMENT
W.O. E700224L (TASK 013) SL-7521

CITY OF LOS ANGELES
ED EBRAHIMIAN, DIRECTOR BUREAU OF STREET LIGHTING

ACCEPTED: Nam Ishakian for 5-27-16
DIRECTOR, BUREAU OF STREET LIGHTING DATE

DRAWING NO.
SL-205

SCALE OF ORIGINAL PLAN: 1" = 10'

SHEET 100 OF 560 SHEETS

INDEX NUMBER **P-38113**

CONTRACTOR:
INSPECTED BY:
DATE ENERGIZED
DATE ENERGIZED
CORRECTED TO "AS BUILT"
BY CHECKED

BUREAU OF STREET LIGHTING
DEPARTMENT OF PUBLIC WORKS
CITY OF LOS ANGELES

THE CITY OF LOS ANGELES OR ITS OFFICERS OR AGENTS SHALL NOT BE RESPONSIBLE FOR THE ACCURACY OR COMPLETENESS OF ELECTRONIC COPIES OF THIS PLAN SHEET.

C:\caddlib\pw\pwwestcoast\rgreenlee\dms57861\SL-200.dwg May 19, 2016 - 10:44am

THE CITY OF LOS ANGELES OR ITS OFFICERS OR AGENTS SHALL NOT BE RESPONSIBLE FOR THE ACCURACY OR COMPLETENESS OF ELECTRONIC COPIES OF THIS PLAN SHEET.

C:\caddlib\pw\pwwestcoast\ygreenlee\dms578611\SL-200.dwg Oct 10, 2018 - 7:15am

ADDENDUM 5

NOTES:
1. INSTALL ON TYPE 80 BARRIER. SEE SL-405 FOR DETAILS WITH THE FOLLOWING DEVIATIONS. INSTALL ELECTROLIER ANCHORAGE PER CALTRANS STANDARD PLAN RSP ES-6B DETAIL B-1. SEE SL-409 FOR ANCHOR PLATE DETAILS. ANCHOR BOLT DIAMETER 1 INCH.

CONTRACTOR:	
INSPECTED BY:	
DATE ENERGIZED	
DATE ENERGIZED	
CORRECTED TO "AS BUILT"	
BY	CHECKED

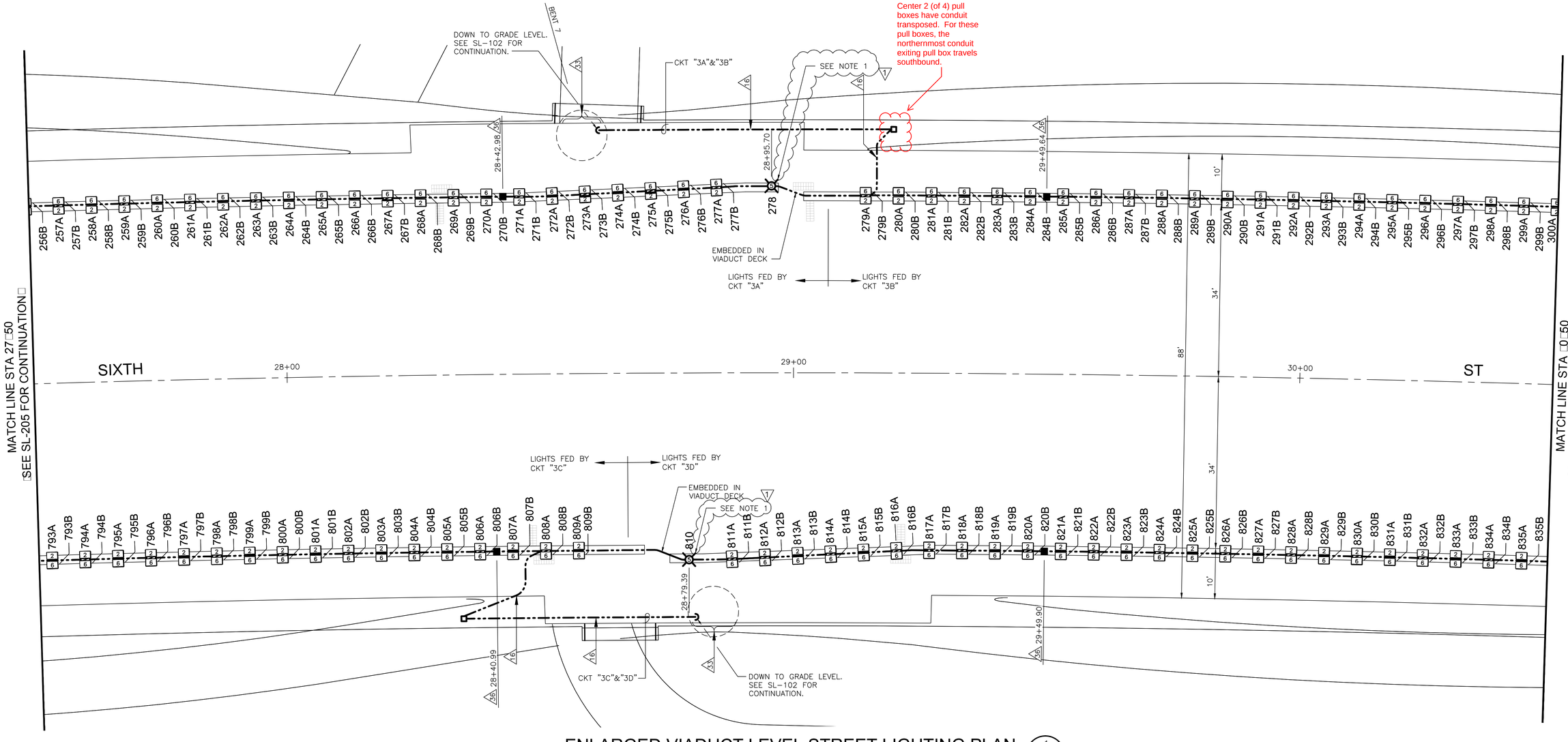

ENLARGED VIADUCT LEVEL STREET LIGHTING PLAN

SCALE 1" = 10'

1 / SL-100

T.O. 5 - Preliminary Change Order Serial Sketch No. 80 - Page 1 of 3

DELTA No.	DESCRIPTION OF REVISION	DATE	BY
1	RFI 207	10/09/2018	C. AYUBI

10' 5' 0 10' 20'
SCALE 1" = 10'-0"

PLANS PREPARED BY:
HNTB Corporation
One Bunker Hill Bldg.,
601 West 5th St., Ste 1000
Los Angeles, California 90071

SIGNATURE 10/10/2018 DATE

REGISTERED PROFESSIONAL ENGINEER CARL A. AYUBI No. E17891 Exp. 9/30/2020 ELECTRICAL STATE OF CALIFORNIA

STREET LIGHTING PLANS
SIXTH STREET VIADUCT REPLACEMENT
W.O. E700224L (TASK 013) SL-7521

CITY OF LOS ANGELES
ED EBRAHIMIAN, DIRECTOR BUREAU OF STREET LIGHTING

ACCEPTED: DIRECTOR, BUREAU OF STREET LIGHTING DATE

DRAWING NO. SL-206

SCALE OF ORIGINAL PLAN: 1" = 10' | SHEET OF SHEETS | INDEX NUMBER

CITY OF LOS ANGELES DEPARTMENT OF PUBLIC WORKS BUREAU OF STREET LIGHTING

ADDENDUM 5

THE CITY OF LOS ANGELES OR ITS OFFICERS OR AGENTS SHALL NOT BE RESPONSIBLE FOR THE ACCURACY OR COMPLETENESS OF ELECTRONIC COPIES OF THIS PLAN SHEET.

C:\coddlib\pw\pwwestcoast\rgreenlee\dms57861\SL-200.dwg May 19, 2016 - 10:44am

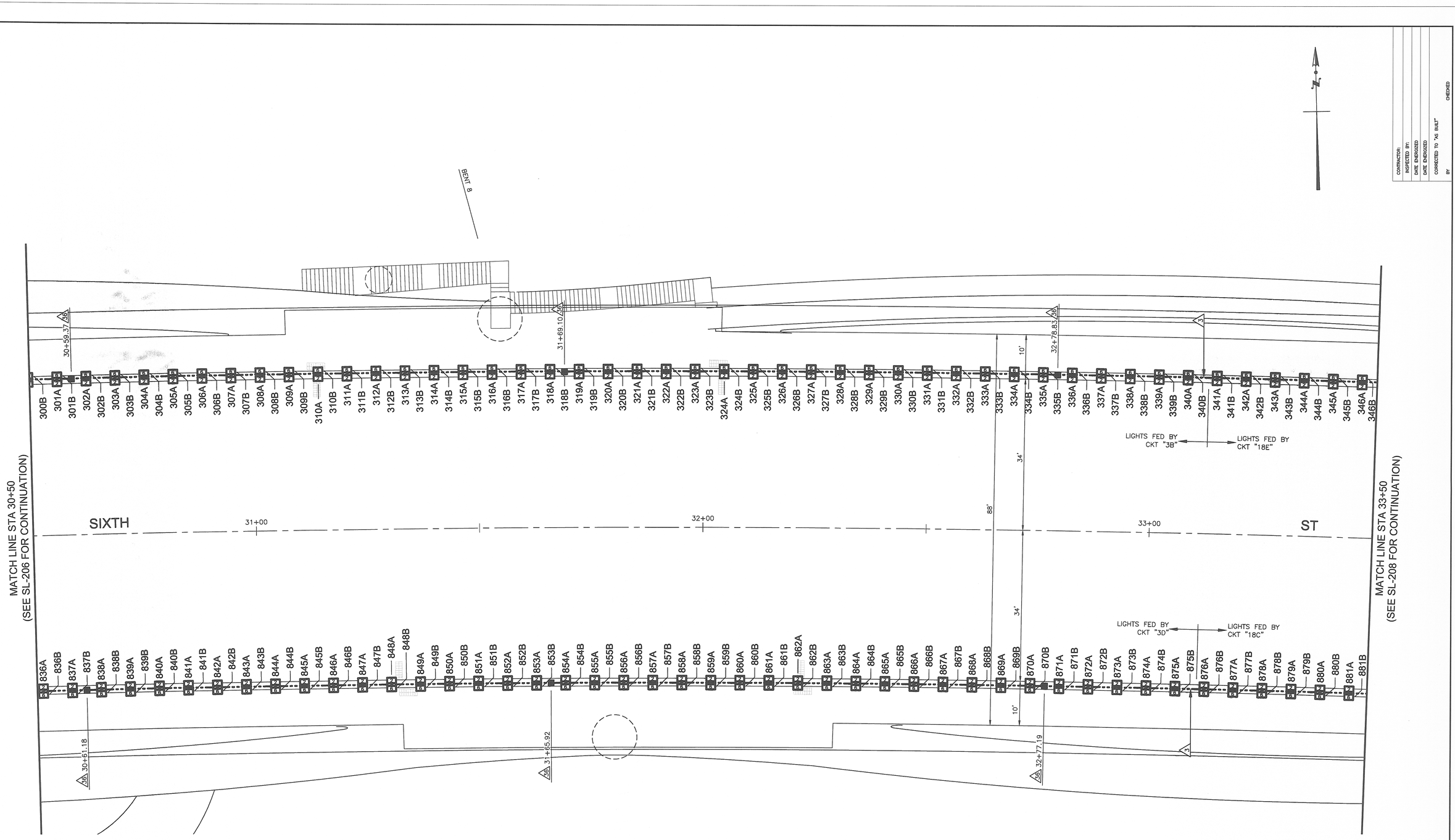

CONTRACTOR:
INSPECTED BY:
DATE ENERGIZED
DATE ENERGIZED
CORRECTED TO "AS BUILT"
BY CHECKED

DEPARTMENT OF PUBLIC WORKS
BUREAU OF STREET LIGHTING
CITY OF LOS ANGELES

ENLARGED VIADUCT LEVEL STREET LIGHTING PLAN

SCALE: 1" = 10'

1 / SL-100

10' 5' 0 10' 20'
SCALE 1" = 10'-0"

PLANS PREPARED BY:
HNTB Corporation
One Bunker Hill Bldg.,
601 West 5th St., Ste 1000
Los Angeles, California 90071

SIGNATURE 4/14/2016 DATE

REGISTERED PROFESSIONAL ENGINEER
PATRICIA L. PROVOST
No. E14352
Exp. 12/31/17
ELECTRICAL
STATE OF CALIFORNIA
5/27/16

BUREAU OF ENGINEERING
OFFICIAL RECORD

STREET LIGHTING PLANS
SIXTH STREET VIADUCT REPLACEMENT
W.O. E700224L (TASK 013) SL-7521

CITY OF LOS ANGELES
ED EBRAHIMIAN, DIRECTOR BUREAU OF STREET LIGHTING

ACCEPTED: _____ 5-27-16
DIRECTOR, BUREAU OF STREET LIGHTING DATE

DRAWING NO.
SL-207

SCALE OF ORIGINAL PLAN: 1" = 10'

SHEET 102 OF 560 SHEETS

INDEX NUMBER **P-38113**

ADDENDUM 5

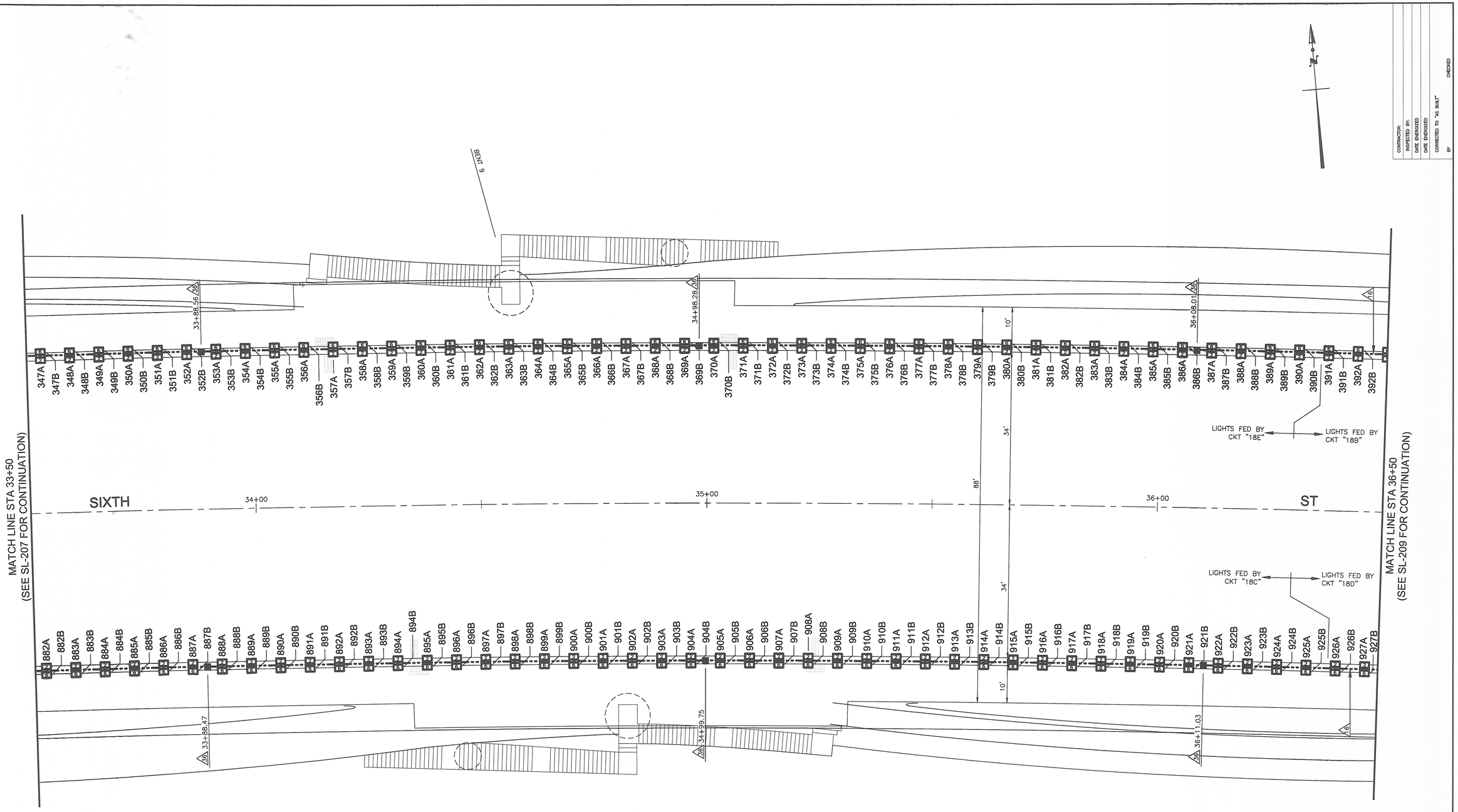

ENLARGED VIADUCT LEVEL STREET LIGHTING PLAN

1 / SL-100

SCALE: 1" = 10'

10' 5' 0 10' 20'

SCALE 1" = 10'-0"

PLANS PREPARED BY:

HNTB Corporation
One Bunker Hill Bldg.,
601 West 5th St., Ste 1000
Los Angeles, California 90071

SIGNATURE 4/14/2016 DATE

REGISTERED PROFESSIONAL ENGINEER PATRICIA L. TARDYCE No. E14352 Exp. 12/31/17 ELECTRICAL STATE OF CALIFORNIA 5/26/16

STREET LIGHTING PLANS
SIXTH STREET VIADUCT REPLACEMENT
W.O. E700224L (TASK 013) SL-7521

CITY OF LOS ANGELES
ED EBRAHIMIAN, DIRECTOR BUREAU OF STREET LIGHTING

ACCEPTED: DIRECTOR, BUREAU OF STREET LIGHTING 5-27-16 DATE

BUREAU OF ENGINEERING OFFICIAL RECORD

DRAWING NO. SL-208

SCALE OF ORIGINAL PLAN: 1" = 10'

SHEET 103 OF 560 SHEETS

INDEX NUMBER P-38113

CITY OF LOS ANGELES DEPARTMENT OF PUBLIC WORKS BUREAU OF STREET LIGHTING

CONTRACTOR:
INSPECTED BY:
DATE ENERGIZED
DATE ENERGIZED
CORRECTED TO "AS BUILT"
BY CHECKED

THE CITY OF LOS ANGELES OR ITS OFFICERS OR AGENTS SHALL NOT BE RESPONSIBLE FOR THE ACCURACY OR COMPLETENESS OF ELECTRONIC COPIES OF THIS PLAN SHEET.

C:\caddlib\pw\pwwestcoast\rgreenlee\dms57861\SL-200.dwg May 19, 2016 - 10:45am

ADDENDUM 5

THE CITY OF LOS ANGELES, ITS OFFICERS OR AGENTS SHALL NOT BE RESPONSIBLE FOR THE ACCURACY OR COMPLETENESS OF ELECTRONIC COPIES OF THIS PLAN SHEET.

C:\caddlib\pw\pwwestcoast\ygreenlee\dms57861\SL-200.dwg May 19, 2016 - 10:46am

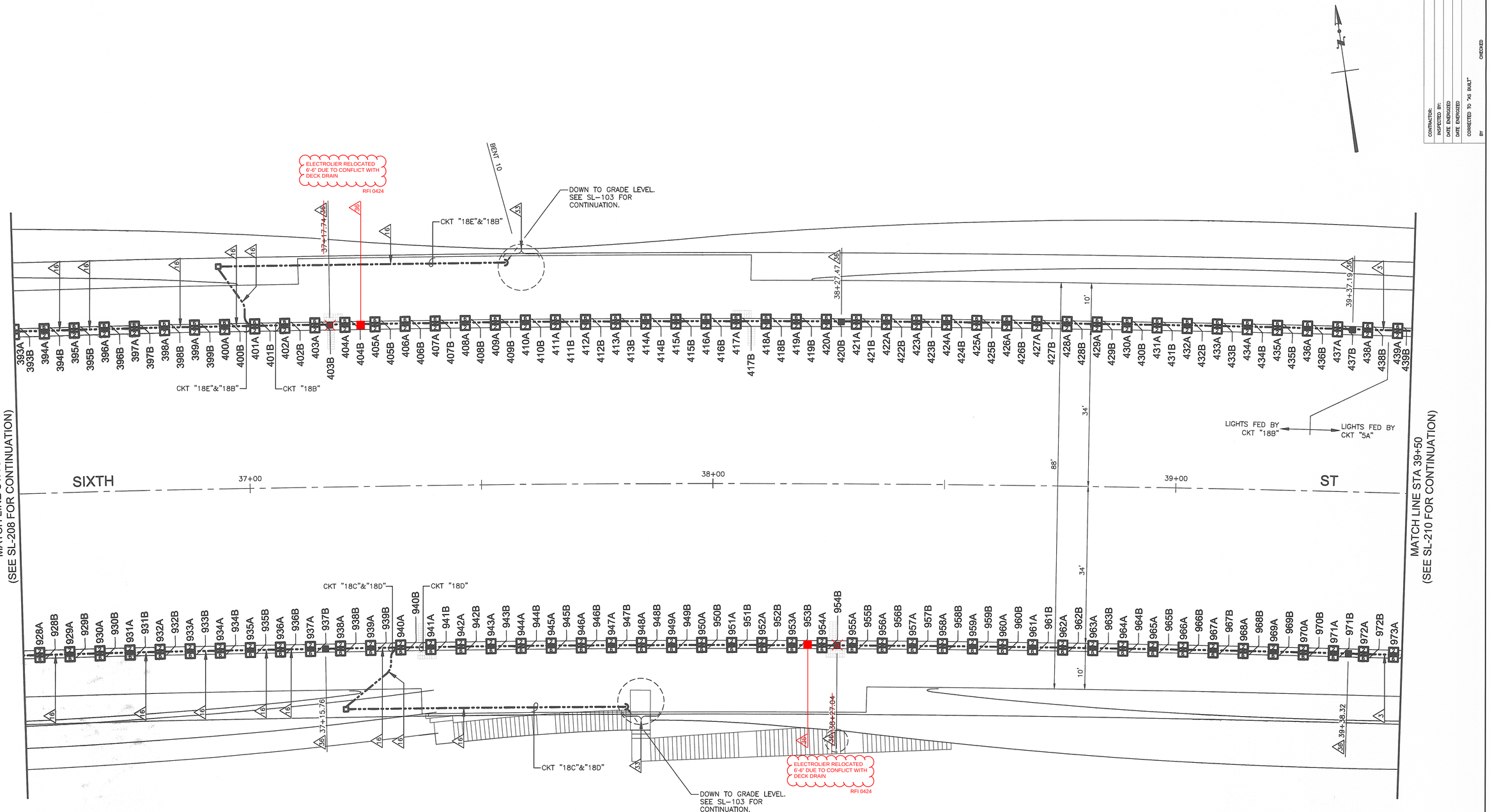

ENLARGED VIADUCT LEVEL STREET LIGHTING PLAN

1 / SL-100

SCALE: 1" = 10'

10' 5' 0 10' 20'
SCALE 1" = 10'-0"

PLANS PREPARED BY:
HNTB Corporation
One Bunker Hill Bldg.,
601 West 5th St., Ste 1000
Los Angeles, California 90071

SIGNATURE — 4/14/2016 DATE

REGISTERED PROFESSIONAL ENGINEER
PATRICIA L. PONTOYE
No. E14352
Exp. 12/31/17
ELECTRICAL
STATE OF CALIFORNIA
4/20/16

CONTRACTOR:
INSPECTED BY:
DATE ENERGIZED
DATE ENERGIZED
CORRECTED TO "AS BUILT"
BY — CHECKED

BUREAU OF ENGINEERING
OFFICIAL RECORD

STREET LIGHTING PLANS
SIXTH STREET VIADUCT REPLACEMENT
W.O. E700224L (TASK 013) SL-7521

CITY OF LOS ANGELES
ED EBRAHIMIAN, DIRECTOR BUREAU OF STREET LIGHTING

ACCEPTED: Norma Shakafo — DIRECTOR, BUREAU OF STREET LIGHTING — 5-27-16 DATE

DRAWING NO. SL-209

SCALE OF ORIGINAL PLAN: 1" = 10'

SHEET 104 OF 560 SHEETS

INDEX NUMBER P-38113

CITY OF LOS ANGELES
DEPARTMENT OF PUBLIC WORKS
BUREAU OF STREET LIGHTING

ADDENDUM 5

THE CITY OF LOS ANGELES OR ITS OFFICERS OR AGENTS SHALL NOT BE RESPONSIBLE FOR THE ACCURACY OR COMPLETENESS OF ELECTRONIC COPIES OF THIS PLAN SHEET.

C:\cadd\b\pw\pwwestcoast\ygreenlee\dms57861\SL-200.dwg May 19, 2016 - 10:46am

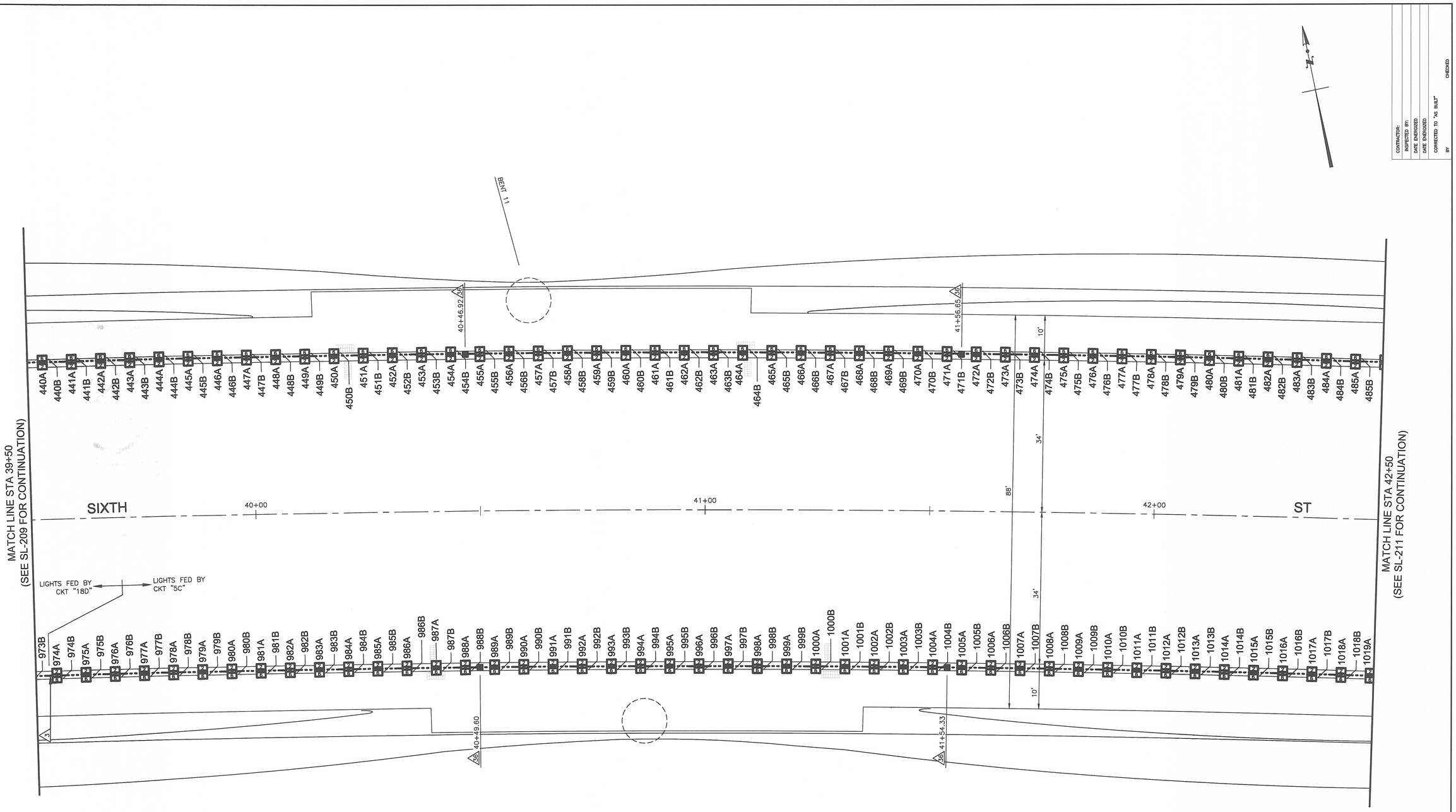

CONTRACTOR:
INSPECTED BY:
DATE ENERGIZED
DATE ENERGIZED
CORRECTED TO "AS BUILT"
BY CHECKED

ENLARGED VIADUCT LEVEL STREET LIGHTING PLAN (1 / SL-100)

SCALE: 1" = 10'

10' 5' 0 10' 20'
SCALE 1" = 10'-0"

PLANS PREPARED BY:
HNTB Corporation
One Bunker Hill Bldg.,
601 West 5th St., Ste 1000
Los Angeles, California 90071

SIGNATURE 4/14/2016 DATE

REGISTERED PROFESSIONAL ENGINEER
PATRICIA L. PRINCE
No. E14352
Exp. 12/31/17
ELECTRICAL
STATE OF CALIFORNIA
5/20/16

BUREAU OF ENGINEERING
OFFICIAL RECORD

STREET LIGHTING PLANS
SIXTH STREET VIADUCT REPLACEMENT
W.O. E700224L (TASK 013) SL-7521

CITY OF LOS ANGELES
ED EBRAHIMIAN, DIRECTOR BUREAU OF STREET LIGHTING

ACCEPTED: _____ DIRECTOR, BUREAU OF STREET LIGHTING 5-27-16 DATE

DRAWING NO. SL-210

SCALE OF ORIGINAL PLAN: 1" = 10'

SHEET 105 OF 560 SHEETS

INDEX NUMBER **P-38113**

CITY OF LOS ANGELES DEPARTMENT OF PUBLIC WORKS BUREAU OF STREET LIGHTING

ADDENDUM 5

THE CITY OF LOS ANGELES OR ITS OFFICERS OR AGENTS SHALL NOT BE RESPONSIBLE FOR THE ACCURACY OR COMPLETENESS OF ELECTRONIC COPIES OF THIS PLAN SHEET.

C:\coddlib\pw\pwwestcoast\vgreenlee\dms57861\SL-200.dwg May 19, 2016 - 10:46am

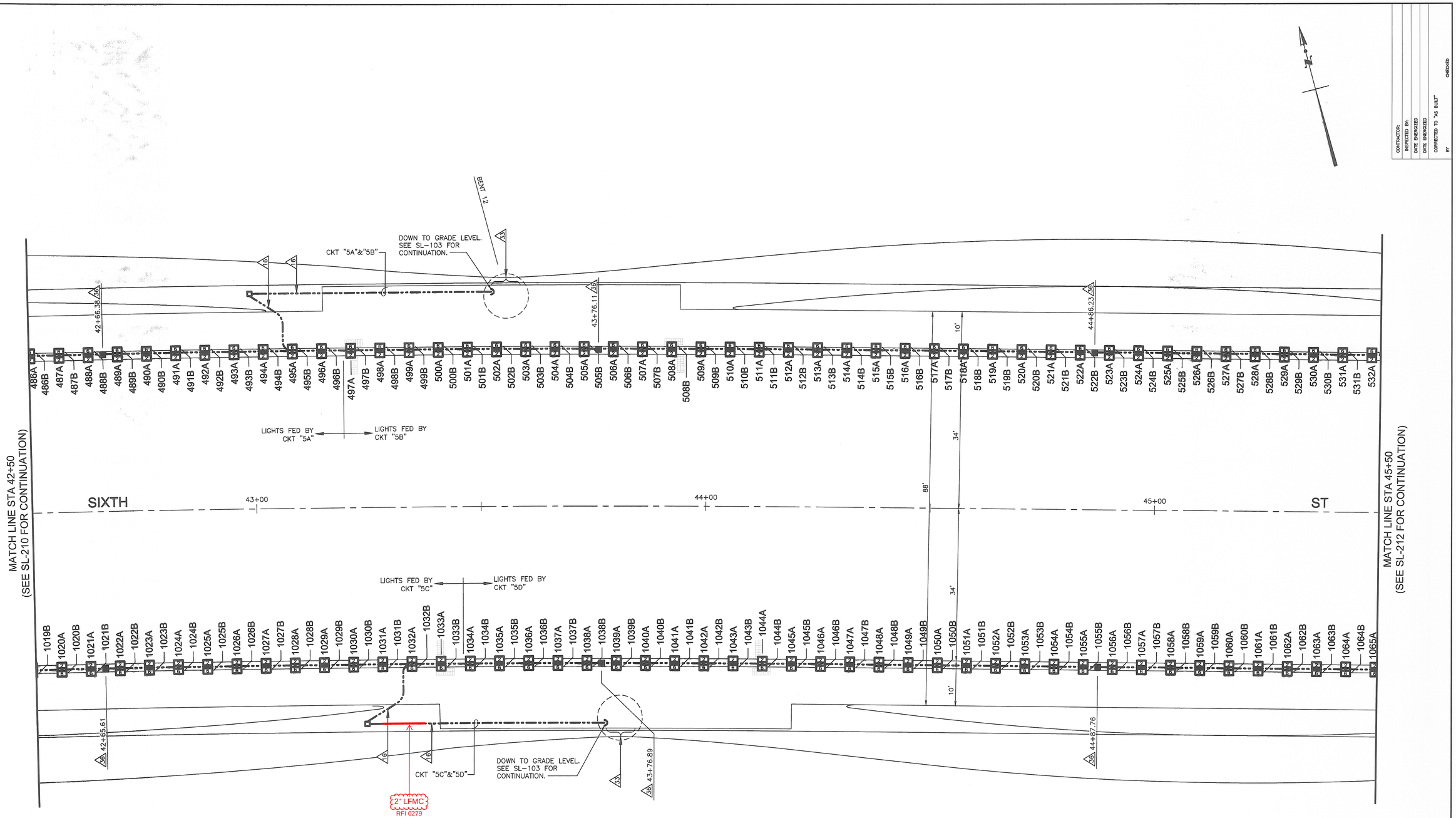

ENLARGED VIADUCT LEVEL STREET LIGHTING PLAN

SCALE: 1" = 10'

1 / SL-100

10' 5' 0 10' 20'

SCALE 1" = 10'-0"

CONTRACTOR:
INSPECTED BY:
DATE ENERGIZED
DATE ENERGIZED
CORRECTED TO "AS BUILT"
BY CHECKED

PLANS PREPARED BY:

HNTB Corporation
One Bunker Hill Bldg.,
601 West 5th St., Ste 1000
Los Angeles, California 90071

SIGNATURE 4/14/2016 DATE

REGISTERED PROFESSIONAL ENGINEER PATRICIA L. FORRESTER No. E14352 Exp. 12/31/17 ELECTRICAL STATE OF CALIFORNIA 5/26/16

BUREAU OF ENGINEERING OFFICIAL RECORD

STREET LIGHTING PLANS
SIXTH STREET VIADUCT REPLACEMENT
W.O. E700224L (TASK 013) SL-7521

CITY OF LOS ANGELES
ED EBRAHIMIAN, DIRECTOR BUREAU OF STREET LIGHTING

ACCEPTED: _____ 5-27-16
DIRECTOR, BUREAU OF STREET LIGHTING DATE

DRAWING NO. SL-211

SCALE OF ORIGINAL PLAN: 1" = 10'

SHEET 106 OF 560 SHEETS

INDEX NUMBER P-38113

CITY OF LOS ANGELES
DEPARTMENT OF PUBLIC WORKS
BUREAU OF STREET LIGHTING

THE CITY OF LOS ANGELES OR ITS OFFICERS OR AGENTS SHALL NOT BE RESPONSIBLE FOR THE ACCURACY OR COMPLETENESS OF ELECTRONIC COPIES OF THIS PLAN SHEET.

ADDENDUM 5

NOTES:
1. INSTALL CIDH FOUNDATION PER CALTRANS STANDARD PLAN RSP ES-6A FOR TYPE 21 POLE. FOLLOW ELECTROLIER MANUFACTURER'S BOLT CIRCLE DIMENSIONS.

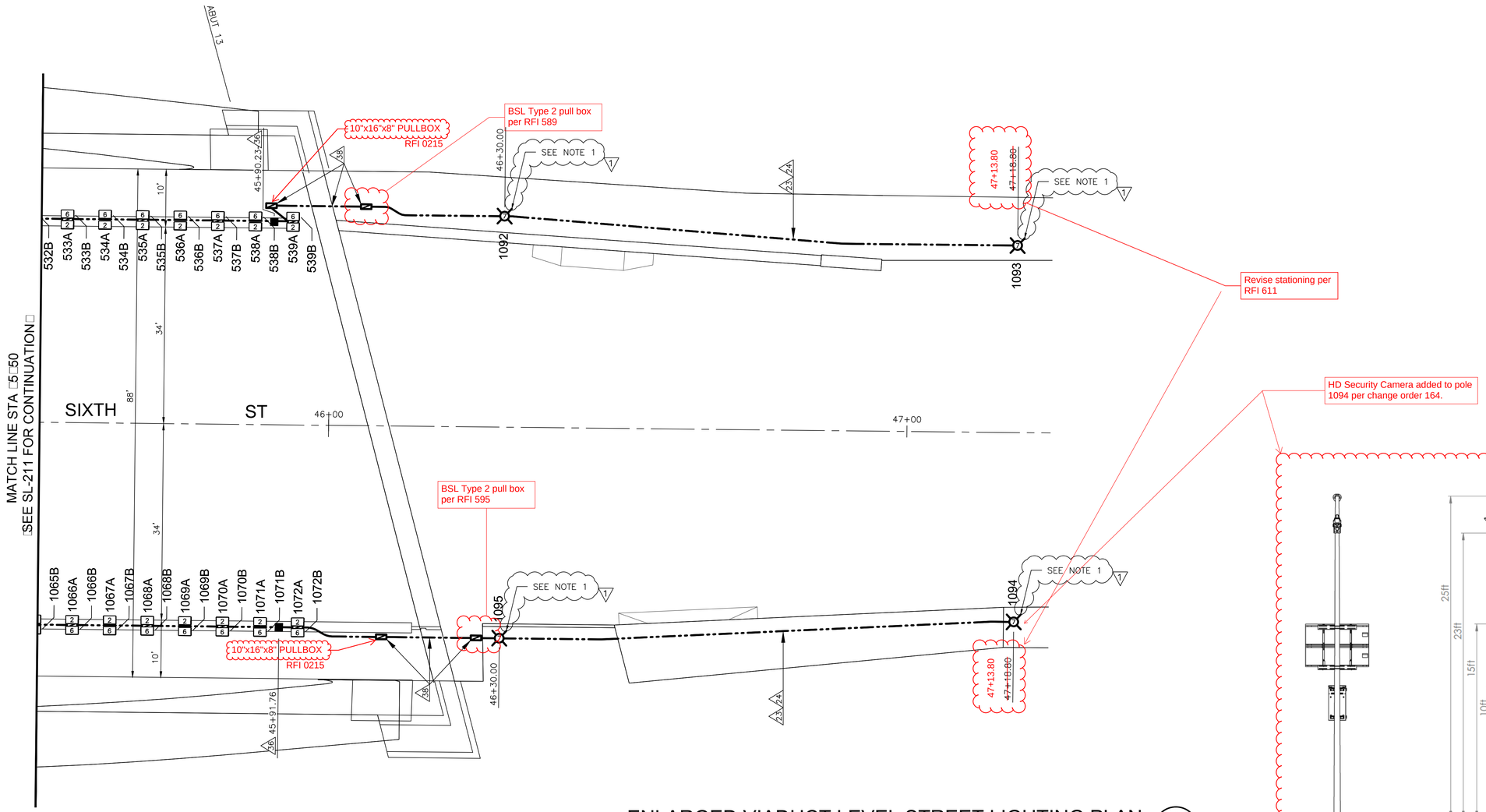

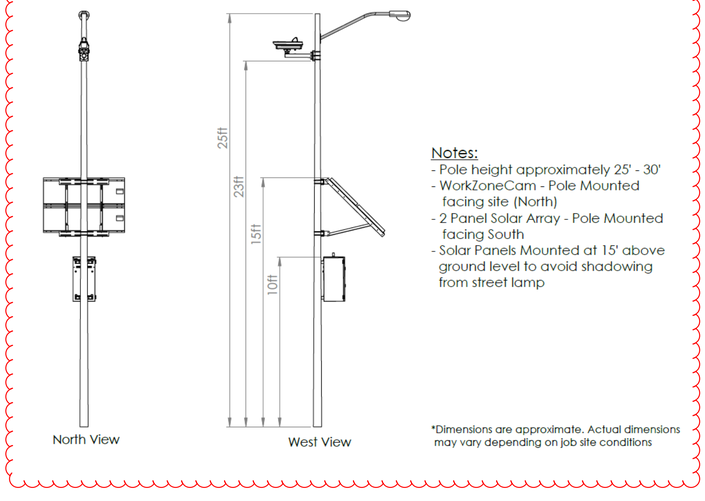

Notes:
- Pole height approximately 25' - 30'
- WorkZoneCam - Pole Mounted facing site (North)
- 2 Panel Solar Array - Pole Mounted facing South
- Solar Panels Mounted at 15' above ground level to avoid shadowing from street lamp

*Dimensions are approximate. Actual dimensions may vary depending on job site conditions

ENLARGED VIADUCT LEVEL STREET LIGHTING PLAN

SCALE 1" = 10'

1 / SL-100

T.O. 5 - Preliminary Change Order Serial Sketch No. 80 - Page 2 of 3

DELTA No.	DESCRIPTION OF REVISION	DATE	BY
1	RFI 204	10/09/2018	C. AYUBI

10' 5' 0 10' 20'
SCALE 1" = 10'-0"

PLANS PREPARED BY:
HNTB Corporation
One Bunker Hill Bldg.,
601 West 5th St., Ste 1000
Los Angeles, California 90071

SIGNATURE 10/10/2020 DATE

REGISTERED PROFESSIONAL ENGINEER CARL A. AYUBI No. E17891 Exp. 9/30/2020 ELECTRICAL STATE OF CALIFORNIA

STREET LIGHTING PLANS
SIXTH STREET VIADUCT REPLACEMENT
W.O. E700224L (TASK 013) SL-7521

CITY OF LOS ANGELES
ED EBRAHIMIAN, DIRECTOR BUREAU OF STREET LIGHTING

ACCEPTED: DIRECTOR, BUREAU OF STREET LIGHTING DATE

DRAWING NO. SL-212

SCALE OF ORIGINAL PLAN: 1" = 10' | SHEET OF SHEETS | INDEX NUMBER

CONTRACTOR:
INSPECTED BY:
DATE ENERGIZED
DATE ENERGIZED
CORRECTED TO "AS BUILT"
BY CHECKED

BUREAU OF STREET LIGHTING
DEPARTMENT OF PUBLIC WORKS
CITY OF LOS ANGELES

C:\caddlib\pw\pwwestcoast\rgreenlee\dms57861\SL-200.dwg Oct 10, 2018 - 7:15am

ADDENDUM 5

THE CITY OF LOS ANGELES OR ITS OFFICERS OR AGENTS SHALL NOT BE RESPONSIBLE FOR THE ACCURACY OR COMPLETENESS OF ELECTRONIC COPIES OF THIS PLAN SHEET.

C:\caddlib\pw\pwwestcoast\rgreenlee\dms57861\SL-213.dwg Mar 14, 2017 - 12:51pm

HNTB Notes added in blue font

NOTES:

1. FOR ONE-LINE DIAGRAM SEE SL-300.
2. ALL CONDUIT SHOWN ON THIS SHEET SHALL BE EMBEDDED IN BOX GIRDER STRUCTURE.

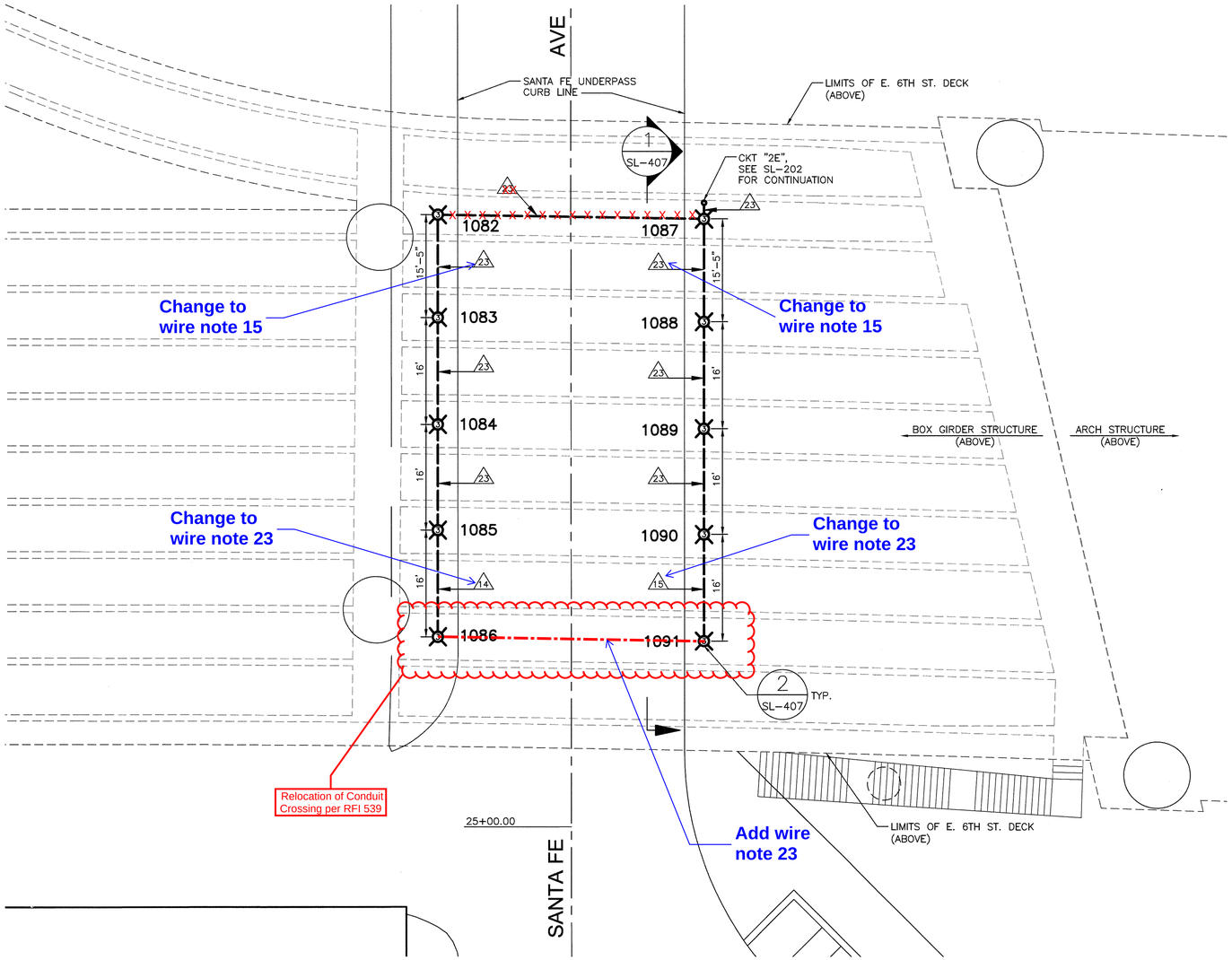

Notes:
1. All wiring for Ckt 2E shall be #8 AWG per "MULTIPLE CIRCUIT NOTES" Note 2 on Sheet SL-100
2. Contractor shall record changes to Ckt 2E on Drawings SL-213 and SL-300 as-built record drawings.

ENLARGED UNDERPASS ROADWAY PLAN (1 / SL-100)
SCALE: 1" = 10'

DELTA No.	DESCRIPTION OF REVISION	DATE	BY
1	REVISED PER BSL REVIEW	4/7/2017	A. GOROVAYA

SCALE 1" = 10'-0"

PLANS PREPARED BY:
HNTB Corporation
One Bunker Hill Bldg.,
601 West 5th St., Ste 1000
Los Angeles, California 90071
SIGNATURE 1/20/2017 DATE

REGISTERED PROFESSIONAL ENGINEER — CARL A. AYUBI — No. E17891 — Exp. 9/30/2018 — ELECTRICAL — STATE OF CALIFORNIA

STREET LIGHTING PLANS
SIXTH STREET VIADUCT REPLACEMENT
W.O. E700224L (TASK 013) SL-7521

CITY OF LOS ANGELES
ED EBRAHIMIAN, DIRECTOR BUREAU OF STREET LIGHTING
ACCEPTED: DIRECTOR, BUREAU OF STREET LIGHTING 3-22-17 DATE

DRAWING NO. SL-213

SCALE OF ORIGINAL PLAN: 1" = 10' | SHEET OF SHEETS | INDEX NUMBER

CONTRACTOR:
INSPECTED BY:
DATE ENERGIZED
DATE ENERGIZED
CORRECTED TO "AS BUILT"
BY CHECKED

CITY OF LOS ANGELES DEPARTMENT OF PUBLIC WORKS BUREAU OF STREET LIGHTING

ADDENDUM 5

THE CITY OF LOS ANGELES OR ITS OFFICERS OR AGENTS SHALL NOT BE RESPONSIBLE FOR THE ACCURACY OR COMPLETENESS OF ELECTRONIC COPIES OF THIS PLAN SHEET.

C:\caddlib\pw\hntb_nchowdhury\west\dms578611\SL-300.dwg Feb 11, 2020 - 10:56am

WEST RAMP LIGHTS (SEE RAMP/STAIR LIGHTING PACKAGE DRAWING SL-2201 FOR PLAN)

CKT "1C" → SEE RAMP/STAIR LIGHTING PACKAGE FOR CONTINUATION

WEST APPROACH LIGHTS (SEE DRAWINGS SL-200 & SL-201 FOR PLANS)

CKT "1A"

CKT "1B"

NEW SERVICE NO. 1 (35) (2)

SANTA FE UNDERPASS (SEE DRAWING SL-213 FOR PLAN)

CKT "2E"

(1)

(41) NEW SERVICE NO. 2

VIADUCT STREET LIGHTS (SEE DRAWINGS SL-202 THROUGH SL-204 FOR PLANS)

CKT "2A","2E" (1)

CKT "2B"

CKT "2C","2D"

WEST STAIR LIGHTS (SEE RAMP/STAIR LIGHTING PACKAGE DRAWING SL-2207 FOR PLAN)

SEE RAMP/STAIR LIGHTING PACKAGE FOR CONTINUATION

(1)

CKT "2C"

CKT "2D"

VIADUCT STREET LIGHTS (SEE DRAWINGS SL-202 THROUGH SL-204 FOR PLANS)

(4) 614

CONTRACTOR:
INSPECTED BY:
DATE ENERGIZED
DATE ENERGIZED
CORRECTED TO "AS BUILT"
BY
CHECKED

DELTA No.	DESCRIPTION OF REVISION	DATE	BY
(1)	REVISED PER BSL REVIEW	4/7/2017	A. GOROVAYA
(2)	RELOCATE SERVICE NO. 1	2/12/2020	D. WOODWARD

STREET LIGHTING SERVICE NO. 1 & 2 ONE-LINE DIAGRAMS

T.O. 5 - Change Order Serial Sketch No. 116 - Page 4 of 4

STREET LIGHTING PLANS
SIXTH STREET VIADUCT REPLACEMENT
W.O. E700224L (TASK 013) SL-7521

PLANS PREPARED BY:
HNTB Corporation
One Bunker Hill Bldg.,
601 West 5th St., Ste 1000
Los Angeles, California 90071

SIGNATURE — 1/20/2017 DATE

REGISTERED PROFESSIONAL ENGINEER — CARL A. AYUBI — No. E17891 — Exp. 9/30/2020 — ELECTRICAL — STATE OF CALIFORNIA

CITY OF LOS ANGELES
ED EBRAHIMIAN, DIRECTOR BUREAU OF STREET LIGHTING

ACCEPTED: _____ DIRECTOR, BUREAU OF STREET LIGHTING _____ DATE

DRAWING NO. SL-300

SCALE OF ORIGINAL PLAN: NO SCALE | SHEET OF SHEETS | INDEX NUMBER

CITY OF LOS ANGELES DEPARTMENT OF PUBLIC WORKS BUREAU OF STREET LIGHTING

ADDENDUM 5

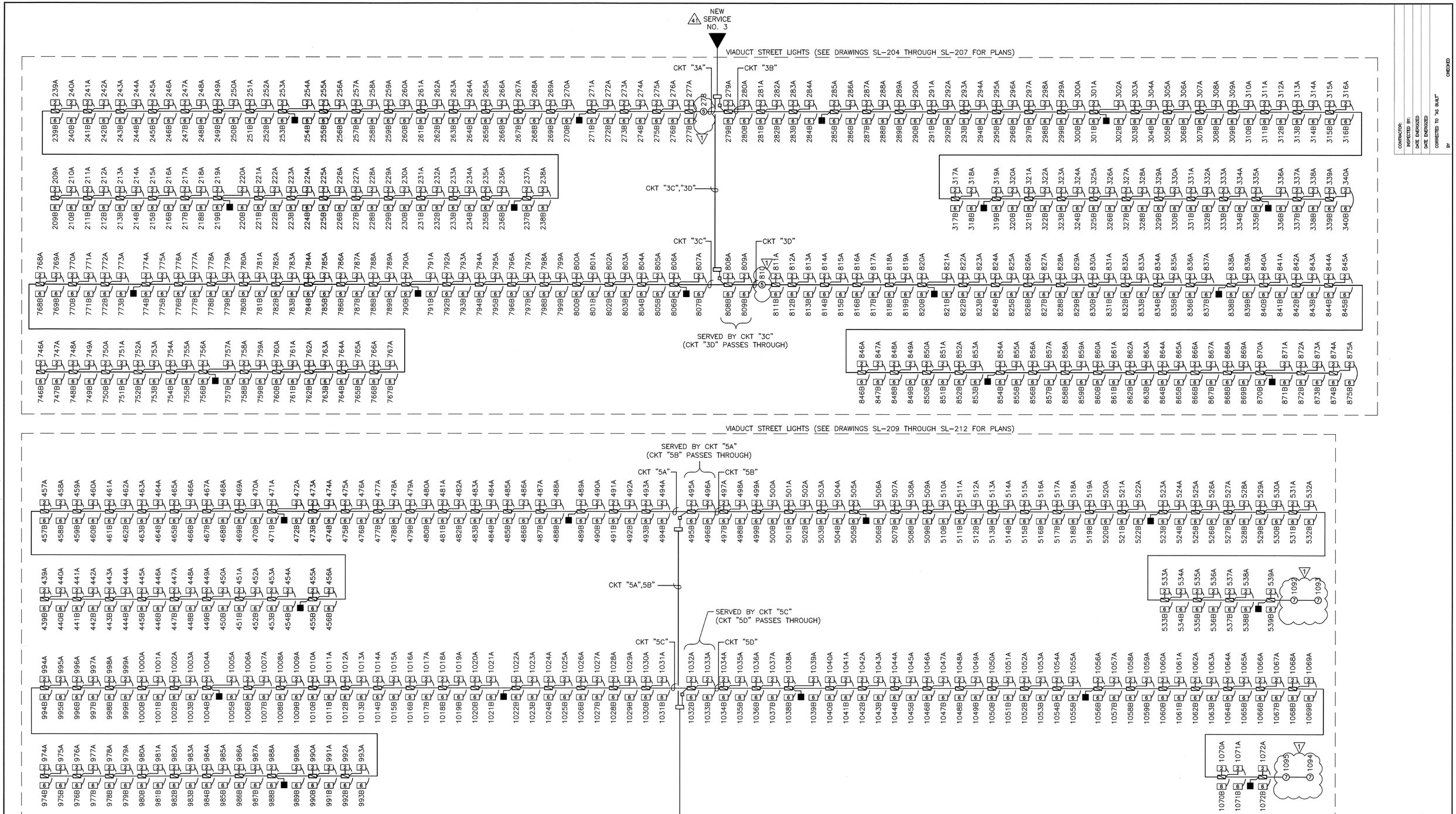

CONTRACTOR:
INSPECTED BY:
DATE ENERGIZED
DATE ENERGIZED
CORRECTED TO "AS BUILT"
BY
CHECKED

DELTA No.	DESCRIPTION OF REVISION	DATE	BY
7	REVISED PER BSL REVIEW	4/7/2017	A. GOROVAYA

STREET LIGHTING SERVICE NO. 3 & 5 ONE-LINE DIAGRAMS

T.O. 5 - Change Order Serial Sketch No. 17R3 - Page 9 of 16

PLANS PREPARED BY:
HNTB Corporation
One Bunker Hill Bldg.,
601 West 5th St., Ste 1000
Los Angeles, California 90071

SIGNATURE 1/20/2017 DATE

REGISTERED PROFESSIONAL ENGINEER CARL A. AYUBI No. E17891 Exp. 9/30/2018 ELECTRICAL STATE OF CALIFORNIA

STREET LIGHTING PLANS
SIXTH STREET VIADUCT REPLACEMENT
W.O. E700224L (TASK 013) SL-7521

CITY OF LOS ANGELES
ED EBRAHIMIAN, DIRECTOR BUREAU OF STREET LIGHTING

ACCEPTED: for DIRECTOR, BUREAU OF STREET LIGHTING 3-22-19 DATE

DRAWING NO. SL-301

SCALE OF ORIGINAL PLAN: NO SCALE | SHEET OF SHEETS | INDEX NUMBER

CITY OF LOS ANGELES DEPARTMENT OF PUBLIC WORKS BUREAU OF STREET LIGHTING

THE CITY OF LOS ANGELES OR ITS OFFICERS OR AGENTS SHALL NOT BE RESPONSIBLE FOR THE ACCURACY OR COMPLETENESS OF ELECTRONIC COPIES OF THIS PLAN SHEET.

C:\caddlib\pw\pwwestcoast\ygreenlee\dms57861\SL-301.dwg Mar 14, 2017 - 12:49pm

ADDENDUM 5

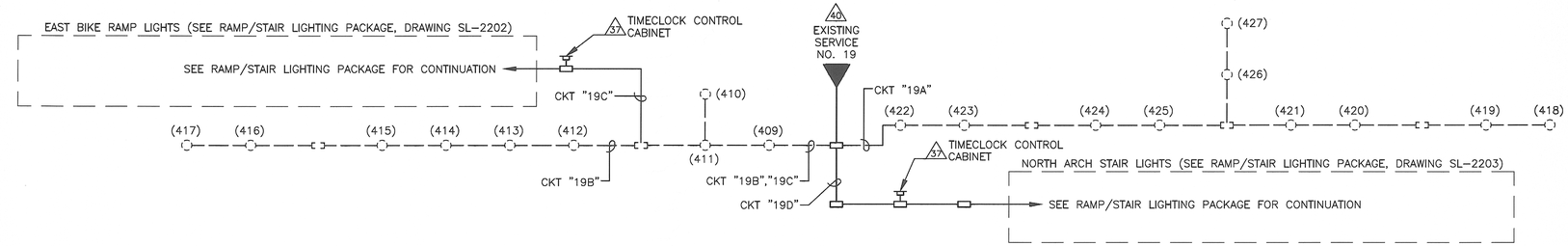

CONTRACTOR:
INSPECTED BY:
DATE ENERGIZED
DATE ENERGIZED
CORRECTED TO "AS BUILT"
BY
CHECKED

VIADUCT STREET LIGHTS (SEE DRAWINGS SL-207 THROUGH SL-210 FOR PLANS)

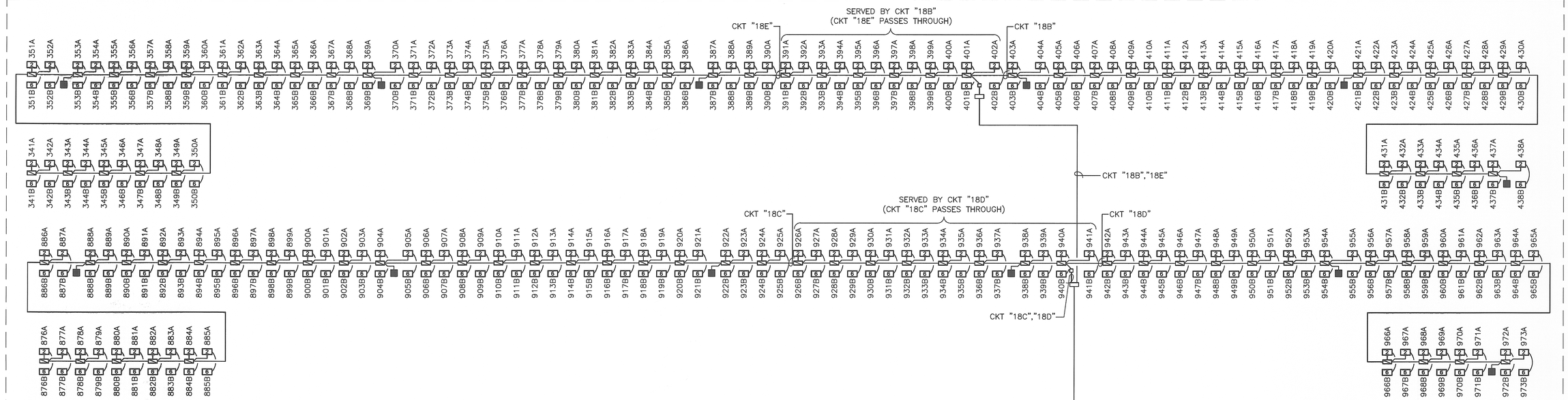

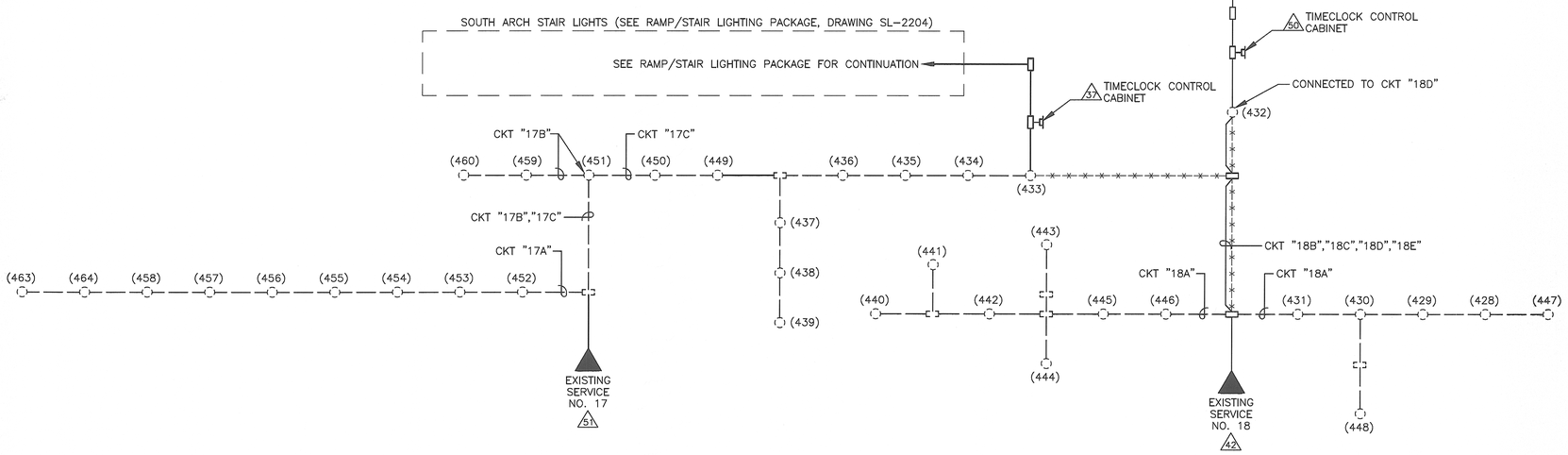

BUREAU OF ENGINEERING
OFFICIAL RECORD

STREET LIGHTING SERVICE NO. 17, 18 & 19 ONE-LINE DIAGRAMS

PLANS PREPARED BY:
HNTB Corporation
One Bunker Hill Bldg.,
601 West 5th St., Ste 1000
Los Angeles, California 90071
SIGNATURE
4/14/2016
DATE

REGISTERED PROFESSIONAL ENGINEER
PATRICIA L. PRICE
No. E14352
Exp. 12/31/17
ELECTRICAL
STATE OF CALIFORNIA
5/24/16

STREET LIGHTING PLANS
SIXTH STREET VIADUCT REPLACEMENT
W.O. E700224L (TASK 013) SL-7521

CITY OF LOS ANGELES
ED EBRAHIMIAN, DIRECTOR BUREAU OF STREET LIGHTING
ACCEPTED: _____ DIRECTOR, BUREAU OF STREET LIGHTING
5-27-16 DATE

DRAWING NO. SL-302

SCALE OF ORIGINAL PLAN: NO SCALE
SHEET 111 OF 560 SHEETS
INDEX NUMBER **P-38113**

CITY OF LOS ANGELES
DEPARTMENT OF PUBLIC WORKS
BUREAU OF STREET LIGHTING

THE CITY OF LOS ANGELES AND ITS OFFICERS OR AGENTS SHALL NOT BE RESPONSIBLE FOR THE ACCURACY OR COMPLETENESS OF ELECTRONIC COPIES OF THIS PLAN SHEET.

C:\caddlib\pw\pwwestcoast\rgreenlee\dms57861\SL-302.dwg May 19, 2016 - 10:51am

ADDENDUM 5

THE CITY OF LOS ANGELES OR ITS OFFICERS OR AGENTS SHALL NOT BE RESPONSIBLE FOR THE ACCURACY OR COMPLETENESS OF ELECTRONIC COPIES OF THIS PLAN SHEET.

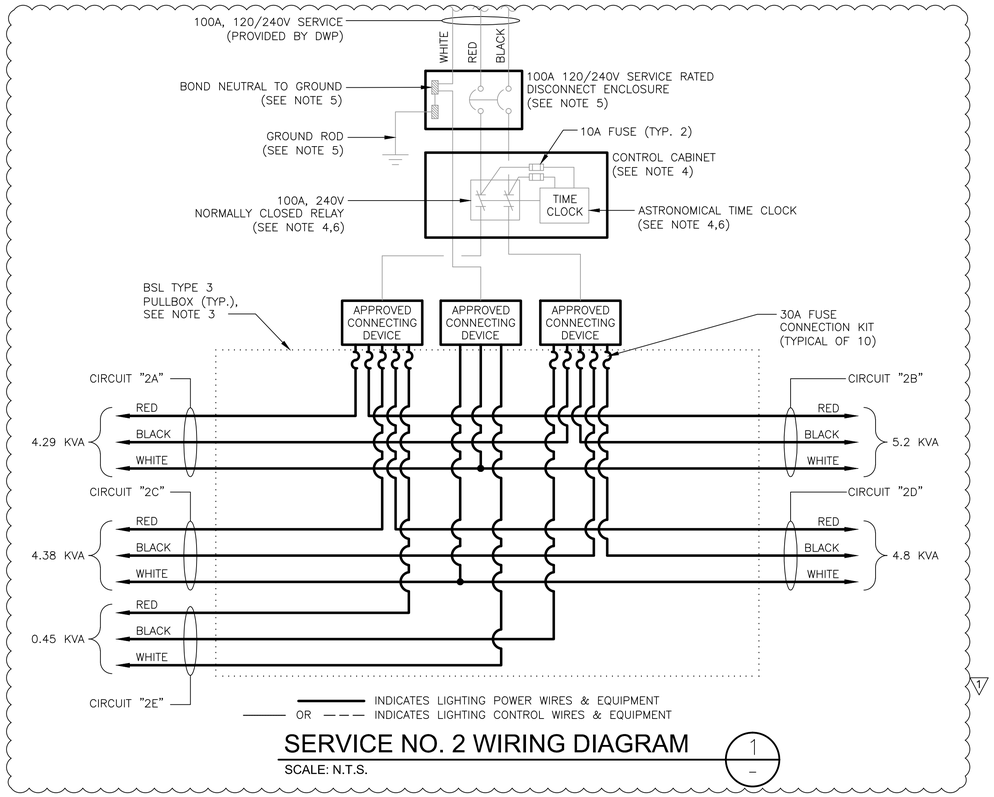

SERVICE NO. 2 WIRING DIAGRAM

1

SCALE: N.T.S.

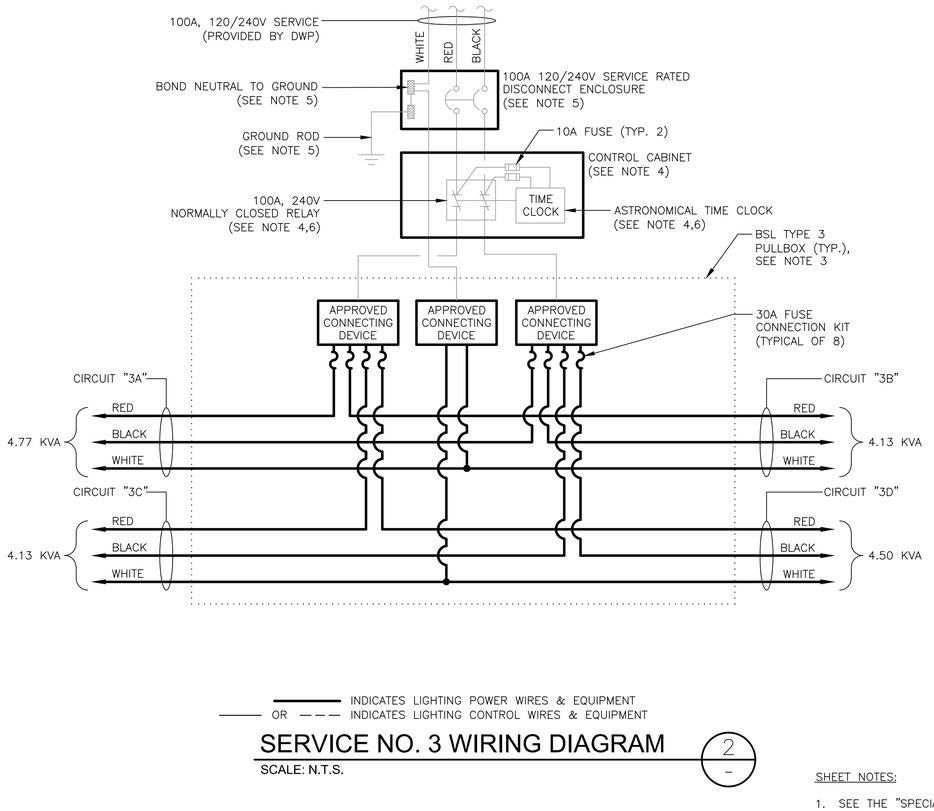

SERVICE NO. 3 WIRING DIAGRAM

2

SCALE: N.T.S.

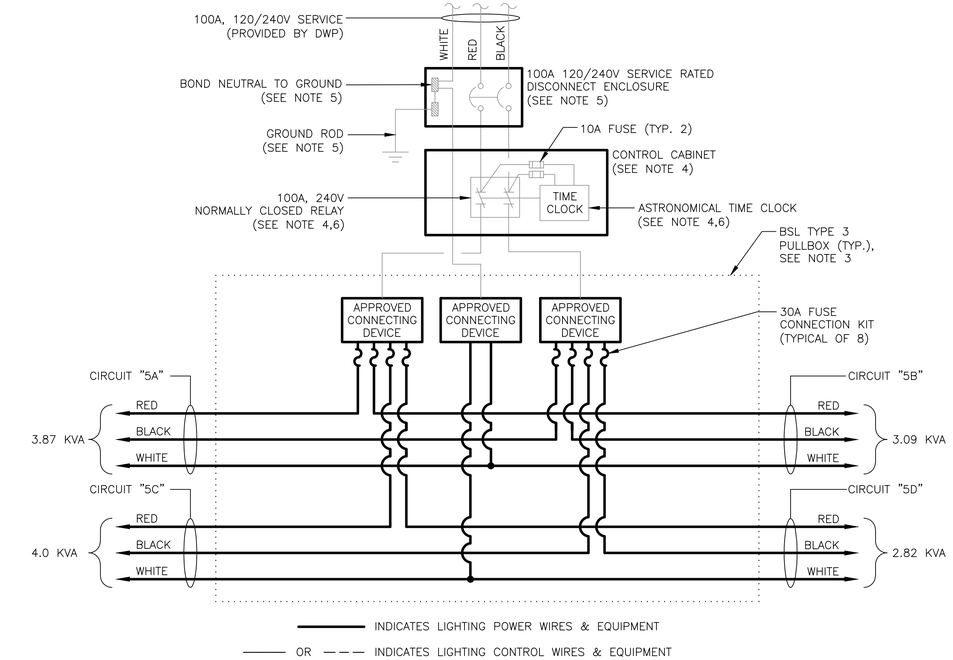

SERVICE NO. 5 WIRING DIAGRAM

3

SCALE: N.T.S.

SHEET NOTES:

1. SEE THE "SPECIAL SPECIFICATION FOR THE CONSTRUCTION OF STREET LIGHTING SYSTEMS" SECTION 16400 FOR ADDITIONAL SERVICE INSTALLATION REQUIREMENTS.
2. NOT USED.
3. INSTALL SERVICE EQUIPMENT INTO SEPARATE BSL TYPE 3 PULLBOXES AS SHOWN.
4. ELECTRICAL CONTRACTOR SHALL PROVIDE AND INSTALL CONTROL CABINET AND ALL ASSOCIATED CONDUIT AND PULLBOXES PER DETAIL 2 ON SHEET SL-305, INCLUDING ASTRONOMICAL TIME CLOCK, RELAY, AND ALL ASSOCIATED WIRING AND ELECTRICAL COMPONENTS WITHIN CONTROL ENCLOSURE. (1)
5. ELECTRICAL CONTRACTOR SHALL PROVIDE AND INSTALL SERVICE DISCONNECT ENCLOSURE AND ALL ASSOCIATED CONDUIT AND PULLBOXES PER DETAIL 2 ON SHEET SL-305, AND INSTALL SERVICE BREAKERS, CONDUCTORS, AND GROUNDING COMPONENTS.
6. RELAY SHALL HAVE NORMALLY CLOSED CONTACTS WHICH ARE HELD OPEN DURING DAYLIGHT HOURS BY A CONTROL SIGNAL FROM THE ASTRONOMICAL TIME CLOCK. SYSTEM SHALL OPERATE SUCH THAT IF THE ASTRONOMICAL TIME CLOCK MALFUNCTIONS OR IS DISCONNECTED THEN THE RELAYS WILL CLOSE (OR REMAIN CLOSED), AND THE SERVICE WILL BE IN AN ENERGIZED STATE.

CONTRACTOR:
INSPECTED BY:
DATE ENERGIZED
DATE ENERGIZED
CORRECTED TO "AS BUILT"
BY
CHECKED

T.O. 5 - Change Order Serial Sketch No. 17R3 - Page 10 of 16

DELTA No.	DESCRIPTION OF REVISION	DATE	BY
(1)	REVISED PER BSL REVIEW	2/13/2018	A. GOROVAYA

PLANS PREPARED BY:
HNTB Corporation
One Bunker Hill Bldg.,
601 West 5th St., Ste 1000
Los Angeles, California 90071

SIGNATURE 1/20/2017 DATE

REGISTERED PROFESSIONAL ENGINEER
CARL A. AYUBI
No. E17891
Exp. 9/30/2018
ELECTRICAL
STATE OF CALIFORNIA

STREET LIGHTING PLANS
SIXTH STREET VIADUCT REPLACEMENT
W.O. E700224L (TASK 013) SL-7521

CITY OF LOS ANGELES
ED EBRAHIMIAN, DIRECTOR BUREAU OF STREET LIGHTING

ACCEPTED: _____ DIRECTOR, BUREAU OF STREET LIGHTING _____ DATE

DRAWING NO.
SL-303

SCALE OF ORIGINAL PLAN: NO SCALE | SHEET OF SHEETS | INDEX NUMBER

C:\caddlib\pw\pwwestcoast\vgreenlee\dms57861\SL-303.dwg Apr 02, 2018 - 12:13pm

CITY OF LOS ANGELES DEPARTMENT OF PUBLIC WORKS BUREAU OF STREET LIGHTING

ADDENDUM 5

THE CITY OF LOS ANGELES OR ITS OFFICERS OR AGENTS SHALL NOT BE RESPONSIBLE FOR THE ACCURACY OR COMPLETENESS OF ELECTRONIC COPIES OF THIS PLAN SHEET.

C:\coddlib\pw\pwwestcoast\ygreenlee\dms57861\SL-304.dwg Apr 02, 2018 - 12:15pm

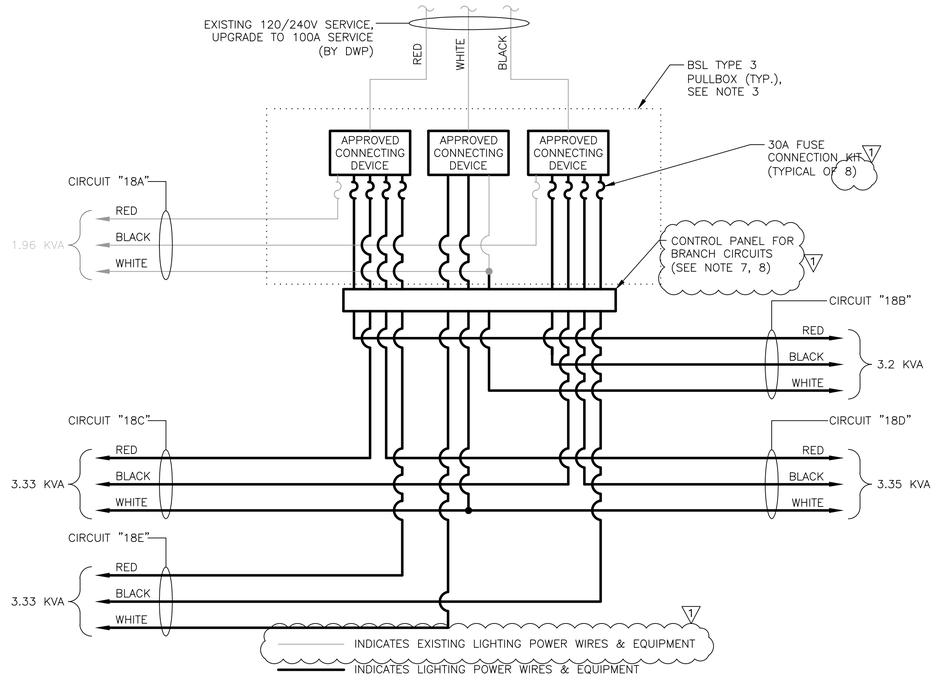

SERVICE NO. 18 WIRING DIAGRAM 1

SCALE: N.T.S.

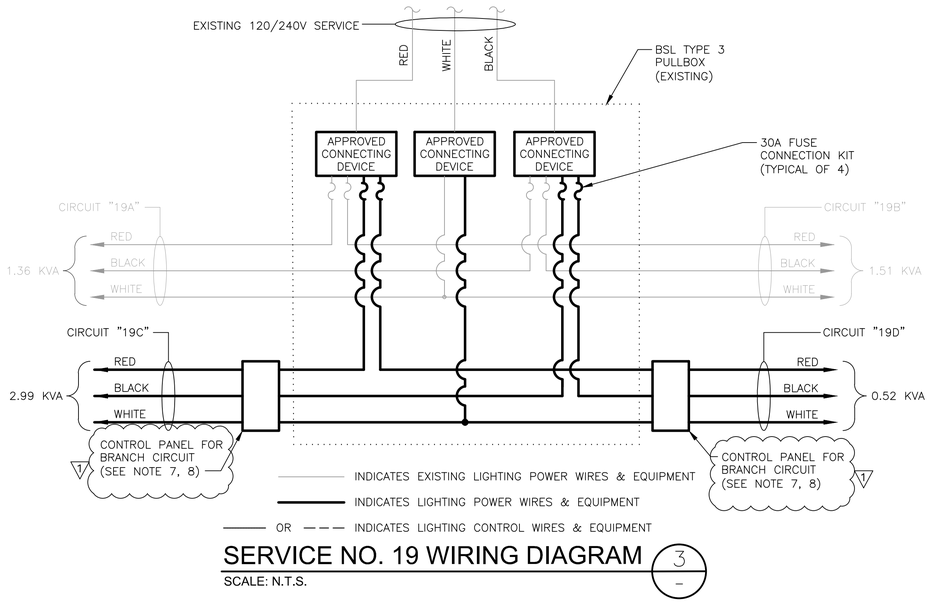

SERVICE NO. 19 WIRING DIAGRAM 3

SCALE: N.T.S.

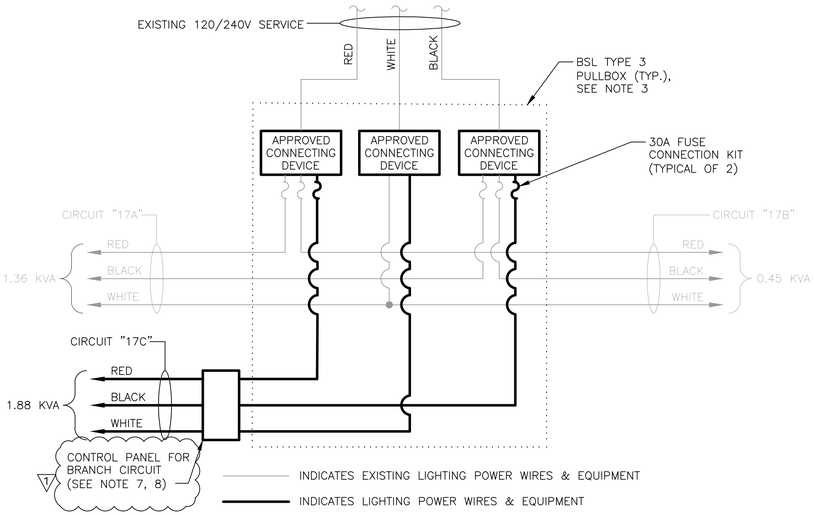

SERVICE NO. 17 WIRING DIAGRAM 2

SCALE: N.T.S.

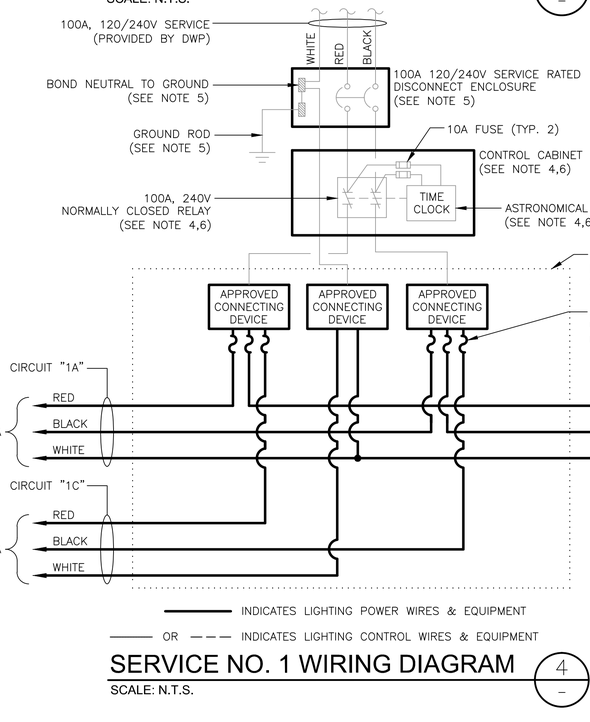

SERVICE NO. 1 WIRING DIAGRAM 4

SCALE: N.T.S.

SHEET NOTES:

1. SEE THE "SPECIAL SPECIFICATION FOR THE CONSTRUCTION OF STREET LIGHTING SYSTEMS" SECTION 16400 FOR ADDITIONAL SERVICE INSTALLATION REQUIREMENTS.
2. NOT USED.
3. INSTALL SERVICE EQUIPMENT INTO SEPARATE BSL TYPE 3 PULLBOXES AS SHOWN.
4. (1) ELECTRICAL CONTRACTOR SHALL PROVIDE AND INSTALL CONTROL CABINET AND ALL ASSOCIATED CONDUIT AND PULLBOXES PER DETAIL 2 ON SHEET SL-305, INCLUDING ASTRONOMICAL TIME CLOCK, RELAY, AND ALL ASSOCIATED WIRING AND ELECTRICAL COMPONENTS WITHIN CONTROL ENCLOSURE.
5. ELECTRICAL CONTRACTOR SHALL PROVIDE AND INSTALL SERVICE DISCONNECT ENCLOSURE AND ALL ASSOCIATED CONDUIT AND PULLBOXES PER DETAIL 2 ON SHEET SL-305, AND INSTALL SERVICE BREAKERS, CONDUCTORS, AND GROUNDING COMPONENTS.
6. RELAY(S) SHALL HAVE NORMALLY CLOSED CONTACTS WHICH ARE HELD OPEN DURING DAYLIGHT HOURS BY A CONTROL SIGNAL FROM THE ASTRONOMICAL TIME CLOCK. SYSTEM SHALL OPERATE SUCH THAT IF THE ASTRONOMICAL TIME CLOCK MALFUNCTIONS OR IS DISCONNECTED THEN THE RELAYS WILL CLOSE (OR REMAIN CLOSED), AND THE LOAD WILL BE IN AN ENERGIZED STATE.
7. (1) ELECTRICAL CONTRACTOR SHALL PROVIDE AND INSTALL CONTROL CABINET AND ALL ASSOCIATED CONDUIT AND PULLBOXES PER DETAIL 1 ON SHEET SL-305, INCLUDING ASTRONOMICAL TIME CLOCK, RELAY, AND ALL ASSOCIATED WIRING AND ELECTRICAL COMPONENTS WITHIN CONTROL ENCLOSURE.
8. SEE BRANCH CIRCUIT TIMECLOCK WIRING DIAGRAM ON SHEET SL-305. DETAILS 3 AND 4.

CONTRACTOR:
INSPECTED BY:
DATE ENERGIZED
DATE ENERGIZED
CORRECTED TO "AS BUILT"
BY
CHECKED

DELTA No.	DESCRIPTION OF REVISION	DATE	BY
1	REVISED PER BSL REVIEW	2/13/2018	A. GOROVAYA

PLANS PREPARED BY:
HNTB Corporation
One Bunker Hill Bldg.,
601 West 5th St., Ste 1000
Los Angeles, California 90071

SIGNATURE
1/20/2017
DATE

REGISTERED PROFESSIONAL ENGINEER
CARL A. AYUB
No. E17891
Exp. 9/30/2018
ELECTRICAL
STATE OF CALIFORNIA

STREET LIGHTING PLANS
SIXTH STREET VIADUCT REPLACEMENT
W.O. E700224L (TASK 013) SL-7521

CITY OF LOS ANGELES
ED EBRAHIMIAN, DIRECTOR BUREAU OF STREET LIGHTING

ACCEPTED: _____ DIRECTOR, BUREAU OF STREET LIGHTING _____ DATE

DRAWING NO. SL-304

SCALE OF ORIGINAL PLAN: NO SCALE | SHEET OF SHEETS | INDEX NUMBER

T.O. 5 - Change Order Serial Sketch No. 17R3 - Page 11 of 16

CITY OF LOS ANGELES DEPARTMENT OF PUBLIC WORKS BUREAU OF STREET LIGHTING

ADDENDUM 5

THE CITY OF LOS ANGELES OR ITS OFFICERS OR AGENTS SHALL NOT BE RESPONSIBLE FOR THE ACCURACY OR COMPLETENESS OF ELECTRONIC COPIES OF THIS PLAN SHEET.

C:\caddlib\pw\pwwestcoast\ygreenlee\dms57861\SL-305.dwg Jul 25, 2018 - 9:20am

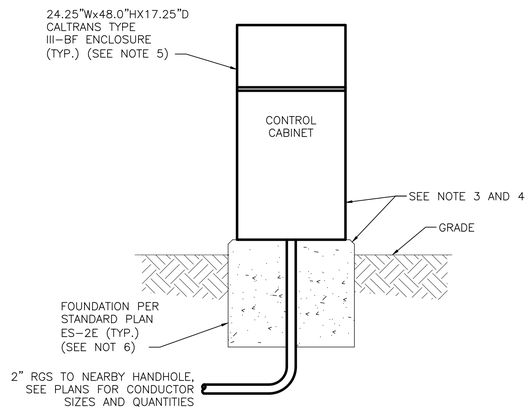

NOTE:
SEE TIMECLOCK WIRING DIAGRAMS, DETAILS 3 & 4, THIS SHEET, FOR REQUIRED EQUIPMENT AND WIRING WITHIN ENCLOSURES.

BRANCH CIRCUIT TIMECLOCK INSTALLATION

1

SCALE: N.T.S.

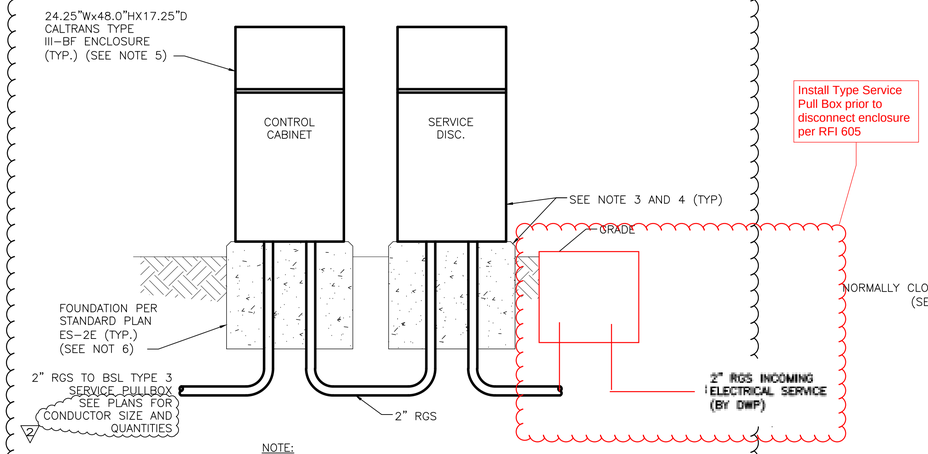

Install Type Service Pull Box prior to disconnect enclosure per RFI 605

NOTE:
SEE SERVICE WIRING DIAGRAMS ON SHEETS SL-303 & SL-304 FOR REQUIRED SERVICE EQUIPMENT AND WIRING WITHIN ENCLOSURES.

SERVICE DISCONNECT AND TIMECLOCK INSTALLATION

2

SCALE: N.T.S.

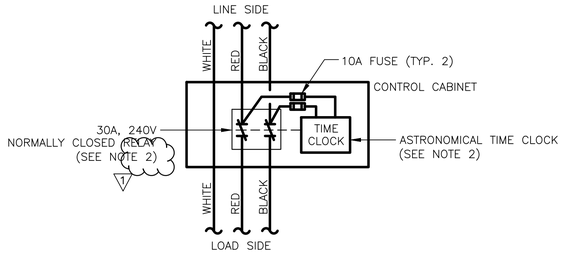

TYPICAL BRANCH CIRCUIT TIMECLOCK WIRING DIAGRAM FOR CIRCUITS 17C, 19C AND 19D

3

SCALE: N.T.S.

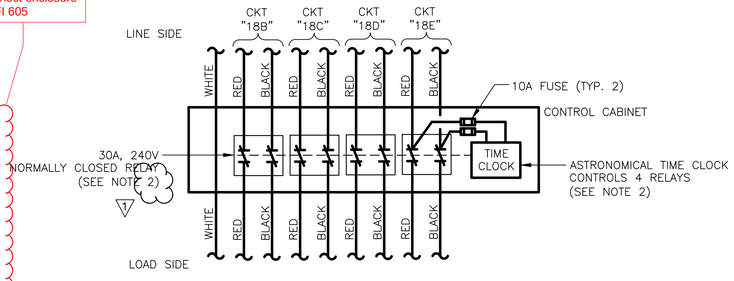

BRANCH CIRCUIT TIMECLOCK WIRING DIAGRAM FROM SERVICE 1 ONLY

4

SCALE: N.T.S.

SHEET NOTES:

1. SEE THE "SPECIAL SPECIFICATION FOR THE CONSTRUCTION OF STREET LIGHTING SYSTEMS" SECTION 16400 FOR ADDITIONAL SERVICE INSTALLATION REQUIREMENTS.
2. RELAY(S) SHALL HAVE NORMALLY CLOSED CONTACTS WHICH ARE HELD OPEN DURING DAYLIGHT HOURS BY A CONTROL SIGNAL FROM THE ASTRONOMICAL TIME CLOCK. SYSTEM SHALL OPERATE SUCH THAT IF THE ASTRONOMICAL TIME CLOCK MALFUNCTIONS OR IS DISCONNECTED THEN THE RELAYS WILL CLOSE (OR REMAIN CLOSED), AND THE LOAD WILL BE IN AN ENERGIZED STATE.
3. SECURE ENCLOSURE TO RC PEDESTAL WITH FOUR 1/2" DIA RESIN BONDED ANCHORS. ANCHORS SHALL BE STAINLESS STEEL.
4. FINISH ALL EXPOSED CORNERS OF THE RC PEDESTAL WITH 3/4" CHAMFERS.
5. ALL ELECTRICAL EQUIPMENT INSIDE CALTRANS TYPE III-BF ENCLOSURE SHALL BE UL LISTED AND INSTALLED AT MANUFACTURER'S SITE.
6. GROUND ROD 3/4" DIA. X 10" LONG SHALL BE PROVIDED PER STANDARD PLAN ES-2E.

1

DELTA No.	DESCRIPTION OF REVISION	DATE	BY
1	REVISED PER BSL REVIEW	2/13/2018	A. GOROVAYA
2	REVISED ANNOTATION	7/25/2018	A. GOROVAYA

CONTRACTOR:
INSPECTED BY:
DATE ENERGIZED
DATE ENERGIZED
CORRECTED TO "AS BUILT"
BY
CHECKED

PLANS PREPARED BY:
HNTB Corporation
One Bunker Hill Bldg.,
601 West 5th St., Ste 1000
Los Angeles, California 90071

SIGNATURE
1/20/2017
DATE

REGISTERED PROFESSIONAL ENGINEER
CARL A. AYUB
No. E17891
Exp. 9/30/2018
ELECTRICAL
STATE OF CALIFORNIA

STREET LIGHTING PLANS
SIXTH STREET VIADUCT REPLACEMENT
W.O. E700224L (TASK 013) SL-7521

CITY OF LOS ANGELES
ED EBRAHIMIAN, DIRECTOR BUREAU OF STREET LIGHTING

ACCEPTED: _____ DIRECTOR, BUREAU OF STREET LIGHTING _____ DATE

DRAWING NO. SL-305

SCALE OF ORIGINAL PLAN: NO SCALE | SHEET OF SHEETS | INDEX NUMBER

T.O. 5 - Change Order Serial Sketch No. 17R3 - Page 12 of 16

CITY OF LOS ANGELES
DEPARTMENT OF PUBLIC WORKS
BUREAU OF STREET LIGHTING

ADDENDUM 5

THE CITY OF LOS ANGELES OR ITS OFFICERS OR AGENTS SHALL NOT BE RESPONSIBLE FOR THE ACCURACY OR COMPLETENESS OF ELECTRONIC COPIES OF THIS PLAN SHEET.

C:\caddfiles\pw\pwwestcoast\ygreenlee\dms578661\SL-400.dwg May 19, 2016 - 10:56am

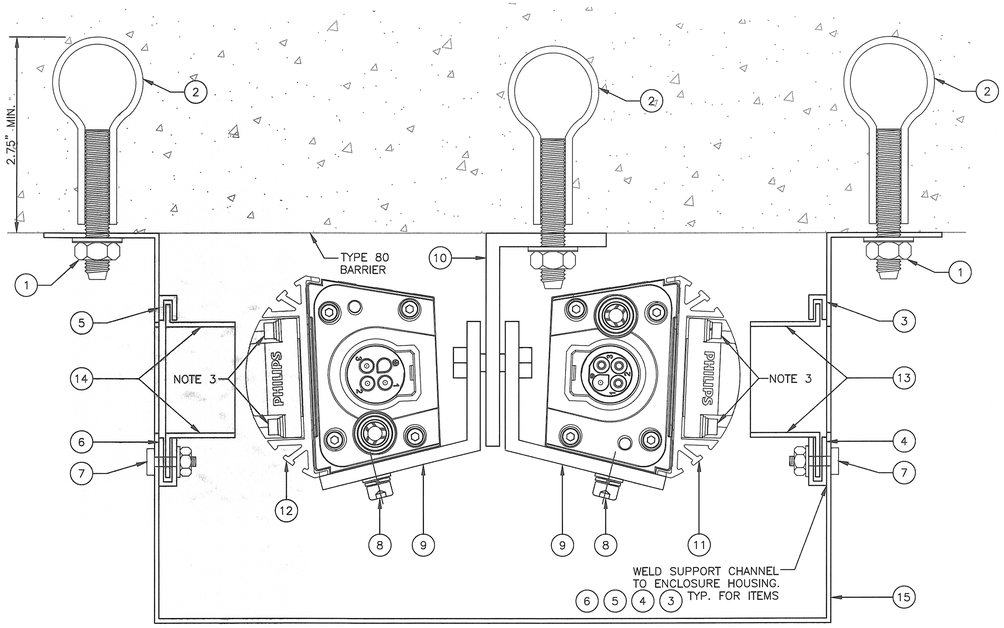

SECTION

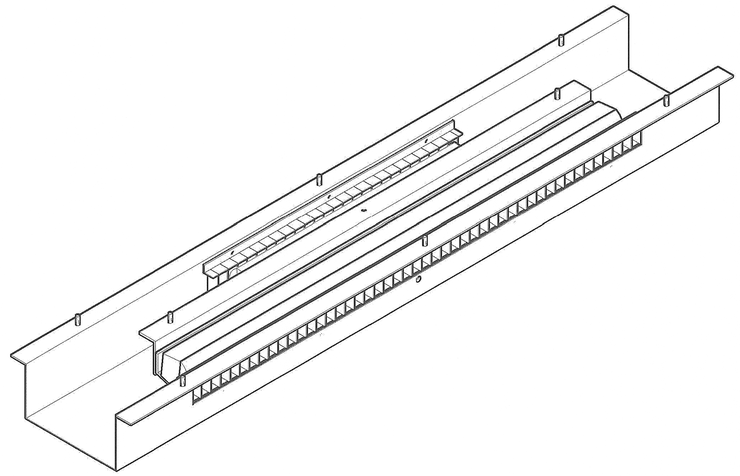

3D VIEW FROM WALKWAY SIDE - FULLY ASSEMBLED

MATERIALS LIST

ID	QTY	DESCRIPTION
1	8	TAMPER PROOF FASTENER W/LOCK WASHER *
2	8	F-42 LOOP FERRULE INSERT
3	1	BAFFLE SUPPORT CHANNEL (TOP, 2')
4	1	BAFFLE SUPPORT CHANNEL (BOTTOM, 2')
5	1	BAFFLE SUPPORT CHANNEL (TOP, 4')
6	1	BAFFLE SUPPORT CHANNEL (BOTTOM, 4')
7	2	TAMPER PROOF SCREW FOR BAFFLE SUPPORT CHANNEL *
8	8	LUMINAIRE ATTACHMENT SCREW (M5xP0.8)
9	4	LUMINAIRE ATTACHMENT BRACKET
10	4	LUMINAIRE ATTACHMENT BASE
11	1	2' LINEAR LED LUMINAIRE (SEE SL-100 FOR EXACT CATALOG NUMBER)
12	1	4' LINEAR LED LUMINAIRE (SEE SL-100 FOR EXACT CATALOG NUMBER)
13	1	2' LONG BAFFLE (NATURAL STEEL FINISH)
14	1	4' LONG BAFFLE (MATTE BLACK FINISH)
15	1	ENCLOSURE HOUSING

* CONTACT 'TIFCO INDUSTRIES' FOR TAMPER PROOF FASTENERS AND SCREWS.

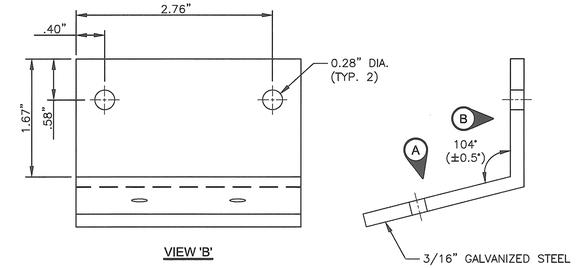

NOTE:
MANUFACTURER SUPPLIED HINGE MAY USED IN LIEU OF CUSTOM ATTACHMENT BRACKET.

LUMINAIRE ATTACHMENT BRACKET (ITEM #9)

TOLERANCES:

ALL FABRICATION TOLERANCES ARE AS FOLLOWS UNLESS NOTED OTHERWISE.

SHEARED EDGE TO HOLE: ±0.01"
FORMED EDGE TO HOLE: ±0.01"
FORMED PART: ±0.03"
HOLE DIAMETERS: ±0.005"
ANGULAR BENDS: ±1°

SHEET NOTES:

1. ALL SCREWS SHALL BE EQUIPPED WITH LOCKING WASHERS AND/OR NUTS TO PREVENT LOOSENING OVER TIME FROM VIBRATION.
2. PROVIDE NYLON DIELECTRIC BUSHINGS BETWEEN ALL DISSIMILAR METALS TO PREVENT GALVANIC CORROSION.
3. MODIFY LUMINAIRE LENS SCREWS SUCH THAT THEY CANNOT BE REMOVED.

CONTRACTOR:
INSPECTED BY:
DATE ENERGIZED
DATE ENERGIZED
CORRECTED TO "AS BUILT"
BY CHECKED

LUMINOUS BARRIER ENCLOSURE (SHEET 1 OF 4) 1/-

SCALE: NO SCALE

PLANS PREPARED BY:
HNTB Corporation
One Bunker Hill Bldg.,
601 West 5th St., Ste 1000
Los Angeles, California 90071

SIGNATURE 4/14/2016 DATE

REGISTERED PROFESSIONAL ENGINEER PATRICIA L. PRINCE No. E14352 Exp. 12/31/17 ELECTRICAL STATE OF CALIFORNIA 5/20/16

BUREAU OF ENGINEERING OFFICIAL RECORD

STREET LIGHTING PLANS
SIXTH STREET VIADUCT REPLACEMENT
W.O. E700224L (TASK 013) SL-7521

CITY OF LOS ANGELES
ED EBRAHIMIAN, DIRECTOR BUREAU OF STREET LIGHTING

ACCEPTED: _____ DIRECTOR, BUREAU OF STREET LIGHTING 5-27-16 DATE

DRAWING NO. SL-400

SCALE OF ORIGINAL PLAN: NO SCALE

SHEET 115 OF 560 SHEETS

INDEX NUMBER **P-38113**

CITY OF LOS ANGELES DEPARTMENT OF PUBLIC WORKS BUREAU OF STREET LIGHTING

ADDENDUM 5

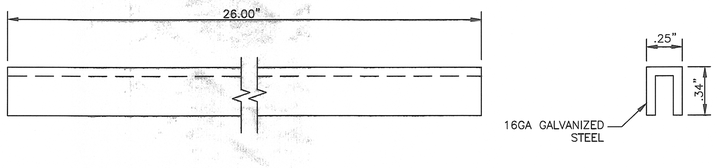

BAFFLE SUPPORT CHANNEL, TOP, 2' (ITEM #3)

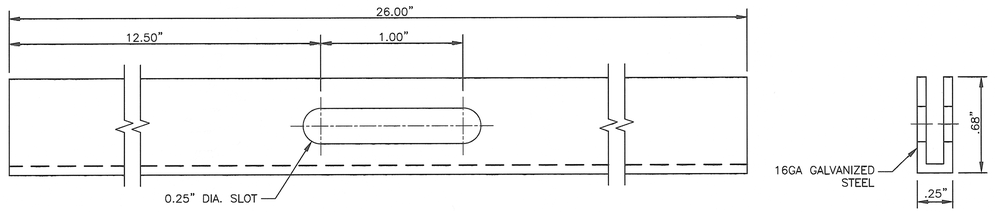

BAFFLE SUPPORT CHANNEL, BOTTOM, 2' (ITEM #4)

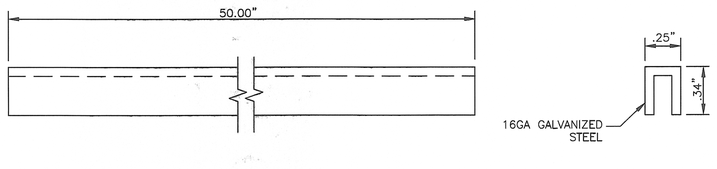

BAFFLE SUPPORT CHANNEL, TOP, 4' (ITEM #5)

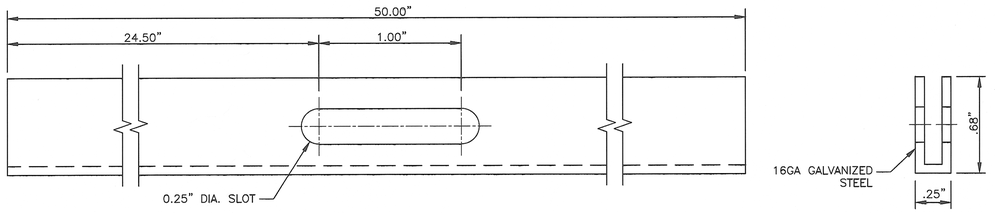

BAFFLE SUPPORT CHANNEL, BOTTOM, 4' (ITEM #6)

SHEET NOTES:

1. SEE MATERIALS LIST, SHEET NOTES, AND TOLERANCES ON DRAWING SL-400.

CONTRACTOR:
INSPECTED BY:
DATE ENERGIZED
DATE ENERGIZED
CORRECTED TO "AS BUILT"
BY
CHECKED

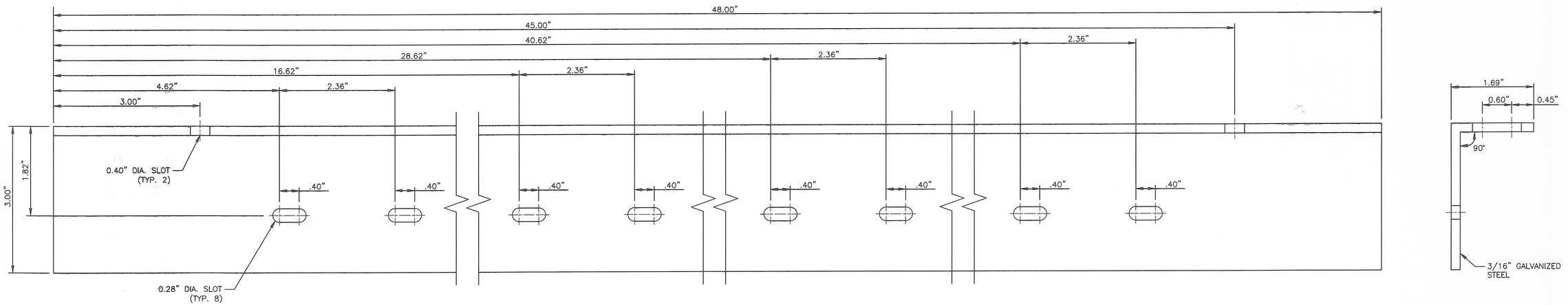

LUMINAIRE ATTACHMENT BASE (ITEM #10)

LUMINOUS BARRIER ENCLOSURE (SHEET 2 OF 4)

SCALE: NO SCALE

1
-

PLANS PREPARED BY:
HNTB Corporation
One Bunker Hill Bldg.,
601 West 5th St., Ste 1000
Los Angeles, California 90071

SIGNATURE 4/14/2016 DATE

REGISTERED PROFESSIONAL ENGINEER — PATRICIA L. PRYCE — E14352 — Exp. 12/31/17 — ELECTRICAL — STATE OF CALIFORNIA — 5/26/16

BUREAU OF ENGINEERING — OFFICIAL RECORD

STREET LIGHTING PLANS
SIXTH STREET VIADUCT REPLACEMENT
W.O. E700224L (TASK 013) SL-7521

CITY OF LOS ANGELES
ED EBRAHIMIAN, DIRECTOR BUREAU OF STREET LIGHTING

ACCEPTED: _____ DIRECTOR, BUREAU OF STREET LIGHTING 5-27-16 DATE

DRAWING NO. SL-401

SCALE OF ORIGINAL PLAN: NO SCALE

SHEET 116 OF 560 SHEETS

INDEX NUMBER P-38113

DEPARTMENT OF PUBLIC WORKS
BUREAU OF STREET LIGHTING
CITY OF LOS ANGELES

THE CITY OF LOS ANGELES OR ITS OFFICERS OR AGENTS SHALL NOT BE RESPONSIBLE FOR THE ACCURACY OR COMPLETENESS OF ELECTRONIC COPIES OF THIS PLAN SHEET.

C:\caddlib\pw\pwwestcoast\rgreenlee\dms57861\SL-400.dwg May 19, 2016 - 10:56am

ADDENDUM 5

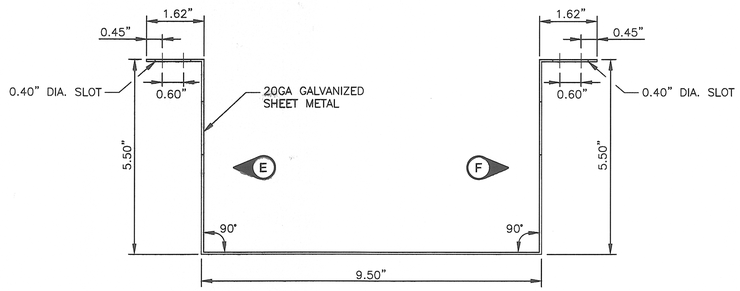

SHEET NOTES:

1. SEE MATERIALS LIST, SHEET NOTES, AND TOLERANCES ON DRAWING SL-400.

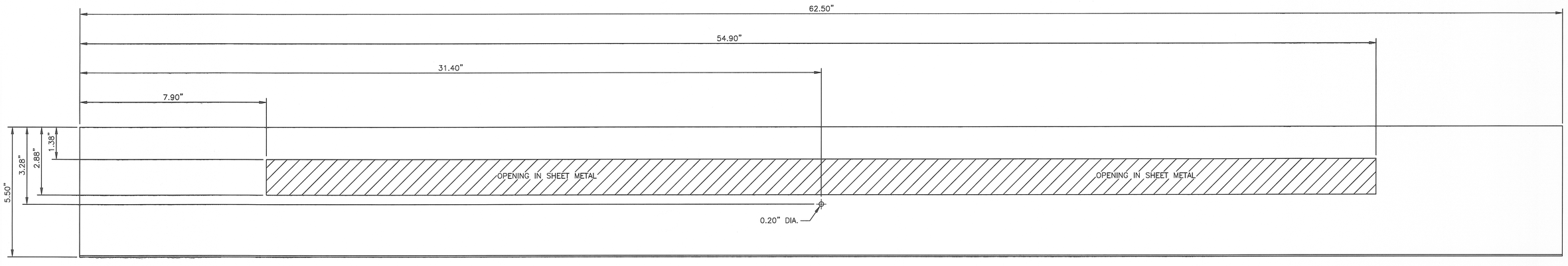

VIEW 'E'

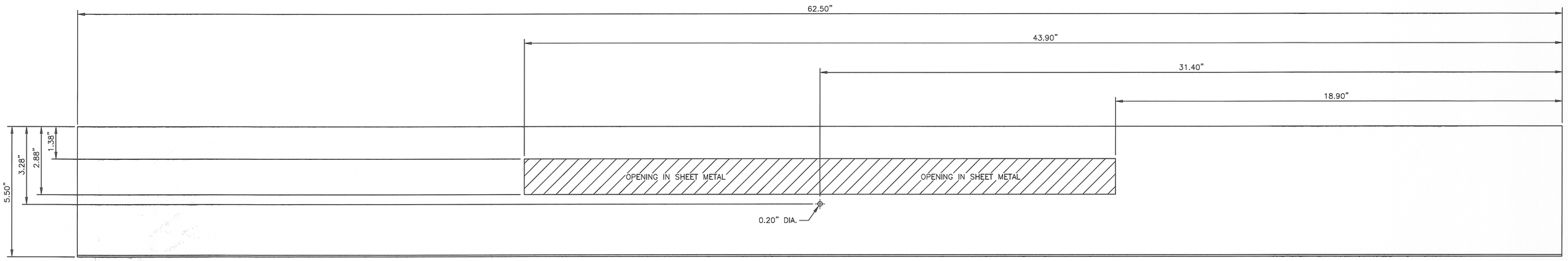

VIEW 'F'

ENCLOSURE HOUSING (ITEM #15)

LUMINOUS BARRIER ENCLOSURE (SHEET 3 OF 4) 1/-

SCALE: NO SCALE

PLANS PREPARED BY:
HNTB Corporation
One Bunker Hill Bldg.,
601 West 5th St., Ste 1000
Los Angeles, California 90071

SIGNATURE 4/14/2016 DATE

REGISTERED PROFESSIONAL ENGINEER PATRICIA L. GRAYCE No. E14352 Exp. 12/31/17 ELECTRICAL STATE OF CALIFORNIA 5/20/16

STREET LIGHTING PLANS
SIXTH STREET VIADUCT REPLACEMENT
W.O. E700224L (TASK 013) SL-7521

CITY OF LOS ANGELES
ED EBRAHIMIAN, DIRECTOR BUREAU OF STREET LIGHTING

ACCEPTED: DIRECTOR, BUREAU OF STREET LIGHTING 5-27-16 DATE

DRAWING NO. SL-402

SCALE OF ORIGINAL PLAN: NO SCALE | SHEET 117 OF 560 SHEETS | INDEX NUMBER P-38113

CONTRACTOR:
INSPECTED BY:
DATE ENERGIZED
DATE ENERGIZED
CORRECTED TO "AS BUILT"
BY CHECKED

BUREAU OF STREET LIGHTING
DEPARTMENT OF PUBLIC WORKS
CITY OF LOS ANGELES

THE CITY OF LOS ANGELES OR ITS OFFICERS OR AGENTS SHALL NOT BE RESPONSIBLE FOR THE ACCURACY OR COMPLETENESS OF ELECTRONIC COPIES OF THIS PLAN SHEET.

C:\caddlib\pw\pwwestcoast\rgreenlee\dms57861\SL-400.dwg May 19, 2016 - 10:56am

ADDENDUM 5

THE CITY OF LOS ANGELES OR ITS OFFICERS OR AGENTS SHALL NOT BE RESPONSIBLE FOR THE ACCURACY OR COMPLETENESS OF ELECTRONIC COPIES OF THIS PLAN SHEET.

C:\ceddlib\pw\pwwestcoast\rgreenlee\dms57861\SL-400.dwg May 19, 2016 - 10:57am

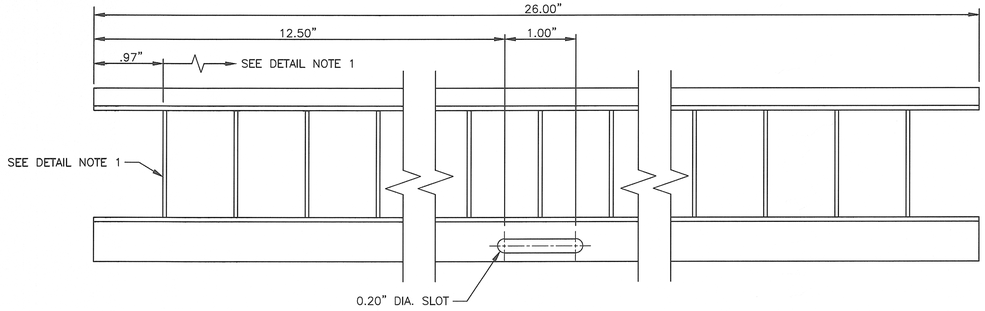

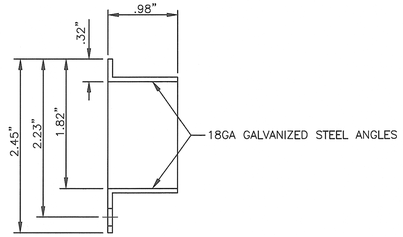

DETAIL NOTES:

1. 24GA GALVANIZED STEEL BAFFLES @ 1" SPACING. QTY. 25 TOTAL. WELD TO 18GA GALVANIZED STEEL ANGLES AS SHOWN.
2. BAFFLE SHALL HAVE NATURAL STEEL FINISH.

2' LONG BAFFLE (ITEM #13)

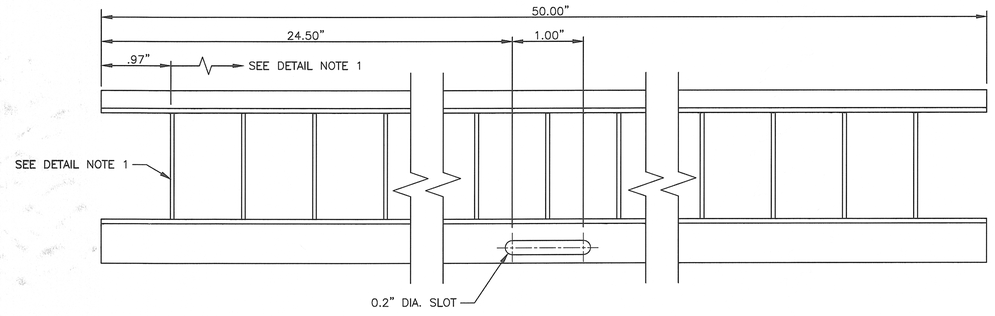

DETAIL NOTES:

1. 24GA GALVANIZED STEEL BAFFLES @ 1" SPACING. QTY. 47 TOTAL. WELD TO 18GA GALVANIZED STEEL ANGLES AS SHOWN.
2. BAFFLE SHALL HAVE MATTE BLACK FINISH.

4' LONG BAFFLE (ITEM #14)

SHEET NOTES:

1. SEE MATERIALS LIST, SHEET NOTES, AND TOLERANCES ON DRAWING SL-400.

CONTRACTOR:
INSPECTED BY:
DATE ENERGIZED
DATE ENERGIZED
CORRECTED TO "AS BUILT"
BY
CHECKED

LUMINOUS BARRIER ENCLOSURE (SHEET 4 OF 4)

SCALE: NO SCALE

1

PLANS PREPARED BY:
HNTB Corporation
One Bunker Hill Bldg.,
601 West 5th St., Ste 1000
Los Angeles, California 90071

SIGNATURE

4/14/2016
DATE

REGISTERED PROFESSIONAL ENGINEER
PATRICIA L. [illegible]
No. E14352
EXP. 12/31/17
ELECTRICAL
STATE OF CALIFORNIA

5/9/16

BUREAU OF ENGINEERING
OFFICIAL RECORD

STREET LIGHTING PLANS
SIXTH STREET VIADUCT REPLACEMENT
W.O. E700224L (TASK 013) SL-7521

CITY OF LOS ANGELES
ED EBRAHIMIAN, DIRECTOR BUREAU OF STREET LIGHTING

ACCEPTED: Norma Sobaken for
DIRECTOR, BUREAU OF STREET LIGHTING

5-27-16
DATE

DRAWING NO.
SL-403

SCALE OF ORIGINAL PLAN: NO SCALE

SHEET 118 OF 560 SHEETS

INDEX NUMBER **P-38113**

DEPARTMENT OF PUBLIC WORKS
BUREAU OF STREET LIGHTING
CITY OF LOS ANGELES

THE CITY OF LOS ANGELES OR ITS OFFICERS OR AGENTS SHALL NOT BE RESPONSIBLE FOR THE ACCURACY OR COMPLETENESS OF ELECTRONIC COPIES OF THIS PLAN SHEET.

C:\caddlib\pw\pwwestcoast\rgreenlee\dms57861\SL-404.dwg Mar 14, 2017 - 12:43pm

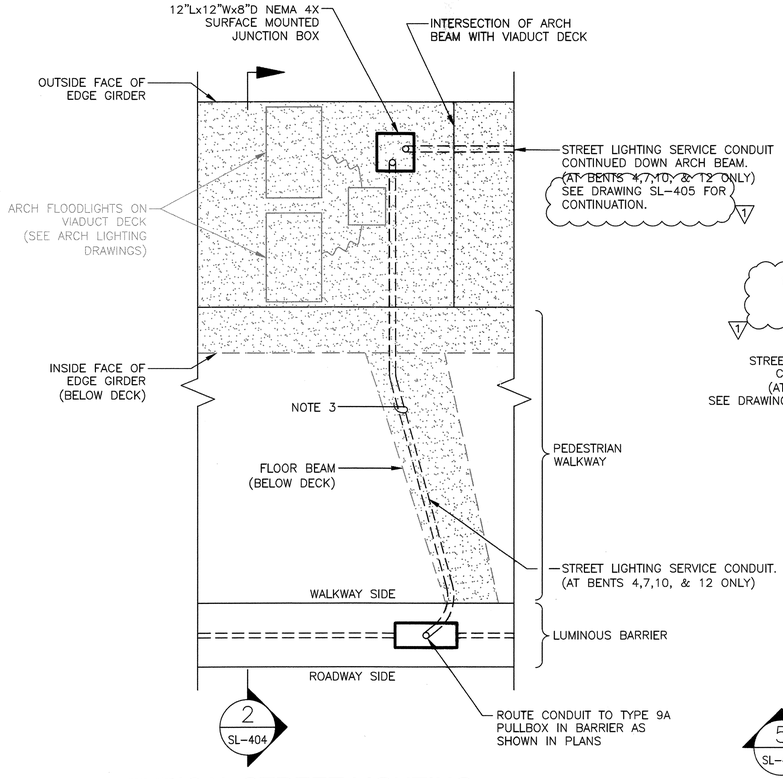

TYPICAL STREET LIGHTING ELECTRICAL DISTRIBUTION

SCALE: 1/2" = 1'-0"

1

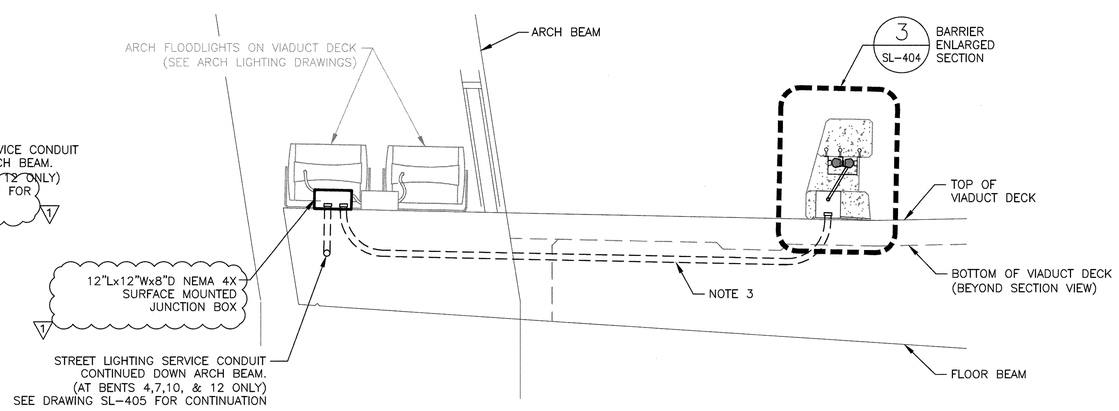

TYPICAL STREET LIGHTING SECTION ON VIADUCT

SCALE: 1/2" = 1'-0"

2
SL-404

SHEET NOTES:

1. BOND ALL METALLIC ENCLOSURE PARTS TO INCOMING 2" RGS WITH #10 CU.
2. PROVIDE NYLON DIELECTRIC BUSHINGS BETWEEN ALL DISSIMILAR METALS TO PREVENT GALVANIC CORROSION.
3. RFI 0210
4. SEE DRAWINGS SL-400 THROUGH SL-403 FOR LUMINOUS BARRIER ENCLOSURE DETAILS.
5. SEE DRAWINGS SL-200 THRU SL-212 FOR CONDUCTOR SIZES AND QUANTITIES.
6. AFTER FINAL APPROVAL OF INSTALLATION BY THE LA BUREAU OF STREET LIGHTING, ALL PULLBOX LIDS SHALL BE TACK WELDED SHUT BY CONTRACTOR.

CONTRACTOR:
INSPECTED BY:
DATE ENERGIZED
DATE ENERGIZED
CORRECTED TO "AS BUILT"
BY
CHECKED

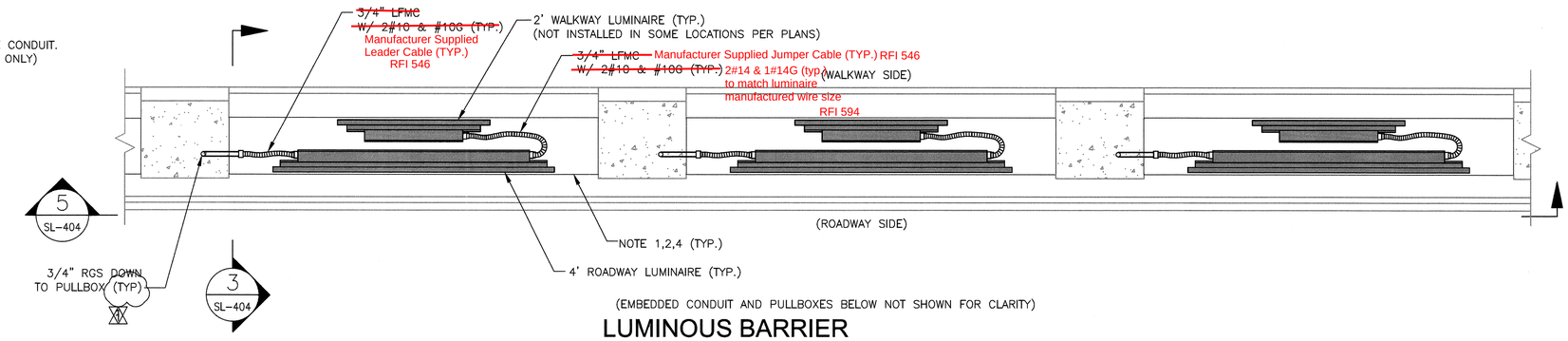

(EMBEDDED CONDUIT AND PULLBOXES BELOW NOT SHOWN FOR CLARITY)

LUMINOUS BARRIER TYPICAL ENLARGED PLAN

SCALE: 1/2" = 1'-0"

4
SL-404

LUMINOUS BARRIER TYPICAL ENLARGED SECTION

SCALE: 1-1/2" = 1'-0"

3
SL-404

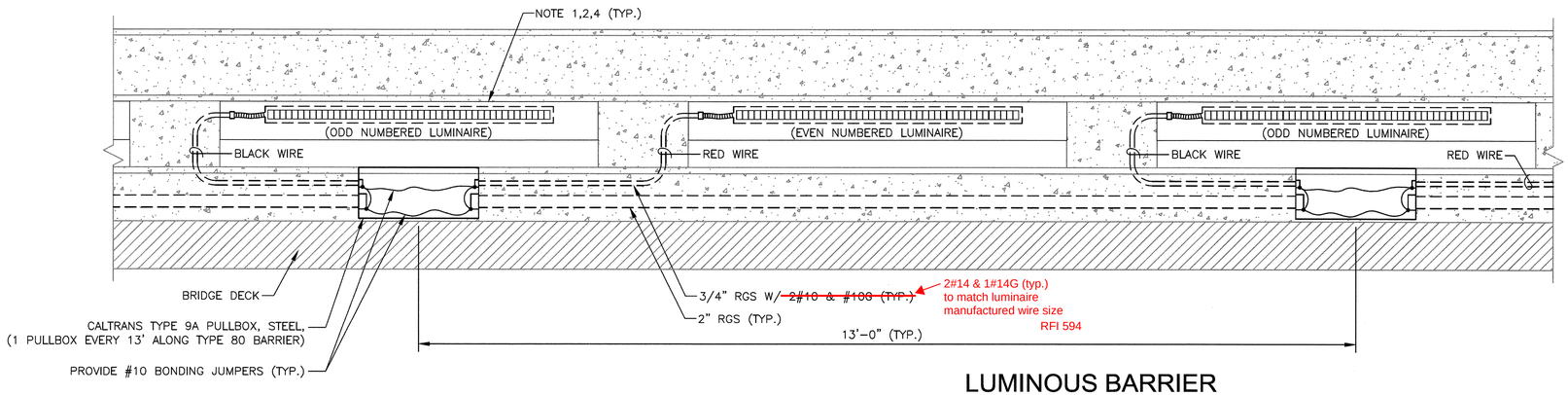

LUMINOUS BARRIER TYPICAL ELEVATION

SCALE: 1/2" = 1'-0"

5
SL-404

DELTA No.	DESCRIPTION OF REVISION	DATE	BY
1	REVISED PER BSL REVIEW	4/7/2017	A. GOROVAYA

PLANS PREPARED BY:

HNTB Corporation
One Bunker Hill Bldg.,
601 West 5th St., Ste 1000
Los Angeles, California 90071

SIGNATURE

1/20/2017
DATE

REGISTERED PROFESSIONAL ENGINEER
CARL A. AYUBI
No. E17891
Exp. 9/30/2018
ELECTRICAL
STATE OF CALIFORNIA

STREET LIGHTING PLANS
SIXTH STREET VIADUCT REPLACEMENT
W.O. E700224L (TASK 013) SL-7521

CITY OF LOS ANGELES
ED EBRAHIMIAN, DIRECTOR BUREAU OF STREET LIGHTING

ACCEPTED: _____ DIRECTOR, BUREAU OF STREET LIGHTING

3-22-17
DATE

DRAWING NO.
SL-404

SCALE OF ORIGINAL PLAN: AS SHOWN | SHEET OF SHEETS | INDEX NUMBER

CITY OF LOS ANGELES DEPARTMENT OF PUBLIC WORKS BUREAU OF STREET LIGHTING

THE CITY OF LOS ANGELES OR ITS OFFICERS OR AGENTS SHALL NOT BE RESPONSIBLE FOR THE ACCURACY OR COMPLETENESS OF ELECTRONIC COPIES OF THIS PLAN SHEET.

C:\coddlib\pw\pwwestcoast\ygreenlee\dms57861\SL-405.dwg Mar 14, 2017 - 12:42pm

ADDENDUM 5

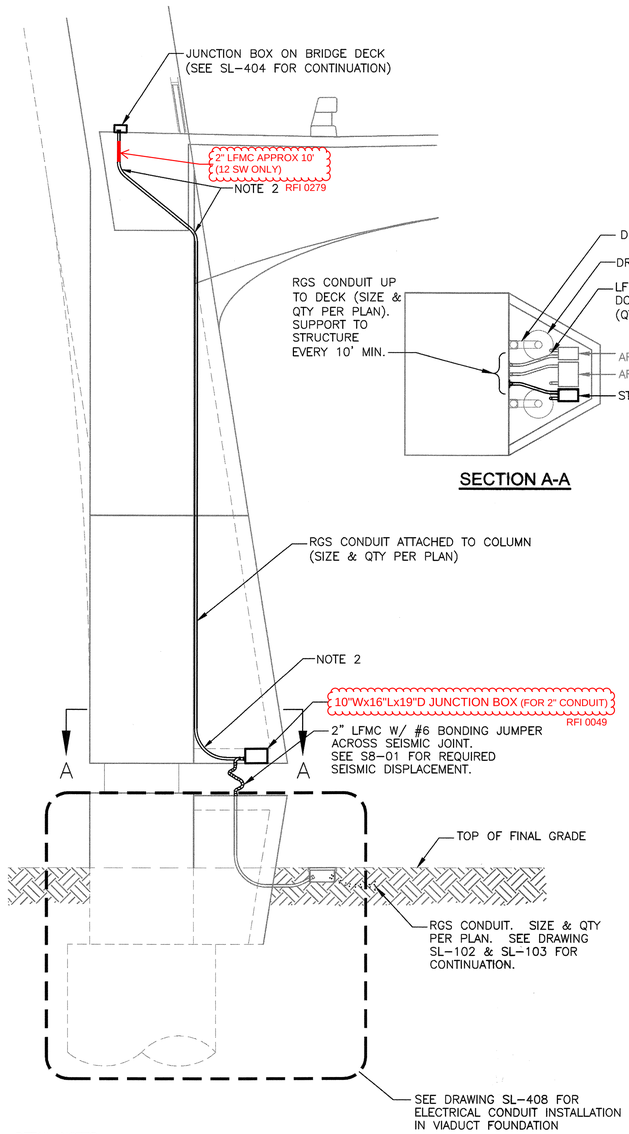

SECTION A-A

DETAIL NOTES:

1. PROVIDE J-BOXES AND CONDUIT AS REQUIRED FOR THE SYSTEMS BEING SERVED. NOT ALL J-BOXES AND CONDUIT ARE REQUIRED AT ALL COLUMN LOCATIONS. SEE STREET LIGHTING PLANS FOR CLARIFICATION. ARCH LIGHTING J-BOXES AND CONDUIT ARE SHOWN ON THE ARCH LIGHTING PLANS.
2. RGS CONDUIT BENDS SHALL BE PER GREENBOOK 307-12.2 (NOT LESS THAN 6X INTERNAL DIAMETER OF CONDUIT).

TYPICAL CONDUIT INSTALLATION IN VIADUCT COLUMNS

SCALE: NO SCALE

1

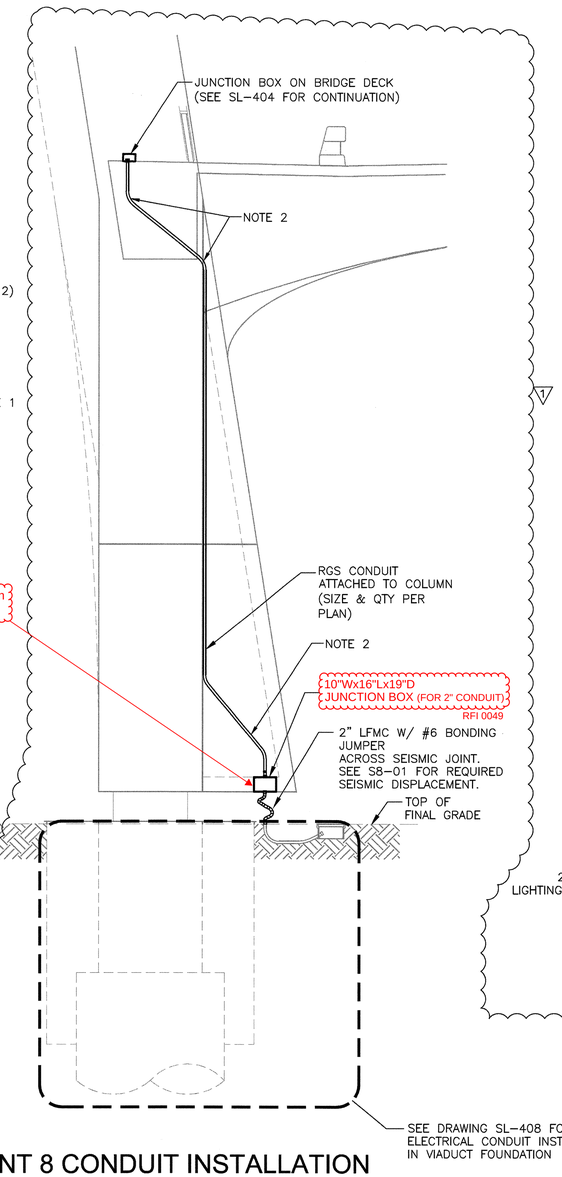

LFMC Enters Side of Junction Box as Shown in Detail 1 RFI 0049

BENT 8 CONDUIT INSTALLATION IN VIADUCT COLUMNS

SCALE: NO SCALE

2

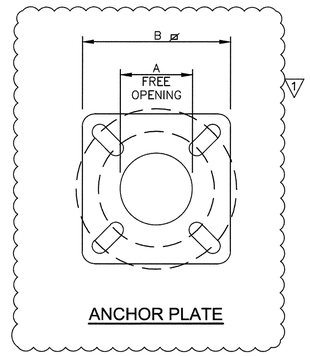

ANCHOR PLATE

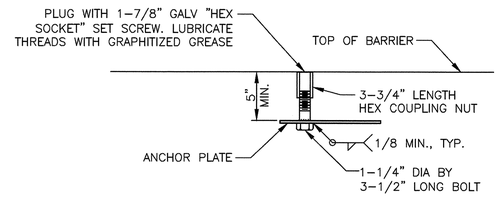

ELECTROLIER ANCHORAGES

(FOR FUTURE INSTALLATION WITH PLUG)

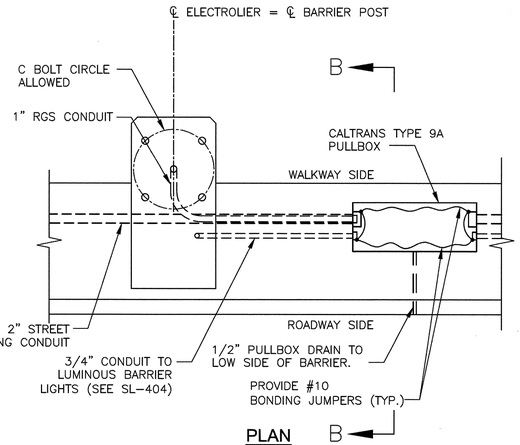

PLAN

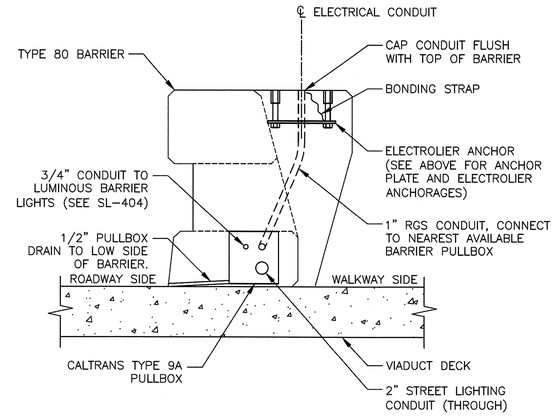

SECTION B-B

POLE TYPE	A	B	C
UPS100	7-1/8"	13"	11" TO 13"
PUM100	9-1/2"	13"	13" TO 15"

DETAIL NOTES:

1. SEE DRAWINGS SL-200 THROUGH SL-212 FOR FUTURE ELECTROLIER AND PULL BOX LOCATIONS.
2. FOR REINFORCEMENT AND STRUCTURAL DETAILS AT ELECTROLIER, SEE CALTRANS STD, PLAN NO. B11-61.
3. ELECTROLIER ANCHOR BOLTS SHALL BE HELD IN POSITION FOR POURING BY MEANS OF ANCHOR PLATES AND SUITABLE TEMPLATES. DEVIATION FROM THE TRUE POSITION, VERTICAL AND HEIGHT SHALL NOT EXCEED 1/16".

TYPE 80 FUTURE ELECTROLIER FOUNDATION DETAIL

SCALE: NO SCALE

3

DELTA No.	DESCRIPTION OF REVISION	DATE	BY
1	REVISED PER BSL REVIEW	4/7/2017	A. GOROVAYA

PLANS PREPARED BY:
HNTB Corporation
One Bunker Hill Bldg.,
601 West 5th St., Ste 1000
Los Angeles, California 90071

SIGNATURE 1/20/2017 DATE

REGISTERED PROFESSIONAL ENGINEER
CARL A. AHLBERG
No. E17891
Exp. 9/30/2018
ELECTRICAL
STATE OF CALIFORNIA

STREET LIGHTING PLANS
SIXTH STREET VIADUCT REPLACEMENT
W.O. E700224L (TASK 013) SL-7521

CITY OF LOS ANGELES
ED EBRAHIMIAN, DIRECTOR BUREAU OF STREET LIGHTING

ACCEPTED: DIRECTOR, BUREAU OF STREET LIGHTING 3-27-17 DATE

DRAWING NO. SL-405

SCALE OF ORIGINAL PLAN: NO SCALE | SHEET OF SHEETS | INDEX NUMBER

CONTRACTOR:
INSPECTED BY:
DATE ENERGIZED
DATE ENERGIZED
CORRECTED TO "AS BUILT"
BY
CHECKED

CITY OF LOS ANGELES DEPARTMENT OF PUBLIC WORKS BUREAU OF STREET LIGHTING

ADDENDUM 5

THE CITY OF LOS ANGELES OR ITS OFFICERS OR AGENTS SHALL NOT BE RESPONSIBLE FOR THE ACCURACY OR COMPLETENESS OF ELECTRONIC COPIES OF THIS PLAN SHEET.

C:\caddlib\pw\pwwestcoast\ygreenlee\dms57861\SL-406.dwg Feb 13, 2018 - 7:21am

SHEET NOTES:

1. COORDINATE CONDUIT AND JUNCTION BOX INSTALLATION WITH STRUCTURAL PLANS.

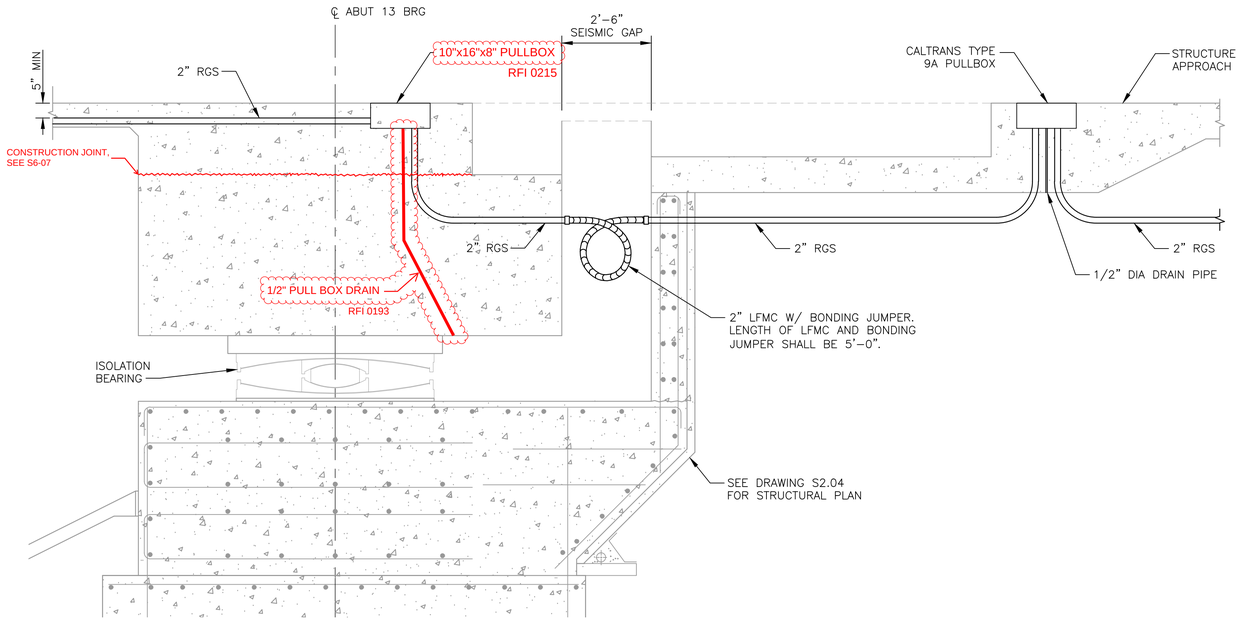

1 TYPICAL CONDUIT INSTALLATION AT ABUTMENT

SCALE NO SCALE

DELTA No.	DESCRIPTION OF REVISION	DATE	BY
1	APPLY DETAIL TO WEST ABUT	2/13/2018	A. GOROVAYA

PLANS PREPARED BY:
HNTB Corporation
One Bunker Hill Bldg.,
601 West 5th St., Ste 1000
Los Angeles, California 90071

SIGNATURE 1/20/2017 DATE

REGISTERED PROFESSIONAL ENGINEER CARL A. AYUB No. E17891 Exp. 9/30/2018 ELECTRICAL STATE OF CALIFORNIA

STREET LIGHTING PLANS
SIXTH STREET VIADUCT REPLACEMENT
W.O. E700224L (TASK 013) SL-7521

CITY OF LOS ANGELES
ED EBRAHIMIAN, DIRECTOR BUREAU OF STREET LIGHTING

ACCEPTED: _____ DIRECTOR, BUREAU OF STREET LIGHTING _____ DATE

DRAWING NO. SL-406

SCALE OF ORIGINAL PLAN: NO SCALE | SHEET OF SHEETS | INDEX NUMBER

CONTRACTOR:
INSPECTED BY:
DATE ENERGIZED
DATE ENERGIZED
CORRECTED TO "AS BUILT"
BY CHECKED

DEPARTMENT OF PUBLIC WORKS
BUREAU OF STREET LIGHTING
CITY OF LOS ANGELES

ADDENDUM 5

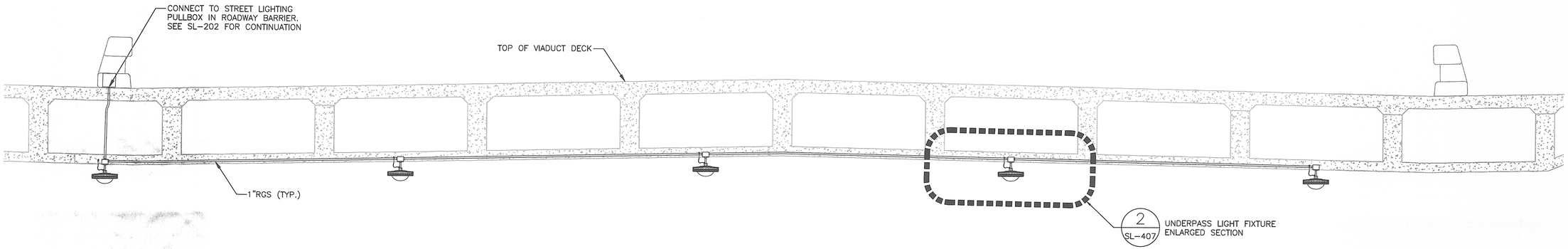

UNDERPASS LIGHT FIXTURE OVERALL SECTION AT SANTA FE

SCALE: 3/8" = 1'-0"

1 / SL-213

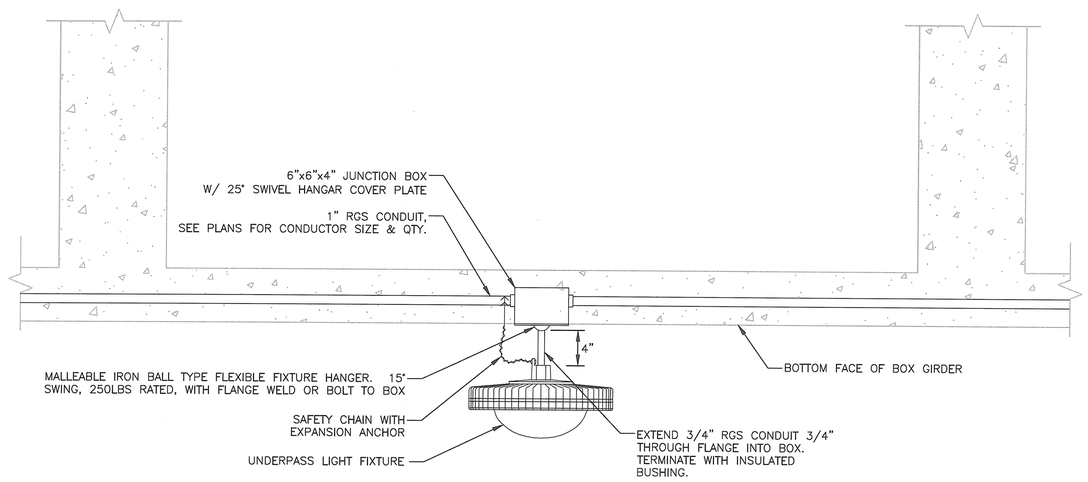

TYPICAL UNDERPASS LIGHT FIXTURE ENLARGED SECTION

SCALE: 1-1/2"=1'-0"

2 / SL-407

CONTRACTOR:
INSPECTED BY:
DATE ENERGIZED
DATE ENERGIZED
CORRECTED TO "AS BUILT"
BY
CHECKED

BUREAU OF STREET LIGHTING

DEPARTMENT OF PUBLIC WORKS

CITY OF LOS ANGELES

PLANS PREPARED BY:

HNTB Corporation
One Bunker Hill Bldg.,
601 West 5th St., Ste 1000
Los Angeles, California 90071

SIGNATURE 4/14/2016 DATE

REGISTERED PROFESSIONAL ENGINEER PATRICIA L. FORNICE No. E14352 Exp. 12/31/17 ELECTRICAL STATE OF CALIFORNIA 5/24/16

STREET LIGHTING PLANS
SIXTH STREET VIADUCT REPLACEMENT
W.O. E700224L (TASK 013) SL-7521

CITY OF LOS ANGELES
ED EBRAHIMIAN, DIRECTOR BUREAU OF STREET LIGHTING

ACCEPTED: Norm Sohaker for DIRECTOR, BUREAU OF STREET LIGHTING 5-27-16 DATE

DRAWING NO. SL-407

SCALE OF ORIGINAL PLAN: AS SHOWN | SHEET 122 OF 560 SHEETS | INDEX NUMBER P-38113

THE CITY OF LOS ANGELES OR ITS OFFICERS OR AGENTS SHALL NOT BE RESPONSIBLE FOR THE ACCURACY OR COMPLETENESS OF ELECTRONIC COPIES OF THIS PLAN SHEET.

C:\caddlib\pw\pwwestcoast\rgreenlee\dms57861\SL-407.dwg May 19, 2016 - 11:00am

THE CITY OF LOS ANGELES OR ITS OFFICERS OR AGENTS SHALL NOT BE RESPONSIBLE FOR THE ACCURACY OR COMPLETENESS OF ELECTRONIC COPIES OF THIS PLAN SHEET.

C:\caddlib\pw\pwwestcoast\rgreenlee\dms57861\SL-408.dwg Feb 15, 2017 - 2:37pm

ADDENDUM 5

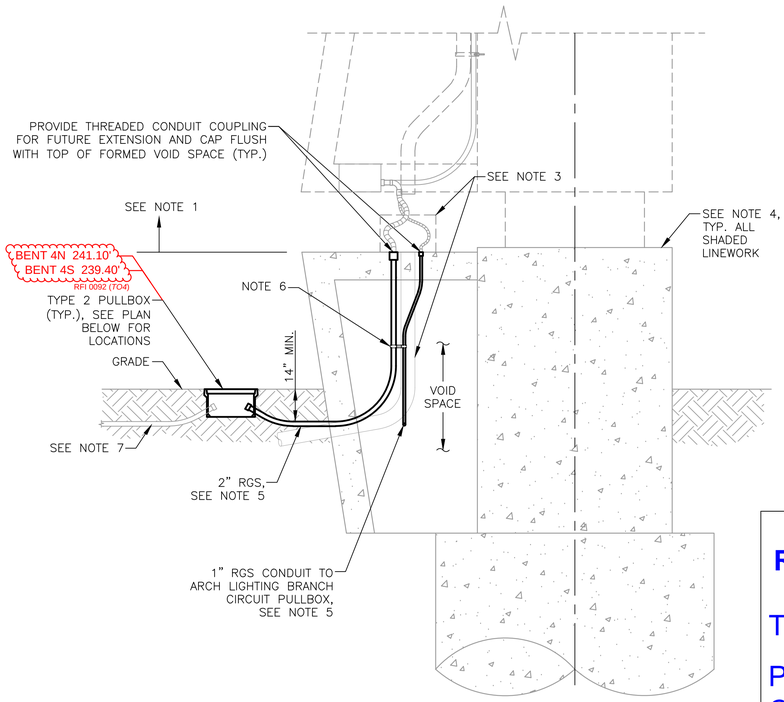

SECTION A-A

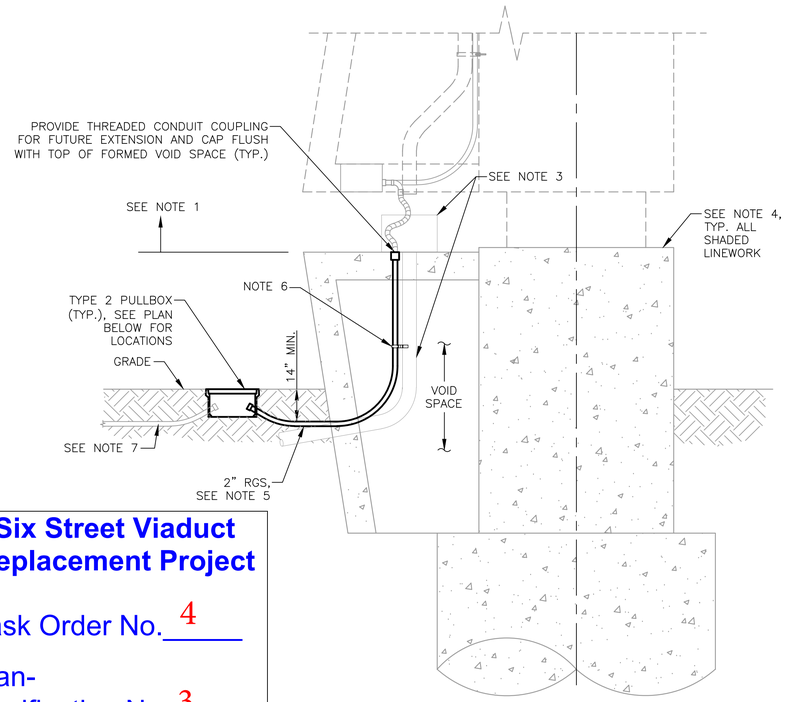

SECTION B-B

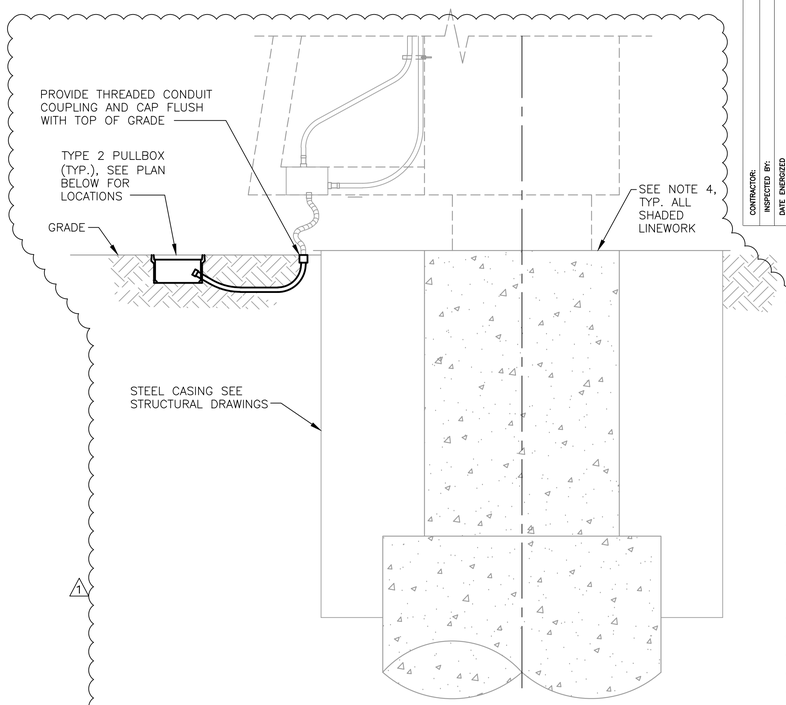

SECTION C-C

Six Street Viaduct Replacement Project

Task Order No. 4

Plan-Clarification No. 3

Page 2 of 2

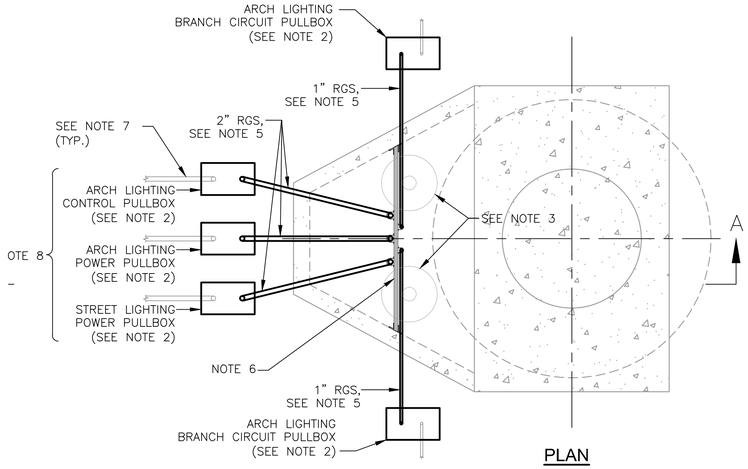

PLAN

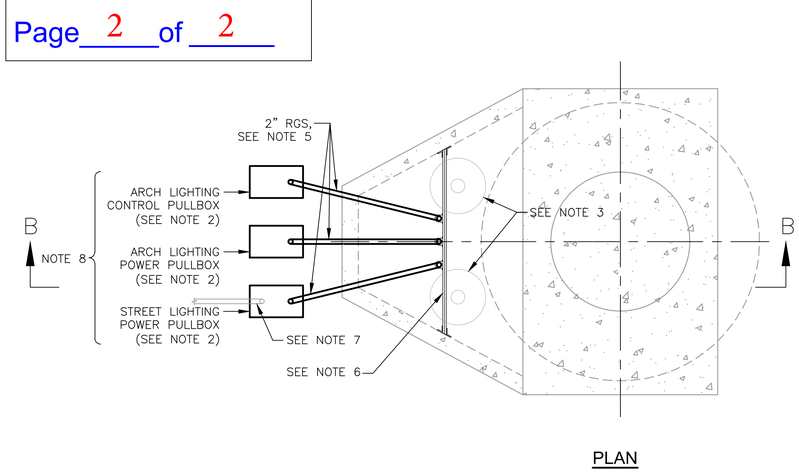

PLAN

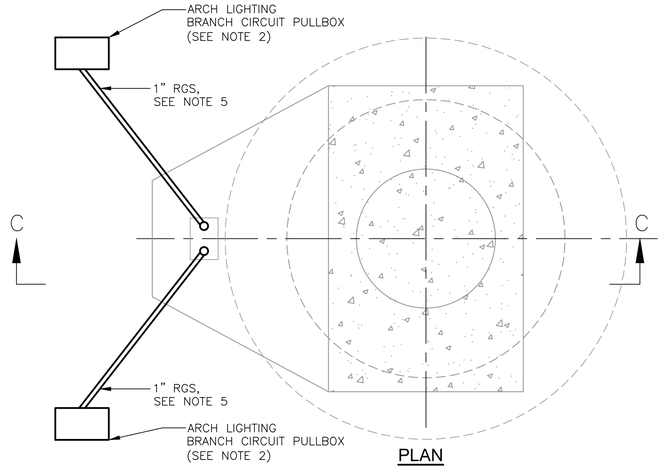

PLAN

BENT □, 7, 9 - 11 TYPICAL CONDUIT INSTALLATION IN VIADUCT FOUNDATION (1)

SCALE□□□" □ 1=0"

BENT 12 TYPICAL CONDUIT INSTALLATION IN VIADUCT FOUNDATION (2)

SCALE□□□" □ 1=0"

BENT □ TYPICAL CONDUIT INSTALLATION IN VIADUCT FOUNDATION (3)

SCALE□□□" □ 1=0"

SHEET NOTES:

1. SEE DRAWINGS SL-405 (STREET LIGHTING PLANS) AND SL-1402 (ARCH LIGHTING PLANS) FOR ELECTRICAL INSTALLATION DETAILS ABOVE FOUNDATION.
2. ALL PULLBOXES SHALL BE LA BSL TYPE 2. PULLBOX LIDS SHALL BE LABELED ACCORDING TO THE SYSTEM THEY SERVE AND THE VOLTAGE WITHIN (I.E. "STREET LIGHTING 120/240V" OR "ARCH LIGHTING 480/277V"). EXACT PULLBOX LOCATIONS MAY BE ADJUSTED ACCORDING TO AVAILABLE SPACE NEAR THE VIADUCT FOUNDATION.
3. COORDINATE CONDUIT INSTALLATION WITH DRAINAGE FUNNELS AND PIPES.
4. EXACT DIMENSIONS AND CONFIGURATION OF FOUNDATION VARIES. COORDINATE ALL ELECTRICAL WORK WITH STRUCTURAL PLANS.
5. CONDUIT WILL BE UTILIZED AS THE GROUND PATH. ALL CONDUIT SHALL BE RGS AND PROPERLY BONDED ACROSS ALL CONNECTING PARTS SUCH THAT IT IS ELECTRICALLY CONTINUOUS.
6. PROVIDE BACK-TO-BACK 1-1/4" x 3/4" UNISTRUT WITH CONDUIT CLAMPS. HORIZONTAL LOCATION MAY BE ADJUSTED AS NEEDED TO SUPPORT CONDUIT. SUPPORTS SHALL BE INSTALLED EVERY 5' MAX. FOR VERTICAL CONDUIT INSTALLATIONS.
7. FOR CONTINUATION OF CONDUIT SEE STREET LIGHTING PLANS AND ARCH LIGHTING PLANS. IN LOCATIONS WHERE SPARE PULLBOXES ARE INSTALLED THERE IS NO CONDUIT CONTINUATION.
8. THE CONDUIT AND PULLBOX LAYOUT SHOWN IS TYPICAL FOR ALL FOUNDATIONS INDICATED. AT SOME LOCATIONS THE CONDUIT AND PULLBOXES ARE NOT UTILIZED AND SHALL BE INSTALLED AS SPARES. SEE STREET LIGHTING PLANS AND ARCH LIGHTING PLANS FOR PULLBOX AND CONDUIT UTILIZATION.

DELTA No.	DESCRIPTION OF REVISION	DATE	BY
1	RFI 49	2/15/2017	A. GOROVAYA

PLANS PREPARED BY:

HNTB Corporation
One Bunker Hill Bldg.,
601 West 5th St., Ste 1000
Los Angeles, California 90071

SIGNATURE — 1/20/2017 DATE

REGISTERED PROFESSIONAL ENGINEER — CARL A. AYUB — No. E17891 — Exp. 9/30/2018 — ELECTRICAL — STATE OF CALIFORNIA

CONTRACTOR:
INSPECTED BY:
DATE ENERGIZED
DATE ENERGIZED
CORRECTED TO "AS BUILT"
BY
CHECKED

STREET LIGHTING PLANS
SIXTH STREET VIADUCT REPLACEMENT
W.O. E700224L (TASK 013) SL-7521

CITY OF LOS ANGELES
ED EBRAHIMIAN, DIRECTOR BUREAU OF STREET LIGHTING

ACCEPTED: _____ DIRECTOR, BUREAU OF STREET LIGHTING _____ DATE

DRAWING NO. SL-408

SCALE OF ORIGINAL PLAN: AS SHOWN | SHEET OF SHEETS | INDEX NUMBER

CITY OF LOS ANGELES — DEPARTMENT OF PUBLIC WORKS — BUREAU OF STREET LIGHTING

THE CITY OF LOS ANGELES OR ITS OFFICERS OR AGENTS SHALL NOT BE RESPONSIBLE FOR THE ACCURACY OR COMPLETENESS OF ELECTRONIC COPIES OF THIS PLAN SHEET.

C:\caddlib\pw\pwwestcoast\rgreenlee\dms57861\SL-409.dwg Oct 10, 2018 - 1:14pm

ADDENDUM 5

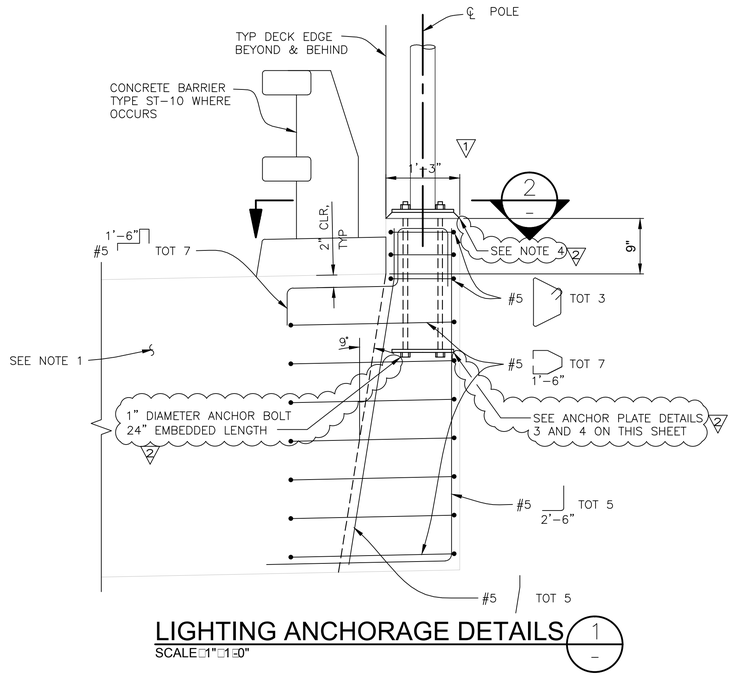

LIGHTING ANCHORAGE DETAILS 1

SCALE: 1" = 1'-0"

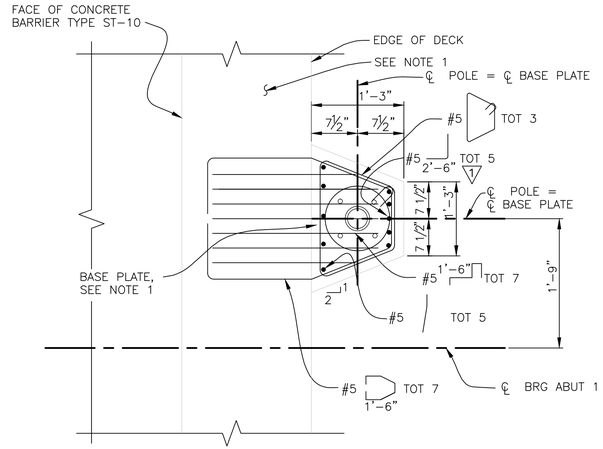

SECTION 2

SCALE: 1" = 1'-0"

SHEET NOTES:

1. TYPICAL REINFORCEMENT AT ABUTMENT 1 END DIAPHRAGM NOT SHOWN FOR CLARITY. SEE "STREET LIGHTING PLANS" FOR DETAILS OF ANCHOR BOLTS, BASE PLATE, ANCHOR PLATE AND RELATED PARTS.
2. NOT ALL ABUTMENT 1 END DIAPHRAGM REINFORCEMENT SHOWN FOR CLARITY.
3. SEE STRUCTURAL DRAWING S6-03 FOR MORE DETAILS.
4. SEE ELECTROLIER MANUFACTURER'S SPECIFICATIONS FOR BASE PLATE DIMENSIONS.

2

CONTRACTOR:			
INSPECTED BY:			
DATE ENERGIZED			
DATE ENERGIZED			
CORRECTED TO "AS BUILT"			CHECKED
BY			

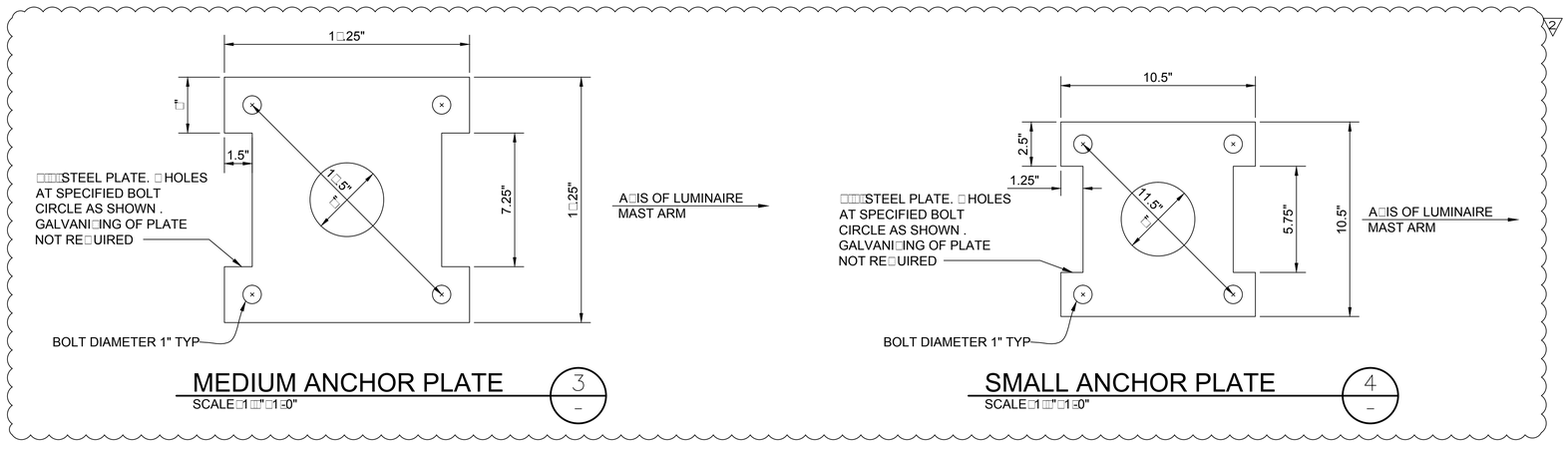

MEDIUM ANCHOR PLATE 3

SCALE: 1 □" = 1'-0"

SMALL ANCHOR PLATE 4

SCALE: 1 □" = 1'-0"

DELTA No.	DESCRIPTION OF REVISION	DATE	BY
PCO 17 ▽1	REVISED PER BSL REVIEW	3/14/2017	A. GOROVAYA
▽2	RFI 205	10/9/2018	C. AYUBI

T.O. 5 - Preliminary Change Order Serial Sketch No. 80 - Page 3 of 3

PLANS PREPARED BY:

HNTB Corporation
One Bunker Hill Bldg.,
601 West 5th St., Ste 1000
Los Angeles, California 90071

SIGNATURE — 10/10/2018 DATE

REGISTERED PROFESSIONAL ENGINEER — CARL A. AYUBI — No. E17891 — Exp. 9/30/2020 — ELECTRICAL — STATE OF CALIFORNIA

STREET LIGHTING PLANS
SIXTH STREET VIADUCT REPLACEMENT
W.O. E700224L (TASK 013) SL-7521

CITY OF LOS ANGELES
ED EBRAHIMIAN, DIRECTOR BUREAU OF STREET LIGHTING

ACCEPTED: _____ DIRECTOR, BUREAU OF STREET LIGHTING _____ DATE

DRAWING NO. SL-409

SCALE OF ORIGINAL PLAN: AS SHOWN | SHEET OF SHEETS | INDEX NUMBER

CITY OF LOS ANGELES DEPARTMENT OF PUBLIC WORKS BUREAU OF STREET LIGHTING

ADDENDUM 5

THE CITY OF LOS ANGELES OR ITS OFFICERS OR AGENTS SHALL NOT BE RESPONSIBLE FOR THE ACCURACY OR COMPLETENESS OF ELECTRONIC COPIES OF THIS PLAN SHEET.

C:\oddlib\pw\pwwestcoast\rgreenlee\dms257861\SL-2001.dwg Sep 13, 2016 - 11:00am

NOTICE TO CONTRACTORS GENERAL NOTES

1. ALL WORK SHALL CONFORM TO THE LATEST BOARD OF PUBLIC WORKS OF THE CITY OF LOS ANGELES ADOPTED EDITION AND SUPPLEMENTS TO THE "GREENBOOK STANDARD SPECIFICATIONS FOR PUBLIC WORKS CONSTRUCTION" AS MODIFIED BY THE CORRESPONDING ISSUE OF THE BROWN BOOK, THE LATEST EDITION OF THE BUREAU OF STREET LIGHTING "SPECIAL SPECIFICATIONS", AND THE SPECIAL PROVISIONS.
2. ELECTROLIERS SHALL BE INSTALLED WITH CENTERLINE 30" BEHIND THE CURB FACE, AND WITH LUMINAIRE ARM ORIENTED OVER THE STREET AND PERPENDICULAR TO ITS CENTER LINE, EXCEPT AS OTHERWISE SPECIFIED HEREON.
3. ELECTROLIERS SPECIFIED TO BE LOCATED INSIDE OF THE CURB RETURN SHALL BE INSTALLED WITH THE CENTER OF THE ELECTROLIER 30 INCHES BEHIND THE CURB FACE MEASURED RADIALLY, AND WITH THE LUMINAIRE ARM ORIENTED OVER THE STREET AND PERPENDICULAR TO THE STREET CENTERLINE.
4. ELECTROLIERS SHALL BE ERECTED SO THAT THE BASE DOOR IS PERPENDICULAR TO THE CURB AND LOCATED ON THE SIDE OF THE ELECTROLIER AWAY FROM ONCOMING TRAFFIC.
5. ALL EXISTING ELECTROLIERS SPECIFIED TO BE REMOVED OR MODIFIED ON THIS PLAN SHALL BE MAINTAINED IN SERVICE UNTIL THE NEW ELECTROLIER LIGHTING SYSTEM IS PLACED IN SERVICE, UNLESS OTHERWISE SPECIFIED HEREON. ALL OTHER ELECTROLIERS ON CIRCUITS AFFECTED BY THIS PLAN SHALL BE MAINTAINED IN SERVICE. CONTRACTOR MAY PROVIDE ALTERNATE LIGHTING IN LIEU OF MAINTAINING EXISTING ELECTROLIER LIGHTS IN SERVICE PROVIDED THAT SUCH ARRANGEMENTS ARE APPROVED BY THE ENGINEER.
6. ALL EQUIPMENT REQUIRED HEREON FOR FURNISHING ELECTRICAL SERVICE FOR EACH CIRCUIT SHALL BE INSTALLED AND INSPECTED PRIOR TO ANY OTHER CONSTRUCTION ON THAT CIRCUIT UNLESS OTHERWISE APPROVED BY THE ENGINEER.
7. THE CONTRACTOR SHALL GIVE WRITTEN NOTICE, 72 HOURS IN ADVANCE OF THE REMOVAL OF AN ELECTROLIER, TO ANY PUBLIC AGENCY MAINTAINING EQUIPMENT SUPPORTED BY THAT ELECTROLIER.
8. FOUNDATIONS AND PULLBOXES NOT REMAINING IN SERVICE SHALL BE REMOVED. THE RESULTING EXCAVATION SHALL BE FILLED WITH MATERIAL SIMILAR TO ADJACENT MATERIAL AND SATISFACTORILY COMPACTED WITH A MECHANICAL COMPACTOR IN LAYERS NOT EXCEEDING 12 INCHES. THE SURFACE SHALL BE FINISHED TO MATCH THE ADJACENT SURFACE.
9. THE CONTRACTOR SHALL REQUEST A BURN TEST BY NOTIFYING THE BUREAU OF CONTRACT ADMINISTRATION PROJECT INSPECTOR A MINIMUM OF 7 CALENDAR DAYS IN ADVANCE OF THE DATE ON WHICH A BURN TEST IS DESIRED.
10. CONTRACTOR SHALL GIVE THREE WORKING DAYS NOTICE (PHONE 323-913-4743) PRIOR TO DELIVERY OF ANY EQUIPMENT SPECIFIED TO BE DELIVERED TO THE BUREAU OF STREET LIGHTING YARD AT 4550 SANTA MONICA BLVD. SUCH DELIVERIES SHALL BE BETWEEN 8:30 AM AND 3:00 PM AND SHALL INCLUDE ALL HANDLING AND LOADING FROM THE TRUCK BY THE CONTRACTOR. CONTRACTOR MUST SUPPLY A COPY OF THE STREET LIGHTING DRAWINGS WITH THE DELIVERY OF MATERIAL.
11. PULLBOXES LOCATED ADJACENT TO DRIVEWAYS AND ALLEYS SHALL BE INSTALLED AT A MINIMUM DISTANCE OF FIVE FEET FROM THE TOP OF THE "X" OF A CASE 1 OR CASE 2 DRIVEWAY OR AT A MINIMUM DISTANCE OF TWO FEET FROM THE B.C. OF A CASE 3 OR CASE 4 DRIVEWAY OR FIVE FEET FROM TRAVELLED WAY OF THE ALLEY.
12. PULLBOXES INSTALLED AT INTERSECTIONS OF LOCAL STREET SHALL BE INSTALLED NO CLOSER TO THE INTERSECTIONS THAN THE B.C.R. OF AN ASSUMED FUTURE 25' RADIUS CURB RETURN UNLESS OTHERWISE APPROVED BY THE ENGINEER. PULLBOXES INSTALLED AT INTERSECTIONS WHICH INVOLVE ONE OR MORE MAJOR OR SECONDARY STREETS SHALL BE INSTALLED NO CLOSER TO INTERSECTIONS THAN THE B.C.R. OF AN ASSUMED FUTURE 35' RADIUS CURB RETURN UNLESS OTHERWISE APPROVED BY THE ENGINEER.
13. CONDUIT SHALL BE INSTALLED AROUND ALL EXISTING AND/OR PROPOSED CATCH BASINS PER BUREAU OF STREET LIGHTING STANDARD DRAWING NO. L-304-0 UNLESS OTHERWISE SPECIFIED.
14. ALL SCREWS PROVIDED FOR ELECTROLIER STANDARD BASE DOORS AND BASE COVERS SHALL BE CADMIUM PLATED STEEL, 1/4-20NC MACHINE SCREWS, WITH PHILLIPS RECESSED ROUND HEADS.
15. WARNING: SAFETY CLEARANCE SHALL BE OBTAINED DAILY FROM THE AFFECTED UTILITY COMPANY BEFORE DOING ANY WORK IN CLOSE PROXIMITY TO ANY OVERHEAD ELECTRIC LINE. SEE SECTIONS 16430 AND 2100 OF SPECIAL SPECIFICATIONS.
16. UNLESS OTHERWISE SPECIFIED HEREON, LUMINAIRES SHALL PROVIDE A MEDIUM, CUTOFF, TYPE III, LIGHTING DISTRIBUTION PATTERN CONFORMING TO I.E.S DESIGNATION.
17. CONTRACTOR SHALL BE RESPONSIBLE FOR PRESERVING THE CONDITION OF ALL EXISTING EQUIPMENT TO BE REUSED, MODIFIED OR RETURNED TO THE BUREAU OF STREET LIGHTING YARD.
18. EQUIPMENT INDICATED "DISPOSE" SHALL BECOME THE PROPERTY OF THE CONTRACTOR AND BE DISPOSED OF BY THE CONTRACTOR.
19. STREET LIGHTING CONDUIT SHALL BE INSTALLED BY JACKING OR DRILLING METHODS. INSTALLATION OF CONDUIT BY OPEN TRENCHING IS NOT PERMITTED UNLESS APPROVED BY THE DIRECTOR, BUREAU OF STREET LIGHTING.
20. CONTRACTOR SHALL REPAIR AT HIS COST, THE DAMAGE CAUSED TO EXISTING SPRINKLER SYSTEMS DURING THE CONSTRUCTION OF THIS PROJECT. REPAIRS SHALL BE MADE WITHIN 5 WORKING DAYS AFTER DAMAGE OCCURS.
21. ALL ELECTROLIERS SPECIFIED HEREON SHALL INCLUDE A TYPE 2 PULLBOX, TO BE SUPPLIED AND INSTALLED, UNLESS OTHERWISE SPECIFIED.
22. CONTRACTOR SHALL BE RESPONSIBLE TO ALL EXISTING ELECTROLIERS SPECIFIED TO BE RELOCATED AND MODIFIED ON THIS PLAN. PRIOR TO REINSTALLATION, CONTRACTOR SHALL REPAIR OR REPLACE ALL EXISTING STREET LIGHTING FACILITIES FOUND TO BE DAMAGED PRIOR TO START OF OR DURING THE CONSTRUCTION OF THIS PROJECT AT NO COST TO THE CITY.

SUPPLEMENTAL NOTES

1. CONTRACTOR SHALL LOCATE & PROTECT SUBSTRUCTURE(S) SHOWN HEREON, & SHALL PROVIDE FOR A MINIMUM 12" HORIZONTAL CLEARANCE BETWEEN FOUNDATION & SUBSTRUCTURES. IN THE EVENT A 12" CLEARANCE CANNOT BE ACHIEVED, THE CONTRACTOR SHALL MAKE ARRANGEMENTS FOR RELOCATION OF SUBSTRUCTURES AT NO COST TO THE CITY.
2. IN THE EVENT OF OVERHEAD LINES CONFLICT WITH ELECTROLIERS THE CONTRACTOR SHALL MAKE NECESSARY ARRANGEMENTS WITH THE DEPT. OF WATER AND POWER TO RAISE THEIR OVERHEAD FACILITIES IN ORDER TO PROVIDE FOR THE FOLLOWING CLEARANCES WITH EXISTING AND/OR PROPOSED ELECTROLIERS.
   LOW VOLTAGE: MINIMUM 3' CLEARANCE BETWEEN OVERHEAD LINES AND ELECTROLIERS
   HIGH VOLTAGE: MINIMUM 6' CLEARANCE BETWEEN OVERHEAD LINES AND ELECTROLIERS
3. STREET TREES SHALL NOT BE PLANTED CLOSER THAN 20' FROM EXISTING OR PROPOSED ELECTROLIER, UNLESS OTHERWISE INDICATED.
4. IN THE EVENT OF OVERHEAD COMMUNICATION LINE CONFLICT WITH ELECTROLIERS, CONTRACTOR SHALL MAKE NECESSARY ARRANGEMENTS TO PROVIDE A MINIMUM 12" CLEARANCE.
5. PROPOSED ELECTROLIER FOUNDATIONS AND PULLBOXES SHALL BE INSTALLED OUTSIDE OF ACCESS RAMP AREAS. EXISTING FOUNDATIONS AND PULLBOXES SHALL BE RECONSTRUCTED TO CLEAR ACCESS RAMPS BY A MINIMUM OF 12". EXISTING CONDUIT SHALL BE LOWERED AS NECESSARY PER SEC. 307-2.5 OF THE STANDARD SPECIFICATIONS FOR PUBLIC WORKS CONSTRUCTION.
6. CONDUIT THAT IS TO BE ABANDONED SHALL HAVE WIRES REMOVED. THE CONDUIT SHALL BE REMOVED TO A DEPTH OF AT LEAST 12" BELOW THE SURFACE AND HAVE BOTH ENDS CRIMPED.
7. NOTWITHSTANDING SECTION 16950.2 OF THE SPECIAL SPECIFICATIONS FOR THE CONSTRUCTION STREET LIGHTING SYSTEMS MAGNETIC REGULATING BALLASTS ARE REQUIRED IN ALL COBRA-HEAD LUMINAIRES.
8. ALL #10 AWG WIRES USED FOR MULTIPLE CIRCUIT ELECTROLIER WIRING REFERENCED IN STANDARD DRAWING NO. L-301-1 SHALL BE #10 AWG SOLID COPPER CONDUCTORS.
9. AT LEAST TWO (2) WORKING DAYS PRIOR TO STARTING ANY EXCAVATION. THE CONTRACTOR MUST OBTAIN AN INQUIRY I.D. NUMBER FROM UNDERGROUND SERVICE ALERT BY CALLING (800) 422-4133 OR BY DIALING 811.

SERIES CIRCUIT NOTES

1. WARNING: SAFETY CLEARANCE SHALL BE OBTAINED DAILY FROM THE SERVING COMPANY, AND "MEN AT WORK" SIGNS SHALL BE POSTED AT THE SERVICE POINT BEFORE ANY WORK IS DONE OR ANY CONNECTIONS MADE ON AN EXISTING CIRCUIT. SEE SECTIONS 16430 AND 2100 OF SPECIAL SPECIFICATIONS.
2. SERIES CIRCUIT WIRE SHALL BE NO. 8 AWG STRANDED COPPER CONDUCTOR, INSULATED WITH 0.110" APPROVED POLYETHYLENE COMPOUND RATED FOR 5,000 VOLT OPERATION.
3. TWO OR MORE TURNS OF SELF-ADHESIVE COLORED TAPE WITH A MINIMUM WIDTH OF 1/2 INCH SHALL BE APPLIED TO EACH CABLE IN ALL SERIES CIRCUITS WHERE WORK IS BEING DONE AND WHERE TWO OR MORE CIRCUITS EXIST IN A COMMON PULLBOX OR POST BASE. THE TAPE SHALL BE APPLIED ON THE CABLE BETWEEN THE SPLICES AND THE CONDUIT, USING ONE COLOR FOR EACH CIRCUIT. THE COLORS WHITE, GRAY, GREEN,AND ORANGE SHALL NOT BE USED.
4. CONTRACTOR SHALL GIVE THE BUREAU OF STREET LIGHTING YARD (PHONE 323-913-4744) TWO WORKING DAYS NOTICE BEFORE ANY WORK IS DONE ON AN EXISTING SERIES CIRCUIT.

CIRCUIT DIAGRAM LEGEND

- NEW WIRE
- EXISTING WIRE
- DISCONNECT AND REMOVE WIRE
- CONNECT WIRE
- DISCONNECT WIRE AND TAPE ENDS
- NEW LAMP
- EXISTING LAMP
- REMOVE EXISTING LAMP

MULTIPLE CIRCUIT NOTES

1. WARNING: SAFETY CLEARANCE SHALL BE OBTAINED DAILY FROM THE SERVING COMPANY BEFORE DOING ANY WORK OR MAKING ANY CONNECTIONS ON AN EXISTING CIRCUIT. SEE SECTIONS 16430 AND 2100 OF SPECIAL SPECIFICATIONS.
2. MULTIPLE CIRCUIT WIRE SHALL BE NO. 8 AWG STRANDED COPPER CONDUCTOR. TYPE THWN/THHN INSULATION, UL APPROVED FOR 600 VOLT OPERATION UNLESS OTHERWISE SPECIFIED HEREON.
3. THREE WIRES (COLOR CODE: 1-RED, 1-BLACK, 1-WHITE,) SHALL BE INSTALLED IN ALL MULTIPLE CIRCUIT CONDUIT UNLESS OTHERWISE PROVIDED FOR HEREON.
4. EVEN NUMBERED ELECTROLIERS SHALL BE CONNECTED TO RED AND WHITE WIRES AND ODD NUMBERED ELECTROLIERS SHALL BE CONNECTED TO BLACK AND WHITE WIRES.
5. ELECTROLIERS SHALL BE WIRED PER TYPICAL MULTIPLE CIRCUIT ELECTROLIER WIRING DETAIL, BUREAU OF STREET LIGHTING STANDARD DRAWING NO. L-301-1, UNLESS OTHERWISE SPECIFIED.
6. MULTIPLE CIRCUITS IN CONDUITS CONTAINING MORE THAN THREE CONDUCTORS SHALL BE APPROPRIATELY IDENTIFIED BY LABELING CONDUCTORS "A", "B", ETC. WITH APPROVED SELF-LAMINATING LETTER TAPE WRAPPED AT LEAST TWICE AROUND THE CONDUCTOR IN EACH PULLBOX. (W.H. BRADY, SPECIAL SELF-LAMINATING WIRE MARKERS OR EQUIVALENT)

LEGEND

- EXISTING ELECTROLIER TO BE RELOCATED
- EXISTING UTILITARIAN LIGHTS ON WOODEN POLES WHICH SHALL BE MAINTAINED IN SERVICE UNTIL THE PERMANENT ELECTROLIER LIGHTING SYSTEM IS PLACED IN SERVICE. CONTRACTOR MAY PROVIDE ALTERNATE LIGHTING IN LIEU OF MAINTAINING EXISTING UTILITARIAN LIGHTS IN SERVICE PROVIDED THAT SUCH ARRANGEMENTS ARE APPROVED BY THE ENGINEER.
- EXISTING ELECTROLIER TO BE REMOVED. (SEE GENERAL NOTE 8)
- NEW ELECTROLIER
- EXISTING ELECTROLIER, NOT TO BE REMOVED OR MODIFIED
- PULLBOX TYPE 2 UNLESS OTHERWISE SHOWN HEREON. (SEE DELTA NO. 26). ADDITIONAL PULLBOXES SHALL BE REQUIRED AS SPECIFIED.
- EXISTING PULLBOX
- EXISTING 1" CONDUIT
- EXISTING 1-1/2" CONDUIT
- EXISTING 2" CONDUIT
- NEW 1" CONDUIT
- NEW 1-1/2" CONDUIT
- NEW 2" CONDUIT
- ABANDON CONDUIT (SEE GENERAL NOTE NO.8 & SUPPLEMENTAL NOTE NO.7)
- EXISTING ELECTROLIER FOUNDATION
- FUTURE ELECTROLIER
- PROPOSED CATCH BASIN
- FOR PROP. 218 AND GIS SECTION USE ONLY. (GENERAL BENEFIT)

NOTICE TO CONTRACTORS MATERIAL LIST

FOLLOWING IS A SUMMARY OF NEW ELECTROLIERS, LUMINAIRES, LAMPS, BALLASTS, FOUNDATIONS, AND OTHER EQUIPMENT WHICH SHALL BE SUPPLIED AND INSTALLED BY THE CONTRACTOR. THIS IS NOT INTENDED TO BE A COMPLETE LIST OF ALL MATERIALS REQUIRED. UNLESS NOTED OTHERWISE, EQUIVALENT PRODUCTS BY OTHER MANUFACTURERS MAY BE SUBMITTED TO THE ENGINEER OF RECORD FOR REVIEW AND APPROVAL.

SYMBOL	ITEM	QUANTITY	DESCRIPTION	STANDARD PLAN NO.	REV. NO.	NOMINAL WATTAGE
	LUMINAIRE	958 (+ 50 SPARE)	2W LEDPOD XL28 HANDRAIL LIGHT 30 31 32 33			2W
	LUMINAIRE	354 (+ 25 SPARE)	2W LEDPOD 50 HANDRAIL LIGHT 30 31 32 33			2W
	JUNCTION BOX	10	14"x8"x4"D STEEL J-BOX, NEMA 4X, LOCKABLE LEDPOD DRIVER ENCLOSURE 35			
	JUNCTION BOX	27	16"x14"x8"D STEEL J-BOX, NEMA 3R, LOCKABLE, NON-SLIP LID LEDPOD DRIVER ENCLOSURE 35			
	DRIVER	36 (+ 4 SPARE)	100W LED DRIVER 30 31 32 33 34			100W

SUPPLEMENTAL LEGEND

- 14"x8"x4"D STEEL J-BOX, NEMA 4X, LOCKABLE LEDPOD DRIVER ENCLOSURE
- 16"x14"x8"D STEEL J-BOX, NEMA 3R, LOCKABLE, NON-SLIP LID LEDPOD DRIVER ENCLOSURE

35 "STREET LIGHTING - HIGH VOLTAGE" LABEL SHALL BE PROVIDED ON JUNCTION BOX LID.

34 THE DRIVER CATALOG NUMBER IS AS FOLLOWS OR BSL APPROVED EQUAL: (PHILIPS ADVANCE) CAT. #LEDINTA0024V41FD
* SEE SL-2400 FOR INSTALLATION
* DRIVER DESCRIPTION: 120V, 100W, OUTDOOR APPLICATION

33 "OR EQUAL" IS DEFINED AS EQUIPMENT OTHER THAN WHAT IS NOTED HERE, BUT MUST BE ON THE BUREAU OF STREET LIGHTING'S (BSL) APPROVED EQUIPMENT LIST WHICH WAS IN EFFECT ON THE DATE THE CONSTRUCTION CONTRACT WAS AWARDED OR HAVE A LETTER OF APPROVAL FROM THE BSL DATED ON OR BEFORE THE DATE THE CONSTRUCTION CONTRACT WAS AWARDED.

32 CONTRACTOR SHALL SUBMIT A PROTOTYPE, SHOP DRAWINGS, AND METHOD OF ATTACHMENT AND WINDLOAD (100MPH)/SEISMIC (WHICHEVER IS DOMINANT) CALCULATIONS BASED ON THE MOST CURRENT AASHTO SPECIFICATIONS, STAMPED AND SIGNED BY A LICENSED STRUCTURAL OR CIVIL ENGINEER REGISTERED IN THE STATE OF CALIFORNIA TO THE TESTING AND EQUIPMENT EVALUATION SECTION (TEL. NO. 213-847-1831) FOR REVIEW AND APPROVAL. THE CONTRACTOR WILL BE NOTIFIED OF REQUIRED CHANGES, IF ANY, WITHIN 30 DAYS AFTER SHOP DRAWINGS/CALCULATIONS ARE RECEIVED. WRITTEN APPROVAL FROM THE BUREAU ON THE SHOP DRAWINGS IS REQUIRED PRIOR TO FABRICATION OF EQUIPMENT.

31 CONTRACTOR SHALL DELIVER THE FOLLOWING SPARES AND EQUIPMENT TO BSL YARD AS SHOWN IN MATERIAL LIST.

30 THE LUMINAIRE CATALOG NUMBERS ARE AS FOLLOWS OR BSL APPROVED EQUAL:
2W LEDPOD XL28 HANDRAIL LIGHT (RAMPS):
(WAGNER LEDPOD) CAT. # LPXL28FD040K1.9AFLD
* SEE SL-2201 THRU SL-2202 FOR INSTALLATION
* FIXTURE DESCRIPTION: LEDPOD XL28 FLAT BEZEL 4000K 2 WATT ASYMMETRIC FLOOD LENS, 500MA DRIVER.

2W LEDPOD 50 HANDRAIL LIGHT (STAIRS):
(WAGNER LEDPOD) CAT. # LULP040K4A40TP
* SEE SL-2203 THRU SL-2207 FOR INSTALLATION
* FIXTURE DESCRIPTION: LEDPOD, 4000K LED, NEUTRAL WHITE, WITH SPRING CLIP FOR 1-1/2 SCHEDULE 40 PIPE (1.90 INCH DIAMETER WITH .145 INCH WALL) TAMPERPROOF BEZEL, POLYCARBONATE ASYMETRIC LENS AND OPTIC, 500MA DRIVER.

29 THE CONTRACTOR SHALL INSTALL PHILIPS CITY TOUCH OUTDOOR LUMINAIRE CONTROLLER LLC7260 ON ALL LOW VOLTAGE, MULTIPLE CIRCUITS LUMINAIRES. THE UNIT SHOULD BE PICKED UP AT THE BUREAU'S PLAN COUNTER AT 1149 S. BROADWAY STE. 200, LOS ANGELES, CA 90015. THE UNITS WILL BE PROVIDED FOR A NON-REFUNDABLE FEE (APPROXIMATELY $155 PER UNIT). THE CONTRACTOR SHALL GIVE SEVEN WORKING DAYS NOTICE (PHONE 213-847-1492) PRIOR TO PICKING UP THE REMOTE MONITORING UNITS. NODES SHALL BE INSTALLED INTO PHOTOELECTRIC CONTROL STANDARD SOCKET PER ANSI/NEMA C-136.10 AND SHALL BE ORIENTED IN A NORTHERLY DIRECTION. A SEPARATE P.E. CELL IS NOT NEEDED FOR LUMINAIRES EQUIPPED WITH A REMOTE MONITORING NODE.

28 INSTALL TYPE 3 PULLBOX FOR DWP SERVICE. ALL TYPE 3 PULLBOXES SHALL BE OF "COMPOSITE/POLYMER" MATERIAL, W/BOLT-DOWN LID AND SHALL COMPLY WITH STANDARD PLAN "COMPOSITE TYPE 3, REV A" AND APPROVED BY BUREAU OF STREETLIGHTING.

27 CONTRACTOR SHALL LOCATE AND PROTECT STREET LIGHTING PULLBOX PRIOR TO TERMINATING NEW CONDUIT TO PULLBOX. IN THE EVENT THE PULLBOX DOES NOT EXIST OR IS MISSING, THE CONTRACTOR SHALL CONTACT THE PRIVATE ENGINEER (ENGINEER ON RECORD) AND BUREAU OF STREET LIGHTING TO OBTAIN AN APPROVAL FOR THE INSTALLATION OF NEW PULLBOX AT NO COST TO THE CITY.

26 INSTALL FUSE HOLDER(S), FUSE(S) AND CONNECT WIRES INSIDE TYPE 2 PULLBOX.

25 INSTALL TYPE 2 PULLBOX. ALL PULLBOXES SPECIFIED SHALL BE OF "COMPOSITE/POLYMER" MATERIAL WITH BOLT-DOWN LID AND SHALL COMPLY WITH STANDARD PLAN "COMPOSITE TYPE 2, REV B" AND APPROVED BY BUREAU OF STREETLIGHTING.

24 TAPE ENDS OF SPARE WIRE.

23 INSTALL THREE MULTIPLE CIRCUIT WIRES: (COLOR CODE: 1-RED, 1-BLACK, 1-WHITE)

22 REMOVE EXISTING STREET LIGHTING WIRES.

21 MULTIPLE SERVICE LOCATION. INTERCEPT CONDUIT INSTALLED BY OTHERS AND INSTALL TYPE 3 SERVICE PULLBOX. VERIFY EXACT LOCATION OF CONDUIT. PHONE DEPT. OF WATER AND POWER UNDERGROUND ENGINEERING FIVE DAYS PRIOR TO START OF WORK AT THIS LOCATION. (PHONE: 213-367-3003)

20 CONTRACTOR SHALL REQUEST A PERMIT TO PRUNE TREE FROM THE URBAN FORESTRY DIVISION (213) 847-3077, FIVE DAYS PRIOR TO THE INSTALLATION OF ELECTROLIER. ALL TREE WORK SHALL BE PERFORMED TO TREE CARE PROFESSION BEST MANAGEMENT PRACTICES AND TO THE SATISFACTION OF THE URBAN FORESTRY DIVISION.

19 INSTALL APPROVED CONNECTING DEVICES PER DETAIL "B", BUREAU OF STREET LIGHTING STANDARD DRAWING NO. L-301-1.

18 INSTALL APPROVED CONNECTING DEVICES PER DETAIL "A", BUREAU OF STREET LIGHTING STANDARD DRAWING NO. L-301-1.

17 MULTIPLE SERVICE LOCATION. INSTALL 10' OF 2" GALVANIZED CONDUIT SERVICE RISER ON POLE. EXTEND CONDUIT TO THE ALLEY B.C. AND INSTALL TYPE 3 PULLBOX UNLESS OTHERWISE SPECIFIED. INSTALL PULLWIRE.

16 INSTALL FIVE MULTIPLE CIRCUIT WIRES: (COLOR CODE: 2-RED, 2-BLACK, 1-WHITE)

15 INSTALL TWO MULTIPLE CIRCUIT WIRES: (COLOR CODE: 1-BLACK, 1-WHITE)

14 INSTALL TWO MULTIPLE CIRCUIT WIRES: (COLOR CODE: 1-RED, 1-WHITE)

13 INSTALL 1" CONDUIT BEND.

12 INSTALL ADDITIONAL 2" CONDUIT BEND FOR TRAFFIC SIGNAL WIRING.

11 INSTALL ONE APPROVED FUSE HOLDER WITH 30 AMP FUSE BETWEEN EACH SERVICE WIRE (NOT NEUTRAL WIRE) OR SERVICE WIRE CONNECTING DEVICE AND STREET LIGHTING CIRCUIT WIRE. SERVING COMPANY WILL INSTALL SERVICE.

10 JOIN CONDUIT

9 MULTIPLE SERVICE LOCATION. INSTALL TYPE 3 PULLBOX UNLESS OTHERWISE SPECIFIED AND 10' OF 2" GALVANIZED CONDUIT SERVICE RISER ON POLE. INSTALL PULLBOX NO CLOSER THAN 5' AND NO FARTHER THAN 15' FROM THE SERVICE POLE.

8 SERIES SERVICE POLE. INSTALL ONE TERMINAL CUTOFF BOX STANDARD PLAN B-3724 WITH ONE DISCONNECTING SWITCH FOR EACH CIRCUIT. SERVING COMPANY WILL INSTALL SERVICE.

7 CONSTRUCT CASE 4 DRIVEWAY RETURN PER STANDARD PLAN NO. S-440

6 CONSTRUCT CASE 3 DRIVEWAY RETURN PER STANDARD PLAN NO. S-440.

5 INTERCEPT CONDUIT AND INSTALL PULLBOX.

4 THREAD AND CAP CONDUIT AT END OF IMPROVEMENT.

3 INSTALL CONDUIT ONLY.

2 CONNECT WIRES (PER CIRCUIT DIAGRAM WHERE APPLICABLE).

1 TERMINATE CONDUIT IN STREET LIGHTING PULLBOX.

THE ABOVE NOTES ARE APPLICABLE ONLY WHERE SPECIFIED ON THIS PLAN.

DELTA NOTES

PLAN OF ELECTROLIER LIGHTING SYSTEM

(M)=MAJOR, (S)=SECONDARY, (L)=LOCAL, (C)=COLLECTOR STREET	FROM	TO
STAIR AND RAMP	MATEO ST (S)	BOYLE AVE (S)

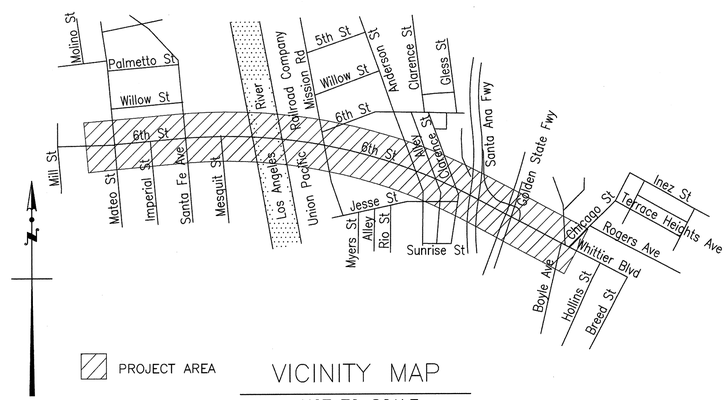

PROJECT AREA

VICINITY MAP
NOT TO SCALE

ALL CONSTRUCTION IS PROHIBITED ON MAJOR AND SECONDARY STREET BETWEEN:
6:00 A.M. TO 9:00 A.M.
3:30 P.M. TO 7:00 P.M.

PROCEDURE FOR STREET LIGHT CIRCUIT CLEARANCE

- HIGH VOLTAGE CIRCUIT CLEARANCE REQUESTS SHALL BE MADE TO THE BUREAU OF STREET LIGHTING AND WILL BE PERFORMED BY CITY CREWS.
- LOW VOLTAGE CIRCUIT CLEARANCE SHALL BE PERFORMED BY THE QUALIFIED CONTRACTOR RESPONSIBLE FOR CONSTRUCTION PROJECTS.
- PRIOR TO CONSTRUCTION, THE CONTRACTOR SHALL SUBMIT TWO (2) COPIES OF THE PLAN (24"X36") AND NOTIFY THE INSPECTOR TO SUBMIT "CONSTRUCTION START NOTICE" AND M-21 FORM TO LADWP STREET LIGHT SUPPORT (111 N. HOPE STREET, RM 910, LOS ANGELES, CA 90012)

FOR DETAILED PROCEDURES, SEE WWW.bsl.lacity.org (CLICK ON THE BUSINESS/CONTRACTORS LINK).

NOTICE TO CITY INSPECTOR/CONTRACTOR NO. 1

THE STREET LIGHTING EQUIPMENT ON THIS PLAN MAY BE SUBJECT TO CHANGE ("GREEN BOOK" 2006 §307-1.3). THE CONTRACTOR SHALL NOT ORDER ANY NEW STREET LIGHTING EQUIPMENT PRIOR TO APPROVAL BY THE BUREAU OF STREET LIGHTING, EQUIPMENT APPROVAL SECTION (M-40 FORM). CONTACT (213) 847-1831 FOR MORE INFORMATION.

NOTICE TO CITY INSPECTOR/CONTRACTOR NO. 2

THIS PROJECT IS IMPACTED BY PROPOSITION 218

ELECTROLIER(S) SPECIFIED HEREON SHALL NOT BE INSTALLED UNTIL THE LEGAL REQUIREMENTS OF PROPOSITION 218 HAVE BEEN SATISFIED. THE CITY INSPECTOR SHALL CONTACT THE BUREAU OF STREET LIGHTING, ENGINEERING AND TECHNICAL SERVICES DIVISION AT (213) 847-1431 FOR CONSTRUCTION CLEARANCE. UNDERGROUND FACILITIES MAY BE INSTALLED PRIOR TO PROPOSITION 218 CONSTRUCTION CLEARANCE.

NOTICE TO CITY INSPECTOR/CONTRACTOR NO. 3

THIS PROJECT IS SUBJECT TO "BUY AMERICA" REQUIREMENTS OF TITLE 23 UNITED STATES CODE, SECTION 313. CERTIFICATION OF COMPLIANCE IS REQUIRED TO BE SUBMITTED TO THE PROJECT INSPECTOR. SEE PROJECT SPECIFICATIONS.

NOTICE TO CITY INSPECTOR/CONTRACTOR NO. 4

CONTRACTOR SHALL NOTIFY THE STREET LIGHTING ENGINEER (TELEPHONE: 213-847-1459) A MINIMUM OF SEVEN (7) WORKING DAYS PRIOR TO WORKING ON ANY ELECTROLIER, WITH EXISTING TE.ECOMMUNICATION EQUIPMENT, WHICH REQUIRES REMOVAL AND/OR RELOCAION.

T.O. 5 - Change Order Sketch No. 19 - page 1 of 12

DELTA No.	DESCRIPTION OF REVISION	DATE	BY
1	REVISED PER BSL REVIEW	4/7/2017	A. GOROVAYA

STAIR AND RAMP LIGHTING PLANS
SIXTH STREET VIADUCT REPLACEMENT
W.O. E700224L (TASK 013) SL-7947

PLANS PREPARED BY:
HNTB Corporation
One Bunker Hill Bldg.,
601 West 5th St., Ste 1000
Los Angeles, California 90071

SIGNATURE 9/13/2016 DATE

REGISTERED PROFESSIONAL ENGINEER CARL A. AYUB No. E17891 Exp. 9/30/2016 ELECTRICAL STATE OF CALIFORNIA

CITY OF LOS ANGELES
ED EBRAHIMIAN, DIRECTOR BUREAU OF STREET LIGHTING

OTHER DEPARTMENT/BUREAU ACCEPTANCE			ACCEPTANCE
DEPARTMENT OR BUREAU	ENGINEER	DATE	
ENGINEERING, DISTRICT OFFICE			STREET LIGHTING ENGINEER 10-12-2016 DATE
DEPT. OF TRANSPORTATION			SENIOR STREET LIGHTING ENGINEER 10-12-16 DATE
STREET SERVICES, URBAN FORESTRY			DIRECTOR, BUREAU OF STREET LIGHTING 10-21-16 DATE
ENGINEERING, STRUCTURAL			

DRAWING NO.
SL-2001

SCALE OF ORIGINAL PLAN: N/A SHEET OF SHEET(S) INDEX NUMBER

CONTRACTOR: ELECT'S: LAMPS:
INSPECTED BY: ELECT'S: LAMPS:
DATE ENERGIZED ELECT'S: LAMPS:
DATE ENERGIZED ELECT'S: LAMPS:
CORRECTED TO "AS BUILT" CHECKED
BY

SIGNATURES		DATE
CITY OF LOS ANGELES SURVEY DEPT.		06/04/14
FIELD SURVEY BY	LEE BRAGG	02/03/16
DRAWN BY	LEE BRAGG	02/03/16
DESIGNED BY		
CHECKED BY		
SUPERVISED BY		

DATE ENERGIZED
COUNTY ASSESSOR'S PARCEL NO'S: 5171-014-905
THOMAS GUIDE: 634-H5, 634-H6, 634-J5, 634-J6
COUNCIL DISTRICT: 14
SUPERSEDES PLAN NO. D-28321
ELECTROLIER UNIT: 1030
DW: 124-54317 P.M. NO.: 294, 278EE

CITY OF LOS ANGELES DEPARTMENT OF PUBLIC WORKS BUREAU OF STREET LIGHTING

ADDENDUM 5

THE CITY OF LOS ANGELES OR ITS OFFICERS OR AGENTS SHALL NOT BE RESPONSIBLE FOR THE ACCURACY OR COMPLETENESS OF ELECTRONIC COPIES OF THIS PLAN SHEET.

C:\caddlib\pw\pwwestcoast\vgreenlee\dms57861\SL-2100.dwg Sep 13, 2016 - 11:02am

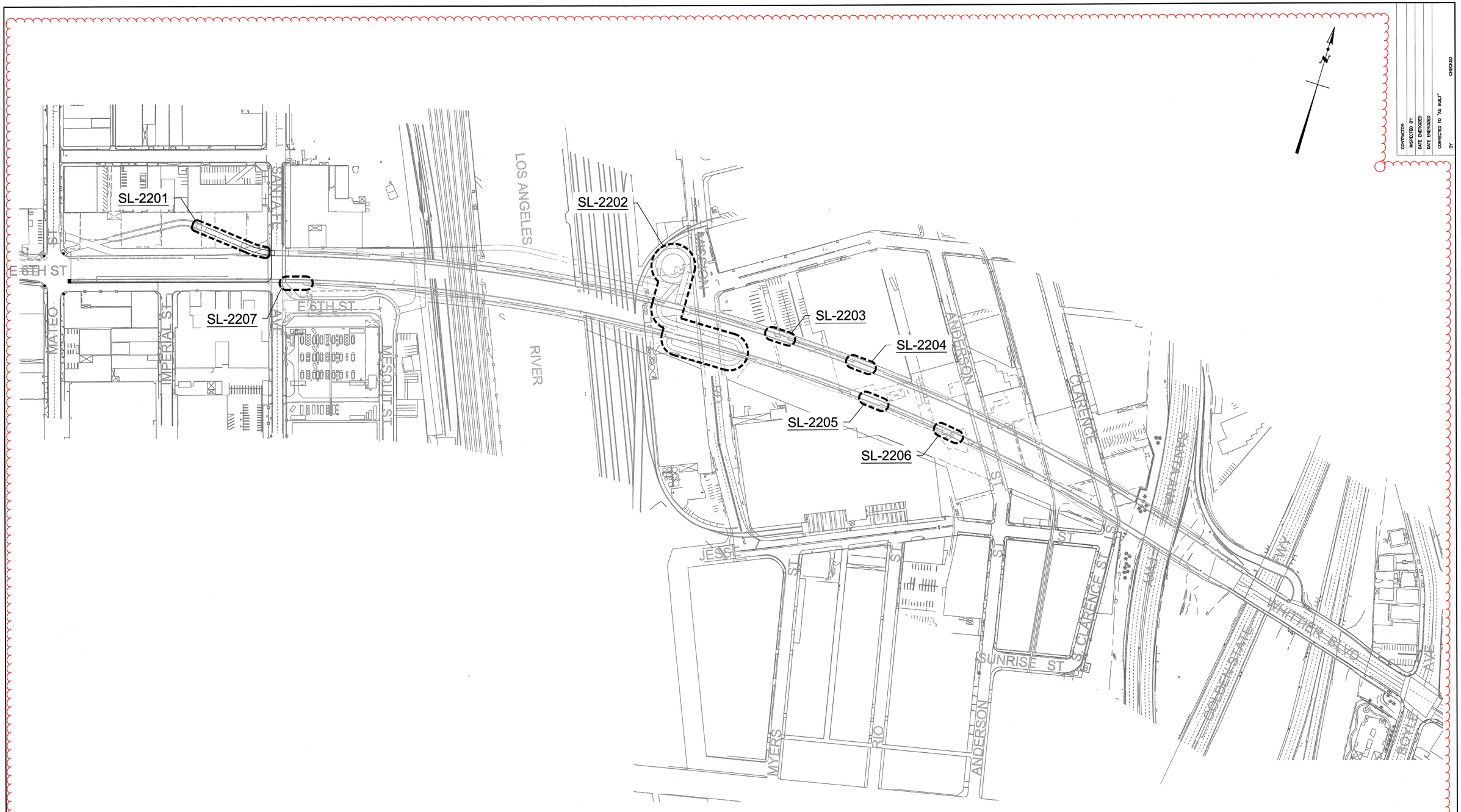

STAIR AND RAMP LIGHTING KEY MAP

SCALE: N.T.S.

DELTA No.	DESCRIPTION OF REVISION	DATE	BY
1	REVISED PER BSL REVIEW	4/7/2017	A. GOROVAYA

CONTRACTOR:
INSPECTED BY:
DATE ENERGIZED
DATE ENERGIZED
CORRECTED TO "AS BUILT"
BY
CHECKED

PLANS PREPARED BY:
HNTB Corporation
One Bunker Hill Bldg.,
601 West 5th St., Ste 1000
Los Angeles, California 90071

SIGNATURE 9/13/2016 DATE

REGISTERED PROFESSIONAL ENGINEER
CARL A. AUBI
No. E17891
Exp. 9/30/2016
ELECTRICAL
STATE OF CALIFORNIA

STAIR AND RAMP LIGHTING PLANS
SIXTH STREET VIADUCT REPLACEMENT
W.O. E700224L (TASK 013) SL-7947

1

CITY OF LOS ANGELES
ED EBRAHIMIAN, DIRECTOR BUREAU OF STREET LIGHTING

ACCEPTED: DIRECTOR, BUREAU OF STREET LIGHTING 10-21-16 DATE

DRAWING NO.
SL-2100

SCALE OF ORIGINAL PLAN: N.T.S.

SHEET OF SHEETS

INDEX NUMBER

T.O. 5 - Change Order Sketch No. 19 - page 2 of 12

CITY OF LOS ANGELES
DEPARTMENT OF PUBLIC WORKS
BUREAU OF STREET LIGHTING

ADDENDUM 5

THE CITY OF LOS ANGELES OR ITS OFFICERS OR AGENTS SHALL NOT BE RESPONSIBLE FOR THE ACCURACY OR COMPLETENESS OF ELECTRONIC COPIES OF THIS PLAN SHEET.

C:\caddlib\gw\pwwestcoast\ygreenlee\dms57861\SL-2201.dwg Sep 13, 2016 - 11:03am

CONTRACTOR:
INSPECTED BY:
DATE ENERGIZED
DATE ENERGIZED
CORRECTED TO "AS BUILT"
BY
CHECKED

NOTES:

1. LEDPODS SHALL BE SPACED AT 2'-2" O.C. ALONG RAILING. CENTER SPACING WITHIN EACH 6'-6" RAILING SECTION.
2. INSTALL 2#12 AWG COPPER CONDUCTORS THROUGH HOLLOW HANDRAIL SUPPORT BEAMS UP TO HANDRAIL, AND THROUGHOUT THE LENGTH OF THE HANDRAIL AS SHOWN.
3. SEE DRAWING SL-2300 FOR ONE LINE DIAGRAM.
4. EVEN NUMBERED LEDPOD DRIVER ENCLOSURES SHALL BE CONNECTED TO RED AND WHITE WIRES AND ODD NUMBERED ENCLOSURES SHALL BE CONNECTED TO BLACK AND WHITE WIRES.

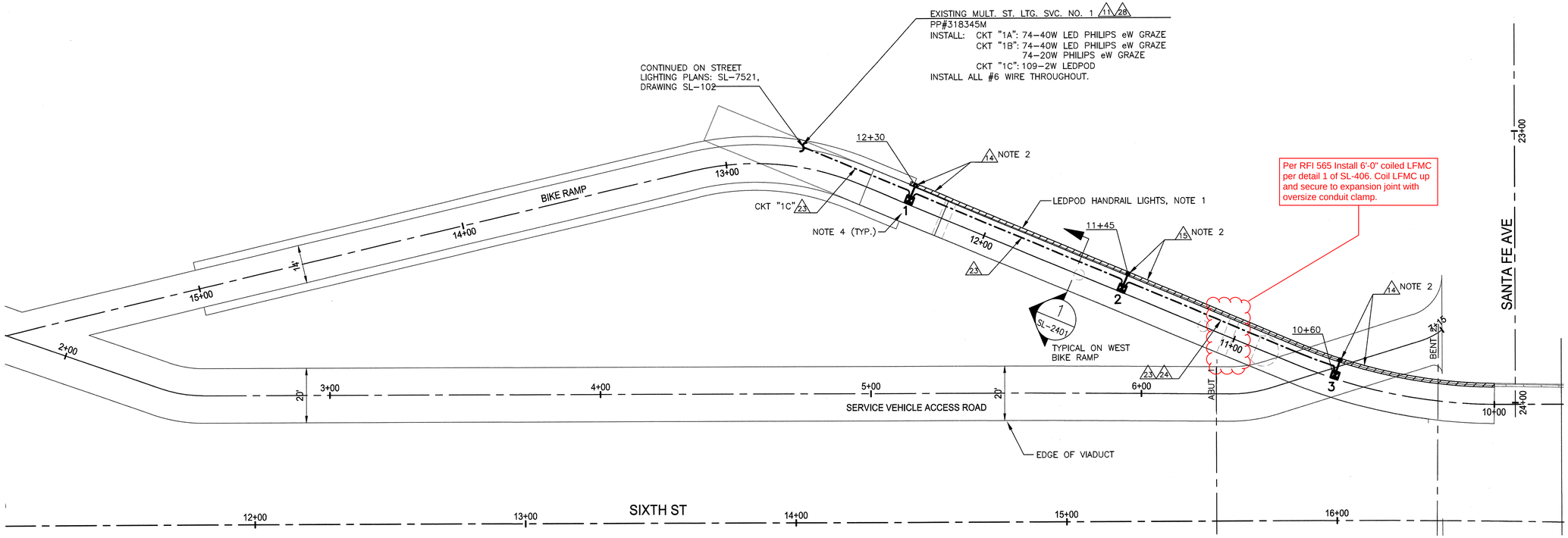

ENLARGED WEST BIKE RAMP PLAN (1 SL-2100)

SCALE: 1" = 20'

DELTA No.	DESCRIPTION OF REVISION	DATE	BY
1	REVISED PER BSL REVIEW	4/7/2017	A. GOROVAYA

T.O. 5 - Change Order Sketch No. 19 - page 3 of 12

20' 10' 0 20' 40'
SCALE 1" = 20'-0"

PLANS PREPARED BY:
HNTB Corporation
One Bunker Hill Bldg.,
601 West 5th St., Ste 1000
Los Angeles, California 90071
SIGNATURE
9/13/2016
DATE

REGISTERED PROFESSIONAL ENGINEER
CARL A. AYUSO
No. E17891
Exp. 9/30/2016
ELECTRICAL
STATE OF CALIFORNIA

STAIR AND RAMP LIGHTING PLANS
SIXTH STREET VIADUCT REPLACEMENT
W.O. E700224L (TASK 013) SL-7947

CITY OF LOS ANGELES
ED EBRAHIMIAN, DIRECTOR BUREAU OF STREET LIGHTING
ACCEPTED:
DIRECTOR, BUREAU OF STREET LIGHTING
10-21-16
DATE

DRAWING NO.
SL-2201

SCALE OF ORIGINAL PLAN: 1" = 20'
SHEET OF SHEETS
INDEX NUMBER

CITY OF LOS ANGELES
DEPARTMENT OF PUBLIC WORKS
BUREAU OF STREET LIGHTING

ADDENDUM 5

THE CITY OF LOS ANGELES OR ITS OFFICERS OR AGENTS SHALL NOT BE RESPONSIBLE FOR THE ACCURACY OR COMPLETENESS OF ELECTRONIC COPIES OF THIS PLAN SHEET.

C:\coddlib\pw\pwwestcoast\vgreenlee\dms57861\SL-2202.dwg Sep 13, 2016 - 11:04am

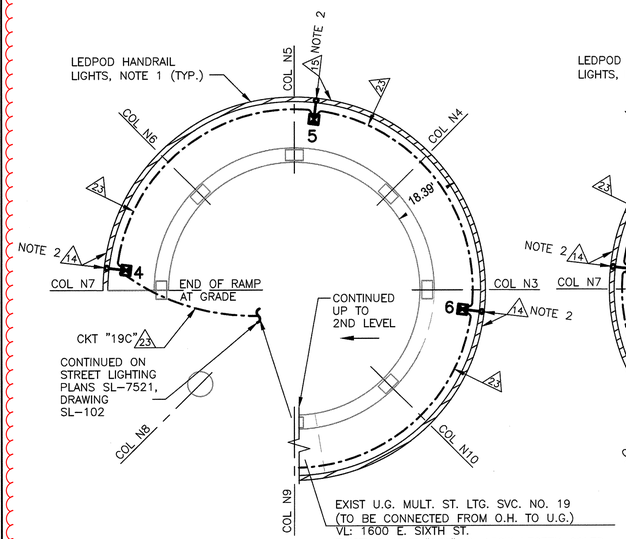

EAST RAMP HELIX 1ST LEVEL

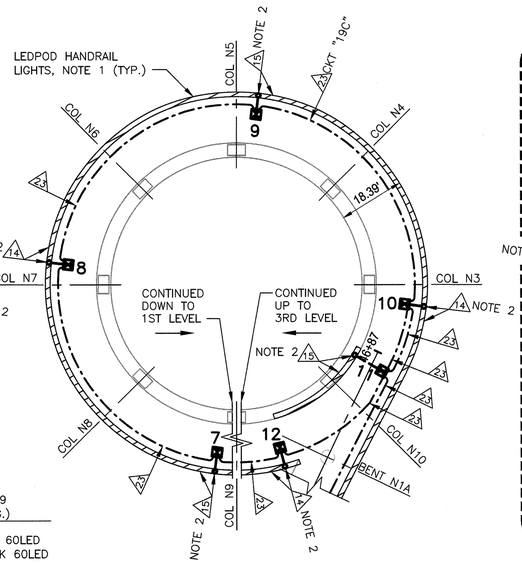

EAST RAMP HELIX 2ND LEVEL

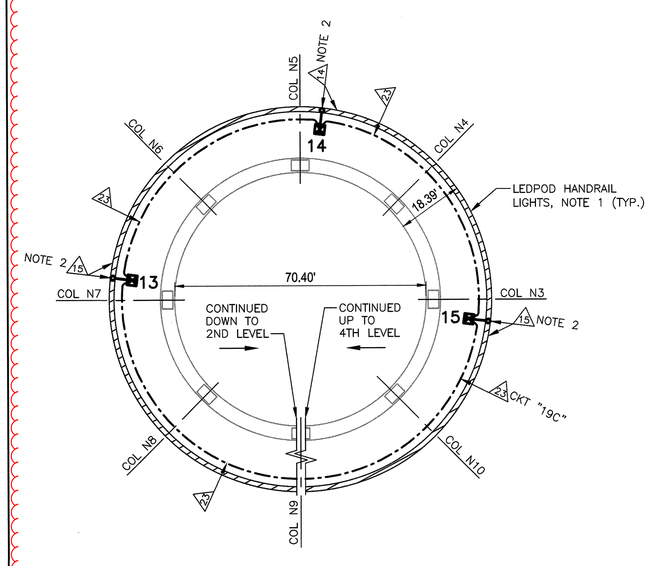

EAST RAMP HELIX 3RD LEVEL

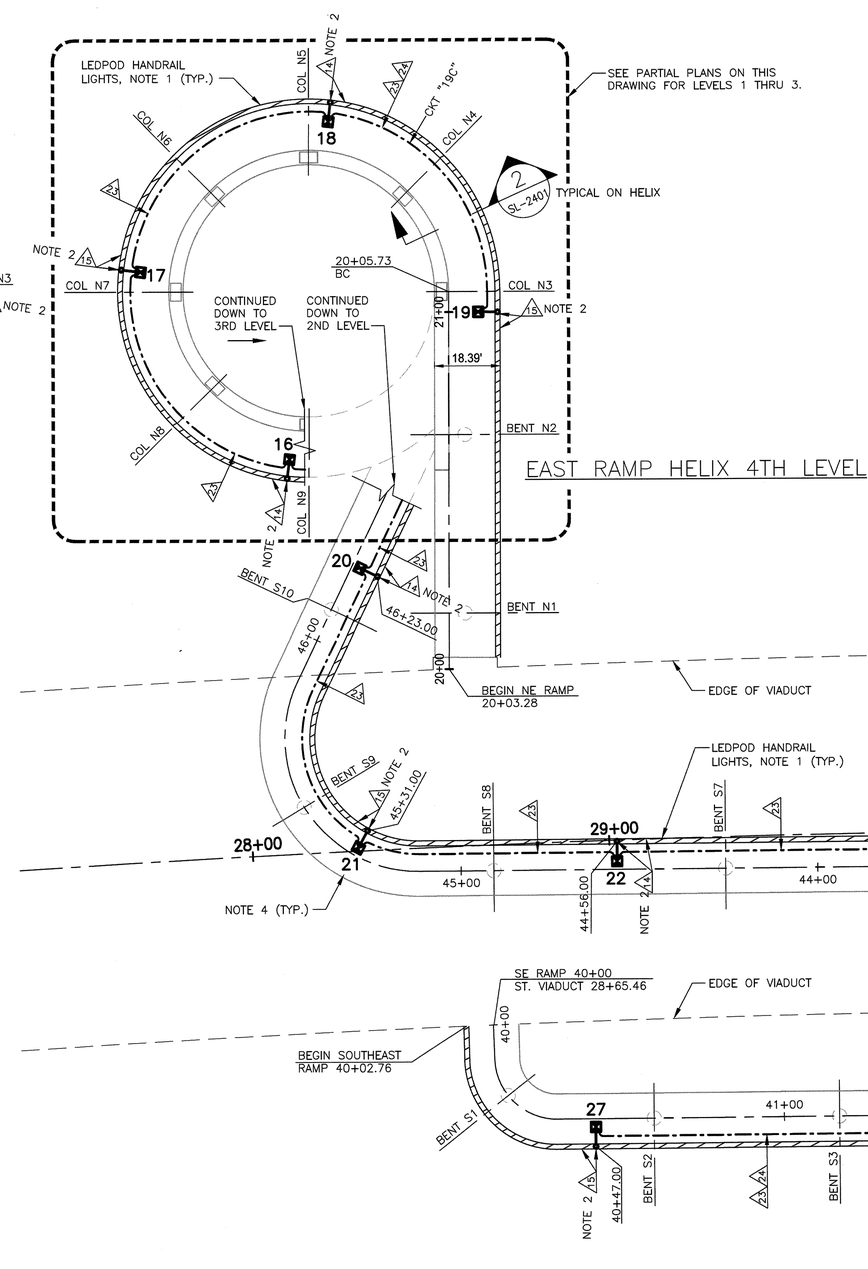

EAST RAMP HELIX 4TH LEVEL

NOTES:

1. LEDPODS ON THE EAST BIKE RAMP (FROM STA 40+00 TO THE HELIX) SHALL BE SPACED AT 2'-2" O.C. ALONG RAILING. CENTER SPACING WITHIN EACH 6'-6" RAILING SECTION. LEDPODS ON THE HELIX SHALL BE SPACED IN GROUPS OF THREE EVERY 6'-6". SEE DRAWING ~~A-400~~ A-603 per drawing review, DETAIL 3 FOR EXACT LAYOUT.
2. INSTALL 2#12 AWG COPPER CONDUCTORS THROUGH HOLLOW HANDRAIL SUPPORT BEAMS UP TO HANDRAIL, AND THROUGHOUT THE LENGTH OF THE HANDRAIL AS SHOWN.
3. SEE DRAWING SL-2300 FOR ONE LINE DIAGRAM.
4. EVEN NUMBERED LEDPOD DRIVER ENCLOSURES SHALL BE CONNECTED TO RED AND WHITE WIRES AND ODD NUMBERED ENCLOSURES SHALL BE CONNECTED TO BLACK AND WHITE WIRES.
5. UNLESS NOTED OTHERWISE, INSTALL CONDUIT COMBINATION EXPANSION-DEFLECTION FITTING PER CALTRANS STD. PLAN NO. ES-9B, DETAIL X-Y AT EACH BRIDGE EXPANSION JOINT, HINGE, OR ABUTMENT.

CONTRACTOR:
INSPECTED BY:
DATE ENERGIZED
DATE ENERGIZED
CORRECTED TO "AS BUILT"
BY
CHECKED

ENLARGED EAST BIKE RAMP PLAN (1 / SL-2100)
SCALE: 1" = 20'

SCALE 1" = 20'-0"

DELTA No.	DESCRIPTION OF REVISION	DATE	BY
1	REVISED PER BSL REVIEW	4/7/2017	A. GOROVAYA

PLANS PREPARED BY:
HNTB Corporation
One Bunker Hill Bldg.,
601 West 5th St., Ste 1000
Los Angeles, California 90071
SIGNATURE 9/13/2016 DATE

REGISTERED PROFESSIONAL ENGINEER CARL A. AYUBI No. E17891 Exp. 9/30/2016 ELECTRICAL STATE OF CALIFORNIA

STAIR AND RAMP LIGHTING PLANS
SIXTH STREET VIADUCT REPLACEMENT
W.O. E700224L (TASK 013) SL-7947

CITY OF LOS ANGELES
ED EBRAHIMIAN, DIRECTOR BUREAU OF STREET LIGHTING
ACCEPTED: 10-21-16 DATE

DRAWING NO. SL-2202

SCALE OF ORIGINAL PLAN: 1" = 20' | SHEET OF SHEETS | INDEX NUMBER

T.O. 5 - Change Order Sketch No. 19 - page 4 of 12

DEPARTMENT OF PUBLIC WORKS
BUREAU OF STREET LIGHTING
CITY OF LOS ANGELES

ADDENDUM 5

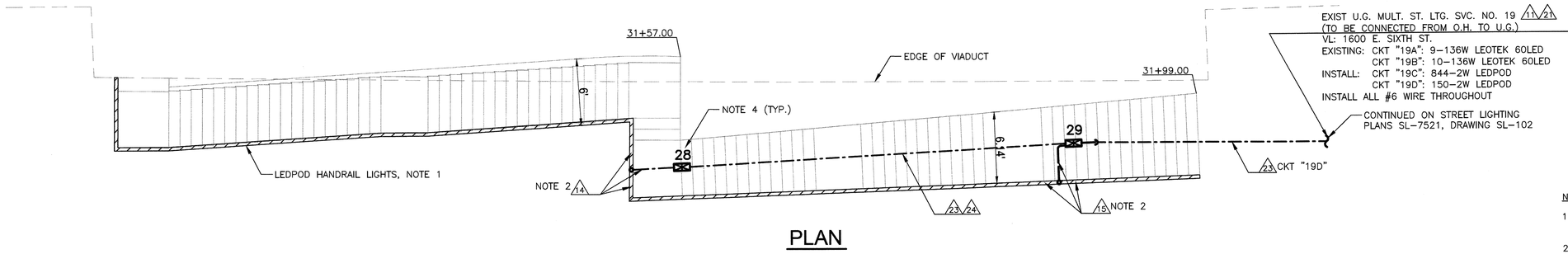

PLAN

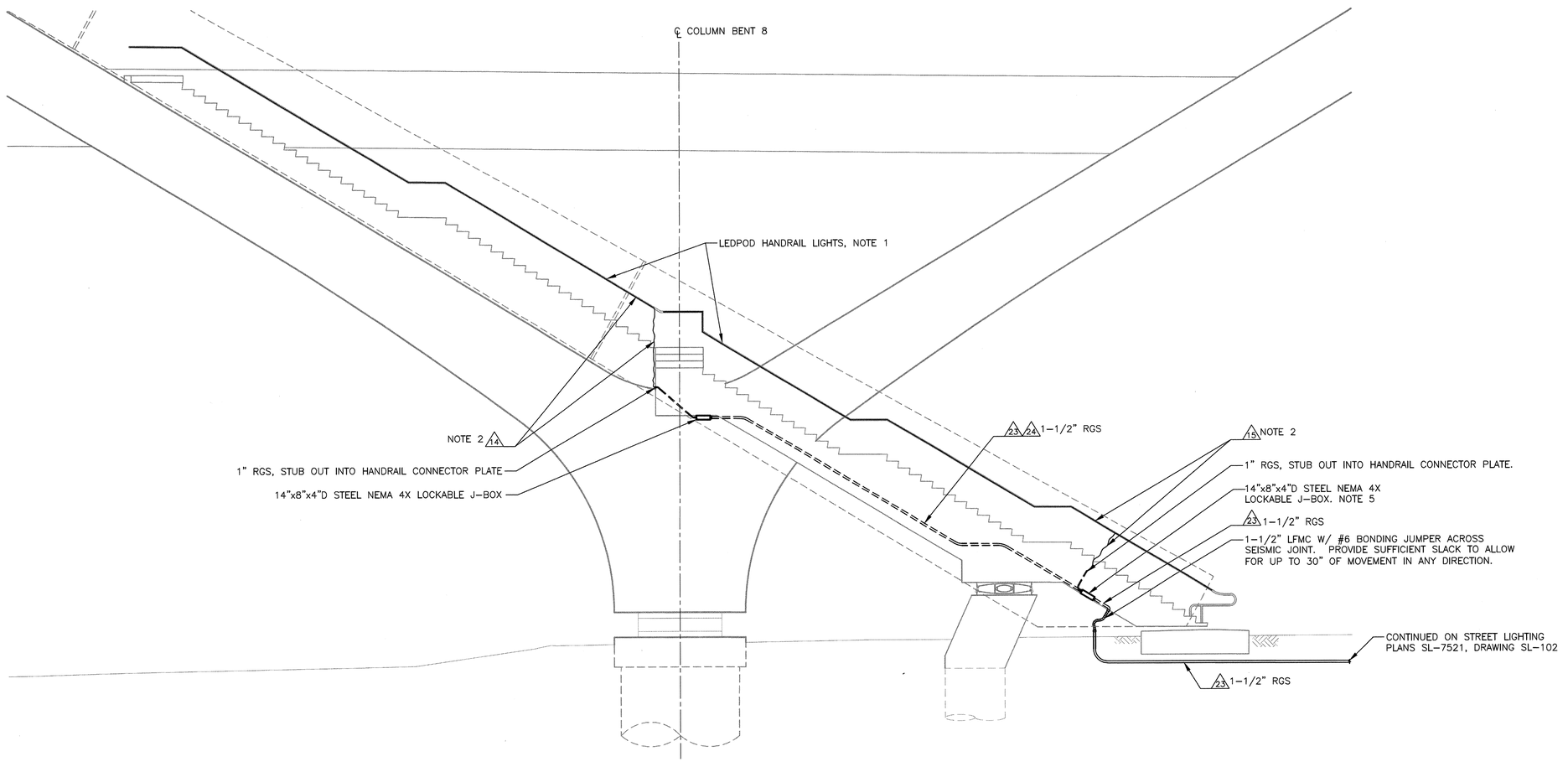

ELEVATION

NOTES:

1. LEDPODS SHALL BE SPACED EVENLY ALONG HANDRAIL AT 1'-8" O.C.
2. INSTALL 2#12 AWG COPPER CONDUCTORS THROUGH HOLLOW HANDRAIL SUPPORT BEAMS UP TO HANDRAIL, AND THROUGHOUT THE LENGTH OF THE HANDRAIL AS SHOWN.
3. SEE DRAWING SL-2300 FOR ONE LINE DIAGRAM.
4. EVEN NUMBERED LEDPOD DRIVER ENCLOSURES SHALL BE CONNECTED TO RED AND WHITE WIRES AND ODD NUMBERED ENCLOSURES SHALL BE CONNECTED TO BLACK AND WHITE WIRES.
5. SEE DRAWING SL-2401, DETAIL 4 FOR TYPICAL STAIR SECTION AND CONNECTION TO LEDPODS IN HANDRAILS.

CONTRACTOR:
INSPECTED BY:
DATE ENERGIZED:
DATE ENERGIZED:
CORRECTED TO "AS BUILT"
BY
CHECKED

BENT 8 NORTH ARCH STAIR LIGHTING (1 / SL-2100)
SCALE: 1" = 5'

5' 2.5' 0 5' 10'
SCALE 1" = 5'-0"

DELTA No.	DESCRIPTION OF REVISION	DATE	BY
1	REVISED PER BSL REVIEW	4/7/2017	A. GOROVAYA

STAIR AND RAMP LIGHTING PLANS
SIXTH STREET VIADUCT REPLACEMENT
W.O. E700224L (TASK 013) SL-7947 1

PLANS PREPARED BY:
HNTB Corporation
One Bunker Hill Bldg.,
601 West 5th St., Ste 1000
Los Angeles, California 90071
SIGNATURE 9/13/2016 DATE

REGISTERED PROFESSIONAL ENGINEER — CARL A. ATUAT — No. E17891 Exp. 9/30/2016 — ELECTRICAL — STATE OF CALIFORNIA

CITY OF LOS ANGELES
ED EBRAHIMIAN, DIRECTOR BUREAU OF STREET LIGHTING
ACCEPTED: DIRECTOR, BUREAU OF STREET LIGHTING 10-21-16 DATE

DRAWING NO. SL-2203

SCALE OF ORIGINAL PLAN: 1" = 5' | SHEET OF SHEETS | INDEX NUMBER

T.O. 5 - Change Order Sketch No. 19 - page 5 of 12

DEPARTMENT OF PUBLIC WORKS
BUREAU OF STREET LIGHTING
CITY OF LOS ANGELES

THE CITY OF LOS ANGELES OR ITS OFFICERS OR AGENTS SHALL NOT BE RESPONSIBLE FOR THE ACCURACY OR COMPLETENESS OF ELECTRONIC COPIES OF THIS PLAN SHEET.

C:\cadditb\pw\pwwestcoast\vgreenlee\dms57861\SL-2203.dwg Sep 13, 2016 - 11:07am

ADDENDUM 5

THE CITY OF LOS ANGELES OR ITS OFFICERS OR AGENTS SHALL NOT BE RESPONSIBLE FOR THE ACCURACY OR COMPLETENESS OF ELECTRONIC COPIES OF THIS PLAN SHEET.

C:\caddlib\pw\pwwestcoast\rgreenlee\dms57861\SL-2203.dwg Sep 13, 2016 - 11:08am

EXIST U.G. MULT. ST. LTG. SVC. NO. 19 11 21
(TO BE CONNECTED FROM O.H. TO U.G.)
VL: 1600 E. SIXTH ST.
EXISTING: CKT "19A": 9–136W LEOTEK 60LED
CKT "19B": 10–136W LEOTEK 60LED
INSTALL: CKT "19C": 844–2W LEDPOD
CKT "19D": 150–2W LEDPOD
INSTALL ALL #6 WIRE THROUGHOUT

CONTINUED ON STREET LIGHTING PLANS SL–7521, DRAWING SL–103

CKT "19D" 23

34+13.00

NOTE 4 (TYP.)

30

NOTE 2 14

23 24

EDGE OF VIADUCT

34+55.00

31

15 NOTE 2

LEDPOD HANDRAIL LIGHTS, NOTE 1

PLAN

CONTRACTOR:
INSPECTED BY:
DATE ENERGIZED
DATE ENERGIZED
CORRECTED TO "AS BUILT"
BY
CHECKED

NOTES:

1. LEDPODS SHALL BE SPACED EVENLY ALONG HANDRAIL AT 1'–8" O.C.
2. INSTALL 2#12 AWG COPPER CONDUCTORS THROUGH HOLLOW HANDRAIL SUPPORT BEAMS UP TO HANDRAIL, AND THROUGHOUT THE LENGTH OF THE HANDRAIL AS SHOWN.
3. SEE DRAWING SL–2300 FOR ONE LINE DIAGRAM.
4. EVEN NUMBERED LEDPOD DRIVER ENCLOSURES SHALL BE CONNECTED TO RED AND WHITE WIRES AND ODD NUMBERED ENCLOSURES SHALL BE CONNECTED TO BLACK AND WHITE WIRES.
5. SEE DRAWING SL–2401, DETAIL 4 FOR TYPICAL STAIR SECTION AND CONNECTION TO LEDPODS IN HANDRAILS.

℄ COLUMN BENT 9

LEDPOD HANDRAIL LIGHTS, NOTE 1

15 NOTE 2

1" RGS, STUB OUT INTO HANDRAIL CONNECTOR PLATE

14"x8"x4"D STEEL NEMA 4X LOCKABLE J–BOX

NOTE 2 14

1–1/2" RGS 23 24

1" RGS, STUB OUT INTO HANDRAIL CONNECTOR PLATE.

14"x8"x4"D STEEL NEMA 4X LOCKABLE J–BOX. NOTE 5

1–1/2" RGS 23

1–1/2" LFMC W/ #6 BONDING JUMPER ACROSS SEISMIC JOINT. PROVIDE SUFFICIENT SLACK TO ALLOW FOR UP TO 30" OF MOVEMENT IN ANY DIRECTION.

CONTINUED ON STREET LIGHTING PLANS SL–7521, DRAWING SL–103

1–1/2" RGS 23

ELEVATION

BENT 9 NORTH ARCH STAIR LIGHTING

SCALE: 1" = 5'

1 / SL–2100

5' 2.5' 0 5' 10'
SCALE 1" = 5'-0"

DELTA No.	DESCRIPTION OF REVISION	DATE	BY
1	REVISED PER BSL REVIEW	4/7/2017	A. GOROVAYA

PLANS PREPARED BY:
HNTB Corporation
One Bunker Hill Bldg.,
601 West 5th St., Ste 1000
Los Angeles, California 90071

SIGNATURE 9/13/2016 DATE

REGISTERED PROFESSIONAL ENGINEER CARL A. AYUBI No. E17891 Exp. 9/30/2016 ELECTRICAL STATE OF CALIFORNIA

STAIR AND RAMP LIGHTING PLANS
SIXTH STREET VIADUCT REPLACEMENT
W.O. E700224L (TASK 013) SL–7947

1

CITY OF LOS ANGELES
ED EBRAHIMIAN, DIRECTOR BUREAU OF STREET LIGHTING

ACCEPTED: DIRECTOR, BUREAU OF STREET LIGHTING 10-21-16 DATE

DRAWING NO.
SL–2204

SCALE OF ORIGINAL PLAN: 1" = 5' | SHEET OF SHEETS | INDEX NUMBER

T.O. 5 - Change Order Sketch No. 19 - page 6 of 12

DEPARTMENT OF PUBLIC WORKS
BUREAU OF STREET LIGHTING
CITY OF LOS ANGELES

ADDENDUM 5

THE CITY OF LOS ANGELES OR ITS OFFICERS OR AGENTS SHALL NOT BE RESPONSIBLE FOR THE ACCURACY OR COMPLETENESS OF ELECTRONIC COPIES OF THIS PLAN SHEET.

C:\cadlib\pw\pwwestcoast\ygreenlee\dms57861\SL-2203.dwg Sep 13, 2016 - 11:10am

EXISTING MULTIPLE ST. LTG. SVC. NO. 17 (11)(28)
PP #273578M
EXISTING: CKT "17A": 9-136W LEOTEK 60LED
CKT "17B": 3-136W LEOTEK 60LED
INSTALL: CKT "17C": 165-2W LED LEDPOD
9-136W LEOTEK 60LED
TRANSFER TO CKT NO. 17C:
CKT "17B": 2-136W LEOTEK 60LED

CONTINUED ON STREET LIGHTING
PLANS SL-7521, DRAWING SL-103

CKT "17C" (23)

EDGE OF VIADUCT

34+84.00

35+28.00

NOTE 4 (TYP.)

32

33

NOTE 2 (14)

(23)(24)

(15) NOTE 2

LEDPOD HANDRAIL LIGHTS, NOTE 1

PLAN

℄ COLUMN BENT 9

LEDPOD HANDRAIL LIGHTS, NOTE 1

(15) NOTE 2

1" RGS, STUB OUT INTO HANDRAIL CONNECTOR PLATE

14"x8"x4"D STEEL NEMA 4X LOCKABLE J-BOX

NOTE 2 (14)

1" RGS, STUB OUT INTO HANDRAIL CONNECTOR PLATE.

14"x8"x4"D STEEL NEMA 4X LOCKABLE J-BOX. NOTE 5

1-1/2" RGS (23)

1-1/2" LFMC W/ #6 BONDING JUMPER ACROSS SEISMIC JOINT. PROVIDE SUFFICIENT SLACK TO ALLOW FOR UP TO 30" OF MOVEMENT IN ANY DIRECTION.

1-1/2" RGS (23)(24)

CONTINUED ON STREET LIGHTING
PLANS SL-7521, DRAWING SL-103

1-1/2" RGS (23)

ELEVATION

BENT 9 SOUTH ARCH STAIR LIGHTING

SCALE: 1" = 5'

(1) SL-2100

5' 2.5' 0 5' 10'
SCALE 1" = 5'-0"

NOTES:

1. LEDPODS SHALL BE SPACED EVENLY ALONG HANDRAIL AT 1'-8" O.C.
2. INSTALL 2#12 AWG COPPER CONDUCTORS THROUGH HOLLOW HANDRAIL SUPPORT BEAMS UP TO HANDRAIL, AND THROUGHOUT THE LENGTH OF THE HANDRAIL AS SHOWN.
3. SEE DRAWING SL-2300 FOR ONE LINE DIAGRAM.
4. EVEN NUMBERED LEDPOD DRIVER ENCLOSURES SHALL BE CONNECTED TO RED AND WHITE WIRES AND ODD NUMBERED ENCLOSURES SHALL BE CONNECTED TO BLACK AND WHITE WIRES.
5. SEE DRAWING SL-2401, DETAIL 4 FOR TYPICAL STAIR SECTION AND CONNECTION TO LEDPODS IN HANDRAILS.

CONTRACTOR:
INSPECTED BY:
DATE ENERGIZED
DATE ENERGIZED
CORRECTED TO "AS BUILT"
BY
CHECKED

DELTA No.	DESCRIPTION OF REVISION	DATE	BY
1	REVISED PER BSL REVIEW	4/7/2017	A. GOROVAYA

T.O. 5 - Change Order Sketch No. 19 - page 7 of 12

PLANS PREPARED BY:
HNTB Corporation
One Bunker Hill Bldg.,
601 West 5th St., Ste 1000
Los Angeles, California 90071
SIGNATURE 9/13/2016 DATE

REGISTERED PROFESSIONAL ENGINEER
CARL A. AYUB
No. E17891
Exp. 9/30/2016
ELECTRICAL
STATE OF CALIFORNIA

STAIR AND RAMP LIGHTING PLANS
SIXTH STREET VIADUCT REPLACEMENT
W.O. E700224L (TASK 013) SL-7947 (1)

CITY OF LOS ANGELES
ED EBRAHIMIAN, DIRECTOR BUREAU OF STREET LIGHTING
ACCEPTED: 10-21-16
DIRECTOR, BUREAU OF STREET LIGHTING DATE

DRAWING NO. SL-2205

SCALE OF ORIGINAL PLAN: 1" = 5' | SHEET OF SHEETS | INDEX NUMBER

CITY OF LOS ANGELES
DEPARTMENT OF PUBLIC WORKS
BUREAU OF STREET LIGHTING

ADDENDUM 5

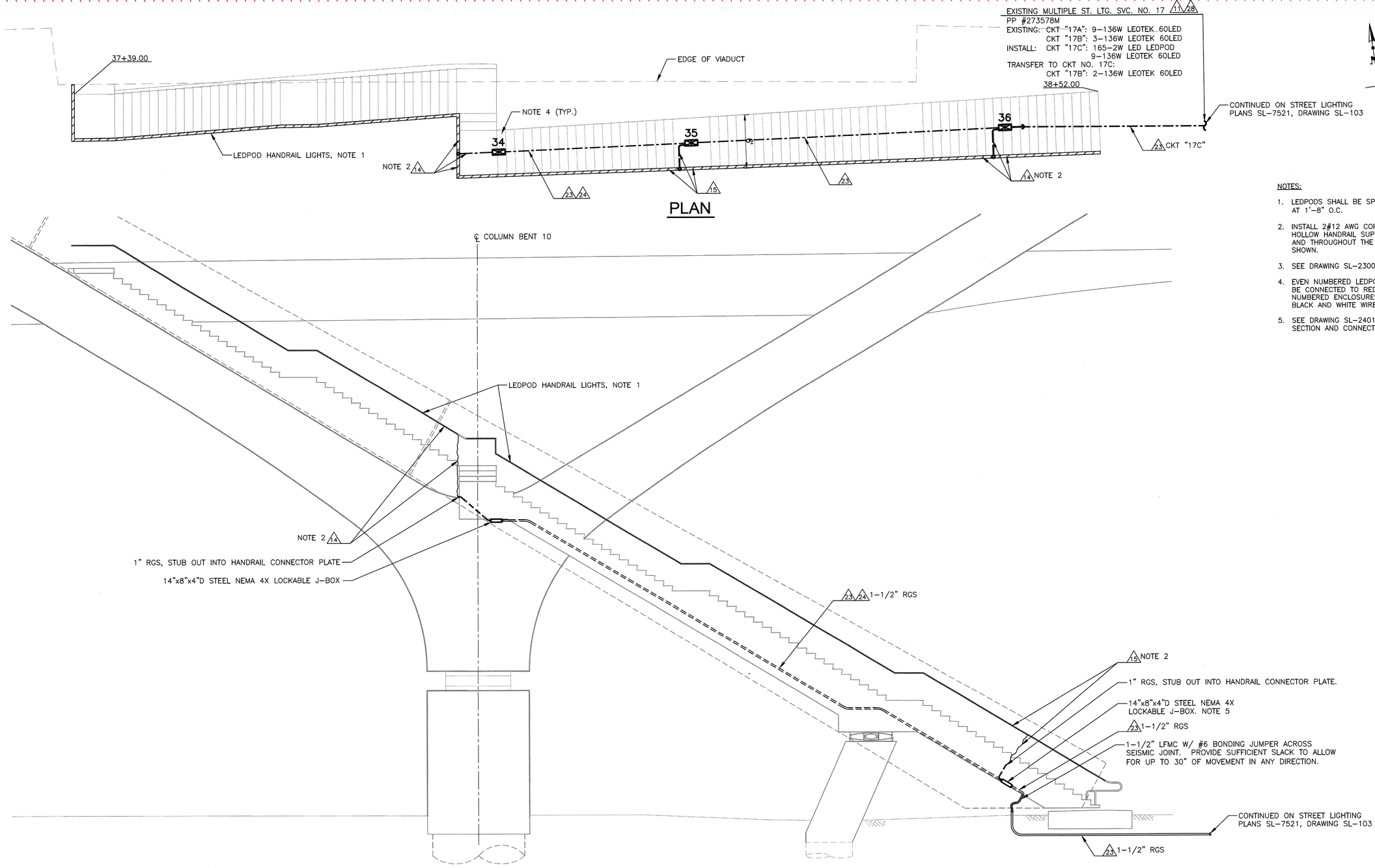

NOTES:

1. LEDPODS SHALL BE SPACED EVENLY ALONG HANDRAIL AT 1'-8" O.C.
2. INSTALL 2#12 AWG COPPER CONDUCTORS THROUGH HOLLOW HANDRAIL SUPPORT BEAMS UP TO HANDRAIL, AND THROUGHOUT THE LENGTH OF THE HANDRAIL AS SHOWN.
3. SEE DRAWING SL-2300 FOR ONE LINE DIAGRAM.
4. EVEN NUMBERED LEDPOD DRIVER ENCLOSURES SHALL BE CONNECTED TO RED AND WHITE WIRES AND ODD NUMBERED ENCLOSURES SHALL BE CONNECTED TO BLACK AND WHITE WIRES.
5. SEE DRAWING SL-2401, DETAIL 4 FOR TYPICAL STAIR SECTION AND CONNECTION TO LEDPODS IN HANDRAILS.

DELTA No.	DESCRIPTION OF REVISION	DATE	BY
1	REVISED PER BSL REVIEW	4/7/2017	A. GOROVAYA

BENT 10 SOUTH ARCH STAIR LIGHTING 1 SL-2100

SCALE: 1" = 5'

5' 2.5' 0 5' 10'
SCALE 1" = 5'-0"

T.O. 5 - Change Order Sketch No. 19 - page 8 of 12

PLANS PREPARED BY:
HNTB Corporation
One Bunker Hill Bldg.,
601 West 5th St., Ste 1000
Los Angeles, California 90071
SIGNATURE 9/13/2016 DATE

REGISTERED PROFESSIONAL ENGINEER CARL A. AYUBI No. E17891 Exp. 9/30/2016 ELECTRICAL STATE OF CALIFORNIA

STAIR AND RAMP LIGHTING PLANS
SIXTH STREET VIADUCT REPLACEMENT
W.O. E700224L (TASK 013) SL-7947

CITY OF LOS ANGELES
ED EBRAHIMIAN, DIRECTOR BUREAU OF STREET LIGHTING
ACCEPTED: DIRECTOR, BUREAU OF STREET LIGHTING 10-21-16 DATE

DRAWING NO. SL-2206

SCALE OF ORIGINAL PLAN: 1" = 5' | SHEET OF SHEETS | INDEX NUMBER

CONTRACTOR:
INSPECTED BY:
DATE ENERGIZED
DATE ENERGIZED
CORRECTED TO "AS BUILT"
BY
CHECKED

BUREAU OF STREET LIGHTING
DEPARTMENT OF PUBLIC WORKS
CITY OF LOS ANGELES

THE CITY OF LOS ANGELES OR ITS OFFICERS OR AGENTS SHALL NOT BE RESPONSIBLE FOR THE ACCURACY OR COMPLETENESS OF ELECTRONIC COPIES OF THIS PLAN SHEET.

C:\caddlib\pw\pwwestcoast\rgreenlee\dms57861\SL-2203.dwg Sep 13, 2016 - 11:11am

ADDENDUM 5

THE CITY OF LOS ANGELES OR ITS OFFICERS OR AGENTS SHALL NOT BE RESPONSIBLE FOR THE ACCURACY OR COMPLETENESS OF ELECTRONIC COPIES OF THIS PLAN SHEET.

C:\coddlib\pw\pwwestcoast\rgreenlee\dms57861\SL-2203.dwg Sep 13, 2016 - 11:11am

NEW U.G. MULT. ST. LTG. SVC. NO. 2 △11 △21 △28 △41 △37 △52
MH: 1496 SIXTH ST
INSTALL: CKT "2A": 54-40W LED PHILIPS eW GRAZE
45-20W LED PHILIPS eW GRAZE
1-152W LED GE EVOLVE
10-45W LED DIALIGHT DUROSITE
CKT "2B": 78-40W LED PHILIPS eW GRAZE
78-20W LED PHILIPS eW GRAZE
CKT "2C": 58-40W LED PHILIPS eW GRAZE
58-20W LED PHILIPS eW GRAZE
1-301W LED GE EVOLVE
39-2W LED LEDPOD
CKT "2D": 72-40W LED PHILIPS eW GRAZE
72-20W LED PHILIPS eW GRAZE
INSTALL ALL #6 WIRE THROUGHOUT.

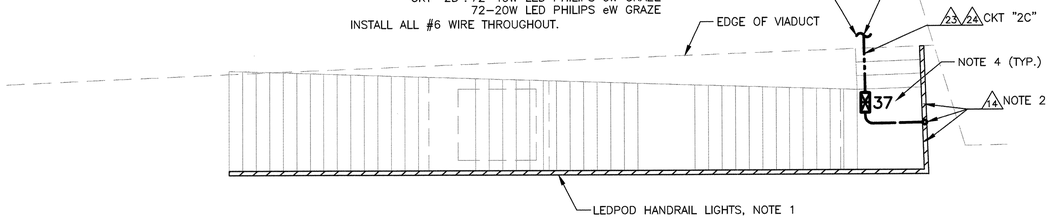

WEST STAIR PLAN

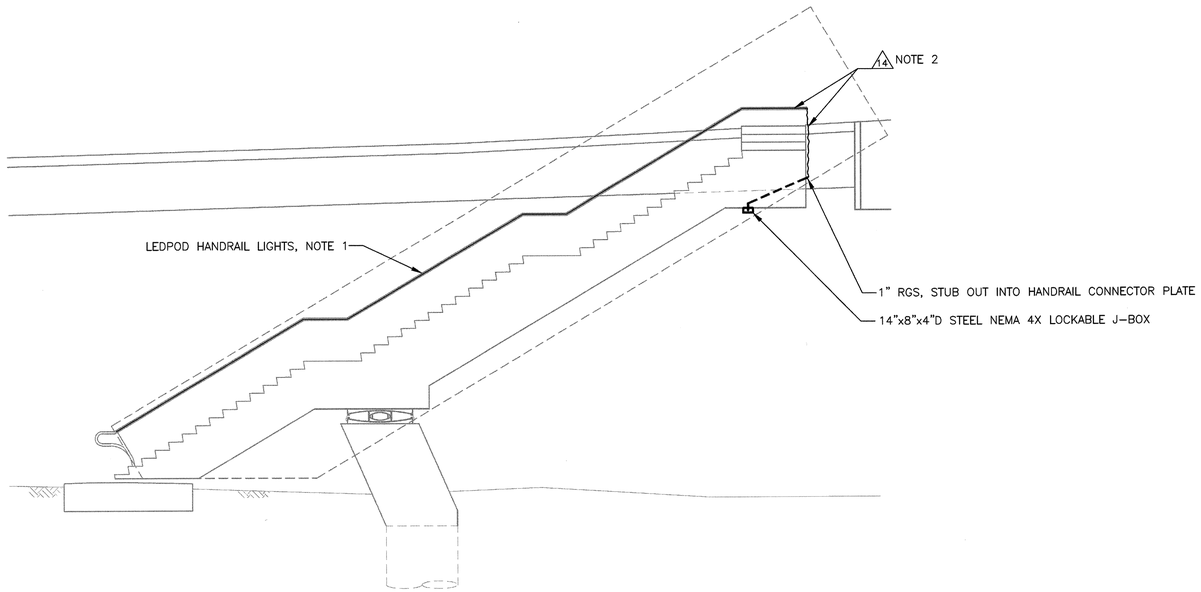

ELEVATION

NOTES:

1. LEDPODS SHALL BE SPACED EVENLY ALONG HANDRAIL AT 1'-8" O.C.
2. INSTALL 2#12 AWG COPPER CONDUCTORS THROUGH HOLLOW HANDRAIL SUPPORT BEAMS UP TO HANDRAIL, AND THROUGHOUT THE LENGTH OF THE HANDRAIL AS SHOWN.
3. SEE DRAWING SL-2300 FOR ONE LINE DIAGRAM.
4. EVEN NUMBERED LEDPOD DRIVER ENCLOSURES SHALL BE CONNECTED TO RED AND WHITE WIRES AND ODD NUMBERED ENCLOSURES SHALL BE CONNECTED TO BLACK AND WHITE WIRES.
5. SEE DRAWING SL-2401, DETAIL 4 FOR TYPICAL STAIR SECTION AND CONNECTION TO LEDPODS IN HANDRAILS.

CONTRACTOR:
INSPECTED BY:
DATE ENERGIZED
DATE ENERGIZED
CORRECTED TO "AS BUILT"
BY
CHECKED

WEST STAIR LIGHTING
SCALE: 1" = 5'
1 / SL-2100

5' 2.5' 0 5' 10'
SCALE 1" = 5'-0"

DELTA No.	DESCRIPTION OF REVISION	DATE	BY
△1	REVISED PER BSL REVIEW	4/7/2017	A. GOROVAYA

PLANS PREPARED BY:
HNTB Corporation
One Bunker Hill Bldg.,
601 West 5th St., Ste 1000
Los Angeles, California 90071
SIGNATURE
9/13/2016
DATE

REGISTERED PROFESSIONAL ENGINEER
CARL A. AYUBI
No. E17691
Exp. 9/30/2016
ELECTRICAL
STATE OF CALIFORNIA

STAIR AND RAMP LIGHTING PLANS
SIXTH STREET VIADUCT REPLACEMENT
W.O. E700224L (TASK 013) SL-7947
△1

CITY OF LOS ANGELES
ED EBRAHIMIAN, DIRECTOR BUREAU OF STREET LIGHTING
ACCEPTED:
DIRECTOR, BUREAU OF STREET LIGHTING
10-21-16
DATE

DRAWING NO.
SL-2207

SCALE OF ORIGINAL PLAN: 1" = 5'
SHEET OF SHEETS
INDEX NUMBER

T.O. 5 - Change Order Sketch No. 19 - page 9 of 12

CITY OF LOS ANGELES
DEPARTMENT OF PUBLIC WORKS
BUREAU OF STREET LIGHTING

ADDENDUM 5

THE CITY OF LOS ANGELES OR ITS OFFICERS OR AGENTS SHALL NOT BE RESPONSIBLE FOR THE ACCURACY OR COMPLETENESS OF ELECTRONIC COPIES OF THIS PLAN SHEET.

C:\caddlib\pw\pwwestcoast\rgreenlee\dms7861\SL-2300.dwg Sep 13, 2016 - 11:14am

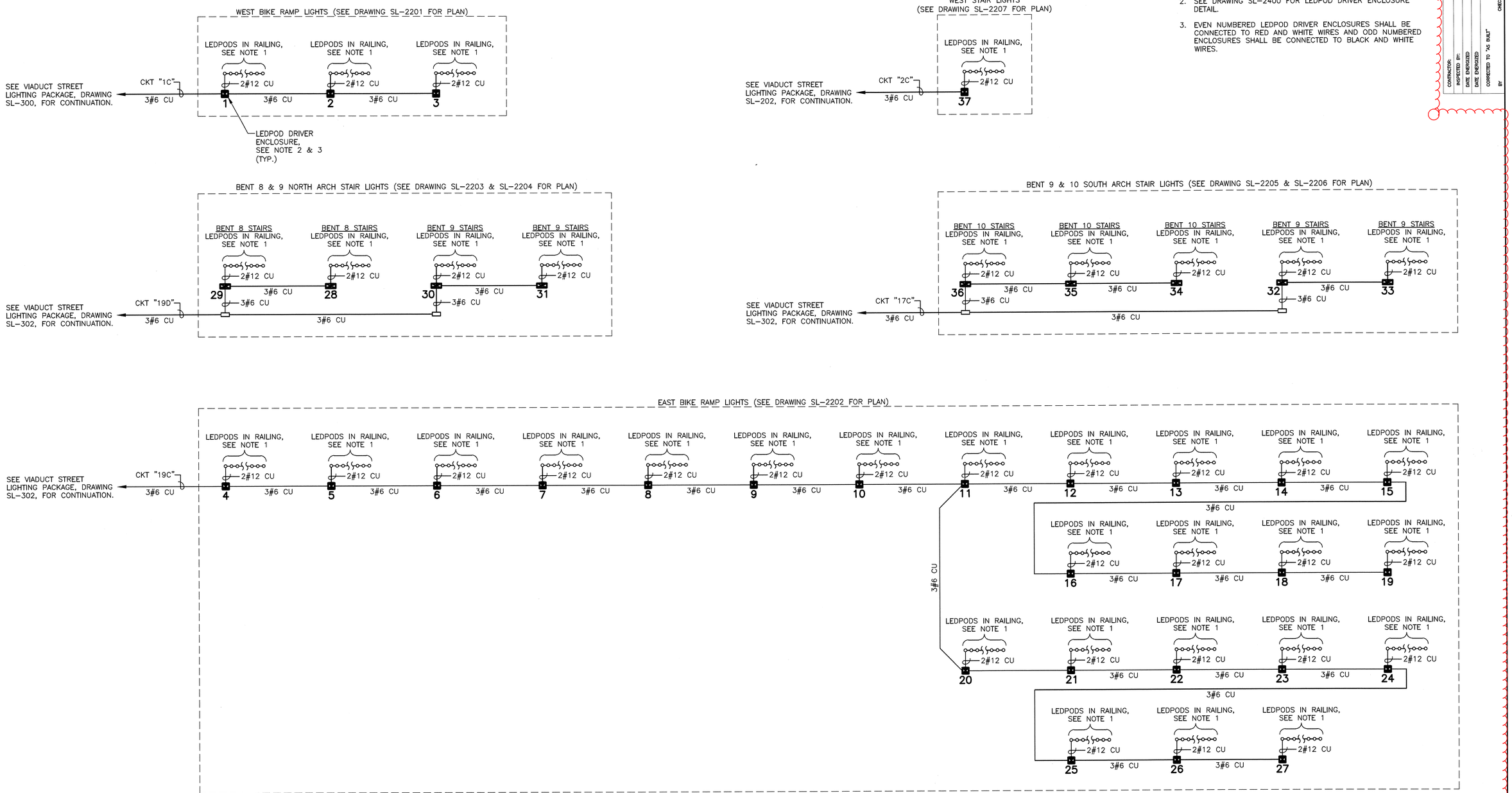

NOTES:

1. SEE ARCHITECTURAL RAILING PLANS FOR EXACT LOCATIONS OF LEDPODS WITHIN RAILING.
2. SEE DRAWING SL-2400 FOR LEDPOD DRIVER ENCLOSURE DETAIL.
3. EVEN NUMBERED LEDPOD DRIVER ENCLOSURES SHALL BE CONNECTED TO RED AND WHITE WIRES AND ODD NUMBERED ENCLOSURES SHALL BE CONNECTED TO BLACK AND WHITE WIRES.

CONTRACTOR:		CHECKED
INSPECTED BY:		
DATE ENERGIZED		
DATE ENERGIZED		
CORRECTED TO "AS BUILT"		
BY		

STAIR/RAMP LIGHTING SCHEMATIC DIAGRAMS

T.O. 5 - Change Order Sketch No. 19 - page 10 of 12

DELTA No.	DESCRIPTION OF REVISION	DATE	BY
1	REVISED PER BSL REVIEW	4/7/2017	A. GOROVAYA

PLANS PREPARED BY:

HNTB Corporation
One Bunker Hill Bldg.,
601 West 5th St., Ste 1000
Los Angeles, California 90071

REGISTERED PROFESSIONAL ENGINEER — CARL A. AYUBI — No. E17891 — Exp. 9/30/2016 — ELECTRICAL — STATE OF CALIFORNIA

SIGNATURE 9/13/2016 DATE

STAIR AND RAMP LIGHTING PLANS
SIXTH STREET VIADUCT REPLACEMENT
W.O. E700224L (TASK 013) SL-7947

1

CITY OF LOS ANGELES
ED EBRAHIMIAN, DIRECTOR BUREAU OF STREET LIGHTING

ACCEPTED: DIRECTOR, BUREAU OF STREET LIGHTING 10-21-16 DATE

DRAWING NO. SL-2300

SCALE OF ORIGINAL PLAN: N.T.S. | SHEET OF SHEETS | INDEX NUMBER

CITY OF LOS ANGELES
DEPARTMENT OF PUBLIC WORKS
BUREAU OF STREET LIGHTING

ADDENDUM 5

THE CITY OF LOS ANGELES OR ITS OFFICERS OR AGENTS SHALL NOT BE RESPONSIBLE FOR THE ACCURACY OR COMPLETENESS OF ELECTRONIC COPIES OF THIS PLAN SHEET.

C:\caddlib\pw\pwwestcoast\ygreenlee\dms57861\SL-2400.dwg Sep 13, 2016 - 11:18am

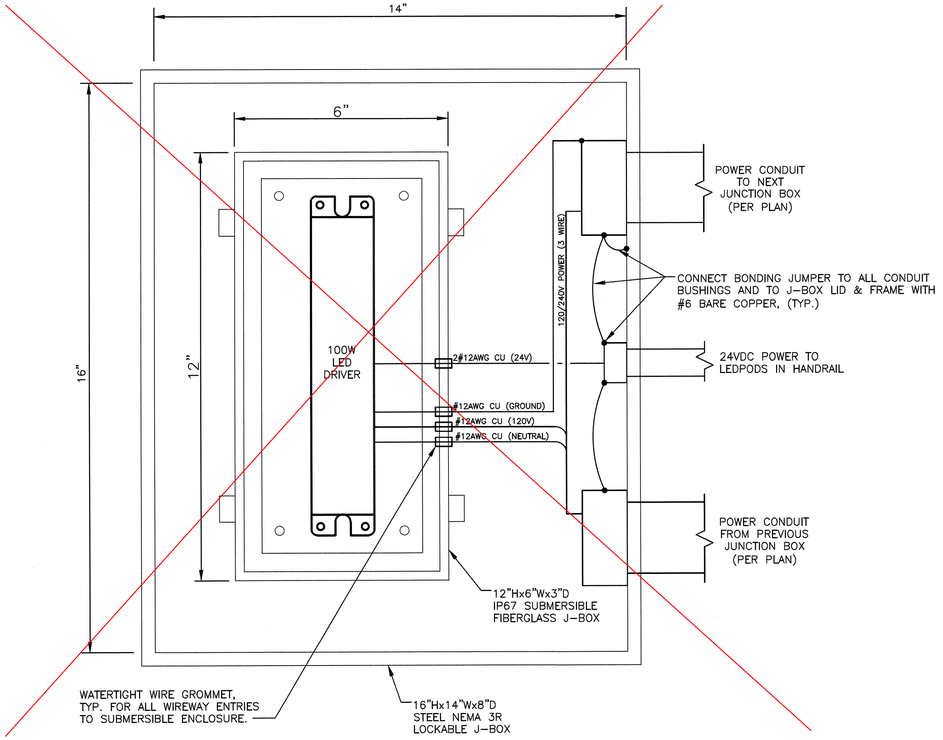

PLAN

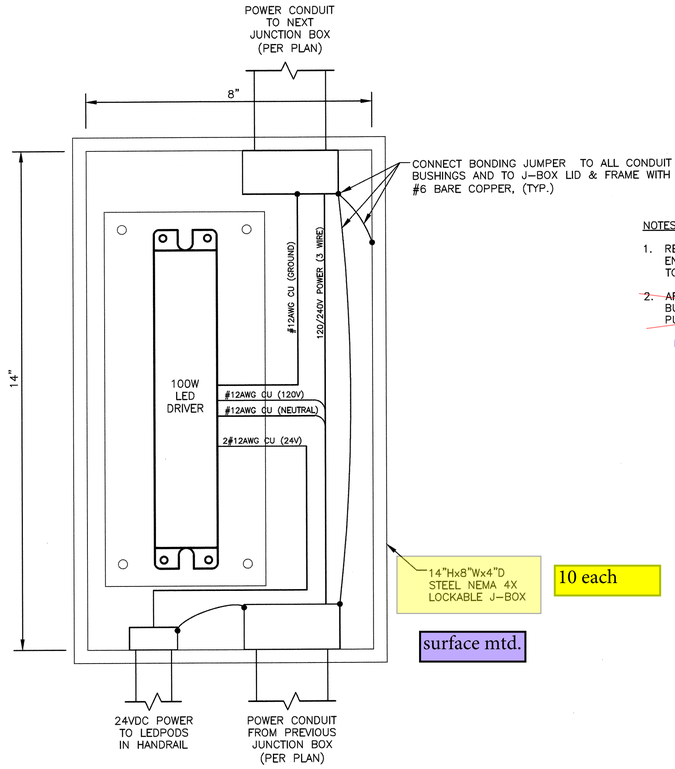

10 each

surface mtd.

PLAN

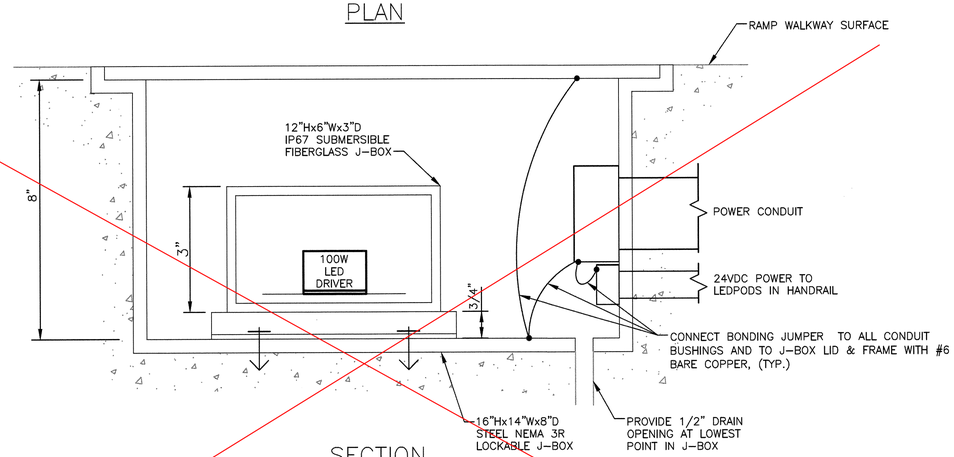

SECTION

TYPICAL RAMP LIGHTING DRIVER ENCLOSURE (1)

SCALE: N.T.S.

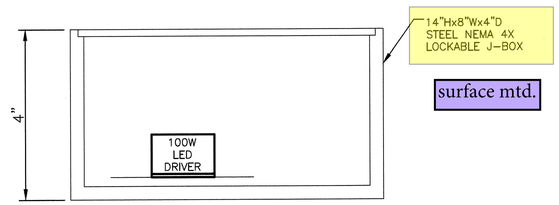

surface mtd.

SECTION

TYPICAL STAIR LIGHTING DRIVER ENCLOSURE (2)

SCALE: N.T.S.

CONTRACTOR:
INSPECTED BY:
DATE ENERGIZED
DATE ENERGIZED
CORRECTED TO "AS BUILT"
BY
CHECKED

NOTES:

1. RELOCATE CONDUIT ENTRIES AND CONTROL ENCLOSURE POSITIONING WITHIN J-BOX AS NEEDED TO ACCOMMODATE PLAN LAYOUT.
2. AFTER FINAL APPROVAL OF INSTALLATION BY THE LA BUREAU OF STREET LIGHTING, ALL NON-LOCKABLE PULL BOX LIDS SHALL BE TACK WELDED SHUT.

N/A (both j-boxes are lockable)

DELTA No.	DESCRIPTION OF REVISION	DATE	BY
1	REVISED PER BSL REVIEW	4/7/2017	A. GOROVAYA

PLANS PREPARED BY:
HNTB Corporation
One Bunker Hill Bldg.,
601 West 5th St., Ste 1000
Los Angeles, California 90071

SIGNATURE 9/13/2016 DATE

REGISTERED PROFESSIONAL ENGINEER — CARL A. AYUBI — No. E17891 — Exp. 9/30/2016 — ELECTRICAL — STATE OF CALIFORNIA

STAIR AND RAMP LIGHTING PLANS
SIXTH STREET VIADUCT REPLACEMENT
W.O. E700224L (TASK 013) SL-7947

1

CITY OF LOS ANGELES
ED EBRAHIMIAN, DIRECTOR BUREAU OF STREET LIGHTING

ACCEPTED: DIRECTOR, BUREAU OF STREET LIGHTING 10-21-16 DATE

DRAWING NO.
SL-2400

SCALE OF ORIGINAL PLAN: N.T.S. | SHEET OF SHEETS | INDEX NUMBER

CITY OF LOS ANGELES
DEPARTMENT OF PUBLIC WORKS
BUREAU OF STREET LIGHTING

ADDENDUM 5

THE CITY OF LOS ANGELES OR ITS OFFICERS OR AGENTS SHALL NOT BE RESPONSIBLE FOR THE ACCURACY OR COMPLETENESS OF ELECTRONIC COPIES OF THIS PLAN SHEET.

C:\caddlib\pw\pwwestcoast\rgreenlee\dms57861\SL-2401.dwg Sep 13, 2016 - 11:22am

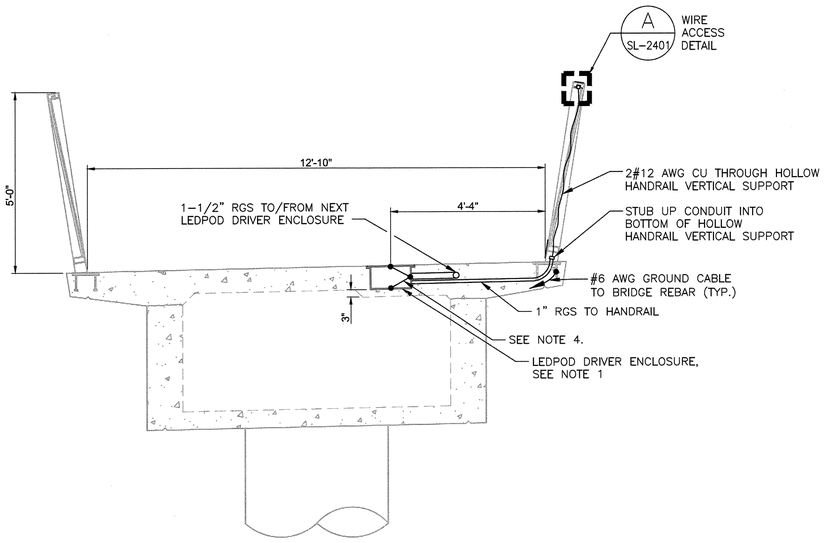

TYPICAL SECTION ON SOUTH EAST BIKE RAMP AND WEST BIKE RAMP

SCALE: 1/2" = 1'-0"

1 — SL-2201, SL-2202

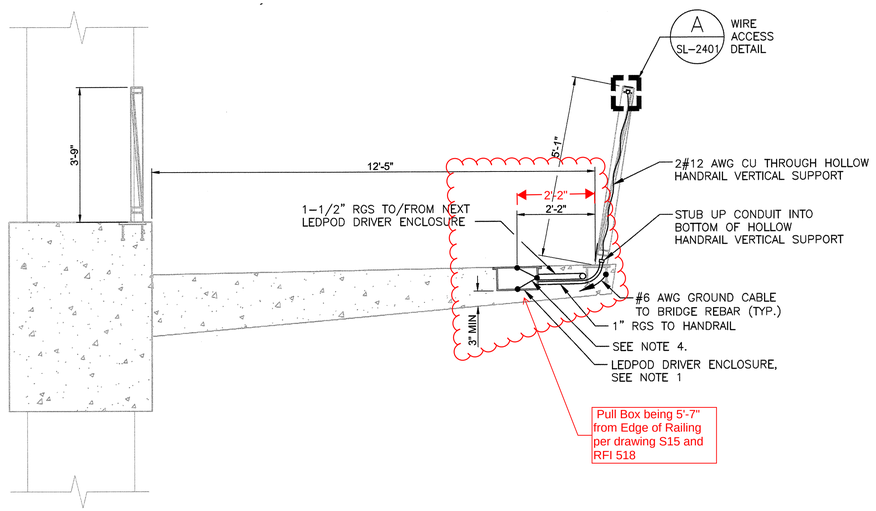

TYPICAL SECTION ON EAST BIKE RAMP HELIX

SCALE: 1/2" = 1'-0"

2 — SL-2202

NOTES:

1. FOR FLUSH MOUNTED LEDPOD DRIVER ENCLOSURE DETAIL SEE DRAWING SL-2400, DETAIL 1. COORDINATE INSTALLATION WITH STRUCTURES DRAWING S19.
2. AFTER FINAL APPROVAL OF INSTALLATION BY THE LA BUREAU OF STREET LIGHTING, ALL WIREWAY ACCESS HATCHES SHALL BE TACK WELDED SHUT.
3. FOR SURFACE MOUNTED LEDPOD DRIVER ENCLOSURE DETAIL SEE DRAWING SL-2400, DETAIL 2.
4. FOR BONDING JUMPER DETAIL SEE DRAWING SL-2400.
5. INSTALL JUNCTION BOX PER MANUFACTURER SPECIFICATION.

CONTRACTOR:
INSPECTED BY:
DATE ENERGIZED
DATE ENERGIZED
CORRECTED TO "AS BUILT"
BY
CHECKED

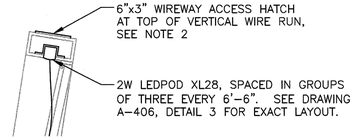

WIRE ACCESS DETAIL

SCALE: N.T.S.

A — SL-2401

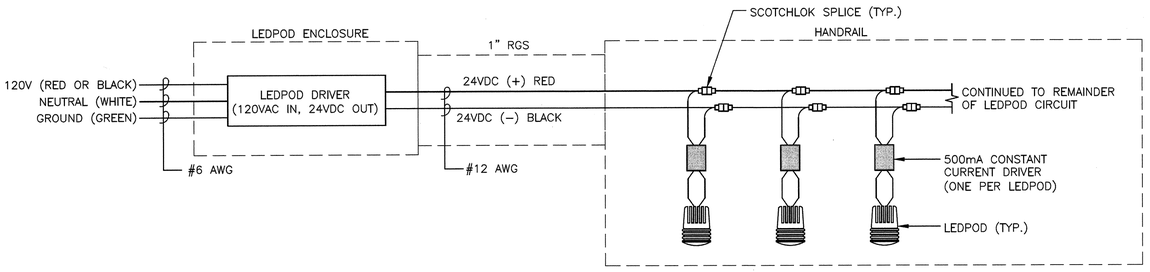

TYPICAL LEDPOD WIRING DIAGRAM

SCALE: N.T.S.

3 — -

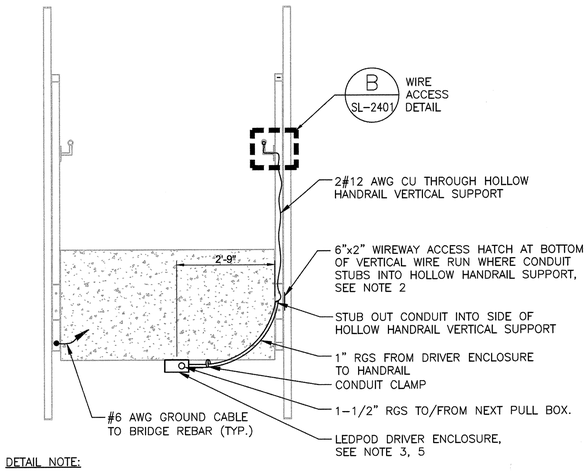

DETAIL NOTE:

INSTALLATION SHOWN IS TYPICAL, SEE STAIR LIGHTING PLANS SL-2203 THRU SL-2207 FOR EXACT CONDUIT ROUTING AND LEDPOD DRIVER ENCLOSURE LOCATIONS.

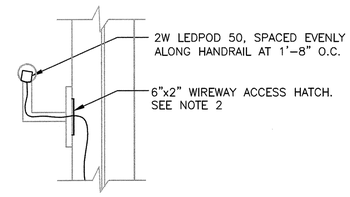

WIRE ACCESS DETAIL

SCALE: N.T.S.

B — SL-2401

TYPICAL SECTION ON STAIRS

SCALE: 1/2" = 1'-0"

4 — SL-2203, SL-2204, SL-2205, SL-2206, SL-2207

DELTA No.	DESCRIPTION OF REVISION	DATE	BY
1	REVISED PER BSL REVIEW	4/7/2017	A. GOROVAYA

T.O. 5 - Change Order Sketch No. 19 - page 12 of 12

2' 1' 0 2' 4'
SCALE 1/2" = 1'-0"

PLANS PREPARED BY:
HNTB Corporation
One Bunker Hill Bldg.,
601 West 5th St., Ste 1000
Los Angeles, California 90071
SIGNATURE
9/13/2016
DATE

REGISTERED PROFESSIONAL ENGINEER — CARL A. AYUB — No. E17891 — Exp. 9/30/2016 — ELECTRICAL — STATE OF CALIFORNIA

STAIR AND RAMP LIGHTING PLANS
SIXTH STREET VIADUCT REPLACEMENT
W.O. E700224L (TASK 013) SL-7947

1

CITY OF LOS ANGELES
ED EBRAHIMIAN, DIRECTOR BUREAU OF STREET LIGHTING
ACCEPTED:
DIRECTOR, BUREAU OF STREET LIGHTING
10-21-16
DATE

DRAWING NO.
SL-2401

SCALE OF ORIGINAL PLAN: N.T.S.
SHEET OF SHEETS
INDEX NUMBER

CITY OF LOS ANGELES
DEPARTMENT OF PUBLIC WORKS
BUREAU OF STREET LIGHTING

ADDENDUM 5

NOTICE TO CONTRACTORS GENERAL NOTES

1. ALL WORK SHALL CONFORM TO THE LATEST BOARD OF PUBLIC WORKS OF THE CITY OF LOS ANGELES ADOPTED EDITION AND SUPPLEMENTS TO THE "GREENBOOK STANDARD SPECIFICATIONS FOR PUBLIC WORKS CONSTRUCTION" AS MODIFIED BY THE CORRESPONDING ISSUE OF THE BROWN BOOK, THE LATEST EDITION OF THE BUREAU OF STREET LIGHTING "SPECIAL SPECIFICATIONS", AND THE SPECIAL PROVISIONS.
2. ELECTROLIERS SHALL BE INSTALLED WITH CENTERLINE 30" BEHIND THE CURB FACE, AND WITH LUMINAIRE ARM ORIENTED OVER THE STREET AND PERPENDICULAR TO ITS CENTER LINE, EXCEPT AS OTHERWISE SPECIFIED HEREON.
3. ELECTROLIERS SPECIFIED TO BE LOCATED INSIDE OF THE CURB RETURN SHALL BE INSTALLED WITH THE CENTER OF THE ELECTROLIER 30 INCHES BEHIND THE CURB FACE MEASURED RADIALLY, AND WITH THE LUMINAIRE ARM ORIENTED OVER THE STREET AND PERPENDICULAR TO THE STREET CENTERLINE.
4. ELECTROLIERS SHALL BE ERECTED SO THAT THE BASE DOOR IS PERPENDICULAR TO THE CURB AND LOCATED ON THE SIDE OF THE ELECTROLIER AWAY FROM ONCOMING TRAFFIC.
5. ALL EXISTING ELECTROLIERS SPECIFIED TO BE REMOVED OR MODIFIED ON THIS PLAN SHALL BE MAINTAINED IN SERVICE UNTIL THE NEW ELECTROLIER LIGHTING SYSTEM IS PLACED IN SERVICE, UNLESS OTHERWISE SPECIFIED HEREON. ALL OTHER ELECTROLIERS ON CIRCUITS AFFECTED BY THIS PLAN SHALL BE MAINTAINED IN SERVICE. CONTRACTOR MAY PROVIDE ALTERNATE LIGHTING IN LIEU OF MAINTAINING EXISTING ELECTROLIER LIGHTS IN SERVICE PROVIDED THAT SUCH ARRANGEMENTS ARE APPROVED BY THE ENGINEER.
6. ALL EQUIPMENT REQUIRED HEREON FOR FURNISHING ELECTRICAL SERVICE FOR EACH CIRCUIT SHALL BE INSTALLED AND INSPECTED PRIOR TO ANY OTHER CONSTRUCTION ON THAT CIRCUIT UNLESS OTHERWISE APPROVED BY THE ENGINEER.
7. THE CONTRACTOR SHALL GIVE WRITTEN NOTICE, 72 HOURS IN ADVANCE OF THE REMOVAL OF AN ELECTROLIER, TO ANY PUBLIC AGENCY MAINTAINING EQUIPMENT SUPPORTED BY THAT ELECTROLIER.
8. FOUNDATIONS AND PULLBOXES NOT REMAINING IN SERVICE SHALL BE REMOVED. THE RESULTING EXCAVATION SHALL BE FILLED WITH MATERIAL SIMILAR TO ADJACENT MATERIAL AND SATISFACTORILY COMPACTED WITH A MECHANICAL COMPACTOR IN LAYERS NOT EXCEEDING 12 INCHES. THE SURFACE SHALL BE FINISHED TO MATCH THE ADJACENT SURFACE.
9. THE CONTRACTOR SHALL REQUEST A BURN TEST BY NOTIFYING THE BUREAU OF CONTRACT ADMINISTRATION PROJECT INSPECTOR A MINIMUM OF 7 CALENDAR DAYS IN ADVANCE OF THE DATE ON WHICH A BURN TEST IS DESIRED.
10. CONTRACTOR SHALL GIVE THREE WORKING DAYS NOTICE (PHONE 323-913-4743) PRIOR TO DELIVERY OF ANY EQUIPMENT SPECIFIED TO BE DELIVERED TO THE BUREAU OF STREET LIGHTING YARD AT 4550 SANTA MONICA BLVD., SUCH DELIVERIES SHALL BE BETWEEN 8:30 AM AND 3:00 PM AND SHALL INCLUDE ALL HANDLING AND LOADING FROM THE TRUCK BY THE CONTRACTOR. CONTRACTOR MUST SUPPLY A COPY OF THE STREET LIGHTING SHEETS WITH THE DELIVERY OF MATERIAL.
11. PULLBOXES LOCATED ADJACENT TO DRIVEWAYS AND ALLEYS SHALL BE INSTALLED AT A MINIMUM DISTANCE OF FIVE FEET FROM THE TOP OF THE "X" OF A CASE 1 OR CASE 2 DRIVEWAY OR AT A MINIMUM DISTANCE OF TWO FEET FROM THE B.C. OF A CASE 3 OR CASE 4 DRIVEWAY OR FIVE FEET FROM TRAVELLED WAY OF THE ALLEY.
12. PULLBOXES INSTALLED AT INTERSECTIONS OF LOCAL STREET SHALL BE INSTALLED NO CLOSER TO THE INTERSECTIONS THAN THE B.C.R. OF AN ASSUMED FUTURE 25' RADIUS CURB RETURN UNLESS OTHERWISE APPROVED BY THE ENGINEER. PULLBOXES INSTALLED AT INTERSECTIONS WHICH INVOLVE ONE OR MORE MAJOR OR SECONDARY STREETS SHALL BE INSTALLED NO CLOSER TO INTERSECTIONS THAN THE B.C.R. OF AN ASSUMED FUTURE 35' RADIUS CURB RETURN UNLESS OTHERWISE APPROVED BY THE ENGINEER.
13. CONDUIT SHALL BE INSTALLED AROUND ALL EXISTING AND/OR PROPOSED CATCH BASINS PER BUREAU OF STREET LIGHTING STANDARD DRAWING NO. L-304-0 UNLESS OTHERWISE SPECIFIED.
14. ALL SCREWS PROVIDED FOR ELECTROLIER STANDARD BASE DOORS AND BASE COVERS SHALL BE CADMIUM PLATED STEEL, 1/4-20NC MACHINE SCREWS, WITH PHILLIPS RECESSED ROUND HEADS.
15. WARNING: SAFETY CLEARANCE SHALL BE OBTAINED DAILY FROM THE AFFECTED UTILITY COMPANY BEFORE DOING ANY WORK IN CLOSE PROXIMITY TO ANY OVERHEAD ELECTRIC LINE. SEE SECTIONS 16430 AND 2100 OF SPECIAL SPECIFICATIONS.
16. UNLESS OTHERWISE SPECIFIED HEREON, LUMINAIRES SHALL PROVIDE A MEDIUM, CUTOFF, TYPE III, LIGHTING DISTRIBUTION PATTERN CONFORMING TO I.E.S DESIGNATION.
17. CONTRACTOR SHALL BE RESPONSIBLE FOR PRESERVING THE CONDITION OF ALL EXISTING EQUIPMENT TO BE REUSED, MODIFIED OR RETURNED TO THE BUREAU OF STREET LIGHTING YARD.
18. EQUIPMENT INDICATED "DISPOSE" SHALL BECOME THE PROPERTY OF THE CONTRACTOR AND BE DISPOSED OF BY THE CONTRACTOR.
19. STREET LIGHTING CONDUIT SHALL BE INSTALLED BY JACKING OR DRILLING METHODS. INSTALLATION OF CONDUIT BY OPEN TRENCHING IS NOT PERMITTED UNLESS APPROVED BY THE DIRECTOR, BUREAU OF STREET LIGHTING.
20. CONTRACTOR SHALL REPAIR AT HIS COST, THE DAMAGE CAUSED TO EXISTING SPRINKLER SYSTEMS DURING THE CONSTRUCTION OF THIS PROJECT. REPAIRS SHALL BE MADE WITHIN 5 WORKING DAYS AFTER DAMAGE OCCURS.
21. NOT USED.
22. CONTRACTOR SHALL BE RESPONSIBLE FOR ALL EXISTING ELECTROLIERS SPECIFIED TO BE RELOCATED AND MODIFIED ON THIS PLAN. PRIOR TO REINSTALLATION, CONTRACTOR SHALL REPAIR OR REPLACE ALL EXISTING STREET LIGHTING FACILITIES FOUND TO BE DAMAGED PRIOR TO START OF OR DURING THE CONSTRUCTION OF THIS PROJECT AT NO COST TO THE CITY. (1)

SUPPLEMENTAL NOTES

1. CONTRACTOR SHALL LOCATE & PROTECT SUBSTRUCTURE(S) SHOWN HEREON, & SHALL PROVIDE FOR A MINIMUM 12" HORIZONTAL CLEARANCE BETWEEN FOUNDATION & SUBSTRUCTURES. IN THE EVENT A 12" CLEARANCE CANNOT BE ACHIEVED, THE CONTRACTOR SHALL MAKE ARRANGEMENTS FOR RELOCATION OF SUBSTRUCTURES AT NO COST TO THE CITY.
2. IN THE EVENT OF OVERHEAD LINES CONFLICT WITH ELECTROLIERS THE CONTRACTOR SHALL MAKE NECESSARY ARRANGEMENTS WITH THE DEPT. OF WATER AND POWER TO RAISE THEIR OVERHEAD FACILITIES IN ORDER TO PROVIDE FOR THE FOLLOWING CLEARANCES WITH EXISTING AND/OR PROPOSED ELECTROLIERS.
   LOW VOLTAGE: MINIMUM 3' CLEARANCE BETWEEN OVERHEAD LINES AND ELECTROLIERS
   HIGH VOLTAGE: MINIMUM 6' CLEARANCE BETWEEN OVERHEAD LINES AND ELECTROLIERS
3. STREET TREES SHALL NOT BE PLANTED CLOSER THAN 20' FROM EXISTING OR PROPOSED ELECTROLIER, UNLESS OTHERWISE INDICATED.
4. IN THE EVENT OF OVERHEAD COMMUNICATION LINE CONFLICT WITH ELECTROLIERS, CONTRACTOR SHALL MAKE NECESSARY ARRANGEMENTS TO PROVIDE A MINIMUM 12" CLEARANCE.
5. PROPOSED ELECTROLIER FOUNDATIONS AND PULLBOXES SHALL BE INSTALLED OUTSIDE OF ACCESS RAMP AREAS. EXISTING PULLBOXES SHALL BE RECONSTRUCTED TO CLEAR ACCESS RAMPS BY A MINIMUM OF 12". EXISTING CONDUIT SHALL BE LOWERED AS NECESSARY PER SEC. 307-2.5 OF THE STANDARD SPECIFICATIONS FOR PUBLIC WORKS CONSTRUCTION.
6. CONDUIT THAT IS TO BE ABANDONED SHALL HAVE WIRES REMOVED. THE CONDUIT SHALL BE REMOVED TO A DEPTH OF AT LEAST 12" BELOW THE SURFACE AND HAVE BOTH ENDS CRIMPED.
7. NOTWITHSTANDING SECTION 16950.2 OF THE SPECIAL SPECIFICATIONS FOR THE CONSTRUCTION STREET LIGHTING SYSTEMS MAGNETIC REGULATING BALLASTS ARE REQUIRED IN ALL COBRA-HEAD LUMINAIRES.
8. ALL #10 AWG WIRES USED FOR MULTIPLE CIRCUIT ELECTROLIER WIRING REFERENCED IN STANDARD DRAWING NO. L-301-1 SHALL BE #10 AWG SOLID COPPER CONDUCTORS.
9. AT LEAST TWO (2) WORKING DAYS PRIOR TO STARTING ANY EXCAVATION. THE CONTRACTOR MUST OBTAIN AN INQUIRY I.D. NUMBER FROM UNDERGROUND SERVICE ALERT BY CALLING (800) 422-4133 OR BY DIALING 811.

SERIES CIRCUIT NOTES

1. WARNING: SAFETY CLEARANCE SHALL BE OBTAINED DAILY FROM THE SERVING COMPANY, AND "MEN AT WORK" SIGNS SHALL BE POSTED AT THE SERVICE POINT BEFORE ANY WORK IS DONE OR ANY CONNECTIONS MADE ON AN EXISTING CIRCUIT. SEE SECTIONS 16430 AND 2100 OF SPECIAL SPECIFICATIONS.
2. SERIES CIRCUIT WIRE SHALL BE NO. 8 AWG STRANDED COPPER CONDUCTOR, INSULATED WITH 0.110" APPROVED POLYETHYLENE COMPOUND RATED FOR 5,000 VOLT OPERATION.
3. TWO OR MORE TURNS OF SELF-ADHESIVE COLORED TAPE WITH A MINIMUM WIDTH OF 1/2 INCH SHALL BE APPLIED TO EACH CABLE IN ALL SERIES CIRCUITS WHERE WORK IS BEING DONE AND WHERE TWO OR MORE CIRCUITS EXIST IN A COMMON PULLBOX OR POST BASE. THE TAPE SHALL BE APPLIED ON THE CABLE BETWEEN THE SPLICES AND THE CONDUIT, USING ONE COLOR FOR EACH CIRCUIT. THE COLORS WHITE, GRAY, GREEN, AND ORANGE SHALL NOT BE USED.
4. CONTRACTOR SHALL GIVE THE BUREAU OF STREET LIGHTING YARD (PHONE 323-913-4744) TWO WORKING DAYS NOTICE BEFORE ANY WORK IS DONE ON AN EXISTING SERIES CIRCUIT.

CIRCUIT DIAGRAM LEGEND

- NEW WIRE
- EXISTING WIRE
- DISCONNECT AND REMOVE WIRE
- CONNECT WIRE
- DISCONNECT WIRE AND TAPE ENDS
- NEW LAMP
- EXISTING LAMP
- REMOVE EXISTING LAMP

MULTIPLE CIRCUIT NOTES

1. WARNING: SAFETY CLEARANCE SHALL BE OBTAINED DAILY FROM THE SERVING COMPANY BEFORE DOING ANY WORK OR MAKING ANY CONNECTIONS ON AN EXISTING CIRCUIT. SEE SECTIONS 16430 AND 2100 OF SPECIAL SPECIFICATIONS.
2. MULTIPLE CIRCUIT WIRE SHALL BE NO. 8 AWG STRANDED COPPER CONDUCTOR. TYPE THWN/THHN INSULATION, UL APPROVED FOR 600 VOLT OPERATION UNLESS OTHERWISE SPECIFIED HEREON.
3. THREE WIRES (COLOR CODE: 1-RED, 1-BLACK, 1-WHITE,) SHALL BE INSTALLED IN ALL MULTIPLE CIRCUIT CONDUIT UNLESS OTHERWISE PROVIDED FOR HEREON.
4. EVEN NUMBERED ELECTROLIERS SHALL BE CONNECTED TO RED AND WHITE WIRES AND ODD NUMBERED ELECTROLIERS SHALL BE CONNECTED TO BLACK AND WHITE WIRES.
5. ELECTROLIERS SHALL BE WIRED PER TYPICAL MULTIPLE CIRCUIT ELECTROLIER WIRING DETAIL, BUREAU OF STREET LIGHTING STANDARD DRAWING NO. L-301-1, UNLESS OTHERWISE SPECIFIED.
6. MULTIPLE CIRCUITS IN CONDUITS CONTAINING MORE THAN THREE CONDUCTORS SHALL BE APPROPRIATELY IDENTIFIED BY LABELING CONDUCTORS "A", "B", ETC. WITH APPROVED SELF-LAMINATING LETTER TAPE WRAPPED AT LEAST TWICE AROUND THE CONDUCTOR IN EACH PULLBOX. (W.H. BRADY, SPECIAL SELF-LAMINATING WIRE MARKERS OR EQUIVALENT)

LEGEND

- (R) EXISTING ELECTROLIER TO BE RELOCATED
- EXISTING UTILITARIAN LIGHTS ON WOODEN POLES WHICH SHALL BE MAINTAINED IN SERVICE UNTIL THE PERMANENT ELECTROLIER LIGHTING SYSTEM IS PLACED IN SERVICE. CONTRACTOR MAY PROVIDE ALTERNATE LIGHTING IN LIEU OF MAINTAINING EXISTING UTILITARIAN LIGHTS IN SERVICE PROVIDED THAT SUCH ARRANGEMENTS ARE APPROVED BY THE ENGINEER.
- EXISTING ELECTROLIER TO BE REMOVED. (SEE GENERAL NOTE 8)
- NEW ELECTROLIER
- EXISTING ELECTROLIER, NOT TO BE REMOVED OR MODIFIED
- PULLBOX TYPE 2 UNLESS OTHERWISE SHOWN HEREON. (SEE DELTA NOTES NO. 25 AND NO. 26). ADDITIONAL PULLBOXES SHALL BE REQUIRED AS SPECIFIED. (1)
- EXISTING PULLBOX
- EXISTING 1" CONDUIT
- EXISTING 1-1/2" CONDUIT
- EXISTING 2" CONDUIT
- NEW 1" CONDUIT
- NEW 1-1/2" CONDUIT
- NEW 2" CONDUIT
- ABANDON CONDUIT (SEE GENERAL NOTE NO.8 & SUPPLEMENTAL NOTE NO.6) (1)
- EXISTING ELECTROLIER FOUNDATION
- FUTURE ELECTROLIER
- PROPOSED CATCH BASIN
- FOR PROP. 218 AND GIS SECTION USE ONLY. (GENERAL BENEFIT)

NOTICE TO CONTRACTORS MATERIAL LIST

FOLLOWING IS A SUMMARY OF NEW ELECTROLIERS, LUMINAIRES, LAMPS, BALLASTS, FOUNDATIONS, AND OTHER EQUIPMENT WHICH SHALL BE SUPPLIED AND INSTALLED BY THE CONTRACTOR. THIS IS NOT INTENDED TO BE A COMPLETE LIST OF ALL MATERIALS REQUIRED. UNLESS NOTED OTHERWISE, EQUIVALENT PRODUCTS BY OTHER MANUFACTURERS MAY BE SUBMITTED TO THE ENGINEER OF RECORD FOR REVIEW AND APPROVAL.

SYMBOL	ITEM	QUANTITY (1)	DESCRIPTION	STANDARD PLAN NO.	REV. NO.	NOMINAL WATTAGE
1	LUMINAIRE	52 (+2 SPARE)	270W FLOOD LED, PHILIPS COLORREACH POWERCORE GEN2, 23 DEG LENS (42) (46)			270W
2	LUMINAIRE	40 (+2 SPARE)	270W FLOOD LED, PHILIPS COLORREACH POWERCORE GEN2, 8 DEG LENS (42) (46)			270W
3	LUMINAIRE	24 (+2 SPARE)	135W FLOOD LED, PHILIPS COLORREACH COMPACT POWERCORE, 40 DEG LENS (42) (46)			135W
4	LUMINAIRE	24 (+2 SPARE)	135W FLOOD LED, PHILIPS COLORREACH COMPACT POWERCORE, 13 DEG LENS (42) (46)			135W
	DATA ENABLER	40 (+4 SPARE)	20W PHILIPS DATA ENABLER PRO (43)			20W
	STEEL LID	40	CONCRETE BLOCKOUT W/ LOCKABLE TRAFFIC RATED STEEL LID (59)			
	JUNCTION BOX	40	14"X12"X6"D IP67 FIBERGLASS CONTROL ENCLOSURE (39) (1) RFI 0394			
	PULL BOX	28	LA BSL TYPE 2 PULL BOX (25)			
	JUNCTION BOX	46	12"X12"X8" STRUCTURE PULL BOX, NEMA 4X, LOCKABLE			
	JUNCTION BOX	14	10"X16"X12" STRUCTURE PULL BOX, NEMA 4X, LOCKABLE			
	XFMR PAD	1	4'x5'-6" TRANSFORMER PAD (40) (41)			
	PANELBOARD	1	480/277V PANELBOARD P-1 (38) (44)			
	METER	1	480/277V, 3PH, 100A METER (BY DWP) (41)			
	CONTROL PANEL	1	ARCH LIGHTING CONTROL PANEL ENCLOSURE (45)			
	CONTROLLER	1	PHILIPS PHAROS LPC2 LIGHTING PLAYBACK CONTROLLER			4W
	MODEM	1	PROVIDED BY INTERNET SERVICE PROVIDER <- RFI 501			
	FIREWALL/ROUTER	1	EXACT MODEL TO BE SELECTED BY LIGHTING CONTROLS CONTRACTOR			
	ETHERNET SW.	1	EXACT MODEL TO BE SELECTED BY LIGHTING CONTROLS CONTRACTOR			

(1)

(36) ELECTRICAL PANELBOARD SHALL BE AS FOLLOWS OR BSL APPROVED EQUAL: 480/277V, 3PH, 4W, 100A, 18 KAIC SERVICE RATED, NEMA 3R, LOCKABLE, GALVANIZED STEEL, 18 POLES

(37) INSTALL NINE #6 MULTIPLE CIRCUIT WIRES (TWO CIRCUITS, 480V, 3PH):
COLOR CODE: 2-BROWN (PHASE A) 2-ORANGE (PHASE B) 2-YELLOW (PHASE C) 2-GRAY (NEUTRAL) 1-GREEN (GROUND)

(36) INSTALL TWO CATEGORY 6 ETHERNET CABLES.

(35) INSTALL FIVE #6 MULTIPLE CIRCUIT WIRES (ONE CIRCUIT, 480V, 3PH):
COLOR CODE: 1-BROWN (PHASE A) 1-ORANGE (PHASE B) 1-YELLOW (PHASE C) 1-GRAY (NEUTRAL) 1-GREEN (GROUND)

(34) INSTALL FOUR #10 MULTIPLE CIRCUIT WIRES: (COLOR CODE: 1-RED, 1-BLACK, 1-WHITE, 1-GREEN)

(33) INSTALL ONE CATEGORY 6 ETHERNET CABLE.

(32) ROUTE ALL TRANSVERSE-ORIENTED CONDUIT IN THE VIADUCT DECK UNDER POST TENSIONING DUCT AT FLOOR BEAM LOCATIONS. COORDINATE EXACT ROUTING WITH STRUCTURAL PLANS.

(31) SEE DRAWING SL-1403 DETAIL 3 FOR TYPICAL IN-GRADE ARCH LIGHT INSTALLATION.

(30) SEE DRAWING SL-1402 FOR TYPICAL CONDUIT INSTALLATION IN VIADUCT COLUMNS.

(29) ALL COBRAHEAD LUMINAIRES REGARDLESS OF WATTAGE ON LOW VOLTAGE, MULTIPLE CIRCUITS SHALL BE EQUIPPED WITH PHILIPS CITY TOUCH OUTDOOR CONTROLLER LLC7280. THE UNIT SHOULD BE PICKED UP AT THE BUREAU'S PLAN COUNTER AT 1149 S. BROADWAY, SUITE #200, LOS ANGELES, CA 90015. THE UNITS WILL BE PROVIDED FOR A NON-REFUNDABLE FEE (APPROXIMATELY $ 156.00 PER UNIT). THE CONTRACTOR SHALL GIVE SEVEN WORKING DAYS NOTICE (TELEPHONE 231 847-1498) PRIOR TO PICKING UP THE MONITORING UNITS. NODES SHALL BE INSTALLED INTO THE PHOTOELECTRIC CONTROL STANDARD SOCKET PER ANSI/NEMA C-136.10 AND SHALL BE ORIENTED IN A NORTHERLY DIRECTION. A SEPARATE P.E. CELL IS NOT REQUIRED FOR LUMINAIRES EQUIPPED WITH A REMOTE MONITORING NODE. (1)

(28) INSTALL TYPE 3 PULLBOX FOR DWP SERVICE. ALL TYPE 3 PULLBOXES SHALL BE OF "COMPOSITE/POLYMER" MATERIAL W/BOLT-DOWN LID AND SHALL COMPLY WITH STANDARD PLAN "COMPOSITE TYPE 3, REV A" AND APPROVED BY BUREAU OF STREETLIGHTING.

(27) CONTRACTOR SHALL LOCATE AND PROTECT STREET LIGHTING PULLBOX PRIOR TO TERMINATING NEW CONDUIT TO PULLBOX. IN THE EVENT THE PULLBOX DOES NOT EXIST OR IS MISSING, THE CONTRACTOR SHALL CONTACT THE PRIVATE ENGINEER (ADMEER ON RECORD) AND BUREAU OF STREET LIGHTING TO OBTAIN AN APPROVAL FOR THE INSTALLATION OF NEW PULLBOX AT NO COST TO THE CITY.

(26) INSTALL FUSE HOLDER(S), FUSE(S) AND CONNECT WIRES INSIDE TYPE 2 PULLBOX.

(25) INSTALL TYPE 2 PULLBOX. ALL PULLBOXES SPECIFIED SHALL BE OF "COMPOSITE/POLYMER" MATERIAL WITH BOLT-DOWN LID AND SHALL COMPLY WITH STANDARD PLAN "COMPOSITE TYPE 2, REV B" AND APPROVED BY BUREAU OF STREETLIGHTING.

(24) TAPE ENDS OF SPARE WIRE.

(23) INSTALL THREE MULTIPLE CIRCUIT WIRES: (COLOR CODE: 1-RED, 1-BLACK, 1-WHITE)

(22) REMOVE EXISTING STREET LIGHTING WIRES.

(21) MULTIPLE SERVICE LOCATION. INTERCEPT CONDUIT INSTALLED BY OTHERS AND INSTALL TYPE 3 SERVICE PULLBOX. VERIFY EXACT LOCATION OF CONDUIT, PHONE DEPT. OF WATER AND POWER UNDERGROUND ENGINEERING FIVE DAYS PRIOR TO START OF WORK AT THIS LOCATION. (PHONE: 213-367-3003)

(20) CONTRACTOR SHALL REQUEST A PERMIT TO PRUNE TREE FROM THE URBAN FORESTRY DIVISION (213) 847-3077, FIVE DAYS PRIOR TO THE INSTALLATION OF ELECTROLIER. ALL TREE WORK SHALL BE PERFORMED TO TREE CARE PROFESSION BEST MANAGEMENT PRACTICES AND TO THE SATISFACTION OF THE URBAN FORESTRY DIVISION.

(19) INSTALL APPROVED CONNECTING DEVICES PER DETAIL "B", BUREAU OF STREET LIGHTING STANDARD DRAWING NO. L-301-1.

(18) INSTALL APPROVED CONNECTING DEVICES PER DETAIL "A", BUREAU OF STREET LIGHTING STANDARD DRAWING NO. L-301-1.

(17) MULTIPLE SERVICE LOCATION. INSTALL 10' OF 2" GALVANIZED CONDUIT SERVICE RISER ON POLE. EXTEND CONDUIT TO THE ALLEY B.C. AND INSTALL TYPE 3 PULLBOX UNLESS OTHERWISE SPECIFIED. INSTALL PULLWIRE.

(16) INSTALL FIVE MULTIPLE CIRCUIT WIRES: (COLOR CODE: 2-RED, 2-BLACK, 1-WHITE)

(15) INSTALL TWO MULTIPLE CIRCUIT WIRES: (COLOR CODE: 1-BLACK, 1-WHITE)

(14) INSTALL TWO MULTIPLE CIRCUIT WIRES: (COLOR CODE: 1-RED, 1-WHITE)

(13) INSTALL 1" CONDUIT BEND.

(12) INSTALL ADDITIONAL 2" CONDUIT BEND FOR TRAFFIC SIGNAL WIRING.

(11) INSTALL ONE APPROVED FUSE HOLDER WITH 30 AMP FUSE BETWEEN EACH SERVICE WIRE (NOT NEUTRAL WIRE) OR SERVICE WIRE CONNECTING DEVICE AND STREET LIGHTING CIRCUIT WIRE. SERVING COMPANY WILL INSTALL SERVICE.

(10) JOIN CONDUIT

(9) MULTIPLE SERVICE LOCATION. INSTALL TYPE 3 PULLBOX UNLESS OTHERWISE SPECIFIED AND 10' OF 2" GALVANIZED CONDUIT SERVICE RISER ON POLE. INSTALL PULLBOX NO CLOSER THAN 5' AND NO FARTHER THAN 15' FROM THE SERVICE POLE.

(8) SERIES SERVICE POLE. INSTALL ONE TERMINAL CUTOFF BOX STANDARD PLAN B-3724 WITH ONE DISCONNECTING SWITCH FOR EACH CIRCUIT. SERVING COMPANY WILL INSTALL SERVICE.

(7) CONSTRUCT CASE 4 DRIVEWAY RETURN PER STANDARD PLAN NO. S-440

(6) CONSTRUCT CASE 3 DRIVEWAY RETURN PER STANDARD PLAN NO. S-440.

(5) INTERCEPT CONDUIT AND INSTALL PULLBOX.

(4) THREAD AND CAP CONDUIT AT END OF IMPROVEMENT.

(3) INSTALL CONDUIT ONLY.

(2) CONNECT WIRES (PER CIRCUIT DIAGRAM WHERE APPLICABLE).

(1) TERMINATE CONDUIT IN STREET LIGHTING PULLBOX.

(1) THE ABOVE NOTES ARE APPLICABLE ONLY WHERE SPECIFIED ON DRAWINGS.

DELTA NOTES

(47) CONTRACTOR SHALL DELIVER THE FOLLOWING SPARES AND EQUIPMENT TO BSL YARD PER GENERAL NOTE NO. 10:
* MIN. OF 10% SPARES FOR ALL EQUIPMENT, AS SHOWN IN MATERIAL LIST.

(46) FOR NON-STANDARD OR 'EQUAL' LIGHTING POLES, LIGHTING EQUIPMENT, AND FOUNDATIONS, THE CONTRACTOR IS RESPONSIBLE TO SUBMIT SHOP DRAWINGS AND STRUCTURAL CALCULATIONS STAMPED BY A REGISTERED STRUCTURAL OR CIVIL ENGINEER LICENSED BY THE STATE OF CALIFORNIA. CALCULATIONS SHALL INCLUDE SEISMIC AND 100MPH WIND LOAD (WHICHEVER IS DOMINANT) BASED ON THE MOST CURRENT AASHTO SPECIFICATIONS. THE CONTRACTOR SHALL SUBMIT, AT THE REQUEST OF BUREAU OF STREET LIGHTING, EQUIPMENT PROTOTYPES. ALLOW 45 DAYS REVIEW AND EVALUATION. WRITTEN APPROVAL FROM THE BUREAU OF STREET LIGHTING IS REQUIRED. POLE INSPECTION BY THE BUREAU OF CONTRACT ADMINISTRATION MAY BE REQUIRED. CONTACT BSL ENGINEER AT (213) 847-1347 FOR DETAILS AND APPOINTMENT. IN ADDITION, APPROVAL OF M-40 FORM, (MATERIAL APPROVAL LIST), IS MANDATORY BEFORE PURCHASING EQUIPMENT, AND IS CONTINGENT UPON APPROVAL OF SHOP DRAWINGS, CALCULATIONS AND PROTOTYPES. (1)

80 MPH WIND LOAD ALLOWED IN BELOW GRADE APPLICATIONS — RFI 0043

(45) 30"Wx36"Hx18"D, NEMA 3R, LOCKABLE, GALVANIZED STEEL,

(44) SEE DRAWING SL-1405 FOR PANELBOARD P-1 PANEL SCHEDULE.

(43) THE COMPONENT CATALOG NUMBERS ARE AS FOLLOWS OR BSL APPROVED EQUAL: DATA ENABLER PRO CAT. # 106-000004-00

(42) THE LUMINAIRE CATALOG NUMBERS ARE AS FOLLOWS OR BSL APPROVED EQUAL:
270W FLOOD LED (PHILIPS COLORREACH POWERCORE GEN2, 23 DEG LENS) FIXTURE CAT. # 123-000153-00 LENS CAT. # 120-000068-01
270W FLOOD LED (PHILIPS COLORREACH POWERCORE GEN2, 8 DEG LENS) FIXTURE CAT. # 123-000153-00 LENS CAT. # 120-000068-05
135W FLOOD LED (PHILIPS COLORREACH COMPACT POWERCORE GEN2, 40 DEG LENS) FIXTURE CAT. # 123-000154-00 LENS CAT. # 120-000068-02
135W FLOOD LED (PHILIPS COLORREACH COMPACT POWERCORE GEN2, 13 DEG LENS) FIXTURE CAT. # 123-000154-00 LENS CAT. # 120-000068-00

(41) SEE DRAWING SL-1103 FOR ELECTRICAL SERVICE EQUIPMENT LAYOUT.

(40) TRANSFORMER PAD SHALL BE INSTALLED PER DWP STANDARD PLAN C721-01.

(39) SEE DRAWING SL-1403 FOR TYPICAL CONTROL ENCLOSURE BLOCKOUT INSTALLATION.

PLAN OF ELECTROLIER LIGHTING SYSTEM

(M)=MAJOR, (S)=SECONDARY, (L)=LOCAL, (C)=COLLECTOR STREET	FROM	TO
6TH ST (M)	MATEO ST (S)	BOYLE AVE (S)

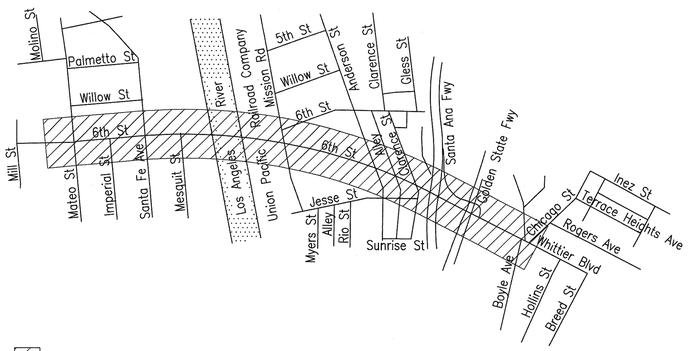

N

PROJECT AREA

VICINITY MAP
NOT TO SCALE

PROCEDURE FOR STREET LIGHT CIRCUIT CLEARANCE

- HIGH VOLTAGE CIRCUIT CLEARANCE REQUESTS SHALL BE MADE TO THE BUREAU OF STREET LIGHTING AND WILL BE PERFORMED BY CITY CREWS.
- LOW VOLTAGE CIRCUIT CLEARANCE SHALL BE PERFORMED BY THE QUALIFIED CONTRACTOR RESPONSIBLE FOR CONSTRUCTION PROJECTS.
- PRIOR TO CONSTRUCTION, THE CONTRACTOR SHALL SUBMIT TWO (2) COPIES OF THE PLAN (24"X36") AND NOTIFY THE INSPECTOR TO SUBMIT "CONSTRUCTION START NOTICE" AND M-21 FORM TO LADWP STREET LIGHT SUPPORT (111 N. HOPE STREET, RM 910, LOS ANGELES, CA 90012)

FOR DETAILED PROCEDURES, SEE WWW.bsl.lacity.org (CLICK ON THE BUSINESS/CONTRACTORS LINK).

ALL CONSTRUCTION IS PROHIBITED ON MAJOR AND SECONDARY STREET BETWEEN:
6:00 A.M. TO 9:00 A.M.
3:30 P.M. TO 7:00 P.M.

NOTICE TO CITY INSPECTOR/CONTRACTOR NO. 1

THE STREET LIGHTING EQUIPMENT ON THIS PLAN MAY BE SUBJECT TO CHANGE ("GREEN BOOK" 2006 §307-1.3). THE CONTRACTOR SHALL NOT ORDER ANY NEW STREET LIGHTING EQUIPMENT PRIOR TO APPROVAL BY THE BUREAU OF STREET LIGHTING, EQUIPMENT APPROVAL SECTION (M-40 FORM). CONTACT (213) 847-1831 FOR MORE INFORMATION. (1)

NOTICE TO CITY INSPECTOR/CONTRACTOR NO. 2

THIS PROJECT IS IMPACTED BY PROPOSITION 218

ELECTROLIER(S) SPECIFIED HEREON SHALL NOT BE INSTALLED UNTIL THE LEGAL REQUIREMENTS OF PROPOSITION 218 HAVE BEEN SATISFIED. THE CITY INSPECTOR SHALL CONTACT THE BUREAU OF STREET LIGHTING, ENGINEERING AND TECHNICAL SERVICES DIVISION AT (213) 847-1431 FOR CONSTRUCTION CLEARANCE. UNDERGROUND FACILITIES MAY BE INSTALLED PRIOR TO PROPOSITION 218 CONSTRUCTION CLEARANCE.

NOTICE TO CITY INSPECTOR/CONTRACTOR NO. 3

THIS PROJECT IS SUBJECT TO "BUY AMERICA" REQUIREMENTS OF TITLE 23 UNITED STATES CODE, SECTION 313. CERTIFICATION OF COMPLIANCE IS REQUIRED TO BE SUBMITTED TO THE PROJECT INSPECTOR. SEE PROJECT SPECIFICATIONS.

NOTICE TO CITY INSPECTOR/CONTRACTOR NO. 4

CONTRACTOR SHALL NOTIFY THE STREET LIGHTING ENGINEER (TELEPHONE: 213-847-1459) A MINIMUM OF SEVEN (7) WORKING DAYS PRIOR TO WORKING ON ANY ELECTROLIER, WITH EXISTING TELECOMMUNICATION EQUIPMENT, WHICH REQUIRES REMOVAL AND/OR RELOCATION.

NOTICE TO CITY INSPECTOR/CONTRACTOR NO. 5

THE BUREAU OF STREET LIGHTING WILL NOT MAINTAIN NOR PERFORM THE STREET LIGHTING CONSTRUCTION ACCEPTANCE TEST OF THE ARCH LIGHTING SYSTEM ON THIS PLAN. BUREAU OF ENGINEERING SHALL VERIFY ALL EQUIPMENT LISTED ON THE PLAN AND PROVIDE STORAGE FOR THE SPARES.

SL-7948 3-22-2017
REVIEWED BY BUREAU OF STREET LIGHTING

T.O. 5 - Change Order Serial Sketch No. 18 - page 1 of 23

HNTB
HNTB Corporation
601 W. 5TH STREET SUITE 1000
LOS ANGELES, CALIFORNIA 90071
TEL (213) 403-1000 FAX (213) 403-1001

CITY OF LOS ANGELES DEPARTMENT OF PUBLIC WORKS
BUREAU OF ENGINEERING
ENGINEERING CITY OF LOS ANGELES

GARY LEE MOORE, P

ADDENDUM 5

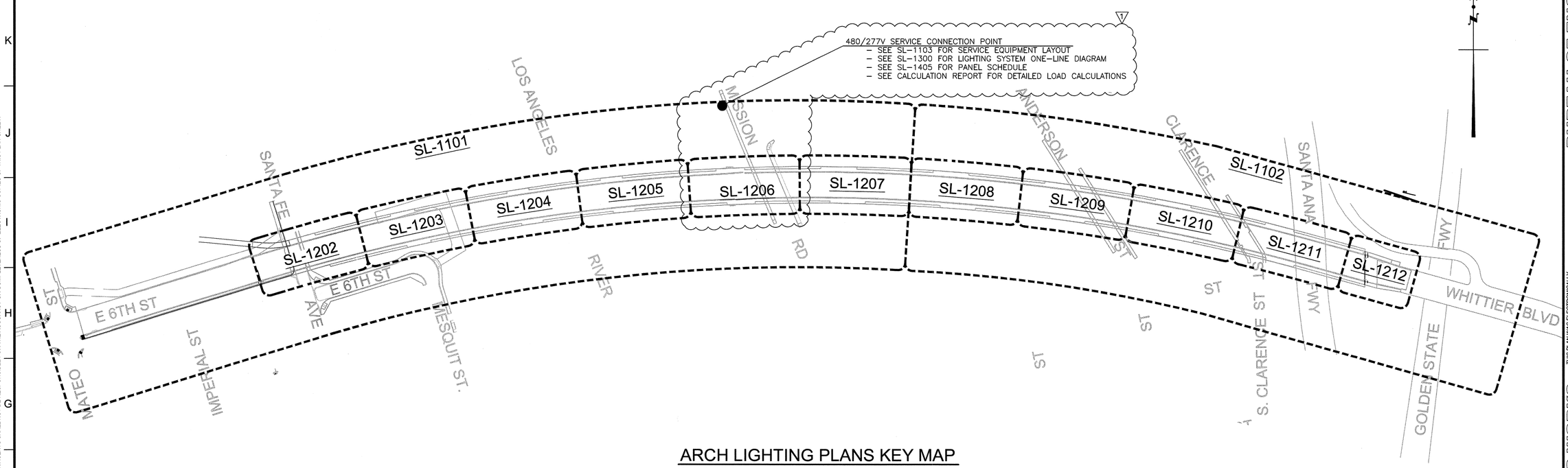

ARCH LIGHTING PLANS KEY MAP

SCALE: N.T.S

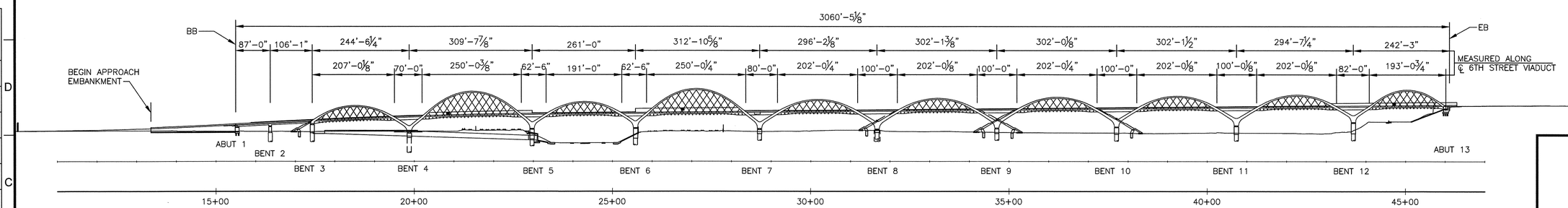

OVERALL ELEVATION

SCALE: N.T.S

SL-7948 3-22-17

REVIEWED BY BUREAU OF STREET LIGHTING

T.O. 5 - Change Order Serial Sketch No. 18 - page 2 of 23

HNTB

HNTB Corporation
601 W. 5TH STREET SUITE 1000
LOS ANGELES, CALIFORNIA 90071
TEL (213) 403-1000 FAX (213) 403-1001

CITY OF LOS ANGELES DEPARTMENT OF PUBLIC WORKS BUREAU OF ENGINEERING

ENGINEERING
CITY OF LOS ANGELES

NO.	REVISIONS:	DATE:	BY:
1	DESIGN CHANGES; CHANGE TO BOE APPROVAL	4/7/17	

STRUCTURE NO. 53C-2329

INDEX NO.

THIS PLAN WAS ELECTRONICALLY SIGNED AND STAMPED.

REGISTERED PROFESSIONAL ENGINEER CARL A. AYUBI No. 21786 Exp. 9/30/2018 ELECTRICAL STATE OF CALIFORNIA

GARY LEE MOORE, P.E. CITY ENGINEER
DESIGN GROUP
ENGINEER: ALEKSANNDRA GOROVAYA LIC. NO. 45318
DESIGNED BY: ALEKSANNDRA GOROVAYA
DRAWN BY: RON GREENLEE
CHECKED BY: CARL AYUBI
APPROVED BY:
DATE:

VERTICAL CONTROL: BM 12-04070, 1929 (NGVD 29) - 1985 ADJUSTMENT
HORIZONTAL CONTROL: GPS; PID AE 1704, EPOCH 1991.35

SHEET TITLE: ARCH LIGHTING PLANS
PROJECT: SIXTH STREET VIADUCT REPLACEMENT
ADDRESS: SIXTH STREET VIADUCT (WHITTIER BLVD) LOS ANGELES, CA

WORK ORDER NO. E700224L
DRAWING NO. SL-1100
SHEET OF SHEETS

THE CITY OF LOS ANGELES OR ITS OFFICERS OR AGENTS SHALL NOT BE RESPONSIBLE FOR THE ACCURACY OR COMPLETENESS OF ELECTRONIC COPIES OF THIS PLAN SHEET.

C:\caddlib\pw\pwwestcoast\rgreenlee\dms57861\SL-1100.dwg 3/13/17 08:58

REVISION DATES (DESIGN STAGE ONLY)

Sheet Version 3.0

ADDENDUM 5

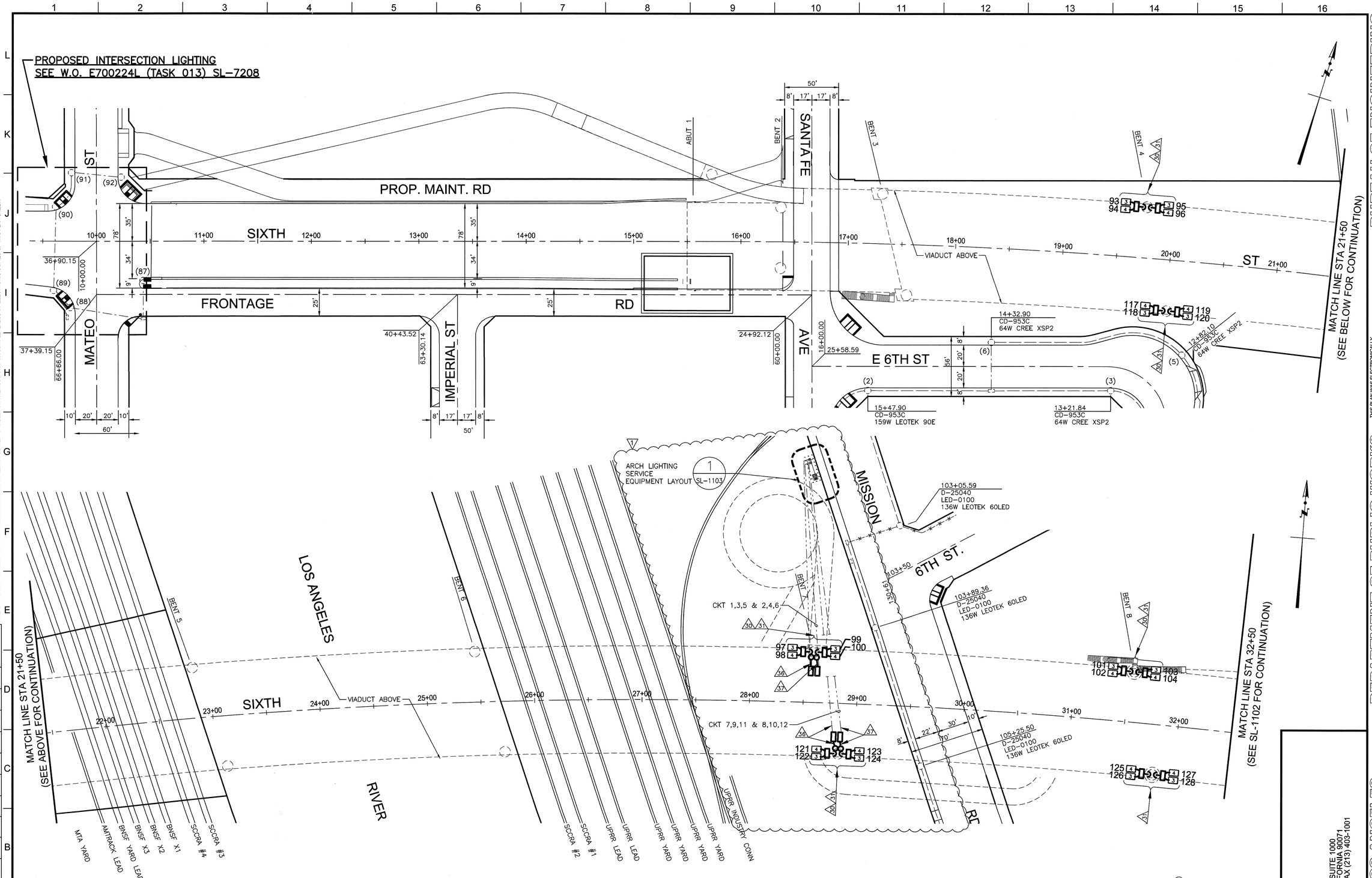

GRADE LEVEL ARCH LIGHTING PLAN

SCALE: 1" = 40'

SL-7948 3-22-17

REVIEWED BY BUREAU OF STREET LIGHTING

SCALE 1" = 40'-0"

T.O. 5 - Change Order Serial Sketch No. 18 - page 3 of 23

THE CITY OF LOS ANGELES OR ITS OFFICERS OR AGENTS SHALL NOT BE RESPONSIBLE FOR THE ACCURACY OR COMPLETENESS OF ELECTRONIC COPIES OF THIS PLAN SHEET.

C:\caddlib\pw\pwwestcoast\rgreenlee\dms57861\SL-1101.dwg 3/13/17 08:57

REVISION DATES (DESIGN STAGE ONLY)

Sheet Version 3.0

BUREAU OF ENGINEERING

ENGINEERING
CITY OF LOS ANGELES

NO.	REVISIONS:	DATE:	BY:
1	DESIGN CHANGES; CHANGE TO BOE APPROVAL	4/7/17	

STRUCTURE NO. 53C-2329

INDEX NO.

THIS PLAN WAS ELECTRONICALLY SIGNED AND STAMPED.

REGISTERED PROFESSIONAL ENGINEER CARL A. AYUBI No. 21760 Exp. 9/30/2018 ELECTRICAL STATE OF CALIFORNIA

DEPARTMENT OF PUBLIC WORKS

GARY LEE MOORE, P.E. CITY ENGINEER

DESIGN GROUP

ENGINEER: ALEKSANNDRA GOROVAYA LIC. NO. 45318

DESIGNED BY: ALEKSANNDRA GOROVAYA

DRAWN BY: RON GREENLEE

CHECKED BY: CARL AYUBI

APPROVED BY:

CITY OF LOS ANGELES

VERTICAL CONTROL: BM 12-04070,1929 (NGVD 29) - 1985 ADJUSTMENT

HORIZONTAL CONTROL: GPS; PID AE 1704, EPOCH 1991.35

SHEET TITLE: ARCH LIGHTING PLANS

PROJECT: SIXTH STREET VIADUCT REPLACEMENT

ADDRESS: SIXTH STREET VIADUCT (WHITTIER BLVD) LOS ANGELES, CA

HNTB

HNTB Corporation
601 W. 5TH STREET SUITE 1000
LOS ANGELES, CALIFORNIA 90071
TEL (213) 403-1000 FAX (213) 403-1001

WORK ORDER NO. E700224L

DRAWING NO. SL-1101

SHEET OF SHEETS

ADDENDUM 5

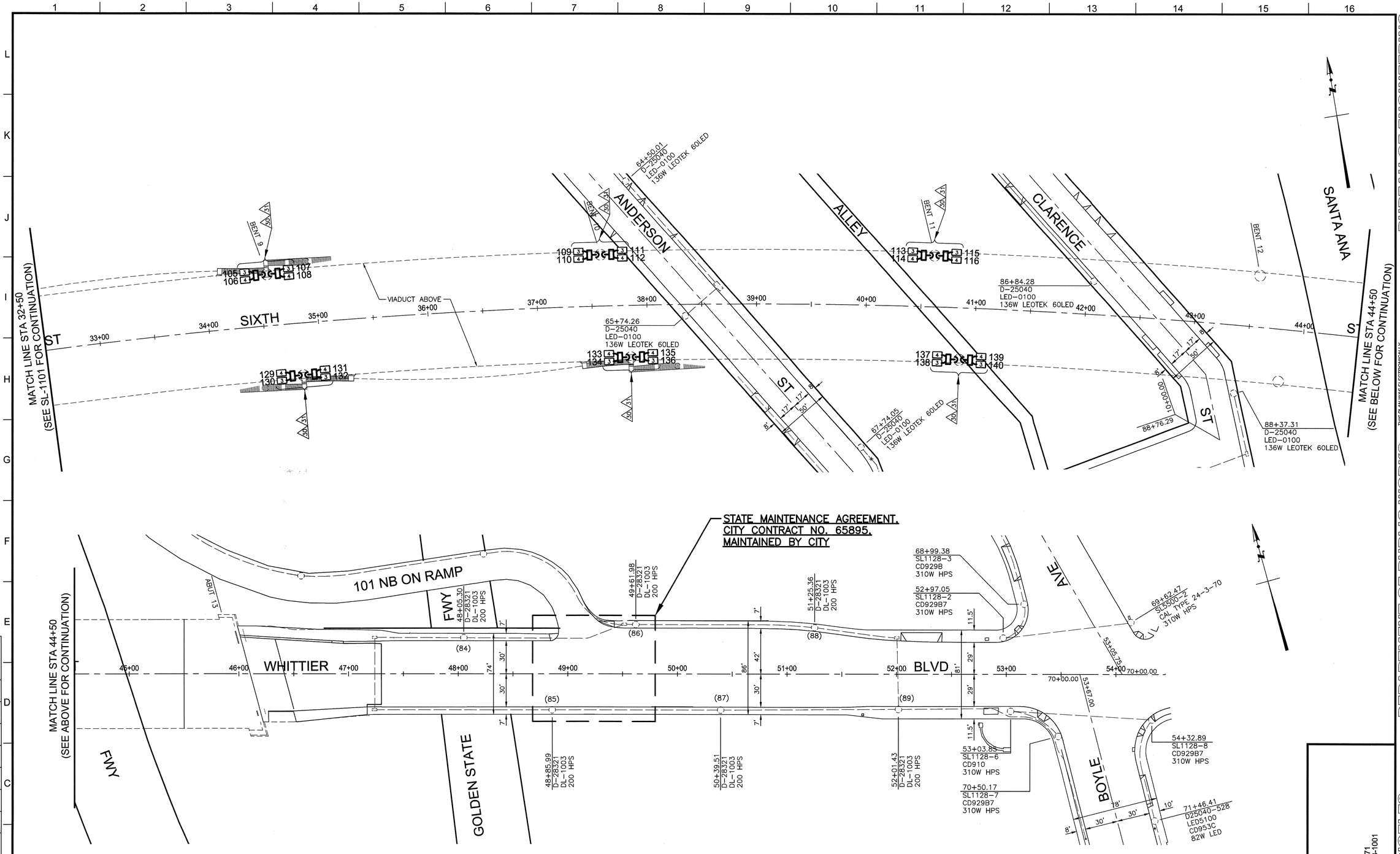

GRADE LEVEL ARCH LIGHTING PLAN

SCALE: 1" = 40'

1 / SL-1100

SL-7948 3-22-17

REVIEWED BY BUREAU OF STREET LIGHTING

40' 20' 0 40' 80'

SCALE 1" = 40'-0"

T.O. 5 - Change Order Serial Sketch No. 18 - page 4 of 23

HNTB

HNTB Corporation
601 W. 5TH STREET SUITE 1000
LOS ANGELES, CALIFORNIA 90071
TEL (213) 403-1000 FAX (213) 403-1001

CITY OF LOS ANGELES DEPARTMENT OF PUBLIC WORKS

BUREAU OF ENGINEERING

ENGINEERING
CITY OF LOS ANGELES

NO.	REVISIONS:	DATE:	BY:
1	DESIGN CHANGES; CHANGE TO BOE APPROVAL	4/7/17	

STRUCTURE NO. 53C-2329

INDEX NO.

THIS PLAN WAS ELECTRONICALLY SIGNED AND STAMPED.

REGISTERED PROFESSIONAL ENGINEER
CARL A. AYUBI
No. 21760
Exp. 9/30/2018
ELECTRICAL
STATE OF CALIFORNIA

GARY LEE MOORE, P.E. CITY ENGINEER

DESIGN GROUP

ENGINEER: ALEKSANDRA GOROVAYA LIC. NO. 45318
DESIGNED BY: ALEKSANDRA GOROVAYA
DRAWN BY: RON GREENLEE
CHECKED BY: CARL AYUBI
APPROVED BY:

VERTICAL CONTROL: BM 12-04070.1929 (NGVD 29) - 1985 ADJUSTMENT
HORIZONTAL CONTROL: GPS; PID AE 1704, EPOCH 1991.35

SHEET TITLE: ARCH LIGHTING PLANS

PROJECT: SIXTH STREET VIADUCT REPLACEMENT

ADDRESS: SIXTH STREET VIADUCT (WHITTIER BLVD) LOS ANGELES, CA

WORK ORDER NO. E700224L

DRAWING NO. SL-1102

SHEET OF SHEETS

THE CITY OF LOS ANGELES OR ITS OFFICERS OR AGENTS SHALL NOT BE RESPONSIBLE FOR THE ACCURACY OR COMPLETENESS OF ELECTRONIC COPIES OF THIS PLAN SHEET.

C:\caddlib\pw\pwwestcoast\rgreenlee\dms57861\SL-1101.dwg 3/13/17 08:57

REVISION DATES (DESIGN STAGE ONLY)

Sheet Version 3.0

ADDENDUM 5

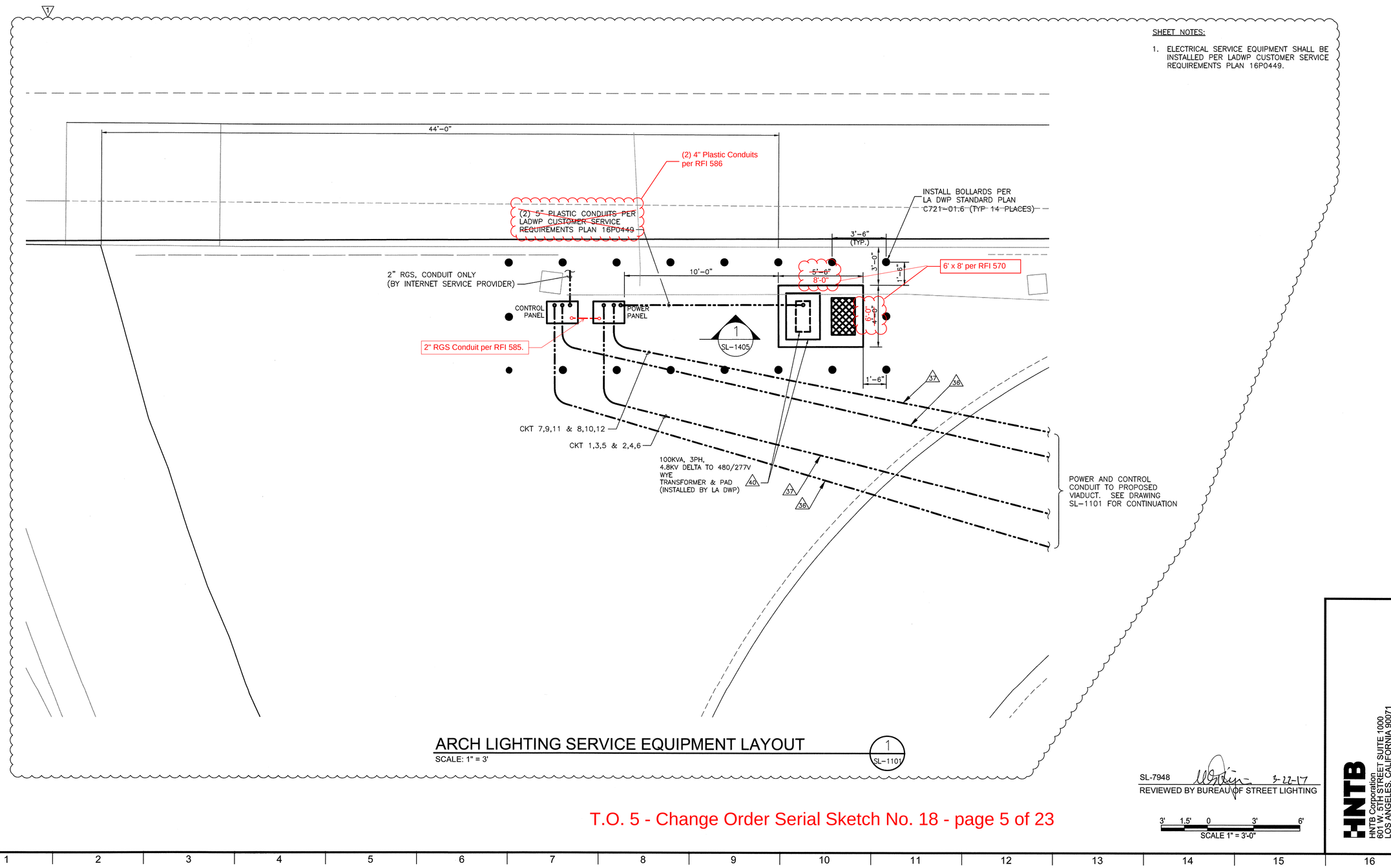

SHEET NOTES:

1. ELECTRICAL SERVICE EQUIPMENT SHALL BE INSTALLED PER LADWP CUSTOMER SERVICE REQUIREMENTS PLAN 16P0449.

ARCH LIGHTING SERVICE EQUIPMENT LAYOUT

SCALE: 1" = 3'

1 / SL-1101

SL-7948 3-22-17
REVIEWED BY BUREAU OF STREET LIGHTING

3' 1.5' 0 3' 6'
SCALE 1" = 3'-0"

T.O. 5 - Change Order Serial Sketch No. 18 - page 5 of 23

HNTB
HNTB Corporation
601 W. 5TH STREET SUITE 1000
LOS ANGELES, CALIFORNIA 90071
TEL (213) 403-1000 FAX (213) 403-1001

BUREAU OF ENGINEERING
ENGINEERING
CITY OF LOS ANGELES

NO.	REVISIONS:	DATE:	BY:
1	DESIGN CHANGES; CHANGE TO BOE APPROVAL	4/7/17	

STRUCTURE NO.
53C-2329

INDEX NO.

PROFESSIONAL ENGINEER * ALEKSANDRA A. GOROVAYA * No. 45318 * Exp. 6/30/2018 * ELECTRICAL * STATE OF CALIFORNIA

THIS PLAN WAS ELECTRONICALLY SIGNED AND STAMPED.

DEPARTMENT OF PUBLIC WORKS
CITY OF LOS ANGELES

GARY LEE MOORE, P.E.	CITY ENGINEER
DESIGN GROUP	DATE:
ENGINEER: ALEKSANDRA GOROVAYA	LIC. NO. 45318
DESIGNED BY: ALEKSANDRA GOROVAYA	
DRAWN BY: RON GREENLEE	
CHECKED BY: CARL AYUBI	
APPROVED BY:	

VERTICAL CONTROL: BM 12-04070,1928 (NGVD 29) - 1985 ADJUSTMENT
HORIZONTAL CONTROL: GPS; PID AE 1704; EPOCH 1991.35

SHEET TITLE: ARCH LIGHTING PLANS

PROJECT: SIXTH STREET VIADUCT REPLACEMENT

ADDRESS: SIXTH STREET VIADUCT (WHITTIER BLVD) LOS ANGELES, CA

WORK ORDER NO.
E700224L

DRAWING NO.
SL-1103

SHEET OF SHEETS

THE CITY OF LOS ANGELES OR ITS OFFICERS OR AGENTS SHALL NOT BE RESPONSIBLE FOR THE ACCURACY OR COMPLETENESS OF ELECTRONIC COPIES OF THIS PLAN SHEET.

REVISION DATES: (DESIGN STAGE ONLY)

C:\caddlib\pw\pwwestcoast\greenlee\dms57861\SL-1103.dwg 3/13/17 08:56

Sheet Version 3.0

ADDENDUM 5

NOTES FOR SHEETS SL-1202 THROUGH SL-212:

1. FOR ONE-LINE DIAGRAMS SEE SL-1300.
2. UNLESS NOTED OTHERWISE, INSTALL CONDUIT COMBINATION EXPANSION-DEFLECTION FITTING PER CALTRANS STD. PLAN NO. ES-9B, DETAIL X-Y AT EACH BRIDGE EXPANSION JOINT, HINGE, OR ABUTMENT.

BENT 2
BENT 3
ABUT 1
SIXTH ST
16+00
17+00
18+00
1 SL-1401 SIMILAR
CKT 1,3,5
CKT 7,9,11
(TYP.)
88'
34'
10'
2'
MATCH LINE STA 18+50
(SEE SL-1203 FOR CONTINUATION)

ENLARGED VIADUCT LEVEL ARCH LIGHTING PLAN

SCALE: 1" = 10'

1 SL-1100

SL-7948 3-27-2017
REVIEWED BY BUREAU OF STREET LIGHTING

10' 5' 0 10' 20'
SCALE 1" = 10'-0"

THE CITY OF LOS ANGELES OR ITS OFFICERS OR AGENTS SHALL NOT BE RESPONSIBLE FOR THE ACCURACY OR COMPLETENESS OF ELECTRONIC COPIES OF THIS PLAN SHEET.

C:\caddlib\pw\pwwestcoast\rgreenlee\dms57861\SL-1200.dwg 3/13/17 08:55

Sheet Version 3.0

REVISION DATES (DESIGN STAGE ONLY)

T.O. 5 - Change Order Serial Sketch No. 18 - page 6 of 23

HNTB
HNTB Corporation
601 W. 5TH STREET SUITE 1000
LOS ANGELES, CALIFORNIA 90071
TEL (213) 403-1000 FAX (213) 403-1001

BUREAU OF ENGINEERING
ENGINEERING
CITY OF LOS ANGELES

NO.	REVISIONS:	DATE:	BY:
1	DESIGN CHANGES; CHANGE TO BOE APPROVAL	4/7/17	

STRUCTURE NO. 53C-2329

INDEX NO.

THIS PLAN WAS ELECTRONICALLY SIGNED AND STAMPED.

PROFESSIONAL ENGINEER — ANDREW A. MYHUB — No. 617980 — Exp. 6/30/2018 — ELECTRICAL — STATE OF CALIFORNIA

CITY OF LOS ANGELES DEPARTMENT OF PUBLIC WORKS

GARY LEE MOORE, P.E. CITY ENGINEER
DESIGN GROUP

ENGINEER:	ALEKSANNDRA GOROVAYA	LIC. NO. 45318
DESIGNED BY:	ALEKSANNDRA GOROVAYA	DATE:
DRAWN BY:	RON GREENLEE	
CHECKED BY:	CARL AYUBI	
APPROVED BY:		

VERTICAL CONTROL: BM 12-4407(1.1929 (NGVD 29)) - 1985 ADJUSTMENT
HORIZONTAL CONTROL: GPS, NAD 83, 2010.0 EPOCH 1991.35

SHEET TITLE: ARCH LIGHTING PLANS

PROJECT: SIXTH STREET VIADUCT REPLACEMENT

ADDRESS: SIXTH STREET VIADUCT (WHITTIER BLVD) LOS ANGELES, CA

WORK ORDER NO. E700224L

DRAWING NO. SL-1202

SHEET OF SHEETS

ADDENDUM 5

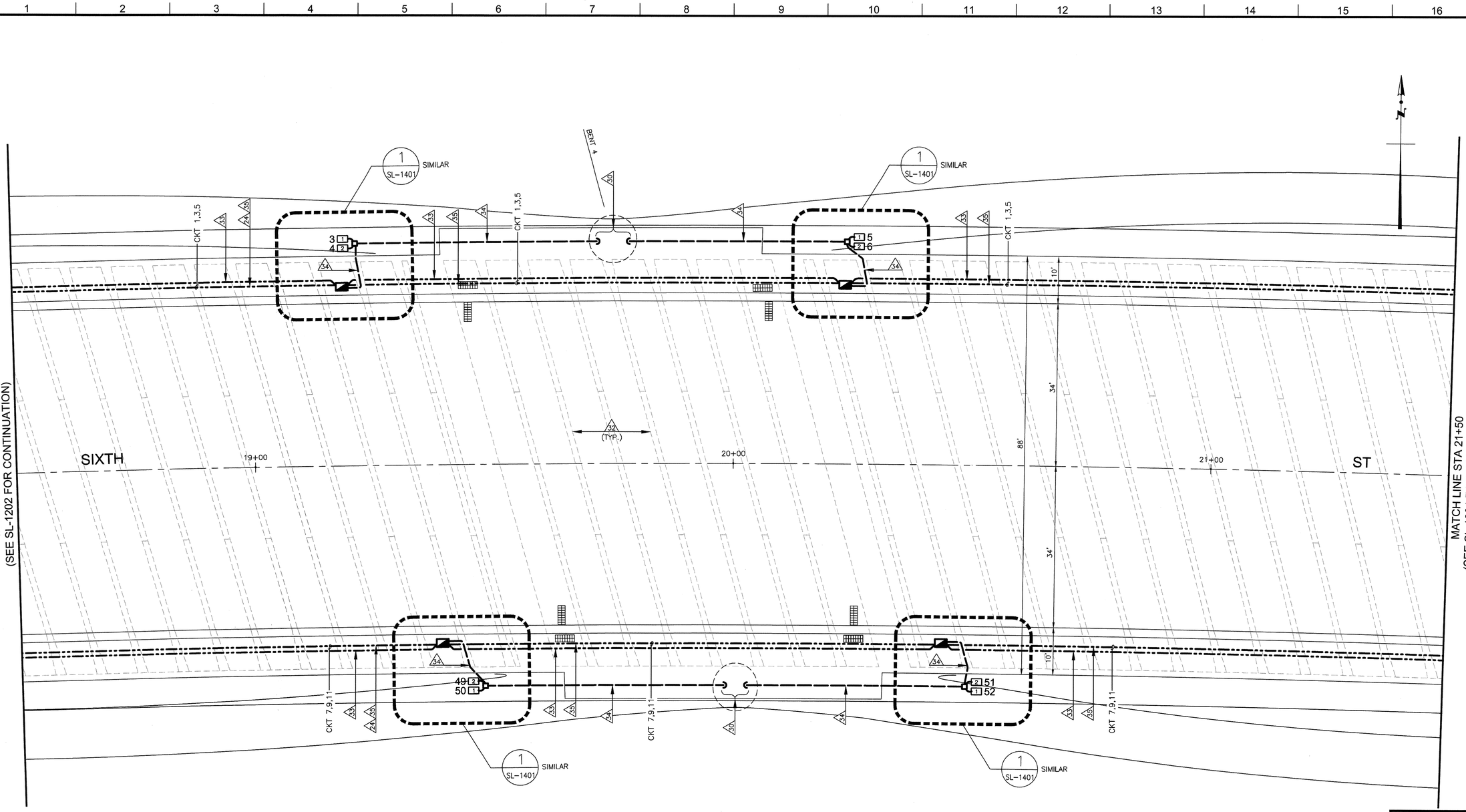

ENLARGED VIADUCT LEVEL ARCH LIGHTING PLAN

SCALE: 1" = 10'

1 SL-1100

SL-7948 3-22-2017

REVIEWED BY BUREAU OF STREET LIGHTING

10' 5' 0 10' 20'

SCALE 1" = 10'-0"

T.O. 5 - Change Order Serial Sketch No. 18 - page 7 of 23

HNTB

HNTB Corporation
601 W. 5TH STREET SUITE 1000
LOS ANGELES, CALIFORNIA 90071
TEL (213) 403-1000 FAX (213) 403-1001

CITY OF LOS ANGELES DEPARTMENT OF PUBLIC WORKS BUREAU OF ENGINEERING

ENGINEERING
CITY OF LOS ANGELES

NO.	REVISIONS:	DATE:	BY:
1	DESIGN CHANGES; CHANGE TO BOE APPROVAL	4/7/17	

STRUCTURE NO. 53C-2329

INDEX NO.

REGISTERED PROFESSIONAL ENGINEER CARL A. AYUBI No. 21780 Exp. 9/30/2018 ELECTRICAL STATE OF CALIFORNIA

THIS PLAN WAS ELECTRONICALLY SIGNED AND STAMPED.

GARY LEE MOORE, P.E.
CITY ENGINEER

DESIGN GROUP

ENGINEER: ALEKSANNDRA GOROVAYA
DESIGNED BY: ALEKSANNDRA GOROVAYA LIC. NO. 45318
DRAWN BY: RON GREENLEE
CHECKED BY: CARL AYUBI
APPROVED BY:
DATE:

VERTICAL CONTROL: BM 12-04070,1929 (NGVD 29) - 1985 ADJUSTMENT
HORIZONTAL CONTROL: GPS; PID AE 1704, EPOCH 1991.35

SHEET TITLE: ARCH LIGHTING PLANS

PROJECT: SIXTH STREET VIADUCT REPLACEMENT

ADDRESS: SIXTH STREET VIADUCT (WHITTIER BLVD) LOS ANGELES, CA

WORK ORDER NO. E700224L

DRAWING NO. SL-1203

SHEET OF SHEETS

THE CITY OF LOS ANGELES OR ITS OFFICERS OR AGENTS SHALL NOT BE RESPONSIBLE FOR THE ACCURACY OR COMPLETENESS OF ELECTRONIC COPIES OF THIS PLAN SHEET.

C:\caddlib\pw\pwwestcoast\rgreenlee\dms57861\SL-1200.dwg 3/13/17 08:55

REVISION DATES (DESIGN STAGE ONLY)

Sheet Version 3.0

ADDENDUM 5

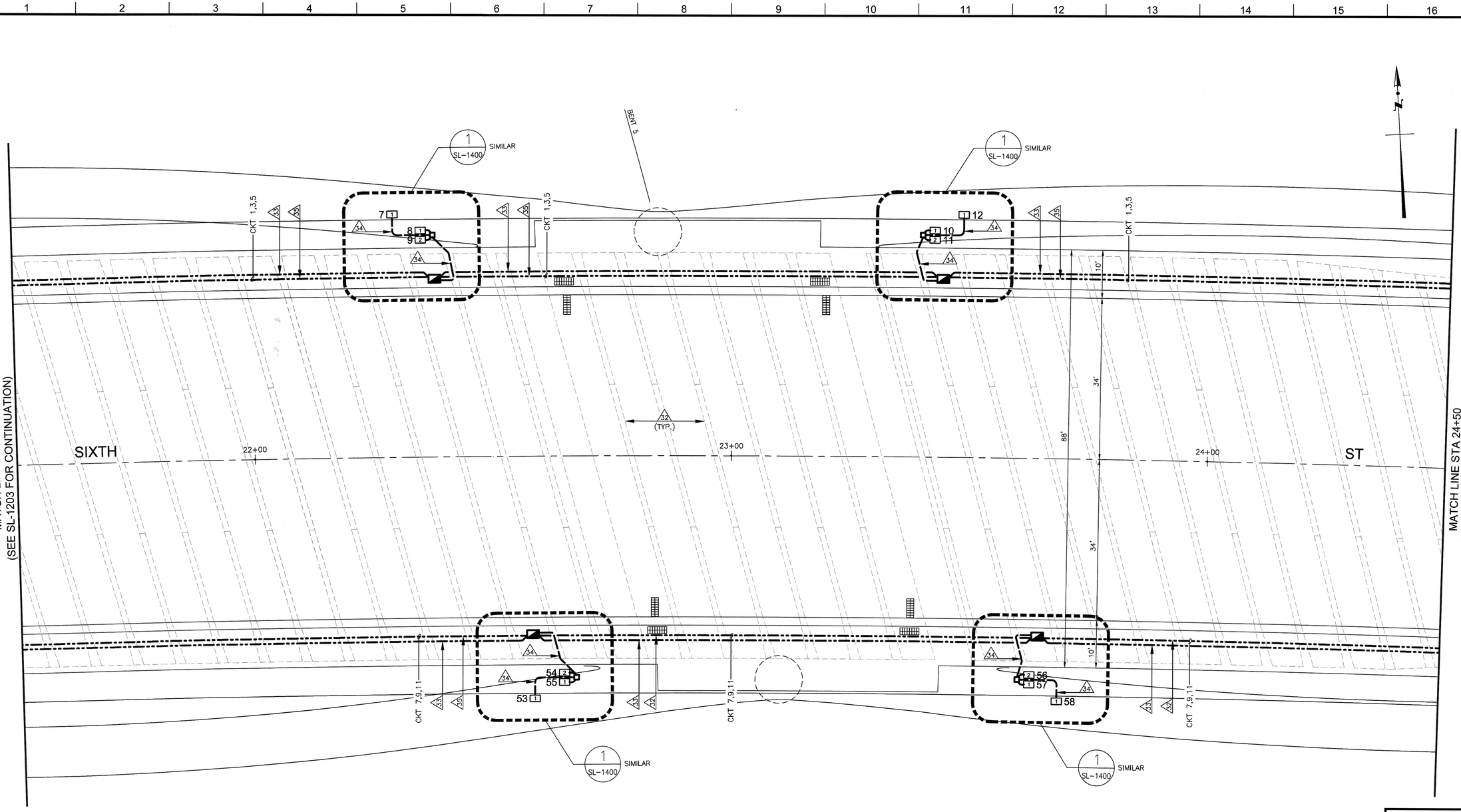

ENLARGED VIADUCT LEVEL ARCH LIGHTING PLAN

SCALE: 1" = 10'

1 SL-1100

SL-7948 3-22-2017

REVIEWED BY BUREAU OF STREET LIGHTING

10' 5' 0 10' 20'

SCALE 1" = 10'-0"

T.O. 5 - Change Order Serial Sketch No. 18 - page 8 of 23

HNTB

HNTB Corporation
601 W. 5TH STREET SUITE 1000
LOS ANGELES, CALIFORNIA 90071
TEL (213) 403-1000 FAX (213) 403-1001

CITY OF LOS ANGELES DEPARTMENT OF PUBLIC WORKS BUREAU OF ENGINEERING

ENGINEERING
CITY OF LOS ANGELES

NO.	REVISIONS:	DATE:	BY:
1	DESIGN CHANGES; CHANGE TO BOE APPROVAL	4/7/17	

STRUCTURE NO. 53C-2329

INDEX NO.

REGISTERED PROFESSIONAL ENGINEER CARL A. AYUBI No. 21780 Exp. 9/30/2018 ELECTRICAL STATE OF CALIFORNIA

THIS PLAN WAS ELECTRONICALLY SIGNED AND STAMPED.

GARY LEE MOORE, P.E. CITY ENGINEER

DESIGN GROUP

ENGINEER: ALEKSANNDRA GOROVAYA LIC. NO. 45318

DESIGNED BY: ALEKSANNDRA GOROVAYA

DRAWN BY: RON GREENLEE

CHECKED BY: CARL AYUBI

APPROVED BY:

DATE:

VERTICAL CONTROL: BM 12-04070,1929 (NGVD 29) - 1985 ADJUSTMENT

HORIZONTAL CONTROL: GPS; PID AE 1704, EPOCH 1991.35

SHEET TITLE: ARCH LIGHTING PLANS

PROJECT: SIXTH STREET VIADUCT REPLACEMENT

ADDRESS: SIXTH STREET VIADUCT (WHITTIER BLVD) LOS ANGELES, CA

WORK ORDER NO. E700224L

DRAWING NO. SL-1204

SHEET OF SHEETS

THE CITY OF LOS ANGELES OR ITS OFFICERS OR AGENTS SHALL NOT BE RESPONSIBLE FOR THE ACCURACY OR COMPLETENESS OF ELECTRONIC COPIES OF THIS PLAN SHEET.

REVISION DATES (DESIGN STAGE ONLY)

C:\caddlib\pw\pwwestcoast\rgreenlee\dms57861\SL-1200.dwg 3/13/17 08:55

Sheet Version 3.0

ADDENDUM 5

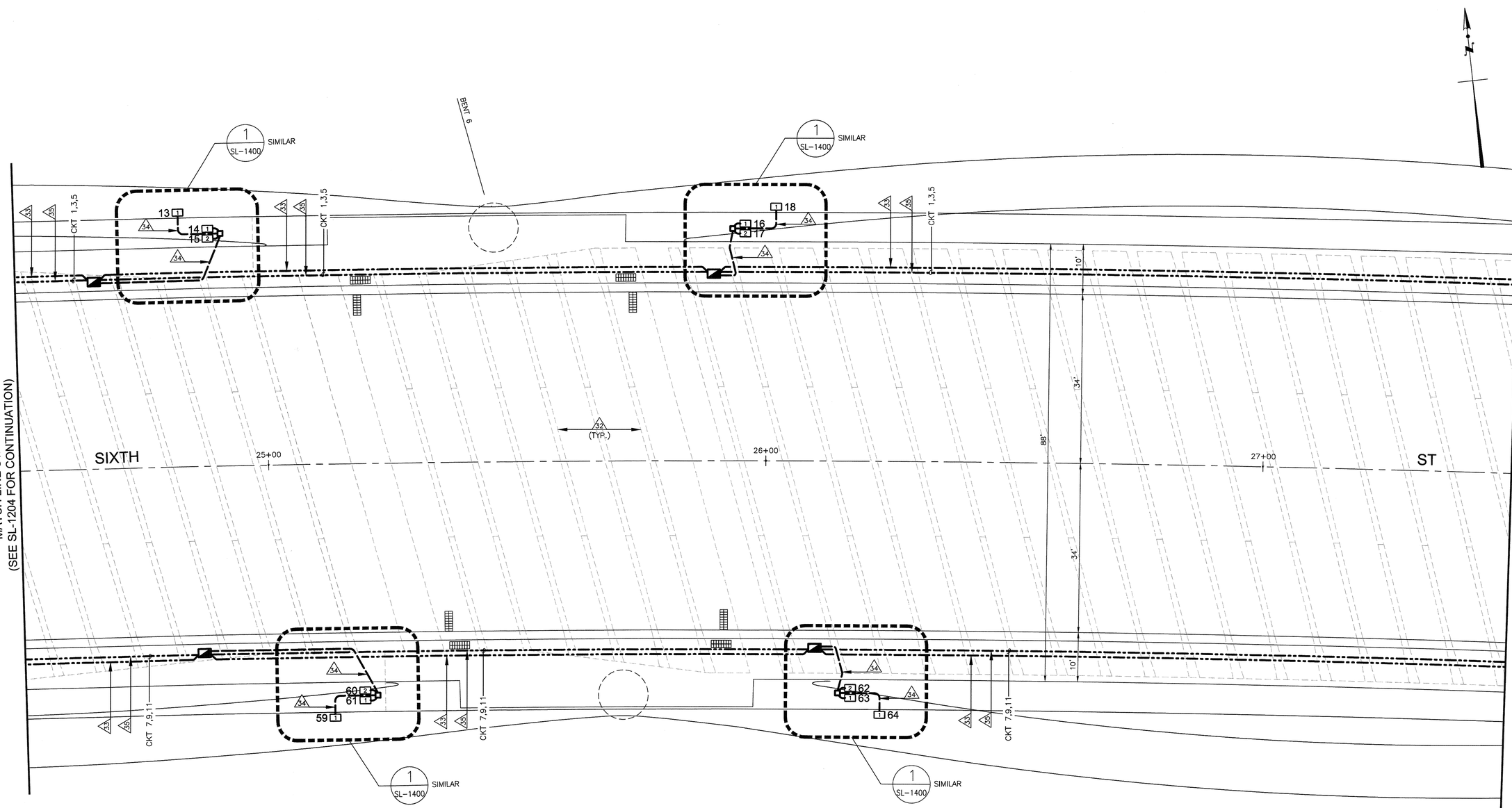

ENLARGED VIADUCT LEVEL ARCH LIGHTING PLAN

SCALE: 1" = 10'

SL-7948 3-22-2017

REVIEWED BY BUREAU OF STREET LIGHTING

10' 5' 0 10' 20'

SCALE 1" = 10'-0"

T.O. 5 - Change Order Serial Sketch No. 18 - page 9 of 23

THE CITY OF LOS ANGELES OR ITS OFFICERS OR AGENTS SHALL NOT BE RESPONSIBLE FOR THE ACCURACY OR COMPLETENESS OF ELECTRONIC COPIES OF THIS PLAN SHEET.

C:\caddlib\pw\pwwestcoast\rgreenlee\dms57861\SL-1200.dwg 3/13/17 08:54

REVISION DATES (DESIGN STAGE ONLY)

Sheet Version 3.0

HNTB

HNTB Corporation
601 W. 5TH STREET SUITE 1000
LOS ANGELES, CALIFORNIA 90071
TEL (213) 403-1000 FAX (213) 403-1001

CITY OF LOS ANGELES DEPARTMENT OF PUBLIC WORKS

BUREAU OF ENGINEERING

ENGINEERING
CITY OF LOS ANGELES

NO.	REVISIONS:	DATE:	BY:
1	DESIGN CHANGES; CHANGE TO BOE APPROVAL	4/7/17	

STRUCTURE NO. 53C-2329

INDEX NO.

THIS PLAN WAS ELECTRONICALLY SIGNED AND STAMPED.

REGISTERED PROFESSIONAL ENGINEER
CARL A. AYUBI
No. 21780
Exp. 9/30/2018
ELECTRICAL
STATE OF CALIFORNIA

GARY LEE MOORE, P.E. CITY ENGINEER

DESIGN GROUP

ENGINEER: ALEKSANNDRA GOROVAYA
DESIGNED BY: ALEKSANNDRA GOROVAYA
DRAWN BY: RON GREENLEE
CHECKED BY: CARL AYUBI
APPROVED BY:

DATE:
LIC. NO. 45318

VERTICAL CONTROL: BM 12-04070,1929 (NGVD 29) - 1985 ADJUSTMENT
HORIZONTAL CONTROL: GPS; PID AE 1704, EPOCH 1991.35

SHEET TITLE: ARCH LIGHTING PLANS

PROJECT: SIXTH STREET VIADUCT REPLACEMENT

ADDRESS: SIXTH STREET VIADUCT (WHITTIER BLVD)
LOS ANGELES, CA

WORK ORDER NO. E700224L

DRAWING NO. SL-1205

SHEET OF SHEETS

ADDENDUM 5

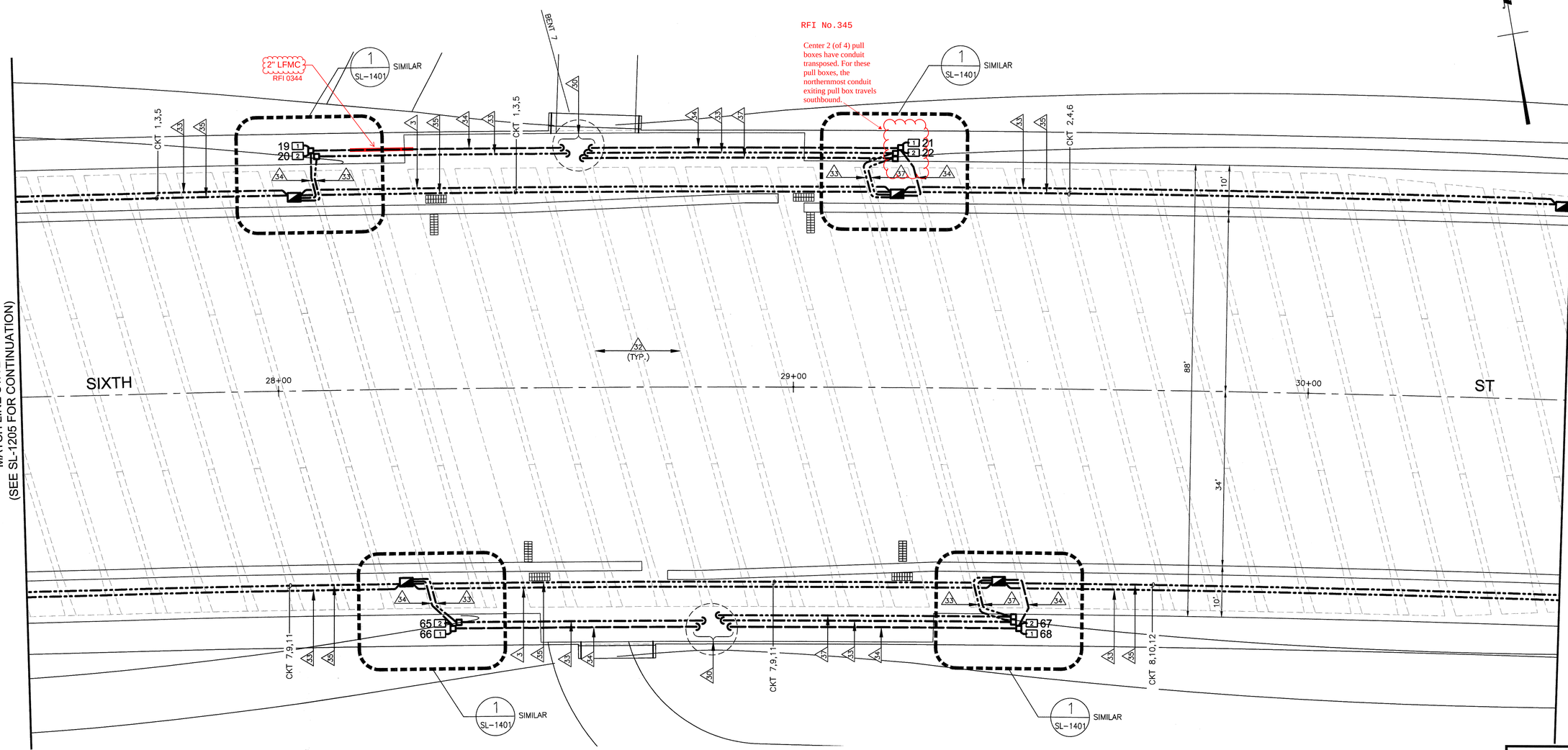

ENLARGED VIADUCT LEVEL ARCH LIGHTING PLAN

SCALE: 1" = 10'

1 SL-1100

SL-7948 3-22-17
REVIEWED BY BUREAU OF STREET LIGHTING

10' 5' 0 10' 20'
SCALE 1" = 10'-0"

T.O. 5 - Change Order Serial Sketch No. 18 - page 10 of 23

HNTB
HNTB Corporation
601 W. 5TH STREET SUITE 1000
LOS ANGELES, CALIFORNIA 90071
TEL (213) 403-1000 FAX (213) 403-1001

CITY OF LOS ANGELES DEPARTMENT OF PUBLIC WORKS BUREAU OF ENGINEERING

ENGINEERING
CITY OF LOS ANGELES

NO.	REVISIONS:	DATE:	BY:
1	DESIGN CHANGES; CHANGE TO BOE APPROVAL	4/7/17	

STRUCTURE NO. 53C-2329

INDEX NO.

THIS PLAN WAS ELECTRONICALLY SIGNED AND STAMPED.

REGISTERED PROFESSIONAL ENGINEER
CARL A. AYUBI
No. 21786
Exp. 9/30/2018
ELECTRICAL
STATE OF CALIFORNIA

GARY LEE MOORE, P.E. CITY ENGINEER
DESIGN GROUP
DATE:
ENGINEER: ALEKSANNDRA GOROVAYA
DESIGNED BY: ALEKSANNDRA GOROVAYA LIC. NO. 45318
DRAWN BY: RON GREENLEE
CHECKED BY: CARL AYUBI
APPROVED BY:

VERTICAL CONTROL: BM 12-04070,1929 (NGVD 29) - 1985 ADJUSTMENT
HORIZONTAL CONTROL: GPS; PID AE 1704, EPOCH 1991.35

SHEET TITLE: ARCH LIGHTING PLANS
PROJECT: SIXTH STREET VIADUCT REPLACEMENT
ADDRESS: SIXTH STREET VIADUCT (WHITTIER BLVD) LOS ANGELES, CA

WORK ORDER NO. E700224L
DRAWING NO. SL-1206
SHEET OF SHEETS

THE CITY OF LOS ANGELES OR ITS OFFICERS OR AGENTS SHALL NOT BE RESPONSIBLE FOR THE ACCURACY OR COMPLETENESS OF ELECTRONIC COPIES OF THIS PLAN SHEET.

C:\caddlib\pw\pwwestcoast\rgreenlee\dms57861\SL-1200.dwg 3/13/17 08:54

REVISION DATES (DESIGN STAGE ONLY)

Sheet Version 3.0

ADDENDUM 5

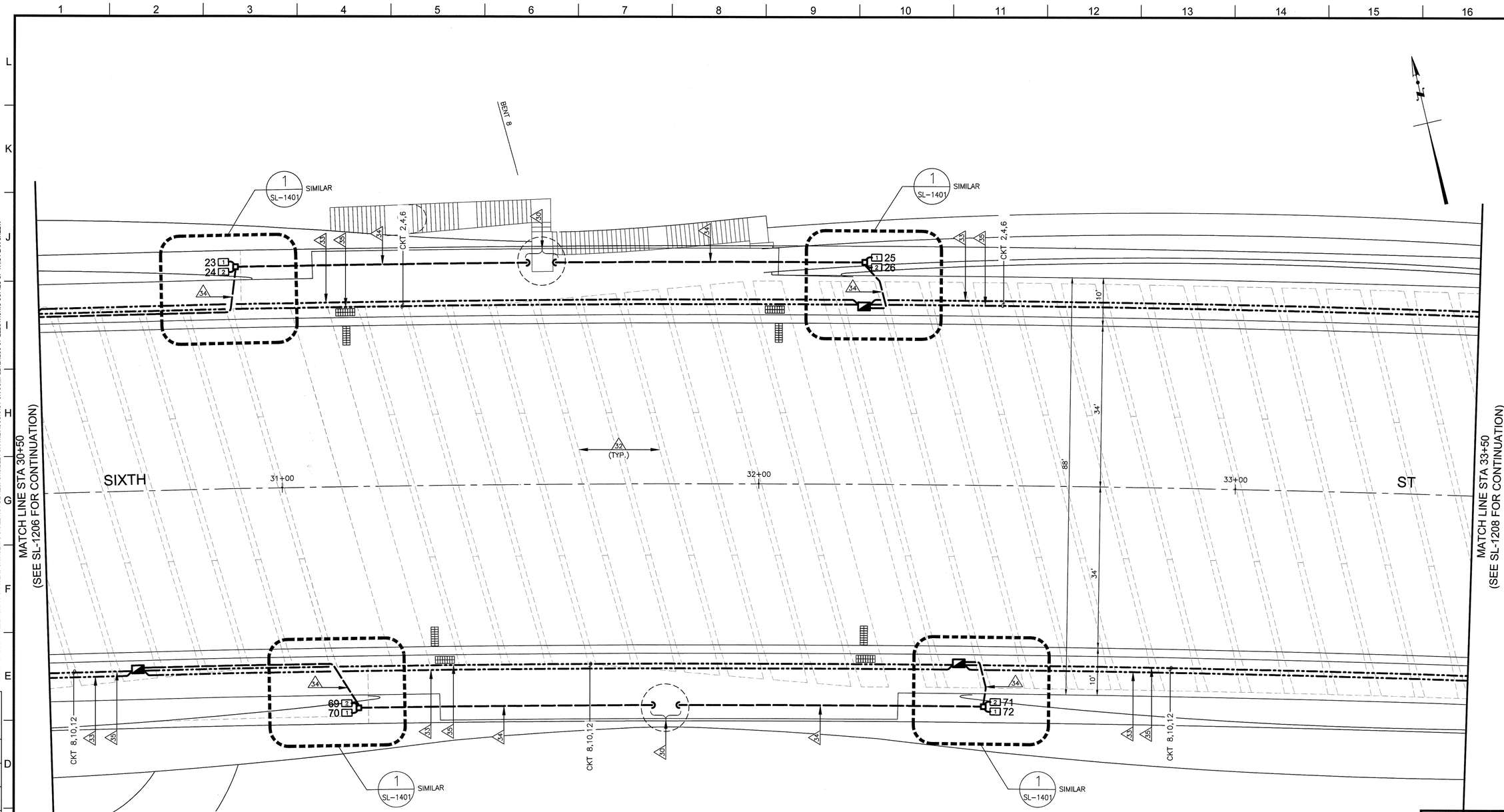

ENLARGED VIADUCT LEVEL ARCH LIGHTING PLAN (1 / SL-1100)

SCALE: 1" = 10'

SL-7948 3-22-17

REVIEWED BY BUREAU OF STREET LIGHTING

10' 5' 0 10' 20'

SCALE 1" = 10'-0"

T.O. 5 - Change Order Serial Sketch No. 18 - page 11 of 23

HNTB

HNTB Corporation
601 W. 5TH STREET SUITE 1000
LOS ANGELES, CALIFORNIA 90071
TEL (213) 403-1000 FAX (213) 403-1001

CITY OF LOS ANGELES DEPARTMENT OF PUBLIC WORKS BUREAU OF ENGINEERING

ENGINEERING CITY OF LOS ANGELES

NO.	REVISIONS:	DATE:	BY:
1	DESIGN CHANGES; CHANGE TO BOE APPROVAL	4/7/17	

STRUCTURE NO. 53C-2329

INDEX NO.

THIS PLAN WAS ELECTRONICALLY SIGNED AND STAMPED.

REGISTERED PROFESSIONAL ENGINEER CARL A. AYUBI No. 21768 Exp. 9/30/2018 ELECTRICAL STATE OF CALIFORNIA

GARY LEE MOORE, P.E. CITY ENGINEER

DESIGN GROUP

ENGINEER: ALEKSANNDRA GOROVAYA LIC. NO. 45318

DESIGNED BY: ALEKSANNDRA GOROVAYA

DRAWN BY: RON GREENLEE

CHECKED BY: CARL AYUBI

APPROVED BY:

DATE:

VERTICAL CONTROL: BM 12-04070.1929 (NGVD 29) - 1985 ADJUSTMENT

HORIZONTAL CONTROL: GPS; PID AE 1704, EPOCH 1991.35

SHEET TITLE: ARCH LIGHTING PLANS

PROJECT: SIXTH STREET VIADUCT REPLACEMENT

ADDRESS: SIXTH STREET VIADUCT (WHITTIER BLVD) LOS ANGELES, CA

WORK ORDER NO. E700224L

DRAWING NO. SL-1207

SHEET OF SHEETS

THE CITY OF LOS ANGELES OR ITS OFFICERS OR AGENTS SHALL NOT BE RESPONSIBLE FOR THE ACCURACY OR COMPLETENESS OF ELECTRONIC COPIES OF THIS PLAN SHEET.

C:\caddlib\pw\pwwestcoast\rgreenlee\dms57861\SL-1200.dwg 3/13/17 08:54

REVISION DATES (DESIGN STAGE ONLY)

Sheet Version 3.0

ADDENDUM 5

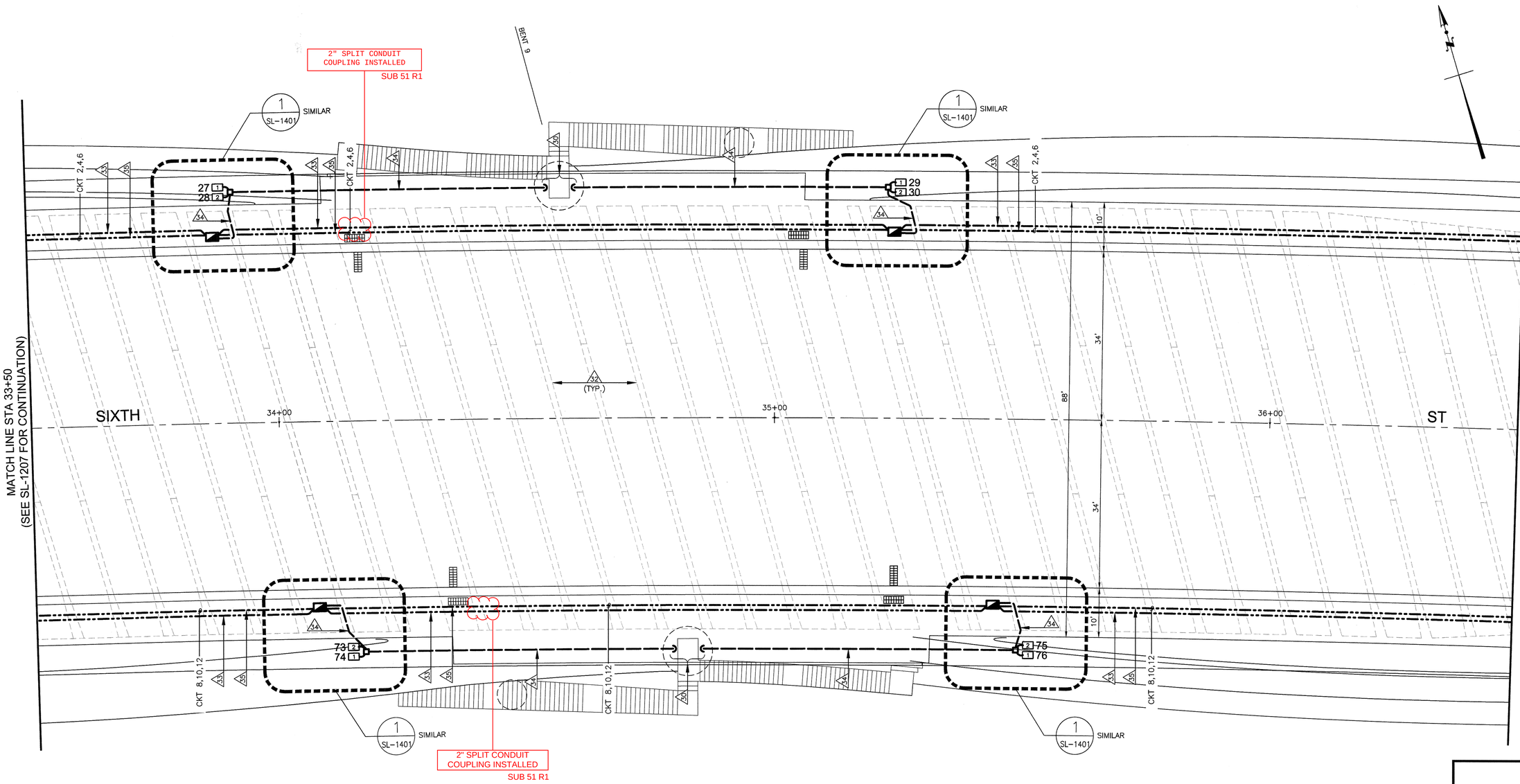

ENLARGED VIADUCT LEVEL ARCH LIGHTING PLAN (1 / SL-1100)

SCALE: 1" = 10'

SL-7948 3-22-17

REVIEWED BY BUREAU OF STREET LIGHTING

10' 5' 0 10' 20'

SCALE 1" = 10'-0"

T.O. 5 - Change Order Serial Sketch No. 18 - page 12 of 23

HNTB

HNTB Corporation
601 W. 5TH STREET SUITE 1000
LOS ANGELES, CALIFORNIA 90071
TEL (213) 403-1000 FAX (213) 403-1001

CITY OF LOS ANGELES DEPARTMENT OF PUBLIC WORKS

BUREAU OF ENGINEERING

ENGINEERING
CITY OF LOS ANGELES

NO.	REVISIONS:	DATE:	BY:
1	DESIGN CHANGES; CHANGE TO BOE APPROVAL	4/7/17	

STRUCTURE NO. 53C-2329

INDEX NO.

THIS PLAN WAS ELECTRONICALLY SIGNED AND STAMPED.

REGISTERED PROFESSIONAL ENGINEER CARL A. AYUBI No. 21780 Exp. 9/30/2018 ELECTRICAL STATE OF CALIFORNIA

GARY LEE MOORE, P.E. CITY ENGINEER

DESIGN GROUP

ENGINEER: ALEKSANNDRA GOROVAYA LIC. NO. 45318

DESIGNED BY: ALEKSANNDRA GOROVAYA

DRAWN BY: RON GREENLEE

CHECKED BY: CARL AYUBI

APPROVED BY:

DATE:

VERTICAL CONTROL: BM 12-04070, 1929 (NGVD 29) - 1985 ADJUSTMENT

HORIZONTAL CONTROL: GPS; PID AE 1704, EPOCH 1991.35

SHEET TITLE: ARCH LIGHTING PLANS

PROJECT: SIXTH STREET VIADUCT REPLACEMENT

ADDRESS: SIXTH STREET VIADUCT (WHITTIER BLVD) LOS ANGELES, CA

WORK ORDER NO. E700224L

DRAWING NO. SL-1208

SHEET OF SHEETS

THE CITY OF LOS ANGELES OR ITS OFFICERS OR AGENTS SHALL NOT BE RESPONSIBLE FOR THE ACCURACY OR COMPLETENESS OF ELECTRONIC COPIES OF THIS PLAN SHEET.

C:\caddlib\pw\pwwestcoast\rgreenlee\dms57861\SL-1200.dwg 3/13/17 08:53

REVISION DATES (DESIGN STAGE ONLY)

Sheet Version 3.0

ADDENDUM 5

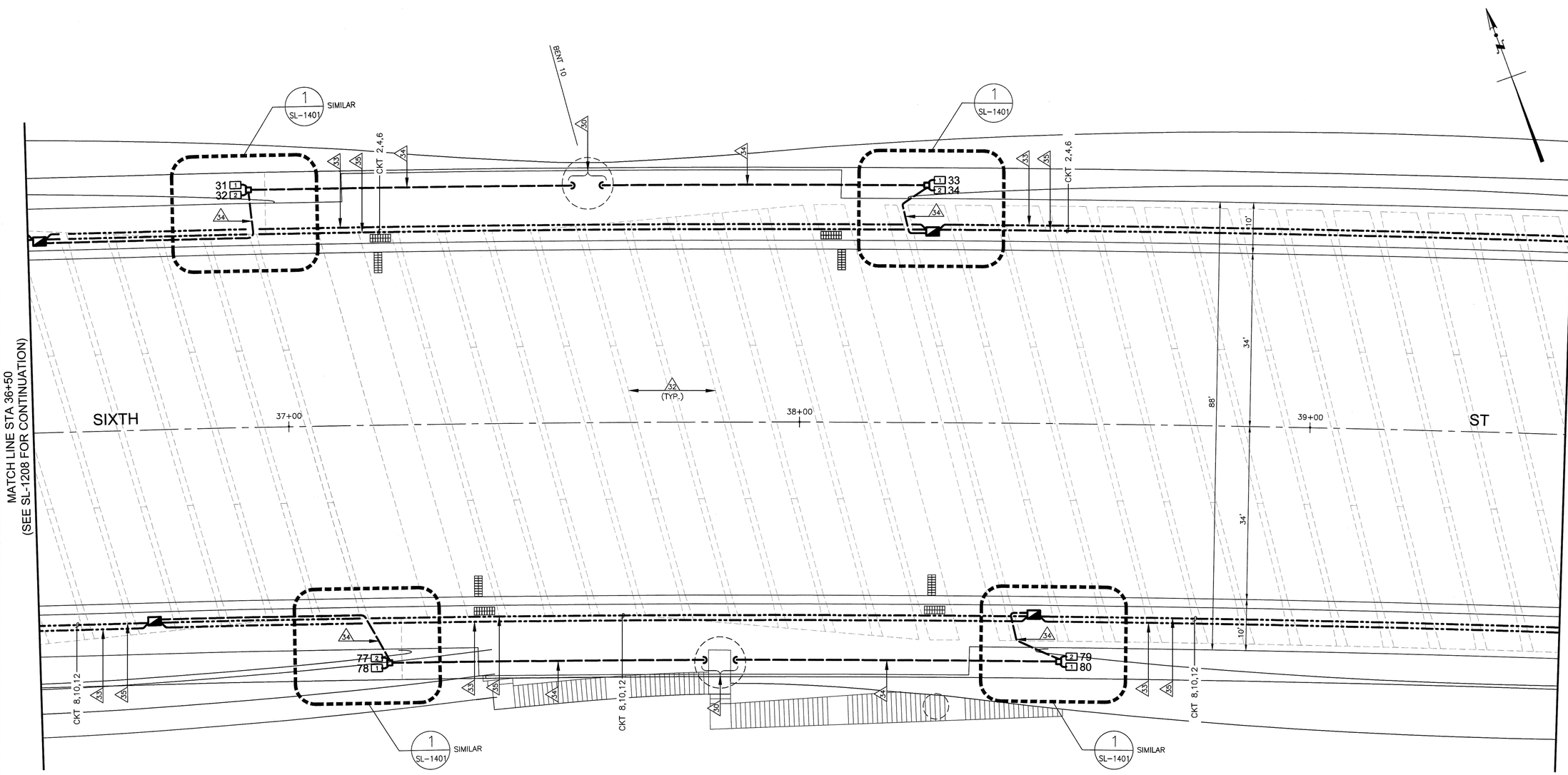

ENLARGED VIADUCT LEVEL ARCH LIGHTING PLAN

SCALE: 1" = 10'

SL-1100

SL-7948 3-22-17
REVIEWED BY BUREAU OF STREET LIGHTING

10' 5' 0 10' 20'
SCALE 1" = 10'-0"

T.O. 5 - Change Order Serial Sketch No. 18 - page 13 of 23

HNTB
HNTB Corporation
601 W. 5TH STREET SUITE 1000
LOS ANGELES, CALIFORNIA 90071
TEL (213) 403-1000 FAX (213) 403-1001

CITY OF LOS ANGELES DEPARTMENT OF PUBLIC WORKS
BUREAU OF ENGINEERING

ENGINEERING
CITY OF LOS ANGELES

NO.	REVISIONS:	DATE:	BY:
1	DESIGN CHANGES; CHANGE TO BOE APPROVAL	4/7/17	

STRUCTURE NO. 53C-2329

INDEX NO.

THIS PLAN WAS ELECTRONICALLY SIGNED AND STAMPED.

REGISTERED PROFESSIONAL ENGINEER CARL A. AYUBI No. 21780 Exp. 9/30/2018 ELECTRICAL STATE OF CALIFORNIA

GARY LEE MOORE, P.E. CITY ENGINEER

ENGINEER:	ALEKSANNDRA GOROVAYA	DATE:
DESIGNED BY:	ALEKSANNDRA GOROVAYA	LIC. NO. 45318
DRAWN BY:	RON GREENLEE	
CHECKED BY:	CARL AYUBI	
APPROVED BY:		

VERTICAL CONTROL: BM 12-04070,1929 (NGVD 29) - 1985 ADJUSTMENT
HORIZONTAL CONTROL: GPS; PID AE 1704, EPOCH 1991.35

SHEET TITLE: ARCH LIGHTING PLANS

PROJECT: SIXTH STREET VIADUCT REPLACEMENT

ADDRESS: SIXTH STREET VIADUCT (WHITTIER BLVD) LOS ANGELES, CA

WORK ORDER NO. E700224L

DRAWING NO. SL-1209

SHEET OF SHEETS

THE CITY OF LOS ANGELES OR ITS OFFICERS OR AGENTS SHALL NOT BE RESPONSIBLE FOR THE ACCURACY OR COMPLETENESS OF ELECTRONIC COPIES OF THIS PLAN SHEET.

C:\caddlib\pw\pwwestcoast\rgreenlee\dms57861\SL-1200.dwg 3/13/17 08:53

REVISION DATES (DESIGN STAGE ONLY)

Sheet Version 3.0

ADDENDUM 5

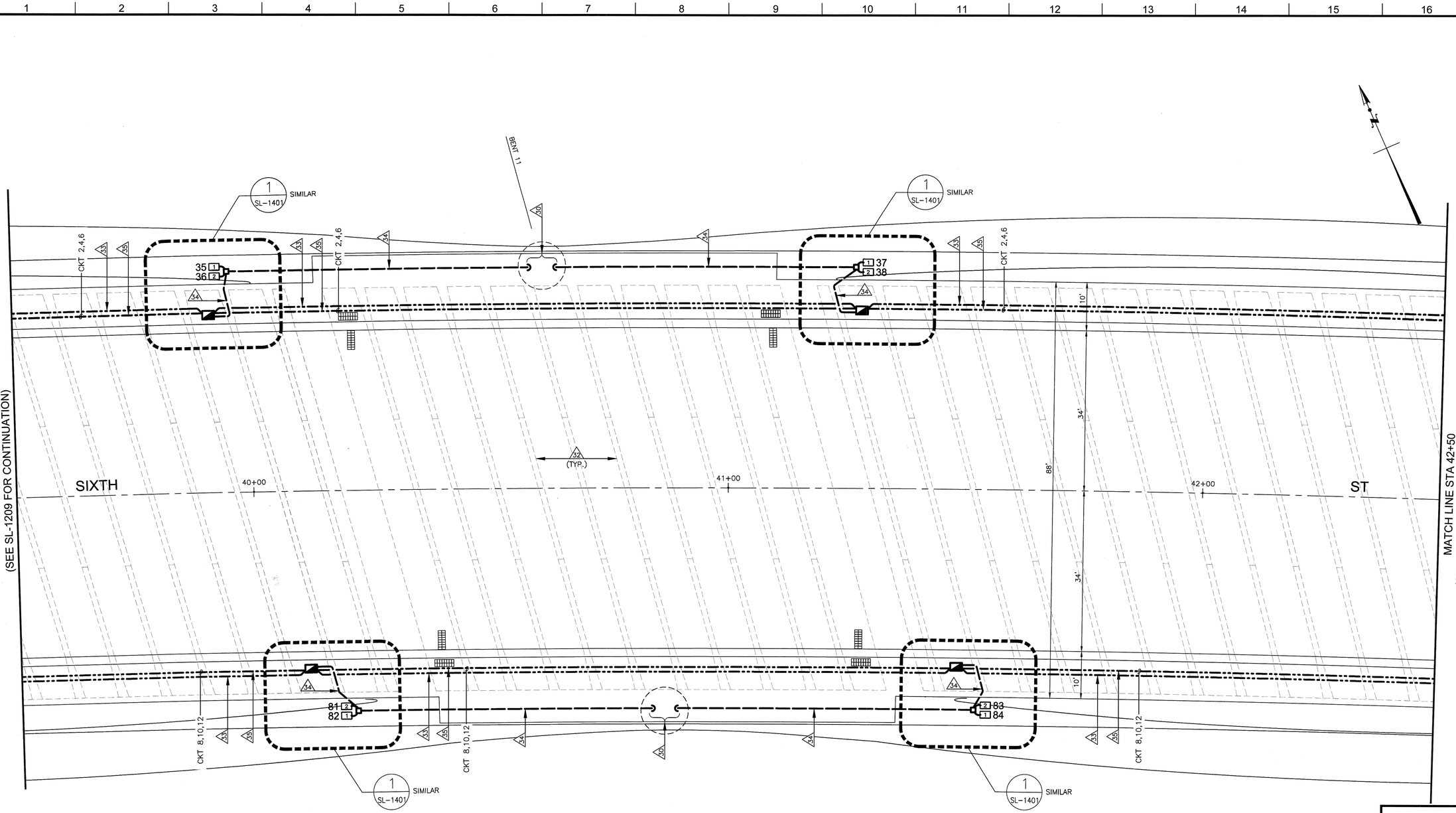

ENLARGED VIADUCT LEVEL ARCH LIGHTING PLAN (1 / SL-1100)

SCALE: 1" = 10'

SL-7948 3-22-17

REVIEWED BY BUREAU OF STREET LIGHTING

10' 5' 0 10' 20'

SCALE 1" = 10'-0"

THE CITY OF LOS ANGELES OR ITS OFFICERS OR AGENTS SHALL NOT BE RESPONSIBLE FOR THE ACCURACY OR COMPLETENESS OF ELECTRONIC COPIES OF THIS PLAN SHEET.

C:\caddlib\pw\pwwestcoast\rgreenlee\dms57861\SL-1200.dwg 3/13/17 08:53

REVISION DATES (DESIGN STAGE ONLY)

Sheet Version 3.0

T.O. 5 - Change Order Serial Sketch No. 18 - page 14 of 23

HNTB
HNTB Corporation
601 W. 5TH STREET SUITE 1000
LOS ANGELES, CALIFORNIA 90071
TEL (213) 403-1000 FAX (213) 403-1001

CITY OF LOS ANGELES DEPARTMENT OF PUBLIC WORKS BUREAU OF ENGINEERING

ENGINEERING
CITY OF LOS ANGELES

NO.	REVISIONS:	DATE	BY:
1	DESIGN CHANGES; CHANGE TO BOE APPROVAL	4/7/17	

STRUCTURE NO. 53C-2329

INDEX NO.

THIS PLAN WAS ELECTRONICALLY SIGNED AND STAMPED.

PROFESSIONAL ENGINEER
ARIA AYUBI
No. 61769
Exp. 9/30/2018
ELECTRICAL
STATE OF CALIFORNIA

GARY LEE MOORE, P.E. CITY ENGINEER

ENGINEER:	DESIGN GROUP
DESIGNED BY:	ALEKSANNDRA GOROVAYA LIC. NO. 45318
DRAWN BY:	ALEKSANNDRA GOROVAYA
CHECKED BY:	RON GREENLEE
APPROVED BY:	CARL AYUBI

VERTICAL CONTROL: BM 12-24070, 1929 (NGVD 29) - 1985 ADJUSTMENT
HORIZONTAL CONTROL: GPS; PID AE 1704, EPOCH 1991.35

SHEET TITLE: ARCH LIGHTING PLANS

PROJECT: SIXTH STREET VIADUCT REPLACEMENT

ADDRESS: SIXTH STREET VIADUCT (WHITTIER BLVD) LOS ANGELES, CA

WORK ORDER NO. E700224L

DRAWING NO. SL-1210

SHEET OF SHEETS

ADDENDUM 5

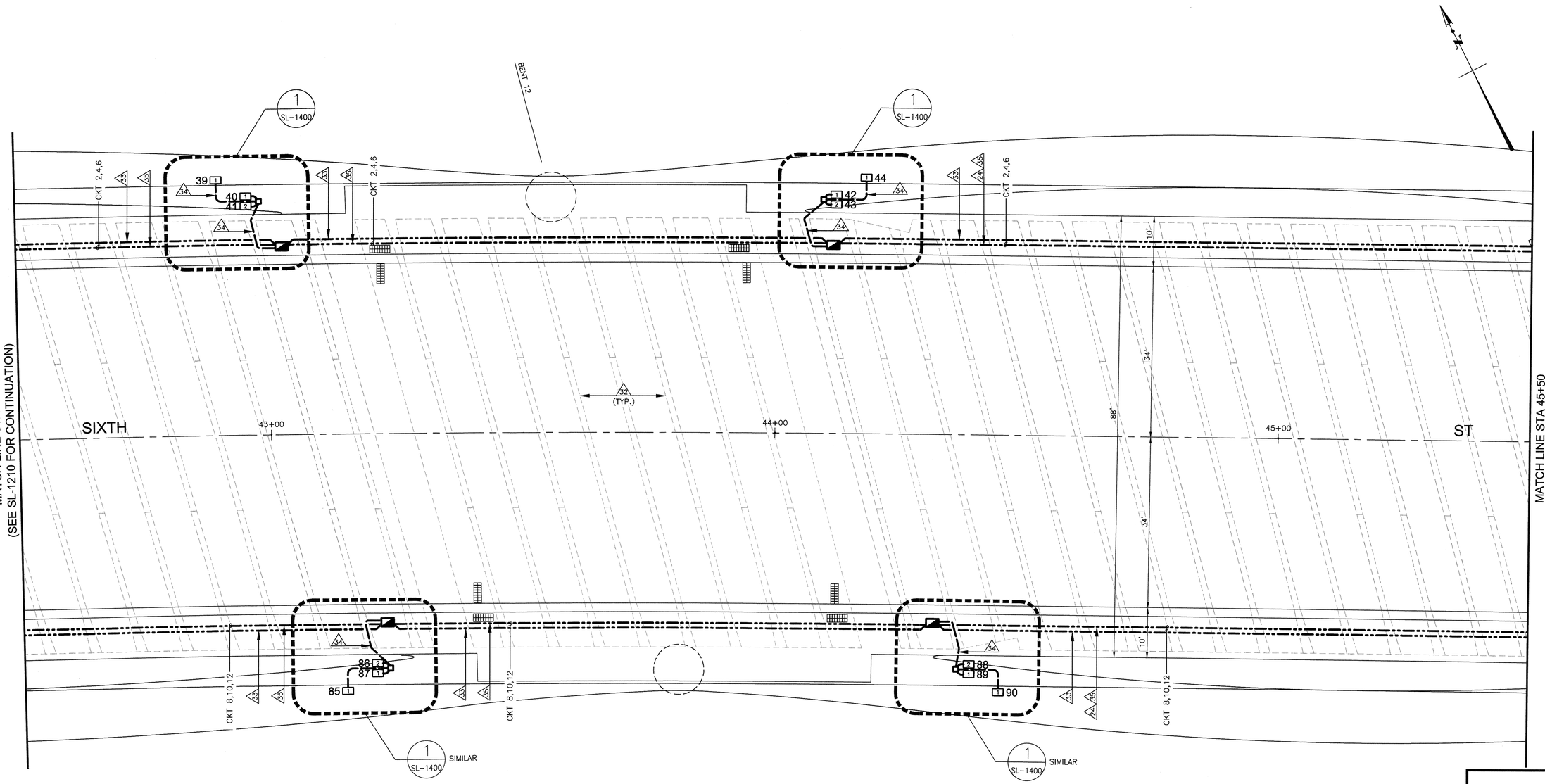

MATCH LINE STA 42+50
(SEE SL-1210 FOR CONTINUATION)

MATCH LINE STA 45+50
(SEE SL-1212 FOR CONTINUATION)

ENLARGED VIADUCT LEVEL ARCH LIGHTING PLAN

SCALE: 1" = 10'

1 SL-1100

SL-7948 3-22-17
REVIEWED BY BUREAU OF STREET LIGHTING

10' 5' 0 10' 20'
SCALE 1" = 10'-0"

T.O. 5 - Change Order Serial Sketch No. 18 - page 15 of 23

THE CITY OF LOS ANGELES OR ITS OFFICERS OR AGENTS SHALL NOT BE RESPONSIBLE FOR THE ACCURACY OR COMPLETENESS OF ELECTRONIC COPIES OF THIS PLAN SHEET.

C:\caddlib\pw\pwwestcoast\vgreenlee\dms57861\SL-1200.dwg 3/13/17 08:52

DESIGN DATES
(DESIGN STAGE ONLY)

Sheet Version 3.0

BUREAU OF ENGINEERING

ENGINEERING
CITY OF LOS ANGELES

NO.	REVISIONS:	DATE	BY:
1	DESIGN CHANGES; CHANGE TO BOE APPROVAL	4/7/17	

STRUCTURE NO.
53C-2329

INDEX NO.

PROFESSIONAL ENGINEER
CARL A. AYUBI
No. 45318
Exp. 9/30/2018
ELECTRICAL
STATE OF CALIFORNIA

THIS PLAN WAS ELECTRONICALLY SIGNED AND STAMPED

CITY OF LOS ANGELES DEPARTMENT OF PUBLIC WORKS

GARY LEE MOORE, P.E. CITY ENGINEER
DESIGN GROUP

		DATE:
ENGINEER:	ALEKSANNDRA GOROVAYA	LIC. NO. 45318
DESIGNED BY:	ALEKSANNDRA GOROVAYA	
DRAWN BY:	RON GREENLEE	
CHECKED BY:	CARL AYUBI	
APPROVED BY:		

VERTICAL CONTROL: BM 12-04070,1928 (NGVD 29) - 1985 ADJUSTMENT
HORIZONTAL CONTROL: GPS; PID AE 1170; EPOCH 1991.35

SHEET TITLE: ARCH LIGHTING PLANS

PROJECT: SIXTH STREET VIADUCT REPLACEMENT

ADDRESS: SIXTH STREET VIADUCT (WHITTIER BLVD)
LOS ANGELES, CA

HNTB
HNTB Corporation
601 W. 5TH STREET SUITE 1000
LOS ANGELES, CALIFORNIA 90071
TEL (213) 403-1000 FAX (213) 403-1001

WORK ORDER NO.
E700224L

DRAWING NO.
SL-1211

SHEET OF SHEETS

ADDENDUM 5

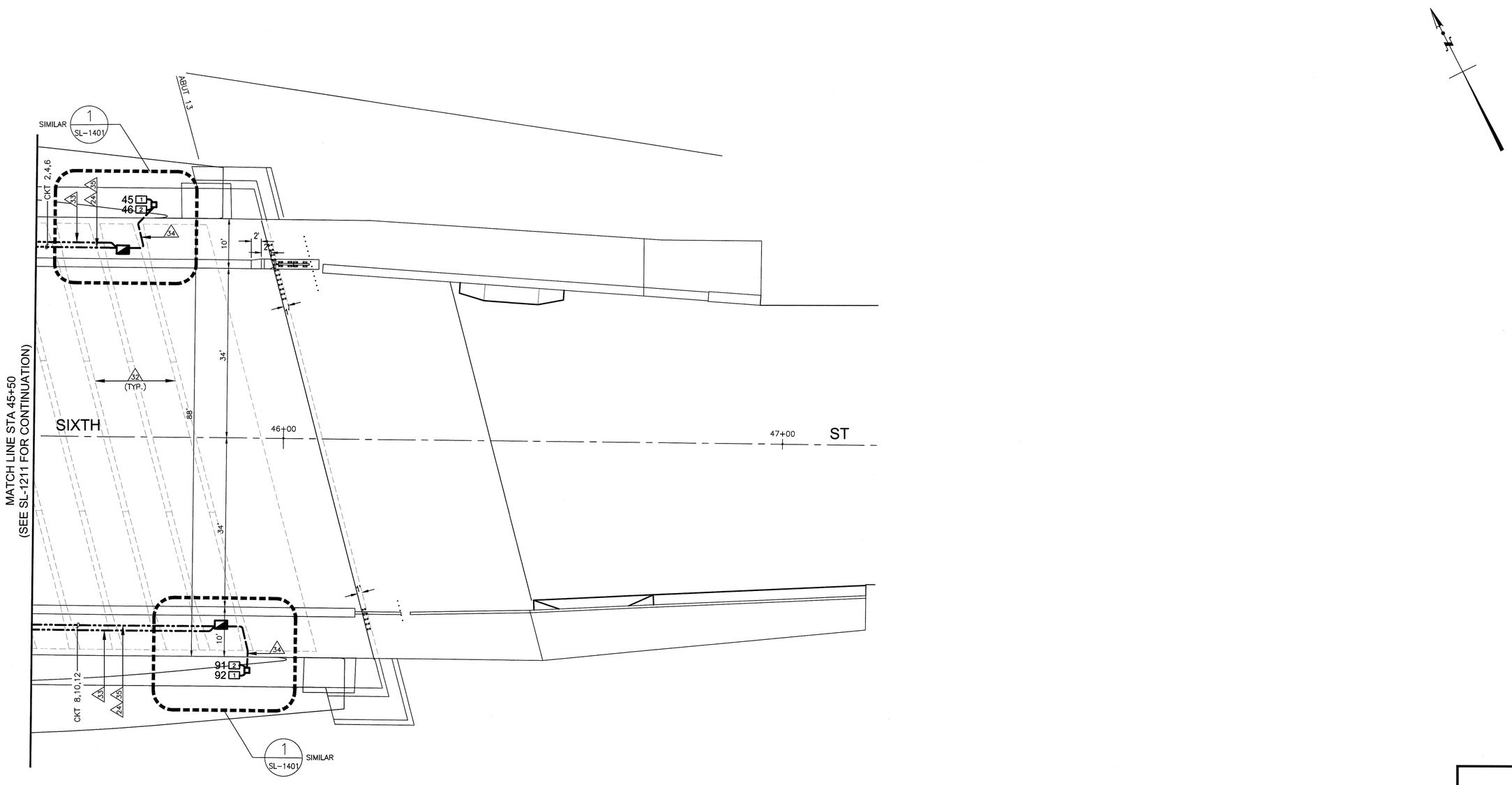

ENLARGED VIADUCT LEVEL ARCH LIGHTING PLAN

SCALE: 1" = 10'

1
SL-1100

SL-7948 3-22-17

REVIEWED BY BUREAU OF STREET LIGHTING

10' 5' 0 10' 20'

SCALE 1" = 10'-0"

T.O. 5 - Change Order Serial Sketch No. 18 - page 16 of 23

HNTB

HNTB Corporation
601 W. 5TH STREET SUITE 1000
LOS ANGELES, CALIFORNIA 90071
TEL (213) 403-1000 FAX (213) 403-1001

CITY OF LOS ANGELES DEPARTMENT OF PUBLIC WORKS BUREAU OF ENGINEERING

ENGINEERING
CITY OF LOS ANGELES

NO.	REVISIONS:	DATE:	BY:
1	DESIGN CHANGES; CHANGE TO BOE APPROVAL	4/7/17	

STRUCTURE NO. 53C-2329

INDEX NO.

THIS PLAN WAS ELECTRONICALLY SIGNED AND STAMPED.

REGISTERED PROFESSIONAL ENGINEER
CARL A. AYUBI
No. 21760
Exp. 9/30/2018
ELECTRICAL
STATE OF CALIFORNIA

GARY LEE MOORE, P.E. CITY ENGINEER

DESIGN GROUP

ENGINEER: ALEKSANNDRA GOROVAYA LIC. NO. 45318

DESIGNED BY: ALEKSANNDRA GOROVAYA

DRAWN BY: RON GREENLEE

CHECKED BY: CARL AYUBI

APPROVED BY:

DATE:

VERTICAL CONTROL: BM 12-04070,1929 (NGVD 29) - 1985 ADJUSTMENT

HORIZONTAL CONTROL: GPS; PID AE 1704, EPOCH 1991.35

SHEET TITLE: ARCH LIGHTING PLANS

PROJECT: SIXTH STREET VIADUCT REPLACEMENT

ADDRESS: SIXTH STREET VIADUCT (WHITTIER BLVD) LOS ANGELES, CA

WORK ORDER NO. E700224L

DRAWING NO. SL-1212

SHEET OF SHEETS

THE CITY OF LOS ANGELES OR ITS OFFICERS OR AGENTS SHALL NOT BE RESPONSIBLE FOR THE ACCURACY OR COMPLETENESS OF ELECTRONIC COPIES OF THIS PLAN SHEET.

C:\caddlib\pw\pwwestcoast\rgreenlee\dms57861\SL-1200.dwg 3/13/17 08:52

REVISION DATES (DESIGN STAGE ONLY)

Sheet Version 3.0

ADDENDUM 5

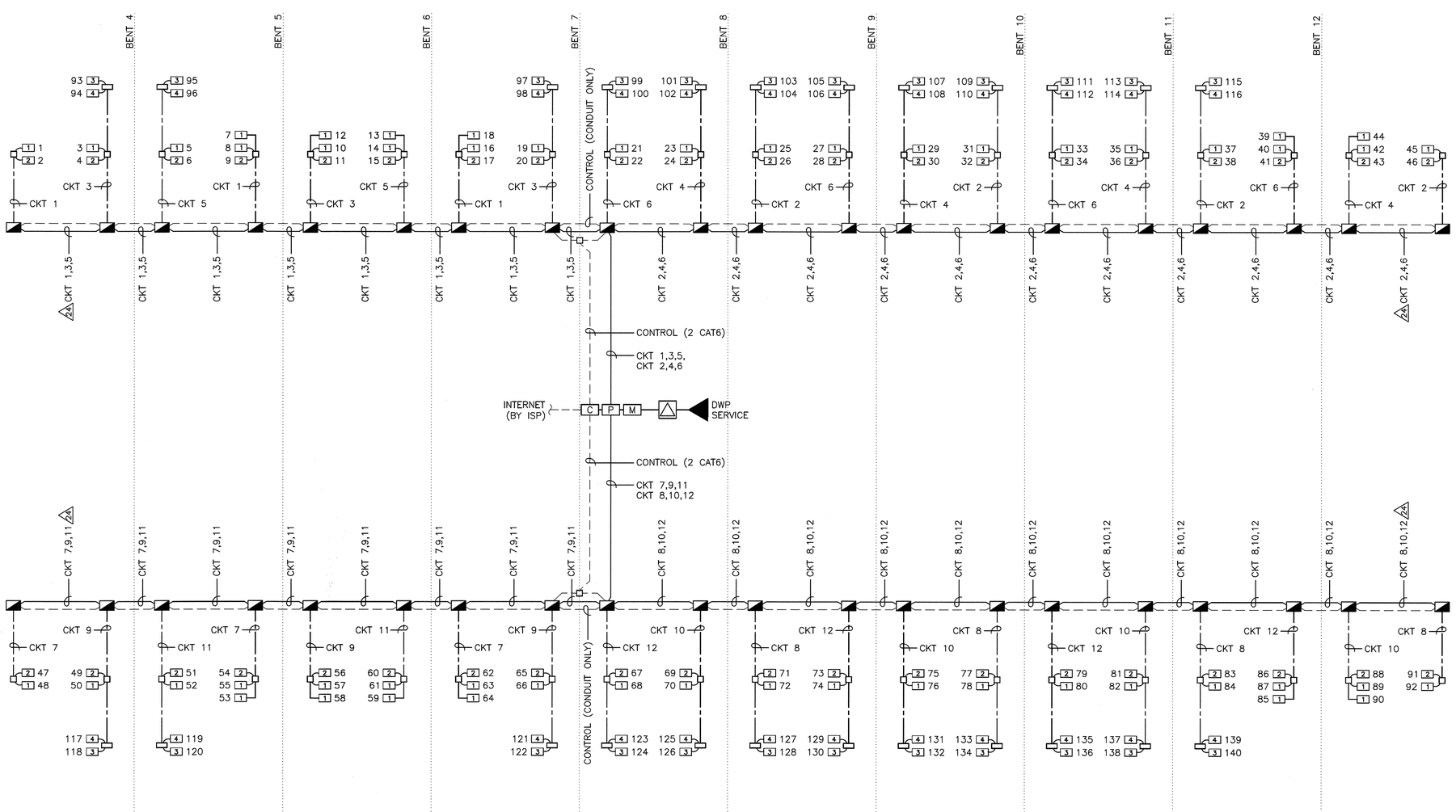

SHEET NOTES:

1. SEE SHEET SL-1403 FOR CONTROL ENCLOSURE BLOCKOUT DETAIL.
2. SEE PLAN SHEETS SL-1101 THROUGH SL-1102, AND SL-1202 THROUGH SL-1212 FOR LED FLOODLIGHT LOCATIONS.
3. SEE SHEET SL-1103 FOR SERVICE EQUIPMENT LAYOUT.
4. SEE SHEET SL-1405 FOR SERVICE EQUIPMENT ELEVATION AND PANEL SCHEDULE.
5. SEE SHEET SL-1404 FOR CONTROL PANEL C-1 DETAIL.
6. SEE SHEET SL-1001 FOR ARCH FLOODLIGHT TYPES AND WATTAGES.
7. MAXIMUM LENGTH OF CAT6 CABLE SHALL BE 328'.
8. LABEL ALL DATA AND POWER CABLES IN ACCORDANCE WITH MULTIPLE CIRCUIT NOTE #6 ON SHEET SL-1001.

LEGEND

- ARCH LIGHTING CONTROL CONDUIT (1-CAT6 UNLESS NOTED OTHERWISE)
- ARCH LIGHTING POWER CONDUIT (CKT AS NOTED)
- ARCH LIGHTING COMBINED POWER/CONTROL CONDUCTORS (CKT AS NOTED)
- CONTROL ENCLOSURE WITH DATA ENABLER (SEE NOTE 1)
- 480/277V DWP TRANSFORMER
- M METER (BY DWP)
- P PANELBOARD P-1 (SEE NOTE 4)
- C CONTROL PANEL C-1 (SEE NOTE 5)
- 1 X LED ARCH FLOODLIGHT, TYPE AND ID AS NOTED (SEE NOTE 6)

ARCH LIGHTING ONE-LINE DIAGRAM

SL-7948 3-22-17
REVIEWED BY BUREAU OF STREET LIGHTING

T.O. 5 - Change Order Serial Sketch No. 18 - page 17 of 23

HNTB
HNTB Corporation
601 W. 5TH STREET SUITE 1000
LOS ANGELES, CALIFORNIA 90071
TEL (213) 403-1000 FAX (213) 403-1001

CITY OF LOS ANGELES DEPARTMENT OF PUBLIC WORKS
BUREAU OF ENGINEERING
ENGINEERING CITY OF LOS ANGELES

NO.	REVISIONS:	DATE:	BY:
1	DESIGN CHANGES; CHANGE TO BOE APPROVAL	4/7/17	

STRUCTURE NO. 53C-2329

INDEX NO.

THIS PLAN WAS ELECTRONICALLY SIGNED AND STAMPED.

REGISTERED PROFESSIONAL ENGINEER CARL A. AYUBI No. 41780 Exp. 9/30/2018 ELECTRICAL STATE OF CALIFORNIA

GARY LEE MOORE, P.E. CITY ENGINEER
DESIGN GROUP
ENGINEER: ALEKSANNDRA GOROVAYA LIC. NO. 45318
DESIGNED BY: ALEKSANNDRA GOROVAYA
DRAWN BY: RON GREENLEE
CHECKED BY: CARL AYUBI
APPROVED BY:
DATE:

VERTICAL CONTROL: BM 12-04070,1929 (NGVD 29) - 1985 ADJUSTMENT
HORIZONTAL CONTROL: GPS; PID AE 1704, EPOCH 1991.35

SHEET TITLE: ARCH LIGHTING PLANS
PROJECT: SIXTH STREET VIADUCT REPLACEMENT
ADDRESS: SIXTH STREET VIADUCT (WHITTIER BLVD) LOS ANGELES, CA

WORK ORDER NO. E700224L
DRAWING NO. SL-1300
SHEET OF SHEETS

THE CITY OF LOS ANGELES OR ITS OFFICERS OR AGENTS SHALL NOT BE RESPONSIBLE FOR THE ACCURACY OR COMPLETENESS OF ELECTRONIC COPIES OF THIS PLAN SHEET.

REVISION DATES (DESIGN STAGE ONLY)

C:\caddlib\pw\pwwestcoast\rgreenlee\dms57861\SL-1300.dwg 3/13/17 08:52

Sheet Version 3.0

ADDENDUM 5

ARCH LIGHT HINGED ARM MATERIALS
HSS 4x4x1/4 – ASTM A500 GRADE B, Fy=46 KSI, Fu=58 KSI BEAM CLAMP – ASTM A36, Fy=36 KSI, Fu=58 KSI 1/2" 90° ANCHOR BOLTS – GALVANIZED ASTM F1554 GRADE 36, Fy=36 KSI, Fu=58 KSI WASHERS – ASTM F436 TYPE 3 NUTS – GALVANIZED ASTM A563 GRADE A

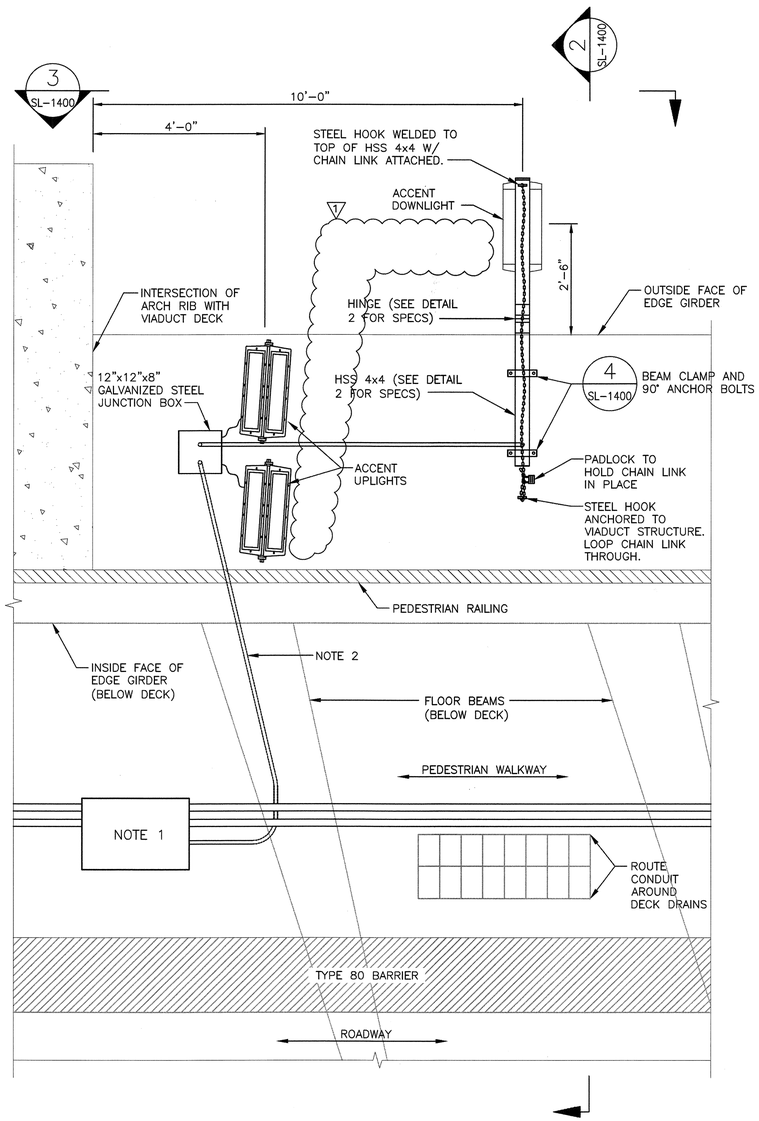

1 PLAN
SCALE: N.T.S.
1 SL-1400

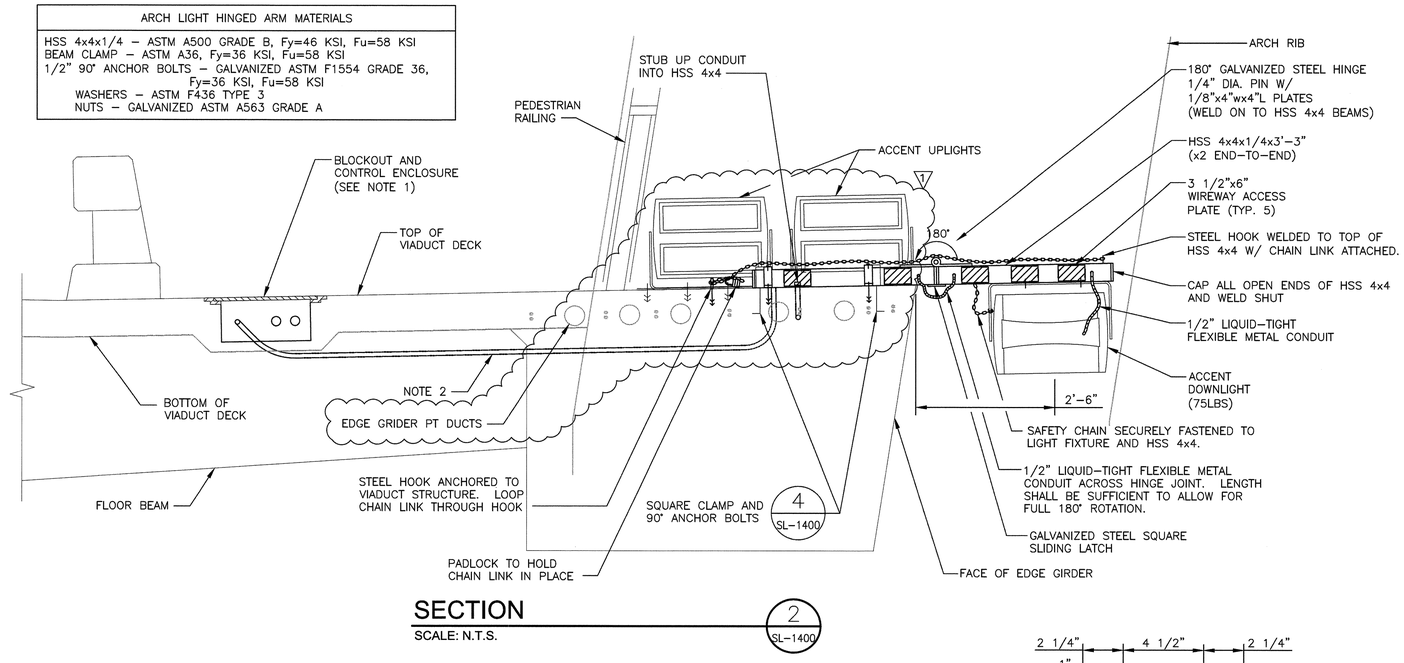

SECTION
SCALE: N.T.S.
2 SL-1400

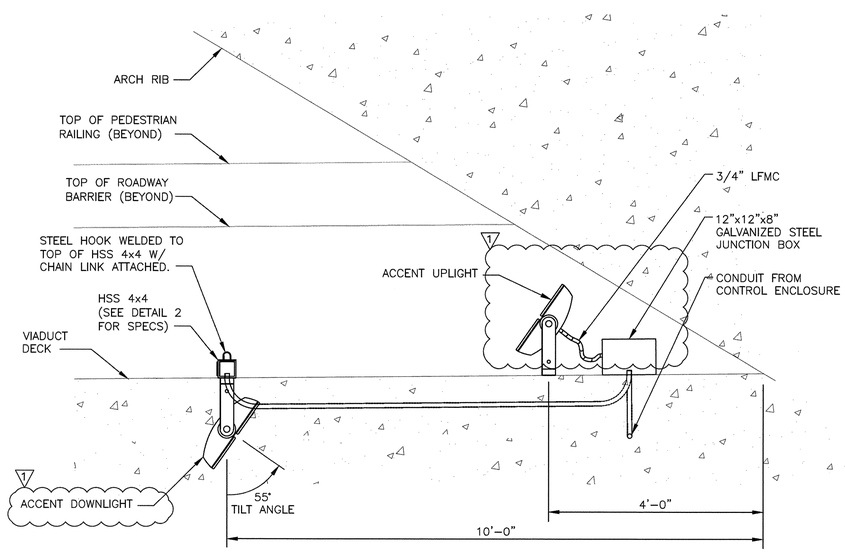

ELEVATION
SCALE: N.T.S.
(SOME CONDUIT IS OMITTED FOR CLARITY)
3 SL-1400

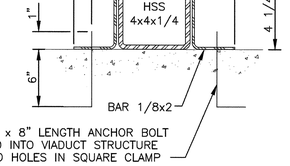

1/2" DIA. x 8" LENGTH ANCHOR BOLT EMBEDDED INTO VIADUCT STRUCTURE OVERSIZED HOLES IN SQUARE CLAMP

BEAM CLAMP AND ANCHOR ROD DETAIL
SCALE: N.T.S.
4 SL-1400

SHEET NOTES:

1. 30"X20"X10" CONCRETE BLOCKOUT W/ LOCKABLE GALVANIZED STEEL COVER PLATE AND NEOPRENE SEAL. SEE SL-1202 THRU SL-1212 FOR EXACT LOCATIONS. SEE DRAWING SL-1403 FOR ELECTRICAL DETAILS. SEE STRUCTURAL PLAN S4-07 FOR REINFORCEMENT DETAILS.
2. RFI 0210
3. ALL CONDUIT SHOWN IS EMBEDDED IN THE STRUCTURE UNLESS NOTED OTHERWISE. SEE PLAN SHEETS SL-1202 THROUGH SL-1212 FOR EXACT ROUTING.
4. SEE PLAN SHEETS SL-1202 THROUGH SL-1212 FOR CONDUCTOR SIZES AND QUANTITIES.

SL-7948 3-22-17
REVIEWED BY BUREAU OF STREET LIGHTING

TYPICAL ARCH LIGHTING INSTALLATION AT BENTS 5, 6, & 12

T.O. 5 - Change Order Serial Sketch No. 18 - page 18 of 23

THE CITY OF LOS ANGELES OR ITS OFFICERS OR AGENTS SHALL NOT BE RESPONSIBLE FOR THE ACCURACY OR COMPLETENESS OF ELECTRONIC COPIES OF THIS PLAN SHEET.

C:\caddlib\pw\pwwestcoast\vgreenlee\dms57861\SL-1400.dwg 3/13/17 08:50

REVISION DATES (DESIGN STAGE ONLY)

Sheet Version 3.0

ENGINEERING
CITY OF LOS ANGELES

BUREAU OF ENGINEERING

NO.	REVISIONS:	DATE:	BY:
1	DESIGN CHANGES; CHANGE TO BOE APPROVAL	4/7/17	

STRUCTURE NO. 53C-2329

INDEX NO.

THIS PLAN WAS ELECTRONICALLY SIGNED AND STAMPED

PROFESSIONAL ENGINEER
No. 417861
Exp. 9/30/2018
ELECTRICAL
STATE OF CALIFORNIA

CITY OF LOS ANGELES DEPARTMENT OF PUBLIC WORKS

GARY LEE MOORE, P.E. CITY ENGINEER
DESIGN GROUP

ENGINEER:	ALEKSANNDRA GOROVAYA	LIC. NO.	45318
DESIGNED BY:	ALEKSANNDRA GOROVAYA	DATE:	
DRAWN BY:	RON GREENLEE		
CHECKED BY:	CARL AYUBI		
APPROVED BY:			

VERTICAL CONTROL: BM LA-0470 1929 (NGVD 29) - 1985 ADJUSTMENT
HORIZONTAL CONTROL: CRS, 210 A/E 1704, EPOCH 1991.35

SHEET TITLE: ARCH LIGHTING PLANS

PROJECT: SIXTH STREET VIADUCT REPLACEMENT

ADDRESS: SIXTH STREET VIADUCT (WHITTIER BLVD) LOS ANGELES, CA

HNTB
HNTB Corporation
601 W. 5TH STREET SUITE 1000
LOS ANGELES, CALIFORNIA 90071
TEL (213) 403-1000 FAX (213) 403-1001

WORK ORDER NO. E700224L

DRAWING NO. SL-1400

SHEET OF SHEETS

ADDENDUM 5

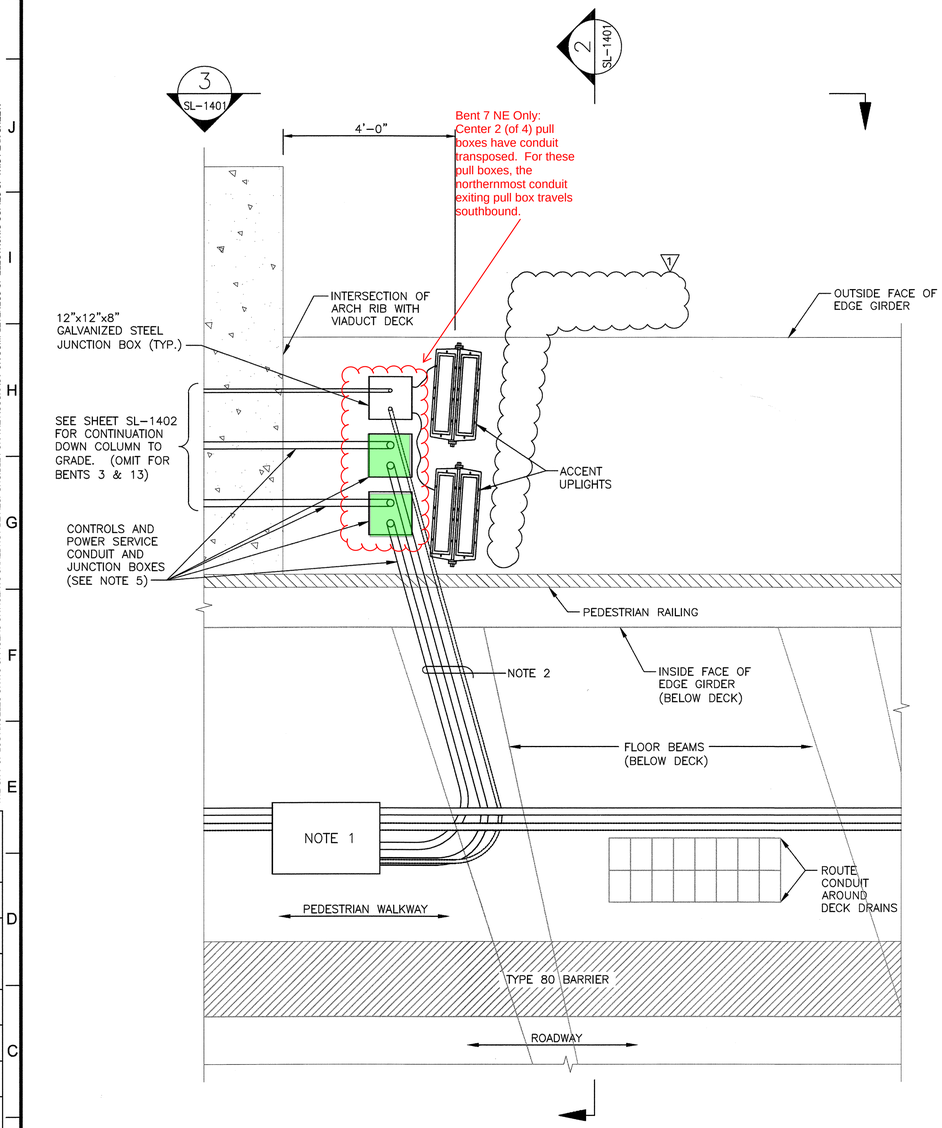

PLAN
SCALE: N.T.S.

1 / SL-1401

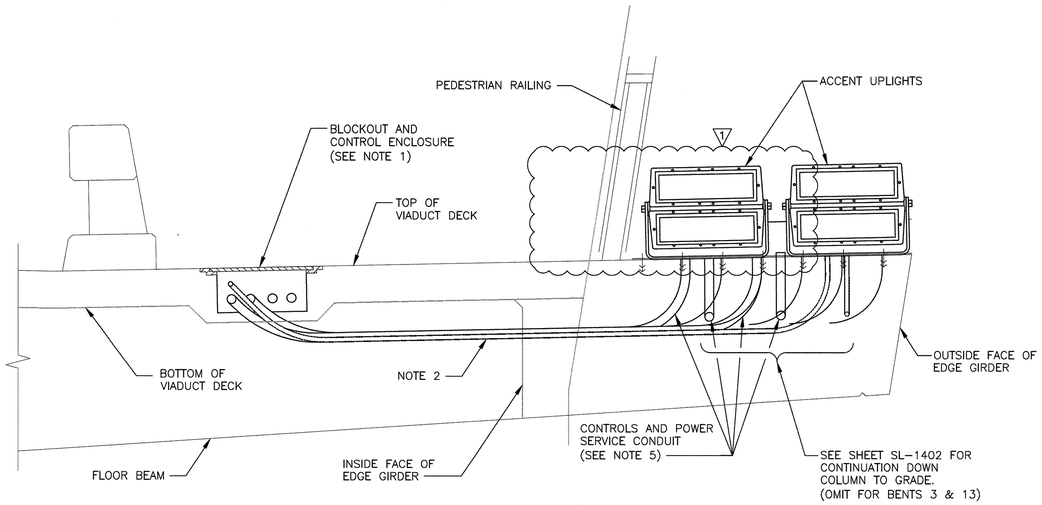

SECTION
SCALE: N.T.S.

2 / SL-1401

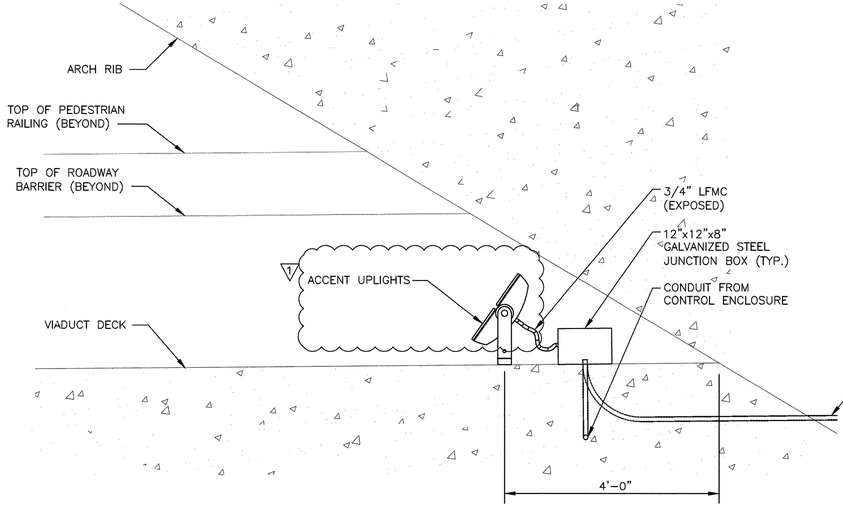

ELEVATION
SCALE: N.T.S.
(SOME CONDUIT IS OMITTED FOR CLARITY)

3 / SL-1401

SHEET NOTES:

1. 30"X20"X10" CONCRETE BLOCKOUT W/ LOCKABLE GALVANIZED STEEL COVER PLATE AND NEOPRENE SEAL. SEE SL-1202 THRU SL-1212 FOR EXACT LOCATIONS. SEE DRAWING SL-1403 FOR ELECTRICAL DETAILS. SEE STRUCTURAL PLAN S4-07 FOR REINFORCEMENT DETAILS.
2. RFI 0210
3. ALL CONDUIT SHOWN IS EMBEDDED IN THE STRUCTURE UNLESS NOTED OTHERWISE. SEE PLAN SHEETS SL-1202 THROUGH SL-1212 FOR EXACT ROUTING.
4. SEE PLAN SHEETS SL-1202 THROUGH SL-1212 FOR CONDUCTOR SIZES AND QUANTITIES.
5. COMMUNICATIONS AND POWER SERVICE CONDUIT AND JUNCTION BOXES OCCUR AT BENT 7 ONLY. SEE SL-1206 FOR REQUIRED CONDUIT, JUNCTION BOXES, AND CONDUCTORS/CABLES.

SL-7948 3-22-17
REVIEWED BY BUREAU OF STREET LIGHTING

TYPICAL ARCH LIGHTING INSTALLATION AT BENTS 3, 4, 7-11, & 13

T.O. 5 - Change Order Serial Sketch No. 18 - page 19 of 23

HNTB
HNTB Corporation
601 W. 5TH STREET SUITE 1000
LOS ANGELES, CALIFORNIA 90071
TEL (213) 403-1000 FAX (213) 403-1001

CITY OF LOS ANGELES DEPARTMENT OF PUBLIC WORKS BUREAU OF ENGINEERING

ENGINEERING
CITY OF LOS ANGELES

NO.	REVISIONS:	DATE	BY:
1	DESIGN CHANGES; CHANGE TO BOE APPROVAL	4/7/17	

STRUCTURE NO.
53C-2329

INDEX NO.

THIS PLAN WAS ELECTRONICALLY SIGNED AND STAMPED

PROFESSIONAL ENGINEER
No. 41708
Exp. 12/30/2018
A. AYUBI
ELECTRICAL
STATE OF CALIFORNIA

GARY LEE MOORE, P.E. CITY ENGINEER
DATE:

ENGINEER:	ALEKSANDRA GOROVAYA	LIC. NO. 45318
DESIGNED BY:	ALEKSANDRA GOROVAYA	
DESIGN GROUP		
DRAWN BY:	RON GREENLEE	
CHECKED BY:	CARL AYUBI	
APPROVED BY:		

VERTICAL CONTROL: BM 12-04070,1929 (NGVD 29) - 1985 ADJUSTMENT
HORIZONTAL CONTROL: GPS; PID AE 1704, EPOCH 1991.35

SHEET TITLE: ARCH LIGHTING PLANS

PROJECT: SIXTH STREET VIADUCT REPLACEMENT

ADDRESS: SIXTH STREET VIADUCT (WHITTIER BLVD) LOS ANGELES, CA

WORK ORDER NO.
E700224L

DRAWING NO.
SL-1401

SHEET OF SHEETS

REVISION DATES (DESIGN STAGE ONLY)

C:\cadlib\pw\pwwestcoast\rgreenlee\dms5786\SL-1401.dwg 3/13/17 08:48

Sheet Version 3.0

THE CITY OF LOS ANGELES OR ITS OFFICERS OR AGENTS SHALL NOT BE RESPONSIBLE FOR THE ACCURACY OR COMPLETENESS OF ELECTRONIC COPIES OF THIS PLAN SHEET.

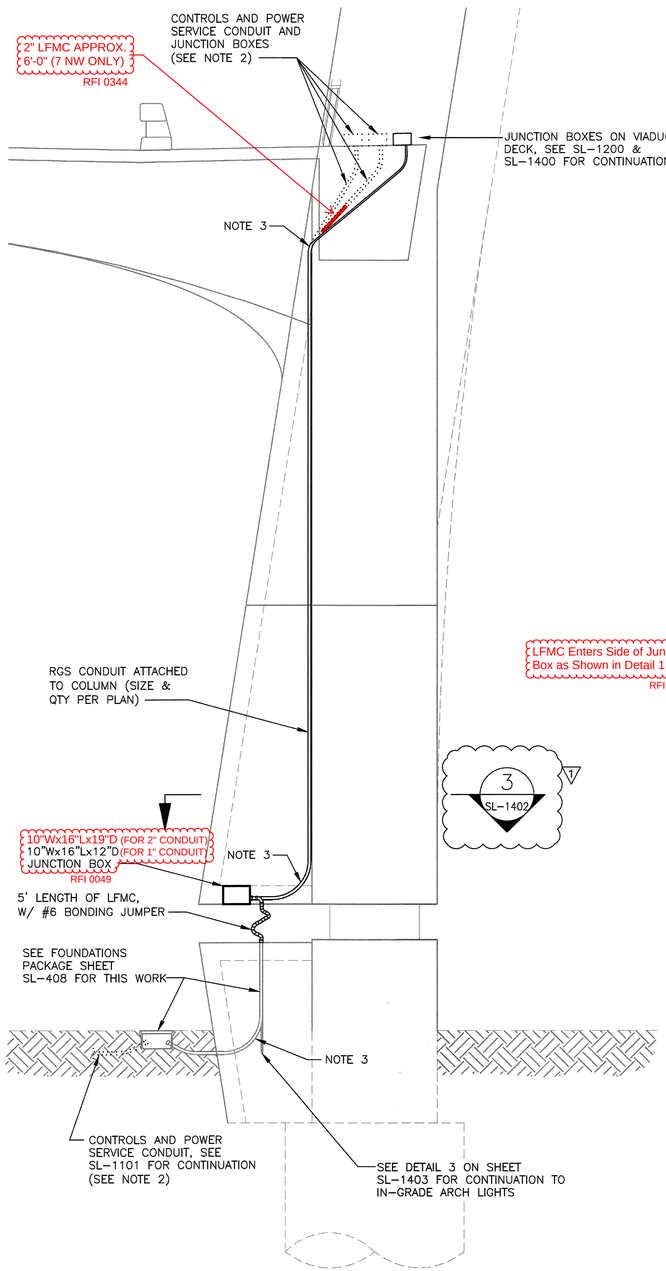

TYPICAL CONDUIT INSTALLATION IN VIADUCT COLUMNS

SCALE: N.T.S.

1 / SL-1402

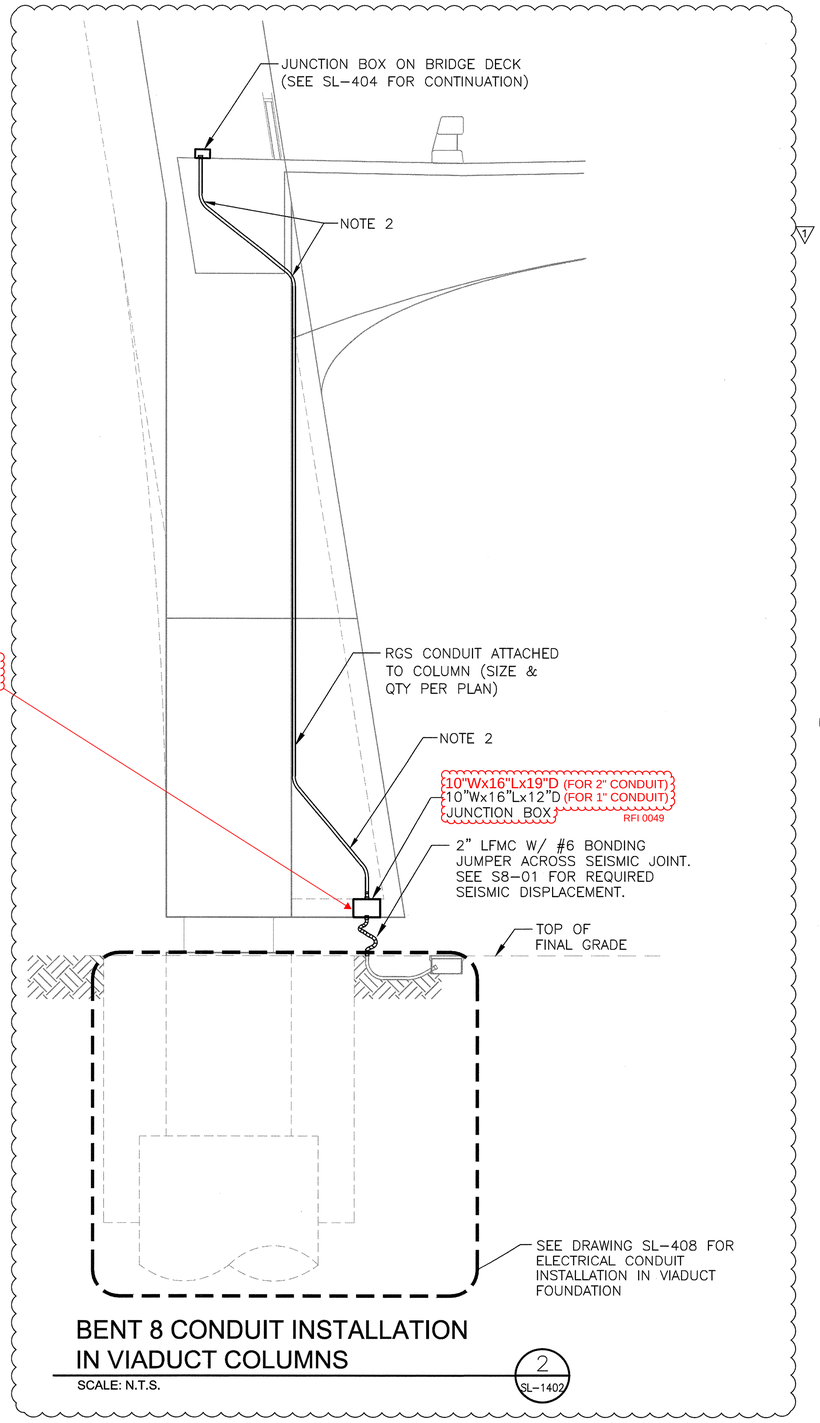

BENT 8 CONDUIT INSTALLATION IN VIADUCT COLUMNS

SCALE: N.T.S.

2 / SL-1402

SHEET NOTES:

1. PROVIDE J-BOXES AND CONDUIT AS REQUIRED FOR THE SYSTEMS BEING SERVED. NOT ALL J-BOXES AND CONDUIT ARE REQUIRED AT ALL COLUMN LOCATIONS. SEE PLANS FOR CLARIFICATION.
2. COMMUNICATIONS AND POWER SERVICE CONDUIT AND JUNCTION BOXES OCCUR AT BENT 7 ONLY. SEE SL-1206 FOR REQUIRED CONDUIT, JUNCTION BOXES, AND CONDUCTORS/CABLES.
3. ALL CONDUIT BENDS SHALL BE PER BUREAU OF STREET LIGHTING GREENBOOK.

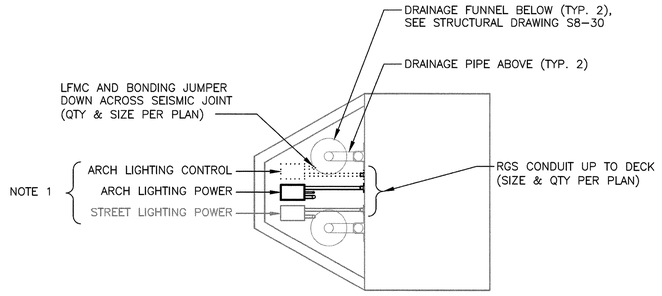

DETAIL NOTES:

1. PROVIDE J-BOXES AND CONDUIT AS REQUIRED FOR THE SYSTEMS BEING SERVED. NOT ALL J-BOXES AND CONDUIT ARE REQUIRED AT ALL COLUMN LOCATIONS. SEE PLANS FOR CLARIFICATION.

TYPICAL CONDUIT AND J-BOX LAYOUT IN VIADUCT COLUMNS

SCALE: N.T.S.

1 / 3 / SL-1402

SL-7948 3-22-17
REVIEWED BY BUREAU OF STREET LIGHTING

HNTB
HNTB Corporation
601 W. 5TH STREET SUITE 1000
LOS ANGELES, CALIFORNIA 90071
TEL (213) 403-1000 FAX (213) 403-1001

THE CITY OF LOS ANGELES OR ITS OFFICERS OR AGENTS SHALL NOT BE RESPONSIBLE FOR THE ACCURACY OR COMPLETENESS OF ELECTRONIC COPIES OF THIS PLAN SHEET.
THIS PLAN WAS ELECTRONICALLY SIGNED AND SEALED
CITY OF LOS ANGELES DEPARTMENT OF PUBLIC WORKS
BUREAU OF ENGINEERING

ENGINEERING
CITY OF LOS ANGELES

NO.	REVISIONS:	DATE:	BY:
1	DESIGN CHANGES; CHANGE TO BOE APPROVAL	4/7/17	

STRUCTURE NO. 53C-2329

INDEX NO.

PROFESSIONAL ENGINEER — No. 47980 — Exp. 6/30/2018 — ELECTRICAL — STATE OF CALIFORNIA

GARY LEE MOORE, P.E. — CITY ENGINEER — LIC. NO. 45318 — DATE:

DESIGN GROUP

ENGINEER: ALEKSANDRA GOROVAYA
DESIGNED BY: ALEKSANDRA GOROVAYA
DRAWN BY: RON GREENLEE
CHECKED BY: CARL AYUBI
APPROVED BY:

VERTICAL CONTROL: BM 12-04070,1929 (NGVD 29) - 1985 ADJUSTMENT
HORIZONTAL CONTROL: GPS; PID AE 1704, EPOCH 1991.35

SHEET TITLE: ARCH LIGHTING PLANS

PROJECT: SIXTH STREET VIADUCT REPLACEMENT

ADDRESS: SIXTH STREET VIADUCT (WHITTIER BLVD) LOS ANGELES, CA

WORK ORDER NO. E700224L

DRAWING NO. SL-1402

SHEET OF SHEETS

C:\caddlib\pw\pwwestcoast\ygreenlee\dms57861\SL-1402.dwg 3/13/17 08:47

REVISION DATES (DESIGN STAGE ONLY)

Sheet Version 3.0

ADDENDUM 5

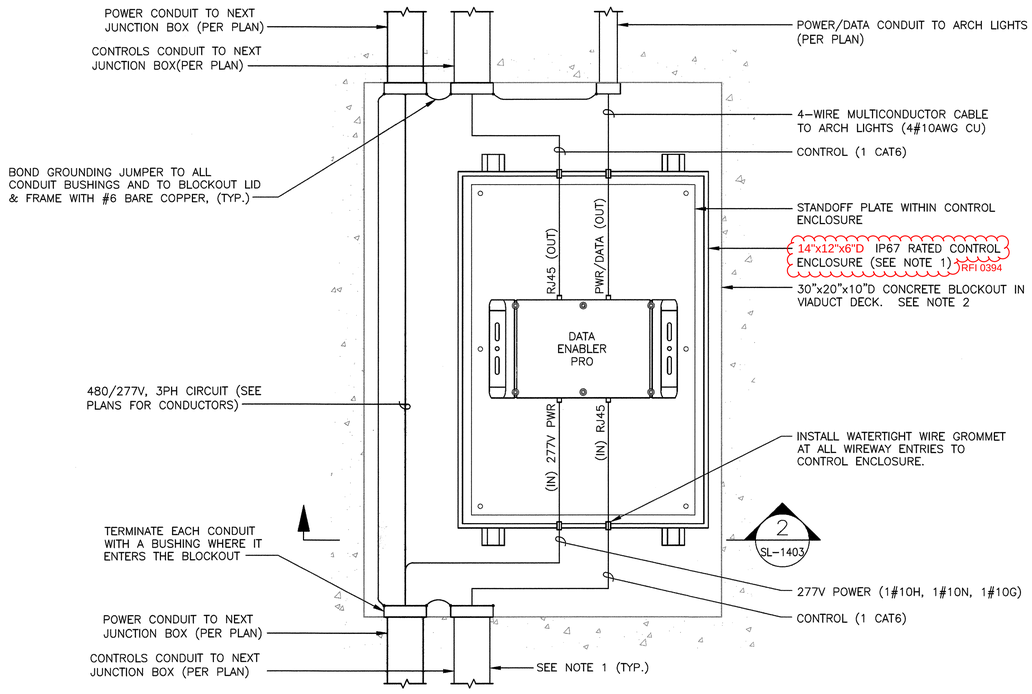

PLAN - TYPICAL CONTROL ENCLOSURE BLOCKOUT

SCALE: 3"=1'-0"

1 SL–1403

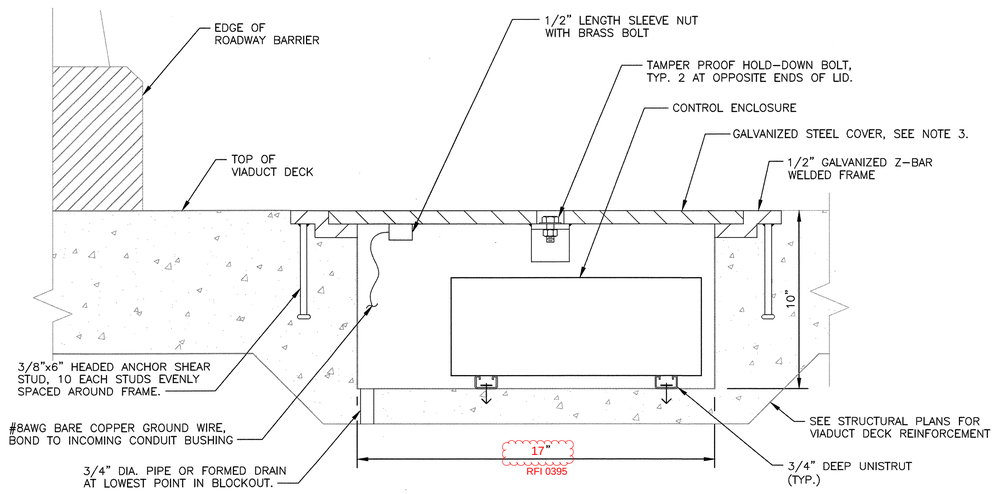

SECTION - TYPICAL CONTROL ENCLOSURE BLOCKOUT

SCALE: 3"=1'-0"

2 SL–1403

SHEET NOTES:

1. RELOCATE CONDUIT ENTRIES AND CONTROL ENCLOSURE POSITIONING WITHIN BLOCKOUT AS NEEDED TO ACCOMODATE PLAN LAYOUT.
2. SEE STRUCTURAL PLAN S4–07 FOR BLOCKOUT REINFORCEMENT DETAILS.
3. BLOCKOUT COVER SHALL BE REINFORCED 1/2" MIN GALVANIZED STEEL W/ NEOPRENE SEAL AND NON–SKID SURFACE. COVER SHALL BE CLEARLY LABELED "ARCH LIGHTING 480/277V". COVER SHALL BE RATED FOR TRAFFIC–BEARING. TACK WELD SHUT AFTER BSL APPROVES INSTALLATION.

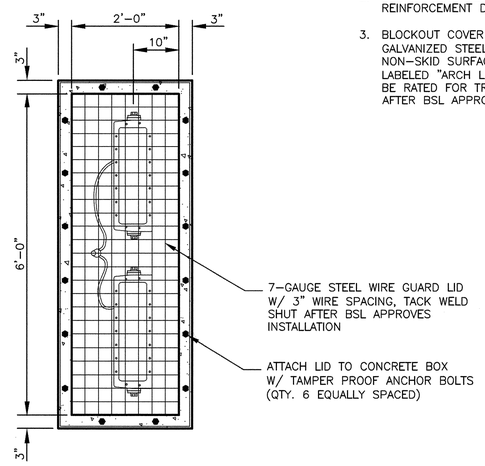

PLAN VIEW OF CONCRETE BOX

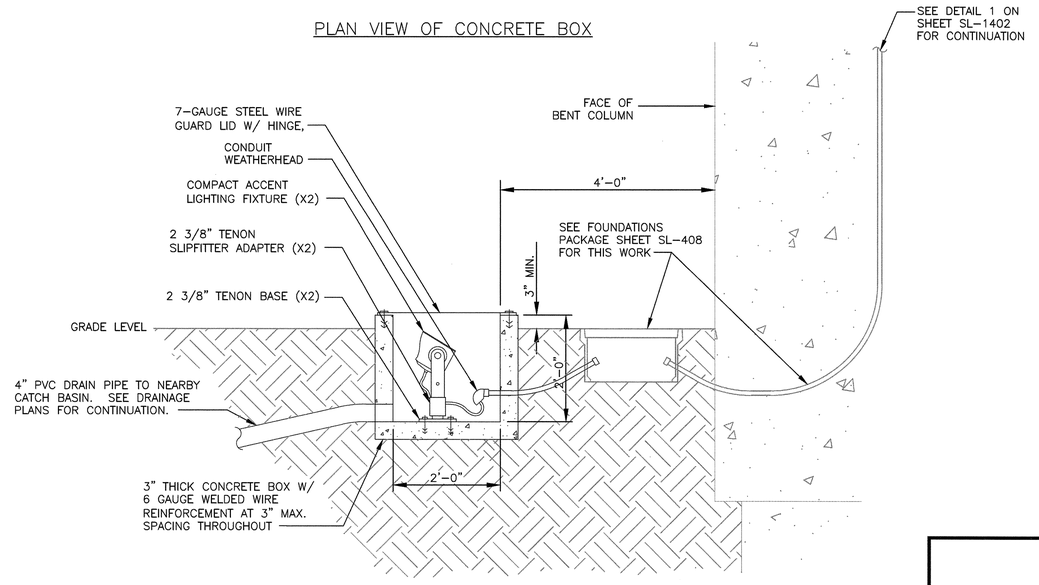

TYPICAL IN-GRADE ARCH LIGHT INSTALLATION

SCALE: 3/4" = 1'-0"

3 SL–1403

SL-7948 3-27-17

REVIEWED BY BUREAU OF STREET LIGHTING

T.O. 5 - Change Order Serial Sketch No. 18 - page 21 of 23

BUREAU OF ENGINEERING

ENGINEERING
CITY OF LOS ANGELES

NO.	REVISIONS:	DATE:	BY:
1	DESIGN CHANGES; CHANGE TO BOE APPROVAL	4/7/17	

STRUCTURE NO.
53C-2329

INDEX NO.

THIS PLAN WAS ELECTRONICALLY SIGNED AND SEALED

PROFESSIONAL ENGINEER — No. 47708 — Exp. 6/30/2018 — ELECTRICAL — STATE OF CALIFORNIA

CITY OF LOS ANGELES DEPARTMENT OF PUBLIC WORKS

GARY LEE MOORE, P.E. CITY ENGINEER — DATE:

ENGINEER:	ALEKSANDRA GOROVAYA	LIC. NO. 45318
DESIGNED BY:	ALEKSANDRA GOROVAYA	
DRAWN BY:	RON GREENLEE	
CHECKED BY:	CARL AYUBI	
APPROVED BY:		

DESIGN GROUP

SHEET TITLE: ARCH LIGHTING PLANS

PROJECT: SIXTH STREET VIADUCT REPLACEMENT

ADDRESS: SIXTH STREET VIADUCT (WHITTIER BLVD) LOS ANGELES, CA

VERTICAL CONTROL: BM 12-04070.1929 (NGVD 29) - 1986 ADJUSTMENT
HORIZONTAL CONTROL: GPS; PID AE 1704, EPOCH 1991.35

CITY OF LOS ANGELES

HNTB
HNTB Corporation
601 W. 5TH STREET SUITE 1000
LOS ANGELES, CALIFORNIA 90071
TEL (213) 403-1000 FAX (213) 403-1001

WORK ORDER NO.
E700224L

DRAWING NO.
SL-1403

SHEET OF SHEETS

THE CITY OF LOS ANGELES OR ITS OFFICERS OR AGENTS SHALL NOT BE RESPONSIBLE FOR THE ACCURACY OR COMPLETENESS OF ELECTRONIC COPIES OF THIS PLAN SHEET.

REVISION DATES (DESIGN STAGE ONLY)

C:\caddlib\pw\pwwestcoast\rgreenlee\dms57861\SL-1403.dwg 3/13/17 08:47

Sheet Version 3.0

ADDENDUM 5

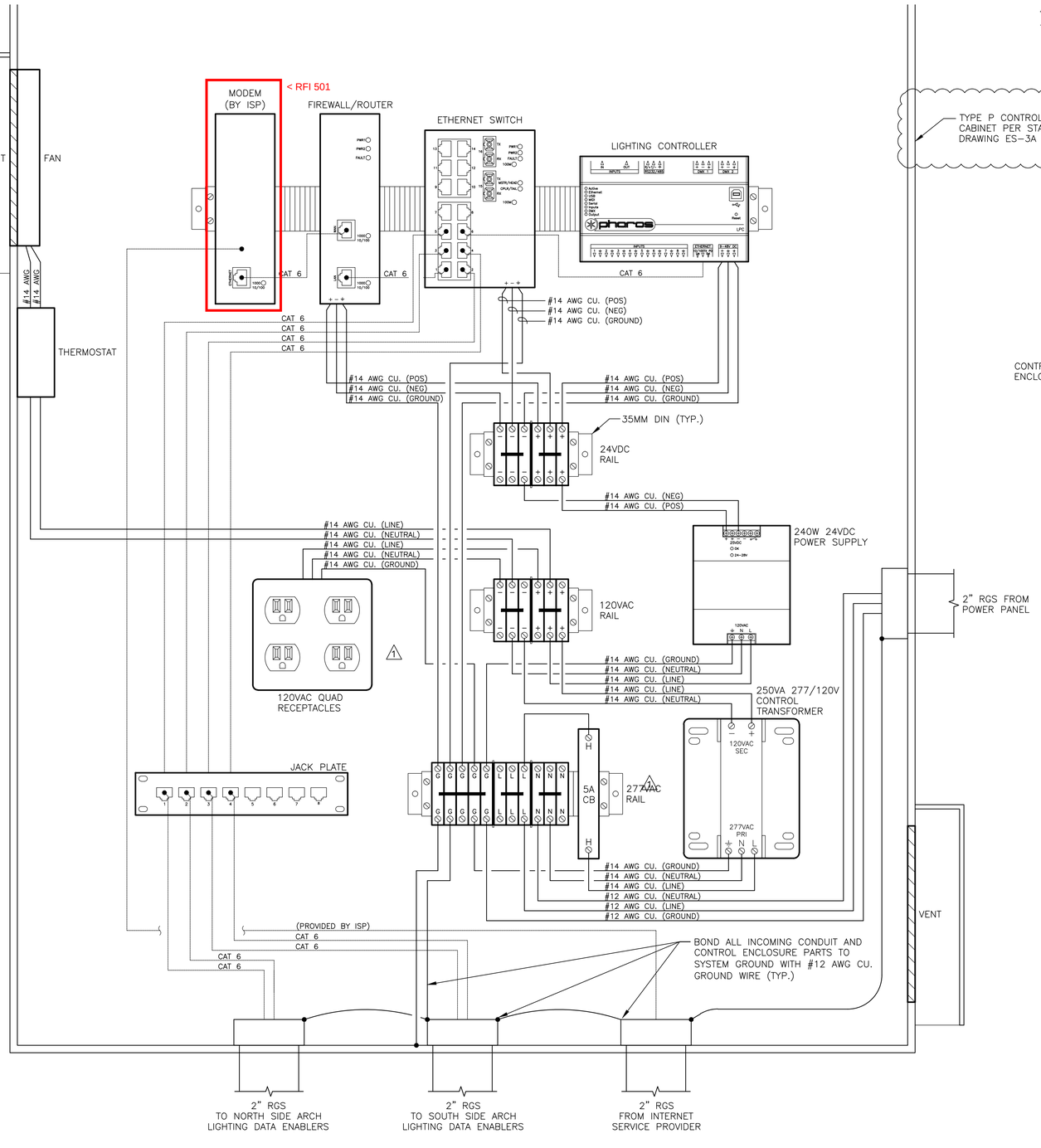

ARCH LIGHTING CONTROL PANEL C-1
E□UIPMENT LAYOUT

SCALE□N.T.S.

1 SL-1404

POWER/GROUND
DATA

TYPE P CONTROL
CABINET PER STANDARD
DRAWING ES-3A

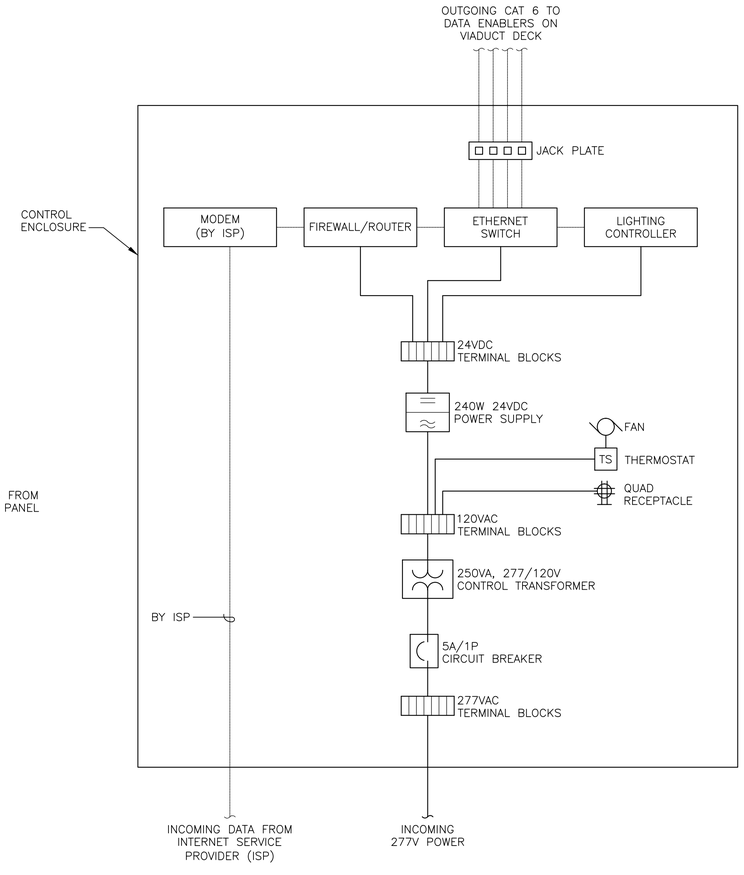

ARCH LIGHTING CONTROL PANEL C-1
INTERCONNECTION DIAGRAM

SCALE: N.T.S.

2 SL-1404

SL-79□□
REVIEWED BY BUREAU OF STREET LIGHTING

T.O. 5 - Preliminary Change Order Serial Sketch No. 76 - Page 1 of 2

THE CITY OF LOS ANGELES OR ITS OFFICERS OR AGENTS SHALL NOT BE RESPONSIBLE FOR THE ACCURACY OR COMPLETENESS OF ELECTRONIC COPIES OF THIS PLAN SHEET.

C:\caddfiles\pw\pwwestcoast\ygreenlee\dms57861\SL-1404.dwg 7/02/18 13:37

REVISION DATES
DESIGN STAGE ONLY□

Sheet Version 3.0

CITY OF LOS ANGELES DEPARTMENT OF PUBLIC WORKS
BUREAU OF ENGINEERING

ENGINEERING
CITY OF LOS ANGELES

NO.	REVISIONS:	DATE	BY:
1	DESIGN CHANGES: CHANGE TO BOE APPROVAL	3/15/17	
2	DESIGN CHANGES: REVISED ENCLOSURE TYPE	7/3/18	

STRUCTURE NO.
53C-2329

INDEX NO.

THIS PLAN WAS ELECTRONICALLY SIGNED AND STAMPED

PROFESSIONAL ENGINEER
No. 41708
Exp. 6/30/2018
ELECTRICAL
STATE OF CALIFORNIA

GARY LEE MOORE, P.E. CITY ENGINEER
DESIGN GROUP
ENGINEER: ALEKSANDRA GOROVAYA LIC NO. 45318 DATE:
DESIGNED BY: ALEKSANDRA GOROVAYA
DRAWN BY: RON GREENLEE
CHECKED BY: CARL AYUBI
APPROVED BY:

VERTICAL CONTROL: BM 12-04070, 1929 (NGVD 29) - 1985 ADJUSTMENT
HORIZONTAL CONTROL: GPS; PID AE 1704, EPOCH 1991.35

SHEET TITLE: ARCH LIGHTING PLANS

PROJECT: SIXTH STREET VIADUCT REPLACEMENT

ADDRESS: SIXTH STREET VIADUCT (WHITTIER BLVD)
LOS ANGELES, CA

HNTB
HNTB Corporation
601 W. 5TH STREET SUITE 1000
LOS ANGELES, CALIFORNIA 90071
TEL (213) 403-1000 FAX (213) 403-1001

WORK ORDER NO.
E70022□L

DRAWING NO.
SL-1404

SHEET OF SHEETS

ADDENDUM 5

SHEET NOTES: ▽1

1. ALL ELECTRICAL EQUIPMENT INSIDE CALTRANS TYPE III–BF ENCLOSURE SHALL BE UL LISTED AND INSTALLED AT MANUFACTURER'S SITE.
2. GROUND ROD 3/4" DIA. X 10" LONG SHALL BE PROVIDED PER STANDARD PLAN ES–2E.

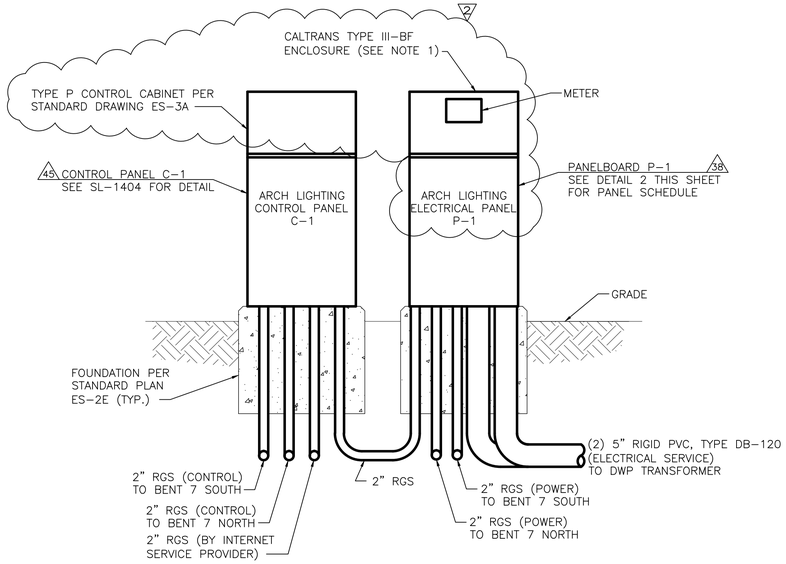

SERVICE EQUIPMENT ELEVATION

SCALE: N.T.S.

1 / SL–1405

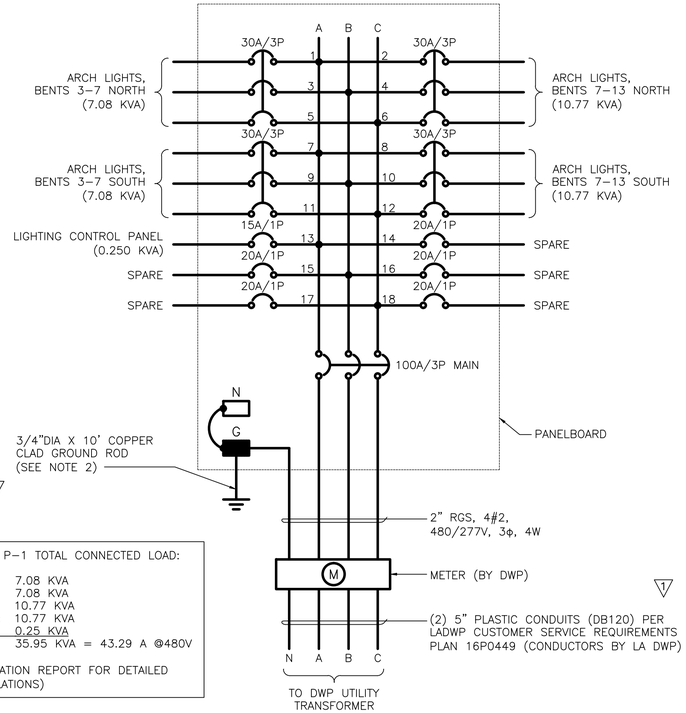

PANELBOARD P–1 TOTAL CONNECTED LOAD:

CKT 1,3,5:	7.08 KVA
CKT 7,9,11:	7.08 KVA
CKT 2,4,6:	10.77 KVA
CKT 8,10,12:	10.77 KVA
CKT 13:	0.25 KVA
TOTAL:	35.95 KVA = 43.29 A @480V

(SEE CALCULATION REPORT FOR DETAILED LOAD CALCULATIONS)

PANELBOARD P-1 PANEL SCHEDULE

SCALE: N.T.S.

2 / SL–1405

SL-79□□
REVIEWED BY BUREAU OF STREET LIGHTING

T.O. 5 - Preliminary Change Order Serial Sketch No. 76 - Page 2 of 2

HNTB
HNTB Corporation
601 W. 5TH STREET SUITE 1000
LOS ANGELES, CALIFORNIA 90071
TEL (213) 403-1000 FAX (213) 403-1001

CITY OF LOS ANGELES DEPARTMENT OF PUBLIC WORKS BUREAU OF ENGINEERING

ENGINEERING — CITY OF LOS ANGELES

NO.	REVISIONS:	DATE:	BY:
1	DESIGN CHANGES; CHANGE TO BOE APPROVAL	3/15/17	
2	DESIGN CHANGES; REVISED ENCLOSURE TYPE	7/3/18	

STRUCTURE NO. 53C-2329

INDEX NO.

THIS PLAN WAS ELECTRONICALLY SIGNED AND STAMPED

PROFESSIONAL ENGINEER — ANDREW A. MOORE — No. 417087 — Exp. 6/30/2018 — STATE OF CALIFORNIA — ELECTRICAL

GARY LEE MOORE, P.E. — CITY ENGINEER — DATE:
LIC. NO. 45318

ENGINEER:	ALEKSANDRA GOROVAYA
DESIGNED BY:	ALEKSANDRA GOROVAYA
DRAWN BY:	RON GREENLEE
CHECKED BY:	CARL AYUBI
APPROVED BY:	

DESIGN GROUP

VERTICAL CONTROL: BM 12-04070, 1929 (NGVD 29) - 1985 ADJUSTMENT
HORIZONTAL CONTROL: GPS; PID AE 1704, EPOCH 1991.35

SHEET TITLE: ARCH LIGHTING PLANS

PROJECT: SIXTH STREET VIADUCT REPLACEMENT

ADDRESS: SIXTH STREET VIADUCT (WHITTIER BLVD) LOS ANGELES, CA

WORK ORDER NO. E70022□L

DRAWING NO. SL-1405

SHEET OF SHEETS

THE CITY OF LOS ANGELES OR ITS OFFICERS OR AGENTS SHALL NOT BE RESPONSIBLE FOR THE ACCURACY OR COMPLETENESS OF ELECTRONIC COPIES OF THIS PLAN SHEET.

REVISION DATES DESIGN STAGE ONLY:

C:\caddlib\pw\pwwestcoast\greenlee\dms57861\SL-1405.dwg 7/02/18 13:57

Sheet Version 3.0

Dist	COUNTY	ROUTE	POST MILES TOTAL PROJECT	SHEET No.	TOTAL SHEETS
07	LA	101	S0.20	160	560

INDEX OF PLANS

SHEET NO.	DESCRIPTION
1	TITLE AND LOCATION MAP
2	TYPICAL CROSS SECTION
3	LAYOUT
4	PROF ILE
5-6	CONSTRUCTION DETAILS
7	TEMPORARY WATER POLLUTION CONTROL PLAN
8	EROSION CONTROL PLAN
9	CONTOUR GRADING
10	DRAINAGE PLAN
11	DRAINAGE PROFILE
12-13	STAGE CONSTRUCTION
14-18	TRAFFIC HANDLING DETAILS
19	PAVEMENT DELINEATION
20	STRUCTURAL PLAN NO. 6 - CONSTRUCTION WITHIN CALTRANS R/W

STATE OF CALIFORNIA
DEPARTMENT OF TRANSPORTATION

PROJECT PLANS FOR CONSTRUCTION ON
STATE HIGHWAY

IN LOS ANGELES COUNTY
IN LOS ANGELES
AT SIXTH STREET VIADUCT

TO BE SUPLEMENTED BY STANDARD PLANS DATED 2010





Caltrans

BUREAU OF ENGINEERING
OFFICIAL RECORD

APPROVED AS TO IMPACT ON STATE FACILITIES AND CONFORMANCE WITH APPLICABLE STATE STANDARDS AND PRACTICES AND THAT TECHNICAL OVERSIGHT WAS PERFORMED.

CONSULTANT DESIGN ENGINEER: VICTOR MARTINEZ | REGISTRATION No. 50820 | LICENSE EXP DATE 9-30-17

CALTRANS DESIGN OVERSIGHT APPROVAL: REFUGIO DOMINGUEZ, CIVIL | DATE SIGNED

6/9/2016
PROJECT ENGINEER DATE
REGISTERED CIVIL ENGINEER
TERENCE T PAO No. C 63433 Exp. 9/30/16 CIVIL

6/10/2016
PLANS APPROVAL DATE

THE STATE OF CALIFORNIA OR ITS OFFICERS OR AGENTS SHALL NOT BE RESPONSIBLE FOR THE ACCURACY OR COMPLETENESS OF SCANNED COPIES OF THIS PLAN SHEET.

THE CONTRACTOR SHALL POSSESS THE CLASS (OR CLASSES) OF LICENSE AS SPECIFIED IN THE "NOTICE TO BIDDERS."

NO SCALE

HNTB COPORATION
601 W. 5TH STREET
SUITE 1000
LOS ANGELES, CA 90071

CITY OF LOS ANGELES
DEPT OF PUBLIC WORKS BOE
1149 BROADWAY, SUITE 700
LOS ANGELES, CA 90015

CONTRACT No.	07-251204
PROJECT ID	0700000448

P-38113

LAST REVISION DATE PLOTTED => 00-00-00 TIME PLOTTED => ST_ME$

BORDER LAST REVISED 9/30/2012 | CALTRANS WEB SITE IS: HTTP//WWW.DOT.CA.GOV/ | RELATIVE BORDER SCALE IS IN INCHES 0 1 2 3 | USERNAME => $USER$ DGN FILE => $FILE$ | UNIT 1819 | PROJECT NUMBER & PHASE 07000004481

ADDENDUM 5

Dist	COUNTY	ROUTE	POST MILES TOTAL PROJECT	SHEET No.	TOTAL SHEETS
07	LA	101	S0.2	161	560

REGISTERED CIVIL ENGINEER — DATE 6/9/2016

6/9/2016
PLANS APPROVAL DATE

REGISTERED PROFESSIONAL ENGINEER
TERENCE T. PAO
No. C 63433
Exp. 9/30/16
CIVIL
STATE OF CALIFORNIA

THE STATE OF CALIFORNIA OR ITS OFFICERS OR AGENTS SHALL NOT BE RESPONSIBLE FOR THE ACCURACY OR COMPLETENESS OF SCANNED COPIES OF THIS PLAN SHEET.

HTNB CORPORATION
601 W. 5TH ST.
SUITE 1000
LOS ANGELES, CA 90071

CITY OF LOS ANGELES
DEPT OF PUBIC WORKS BOE
1149 BROADWAY, SUITE 700
LOS ANGELES, CA 90015

NOTES:

1. DIMENSIONS OF THE STRUCTURAL SECTIONS ARE SUBJECT TO TOLERANCES SPECIFIED IN THE STANDARD SPECIFICATIONS.
2. SUPERELEVATION AS SHOWN OR AS DIRECTED BY THE ENGINEER.
3. SEE LAYOUT PLANS FOR CONCRETE BARRIER TYPE

TYPICAL STRUCTURAL SECTION

1E — 0.67′ PCC
0.50′ UNTREATED ROCK BASE

1 — 0.95′ JPCP
BOND BREAKER NO.5
0.35′ LCB
0.70′ CLASS 3 AB

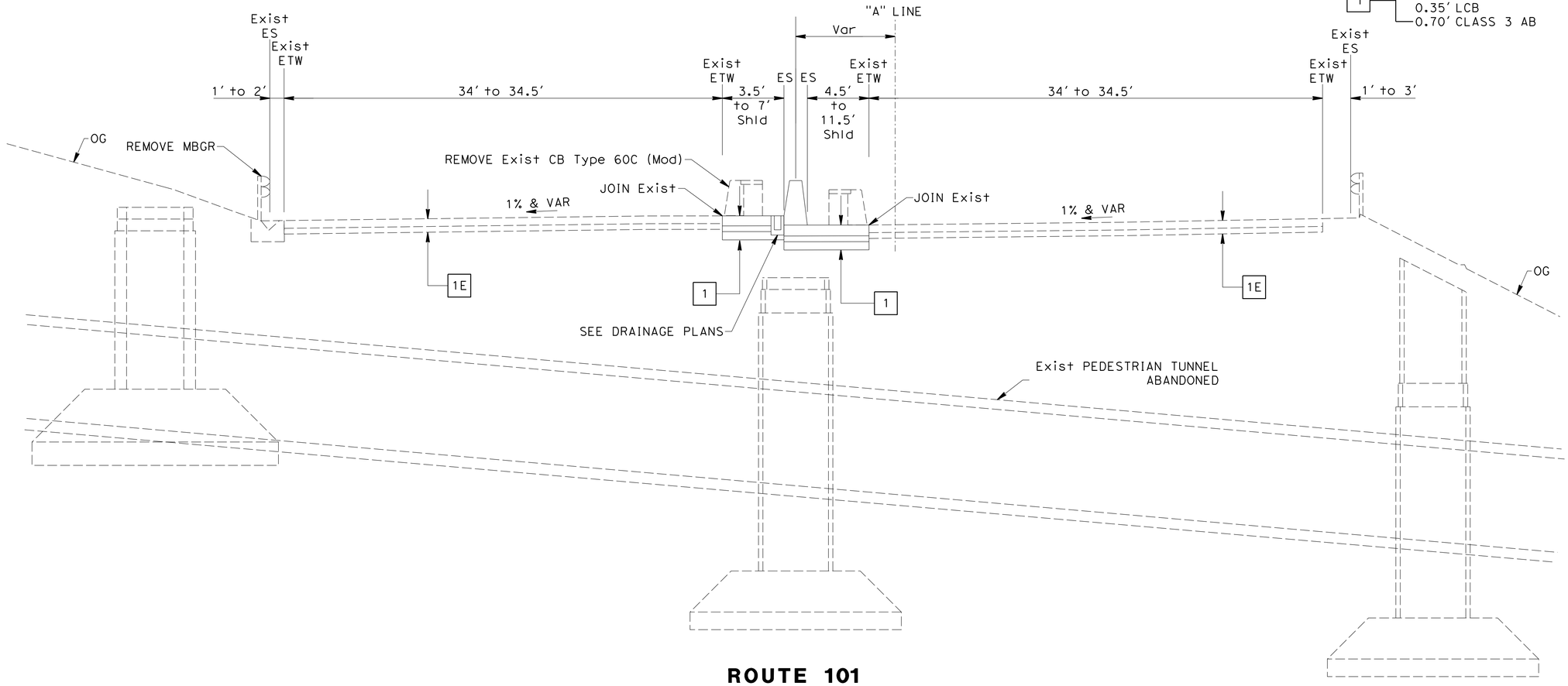

ROUTE 101

"A" LINE Sta 48+75.00 TO Sta 51+99.10

BUREAU OF ENGINEERING
OFFICIAL RECORD

TYPICAL CROSS SECTIONS

NO SCALE

P-38113

X-1

REVISED BY | DATE REVISED
TAYLOR HENDERSON | TERENCE PAO
CALCULATED–DESIGNED BY | CHECKED BY
CONSULTANT FUNCTIONAL SUPERVISOR: TERENCE PAO
STATE OF CALIFORNIA – DEPARTMENT OF TRANSPORTATION
Caltrans

LAST REVISION 00-00-00 | DATE PLOTTED => $DATE$ | TIME PLOTTED => $TIME$

BORDER LAST REVISED 7/2/2010 | USERNAME =>$USER$ | DGN FILE => $FILE$ | RELATIVE BORDER SCALE IS IN INCHES 0 1 2 3 | UNIT 1819 | PROJECT NUMBER & PHASE 07000004481

ADDENDUM 5

Dist	COUNTY	ROUTE	POST MILES TOTAL PROJECT	SHEET No.	TOTAL SHEETS
07	LA	101	S0.2	162	560

REGISTERED CIVIL ENGINEER — DATE 6/9/2016

TERENCE T. PAO No. C 63433 Exp. 9/30/16 CIVIL — REGISTERED PROFESSIONAL ENGINEER — STATE OF CALIFORNIA

6/9/2016
PLANS APPROVAL DATE

THE STATE OF CALIFORNIA OR ITS OFFICERS OR AGENTS SHALL NOT BE RESPONSIBLE FOR THE ACCURACY OR COMPLETENESS OF SCANNED COPIES OF THIS PLAN SHEET.

HTNB CORPORATION
601 W. 5TH ST.
SUITE 1000
LOS ANGELES, CA 90071

CITY OF LOS ANGELES
DEPT OF PUBIC WORKS BOE
1149 BROADWAY, SUITE 700
LOS ANGELES, CA 90015

NOTE:

FOR COMPLETE R/W AND ACCURATE ACCESS DATA, SEE R/W RECORD MAPS AT DISTRICT OFFICE.

LEGEND:

REMOVE Conc Shld
Const PCCP Shld
Where Shld width is less than 6FT,
Const transverse weakened plane
joint at 1W:1L Interval

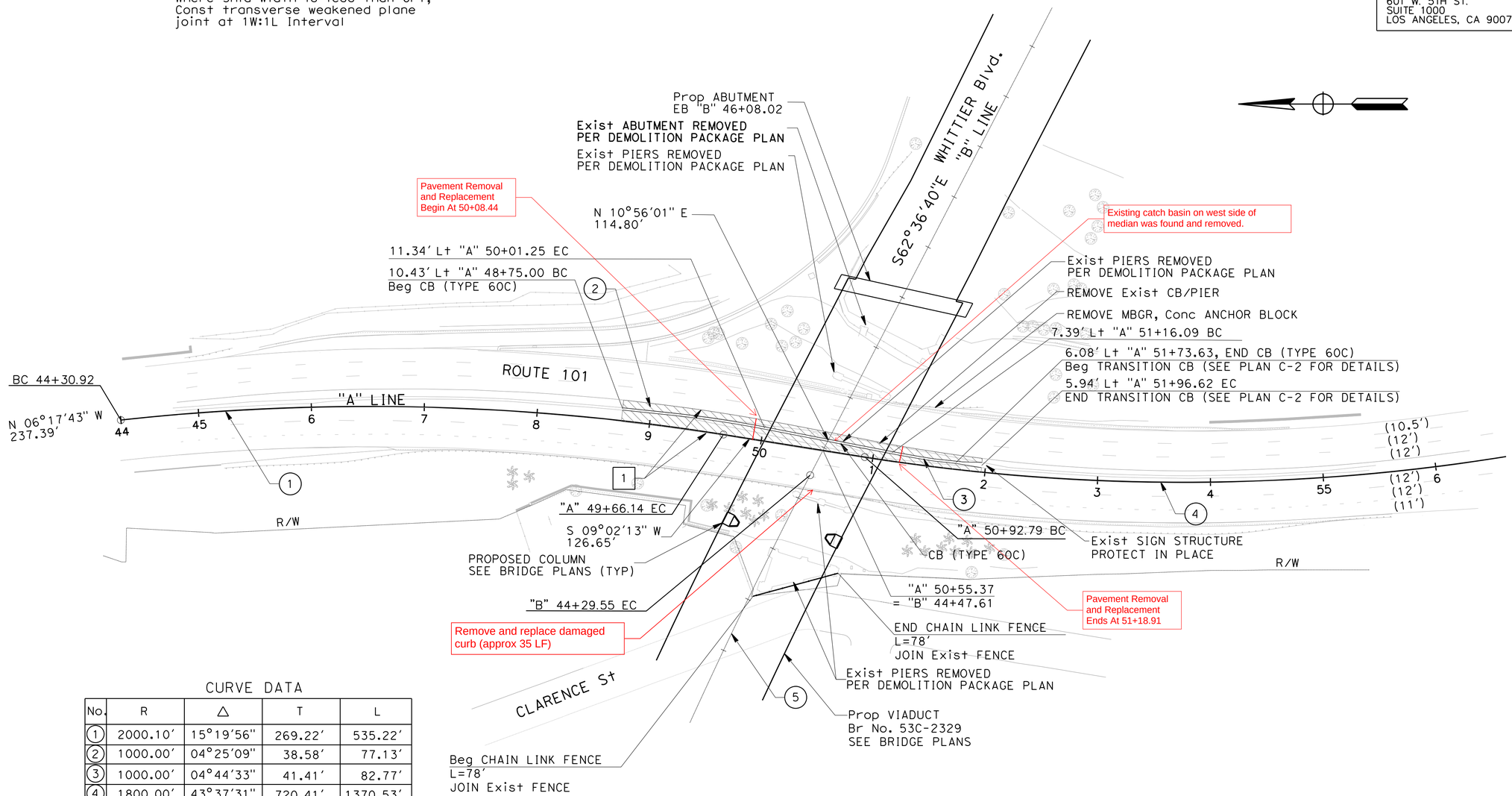

CURVE DATA

No.	R	Δ	T	L
1	2000.10'	15°19'56"	269.22'	535.22'
2	1000.00'	04°25'09"	38.58'	77.13'
3	1000.00'	04°44'33"	41.41'	82.77'
4	1800.00'	43°37'31"	720.41'	1370.53'
5	5000.00'	32°30'52"	1458.05'	2837.42'

BUREAU OF ENGINEERING — OFFICIAL RECORD

LAYOUT

SCALE : 1"=50'

P-38113

L-1

STATE OF CALIFORNIA – DEPARTMENT OF TRANSPORTATION — Caltrans®

CONSULTANT FUNCTIONAL SUPERVISOR: TERENCE PAO

CALCULATED–DESIGNED BY: TAYLOR HENDERSON — CHECKED BY: TERENCE PAO

REVISED BY — DATE REVISED

LAST REVISION — DATE PLOTTED => $DATE$ — TIME PLOTTED => $TIME$ — 00-00-00

BORDER LAST REVISED 7/2/2010 — USERNAME =>$USER$ — DGN FILE => $FILE$ — RELATIVE BORDER SCALE IS IN INCHES 0 1 2 3 — UNIT 1819 — PROJECT NUMBER & PHASE 07000004481

ADDENDUM 5

Dist	COUNTY	ROUTE	POST MILES TOTAL PROJECT	SHEET No.	TOTAL SHEETS
07	LA	101	S0.2	163	560

REGISTERED CIVIL ENGINEER — DATE 6/9/2016

TERENCE T. PAO, No. C 63433, Exp. 9/30/16, CIVIL — REGISTERED PROFESSIONAL ENGINEER — STATE OF CALIFORNIA

6/9/2016
PLANS APPROVAL DATE

THE STATE OF CALIFORNIA OR ITS OFFICERS OR AGENTS SHALL NOT BE RESPONSIBLE FOR THE ACCURACY OR COMPLETENESS OF SCANNED COPIES OF THIS PLAN SHEET.

HTNB CORPORATION
601 W. 5TH ST.
SUITE 1000
LOS ANGELES, CA 90071

CITY OF LOS ANGELES
DEPT OF PUBIC WORKS BOE
1149 BROADWAY, SUITE 700
LOS ANGELES, CA 90015

REVISED BY | DATE REVISED

CALCULATED–DESIGNED BY: TAYLOR HENDERSON
CHECKED BY: TERENCE PAO

CONSULTANT FUNCTIONAL SUPERVISOR: TERENCE PAO

STATE OF CALIFORNIA – DEPARTMENT OF TRANSPORTATION

Caltrans

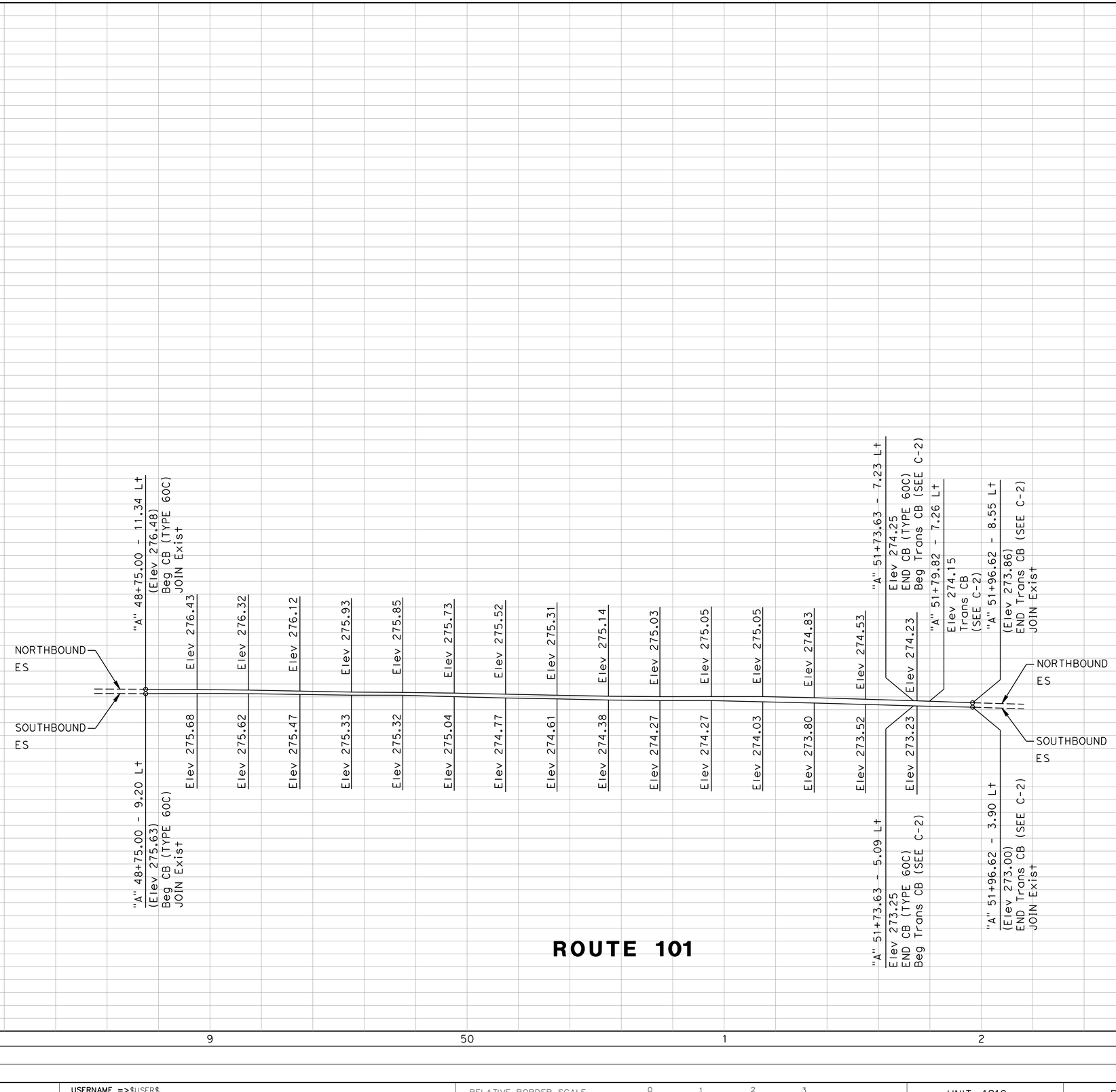

ROUTE 101

PROFILE

SCALE: Horiz 1"=20'
Vert 1"=2'

P-1

BUREAU OF ENGINEERING — OFFICIAL RECORD

STATION	8	9	50	1	2	3	TOTAL
CY Exc							
CY Emb							

P-38113

LAST REVISION: DATE PLOTTED => $DATE$ 00-00-00 TIME PLOTTED => $TIME$

BORDER LAST REVISED 7/2/2010 | USERNAME =>$USER$ DGN FILE => $FILE$ | RELATIVE BORDER SCALE IS IN INCHES 0 1 2 3 | UNIT 1819 | PROJECT NUMBER & PHASE 07000004481

ADDENDUM 5

Dist	COUNTY	ROUTE	POST MILES TOTAL PROJECT	SHEET No.	TOTAL SHEETS
07	LA	101	S0.2	164	560

REGISTERED CIVIL ENGINEER — DATE 6/9/2016

6/9/2016
PLANS APPROVAL DATE

TERENCE T. PAO
No. C 63433
Exp. 9/30/16
CIVIL
REGISTERED PROFESSIONAL ENGINEER
STATE OF CALIFORNIA

THE STATE OF CALIFORNIA OR ITS OFFICERS OR AGENTS SHALL NOT BE RESPONSIBLE FOR THE ACCURACY OR COMPLETENESS OF SCANNED COPIES OF THIS PLAN SHEET.

HTNB CORPORATION
601 W. 5TH ST.
SUITE 1000
LOS ANGELES, CA 90071

CITY OF LOS ANGELES
DEPT OF PUBIC WORKS BOE
1149 BROADWAY, SUITE 700
LOS ANGELES, CA 90015

NOTE:

FOR COMPLETE R/W AND ACCURATE ACCESS DATA, SEE R/W RECORD MAPS AT DISTRICT OFFICE.

ADL NOTE:

AERIALLY DEPOSITED LEAD, TYPE Y-1, DEPTH=4'

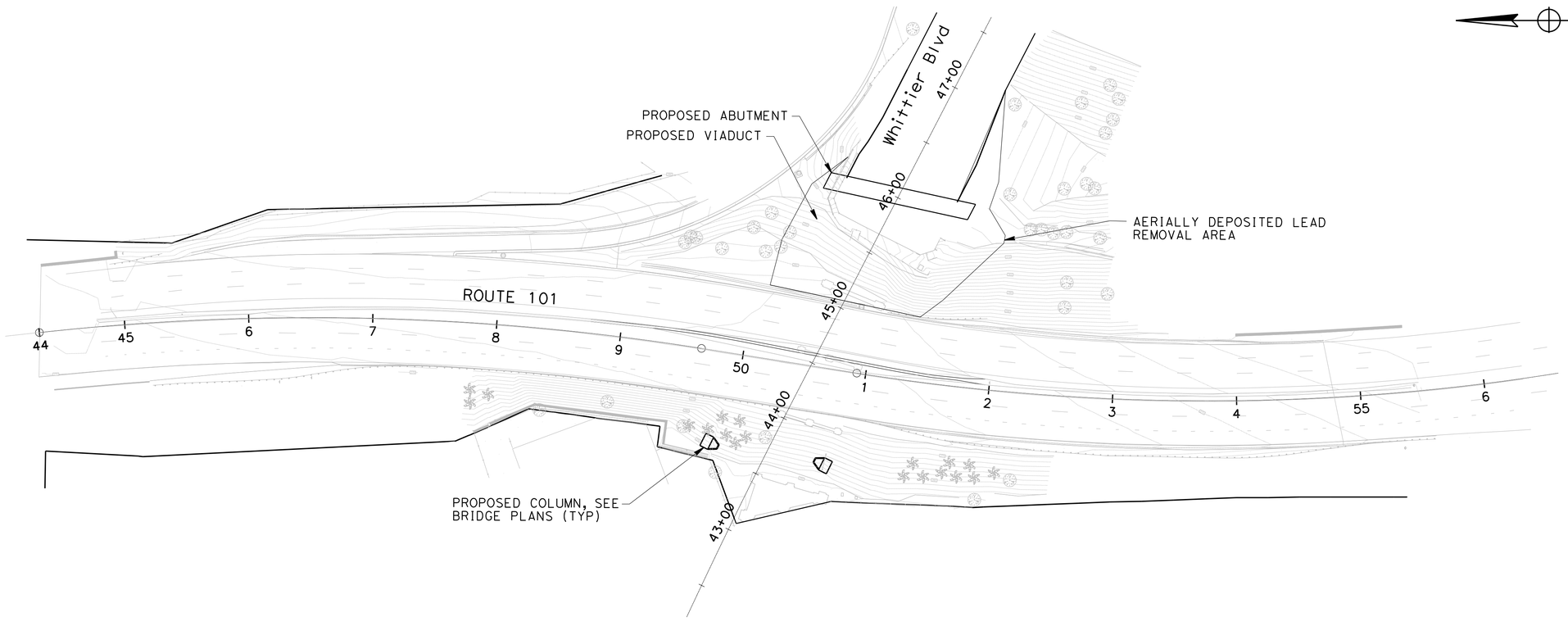

BUREAU OF ENGINEERING
OFFICIAL RECORD

CONSTRUCTION DETAILS

SCALE : 1"=50'

P-38113 **C-1**

LAST REVISION | DATE PLOTTED => $DATE$
00-00-00 | TIME PLOTTED => $TIME$

REVISED BY | DATE REVISED

TAYLOR HENDERSON | TERENCE PAO

CALCULATED-DESIGNED BY | CHECKED BY

CONSULTANT FUNCTIONAL SUPERVISOR: TERENCE PAO

STATE OF CALIFORNIA - DEPARTMENT OF TRANSPORTATION
Caltrans

BORDER LAST REVISED 7/2/2010 | USERNAME =>$USER$ | DGN FILE => $FILE$ | RELATIVE BORDER SCALE IS IN INCHES 0 1 2 3 | UNIT 1819 | PROJECT NUMBER & PHASE 07000004481

ADDENDUM 5

NOTE:

1. FOR DETAILS NOT SHOWN REFER TO CALTRANS Std PLAN A76A

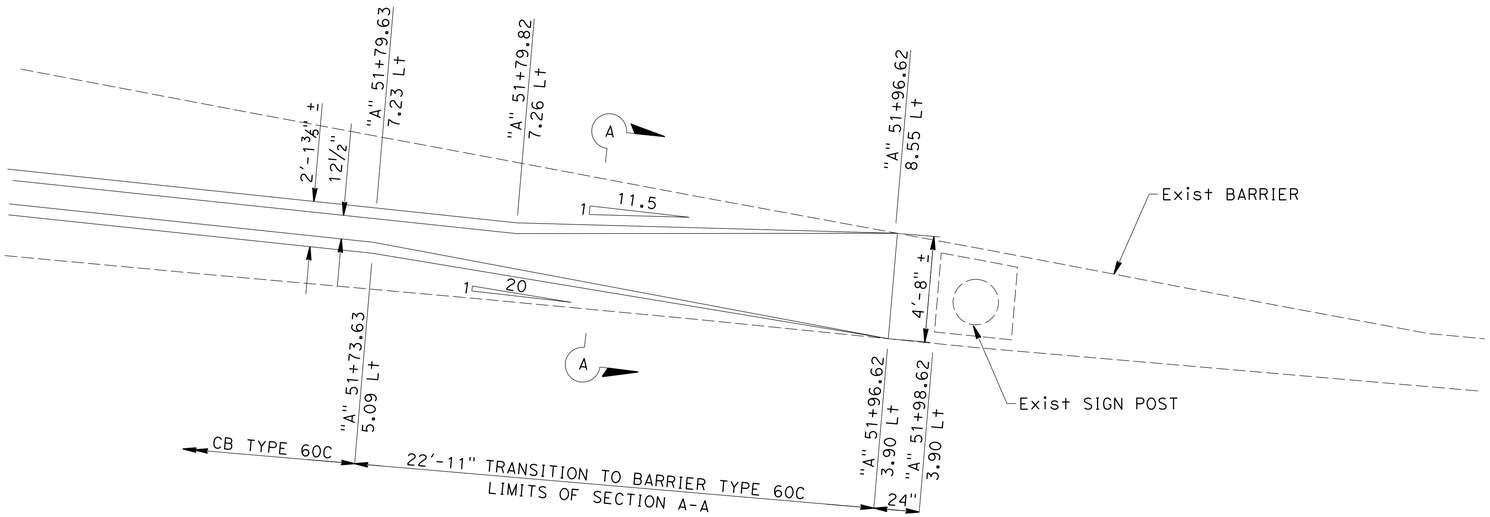

CONCRETE BARRIER TRANSITION DETAIL

No Scale

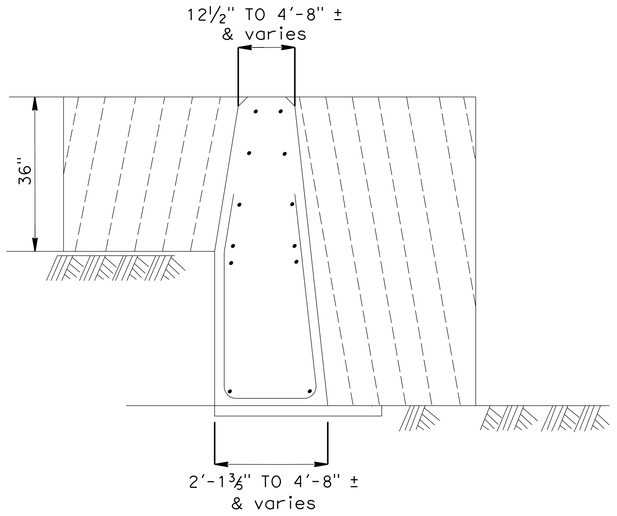

SECTION A-A

No Scale

Dist	COUNTY	ROUTE	POST MILES TOTAL PROJECT	SHEET No.	TOTAL SHEETS
07	LA	101	S0.2	165	560

REGISTERED CIVIL ENGINEER — DATE 6/9/2016

REGISTERED PROFESSIONAL ENGINEER — TERENCE T. PAO — No. C 63433 — Exp. 9/30/16 — CIVIL — STATE OF CALIFORNIA

6/9/2016
PLANS APPROVAL DATE

THE STATE OF CALIFORNIA OR ITS OFFICERS OR AGENTS SHALL NOT BE RESPONSIBLE FOR THE ACCURACY OR COMPLETENESS OF SCANNED COPIES OF THIS PLAN SHEET.

HTNB CORPORATION
601 W. 5TH ST.
SUITE 1000
LOS ANGELES, CA 90071

CITY OF LOS ANGELES
DEPT OF PUBIC WORKS BOE
1149 BROADWAY, SUITE 700
LOS ANGELES, CA 90015

BUREAU OF ENGINEERING — OFFICIAL RECORD

CONSTRUCTION DETAILS

No Scale

P-38113 C-2

REVISED BY | DATE REVISED
TAYLOR HENDERSON | TERENCE PAO
CALCULATED-DESIGNED BY | CHECKED BY
CONSULTANT FUNCTIONAL SUPERVISOR: TERENCE PAO
STATE OF CALIFORNIA - DEPARTMENT OF TRANSPORTATION — Caltrans

LAST REVISION | DATE PLOTTED => $DATE$ | 00-00-00 | TIME PLOTTED => $TIME$

BORDER LAST REVISED 7/2/2010 | USERNAME =>$USER$ | DGN FILE => $FILE$ | RELATIVE BORDER SCALE IS IN INCHES 0 1 2 3 | UNIT 1819 | PROJECT NUMBER & PHASE 07000004481

ADDENDUM 5

Dist	COUNTY	ROUTE	POST MILES TOTAL PROJECT	SHEET No.	TOTAL SHEETS
07	LA	101	S0.2	166	560

REGISTERED CIVIL ENGINEER — DATE 6/9/2016

REGISTERED PROFESSIONAL ENGINEER — TERENCE T. PAO — No. C 63433 — Exp. 9/30/16 — CIVIL — STATE OF CALIFORNIA

6/9/2016
PLANS APPROVAL DATE

THE STATE OF CALIFORNIA OR ITS OFFICERS OR AGENTS SHALL NOT BE RESPONSIBLE FOR THE ACCURACY OR COMPLETENESS OF SCANNED COPIES OF THIS PLAN SHEET.

HTNB CORPORATION
601 W. 5TH ST.
SUITE 1000
LOS ANGELES, CA 90071

CITY OF LOS ANGELES
DEPT OF PUBIC WORKS BOE
1149 BROADWAY, SUITE 700
LOS ANGELES, CA 90015

FOR COMPLETE R/W AND ACCURATE ACCESS DATA,
SEE R/W RECORD MAPS AT DISTRICT OFFICE.

CONSTRUCTION NOTES:

1. CONSTRUCT PROP BRIDGE ABUTMENT
2. CONSTRUCT PROP BRIDGE COLUMN
3. CONSTRUCT PROP GRATED LINE DRAIN
4. CONSTRUCT PROP CATCH BASIN

LEGEND:

- SC-10 STORM DRAIN INLET PROTECTION
- SURFACE FLOW DIRECTION
- SS-2 PRESERVATION OF EXISTING VEGETATION
- SS-4 HYDROSEEDING
- TC-1 STABILIZED CONSTRUCTION ENTRANCE/EXIT
- SC-1 SILT FENCE
- SC-5 FIBER ROLLS
- SC-8 SANDBAG BARRIER

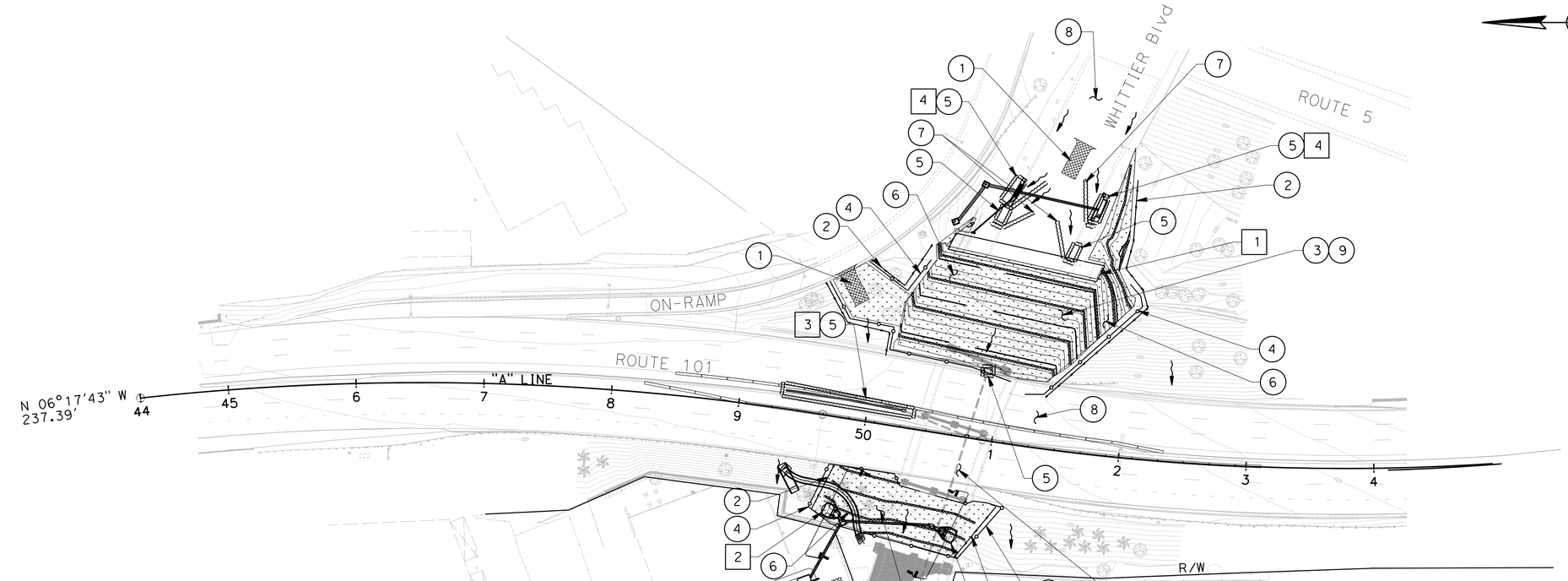

STORM WATER POLLUTION CONTROL CONSTRUCTION NOTES:

1. INSTALL STABILIZED CONSTRUCTION ENTRANCE/EXIT (TC-1)
2. PRESERVE EXISTING VEGETATION (SS-2)
3. INSTALL HYDROSEEDING (SS-4)
4. INSTALL SILT FENCE (SC-1)
5. INSTALL STORM DRAIN INLET PROTECTION (SC-10)
6. INSTALL FIBER ROLLS (SC-5)
7. INSTALL SANDBAG BARRIER (SC-8)
8. STREET SWEEPING AND VACUUMING (SC-7)
9. INSTALL GEOTEXTILES, MATS, PLASTIC COVERS, AND EROSION CONTROL BLANKETS (SS-7) AS APPLICABLE

APPROVED FOR TEMPORARY WATER POLLUTION CONTROL WORK ONLY

BUREAU OF ENGINEERING — OFFICIAL RECORD

TEMPORARY WATER POLLUTION CONTROL

SCALE : 1"=50'

P-38113

TWPC-1

REVISED BY	DATE REVISED
TAYLOR HENDERSON	TERENCE PAO

CALCULATED–DESIGNED BY
CHECKED BY

CONSULTANT FUNCTIONAL SUPERVISOR
TERENCE PAO

STATE OF CALIFORNIA - DEPARTMENT OF TRANSPORTATION
Caltrans®

LAST REVISION 00-00-00
DATE PLOTTED => $DATE$
TIME PLOTTED => $TIME$

BORDER LAST REVISED 7/2/2010 | USERNAME =>$USER$ DGN FILE => $FILE$ | RELATIVE BORDER SCALE IS IN INCHES 0 1 2 3 | UNIT 1819 | PROJECT NUMBER & PHASE 07000004481

ADDENDUM 5

Dist	COUNTY	ROUTE	POST MILES TOTAL PROJECT	SHEET No.	TOTAL SHEETS
07	LA	101	S0.2	167	560

REGISTERED CIVIL ENGINEER — DATE 6/9/2016

6/9/2016
PLANS APPROVAL DATE

REGISTERED PROFESSIONAL ENGINEER
TERENCE T. PAO
No. C 63433
Exp. 9/30/16
CIVIL
STATE OF CALIFORNIA

THE STATE OF CALIFORNIA OR ITS OFFICERS OR AGENTS SHALL NOT BE RESPONSIBLE FOR THE ACCURACY OR COMPLETENESS OF SCANNED COPIES OF THIS PLAN SHEET.

HTNB CORPORATION
601 W. 5TH ST.
SUITE 1000
LOS ANGELES, CA 90071

CITY OF LOS ANGELES
DEPT OF PUBIC WORKS BOE
1149 BROADWAY, SUITE 700
LOS ANGELES, CA 90015

NOTE:

FOR COMPLETE R/W AND ACCURATE ACCESS DATA, SEE R/W RECORD MAPS AT DISTRICT OFFICE.

LEGEND:

SS-4 ~~HYDROSEEDING~~ Mulch per change order 181

SC-5 FIBER ROLLS

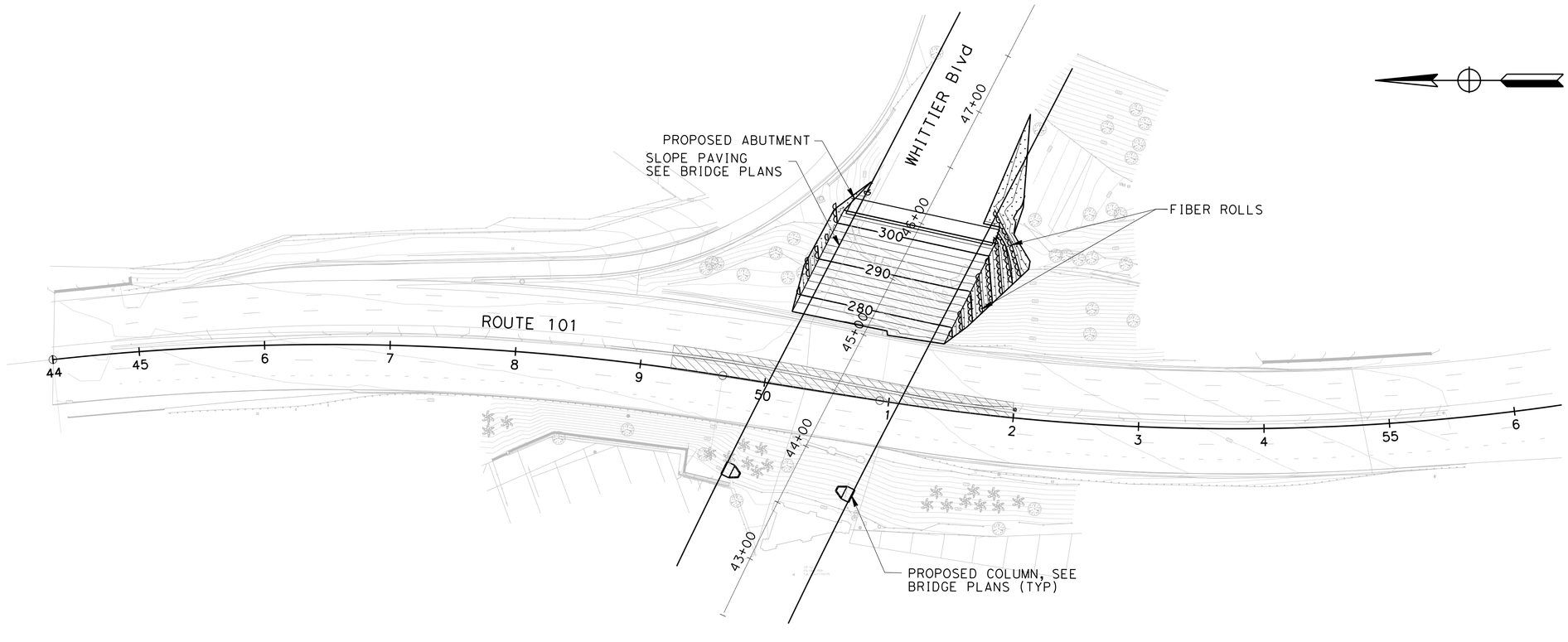

BUREAU OF ENGINEERING
OFFICIAL RECORD

APPROVED FOR EROSION CONTROL WORK ONLY

EROSION CONTROL PLAN

SCALE : 1"=50'

EC-1

P-38113

REVISED BY | DATE REVISED
TAYLOR HENDERSON | TERENCE PAO
CALCULATED-DESIGNED BY | CHECKED BY
CONSULTANT FUNCTIONAL SUPERVISOR
TERENCE PAO
STATE OF CALIFORNIA - DEPARTMENT OF TRANSPORTATION
Caltrans

LAST REVISION | DATE PLOTTED => $DATE$ TIME PLOTTED => $TIME$
00-00-00

BORDER LAST REVISED 7/2/2010 | USERNAME =>$USER$ DGN FILE => $FILE$ | RELATIVE BORDER SCALE IS IN INCHES 0 1 2 3 | UNIT 1819 | PROJECT NUMBER & PHASE 07000004481

ADDENDUM 5

Dist	COUNTY	ROUTE	POST MILES TOTAL PROJECT	SHEET No.	TOTAL SHEETS
07	LA	101	S0.2	168	560

REGISTERED CIVIL ENGINEER — DATE 6/9/2016

REGISTERED PROFESSIONAL ENGINEER
TERENCE T. PAO
No. C 63433
Exp. 9/30/16
CIVIL
STATE OF CALIFORNIA

6/9/2016
PLANS APPROVAL DATE

THE STATE OF CALIFORNIA OR ITS OFFICERS OR AGENTS SHALL NOT BE RESPONSIBLE FOR THE ACCURACY OR COMPLETENESS OF SCANNED COPIES OF THIS PLAN SHEET.

HTNB CORPORATION
601 W. 5TH ST.
SUITE 1000
LOS ANGELES, CA 90071

CITY OF LOS ANGELES
DEPT OF PUBIC WORKS BOE
1149 BROADWAY, SUITE 700
LOS ANGELES, CA 90015

NOTE:

FOR COMPLETE R/W AND ACCURATE ACCESS DATA, SEE R/W RECORD MAPS AT DISTRICT OFFICE.

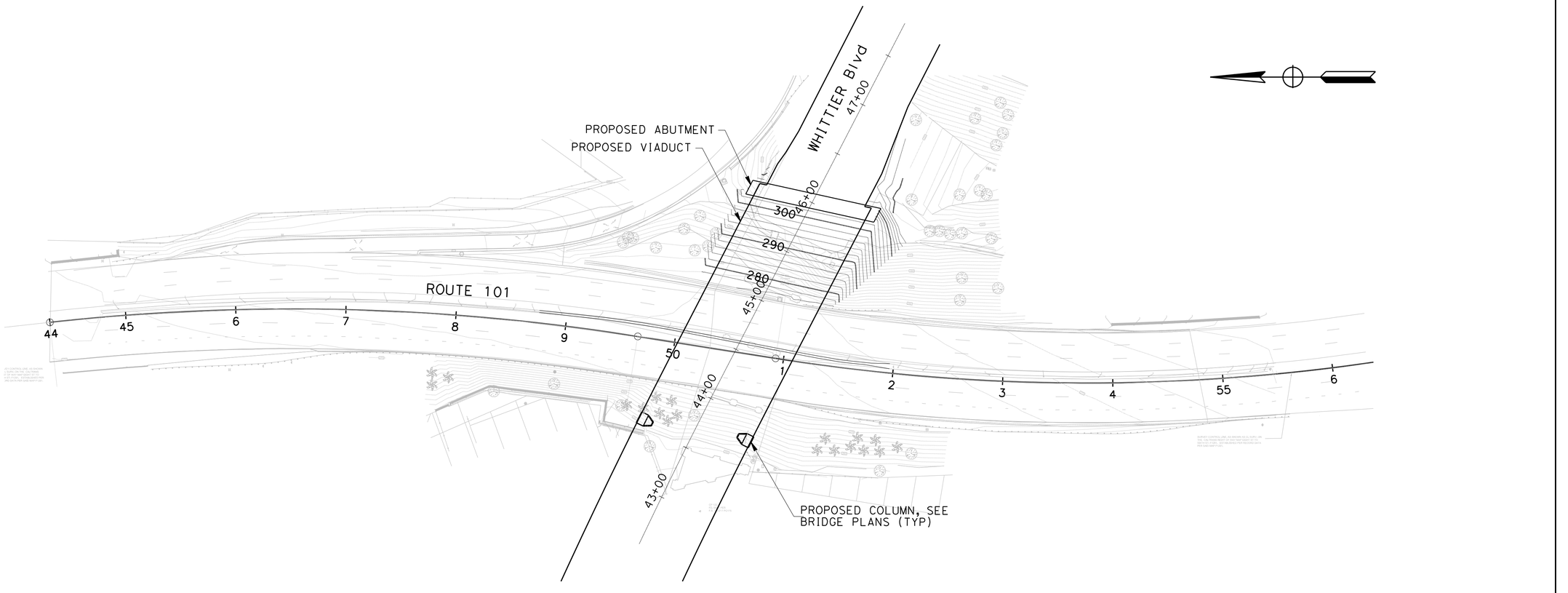

APPROVED FOR CONTOUR GRADING WORK ONLY

BUREAU OF ENGINEERING
OFFICIAL RECORD

CONTOUR GRADING

SCALE : 1"=50'

G-1

P-38113

LAST REVISION | DATE PLOTTED => $DATE$
00-00-00 | TIME PLOTTED => $TIME$

REVISED BY	DATE REVISED

CALCULATED-DESIGNED BY
CHECKED BY
TAYLOR HENDERSON
TERENCE PAO

CONSULTANT FUNCTIONAL SUPERVISOR
TERENCE PAO

STATE OF CALIFORNIA - DEPARTMENT OF TRANSPORTATION
Caltrans

BORDER LAST REVISED 7/2/2010

USERNAME =>$USER$
DGN FILE => $FILE$

RELATIVE BORDER SCALE IS IN INCHES 0 1 2 3

UNIT 1819

PROJECT NUMBER & PHASE 07000004481

ADDENDUM 5

Dist	COUNTY	ROUTE	POST MILES TOTAL PROJECT	SHEET No.	TOTAL SHEETS
07	LA	101	S0.2	169	560

REGISTERED CIVIL ENGINEER — DATE 6/9/2016

REGISTERED PROFESSIONAL ENGINEER — TERENCE T. PAO — No. C 63433 — Exp. 9/30/16 — CIVIL — STATE OF CALIFORNIA

6/9/2016
PLANS APPROVAL DATE

THE STATE OF CALIFORNIA OR ITS OFFICERS OR AGENTS SHALL NOT BE RESPONSIBLE FOR THE ACCURACY OR COMPLETENESS OF SCANNED COPIES OF THIS PLAN SHEET.

HTNB CORPORATION
601 W. 5TH ST.
SUITE 1000
LOS ANGELES, CA 90071

CITY OF LOS ANGELES
DEPT OF PUBIC WORKS BOE
1149 BROADWAY, SUITE 700
LOS ANGELES, CA 90015

NOTES:

1. FOR COMPLETE R/W AND ACCURATE ACCESS DATA, SEE R/W RECORD MAPS AT DISTRICT OFFICE.
2. THE CONTRACTOR SHALL VERIFY LOCATIONS AND ELEVATIONS OF EXISTING AND PROPOSED DRAINAGE SYSTEM BEFORE COMMENCEMENT OF WORK.

DRAINAGE NOTES:

1. REFER TO CITY DRAINAGE PLANS FOR STORM DRAIN INFORMATION ALONG LOCAL STREETS.
2. REFER TO ROADWAY LAYOUT PLANS FOR SAWCUT LIMITS WITHIN MEDIAN.
3. ALL EDGE OF INLET GRATES SHALL BE FLUSHED WITH FLOW LINE.
4. INSTALL DRAINAGE INLET MARKER (MEDALLION) ON ALL PROPOSED AND REMODELED INLETS IN ACCORDANCE WITH STANDARD PLAN D71.

LEGEND:

(X) DRAINAGE SYSTEM No.

(a) DRAINAGE UNIT No.

LABOE LOS ANGELES BUREAU OF ENGINEERING

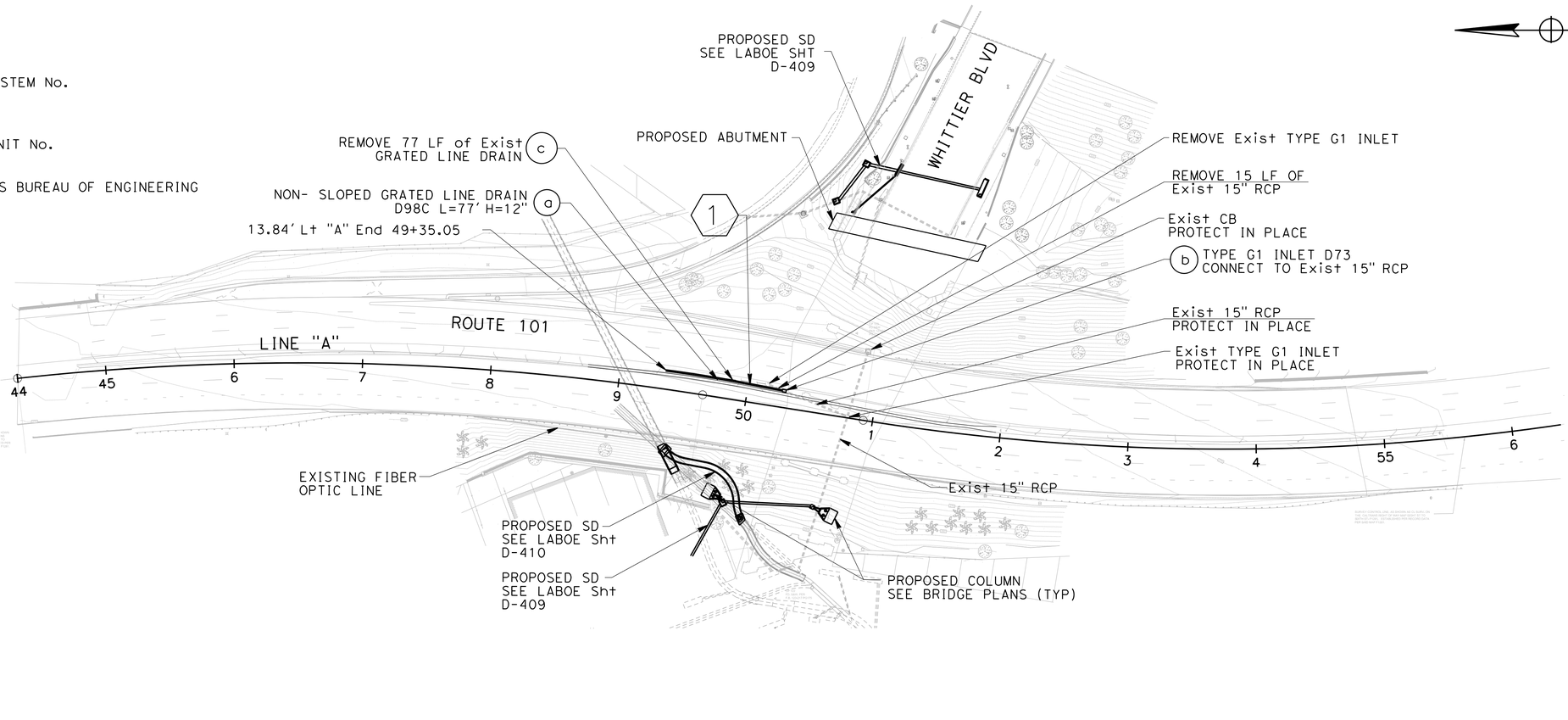

APPROVED FOR DRAINAGE WORK ONLY

BUREAU OF ENGINEERING — OFFICIAL RECORD

DRAINAGE PLAN

SCALE : 1"=50'

P-38113 **D-1**

LAST REVISION — DATE PLOTTED => $DATE$ — TIME PLOTTED => $TIME$ — 00-00-00

REVISED BY | DATE REVISED
TAYLOR HENDERSON | TERENCE PAO
CALCULATED-DESIGNED BY | CHECKED BY
CONSULTANT FUNCTIONAL SUPERVISOR | TERENCE PAO
STATE OF CALIFORNIA - DEPARTMENT OF TRANSPORTATION — Caltrans

BORDER LAST REVISED 7/2/2010 | USERNAME =>$USER$ | DGN FILE => $FILE$ | RELATIVE BORDER SCALE IS IN INCHES 0 1 2 3 | UNIT 1819 | PROJECT NUMBER & PHASE 07000004481

ADDENDUM 5

Dist	COUNTY	ROUTE	POST MILES TOTAL PROJECT	SHEET No.	TOTAL SHEETS
07	LA	101	S0.2	170	560

REGISTERED CIVIL ENGINEER — DATE 6/9/2016

6/9/2016
PLANS APPROVAL DATE

REGISTERED PROFESSIONAL ENGINEER
TERENCE T. PAO
No. C 63433
Exp. 9/30/16
CIVIL
STATE OF CALIFORNIA

THE STATE OF CALIFORNIA OR ITS OFFICERS OR AGENTS SHALL NOT BE RESPONSIBLE FOR THE ACCURACY OR COMPLETENESS OF SCANNED COPIES OF THIS PLAN SHEET.

HTNB CORPORATION
601 W. 5TH ST.
SUITE 1000
LOS ANGELES, CA 90071

CITY OF LOS ANGELES
DEPT OF PUBIC WORKS BOE
1149 BROADWAY, SUITE 700
LOS ANGELES, CA 90015

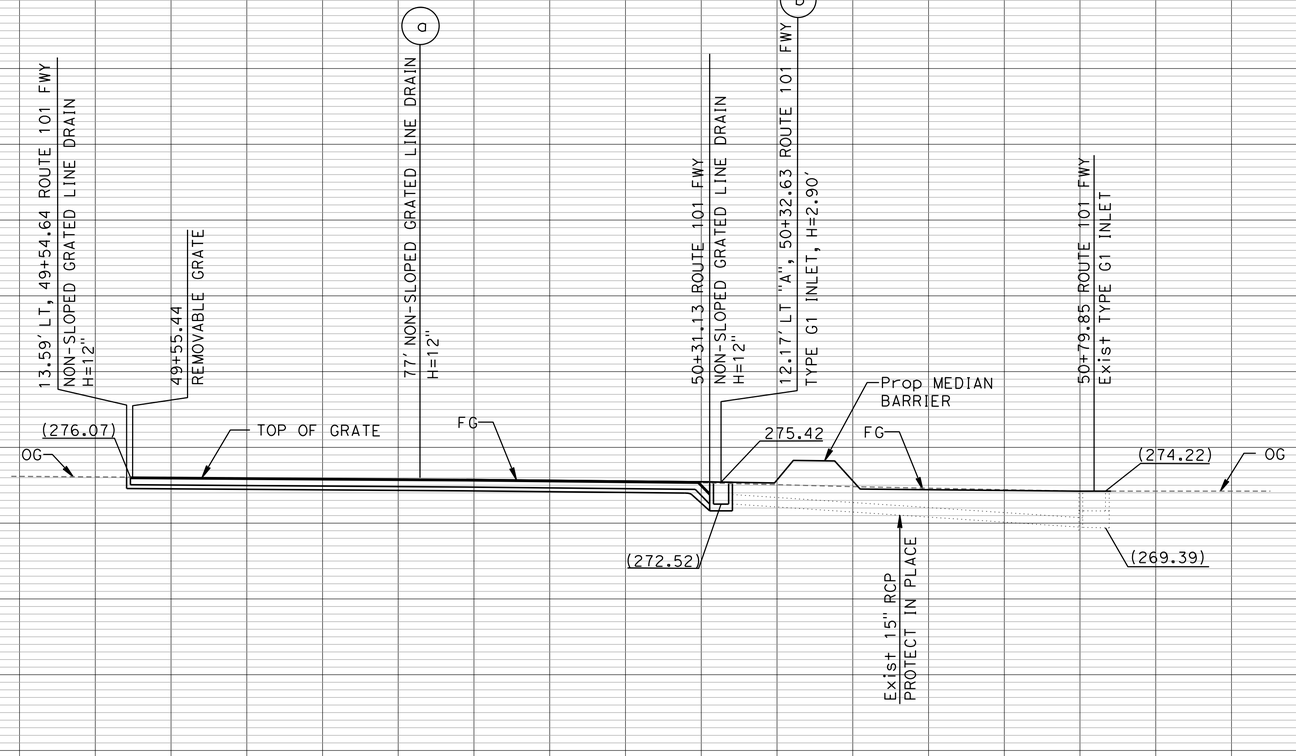

DRAINAGE SYSTEM NO 1

APPROVED FOR DRAINAGE WORK ONLY

BUREAU OF ENGINEERING
OFFICIAL RECORD

DRAINAGE PROFILE

SCALE: Horiz 1"=10'
Vert 1"=10'

P-38113 **DP-1**

REVISED BY | DATE REVISED
TAYLOR HENDERSON | TERENCE PAO
CALCULATED-DESIGNED BY | CHECKED BY
CONSULTANT FUNCTIONAL SUPERVISOR
TERENCE PAO
STATE OF CALIFORNIA - DEPARTMENT OF TRANSPORTATION
Caltrans

LAST REVISION 00-00-00 | DATE PLOTTED => $DATE$ | TIME PLOTTED => $TIME$

BORDER LAST REVISED 7/2/2010 | USERNAME =>$USER$ | DGN FILE => $FILE$ | RELATIVE BORDER SCALE IS IN INCHES 0 1 2 3 | UNIT 1819 | PROJECT NUMBER & PHASE 07000004481

ADDENDUM 5

Dist	COUNTY	ROUTE	POST MILES TOTAL PROJECT	SHEET No.	TOTAL SHEETS
07	LA	101	S0.2	171	560

REGISTERED CIVIL ENGINEER — DATE 6/9/2016

TERENCE T. PAO No. C 63433 Exp. 9/30/16 CIVIL — REGISTERED PROFESSIONAL ENGINEER — STATE OF CALIFORNIA

6/9/2016
PLANS APPROVAL DATE

THE STATE OF CALIFORNIA OR ITS OFFICERS OR AGENTS SHALL NOT BE RESPONSIBLE FOR THE ACCURACY OR COMPLETENESS OF SCANNED COPIES OF THIS PLAN SHEET.

HTNB CORPORATION
601 W. 5TH ST.
SUITE 1000
LOS ANGELES, CA 90071

CITY OF LOS ANGELES
DEPT OF PUBIC WORKS BOE
1149 BROADWAY, SUITE 700
LOS ANGELES, CA 90015

FOR COMPLETE R/W AND ACCURATE ACCESS DATA,
SEE R/W RECORD MAPS AT DISTRICT OFFICE.

CONSTRUCTION NOTES:

1. CONSTRUCT NEW VIADUCT ABUTMENT, BENT AND SUPERSTRUCTURE, SEE STRUCTURE PLANS

2. TEMPORARY TRAFFIC STRIPES AND PAVEMENT MARKINGS SHALL BE THERMOPASTIC

3. Striping to be installed per Caltrans 2018 Standards. Per CO 177.

TRAFFIC HANDLING NOTES:

1.TRAFFIC DETOURS PER CLOSURE CHARTS

LEGEND:

- MEDIAN RECONSTRUCTION LIMITS
- No. — PAVEMENT DELINEATION DETAIL No.
- Temp RAILING (TYPE K) WITH SCUPPERS AND TRAFFIC SCREEN
- DIRECTION OF TRAVEL
- 6" per CO 177
- 12 Mod — 4" WHITE SOLID STRIPE WITH MARKERS PER DETAIL 12
- 37 Mod — 6" WHITE SOLID STRIPE WITH MARKERS PER DETAIL 37

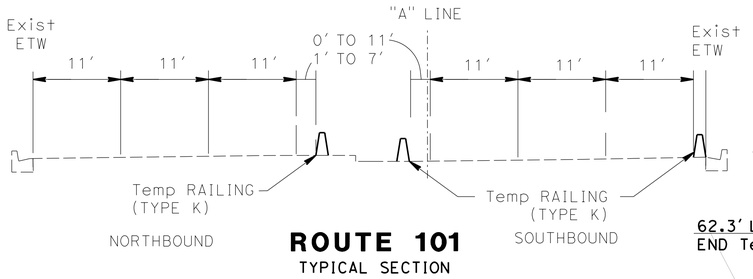

ROUTE 101
TYPICAL SECTION

BUREAU OF ENGINEERING — OFFICIAL RECORD

STAGE CONSTRUCTION AND TRAFFIC HANDLING PLAN

SCALE : 1"=50′

APPROVED FOR STAGE CONSTRUCTION AND TRAFFIC HANDLING WORK ONLY

P-38113

SC-1

STATE OF CALIFORNIA – DEPARTMENT OF TRANSPORTATION — Caltrans®
CONSULTANT FUNCTIONAL SUPERVISOR: TERENCE PAO
CALCULATED– DESIGNED BY: TAYLOR HENDERSON
CHECKED BY: TERENCE PAO
REVISED BY
DATE REVISED
LAST REVISION 00–00–00
DATE PLOTTED => $DATE$
TIME PLOTTED => $TIME$

BORDER LAST REVISED 7/2/2010 | USERNAME =>$USER$ DGN FILE => $FILE$ | RELATIVE BORDER SCALE IS IN INCHES 0 1 2 3 | UNIT 1819 | PROJECT NUMBER & PHASE 07000004481

ADDENDUM 5

Dist	COUNTY	ROUTE	POST MILES TOTAL PROJECT	SHEET No.	TOTAL SHEETS
07	LA	101	S0.2	172	560

REGISTERED CIVIL ENGINEER — 6/9/2016 DATE

REGISTERED PROFESSIONAL ENGINEER — TERENCE T. PAO — No. C 63433 — Exp. 9/30/16 — CIVIL — STATE OF CALIFORNIA

6/9/2016
PLANS APPROVAL DATE

THE STATE OF CALIFORNIA OR ITS OFFICERS OR AGENTS SHALL NOT BE RESPONSIBLE FOR THE ACCURACY OR COMPLETENESS OF SCANNED COPIES OF THIS PLAN SHEET.

HTNB CORPORATION
601 W. 5TH ST.
SUITE 1000
LOS ANGELES, CA 90071

CITY OF LOS ANGELES
DEPT OF PUBIC WORKS BOE
1149 BROADWAY, SUITE 700
LOS ANGELES, CA 90015

FOR COMPLETE R/W AND ACCURATE ACCESS DATA,
SEE R/W RECORD MAPS AT DISTRICT OFFICE.

CONSTRUCTION NOTES:

1. TEMPORARY TRAFFIC STRIPES AND PAVEMENT MARKINGS SHALL BE THERMOPLASTIC
2. CONSTRUCT PCC SHLD AND MEDIAN BARRIER

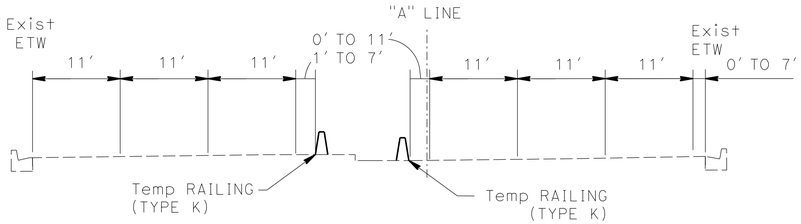

ROUTE 101
TYPICAL SECTION

LEGEND:

- MEDIAN RECONSTRUCTION LIMITS
- ⟨No.⟩ PAVEMENT DELINEATION DETAIL No.
- Temp RAILING (TYPE K) WITH SCUPPERS AND TRAFFIC SCREEN
- DIRECTION OF TRAVEL
- ⟨12 MOD⟩ 4" WHITE SOLID STRIPE WITH MARKERS PER DETAIL 12
- ⟨37 MOD⟩ 6" WHITE SOLID STRIPE WITH MARKERS PER DETAIL 37

TRAFFIC HANDLING NOTES:

1. TRAFFIC DETOURS PER CLOSURE CHARTS

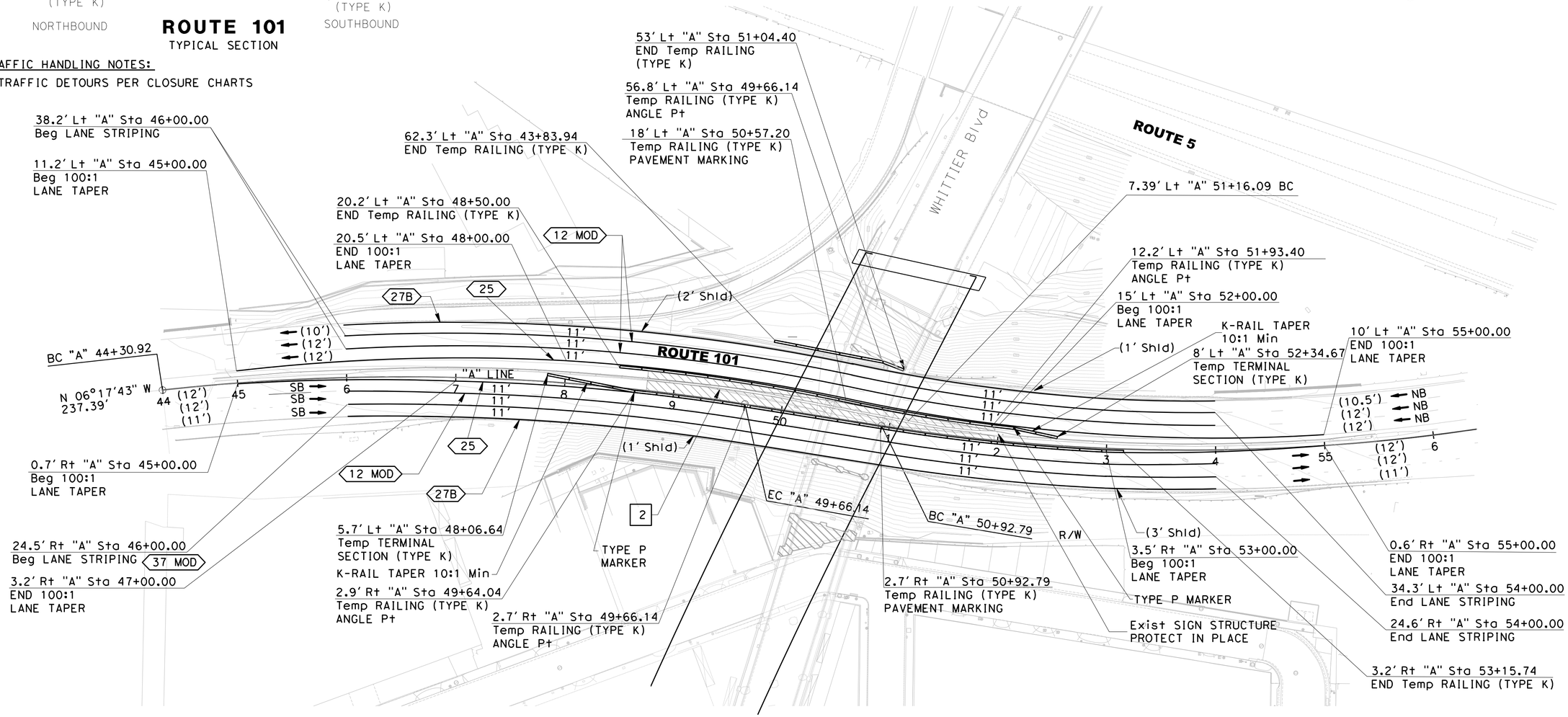

APPROVED FOR STAGE CONSTRUCTION AND TRAFFIC HANDLING WORK ONLY

BUREAU OF ENGINEERING — OFFICIAL RECORD

STAGE CONSTRUCTION AND TRAFFIC HANDLING PLAN

SCALE : 1"=50′

SC-2

P-38113

REVISED BY | DATE REVISED
TAYLOR HENDERSON | TERENCE PAO
CALCULATED–DESIGNED BY | CHECKED BY
CONSULTANT FUNCTIONAL SUPERVISOR: TERENCE PAO
STATE OF CALIFORNIA – DEPARTMENT OF TRANSPORTATION — Caltrans

LAST REVISION 00-00-00 | DATE PLOTTED => $DATE$ | TIME PLOTTED => $TIME$

BORDER LAST REVISED 7/2/2010 | USERNAME =>$USER$ | DGN FILE => $FILE$ | RELATIVE BORDER SCALE IS IN INCHES 0 1 2 3 | UNIT 1819 | PROJECT NUMBER & PHASE 07000004481

ADDENDUM 5

Dist	COUNTY	ROUTE	POST MILES TOTAL PROJECT	SHEET No.	TOTAL SHEETS
07	LA	101	S0.2	173	560

REGISTERED CIVIL ENGINEER — DATE 6/9/2016

6/9/2016
PLANS APPROVAL DATE

REGISTERED PROFESSIONAL ENGINEER — TERENCE T. PAO — No. C 63433 — Exp. 9/30/16 — CIVIL — STATE OF CALIFORNIA

THE STATE OF CALIFORNIA OR ITS OFFICERS OR AGENTS SHALL NOT BE RESPONSIBLE FOR THE ACCURACY OR COMPLETENESS OF SCANNED COPIES OF THIS PLAN SHEET.

HTNB CORPORATION
601 W. 5TH ST.
SUITE 1000
LOS ANGELES, CA 90071

CITY OF LOS ANGELES
DEPT OF PUBIC WORKS BOE
1149 BROADWAY, SUITE 700
LOS ANGELES, CA 90015

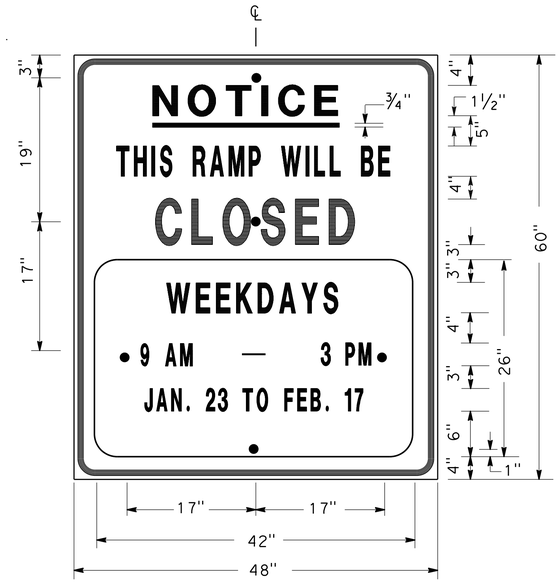

SIGN SP-1

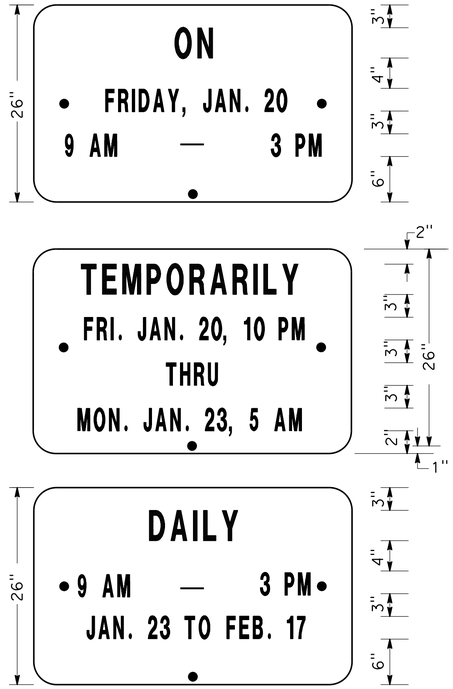

ALTERNATE OVERLAY PANELS (TYPICAL)

NOTES: SIGN SP-1

1. LETTERS AND BORDER MUST BE BLACK ON REFLECTORIZED ORANGE BACKGROUND.
2. BOLT HOLES MUST BE 3/8" DIAMETER.
3. BASE MATERIAL MUST BE ALUMINUM (MINIMUM 0.06").
4. SIGNS MUST BE MOUNTED WITH BOTTOMS OF SIGNS A MINIMUM OF 7' ABOVE GROUND.

SIZE	BORDER WIDTH	MARGIN WIDTH	LETTER SIZE					CORNER RADIUS
			LINE 1	LINE 2*	LINE 3	LINE 4	LINE 5, 6, & 7*	
48"x60"	1 1/4"	3/4"	4E	4D	6E	4D		3"
42"x26"	OVERLAY						3D	1 1/2"
* CONDENSED SPACING IF NECESSARY								

SPECIAL ADVANCE NOTICE PUBLICITY SIGN

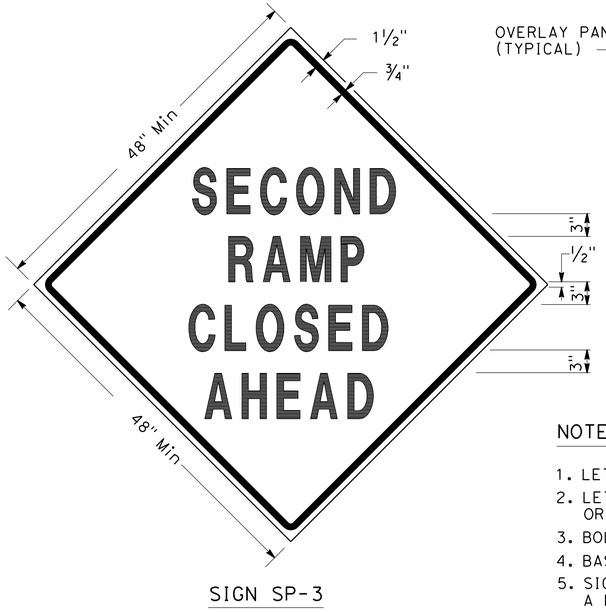

SIGN SP-3

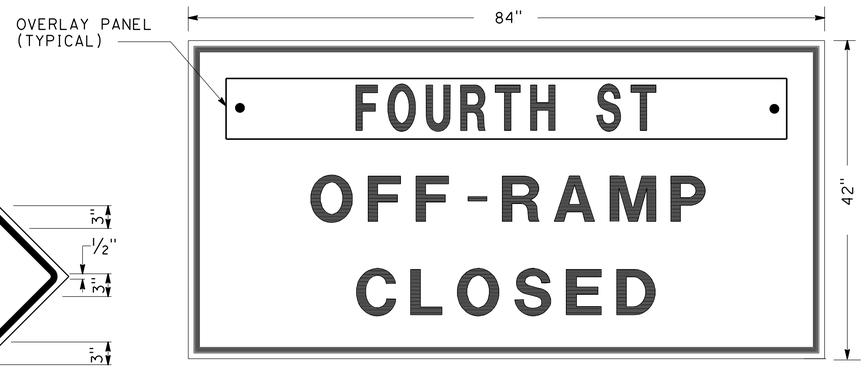

SIGN SP-5

NOTES: SIGNS SP-3 & SP-5

1. LETTERS - 6" SERIES D.
2. LETTERS AND BORDER MUST BE BLACK ON REFLECTORIZED ORANGE BACKGROUND.
3. BOLT HOLES MUST BE 3/8" DIAMETER.
4. BASE MATERIAL MUST BE ALUMINUM (MINIMUM 0.06").
5. SIGNS MUST BE MOUNTED WITH BOTTOMS OF SIGNS A MINIMUM OF 7' ABOVE GROUND.
6. SIGN SP-5 MUST BE USED IF THE OFF-RAMP TO BE CLOSED FOLLOWS A FREEWAY OFF-CONNECTOR.

SPECIAL SIGNS FOR EXIT RAMP CLOSURES

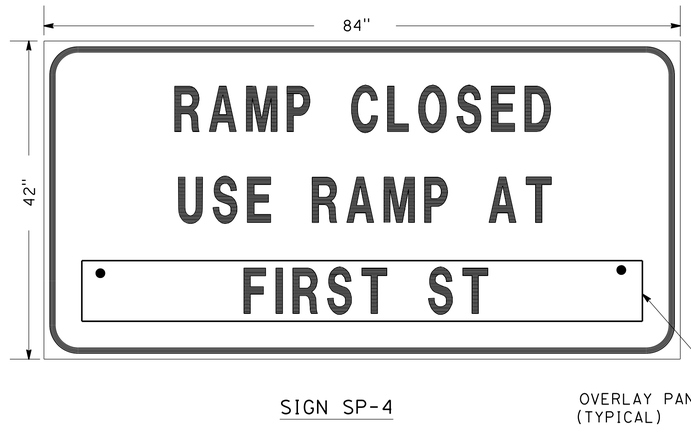

SIGN SP-4

OVERLAY PANEL (TYPICAL)

NOTES: SIGN SP-4

1. LETTERS - 6" SERIES C.
2. LETTERS AND BORDER MUST BE BLACK ON REFLECTORIZED WHITE BACKGROUND.
3. BOLT HOLES MUST BE 3/8" DIAMETER.
4. BASE MATERIAL MUST BE ALUMINUM (MINIMUM 0.06").
5. SIGNS MUST BE PLACED AT RAMP ENTRANCES IN ADDITION TO SIGNS POSTED IN ACCORDANCE WITH REVISED STANDARD PLAN RSP T14.

BUREAU OF ENGINEERING — OFFICIAL RECORD

SPECIAL SIGN FOR ENTRANCE RAMP CLOSURES

TRAFFIC HANDLING DETAILS
TRAFFIC CONTROL SYSTEM FOR RAMP CLOSURES, DETOUR SIGNS, AND MISCELLANEOUS DETAILS
SHEET 1 OF 2

NO SCALE

THD-1

P-38113

REVISED BY | DATE REVISED
TAYLOR HENDERSON | TERENCE PAO
CALCULATED-DESIGNED BY | CHECKED BY
CONSULTANT FUNCTIONAL SUPERVISOR | TERENCE PAO
STATE OF CALIFORNIA - DEPARTMENT OF TRANSPORTATION
Caltrans®

LAST REVISION | DATE PLOTTED => $DATE$ | TIME PLOTTED => $TIME$
00-00-00

BORDER LAST REVISED 7/2/2010 | USERNAME =>$USER$ | DGN FILE => $FILE$ | RELATIVE BORDER SCALE IS IN INCHES 0 1 2 3 | UNIT 1819 | PROJECT NUMBER & PHASE 07000004481

ADDENDUM 5

Dist	COUNTY	ROUTE	POST MILES TOTAL PROJECT	SHEET No.	TOTAL SHEETS
07	LA	101	S0.2	174	560

REGISTERED CIVIL ENGINEER — DATE 6/9/2016

6/9/2016
PLANS APPROVAL DATE

REGISTERED PROFESSIONAL ENGINEER
TERENCE T. PAO
No. C 63433
Exp. 9/30/16
CIVIL
STATE OF CALIFORNIA

THE STATE OF CALIFORNIA OR ITS OFFICERS OR AGENTS SHALL NOT BE RESPONSIBLE FOR THE ACCURACY OR COMPLETENESS OF SCANNED COPIES OF THIS PLAN SHEET.

HTNB CORPORATION
601 W. 5TH ST.
SUITE 1000
LOS ANGELES, CA 90071

CITY OF LOS ANGELES
DEPT OF PUBIC WORKS BOE
1149 BROADWAY, SUITE 700
LOS ANGELES, CA 90015

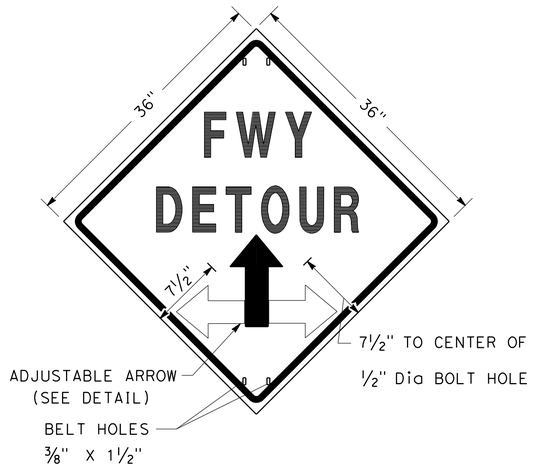

SIGN SP-2

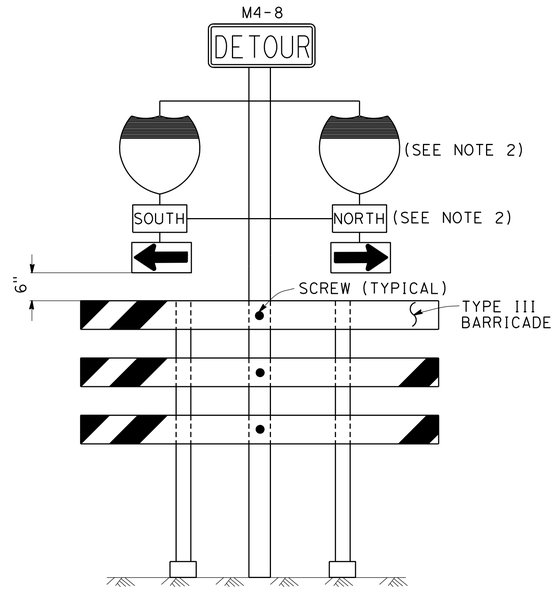

SIGN SP-6 (SEE NOTE 1)

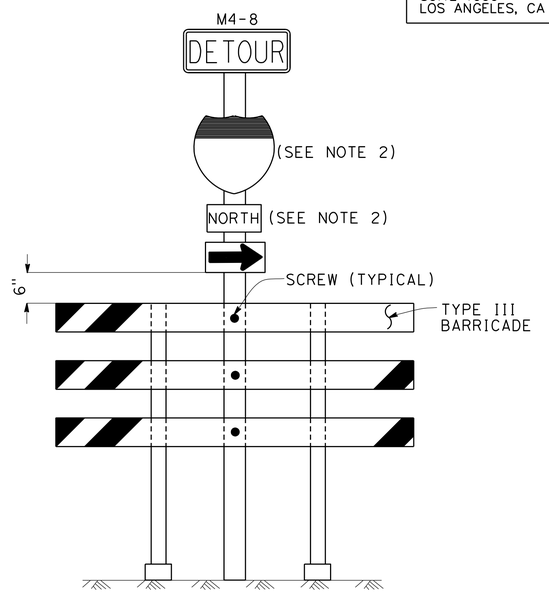

SIGN SP-7 (SEE NOTE 1)

NOTES: SIGN SP-2

1. LETTERS - 6" SERIES E.
2. LETTERS, BORDER AND ARROW - BLACK ON RETROREFLECTORIZED ORANGE BACKGROUND.
3. BASE MATERIAL FOR SIGNS AND ARROWS MUST BE ALUMINUM (MINIMUM 0.06").
4. BELTS (LUGGAGE STRAPS) MUST BE 1" WIDE BY 48" LONG, MADE OF COTTON OR POLYPROPYLENE WEB MATERIAL.
5. SIGNS MUST BE MOUNTED WITH BOTTOMS OF SIGNS A MINIMUM OF 7' ABOVE GROUND EXCEPT AS OTHERWISE SHOWN ON OTHER TRAFFIC HANDLING DETAILS PLANS.

ABBREVIATION

(CA) CALIFORNIA CODE

NOTES: SIGNS SP-6 & SP-7

1. IN LIEU OF PLACING SIGNS ON TYPE III BARRICADES, SIGNS, INCLUDING POSTS, MAY BE PLACED INTO THE GROUND OR FASTENED ONTO ELECTROLIERS.
2. USE APPROPRIATE ROUTE MARKER [G26-2(CA), G27-2(CA), G28-2(CA)] AND CARDINAL DIRECTION [NORTH (M3-1), SOUTH (M3-3), EAST (M3-2), WEST (M3-4)].

SPECIAL PORTABLE FREEWAY DETOUR SIGNS

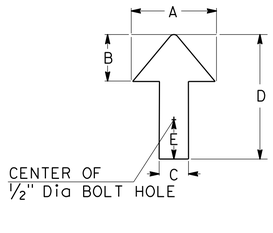

DIMENSIONS				
A	B	C	D	E
6"	3"	2"	8"	1"

ADJUSTABLE ARROW DETAIL

BUREAU OF ENGINEERING
OFFICIAL RECORD

TRAFFIC HANDLING DETAILS

TRAFFIC CONTROL SYSTEM FOR RAMP CLOSURES, DETOUR SIGNS, AND MISCELLANEOUS DETAILS

SHEET 2 OF 2

NO SCALE

THD-2

P-38113

REVISED BY | DATE REVISED
TAYLOR HENDERSON | TERENCE PAO
CALCULATED-DESIGNED BY | CHECKED BY
CONSULTANT FUNCTIONAL SUPERVISOR: TERENCE PAO
STATE OF CALIFORNIA - DEPARTMENT OF TRANSPORTATION
Caltrans

LAST REVISION | DATE PLOTTED => $DATE$ | TIME PLOTTED => $TIME$
00-00-00

BORDER LAST REVISED 7/2/2010 | USERNAME =>$USER$ | DGN FILE => $FILE$ | RELATIVE BORDER SCALE IS IN INCHES 0 1 2 3 | UNIT 1819 | PROJECT NUMBER & PHASE 07000004481

ADDENDUM 5

Dist	COUNTY	ROUTE	POST MILES TOTAL PROJECT	SHEET No.	TOTAL SHEETS
07	LA	101	S0.2	175	560

REGISTERED CIVIL ENGINEER — DATE 6/9/2016

6/9/2016
PLANS APPROVAL DATE

REGISTERED PROFESSIONAL ENGINEER
TERENCE T. PAO
No. C 63433
Exp. 9/30/16
CIVIL
STATE OF CALIFORNIA

THE STATE OF CALIFORNIA OR ITS OFFICERS OR AGENTS SHALL NOT BE RESPONSIBLE FOR THE ACCURACY OR COMPLETENESS OF SCANNED COPIES OF THIS PLAN SHEET.

HTNB CORPORATION
601 W. 5TH ST.
SUITE 1000
LOS ANGELES, CA 90071

CITY OF LOS ANGELES
DEPT OF PUBIC WORKS BOE
1149 BROADWAY, SUITE 700
LOS ANGELES, CA 90015

LEGEND

- SIGN SP-2
- AND/OR — DESIGNATED DETOUR ROUTE
- DETOUR DIRECTION
- CONTROLLED INTERSECTION

NOTES:

1. SP-2 SIGNS MAY BE STRAPPED ON EXISTING ELECTROLIER, SIGNAL POST OR SIGN POST.
2. SP-2 SIGNS MUST NOT BE INSTALLED ON BARRICADES EXCEPT AS OTHERWISE SHOWN.
3. SIGN LOCATIONS ARE APPROXIMATE. EXACT LOCATIONS WILL BE DETERMINED BY THE ENGINEER.
4. SP-2 SIGNS MUST BE POSTED AT EACH CONTROLLED INTERSECTION (EXCEPT AT COMMERCIAL PROPERTY, RESIDENTIAL COMPLEX OR T-INTERSECTION FROM ONE-WAY STREET) ALONG THE DESIGNATED DETOUR ROUTE.
5. UNLESS OTHERWISE SHOWN ON OTHER THD PLANS, WHEN CONTROLLED INTERSECTIONS ALONG THE DESIGNATED DETOUR ROUTE ARE CLOSELY SPACED, PLACE SP-2 SIGNS AT CONTROLLED INTERSECTIONS AT A DISTANCE NOT TO EXCEED 1/4 MILE FROM THE PRECEDING DETOUR SIGN.
6. EXCEPT AS OTHERWISE SHOWN ON OTHER PLANS OR SPECIFIED IN THE SPECIAL PROVISIONS, SP-2 SIGNS MUST BE PLACED AS SHOWN ON THIS PLAN.

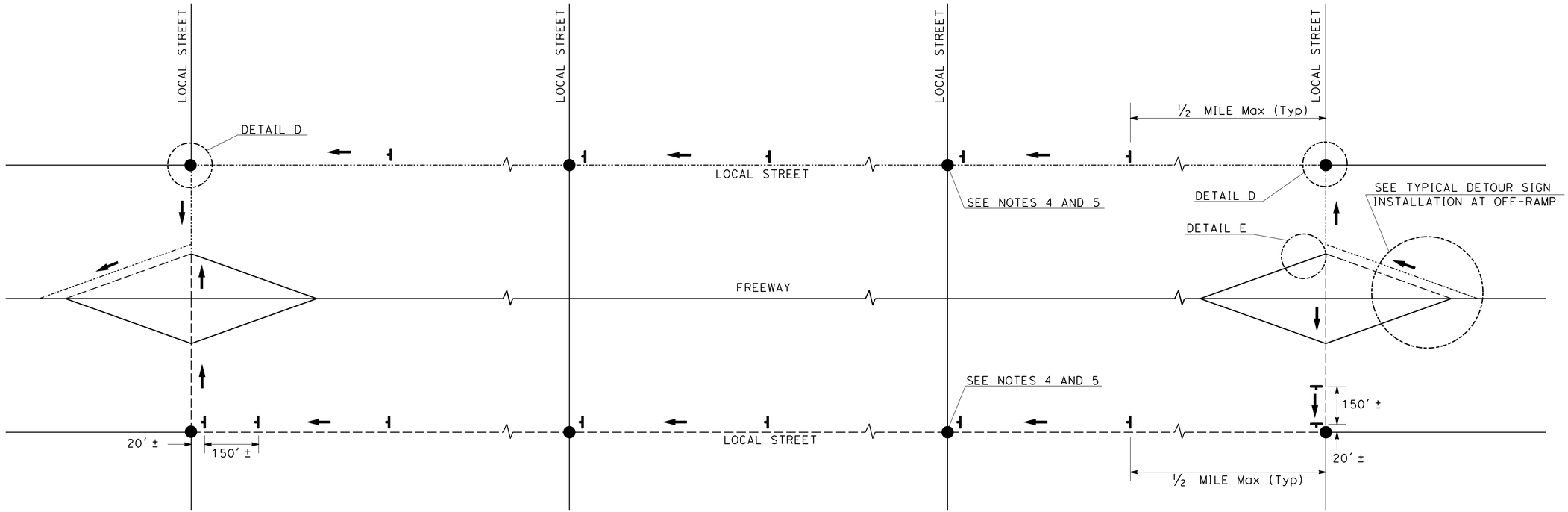

TYPICAL DETOUR SIGN INSTALLATION ALONG DESIGNATED DETOUR ROUTE

BUREAU OF ENGINEERING
OFFICIAL RECORD

TRAFFIC HANDLING DETAILS

TRAFFIC CONTROL SYSTEM FOR DETOUR SIGN INSTALLATION ALONG DESIGNATED DETOUR ROUTE

SHEET 1 OF 3

NO SCALE

THD-3

P-38113

REVISED BY | DATE REVISED
TAYLOR HENDERSON | TERENCE PAO
CALCULATED-DESIGNED BY | CHECKED BY
CONSULTANT FUNCTIONAL SUPERVISOR: TERENCE PAO
STATE OF CALIFORNIA - DEPARTMENT OF TRANSPORTATION
Caltrans

LAST REVISION | DATE PLOTTED => $DATE$ | TIME PLOTTED => $TIME$
00-00-00

BORDER LAST REVISED 7/2/2010 | USERNAME =>$USER$ | DGN FILE => $FILE$ | RELATIVE BORDER SCALE IS IN INCHES 0 1 2 3 | UNIT 1819 | PROJECT NUMBER & PHASE 07000004481

ADDENDUM 5

Dist	COUNTY	ROUTE	POST MILES TOTAL PROJECT	SHEET No.	TOTAL SHEETS
07	LA	101	S0.2	176	560

REGISTERED CIVIL ENGINEER — DATE 6/9/2016

6/9/2016
PLANS APPROVAL DATE

REGISTERED PROFESSIONAL ENGINEER — TERENCE T. PAO — No. C 63433 — Exp. 9/30/16 — CIVIL — STATE OF CALIFORNIA

THE STATE OF CALIFORNIA OR ITS OFFICERS OR AGENTS SHALL NOT BE RESPONSIBLE FOR THE ACCURACY OR COMPLETENESS OF SCANNED COPIES OF THIS PLAN SHEET.

HTNB CORPORATION
601 W. 5TH ST.
SUITE 1000
LOS ANGELES, CA 90071

CITY OF LOS ANGELES
DEPT OF PUBIC WORKS BOE
1149 BROADWAY, SUITE 700
LOS ANGELES, CA 90015

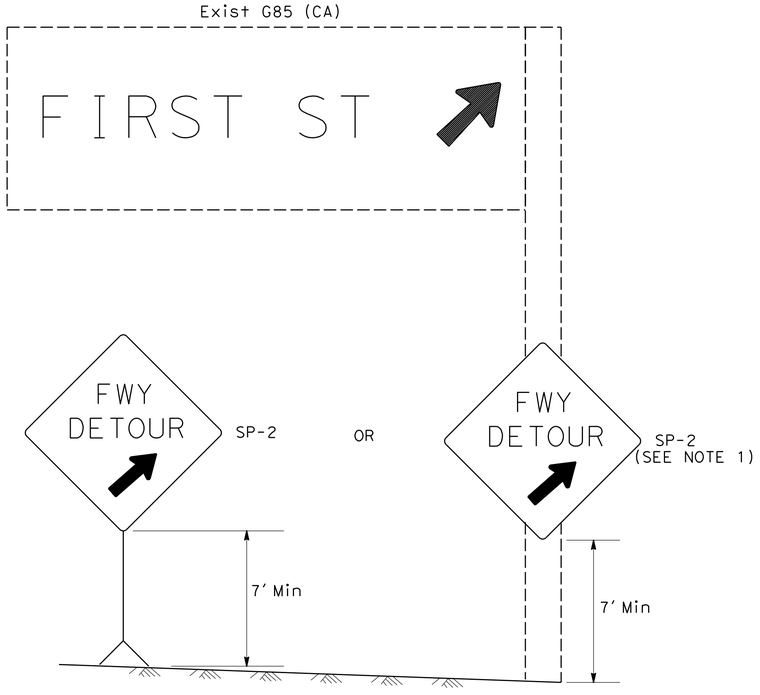

DETAIL A (SEE NOTE 3)

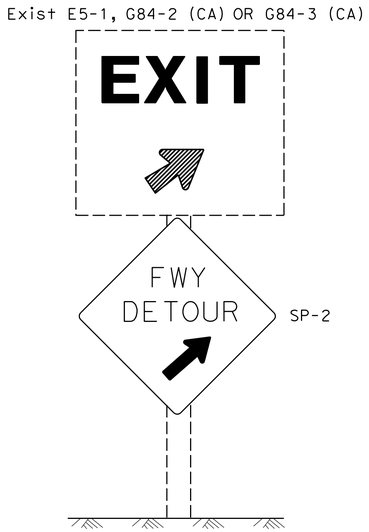

DETAIL B (SEE NOTE 3)

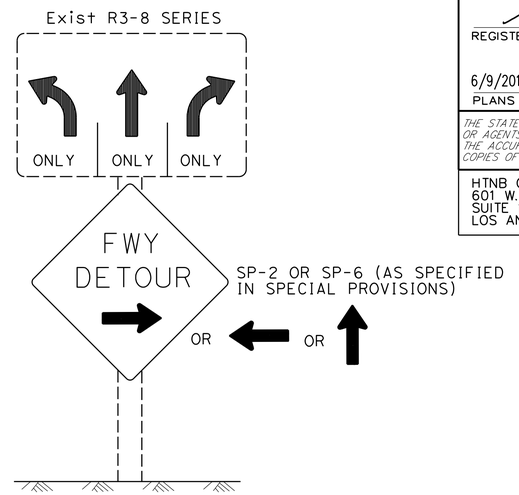

DETAIL C (SEE NOTES 4, 5, AND 6)

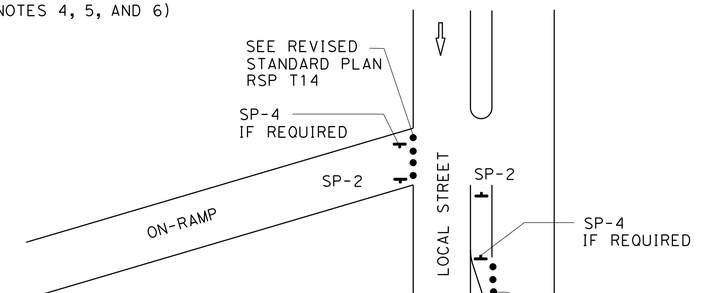

DETAIL E

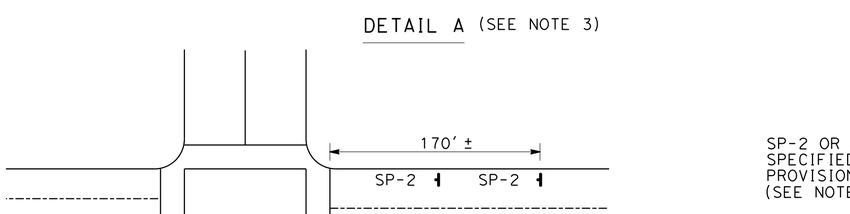

DETAIL D

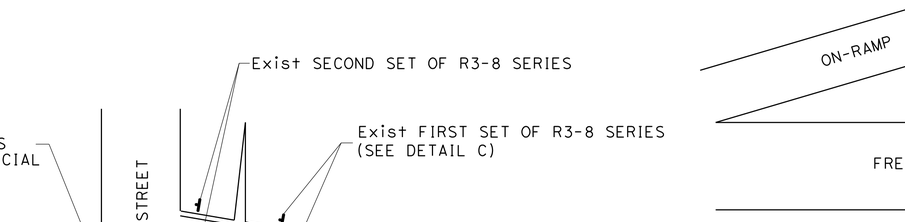

TYPICAL DETOUR SIGN INSTALLATION AT OFF-RAMP

NOTES: SIGN SP-2

1. SP-2 SIGNS MAY BE STRAPPED ON EXISTING ELECTROLIER, SIGNAL POST OR SIGN POST.
2. SP-2 SIGNS MUST NOT BE INSTALLED ON BARRICADES EXCEPT AS OTHERWISE SHOWN.
3. OMIT DETAILS A AND B FOR FULL FREEWAY CLOSURES.
4. SEE TRAFFIC HANDLING DETAILS-TRAFFIC CONTROL SYSTEM FOR RAMP CLOSURES, DETOUR SIGNS, AND MISCELLANEOUS DETAILS PLAN SHEET 2 OF 2 FOR SP-6 SIGN DETAILS.
5. IF R3-8 SERIES SIGNS ARE NOT PRESENT AT THE OFF-RAMP, SP-2 OR SP-6 SIGNS MUST BE FASTENED ONTO EXISTING ELECTROLIER, SIGNAL POST OR SIGN POST.
6. EXCEPT FOR DETAILS A & B, OMIT SP-2 SIGNS IF RAMP HAS MANDATORY SINGLE MOVE.

LEGEND

- TRAFFIC CONE
- TEMPORARY TRAFFIC CONTROL SIGN
- DETOUR DIRECTION
- EXISTING OVERHEAD SIGN

BUREAU OF ENGINEERING — OFFICIAL RECORD

SIGN CODE LEGEND

XXYY-Y: FEDERAL SIGN CODE PER MANUAL ON UNIFORM TRAFFIC CONTROL DEVICES (MUTCD)

XXYY-Y (CA): CALIFORNIA SIGN CODE PER CALIFORNIA MUTCD

TRAFFIC HANDLING DETAILS
TRAFFIC CONTROL SYSTEM FOR DETOUR SIGN INSTALLATION ALONG DESIGNATED DETOUR ROUTE
SHEET 2 OF 3

NO SCALE

THD-4

P-38113

CALCULATED–DESIGNED BY	CHECKED BY	REVISED BY	DATE REVISED
TAYLOR HENDERSON	TERENCE PAO		

CONSULTANT FUNCTIONAL SUPERVISOR: TERENCE PAO

STATE OF CALIFORNIA - DEPARTMENT OF TRANSPORTATION — Caltrans

LAST REVISION — DATE PLOTTED => $DATE$ — 00-00-00 — TIME PLOTTED => $TIME$

BORDER LAST REVISED 7/2/2010 | USERNAME =>$USER$ DGN FILE => $FILE$ | RELATIVE BORDER SCALE IS IN INCHES 0 1 2 3 | UNIT 1819 | PROJECT NUMBER & PHASE 07000004481

ADDENDUM 5

Dist	COUNTY	ROUTE	POST MILES TOTAL PROJECT	SHEET No.	TOTAL SHEETS
07	LA	101	S0.2	177	560

REGISTERED CIVIL ENGINEER — DATE 6/9/2016

6/9/2016
PLANS APPROVAL DATE

REGISTERED PROFESSIONAL ENGINEER
TERENCE T. PAO
No. C 63433
Exp. 9/30/16
CIVIL
STATE OF CALIFORNIA

THE STATE OF CALIFORNIA OR ITS OFFICERS OR AGENTS SHALL NOT BE RESPONSIBLE FOR THE ACCURACY OR COMPLETENESS OF SCANNED COPIES OF THIS PLAN SHEET.

HTNB CORPORATION
601 W. 5TH ST.
SUITE 1000
LOS ANGELES, CA 90071

CITY OF LOS ANGELES
DEPT OF PUBIC WORKS BOE
1149 BROADWAY, SUITE 700
LOS ANGELES, CA 90015

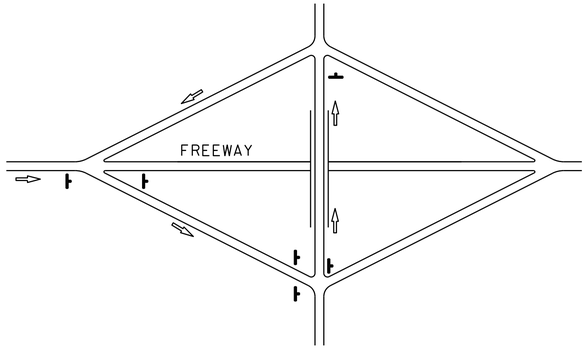

TYPE I

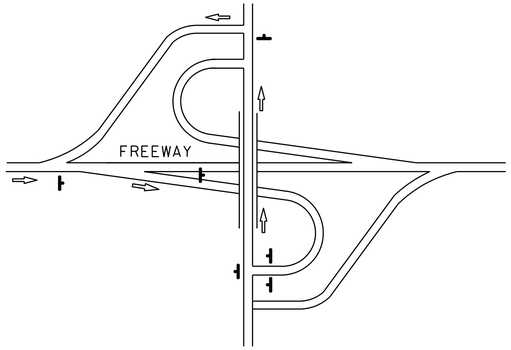

TYPE II

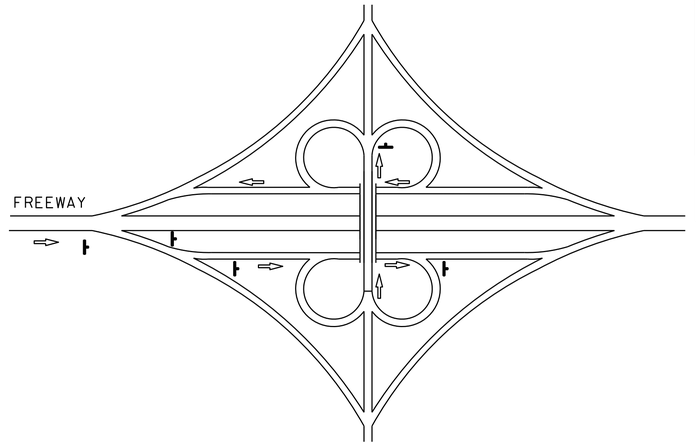

TYPE III

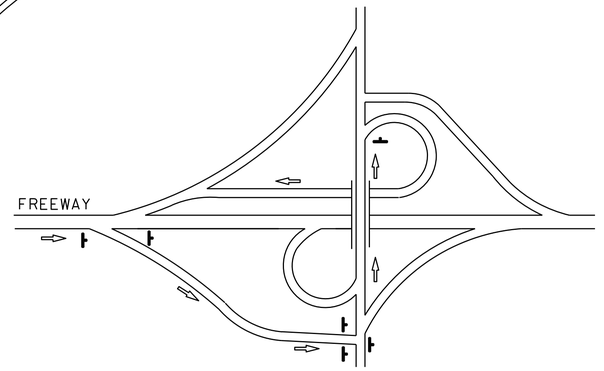

TYPE IV

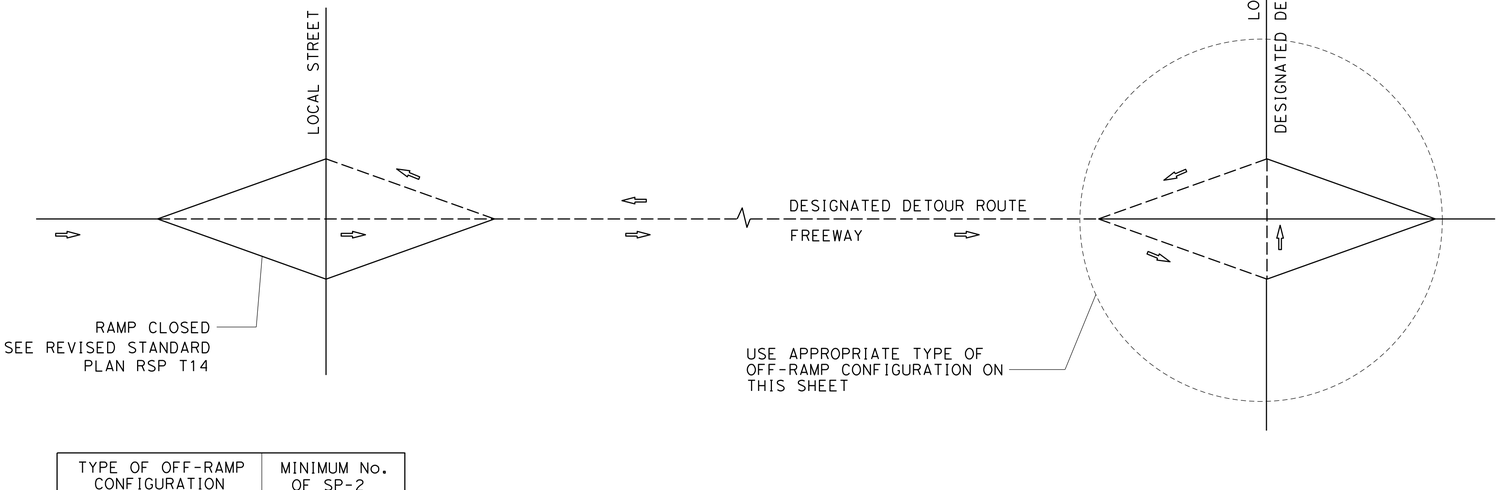

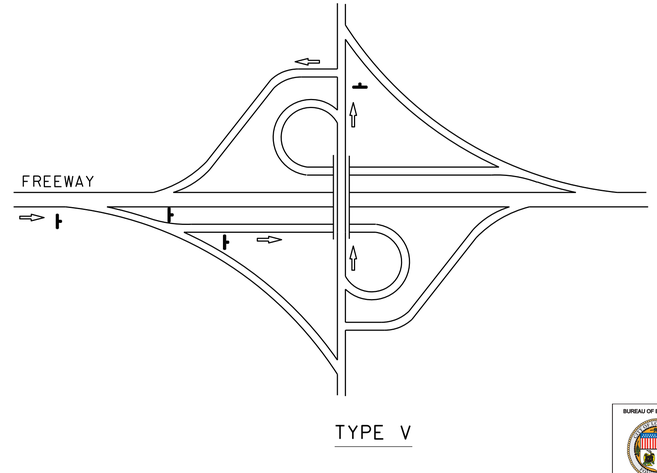

TYPE V

TYPE OF OFF-RAMP CONFIGURATION	MINIMUM No. OF SP-2
TYPE I	6
TYPE II	6
TYPE III	5
TYPE IV	6
TYPE V	4

TYPICAL DETOUR SIGN INSTALLATION FOR OFF-RAMP CLOSURE

NOTES:

1. FOR RAMP CONFIGURATIONS NOT SHOWN, THE EXACT LOCATIONS AND MINIMUM NUMBER OF SP-2 SIGNS SHALL BE DETERMINED BY THE ENGINEER.
2. SEE TRAFFIC HANDLING DETAILS-TRAFFIC CONTROL SYSTEM FOR RAMP CLOSURES, DETOUR SIGNS, AND MISCELLANEOUS DETAILS PLAN SHEET 2 OF 2 FOR SP-2 SIGN DETAILS.

LEGEND

- SIGN SP-2
- DETOUR DIRECTION
- DESIGNATED DETOUR ROUTE

BUREAU OF ENGINEERING
OFFICIAL RECORD

TRAFFIC HANDLING DETAILS
TRAFFIC CONTROL SYSTEM FOR DETOUR SIGN INSTALLATION ALONG DESIGNATED DETOUR ROUTE
SHEET 3 OF 3

NO SCALE

THD-5

P-38113

REVISED BY	DATE REVISED

CALCULATED-DESIGNED BY: TAYLOR HENDERSON
CHECKED BY: TERENCE PAO
CONSULTANT FUNCTIONAL SUPERVISOR: TERENCE PAO

STATE OF CALIFORNIA - DEPARTMENT OF TRANSPORTATION
Caltrans

LAST REVISION — DATE PLOTTED => $DATE$ 00-00-00
TIME PLOTTED => $TIME$

BORDER LAST REVISED 7/2/2010 | USERNAME =>$USER$ DGN FILE => $FILE$ | RELATIVE BORDER SCALE IS IN INCHES 0 1 2 3 | UNIT 1819 | PROJECT NUMBER & PHASE 07000004481

ADDENDUM 5

Dist	COUNTY	ROUTE	POST MILES TOTAL PROJECT	SHEET No.	TOTAL SHEETS
07	LA	101	S0.2	178	560

REGISTERED CIVIL ENGINEER — DATE 6/9/2016

PLANS APPROVAL DATE 6/9/2016

REGISTERED PROFESSIONAL ENGINEER — TERENCE T. PAO — No. C 63433 — Exp. 9/30/16 — CIVIL — STATE OF CALIFORNIA

THE STATE OF CALIFORNIA OR ITS OFFICERS OR AGENTS SHALL NOT BE RESPONSIBLE FOR THE ACCURACY OR COMPLETENESS OF SCANNED COPIES OF THIS PLAN SHEET.

HTNB CORPORATION
601 W. 5TH ST.
SUITE 1000
LOS ANGELES, CA 90071

CITY OF LOS ANGELES
DEPT OF PUBIC WORKS BOE
1149 BROADWAY, SUITE 700
LOS ANGELES, CA 90015

NOTE:

FOR COMPLETE R/W AND ACCURATE ACCESS DATA, SEE R/W RECORD MAPS AT DISTRICT OFFICE.

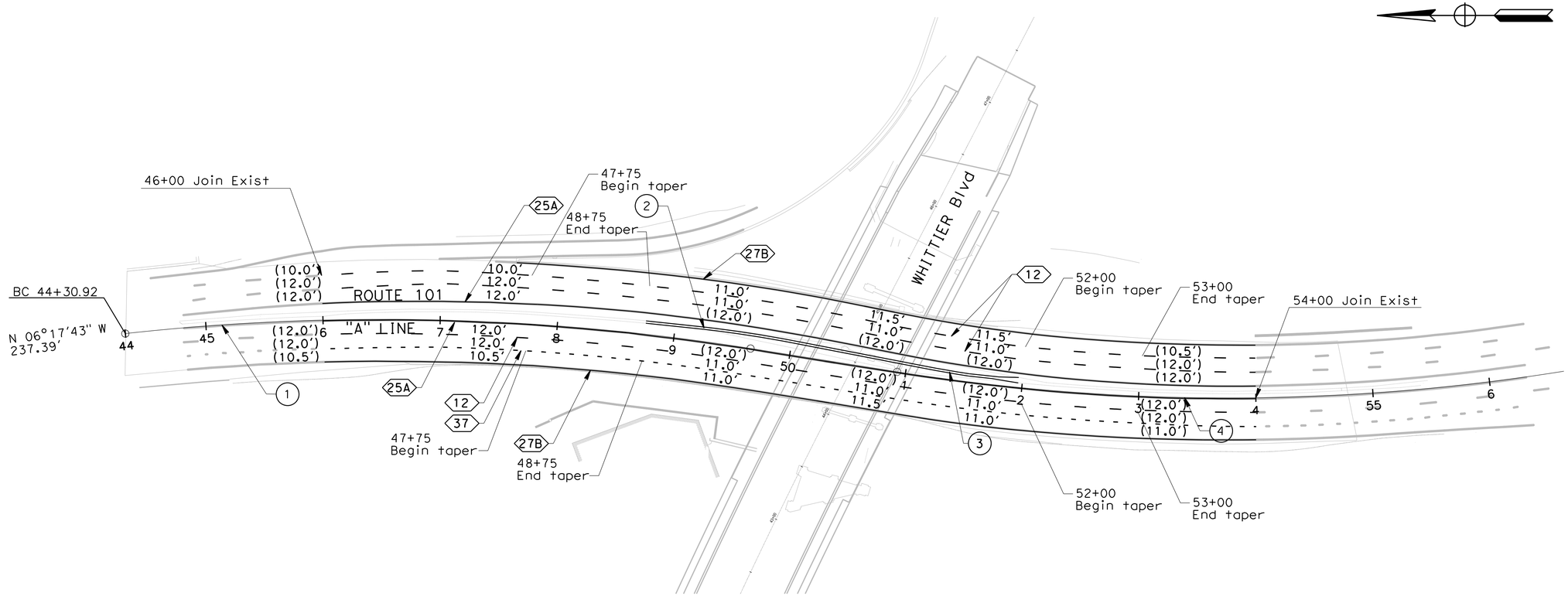

CURVE DATA

No.	R	Δ	T	L
(1)	2000.10′	15°19′56"	269.22′	535.22′
(2)	1000.00′	04°25′09"	38.58′	77.13′
(3)	1000.00′	04°44′33"	41.41′	82.77′
(4)	1800.00′	43°37′31"	720.41′	1370.53′

BUREAU OF ENGINEERING — OFFICIAL RECORD

PAVEMENT DELINEATION

SCALE : 1"=50′

P-38113

PD-1

REVISED BY	DATE REVISED
TAYLOR HENDERSON	TERENCE PAO

CALCULATED–DESIGNED BY | CHECKED BY

CONSULTANT FUNCTIONAL SUPERVISOR: TERENCE PAO

STATE OF CALIFORNIA – DEPARTMENT OF TRANSPORTATION — Caltrans®

LAST REVISION — DATE PLOTTED => $DATE$ — TIME PLOTTED => $TIME$ — 00-00-00

BORDER LAST REVISED 7/2/2010 | USERNAME =>$USER$ | DGN FILE => $FILE$ | RELATIVE BORDER SCALE IS IN INCHES 0 1 2 3 | UNIT 1819 | PROJECT NUMBER & PHASE 07000004481

ADDENDUM 5

DIST	COUNTY	ROUTE	POST MILES TOTAL PROJECT	SHEET No	TOTAL SHEETS
07	LA	101	S0.2	179	560

MICHAEL H. JONES 4/6/16
REGISTERED CIVIL ENGINEER DATE

PLANS APPROVAL DATE

REGISTERED PROFESSIONAL ENGINEER MICHAEL H. JONES No. S3033 Exp. 03-31-18 CIVIL STATE OF CALIFORNIA

The State of California or its officers or agents shall not be responsible for the accuracy or completeness of scanned copies of this plan sheet.

CITY OF LOS ANGELES DEPARTMENT OF PUBLIC WORKS BUREAU OF ENGINEERING
1149 S. BROADWAY
LOS ANGELES, CA 90015

HNTB CORPORATION
601 W. 5TH STREET SUITE 1000
LOS ANGELES, CA 90071

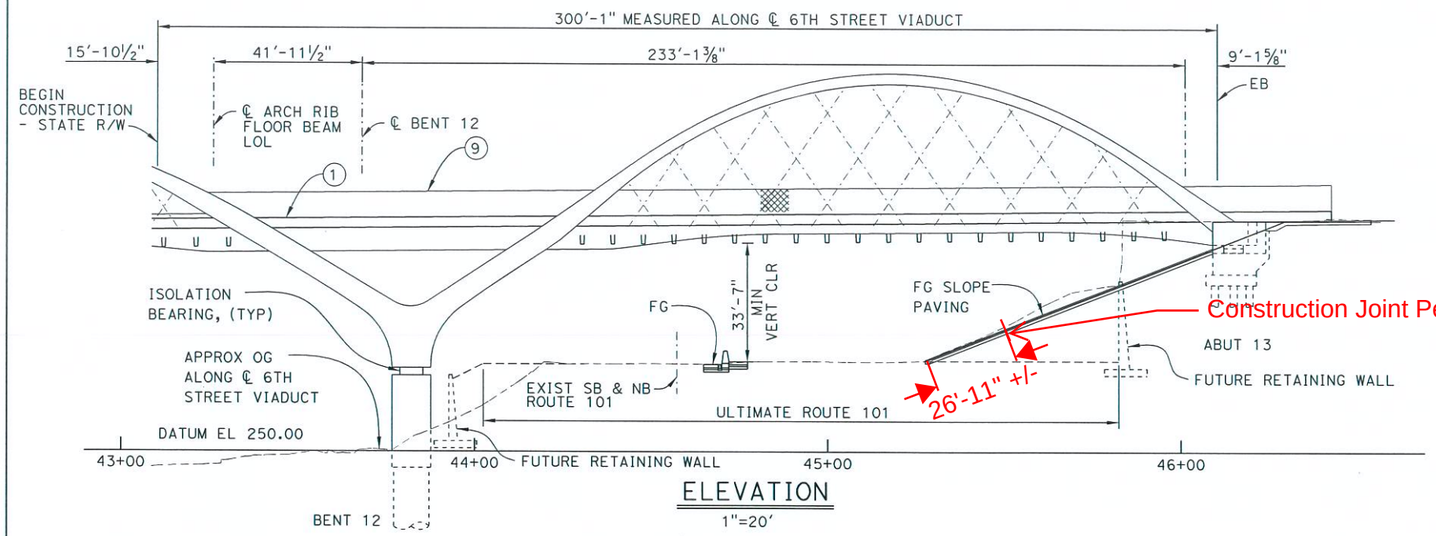

ELEVATION
1"=20'

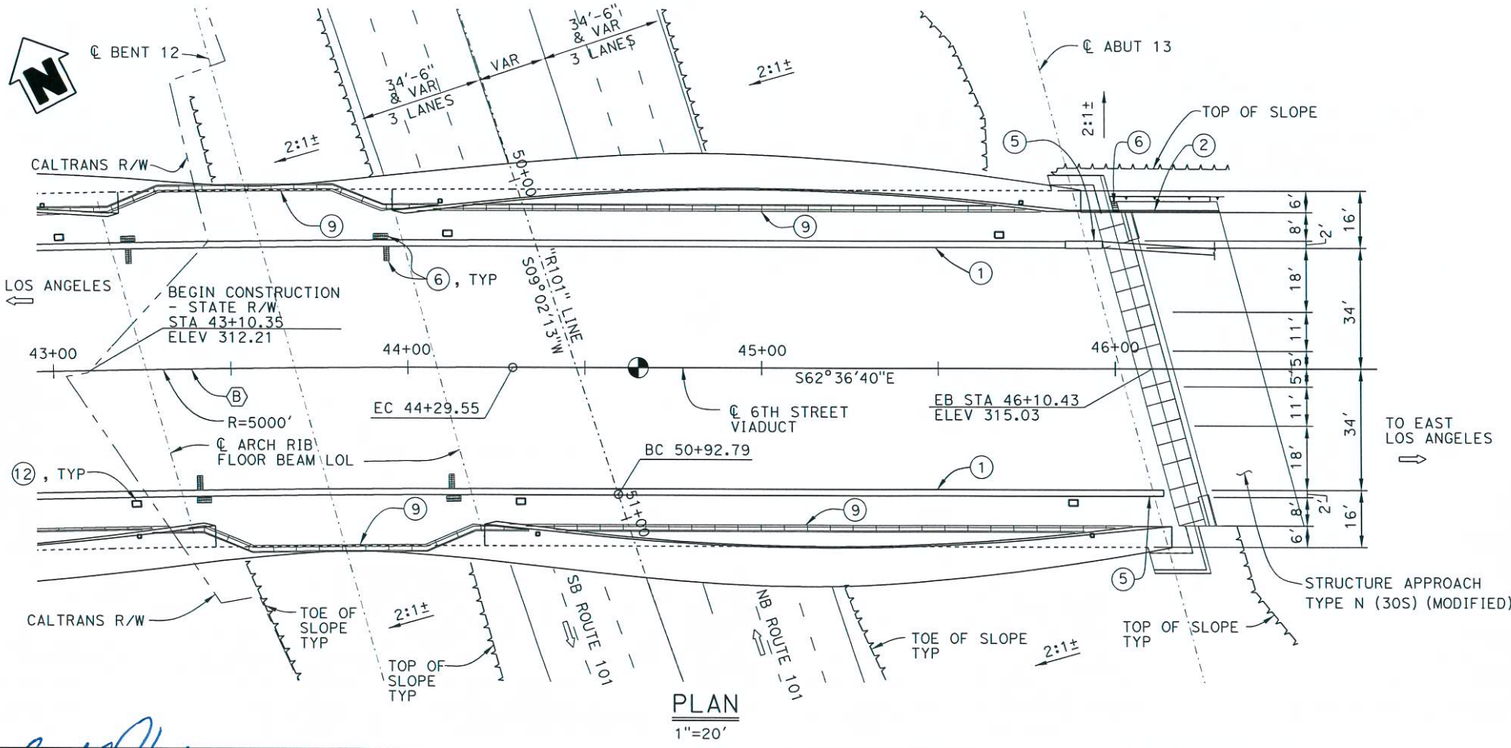

PLAN
1"=20'

ABUTMENT AND BENT DATA

LOCATION	STATION	SKEW ANGLE
℄ BENT 12	43+68.18	15°03'00"
℄ OF BRG ABUT 13	46+01.29	15°00'00"

LEGEND

- ⇨ DIRECTION OF TRAFFIC
- ◒ POINT OF MINIMUM VERTICAL CLEARANCE
- (1) CONCRETE BARRIER TYPE 80 (MODIFY)
- (2) 4' GALVANIZED METAL RAILING
- (5) CRASH CUSHION
- (6) DECK DRAIN TYPE C (MODIFIED)
- (9) 10' FENCE
- (12) ELECTRICAL BLOCKOUTS

CURVE DATA

(B) ℄ 6TH STREET VIADUCT

R = 5000.00'
Δ = 32°30'51"
T = 1458.05'
L = 2837.42'

BUREAU OF ENGINEERING OFFICIAL RECORD

WORK ORDER NO. E700224F

P-38113 S0-10

DESIGN OVERSIGHT 9 JUNE 2016
SIGN OFF DATE

DESIGN DETAIL SHEET (ENGLISH) (REV. 03/14/12)

	BY	CHECKED
DESIGN	M. JONES	T. KOMPFNER
DETAILS	L. ZHANG	T. KOMPFNER
QUANTITIES	X	X

ORIGINAL SCALE IN INCHES FOR REDUCED PLANS 0 1 2 3

PREPARED FOR THE STATE OF CALIFORNIA DEPARTMENT OF TRANSPORTATION

MICHAEL H. JONES
PROJECT ENGINEER

BRIDGE NO. 53C-2329
POST MILES S 0.20

6TH STREET VIADUCT REPLACEMENT

STRUCTURAL PLAN NO. 6 - CONSTRUCTION WITHIN CALTRANS R/W

UNIT: 07 1819
PROJECT NUMBER & PHASE: 0700004481 CONTRACT NO.: 07-251204

DISREGARD PRINTS BEARING EARLIER REVISION DATES

REVISION DATES				SHEET	OF
X				20	20

FILE => $REQUEST

USERNAME => $USER DATE PLOTTED => $DATE TIME PLOTTED => $TIME

ADDENDUM 5

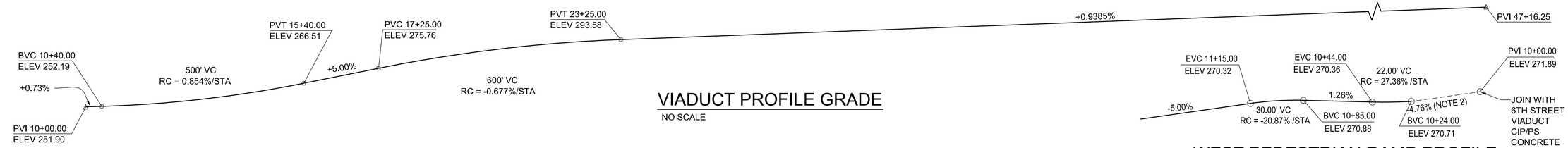

VIADUCT PROFILE GRADE

NO SCALE

WEST PEDESTRIAN RAMP PROFILE

NO SCALE

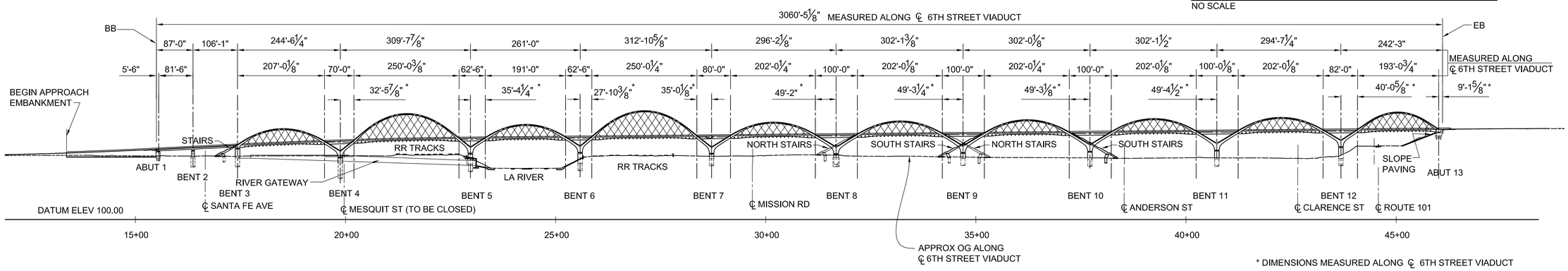

* DIMENSIONS MEASURED ALONG ℄ 6TH STREET VIADUCT

DEVELOPED ELEVATION

SCALE: 1" = 120'

NOTES:

1. FOR MINIMUM VERTICAL CLEARANCE, SEE STRUCTURE PLANS.
2. TANGENT SLOPE OF -4.76% IS PROVIDE TO DEFINE VERTICAL CURVE ONLY. WEST PEDESTRIAN RAMP PROFILE BETWEEN STATIONS 10+24.00 AND 10+00.00 IS DEFINED BY VIADUCT PROFILE GRADE.
3. FOUNDATION COMPONENTS NOT INCLUDED IN THE VIADUCT PACKAGE INCLUDE ALL BENT 1 AND BENTS 2 THROUGH 12 COMPONENTS BELOW THE LEVEL OF THE ISOLATION BEARINGS, ABUTMENTS 1 AND 13 AND ISOLATION BEARINGS AT THESE LOCATIONS. VIADUCT PACKAGE CONSTRUCTION DOES INCLUDE ABUTMENT 1 AND 13 BACKWALLS, BACKFILL AND GEOCOMPOSITE DRAIN. FOUNDATIONS FOR STAIRS AND PEDESTRIAN RAMPS AS WELL AS RETAINING WALLS ARE ALSO INCLUDED IN THE VIADUCT PACKAGE. DETAILS AND NOTES SHOWN ON THE VIACUCT PACKAGE FOR EXCLUDED FOUNDATION ELEMENTS ARE PROVIDED FOR REFERENCE ONLY.
4. THE PORTION OF THE VIADUCT OWNED BY CALTRANS INCLUDES ALL VIADUCT CONSTRUCTION EAST OF CALTRANS RIGHT-OF-WAY.

CURVE DATA

Ⓐ ℄ WEST PEDESTRIAN RAMP
R = 196.04'
△ = 22°09'08"
T = 38.38'
L = 75.79'

Ⓑ ℄ 6TH STREET VIADUCT
R = 5000.00
△ = 32°30'51"
T = 1458.05'
L = 2837.42'

LEGEND:

- - - - FOUNDATION CONSTRUCTION LIMIT NOT INCLUDED IN VIADUCT PACKAGE

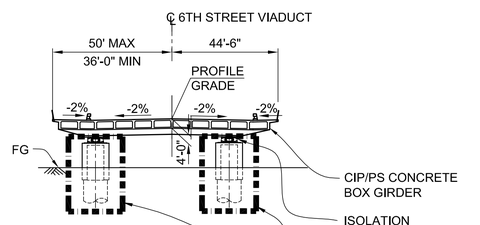

TYPICAL GIRDER SPAN SECTION

SCALE: 1" = 30'

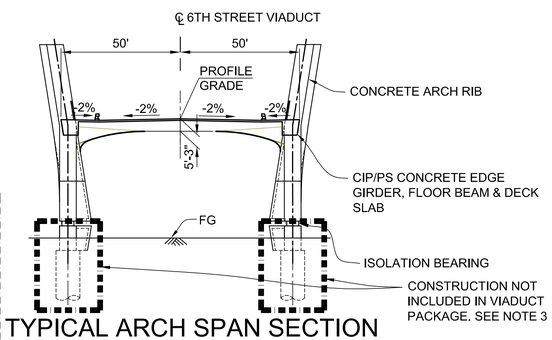

TYPICAL ARCH SPAN SECTION

SCALE: 1" = 30'

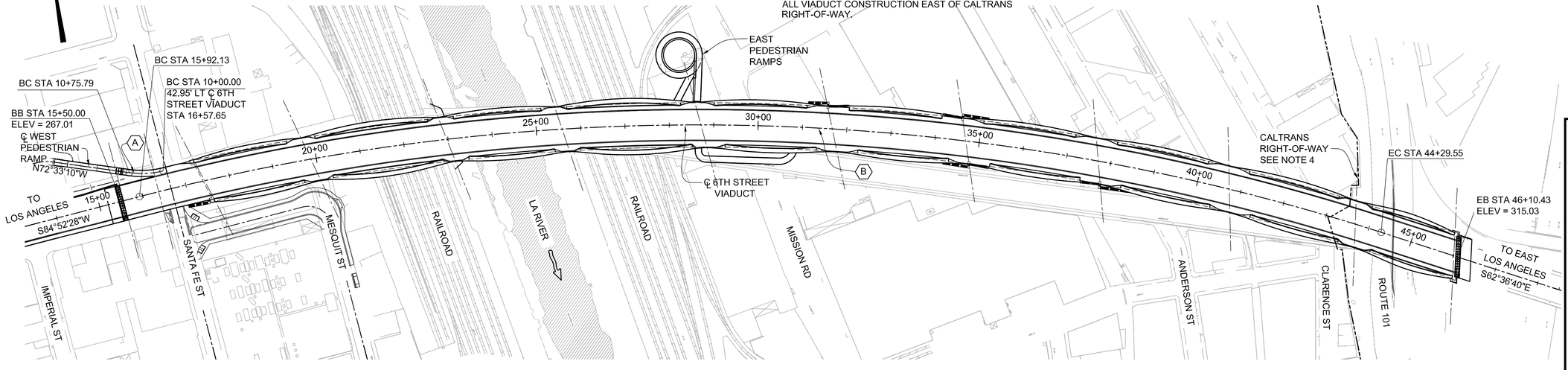

PLAN

SCALE: 1" = 120'

BUREAU OF ENGINEERING
OFFICIAL RECORD

HNTB
HNTB Corporation
601 W. 5TH STREET SUITE 1000
LOS ANGELES, CALIFORNIA 90071
TEL (213) 403-1000 FAX (213) 403-1001

CITY OF LOS ANGELES DEPARTMENT OF PUBLIC WORKS
BUREAU OF ENGINEERING

ENGINEERING
CITY OF LOS ANGELES

NO.	REVISIONS:	DATE	BY:

STRUCTURE NO. 53C-2329

INDEX NO. P-38113

REGISTERED PROFESSIONAL ENGINEER
MICHAEL H. JONES
No. 53033
CIVIL
STATE OF CALIFORNIA

THIS PLAN WAS ELECTRONICALLY SIGNED AND STAMPED.

CITY ENGINEER	DATE:
GARY LEE MOORE, P.E.	1/29/2016
DESIGN GROUP	1/29/2016
ENGINEER: MICHAEL H. JONES LIC. NO. 53033	1/29/2016
DESIGNED BY: MICHAEL H. JONES	1/29/2016
DRAWN BY: LI ZHANG	1/29/2016
CHECKED BY: TOMAS KOMPFNER	1/29/2016
APPROVED BY: MICHAEL H. JONES	1/29/2016

VERTICAL CONTROL: BM 12-04070, 1929 (NGVD 29) - 1985 ADJUSTMENT
HORIZONTAL CONTROL: GPS; PID AE 1704, EPOCH 1991.35

SHEET TITLE: GENERAL PLAN

PROJECT: SIXTH STREET VIADUCT REPLACEMENT

ADDRESS: SIXTH STREET VIADUCT (WHITTIER BLVD) LOS ANGELES, CA

WORK ORDER NO. E700224F

DRAWING NO. S0-01

SHEET 180 OF 560 SHEETS

REVISION DATES (DESIGN STAGE ONLY)

THE CITY OF LOS ANGELES OR ITS OFFICERS OR AGENTS SHALL NOT BE RESPONSIBLE FOR THE ACCURACY OR COMPLETENESS OF ELECTRONIC COPIES OF THIS PLAN SHEET.

C:\caddlib\pw\pwwestcoast\lzhang\dms57683\S0-01-GP.dwg 6/30/16 10:24

Sheet Version 3.0

ADDENDUM 5

INDEX TO PLANS

SHEET NUMBER	SHEET NAME	STRUCTURE SHEETS
180	S0-01	GENERAL PLAN
181	S0-02	INDEX TO PLANS NO. 1
182	S0-03	INDEX TO PLANS NO. 2
183	S0-04	GENERAL NOTES
184	S0-05	CONCRETE STRENGTH AND TYPE LIMITS
185	S0-06	STRUCTURE PLAN NO. 1
186	S0-07	STRUCTURE PLAN NO. 2
187	S0-08	STRUCTURE PLAN NO. 3
188	S0-09	STRUCTURE PLAN NO. 4
189	S1-01	DECK CONTOURS NO. 1
190	S1-02	DECK CONTOURS NO. 2
191	S1-03	DECK CONTOURS NO. 3
192	S1-04	FOUNDATION PLAN NO. 1
193	S1-05	FOUNDATION PLAN NO. 2
194	S1-06	FOUNDATION PLAN NO. 3
195	S2-01	ABUTMENT 1 LAYOUT
196	S2-02	ABUTMENT 13 LAYOUT
197	S2-03	ABUTMENT 1 DETAILS
198	S2-04	ABUTMENT 13 DETAILS
199	S2-05	ABUTMENT 13 RETAINING WALL LAYOUT
200	S2-07	APPROACH RETAINING WALL - LAYOUT
201	S2-08	APPROACH RETAINING WALL - DETAILS NO. 1
202	S2-09	APPROACH RETAINING WALL - DETAILS NO. 2
203	S2-10	APPROACH RETAINING WALL - DETAILS NO. 3
204	S2-11	APPROACH RETAINING WALL - DETAILS NO. 4
205	S2-12	APPROACH RETAINING WALL - DETAILS NO. 5
206	S2-13	APPROACH RETAINING WALL - DETAILS NO. 6
207	S2-31	RETAINING WALLS AT RIVER - GENERAL PLAN
208	S2-32	RETAINING WALLS AT RIVER - TYPICAL SECTIONS
209	S2-33	RETAINING WALLS AT RIVER - DETAILS NO. 1
210	S2-34	RETAINING WALLS AT RIVER - DETAILS NO. 2
211	S2-35	RETAINING WALLS AT RIVER - DETAILS NO. 3
212	S3-01	BENT 2 LAYOUT & DETAILS
213	S3-02	BENT 2 DETAILS NO. 1
214	S3-03	BENT 2 DETAILS NO. 2
215	S3-04	BENT 1 LAYOUT & DETAILS
216	S3-05	BENT 3 LAYOUT
217	S3-06	BENT 3 DETAILS NO. 1
218	S3-07	BENT 3 DETAILS NO. 2
219	S3-08	BENT 3 DETAILS NO. 3
220	S3-09	BENT 3 DETAILS NO. 4
221	S3-11	Y-BENT GEOMETRY LAYOUT NO. 1
222	S3-12	Y-BENT GEOMETRY LAYOUT NO. 2
223	S3-13	Y-BENT GEOMETRY LAYOUT NO. 3
224	S3-14	Y-BENT GEOMETRY LAYOUT NO. 4
225	S3-15	Y-BENT GEOMETRY LAYOUT NO. 5
226	S3-16	Y-BENT REINFORCEMENT DETAILS NO. 1
227	S3-17	Y-BENT REINFORCEMENT DETAILS NO. 2
228	S3-18	Y-BENT REINFORCEMENT DETAILS NO. 3
229	S3-19	ARCHITECTURAL CONCRETE - REINFORCEMENT NO. 1
230	S3-20	ARCHITECTURAL CONCRETE - REINFORCEMENT NO. 2
231	S3-21	ARCH RIB FLOOR BEAM DETAILS - NO. 1
232	S3-22	ARCH RIB FLOOR BEAM DETAILS - NO. 2
233	S3-23	ARCH RIB FLOOR BEAM DETAILS - NO. 3
234	S3-24	ARCH RIB FLOOR BEAM DETAILS - NO. 4
235	S3-25	ARCH RIB FLOOR BEAM POST TENSIONING DETAILS
236	S3-30	LOWER COLUMN AND CIDH CONCRETE PILE DETAILS NO. 1
237	S3-31	LOWER COLUMN AND CIDH CONCRETE PILE DETAILS NO. 2
238	S3-32	LOWER COLUMN AND CIDH CONCRETE PILE DETAILS NO. 3
239	S3-33	Y-BENT COLUMN MISCELLANEOUS DETAILS
240	S3-35	24" DIAMETER CIDH CONCRETE PILE
241	S3-36	CIDH PILE ISOLATION CASING - DETAILS NO. 1
242	S3-37	CIDH PILE ISOLATION CASING - DETAILS NO. 2
243	S4-01	TYPICAL SECTIONS NO. 1 - GIRDER SPANS
244	S4-02	TYPICAL SECTIONS NO. 2 - GIRDER SPANS
245	S4-03	TYPICAL SECTIONS NO. 1 - ARCH SPANS

INDEX TO PLANS

SHEET NUMBER	SHEET NAME	STRUCTURE SHEETS
246	S4-04	TYPICAL SECTIONS NO. 2 - ARCH SPANS
247	S4-05	TYPICAL SECTIONS NO. 3 - ARCH SPANS
248	S4-06	TYPICAL SECTIONS NO. 4 - ARCH SPANS
249	S4-07	DECK REINFORCEMENT DETAILS
250	S5-01	ARCH RIB GEOMETRY LAYOUT NO. 1
251	S5-02	ARCH RIB GEOMETRY LAYOUT NO. 2
252	S5-03	ARCH RIB GEOMETRY LAYOUT NO. 3
253	S5-04	ARCH RIB GEOMETRY LAYOUT NO. 4
254	S5-11	ARCH RIB MISCELLANEOUS DETAILS NO. 1
255	S5-12	ARCH RIB MISCELLANEOUS DETAILS NO. 2
256	S5-13	ARCH RIB MISCELLANEOUS DETAILS NO. 3
257	S5-15	ARCH RIB STAIR DETAILS NO. 1
258	S5-16	ARCH RIB STAIR DETAILS NO. 2
259	S5-17	ARCH RIB STAIR DETAILS NO. 3
260	S5-18	ARCH RIB STAIR DETAILS NO. 4
261	S5-20	Y-BENT STAIR DETAILS
262	S5-21	ARCH RIB REINFORCEMENT NO. 1
263	S5-22	ARCH RIB REINFORCEMENT NO. 2
264	S5-23	ARCH RIB REINFORCEMENT NO. 3
265	S5-24	ARCH RIB REINFORCEMENT NO. 4
266	S5-25	ARCH RIB REINFORCEMENT NO. 5
267	S5-26	ARCH RIB REINFORCEMENT NO. 6
268	S5-27	ARCH RIB REINFORCEMENT NO. 7
269	S5-28	ARCH RIB REINFORCEMENT NO. 8
270	S5-29	ARCH RIB REINFORCEMENT NO. 9
271	S5-30	ARCH RIB REINFORCEMENT NO. 10
272	S5-31	ARCH RIB REINFORCEMENT NO. 11
273	S5-32	ARCH RIB REINFORCEMENT NO. 12
274	S5-41	ARCH RIB REINFORCEMENT - DETAILS NO. 1
275	S5-42	ARCH RIB REINFORCEMENT - DETAILS NO. 2
276	S5-43	ARCH RIB REINFORCEMENT - DETAILS NO. 3
277	S5-44	ARCH RIB REINFORCEMENT - DETAILS NO. 4
278	S5-45	ARCH RIB REINFORCEMENT - DETAILS NO. 5
279	S5-46	ARCH RIB REINFORCEMENT - DETAILS NO. 6
280	S5-48	ARCH RIB ARCHITECTURAL CONCRETE REINFORCEMENT DETAILS
281	S5-49	ARCH HANGER GENERAL LAYOUT NO. 1
282	S5-50	ARCH HANGER GENERAL LAYOUT NO. 2
283	S5-51	ARCH HANGER LAYOUT NO. 1
284	S5-52	ARCH HANGER LAYOUT NO. 2
285	S5-53	ARCH HANGER LAYOUT NO. 3
286	S5-54	ARCH HANGER LAYOUT NO. 4
287	S5-55	ARCH HANGER LAYOUT NO. 5
288	S5-56	ARCH HANGER LAYOUT NO. 6
289	S5-57	ARCH HANGER LAYOUT NO. 7
290	S5-58	ARCH HANGER LAYOUT NO. 8
291	S5-59	ARCH HANGER LAYOUT NO. 9
292	S5-60	ARCH HANGER LAYOUT NO. 10
293	S5-61	ARCH HANGER LAYOUT NO. 11
294	S5-62	ARCH HANGER LAYOUT NO. 12
295	S5-63	ARCH HANGER LAYOUT NO. 13
296	S5-64	ARCH HANGER LAYOUT NO. 14
297	S5-65	ARCH HANGER LAYOUT NO. 15
298	S5-66	ARCH HANGER LAYOUT NO. 16
299	S5-70	HANGER CONNECTION DETAILS NO. 1
300	S5-71	HANGER CONNECTION DETAILS NO. 2
301	S5-72	HANGER CONNECTION DETAILS NO. 3
302	S5-73	HANGER CONNECTION DETAILS NO. 4
303	S5-74	HANGER CONNECTION DETAILS NO. 5
304	S6-01	GIRDER LAYOUT - GIRDER SPANS
305	S6-02	GIRDER DETAILS NO. 1
306	S6-03	GIRDER DETAILS NO. 2
307	S6-04	GIRDER DETAILS NO. 3
308	S6-05	GIRDER REINFORCEMENT
309	S6-06	ABUTMENT 13 FLOOR BEAM - DETAILS NO. 1
310	S6-07	ABUTMENT 13 FLOOR BEAM - DETAILS NO. 2
311	S6-08	ABUTMENT 13 FLOOR BEAM - DETAILS NO. 3
312	S6-10	DECK FRAMING PLAN - GENERAL LAYOUT
313	S6-11	DECK FRAMING PLAN NO. 1
314	S6-12	DECK FRAMING PLAN NO. 2
315	S6-13	DECK FRAMING PLAN NO. 3

INDEX TO PLANS

SHEET NUMBER	SHEET NAME	STRUCTURE SHEETS
316	S6-14	DECK FRAMING PLAN NO. 4
317	S6-15	DECK FRAMING PLAN NO. 5
318	S6-16	DECK FRAMING PLAN NO. 6
319	S6-17	DECK FRAMING PLAN NO. 7
320	S6-18	JUMP SPAN EDGE GIRDER PRESTRESSING DETAILS
321	S6-20	EDGE GIRDER PRESTRESSING LAYOUT
322	S6-21	EDGE GIRDER REINFORCEMENT - DETAILS NO. 1
323	S6-22	EDGE GIRDER REINFORCEMENT - DETAILS NO. 2
324	S6-23	EDGE GIRDER REINFORCEMENT - DETAILS NO. 3
325	S6-24	EDGE GIRDER REINFORCEMENT - DETAILS NO. 4
326	S6-25	EDGE GIRDER REINFORCEMENT - DETAILS NO. 5
327	S6-26	EDGE GIRDER REINFORCEMENT - DETAILS NO. 6
328	S6-27	EDGE GIRDER REINFORCEMENT - DETAILS NO. 7
329	S6-28	EDGE GIRDER REINFORCEMENT - DETAILS NO. 8
330	S6-29	EDGE GIRDER REINFORCEMENT - DETAILS NO. 9
331	S6-30	EDGE GIRDER REINFORCEMENT - DETAILS NO. 10
332	S6-31	EDGE GIRDER REINFORCEMENT - DETAILS NO. 11
333	S6-32	EDGE GIRDER REINFORCEMENT - DETAILS NO. 12
334	S6-33	EDGE GIRDER REINFORCEMENT - DETAILS NO. 13
335	S6-34	EDGE GIRDER REINFORCEMENT - DETAILS NO. 14
336	S6-35	EDGE GIRDER REINFORCEMENT - DETAILS NO. 15
337	S6-36	EDGE GIRDER REINFORCEMENT - DETAILS NO. 16
338	S6-37	EDGE GIRDER REINFORCEMENT - DETAILS NO. 17
339	S6-38	EDGE GIRDER REINFORCEMENT - DETAILS NO. 18
340	S6-39	EDGE GIRDER REINFORCEMENT - DETAILS NO. 19
341	S6-40	EDGE GIRDER REINFORCEMENT - DETAILS NO. 20
342	S6-41	EDGE GIRDER REINFORCEMENT - DETAILS NO. 21
343	S6-42	EDGE GIRDER REINFORCEMENT - DETAILS NO. 22
344	S6-43	EDGE GIRDER REINFORCEMENT - DETAILS NO. 23
345	S6-44	EDGE GIRDER REINFORCEMENT - DETAILS NO. 24
346	S6-45	EDGE GIRDER REINFORCEMENT - DETAILS NO. 25
347	S6-46	EDGE GIRDER REINFORCEMENT - DETAILS NO. 26
348	S6-47	EDGE GIRDER REINFORCEMENT - DETAILS NO. 27
349	S6-48	EDGE GIRDER REINFORCEMENT - DETAILS NO. 28
350	S6-49	EDGE GIRDER REINFORCEMENT - DETAILS NO. 29
351	S6-50	EDGE GIRDER REINFORCEMENT - DETAILS NO. 30
352	S6-51	EDGE GIRDER REINFORCEMENT - DETAILS NO. 31
353	S6-52	EDGE GIRDER REINFORCEMENT - DETAILS NO. 32
354	S6-53	EDGE GIRDER REINFORCEMENT - DETAILS NO. 33
355	S6-54	EDGE GIRDER REINFORCEMENT - DETAILS NO. 34
356	S6-55	EDGE GIRDER REINFORCEMENT - DETAILS NO. 35
357	S6-56	EDGE GIRDER REINFORCEMENT - DETAILS NO. 36
358	S6-57	EDGE GIRDER REINFORCEMENT - DETAILS NO. 37
359	S6-58	EDGE GIRDER REINFORCEMENT - DETAILS NO. 38
360	S6-59	EDGE GIRDER REINFORCEMENT - DETAILS NO. 39
361	S6-60	EDGE GIRDER REINFORCEMENT - DETAILS NO. 40
362	S6-61	EDGE GIRDER REINFORCEMENT - DETAILS NO. 41
363	S6-62	EDGE GIRDER REINFORCEMENT - DETAILS NO. 42
364	S6-63	EDGE GIRDER REINFORCEMENT - DETAILS NO. 43
365	S6-64	EDGE GIRDER REINFORCEMENT - DETAILS NO. 44
366	S6-65	EDGE GIRDER REINFORCEMENT - DETAILS NO. 45
367	S6-66	EDGE GIRDER REINFORCEMENT - DETAILS NO. 46
368	S6-67	EDGE GIRDER REINFORCEMENT - DETAILS NO. 47
369	S6-71	EDGE GIRDER DETAILS NO. 1
370	S6-72	EDGE GIRDER DETAILS NO. 2
371	S6-73	EDGE GIRDER DETAILS NO. 3
372	S6-74	EDGE GIRDER DETAILS NO. 4
373	S6-75	EDGE GIRDER DETAILS NO. 5
374	S6-76	EDGE GIRDER DETAILS NO. 6
375	S6-77	EDGE GIRDER DETAILS NO. 7
376	S6-78	PEDESTRIAN RAMP EDGE GIRDER LEDGE - LAYOUT
377	S6-79	PEDESTRIAN RAMP EDGE GIRDER LEDGE - DETAILS
378	S6-80	EDGE GIRDER POST TENSIONING NOTES
379	S6-81	EDGE GIRDER POST TENSIONING - DETAILS NO. 1
380	S6-82	EDGE GIRDER POST TENSIONING - DETAILS NO. 2
381	S6-83	EDGE GIRDER POST TENSIONING - DETAILS NO. 3
382	S6-84	EDGE GIRDER POST TENSIONING - DETAILS NO. 4
383	S6-85	EDGE GIRDER POST TENSIONING - DETAILS NO. 5
384	S6-86	EDGE GIRDER POST TENSIONING - DETAILS NO. 6
385	S6-87	EDGE GIRDER POST TENSIONING - DETAILS NO. 7
386	S6-88	EDGE GIRDER POST TENSIONING - DETAILS NO. 8
387	S6-89	EDGE GIRDER POST TENSIONING - DETAILS NO. 9

THE CITY OF LOS ANGELES OR ITS OFFICERS OR AGENTS SHALL NOT BE RESPONSIBLE FOR THE ACCURACY OR COMPLETENESS OF ELECTRONIC COPIES OF THIS PLAN SHEET.

REVISION DATES (DESIGN STAGE ONLY)

C:\caddlib\pw\pwwestcoast\zhang\dms57683\S0-02-I001-02.dwg 6/30/16 11:05

Sheet Version 3.0

BUREAU OF ENGINEERING

ENGINEERING
CITY OF LOS ANGELES

NO. | REVISIONS: | DATE: | BY:

STRUCTURE NO. 53C-2329

INDEX NO. P-38113

THIS PLAN WAS ELECTRONICALLY SIGNED AND STAMPED

REGISTERED PROFESSIONAL ENGINEER — MICHAEL H. JONES — No. S3033 — CIVIL — STATE OF CALIFORNIA

BUREAU OF ENGINEERING — OFFICIAL RECORD

CITY OF LOS ANGELES — DEPARTMENT OF PUBLIC WORKS

GARY LEE MOORE, P.E. — CITY ENGINEER

ENGINEER:	MICHAEL H. JONES	LIC. NO.	S3033
DESIGNED BY:	MICHAEL H. JONES	DATE:	1/29/2016
DRAWN BY:	LI ZHANG	DATE:	1/29/2016
CHECKED BY:	TOMAS KOMPFNER	DATE:	1/29/2016
APPROVED BY:	MICHAEL H. JONES	DATE:	1/29/2016

DESIGN GROUP

VERTICAL CONTROL: BM 12-04070.1929 (NGVD 29) - 1985 ADJUSTMENT
HORIZONTAL CONTROL: GPS; PID AE 1704, EPOCH 1991.35

SHEET TITLE: INDEX TO PLANS NO. 1

PROJECT: SIXTH STREET VIADUCT REPLACEMENT

ADDRESS: SIXTH STREET VIADUCT (WHITTIER BLVD) LOS ANGELES, CA

HNTB
HNTB Corporation
601 W. 5TH STREET SUITE 1000
LOS ANGELES, CALIFORNIA 90071
TEL (213) 403-1000 FAX (213) 403-1001

WORK ORDER NO. E700224F

DRAWING NO. S0-02

SHEET 181 OF 560 SHEETS

ADDENDUM 5

INDEX TO PLANS

SHEET NUMBER	SHEET NAME	STRUCTURE SHEETS
388	S6-90	EDGE GIRDER POST TENSIONING - DETAILS NO. 10
389	S6-91	EDGE GIRDER POST TENSIONING - DETAILS NO. 11
390	S6-92	EDGE GIRDER POST TENSIONING - DETAILS NO. 12
391	S6-93	EDGE GIRDER POST TENSIONING - DETAILS NO. 13
392	S6-94	EDGE GIRDER POST TENSIONING - DETAILS NO. 14
393	S7-01	FLOOR BEAM DETAILS NO. 1
394	S7-02	FLOOR BEAM DETAILS NO. 2
395	S7-03	FLOOR BEAM DETAILS NO. 3
396	S7-04	FLOOR BEAM DETAILS NO. 4
397	S7-05	FLOOR BEAM DETAILS NO. 5
398	S8-01	ISOLATION BEARING DETAILS NO. 1
399	S8-02	ISOLATION BEARING DETAILS NO. 2
400	S8-03	ISOLATION BEARING DETAILS NO. 3
401	S8-04	ISOLATION BEARING DETAILS NO. 4
402	S8-05	SEISMIC JOINT LAYOUT
403	S8-06	SEISMIC JOINT CROSS SECTION
404	S8-07	DECK PLATE DETAILS NO. 1
405	S8-08	DECK PLATE DETAILS NO. 2
406	S8-09	DECK PLATE DETAILS NO. 3
407	S8-10	CHANNEL ASSEMBLY DETAILS NO. 1
408	S8-11	CHANNEL ASSEMBLY DETAILS NO. 2
409	S8-12	SUPPORT PLATE DETAILS
410	S8-13	REINFORCEMENT DETAILS
411	S8-14	SEISMIC JOINT CONSTRUCTION SEQUENCE
412	S8-15	STRUCTURE APPROACH TYPE N (30S)
413	S8-16	STRUCTURE APPROACH TYPE N (30S) DETAILS NO. 1
414	S8-17	STRUCTURE APPROACH TYPE N (30S) DETAILS NO. 2
415	S8-18	STRUCTURE APPROACH DRAINAGE DETAILS
416	S8-19	SLOPE PAVING AT ABUTMENT 13
417	S8-20	BARRIER TYPE 80 MODIFICATIONS
418	S8-21	CALIFORNIA ST-10 BRIDGE RAIL (MODIFIED)
419	S8-22	ADA COMPLIANT JOINT SEAL
420	S8-30	ARCH SPAN DECK DRAINAGE - DETAILS NO. 1
421	S8-31	ARCH SPAN DECK DRAINAGE - DETAILS NO. 2
422	S8-32	ARCH SPAN DECK DRAINAGE - DETAILS NO. 3
423	S8-33	ARCH SPAN DECK DRAINAGE - DETAILS NO. 4
424	S8-34	GIRDER SPAN DECK DRAINAGE - DETAILS NO. 1
425	S8-35	GIRDER SPAN DECK DRAINAGE - DETAILS NO. 2
426	S8-50	STAIR LAYOUT NO. 1
427	S8-51	STAIR LAYOUT NO. 2
428	S8-52	STAIR LAYOUT NO. 3
429	S8-53	STAIR SUBSTRUCTURE
430	S8-54	STAIR REINFORCEMENT LAYOUT
431	S8-55	STAIR DETAILS
432	S9-05	STAGED CONSTRUCTION NO. 1
433	S9-06	STAGED CONSTRUCTION NO. 2
434	S9-07	STAGED CONSTRUCTION NO. 3
435	S9-08	STAGED CONSTRUCTION NO. 4
436	S9-09	STAGED CONSTRUCTION NO. 5
437	S9-51	LOG OF TEST BORINGS SHEET 1 OF 20
438	S9-52	LOG OF TEST BORINGS SHEET 2 OF 20
439	S9-53	LOG OF TEST BORINGS SHEET 3 OF 20
440	S9-54	LOG OF TEST BORINGS SHEET 4 OF 20
441	S9-55	LOG OF TEST BORINGS SHEET 5 OF 20
442	S9-56	LOG OF TEST BORINGS SHEET 6 OF 20
443	S9-57	LOG OF TEST BORINGS SHEET 7 OF 20
444	S9-58	LOG OF TEST BORINGS SHEET 8 OF 20
445	S9-59	LOG OF TEST BORINGS SHEET 9 OF 20
446	S9-60	LOG OF TEST BORINGS SHEET 10 OF 20
447	S9-61	LOG OF TEST BORINGS SHEET 11 OF 20
448	S9-62	LOG OF TEST BORINGS SHEET 12 OF 20
449	S9-63	LOG OF TEST BORINGS SHEET 13 OF 20
450	S9-64	LOG OF TEST BORINGS SHEET 14 OF 20
451	S9-65	LOG OF TEST BORINGS SHEET 15 OF 20
452	S9-66	LOG OF TEST BORINGS SHEET 16 OF 20
453	S9-67	LOG OF TEST BORINGS SHEET 17 OF 20
454	S9-68	LOG OF TEST BORINGS SHEET 18 OF 20
455	S9-69	LOG OF TEST BORINGS SHEET 19 OF 20
456	S9-70	LOG OF TEST BORINGS SHEET 20 OF 20

THE CITY OF LOS ANGELES OR ITS OFFICERS OR AGENTS SHALL NOT BE RESPONSIBLE FOR THE ACCURACY OR COMPLETENESS OF ELECTRONIC COPIES OF THIS PLAN SHEET.

REVISION DATES (DESIGN STAGE ONLY)

C:\caddlib\pw\pwwestcoast\zhang\dms57683\S0-02-I001-02.dwg 6/30/16 11:06

Sheet Version 3.0

BUREAU OF ENGINEERING

ENGINEERING
CITY OF LOS ANGELES

NO.	REVISIONS:	DATE	BY:

STRUCTURE NO. 53C-2329

INDEX NO. P-38113

THIS PLAN WAS ELECTRONICALLY SIGNED AND STAMPED

REGISTERED PROFESSIONAL ENGINEER
GARY LEE MOORE
No. C 16
CIVIL
STATE OF CALIFORNIA

BUREAU OF ENGINEERING
OFFICIAL RECORD

CITY OF LOS ANGELES DEPARTMENT OF PUBLIC WORKS
BUREAU OF ENGINEERING

GARY LEE MOORE, P.E. CITY ENGINEER

		DESIGN GROUP	LIC. NO.	DATE:
ENGINEER:	MICHAEL H. JONES		S3033	1/29/2016
DESIGNED BY:	MICHAEL H. JONES			1/29/2016
DRAWN BY:	LI ZHANG			1/29/2016
CHECKED BY:	TOMAS KOMPFNER			1/29/2016
APPROVED BY:	MICHAEL H. JONES			1/29/2016

VERTICAL CONTROL: BM 12-04070.1929 (NGVD 29) - 1985 ADJUSTMENT
HORIZONTAL CONTROL: GPS; PID AE 1704, EPOCH 1991.35

SHEET TITLE: INDEX TO PLANS NO. 2

PROJECT: SIXTH STREET VIADUCT REPLACEMENT

ADDRESS: SIXTH STREET VIADUCT (WHITTIER BLVD)
LOS ANGELES, CA

WORK ORDER NO. E700224F

DRAWING NO. S0-03

SHEET 182 OF 560 SHEETS

HNTB
HNTB Corporation
601 W. 5TH STREET SUITE 1000
LOS ANGELES, CALIFORNIA 90071
TEL (213) 403-1000 FAX (213) 403-1001

GENERAL NOTES

LOAD AND RESISTANCE FACTOR DESIGN

DESIGN:	PROJECT SPECIFIC DESIGN CRITERIA FOR THE SIXTH STREET BRIDGE REPLACEMENT PROJECT
SEISMIC DESIGN:	PROJECT SPECIFIC DESIGN CRITERIA FOR THE SIXTH STREET BRIDGE REPLACEMENT PROJECT
DEAD LOADS:	INCLUDES 35 PSF FOR FUTURE WEARING SURFACE
CREEP AND SHRINKAGE:	FIP MODEL CODE FOR CONCRETE STRUCTURES, 2010 AVERAGE RELATIVE HUMIDITY = 70% AVERAGE AMBIENT TEMPERATURE = 65° F
LIVE LOADING:	HL93 WITH "LOW-BOY", PERMIT DESIGN LOAD AND 75 PSF AND 90 PSF PEDESTRIAN LOADING.
SEISMIC LOADING:	THE AVERAGE OF SEVEN SITE SPECIFIC GROUND MOTIONS (PEAK ROCK ACCELERATION = 0.6g). SEE PROJECT DESIGN CRITERIA.
REINFORCED CONCRETE:	FOR CONCRETE STRENGTHS, SEE "DRAWING NO. S0-05"
REINFORCEMENT:	ALL REINFORCEMENT TO BE ASTM A706, GRADE 60 UNO. REINFORCEMENT SPECIFIED AS GRADE 80 SHALL BE ASTM A706. EPOXY COATED REINFORCEMENT REQUIRED AT ARCHITECTURAL CONCRETE. SEE DRAWING NOS. S3-03, S3-09, S3-19, S3-20, S5-20 AND S5-48.
PRESTRESSING STEEL:	STRAND PRESTRESSING STEEL SHALL BE ASTM A416, GRADE 270, LOW RELAXATION.
STRUCTURAL STEEL:	ALL STRUCTURAL STEEL SHALL BE ASTM A709 GRADE 50 UON. ASTM A354 THREADED BOLTS SHALL BE GRADE BD.
ARCH HANGERS:	HANGERS SHALL BE GALVANIZED/GALFAN COATED STRUCTURAL STRAND WITH A LUBRICATING/BLOCKING COMPOUND APPLIED CONFORMING TO ASTM A586, GRADE 2 AND PROVIDE THE MINIMUM BREAKING STRENGTH SPECIFIED FOR HELICAL STRAND. HELICAL STRAND SHALL BE PRESTRETCHED PURSUANT TO ASTM A586.

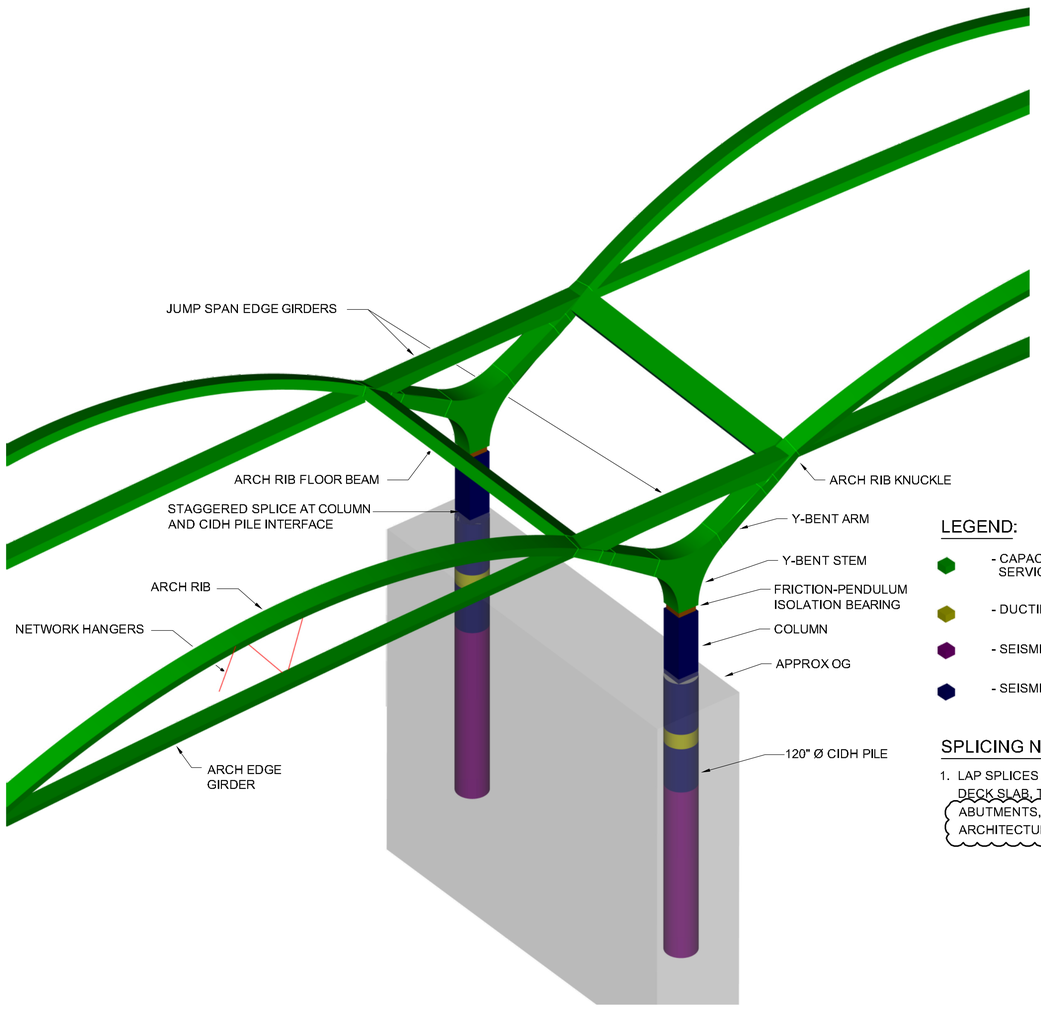

LEGEND:

- CAPACITY PROTECTED SERVICE SPLICE
- DUCTILE PLASTIC HINGE
- SEISMIC CRITICAL - ULTIMATE SPLICE
- SEISMIC CRITICAL - NO SPLICE ZONES

SPLICING NOTES:

1. LAP SPLICES ARE PERMITTED AT DECK SLAB, TYPICAL FLOOR BEAMS, ABUTMENTS, RETAINING WALLS AND ARCHITECTURAL CONCRETE. /1

CONCRETE REINFORCEMENT SPLICING REQUIREMENTS

CALTRANS STANDARD DRAWINGS DATED 2010

A10A	ABBREVIATIONS (SHEET 1 OF 2)
(RSP) A10B	ABBREVIATIONS (SHEET 2 OF 2)
A10C	LINES AND SYMBOLS (SHEET 1 OF 3)
A10D	LINES AND SYMBOLS (SHEET 2 OF 3)
A10E	LINES AND SYMBOLS (SHEET 3 OF 3)
B0-1	BRIDGE DETAILS
B0-3	BRIDGE DETAILS
B0-5	BRIDGE DETAILS
B0-13	BRIDGE DETAILS
(RSP) B3-1A	RETAINING WALL TYPE 1 (CASE 1)
(RSP) B3-1B	RETAINING WALL TYPE 1 (CASE 2)
(RSP) B3-1C	RETAINING WALL TYPE 1 (CASE 3)
(RSP) B3-4A	RETAINING WALL TYPE 5 (CASE 1)
(RSP) B3-4B	RETAINING WALL TYPE 5 (CASE 2)
(RSP) B3-4C	RETAINING WALL TYPE 5 (CASE 3)
(RSP) B3-5	RETAINING WALL DETAILS NO. 1
(RSP) B6-21	JOINT SEALS (MAXIMUM MOVEMENT RATING=2")
(RSP) B7-1	BOX GIRDER DETAILS
(RSP) B7-6	DECK DRAINS TYPES D-1 AND D-2
(RSP) B7-10	UTILITY OPENING - BOX GIRDER
(RSP) B8-5	CAST-IN-PLACE PRESTRESSED GIRDER DETAILS
(RSP) B11-47	CABLE RAILING
(RSP) B11-56	CONCRETE BARRIER TYPE 736
(RSP) B11-60	CONCRETE BARRIER TYPE 80 (SHEET 1 OF 2)
(RSP) B11-61	CONCRETE BARRIER TYPE 80 (SHEET 2 OF 2)
(RSP) B11-68	CALIFORNIA ST-10 BRIDGE RAIL (SHEET 1 OF 3)
B11-69	CALIFORNIA ST-10 BRIDGE RAIL (SHEET 2 OF 3)
(RSP) B11-70	CALIFORNIA ST-10 BRIDGE RAIL (SHEET 2 OF 3)

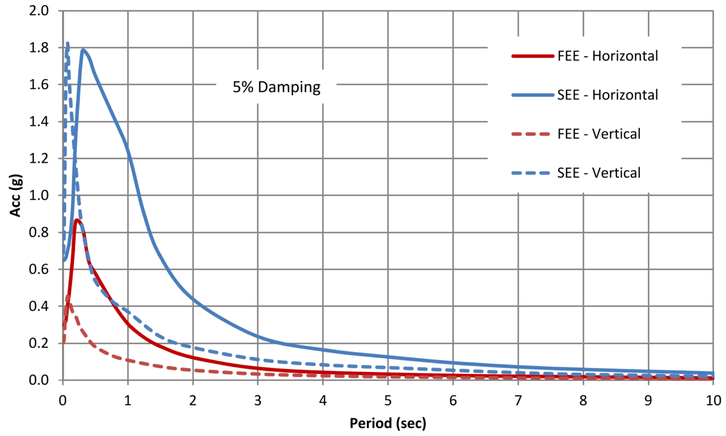

DESIGN ARS CURVE FOR FEE AND SEE

THE CITY OF LOS ANGELES OR ITS OFFICERS OR AGENTS SHALL NOT BE RESPONSIBLE FOR THE ACCURACY OR COMPLETENESS OF ELECTRONIC COPIES OF THIS PLAN SHEET.

REVISION DATES (DESIGN STAGE ONLY)

C:\caddlib\pw\pwwestcoast\zhang\dms576831\S0-04-0N01.dwg 5/03/18 09:44

Sheet Version 3.0

HNTB
HNTB Corporation
601 W. 5TH STREET SUITE 1000
LOS ANGELES, CALIFORNIA 90071
TEL (213) 403-1000 FAX (213) 403-1001

CITY OF LOS ANGELES DEPARTMENT OF PUBLIC WORKS

BUREAU OF ENGINEERING

ENGINEERING CITY OF LOS ANGELES

GARY LEE MOORE, P.E. CITY ENGINEER

NO.	REVISIONS:	DATE:	BY:
1	BIM REVISION 6	4/27/18	MHJ

ECO 63

THIS PLAN WAS ELECTRONICALLY SIGNED AND STAMPED.

REGISTERED PROFESSIONAL ENGINEER MICHAEL H. JONES No. S3033 CIVIL STATE OF CALIFORNIA

		DATE:
ENGINEER:	MICHAEL H. JONES LIC. NO. S3033 DESIGN GROUP	1/29/2016
DESIGNED BY:	MICHAEL H. JONES	1/29/2016
DRAWN BY:	LI ZHANG	1/29/2016
CHECKED BY:	TOMAS KOMPFNER	1/29/2016
APPROVED BY:	MICHAEL H. JONES	1/29/2016

VERTICAL CONTROL: BM 12-04070 1929 (NGVD 29) - 1985 ADJUSTMENT
HORIZONTAL CONTROL: GPS; PID AE 1704, EPOCH 1991.35

SHEET TITLE: GENERAL NOTES

PROJECT: SIXTH STREET VIADUCT REPLACEMENT

ADDRESS: SIXTH STREET VIADUCT (WHITTIER BLVD) LOS ANGELES, CA

STRUCTURE NO. 53C-2329

INDEX NO.

WORK ORDER NO. E700224F

DRAWING NO. S0-04

SHEET 183 OF 560 SHEETS

ADDENDUM 5

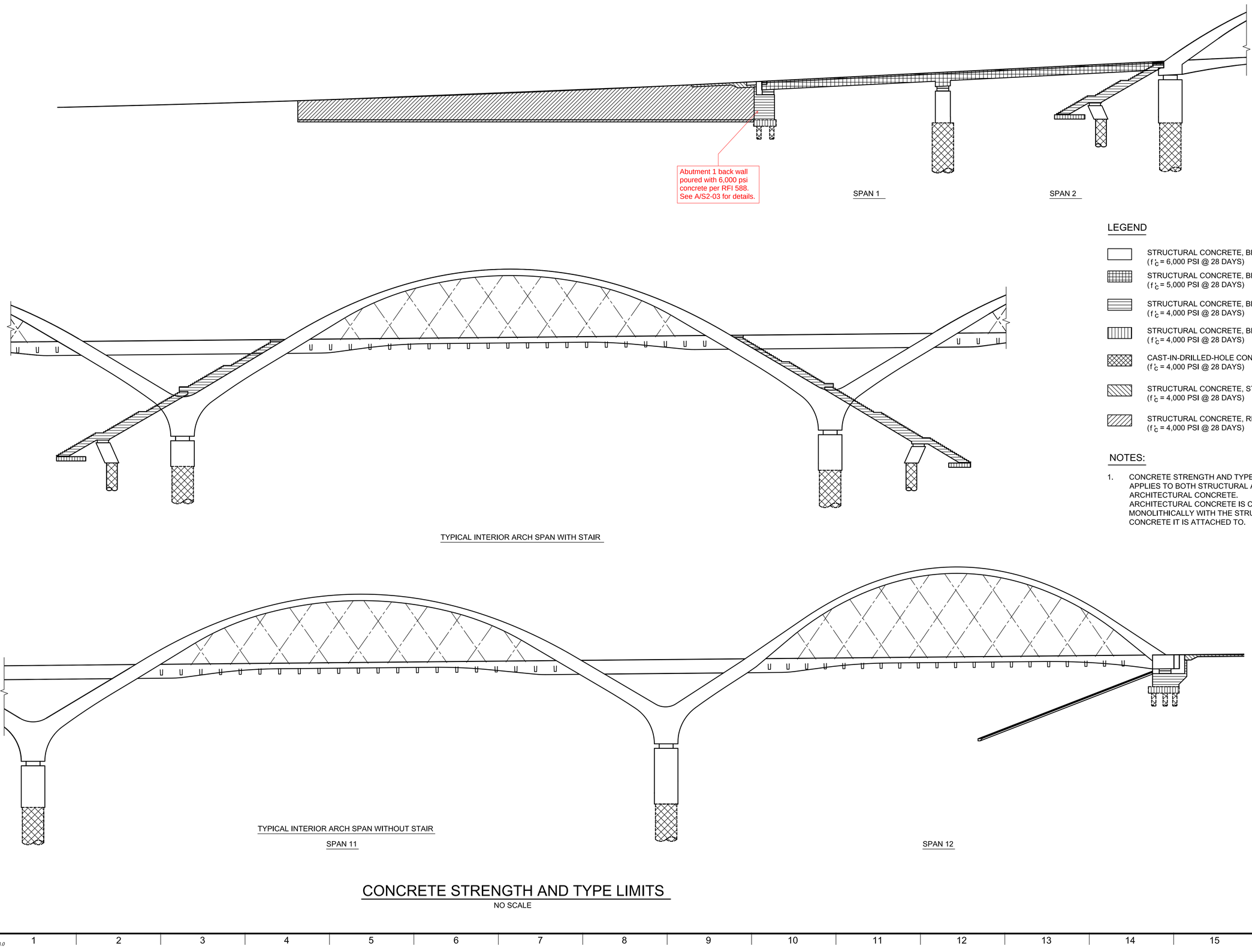

LEGEND

- STRUCTURAL CONCRETE, BRIDGE (f'_c = 6,000 PSI @ 28 DAYS)
- STRUCTURAL CONCRETE, BRIDGE (f'_c = 5,000 PSI @ 28 DAYS)
- STRUCTURAL CONCRETE, BRIDGE (f'_c = 4,000 PSI @ 28 DAYS)
- STRUCTURAL CONCRETE, BRIDGE FOOTING (f'_c = 4,000 PSI @ 28 DAYS)
- CAST-IN-DRILLED-HOLE CONCRETE PILE (f'_c = 4,000 PSI @ 28 DAYS)
- STRUCTURAL CONCRETE, STRUCTURE APPROACH (f'_c = 4,000 PSI @ 28 DAYS)
- STRUCTURAL CONCRETE, RETAINING WALL (f'_c = 4,000 PSI @ 28 DAYS)

NOTES:

1. CONCRETE STRENGTH AND TYPE LIMITS APPLIES TO BOTH STRUCTURAL AND ARCHITECTURAL CONCRETE. ARCHITECTURAL CONCRETE IS CAST MONOLITHICALLY WITH THE STRUCTURAL CONCRETE IT IS ATTACHED TO.

CONCRETE STRENGTH AND TYPE LIMITS

NO SCALE

HNTB
HNTB Corporation
601 W. 5TH STREET SUITE 1000
LOS ANGELES, CALIFORNIA 90071
TEL (213) 403-1000 FAX (213) 403-1001

BUREAU OF ENGINEERING
OFFICIAL RECORD

ENGINEERING
CITY OF LOS ANGELES

BUREAU OF ENGINEERING

NO.	REVISIONS:	DATE	BY:

STRUCTURE NO. 53C-2329

INDEX NO. P-38113

REGISTERED PROFESSIONAL ENGINEER MICHAEL H. JONES No. S3033 CIVIL STATE OF CALIFORNIA

* THIS PLAN WAS ELECTRONICALLY SIGNED AND STAMPED

CITY OF LOS ANGELES DEPARTMENT OF PUBLIC WORKS

GARY LEE MOORE, P.E. CITY ENGINEER

DESIGN GROUP	LIC. NO. S3033	DATE:
ENGINEER: MICHAEL H. JONES		1/29/2016
DESIGNED BY: MICHAEL H. JONES		1/29/2016
DRAWN BY: LI ZHANG		1/29/2016
CHECKED BY: TOMAS KOMPFNER		1/29/2016
APPROVED BY: MICHAEL H. JONES		1/29/2016

VERTICAL CONTROL: BM 12-04070 1929 (NGVD 29) - 1985 ADJUSTMENT
HORIZONTAL CONTROL: GPS; PID AE 1704, EPOCH 1991.35

SHEET TITLE: CONCRETE STRENGTH AND TYPE LIMITS

PROJECT: SIXTH STREET VIADUCT REPLACEMENT

ADDRESS: SIXTH STREET VIADUCT (WHITTIER BLVD) LOS ANGELES, CA

WORK ORDER NO. E700224F

DRAWING NO. S0-05

SHEET 184 OF 560 SHEETS

THE CITY OF LOS ANGELES OR ITS OFFICERS OR AGENTS SHALL NOT BE RESPONSIBLE FOR THE ACCURACY OR COMPLETENESS OF ELECTRONIC COPIES OF THIS PLAN SHEET.

C:\caddlib\pw\pwwestcoast\zhang\dms57683\S0-05-GN02.dwg 6/27/16 13:32

REVISION DATES (DESIGN STAGE ONLY)

Sheet Version 3.0

ADDENDUM 5

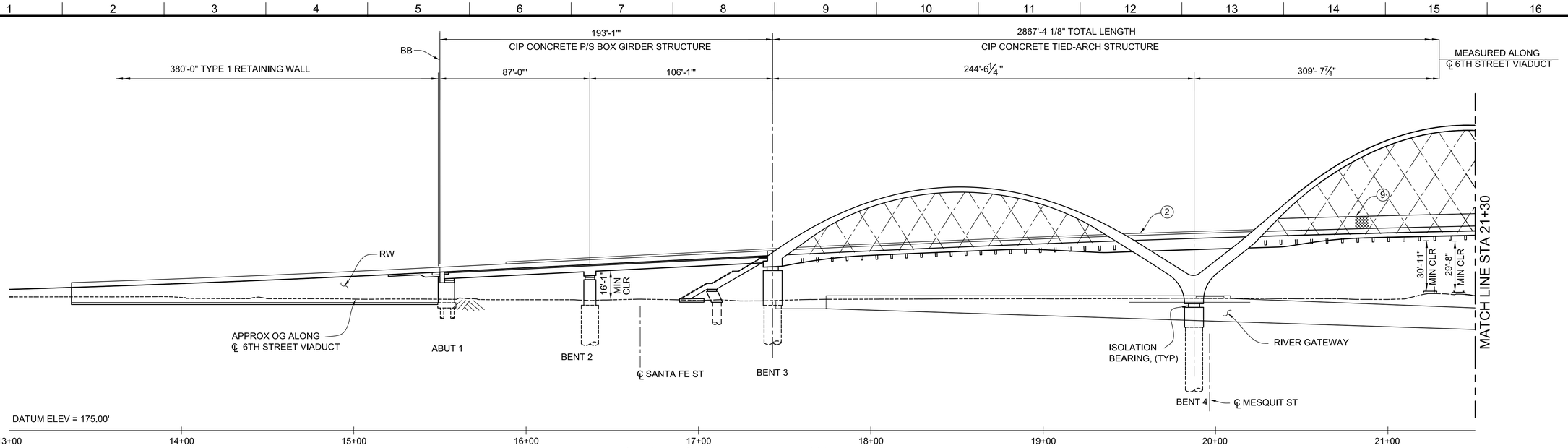

DEVELOPED ELEVATION

SCALE: 1" = 30'

ABUTMENT AND BENT DATA

LOCATION	STATION	SKEW ANGLE
BB AT ABUT 1	15+50.00	0°00'00"
℄ BENT 2	16+37.00	0°00'00"
℄ BENT 3	17+43.08	15°00'00"
℄ BENT 4	19+87.60	15°09'05"

NOTES:

1. PROVIDE EXPANSION JOINT IN CONCRETE BARRIER AT BENT 3 JOINT. SEE B11-60

LEGEND:

1. CONCRETE BARRIER TYPE 80 (MODIFIED)
2. 4' GALVANIZED METAL RAILING
5. CRASH CUSHION
6. DECK DRAIN TYPE C (MODIFIED)
7. DECK DRAIN TYPE D-1 (MODIFIED)
8. CALIFORNIA ST-10 BRIDGE RAIL
9. 10' FENCE
11. DECK DRAIN TYPE C1 (MODIFIED)
12. ELECTRICAL BLOCKOUTS
14. LUMINAIRE
15. ADA COMPLIANT JOINT SEAL

CURVE DATA

Ⓐ ℄ WEST PEDESTRIAN RAMP
R = 196.04'
△ = 22°09'08"
T = 38.38' =
L = 75.80' =

Ⓑ ℄ 6TH STREET VIADUCT
R = 5000.00
△ = 32°30'51"
T = 1458.05
L = 2837.42

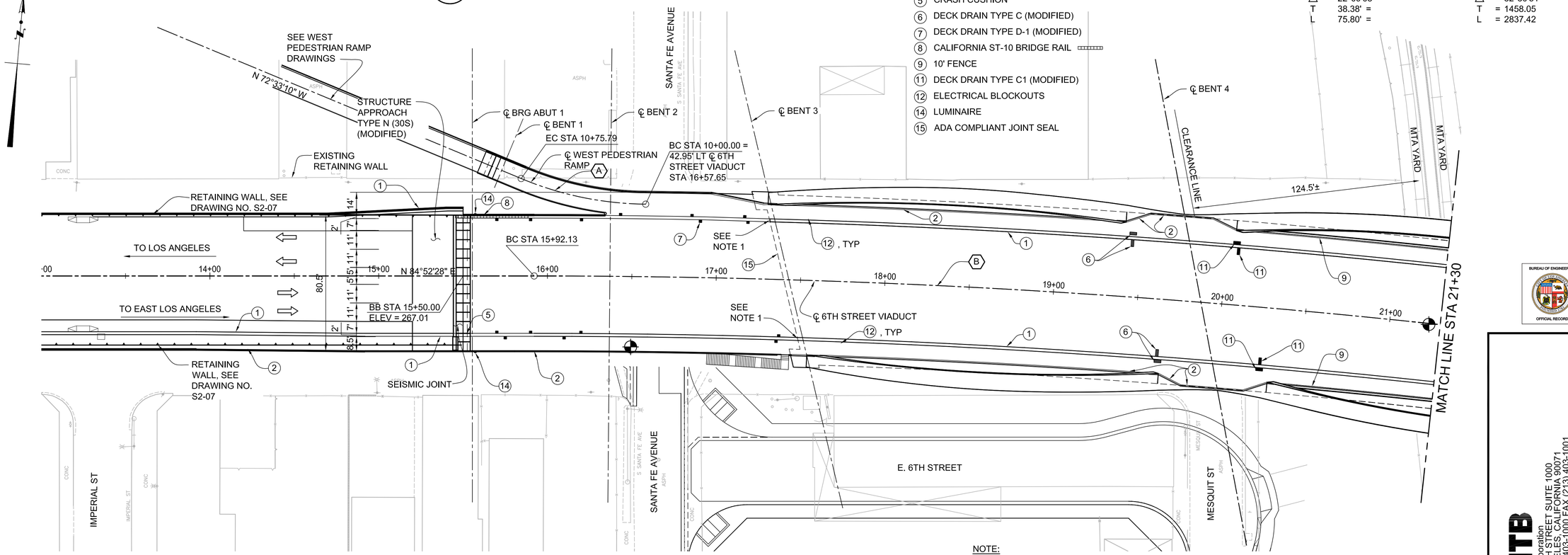

PLAN

SCALE: 1" = 30'

NOTE:

INDICATES POINT OF MINIMUM VERTICAL CLEARANCE

BUREAU OF ENGINEERING OFFICIAL RECORD

HNTB
HNTB Corporation
601 W. 5TH STREET SUITE 1000
LOS ANGELES, CALIFORNIA 90071
TEL (213) 403-1000 FAX (213) 403-1001

CITY OF LOS ANGELES DEPARTMENT OF PUBLIC WORKS BUREAU OF ENGINEERING

ENGINEERING — CITY OF LOS ANGELES

STRUCTURE NO. 53C-2329

INDEX NO. P-38113

NO.	REVISIONS:	DATE:	BY:

THIS PLAN WAS ELECTRONICALLY SIGNED AND STAMPED

REGISTERED PROFESSIONAL ENGINEER — RICHARD H. JONES — No. S3033 — CIVIL — STATE OF CALIFORNIA

GARY LEE MOORE, P.E.	CITY ENGINEER
ENGINEER:	MICHAEL H. JONES
DESIGNED BY:	MICHAEL H. JONES
DRAWN BY:	LI ZHANG
CHECKED BY:	TOMAS KOMPFNER
APPROVED BY:	MICHAEL H. JONES
DESIGN GROUP	LIC. NO. S3033
DATE:	1/29/2016

VERTICAL CONTROL: BM 12-04070, 1929 (NGVD 29) - 1985 ADJUSTMENT
HORIZONTAL CONTROL: GPS; PID AE 1704, EPOCH 1991.35

SHEET TITLE: STRUCTURE PLAN NO. 1

PROJECT: SIXTH STREET VIADUCT REPLACEMENT

ADDRESS: SIXTH STREET VIADUCT (WHITTIER BLVD) LOS ANGELES, CA

WORK ORDER NO. E700224F

DRAWING NO. S0-06

SHEET 185 OF 560 SHEETS

REVISION DATES (DESIGN STAGE ONLY)

THE CITY OF LOS ANGELES OR ITS OFFICERS OR AGENTS SHALL NOT BE RESPONSIBLE FOR THE ACCURACY OR COMPLETENESS OF ELECTRONIC COPIES OF THIS PLAN SHEET.

C:\caddlib\pw\pwwestcoast\zhang\dms57683\S0-06-SP1.dwg 6/29/16 11:24

Sheet Version 3.0

ADDENDUM 5

2867'-4 1/8" TOTAL LENGTH
CIP CONCRETE TIED-ARCH STRUCTURE

MEASURED ALONG ℄ 6TH STREET VIADUCT

309'-7⅞" | 261'-0" | 312'-10⅝" | 296'-2⅛"

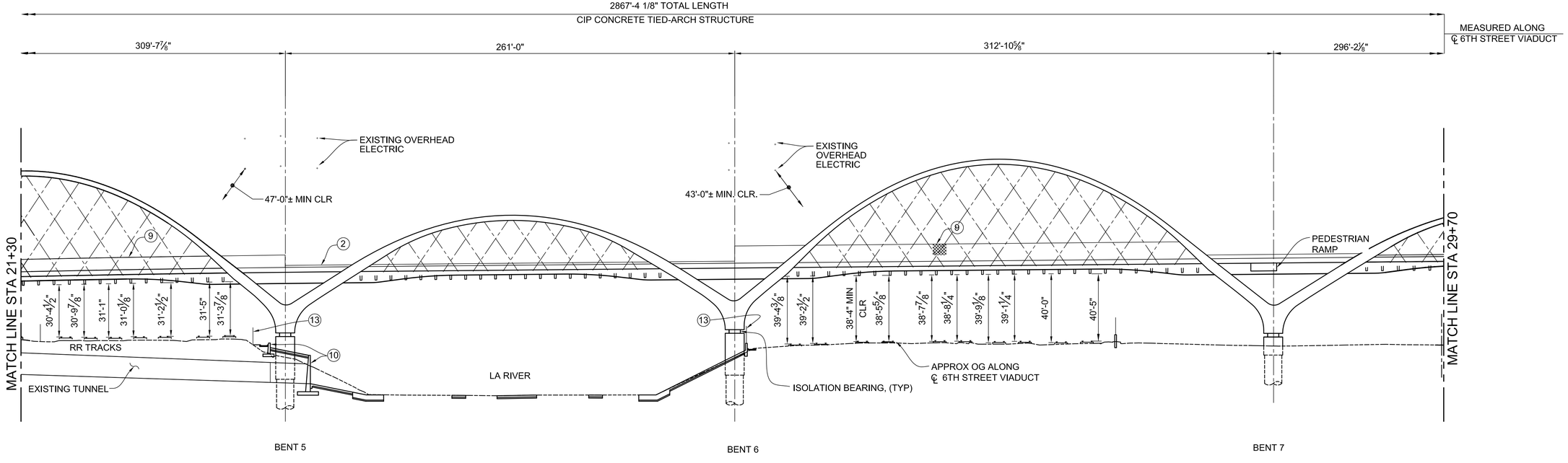

DATUM ELEV = 175.00'

22+00 | 23+00 | 24+00 | 25+00 | 26+00 | 27+00 | 28+00 | 29+00

BENT DATA

LOCATION	STATION	SKEW ANGLE
℄ BENT 5	22+97.26	15°09'00"
℄ BENT 6	25+58.26	15°07'12"
℄ BENT 7	28+71.15	15°07'48"

LEGEND:

1. CONCRETE BARRIER TYPE 80 (MODIFIED)
2. 4' GALVANIZED METAL RAILING
3. 5' GALVANIZED METAL RAILING
6. DECK DRAIN TYPE C (MODIFIED)
7. DECK DRAIN TYPE D-1 (MODIFIED)
9. 10' FENCE
10. RETAINING WALL
11. DECK DRAIN TYPE C1 (MODIFIED)
12. ELECTRICAL BLOCKOUTS
13. REPLACE 7-FT HIGH TUBE STEEL FENCING PER SCRRA STD ES5104

CURVE DATA

Ⓑ ℄ 6TH STREET VIADUCT

R = 5000.00
△ = 32°30'51"
T = 1458.05
L = 2837.42

NOTE:

⊕ INDICATES POINT OF MINIMUM VERTICAL CLEARANCE

DEVELOPED ELEVATION

SCALE: 1" = 30'

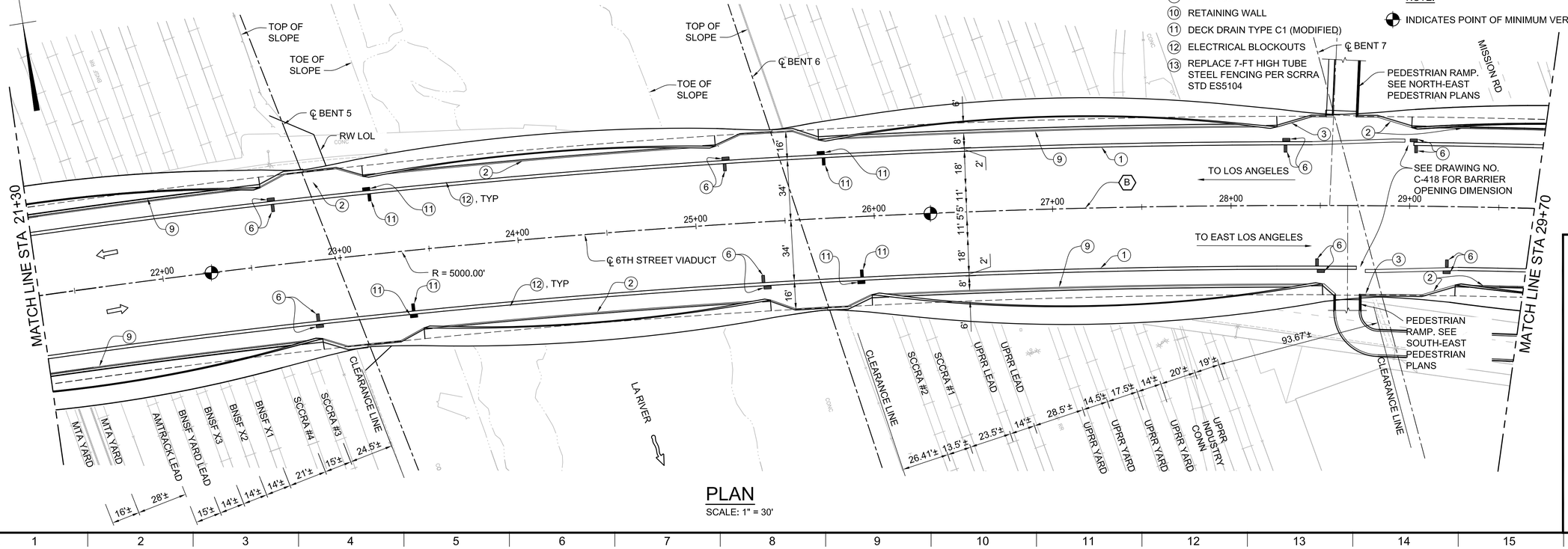

PLAN

SCALE: 1" = 30'

BUREAU OF ENGINEERING
OFFICIAL RECORD

HNTB
HNTB Corporation
601 W. 5TH STREET SUITE 1000
LOS ANGELES, CALIFORNIA 90071
TEL (213) 403-1000 FAX (213) 403-1001

CITY OF LOS ANGELES DEPARTMENT OF PUBLIC WORKS
BUREAU OF ENGINEERING

ENGINEERING
CITY OF LOS ANGELES

STRUCTURE NO. 53C-2329

INDEX NO. P-38113

NO. | REVISIONS: | DATE | BY:

"THIS PLAN WAS ELECTRONICALLY SIGNED AND STAMPED"

REGISTERED PROFESSIONAL ENGINEER
MICHAEL H. JONES
No. S3033
EXP. 12-31-16
STATE OF CALIFORNIA

ENGINEER	GARY LEE MOORE, P.E.	CITY ENGINEER	DATE:
ENGINEER:	MICHAEL H. JONES	LIC. NO. S3033	1/29/2016
DESIGNED BY:	MICHAEL H. JONES	DESIGN GROUP	1/29/2016
DRAWN BY:	LI ZHANG		1/29/2016
CHECKED BY:	CHARLES REDFIELD		1/29/2016
APPROVED BY:	MICHAEL H. JONES		1/29/2016

VERTICAL CONTROL: BM 12-04070, 1929 (NGVD 29) - 1985 ADJUSTMENT
HORIZONTAL CONTROL: GPS; PID AE 1704, EPOCH 1991.35

SHEET TITLE: STRUCTURE PLAN NO. 2

PROJECT: SIXTH STREET VIADUCT REPLACEMENT

ADDRESS: SIXTH STREET VIADUCT (WHITTIER BLVD) LOS ANGELES, CA

WORK ORDER NO. E700224F

DRAWING NO. S0-07

SHEET 186 OF 560 SHEETS

REVISION DATES (DESIGN STAGE ONLY)

THE CITY OF LOS ANGELES OR ITS OFFICERS OR AGENTS SHALL NOT BE RESPONSIBLE FOR THE ACCURACY OR COMPLETENESS OF ELECTRONIC COPIES OF THIS PLAN SHEET.

C:\caddlib\pw\pwwestcoast\lzhang\dms57683\S0-07-SP2.dwg 6/27/16 13:51

Sheet Version 3.0

ADDENDUM 5

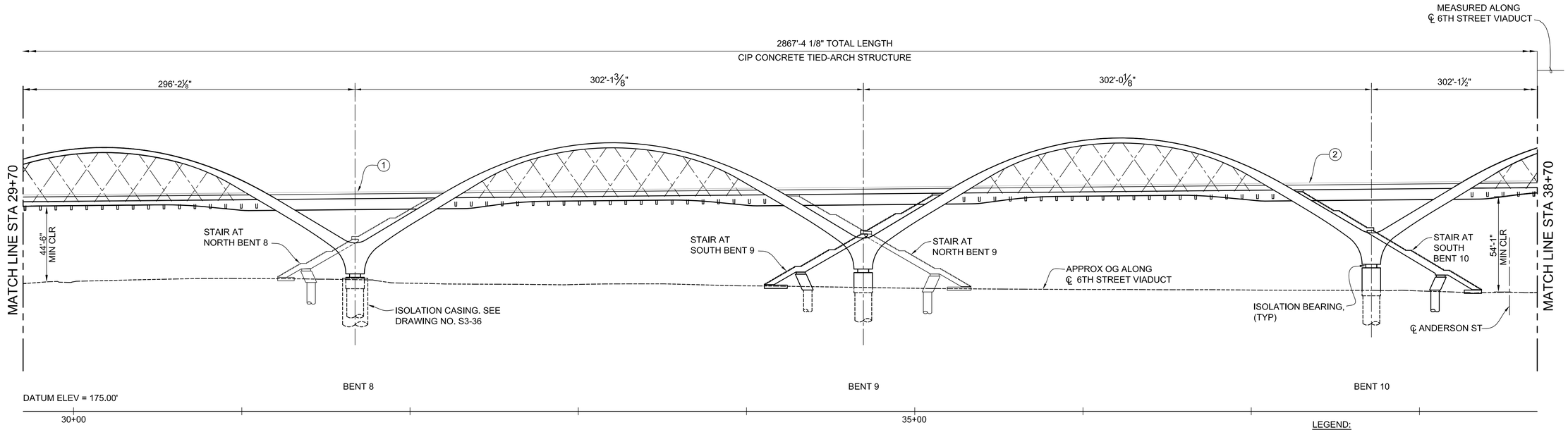

DEVELOPED ELEVATION

SCALE: 1" = 30'

BENT DATA

LOCATION	STATION	SKEW ANGLE
℄ BENT 8	31+67.33	15°07'20"
℄ BENT 9	34+69.43	15°07'20"
℄ BENT 10	37+71.45	15°07'20"

LEGEND:

1. CONCRETE BARRIER TYPE 80 (MODIFIED)
2. 4' GALVANIZED METAL RAILING
6. DECK DRAIN TYPE C (MODIFIED)
7. DECK DRAIN TYPE D-1 (MODIFIED)
12. ELECTRICAL BLOCKOUTS

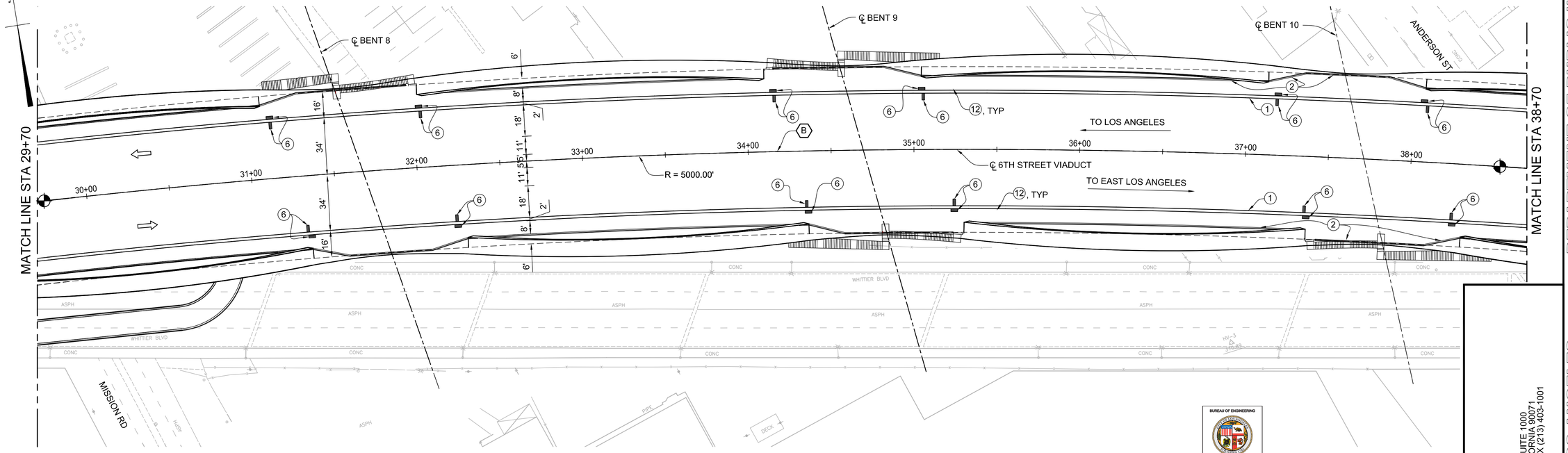

PLAN

SCALE: 1" = 30'

CURVE DATA

(B) ℄ 6TH STREET VIADUCT

R = 5000.00
△ = 32°30'51"
T = 1458.05
L = 2837.42

NOTE:

INDICATES POINT OF MINIMUM VERTICAL CLEARANCE

BUREAU OF ENGINEERING OFFICIAL RECORD

HNTB
HNTB Corporation
601 W. 5TH STREET SUITE 1000
LOS ANGELES, CALIFORNIA 90071
TEL (213) 403-1000 FAX (213) 403-1001

BUREAU OF ENGINEERING

ENGINEERING
CITY OF LOS ANGELES

NO. | REVISIONS: | DATE | BY:

STRUCTURE NO. 53C-2329

INDEX NO. P-38113

REGISTERED PROFESSIONAL ENGINEER MICHAEL H. JONES No. S3033 CIVIL STATE OF CALIFORNIA

THIS PLAN WAS ELECTRONICALLY SIGNED AND STAMPED.

CITY OF LOS ANGELES DEPARTMENT OF PUBLIC WORKS

CITY ENGINEER: GARY LEE MOORE, P.E. — DATE: 1/29/2016
LIC. NO. S3033
DESIGN GROUP
ENGINEER: MICHAEL H. JONES — 1/29/2016
DESIGNED BY: MICHAEL H. JONES — 1/29/2016
DRAWN BY: LI ZHANG — 1/29/2016
CHECKED BY: TOMAS KOMPFNER — 1/29/2016
APPROVED BY: MICHAEL H. JONES — 1/29/2016

VERTICAL CONTROL: BM 12-04070, 1929 (NGVD 29) - 1985 ADJUSTMENT
HORIZONTAL CONTROL: GPS; PID AE 1704, EPOCH 1991.35

SHEET TITLE: STRUCTURE PLAN NO. 3

PROJECT: SIXTH STREET VIADUCT REPLACEMENT

ADDRESS: SIXTH STREET VIADUCT (WHITTIER BLVD) LOS ANGELES, CA

WORK ORDER NO. E700224F

DRAWING NO. S0-08

SHEET 187 OF 560 SHEETS

REVISION DATES (DESIGN STAGE ONLY)

C:\caddlib\pw\pwwestcoast\zhang\dms57683\S0-08-SP3.dwg 6/27/16 13:46

Sheet Version 3.0

THE CITY OF LOS ANGELES OR ITS OFFICERS OR AGENTS SHALL NOT BE RESPONSIBLE FOR THE ACCURACY OR COMPLETENESS OF ELECTRONIC COPIES OF THIS PLAN SHEET.

ADDENDUM 5

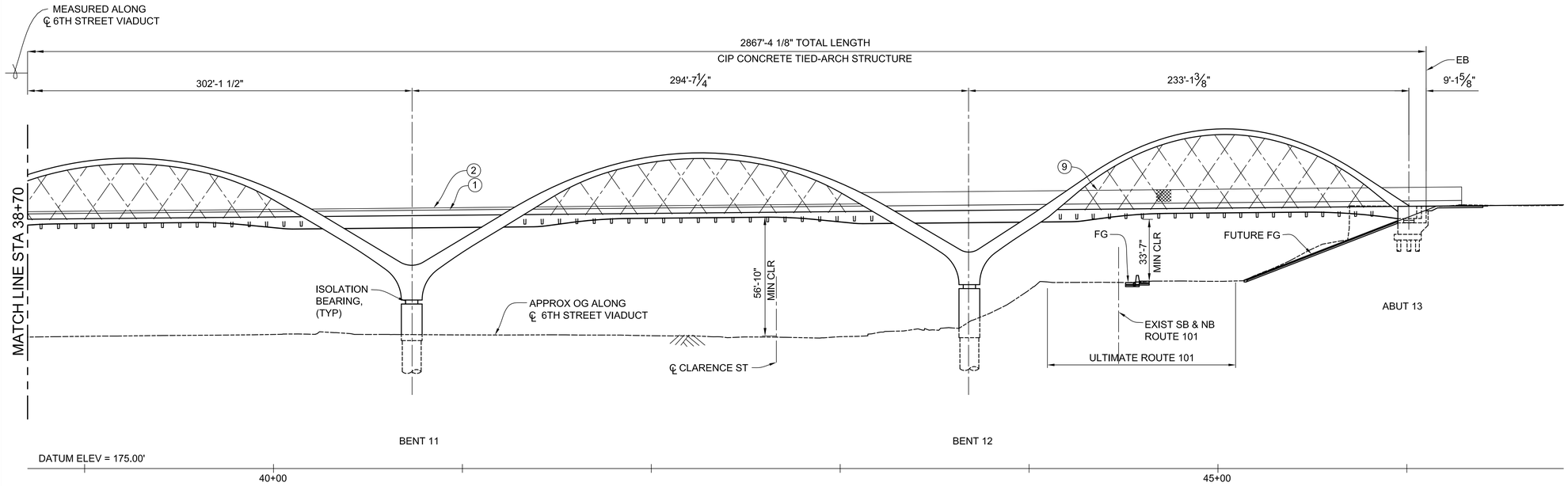

DEVELOPED ELEVATION

SCALE: 1" = 30'

ABUTMENT AND BENT DATA

LOCATION	STATION	SKEW ANGLE
℄ BENT 11	40+73.58	15°07'21"
℄ BENT 12	43+68.18	15°03'00"
℄ OF BRG ABUT 13	46+01.29	15°00'00"

LEGEND:

1. CONCRETE BARRIER TYPE 80 (MODIFIED)
2. 4' GALVANIZED METAL RAILING
5. CRASH CUSHION
6. DECK DRAIN TYPE C (MODIFIED)
9. 10' FENCE
12. ELECTRICAL BLOCKOUTS

CURVE DATA

(B) ℄ 6TH STREET VIADUCT

R = 5000.00
△ = 32°30'51"
T = 1458.05
L = 2837.42

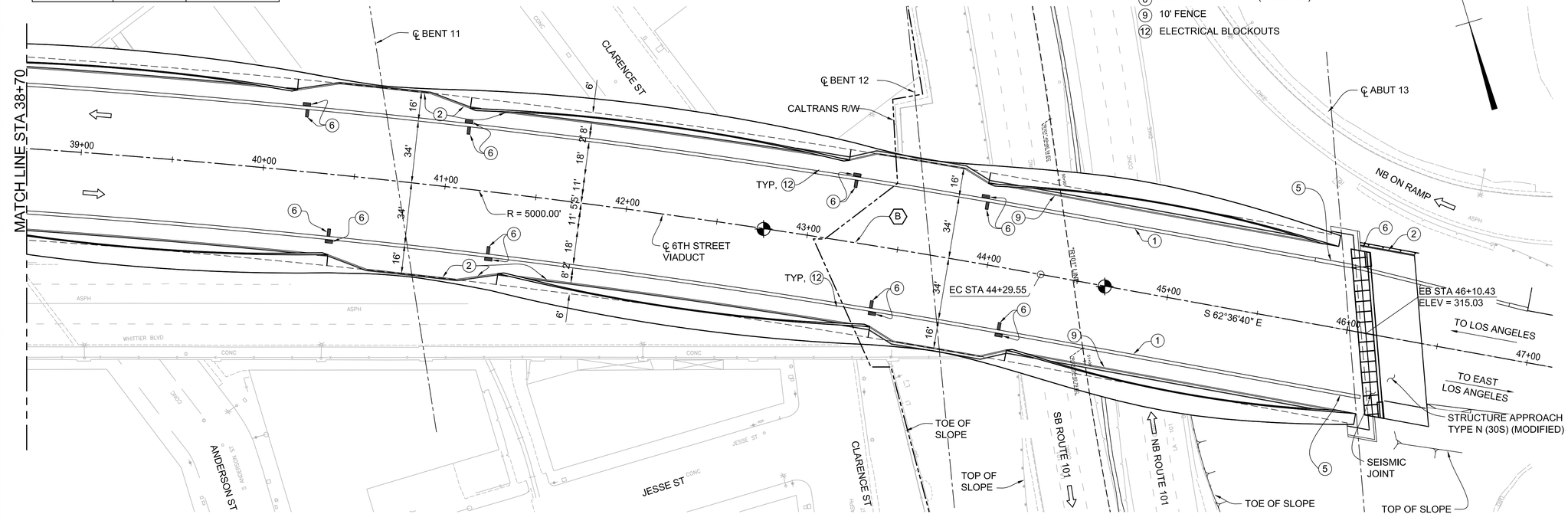

PLAN

SCALE: 1" = 30'

NOTE:

INDICATES POINT OF MINIMUM VERTICAL CLEARANCE

BUREAU OF ENGINEERING
OFFICIAL RECORD

HNTB
HNTB Corporation
601 W. 5TH STREET SUITE 1000
LOS ANGELES, CALIFORNIA 90071
TEL (213) 403-1000 FAX (213) 403-1001

CITY OF LOS ANGELES DEPARTMENT OF PUBLIC WORKS
BUREAU OF ENGINEERING

ENGINEERING
CITY OF LOS ANGELES

NO.	REVISIONS:	DATE	BY:

STRUCTURE NO. 53C-2329

INDEX NO. P-38113

REGISTERED PROFESSIONAL ENGINEER — MICHAEL H. JONES — No. S3033 — CIVIL — STATE OF CALIFORNIA

THIS PLAN WAS ELECTRONICALLY SIGNED AND STAMPED

GARY LEE MOORE, P.E. — CITY ENGINEER

DESIGN GROUP			DATE:
ENGINEER:	MICHAEL H. JONES	LIC. NO. S3033	1/29/2016
DESIGNED BY:	MICHAEL H. JONES		1/29/2016
DRAWN BY:	LI ZHANG		1/29/2016
CHECKED BY:	TOMAS KOMPFNER		1/29/2016
APPROVED BY:	MICHAEL H. JONES		1/29/2016

VERTICAL CONTROL: BM 12-04070 1929 (NGVD 29) - 1985 ADJUSTMENT
HORIZONTAL CONTROL: GPS; PID AE 1704; EPOCH 1991.35

SHEET TITLE: STRUCTURE PLAN NO. 4

PROJECT: SIXTH STREET VIADUCT REPLACEMENT

ADDRESS: SIXTH STREET VIADUCT (WHITTIER BLVD) LOS ANGELES, CA

WORK ORDER NO. E700224F

DRAWING NO. S0-09

SHEET 188 OF 560 SHEETS

THE CITY OF LOS ANGELES OR ITS OFFICERS OR AGENTS SHALL NOT BE RESPONSIBLE FOR THE ACCURACY OR COMPLETENESS OF ELECTRONIC COPIES OF THIS PLAN SHEET.

C:\caddlib\pw\pwwestcoast\zhang\dms57683\S0-09-SP4.dwg 6/27/16 13:48

REVISION DATES (DESIGN STAGE ONLY)

Sheet Version 3.0

ADDENDUM 5

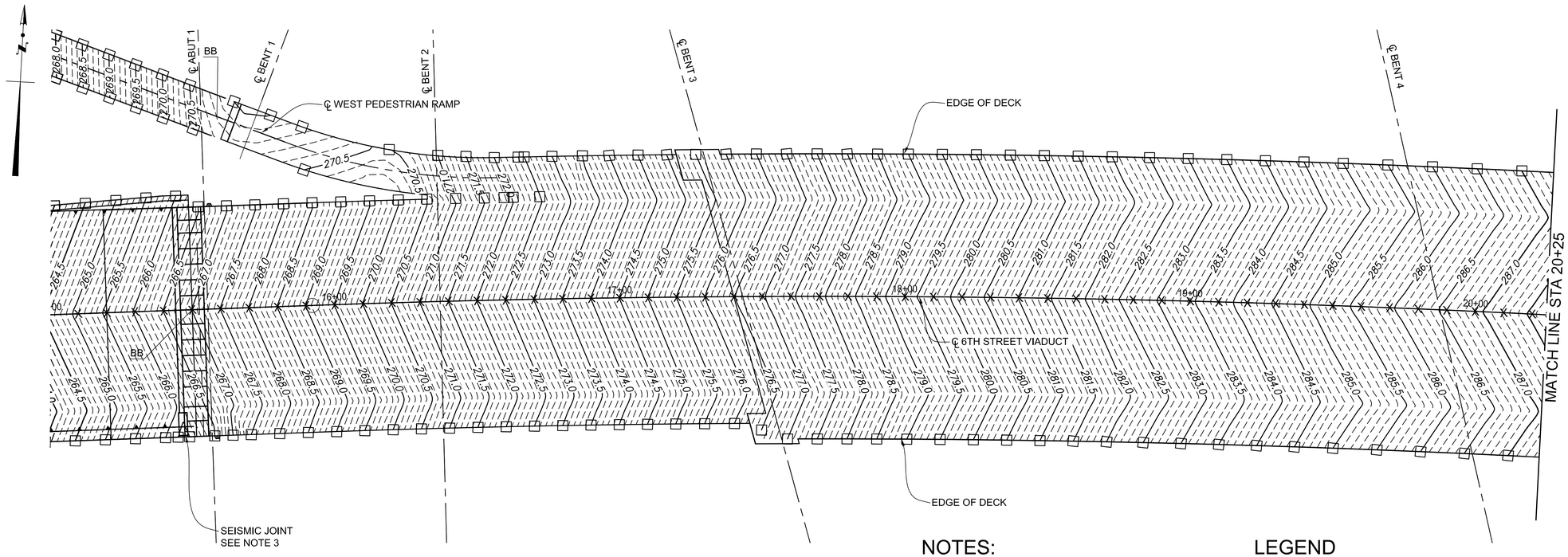

NOTES:

1. CONTOURS DO NOT INCLUDE CAMBER.
2. FOR LAYOUT INFORMATION, SEE "GENERAL PLAN & GEOMETRIC LAYOUT" SHEETS.
3. AT SEISMIC JOINTS, CONTOURS ARE AT THE TOP OF THE MULTILAYER POLYESTER CONCRETE OVERLAY AND RUBBER SEALANT.

LEGEND

X DENOTES 10FT INTERVALS ALONG ℄ 6TH STREET VIADUCT

□ DENOTES 0.5' CONTOUR. CONTOUR INTERVAL IS 0.10'

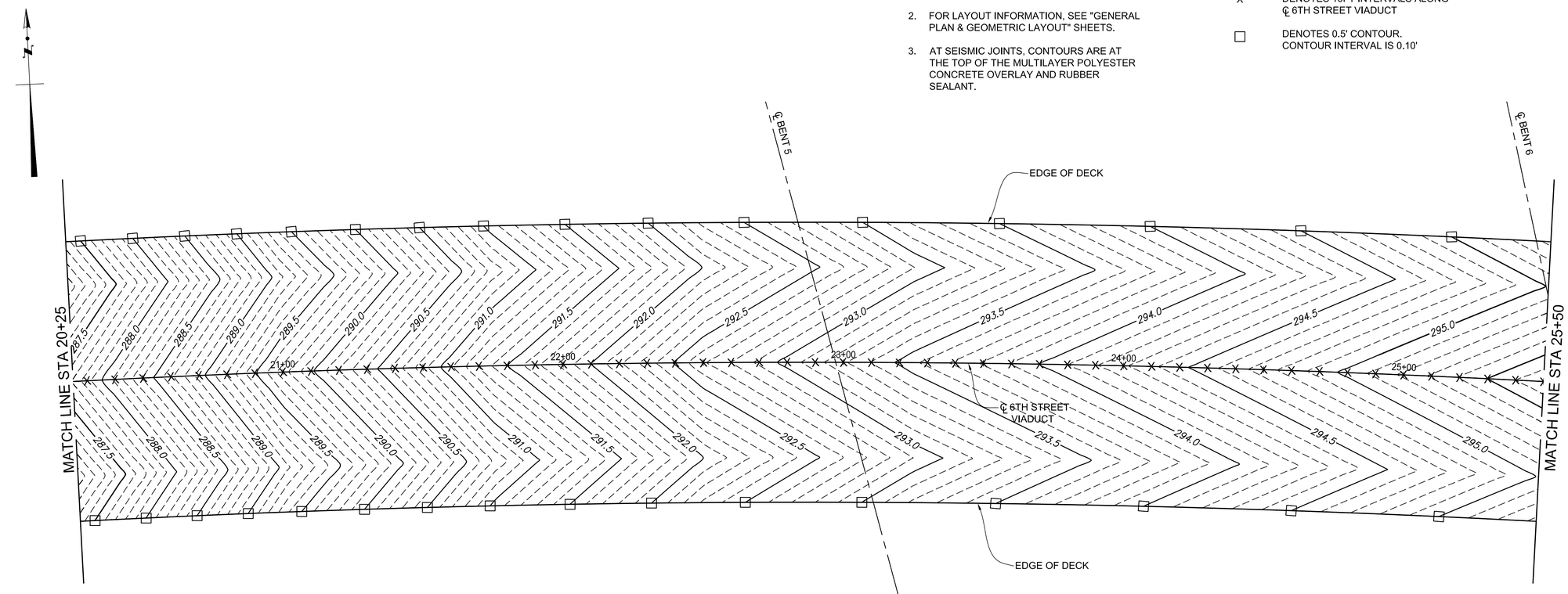

PLAN

SCALE: 1" =20'

THIS PLAN WAS ELECTRONICALLY SIGNED AND STAMPED

REGISTERED PROFESSIONAL ENGINEER MICHAEL H. JONES No. 53033 CIVIL STATE OF CALIFORNIA

BUREAU OF ENGINEERING OFFICIAL RECORD

BUREAU OF ENGINEERING

NO.	REVISIONS:	DATE:	BY:

STRUCTURE NO. 53C-2329

INDEX NO. P-38113

ENGINEERING CITY OF LOS ANGELES

CITY OF LOS ANGELES DEPARTMENT OF PUBLIC WORKS

GARY LEE MOORE, P.E. CITY ENGINEER

	DESIGN GROUP	LIC. NO. 53033	DATE
ENGINEER:	MICHAEL H. JONES		1/29/2016
DESIGNED BY:	MICHAEL H. JONES		1/29/2016
DRAWN BY:	LI ZHANG		1/29/2016
CHECKED BY:	TOMAS KOMPFNER		1/29/2016
APPROVED BY:	MICHAEL H. JONES		1/29/2016

VERTICAL CONTROL: BM 12-04070, 1929 (NGVD 29) - 1985 ADJUSTMENT

HORIZONTAL CONTROL: GPS; PID AE 1704, EPOCH 1991.35

SHEET TITLE: DECK CONTOUR NO. 1

PROJECT: SIXTH STREET VIADUCT REPLACEMENT

ADDRESS: SIXTH STREET VIADUCT (WHITTIER BLVD) LOS ANGELES, CA

HNTB

HNTB Corporation
601 W. 5TH STREET SUITE 1000
LOS ANGELES, CALIFORNIA 90071
TEL (213) 403-1000 FAX (213) 403-1001

WORK ORDER NO. E700224F

DRAWING NO. S1-01

SHEET 189 OF 560 SHEETS

REVISION DATES (DESIGN STAGE ONLY)

C:\caddlib\pw\pwwestcoast\lzhang\dms57683\S1-01-DC01-03.dwg 6/27/16 14:43

Sheet Version 3.0

THE CITY OF LOS ANGELES OR ITS OFFICERS OR AGENTS SHALL NOT BE RESPONSIBLE FOR THE ACCURACY OR COMPLETENESS OF ELECTRONIC COPIES OF THIS PLAN SHEET.

ADDENDUM 5

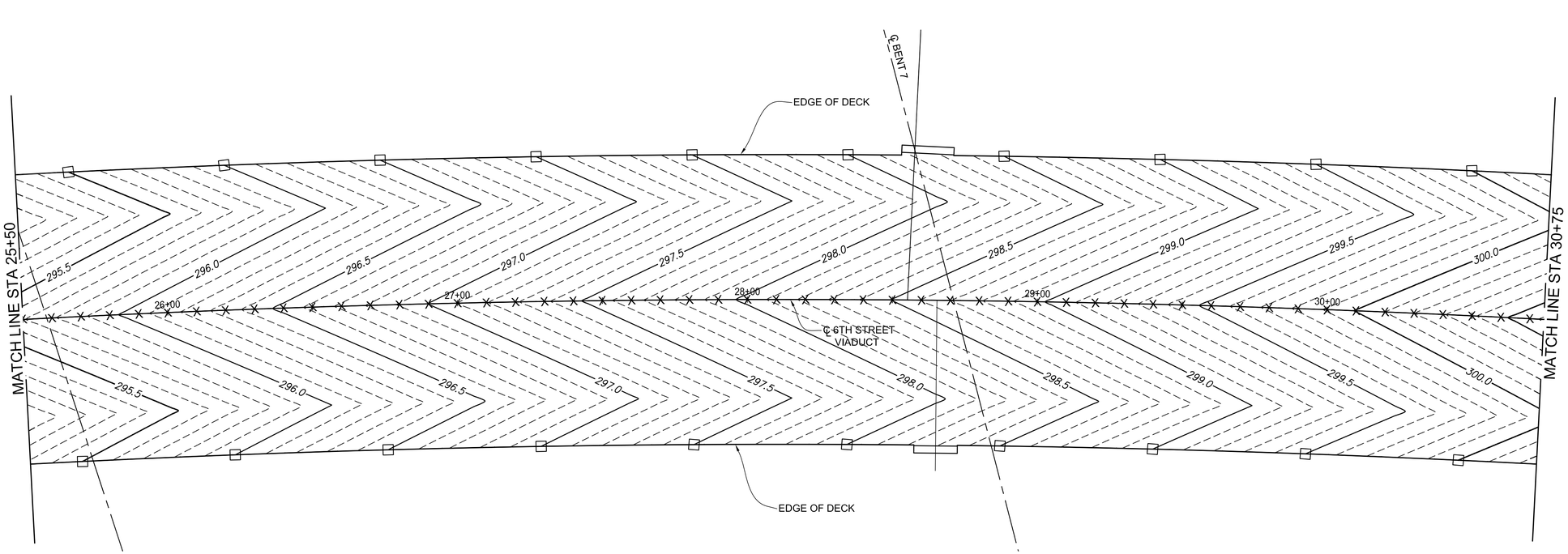

NOTES:

1. FOR NOTES AND LEGEND, SEE DRAWING NO. S1-01.

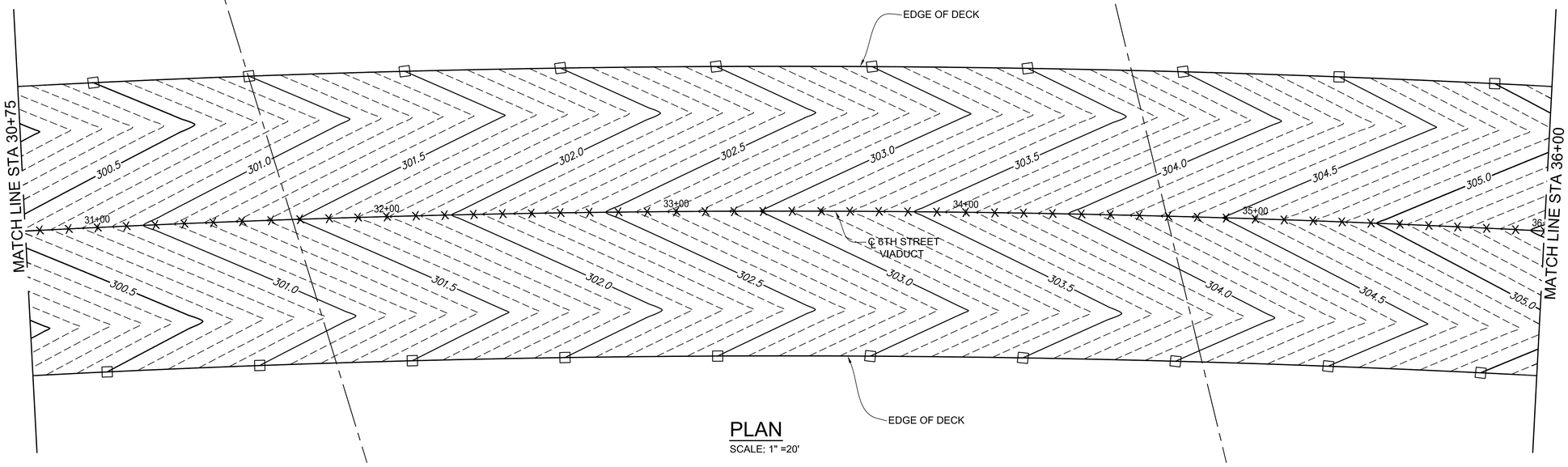

PLAN
SCALE: 1" =20'

THE CITY OF LOS ANGELES OR ITS OFFICERS OR AGENTS SHALL NOT BE RESPONSIBLE FOR THE ACCURACY OR COMPLETENESS OF ELECTRONIC COPIES OF THIS PLAN SHEET.

C:\caddi5\pw\pwwestcoast\zhang\dms57683\S1-01-DC01-03.dwg 6/27/16 14:44

REVISION DATES (DESIGN STAGE ONLY)

Sheet Version 3.0

HNTB
HNTB Corporation
601 W. 5TH STREET SUITE 1000
LOS ANGELES, CALIFORNIA 90071
TEL (213) 403-1000 FAX (213) 403-1001

BUREAU OF ENGINEERING
OFFICIAL RECORD

CITY OF LOS ANGELES DEPARTMENT OF PUBLIC WORKS

BUREAU OF ENGINEERING

ENGINEERING
CITY OF LOS ANGELES

NO.	REVISIONS:	DATE	BY:

STRUCTURE NO. 53C-2329

INDEX NO. **P-38113**

THIS PLAN WAS ELECTRONICALLY SIGNED AND STAMPED

REGISTERED PROFESSIONAL ENGINEER MICHAEL H. JONES No. S3033 CIVIL STATE OF CALIFORNIA

GARY LEE MOORE, P.E. CITY ENGINEER

		DATE:
DESIGN GROUP		
ENGINEER:	MICHAEL H. JONES	1/29/2016
LIC. NO.	S3033	
DESIGNED BY:	MICHAEL H. JONES	1/29/2016
DRAWN BY:	LI ZHANG	1/29/2016
CHECKED BY:	TOMAS KOMPFNER	1/29/2016
APPROVED BY:	MICHAEL H. JONES	1/29/2016

VERTICAL CONTROL: BM 12-04070, 1929 (NGVD 29) - 1985 ADJUSTMENT
HORIZONTAL CONTROL: GPS; PID AE 1704, EPOCH 1991.35

SHEET TITLE: DECK CONTOUR NO. 2

PROJECT: SIXTH STREET VIADUCT REPLACEMENT

ADDRESS: SIXTH STREET VIADUCT (WHITTIER BLVD) LOS ANGELES, CA

WORK ORDER NO. E700224F

DRAWING NO. S1-02

SHEET 190 OF 560 SHEETS

ADDENDUM 5

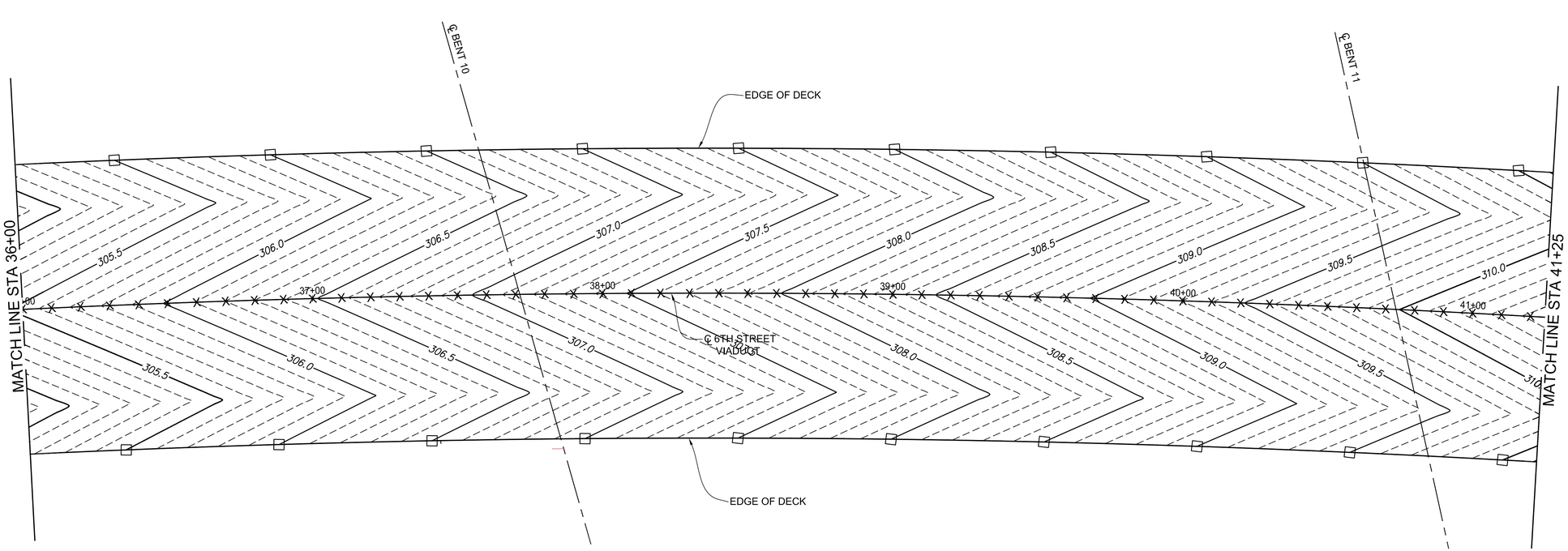

NOTES:

1. FOR NOTES AND LEGEND, SEE DRAWING NO. S1-01.

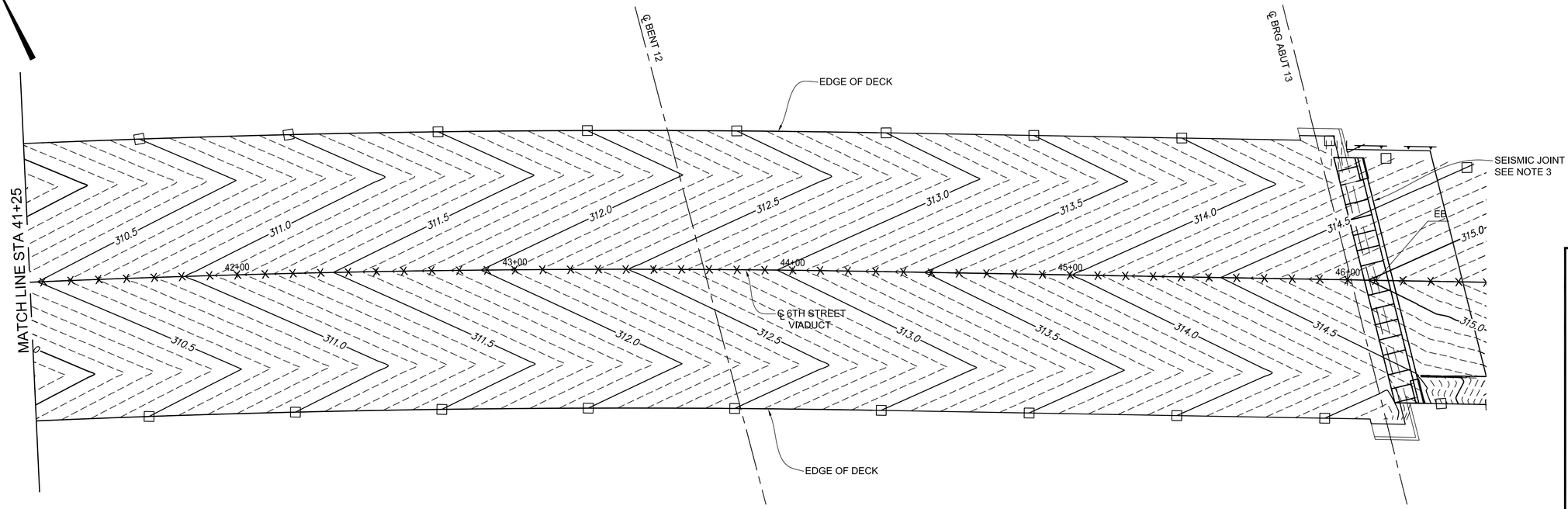

PLAN

SCALE: 1" =20'

THIS PLAN WAS ELECTRONICALLY SIGNED AND STAMPED

REGISTERED PROFESSIONAL ENGINEER MICHAEL H. JONES No. S3033 CIVIL STATE OF CALIFORNIA

BUREAU OF ENGINEERING OFFICIAL RECORD

HNTB
HNTB Corporation
601 W. 5TH STREET SUITE 1000
LOS ANGELES, CALIFORNIA 90071
TEL (213) 403-1000 FAX (213) 403-1001

CITY OF LOS ANGELES DEPARTMENT OF PUBLIC WORKS

BUREAU OF ENGINEERING

ENGINEERING
CITY OF LOS ANGELES

NO.	REVISIONS:	DATE:	BY:

INDEX NO. **P-38113**

STRUCTURE NO. 53C-2329

GARY LEE MOORE, P.E. CITY ENGINEER

		DATE:
DESIGN GROUP		
ENGINEER:	MICHAEL H. JONES	1/29/2016
LIC. NO. S3033		
DESIGNED BY:	MICHAEL H. JONES	1/29/2016
DRAWN BY:	LI ZHANG	1/29/2016
CHECKED BY:	TOMAS KOMPFNER	1/29/2016
APPROVED BY:	MICHAEL H. JONES	1/29/2016

VERTICAL CONTROL: BM 12-04070, 1929 (NGVD 29) - 1988 ADJUSTMENT
HORIZONTAL CONTROL: GPS; PID AE 1704, EPOCH 1991.35

SHEET TITLE: DECK CONTOUR NO. 3

PROJECT: SIXTH STREET VIADUCT REPLACEMENT

ADDRESS: SIXTH STREET VIADUCT (WHITTIER BLVD) LOS ANGELES, CA

WORK ORDER NO. E700224F

DRAWING NO. S1-03

SHEET 191 OF 560 SHEETS

REVISION DATES (DESIGN STAGE ONLY)

C:\caddi5\pw\pwwestcoast\zhang\dms57683\S1-01-DC01-03.dwg 6/27/16 14:44

THE CITY OF LOS ANGELES OR ITS OFFICERS OR AGENTS SHALL NOT BE RESPONSIBLE FOR THE ACCURACY OR COMPLETENESS OF ELECTRONIC COPIES OF THIS PLAN SHEET.

Sheet Version 3.0

ADDENDUM 5

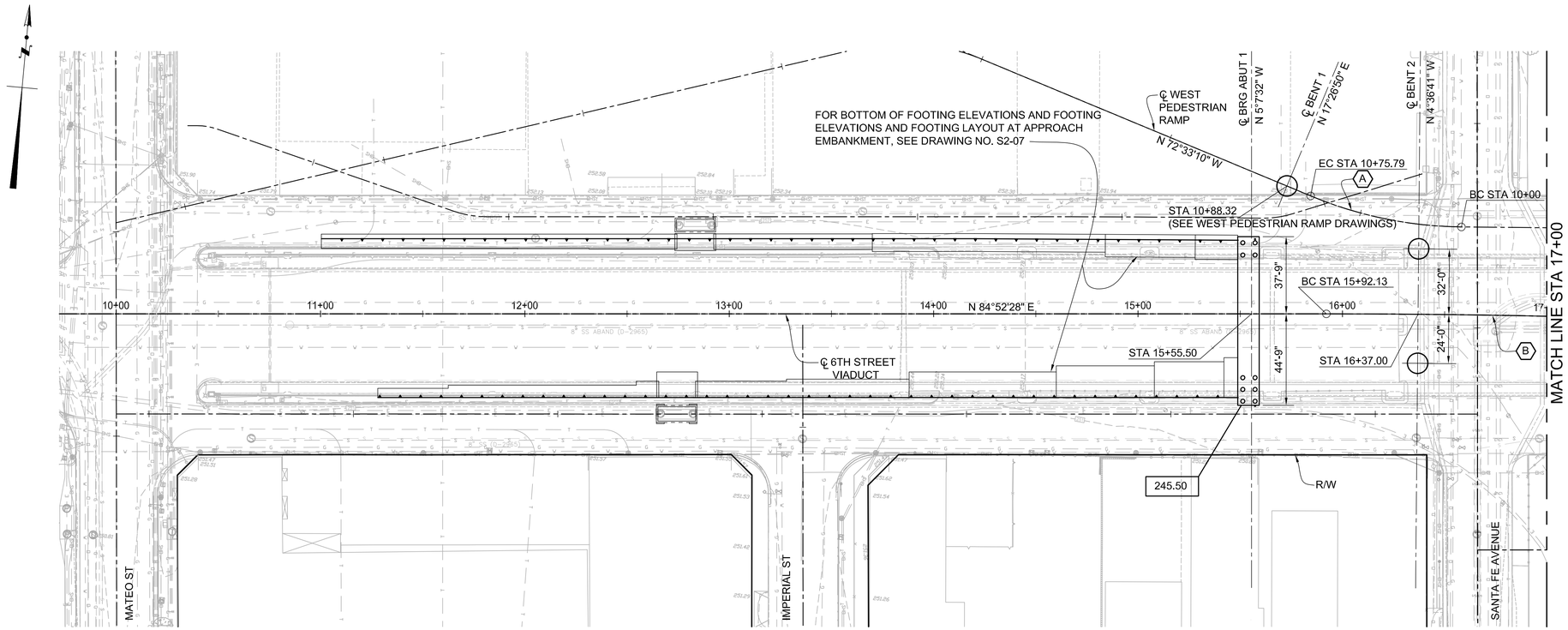

FOUNDATION PLAN

SCALE: 1" =30'

PILE DATA TABLE (SEE NOTES)						
LOCATION	PILE TYPE	CUT-OFF ELEVATION (FT)	NOMINAL RESISTANCE (KIPS)		DESIGN TIP ELEVATION (FT)	SPECIFIED TIP ELEVATION (FT)
			COMPRESSION	TENSION		
ABUTMENT 1	24" Ø CIDH TYPE 1	245.75	400	80	215 (a); 230 (b); 227 (c); 226 (d)	215.0
	24" Ø CIDH TYPE 2		300	90	222 (a); 228 (b); 232 (c); 226 (d)	222.0
BENT 1		249.50	790	0	223 (a); 234(c); 192 (d)	192.0
BENT 2		248.50	5,510	0	194 (a); 211 (c); 192 (d)	192.0
BENT 3		248.00	7,880	0	175 (a); 200 (c); 198 (d)	175.0
BENT 4 NORTH		238.10	16,390	0	103 (a); 146 (c); 178 (d)	103.0
BENT 4 SOUTH		239.40	16,390	0	104 (a); 147 (c); 175 (d)	104.0
BENT 5		243.00	15,840	0	87 (a); 126 (c); 183 (d)	87.0
BENT 6		241.00	16,280	0	78 (a); 121 (c); 181 (d)	78.0
BENT 7	120" Ø CIDH	247.50	16,980	0	100 (a); 151 (c); 187 (d)	100.0
BENT 8 NORTH		246.50	18,300	0	82 (a); 144 (c); 186 (d)	82.0
BENT 8 SOUTH		247.00	17,430	0	88 (a); 143 (c); 187 (d)	88.0
BENT 9		245.50	17,810	0	91 (a); 148 (c); 185 (d)	91.0
BENT 10		245.00	18,310	0	84 (a); 136 (c); 174 (d)	84.0
BENT 11		245.00	17,280	0	96 (a); 136 (c); 184 (d)	96.0
BENT 12 NORTH		251.00	16,030	0	87 (a); 120 (c); 179 (d)	87.0
BENT 12 SOUTH		253.00	15,780	0	91 (a); 123 (c); 180 (d)	91.0
ABUTMENT 13	24" Ø CIDH TYPE 1	297.00	670	0	242 (a); 267 (c); 277 (d)	242.0
	24" Ø CIDH TYPE 2		310	0	278 (a); 289 (c); 277 (d)	277.0
STAIRS	84" Ø CIDH	SEE NOTE 5	760	0	215 (a); 232 (c); 220 (d)	215.0

LEGEND

100.00 INDICATES BOTTOM FOOTING ELEVATION

CURVE DATA

A ℄ WEST PEDESTRIAN RAMP
R = 196.04'
△ = 22°09'08"
T = 38.38'
L = 75.80'

B ℄ 6TH STREET VIADUCT
R = 5000.00
△ = 32°30'51"
T = 1458.05
L = 2837.42

SURVEY CONTROL

BASIS OF BEARING

BASIS OF BEARING S 77° 38' 27" E :
COORDINATES, BEARINGS AND DISTANCES SHOWN ON THIS SURVEY ARE BASED ON THE ICM COORDINATES SHOWN ON NAVIGATE LA HOLDING THE COORDINATE (N=1836387.06 , E=6491165.61) AT THE INTERSECTION OF 6TH ST. AND MATEO ST. FOR POSITION AND HOLDING THE COORDINATE (N=1835473.68 , E=6495334.11) AT THE INTERSECTION OF BOYLE AVE. AND WHITTIER BLVD. FOR DIRECTION OR BEARING.

BENCHMARKS:

	BM #	ELEVATION (FT)	DESCRIPTION / LOCATION
1.	12-04070	247.26	CUT SPIKE 7FT S OF S CURB LINE 7TH ST; 0.8FT W OF W END OF HANDRAIL TO BRIDGE 25FT E OF SANTA FE AVE.
2.	11-02339	318.86	WIRE SPK IN W CURB CHICAGO ST; 5FT N OF N P.L. WHITTIER BLVD; N END CB

THE VERTICAL DATUM IS BASED UPON THE CITY OF LOS ANGELES PRECISE BENCH BOOK, NATIONAL GEODETIC VERTICAL DATUM OF 1929 (NGVD 29) - 1985 ADJUSTMENT IN FEET.

NOTES:

1. DESIGN TIP ELEVATIONS ARE CONTROLLED BY THE FOLLOWING DEMANDS:
   (a) COMPRESSION, (b) TENSION,
   (c) SETTLEMENT, AND (d) LATERAL LOADS.
2. THE SPECIFIED TIP ELEVATION SHALL NOT BE RAISED.
3. NORTH & SOUTH PILES AT EACH BENT HAVE THE SAME PILE DATA UON.
4. FOR BENT SKEW ANGLE SEE DRAWING NOS. S0-06 THROUGH S0-09.
5. FOR CUT-OFF ELEVATION OF 84" DIAMETER CIDH PILES AT STAIRS, SEE DRAWING NOS S8-50 THROUGH S8-52.
6. AT 24" Ø CIDH CONCRETE PILES, TYPE 1 AND TYPE 2 REFER TO DIFFERENT PILE LENGTHS. SEE DRAWING NUMBERS S2-01 AND S2-02 FOR LAYOUT OF TYPE 1 AND 2 PILES.

RFI No.12 : The City Surveyor will certify and stamp the " Controrol Plat " and transmit formally to SSW.

HNTB
HNTB Corporation
601 W. 5TH STREET SUITE 1000
LOS ANGELES, CALIFORNIA 90071
TEL (213) 403-1000 FAX (213) 403-1001

THIS PLAN WAS ELECTRONICALLY SIGNED AND STAMPED.

REGISTERED PROFESSIONAL ENGINEER — RICHARD H. JONES — No. S3033 — STATE OF CALIFORNIA

BUREAU OF ENGINEERING

ENGINEERING — CITY OF LOS ANGELES

NO.	REVISIONS:	DATE	BY:
1	ADDENDUM NO. 1	08/23/16	MHJ

STRUCTURE NO. 53C-2329

INDEX NO.

CITY OF LOS ANGELES DEPARTMENT OF PUBLIC WORKS

CITY ENGINEER: GARY LEE MOORE, P.E.

		DATE:
DESIGN GROUP		
ENGINEER:	MICHAEL H. JONES	1/29/2016
LIC. NO. S3033		1/29/2016
DESIGNED BY:	MICHAEL H. JONES	1/29/2016
DRAWN BY:	LI ZHANG	1/29/2016
CHECKED BY:	CHARLES REDFIELD	1/29/2016
APPROVED BY:	MICHAEL H. JONES	1/29/2016

VERTICAL CONTROL: BM 12-04070 1929 (NGVD 29) - 1985 ADJUSTMENT
HORIZONTAL CONTROL: GPS; PID AE 1704, EPOCH 1991.35

SHEET TITLE: FOUNDATION PLAN NO. 1

PROJECT: SIXTH STREET VIADUCT REPLACEMENT

ADDRESS: SIXTH STREET VIADUCT (WHITTIER BLVD) LOS ANGELES, CA

WORK ORDER NO. E700224F

DRAWING NO. S1-04

SHEET 10 OF SHEETS

THE CITY OF LOS ANGELES OR ITS OFFICERS OR AGENTS SHALL NOT BE RESPONSIBLE FOR THE ACCURACY OR COMPLETENESS OF ELECTRONIC COPIES OF THIS PLAN SHEET.

REVISION DATES (DESIGN STAGE ONLY)

C:\caddlib\pw\pwwestcoast\zhang\dms57683\S1-04-FP01-03.dwg 8/23/16 13:36

Sheet Version 3.0

ADDENDUM 5

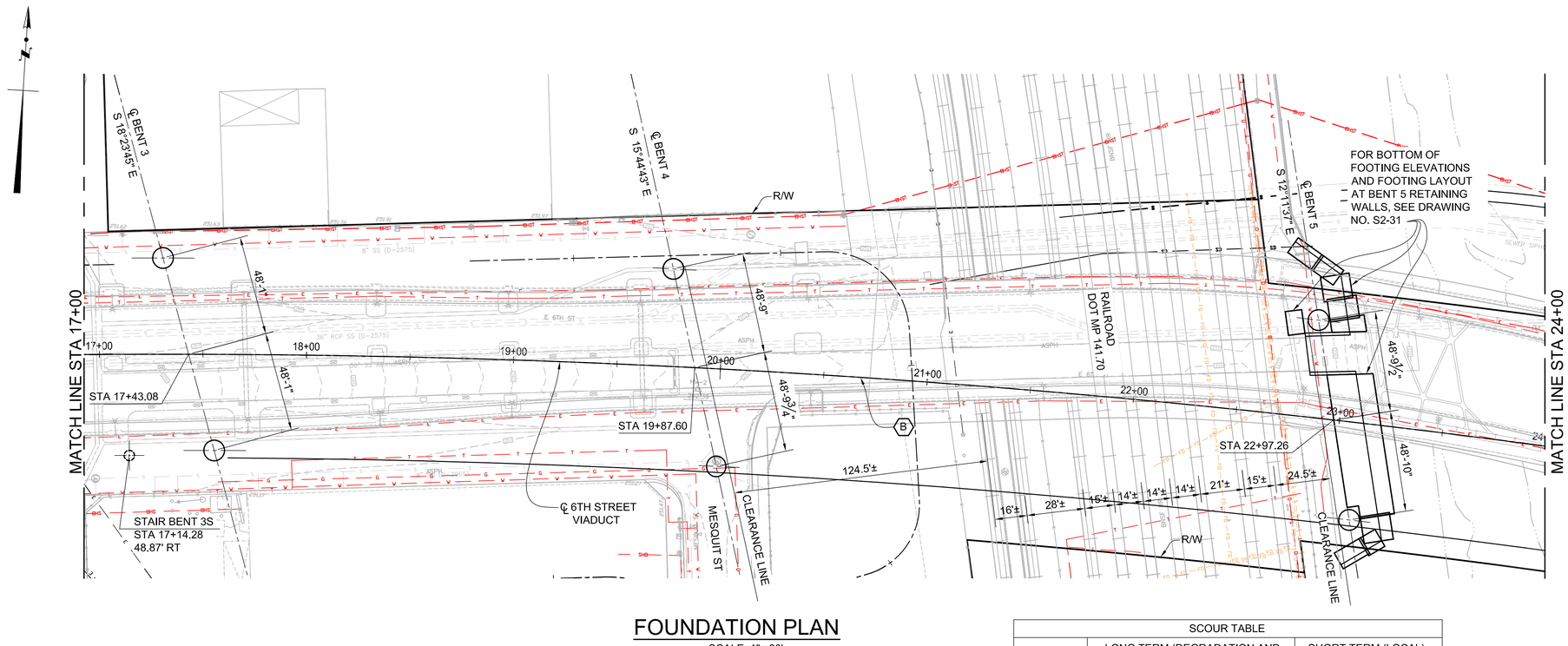

FOUNDATION PLAN

SCALE: 1" =30'

SCOUR TABLE		
SUPPORT NO.	LONG TERM (DEGRADATION AND CONSTRUCTION) SCOUR ELEVATION (FT)	SHORT TERM (LOCAL) SCOUR DEPTH (FT)
BENT 5	SEE NOTE 3	SEE NOTE 3
BENT 6	SEE NOTE 3	SEE NOTE 3

NOTES:

1. ALL WORKS WITHIN RAILROAD ROW MUST BE CLOSELY COORDINATED WITH THE RAILROAD AGENCY.
2. CONTRACTOR SHOULD STUDY RAIL TRAFFIC CLOSELY AND CONSULT WITH RAILROAD AGENCY FOR POSSIBLE WORKING WINDOWS BEFORE SUBMITTING ANY REQUESTS.
3. ALL REQUEST FOR WORKING WINDOWS MUST BE SUBMITTED TO RAILROAD AGENCY AT LEAST 75 DAYS IN ADVANCE.
4. GRANTING THE WORKING WINDOWS ARE SUBJECT TO RAIL OPERATION AND APPROVAL. CONTRACTOR SHALL SCHEDULE ALL WORKS WITHIN THE RAILROAD ROW BASED ON THE TIME TABLE PROVIDE BY THE RAIL AGENCY.

NOTES:

1. FOR TYPICAL NOTES, LEGEND AND CURVE DATA, SEE DRAWING NO. S1-04.
2. SEE DRAWING NO. S1-04 FOR PILE DATA.
3. NO SCOUR IS ANTICIPATED AT THE LOS ANGLES RIVER DUE TO THE REINFORCED CONCRETE LINING.

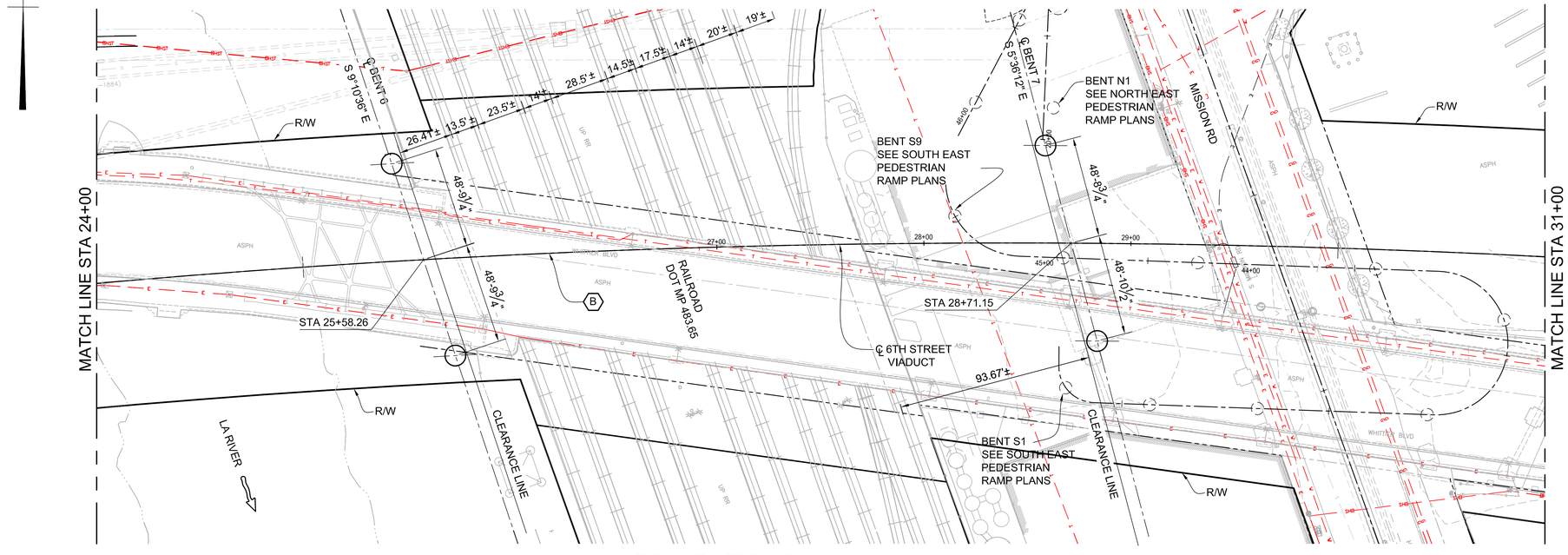

FOUNDATION PLAN

SCALE: 1" =30'

BUREAU OF ENGINEERING
OFFICIAL RECORD

HNTB
HNTB Corporation
601 W. 5TH STREET SUITE 1000
LOS ANGELES, CALIFORNIA 90071
TEL (213) 403-1000 FAX (213) 403-1001

CITY OF LOS ANGELES DEPARTMENT OF PUBLIC WORKS
BUREAU OF ENGINEERING

ENGINEERING
CITY OF LOS ANGELES

NO.	REVISIONS:	DATE	BY:

STRUCTURE NO. 53C-2329

INDEX NO. P-38113

THIS PLAN WAS ELECTRONICALLY SIGNED AND STAMPED

REGISTERED PROFESSIONAL ENGINEER MICHAEL H. JONES No. 53033 CIVIL STATE OF CALIFORNIA

CITY ENGINEER	DATE:
GARY LEE MOORE, P.E.	1/29/2016
ENGINEER: MICHAEL H. JONES — DESIGN GROUP — LIC. NO. 53033	1/29/2016
DESIGNED BY: MICHAEL H. JONES	1/29/2016
DRAWN BY: LI ZHANG	1/29/2016
CHECKED BY: CHARLES REDFIELD	1/29/2016
APPROVED BY: MICHAEL H. JONES	1/29/2016

VERTICAL CONTROL: BM 12-04070, 1929 (NGVD 29) - 1985 ADJUSTMENT
HORIZONTAL CONTROL: GPS; PID AE 1704, EPOCH 1991.35

SHEET TITLE: FOUNDATION PLAN NO. 2

PROJECT: SIXTH STREET VIADUCT REPLACEMENT

ADDRESS: SIXTH STREET VIADUCT (WHITTIER BLVD) LOS ANGELES, CA

WORK ORDER NO. E700224F

DRAWING NO. S1-05

SHEET 193 OF 560 SHEETS

REVISION DATES (DESIGN STAGE ONLY)

C:\caddlib\pw\pwwestcoast\lzhang\dms57683\S1-04-FPD1-03.dwg 6/27/16 14:07

Sheet Version 3.0

THE CITY OF LOS ANGELES OR ITS OFFICERS OR AGENTS SHALL NOT BE RESPONSIBLE FOR THE ACCURACY OR COMPLETENESS OF ELECTRONIC COPIES OF THIS PLAN SHEET.

ADDENDUM 5

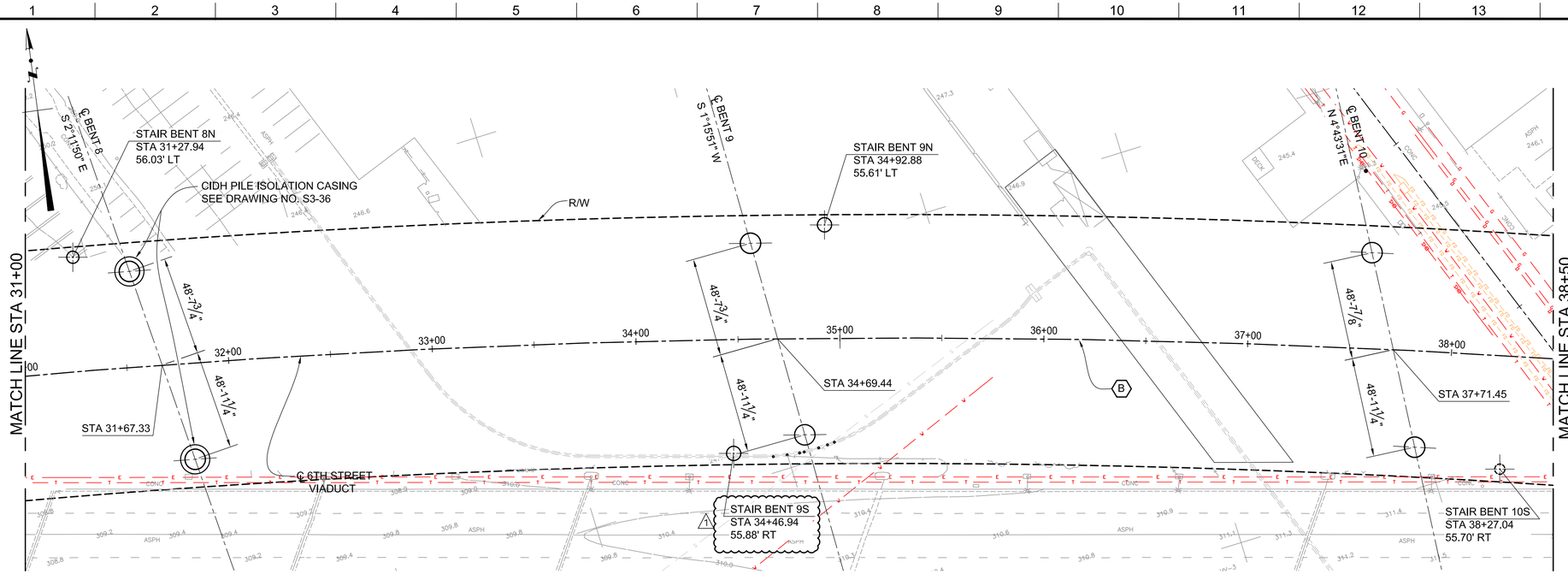

FOUNDATION PLAN

SCALE: 1" =30'

NOTES:

1. FOR TYPICAL NOTES, LEGEND AND CURVE DATA, SEE DRAWING NO. S1-04.
2. SEE DRAWING NO. S1-04 FOR PILE DATA

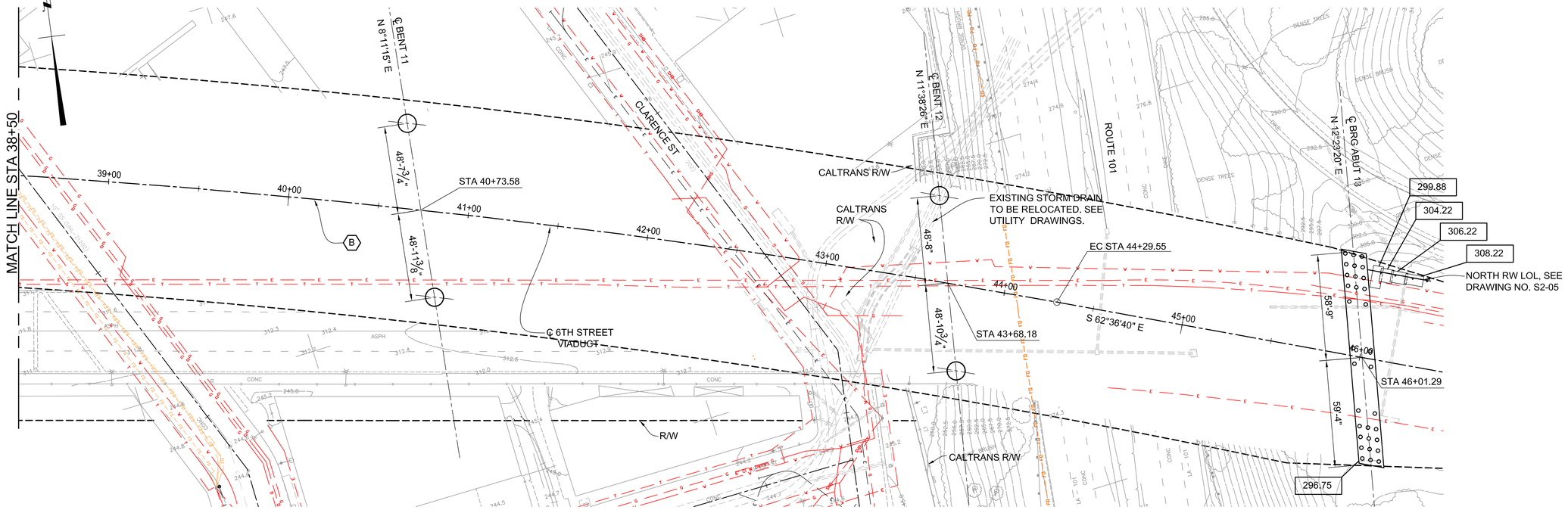

FOUNDATION PLAN

SCALE: 1" =30'

T.O. 5 - Change Order Serial Sketch No. 120-R1 - 1 of 19

HNTB
HNTB Corporation
601 W. 5TH STREET SUITE 1000
LOS ANGELES, CALIFORNIA 90071
TEL (213) 403-1000 FAX (213) 403-1001

WORK ORDER NO.
E700224F

DRAWING NO.
S1-06

SHEET 194 OF 560 SHEETS

CITY OF LOS ANGELES
DEPARTMENT OF PUBLIC WORKS
BUREAU OF ENGINEERING

ENGINEERING
CITY OF LOS ANGELES

NO.	REVISIONS:	DATE	BY:
1	STAIR MODIFICATIONS	08/05/20	MHJ

STRUCTURE NO.
53C-2329

INDEX NO.

THIS PLAN WAS ELECTRONICALLY SIGNED AND STAMPED

REGISTERED PROFESSIONAL ENGINEER
MICHAEL H. JONES
No. S3033
CIVIL
STATE OF CALIFORNIA

CITY ENGINEER:	GARY LEE MOORE, P.E.
DESIGN GROUP	
ENGINEER:	MICHAEL H. JONES
LIC. NO.	S3033
DESIGNED BY:	MICHAEL H. JONES
DRAWN BY:	LI ZHANG
CHECKED BY:	CHARLES REDFIELD
APPROVED BY:	MICHAEL H. JONES
DATE:	1/29/2016

VERTICAL CONTROL:	BM 12-04070 1929 (NGVD 29) - 1985 ADJUSTMENT
HORIZONTAL CONTROL:	GPS; PID AE 1704, EPOCH 1991.35
SHEET TITLE:	FOUNDATION PLAN NO. 3
PROJECT:	SIXTH STREET VIADUCT REPLACEMENT
ADDRESS:	SIXTH STREET VIADUCT (WHITTIER BLVD) LOS ANGELES, CA

REVISION DATES (DESIGN STAGE ONLY)

C:\caddlib\pw\pwwestcoast\lzhang\dms57683\S1-04-FPD1-03.dwg 6/15/20 10:37

Sheet Version 3.0

THE CITY OF LOS ANGELES OR ITS OFFICERS OR AGENTS SHALL NOT BE RESPONSIBLE FOR THE ACCURACY OR COMPLETENESS OF ELECTRONIC COPIES OF THIS PLAN SHEET.

ADDENDUM 5

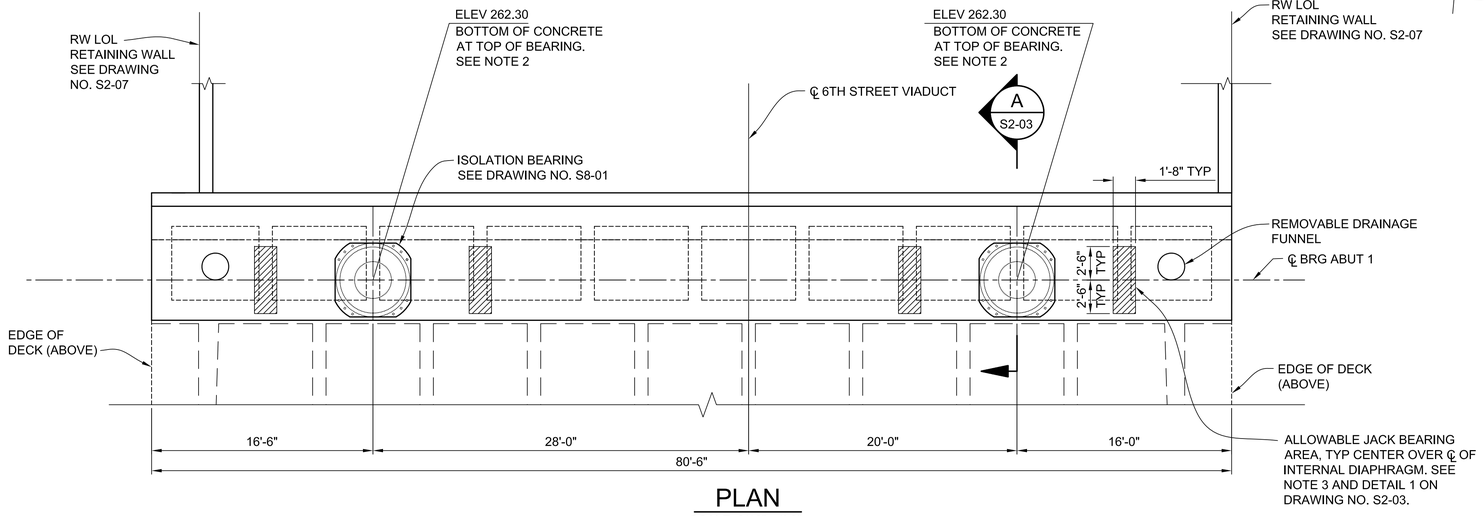

PLAN

SCALE: 3/16" =1'-0"

NOTES:

1. AT ABUTMENT SEAT, LEVEL BEARING SURFACE WITH NON-SHRINK GROUT. SEE DRAWING NO. S8-03.
2. TOP OF BEARING SHALL BE PLACED LEVEL AT THE ELEVATION SHOWN BY PROVIDING A LEVEL SURFACE AT THE BOTTOM OF THE SUPERSTRUCTURE ABUTMENT DIAPHRAGM. SEE DETAIL 1 ON DRAWING NO. S2-03.
3. FOR REQUIRED JACKING DEAD LOADS AT EACH BEARING, SEE DRAWING NO. S8-01.

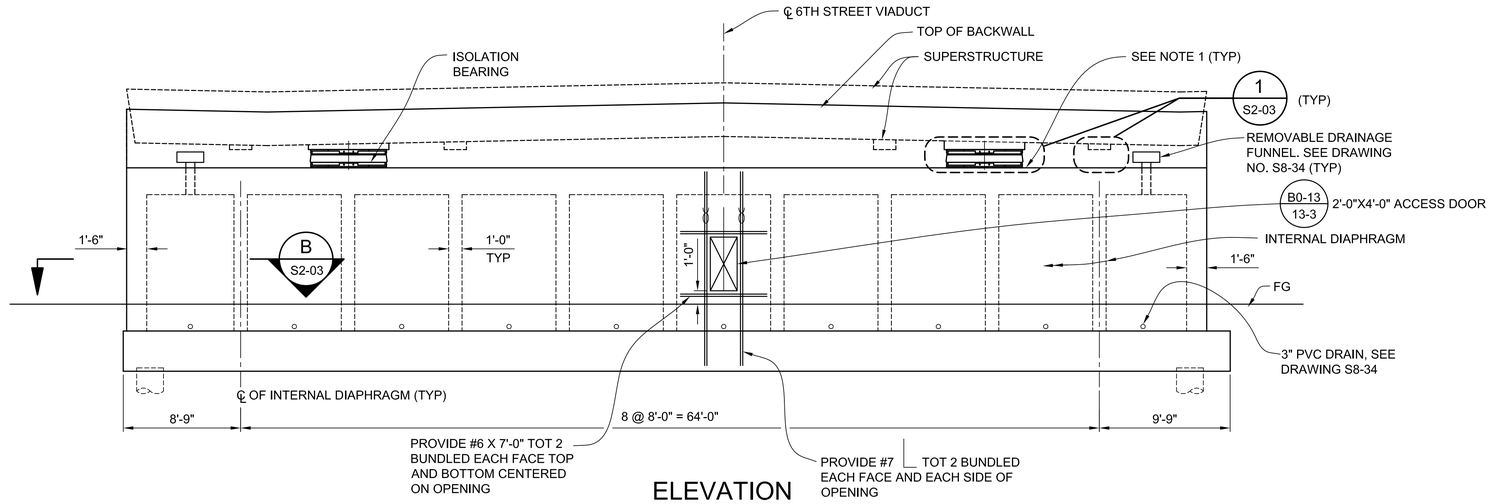

ELEVATION

SCALE: 3/16" =1'-0"

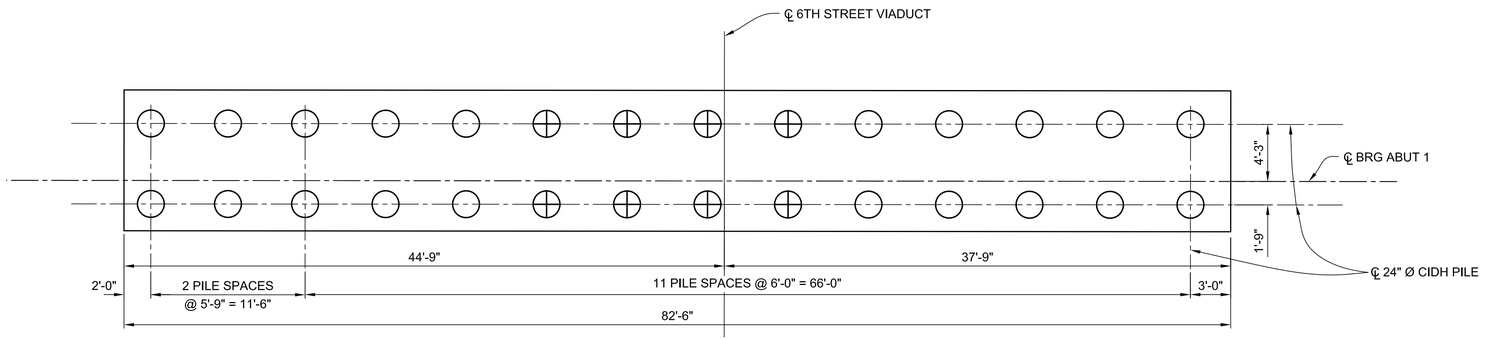

FOOTING LAYOUT PLAN

SCALE: 3/16" =1'-0"

LEGEND:

- ◯ - TYPE 1 PILES
- ⊕ - TYPE 2 PILES
- ⫷⫸ - BUNDLE BARS

HNTB
HNTB Corporation
601 W. 5TH STREET SUITE 1000
LOS ANGELES, CALIFORNIA 90071
TEL (213) 403-1000 FAX (213) 403-1001

BUREAU OF ENGINEERING
OFFICIAL RECORD

CITY OF LOS ANGELES DEPARTMENT OF PUBLIC WORKS
BUREAU OF ENGINEERING

ENGINEERING
CITY OF LOS ANGELES

NO. | REVISIONS: | DATE | BY:

STRUCTURE NO. 53C-2329

INDEX NO. P-38113

THIS PLAN WAS ELECTRONICALLY SIGNED AND STAMPED.

REGISTERED PROFESSIONAL ENGINEER
MICHAEL H. JONES
No. S3033
CIVIL
STATE OF CALIFORNIA

GARY LEE MOORE, P.E. CITY ENGINEER

DESIGN GROUP		LIC. NO. S3033	DATE: 1/29/2016
ENGINEER:	MICHAEL H. JONES		1/29/2016
DESIGNED BY:	TRAN LE		1/29/2016
DRAWN BY:	LI ZHANG		1/29/2016
CHECKED BY:	CHARLES REDFIELD		1/29/2016
APPROVED BY:	MICHAEL H. JONES		

VERTICAL CONTROL: BM 12-04070, 1929 (NGVD 29) - 1985 ADJUSTMENT
HORIZONTAL CONTROL: GPS; PID AE 1704, EPOCH 1991.35

SHEET TITLE: ABUTMENT 1 LAYOUT

PROJECT: SIXTH STREET VIADUCT REPLACEMENT

ADDRESS: SIXTH STREET VIADUCT (WHITTIER BLVD)
LOS ANGELES, CA

WORK ORDER NO. E700224F

DRAWING NO. S2-01

SHEET 195 OF 560 SHEETS

THE CITY OF LOS ANGELES OR ITS OFFICERS OR AGENTS SHALL NOT BE RESPONSIBLE FOR THE ACCURACY OR COMPLETENESS OF ELECTRONIC COPIES OF THIS PLAN SHEET.

REVISION DATES (DESIGN STAGE ONLY)

C:\caddlb\pw\pwwestcoast\zhang\dms57683\S2-01-ABL1.dwg 6/27/16 14:57

Sheet Version 3.0

ADDENDUM 5

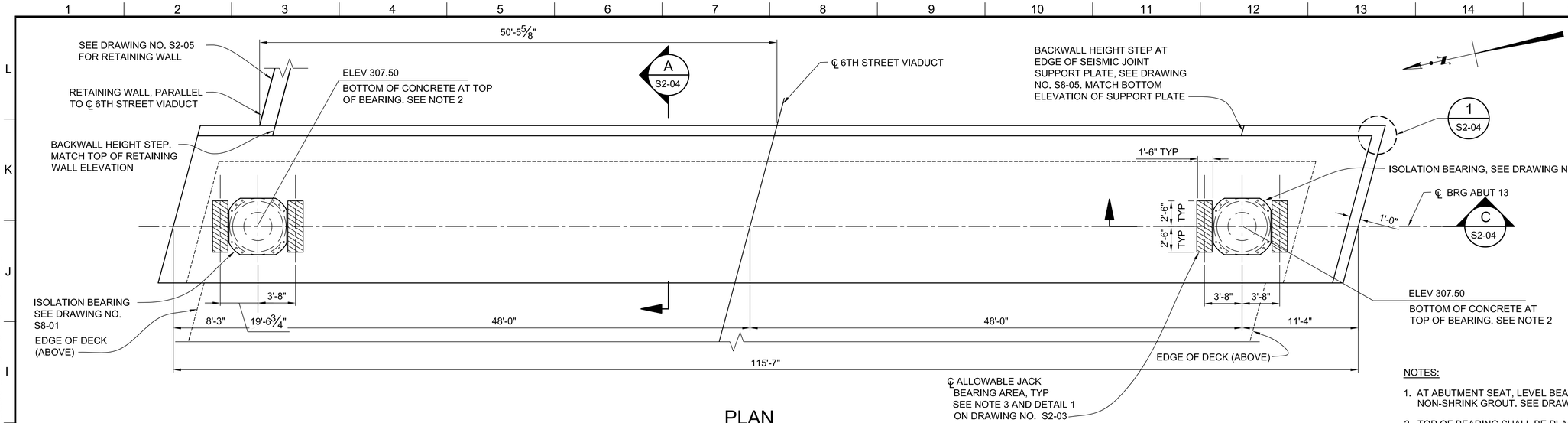

PLAN
SCALE: 3/16" =1'-0"

NOTES:

1. AT ABUTMENT SEAT, LEVEL BEARING SURFACE WITH NON-SHRINK GROUT. SEE DRAWING NO. S8-03.
2. TOP OF BEARING SHALL BE PLACED LEVEL AT THE ELEVATION SHOWN BY PROVIDING A LEVEL SURFACE AT THE BOTTOM OF THE SUPERSTRUCTURE ABUTMENT DIAPHRAGM. SEE DETAIL 1 ON DRAWING NO. S2-03.
3. FOR REQUIRED JACKING DEAD LOADS AT EACH BEARING, SEE DRAWING NO. S8-01.

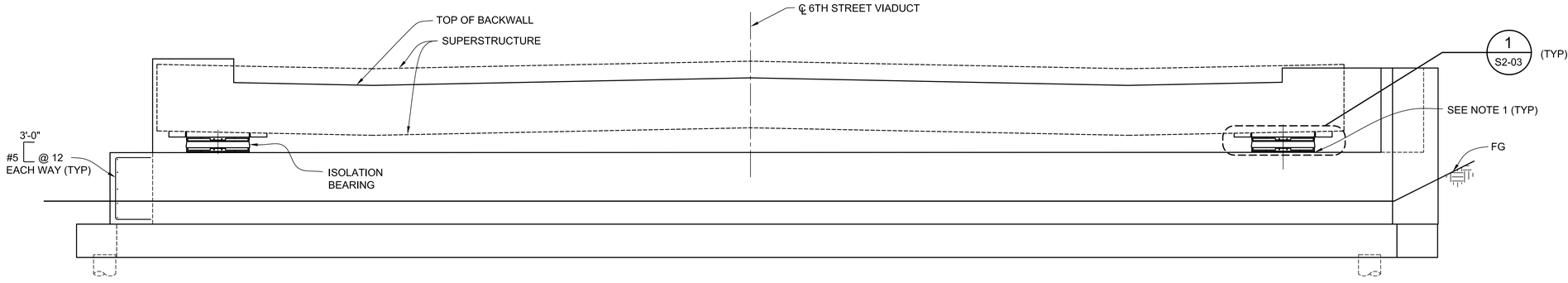

ELEVATION
SCALE: 3/16" =1'-0"

LEGEND:

- ○ - TYPE 1 PILES
- ⊕ - TYPE 2 PILES

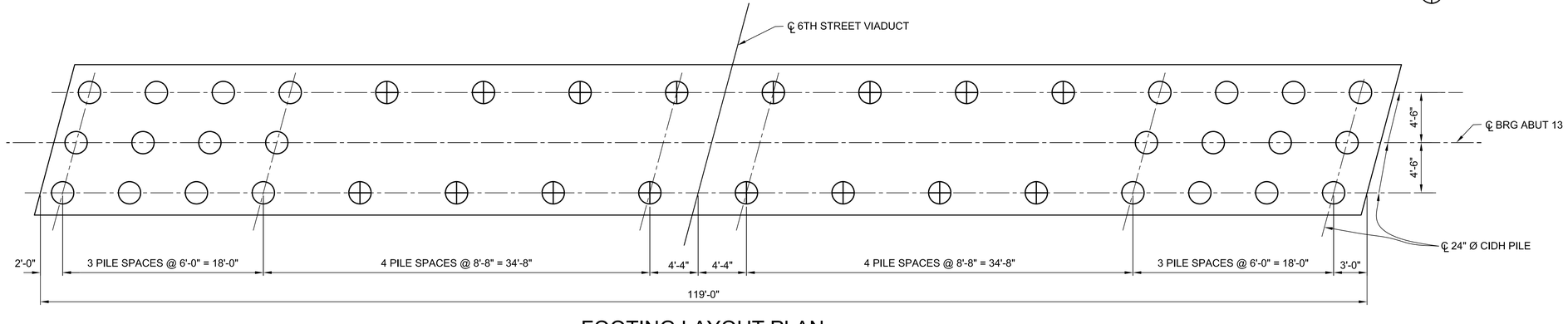

FOOTING LAYOUT PLAN
SCALE: 3/16" =1'-0"

BUREAU OF ENGINEERING
OFFICIAL RECORD

HNTB
HNTB Corporation
601 W. 5TH STREET SUITE 1000
LOS ANGELES, CALIFORNIA 90071
TEL (213) 403-1000 FAX (213) 403-1001

CITY OF LOS ANGELES DEPARTMENT OF PUBLIC WORKS
BUREAU OF ENGINEERING

ENGINEERING
CITY OF LOS ANGELES

NO.	REVISIONS:	DATE	BY:

STRUCTURE NO. 53C-2329

INDEX NO. P-38113

"THIS PLAN WAS ELECTRONICALLY SIGNED AND STAMPED"
REGISTERED PROFESSIONAL ENGINEER MICHAEL H. JONES No. 53033 CIVIL STATE OF CALIFORNIA

GARY LEE MOORE, P.E. CITY ENGINEER

		DESIGN GROUP	DATE
ENGINEER:	MICHAEL H. JONES	LIC. NO. 53033	1/29/2016
DESIGNED BY:	TRAN LE		1/29/2016
DRAWN BY:	LI ZHANG		1/29/2016
CHECKED BY:	PETER ZHAO		1/29/2016
APPROVED BY:	MICHAEL H. JONES		1/29/2016

VERTICAL CONTROL: BM 12-04070,1929 (NGVD 29) - 1985 ADJUSTMENT
HORIZONTAL CONTROL: GPS; PID AE 1704, EPOCH 1991.35

SHEET TITLE: ABUTMENT 13 LAYOUT

PROJECT: SIXTH STREET VIADUCT REPLACEMENT

ADDRESS: SIXTH STREET VIADUCT (WHITTIER BLVD) LOS ANGELES, CA

WORK ORDER NO. E700224F

DRAWING NO. S2-02

SHEET 196 OF 560 SHEETS

THE CITY OF LOS ANGELES OR ITS OFFICERS OR AGENTS SHALL NOT BE RESPONSIBLE FOR THE ACCURACY OR COMPLETENESS OF ELECTRONIC COPIES OF THIS PLAN SHEET.

REVISION DATES (DESIGN STAGE ONLY)

C:\caddlib\pw\pwwestcoast\lzhang\dms57683\S2-02-ABL2.dwg 6/27/16 15:28

Sheet Version 3.0

ADDENDUM 5

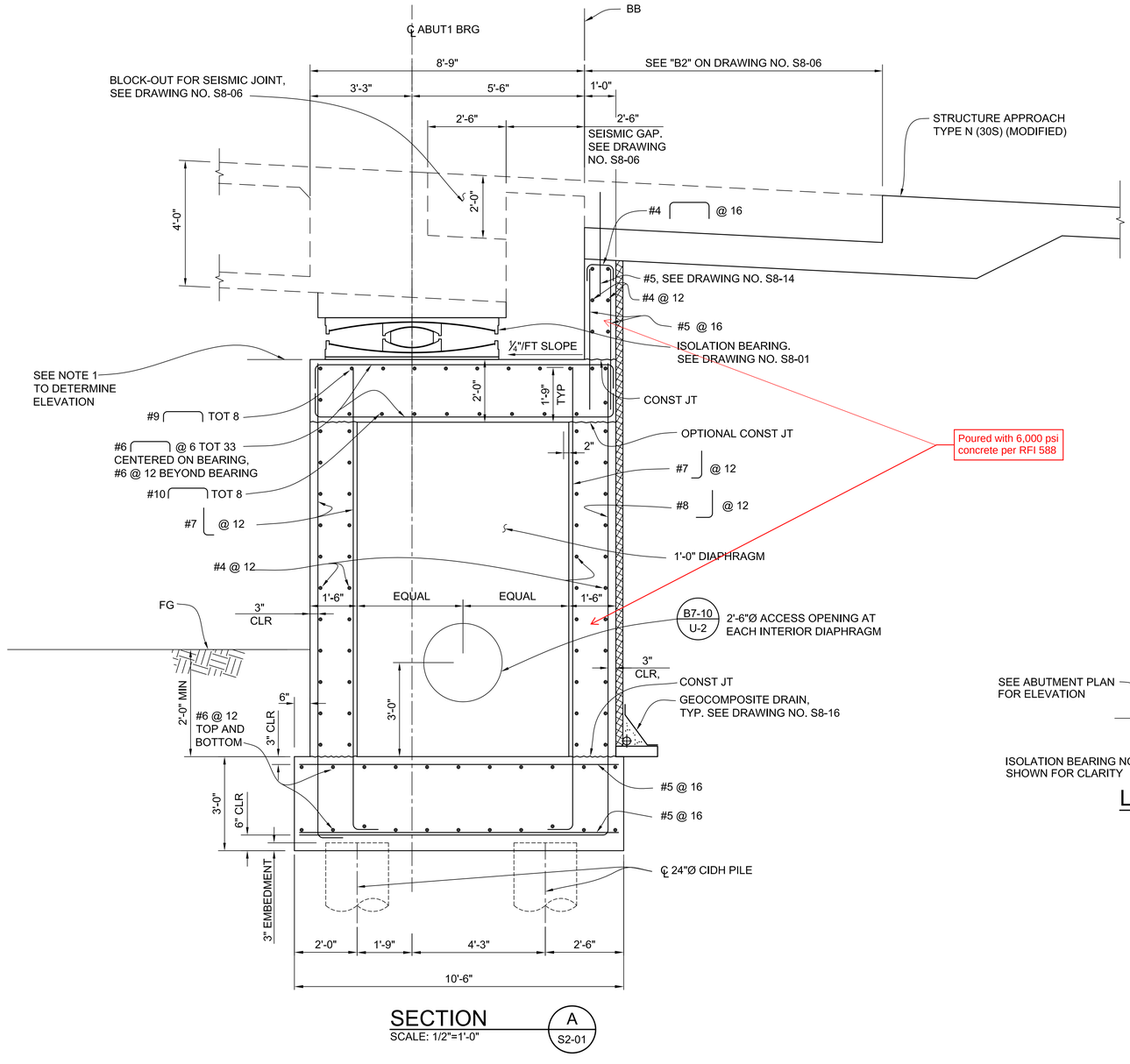

Poured with 6,000 psi concrete per RFI 588

SECTION A
SCALE: 1/2"=1'-0"
S2-01

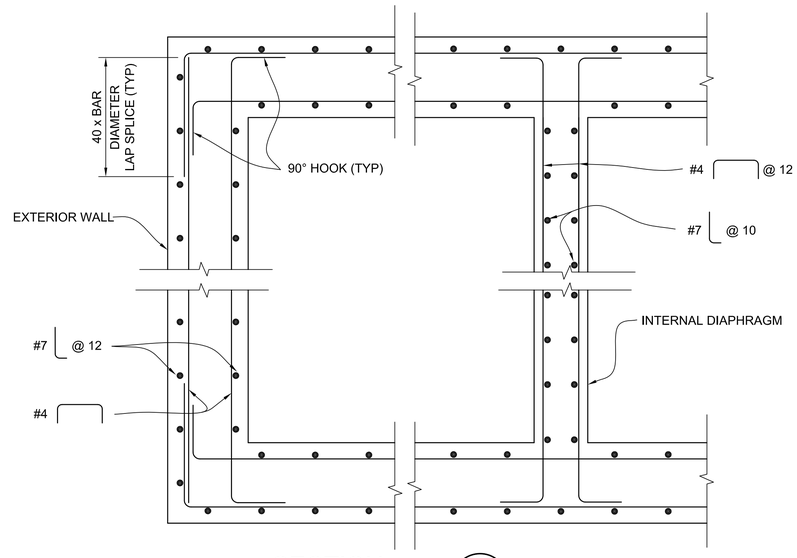

SECTION B
SCALE: 3/4"=1'-0"
S2-01

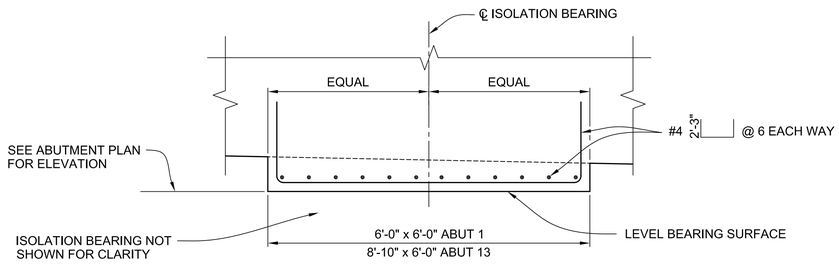

LEVEL BEARING SURFACE AT ISOLATION BEARING

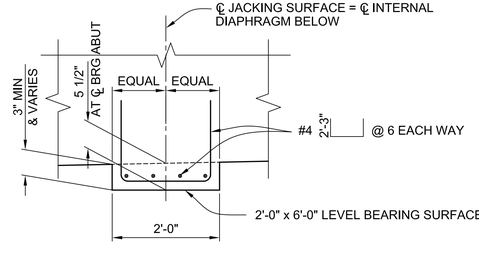

LEVEL SURFACE AT JACKING LOCATIONS - ABUTMENT 1

DETAIL 1
SCALE: 3/4"=1'-0"
S2-01

NOTES:

1. LEVEL BEARING SURFACE WITH NON-SHRINK GROUT, SEE DRAWING NO. S8-03. SEE DRAWING NO. S2-01 FOR TOP OF BEARING ELEVATION.

BUREAU OF ENGINEERING

ENGINEERING
CITY OF LOS ANGELES

STRUCTURE NO. 53C-2329

INDEX NO. P-38113

NO.	REVISIONS:	DATE	BY:

"THIS PLAN WAS ELECTRONICALLY SIGNED AND STAMPED"

REGISTERED PROFESSIONAL ENGINEER
MICHAEL H. JONES
No. S3033
CIVIL
STATE OF CALIFORNIA

BUREAU OF ENGINEERING
OFFICIAL RECORD

CITY OF LOS ANGELES
DEPARTMENT OF PUBLIC WORKS
BUREAU OF ENGINEERING

CITY ENGINEER	GARY LEE MOORE, P.E.
DATE:	1/29/2016
LIC. NO. S3033	
DESIGN GROUP	
ENGINEER:	MICHAEL H. JONES
DESIGNED BY:	TRAN LE
DRAWN BY:	LI ZHANG
CHECKED BY:	CHARLES REDFIELD
APPROVED BY:	MICHAEL H. JONES

VERTICAL CONTROL: BM 12-04070,1929 (NGVD 29) - 1985 ADJUSTMENT
HORIZONTAL CONTROL: GPS; PID AE 1704, EPOCH 1991.35

SHEET TITLE: ABUTMENT 1 DETAILS

PROJECT: SIXTH STREET VIADUCT REPLACEMENT

ADDRESS: SIXTH STREET VIADUCT (WHITTIER BLVD) LOS ANGELES, CA

HNTB
HNTB Corporation
601 W. 5TH STREET SUITE 1000
LOS ANGELES, CALIFORNIA 90071
TEL (213) 403-1000 FAX (213) 403-1001

WORK ORDER NO. E700224F

DRAWING NO. S2-03

SHEET 197 OF 560 SHEETS

THE CITY OF LOS ANGELES OR ITS OFFICERS OR AGENTS SHALL NOT BE RESPONSIBLE FOR THE ACCURACY OR COMPLETENESS OF ELECTRONIC COPIES OF THIS PLAN SHEET.

REVISION DATES (DESIGN STAGE ONLY)

C:\caddlib\pw\pwwestcoast\zhang\dms57683\S2-01-ABL1.dwg 6/27/16 15:26

Sheet Version 3.0

ADDENDUM 5

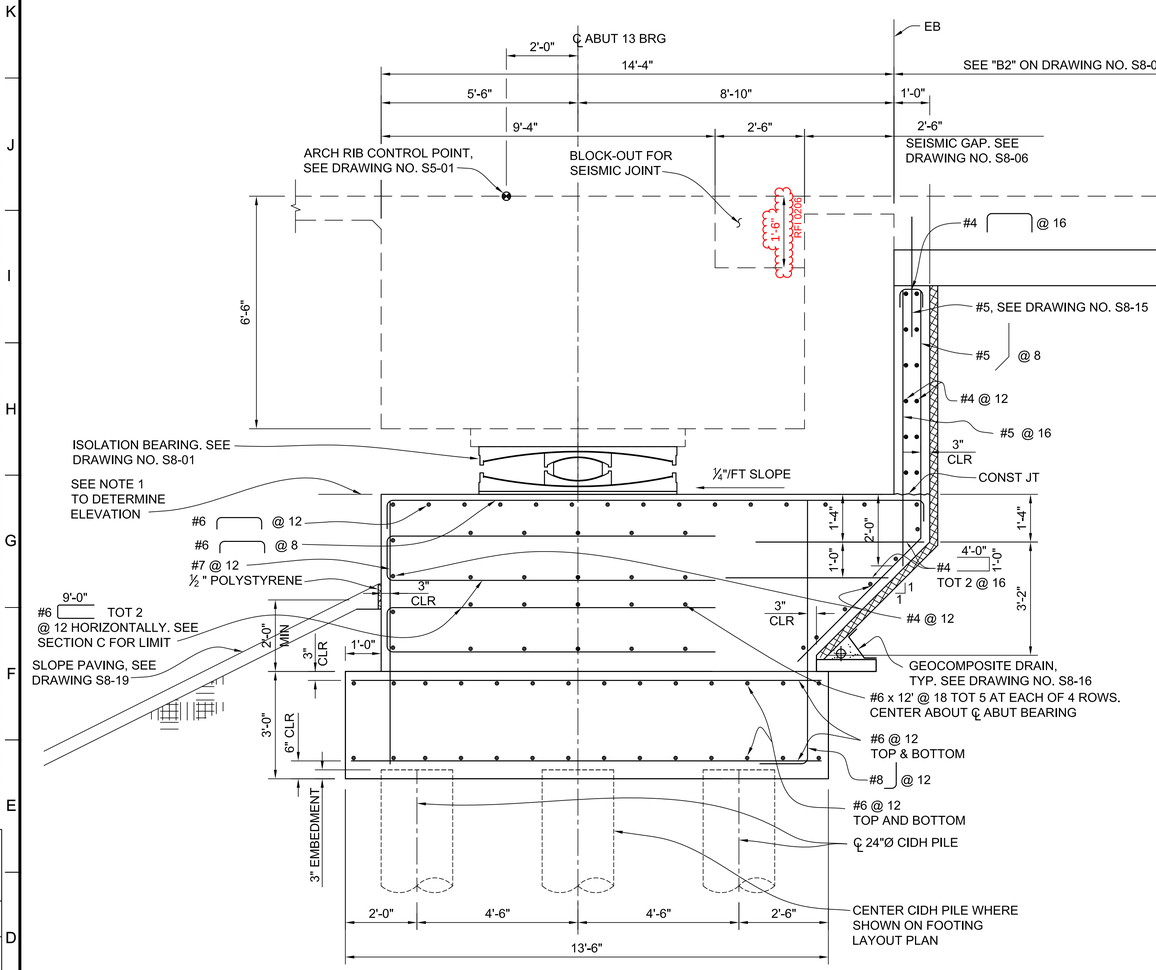

SECTION A
SCALE: 1/2"=1'-0"
S2-02

NOTES:

1. LEVEL BEARING SURFACE WITH NON-SHRINK GROUT, SEE DRAWING NO. S8-03. SEE DRAWING NO. S2-02 FOR TOP OF BEARING ELEVATION.

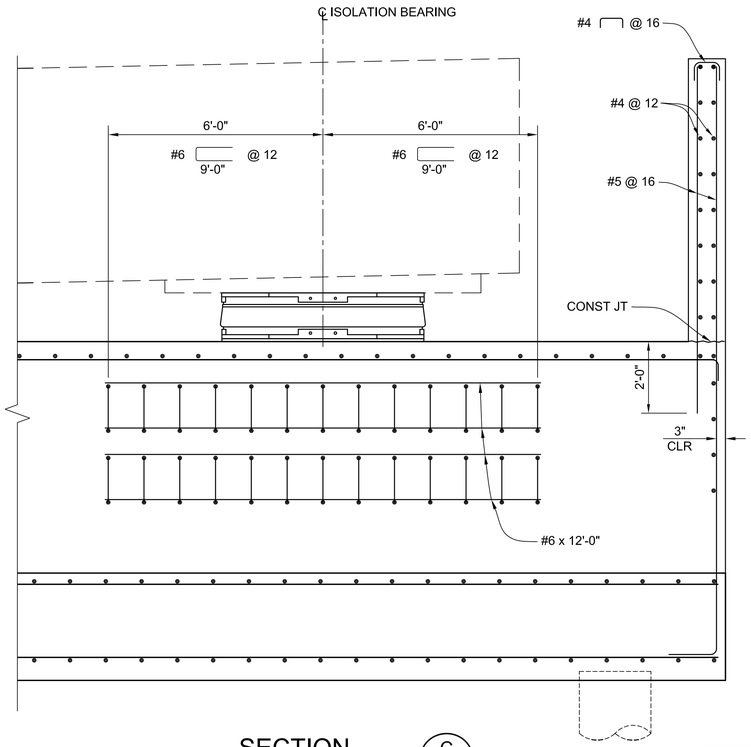

SECTION C
SCALE: 1/2"=1'-0"
S2-02

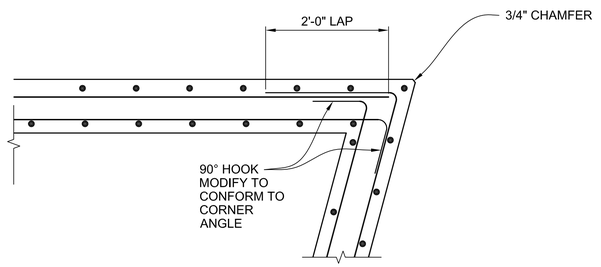

DETAIL 1
SCALE: 3/4"=1'-0"
S2-02

HNTB
HNTB Corporation
601 W. 5TH STREET SUITE 1000
LOS ANGELES, CALIFORNIA 90071
TEL (213) 403-1000 FAX (213) 403-1001

BUREAU OF ENGINEERING
OFFICIAL RECORD

BUREAU OF ENGINEERING
ENGINEERING
CITY OF LOS ANGELES

STRUCTURE NO. 53C-2329

INDEX NO. P-38113

NO. | REVISIONS: | DATE | BY:

REGISTERED PROFESSIONAL ENGINEER MICHAEL H. JONES No. S3033 CIVIL STATE OF CALIFORNIA

THIS PLAN WAS ELECTRONICALLY SIGNED AND STAMPED.

DEPARTMENT OF PUBLIC WORKS
CITY OF LOS ANGELES

GARY LEE MOORE, P.E. CITY ENGINEER

		DATE:
DESIGN GROUP		
ENGINEER:	MICHAEL H. JONES	1/29/2016
LIC. NO.	S3033	1/29/2016
DESIGNED BY:	MICHAEL H. JONES	1/29/2016
DRAWN BY:	LI ZHANG	1/29/2016
CHECKED BY:	DEFERIES/FIELD	1/29/2016
APPROVED BY:	MICHAEL H. JONES	1/29/2016

VERTICAL CONTROL: BM 12-04070, 1929 (NGVD 29) - 1985 ADJUSTMENT
HORIZONTAL CONTROL: GPS; PID AE 1704, EPOCH 1991.35

SHEET TITLE: ABUTMENT 13 DETAILS

PROJECT: SIXTH STREET VIADUCT REPLACEMENT

ADDRESS: SIXTH STREET VIADUCT (WHITTIER BLVD) LOS ANGELES, CA

WORK ORDER NO. E700224F

DRAWING NO. S2-04

SHEET 198 OF 560 SHEETS

REVISION DATES (DESIGN STAGE ONLY)

C:\caddlib\pw\pwwestcoast\zhang\dms57683\S2-04-ABD2.dwg 6/27/16 15:30

Sheet Version 3.0

THE CITY OF LOS ANGELES OR ITS OFFICERS OR AGENTS SHALL NOT BE RESPONSIBLE FOR THE ACCURACY OR COMPLETENESS OF ELECTRONIC COPIES OF THIS PLAN SHEET.

ADDENDUM 5

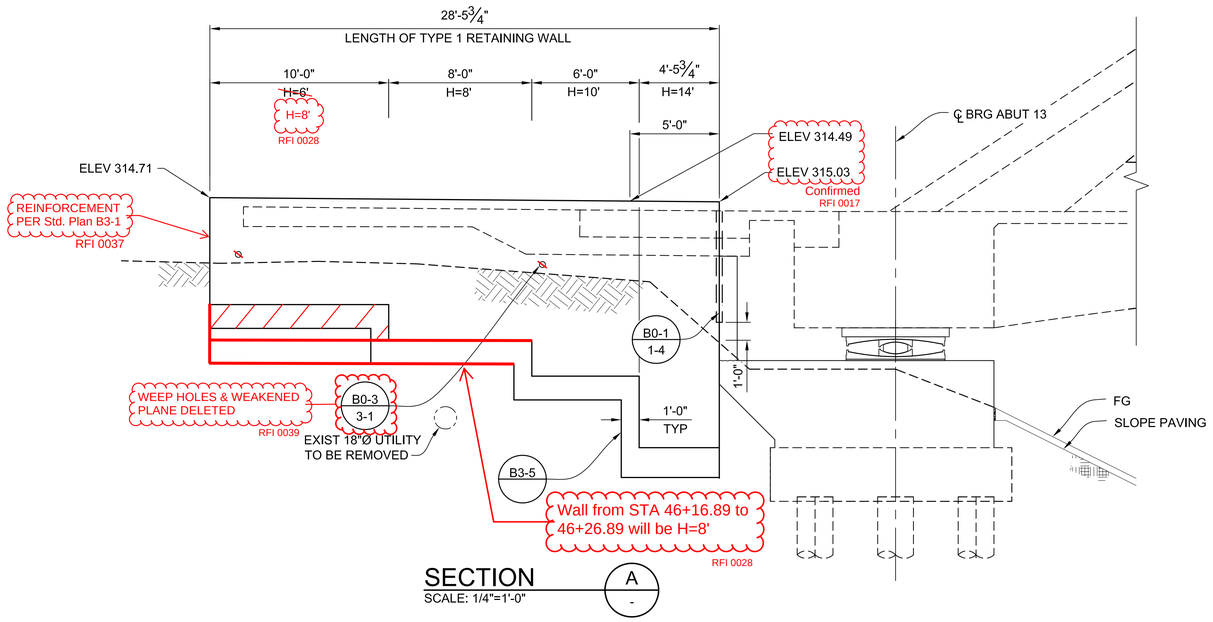

SECTION
SCALE: 1/4"=1'-0"

A

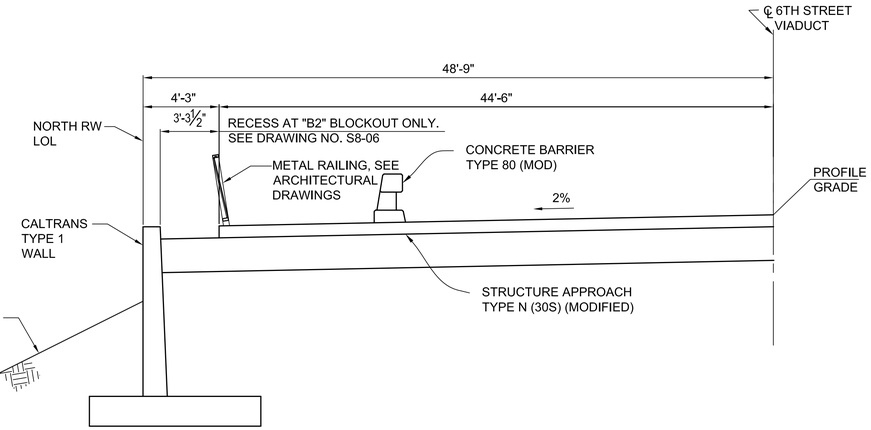

SECTION
SCALE: 1/4"=1'-0"

B

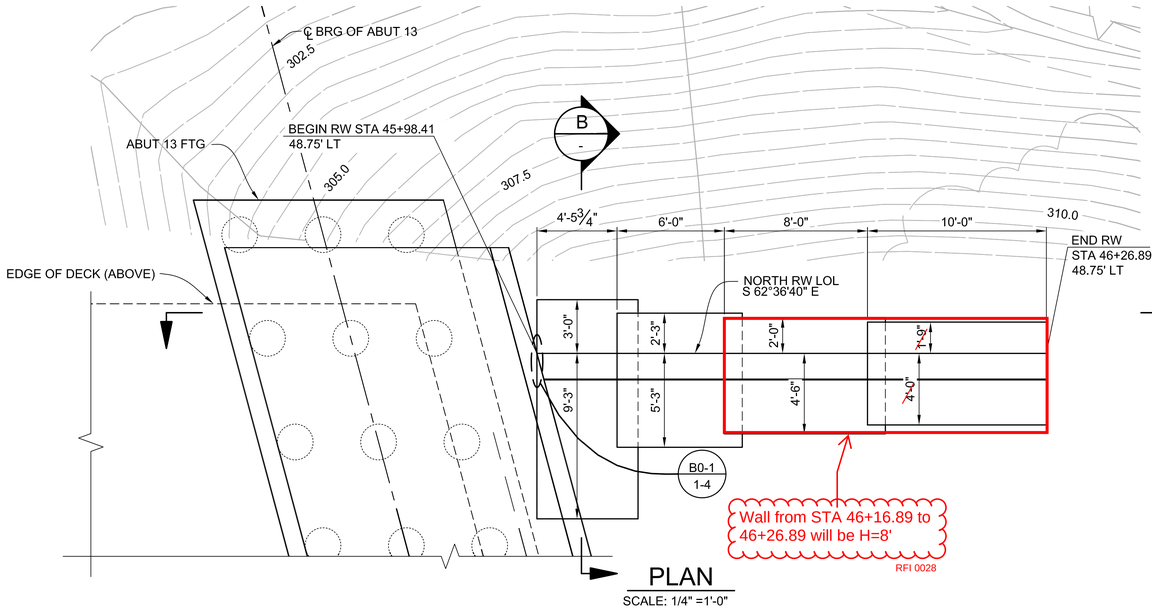

PLAN
SCALE: 1/4" =1'-0"

B

A

BUREAU OF ENGINEERING
OFFICIAL RECORD

HNTB
HNTB Corporation
601 W. 5TH STREET SUITE 1000
LOS ANGELES, CALIFORNIA 90071
TEL (213) 403-1000 FAX (213) 403-1001

THE CITY OF LOS ANGELES OR ITS OFFICERS OR AGENTS SHALL NOT BE RESPONSIBLE FOR THE ACCURACY OR COMPLETENESS OF ELECTRONIC COPIES OF THIS PLAN SHEET.

C:\caddlib\pw\pwwestcoast\zhang\dms57683\S2-06-WLD1.dwg 6/27/16 15:32

REVISION DATES (DESIGN STAGE ONLY)

Sheet Version 3.0

BUREAU OF ENGINEERING

NO.	REVISIONS:	DATE:	BY:

STRUCTURE NO. 53C-2329

INDEX NO. P-38113

ENGINEERING
CITY OF LOS ANGELES

THIS PLAN WAS ELECTRONICALLY SIGNED AND STAMPED.

REGISTERED PROFESSIONAL ENGINEER
MICHAEL H. JONES
No. S3033
CIVIL
STATE OF CALIFORNIA

CITY OF LOS ANGELES DEPARTMENT OF PUBLIC WORKS

CITY ENGINEER
GARY LEE MOORE, P.E.

		DATE:
ENGINEER:	MICHAEL H. JONES	1/29/2016
DESIGNED BY:	TRAN LE	1/29/2016
DRAWN BY:	LI ZHANG	1/29/2016
CHECKED BY:	DANIEL SUN	1/29/2016
APPROVED BY:	MICHAEL H. JONES	1/29/2016

DESIGN GROUP
LIC. NO. S3033

VERTICAL CONTROL: BM 12-04070, 1929 (NGVD 29) - 1985 ADJUSTMENT
HORIZONTAL CONTROL: GPS; PID AE 1704, EPOCH 1991.35

SHEET TITLE: ABUTMENT 13 RETAINING WALL LAYOUT

PROJECT: SIXTH STREET VIADUCT REPLACEMENT

ADDRESS: SIXTH STREET VIADUCT (WHITTIER BLVD)
LOS ANGELES, CA

WORK ORDER NO.
E700224F

DRAWING NO.
S2-05

SHEET 199 OF 560 SHEETS

ADDENDUM 5

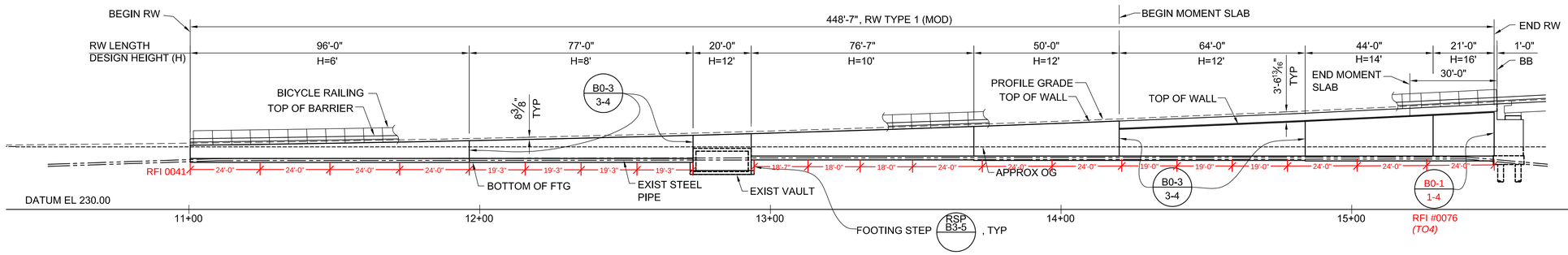

NORTH RW ELEVATION (MIRRORED)

SCALE: 1" =20'

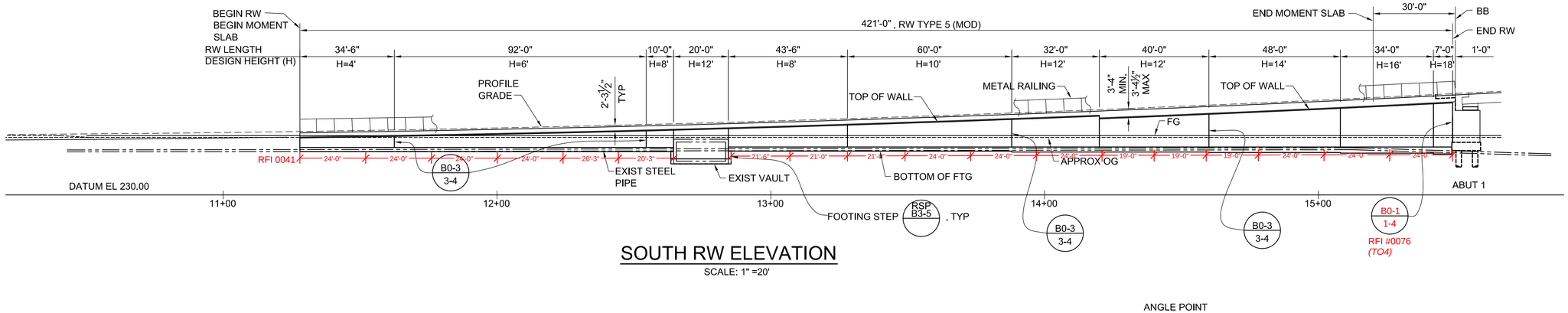

SOUTH RW ELEVATION

SCALE: 1" =20'

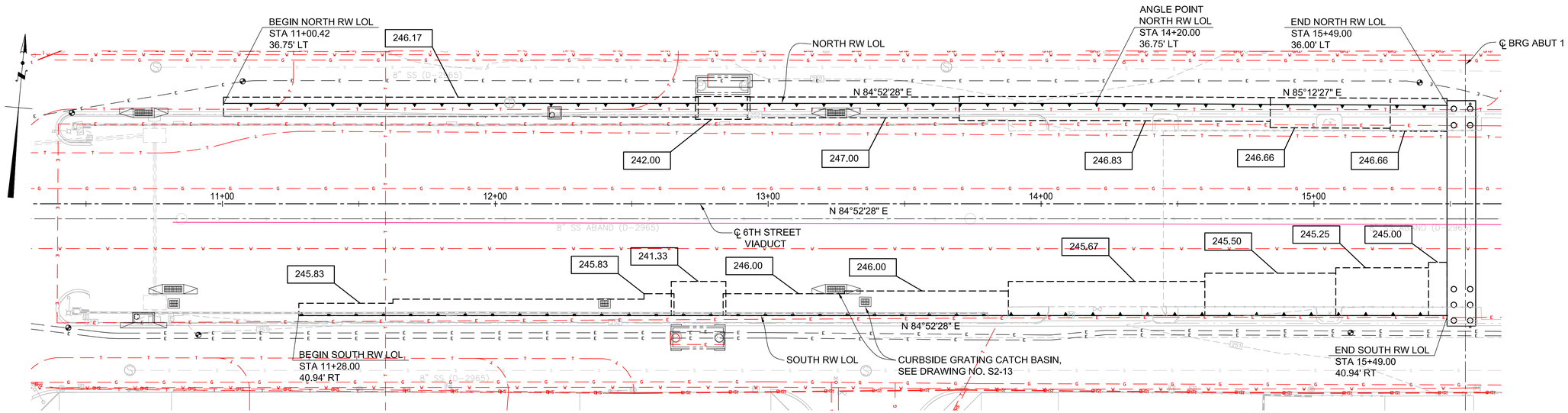

RW LAYOUT PLAN

SCALE: 1" =20'

THE CITY OF LOS ANGELES OR ITS OFFICERS OR AGENTS SHALL NOT BE RESPONSIBLE FOR THE ACCURACY OR COMPLETENESS OF ELECTRONIC COPIES OF THIS PLAN SHEET.

C:\coddlib\pw\pwwestcoast\zhang\dms57683\S2-07-WLD1.dwg 6/27/16 15:34

REVISION DATES (DESIGN STAGE ONLY)

Sheet Version 3.0

BUREAU OF ENGINEERING
OFFICIAL RECORD

HNTB
HNTB Corporation
601 W. 5TH STREET SUITE 1000
LOS ANGELES, CALIFORNIA 90071
TEL (213) 403-1000 FAX (213) 403-1001

CITY OF LOS ANGELES DEPARTMENT OF PUBLIC WORKS
BUREAU OF ENGINEERING

ENGINEERING
CITY OF LOS ANGELES

GARY LEE MOORE, P.E. CITY ENGINEER

		DATE:
ENGINEER:	MICHAEL H. JONES	1/29/2016
DESIGN GROUP	LIC. NO. S3033	
DESIGNED BY:	JIAHWA WANG / HAO LUO	1/29/2016
DRAWN BY:	LI ZHANG	1/29/2016
CHECKED BY:	DANIEL SUN	1/29/2016
APPROVED BY:	MICHAEL H. JONES	1/29/2016

NO. | REVISIONS: | DATE | BY:

STRUCTURE NO. 53C-2329

INDEX NO. P-38113

REGISTERED PROFESSIONAL ENGINEER MICHAEL H. JONES No. S3033 CIVIL STATE OF CALIFORNIA

THIS PLAN WAS ELECTRONICALLY SIGNED AND STAMPED.

VERTICAL CONTROL: BM 12-04070 1929 (NGVD 29) - 1985 ADJUSTMENT
HORIZONTAL CONTROL: GPS; PID AE 1704, EPOCH 1991.35

SHEET TITLE: APPROACH RETAINING WALL LAYOUT

PROJECT: SIXTH STREET VIADUCT REPLACEMENT

ADDRESS: SIXTH STREET VIADUCT (WHITTIER BLVD) LOS ANGELES, CA

WORK ORDER NO. E700224F

DRAWING NO. S2-07

SHEET 200 OF 560 SHEETS

ADDENDUM 5

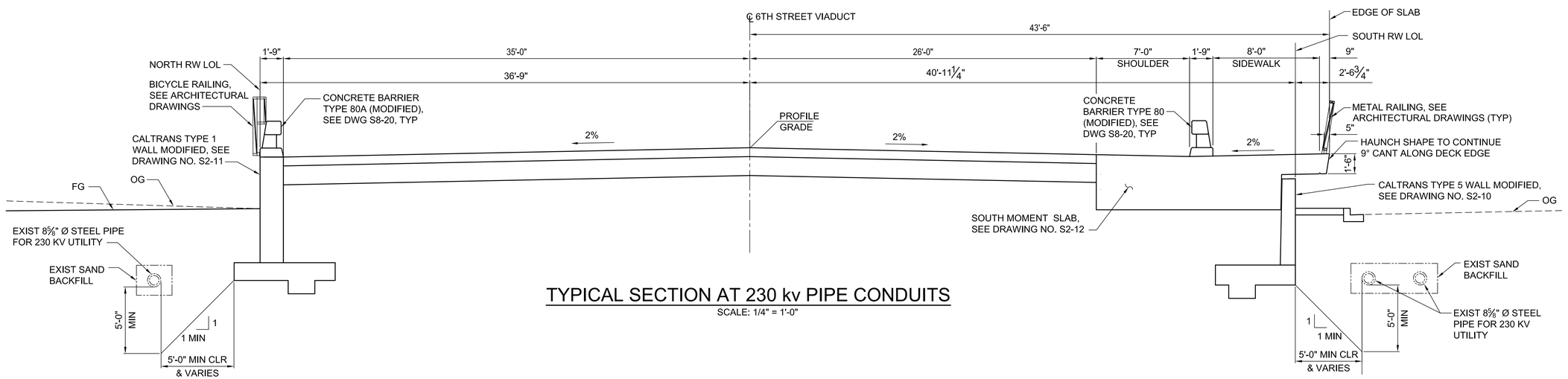

TYPICAL SECTION AT 230 kv PIPE CONDUITS

SCALE: 1/4" = 1'-0"

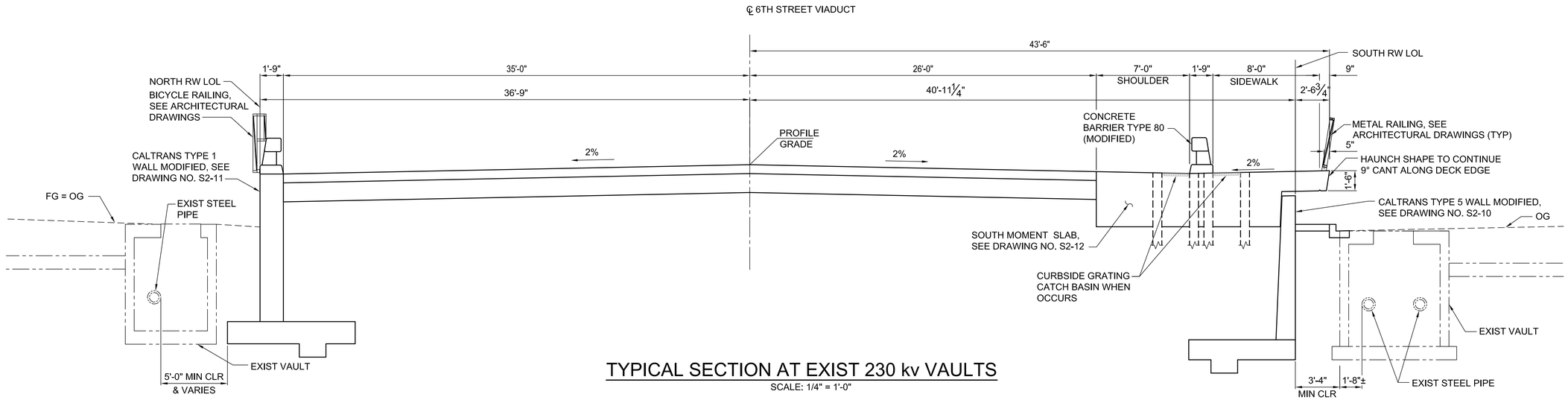

TYPICAL SECTION AT EXIST 230 kv VAULTS

SCALE: 1/4" = 1'-0"

LEGENDS:

NEW STRUCTURE

EXIST STRUCTURE

THE CITY OF LOS ANGELES OR ITS OFFICERS OR AGENTS SHALL NOT BE RESPONSIBLE FOR THE ACCURACY OR COMPLETENESS OF ELECTRONIC COPIES OF THIS PLAN SHEET.

C:\caddlib\pw\pwwestcoast\zhang\dms57683\S2-08-WLD2-3.dwg 6/27/16 15:36

REVISION DATES (DESIGN STAGE ONLY)

Sheet Version 3.0

HNTB
HNTB Corporation
601 W. 5TH STREET SUITE 1000
LOS ANGELES, CALIFORNIA 90071
TEL (213) 403-1000 FAX (213) 403-1001

BUREAU OF ENGINEERING
OFFICIAL RECORD

CITY OF LOS ANGELES DEPARTMENT OF PUBLIC WORKS BUREAU OF ENGINEERING

ENGINEERING
CITY OF LOS ANGELES

NO.	REVISIONS:	DATE:	BY:

STRUCTURE NO. 53C-2329

INDEX NO. P-38113

THIS PLAN WAS ELECTRONICALLY SIGNED AND STAMPED.

REGISTERED PROFESSIONAL ENGINEER MICHAEL H. JONES No. S3033 CIVIL STATE OF CALIFORNIA

GARY LEE MOORE, P.E.	CITY ENGINEER	DATE:
ENGINEER:	MICHAEL H. JONES	1/29/2016
DESIGNED BY:	JIANHUA WANG / HAO LUO	1/29/2016
DRAWN BY:	LI ZHANG	1/29/2016
CHECKED BY:	DANIEL SUN	1/29/2016
APPROVED BY:	MICHAEL H. JONES	1/29/2016

DESIGN GROUP
LIC. NO. S3033

VERTICAL CONTROL: BM 12-04070,1929 (NGVD 29) - 1985 ADJUSTMENT
HORIZONTAL CONTROL: GPS; PID AE 1704, EPOCH 1991.35

SHEET TITLE: APPROACH RETAINING WALL DETAILS NO. 1

PROJECT: SIXTH STREET VIADUCT REPLACEMENT

ADDRESS: SIXTH STREET VIADUCT (WHITTIER BLVD) LOS ANGELES, CA

WORK ORDER NO. E700224F

DRAWING NO. S2-08

SHEET 201 OF 560 SHEETS

ADDENDUM 5

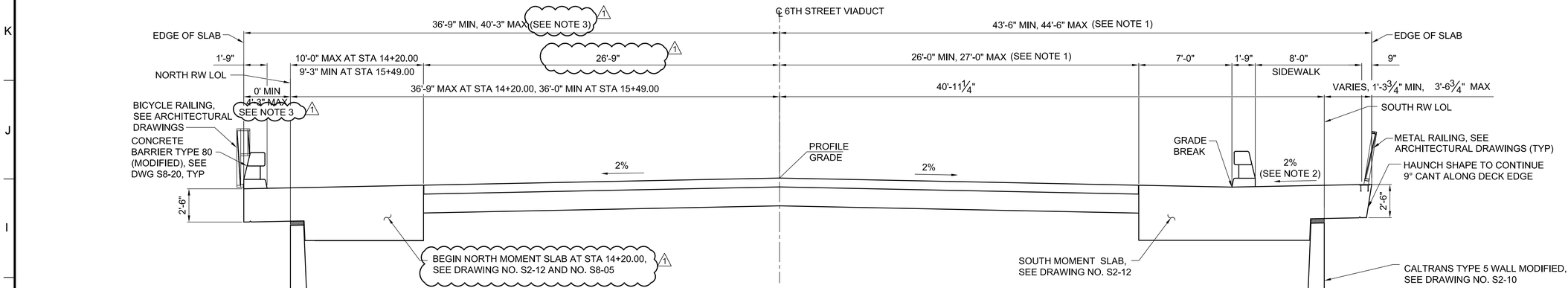

TYPICAL SECTION FROM STA 14+20.00 TO STA 15+49.00

SCALE: 1/4" = 1'-0"

NOTES:

1. TRANSITION WIDTH FROM 26'-0" AT STATION 13+91.91 TO 27'-0" AT STATION 14+91.91.
2. AT APPROACH SLAB 10' WEST OF BB, BEGIN SIDEWALK TRANSITION FROM A 2% CROSS SLOPE DRAINING TOWARDS THE EDGE OF SLAB TO A 2% CROSS SLOPE DRAINING TOWARDS THE GRADE BREAK. SEE DECK CONTOURS ON DRAWING NO. S1-01.
3. BEGIN THE NORTH EXTENSION OF EDGE OF SLAB AT STATION 14+69.96 AND TRANSITION TO AN EXTENSION OF 3'-6" AT STATION 15+40.00. THE MAXIMUM MOMENT SLAB CANTILEVER IS 4'-3" SINCE THE NORTH RETAINING WALL TRANSITIONS 9" TO THE SOUTH BEGINNING AT STATION 14+20. SEE NORTH RETAINING WALL ANGLE POINT ON DRAWING NO. S2-07. RFI 0356

T.O. 5 - Change Order Serial Sketch No. 15 - Page 1 of 2

THE CITY OF LOS ANGELES OR ITS OFFICERS OR AGENTS SHALL NOT BE RESPONSIBLE FOR THE ACCURACY OR COMPLETENESS OF ELECTRONIC COPIES OF THIS PLAN SHEET.

C:\caddlib\pw\pwwestcoast\zhang\dms57683\S2-08-WLD2-3.dwg 4/12/17 14:58

REVISION DATES (DESIGN STAGE ONLY)

Sheet Version 3.0

BUREAU OF ENGINEERING

ENGINEERING
CITY OF LOS ANGELES

NO.	REVISIONS:	DATE	BY:
1	RFI 19	04/12/17	MHJ

STRUCTURE NO. 53C-2329

INDEX NO.

THIS PLAN WAS ELECTRONICALLY SIGNED AND STAMPED.

REGISTERED PROFESSIONAL ENGINEER MICHAEL H. JONES No. S3033 CIVIL STATE OF CALIFORNIA

CITY OF LOS ANGELES DEPARTMENT OF PUBLIC WORKS

GARY LEE MOORE, P.E. CITY ENGINEER

	DESIGN GROUP	LIC. NO.	DATE
ENGINEER:	MICHAEL H. JONES	S3033	1/29/2016
DESIGNED BY:	JIANHA WANG / HAO LUO		1/29/2016
DRAWN BY:	LI ZHANG		1/29/2016
CHECKED BY:	DANIEL SUN		1/29/2016
APPROVED BY:	MICHAEL H. JONES		1/29/2016

VERTICAL CONTROL: BM 12-04070, 1929 (NGVD 29) - 1985 ADJUSTMENT
HORIZONTAL CONTROL: GPS; PID AE 1704, EPOCH 1991.35

SHEET TITLE: APPROACH RETAINING WALL DETAILS NO. 2

PROJECT: SIXTH STREET VIADUCT REPLACEMENT

ADDRESS: SIXTH STREET VIADUCT (WHITTIER BLVD) LOS ANGELES, CA

HNTB
HNTB Corporation
601 W. 5TH STREET SUITE 1000
LOS ANGELES, CALIFORNIA 90071
TEL (213) 403-1000 FAX (213) 403-1001

WORK ORDER NO. E700224F

DRAWING NO. S2-09

SHEET 27 OF SHEETS

ADDENDUM 5

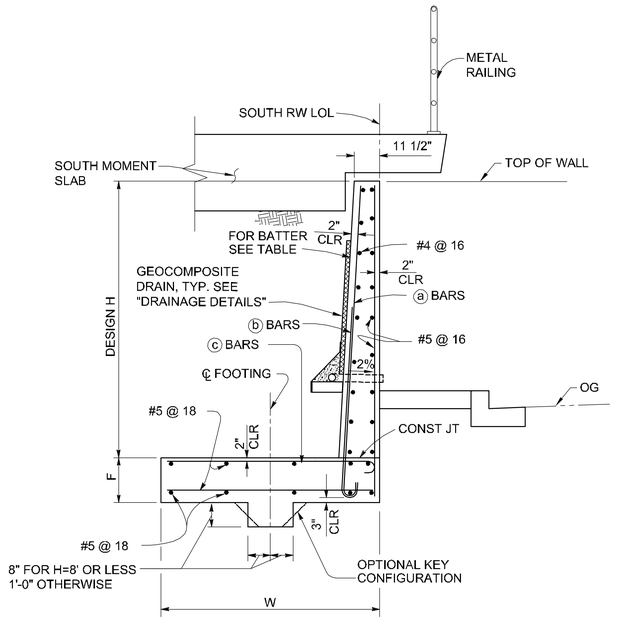

SOUTH RETAINING WALL TYPE 5 (MOD) REINFORCEMENT

NO SCALE

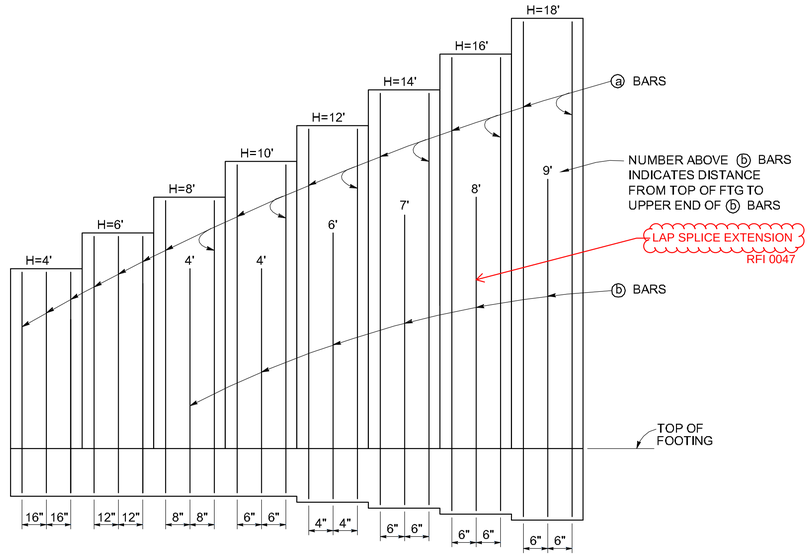

ELEVATION

NO SCALE

SOUTH RW REINFORCING STEEL, DIMENSIONS AND DATA TABLE								
DESIGN H	4'	6'	8'	10'	12'	14'	16'	18'
W	4'-6"	6'-0"	8'-0"	9'-0"	12'-6"	15'-6"	17'-6"	19'-6"
F SPREAD FOOTING	1'-6"	1'-6"	1'-6"	1'-6"	1'-10"	2'-0"	2'-3"	2'-6"
BATTER	NONE	NONE	1/4 : 12	3/8 : 12	5/8 : 12	5/8 : 12	3/4 : 12	3/4 : 12
ⓐ BARS	#5 @ 16	#5 @ 12	#5 @ 16	#6 @ 12	#6 @ 8	#7 @ 12	#8 @ 12	#9 @ 12
ⓑ BARS	NONE	NONE	#5 @ 16	#6 @ 12	#6 @ 8	#7 @ 12	#8 @ 12	#8 @ 12
ⓒ BARS	#7 @ 12	#7 @ 12	#6 @ 8	#6 @ 6	#6 @ 4	#9 @ 6	#9 @ 6	#10 @ 6
SER: B', q'_o	3.1, 1.8	4.2, 2.1	5.9, 2.4	6.4, 2.8	9.9, 2.9	12.8, 3.1	14.5, 2.8	16.2, 3.0
STR: B', q_o	3.0, 2.6	3.9, 3.1	5.7, 3.4	6.1, 4.0	9.6, 4.0	12.5, 4.3	14.2, 4.8	15.8, 5.2
EXT I : B', q_o	3.2, 1.7	4.1, 2.1	5.8, 2.4	6.2, 2.9	9.7, 3.0	12.5, 3.2	14.1, 3.5	15.7, 3.9

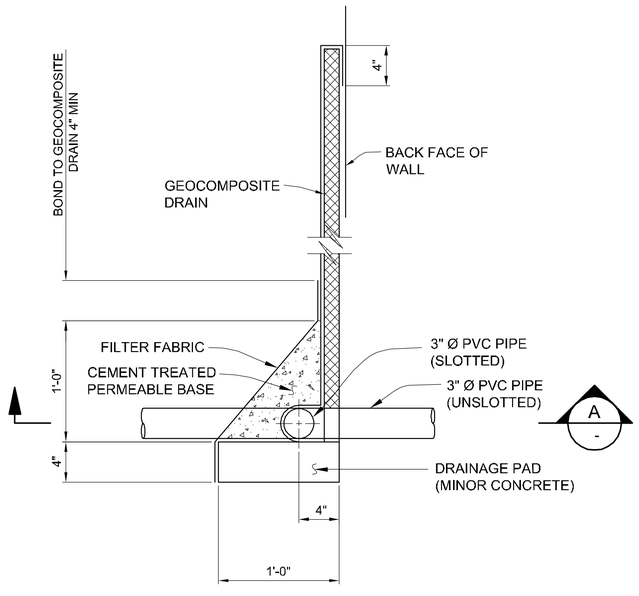

DRAINAGE DETAILS

NO SCALE

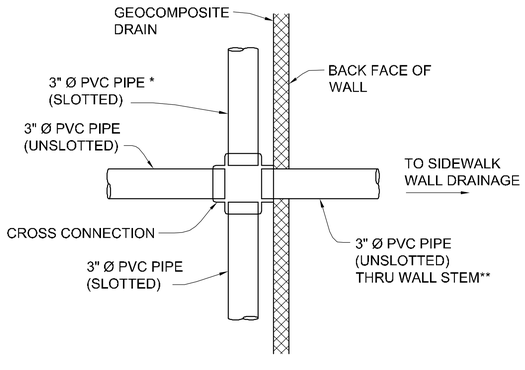

* USE AS NECESSARY. USE TEE CONNECTION WHERE THIS PIPE IS NOT PRESENT.

** 2" CLEARANCE SHALL BE MAINTAINED BETWEEN PVC PIPE AND WALL REINFORCEMENT.

SECTION A-A

NO SCALE

NOTES:

1. 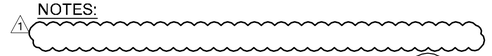

2. FOR DETAILS NOT SHOWN AND DRAINAGE NOTES SEE RSP B3-5

3. AT ⓐ AND ⓑ BARS:

   H ≤ 6', NO SPLICES ARE ALLOWED WITHIN 1'-8" ABOVE THE TOP OF FTG.

   H > 6', NO SPLICES ARE ALLOWED WITHIN H/4 ABOVE THE TOP OF FTG.

DESIGN NOTES FOR APPROACH (NORTH AND SOUTH) RETAINING WALLS:

DESIGN: PROJECT SPECIFIC DESIGN CRITERIA FOR THE SIXTH STREET BRIDGE REPLACEMENT PROJECT

LS: VARIED SURCHARGE ON LEVEL GROUND SURFACE

EQE: UNIFORMLY-DISTRIBUTED PRESSURE OF 17H PSF

SOIL: ϕ = 34°
γ = 120 pcf

REINFORCED CONCRETE: f'c = 4000 psi
fy = 60,000 psi

LOAD COMBINATIONS AND LIMIT STATES

SERVICE I Q=1.00DC+1.00EV+1.00EH+1.00LS

STRENGTH I Q=αDC+βEV+1.50EH+1.75LS

EXTREME I Q=1.00DC+1.00EV+1.00EH+1.00EQD+1.00EQE

WHERE:

Q: FORCE EFFECTS
α: 1.25 OR 0.90, WHICH EVER CONTROLS DESIGN
β: 1.35 OR 1.00, WHICH EVER CONTROLS DESIGN
DC: DEAD LOAD OF STRUCTURE COMPONENTS
EH: HORIZONTAL EARTH FILL PRESSURE
EV: VERTICAL EARTH FILL PRESSURE
LS: LIVE LOAD SURCHARGE
EQE: SEISMIC EARTH PRESSURE
EQD: SOIL AND STRUCTURE COMPONENTS INERTIA, SOIL INERTIA IGNORED FOR STEM DESIGN

SYMBOLS:

SER - SERVICE LIMIT STATE I

STR - STRENGTH LIMIT STATE I

EXT I - EXTREME EVENT LIMIT STATE I

B' - EFFECTIVE FOOTING WIDTH (FT)

q'_o - NET BEARING STRESS (KSF), OG ASSUMED TO BE FG AT TOE

q_o - GROSS UNIFORM BEARING STRESS (KSF)

T.O. 5 - Change Order Serial Sketch No. 29 - page 1 of 3

THE CITY OF LOS ANGELES OR ITS OFFICERS OR AGENTS SHALL NOT BE RESPONSIBLE FOR THE ACCURACY OR COMPLETENESS OF ELECTRONIC COPIES OF THIS PLAN SHEET.

C:\coddlib\pw\pwwestcoast\zhang\dms57683\S2-08-WLD2-3.dwg 5/24/17 13:10

REVISION DATES (DESIGN STAGE ONLY)

Sheet Version 3.0

BUREAU OF ENGINEERING

ENGINEERING CITY OF LOS ANGELES

NO.	REVISIONS:	DATE:	BY:
1	TO IS RFI 0029	05/23/17	MHJ

STRUCTURE NO. 53C-2329

INDEX NO.

THIS PLAN WAS ELECTRONICALLY SIGNED AND STAMPED.

REGISTERED PROFESSIONAL ENGINEER — RICHARD H. JONES — No. S3033 — CIVIL — STATE OF CALIFORNIA

CITY OF LOS ANGELES DEPARTMENT OF PUBLIC WORKS

GARY LEE MOORE, P.E. CITY ENGINEER

ENGINEER:	MICHAEL H. JONES	LIC. NO. S3033	1/29/2016
DESIGN GROUP			1/29/2016
DESIGNED BY:	JIAWEI WANG / HAO LUO		1/29/2016
DRAWN BY:	LI ZHANG		1/29/2016
CHECKED BY:	DANIEL SUN		1/29/2016
APPROVED BY:	MICHAEL H. JONES		1/29/2016

VERTICAL CONTROL: BM 12-04070 1929 (NGVD 29) - 1985 ADJUSTMENT
HORIZONTAL CONTROL: GPS; PID AE 1704, EPOCH 1991.35

SHEET TITLE: APPROACH RETAINING WALL DETAILS NO. 3

PROJECT: SIXTH STREET VIADUCT REPLACEMENT

ADDRESS: SIXTH STREET VIADUCT (WHITTIER BLVD) LOS ANGELES, CA

HNTB
HNTB Corporation
601 W. 5TH STREET SUITE 1000
LOS ANGELES, CALIFORNIA 90071
TEL (213) 403-1000 FAX (213) 403-1001

WORK ORDER NO. E700224F

DRAWING NO. S2-10

SHEET 203 OF 560 SHEETS

ADDENDUM 5

NORTH RW REINFORCING STEEL, DIMENSIONS AND DATA TABLE						
DESIGN H	6'	8'	10'	12'	14'	16'
W	7'-0"	7'-3"	7'-7"	9'-0"	11'-0"	12'-0"
C	2'-3"	2'-3"	2'-4"	2'-6"	2'-6"	2'-6"
B	4'-9"	5'-0"	5'-3"	6'-6"	8'-6"	9'-6"
F	1'-4"	1'-4"	1'-4"	1'-6"	1'-8"	1'-8"
BATTER (SEE NOTE 7)	-	-	-	1/2 : 12	5/8 : 12	5/8 : 12
SPACING "S"	9"	9"	9"	9"	6"	6"
ⓐBARS	-	-	-	-	#6	#6
ⓑBARS	-	-	-	-	#8	#9
ⓒBARS	#6	#6	#6	#6	#8	#9
ⓓBARS	#5	#6	#6	#6	#6	#8
h1	-	-	-	-	7'-0"	8'-0"
h2	-	-	-	-	-	12'-0"
SER: B', q'_o	6.5, 1.0	6.2, 1.3	6.0, 1.6	5.6, 2.3	8.1, 2.4	8.6, 2.8
STR: B', q_o	5.0, 1.8	3.6, 2.3	3.0, 3.3	5.1, 4.6	7.5, 4.5	8.0, 5.1
EXT I: B', q_o	4.7, 1.5	3.9, 2.2	3.1, 3.4	4.1, 4.1	6.6, 3.8	6.9, 4.4
EXT II: B', q_o	2.7, 2.6	2.8, 3.1	2.9, 3.6	3.0, 5.8	6.0, 4.1	6.8, 4.4

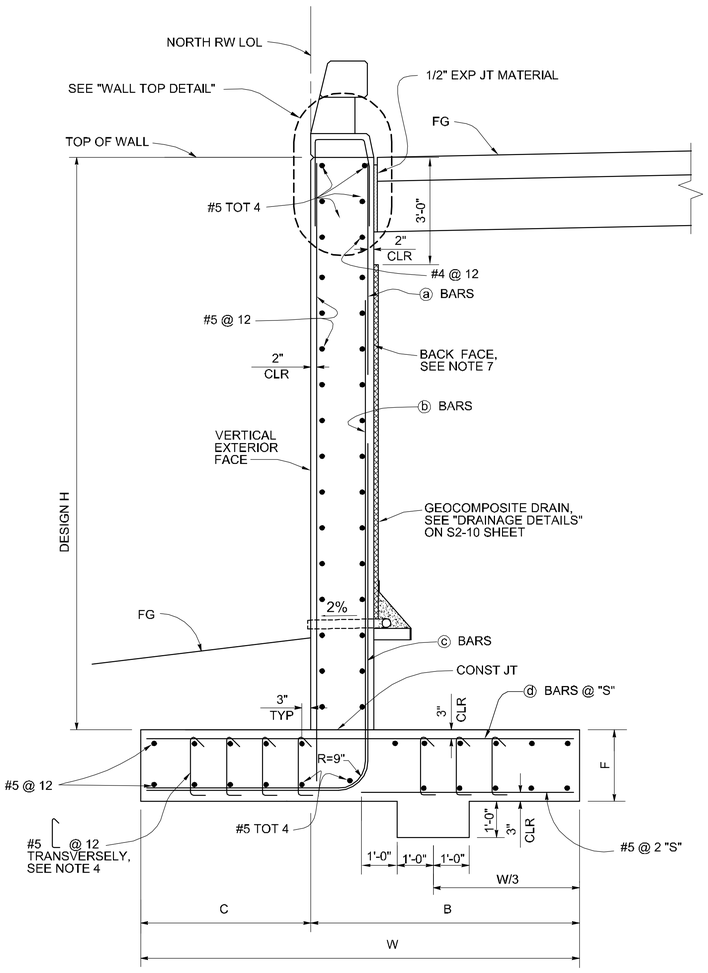

NORTH RETAINING WALL TYPE 1 (MOD) REINFORCEMENT

NO SCALE

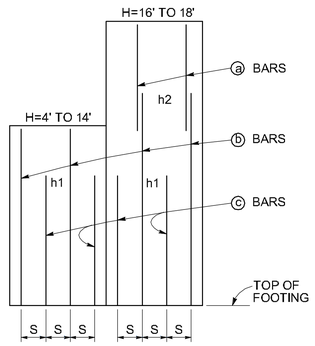

ELEVATION

NO SCALE

SYMBOLS:

SER - SERVICE LIMIT STATE I

STR - STRENGTH LIMIT STATE I

EXT I - EXTREME EVENT LIMIT STATE I

EXT II - EXTREME EVENT LIMIT STATE II

B' - EFFECTIVE FOOTING WIDTH (FT)

q'_o - NET BEARING STRESS (KSF), OG ASSUMED TO BE FG AT TOE

q_o - GROSS UNIFORM BEARING STRESS (KSF)

h1 = TOP OF FTG TO TOP OF ⓒ BARS

h2 = TOP OF FTG TO TOP OF ⓑ BARS

NOTES:

1. FOR DETAILS NOT SHOWN AND DRAINAGE NOTES SEE RSP B3-5
2. FOR WALL STEM JOINT DETAILS SEE B0-3 / 3-3 AND B0-3 / 3-4
3. NO SPLICE AT ⓑ AND ⓒ BARS ARE ALLOWED WITHIN H/4 ABOVE THE TOP OF FOOTING.
4. HOOK STIRRUPS AROUND & SPACE WITH ALTERNATING TRANSVERSE REINF AT 2 x "S"

1

6. SEE DESIGN NOTES ON S2-10 SHEET.
7. BACK FACE OF NORTH RW SHALL BE VERTICAL WHEN BARRIER ON TOP OF WALL OR BATTERED WHEN THE WALL IS UNDER MOMENT SLAB. SEE " WALL TOP DETAIL".

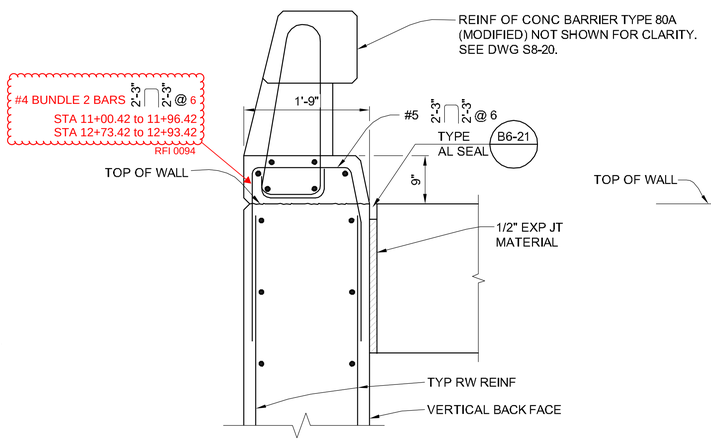

WITH BARRIER

UNDER MOMENT SLAB

WALL TOP DETAIL

NO SCALE

T.O. 5 - Change Order Serial Sketch No. 29 - page 2 of 3

THE CITY OF LOS ANGELES OR ITS OFFICERS OR AGENTS SHALL NOT BE RESPONSIBLE FOR THE ACCURACY OR COMPLETENESS OF ELECTRONIC COPIES OF THIS PLAN SHEET.

C:\coddlib\pw\pwwestcoast\lzhang\dms57683\S2-08-WLD2-3.dwg 5/24/17 13:08

Sheet Version 3.0

REVISION DATES (DESIGN STAGE ONLY)

BUREAU OF ENGINEERING

ENGINEERING CITY OF LOS ANGELES

NO.	REVISIONS:	DATE	BY:
1	TO #5 RFI 0029	05/23/17	MHJ

STRUCTURE NO. 53C-2329

INDEX NO.

THIS PLAN WAS ELECTRONICALLY SIGNED AND STAMPED.

REGISTERED PROFESSIONAL ENGINEER MICHAEL H. JONES No. S30331 CIVIL STATE OF CALIFORNIA

CITY OF LOS ANGELES DEPARTMENT OF PUBLIC WORKS

GARY LEE MOORE, P.E. CITY ENGINEER

DESIGN GROUP		DATE:	1/29/2016
ENGINEER:	MICHAEL H. JONES	LIC. NO. S30331	1/29/2016
DESIGNED BY:	JIAWA WANG / HAO LUO		1/29/2016
DRAWN BY:	LI ZHANG		1/29/2016
CHECKED BY:	DANIEL SUN		1/29/2016
APPROVED BY:	MICHAEL H. JONES		1/29/2016

VERTICAL CONTROL: BM 12-04070,1929 (NGVD 29) - 1985 ADJUSTMENT
HORIZONTAL CONTROL: GPS; PID AE 1704, EPOCH 1991.35

SHEET TITLE: APPROACH RETAINING WALL DETAILS NO. 4

PROJECT: SIXTH STREET VIADUCT REPLACEMENT

ADDRESS: SIXTH STREET VIADUCT (WHITTIER BLVD) LOS ANGELES, CA

HNTB
HNTB Corporation
601 W. 5TH STREET SUITE 1000
LOS ANGELES, CALIFORNIA 90071
TEL (213) 403-1000 FAX (213) 403-1001

WORK ORDER NO. E700224F

DRAWING NO. S2-11

SHEET 204 OF 560 SHEETS

ADDENDUM 5

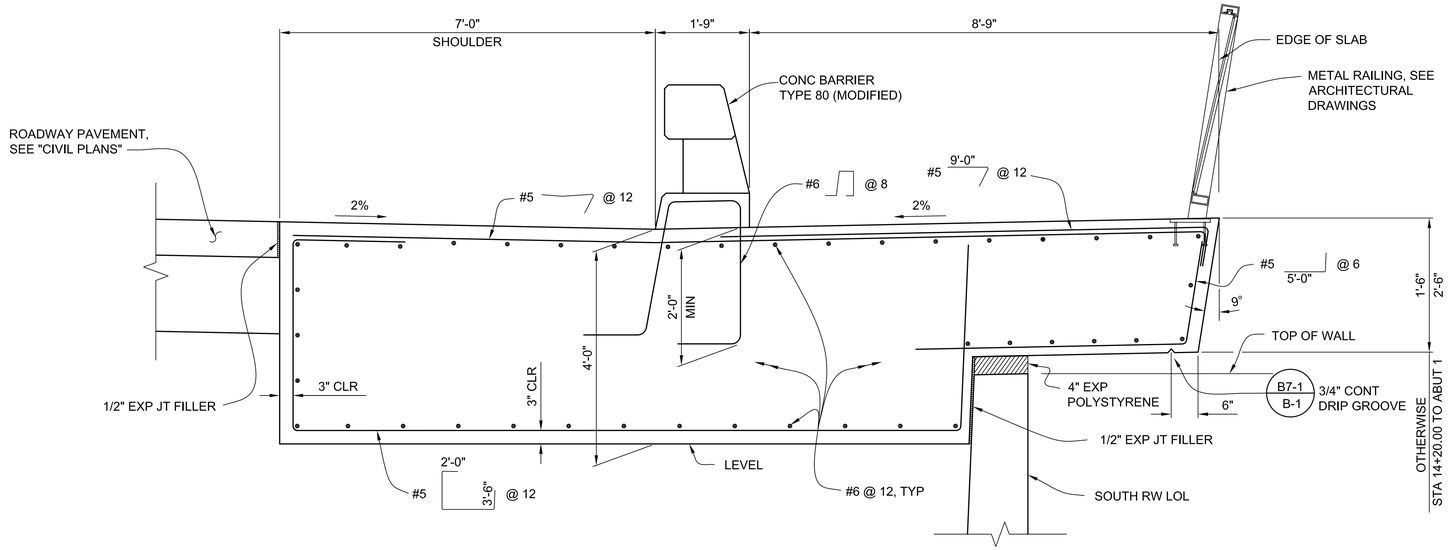

SOUTH MOMENT SLAB REINFORCEMENT

SCALE: 3/4" = 1'-0"

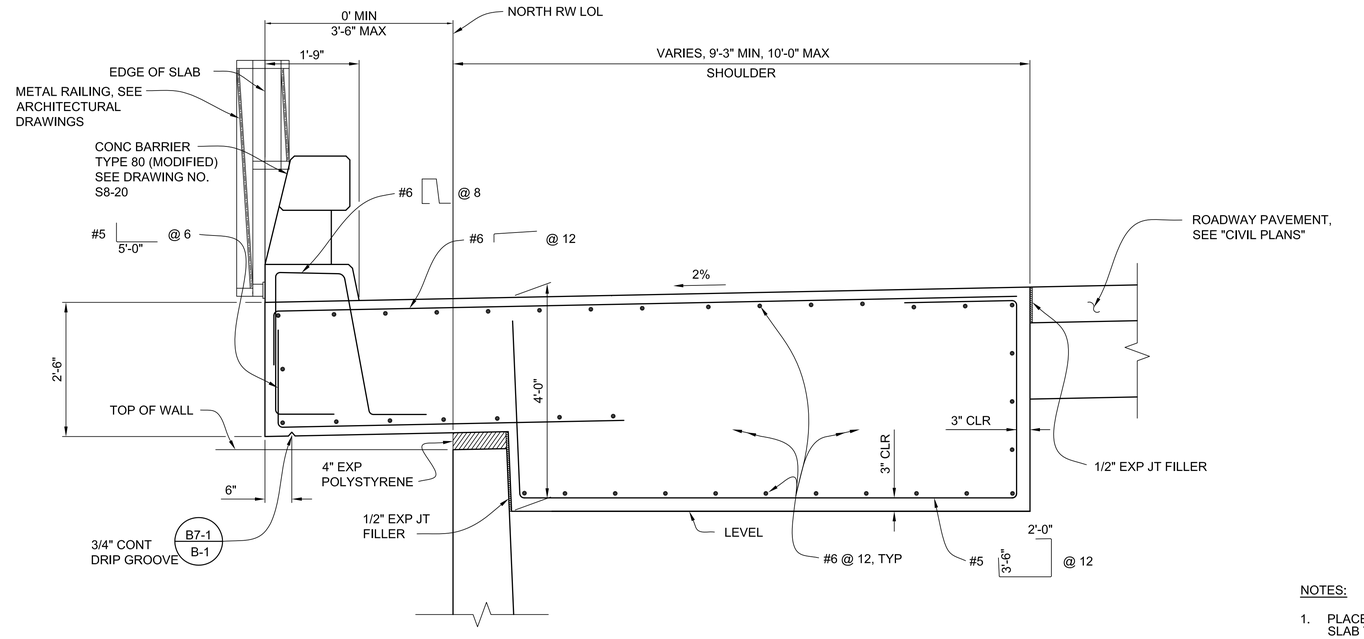

NORTH MOMENT SLAB REINFORCEMENT

SCALE: 3/4" = 1'-0"

NOTES:

1. PLACE ½" ADA COMPLIANT EXPANSION JOINT IN MOMENT SLAB TO MATCH THE LOCATION OF RW EXPANSION JOINTS BELOW. SEE DRAWING NO. S2-07 FOR LOCATION OF RETAINING WALL EXPANSION JOINTS AND DRAWING NO. S8-22 FOR ADA COMPLIANT JOINT DETAILS.

HNTB
HNTB Corporation
601 W. 5TH STREET SUITE 1000
LOS ANGELES, CALIFORNIA 90071
TEL (213) 403-1000 FAX (213) 403-1001

BUREAU OF ENGINEERING
OFFICIAL RECORD

BUREAU OF ENGINEERING
ENGINEERING
CITY OF LOS ANGELES

NO. | REVISIONS: | DATE | BY:

STRUCTURE NO. 53C-2329

INDEX NO. P-38113

THIS PLAN WAS ELECTRONICALLY SIGNED AND STAMPED.

REGISTERED PROFESSIONAL ENGINEER
MICHAEL H. JONES
No. S3033
CIVIL
STATE OF CALIFORNIA

CITY OF LOS ANGELES DEPARTMENT OF PUBLIC WORKS

CITY ENGINEER
GARY LEE MOORE, P.E.

		DATE:
ENGINEER:	MICHAEL H. JONES	1/29/2016
DESIGN GROUP	LIC. NO. S3033	1/29/2016
DESIGNED BY:	JIAHWA WANG / HAO LUO	1/29/2016
DRAWN BY:	LI ZHANG	1/29/2016
CHECKED BY:	DANIEL SUN	1/29/2016
APPROVED BY:	MICHAEL H. JONES	1/29/2016

VERTICAL CONTROL: BM 12-04070,1929 (NGVD 29) - 1985 ADJUSTMENT
HORIZONTAL CONTROL: GPS; PID AE 1704, EPOCH 1991.35

SHEET TITLE: APPROACH RETAINING WALL DETAILS NO. 5

PROJECT: SIXTH STREET VIADUCT REPLACEMENT

ADDRESS: SIXTH STREET VIADUCT (WHITTIER BLVD) LOS ANGELES, CA

WORK ORDER NO. E700224F

DRAWING NO. S2-12

SHEET 205 OF 560 SHEETS

THE CITY OF LOS ANGELES OR ITS OFFICERS OR AGENTS SHALL NOT BE RESPONSIBLE FOR THE ACCURACY OR COMPLETENESS OF ELECTRONIC COPIES OF THIS PLAN SHEET.

REVISION DATES (DESIGN STAGE ONLY)

C:\caddlib\pw\pwwestcoast\zhang\dms57683\S2-08-WLD2-3.dwg 6/27/16 15:37

Sheet Version 3.0

ADDENDUM 5

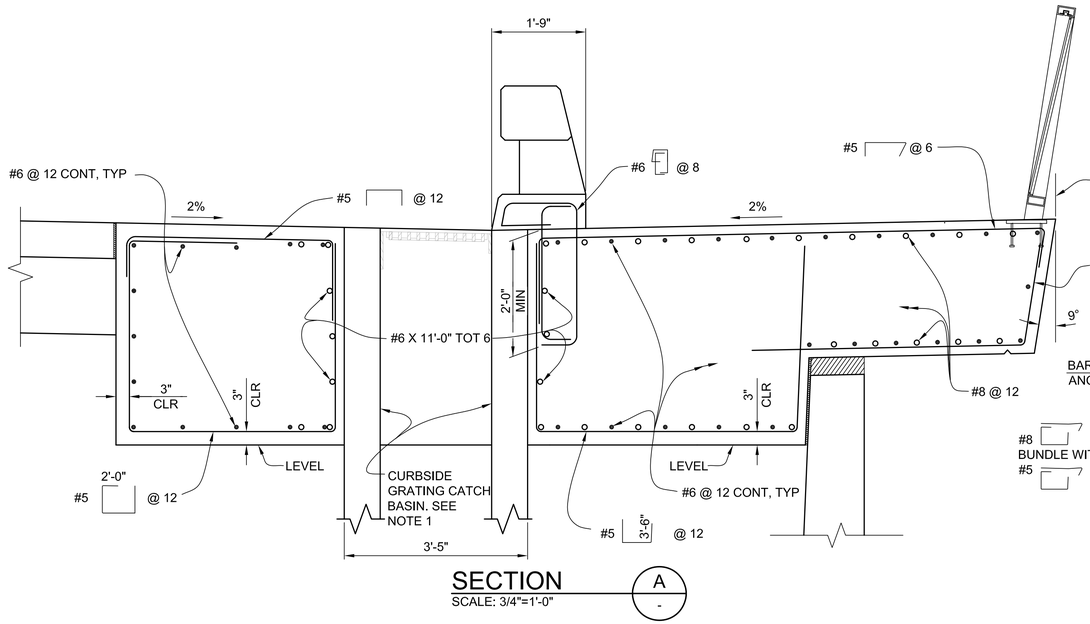

SECTION A
SCALE: 3/4"=1'-0"

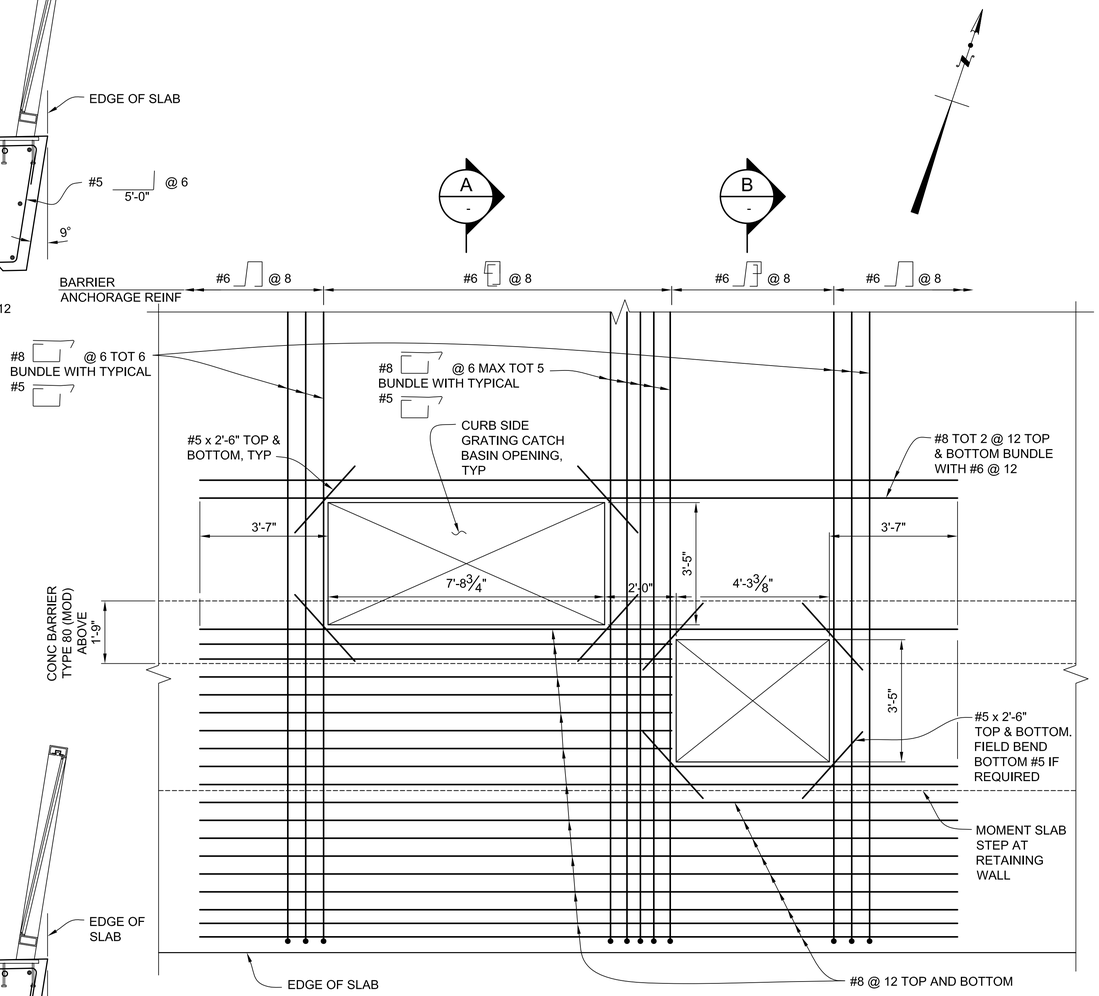

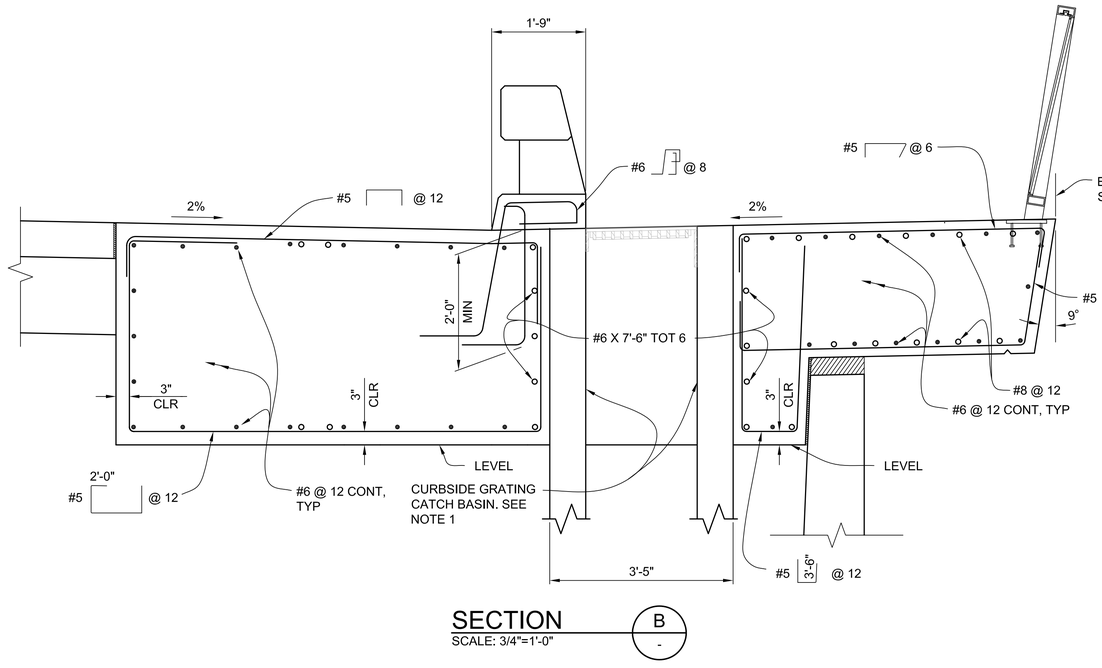

SECTION B
SCALE: 3/4"=1'-0"

SOUTH MOMENT SLAB DRAINAGE REINFORCEMENT PLAN

SCALE: 1/2" = 1'-0"

NOTE: TYPICAL MOMENT SLAB REINFORCEMENT NOT SHOWN IN PLAN FOR CLARITY

LEGEND:

BUNDLED BARS

ADDITIONAL REINFORCEMENT, SEE "SOUTH MOMENT SLAB DRAINAGE OPENING ADDITIONAL REINFORCEMENT" FOR DETAIL

NOTES:

1. FOR LOCATION AND DETAILS OF CURBSIDE GRATING CATCH BASIN, SEE DRAINAGE PLANS.
2. FOR TYPICAL DETAILS NOT SHOWN, SEE DRAWING NO. S2-12.

HNTB
HNTB Corporation
601 W. 5TH STREET SUITE 1000
LOS ANGELES, CALIFORNIA 90071
TEL (213) 403-1000 FAX (213) 403-1001

BUREAU OF ENGINEERING
OFFICIAL RECORD

THE CITY OF LOS ANGELES OR ITS OFFICERS OR AGENTS SHALL NOT BE RESPONSIBLE FOR THE ACCURACY OR COMPLETENESS OF ELECTRONIC COPIES OF THIS PLAN SHEET.

C:\caddlib\pw\pwwestcoast\lzhang\dms57683\S2-08-WLD2-3.dwg 6/27/16 15:38

REVISION DATES (DESIGN STAGE ONLY)

Sheet Version 3.0

BUREAU OF ENGINEERING
ENGINEERING
CITY OF LOS ANGELES

NO.	REVISIONS:	DATE:	BY:

STRUCTURE NO. 53C-2329

INDEX NO. P-38113

REGISTERED PROFESSIONAL ENGINEER MICHAEL H. JONES No. S3033 CIVIL STATE OF CALIFORNIA

THIS PLAN WAS ELECTRONICALLY SIGNED AND STAMPED

CITY OF LOS ANGELES DEPARTMENT OF PUBLIC WORKS

GARY LEE MOORE, P.E. CITY ENGINEER

ENGINEER:	MICHAEL H. JONES	LIC. NO. S3033	DATE: 1/29/2016
DESIGN GROUP			1/29/2016
DESIGNED BY:	JIANHA WANG / HAO LUO		1/29/2016
DRAWN BY:	LI ZHANG		1/29/2016
CHECKED BY:	DANIEL SUN		1/29/2016
APPROVED BY:	MICHAEL H. JONES		1/29/2016

VERTICAL CONTROL: BM 12-04070,1929 (NGVD 29) - 1985 ADJUSTMENT
HORIZONTAL CONTROL: GPS; PID AE 1704, EPOCH 1991.35

SHEET TITLE: APPROACH RETAINING WALL DETAILS NO. 6

PROJECT: SIXTH STREET VIADUCT REPLACEMENT

ADDRESS: SIXTH STREET VIADUCT (WHITTIER BLVD) LOS ANGELES, CA

WORK ORDER NO. E700224F

DRAWING NO. S2-13

SHEET 206 OF 560 SHEETS

ADDENDUM 5

Per RFI 646 construct headwall per Type 5 (Modified) retaining wall on sheet S2-33 with the following exceptions:
-Match top of wall elevations and alignment with north and south sides.
-Remove the retaining wall footing shear key.
-Place retaining wall footing directly on existing tunnel top slab.
-Add #5 dowels on a 12" grid each direction connecting the retaining wall to the existing tunnel top slab. Begin dowels 6" off the toe/ edge of the footing. Use a 90° bend when terminating the dowel at the top surface of the retaining wall footing and drill and bond 6" into the existing tunnel top slab.

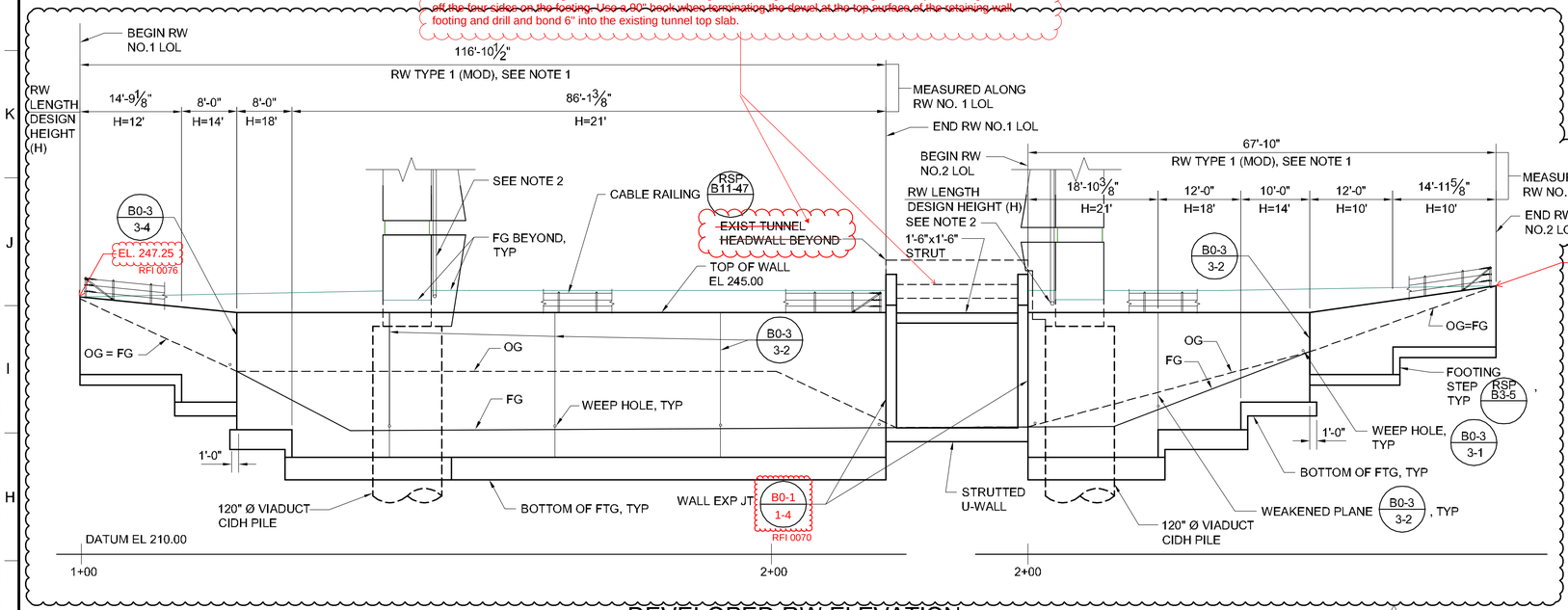

DEVELOPED RW ELEVATION

SCALE: 1" =10'

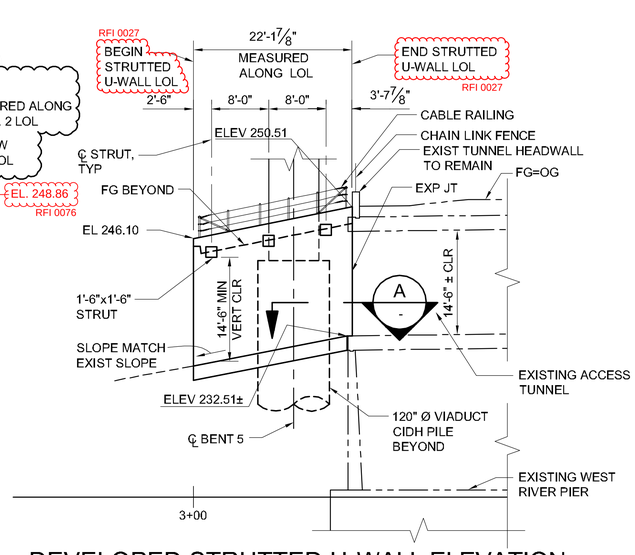

DEVELOPED STRUTTED U-WALL ELEVATION

SCALE: 1" =10'

LEGEND

- 100.00 — INDICATES BOTTOM FOOTING ELEVATION
- CONCRETE CHANNEL LINING REPLACEMENT. SEE NOTE 3
- EXIST RW TO BE REMOVED AND/OR RECONSTRUCT. SEE NOTE 3
- EXISTING STRUCTURE
- PROPOSED CONSTRUCTION
- CHAIN LINK FENCE
- CABLE RAILING FENCE

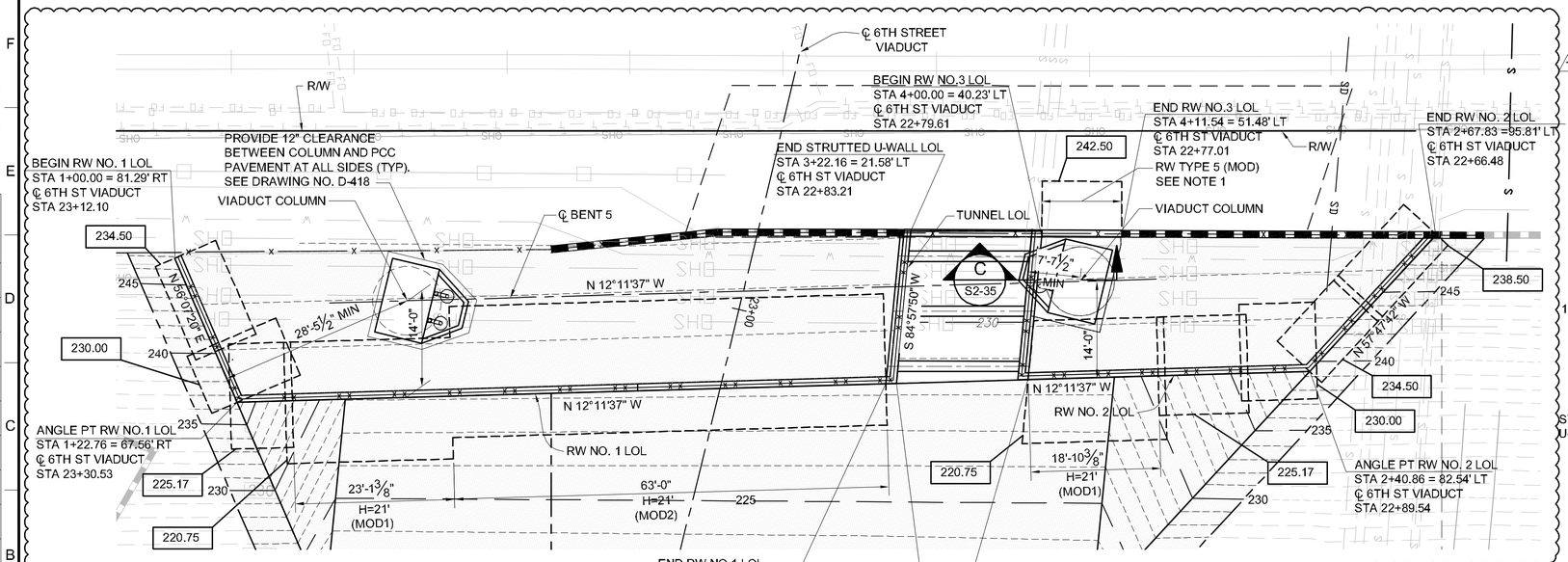

RW LAYOUT PLAN

SCALE: 1" =10'

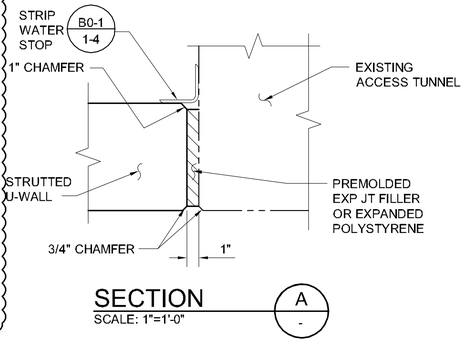

SECTION A

SCALE: 1"=1'-0"

NOTES:

1. FOR DETAILS OF MODIFIED RW TYPE 1 OR TYPE 5, SEE DRAWING NO. S2-33.
2. VIADUCT COLUMN DRAIN OUTLET SHALL DRAIN ONTO THE PAVED SLOPE.
3. FOR CONCRETE CHANNEL LINING REPLACEMENT AND RETAINING WALLS NOT SHOWN, SEE DRAINAGE DRAWING NOS. D-411 THRU D-419.
4. FOR ADDITIONAL DETAILS SEE SUBMITTAL 023r4. RFI 0067

HNTB
HNTB Corporation
601 W. 5TH STREET SUITE 1000
LOS ANGELES, CALIFORNIA 90071
TEL (213) 403-1000 FAX (213) 403-1001

CITY OF LOS ANGELES DEPARTMENT OF PUBLIC WORKS
BUREAU OF ENGINEERING
ENGINEERING — CITY OF LOS ANGELES

NO.	REVISIONS:	DATE	BY:
1	CHANNEL RW BENT 5 CHANGES DUE TO CONSTRUCTION LOADING	05/24/17	HL

STRUCTURE NO. 53C-2329

INDEX NO.

GARY LEE MOORE, P.E. — CITY ENGINEER

		DATE:
DESIGN GROUP		
ENGINEER: MICHAEL H. JONES	LIC. NO. 63316	1/29/2016
DESIGNED BY: JIAHWA WANG / HAO LUO		1/29/2016
DRAWN BY: LI ZHANG		1/29/2016
CHECKED BY: DANIEL SUN		1/29/2016
APPROVED BY: MICHAEL H. JONES		1/29/2016

REGISTERED PROFESSIONAL ENGINEER — MICHAEL H. JONES — No. 63316 — EXP. 6-30-16 — CIVIL — STATE OF CALIFORNIA

THIS PLAN WAS ELECTRONICALLY SIGNED AND STAMPED

VERTICAL CONTROL: BM 12-04070 1929 (NGVD 29) - 1985 ADJUSTMENT
HORIZONTAL CONTROL: GPS; PID AE 1704, EPOCH 1991.35

SHEET TITLE: RETAINING WALLS AT RIVER GENERAL PLAN

PROJECT: SIXTH STREET VIADUCT REPLACEMENT

ADDRESS: SIXTH STREET VIADUCT (WHITTIER BLVD) LOS ANGELES, CA

WORK ORDER NO. E700224F

DRAWING NO. S2-31

SHEET 208 OF 560 SHEETS

THE CITY OF LOS ANGELES OR TS OFFICERS OR AGENTS SHALL NOT BE RESPONSIBLE FOR THE ACCURACY OR COMPLETENESS OF ELECTRONIC COPIES OF THIS PLAN SHEET.

REVISION DATES (DESIGN STAGE ONLY)

C:\coddlib\pw\pwwestcoast\zhang\dms57683\S2-31-WLD4-6.dwg 5/24/17 15:11

Sheet Version 3.0

ADDENDUM 5

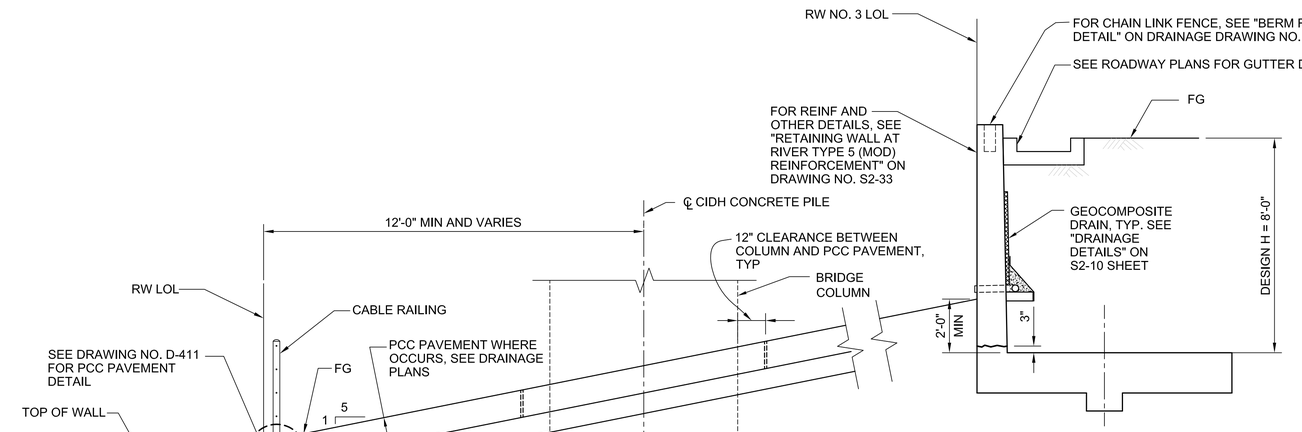

TYPICAL SECTION - RW NO. 3

SCALE: 3/8" = 1'-0"

NOTES:

1. PRIOR TO CONTINUING CONCRETE PLACEMENT AT EXISTING CONSTRUCTION JOINTS, THE EXISTING CONCRETE SURFACE AT THE CONSTRUCTION JOINT INTERFACE SHALL BE PREPARED BY REMOVING ALL LAITANCE AND INTENTIONALLY ROUGHENING THE SURFACE TO AN AMPLITUDE OF 1/4".

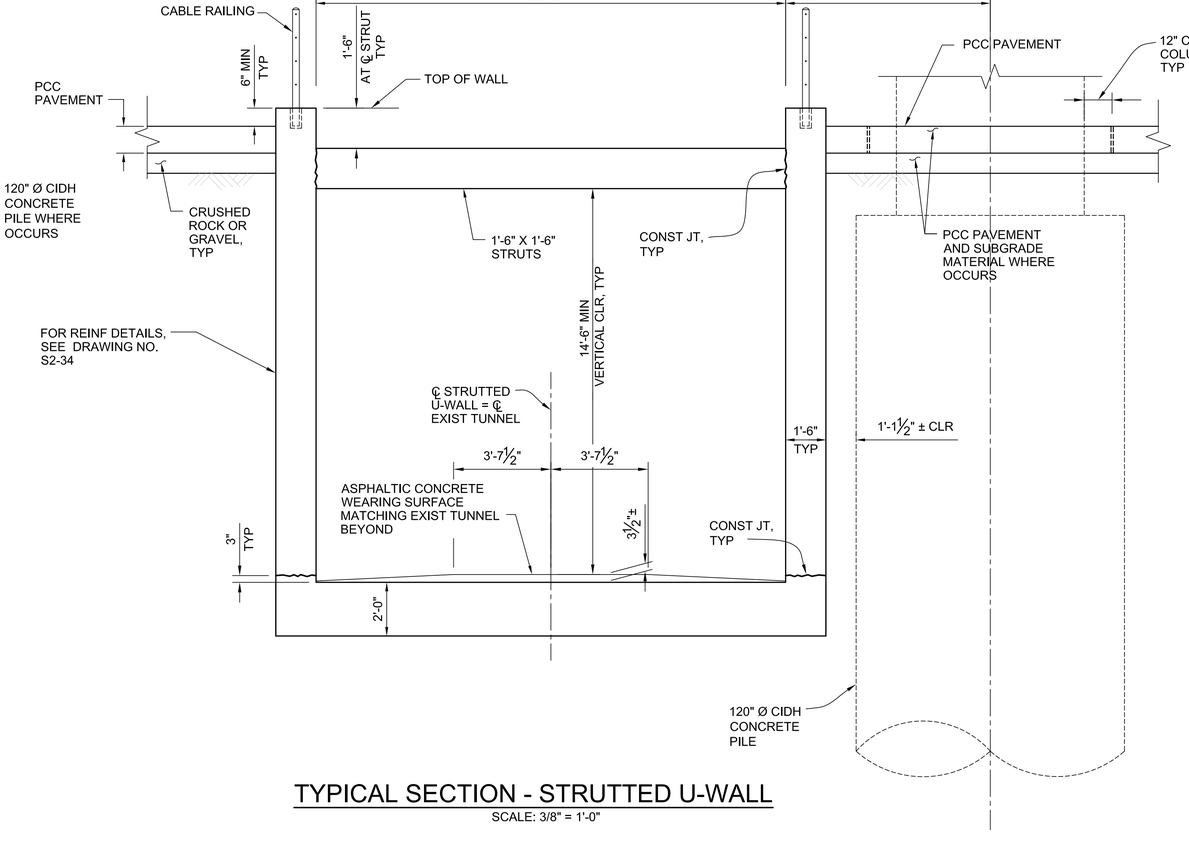

TYPICAL SECTION - RW NO. 1 AND NO. 2

SCALE: 3/8" = 1'-0"

TYPICAL SECTION - STRUTTED U-WALL

SCALE: 3/8" = 1'-0"

THE CITY OF LOS ANGELES OR ITS OFFICERS OR AGENTS SHALL NOT BE RESPONSIBLE FOR THE ACCURACY OR COMPLETENESS OF ELECTRONIC COPIES OF THIS PLAN SHEET.

C:\caddlib\pw\pwwestcoast\zhang\dms57683\S2-32-WL06-7.dwg 6/28/16 16:49

REVISION DATES (DESIGN STAGE ONLY)

Sheet Version 3.0

BUREAU OF ENGINEERING
OFFICIAL RECORD

HNTB
HNTB Corporation
601 W. 5TH STREET SUITE 1000
LOS ANGELES, CALIFORNIA 90071
TEL (213) 403-1000 FAX (213) 403-1001

CITY OF LOS ANGELES DEPARTMENT OF PUBLIC WORKS
BUREAU OF ENGINEERING

ENGINEERING
CITY OF LOS ANGELES

NO. | REVISIONS: | DATE | BY:

STRUCTURE NO. 53C-2329

INDEX NO. P-38113

THIS PLAN WAS ELECTRONICALLY SIGNED AND STAMPED.

REGISTERED PROFESSIONAL ENGINEER — MICHAEL H. JONES — No. S3033 — CIVIL — STATE OF CALIFORNIA

GARY LEE MOORE, P.E. — CITY ENGINEER

ENGINEER:	MICHAEL H. JONES	LIC. NO. S3033	DATE: 1/29/2016
DESIGNED BY:	JIANHUA WANG / HAO LUO		1/29/2016
DRAWN BY:	LI ZHANG		1/29/2016
CHECKED BY:	DANIEL SUN		1/29/2016
APPROVED BY:	MICHAEL H. JONES		1/29/2016

DESIGN GROUP

VERTICAL CONTROL: BM 12-04070, 1929 (NGVD 29) - 1985 ADJUSTMENT
HORIZONTAL CONTROL: GPS; FID AE 1704, EPOCH 1991.35

SHEET TITLE: RETAINING WALLS AT RIVER TYPICAL SECTIONS

PROJECT: SIXTH STREET VIADUCT REPLACEMENT

ADDRESS: SIXTH STREET VIADUCT (WHITTIER BLVD) LOS ANGELES, CA

WORK ORDER NO. E700224F

DRAWING NO. S2-32

SHEET 208 OF 560 SHEETS

THE CITY OF LOS ANGELES OR ITS OFFICERS OR AGENTS SHALL NOT BE RESPONSIBLE FOR THE ACCURACY OR COMPLETENESS OF ELECTRONIC COPIES OF THIS PLAN SHEET.

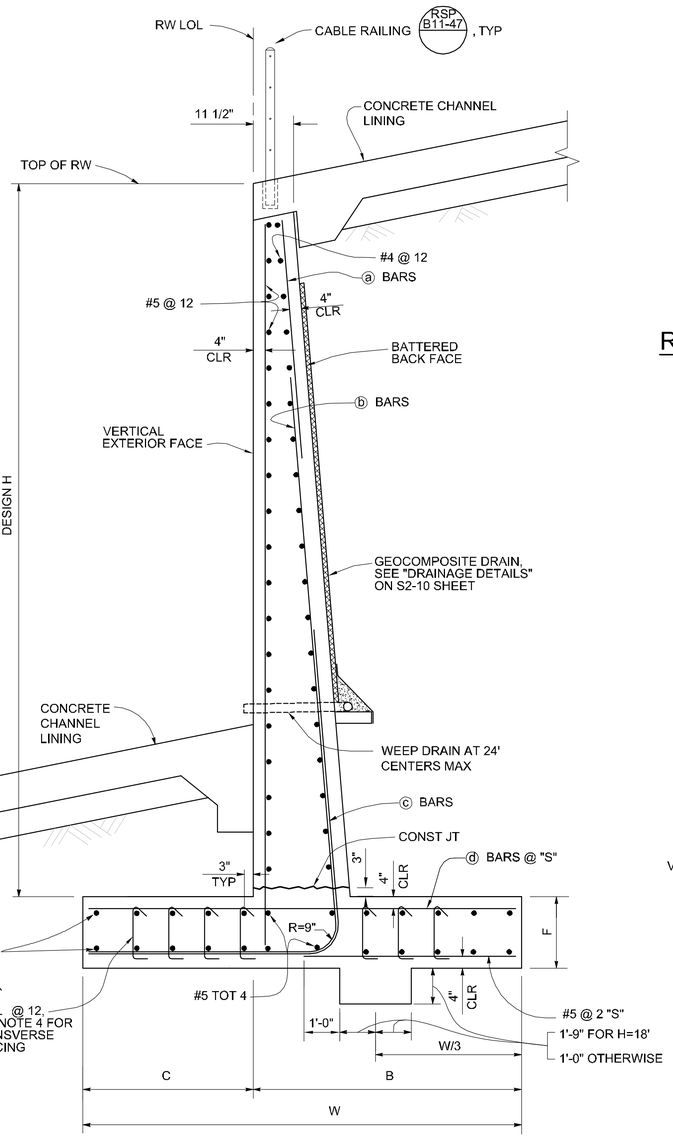

RETAINING WALL AT RIVER TYPE 1 (MOD) REINFORCEMENT

NO SCALE

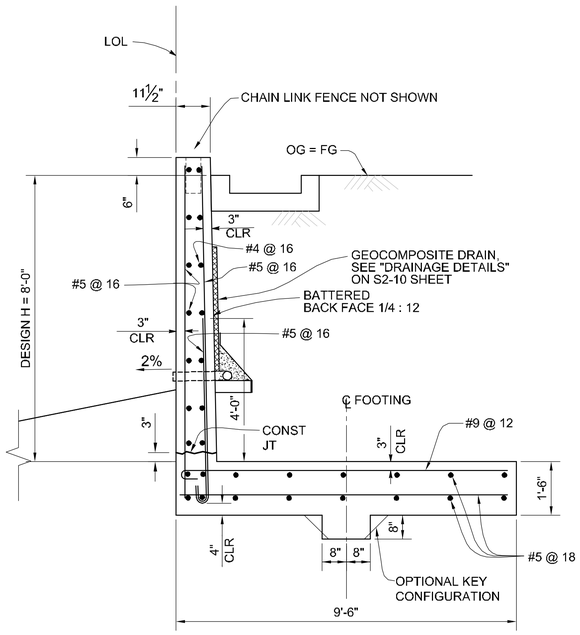

RETAINING WALL AT RIVER TYPE 5 (MOD) REINFORCEMENT

NO SCALE

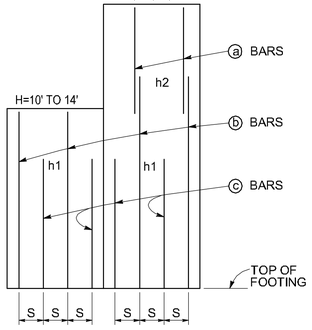

ELEVATION

NO SCALE

T.O. 5 - Change Order Serial Sketch No. 29 - page 3 of 3

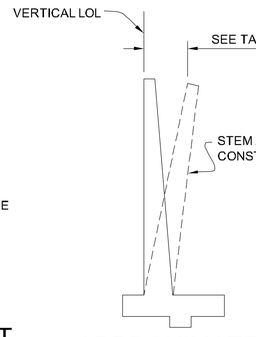

APPROXIMATE WALL OFFSET VALUES

NO SCALE

TABLE A

H	OFFSET
10'-12'	H/125
14'-16'	H/100
18'-20'	H/90

DESIGN NOTES:

DESIGN: PROJECT SPECIFIC DESIGN CRITERIA FOR THE SIXTH STREET BRIDGE REPLACEMENT PROJECT

LS: VARIED SURCHARGE ON LEVEL GROUND SURFACE

EQE: FOR CANTILEVER WALL WITHIN 35 FT DISTANCE FROM ℄ 120" Ø CIDH PILE, 144 PSF PER FOOT OF DEPTH.
FOR STRUTTED U-WALL WITHIN 35 FT DISTANCE FROM ℄ 120" Ø CIDH PILE, 900 PSF PER FOOT OF DEPTH.
OTHERWISE, 24H PSF UNIFORMLY DISTRIBUTED SEISMIC INCREMENTAL PRESSURE

SOIL: ϕ = 34°
γ = 120 pcf

REINFORCED CONCRETE: f'c = 4000 psi
fy = 60,000 psi

LOAD COMBINATIONS AND LIMIT STATES:

SERVICE I Q=1.00DC+1.00EV+1.00EH+1.00LS

STRENGTH I Q=αDC+βEV+1.50EH+1.75LS

EXTREME I Q=1.00DC+1.00EV+1.00EH+1.00EQD+1.00EQE

WHERE:

Q: FORCE EFFECTS
α: 1.25 OR 0.90, WHICHEVER CONTROLS DESIGN
β: 1.35 OR 1.00, WHICHEVER CONTROLS DESIGN
DC: DEAD LOAD OF STRUCTURE COMPONENTS
EV: VERTICAL EARTH FILL PRESSURE
LS: LIVE LOAD SURCHARGE
EQE: SEISMIC EARTH PRESSURE
EQD: SOIL AND STRUCTURE COMPONENTS INERTIA. SOIL INERTIA IGNORED FOR STEM DESIGN

SYMBOLS:

h1 = TOP OF FTG TO TOP OF ⓒ BARS

h2 = TOP OF FTG TO TOP OF ⓑ BARS

NOTES:

1. FOR DETAILS NOT SHOWN AND DRAINAGE NOTES SEE RSP B3-5
2. FOR WALL STEM JOINT DETAILS SEE B0-3 3-3 AND B0-3 3-4
3. NO SPLICE AT ⓑ AND ⓒ BARS ARE ALLOWED WITHIN H/4 ABOVE THE TOP OF FOOTING.
4. HOOK STIRRUPS AROUND & SPACE WITH ALTERNATING TRANSVERSE REINF AT 2 x "S"

1

SYMBOLS:

SER - SERVICE LIMIT STATE I

STR - STRENGTH LIMIT STATE I

EXT I - EXTREME EVENT LIMIT STATE I

B' - EFFECTIVE FOOTING WIDTH (FT)

q'_o - NET BEARING STRESS (KSF), OG ASSUMED TO BE FG AT TOE

q_o - GROSS UNIFORM BEARING STRESS (KSF)

RW TYPE 1 (MOD) TABLE OF REINFORCING STEEL, DIMENSIONS AND DATA

DESIGN H	10'	12'	14'	16'	18'	21' (MOD1)	21' (MOD2)
W	8'-9"	9'-6"	14'-0"	14'-3"	15'-3"	17'-9"	19'-0"
C	2'-4"	3'-1"	4'-0"	5'-9"	6'-9"	9'-3"	6'-0"
B	6'-5"	6'-5"	10'-0"	8'-6"	8'-6"	8'-6"	13'-0"
F	1'-6"	1'-6"	2'-0"	2'-6"	2'-10"	3'-3"	3'-3"
BATTER	1/2 : 12	1/2 : 12	5/8 : 12	5/8 : 12	7/8 : 12	7/8 : 12	1 : 12
SPACING "S"	8"	6"	7"	6"	6"	6"	7"
ⓐBARS	-	-	-	#7	#7	#9	#9
ⓑBARS	#6	#6	#7	#8	#10	#10	#10
ⓒBARS	#6	#6	#7	#8	#9	#10	#10
ⓓBARS	#5	#5	#8	#9	#9	#9	#9
h1	4'-6"	5'-0"	7'-0"	8'-0"	9'-0"	12'-0"	12'-0"
h2	-	-	-	12'-0"	14'-6"	16'-0"	16'-0"
SER: B', q'_o	7.0, 1.6	7.9, 1.7	13.3, 1.8	12.9, 1.9	13.3, 2.1	17.9, 1.8	15.1, 2.6
STR: B', q_o	6.4, 2.3	7.2, 2.4	12.8, 2.5	12.0, 2.7	12.2, 3.1	17.2, 2.5	14.1, 3.7
EXT I: B', q_o	2.9, 3.9	1.9, 7.0	7.9, 3.0	4.8, 5.2	3.2, 9.0	5.0, 6.5	15.5, 2.6

HNTB
HNTB Corporation
601 W. 5TH STREET SUITE 1000
LOS ANGELES, CALIFORNIA 90071
TEL (213) 403-1000 FAX (213) 403-1001

CITY OF LOS ANGELES
DEPARTMENT OF PUBLIC WORKS
BUREAU OF ENGINEERING

ENGINEERING
CITY OF LOS ANGELES

NO.	REVISIONS:	DATE:	BY:
1	TO RS RFI 0029	05/23/17	MHJ

STRUCTURE NO. 53C-2329

INDEX NO.

THIS PLAN WAS ELECTRONICALLY SIGNED AND STAMPED.

REGISTERED PROFESSIONAL ENGINEER MICHAEL H. JONES No. S30333 CIVIL STATE OF CALIFORNIA

GARY LEE MOORE, P.E. CITY ENGINEER

		DATE:
DESIGN GROUP		
ENGINEER:	MICHAEL H. JONES LIC. NO. S30333	1/29/2016
DESIGNED BY:	JIAWA WANG / HAO LUO	1/29/2016
DRAWN BY:	LI ZHANG	1/29/2016
CHECKED BY:	DANIEL SUN	1/29/2016
APPROVED BY:	MICHAEL H. JONES	1/29/2016

VERTICAL CONTROL: BM 12-04070 1929 (NGVD 29) - 1985 ADJUSTMENT
HORIZONTAL CONTROL: GPS; PID AE 1704, EPOCH 1991.35

SHEET TITLE: RETAINING WALLS AT RIVER DETAILS NO. 1

PROJECT: SIXTH STREET VIADUCT REPLACEMENT

ADDRESS: SIXTH STREET VIADUCT (WHITTIER BLVD) LOS ANGELES, CA

WORK ORDER NO. E700224F

DRAWING NO. S2-33

SHEET 209 OF 560 SHEETS

C:\cadlib\pw\pwwestcoast\zhang\dms57683\S2-32-WLD6-7.dwg 5/24/17 11:14

Sheet Version 3.0

ADDENDUM 5

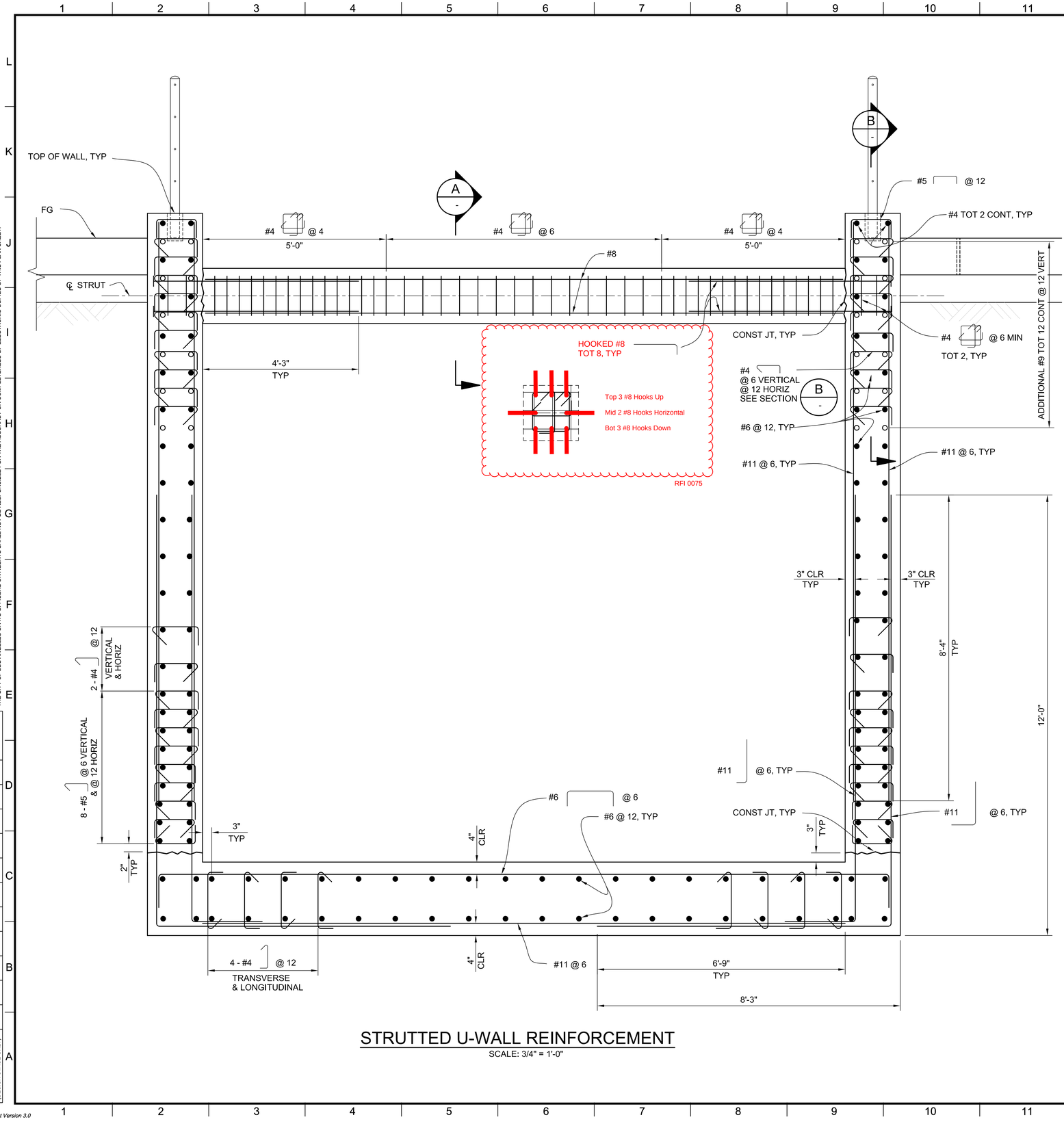

STRUTTED U-WALL REINFORCEMENT

SCALE: 3/4" = 1'-0"

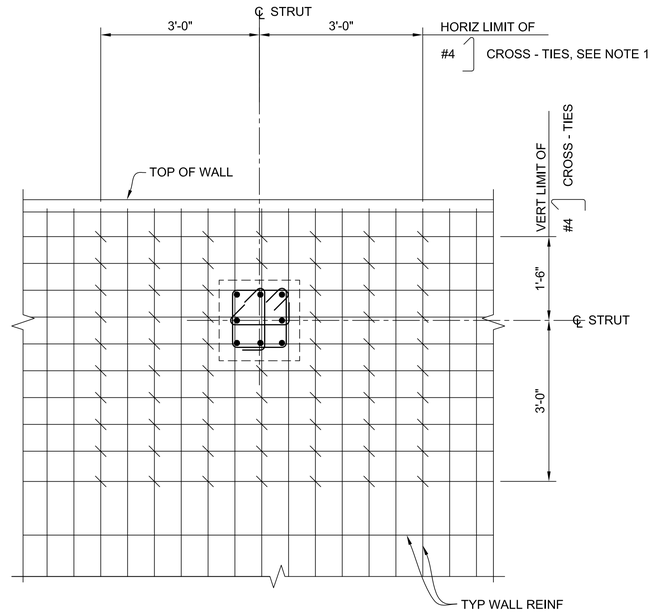

SECTION B

SCALE: 3/4"=1'-0"

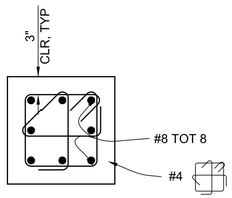

SECTION A

SCALE: 1"=1'-0"

LEGEND:

- #4 ⌐ CROSS-TIES
- ○ ADDITIONAL #9 BAR

NOTES:

1. ADDITIONAL #4 CROSS-TIES EXTEND TO THE END OF THE WALL OR 3'-0" BEYOND ℄ STRUT, WHICHEVER OCCURS FIRST.
2. CROSS-TIES SHALL BE PLACED SO THAT 90° AND 135° HOOKS OF ADJACENT TIES ARE STAGGERED HORIZONTALLY AND VERTICALLY .

BUREAU OF ENGINEERING
OFFICIAL RECORD

HNTB
HNTB Corporation
601 W. 5TH STREET, SUITE 1000
LOS ANGELES, CALIFORNIA 90071
TEL (213) 403-1000 FAX (213) 403-1001

CITY OF LOS ANGELES DEPARTMENT OF PUBLIC WORKS BUREAU OF ENGINEERING

ENGINEERING CITY OF LOS ANGELES

STRUCTURE NO. 53C-2329

INDEX NO. P-38113

NO.	REVISIONS:	DATE	BY:

THIS PLAN WAS ELECTRONICALLY SIGNED AND STAMPED

REGISTERED PROFESSIONAL ENGINEER MICHAEL H. JONES No. S3033 CIVIL STATE OF CALIFORNIA

CITY ENGINEER	GARY LEE MOORE, P.E.	DATE:
DESIGN GROUP		
ENGINEER:	MICHAEL H. JONES	LIC. NO. S3033 1/29/2016
DESIGNED BY:	JIANHUA WANG / HAO LUO	1/29/2016
DRAWN BY:	LI ZHANG	1/29/2016
CHECKED BY:	DANIEL SUN	1/29/2016
APPROVED BY:	MICHAEL H. JONES	1/29/2016

VERTICAL CONTROL: BM 12-04070,1929 (NGVD 29) - 1985 ADJUSTMENT
HORIZONTAL CONTROL: GPS; PID AE 1704, EPOCH 1991.35

SHEET TITLE: RETAINING WALLS AT RIVER DETAILS NO. 2

PROJECT: SIXTH STREET VIADUCT REPLACEMENT

ADDRESS: SIXTH STREET VIADUCT (WHITTIER BLVD) LOS ANGELES, CA

WORK ORDER NO. E700224F

DRAWING NO. S2-34

SHEET 210 OF 560 SHEETS

THE CITY OF LOS ANGELES OR ITS OFFICERS OR AGENTS SHALL NOT BE RESPONSIBLE FOR THE ACCURACY OR COMPLETENESS OF ELECTRONIC COPIES OF THIS PLAN SHEET.

C:\caddlib\pw\pwwestcost\zhang\dms57683\S2-32-WLD6-7.dwg 6/27/16 15:42

REVISION DATES (DESIGN STAGE ONLY)

Sheet Version 3.0

ADDENDUM 5

NOTES:

1. FOR DETAILS OF ARCHITECTURAL CONCRETE NOT SHOWN, SEE DRAWING NOS. S3-11 THROUGH S3-14 AND S3-19.

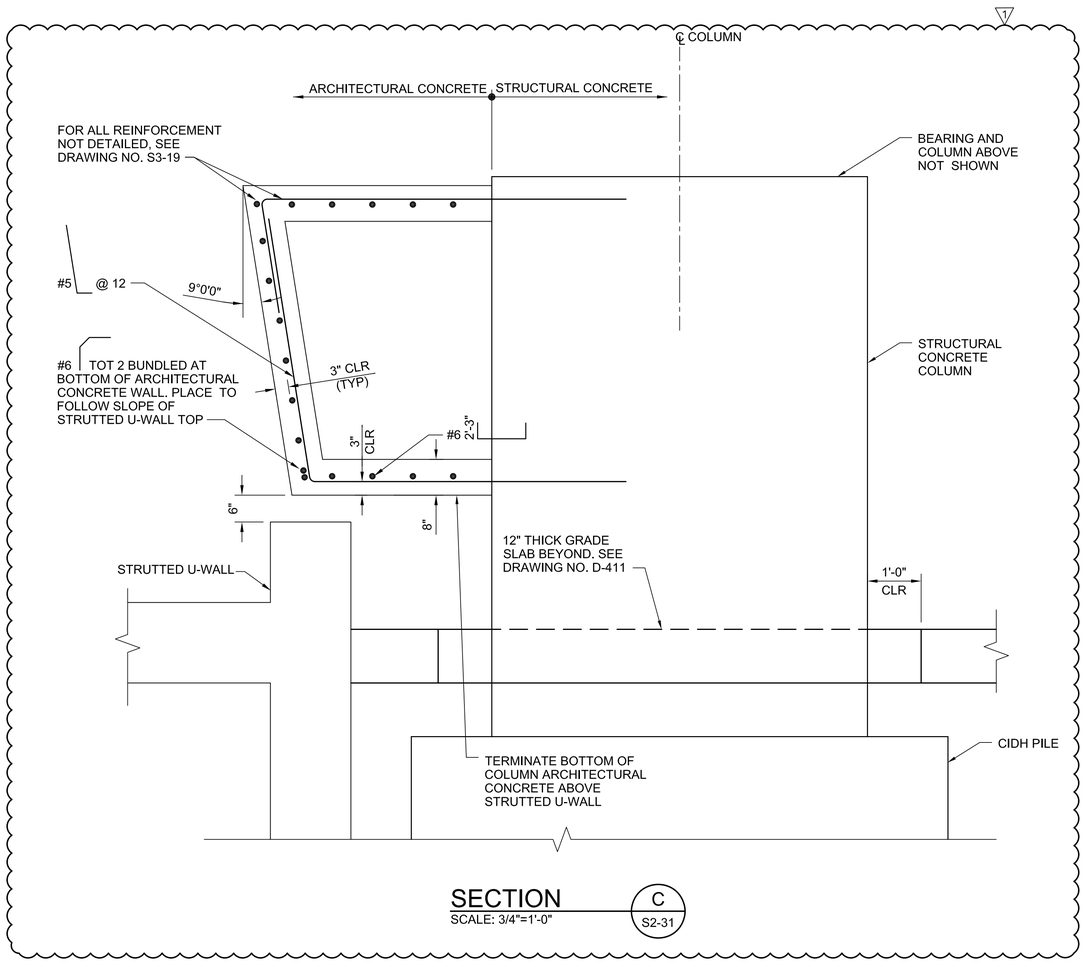

SECTION C
SCALE: 3/4"=1'-0"
S2-31

HNTB
HNTB Corporation
601 W. 5TH STREET SUITE 1000
LOS ANGELES, CALIFORNIA 90071
TEL (213) 403-1000 FAX (213) 403-1001

CITY OF LOS ANGELES DEPARTMENT OF PUBLIC WORKS
BUREAU OF ENGINEERING

ENGINEERING
CITY OF LOS ANGELES

NO.	REVISIONS:	DATE	BY:
1	ADDENDUM NO. 1	08/23/16	MHJ

STRUCTURE NO.
53C-2329

INDEX NO.

THIS PLAN WAS ELECTRONICALLY SIGNED AND STAMPED

REGISTERED PROFESSIONAL ENGINEER MICHAEL H. JONES No. S3033 CIVIL STATE OF CALIFORNIA

GARY LEE MOORE, P.E. CITY ENGINEER

		DATE:
DESIGN GROUP		
ENGINEER:	MICHAEL H. JONES LIC. NO. S3033	1/29/2016
DESIGNED BY:	JIANWA WANG / HAO LUO	1/29/2016
DRAWN BY:	LI ZHANG	1/29/2016
CHECKED BY:	DANIEL SUN	1/29/2016
APPROVED BY:	MICHAEL H. JONES	1/29/2016

VERTICAL CONTROL: BM 12-04070,1928 (NGVD 29) - 1985 ADJUSTMENT
HORIZONTAL CONTROL: GPS; PID AE 1704, EPOCH 1991.35

SHEET TITLE: RETAINING WALLS AT RIVER DETAILS NO. 3

PROJECT: SIXTH STREET VIADUCT REPLACEMENT

ADDRESS: SIXTH STREET VIADUCT (WHITTIER BLVD) LOS ANGELES, CA

WORK ORDER NO.
E700224F

DRAWING NO.
S2-35

SHEET 27 OF SHEETS

THE CITY OF LOS ANGELES OR ITS OFFICERS OR AGENTS SHALL NOT BE RESPONSIBLE FOR THE ACCURACY OR COMPLETENESS OF ELECTRONIC COPIES OF THIS PLAN SHEET.

REVISION DATES (DESIGN STAGE ONLY)

C:\caddlib\pw\pwwestcoast\zhang\dms57683\S2-32-WLD6-7.dwg 8/23/16 13:39

Sheet Version 3.0

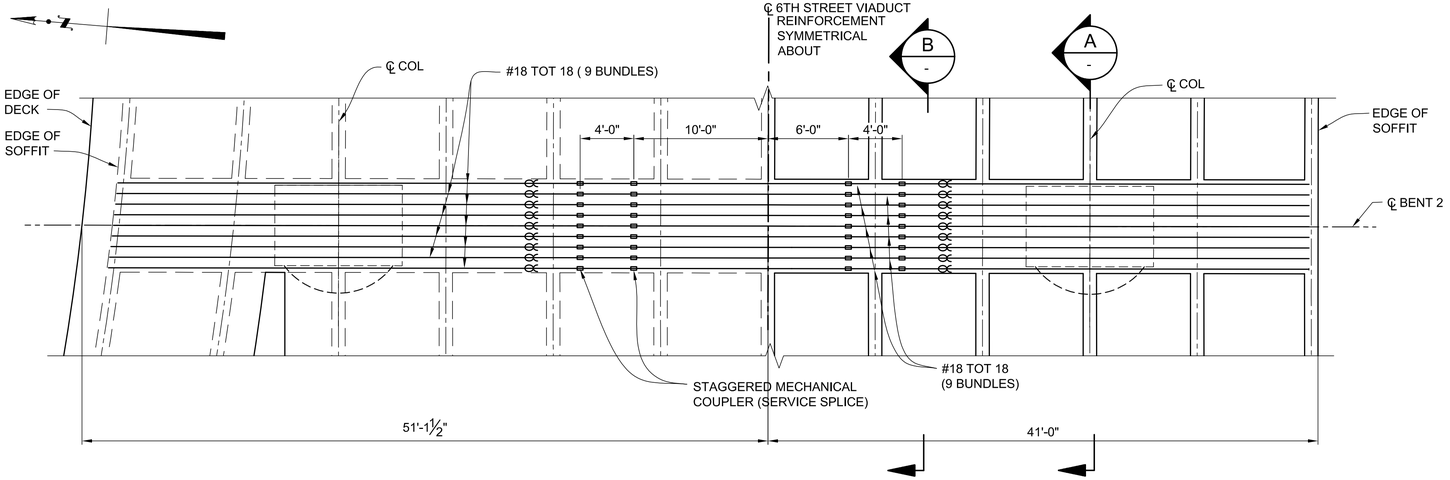

TOP REINF

PLAN
SCALE: 3/16" =1'-0"

BOTTOM REINF

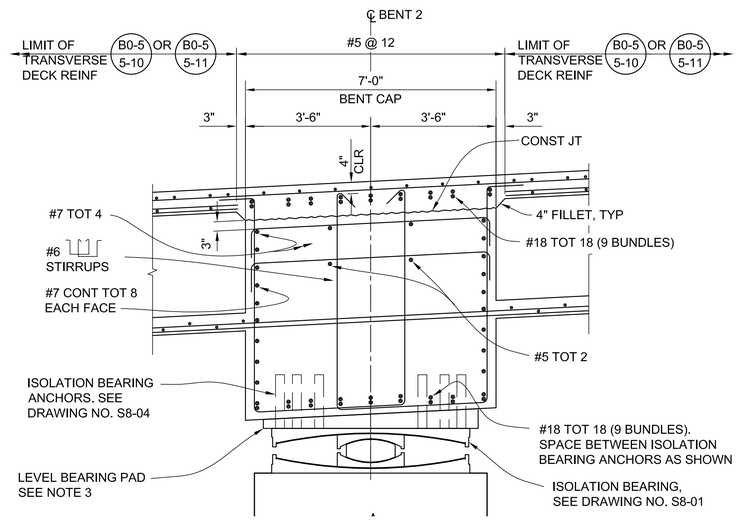

SECTION
SCALE: 1/2"=1'-0"

A
-

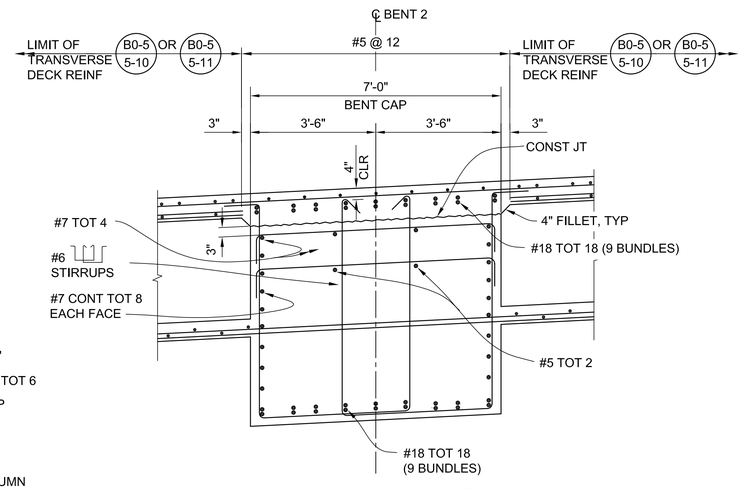

SECTION
SCALE: 1/2"=1'-0"

B
-

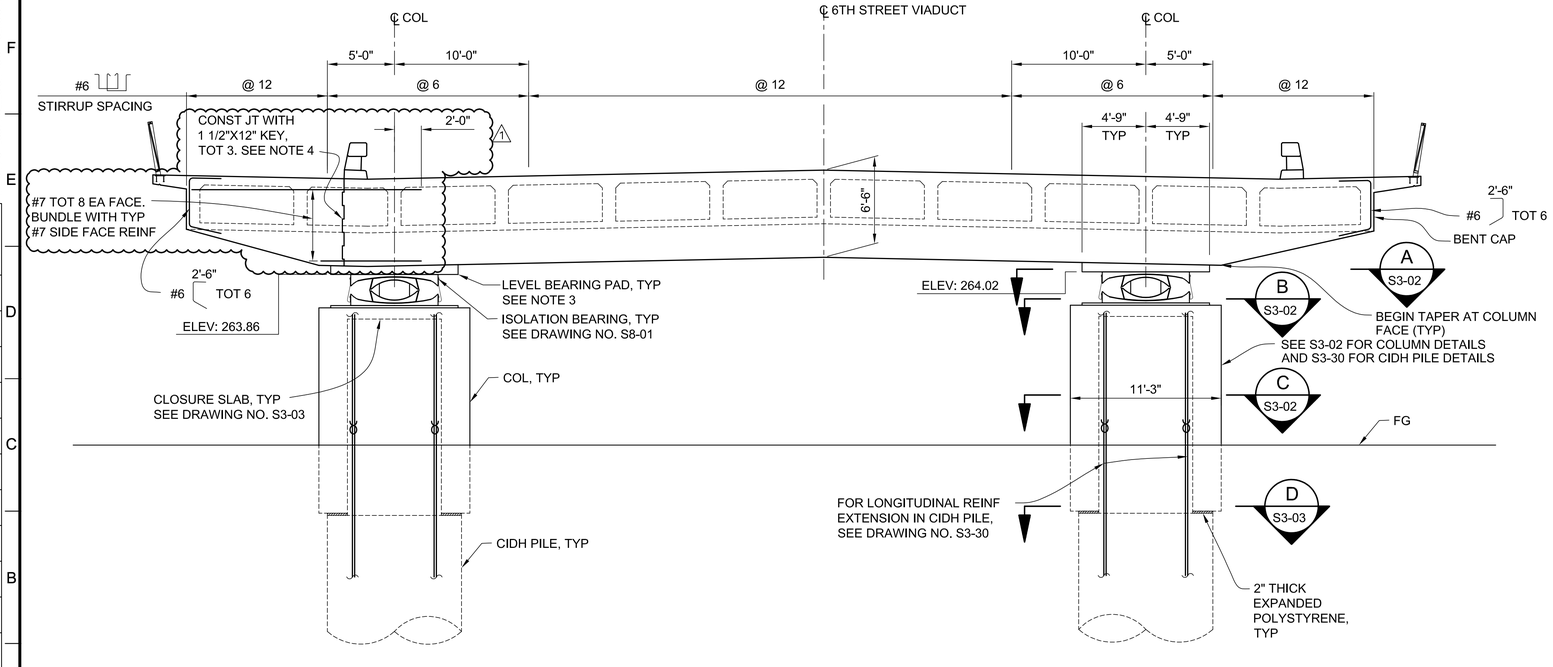

ELEVATION
SCALE: 3/16" =1'-0"

LEGEND:

BUNDLED BARS

NOTES:

1. SPLICE NOT ALLOWED IN COLUMN LONGITUDINAL REINFORCEMENT.
2. PLACE STIRRUPS PARALLEL TO GIRDERS.
3. PROVIDE A 6'-0" x 9'-6" LEVEL SURFACE AT BOTTOM OF THE BENT CAP TO ACCOMMODATE THE BEARING AND JACK BEARING AREA. FOR TYPICAL LEVEL BEARING PAD DETAILS, SEE SECTION A ON DRAWING NO. S3-06.

1 4. PRIOR TO PLACING NEW CONCRETE AT EXISTING CONSTRUCTION JOINT INTERFACE SURFACES, THE SURFACE SHALL BE PREPARED BY REMOVING ALL LAITTANCE AN INTENTIONALLY ROUGHENING THE CONCRETE SURFACE TO AN AMPLITUDE OF 1/4".

T.O. 5 - Change Order Serial Sketch No. 148 - Page 1 of 3

HNTB
HNTB Corporation
601 W. 5TH STREET SUITE 1000
LOS ANGELES, CALIFORNIA 90071
TEL (213) 403-1000 FAX (213) 403-1001

CITY OF LOS ANGELES DEPARTMENT OF PUBLIC WORKS
BUREAU OF ENGINEERING

ENGINEERING
CITY OF LOS ANGELES

GARY LEE MOORE, P.E. CITY ENGINEER

ENGINEER:	DESIGN GROUP	LIC. NO. S3033	DATE:
DESIGNED BY:	MICHAEL H. JONES		1/29/2016
DRAWN BY:	JIAHWA WANG / HAO LUO		1/29/2016
CHECKED BY:	LI ZHANG		1/29/2016
APPROVED BY:	PETER ZHAO		1/29/2016
APPROVED BY:	MICHAEL H. JONES		1/29/2016

NO.	REVISIONS:	DATE	BY:
1	RFI 10517 - SPAN 2 CONSTRUCTION JOINTS CO 148	10/15/21	MHJ

STRUCTURE NO. 53C-2329

INDEX NO.

REGISTERED PROFESSIONAL ENGINEER MICHAEL H. JONES No. S3033 CIVIL STATE OF CALIFORNIA

THIS PLAN WAS ELECTRONICALLY SIGNED AND STAMPED.

VERTICAL CONTROL: BM 12-04070,1929 (NGVD 29) - 1985 ADJUSTMENT
HORIZONTAL CONTROL: GPS; PID AE 1704, EPOCH 1991.35

SHEET TITLE: BENT 2 LAYOUT & DETAILS

PROJECT: SIXTH STREET VIADUCT REPLACEMENT

ADDRESS: SIXTH STREET VIADUCT (WHITTIER BLVD) LOS ANGELES, CA

WORK ORDER NO. E700224F

DRAWING NO. S3-01

SHEET 212 OF 560 SHEETS

REVISION DATES (DESIGN STAGE ONLY)

C:\caddlib\pw\west_c3p\dms57683\S3-01-BNL1.dwg 10/13/21 16:50

Sheet Version 3.0

THE CITY OF LOS ANGELES OR ITS OFFICERS OR AGENTS SHALL NOT BE RESPONSIBLE FOR THE ACCURACY OR COMPLETENESS OF ELECTRONIC COPIES OF THIS PLAN SHEET.

ADDENDUM 5

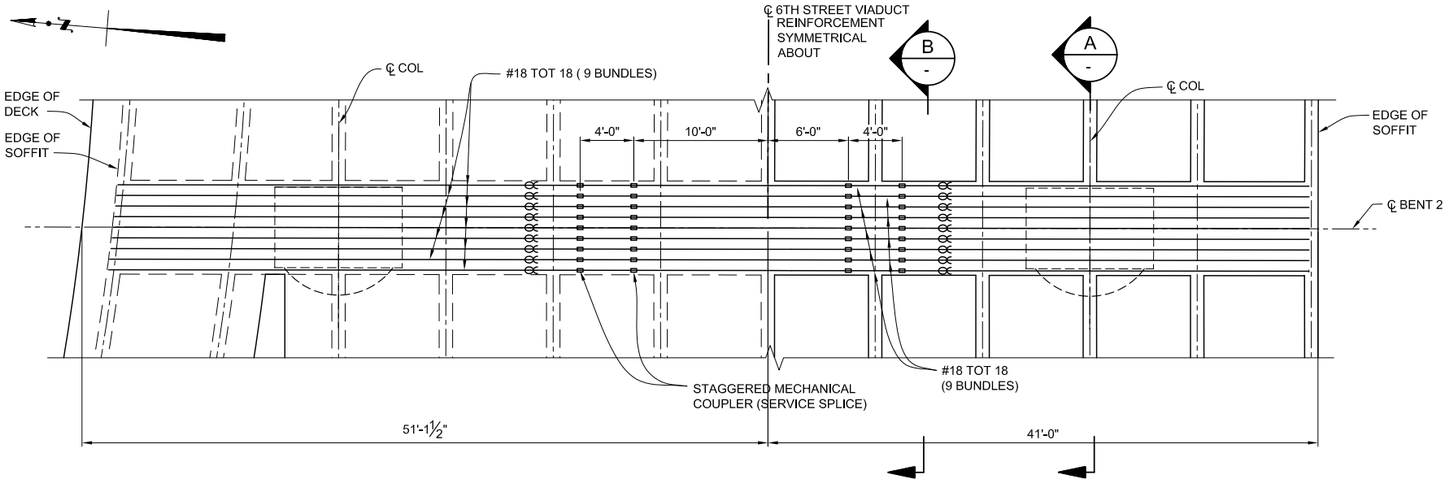

TOP REINF

BOTTOM REINF

PLAN

SCALE: 3/16" =1'-0"

The #7 TOT 4 Conflict with the Girder Ducts and cannot be installed 3" below construction joint. These bars need to be lowered and possibly bundled with the top #7 CONT TOT 8 EACH FACE.

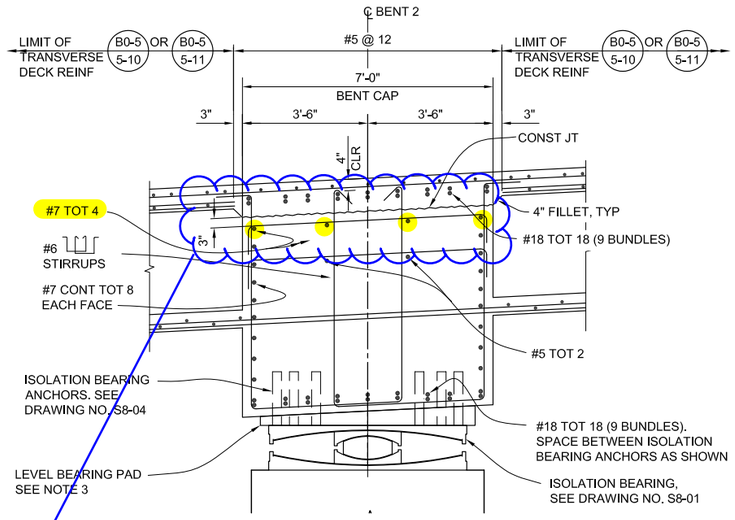

SECTION A

SCALE: 1/2"=1'-0"

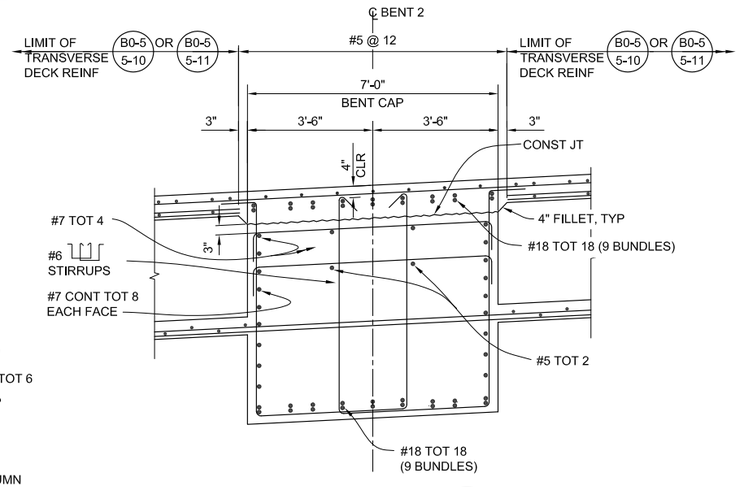

SECTION B

SCALE: 1/2"=1'-0"

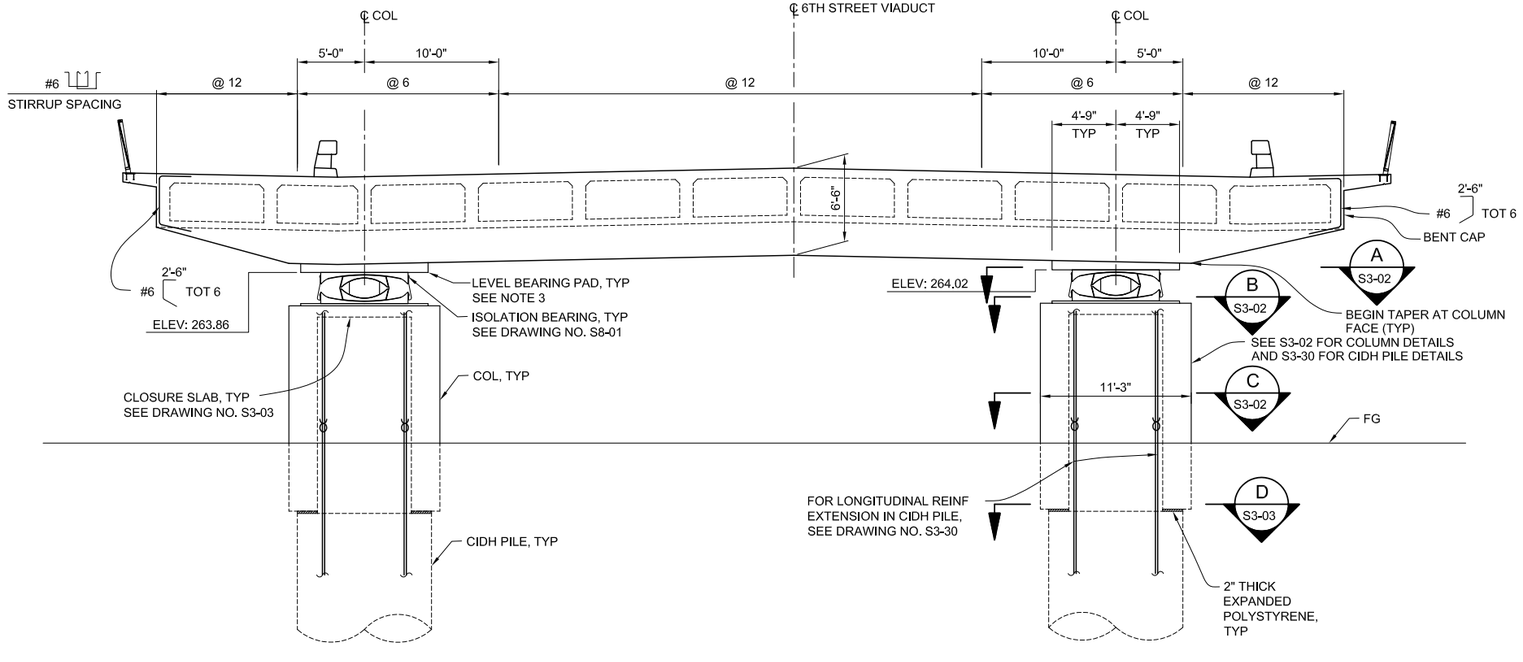

ELEVATION

SCALE: 3/16" =1'-0"

LEGEND:

BUNDLED BARS

NOTES:

1. SPLICE NOT ALLOWED IN COLUMN LONGITUDINAL REINFORCEMENT.
2. PLACE STIRRUPS PARALLEL TO GIRDERS.
3. PROVIDE A 6'-0" x 9'-6" LEVEL SURFACE AT BOTTOM OF THE BENT CAP TO ACCOMMODATE THE BEARING AND JACK BEARING AREA. FOR TYPICAL LEVEL BEARING PAD DETAILS, SEE SECTION A ON DRAWING NO. S3-06.

HNTB
HNTB Corporation
601 W. 5TH STREET SUITE 1000
LOS ANGELES, CALIFORNIA 90071
TEL (213) 403-1000 FAX (213) 403-1001

CITY OF LOS ANGELES
DEPARTMENT OF PUBLIC WORKS
BUREAU OF ENGINEERING

ENGINEERING
CITY OF LOS ANGELES

NO.	REVISIONS:	DATE:	BY:

STRUCTURE NO.
53C-2329

INDEX NO.

THIS PLAN WAS ELECTRONICALLY SIGNED AND STAMPED

REGISTERED PROFESSIONAL ENGINEER MICHAEL H. JONES No. S3033 CIVIL STATE OF CALIFORNIA

ENGINEER		DATE:
GARY LEE MOORE, P.E.	CITY ENGINEER	
ENGINEER:	MICHAEL H. JONES	1/29/2016
DESIGN GROUP	LIC. NO. S3033	1/29/2016
DESIGNED BY:	JIAHNA WANG / HAO LUO	1/29/2016
DRAWN BY:	LI ZHANG	1/29/2016
CHECKED BY:	PETER ZHAO	1/29/2016
APPROVED BY:	MICHAEL H. JONES	1/29/2016

VERTICAL CONTROL: BM 12-04070,1929 (NGVD 29) - 1985 ADJUSTMENT
HORIZONTAL CONTROL: GPS; PID AE 1704, EPOCH 1991.35

SHEET TITLE: BENT 2 LAYOUT & DETAILS

PROJECT: SIXTH STREET VIADUCT REPLACEMENT

ADDRESS: SIXTH STREET VIADUCT (WHITTIER BLVD) LOS ANGELES, CA

WORK ORDER NO.
E700224F

DRAWING NO.
S3-01

SHEET 212 OF 560 SHEETS

REVISION DATES (DESIGN STAGE ONLY)

THE CITY OF LOS ANGELES OR ITS OFFICERS OR AGENTS SHALL NOT BE RESPONSIBLE FOR THE ACCURACY OR COMPLETENESS OF ELECTRONIC COPIES OF THIS PLAN SHEET.

C:\caddlib\pw\pwwestcoast\lzhang\dms57683\S3-01-BNL1.dwg 6/27/16 16:07

Sheet Version 3.0

ADDENDUM 5

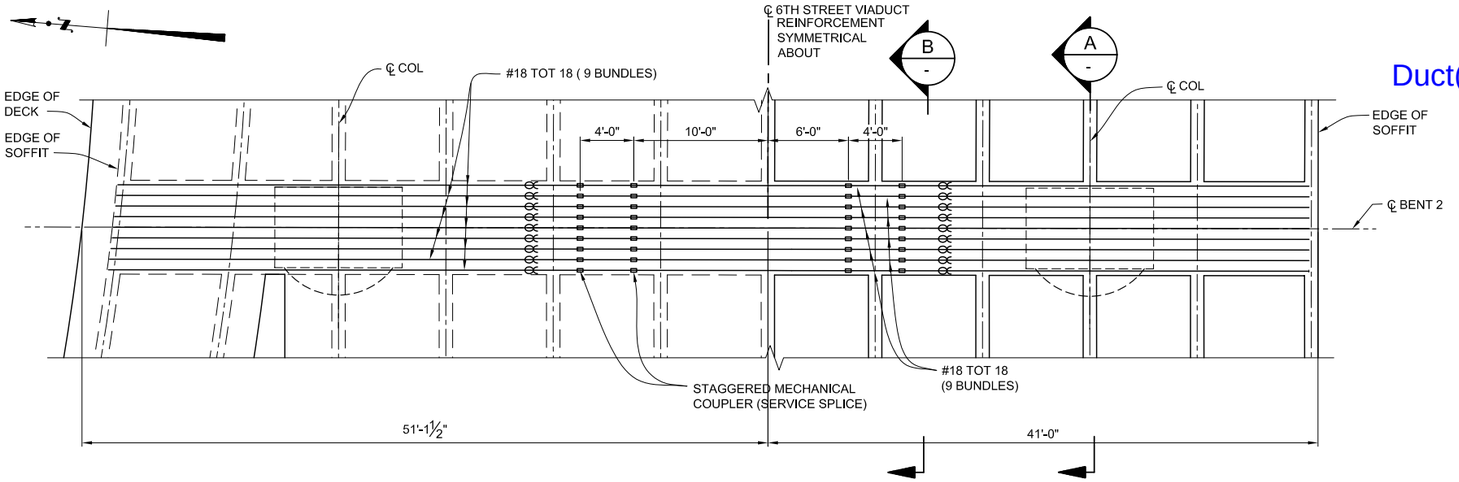

TOP REINF

PLAN
SCALE: 3/16" =1'-0"

BOTTOM REINF

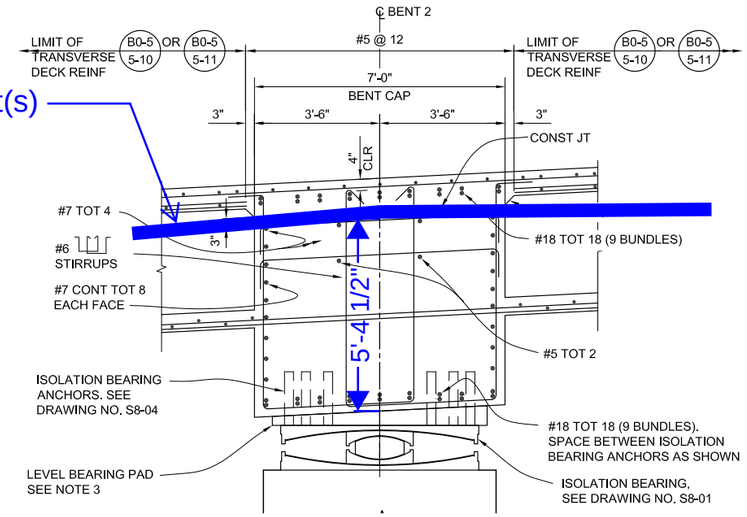

Girders A & B

SECTION
SCALE: 1/2"=1'-0"

A
-

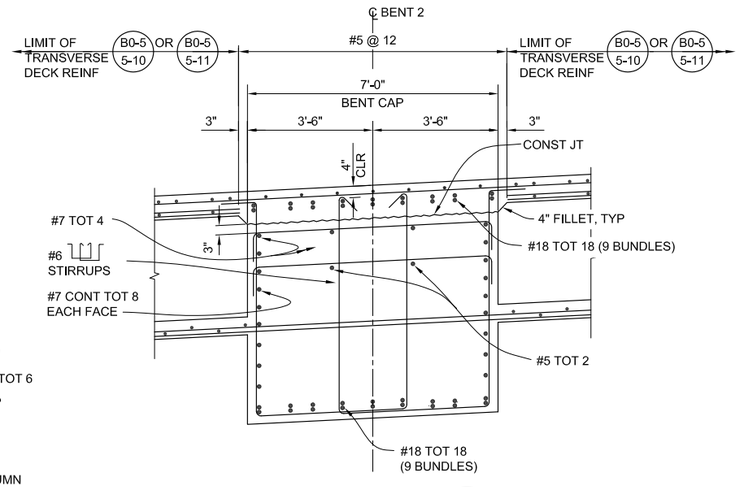

SECTION
SCALE: 1/2"=1'-0"

B
-

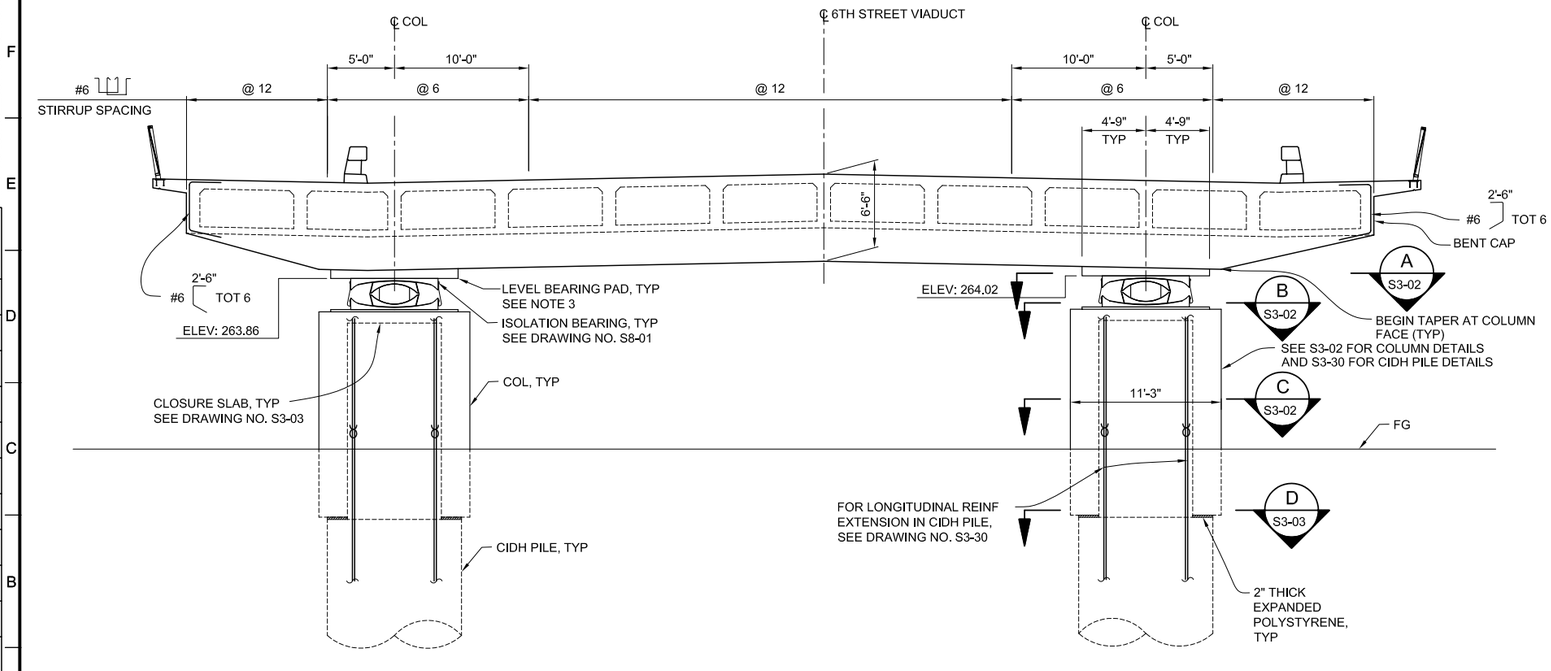

ELEVATION
SCALE: 3/16" =1'-0"

LEGEND:

⊸⊸ BUNDLED BARS

NOTES:

1. SPLICE NOT ALLOWED IN COLUMN LONGITUDINAL REINFORCEMENT.
2. PLACE STIRRUPS PARALLEL TO GIRDERS.
3. PROVIDE A 6'-0" x 9'-6" LEVEL SURFACE AT BOTTOM OF THE BENT CAP TO ACCOMMODATE THE BEARING AND JACK BEARING AREA. FOR TYPICAL LEVEL BEARING PAD DETAILS, SEE SECTION A ON DRAWING NO. S3-06.

HNTB
HNTB Corporation
601 W. 5TH STREET SUITE 1000
LOS ANGELES, CALIFORNIA 90071
TEL (213) 403-1000 FAX (213) 403-1001

THE CITY OF LOS ANGELES OR ITS OFFICERS OR AGENTS SHALL NOT BE RESPONSIBLE FOR THE ACCURACY OR COMPLETENESS OF ELECTRONIC COPIES OF THIS PLAN SHEET.

C:\caddlib\pw\pwwestcoast\lzhang\dms57683\S3-01-BNL1.dwg 6/27/16 16:07

Sheet Version 3.0

REVISION DATES (DESIGN STAGE ONLY)

CITY OF LOS ANGELES DEPARTMENT OF PUBLIC WORKS BUREAU OF ENGINEERING

ENGINEERING
CITY OF LOS ANGELES

NO.	REVISIONS:	DATE:	BY:

STRUCTURE NO.
53C-2329

INDEX NO.

THIS PLAN WAS ELECTRONICALLY SIGNED AND STAMPED.

REGISTERED PROFESSIONAL ENGINEER MICHAEL H. JONES No. S3033 CIVIL STATE OF CALIFORNIA

ENGINEER		DATE:
GARY LEE MOORE, P.E.	CITY ENGINEER	
DESIGN GROUP	LIC. NO. S3033	1/29/2016
ENGINEER: MICHAEL H. JONES		1/29/2016
DESIGNED BY: JIANYA WANG / HAO LUO		1/29/2016
DRAWN BY: LI ZHANG		1/29/2016
CHECKED BY: PETER ZHAO		1/29/2016
APPROVED BY: MICHAEL H. JONES		1/29/2016

VERTICAL CONTROL: BM 12-04070,1929 (NGVD 29) - 1985 ADJUSTMENT
HORIZONTAL CONTROL: GPS; PID AE 1704, EPOCH 1991.35

SHEET TITLE: BENT 2 LAYOUT & DETAILS

PROJECT: SIXTH STREET VIADUCT REPLACEMENT

ADDRESS: SIXTH STREET VIADUCT (WHITTIER BLVD) LOS ANGELES, CA

WORK ORDER NO.
E700224F

DRAWING NO.
S3-01

SHEET 212 OF 560 SHEETS

ADDENDUM 5

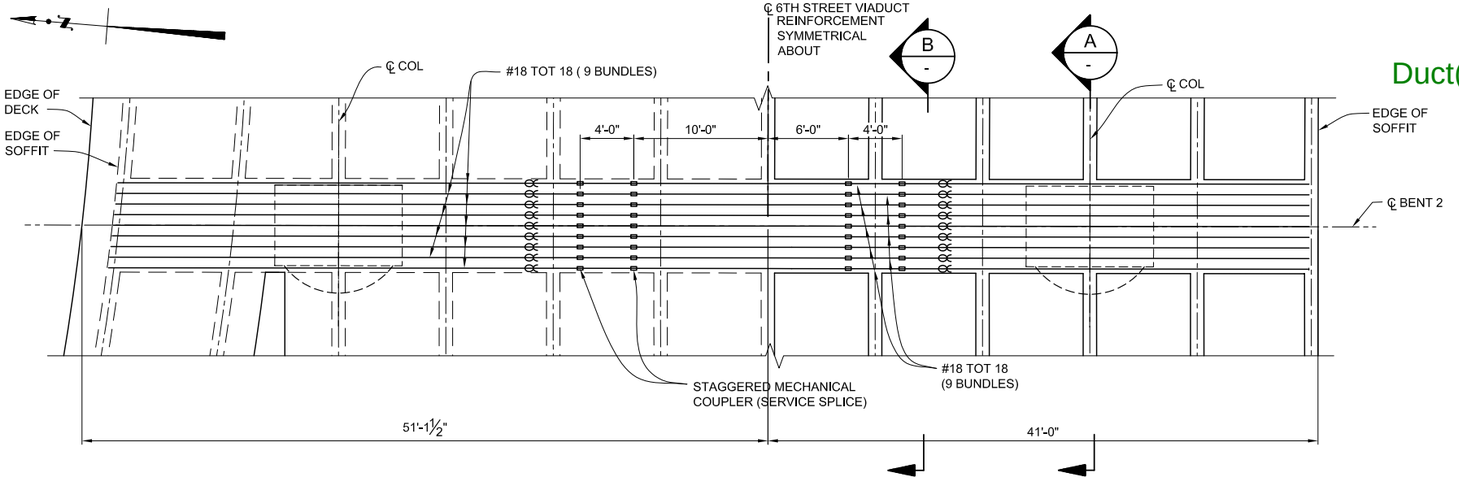

TOP REINF

PLAN
SCALE: 3/16" =1'-0"

BOTTOM REINF

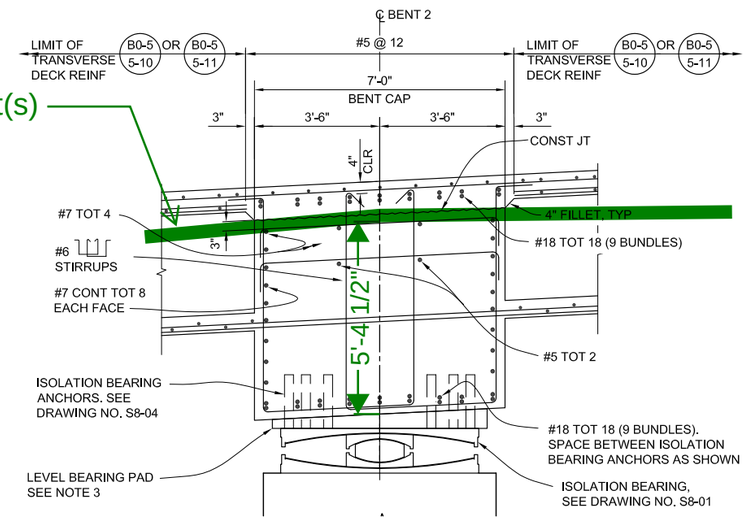

Girders C, D, E & F

SECTION A
SCALE: 1/2"=1'-0"

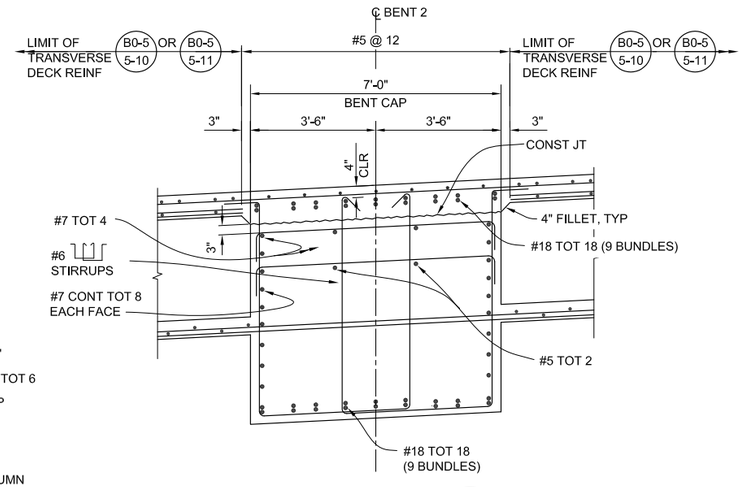

SECTION B
SCALE: 1/2"=1'-0"

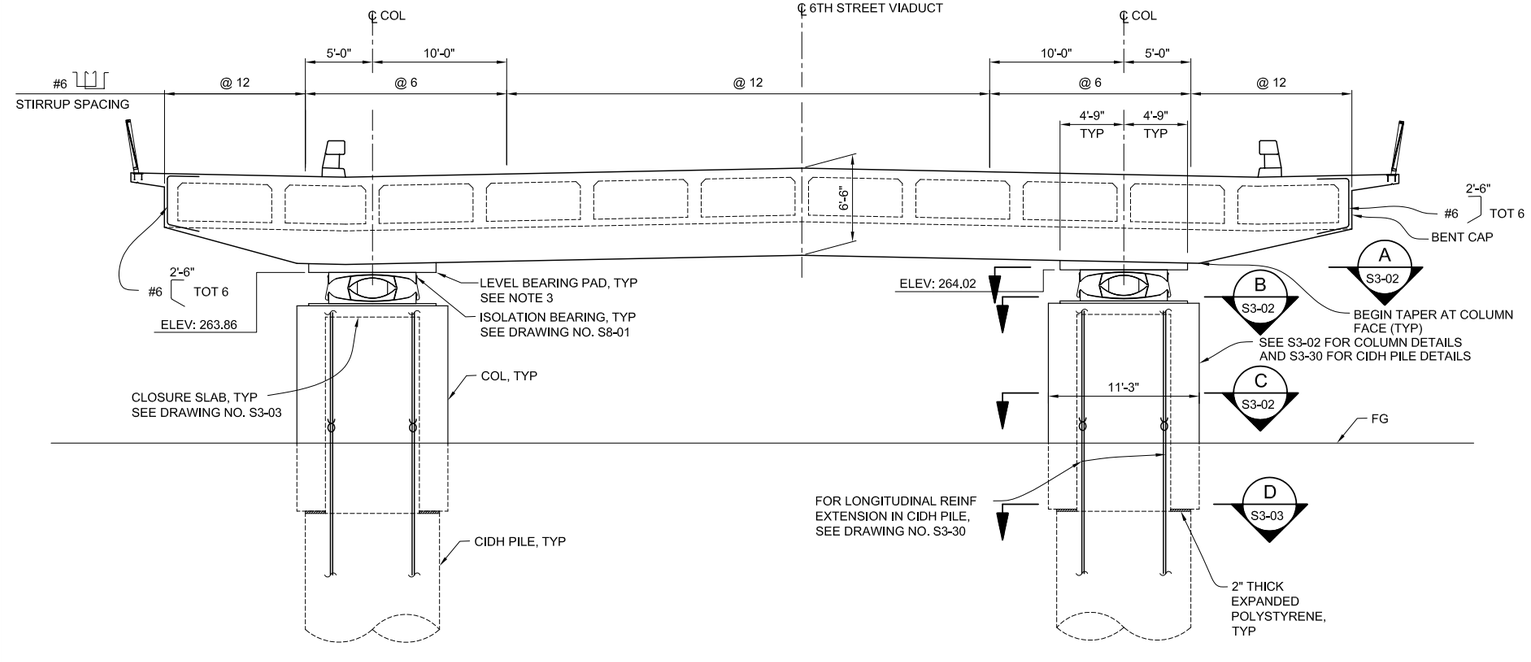

ELEVATION
SCALE: 3/16" =1'-0"

LEGEND:

⊸⊸ BUNDLED BARS

NOTES:

1. Ssplice not allowed in column longitudinal reinforcement.
2. Place stirrups parallel to girders.
3. Provide a 6'-0" x 9'-6" level surface at bottom of the bent cap to accommodate the bearing and jack bearing area. For typical level bearing pad details, see Section A on drawing no. S3-06.

HNTB
HNTB Corporation
601 W. 5TH STREET SUITE 1000
LOS ANGELES, CALIFORNIA 90071
TEL (213) 403-1000 FAX (213) 403-1001

CITY OF LOS ANGELES DEPARTMENT OF PUBLIC WORKS BUREAU OF ENGINEERING

ENGINEERING — CITY OF LOS ANGELES

GARY LEE MOORE, P.E. — CITY ENGINEER

ENGINEER:	DESIGN GROUP	LIC. NO. S3033	DATE:
DESIGNED BY:	MICHAEL H. JONES		1/29/2016
DRAWN BY:	JIAHNA WANG / HAO LUO		1/29/2016
CHECKED BY:	LI ZHANG		1/29/2016
APPROVED BY:	PETER ZHAO		1/29/2016
	MICHAEL H. JONES		1/29/2016

NO.	REVISIONS:	BY:	DATE:

STRUCTURE NO. 53C-2329

INDEX NO.

THIS PLAN WAS ELECTRONICALLY SIGNED AND STAMPED.

REGISTERED PROFESSIONAL ENGINEER — MICHAEL H. JONES — No. S3033 — CIVIL — STATE OF CALIFORNIA

VERTICAL CONTROL:	BM 12-04070, 1929 (NGVD 29) - 1985 ADJUSTMENT
HORIZONTAL CONTROL:	GPS; PID AE 1704, EPOCH 1991.35
SHEET TITLE:	BENT 2 LAYOUT & DETAILS
PROJECT:	SIXTH STREET VIADUCT REPLACEMENT
ADDRESS:	SIXTH STREET VIADUCT (WHITTIER BLVD) LOS ANGELES, CA

WORK ORDER NO. E700224F

DRAWING NO. S3-01

SHEET 212 OF 560 SHEETS

REVISION DATES (DESIGN STAGE ONLY)

THE CITY OF LOS ANGELES OR ITS OFFICERS OR AGENTS SHALL NOT BE RESPONSIBLE FOR THE ACCURACY OR COMPLETENESS OF ELECTRONIC COPIES OF THIS PLAN SHEET.

C:\caddlib\pw\pwwestcoast\lzhang\dms57683\S3-01-BNL1.dwg 6/27/16 16:07

Sheet Version 3.0

ADDENDUM 5

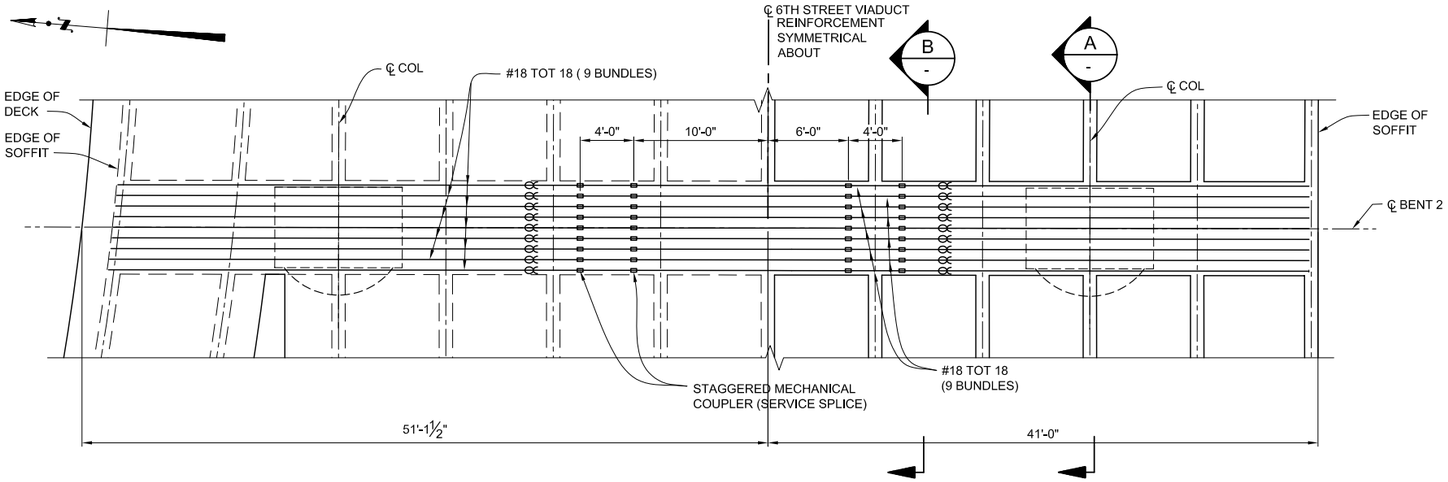

TOP REINF

PLAN
SCALE: 3/16" =1'-0"

BOTTOM REINF

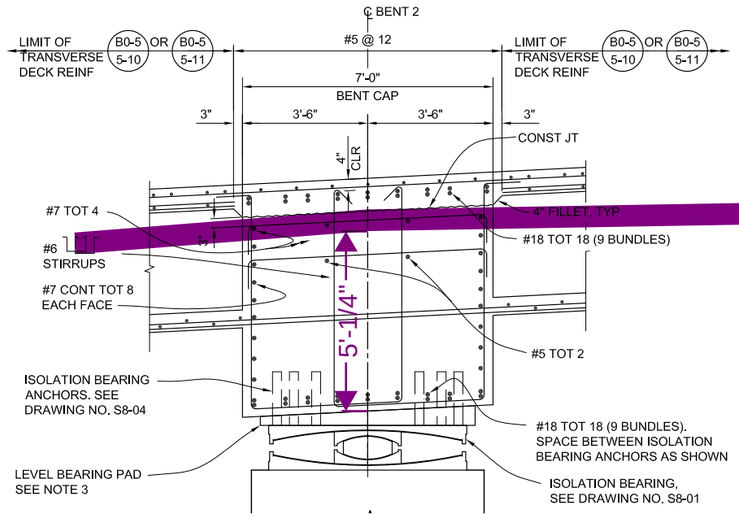

Girders G, H & I

SECTION
SCALE: 1/2"=1'-0"

A
-

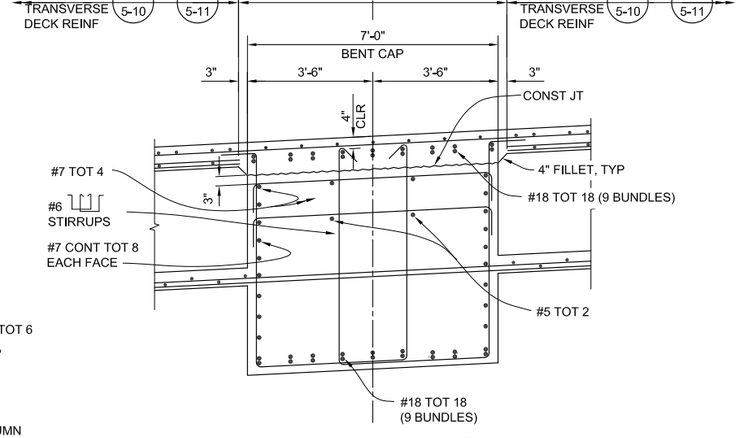

SECTION
SCALE: 1/2"=1'-0"

B
-

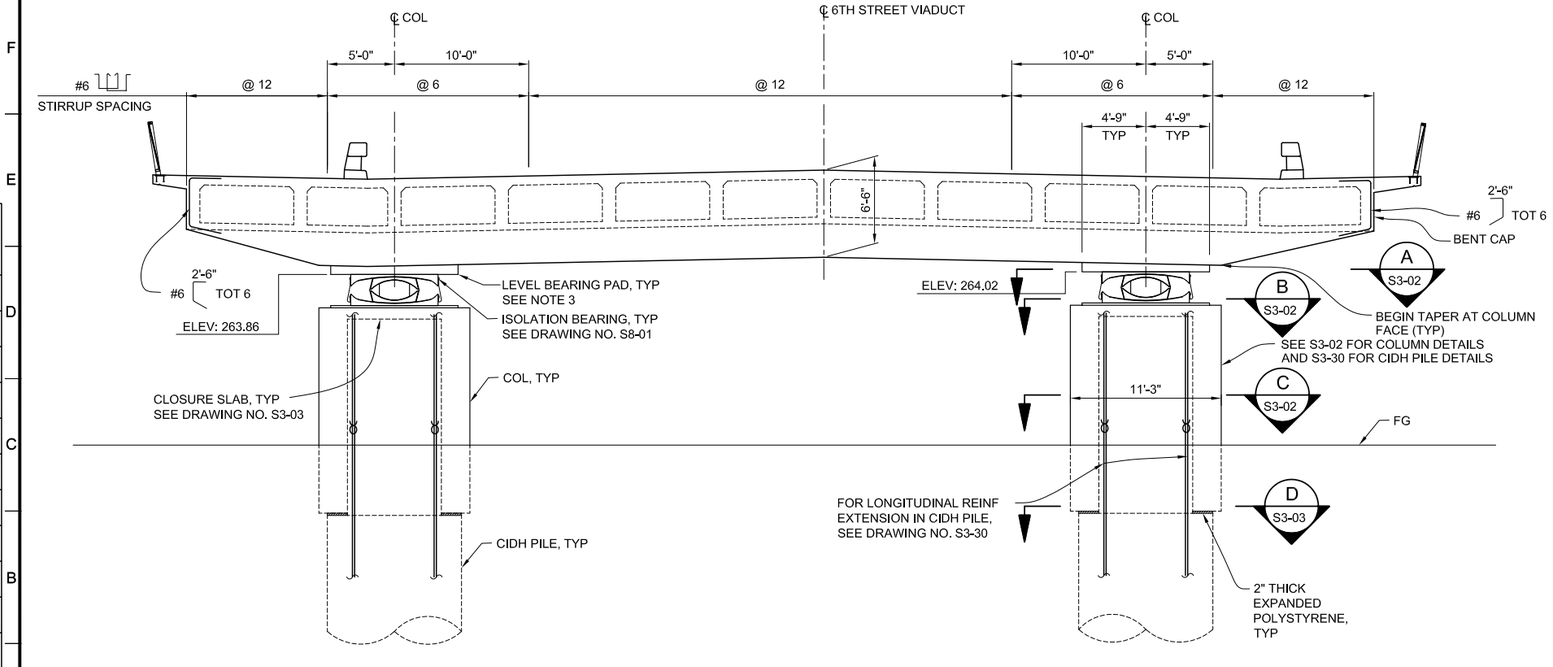

ELEVATION
SCALE: 3/16" =1'-0"

LEGEND:

⟶⟶ BUNDLED BARS

NOTES:

1. SPLICE NOT ALLOWED IN COLUMN LONGITUDINAL REINFORCEMENT.
2. PLACE STIRRUPS PARALLEL TO GIRDERS.
3. PROVIDE A 6'-0" x 9'-6" LEVEL SURFACE AT BOTTOM OF THE BENT CAP TO ACCOMMODATE THE BEARING AND JACK BEARING AREA. FOR TYPICAL LEVEL BEARING PAD DETAILS, SEE SECTION A ON DRAWING NO. S3-06.

HNTB
HNTB Corporation
601 W. 5TH STREET SUITE 1000
LOS ANGELES, CALIFORNIA 90071
TEL (213) 403-1000 FAX (213) 403-1001

THE CITY OF LOS ANGELES OR ITS OFFICERS OR AGENTS SHALL NOT BE RESPONSIBLE FOR THE ACCURACY OR COMPLETENESS OF ELECTRONIC COPIES OF THIS PLAN SHEET.

C:\caddlib\pw\pwwestcoast\lzhang\dms57683\S3-01-BNL1.dwg 6/27/16 16:07

Sheet Version 3.0

REVISION DATES (DESIGN STAGE ONLY)

CITY OF LOS ANGELES DEPARTMENT OF PUBLIC WORKS
BUREAU OF ENGINEERING
ENGINEERING
CITY OF LOS ANGELES

NO.	REVISIONS:	DATE:	BY:

STRUCTURE NO. 53C-2329

INDEX NO.

THIS PLAN WAS ELECTRONICALLY SIGNED AND STAMPED.

REGISTERED PROFESSIONAL ENGINEER MICHAEL H. JONES No. S3033 CIVIL STATE OF CALIFORNIA

GARY LEE MOORE, P.E.	CITY ENGINEER		
	DESIGN GROUP	LIC. NO. S3033	DATE:
ENGINEER:	MICHAEL H. JONES		1/29/2016
DESIGNED BY:	JIAHNA WANG / HAO LUO		1/29/2016
DRAWN BY:	LI ZHANG		1/29/2016
CHECKED BY:	PETER ZHAO		1/29/2016
APPROVED BY:	MICHAEL H. JONES		1/29/2016

VERTICAL CONTROL: BM 12-04070,1929 (NGVD 29) - 1985 ADJUSTMENT
HORIZONTAL CONTROL: GPS; PID AE 1704, EPOCH 1991.35

SHEET TITLE: BENT 2 LAYOUT & DETAILS

PROJECT: SIXTH STREET VIADUCT REPLACEMENT

ADDRESS: SIXTH STREET VIADUCT (WHITTIER BLVD) LOS ANGELES, CA

WORK ORDER NO. E700224F

DRAWING NO. S3-01

SHEET 212 OF 560 SHEETS

ADDENDUM 5

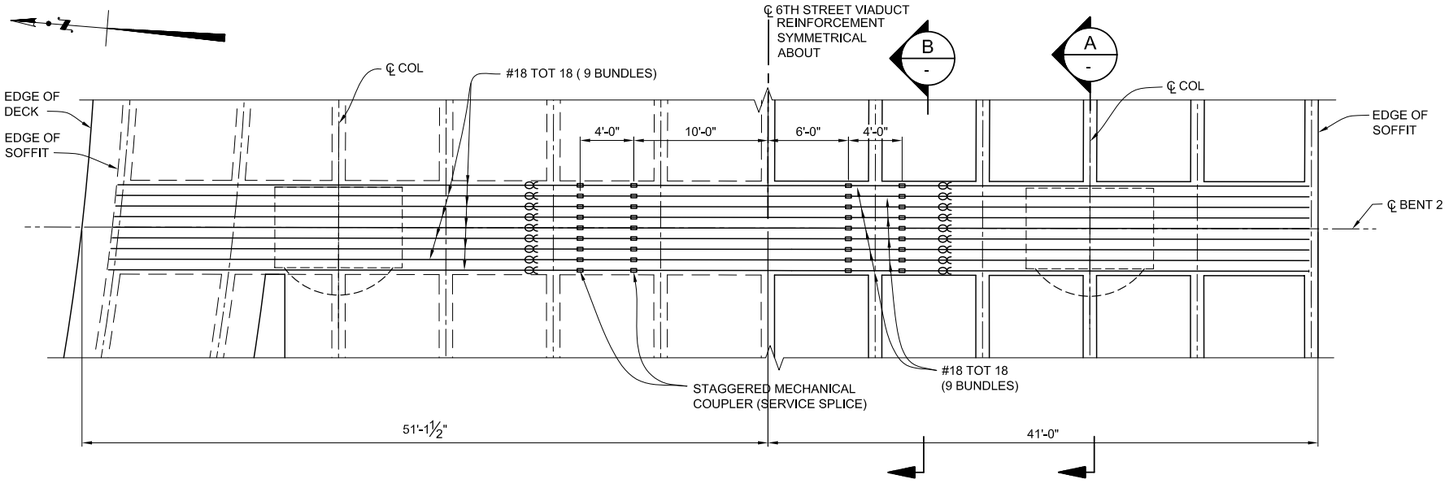

TOP REINF

PLAN
SCALE: 3/16" =1'-0"

BOTTOM REINF

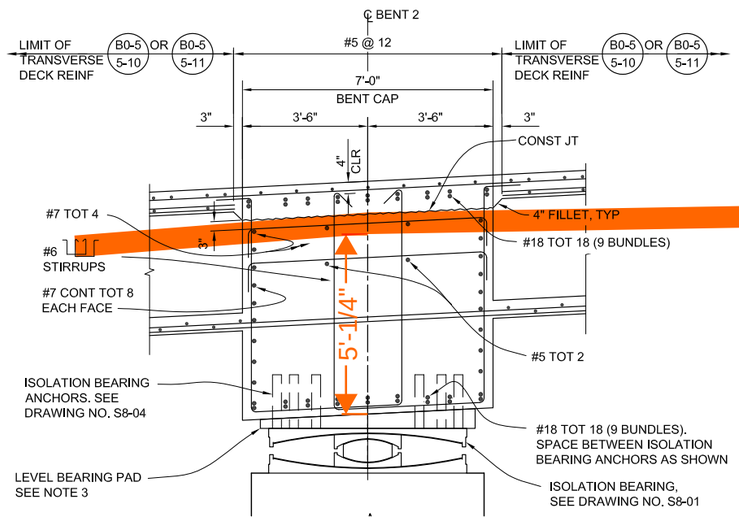

Girders J, K & L

SECTION A
SCALE: 1/2"=1'-0"

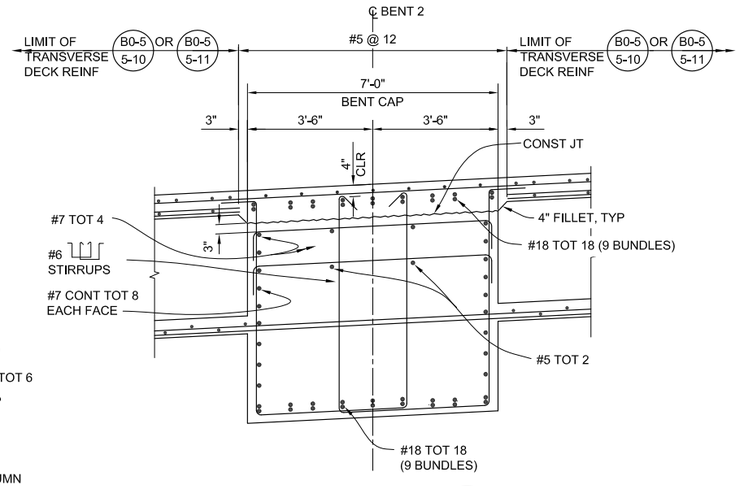

SECTION B
SCALE: 1/2"=1'-0"

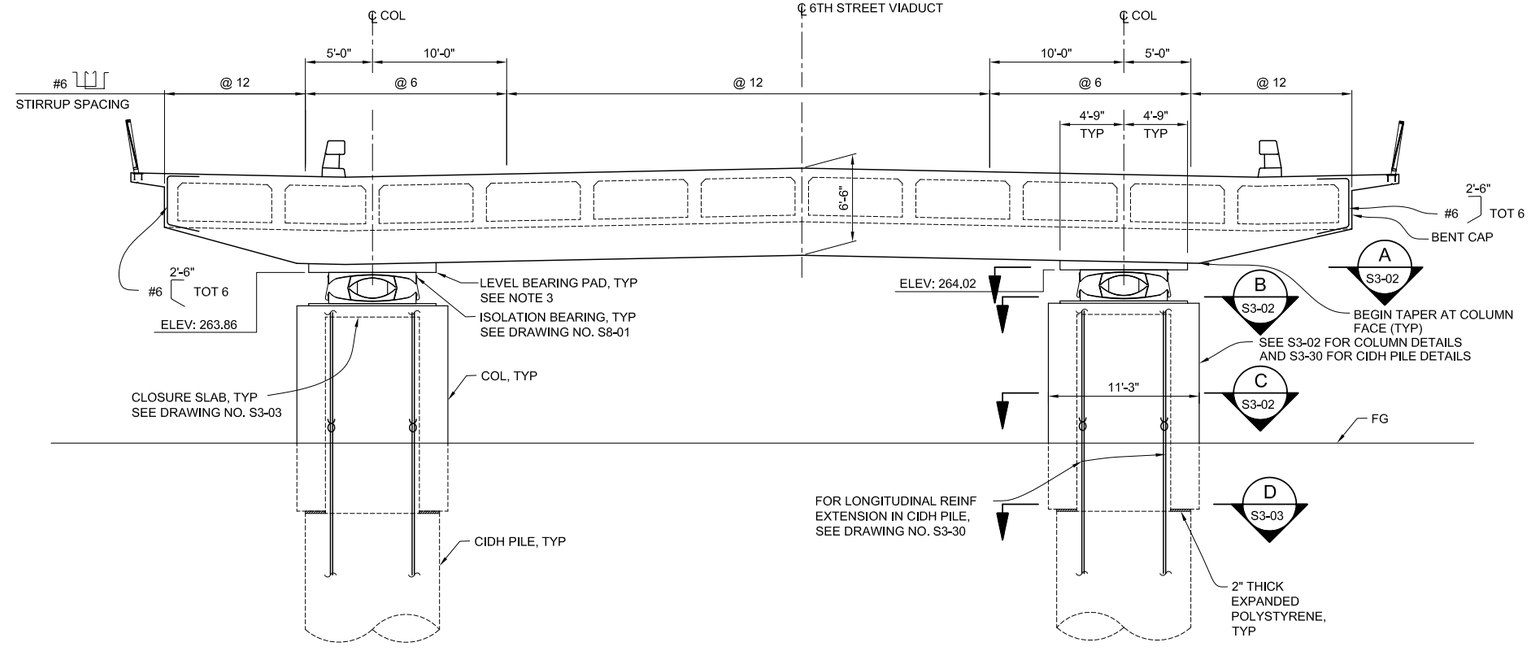

ELEVATION
SCALE: 3/16" =1'-0"

LEGEND:

⟶⟶ BUNDLED BARS

NOTES:

1. Ssplice not allowed in column longitudinal reinforcement.
2. Place stirrups parallel to girders.
3. Provide a 6'-0" x 9'-6" level surface at bottom of the bent cap to accommodate the bearing and jack bearing area. For typical level bearing pad details, see Section A on drawing no. S3-06.

HNTB
HNTB Corporation
601 W. 5TH STREET SUITE 1000
LOS ANGELES, CALIFORNIA 90071
TEL (213) 403-1000 FAX (213) 403-1001

CITY OF LOS ANGELES DEPARTMENT OF PUBLIC WORKS BUREAU OF ENGINEERING

ENGINEERING — CITY OF LOS ANGELES

STRUCTURE NO. 53C-2329

INDEX NO.

NO.	REVISIONS:	DATE:	BY:

THIS PLAN WAS ELECTRONICALLY SIGNED AND STAMPED.

REGISTERED PROFESSIONAL ENGINEER — MICHAEL H. JONES — No. S3033 — CIVIL — STATE OF CALIFORNIA

GARY LEE MOORE, P.E. — CITY ENGINEER

	DESIGN GROUP	LIC. NO. S3033	DATE:
ENGINEER:	MICHAEL H. JONES		1/29/2016
DESIGNED BY:	JIAHNA WANG / HAO LUO		1/29/2016
DRAWN BY:	LI ZHANG		1/29/2016
CHECKED BY:	PETER ZHAO		1/29/2016
APPROVED BY:	MICHAEL H. JONES		1/29/2016

VERTICAL CONTROL: BM 12-04070,1929 (NGVD 29) - 1985 ADJUSTMENT
HORIZONTAL CONTROL: GPS; PID AE 1704, EPOCH 1991.35

SHEET TITLE: BENT 2 LAYOUT & DETAILS

PROJECT: SIXTH STREET VIADUCT REPLACEMENT

ADDRESS: SIXTH STREET VIADUCT (WHITTIER BLVD) LOS ANGELES, CA

WORK ORDER NO. E700224F

DRAWING NO. S3-01

SHEET 212 OF 560 SHEETS

REVISION DATES (DESIGN STAGE ONLY)

THE CITY OF LOS ANGELES OR ITS OFFICERS OR AGENTS SHALL NOT BE RESPONSIBLE FOR THE ACCURACY OR COMPLETENESS OF ELECTRONIC COPIES OF THIS PLAN SHEET.

C:\caddlib\pw\pwwestcoast\lzhang\dms57683\S3-01-BNL1.dwg 6/27/16 16:07

Sheet Version 3.0

ADDENDUM 5

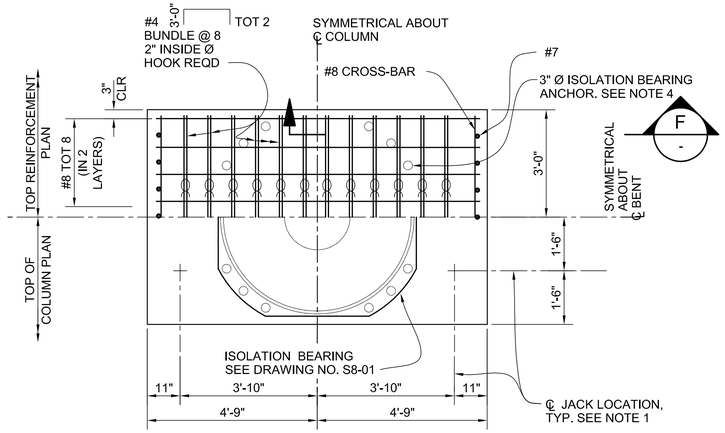

SECTION

SCALE: 1/2"=1'-0"

A S3-01

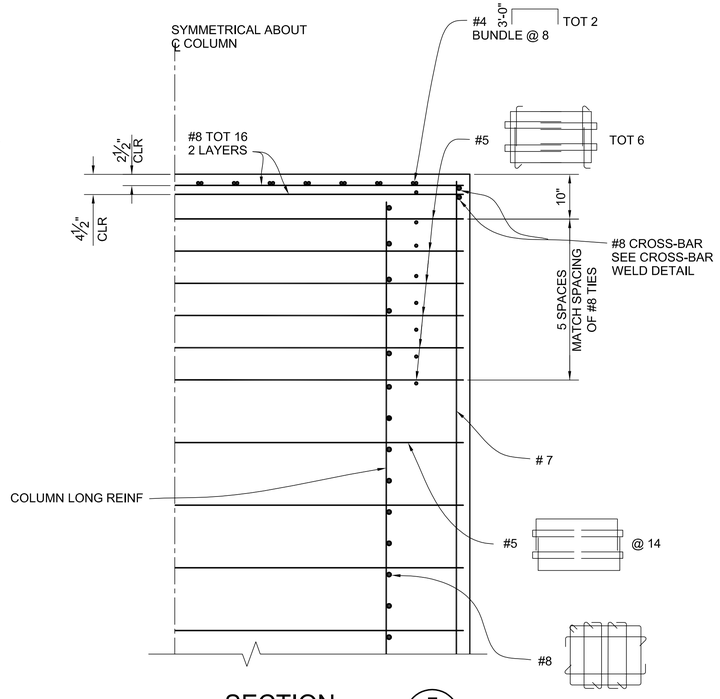

SECTION

SCALE: 3/4"=1'-0"

F -

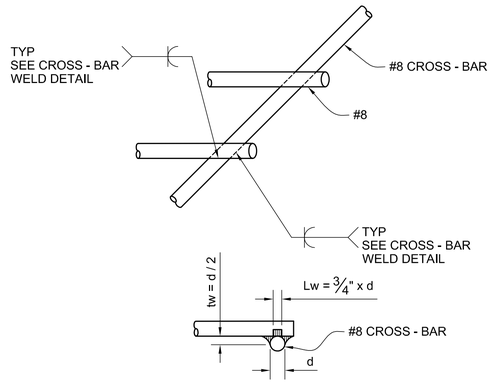

CROSS - BAR WELD DETAIL

NO SCALE

LEGEND:

BUNDLE BAR

NOTES:

1. FOR REQUIRED JACKING DEAD LOADS AT EACH BEARING, SEE DRAWING S8-01.
2. ALL COLUMN LONGITUDINAL #18 BARS ARE ASTM A706 GRADE 80.
3. ARCHITECTURAL CONCRETE TYPICALLY NOT SHOWN FOR CLARITY. FOR ARCHITECTURAL CONCRETE REINFORCEMENT, SEE SHEET S3-03.
4. ADJUST SPACING OF REINFORCEMENT AS REQUIRED TO PROVIDE CLEARANCE FOR ISOLATION BEARING ANCHORS. SEE DRAWING NO. S8-04.

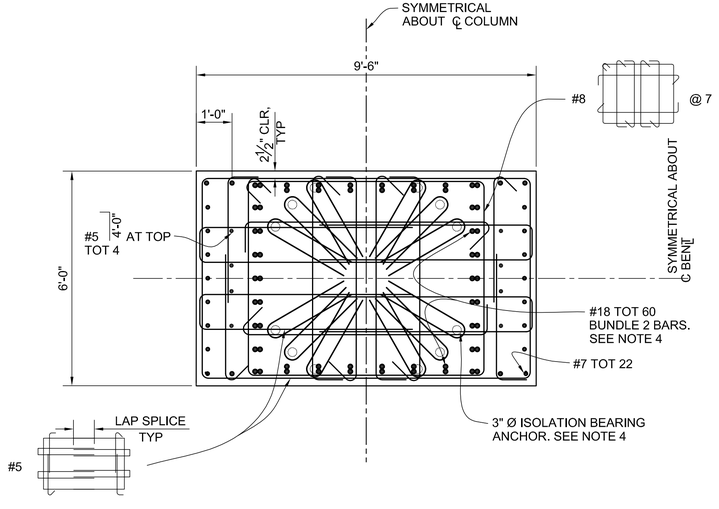

SECTION

SCALE: 1/2"=1'-0"

B S3-01

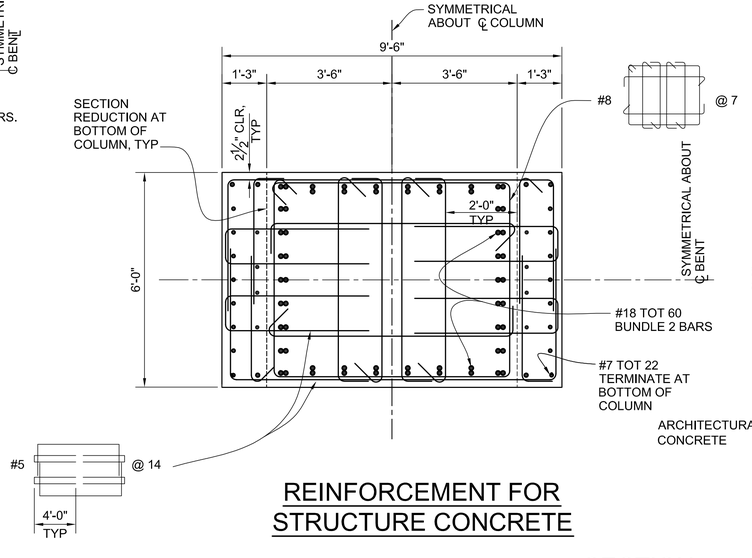

REINFORCEMENT FOR STRUCTURE CONCRETE

SECTION

SCALE: 1/2"=1'-0"

C S3-01

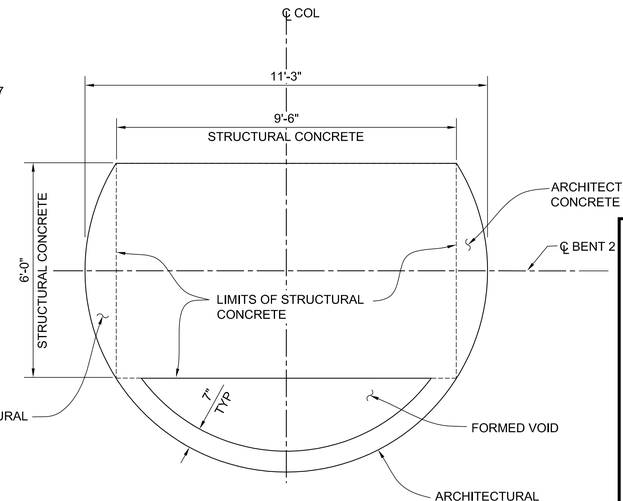

GEOMETRY

HNTB
HNTB Corporation
601 W. 5TH STREET SUITE 1000
LOS ANGELES, CALIFORNIA 90071
TEL (213) 403-1000 FAX (213) 403-1001

BUREAU OF ENGINEERING
OFFICIAL RECORD

CITY OF LOS ANGELES DEPARTMENT OF PUBLIC WORKS
BUREAU OF ENGINEERING

ENGINEERING
CITY OF LOS ANGELES

GARY LEE MOORE, P.E.
CITY ENGINEER

NO.	REVISIONS:	DATE:	BY:

STRUCTURE NO. 53C-2329

INDEX NO. P-38113

THIS PLAN WAS ELECTRONICALLY SIGNED AND STAMPED.

REGISTERED PROFESSIONAL ENGINEER MICHAEL H. JONES No. S3033 CIVIL STATE OF CALIFORNIA

ENGINEER	DATE:
ENGINEER: MICHAEL H. JONES	1/29/2016
LIC. NO. S3033	1/29/2016
DESIGN GROUP	1/29/2016
DESIGNED BY: JIANHUA WANG / HAO LUO	1/29/2016
DRAWN BY: LI ZHANG	1/29/2016
CHECKED BY: PETER ZHAO	1/29/2016
APPROVED BY: MICHAEL H. JONES	1/29/2016

VERTICAL CONTROL: BM 12-04070,1929 (NGVD 29) - 1985 ADJUSTMENT
HORIZONTAL CONTROL: GPS; PID AE 1704, EPOCH 1991.35

SHEET TITLE: BENT 2 DETAILS NO. 1

PROJECT: SIXTH STREET VIADUCT REPLACEMENT

ADDRESS: SIXTH STREET VIADUCT (WHITTIER BLVD) LOS ANGELES, CA

WORK ORDER NO. E700224F

DRAWING NO. S3-02

SHEET 213 OF 560 SHEETS

REVISION DATES (DESIGN STAGE ONLY)

THE CITY OF LOS ANGELES OR ITS OFFICERS OR AGENTS SHALL NOT BE RESPONSIBLE FOR THE ACCURACY OR COMPLETENESS OF ELECTRONIC COPIES OF THIS PLAN SHEET.

C:\caddlib\pw\pwwestcoast\zhang\dms57683\S3-02-BN002.dwg 6/27/16 16:16

Sheet Version 3.0

ADDENDUM 5

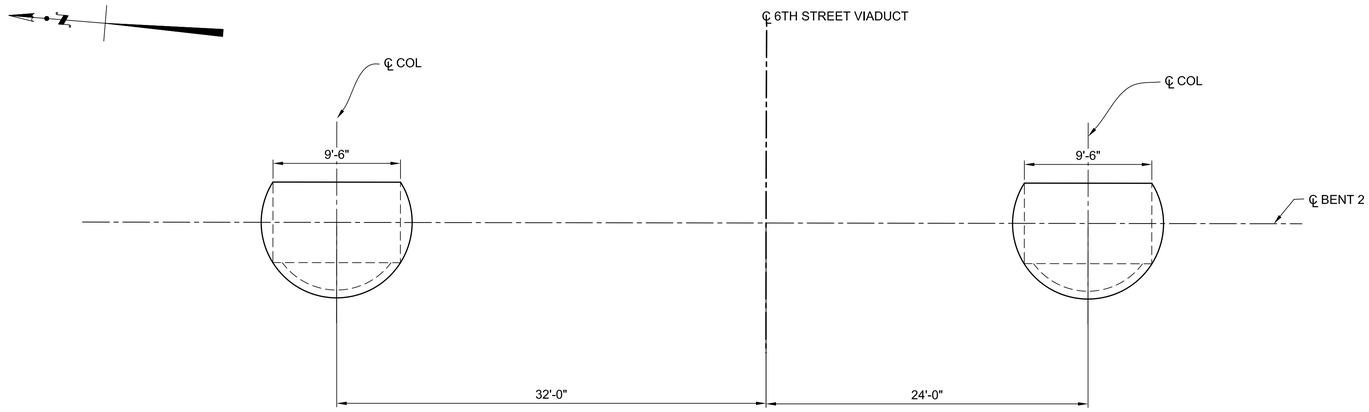

PLAN
SCALE: 3/16" =1'-0"

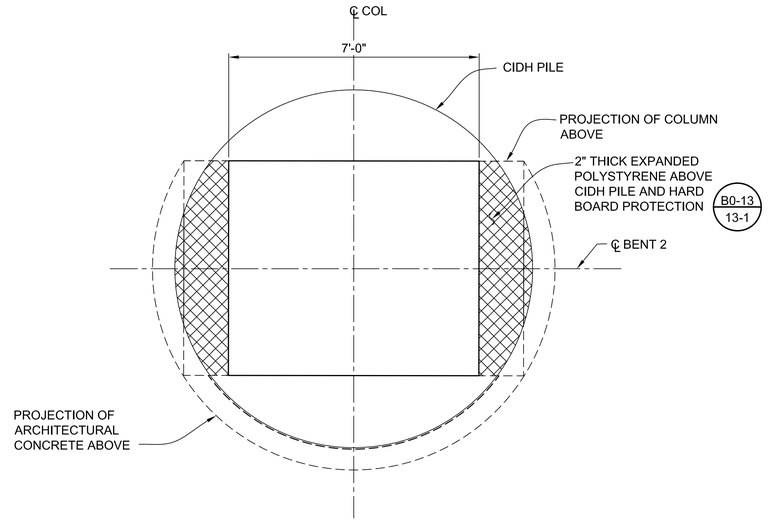

SECTION D
SCALE: 1/2"=1'-0"
S3-01

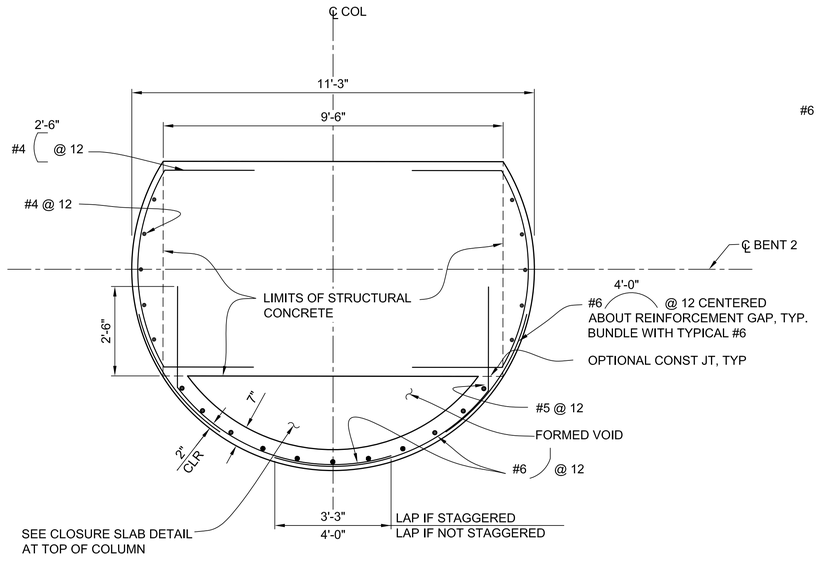

ARCHITECTURAL CONCRETE
SCALE: 1/2"=1'-0"

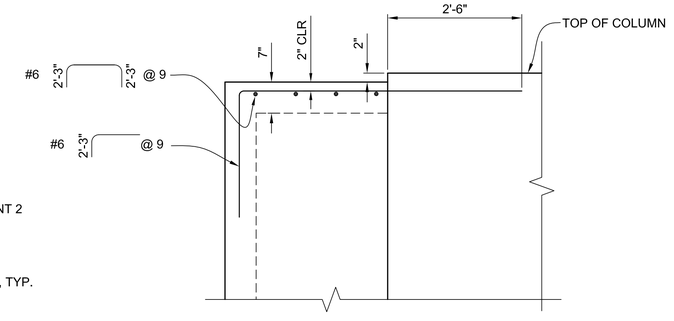

CLOSURE SLAB
SCALE: 3/4"=1'-0"

NOTES:

1. ALL ARCHITECTURAL CONCRETE IS CAST MONOLITHICALLY WITH STRUCTURAL CONCRETE.
2. ALL #4, #5 AND #6 REINFORCING BARS AT ARCHITECTURAL OCNCRETE SHALL BE EPOXY COATED.

THE CITY OF LOS ANGELES OR ITS OFFICERS OR AGENTS SHALL NOT BE RESPONSIBLE FOR THE ACCURACY OR COMPLETENESS OF ELECTRONIC COPIES OF THIS PLAN SHEET.

REVISION DATES (DESIGN STAGE ONLY)

C:\caddlib\pw\pwwestcoast\zhang\dms57683\S3-01-BNL1.dwg 6/27/16 16:08

Sheet Version 3.0

HNTB
HNTB Corporation
601 W. 5TH STREET SUITE 1000
LOS ANGELES, CALIFORNIA 90071
TEL (213) 403-1000 FAX (213) 403-1001

BUREAU OF ENGINEERING
OFFICIAL RECORD

CITY OF LOS ANGELES DEPARTMENT OF PUBLIC WORKS
BUREAU OF ENGINEERING

ENGINEERING
CITY OF LOS ANGELES

NO.	REVISIONS:	DATE	BY:

STRUCTURE NO. 53C-2329

INDEX NO. P-38113

REGISTERED PROFESSIONAL ENGINEER MICHAEL H. JONES No. S3033 CIVIL STATE OF CALIFORNIA

THIS PLAN WAS ELECTRONICALLY SIGNED AND STAMPED.

CITY ENGINEER		DATE
GARY LEE MOORE, P.E.		
DESIGN GROUP	LIC. NO. S3033	
ENGINEER: MICHAEL H. JONES		1/29/2016
DESIGNED BY: JIANHA WANG / HAO LUO		1/29/2016
DRAWN BY: LI ZHANG		1/29/2016
CHECKED BY: PETER ZHAO		1/29/2016
APPROVED BY: MICHAEL H. JONES		1/29/2016

VERTICAL CONTROL: BM 12-04070, 1929 (NGVD 29) - 1985 ADJUSTMENT
HORIZONTAL CONTROL: GPS; PID AE 1704, EPOCH 1991.35

SHEET TITLE: BENT 2 DETAILS NO. 2

PROJECT: SIXTH STREET VIADUCT REPLACEMENT

ADDRESS: SIXTH STREET VIADUCT (WHITTIER BLVD) LOS ANGELES, CA

WORK ORDER NO. E700224F

DRAWING NO. S3-03

SHEET 214 OF 560 SHEETS

ADDENDUM 5

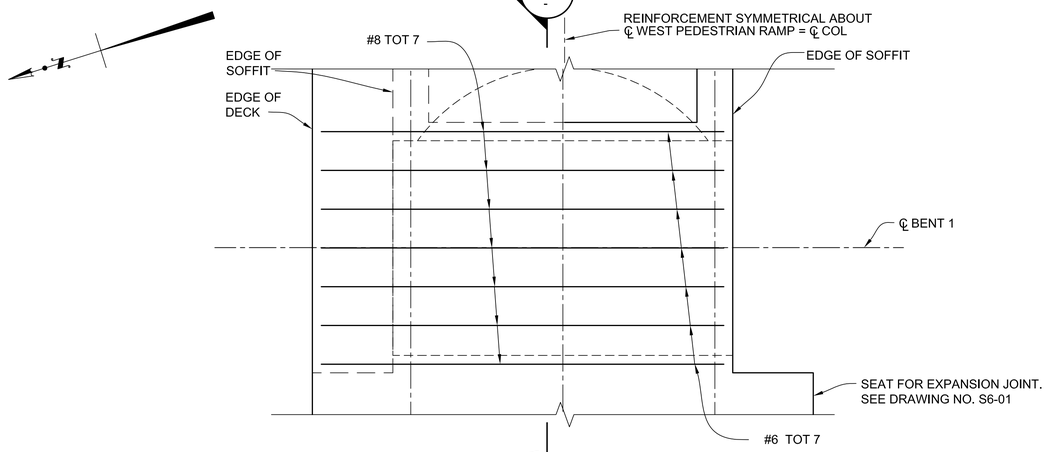

PLAN

SCALE: 1/2" =1'-0"

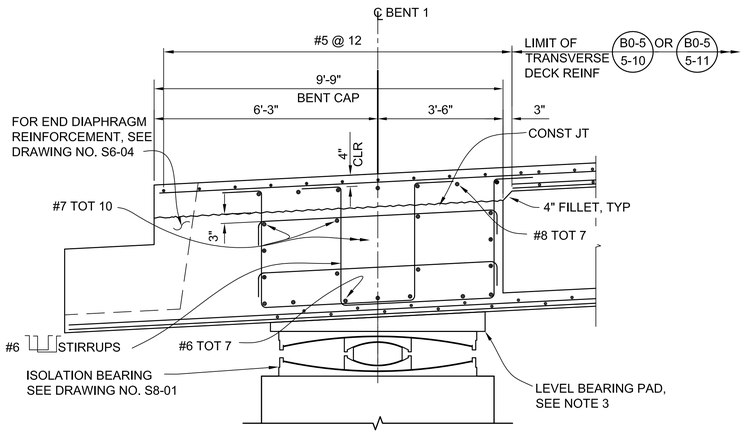

SECTION

SCALE: 1/2"=1'-0"

A
-

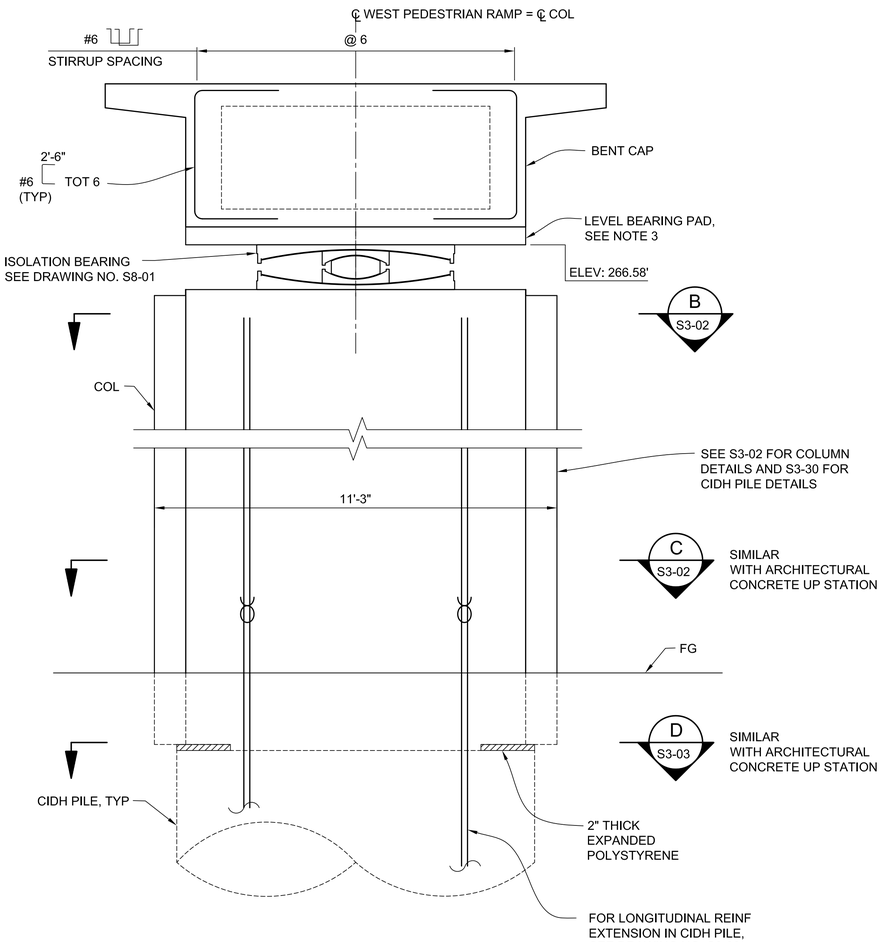

ELEVATION

SCALE: 1/2" =1'-0"

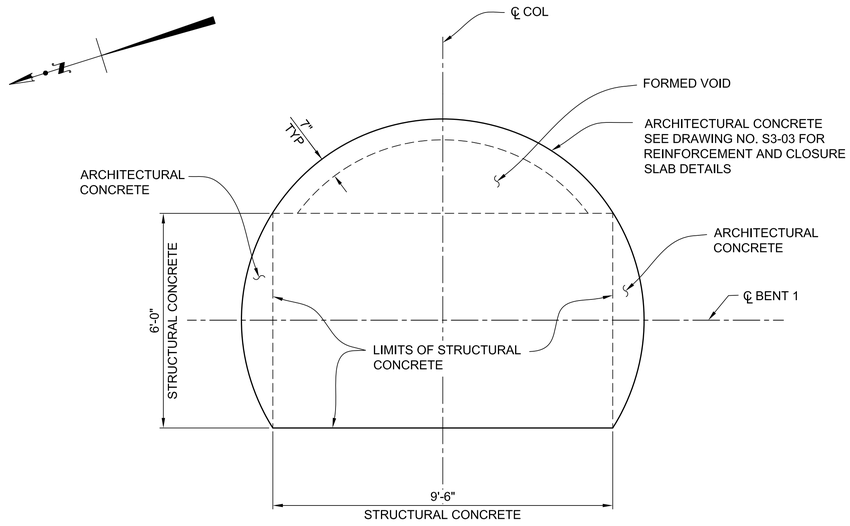

PLAN

SCALE: 1/2" =1'-0"

LEGEND:

BUNDLED BARS

NOTES:

1. SPLICE NOT ALLOWED IN MAIN BENT CAP REINFORCEMENT AND COLUMN LONGITUDINAL REINFORCEMENT.
2. PLACE STIRRUPS PARALLEL TO GIRDERS.
3. PROVIDE A 6'-0" X 9'-6" LEVEL SURFACE AT BOTTOM OF THE BENT CAP TO ACCOMMODATE THE BEARING AND JACK BEARING AREA. FOR TYPICAL LEVEL BEARING PAD DETAILS, SEE SECTION A ON DRAWING NO. S3-06.

HNTB
HNTB Corporation
601 W. 5TH STREET SUITE 1000
LOS ANGELES, CALIFORNIA 90071
TEL (213) 403-1000 FAX (213) 403-1001

BUREAU OF ENGINEERING
OFFICIAL RECORD

CITY OF LOS ANGELES DEPARTMENT OF PUBLIC WORKS
BUREAU OF ENGINEERING

ENGINEERING
CITY OF LOS ANGELES

NO.	REVISIONS:	DATE	BY:

STRUCTURE NO. 53C-2329

INDEX NO. P-38113

THIS PLAN WAS ELECTRONICALLY SIGNED AND STAMPED.

REGISTERED PROFESSIONAL ENGINEER
MICHAEL H. JONES
No. S3033
CIVIL
STATE OF CALIFORNIA

CITY ENGINEER

		DATE:
GARY LEE MOORE, P.E.	CITY ENGINEER	
DESIGN GROUP	LIC. NO. S3033	
ENGINEER: MICHAEL H. JONES		1/29/2016
DESIGNED BY: TRAN LE		1/29/2016
DRAWN BY: LI ZHANG		1/29/2016
CHECKED BY: PETER ZHAO		1/29/2016
APPROVED BY: MICHAEL H. JONES		1/29/2016

VERTICAL CONTROL: BM 12-04070, 1929 (NGVD 29) - 1985 ADJUSTMENT
HORIZONTAL CONTROL: GPS; PID AE 1704, EPOCH 1991.35

SHEET TITLE: BENT 1 LAYOUT & DETAILS

PROJECT: SIXTH STREET VIADUCT REPLACEMENT

ADDRESS: SIXTH STREET VIADUCT (WHITTIER BLVD)
LOS ANGELES, CA

WORK ORDER NO. E700224F

DRAWING NO. S3-04

SHEET 215 OF 560 SHEETS

THE CITY OF LOS ANGELES OR ITS OFFICERS OR AGENTS SHALL NOT BE RESPONSIBLE FOR THE ACCURACY OR COMPLETENESS OF ELECTRONIC COPIES OF THIS PLAN SHEET.

REVISION DATES (DESIGN STAGE ONLY)

C:\caddlib\pw\pwwestcoast\zhang\dms57683\S3-01-BNL1.dwg 6/29/16 11:32

Sheet Version 3.0

ADDENDUM 5

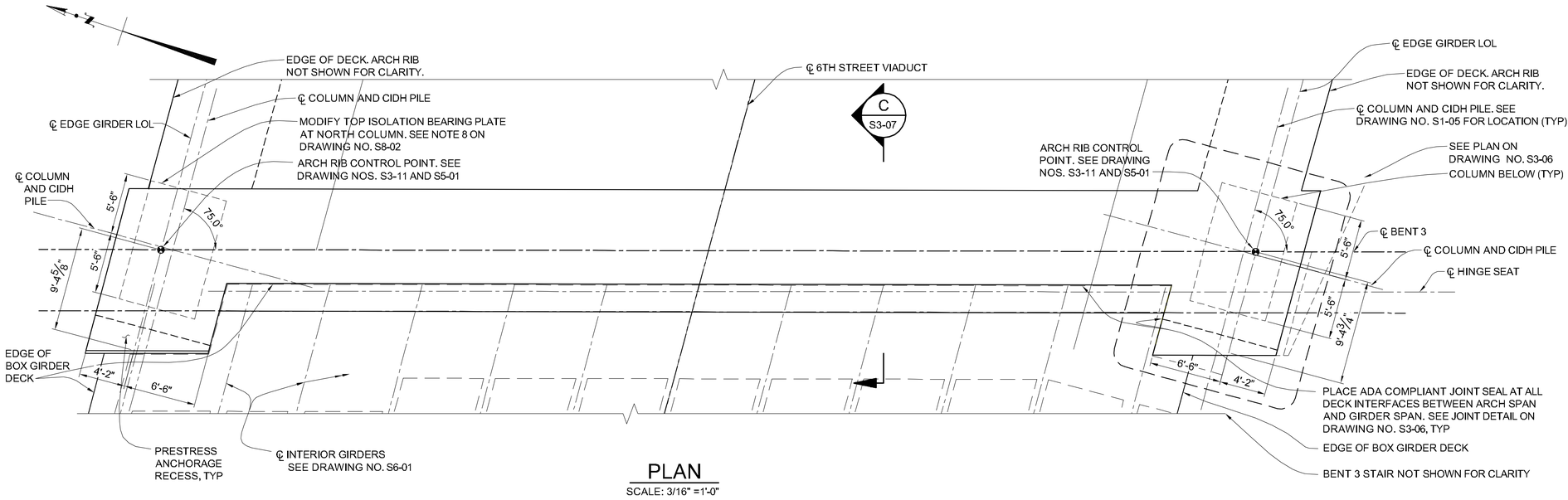

PLAN
SCALE: 3/16" =1'-0"

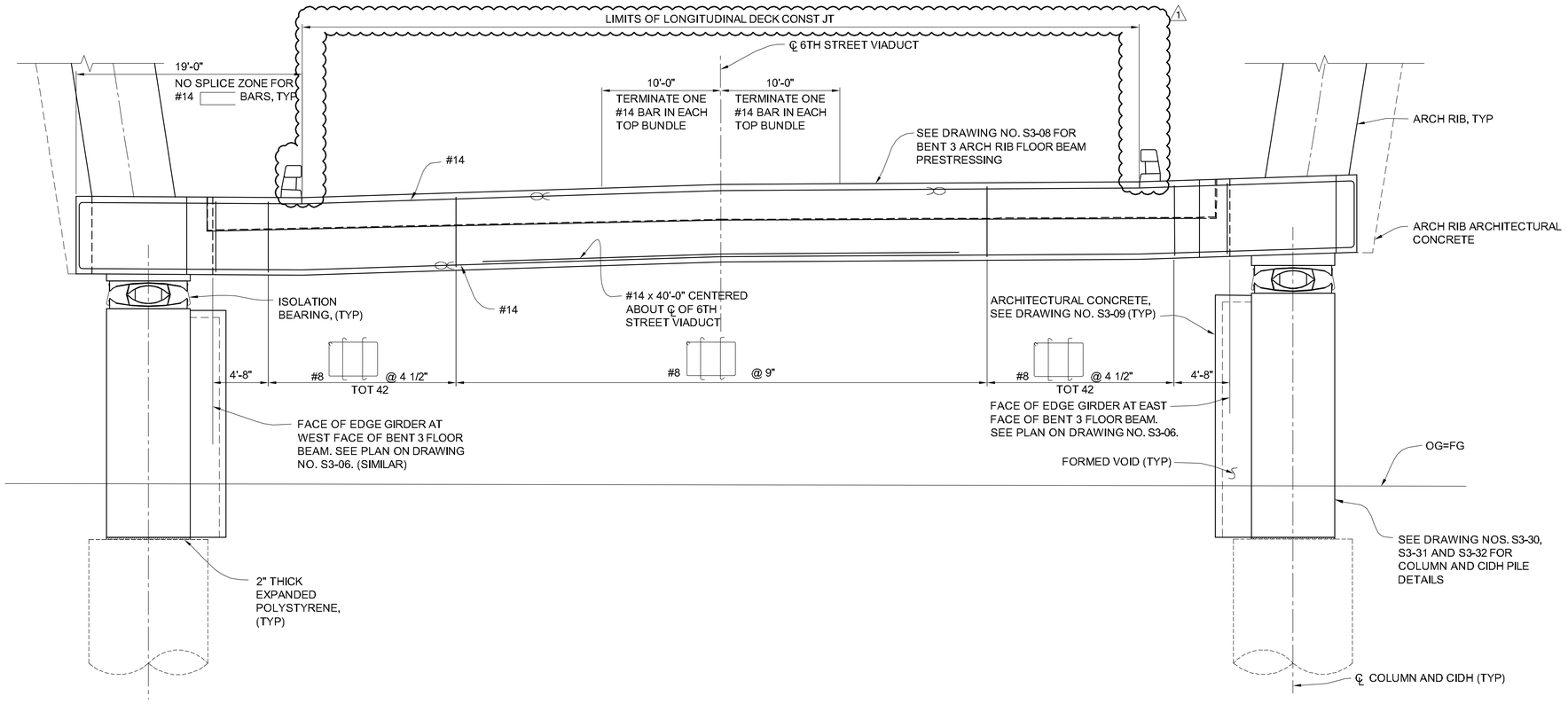

ELEVATION
SCALE: 3/16" =1'-0"

LEGEND:

BUNDLED BARS

THE CITY OF LOS ANGELES OR ITS OFFICERS OR AGENTS SHALL NOT BE RESPONSIBLE FOR THE ACCURACY OR COMPLETENESS OF ELECTRONIC COPIES OF THIS PLAN SHEET.

C:\cadlib\pw\pwwestcoast\tzhang\dms57683\S3-05-BNL2.dwg 8/23/17 15:38

REVISION DATES (DESIGN STAGE ONLY)

Sheet Version 3.0

BUREAU OF ENGINEERING

ENGINEERING
CITY OF LOS ANGELES

NO.	REVISIONS:	DATE	BY:
1	DECK LONGITUDINAL CONSTRUCTION JOINT ADDED	09/01/17	MHJ

STRUCTURE NO. 53C-2329

INDEX NO.

THIS PLAN WAS ELECTRONICALLY SIGNED AND STAMPED.

REGISTERED PROFESSIONAL ENGINEER RICHARD H. JONES No. S3033 CIVIL STATE OF CALIFORNIA

DEPARTMENT OF PUBLIC WORKS
CITY OF LOS ANGELES

GARY LEE MOORE, P.E.
CITY ENGINEER

		DATE:
ENGINEER:	MICHAEL H. JONES	1/29/2016
	DESIGN GROUP	1/29/2016
	LIC. NO. S3033	1/29/2016
DESIGNED BY:	SEAN XIN	1/29/2016
DRAWN BY:	LI ZHANG	1/29/2016
CHECKED BY:	CHARLES REDFIELD	1/29/2016
APPROVED BY:	MICHAEL H. JONES	1/29/2016

VERTICAL CONTROL: BM 12-04070,1929 (NGVD 29) - 1985 ADJUSTMENT
HORIZONTAL CONTROL: GPS; PID AE 1704, EPOCH 1991.35

SHEET TITLE: BENT 3 LAYOUT

PROJECT: SIXTH STREET VIADUCT REPLACEMENT

ADDRESS: SIXTH STREET VIADUCT (WHITTIER BLVD) LOS ANGELES, CA

HNTB
HNTB Corporation
601 W. 5TH STREET SUITE 1000
LOS ANGELES, CALIFORNIA 90071
TEL (213) 403-1000 FAX (213) 403-1001

WORK ORDER NO. E700224F

DRAWING NO. S3-05

SHEET 16 OF 560 SHEETS

THE CITY OF LOS ANGELES OR ITS OFFICERS OR AGENTS SHALL NOT BE RESPONSIBLE FOR THE ACCURACY OR COMPLETENESS OF ELECTRONIC COPIES OF THIS PLAN SHEET.

ADA COMPLIANT JOINT SEAL. SEE DRAWING NO. S8-22

EDGE GIRDER

1"

BOX GIRDER

EXPANDED POLYSTYRENE B0-13 / 13-2

DECK OVERHANG

1"

EDGE GIRDER

ADA COMPLIANT JOINT SEAL. SEE DRAWING NO. S8-22

EXPANDED POLYSTYRENE B0-13 / 13-2

AT BOX GIRDER DIAPHRAGM

AT DECK OVERHANG

JOINT DETAIL

SCALE: 3/4"=1'-0"

EAST FACE OF BENT 3 ARCH RIB FLOOR BEAM

2 #8 AND #7 SEE C / S3-07

B / S3-07

ARCH RIB AND EDGE GIRDER LONGITUDINAL REINF NOT SHOWN FOR CLARITY

4'-8"

#8 #7 TOT 8 AND TOT 4

3"

℄ COLUMN

℄ EDGE GIRDER LOL

#8 BEYOND ARCH RIB

EDGE GIRDER

4'-0"

#6

4'-0"

BENT 3 LONGITUDINAL REINF

℄ BENT 3

ARCH RIB CONTROL POINT. SEE DRAWING NOS. S3-11 AND S5-01

#5 BETWEEN #6

COLUMN BELOW

1'-3" TYP

POST TENSIONING ANCHORAGE RECESS

6" AT SOUTH SIDE

8" AT NORTH SIDE

ARCH RIB ARCHITECTURAL CONCRETE, SEE DRAWING NO. S5-13

PROJECTION OF EDGE GIRDER AT TOP OF DECK

#8 WHERE ARCH RIB OCCURS. EXTEND #8 STIRRUPS TO EXTERIOR FACE OF CONCRETE BEYOND BENT 3 FLOOR BEAM POST TENSIONING ANCHORAGE ZONE

#4 @ 12

#4 EACH WAY @ 12

1'-6" LAP, (TYP)

EDGE GIRDER REINF, #11 SIDE FACE BARS NOT SHOWN FOR CLARITY

PLAN

SCALE: 3/4"=1'-0"

SEE DRAWING NO. S5-23 FOR TIES

TYPE A TIES

TYPE B TIES @ 6" SEE DRAWING NO. S3-18

ARCH RIB LOL

ABOVE DECK, USE 4 ROWS OF HORIZONTAL CROSS TIES

#8 @ 6 SEE NOTE 4

#8 @ 6 SEE NOTE 4

#8 WEST FACE OF BENT 3 ARCH RIB FLOOR BEAM

5'-0" (SEE NOTE 2)

SEE JOINT DETAIL

9'-4 5/8"

SEE NOTE 3 ARCH RIB CONTROL POINT. SEE DRAWING NOS. S3-11 AND S5-01

5'-8 5/16" SEE NOTE 3

℄ BENT 3

HINGE SEAT

1 / S6-06

POST TENSIONING ANCHORAGE RECESS

6" MIN VARIES

ARCH RIB LONGITUDINAL REINFORCEMENT SHALL EXTEND TO THE INSIDE FACE OF THE #11 BARS MAY BE SHORTENED WHERE INTERFERENCE OCCURS WITH TRUMPET OF EDGE GIRDER POST TENSIONING DUCT, BUT IN NO CASE SHALL THE EMBEDMENT WITHIN THE EDGE GIRDER BE LESS THAN 53" FOR SINGLE BARS AND 2-BAR BUNDLES AND 70" FOR 4-BAR BUNDLES

4 ROWS #8 CROSS-TIE @ 6 HORIZONTALLY, @ 18 MAX VERTICALLY PLACE OUTSIDE THE LIMITS OF ARCH RIB STIRRUPS, TYP

0'-1"

21'-9" #5 TOT 16

19'-9" (TOT 20)

#11 BUNDLE 2 BARS. MECHANICAL COUPLER WITH TOP & BOTTOM LONGITUDINAL EDGE GIRDER REINF. SEE D2 / S6-74

SEE NOTE 1

3 ¾ "Ø PT DUCTS, TYP

BOX GIRDER, WHERE OCCURS

13'-3"

#8 HORIZONTAL. 7 LAYERS VERTICALLY, 7 ROWS HORIZONTALLY. TOT 49 BARS

BOTTOM OF CONCRETE AT TOP OF BEARING ELEV: 268.30 (NORTH) ELEV: 269.50 (SOUTH)

Proposed PT bulkhead location.

℄ EDGE GIRDER TENDONS

#5 TOT 7

#4 2'-3" @ 6 EACH WAY

10'-4"

LEVEL BEARING PAD CONCRETE

SECTION

SCALE: 3/4"=1'-0"

A / -

LEGEND:

- HEADED REBAR AT TIE OR CROSS TIE
- BUNDLED BARS
- POST TENSIONING DUCT

NOTES:

1. FOR EDGE GIRDER POST TENSIONING ANCHORAGE DETAILS, SEE DRAWING NO. S6-82.
2. FOR EDGE GIRDER STIRRUP SPACING, SEE DRAWING NO. S6-21. OMIT #4 HORIZONTAL CROSS-TIE EACH STIRRUP.
3. DIMENSIONS ARE PARALLEL TO EDGE GIRDER AND ALSO PROVIDE LIMITS OF ARCHITECTURAL CONCRETE BEYOND ARCH RIB. SEE DRAWING NO. S5-13.
4. EXTERIOR #8 CLOSED TIES AT EDGE GIRDER AND ARCH RIB MAY BE 2-BAR BUNDLED AND SPACING VARIED, BUT SHALL PROVIDE AN EQUIVALENT QUANTITY TO #8 @ 6". MAXIMUM SPACING SHALL NOT EXCEED 18".
5. WHERE HEADED REBAR AT CROSS TIES ARE SHOWN, USE REDUCE SIZE HEADS (4X NET REBAR AREA).

T.O. 5 Change Order Serial Sketch No. 63 - Page 2 of 26

BUREAU OF ENGINEERING

ENGINEERING CITY OF LOS ANGELES

NO.	REVISIONS:	DATE:	BY:
1	GENERAL BIM UPDATES ECO 42	09/01/17	MHJ
2	BIM REVISION 5 ECO 59 ECO 63	3/16/18	MHJ
3	BIM REVISION 6	4/27/18	MHJ

STRUCTURE NO. 53C-2329

INDEX NO.

REGISTERED PROFESSIONAL ENGINEER DANIEL H. JONES No. S3033 CIVIL STATE OF CALIFORNIA

THIS PLAN WAS ELECTRONICALLY SIGNED AND STAMPED.

CITY OF LOS ANGELES DEPARTMENT OF PUBLIC WORKS

GARY LEE MOORE, P.E. CITY ENGINEER

		DATE:
ENGINEER:	DESIGN GROUP	
DESIGNED BY:	MICHAEL H. JONES	1/29/2016
DRAWN BY:	SEAN JUN	1/29/2016
CHECKED BY:	LI ZHANG	1/29/2016
APPROVED BY:	CHARLES REDFIELD	1/29/2016
	MICHAEL H. JONES	1/29/2016

LIC. NO. S3033

VERTICAL CONTROL: BM 12-04070 1929 (NGVD 29) - 1985 ADJUSTMENT
HORIZONTAL CONTROL: GPS; PID AE 1704, EPOCH 1991.35

SHEET TITLE: BENT 3 DETAILS NO. 1

PROJECT: SIXTH STREET VIADUCT REPLACEMENT

ADDRESS: SIXTH STREET VIADUCT (WHITTIER BLVD) LOS ANGELES, CA

HNTB
HNTB Corporation
601 W. 5TH STREET SUITE 1000
LOS ANGELES, CALIFORNIA 90071
TEL (213) 403-1000 FAX (213) 403-1001

WORK ORDER NO. E700224F

DRAWING NO. S3-06

SHEET 217 OF 560 SHEETS

REVISION DATES (DESIGN STAGE ONLY)

C:\cadlib\pw\pwwestcoast\zhang\dms57683\S3-05-BNL2.dwg 5/02/18 10:08

Sheet Version 3.0

ADDENDUM 5

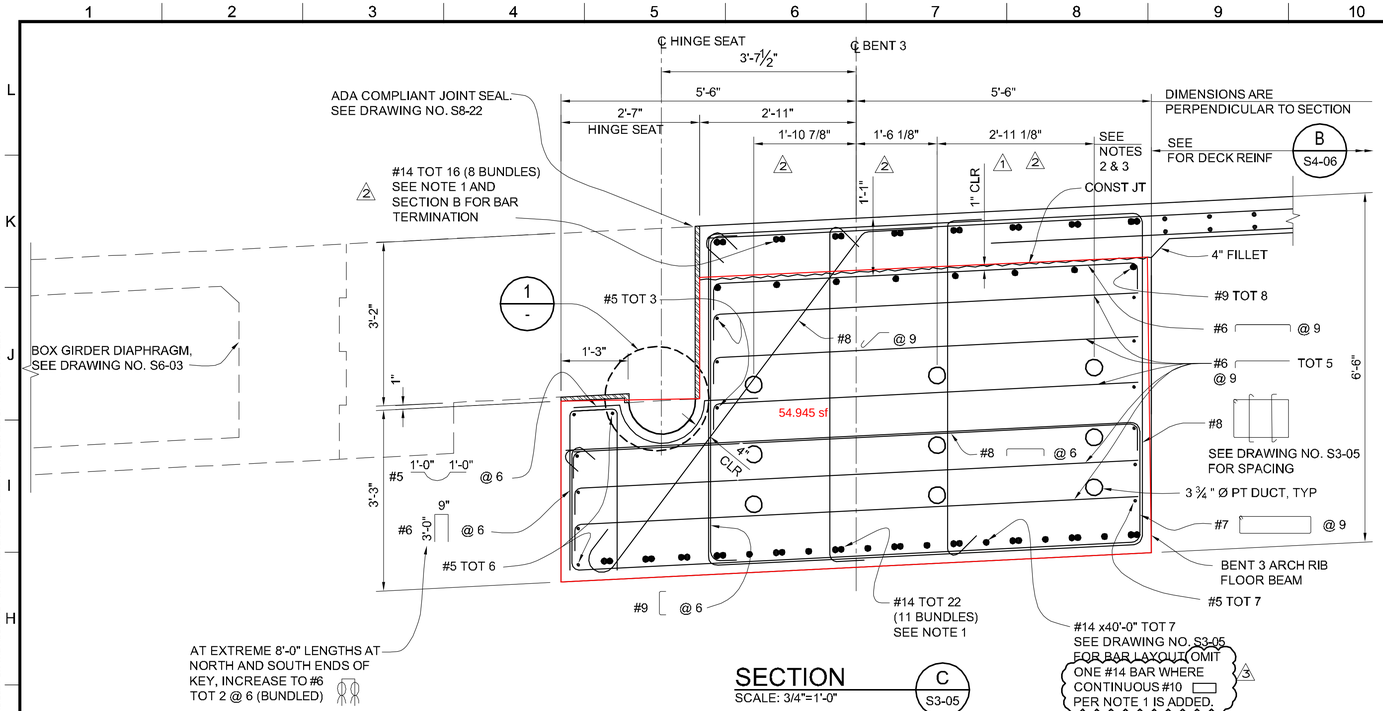

SECTION
SCALE: 3/4"=1'-0"
C S3-05

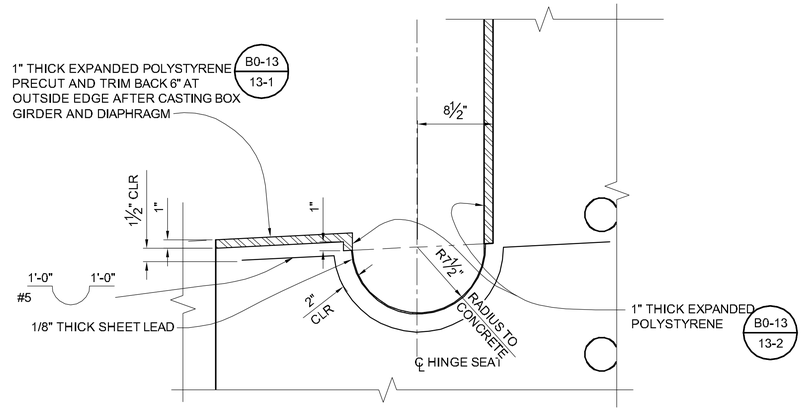

DETAIL
SCALE: 1 1/2"=1'-0"
1 -

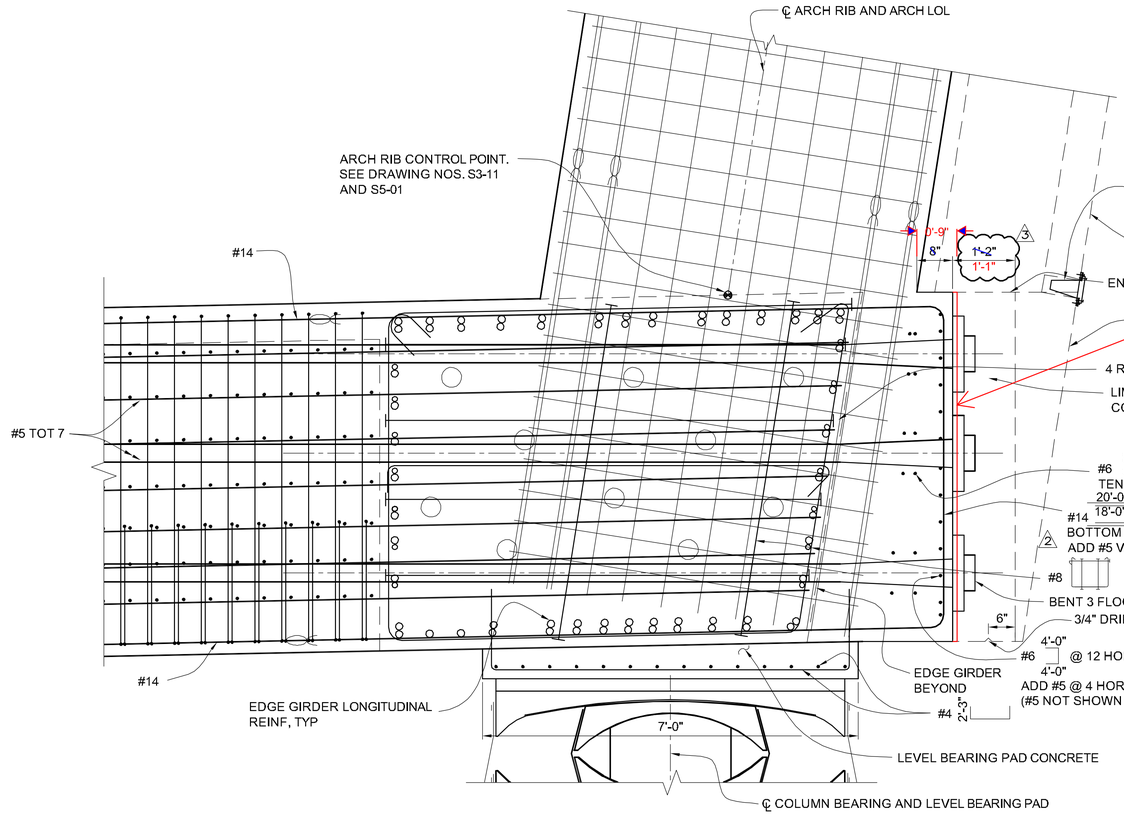

SECTION
SCALE: 3/4"=1'-0"
B S3-06

Proposed PT bulkhead location.

LEGEND:

- HEADED REBAR AT TIE OR CROSS TIE
- BUNDLED BARS
- POST TENSIONING DUCT

NOTES:

1. PROVIDE ADEQUATE SPACE BETWEEN #14 ARCH RIB FLOOR BEAM (ARFB) BARS TO PROVIDE CLEARANCE FOR #14 ARCH RIB TOP #14 BARS. WHERE #14 ARFB SPACING EXCEEDS 18" DUE TO INTERFERENCE WITH #14 ARCH RIB TOP BARS, ADD #10 ACROSS THE FULL LENGTH OF THE ARFB AND CUT AND REMOVE PORTIONS OF THE ADDED #10 BAR WHERE INTERFERENCE OCCURS WITH THE #14 ARCH RIB TOP BARS.
2. AT END ANCHORAGE, POST TENSIONING DUCTS FOR BENT 3 ARCH RIB FLOOR BEAM CAN BE MOVED HORIZONTALLY AND VERTICALLY ±2".
3. VERTICAL POSITION OF PT DUCTS SHOW AT FLOOR BEAM/EDGE GIRDER JOINT. SEE DRAWING S3-08 FOR REQUIRE CENTER OF GRAVITY OF PT AT OTHER LOCATIONS.

T.O. 5 Change Order Serial Sketch No. 63 - Page 3 of 26

THE CITY OF LOS ANGELES OR ITS OFFICERS OR AGENTS SHALL NOT BE RESPONSIBLE FOR THE ACCURACY OR COMPLETENESS OF ELECTRONIC COPIES OF THIS PLAN SHEET.

C:\caddlib\pw\pwwestcoast\lzhang\dms57683\S3-05-BNL2.dwg 5/03/18 09:45

REVISION DATES (DESIGN STAGE ONLY)

Sheet Version 3.0

BUREAU OF ENGINEERING
DEPARTMENT OF PUBLIC WORKS
CITY OF LOS ANGELES

ENGINEERING
CITY OF LOS ANGELES

NO.	REVISIONS:	DATE:	BY:
1	DECK LONGITUDINAL CONSTRUCTION JOINT ECO 41	08/01/17	MHJ
2	BIM REVISION 5 ECO 59 ECO 63	3/16/18	MHJ
3	BIM REVISION 6	4/27/18	MHJ
4			
5			

STRUCTURE NO. 53C-2329

INDEX NO.

THIS PLAN WAS ELECTRONICALLY SIGNED AND STAMPED.

REGISTERED PROFESSIONAL ENGINEER EDWARD H. JONES No. 53033 CIVIL STATE OF CALIFORNIA

GARY LEE MOORE, P.E. CITY ENGINEER

DESIGN GROUP		DATE:	
ENGINEER:	MICHAEL H. JONES	LIC. NO. 53033	1/29/2016
DESIGNED BY:	SEAN XIN		1/29/2016
DRAWN BY:	LI ZHANG		1/29/2016
CHECKED BY:	CHARLES REDFIELD		1/29/2016
APPROVED BY:	MICHAEL H. JONES		1/29/2016

VERTICAL CONTROL: BM 12-04070, 1929 (NGVD 29) - 1985 ADJUSTMENT
HORIZONTAL CONTROL: GPS; PID AE 1704, EPOCH 1991.35

SHEET TITLE: BENT 3 DETAILS NO. 2

PROJECT: SIXTH STREET VIADUCT REPLACEMENT

ADDRESS: SIXTH STREET VIADUCT (WHITTIER BLVD) LOS ANGELES, CA

HNTB
HNTB Corporation
601 W. 5TH STREET SUITE 1000
LOS ANGELES, CALIFORNIA 90071
TEL (213) 403-1000 FAX (213) 403-1001

WORK ORDER NO. E700224F

DRAWING NO. S3-07

SHEET 218 OF 560 SHEETS

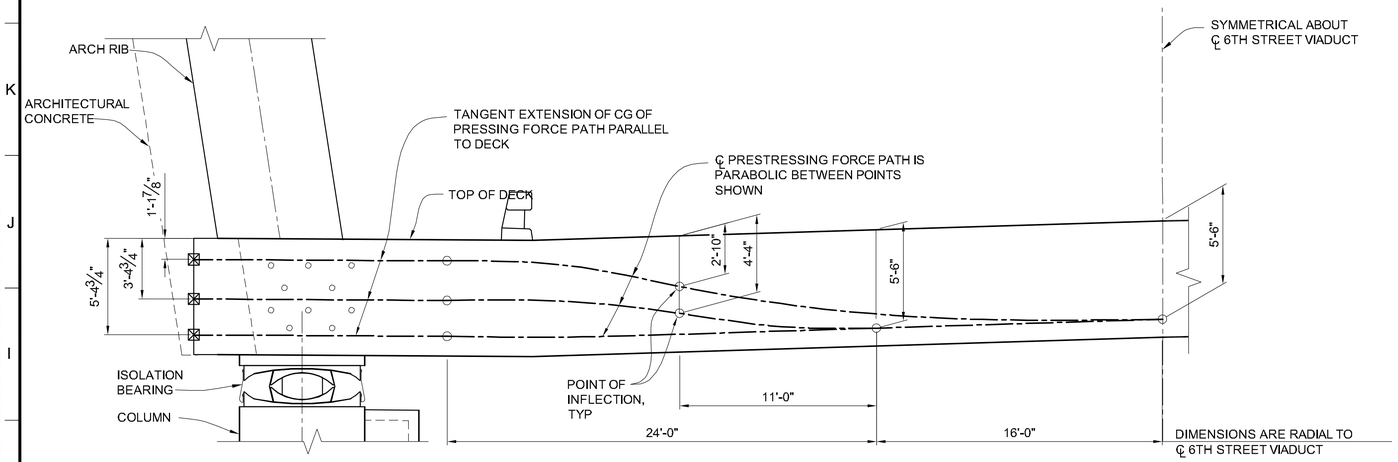

BENT 3 ARCH RIB FLOOR BEAM POST TENSIONING LAYOUT

SCALE: 1/4"=1'-0"

PRESTRESSING NOTES

270 KSI LOW RELAXATION STRANDS

Pjack = 5932 KIPS
ANCHOR SET = 3/8"
K =0.0002 1/FT μ = 0.15

CONCRETE:

f'c = 6, 000 PSI @ 28 DAYS
f'ci = 5,000 PSI @ TIME OF STRESSING

CONTRACTOR SHALL SUBMIT ELONGATION CALCULATIONS BASED ON INITIAL STRESS AT ☒ = 0.924 TIMES JACKING STRESS FOR ALL DUCT.
ONE END STRESSING AT SOUTH END.

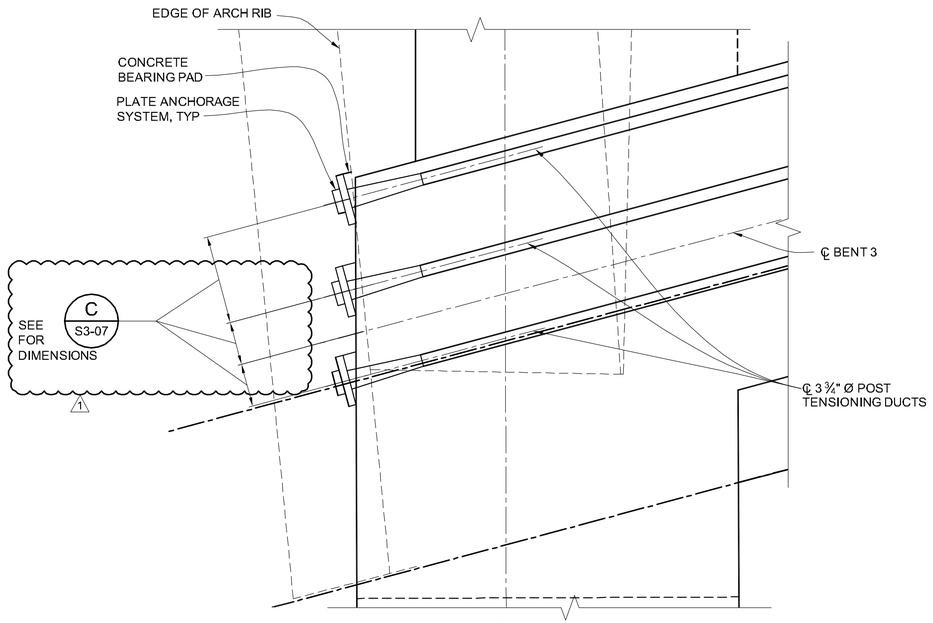

PLAN

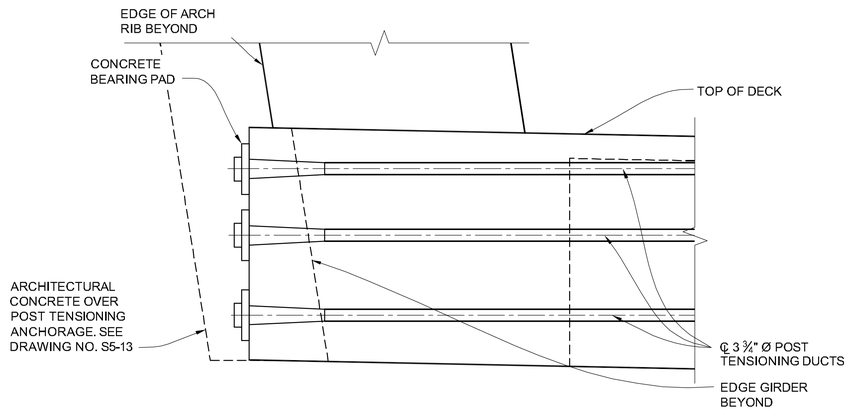

ELEVATION

BENT 3 ARCH RIB FLOOR BEAM POST TENSIONING ANCHORAGE

SCALE: 1/2"=1'-0"

T.O. 5 Change Order Serial Sketch No. 59 - Page 3 of 13

THE CITY OF LOS ANGELES OR ITS OFFICERS OR AGENTS SHALL NOT BE RESPONSIBLE FOR THE ACCURACY OR COMPLETENESS OF ELECTRONIC COPIES OF THIS PLAN SHEET.

C:\caddlib\pw\pwwestcoast\zhang\dms57683\S3-05-BNL2.dwg 3/13/18 17:35

REVISION DATES (DESIGN STAGE ONLY)

Sheet Version 3.0

BUREAU OF ENGINEERING

ENGINEERING
CITY OF LOS ANGELES

NO.	REVISIONS:	DATE:	BY:
1	BIM REVISION 5 ECO 59	03/16/18	MHJ

STRUCTURE NO. 53C-2329

INDEX NO.

THIS PLAN WAS ELECTRONICALLY SIGNED AND STAMPED.

REGISTERED PROFESSIONAL ENGINEER MICHAEL H. JONES No. S3033 CIVIL STATE OF CALIFORNIA

CITY OF LOS ANGELES DEPARTMENT OF PUBLIC WORKS

GARY LEE MOORE, P.E. CITY ENGINEER

		DATE:
ENGINEER:	MICHAEL H. JONES	1/29/2016
DESIGNED BY:	SEAN XIN	1/29/2016
DRAWN BY:	LI ZHANG	1/29/2016
CHECKED BY:	CHARLES REDFIELD	1/29/2016
APPROVED BY:	MICHAEL H. JONES	1/29/2016

DESIGN GROUP
LIC. NO. S3033

VERTICAL CONTROL: BM 12-04070, 1929 (NGVD 29) - 1988 ADJUSTMENT
HORIZONTAL CONTROL: GPS; PID AE 1704, EPOCH 1991.35

SHEET TITLE: BENT 3 DETAILS NO. 3

PROJECT: SIXTH STREET VIADUCT REPLACEMENT

ADDRESS: SIXTH STREET VIADUCT (WHITTIER BLVD) LOS ANGELES, CA

HNTB
HNTB Corporation
601 W. 5TH STREET SUITE 1000
LOS ANGELES, CALIFORNIA 90071
TEL (213) 403-1000 FAX (213) 403-1001

WORK ORDER NO. E700224F

DRAWING NO. S3-08

SHEET 219 OF 560 SHEETS

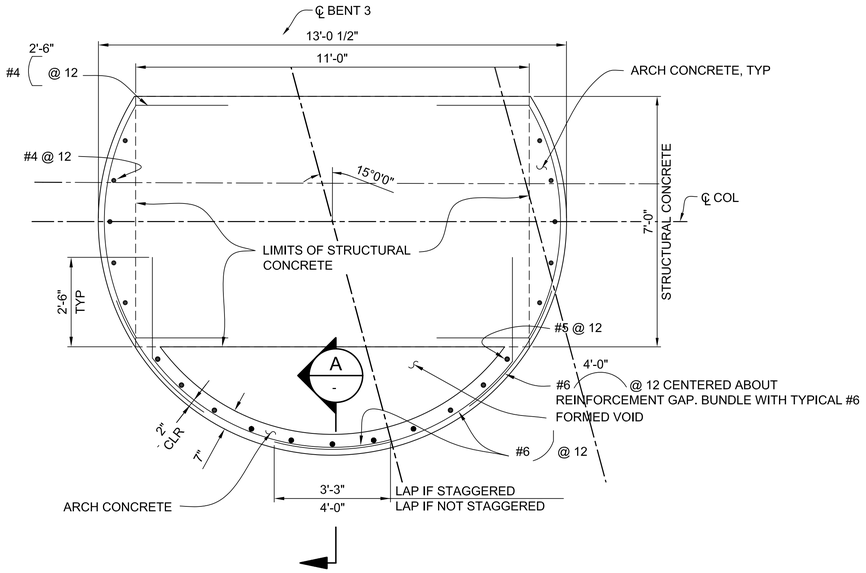

ARCHITECTURAL CONCRETE
SCALE: 1/2"=1'-0"

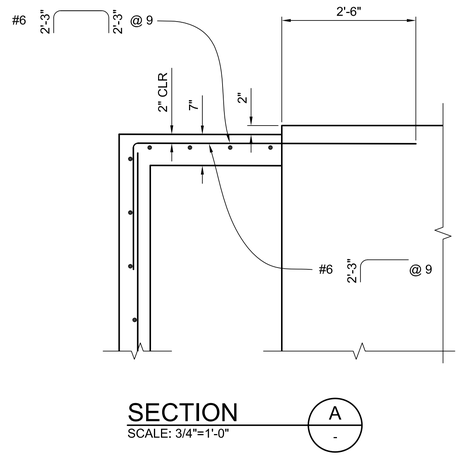

SECTION
SCALE: 3/4"=1'-0"

A
-

NOTES:

1. ALL ARCHITECTURAL CONCRETE IS CAST MONOLITHICALLY WITH STRUCTURAL CONCRETE.
2. INTERNAL FORMS USED TO FORM ARCHITECTURAL CONCRETE MAY BE LEFT IN PLACE.
3. ALL #4, #5 AND #6 REINFORCING BARS AT ARCHITECTURAL CONCRETE SHALL BE EPOXY COATED.

BUREAU OF ENGINEERING
OFFICIAL RECORD

HNTB
HNTB Corporation
601 W. 5TH STREET SUITE 1000
LOS ANGELES, CALIFORNIA 90071
TEL (213) 403-1000 FAX (213) 403-1001

BUREAU OF ENGINEERING

ENGINEERING
CITY OF LOS ANGELES

NO.	REVISIONS:	DATE	BY:

STRUCTURE NO. 53C-2329

INDEX NO. P-38113

REGISTERED PROFESSIONAL ENGINEER MICHAEL H. JONES No. S3033 CIVIL STATE OF CALIFORNIA

THIS PLAN WAS ELECTRONICALLY SIGNED AND STAMPED.

CITY OF LOS ANGELES DEPARTMENT OF PUBLIC WORKS

VERTICAL CONTROL:	BM 12-04070, 1929 (NGVD 29) - 1985 ADJUSTMENT
HORIZONTAL CONTROL:	GPS; PID AE 1704, EPOCH 1991.35
SHEET TITLE:	BENT 3 DETAILS NO. 4
PROJECT:	SIXTH STREET VIADUCT REPLACEMENT
ADDRESS:	SIXTH STREET VIADUCT (WHITTIER BLVD) LOS ANGELES, CA

GARY LEE MOORE, P.E. CITY ENGINEER

		DATE:
	DESIGN GROUP	
ENGINEER:	MICHAEL H. JONES	LIC. NO. S3033 1/29/2016
DESIGNED BY:	SEAN XIN	1/29/2016
DRAWN BY:	LI ZHANG	1/29/2016
CHECKED BY:	CHARLES REDFIELD	1/29/2016
APPROVED BY:	MICHAEL H. JONES	1/29/2016

WORK ORDER NO. E700224F

DRAWING NO. S3-09

SHEET 220 OF 560 SHEETS

THE CITY OF LOS ANGELES OR ITS OFFICERS OR AGENTS SHALL NOT BE RESPONSIBLE FOR THE ACCURACY OR COMPLETENESS OF ELECTRONIC COPIES OF THIS PLAN SHEET.

REVISION DATES (DESIGN STAGE ONLY)

C:\caddlib\pw\pwwestcoast\zhang\dms57683\S3-05-BNL2.dwg 6/27/16 16:19

Sheet Version 3.0

THE CITY OF LOS ANGELES OR ITS OFFICERS OR AGENTS SHALL NOT BE RESPONSIBLE FOR THE ACCURACY OR COMPLETENESS OF ELECTRONIC COPIES OF THIS PLAN SHEET.

ADA COMPLIANT JOINT SEAL. SEE DRAWING NO. S8-22

EDGE GIRDER

1"

BOX GIRDER

EXPANDED POLYSTYRENE B0-13 / 13-2

DECK OVERHANG

1"

EDGE GIRDER

ADA COMPLIANT JOINT SEAL. SEE DRAWING NO. S8-22

EXPANDED POLYSTYRENE B0-13 / 13-2

AT BOX GIRDER DIAPHRAGM

AT DECK OVERHANG

JOINT DETAIL

SCALE: 3/4"=1'-0"

EAST FACE OF BENT 3 ARCH RIB FLOOR BEAM

2 #8 AND #7 SEE C / S3-07

B / S3-07

ARCH RIB AND EDGE GIRDER LONGITUDINAL REINF NOT SHOWN FOR CLARITY

4'-8"

#8 #7 TOT 8 AND TOT 4

3"

℄ COLUMN

℄ EDGE GIRDER LOL

#8 BEYOND ARCH RIB

EDGE GIRDER

4'-0"

#6

4'-0"

BENT 3 LONGITUDINAL REINF

℄ BENT 3

ARCH RIB CONTROL POINT. SEE DRAWING NOS. S3-11 AND S5-01

#5 BETWEEN #6

COLUMN BELOW

1'-3" TYP

POST TENSIONING ANCHORAGE RECESS

6" AT SOUTH SIDE

8" AT NORTH SIDE

ARCH RIB ARCHITECTURAL CONCRETE, SEE DRAWING NO. S5-13

PROJECTION OF EDGE GIRDER AT TOP OF DECK

#8 WHERE ARCH RIB OCCURS. EXTEND #8 STIRRUPS TO EXTERIOR FACE OF CONCRETE BEYOND BENT 3 FLOOR BEAM POST TENSIONING ANCHORAGE ZONE

#4 @ 12

#4 EACH WAY @ 12

1'-6" LAP, (TYP)

EDGE GIRDER REINF, #11 SIDE FACE BARS NOT SHOWN FOR CLARITY

PLAN

SCALE: 3/4"=1'-0"

SEE DRAWING NO. S5-23 FOR TIES

TYPE A TIES

TYPE B TIES @ 6" SEE DRAWING NO. S3-18

ARCH RIB LOL

ABOVE DECK, USE 4 ROWS OF HORIZONTAL CROSS TIES

#8 @ 6 SEE NOTE 4

#8 @ 6 SEE NOTE 4

#8 WEST FACE OF BENT 3 ARCH RIB FLOOR BEAM

5'-0" (SEE NOTE 2)

SEE JOINT DETAIL

9'-4 5/8"

SEE NOTE 3 ARCH RIB CONTROL POINT. SEE DRAWING NOS. S3-11 AND S5-01

5'-8 5/16" SEE NOTE 3

℄ BENT 3

HINGE SEAT

1 / S6-06

POST TENSIONING ANCHORAGE RECESS

6" MIN VARIES

ARCH RIB LONGITUDINAL REINFORCEMENT SHALL EXTEND TO THE INSIDE FACE OF THE #11 BARS MAY BE SHORTENED WHERE INTERFERENCE OCCURS WITH TRUMPET OF EDGE GIRDER POST TENSIONING DUCT, BUT IN NO CASE SHALL THE EMBEDMENT WITHIN THE EDGE GIRDER BE LESS THAN 53" FOR SINGLE BARS AND 2-BAR BUNDLES AND 70" FOR 4-BAR BUNDLES

4 ROWS #8 CROSS-TIE @ 6 HORIZONTALLY, @ 18 MAX VERTICALLY PLACE OUTSIDE THE LIMITS OF ARCH RIB STIRRUPS, TYP

0'-1"

21'-9" #5 TOT 16

19'-9" (TOT 20)

#11 BUNDLE 2 BARS. MECHANICAL COUPLER WITH TOP & BOTTOM LONGITUDINAL EDGE GIRDER REINF. SEE D2 / S6-74

SEE NOTE 1

3 ¾ "Ø PT DUCTS, TYP

BOX GIRDER, WHERE OCCURS

13'-3"

#8 HORIZONTAL. 7 LAYERS VERTICALLY, 7 ROWS HORIZONTALLY. TOT 49 BARS

BOTTOM OF CONCRETE AT TOP OF BEARING ELEV: 268.30 (NORTH) ELEV: 269.50 (SOUTH)

Proposed PT bulkhead location.

℄ EDGE GIRDER TENDONS

#5 TOT 7

#4 2'-3" @ 6 EACH WAY

10'-4"

LEVEL BEARING PAD CONCRETE

SECTION

SCALE: 3/4"=1'-0"

A / -

LEGEND:

- HEADED REBAR AT TIE OR CROSS TIE
- BUNDLED BARS
- POST TENSIONING DUCT

NOTES:

1. FOR EDGE GIRDER POST TENSIONING ANCHORAGE DETAILS, SEE DRAWING NO. S6-82.
2. FOR EDGE GIRDER STIRRUP SPACING, SEE DRAWING NO. S6-21. OMIT #4 HORIZONTAL CROSS-TIE EACH STIRRUP.
3. DIMENSIONS ARE PARALLEL TO EDGE GIRDER AND ALSO PROVIDE LIMITS OF ARCHITECTURAL CONCRETE BEYOND ARCH RIB. SEE DRAWING NO. S5-13.
4. EXTERIOR #8 CLOSED TIES AT EDGE GIRDER AND ARCH RIB MAY BE 2-BAR BUNDLED AND SPACING VARIED, BUT SHALL PROVIDE AN EQUIVALENT QUANTITY TO #8 @ 6". MAXIMUM SPACING SHALL NOT EXCEED 18".
5. WHERE HEADED REBAR AT CROSS TIES ARE SHOWN, USE REDUCE SIZE HEADS (4X NET REBAR AREA).

T.O. 5 Change Order Serial Sketch No. 63 - Page 2 of 26

BUREAU OF ENGINEERING

ENGINEERING CITY OF LOS ANGELES

NO.	REVISIONS:	DATE:	BY:
1	GENERAL BIM UPDATES ECO 42	09/01/17	MHJ
2	BIM REVISION 5 ECO 59 ECO 63	3/16/18	MHJ
3	BIM REVISION 6	4/27/18	MHJ

STRUCTURE NO. 53C-2329

INDEX NO.

REGISTERED PROFESSIONAL ENGINEER DANIEL H. JONES No. S3033 CIVIL STATE OF CALIFORNIA

THIS PLAN WAS ELECTRONICALLY SIGNED AND STAMPED.

CITY OF LOS ANGELES DEPARTMENT OF PUBLIC WORKS

GARY LEE MOORE, P.E. CITY ENGINEER

		DATE:
ENGINEER:	DESIGN GROUP	
DESIGNED BY:	MICHAEL H. JONES	1/29/2016
DRAWN BY:	SEAN JUN	1/29/2016
CHECKED BY:	LI ZHANG	1/29/2016
APPROVED BY:	CHARLES REDFIELD	1/29/2016
	MICHAEL H. JONES	1/29/2016

LIC. NO. S3033

VERTICAL CONTROL: BM 12-04070 1929 (NGVD 29) - 1985 ADJUSTMENT
HORIZONTAL CONTROL: GPS; PID AE 1704, EPOCH 1991.35

SHEET TITLE: BENT 3 DETAILS NO. 1

PROJECT: SIXTH STREET VIADUCT REPLACEMENT

ADDRESS: SIXTH STREET VIADUCT (WHITTIER BLVD) LOS ANGELES, CA

HNTB
HNTB Corporation
601 W. 5TH STREET SUITE 1000
LOS ANGELES, CALIFORNIA 90071
TEL (213) 403-1000 FAX (213) 403-1001

WORK ORDER NO. E700224F

DRAWING NO. S3-06

SHEET 217 OF 560 SHEETS

REVISION DATES (DESIGN STAGE ONLY)

C:\cadlib\pw\pwwestcoast\zhang\dms57683\S3-05-BNL2.dwg 5/02/18 10:08

Sheet Version 3.0

THE CITY OF LOS ANGELES OR ITS OFFICERS OR AGENTS SHALL NOT BE RESPONSIBLE FOR THE ACCURACY OR COMPLETENESS OF ELECTRONIC COPIES OF THIS PLAN SHEET.

ADA COMPLIANT JOINT SEAL. SEE DRAWING NO. S8-22

EDGE GIRDER

1"

BOX GIRDER

EXPANDED POLYSTYRENE B0-13 / 13-2

DECK OVERHANG

1"

EDGE GIRDER

ADA COMPLIANT JOINT SEAL. SEE DRAWING NO. S8-22

EXPANDED POLYSTYRENE B0-13 / 13-2

AT BOX GIRDER DIAPHRAGM

AT DECK OVERHANG

JOINT DETAIL

SCALE: 3/4"=1'-0"

EAST FACE OF BENT 3 ARCH RIB FLOOR BEAM

2 #8 AND #7 SEE C / S3-07

B / S3-07

ARCH RIB AND EDGE GIRDER LONGITUDINAL REINF NOT SHOWN FOR CLARITY

4'-8"

#8 #7 TOT 8 AND TOT 4

3"

℄ COLUMN

℄ EDGE GIRDER LOL

#8 BEYOND ARCH RIB

EDGE GIRDER

4'-0"

#6

4'-0"

BENT 3 LONGITUDINAL REINF

℄ BENT 3

ARCH RIB CONTROL POINT. SEE DRAWING NOS. S3-11 AND S5-01

#5 BETWEEN #6

COLUMN BELOW

1'-3" TYP

POST TENSIONING ANCHORAGE RECESS

6" AT SOUTH SIDE

8" AT NORTH SIDE

ARCH RIB ARCHITECTURAL CONCRETE, SEE DRAWING NO. S5-13

PROJECTION OF EDGE GIRDER AT TOP OF DECK

#8 WHERE ARCH RIB OCCURS. EXTEND #8 STIRRUPS TO EXTERIOR FACE OF CONCRETE BEYOND BENT 3 FLOOR BEAM POST TENSIONING ANCHORAGE ZONE

#4 @ 12

#4 EACH WAY @ 12

1'-6" LAP, (TYP)

EDGE GIRDER REINF, #11 SIDE FACE BARS NOT SHOWN FOR CLARITY

PLAN

SCALE: 3/4"=1'-0"

SEE DRAWING NO. S5-23 FOR TIES

TYPE A TIES

TYPE B TIES @ 6" SEE DRAWING NO. S3-18

ARCH RIB LOL

ABOVE DECK, USE 4 ROWS OF HORIZONTAL CROSS TIES

#8 @ 6 SEE NOTE 4

#8 @ 6 SEE NOTE 4

#8 WEST FACE OF BENT 3 ARCH RIB FLOOR BEAM

5'-0" (SEE NOTE 2)

SEE JOINT DETAIL

9'-4 5/8"

SEE NOTE 3 ARCH RIB CONTROL POINT. SEE DRAWING NOS. S3-11 AND S5-01

5'-8 5/16" SEE NOTE 3

℄ BENT 3

HINGE SEAT

1 / S6-06

POST TENSIONING ANCHORAGE RECESS

6" MIN VARIES

ARCH RIB LONGITUDINAL REINFORCEMENT SHALL EXTEND TO THE INSIDE FACE OF THE #11 BARS MAY BE SHORTENED WHERE INTERFERENCE OCCURS WITH TRUMPET OF EDGE GIRDER POST TENSIONING DUCT, BUT IN NO CASE SHALL THE EMBEDMENT WITHIN THE EDGE GIRDER BE LESS THAN 53" FOR SINGLE BARS AND 2-BAR BUNDLES AND 70" FOR 4-BAR BUNDLES

4 ROWS #8 CROSS-TIE @ 6 HORIZONTALLY, @ 18 MAX VERTICALLY PLACE OUTSIDE THE LIMITS OF ARCH RIB STIRRUPS, TYP

0'-1"

21'-9" #5 TOT 16

19'-9" (TOT 20)

#11 BUNDLE 2 BARS. MECHANICAL COUPLER WITH TOP & BOTTOM LONGITUDINAL EDGE GIRDER REINF. SEE D2 / S6-74

SEE NOTE 1

3 ¾ "Ø PT DUCTS, TYP

BOX GIRDER, WHERE OCCURS

13'-3"

#8 HORIZONTAL. 7 LAYERS VERTICALLY, 7 ROWS HORIZONTALLY. TOT 49 BARS

BOTTOM OF CONCRETE AT TOP OF BEARING ELEV: 268.30 (NORTH) ELEV: 269.50 (SOUTH)

Proposed PT bulkhead location.

℄ EDGE GIRDER TENDONS

#5 TOT 7

#4 2'-3" @ 6 EACH WAY

10'-4"

LEVEL BEARING PAD CONCRETE

SECTION

SCALE: 3/4"=1'-0"

A / -

LEGEND:

- HEADED REBAR AT TIE OR CROSS TIE
- BUNDLED BARS
- POST TENSIONING DUCT

NOTES:

1. FOR EDGE GIRDER POST TENSIONING ANCHORAGE DETAILS, SEE DRAWING NO. S6-82.
2. FOR EDGE GIRDER STIRRUP SPACING, SEE DRAWING NO. S6-21. OMIT #4 HORIZONTAL CROSS-TIE EACH STIRRUP.
3. DIMENSIONS ARE PARALLEL TO EDGE GIRDER AND ALSO PROVIDE LIMITS OF ARCHITECTURAL CONCRETE BEYOND ARCH RIB. SEE DRAWING NO. S5-13.
4. EXTERIOR #8 CLOSED TIES AT EDGE GIRDER AND ARCH RIB MAY BE 2-BAR BUNDLED AND SPACING VARIED, BUT SHALL PROVIDE AN EQUIVALENT QUANTITY TO #8 @ 6". MAXIMUM SPACING SHALL NOT EXCEED 18".
5. WHERE HEADED REBAR AT CROSS TIES ARE SHOWN, USE REDUCE SIZE HEADS (4X NET REBAR AREA).

T.O. 5 Change Order Serial Sketch No. 63 - Page 2 of 26

BUREAU OF ENGINEERING

ENGINEERING CITY OF LOS ANGELES

NO.	REVISIONS:	DATE:	BY:
1	GENERAL BIM UPDATES ECO 42	09/01/17	MHJ
2	BIM REVISION 5 ECO 59 ECO 63	3/16/18	MHJ
3	BIM REVISION 6	4/27/18	MHJ

STRUCTURE NO. 53C-2329

INDEX NO.

REGISTERED PROFESSIONAL ENGINEER DANIEL H. JONES No. S3033 CIVIL STATE OF CALIFORNIA

THIS PLAN WAS ELECTRONICALLY SIGNED AND STAMPED.

CITY OF LOS ANGELES DEPARTMENT OF PUBLIC WORKS

GARY LEE MOORE, P.E. CITY ENGINEER

		DATE:
ENGINEER:	DESIGN GROUP	
DESIGNED BY:	MICHAEL H. JONES	1/29/2016
DRAWN BY:	SEAN JUN	1/29/2016
CHECKED BY:	LI ZHANG	1/29/2016
APPROVED BY:	CHARLES REDFIELD	1/29/2016
	MICHAEL H. JONES	1/29/2016

LIC. NO. S3033

VERTICAL CONTROL: BM 12-04070 1929 (NGVD 29) - 1985 ADJUSTMENT
HORIZONTAL CONTROL: GPS; PID AE 1704, EPOCH 1991.35

SHEET TITLE: BENT 3 DETAILS NO. 1

PROJECT: SIXTH STREET VIADUCT REPLACEMENT

ADDRESS: SIXTH STREET VIADUCT (WHITTIER BLVD) LOS ANGELES, CA

HNTB
HNTB Corporation
601 W. 5TH STREET SUITE 1000
LOS ANGELES, CALIFORNIA 90071
TEL (213) 403-1000 FAX (213) 403-1001

WORK ORDER NO. E700224F

DRAWING NO. S3-06

SHEET 217 OF 560 SHEETS

REVISION DATES (DESIGN STAGE ONLY)

C:\cadlib\pw\pwwestcoast\zhang\dms57683\S3-05-BNL2.dwg 5/02/18 10:08

Sheet Version 3.0

ADDENDUM 5

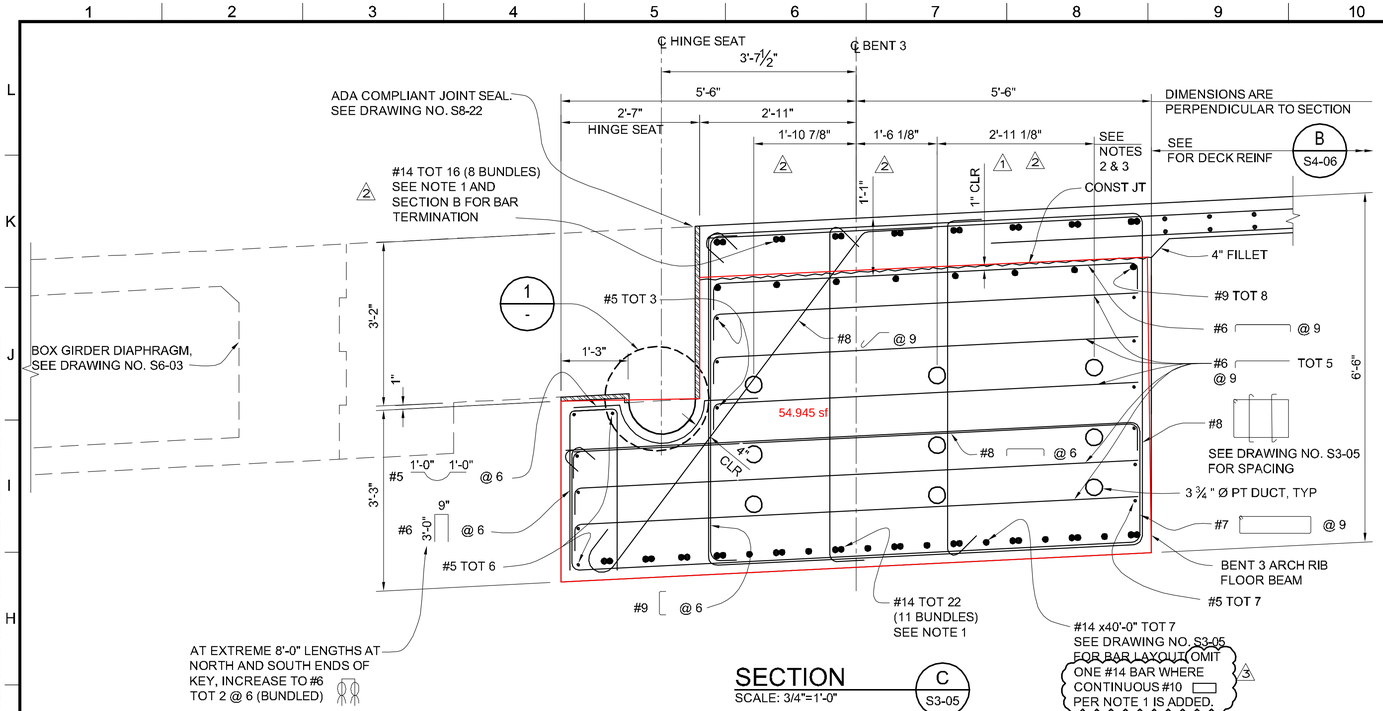

SECTION
SCALE: 3/4"=1'-0"
C S3-05

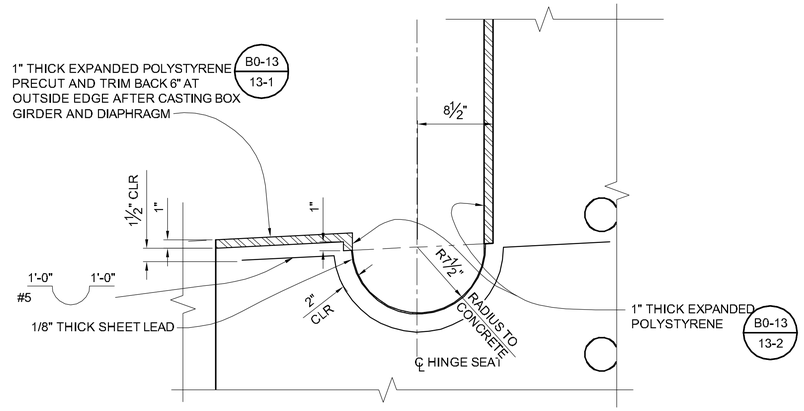

DETAIL
SCALE: 1 1/2"=1'-0"
1 -

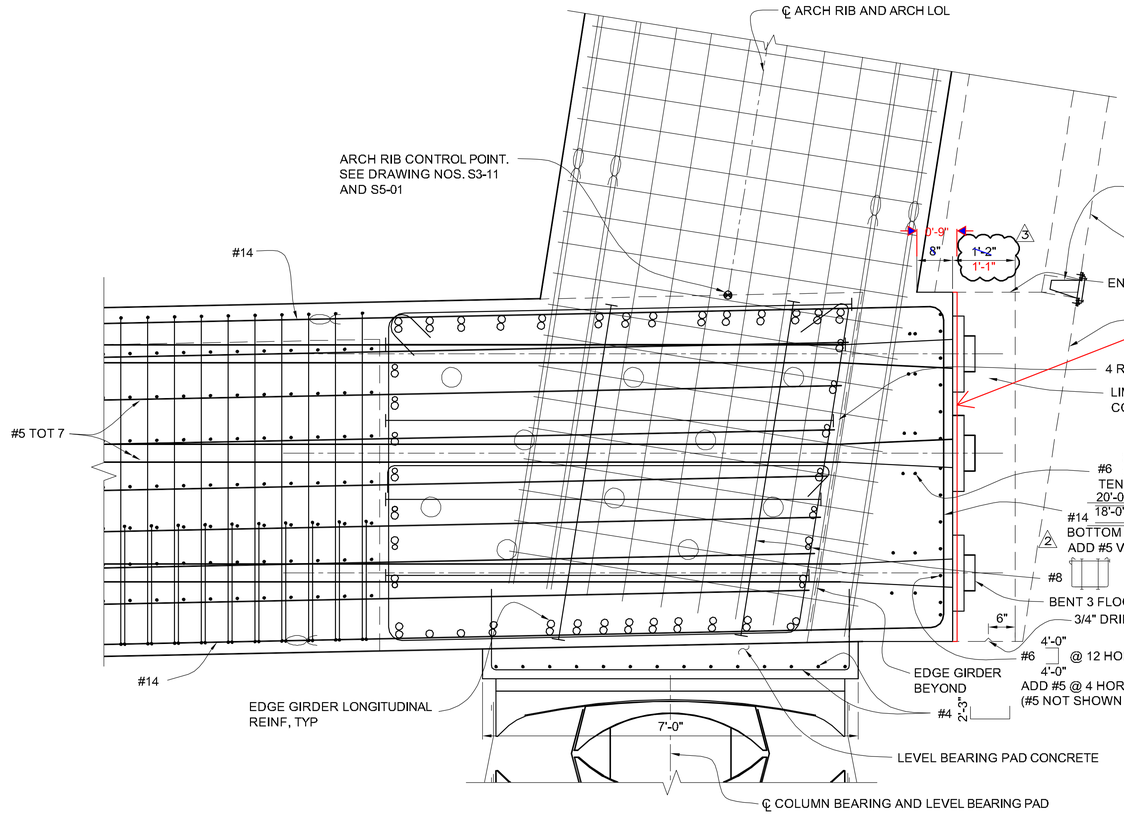

SECTION
SCALE: 3/4"=1'-0"
B S3-06

Proposed PT bulkhead location.

LEGEND:

- HEADED REBAR AT TIE OR CROSS TIE
- BUNDLED BARS
- POST TENSIONING DUCT

NOTES:

1. PROVIDE ADEQUATE SPACE BETWEEN #14 ARCH RIB FLOOR BEAM (ARFB) BARS TO PROVIDE CLEARANCE FOR #14 ARCH RIB TOP #14 BARS. WHERE #14 ARFB SPACING EXCEEDS 18" DUE TO INTERFERENCE WITH #14 ARCH RIB TOP BARS, ADD #10 ACROSS THE FULL LENGTH OF THE ARFB AND CUT AND REMOVE PORTIONS OF THE ADDED #10 BAR WHERE INTERFERENCE OCCURS WITH THE #14 ARCH RIB TOP BARS.
2. AT END ANCHORAGE, POST TENSIONING DUCTS FOR BENT 3 ARCH RIB FLOOR BEAM CAN BE MOVED HORIZONTALLY AND VERTICALLY ±2".
3. VERTICAL POSITION OF PT DUCTS SHOW AT FLOOR BEAM/EDGE GIRDER JOINT. SEE DRAWING S3-08 FOR REQUIRE CENTER OF GRAVITY OF PT AT OTHER LOCATIONS.

T.O. 5 Change Order Serial Sketch No. 63 - Page 3 of 26

THE CITY OF LOS ANGELES OR ITS OFFICERS OR AGENTS SHALL NOT BE RESPONSIBLE FOR THE ACCURACY OR COMPLETENESS OF ELECTRONIC COPIES OF THIS PLAN SHEET.

C:\caddlib\pw\pwwestcoast\lzhang\dms57683\S3-05-BNL2.dwg 5/03/18 09:45

REVISION DATES (DESIGN STAGE ONLY)

Sheet Version 3.0

BUREAU OF ENGINEERING
DEPARTMENT OF PUBLIC WORKS
CITY OF LOS ANGELES

ENGINEERING
CITY OF LOS ANGELES

NO.	REVISIONS:	DATE:	BY:
1	DECK LONGITUDINAL CONSTRUCTION JOINT ECO 41	08/01/17	MHJ
2	BIM REVISION 5 ECO 59 ECO 63	3/16/18	MHJ
3	BIM REVISION 6	4/27/18	MHJ
4			
5			

STRUCTURE NO. 53C-2329

INDEX NO.

THIS PLAN WAS ELECTRONICALLY SIGNED AND STAMPED.

REGISTERED PROFESSIONAL ENGINEER EDWARD H. JONES No. 53033 CIVIL STATE OF CALIFORNIA

GARY LEE MOORE, P.E. CITY ENGINEER

DESIGN GROUP		DATE:	
ENGINEER:	MICHAEL H. JONES	LIC. NO. 53033	1/29/2016
DESIGNED BY:	SEAN XIN		1/29/2016
DRAWN BY:	LI ZHANG		1/29/2016
CHECKED BY:	CHARLES REDFIELD		1/29/2016
APPROVED BY:	MICHAEL H. JONES		1/29/2016

VERTICAL CONTROL: BM 12-04070, 1929 (NGVD 29) - 1985 ADJUSTMENT
HORIZONTAL CONTROL: GPS; PID AE 1704, EPOCH 1991.35

SHEET TITLE: BENT 3 DETAILS NO. 2

PROJECT: SIXTH STREET VIADUCT REPLACEMENT

ADDRESS: SIXTH STREET VIADUCT (WHITTIER BLVD) LOS ANGELES, CA

HNTB
HNTB Corporation
601 W. 5TH STREET SUITE 1000
LOS ANGELES, CALIFORNIA 90071
TEL (213) 403-1000 FAX (213) 403-1001

WORK ORDER NO. E700224F

DRAWING NO. S3-07

SHEET 218 OF 560 SHEETS

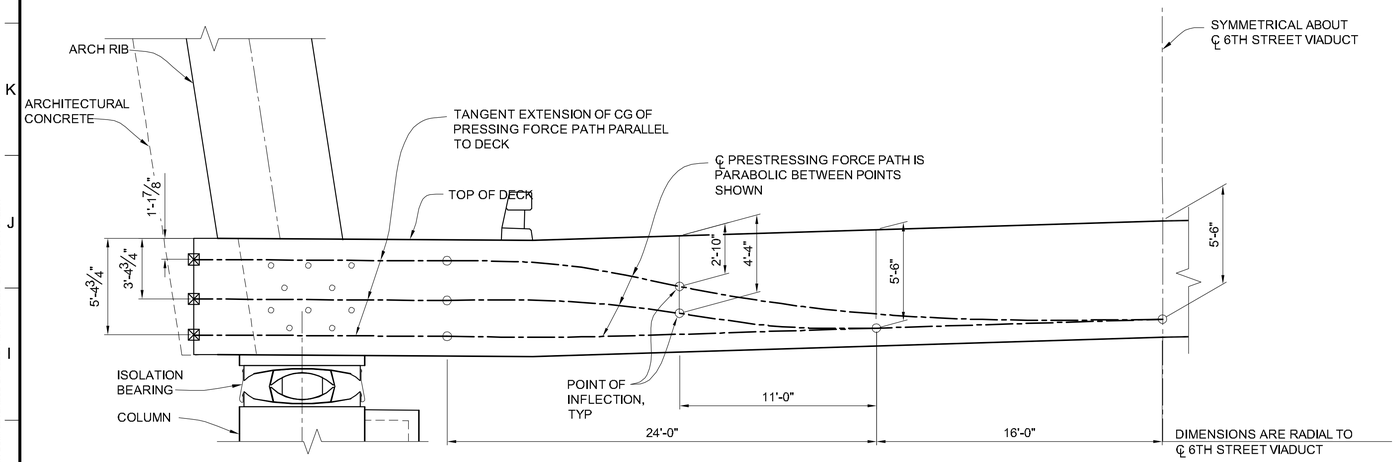

BENT 3 ARCH RIB FLOOR BEAM POST TENSIONING LAYOUT

SCALE: 1/4"=1'-0"

PRESTRESSING NOTES

270 KSI LOW RELAXATION STRANDS

Pjack = 5932 KIPS
ANCHOR SET = 3/8"
K =0.0002 1/FT μ = 0.15

CONCRETE:

f'c = 6, 000 PSI @ 28 DAYS
f'ci = 5,000 PSI @ TIME OF STRESSING

CONTRACTOR SHALL SUBMIT ELONGATION CALCULATIONS BASED ON INITIAL STRESS AT ☒ = 0.924 TIMES JACKING STRESS FOR ALL DUCT.
ONE END STRESSING AT SOUTH END.

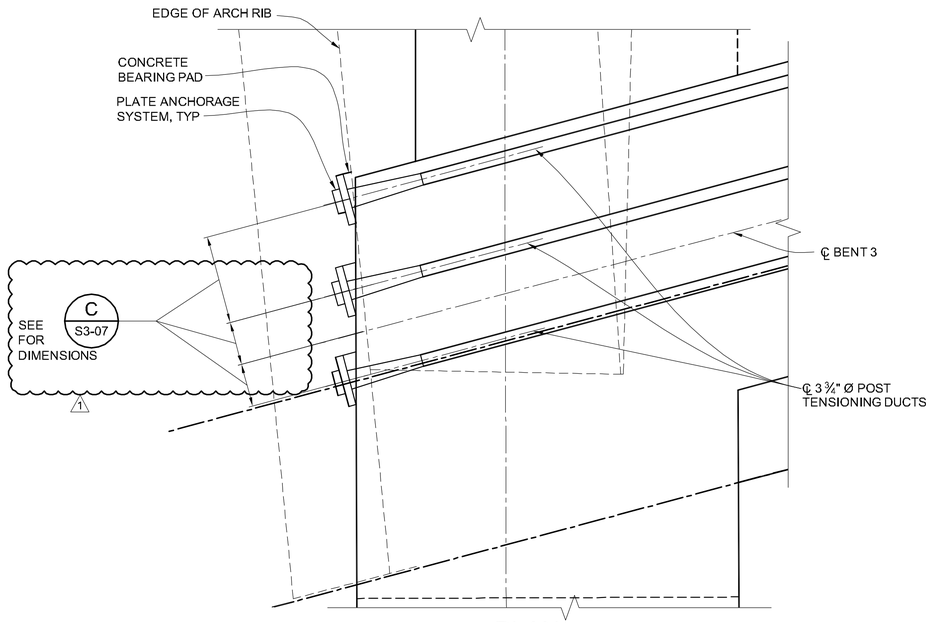

PLAN

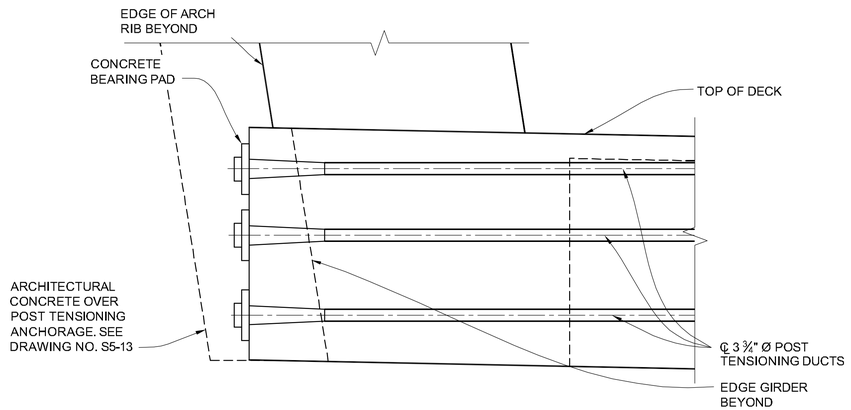

ELEVATION

BENT 3 ARCH RIB FLOOR BEAM POST TENSIONING ANCHORAGE

SCALE: 1/2"=1'-0"

T.O. 5 Change Order Serial Sketch No. 59 - Page 3 of 13

THE CITY OF LOS ANGELES OR ITS OFFICERS OR AGENTS SHALL NOT BE RESPONSIBLE FOR THE ACCURACY OR COMPLETENESS OF ELECTRONIC COPIES OF THIS PLAN SHEET.

C:\caddlib\pw\pwwestcoast\zhang\dms57683\S3-05-BNL2.dwg 3/13/18 17:35

REVISION DATES (DESIGN STAGE ONLY)

Sheet Version 3.0

BUREAU OF ENGINEERING

ENGINEERING
CITY OF LOS ANGELES

NO.	REVISIONS:	DATE:	BY:
1	BIM REVISION 5 ECO 59	03/16/18	MHJ

STRUCTURE NO. 53C-2329

INDEX NO.

THIS PLAN WAS ELECTRONICALLY SIGNED AND STAMPED.

REGISTERED PROFESSIONAL ENGINEER MICHAEL H. JONES No. S3033 CIVIL STATE OF CALIFORNIA

CITY OF LOS ANGELES DEPARTMENT OF PUBLIC WORKS

GARY LEE MOORE, P.E. CITY ENGINEER

		DATE:
ENGINEER:	MICHAEL H. JONES	1/29/2016
DESIGNED BY:	SEAN XIN	1/29/2016
DRAWN BY:	LI ZHANG	1/29/2016
CHECKED BY:	CHARLES REDFIELD	1/29/2016
APPROVED BY:	MICHAEL H. JONES	1/29/2016

DESIGN GROUP
LIC. NO. S3033

VERTICAL CONTROL: BM 12-04070, 1929 (NGVD 29) - 1988 ADJUSTMENT
HORIZONTAL CONTROL: GPS; PID AE 1704, EPOCH 1991.35

SHEET TITLE: BENT 3 DETAILS NO. 3

PROJECT: SIXTH STREET VIADUCT REPLACEMENT

ADDRESS: SIXTH STREET VIADUCT (WHITTIER BLVD) LOS ANGELES, CA

HNTB
HNTB Corporation
601 W. 5TH STREET SUITE 1000
LOS ANGELES, CALIFORNIA 90071
TEL (213) 403-1000 FAX (213) 403-1001

WORK ORDER NO. E700224F

DRAWING NO. S3-08

SHEET 219 OF 560 SHEETS

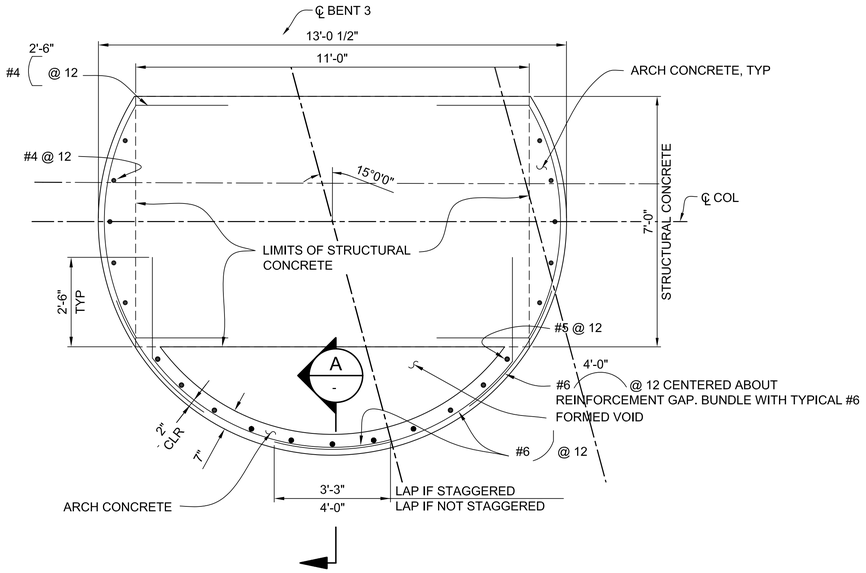

ARCHITECTURAL CONCRETE
SCALE: 1/2"=1'-0"

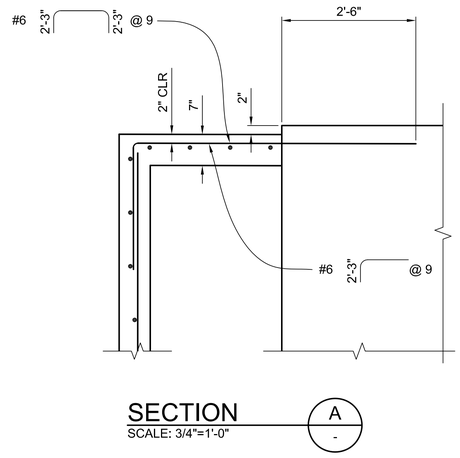

SECTION
SCALE: 3/4"=1'-0"

A
-

NOTES:

1. ALL ARCHITECTURAL CONCRETE IS CAST MONOLITHICALLY WITH STRUCTURAL CONCRETE.
2. INTERNAL FORMS USED TO FORM ARCHITECTURAL CONCRETE MAY BE LEFT IN PLACE.
3. ALL #4, #5 AND #6 REINFORCING BARS AT ARCHITECTURAL CONCRETE SHALL BE EPOXY COATED.

BUREAU OF ENGINEERING
OFFICIAL RECORD

HNTB
HNTB Corporation
601 W. 5TH STREET SUITE 1000
LOS ANGELES, CALIFORNIA 90071
TEL (213) 403-1000 FAX (213) 403-1001

BUREAU OF ENGINEERING

ENGINEERING
CITY OF LOS ANGELES

NO.	REVISIONS:	DATE	BY:

STRUCTURE NO. 53C-2329

INDEX NO. P-38113

REGISTERED PROFESSIONAL ENGINEER MICHAEL H. JONES No. S3033 CIVIL STATE OF CALIFORNIA

THIS PLAN WAS ELECTRONICALLY SIGNED AND STAMPED.

CITY OF LOS ANGELES DEPARTMENT OF PUBLIC WORKS

VERTICAL CONTROL:	BM 12-04070, 1929 (NGVD 29) - 1985 ADJUSTMENT
HORIZONTAL CONTROL:	GPS; PID AE 1704, EPOCH 1991.35
SHEET TITLE:	BENT 3 DETAILS NO. 4
PROJECT:	SIXTH STREET VIADUCT REPLACEMENT
ADDRESS:	SIXTH STREET VIADUCT (WHITTIER BLVD) LOS ANGELES, CA

GARY LEE MOORE, P.E. CITY ENGINEER

		DATE:
	DESIGN GROUP	
ENGINEER:	MICHAEL H. JONES	LIC. NO. S3033 1/29/2016
DESIGNED BY:	SEAN XIN	1/29/2016
DRAWN BY:	LI ZHANG	1/29/2016
CHECKED BY:	CHARLES REDFIELD	1/29/2016
APPROVED BY:	MICHAEL H. JONES	1/29/2016

WORK ORDER NO. E700224F

DRAWING NO. S3-09

SHEET 220 OF 560 SHEETS

THE CITY OF LOS ANGELES OR ITS OFFICERS OR AGENTS SHALL NOT BE RESPONSIBLE FOR THE ACCURACY OR COMPLETENESS OF ELECTRONIC COPIES OF THIS PLAN SHEET.

REVISION DATES (DESIGN STAGE ONLY)

C:\caddlib\pw\pwwestcoast\zhang\dms57683\S3-05-BNL2.dwg 6/27/16 16:19

Sheet Version 3.0

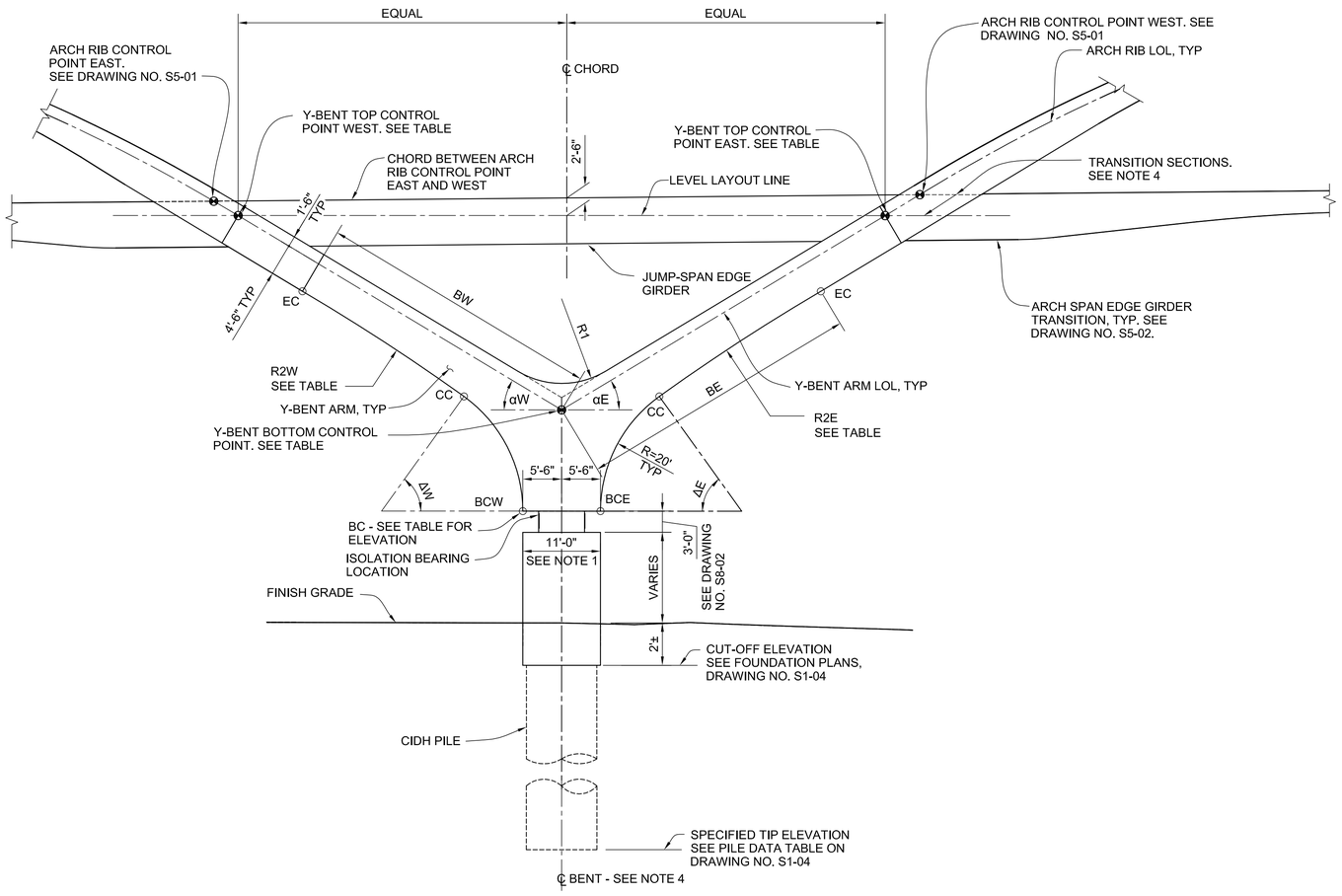

TYPICAL Y-BENT AND JUMP-SPAN NOMENCLATURES

SCALE: 1" =10'

NOTES:

1. THE ORIENTATION OF Y-BENT, INCLUDING THE 11'-0" DIMENSION OF THE LOWER COLUMN, SHALL BE PARALLEL TO THE CHORD BETWEEN THE WEST AND EAST Y-BENT TOP CONTROL POINTS.
2. BCW AND BCE ARE FINISHED CONCRETE ELEVATIONS AT THE TOP OF BEARINGS. WHEN BCW AND BCE ARE NOT THE SAME ELEVATION, THE LOWER ELEVATION OF THE TWO SHALL BE USED TO ESTABLISH THE FINISHED CONCRETE ELEVATION AT THE TOP OF THE BEARING. THE 11'-0" COLUMN DIMENSION SHALL BE MAINTAINED AT THE TOP OF BEARINGS WHEN BCW & BCE ARE AT DIFFERENT ELEVATIONS.
3. FOR THE LAYOUT OF THE X AND Y COORDINATE SYSTEM AND THE BENT PLAN LAYOUT, SEE DRAWING NO. S3-12.
4. THE ARCH RIB CANT IS OBTAINED BY ROTATING THE ARCH RIB ABOUT THE LEVEL LAYOUT LINE. A TRANSITION IS REQUIRED BETWEEN THE Y-BENT TOP CONTROL POINT AND THE ARCH RIB CONTROL POINT. THE SECTION ON THE Y-BENT TOP CONTROL POINT CONSISTS OF A SECTION CUT THROUGH THE 6.0' X 7.0' Y-BENT STRUCTURAL SECTION ALONG THE LEVEL LAYOUT LINE. THE UPPER SECTION IS THEN A PARALLEL SECTION CUT THROUGH THE ARCH RIB CONTROL POINT.

TABLE OF DIMENSIONS

BENT NO.	LOCATION	R1 (FT)	R2W (FT)	R2E (FT)	Y - BENT TOP CONTROL POINT WEST			Y - BENT TOP CONTROL POINT EAST			Y - BENT BOTTOM CONTROL POINT			BW (FT)	BE (FT)	αW (DEG)	αE (DEG)	BC ELEVATION (SEE NOTE 2)		ΔW (DEG)	ΔE (DEG)
					X COORD	Y COORD	ELEVATION	X COORD	Y COORD	ELEVATION	X COORD	Y COORD	ELEVATION					BCW (FT)	BCE (FT)		
4	NORTH	6	500	300	189.296	96.952	283.112	251.734	110.762	283.112	223.988	104.625	260.910	30.00	25.00	32.00	38.00	247.662	249.416	56.1621	49.5474
	SOUTH				235.360	10.519	283.936	296.482	24.381	283.936	269.320	18.221	262.176					248.929	250.683		
5	NORTH		70	300	506.571	159.937	290.250	561.703	168.675	290.250	530.846	163.785	270.347	22.00	25.00	39.00	32.50	258.218	257.309	39.6792	55.3512
	SOUTH				546.966	70.976	290.537	601.005	79.446	290.537	570.760	74.705	271.033					258.905	257.995		
6	NORTH		300	70	760.764	195.440	292.707	816.514	201.408	292.707	791.966	198.780	272.715	25.00	22.00	32.50	39.00	259.678	260.587	55.3512	39.6792
	SOUTH				796.548	104.528	292.946	851.177	110.281	292.946	827.123	107.748	273.360					260.323	261.233		
7	NORTH		300	500	1074.258	221.284	295.722	1147.608	224.416	295.722	1106.853	222.676	270.233	25.00	30.00	38.00	32.00	258.739	256.986	49.5474	56.1621
	SOUTH				1104.293	128.312	295.961	1176.266	131.230	295.961	1136.277	129.609	270.952					259.459	257.706		
8	NORTH	12	300	300	1359.513	227.798	298.463	1452.032	226.340	298.463	1405.773	227.069	270.664	40.10	40.10	31.00	31.00	256.015		53.7161	53.7161
	SOUTH				1384.199	133.249	298.702	1475.021	131.624	298.702	1429.610	132.437	271.412					256.763			
9	NORTH				1664.308	216.914	301.300	1756.409	209.880	301.300	1710.358	213.397	273.550	40.10	40.10	31.00	31.00	258.917		53.7161	53.7161
	SOUTH				1683.242	121.045	301.537	1773.635	113.948	301.537	1728.438	117.496	274.297					259.648			
10	NORTH				1967.728	187.658	304.132	2059.227	175.079	304.132	2013.477	181.368	276.384	40.10	40.10	31.00	31.00	261.735		53.7161	53.7161
	SOUTH				1980.837	90.819	304.370	2070.634	78.279	304.370	2025.735	84.549	277.131					262.482			
11	NORTH				2268.824	140.137	306.966	2359.626	122.004	306.966	2314.225	131.070	279.148	40.10	40.10	31.00	31.00	264.499		53.7161	53.7161
	SOUTH				2276.063	42.685	307.205	2365.165	24.695	307.205	2320.614	33.690	279.896					265.247			
12	NORTH	9	300	300	2566.471	74.520	309.716	2638.915	55.511	309.716	2604.100	64.647	286.341	30.00	30.00	31.00	33.00	272.597	273.156	55.8839	53.7662
	SOUTH				2567.820	-23.162	309.955	2638.652	-41.926	309.955	2604.611	-32.909	287.086					273.342	273.901		

THE CITY OF LOS ANGELES OR ITS OFFICERS OR AGENTS SHALL NOT BE RESPONSIBLE FOR THE ACCURACY OR COMPLETENESS OF ELECTRONIC COPIES OF THIS PLAN SHEET.

C:\caddlib\pw\pwwestcoast\zhang\dms57683\S3-11-LT01-02.dwg 6/27/16 16:20
REVISION DATES (DESIGN STAGE ONLY)
Sheet Version 3.0

HNTB
HNTB Corporation
601 W. 5TH STREET, SUITE 1000
LOS ANGELES, CALIFORNIA 90071
TEL (213) 403-1000 FAX (213) 403-1001

BUREAU OF ENGINEERING
OFFICIAL RECORD

CITY OF LOS ANGELES DEPARTMENT OF PUBLIC WORKS BUREAU OF ENGINEERING

ENGINEERING CITY OF LOS ANGELES

NO.	REVISIONS:	DATE	BY:

STRUCTURE NO. 53C-2329

INDEX NO. P-38113

THIS PLAN WAS ELECTRONICALLY SIGNED AND STAMPED.

REGISTERED PROFESSIONAL ENGINEER MICHAEL H. JONES No. S3033 CIVIL STATE OF CALIFORNIA

GARY LEE MOORE, P.E. CITY ENGINEER

		DATE:
ENGINEER:	MICHAEL H. JONES	1/29/2016
DESIGN GROUP	LIC. NO. S3033	1/29/2016
DESIGNED BY:	MICHAEL H. JONES	1/29/2016
DRAWN BY:	LI ZHANG	1/29/2016
CHECKED BY:	CHARLES REDFIELD	1/29/2016
APPROVED BY:	MICHAEL H. JONES	1/29/2016

VERTICAL CONTROL: BM 12-04070,1929 (NGVD 29) - 1985 ADJUSTMENT
HORIZONTAL CONTROL: GPS; PID AE 1704, EPOCH 1991.35

SHEET TITLE: Y-BENT GEOMETRY LAYOUT NO. 1

PROJECT: SIXTH STREET VIADUCT REPLACEMENT

ADDRESS: SIXTH STREET VIADUCT (WHITTIER BLVD) LOS ANGELES, CA

WORK ORDER NO. E700224F

DRAWING NO. S3-11

SHEET 221 OF 560 SHEETS

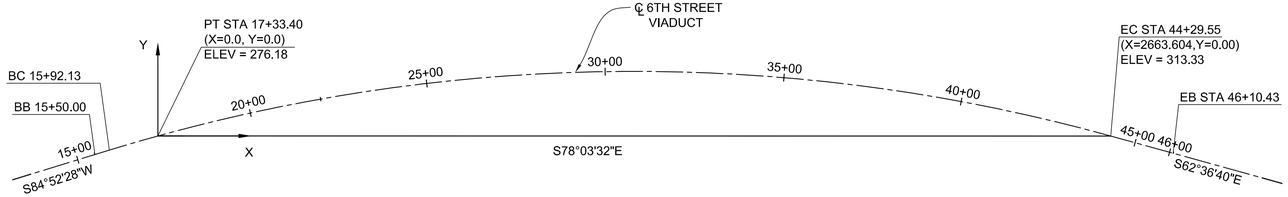

GEOMETRIC CONTROL - X AND Y COORDINATE LAYOUT

SCALE: 1" = 200'

LEGEND:

ZNT = ELEVATION OF NORTH Y-BENT TOP CONTROL POINT

ZNB = ELEVATION OF NORTH Y-BENT BOTTOM CONTROL POINT

ZST = ELEVATION OF SOUTH Y-BENT TOP CONTROL POINT

ZSB = ELEVATION OF SOUTH Y-BENT BOTTOM CONTROL POINT

NOTES:

1. Z AXIS IS VERTICAL, ELEVATIONS ARE RELATIVE TO DATUM SHOWN ON GENERAL PLAN.
2. SEE "TABLE OF DIMENSION" ON DRAWING NO. S3-11 FOR REFERENCED COORDINATES.

BENT LAYOUT PROCEDURE:

1. ESTABLISH ARCH RIB CONTROL POINTS EAST AND WEST AT NORTH AND SOUTH ARCH RIBS. SEE DRAWING NO. S5-01.
2. SET THE ELEVATION OF THE Y-BENT TOP CONTROL POINT AS THE AVERAGE OF THE ARCH RIB CONTROL POINT EAST AND WEST ELEVATIONS MINUS 2'-6". THIS ESTABLISHES THE ELEVATION OF THE LEVEL LAYOUT LINE SHOWN ON THE "TYPICAL Y-BENT AND JUMP-SPAN NOMENCLATURES" ELEVATION ON DRAWING NO. S3-11.
3. ESTABLISH Y-BENT TOP CONTROL POINTS AND THE LOCATION OF THE LEVEL LAYOUT LINE DESCRIBED IN STEP 2 BY PROJECTING THE CANTED TANGENTS OF THE ARCH RIB THROUGH THE ARCH RIB CONTROL POINTS TO THE ELEVATION OF THE LEVEL LINE DESCRIBED IN STEP 2.
4. ESTABLISH Y-BENT BOTTOM CONTROL POINT BY PROJECTING LINES ALONG ANGLES αW AND αE TO THEIR INTERSECTION IN THE PLANE ESTABLISHED WITH THE LEVEL LINE DESCRIBED IN STEP 3. SEE DRAWING NO. S3-11 FOR αW AND αE.
5. SEE "PLAN - BENT LAYOUT" HEREON FOR ℄ BENT LAYOUT.

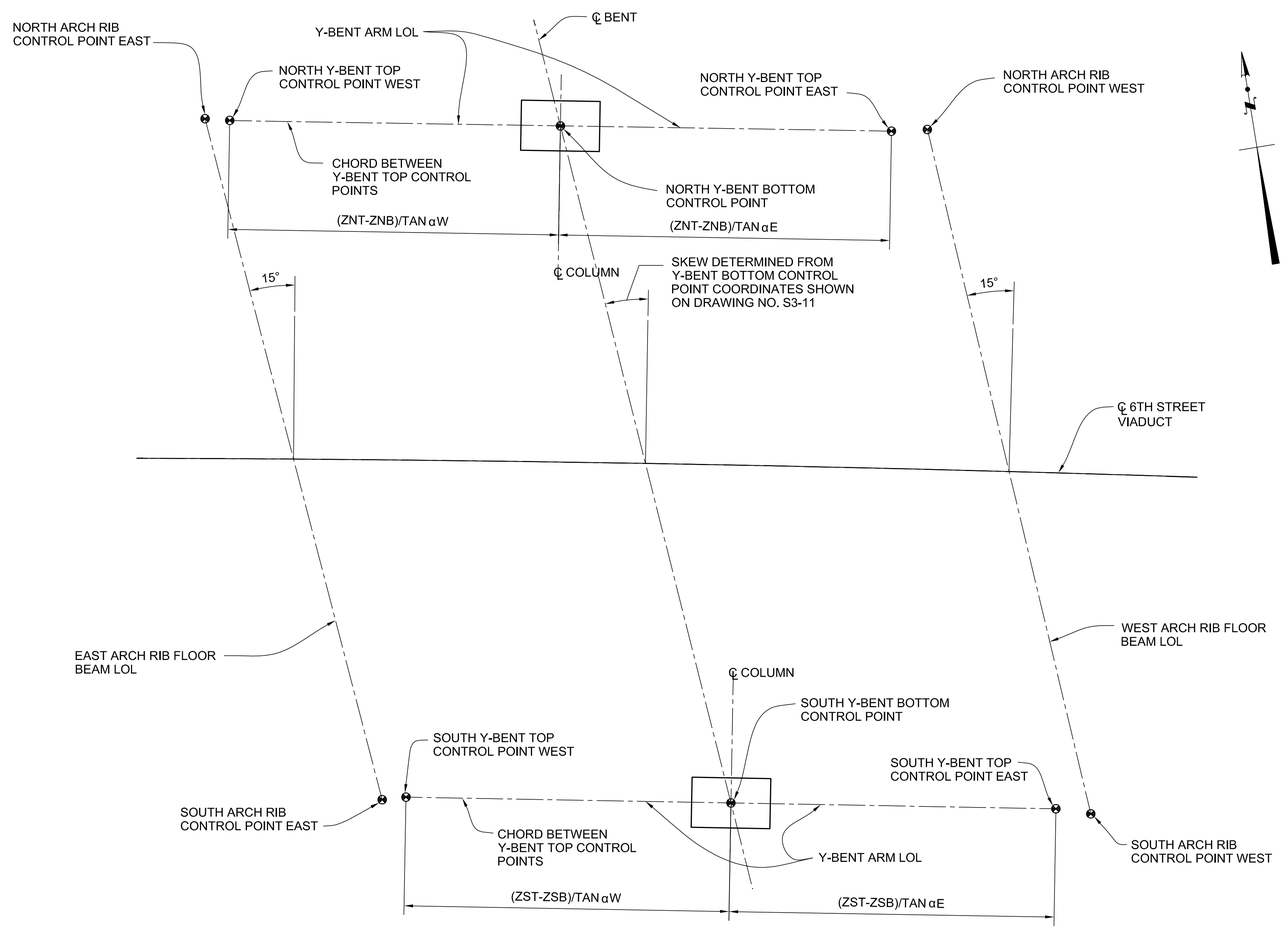

PLAN - BENT LAYOUT

SCALE: 1" = 10'

BUREAU OF ENGINEERING
OFFICIAL RECORD

HNTB
HNTB Corporation
601 W. 5TH STREET SUITE 1000
LOS ANGELES, CALIFORNIA 90071
TEL (213) 403-1000 FAX (213) 403-1001

CITY OF LOS ANGELES DEPARTMENT OF PUBLIC WORKS BUREAU OF ENGINEERING

ENGINEERING CITY OF LOS ANGELES

NO.	REVISIONS:	DATE	BY:

STRUCTURE NO. 53C-2329

INDEX NO. P-38113

"THIS PLAN WAS ELECTRONICALLY SIGNED AND STAMPED."

REGISTERED PROFESSIONAL ENGINEER MICHAEL H. JONES No. S3033 CIVIL STATE OF CALIFORNIA

CITY ENGINEER	DATE:
GARY LEE MOORE, P.E.	
LIC. NO. S3033	1/29/2016

DESIGN GROUP		
ENGINEER:	MICHAEL H. JONES	1/29/2016
DESIGNED BY:	MICHAEL H. JONES	1/29/2016
DRAWN BY:	LI ZHANG	1/29/2016
CHECKED BY:	CHARLES REDFIELD	1/29/2016
APPROVED BY:	MICHAEL H. JONES	1/29/2016

VERTICAL CONTROL: BM 12-04070,1929 (NGVD 29) - 1985 ADJUSTMENT
HORIZONTAL CONTROL: GPS; PID AE 1704, EPOCH 1991.35

SHEET TITLE: Y-BENT GEOMETRY LAYOUT NO. 2

PROJECT: SIXTH STREET VIADUCT REPLACEMENT

ADDRESS: SIXTH STREET VIADUCT (WHITTIER BLVD) LOS ANGELES, CA

WORK ORDER NO. E700224F

DRAWING NO. S3-12

SHEET 222 OF 560 SHEETS

THE CITY OF LOS ANGELES OR ITS OFFICERS OR AGENTS SHALL NOT BE RESPONSIBLE FOR THE ACCURACY OR COMPLETENESS OF ELECTRONIC COPIES OF THIS PLAN SHEET.

REVISION DATES (DESIGN STAGE ONLY)

C:\caddlib\pw\pwwestcoast\zhong\dms57683\S3-11-LT01-02.dwg 6/27/16 16:21

Sheet Version 3.0

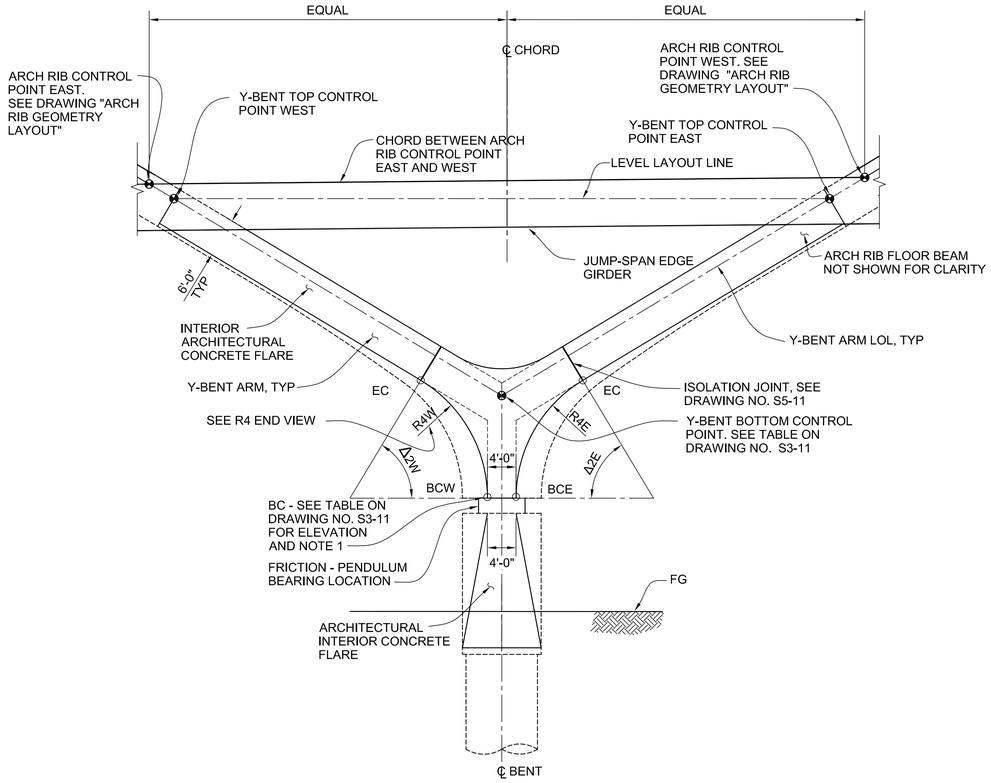

TYPICAL Y-BENT ARCHITECTURAL FLARE - INTERIOR ELEVATION

SCALE: 1" =10'

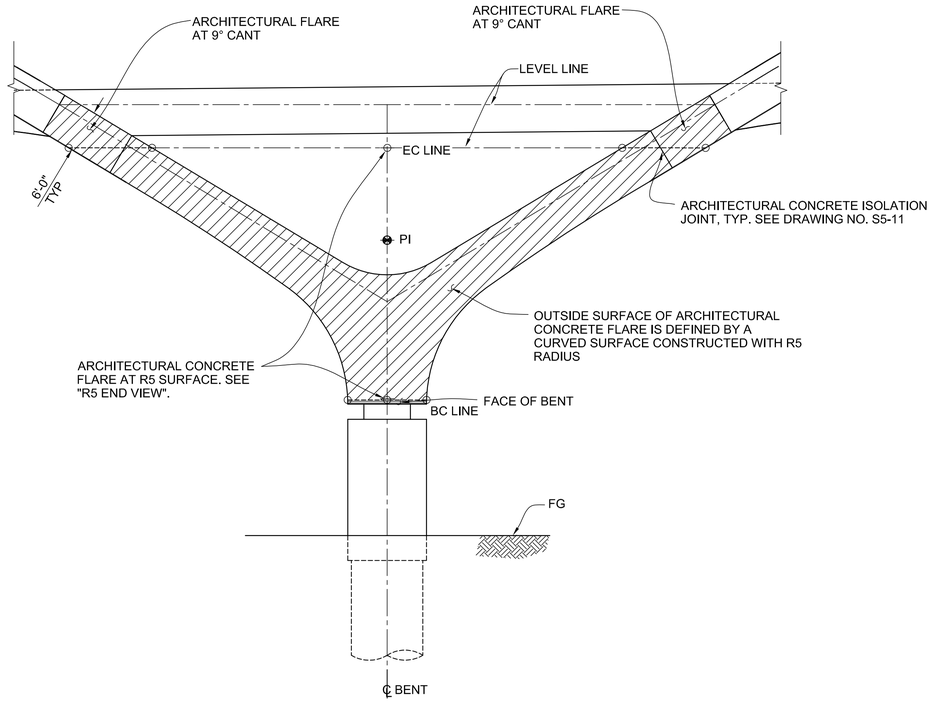

TYPICAL Y-BENT ARCHITECTURAL FLARE - EXTERIOR ELEVATION

SCALE: 1" =10'

TABLE 1						
BENT NO.	LOCATION	R4 WEST	R4 EAST	Δ2W (DEG)	Δ2E (DEG)	B * (FT)
4	NORTH	16.90	19.03	57.68	51.66	6.17
1 SEE NOTE 2	SOUTH	16.90	19.03	57.68	51.66	6.17
5	NORTH	18.97	16.68	50.65	57.18	5.17
	SOUTH	18.97	16.68	50.65	57.18	5.17
6	NORTH	16.68	18.97	57.18	50.65	5.17
	SOUTH	16.68	18.97	57.18	50.65	5.17
7	NORTH	19.03	16.90	51.66	57.68	6.17
	SOUTH	19.03	16.90	51.66	57.68	6.17
8	NORTH	19.09	19.09	58.69	59.69	6.67
	SOUTH					
9	NORTH			58.69	59.69	6.67
	SOUTH					
10	NORTH			58.69	59.69	6.67
	SOUTH					
11	NORTH			58.69	59.69	6.67
	SOUTH					
12	NORTH	17.46	18.17	59.69	56.68	5.83
	SOUTH					5.83

* SEE SECTIONS B AND C ON DRAWING NO. S3-14

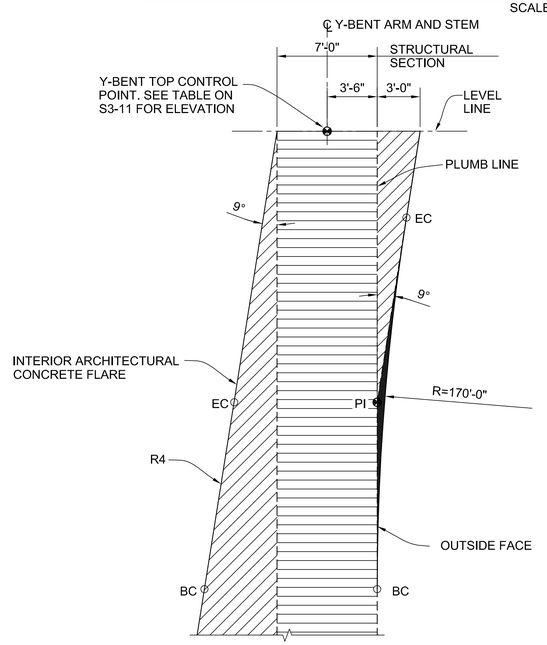

R4 AND R5 END VIEW

NO SCALE

LEGEND:

- STRUCTURAL CONCRETE
- 9° TAPERED ARCHITECTURAL FLARE CONCRETE
- CURVED PLANE ARCHITECTURAL FLARE CONCRETE

NOTES:

1. THE BC ELEVATION AT Y-BENT ARCHITECTURAL FLARES AT THE INTERIOR ELEVATION SHALL BE THE SAME AT THE EAST AND WEST SIDE AND SHALL BE THE LOWER OF BCW OR BCE.
2. TO PERMIT THE REUSE OF THE BENT 7 COLUMN FORM AT BENT 4, THE UPPER PORTION OF THE BENT 7 COLUMN FORM CAN BE REMOVED TO ACCOMMODATE THE SHORTER LENGTH Y-BENT 4 ARMS. AT BENT 4, THIS WILL REQUIRE EXTENDING STRUCTURAL CONCRETE INTO ARCHITECTURAL CONCRETE AT THE INSIDE OF THE Y-BENT AND ADDING A SIMILAR THICKNESS OF ARCHITECTURAL CONCRETE AT THE EXTERIOR OF THE Y-BENT. BELOW THE EC AT CURVE R2W AND R3E SHOWN ON DRAWING S3-11 WHERE INTERIOR ARCHITECTURAL CONCRETE BEGINS TO ANGLE AWAY FROM STRUCTURAL CONCRETE AS SHOWN IN SECTION A ON DRAWING S3-14, THE CORNER OF STRUCTURAL CONCRETE WILL BE REMOVED AS THE STRUCTURAL CONCRETE EXTENDS INTO THE ARCHITECTURAL CONCRETE. INCREASE THE RADIUS OF TIES TO MAINTAIN REQUIRED COVER AND ADJUST THE LOCATION OF LONGITUDINAL REINFORCEMENT. AT GRILLAGE REINFORCEMENT SHOWN IN SECTION A ON DRAWING S3-31, BEND THE #9 CROSS-BAR AS REQUIRED WHERE THE CORNER OF STRUCTURAL CONCRETE IS REMOVED. 1

T.O. 5 - Change Order Serial Sketch No. 60 - Page 1 of 7

THE CITY OF LOS ANGELES OR ITS OFFICERS OR AGENTS SHALL NOT BE RESPONSIBLE FOR THE ACCURACY OR COMPLETENESS OF ELECTRONIC COPIES OF THIS PLAN SHEET.

HNTB
HNTB Corporation
601 W. 5TH STREET SUITE 1000
LOS ANGELES, CALIFORNIA 90071
TEL (213) 403-1000 FAX (213) 403-1001

BUREAU OF ENGINEERING
ENGINEERING
CITY OF LOS ANGELES
NO. 1 | REVISIONS: RFC 0036 | DATE: 01/06/17 | BY: MHJ
STRUCTURE NO. 53C-2329
INDEX NO.
THIS PLAN WAS ELECTRONICALLY SIGNED AND STAMPED.
REGISTERED PROFESSIONAL ENGINEER MICHAEL H. JONES No. S3033 CIVIL STATE OF CALIFORNIA
CITY OF LOS ANGELES DEPARTMENT OF PUBLIC WORKS
GARY LEE MOORE, P.E. CITY ENGINEER
ENGINEER: MICHAEL H. JONES DESIGN GROUP LIC. NO. S3033 DATE: 1/29/2016
DESIGNED BY: MICHAEL H. JONES 1/29/2016
DRAWN BY: LI ZHANG 1/29/2016
CHECKED BY: CHARLES REDFIELD 1/29/2016
APPROVED BY: MICHAEL H. JONES 1/29/2016
VERTICAL CONTROL: BM 12-04070,1929 (NGVD 29) - 1985 ADJUSTMENT
HORIZONTAL CONTROL: GPS; PID AE 1704, EPOCH 1991.35
SHEET TITLE: Y-BENT GEOMETRY LAYOUT NO. 3
PROJECT: SIXTH STREET VIADUCT REPLACEMENT
ADDRESS: SIXTH STREET VIADUCT (WHITTIER BLVD) LOS ANGELES, CA
WORK ORDER NO. E700224F
DRAWING NO. S3-13
SHEET 19 OF SHEETS

C:\caddlib\pw\pwwestcoast\lzhang\dms57683\S3-13-L703-05.dwg 1/06/17 17:23
REVISION DATES (DESIGN STAGE ONLY)
Sheet Version 3.0

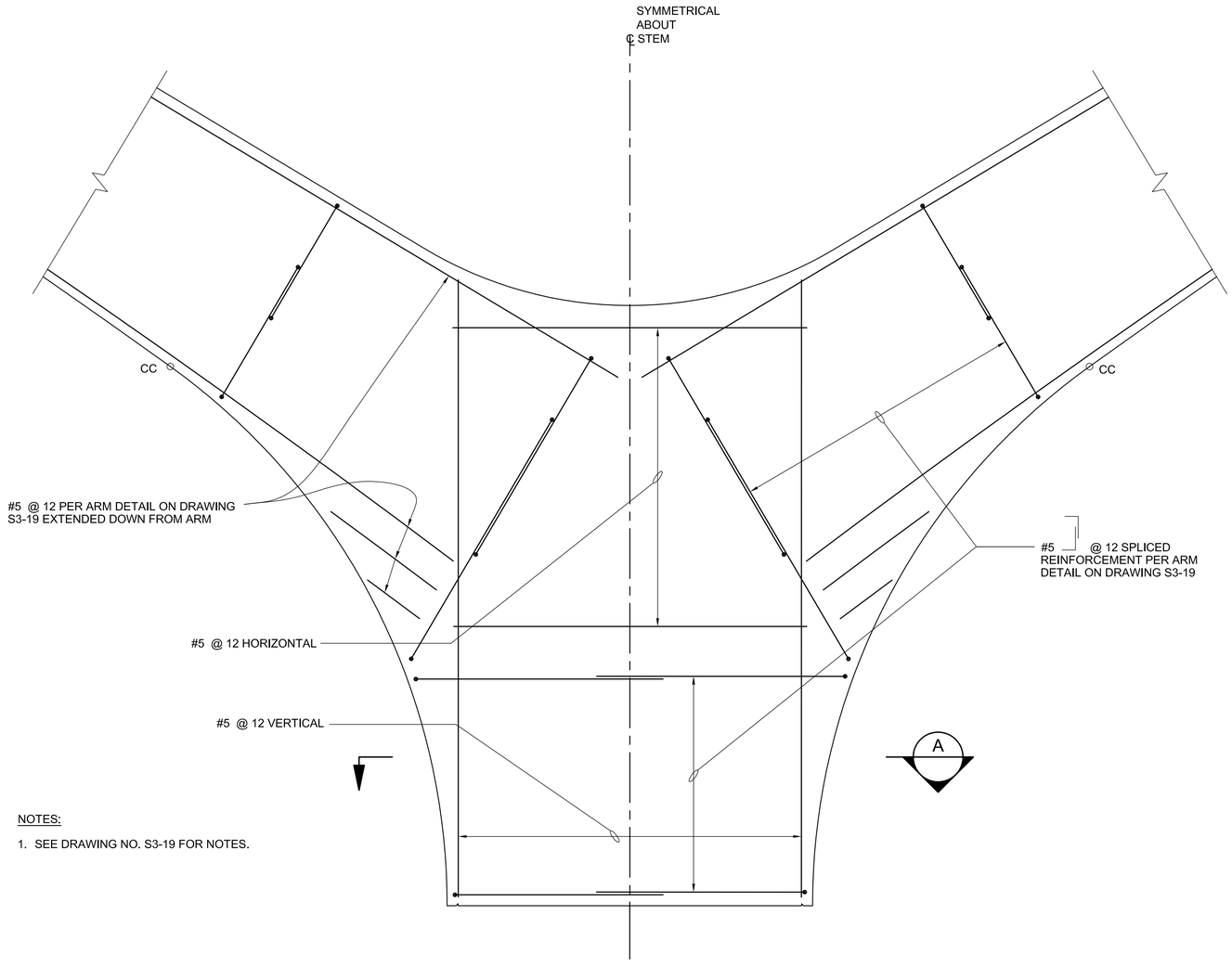

NOTES:

1. SEE DRAWING NO. S3-19 FOR NOTES.

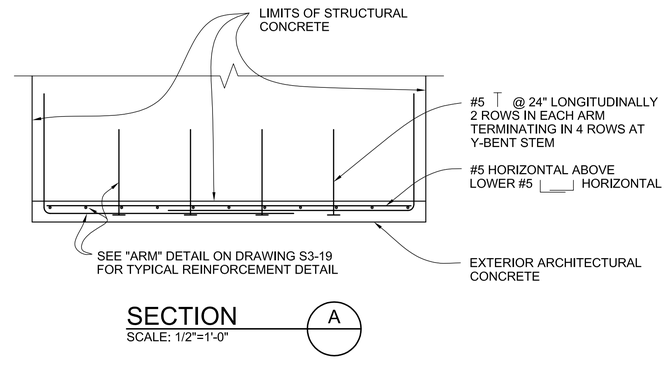

SECTION A
SCALE: 1/2"=1'-0"

RFI 138 4-27-2018

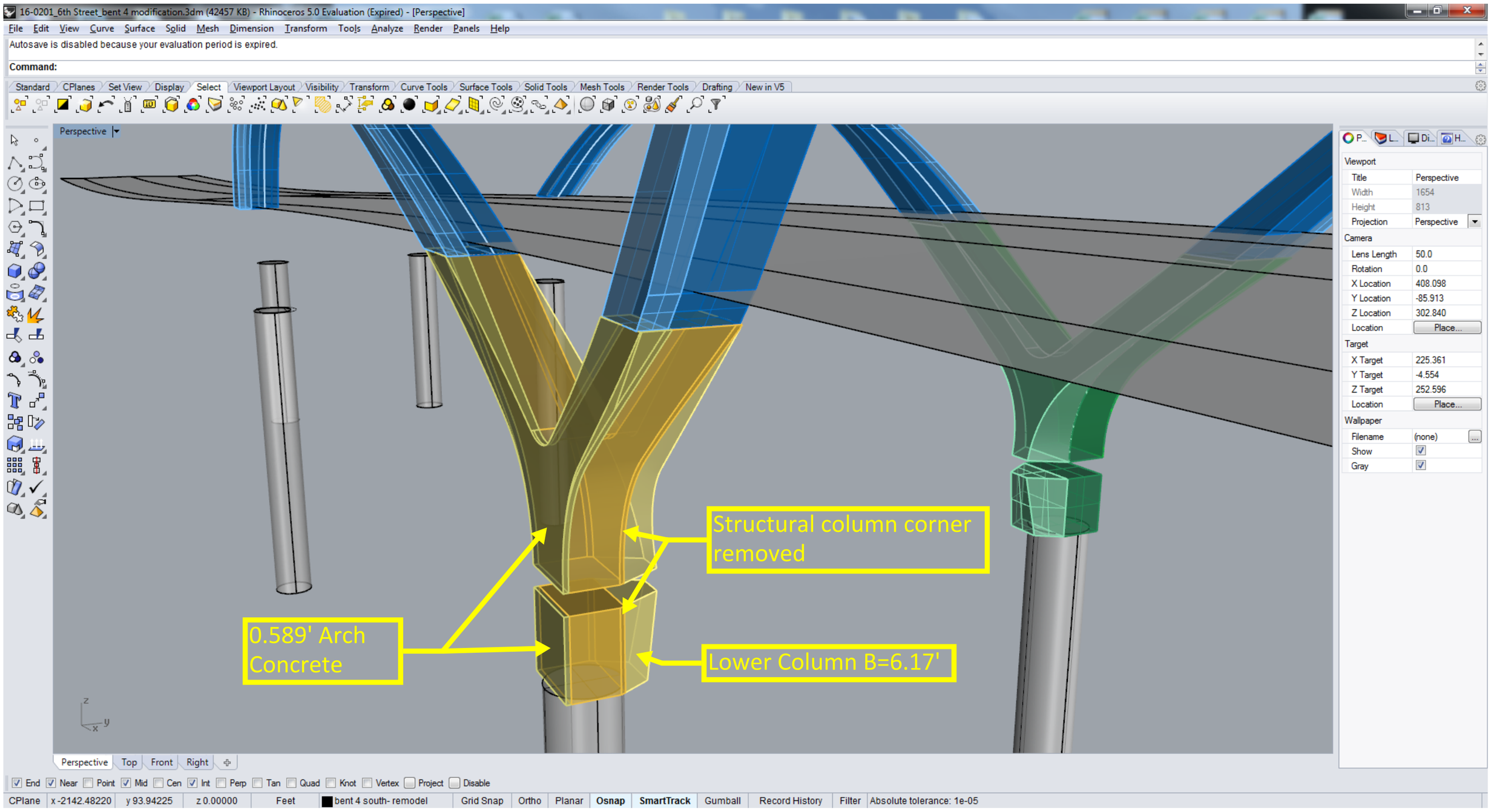

REV.	DATE	DESCRIPTION

SKANSKA
Stacy and Witbeck

585 S. SANTA FE AVE
LOS ANGELES, CA 90013

SIXTH STREET VIADUCT REPLACEMENT PROJECT

BENT 4 PROPOSED MODIFICATIONS

DRAWN BY:	SCOTT KILGORE	DATE:	11/9/15	SCALE:	SHOWN	SHEET	1	OF	5

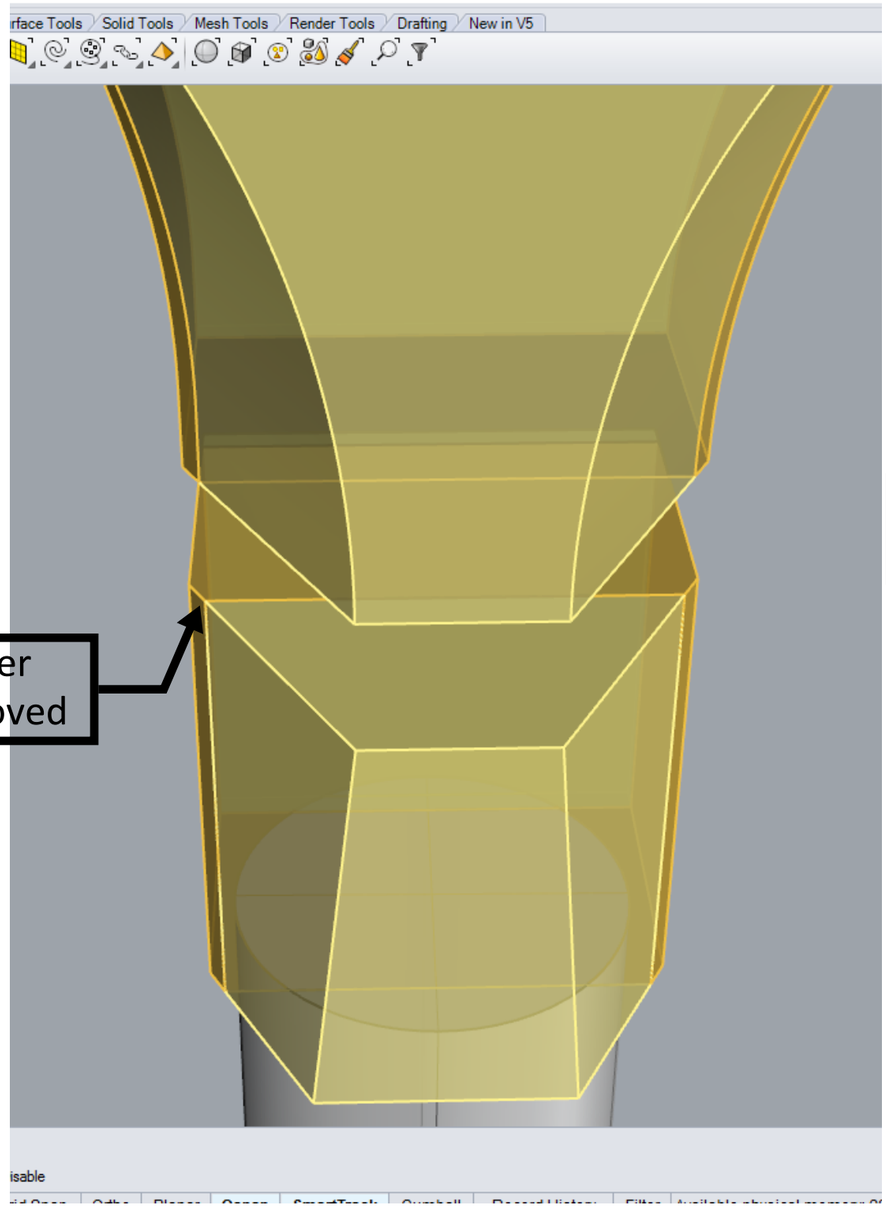

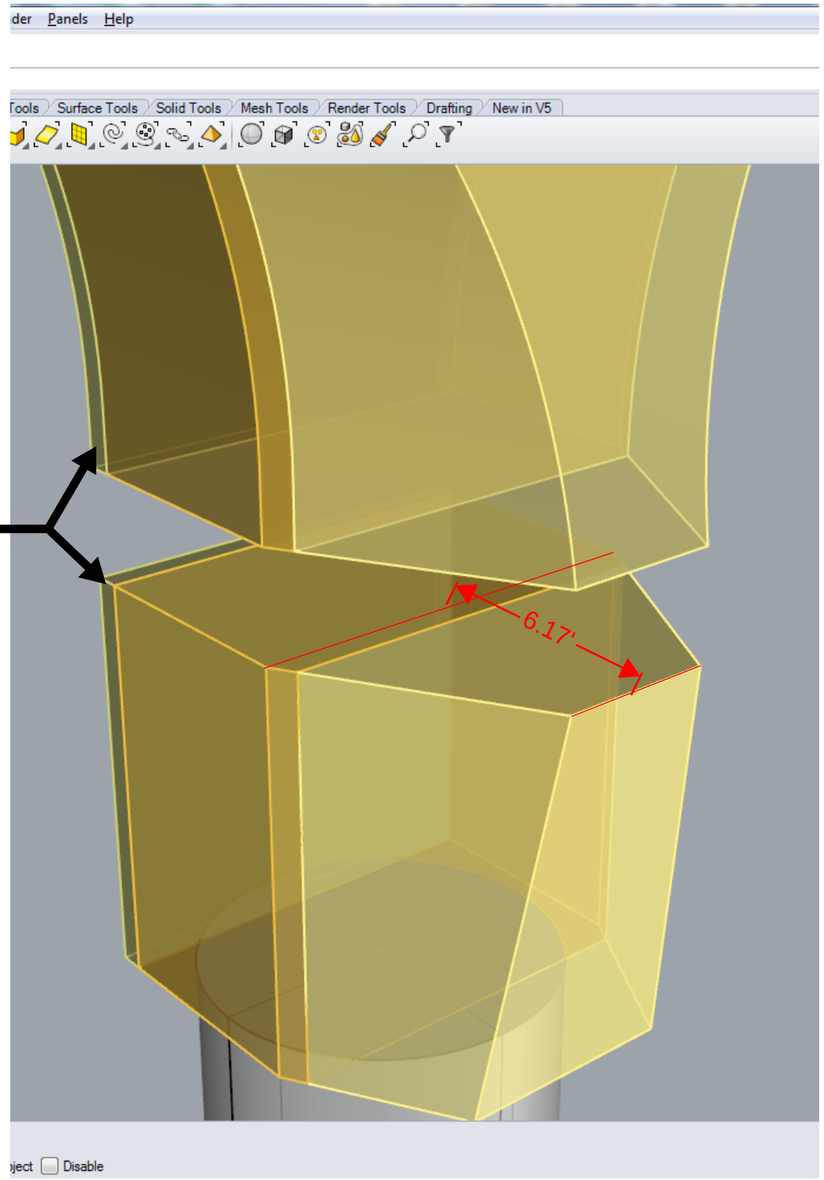

REV.	DATE	DESCRIPTION

SKANSKA
Stacy and Witbeck

585 S. SANTA FE AVE
LOS ANGELES, CA 90013

SIXTH STREET VIADUCT REPLACEMENT PROJECT

BENT 4 PROPOSED MODIFICATIONS

DRAWN BY:	SCOTT KILGORE	DATE:	11/9/15	SCALE:	SHOWN	SHEET	2 OF 5

ADDENDUM 5

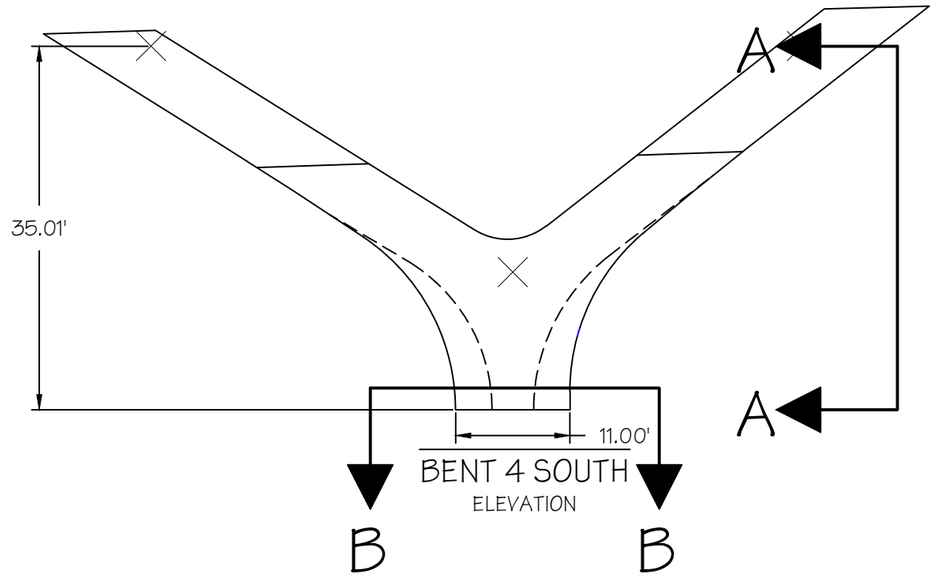

BENT 4 SOUTH
ELEVATION

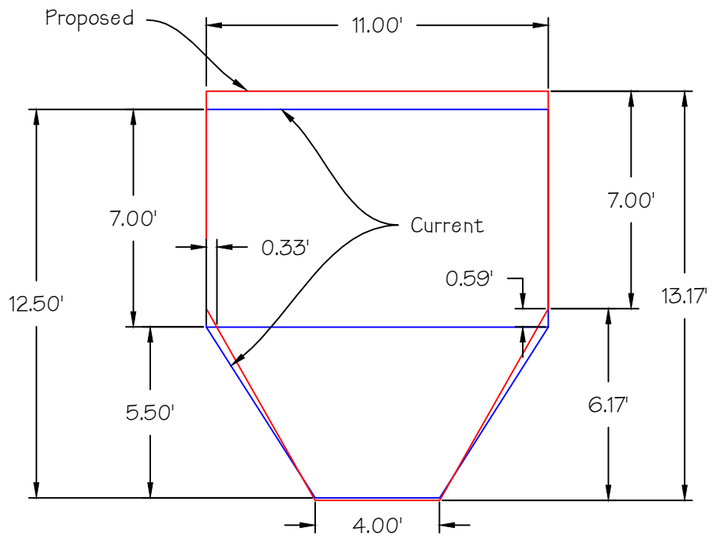

BENT 4 SOUTH
SECTION B-B

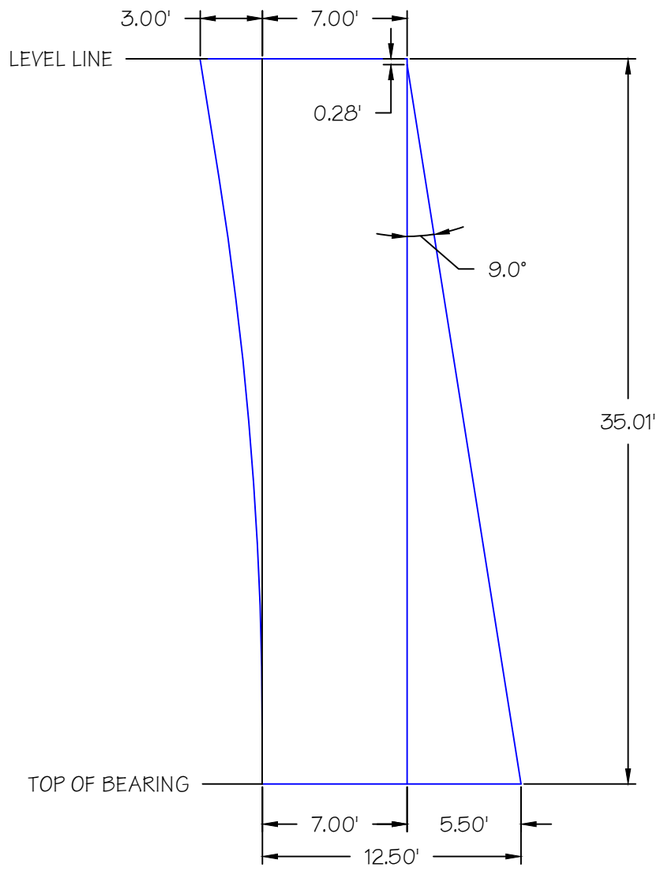

BENT 4 SOUTH
SECTION A-A

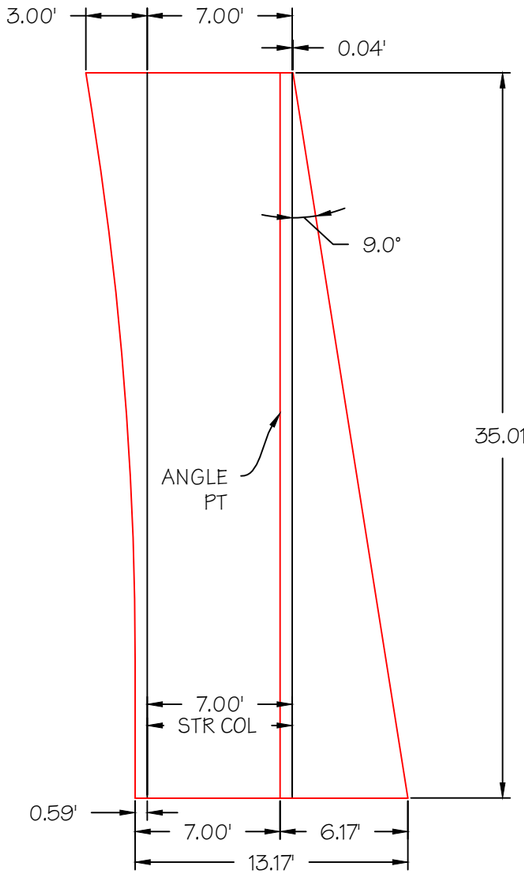

BENT 4 SOUTH (PROPOSED)
SECTION A-A

NOTES

1. INTENT OF PROPOSED MODIFICATIONS IS TO ALLOW THE USE OF STEEL FORMS FROM BENT 7 TO BE USED TO CONSTRUCT BENT 4.
2. "B" DIMENSION ON SHEET S3-13 SHOULD BE CHANGED FROM 5.50' TO 6.17'.

REV.	DATE	DESCRIPTION

SKANSKA
Stacy and Witbeck

585 S. SANTA FE AVE
LOS ANGELES, CA 90013

SIXTH STREET VIADUCT REPLACEMENT PROJECT

BENT 4 PROPOSED MODIFICATIONS

DRAWN BY:	SCOTT KILGORE	DATE:	11/9/15	SCALE:	SHOWN	SHEET	3 OF 5

ADDENDUM 5

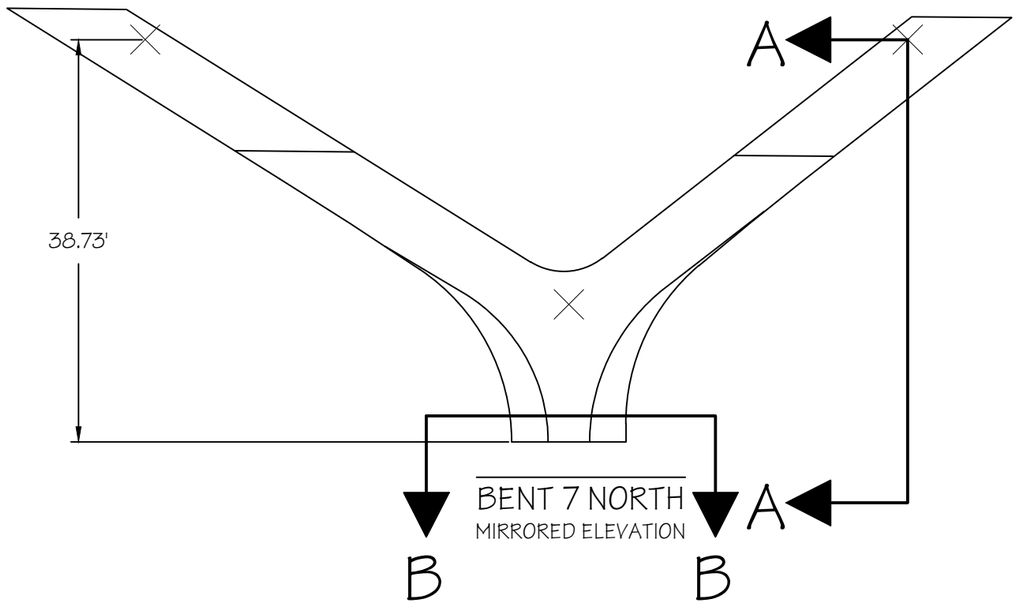

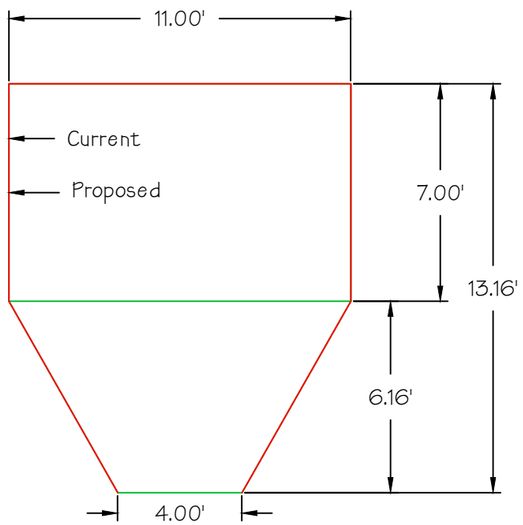

BENT 7 NORTH
SECTION B-B

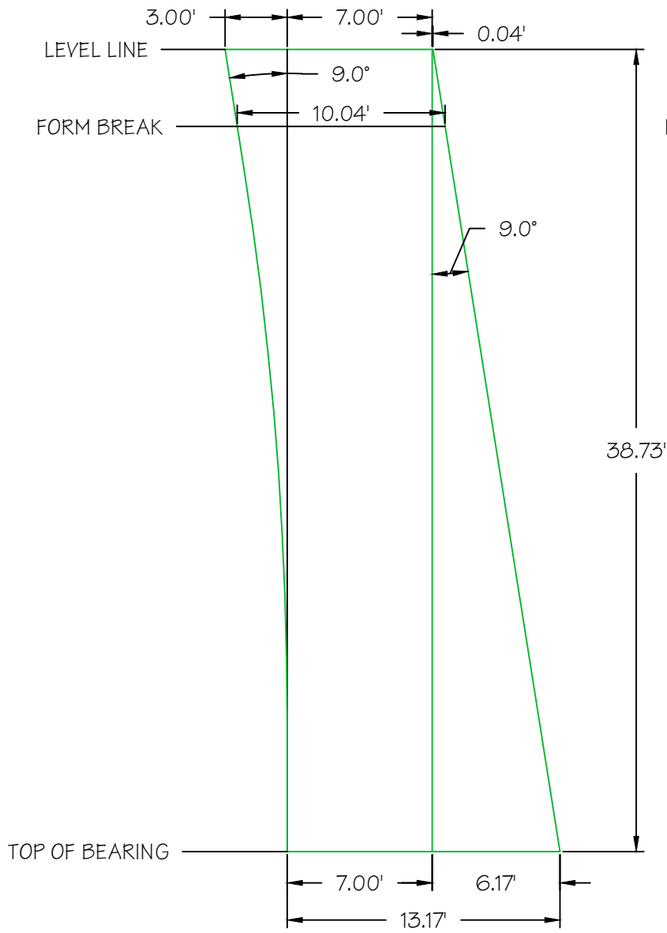

BENT 7 NORTH
SECTION A-A

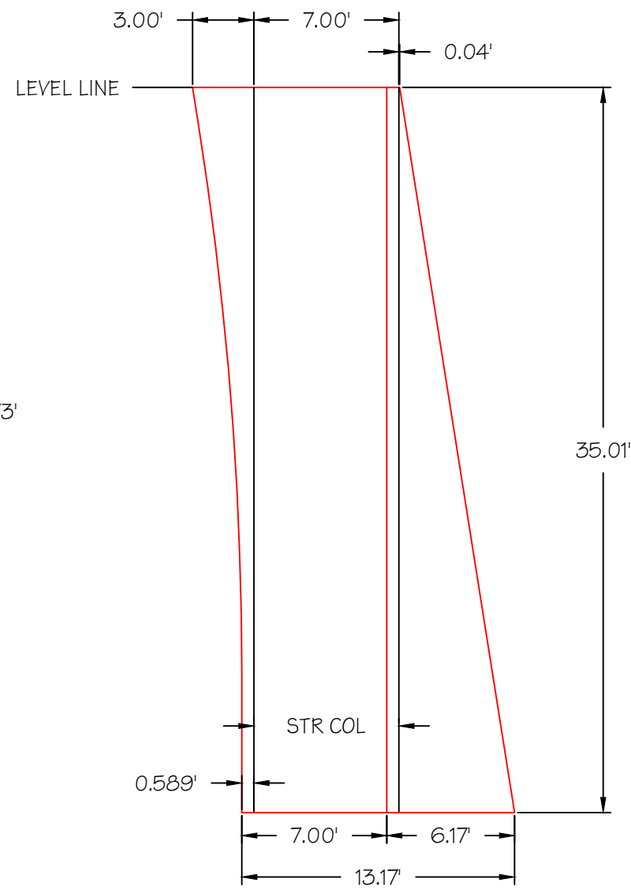

BENT 4 SOUTH (PROPOSED)
SECTION A-A

T.O. 5 - Change Order Serial Sketch No. 60 - Page 6 of 7

REV.	DATE	DESCRIPTION

SKANSKA
Stacy and Witbeck

585 S. SANTA FE AVE
LOS ANGELES, CA 90013

SIXTH STREET VIADUCT REPLACEMENT PROJECT

DRAWN BY: SCOTT KILGORE	DATE: 11/9/15	SCALE: SHOWN	SHEET 4 OF 5

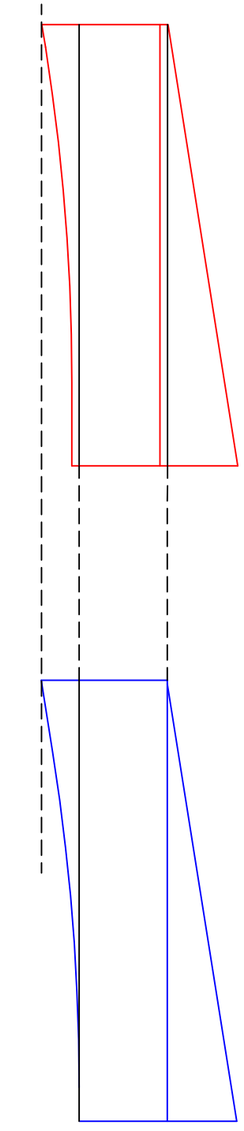

ALIGNMENT DETAIL
BENT 4 SOUTH
SECTION A-A

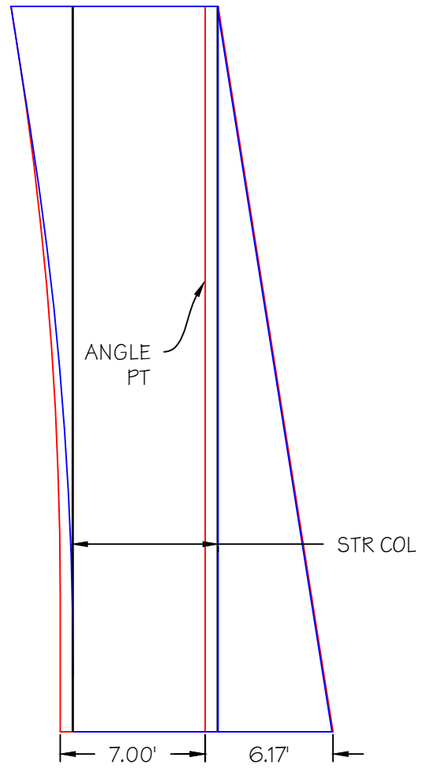

BENT 4 SOUTH (PROPOSED)
OVER BENT 4 (CURRENT)
SECTION A-A

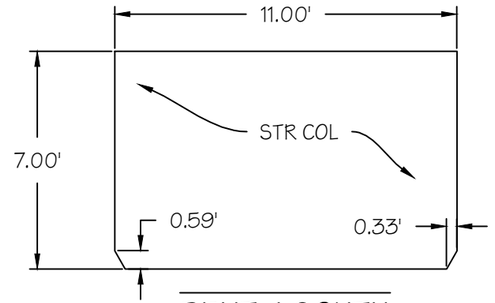

BENT 4 SOUTH
STRUCTURAL CONCRETE ONLY
SECTION B-B

REV.	DATE	DESCRIPTION

SKANSKA
Stacy and Witbeck

585 S. SANTA FE AVE
LOS ANGELES, CA 90013

SIXTH STREET VIADUCT REPLACEMENT PROJECT

DRAWN BY:	SCOTT KILGORE	DATE:	11/9/15	SCALE:	SHOWN	SHEET	5 OF 5

ADDENDUM 5

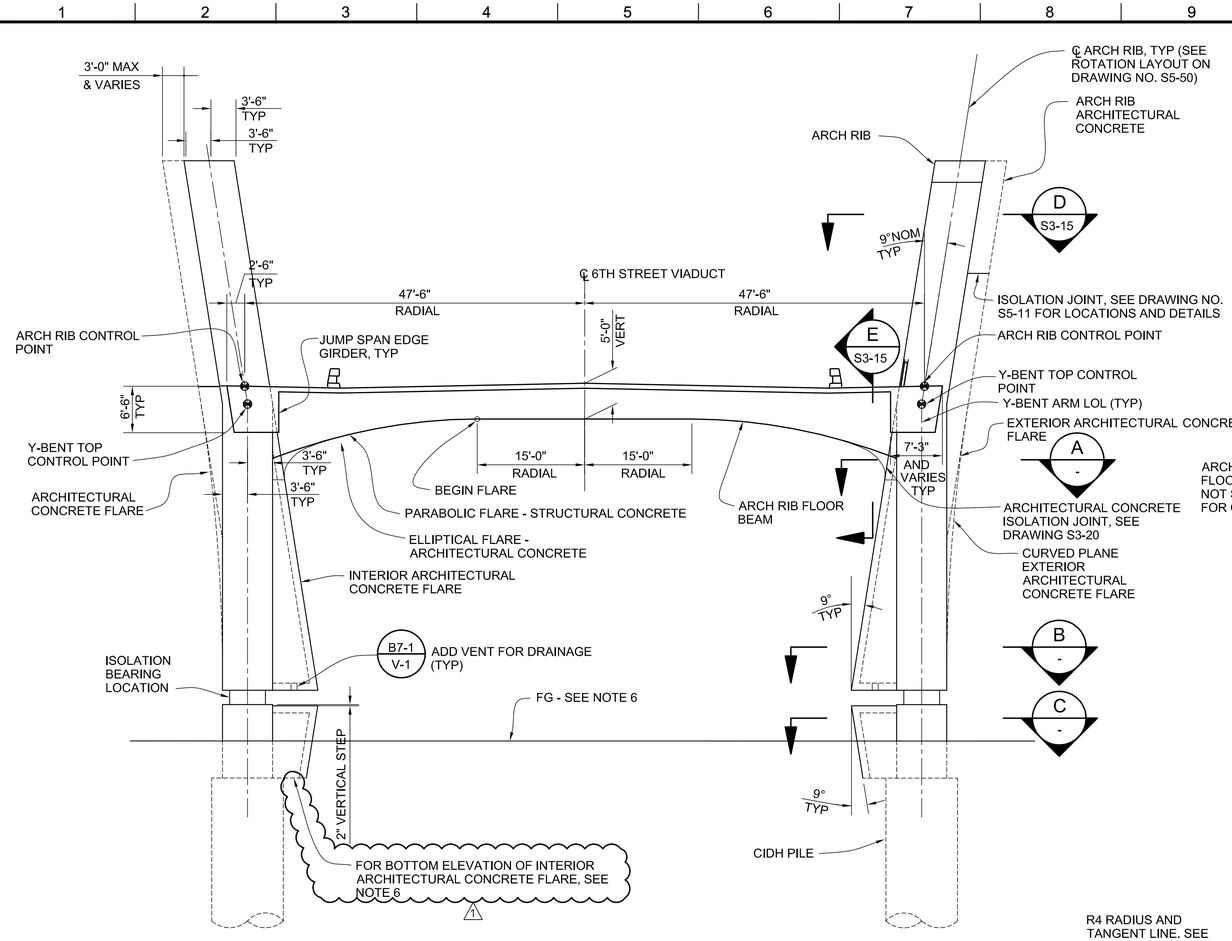

TYPICAL SECTION AT BENT

SCALE: 1" =10'

NOTES:

1. FOR REINFORCEMENT OF STRUCTURAL CONCRETE, SEE DRAWING NOS. S3-16 THROUGH S3-18 FOR CONCRETE ABOVE BEARINGS AND DRAWINGS S3-30 THROUGH S3-33 FOR CONCRETE BELOW BEARINGS.
2. FOR ARCHITECTURAL CONCRETE REINFORCEMENT, SEE DRAWING NOS. S3-19 AND S3-20.
3. INTERNAL FORMS USED TO FORM ARCHITECTURAL CONCRETE MAY BE LEFT IN PLACE. WHERE ELECTRICAL CONDUITS ARE PLACED IN VOIDS, SOLID FOAM SHALL NOT BE USED TO FORM VOIDS UNLESS THE ELECTRICAL CONDUITS CAN TOLERATE HEAT GENERATED DUE TO THE PRESENCE OF THE FOAM.
4. MODIFICATIONS ARE REQUIRED TO ARCHITECTURAL CONCRETE BELOW THE ISOLATION BEARING LEVEL AT THE NORTH COLUMN OF BENT 5. SEE SECTION C ON DRAWING NO. S2-35.
5. AT THE INTERIOR ARCHITECTURAL CONCRETE FLARE, THE "B" DIMENSION IN TABLE 1 ON DRAWING S3-13 IS STANDARDIZED AT SIMILAR BENTS. THE 9° CANT ANGLE SHALL BE MAINTAINED AND THE TERMINATION OF THE ARCHITECTURAL CONCRETE FLARE ABOVE OR BELOW THE Y-BENT TOP CONTROL POINT VARIED AS REQUIRED.
6. SEE DRAWING NO. S3-33 FOR TERMINATION OF INTERIOR ARCHITECTURAL CONCRETE FLARE AT SLOPING FG AT BENTS 6 AND 12. SEE NOTE 4 FOR BENT 5 NORTH. AT OTHER LOCATIONS, LOWER COLUMN INTERIOR ARCHITECTURAL CONCRETE FLARE MAY BE TERMINATED UP TO 13" ABOVE PILE CUT-OFF ELEVATION. 1

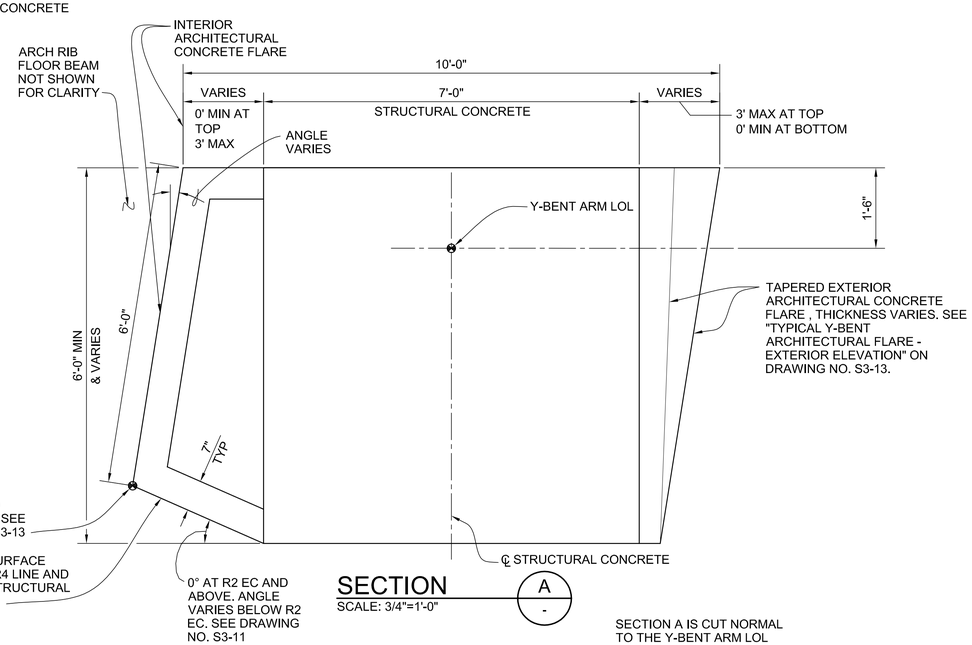

SECTION A

SCALE: 3/4"=1'-0"

SECTION A IS CUT NORMAL TO THE Y-BENT ARM LOL

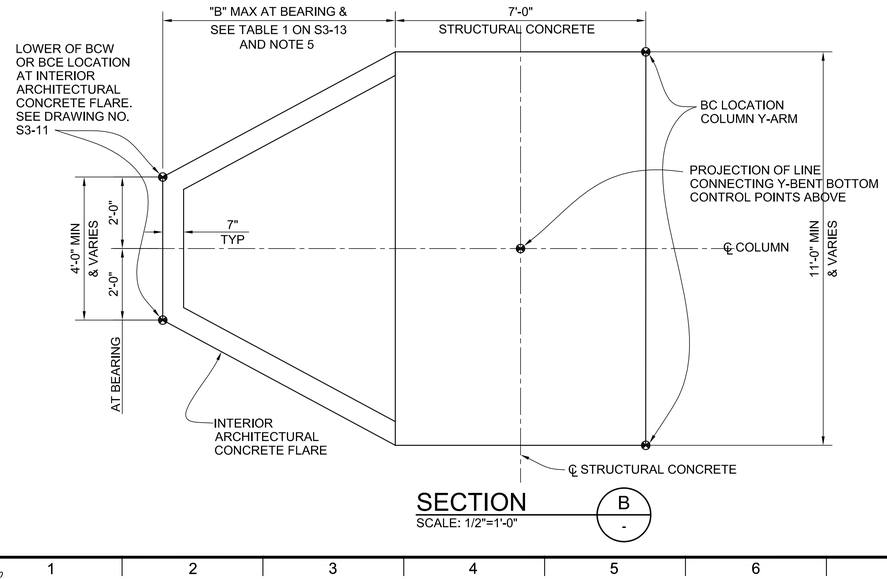

SECTION B

SCALE: 1/2"=1'-0"

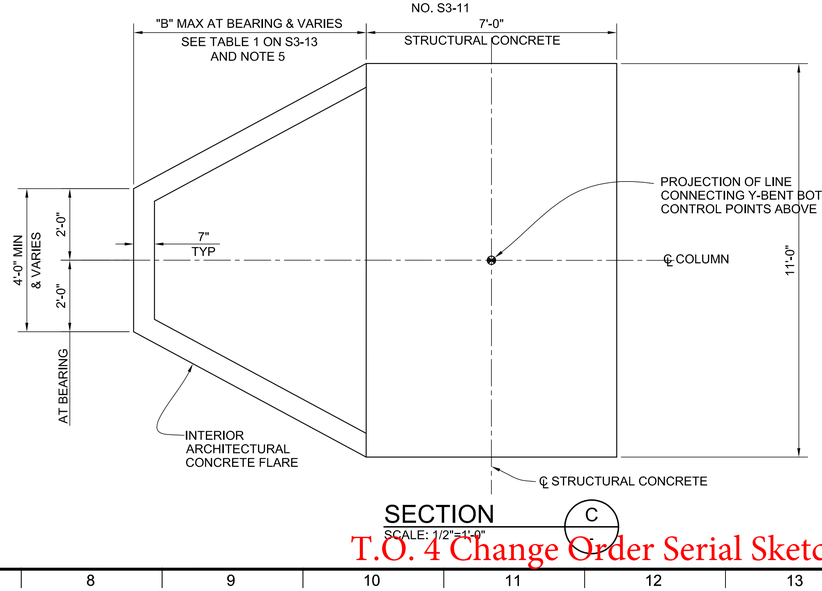

SECTION C

SCALE: 1/2"=1'-0"

T.O. 4 Change Order Serial Sketch No. 1 - Sheet 3 of 10

THE CITY OF LOS ANGELES OR ITS OFFICERS OR AGENTS SHALL NOT BE RESPONSIBLE FOR THE ACCURACY OR COMPLETENESS OF ELECTRONIC COPIES OF THIS PLAN SHEET.

C:\caddlib\pw\pwwestcoast\lzhang\dms57683\S3-13-LT03-05.dwg 12/07/16 17:39

REVISION DATES (DESIGN STAGE ONLY)

Sheet Version 3.0

BUREAU OF ENGINEERING — ENGINEERING — CITY OF LOS ANGELES

NO.	REVISIONS:	DATE	BY:
1	LOWER COLUMN ARCHITECTURAL CONC MODIFICATION	09/23/16	MHJ

STRUCTURE NO. 53C-2329

INDEX NO.

THIS PLAN WAS ELECTRONICALLY SIGNED AND STAMPED.

REGISTERED PROFESSIONAL ENGINEER — MICHAEL H. JONES — No. S3033 — CIVIL — STATE OF CALIFORNIA

CITY OF LOS ANGELES — DEPARTMENT OF PUBLIC WORKS

GARY LEE MOORE, P.E. — CITY ENGINEER

		DATE:
DESIGN GROUP		
ENGINEER:	MICHAEL H. JONES	1/29/2016
LIC. NO. S3033		1/29/2016
DESIGNED BY:	MICHAEL H. JONES	1/29/2016
DRAWN BY:	LI ZHANG	1/29/2016
CHECKED BY:	CHARLES REDFIELD	1/29/2016
APPROVED BY:	MICHAEL H. JONES	1/29/2016

VERTICAL CONTROL: BM 12-04070, 1929 (NGVD 29) – 1985 ADJUSTMENT
HORIZONTAL CONTROL: GPS; PID AE 1704, EPOCH 1991.35

SHEET TITLE: Y-BENT GEOMETRY LAYOUT NO. 4

PROJECT: SIXTH STREET VIADUCT REPLACEMENT

ADDRESS: SIXTH STREET VIADUCT (WHITTIER BLVD) LOS ANGELES, CA

HNTB
HNTB Corporation
601 W. 5TH STREET SUITE 1000
LOS ANGELES, CALIFORNIA 90071
TEL (213) 403-1000 FAX (213) 403-1001

WORK ORDER NO. E700224F

DRAWING NO. S3-14

SHEET 20 OF SHEETS

ADDENDUM 5

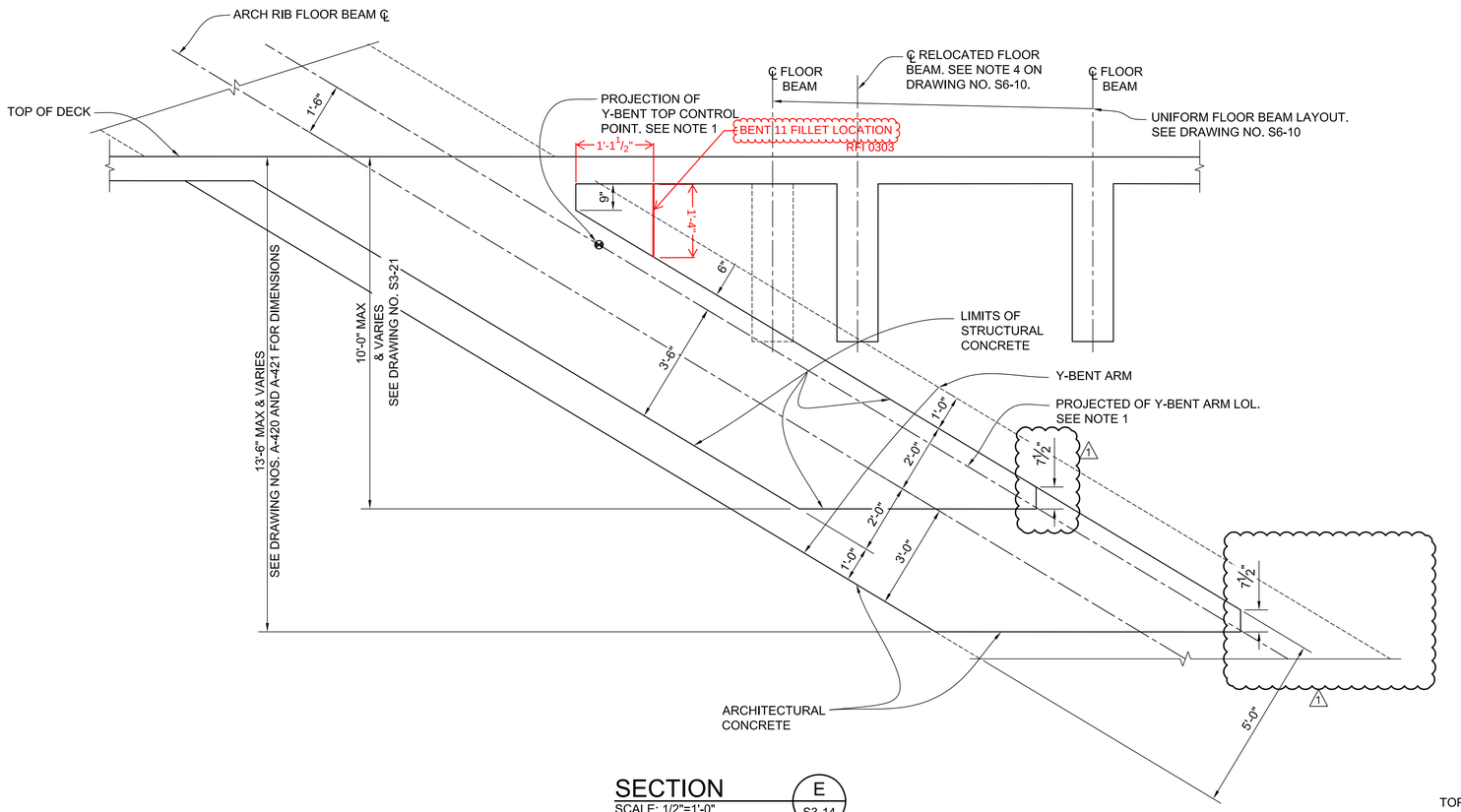

SECTION E
SCALE: 1/2"=1'-0"
S3-14

NOTES:

1. FOR LAYOUT OF ARCH RIB FLOOR BEAMS, USE THE Y-BENT TOP CONTROL POINTS AND Y-BENT ARM LOL PROJECTED TO THE INSIDE FACE OF THE Y-BENT ARMS. SEE DRAWING NO. S3-11 FOR Y-BENT TOP CONTROL POINT COORDINATES. FOR THE PROJECTED ARCH RIB FLOOR BEAM LOL, SEE "ARCH RIB FLOOR BEAM LOL ISOMETRIC" ON THIS DRAWING AND DRAWING NO. S3-21.
2. CANT OF ARCH RIB FACE IS 9° MEASURED FROM A VERTICAL PLANE TO A PLANE ROTATED ABOUT THE ARCH RIB CHORD, DEFINED ON DRAWING NO. S5-01. SEE "ARCH RIB ROTATION LAYOUT" ON DRAWING NO. S5-50. TO MAINTAIN A LEVEL ARCH RIB EXTRADOS AND INTRADOS, THE ARCH RIB CROSS SECTION CORNER ANGLE IS 9° AT THE ARCH RIB CROWN AND VARIES AT OTHER LOCATIONS.
3. INTERNAL FORMS USED TO FORM ARCHITECTURAL CONCRETE MAY BE LEFT IN PLACE.
4. FOR ARCHITECTURAL CONCRETE REINFORCEMENT SEE DRAWING NOS. S3-20 AND S5-48.

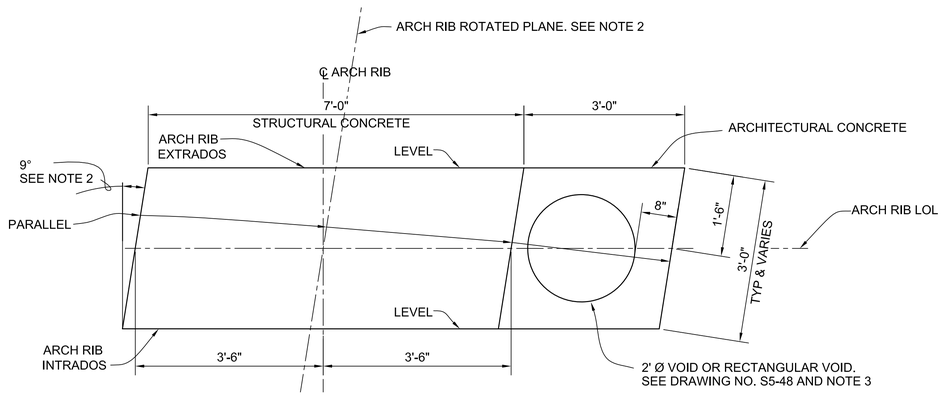

SECTION D
SCALE: 3/4"=1'-0"
S3-14

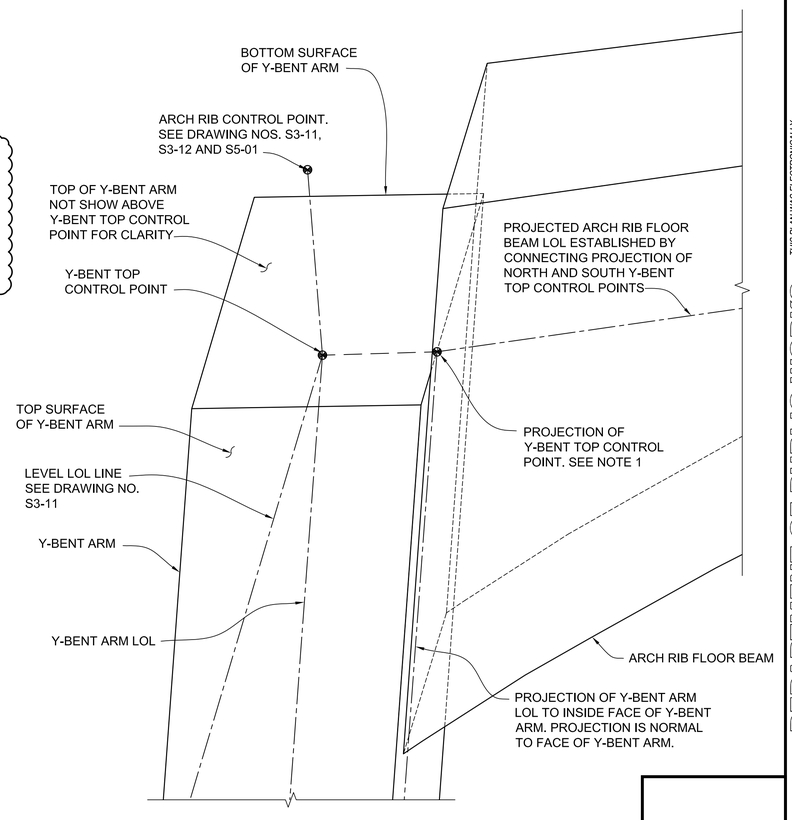

ARCH RIB FLOOR BEAM LOL ISOMETRIC
NO SCALE

T.O. 5 - Change Order Serial Sketch No. 86 - Page 1 of 3

THE CITY OF LOS ANGELES OR ITS OFFICERS OR AGENTS SHALL NOT BE RESPONSIBLE FOR THE ACCURACY OR COMPLETENESS OF ELECTRONIC COPIES OF THIS PLAN SHEET.

C:\caddlib\pw\pwwestcoast\lzhang\dms57683\S3-13-LT03-05.dwg 12/17/18 10.35

REVISION DATES (DESIGN STAGE ONLY)

Sheet Version 3.0

BUREAU OF ENGINEERING
ENGINEERING
CITY OF LOS ANGELES

NO.	REVISIONS:	DATE	BY:
1	AREB CHAMFER CLARIFICATION ECO 86	12/20/18	MHJ

STRUCTURE NO. 53C-2329

INDEX NO.

THIS PLAN WAS ELECTRONICALLY SIGNED AND STAMPED

REGISTERED PROFESSIONAL ENGINEER MICHAEL H. JONES No. S3033 CIVIL STATE OF CALIFORNIA

CITY OF LOS ANGELES DEPARTMENT OF PUBLIC WORKS

GARY LEE MOORE, P.E. CITY ENGINEER

ENGINEER:	MICHAEL H. JONES	DESIGN GROUP	
DESIGNED BY:	MICHAEL H. JONES	DATE:	1/29/2016
DRAWN BY:	LI ZHANG		1/29/2016
CHECKED BY:	CHARLES REDFIELD		1/29/2016
APPROVED BY:	MICHAEL H. JONES		1/29/2016

CITY ENGINEER LIC. NO. S3033

VERTICAL CONTROL: BM 12-04070, 1929 (NGVD 29) – 1985 ADJUSTMENT
HORIZONTAL CONTROL: GPS; PID AE 1704, EPOCH 1991.35

SHEET TITLE: Y-BENT GEOMETRY LAYOUT NO. 5

PROJECT: SIXTH STREET VIADUCT REPLACEMENT

ADDRESS: SIXTH STREET VIADUCT (WHITTIER BLVD) LOS ANGELES, CA

HNTB
HNTB Corporation
601 W. 5TH STREET SUITE 1000
LOS ANGELES, CALIFORNIA 90071
TEL (213) 403-1000 FAX (213) 403-1001

WORK ORDER NO. E700224F

DRAWING NO. S3-15

SHEET 225 OF 560 SHEETS

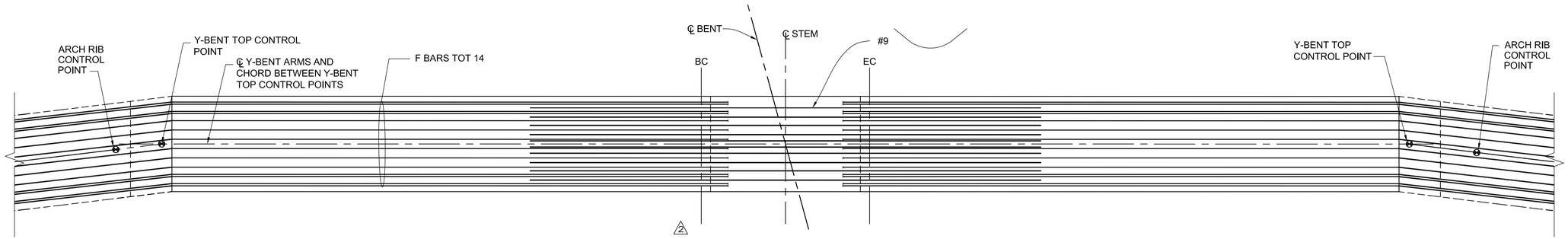

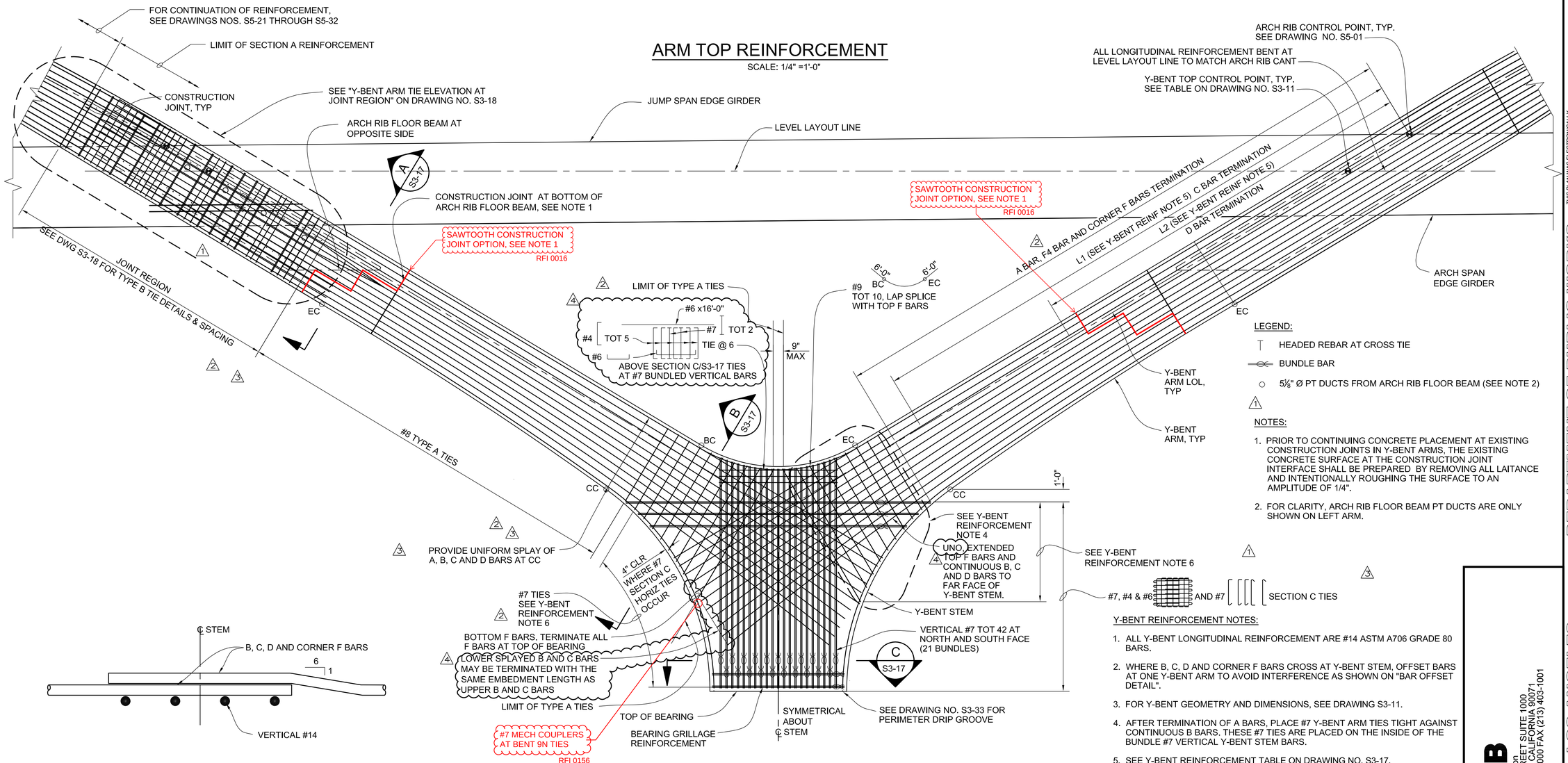

ARM TOP REINFORCEMENT

SCALE: 1/4" =1'-0"

BAR OFFSET DETAIL

NO SCALE

Y-BENT NORTH AND SOUTH FACE REINFORCEMENT

SCALE: 1/4" =1'-0"

LEGEND:

- HEADED REBAR AT CROSS TIE
- BUNDLE BAR
- $5\frac{1}{8}$" Ø PT DUCTS FROM ARCH RIB FLOOR BEAM (SEE NOTE 2)

NOTES:

1. PRIOR TO CONTINUING CONCRETE PLACEMENT AT EXISTING CONSTRUCTION JOINTS IN Y-BENT ARMS, THE EXISTING CONCRETE SURFACE AT THE CONSTRUCTION JOINT INTERFACE SHALL BE PREPARED BY REMOVING ALL LAITANCE AND INTENTIONALLY ROUGHING THE SURFACE TO AN AMPLITUDE OF 1/4".
2. FOR CLARITY, ARCH RIB FLOOR BEAM PT DUCTS ARE ONLY SHOWN ON LEFT ARM.

Y-BENT REINFORCEMENT NOTES:

1. ALL Y-BENT LONGITUDINAL REINFORCEMENT ARE #14 ASTM A706 GRADE 80 BARS.
2. WHERE B, C, D AND CORNER F BARS CROSS AT Y-BENT STEM, OFFSET BARS AT ONE Y-BENT ARM TO AVOID INTERFERENCE AS SHOWN ON "BAR OFFSET DETAIL".
3. FOR Y-BENT GEOMETRY AND DIMENSIONS, SEE DRAWING S3-11.
4. AFTER TERMINATION OF A BARS, PLACE #7 Y-BENT ARM TIES TIGHT AGAINST CONTINUOUS B BARS. THESE #7 TIES ARE PLACED ON THE INSIDE OF THE BUNDLE #7 VERTICAL Y-BENT STEM BARS.
5. SEE Y-BENT REINFORCEMENT TABLE ON DRAWING NO. S3-17.
6. WHERE #7 SECTION C/S3-17 CLOSED TIES OVERLAP #7 Y-BENT ARM CLOSED TIES, USE 90-DEGREE HOOKS AT TERMINATION OF #7 SECTION C/S3-17 CLOSED TIES. WITHIN THIS SAME REGION, CHANGE #6 ⟵ TOT 6 @ 6 TO #6 ⟷ TOT 4 @ 6 SHOWN ON SECTION C/S3-17.

T.O. 5 Change Order Serial Sketch No. 63 - Page 4 of 26

HNTB
HNTB Corporation
601 W. 5TH STREET, SUITE 1000
LOS ANGELES, CALIFORNIA 90071
TEL (213) 403-1000 FAX (213) 403-1001

CITY OF LOS ANGELES DEPARTMENT OF PUBLIC WORKS
BUREAU OF ENGINEERING
ENGINEERING
CITY OF LOS ANGELES
STRUCTURE NO. 53C-2329
INDEX NO.

NO.	REVISIONS:	DATE:	BY:
1.	ARCH RIB FLOOR BEAM MODFICATIONS ECO 11R3	7/7/17	MHJ
2.	BENT 12 BIM ECO 36R1 ECO 42	12/12/17	MHJ
3.	GENERAL BIM UPDATES	2/9/01/18	MHJ
4.	BIM REVISION 6 ECO 63	4/27/18	MHJ

THIS PLAN WAS ELECTRONICALLY SIGNED AND STAMPED

REGISTERED PROFESSIONAL ENGINEER MICHAEL H. JONES No. S3033 RENEWAL 06/30/2017 STATE OF CALIFORNIA

GARY LEE MOORE, P.E. CITY ENGINEER

		DATE:
ENGINEER:	MICHAEL H. JONES	1/29/2016
DESIGNED BY:	TRAN I.E	1/29/2016
DRAWN BY:	LI ZHANG	1/29/2016
CHECKED BY:	CHARLES REDFIELD	1/29/2016
APPROVED BY:	MICHAEL H. JONES	1/29/2016

DESIGN GROUP
LIC. NO. S3033

VERTICAL CONTROL: BM 12-04070, 1929 (NGVD 29) - 1985 ADJUSTMENT
HORIZONTAL CONTROL: GPS; PID AE 1704, EPOCH 1991.35

SHEET TITLE: Y-BENT REINFORCEMENT DETAILS NO. 1
PROJECT: SIXTH STREET VIADUCT REPLACEMENT
ADDRESS: SIXTH STREET VIADUCT (WHITTIER BLVD) LOS ANGELES, CA

WORK ORDER NO. E700224F
DRAWING NO. S3-16
SHEET 226 OF 560 SHEETS

THE CITY OF LOS ANGELES OR ITS OFFICERS OR AGENTS SHALL NOT BE RESPONSIBLE FOR THE ACCURACY OR COMPLETENESS OF ELECTRONIC COPIES OF THIS PLAN SHEET.

REVISION DATES (DESIGN STAGE ONLY)

C:\caddlib\pw\pwwestcost\zhang\dms57683\S3-16-LT03-05.dwg 5/03/18 09:46

Sheet Version 3.0

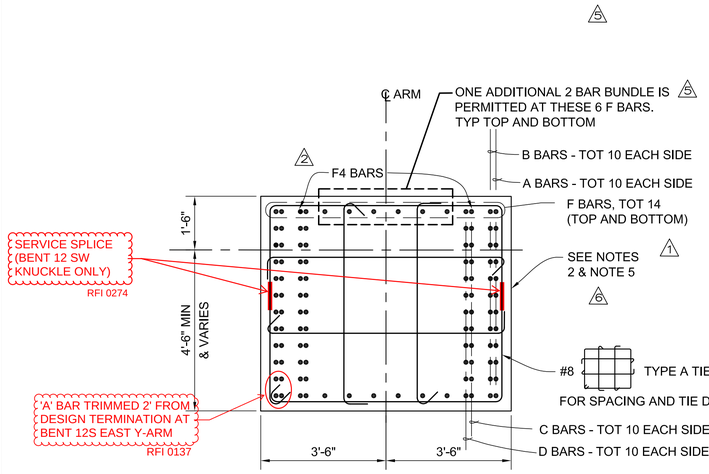

SECTION A
SCALE: 1/2"=1'-0"
S3-16

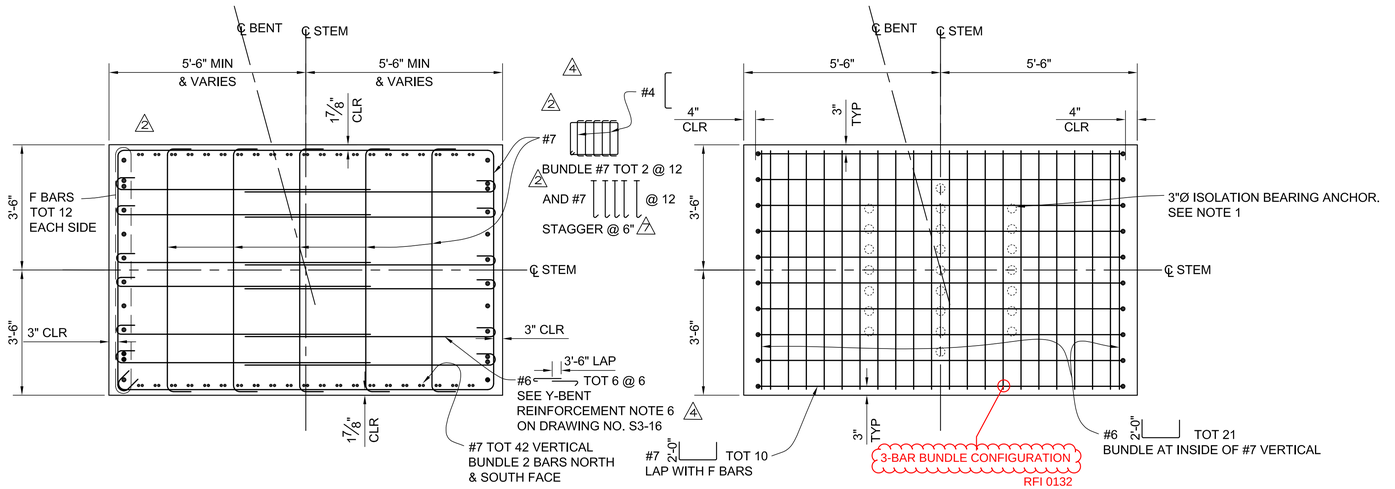

LONGITUDINAL REINFORCEMENT

BEARING GRILLAGE REINFORCEMENT

SECTION C
SCALE: 1/2"=1'-0"
S3-16

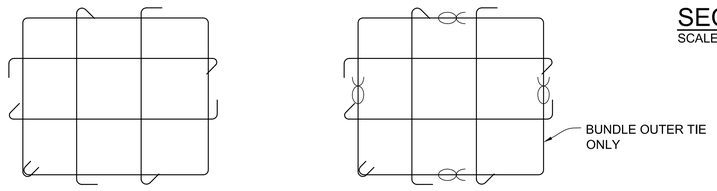

SINGLE BUNDLED

TYPE A TIE DETAIL
NO SCALE

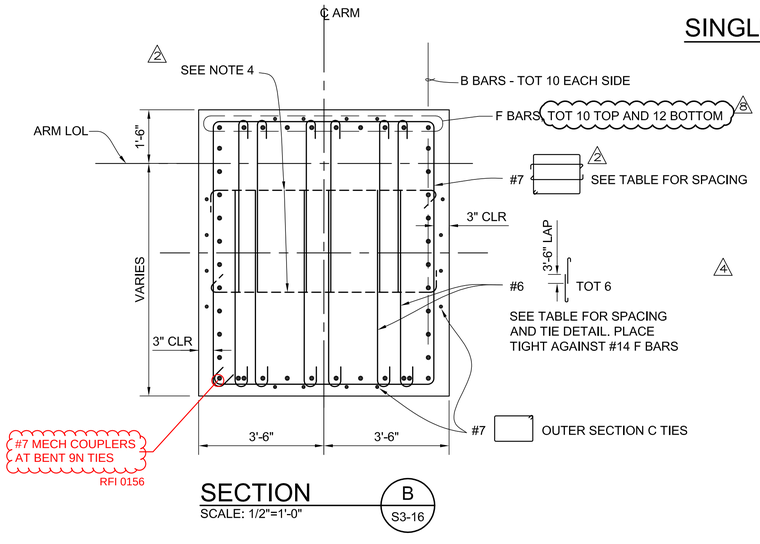

SECTION B
SCALE: 1/2"=1'-0"
S3-16

NOTES:

1. ADJUST SPACING OF REINFORCEMENT AS REQUIRED TO PROVIDE CLEARANCE FOR ISOLATION BEARING ANCHORS. SEE DRAWING NO. S8-04.
2. ADJUST SPACING OF A, B, C AND D BARS AS REQUIRED TO PROVIDE CLEARANCE FOR ARCH RIB FLOOR BEAM POST-TENSIONING. SEE DRAWING NO. S3-26.
3. WHERE HEADED REBAR AT CROSS TIES ARE SHOWN, USE REDUCED SIZE HEADS (4X NET REBAR AREA) . HEADED REBAR MAY BE USED AT EACH END OF CROSS TIE.
4. OMIT HORIZONTAL #7 CROSS TIES WHERE SECTION B TIES OVERLAP WITH SECTION C #7 TIES AT THE 11'-0" WIDE CORE SECTION OF THE Y-BENT STEM .
5. SPACING OF BUNDLED PARALLEL A, B, D AND F BARS PLACED IN A LAYER MAY BE 4 1/2" BETWEEN LAYERS WHEN BARS IN THE UPPER LAYER ARE PLACED DIRECTLY ABOVE THE LOWER LAYER.

Y-BENT REINFORCEMENT TABLE

BENT	ARM	NO. OF #14 BARS EACH SIDE				BAR TERMINATION * (FT)		#8 TYPE A, #7 AND #6 TIES	
		A	B	C	D	L1	L2	SPACING - TIES & CROSS TIES (INCHES)	TYPE A TIE DETAIL
4	WEST	10	10	10	10	-	36	6.25	SINGLE
	EAST	10	10	10	10	-	36	6.25	SINGLE
5	WEST	10	10	10	-	29.00	-	7.25	SINGLE
	EAST	10	10	10	-	34.00	-	7.25	SINGLE
6	WEST	10	10	10	-	-	-	7.25	SINGLE
	EAST	10	10	10	-	-	-	7.25	SINGLE
7	WEST	10	10	10	10	-	43.00	6.25	SINGLE
	EAST	10	10	10	10	-	44.00	6.25	SINGLE
8	WEST	10	10	10	10	-	43.00	8.50	BUNDLE
	EAST	10	10	10	10	-	44.00	9.50	BUNDLE
9	WEST	10	10	10	10	-	47.00	7.00	BUNDLE
	EAST	10	10	10	10	-	47.00	7.25	BUNDLE
10	WEST	10	10	10	10	-	41.00	7.75	BUNDLE
	EAST	10	10	10	10	-	40.00	8.75	BUNDLE
11	WEST	10	10	10	-	-	-	8.50	BUNDLE
	EAST	10	10	10	-	-	-	9.50	BUNDLE
12	WEST	10	10	-	-	-	-	7.00	SINGLE
	EAST	10	10	-	-	-	-	7.25	SINGLE

* EXTEND BARS TO FACE OF Y-BENT STEM IF BAR TERMINATION LENGTH IS NOT PROVIDED.

THE CITY OF LOS ANGELES OR ITS OFFICERS OR AGENTS SHALL NOT BE RESPONSIBLE FOR THE ACCURACY OR COMPLETENESS OF ELECTRONIC COPIES OF THIS PLAN SHEET.

C:\caddlib\pw\pwwestcoast\zhang\dms57683\S3-16-LT03-05.dwg 7/09/18 10.34

REVISION DATES (DESIGN STAGE ONLY)

Sheet Version 3.0

T.O. 5 - Change Order Serial Sketch No. 71 - Page 1 of 15

HNTB
HNTB Corporation
601 W. 5TH STREET SUITE 1000
LOS ANGELES, CALIFORNIA 90071
TEL (213) 403-1000 FAX (213) 403-1001

CITY OF LOS ANGELES DEPARTMENT OF PUBLIC WORKS BUREAU OF ENGINEERING

ENGINEERING — CITY OF LOS ANGELES

NO.	REVISIONS:	DATE	BY:
6	BIM REVISION 5 ECO 59	03/16/18	MHJ
7	BIM REVISION 6 ECO 63	ECO71 04/27/18	MHJ
8	FRAME CONSTRUCTION JOINT AND ARCH RIB UPDATES	07/13/18	MHJ
4	GENERAL BIM UPDATES ECO 42	09/01/17	MHJ
5	BIM REVISION 2 ECO 54	01/16/18	MHJ

STRUCTURE NO. 53C-2329

INDEX NO.

THIS PLAN WAS ELECTRONICALLY SIGNED AND STAMPED

REGISTERED PROFESSIONAL ENGINEER — RICHARD H. JONES — No. S3033 — 6/30/19 — STATE OF CALIFORNIA

GARY LEE MOORE, P.E. — CITY ENGINEER

		DATE:
ENGINEER:	MICHAEL H. JONES	1/29/2016
DESIGNED BY:	TRAN LE	1/29/2016
DRAWN BY:	LI ZHANG	1/29/2016
CHECKED BY:	CHARLES REDFIELD	1/29/2016
APPROVED BY:	MICHAEL H. JONES	1/29/2016

DESIGN GROUP — LIC. NO. S3033

SHEET TITLE: Y-BENT REINFORCEMENT DETAILS NO. 2

PROJECT: SIXTH STREET VIADUCT REPLACEMENT

ADDRESS: SIXTH STREET VIADUCT (WHITTIER BLVD) LOS ANGELES, CA

VERTICAL CONTROL: BM 12-04070, 1929 (NGVD 29) - 1985 ADJUSTMENT
HORIZONTAL CONTROL: GPS; PID AE 1704, EPOCH 1991.35

WORK ORDER NO. E700224F

DRAWING NO. S3-17

SHEET 227 OF 560 SHEETS

ADDENDUM 5

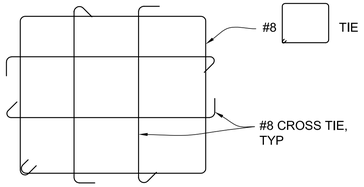

TYPE A

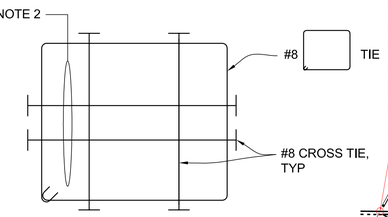

TYPE B

TIE TYPE DETAIL

NO SCALE

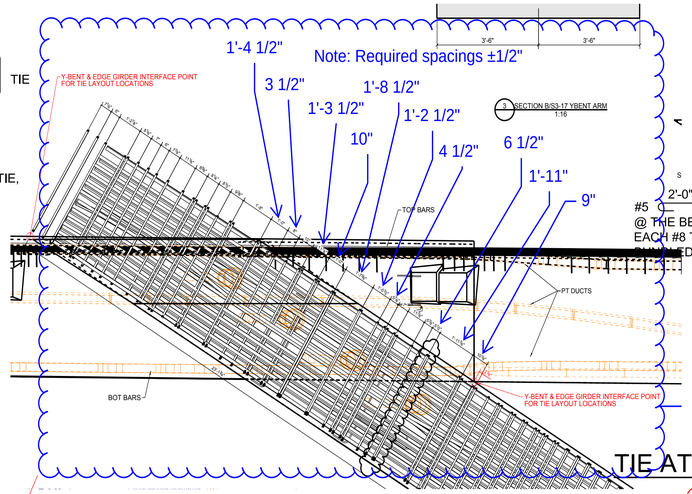

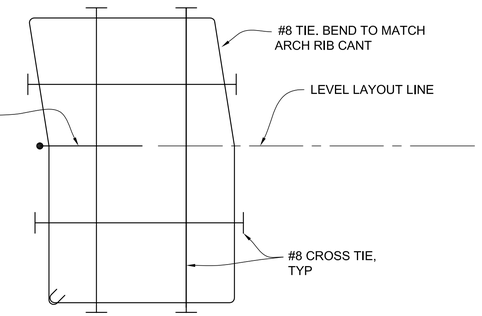

#5 @ 2'-0" @ THE BEND OF EACH #8 TIE OR ADDED #8 TIE

TIE AT ARCH RIB CANT TRANSITION DETAIL

NO SCALE

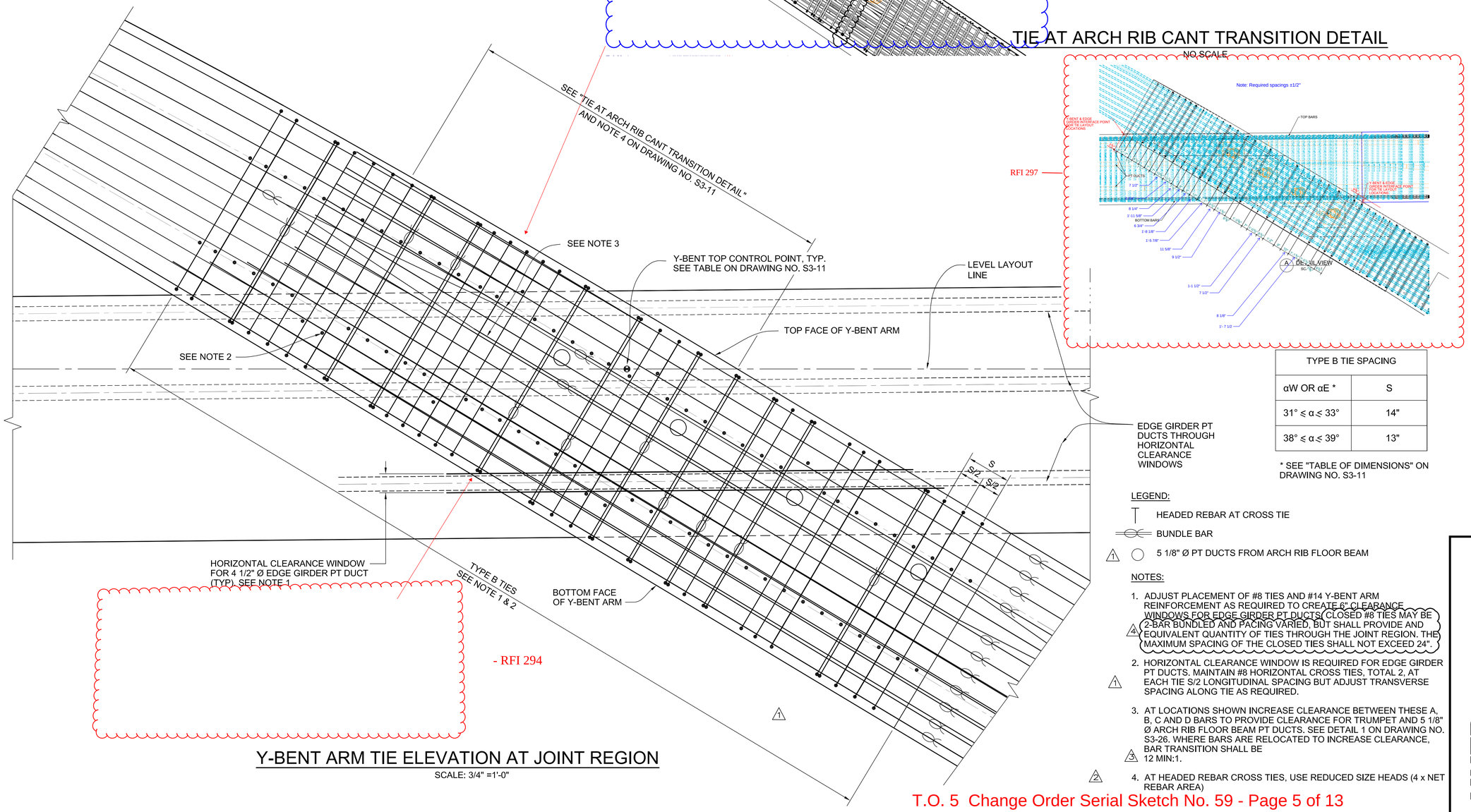

RFI 297

TYPE B TIE SPACING	
αW OR αE *	S
31° ≤ α ≤ 33°	14"
38° ≤ α ≤ 39°	13"

* SEE "TABLE OF DIMENSIONS" ON DRAWING NO. S3-11

LEGEND:

- HEADED REBAR AT CROSS TIE
- BUNDLE BAR
- 1 5 1/8" Ø PT DUCTS FROM ARCH RIB FLOOR BEAM

NOTES:

1. ADJUST PLACEMENT OF #8 TIES AND #14 Y-BENT ARM REINFORCEMENT AS REQUIRED TO CREATE 6" CLEARANCE WINDOWS FOR EDGE GIRDER PT DUCTS. CLOSED #8 TIES MAY BE 2-BAR BUNDLED AND PACING VARIED, BUT SHALL PROVIDE AND EQUIVALENT QUANTITY OF TIES THROUGH THE JOINT REGION. THE MAXIMUM SPACING OF THE CLOSED TIES SHALL NOT EXCEED 24". (4)
2. HORIZONTAL CLEARANCE WINDOW IS REQUIRED FOR EDGE GIRDER PT DUCTS. MAINTAIN #8 HORIZONTAL CROSS TIES, TOTAL 2, AT EACH TIE S/2 LONGITUDINAL SPACING BUT ADJUST TRANSVERSE SPACING ALONG TIE AS REQUIRED. (1)
3. AT LOCATIONS SHOWN INCREASE CLEARANCE BETWEEN THESE A, B, C AND D BARS TO PROVIDE CLEARANCE FOR TRUMPET AND 5 1/8" Ø ARCH RIB FLOOR BEAM PT DUCTS. SEE DETAIL 1 ON DRAWING NO. S3-26. WHERE BARS ARE RELOCATED TO INCREASE CLEARANCE, BAR TRANSITION SHALL BE 12 MIN:1. (3)
4. AT HEADED REBAR CROSS TIES, USE REDUCED SIZE HEADS (4 x NET REBAR AREA) (2)

- RFI 294

Y-BENT ARM TIE ELEVATION AT JOINT REGION

SCALE: 3/4" =1'-0"

T.O. 5 Change Order Serial Sketch No. 59 - Page 5 of 13

HNTB
HNTB Corporation
601 W. 5TH STREET SUITE 1000
LOS ANGELES, CALIFORNIA 90071
TEL (213) 403-1000 FAX (213) 403-1001

THE CITY OF LOS ANGELES OR ITS OFFICERS OR AGENTS SHALL NOT BE RESPONSIBLE FOR THE ACCURACY OR COMPLETENESS OF ELECTRONIC COPIES OF THIS PLAN SHEET.

C:\cadd\b \pw \pwwestcoast\ zhang \dms57683\S3-16-L703-05.dwg 3/13/18 17:40

Sheet Version 3.0

REVISION DATES (DESIGN STAGE ONLY)

BUREAU OF ENGINEERING

ENGINEERING
CITY OF LOS ANGELES

NO.	REVISIONS:	DATE	BY:
1.	ARCH RIB FLOOR BEAM MODFCATIONS ECO 11	01/17/17	MHJ
2.	GENERAL BIM UPDATES ECO 42	09/01/17	MHJ
3.	BIM REVISION 2 ECO 54	01/16/18	MHJ
4.	BIM REVISION 5 ECO 59	03/16/18	MHJ

STRUCTURE NO. 53C-2329

INDEX NO.

THIS PLAN WAS ELECTRONICALLY SIGNED AND STAMPED

REGISTERED PROFESSIONAL ENGINEER MICHAEL H. JONES No. S3033 CIVIL STATE OF CALIFORNIA

CITY OF LOS ANGELES DEPARTMENT OF PUBLIC WORKS

GARY LEE MOORE, P.E.
CITY ENGINEER

		DATE:
ENGINEER:	MICHAEL H. JONES	1/29/2016
DESIGNED BY:	TRAN LE	1/29/2016
DRAWN BY:	LI ZHANG	1/29/2016
CHECKED BY:	CHARLES REDFIELD	1/29/2016
APPROVED BY:	MICHAEL H. JONES	1/29/2016

LIC. NO. S3033 EXP. 12/31/16

DESIGN GROUP

VERTICAL CONTROL: BM 12-04070, 1929 (NGVD 29) - 1985 ADJUSTMENT
HORIZONTAL CONTROL: GPS; PID AE 1704, EPOCH 1991.35

SHEET TITLE: Y-BENT REINFORCEMENT DETAILS NO.3

PROJECT: SIXTH STREET VIADUCT REPLACEMENT

ADDRESS: SIXTH STREET VIADUCT (WHITTIER BLVD) LOS ANGELES, CA

WORK ORDER NO. E700224F

DRAWING NO. S3-18

SHEET 228 OF 560 SHEETS

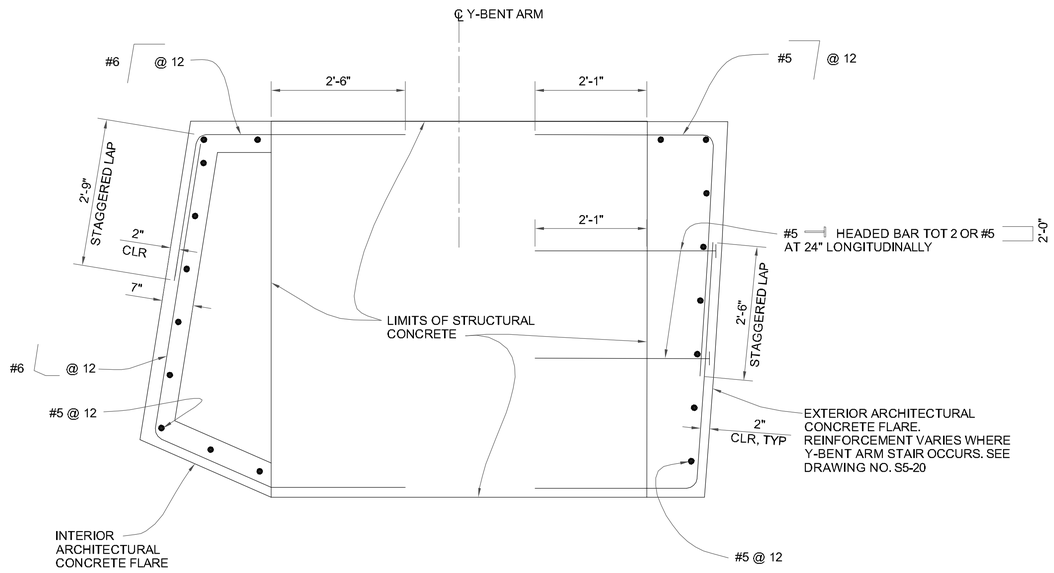

ARM
SCALE: 3/4" =1'-0"

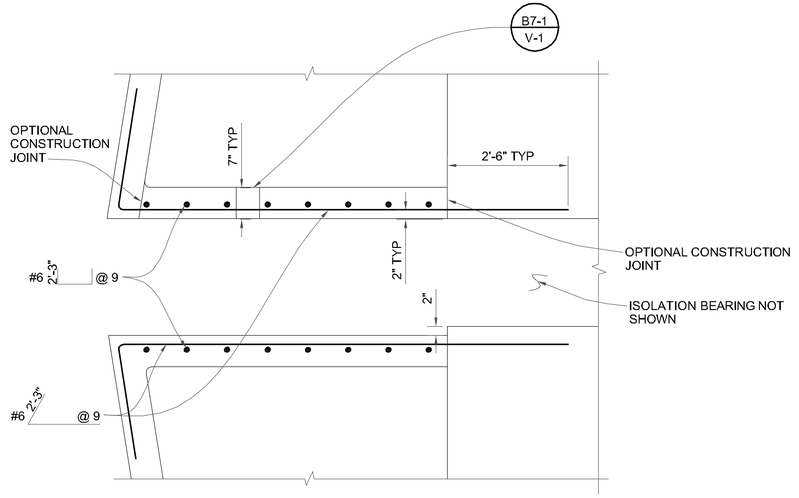

CLOSURE SLABS
SCALE: 3/4" =1'-0"

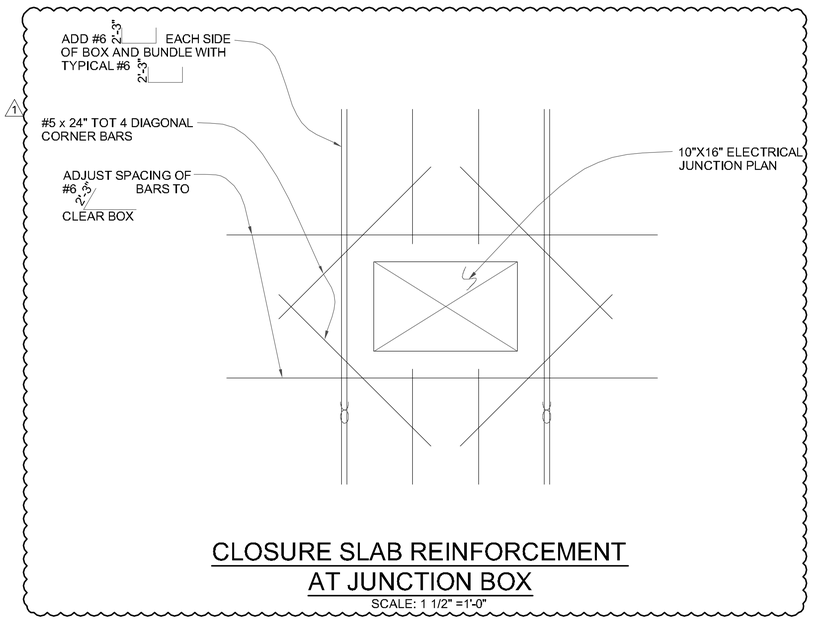

CLOSURE SLAB REINFORCEMENT AT JUNCTION BOX
SCALE: 1 1/2" =1'-0"

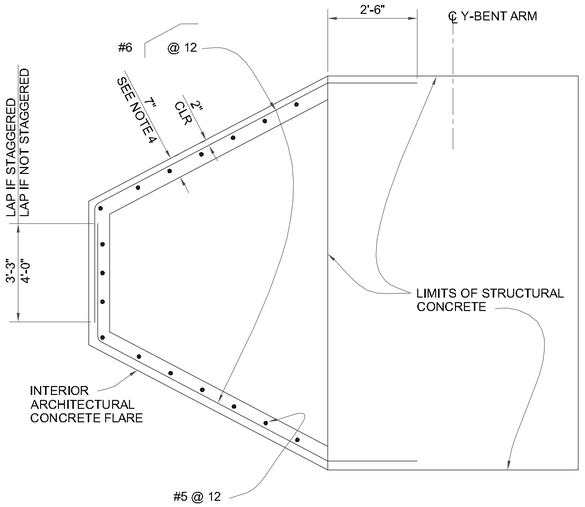

VERTICAL SEGMENT
SCALE: 1/2" =1'-0"

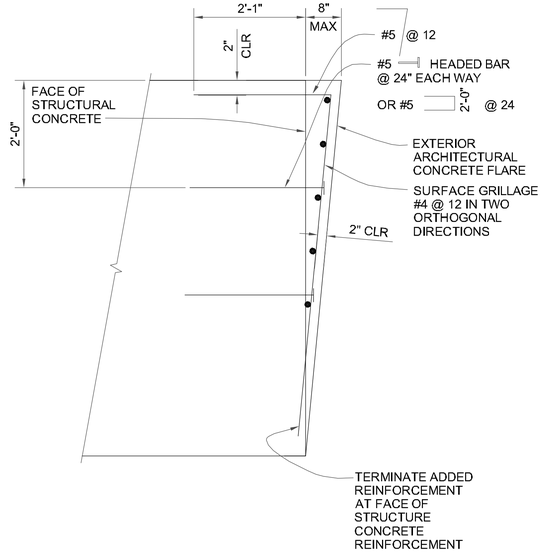

REINFORCEMENT AT 0" TO 8" THICK ARCHITECTURAL CONCRETE
SCALE: 3/4" =1'-0"

ARCHITECTURAL CONCRETE AT Y-BENTS

1 LEGEND:

BUNDLED BARS

NOTES:

1. FOR DIMENSIONS OF ARCHITECTURAL CONCRETE, SEE DRAWINGS S3-11 THROUGH S3-14.
2. ALL ARCHITECTURAL CONCRETE IS CAST MONOLITHICALLY WITH STRUCTURAL CONCRETE.
3. ALL # 4, 5 AND 6 REINFORCING BARS AT ARCHITECTURAL CONCRETE SHALL BE EPOXY COATED.
4. AT BENTS 5 AND 6 COLUMNS BELOW ISOLATION BEARINGS, INCREASE ARCHITECTURAL CONCRETE THICKNESS TO 8" AND PROVIDE 3" CLEAR COVER TO REINFORCEMENT. SEE DRAWING NO. S3-32.

T.O. 5 - Change Order Serial Sketch No. 36R1 - Page 3 of 10

HNTB
HNTB Corporation
801 W. 5TH STREET SUITE 1000
LOS ANGELES, CALIFORNIA 90071
TEL (213) 403-1000 FAX (213) 403-1001

THE CITY OF LOS ANGELES OR ITS OFFICERS OR AGENTS SHALL NOT BE RESPONSIBLE FOR THE ACCURACY OR COMPLETENESS OF ELECTRONIC COPIES OF THIS PLAN SHEET.

C:\coddfb\pw\pwwestcoast\zhong\dms576831\S3-19-LT06.dwg 7/11/17 16:54
Sheet Version 3.0
REVISION DATES (DESIGN STAGE ONLY)

CITY OF LOS ANGELES DEPARTMENT OF PUBLIC WORKS
BUREAU OF ENGINEERING
ENGINEERING CITY OF LOS ANGELES
NO. REVISIONS: DATE: BY:
1 BENT 12 BIM 07/12/17 MHJ
STRUCTURE NO. 53C-2329
INDEX NO.
THIS PLAN WAS ELECTRONICALLY SIGNED AND STAMPED.
REGISTERED PROFESSIONAL ENGINEER MICHAEL H. JONES No. S3033 CIVIL STATE OF CALIFORNIA
GARY LEE MOORE, P.E. CITY ENGINEER
ENGINEER: MICHAEL H. JONES DESIGN GROUP LIC. NO. S3033 DATE: 1/29/2016
DESIGNED BY: SEAN XIN 1/29/2016
DRAWN BY: LI ZHANG 1/29/2016
CHECKED BY: CHARLES REDFIELD 1/29/2016
APPROVED BY: MICHAEL H. JONES 1/29/2016
VERTICAL CONTROL: BM 12-04070,1929 (NGVD 29) - 1985 ADJUSTMENT
HORIZONTAL CONTROL: GPS; PID AE 1704, EPOCH 1991.35
SHEET TITLE: ARCHITECTURAL CONCRETE REINFORCEMENT NO. 1
PROJECT: SIXTH STREET VIADUCT REPLACEMENT
ADDRESS: SIXTH STREET VIADUCT (WHITTIER BLVD) LOS ANGELES, CA
WORK ORDER NO. E700224F
DRAWING NO. S3-19
SHEET 20 OF 560 SHEETS

ADDENDUM 5

SE SOUTH OF BRIDGE ℄ AND NW NORTH OF BRIDGE ℄ (TYP)
NE SOUTH OF BRIDGE ℄ AND SW NORTH OF BRIDGE ℄ (TYP)
NOTE: VARIES FROM 0" AT CL OF BRIDGE TO 5-5/8" AT Y-ARM
RFI 0218

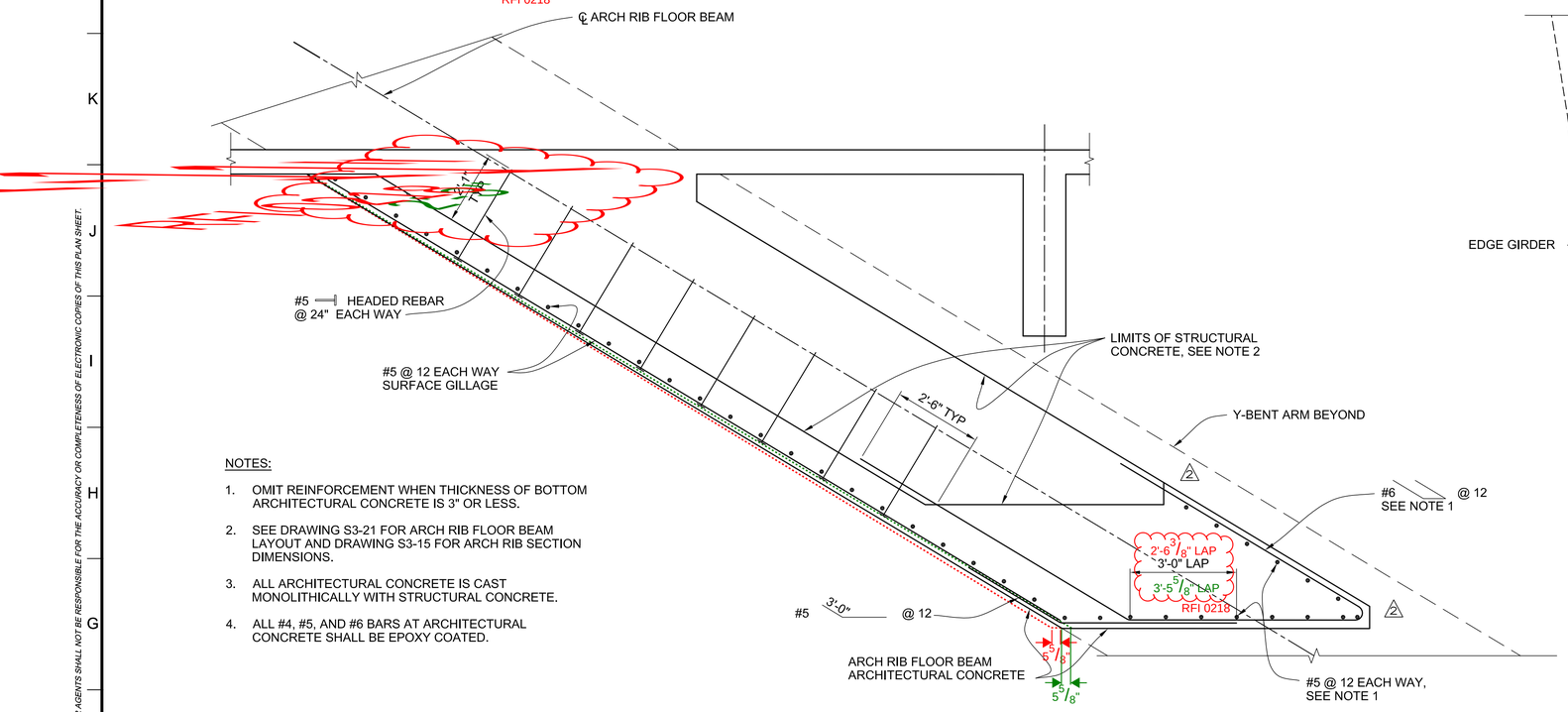

NOTES:

1. OMIT REINFORCEMENT WHEN THICKNESS OF BOTTOM ARCHITECTURAL CONCRETE IS 3" OR LESS.
2. SEE DRAWING S3-21 FOR ARCH RIB FLOOR BEAM LAYOUT AND DRAWING S3-15 FOR ARCH RIB SECTION DIMENSIONS.
3. ALL ARCHITECTURAL CONCRETE IS CAST MONOLITHICALLY WITH STRUCTURAL CONCRETE.
4. ALL #4, #5, AND #6 BARS AT ARCHITECTURAL CONCRETE SHALL BE EPOXY COATED.

ARCHITECTURAL CONCRETE AT ARCH RIB FLOOR BEAM

SCALE: 1/2" =1'-0"

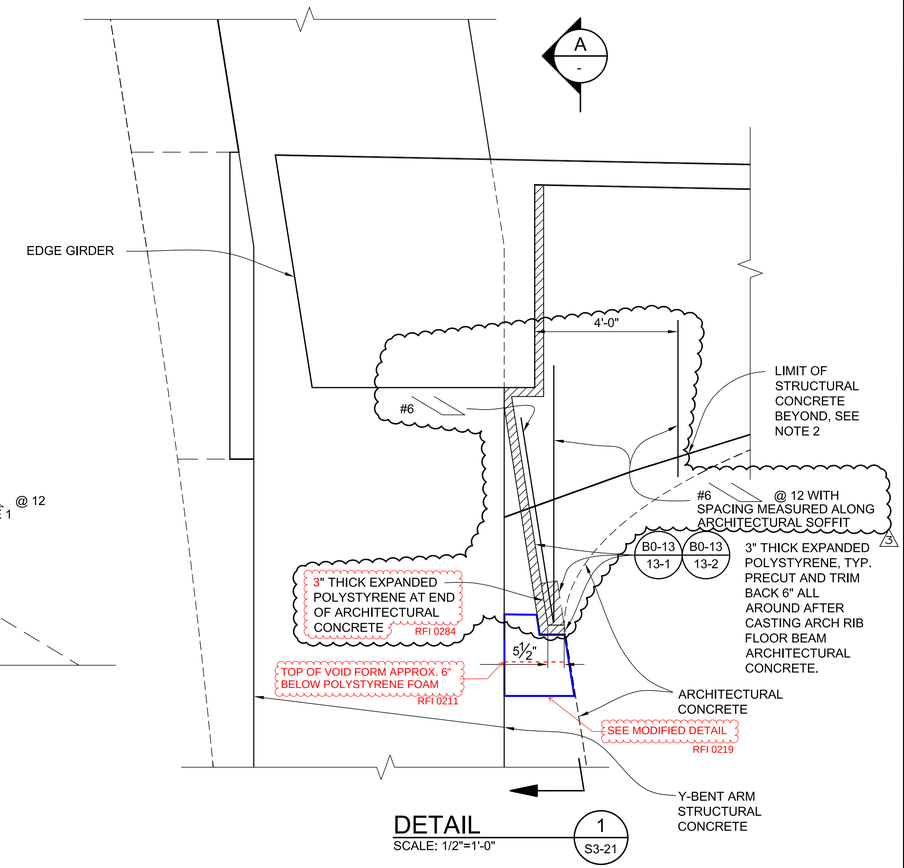

DETAIL 1

SCALE: 1/2"=1'-0"

S3-21

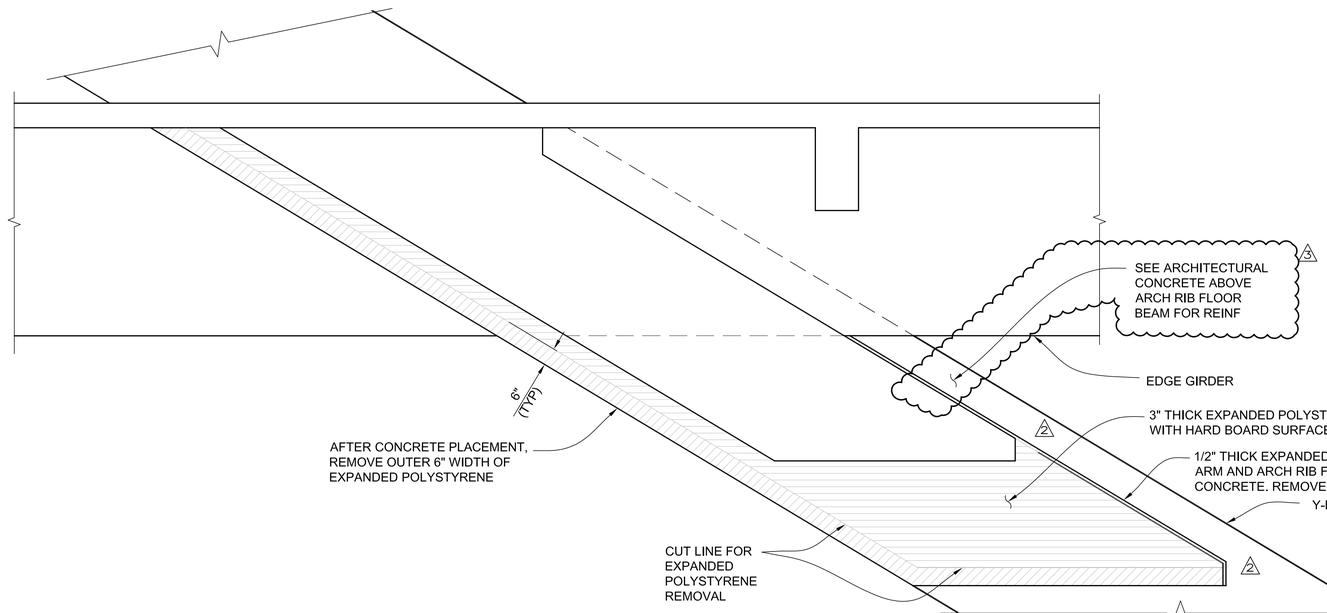

SECTION A

SCALE: 1/2"=1'-0"

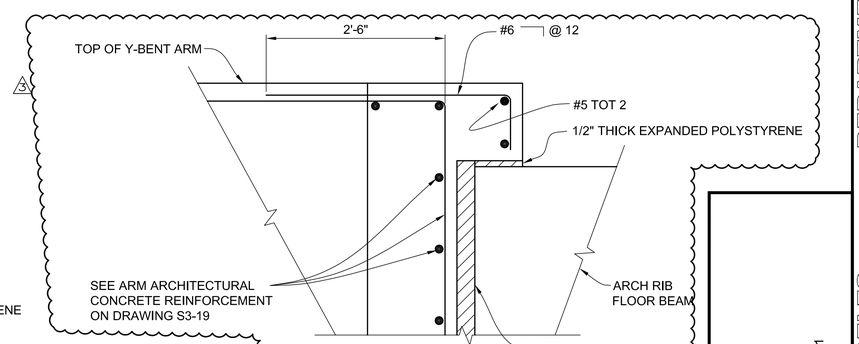

ARCHITECTURAL CONCRETE ABOVE ARCH RIB FLOOR BEAM

NO SCALE

T.O. 5 - Emergency Change Order Serial Sketch No. 92 (Page 1 of 1)

THE CITY OF LOS ANGELES OR ITS OFFICERS OR AGENTS SHALL NOT BE RESPONSIBLE FOR THE ACCURACY OR COMPLETENESS OF ELECTRONIC COPIES OF THIS PLAN SHEET.

C:\caddlib\pw\pwwestcoast\zhang\dms57683\S3-20-FB01-03.dwg 2/12/19 13:56

Sheet Version 3.0

REVISION DATES (DESIGN STAGE ONLY)

BUREAU OF ENGINEERING

ENGINEERING
CITY OF LOS ANGELES

NO.	REVISIONS:	DATE:	BY:
1.	BIM REVISION 6 ECO 63	4/27/18	MHJ
2.	AREB CHAMFER CLARIFICATION ECO 86	12/20/18	MHJ
3.	ARFB ISOLATION JOINT CLARIFICATION ECO 92	2/11/19	MHJ

STRUCTURE NO. 53C-2329

INDEX NO.

THIS PLAN WAS ELECTRONICALLY SIGNED AND STAMPED

REGISTERED PROFESSIONAL ENGINEER MICHAEL H. JONES No. S3033 CIVIL STATE OF CALIFORNIA

CITY OF LOS ANGELES DEPARTMENT OF PUBLIC WORKS

GARY LEE MOORE, P.E. CITY ENGINEER

	DESIGN GROUP	LIC. NO. S3033	DATE:
ENGINEER:	MICHAEL H. JONES		1/29/2016
DESIGNED BY:	SEAN XIN		1/29/2016
DRAWN BY:	LI ZHANG		1/29/2016
CHECKED BY:	CHARLES REDFIELD		1/29/2016
APPROVED BY:	MICHAEL H. JONES		1/29/2016

VERTICAL CONTROL: BM 12-04070, 1929 (NGVD 29) - 1985 ADJUSTMENT
HORIZONTAL CONTROL: GPS; PID AE 1704, EPOCH 1991.35

SHEET TITLE: ARCHITECTURAL CONCRETE REINFORCEMENT NO. 2

PROJECT: SIXTH STREET VIADUCT REPLACEMENT

ADDRESS: SIXTH STREET VIADUCT (WHITTIER BLVD) LOS ANGELES, CA

HNTB
HNTB Corporation
601 W. 5TH STREET SUITE 1000
LOS ANGELES, CALIFORNIA 90071
TEL (213) 403-1000 FAX (213) 403-1001

WORK ORDER NO. E700224F

DRAWING NO. S3-20

SHEET 230 OF 560 SHEETS

ADDENDUM 5

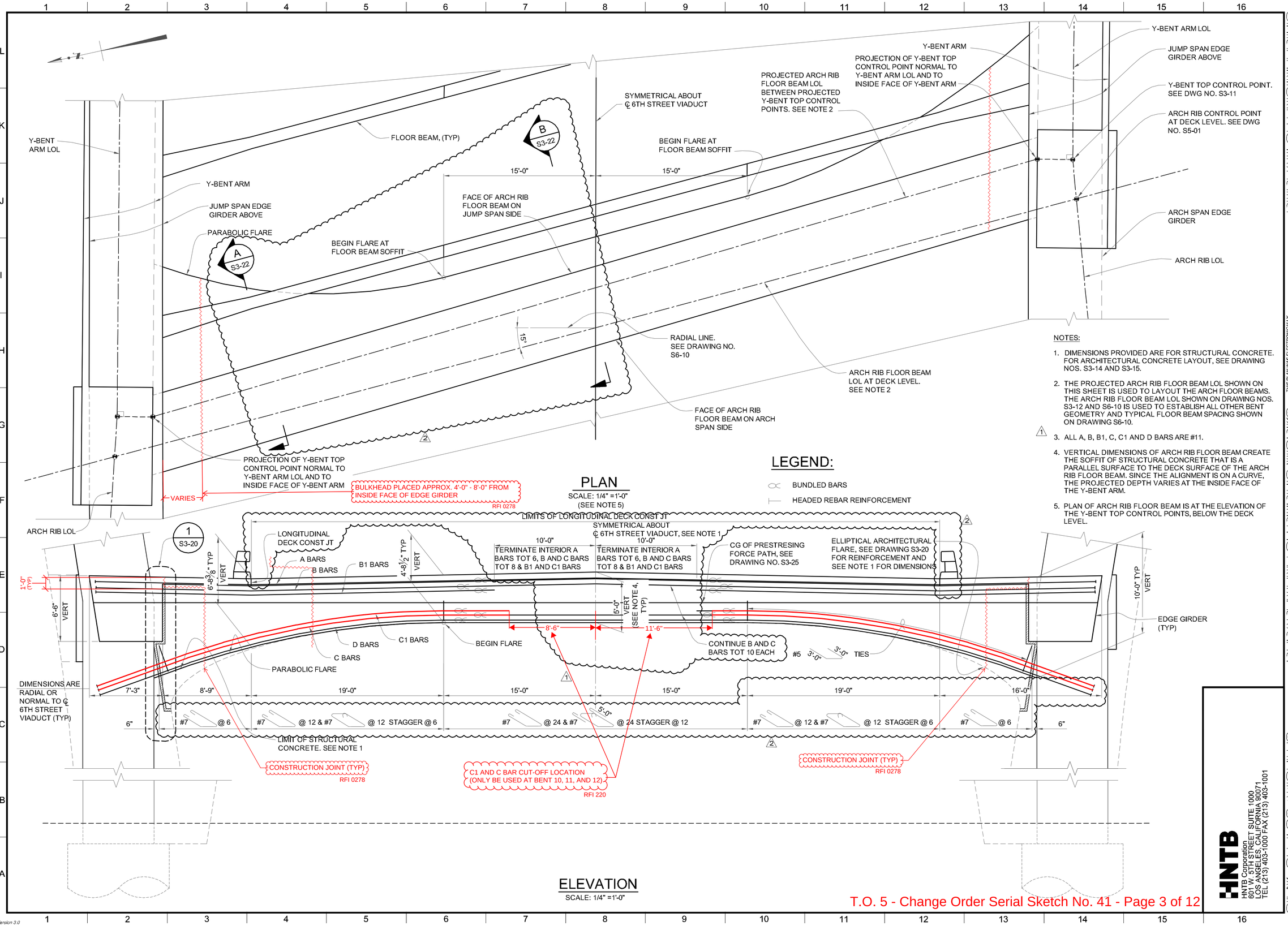

PLAN
SCALE: 1/4" =1'-0"
(SEE NOTE 5)

ELEVATION
SCALE: 1/4" =1'-0"

LEGEND:

- BUNDLED BARS
- HEADED REBAR REINFORCEMENT

NOTES:

1. DIMENSIONS PROVIDED ARE FOR STRUCTURAL CONCRETE. FOR ARCHITECTURAL CONCRETE LAYOUT, SEE DRAWING NOS. S3-14 AND S3-15.
2. THE PROJECTED ARCH RIB FLOOR BEAM LOL SHOWN ON THIS SHEET IS USED TO LAYOUT THE ARCH FLOOR BEAMS. THE ARCH RIB FLOOR BEAM LOL SHOWN ON DRAWING NOS. S3-12 AND S6-10 IS USED TO ESTABLISH ALL OTHER BENT GEOMETRY AND TYPICAL FLOOR BEAM SPACING SHOWN ON DRAWING S6-10.
3. ALL A, B, B1, C, C1 AND D BARS ARE #11.
4. VERTICAL DIMENSIONS OF ARCH RIB FLOOR BEAM CREATE THE SOFFIT OF STRUCTURAL CONCRETE THAT IS A PARALLEL SURFACE TO THE DECK SURFACE OF THE ARCH RIB FLOOR BEAM. SINCE THE ALIGNMENT IS ON A CURVE, THE PROJECTED DEPTH VARIES AT THE INSIDE FACE OF THE Y-BENT ARM.
5. PLAN OF ARCH RIB FLOOR BEAM IS AT THE ELEVATION OF THE Y-BENT TOP CONTROL POINTS, BELOW THE DECK LEVEL.

THE CITY OF LOS ANGELES OR ITS OFFICERS OR AGENTS SHALL NOT BE RESPONSIBLE FOR THE ACCURACY OR COMPLETENESS OF ELECTRONIC COPIES OF THIS PLAN SHEET.

REVISION DATES (DESIGN STAGE ONLY)

C:\caddlib\pw\pwwestcoast\zhang\dms57683\S3-20-FB01-03.dwg 8/25/17 10:48

Sheet Version 3.0

BUREAU OF ENGINEERING

NO.	REVISIONS:	DATE:	BY:
1	BENT 12 BIM SUPPLEMENT 1	07/26/17	MHJ
2	DECK LONGITUDINAL CONSTRUCTION JOINT ADDED	09/01/17	MHJ

ENGINEERING
CITY OF LOS ANGELES

STRUCTURE NO. 53C-2329

INDEX NO.

REGISTERED PROFESSIONAL ENGINEER RICHARD H. JONES No. S3033 CIVIL STATE OF CALIFORNIA

THIS PLAN WAS ELECTRONICALLY SIGNED AND STAMPED.

CITY OF LOS ANGELES • DEPARTMENT OF PUBLIC WORKS • BUREAU OF ENGINEERING

CITY ENGINEER:	GARY LEE MOORE, P.E.
DATE:	1/29/2016
LIC. NO. S3033	
DESIGN GROUP	
ENGINEER:	MICHAEL H. JONES
DESIGNED BY:	SEAN XIN
DRAWN BY:	LI ZHANG
CHECKED BY:	CHARLES REDFIELD
APPROVED BY:	MICHAEL H. JONES

VERTICAL CONTROL: BM 12-04070, 1929 (NGVD 29) - 1985 ADJUSTMENT
HORIZONTAL CONTROL: GPS; PID AE 1704, EPOCH 1991.35

SHEET TITLE: ARCH RIB FLOOR BEAM DETAILS NO. 1

PROJECT: SIXTH STREET VIADUCT REPLACEMENT

ADDRESS: SIXTH STREET VIADUCT (WHITTIER BLVD) LOS ANGELES, CA

HNTB
HNTB Corporation
601 W. 5TH STREET, SUITE 1000
LOS ANGELES, CALIFORNIA 90071
TEL (213) 403-1000 FAX (213) 403-1001

WORK ORDER NO. E700224F

DRAWING NO. S3-21

SHEET 15 OF 560 SHEETS

T.O. 5 - Change Order Serial Sketch No. 41 - Page 3 of 12

ADDENDUM 5

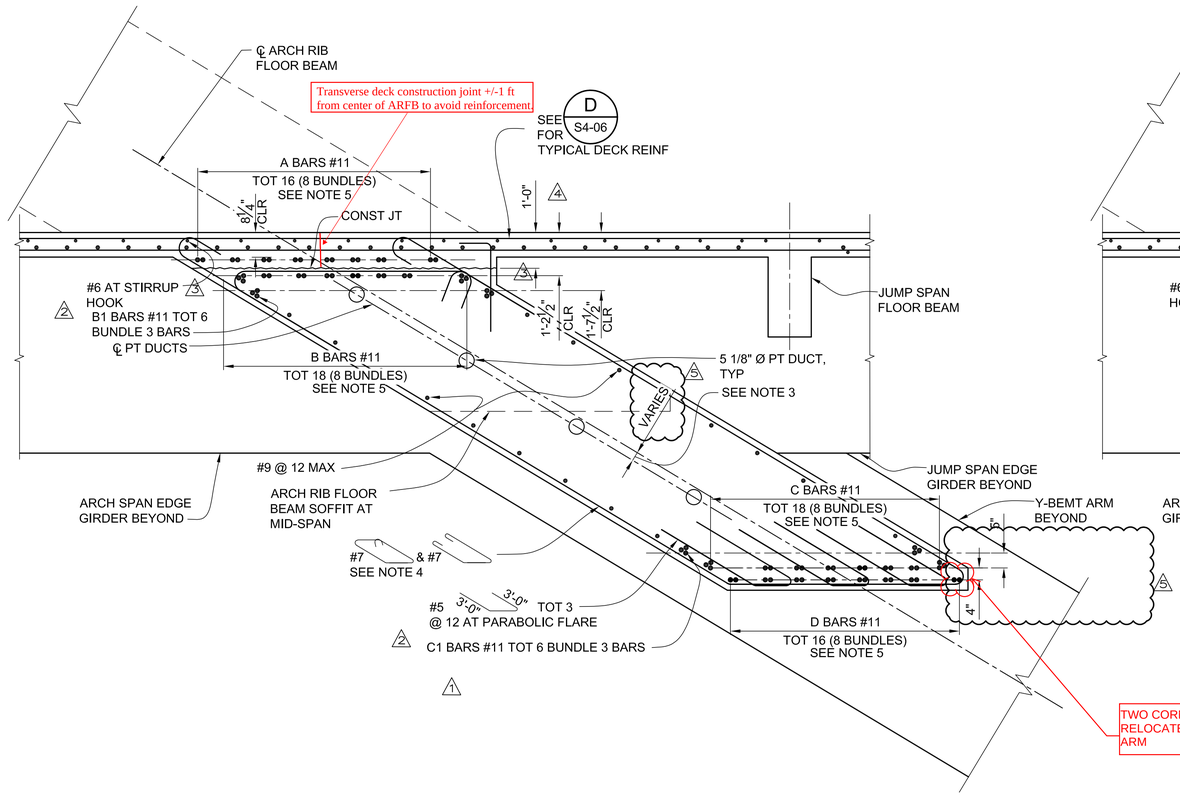

SECTION A
SCALE: 1/2"=1'-0"
S3-21

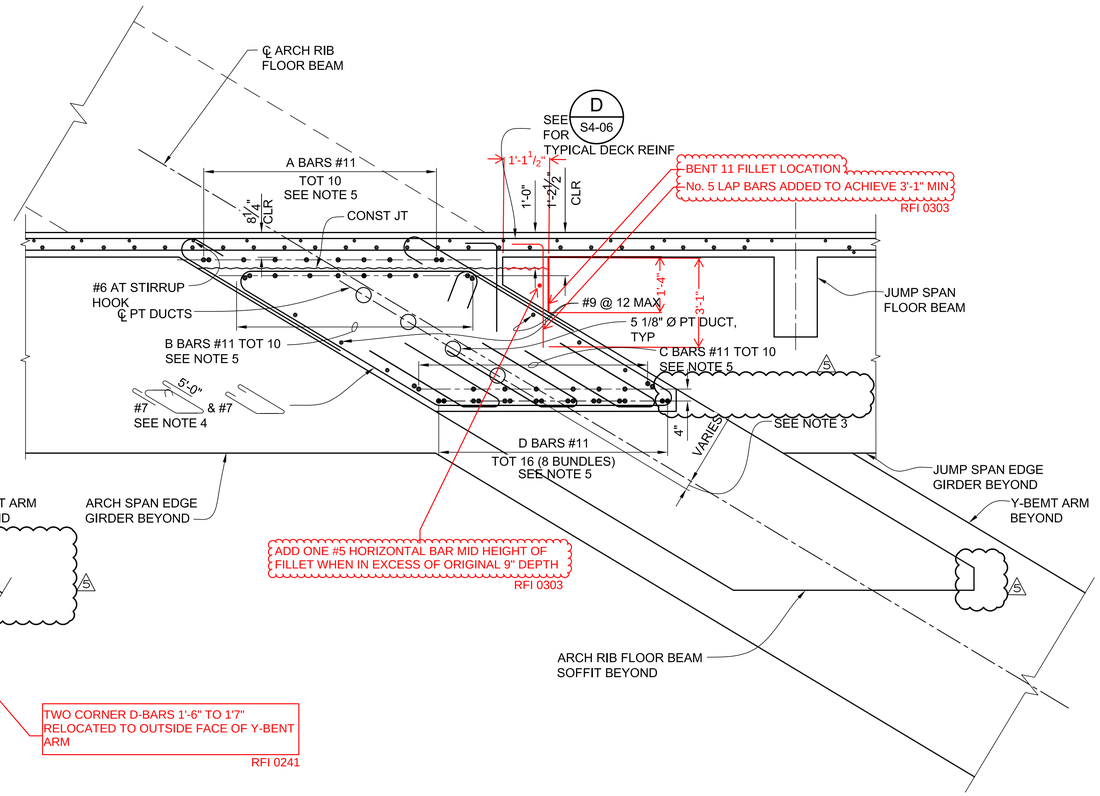

SECTION B
SCALE: 1/2"=1'-0"
S3-21

NOTES:

1. FOR ARCH RIB FLOOR BEAM DIMENSIONS, SEE DRAWING NO. S3-15.
2. SEE DRAWING NO. S3-21 FOR TERMINATION LENGTH OF A, B, C AND D BARS.
3. POST TENSIONING DUCTS FOR ARCH RIB FLOOR BEAM CAN BE MOVED HORIZONTALLY ±3" TO AVOID INTERFERENCE WITH Y-BENT ARM LONGITUDINAL REINFORCEMENT.
4. PLACE #7 ⟋ OR ⟍ STIRRUPS SKEWED WITH THE ARCH RIB FLOOR BEAM LONGITUDINAL AXIS AND PARALLEL TO CENTERLINE OF 6TH STREET VIADUCT AND ALTERNATE WITH EACH OTHER. AT OBTUSE CORNER OF CLOSED TIE, ADJUST HOOK ANGLE TO PROVIDE AN EQUIVALENT 135° HOOK.
5. AT INTERIOR LOCATIONS, ADJUST BAR SPACING TO PLACE C BARS DIRECTLY ABOVE D BARS AND A BARS DIRECTLY ABOVE B BARS.

T.O. 5 - Change Order Serial Sketch No. 86 - Page 3 of 3

HNTB
HNTB Corporation
601 W. 5TH STREET SUITE 1000
LOS ANGELES, CALIFORNIA 90071
TEL (213) 403-1000 FAX (213) 403-1001

CITY OF LOS ANGELES DEPARTMENT OF PUBLIC WORKS
BUREAU OF ENGINEERING

ENGINEERING
CITY OF LOS ANGELES

NO.	REVISIONS:	DATE:	BY:
1.	ARCH RIB FLOOR BEAM MODIFICATIONS ECO 11	01/17/17	MHJ
2.	BENT 12 BIM ECO 36	07/12/17	MHJ
3.	BENT 12 BIM SUPPLEMENT 1 ECO 36	07/26/17	MHJ
4.	DECK LONGITUDINAL CONSTRUCTION JOINT ADDED ECO 43	09/01/17	MHJ
5.	ARFB CHAMFER CLARIFICATION ECO 86	12/20/18	MHJ

STRUCTURE NO. 53C-2329

INDEX NO.

THIS PLAN WAS ELECTRONICALLY SIGNED AND STAMPED

REGISTERED PROFESSIONAL ENGINEER MICHAEL H. JONES No. S3033 CIVIL STATE OF CALIFORNIA

GARY LEE MOORE, P.E. CITY ENGINEER

		DATE:
DESIGN GROUP		
ENGINEER:	MICHAEL H. JONES	1/29/2016
LIC. NO. S3033		
DESIGNED BY:	SEAN XIN	1/29/2016
DRAWN BY:	LI ZHANG	1/29/2016
CHECKED BY:	CHARLES REDFIELD	1/29/2016
APPROVED BY:	MICHAEL H. JONES	1/29/2016

VERTICAL CONTROL: BM 12-04070,1928 (NGVD 29) - 1985 ADJUSTMENT
HORIZONTAL CONTROL: GPS; PID AE 1704, EPOCH 1991.35

SHEET TITLE: ARCH RIB FLOOR BEAM DETAILS NO. 2

PROJECT: SIXTH STREET VIADUCT REPLACEMENT

ADDRESS: SIXTH STREET VIADUCT (WHITTIER BLVD) LOS ANGELES, CA

WORK ORDER NO. E700224F

DRAWING NO. S3-22

SHEET 232 OF 560 SHEETS

THE CITY OF LOS ANGELES OR ITS OFFICERS OR AGENTS SHALL NOT BE RESPONSIBLE FOR THE ACCURACY OR COMPLETENESS OF ELECTRONIC COPIES OF THIS PLAN SHEET.

C:\caddlib\pw\pwwestcoast\zhang\dms57683\S3-20-FB01-03.dwg 12/17/18 11:06

REVISION DATES (DESIGN STAGE ONLY)

Sheet Version 3.0

ADDENDUM 5

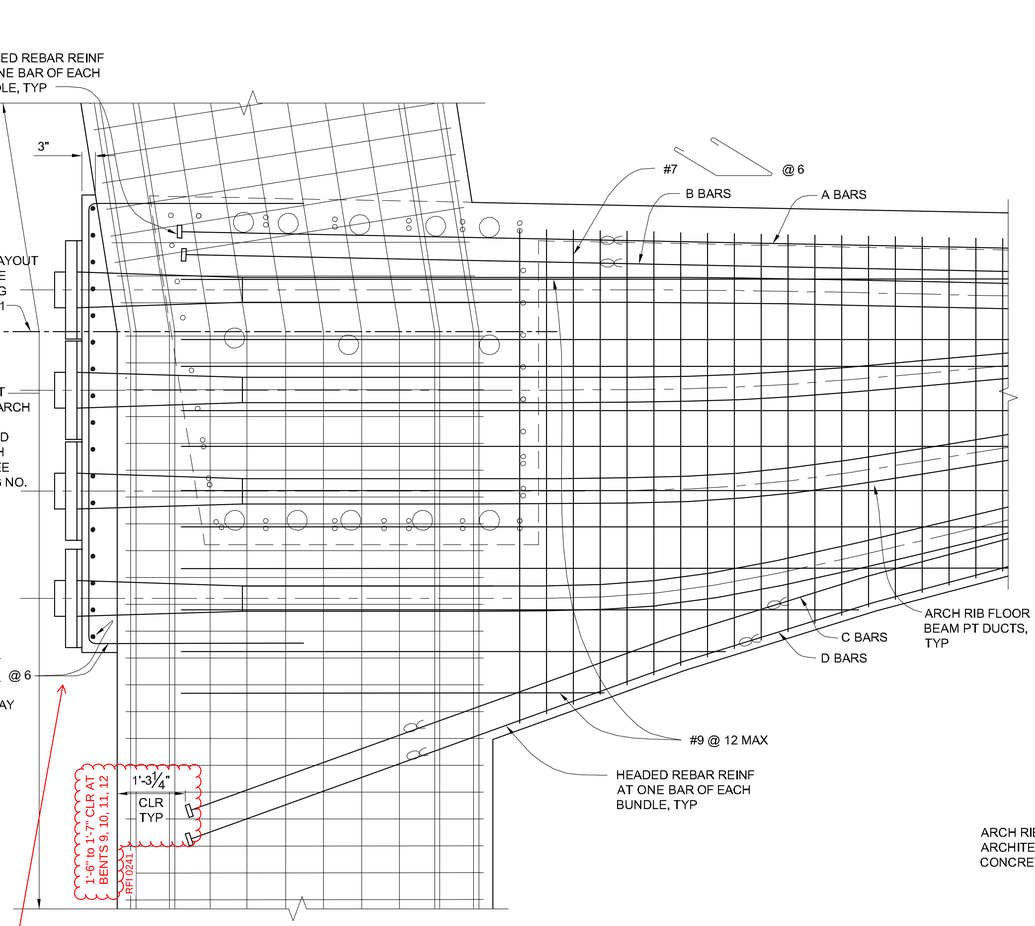

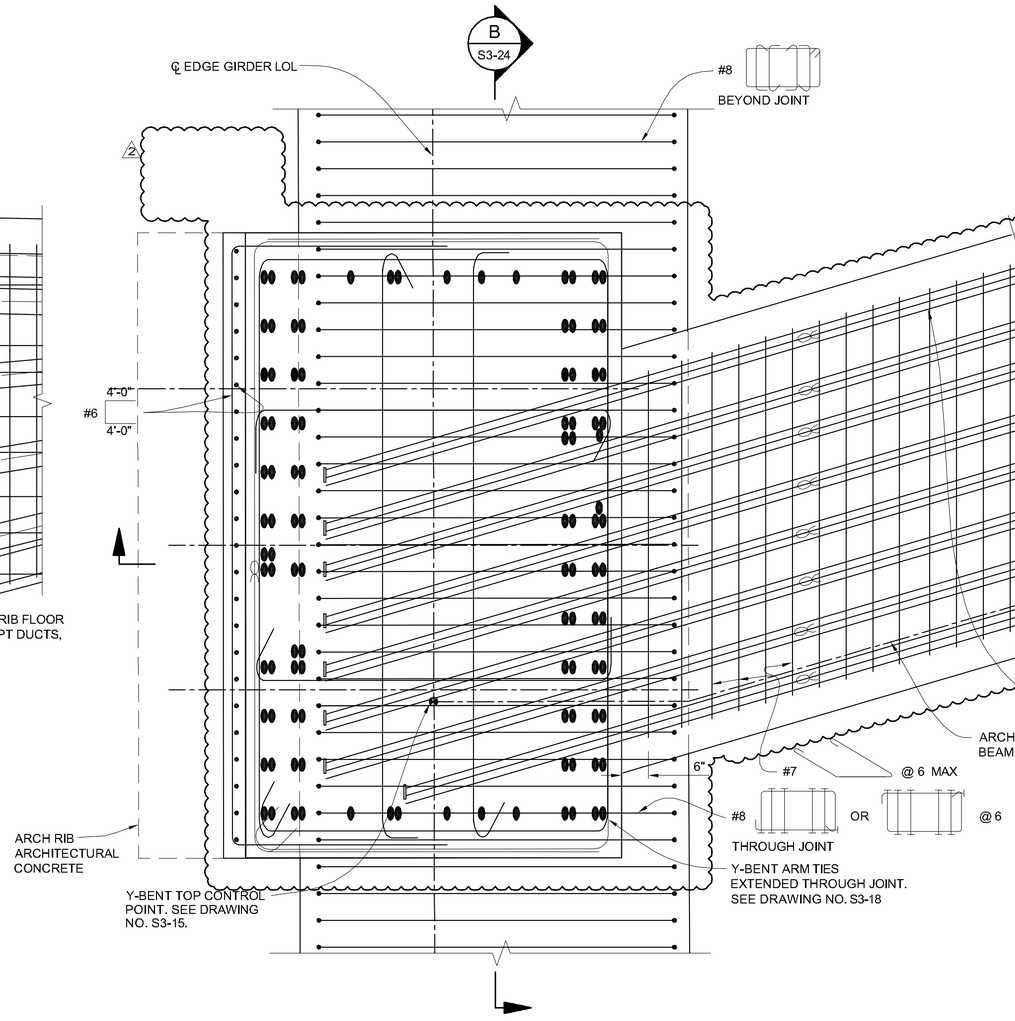

PLAN
SCALE: 3/4"=1'-0"

RFI 306

SECTION A
SCALE: 3/4"=1'-0"

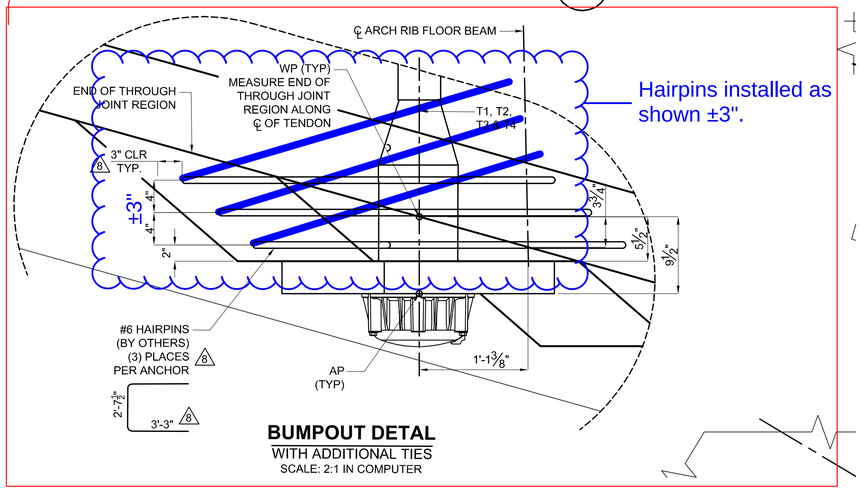

Hairpins installed as shown ±3".

BUMPOUT DETAL
WITH ADDITIONAL TIES
SCALE: 2:1 IN COMPUTER

NOTES:

1. SEE SHEET S3-21 FOR SIZE AND TERMINATION LENGTH OF A, B, C, AND D BARS.

LEGEND:

- ◦ EDGE GIRDER REBAR
- ○ EDGE GIRDER 4 ½" Ø PT DUCT
- BUNDLED BARS
- HEADED REBAR REINFORCEMENT

1

T.O. 5 - Change Order Serial Sketch No. 36R1 - Page 6 of 10

HNTB
HNTB Corporation
601 W. 5TH STREET SUITE 1000
LOS ANGELES, CALIFORNIA 90071
TEL (213) 403-1000 FAX (213) 403-1001

CITY OF LOS ANGELES DEPARTMENT OF PUBLIC WORKS

BUREAU OF ENGINEERING

ENGINEERING
CITY OF LOS ANGELES

NO.	REVISIONS:	DATE:	BY:
1	ARCH RIB FLOOR BEAM MODIFICATIONS	01/17/17	MHJ
2	BENT 12 BIM	07/12/17	MHJ

STRUCTURE NO.
53C-2329

INDEX NO.

REGISTERED PROFESSIONAL ENGINEER
MICHAEL H. JONES
No. S20331
CIVIL
STATE OF CALIFORNIA

THIS PLAN WAS ELECTRONICALLY SIGNED AND STAMPED.

GARY LEE MOORE, P.E.
CITY ENGINEER

		DATE:
DESIGN GROUP		
ENGINEER:	MICHAEL H. JONES	1/29/2016
DESIGNED BY:	SEAN XIN	1/29/2016
DRAWN BY:	LI ZHANG	1/29/2016
CHECKED BY:	CHARLES REDFIELD	1/29/2016
APPROVED BY:	MICHAEL H. JONES	1/29/2016
LIC. NO.	S20331	

VERTICAL CONTROL: BM 12-04070, 1929 (NGVD 29) - 1985 ADJUSTMENT
HORIZONTAL CONTROL: GPS; PID AE 1704, EPOCH 1991.35

SHEET TITLE: ARCH RIB FLOOR BEAM DETAILS NO. 3

PROJECT: SIXTH STREET VIADUCT REPLACEMENT

ADDRESS: SIXTH STREET VIADUCT (WHITTIER BLVD) LOS ANGELES, CA

WORK ORDER NO.
E700224F

DRAWING NO.
S3-23

SHEET 15 OF 560 SHEETS

THE CITY OF LOS ANGELES OR ITS OFFICERS OR AGENTS SHALL NOT BE RESPONSIBLE FOR THE ACCURACY OR COMPLETENESS OF ELECTRONIC COPIES OF THIS PLAN SHEET.

C:\coddlib\pw\pwwestcoast\zhang\dms57683\S3-20-FB01-03.dwg 7/18/17 15:35

REVISION DATES (DESIGN STAGE ONLY)

Sheet Version 3.0

ADDENDUM 5

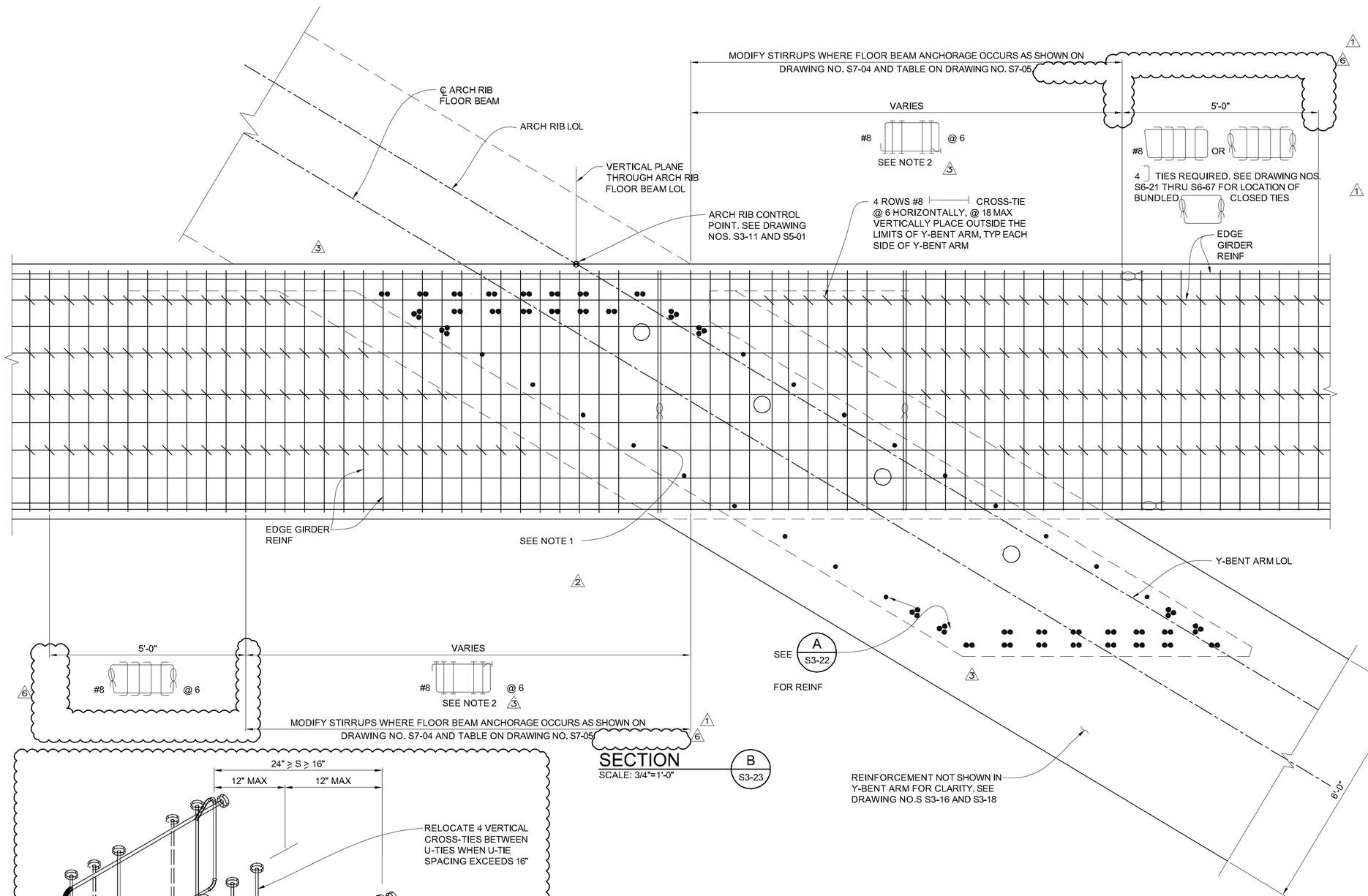

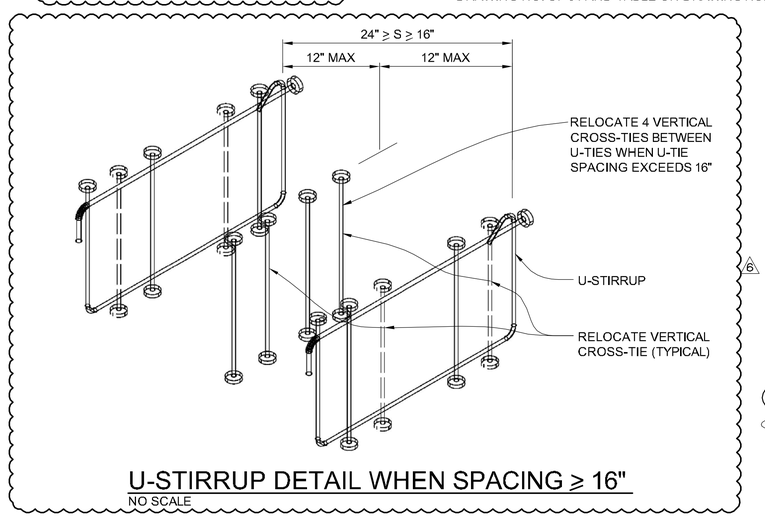

U-STIRRUP DETAIL WHEN SPACING ≥ 16"
NO SCALE

LEGEND:

- ARCH RIB FLOOR BEAM 5 1/8" Ø PT DUCT
- BUNDLED BARS
- HEADED REBAR

T.O. 5 - Change Order Serial Sketch No. 65 - Page 1 of 5

NOTES:

1. BUNDLE #8 OR TIES AS REQUIRED TO PROVIDE CLEARANCE FOR 5¼"Ø ARCH RIB FLOOR BEAM PT DUCTS. SPACING OF SINGLE OR BUNDLED U-STIRRUPS SHALL NOT EXCEED 24". SEE "U-STIRRUP DETAIL WHEN SPACING > 16" ". ADJUST LONGITUDINAL AND LATERAL POSITION OF VERTICAL #8 CROSS-TIES AS REQUIRED TO PROVIDE PT DUCT CLEARANCE. WHEN BUNDLING OR PLACING TWO TIES AT A MINIMUM SPACING OF 2.5 TIES THE TIE DIAMETER, ONE OF THE CAP TIES MAY BE PLACED WITHIN THE DEPTH OF THE EDGE GIRDER AS A HORIZONTAL CROSS TIE.
2. ALL END BAR TERMINATIONS MAY BE 90° HOOKS, 135° HOOKS OR HEADED REBAR WITHIN LIMITS OF NOTE 2 APPLICATIONS. BEND #8 CROSS-TIES TO MATCH ARCH RIB SLOPE AT LEVEL LAYOUT LINE WHERE INTERFERENCE WITH Y-BENT ARM F BARS OR INSIDE A, B, C AND D BARS OCCURS. SEE DRAWING NO. S3-13 FOR LOCATION AND DEFINITION OF LEVEL LAYOUT LINE.
3. AT HEADED REBAR TIES AND CROSS TIES, USE REDUCED SIZE HEADS (4 x NET REBAR AREA)

THE CITY OF LOS ANGELES OR ITS OFFICERS OR AGENTS SHALL NOT BE RESPONSIBLE FOR THE ACCURACY OR COMPLETENESS OF ELECTRONIC COPIES OF THIS PLAN SHEET.

C:\caddlib\pw\pwwestcoast\zhang\dms57683\S3-20-FB01-03.dwg 5/30/18 17:13

Sheet Version 3.0

REVISION DATES (DESIGN STAGE ONLY)

ENGINEERING
CITY OF LOS ANGELES

BUREAU OF ENGINEERING

NO.	REVISIONS:	DATE:	BY:
6	BIM REVISION 7 ECO 65	5/3/18	MHJ
5	ARCH RIB FLOOR BEAM MODIFCATIONS ECO 11R1	01/17/17	MHJ
4	BENT 12 BIM ECO 36R1	07/10/17	MHJ
3	GENERAL BIM UPDATES ECO 42	08/01/17	MHJ
2	BIM REVISION 6 ECO 63	04/27/18	MHJ
1			

STRUCTURE NO.
53C-2329

INDEX NO.

CITY OF LOS ANGELES DEPARTMENT OF PUBLIC WORKS

GARY LEE MOORE, P.E. CITY ENGINEER

		DATE:
ENGINEER:	DESIGN GROUP	
DESIGNED BY:	MICHAEL H. JONES LIC. NO. S3033	1/29/2016
DRAWN BY:	SEAN XIN	1/29/2016
CHECKED BY:	LI ZHANG	1/29/2016
APPROVED BY:	CHARLES REDFIELD	1/29/2016
	MICHAEL H. JONES	1/29/2016

THIS PLAN WAS ELECTRONICALLY SIGNED AND STAMPED.

REGISTERED PROFESSIONAL ENGINEER MICHAEL H. JONES No. S3033 CIVIL STATE OF CALIFORNIA

VERTICAL CONTROL: BM 12-04070,1928 (NGVD 29) - 1985 ADJUSTMENT
HORIZONTAL CONTROL: GPS; P/D AE 17/04, EPOCH 1991.35

SHEET TITLE: ARCH RIB FLOOR BEAM DETAILS NO. 4

PROJECT: SIXTH STREET VIADUCT REPLACEMENT

ADDRESS: SIXTH STREET VIADUCT (WHITTIER BLVD) LOS ANGELES, CA

HNTB
HNTB Corporation
601 W. 5TH STREET SUITE 1000
LOS ANGELES, CALIFORNIA 90071
TEL (213) 403-1000 FAX (213) 403-1001

WORK ORDER NO.
E700224F

DRAWING NO.
S3-24

SHEET 234 OF 560 SHEETS

ADDENDUM 5

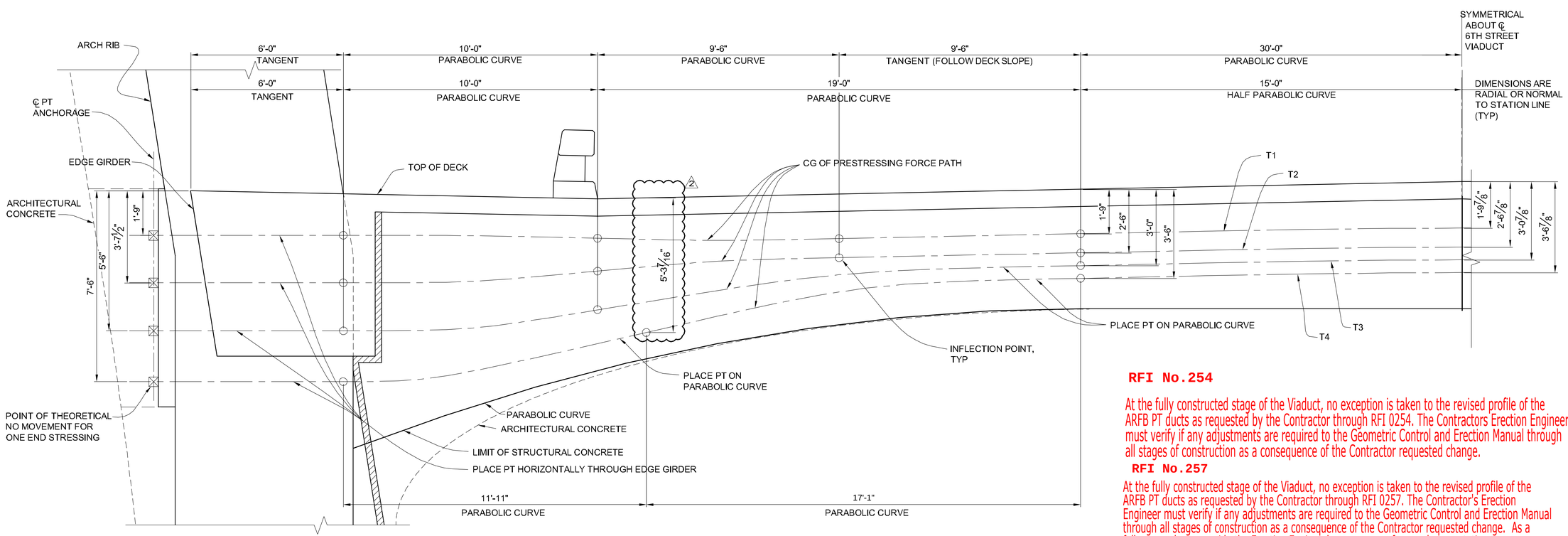

RFI No.254

At the fully constructed stage of the Viaduct, no exception is taken to the revised profile of the ARFB PT ducts as requested by the Contractor through RFI 0254. The Contractors Erection Engineer must verify if any adjustments are required to the Geometric Control and Erection Manual through all stages of construction as a consequence of the Contractor requested change.

RFI No.257

At the fully constructed stage of the Viaduct, no exception is taken to the revised profile of the ARFB PT ducts as requested by the Contractor through RFI 0257. The Contractor's Erection Engineer must verify if any adjustments are required to the Geometric Control and Erection Manual through all stages of construction as a consequence of the Contractor requested change. As a follow-up, please provide the Erection Engineer's concurrence for our documentation.

ARCH RIB FLOOR BEAM POST TENSIONING LAYOUT

SCALE: 1/2"=1'-0"

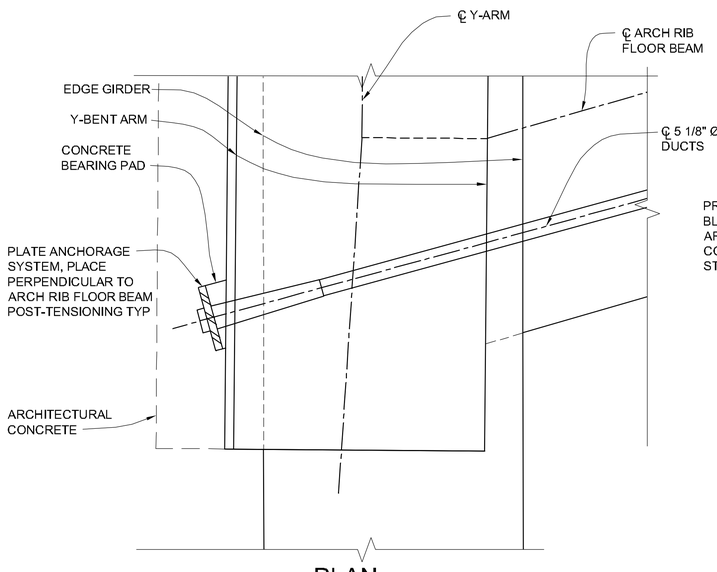

PLAN

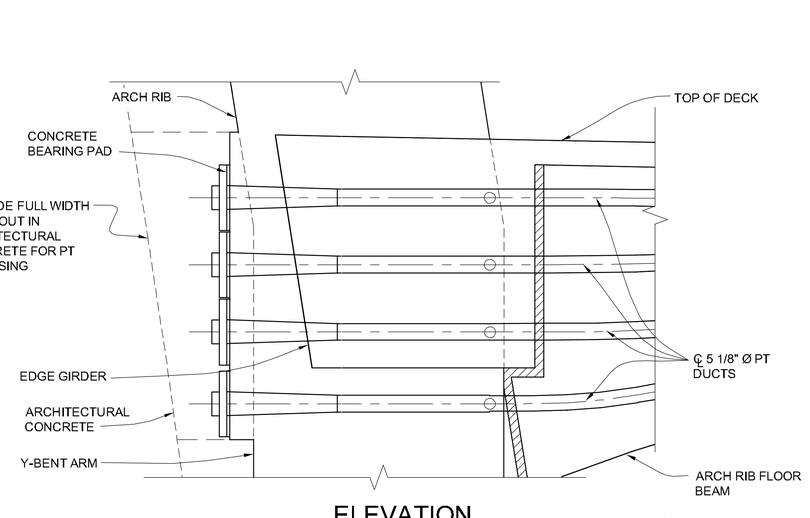

ELEVATION

ARCH RIB FLOOR BEAM POST TENSIONING ANCHORAGE

SCALE: 1/2"=1'-0"

PRESTRESSING NOTES

270 KSI LOW RELAXATION STRAND:
Pjack = SEE TABLE
ANCHOR SET = 3/8"
K = 0.0002 1/FT μ = 0.15

CONCRETE:
f'c = 6, 000 PSI @ 28 DAYS
f'ci = 5,000 PSI @ TIME OF STRESSING

CONTRACTOR SHALL SUBMIT ELONGATION CALCULATIONS BASED ON INITIAL STRESS AT ☒ = (SEE TABLE) TIMES JACKING STRESS. ONE END STRESSING AT SOUTH END.

DUCT LOCATION	NO. OF 0.6" Ø STANDS	P_{JACK}	☒
T1	33	1450	0.932
T2	33	1450	0.869
T3	33	1450	0.790
T4	33	1450	0.701

T.O. 5 - Preliminary Change Order Serial Sketch No. 44 - Page 1 of 1

HNTB
HNTB Corporation
601 W. 5TH STREET SUITE 1000
LOS ANGELES, CALIFORNIA 90071
TEL (213) 403-1000 FAX (213) 403-1001

CITY OF LOS ANGELES DEPARTMENT OF PUBLIC WORKS BUREAU OF ENGINEERING

ENGINEERING CITY OF LOS ANGELES

NO.	REVISIONS:	DATE:	BY:
1	ARCH RIB FLOOR BEAM MODIFICATIONS	01/17/17	MHJ
2	PT SHOP DRAWING REVIEW	02/27/17	RL

STRUCTURE NO. 53C-2329

INDEX NO.

REGISTERED PROFESSIONAL ENGINEER RICHARD H. JONES No. S3033 CIVIL STATE OF CALIFORNIA

THIS PLAN WAS ELECTRONICALLY SIGNED AND STAMPED.

VERTICAL CONTROL:	BM 12-04070, 1929 (NGVD 29) - 1985 ADJUSTMENT
HORIZONTAL CONTROL:	GPS; PID AE 1704, EPOCH 1991.35
SHEET TITLE:	ARCH RIB FLOOR BEAM POST TENSIONING DETAILS
PROJECT:	SIXTH STREET VIADUCT REPLACEMENT
ADDRESS:	SIXTH STREET VIADUCT (WHITTIER BLVD) LOS ANGELES, CA

CITY ENGINEER	DATE:
GARY LEE MOORE, P.E.	
LIC. NO. S3033	1/29/2016
DESIGN GROUP	1/29/2016
ENGINEER: MICHAEL H. JONES	1/29/2016
DESIGNED BY: SEAN XIN	1/29/2016
DRAWN BY: LI ZHANG	1/29/2016
CHECKED BY: CHARLES REDFIELD	1/29/2016
APPROVED BY: MICHAEL H. JONES	1/29/2016

WORK ORDER NO. E700224F

DRAWING NO. S3-25

SHEET 235 OF 560 SHEETS

THE CITY OF LOS ANGELES OR ITS OFFICERS OR AGENTS SHALL NOT BE RESPONSIBLE FOR THE ACCURACY OR COMPLETENESS OF ELECTRONIC COPIES OF THIS PLAN SHEET.

REVISION DATES (DESIGN STAGE ONLY)

C:\caddlib\pw\pwwestcoast\zhang\dms57683\S3-20-FB01-03.dwg 10/24/17 11:04

Sheet Version 3.0

ADDENDUM 5

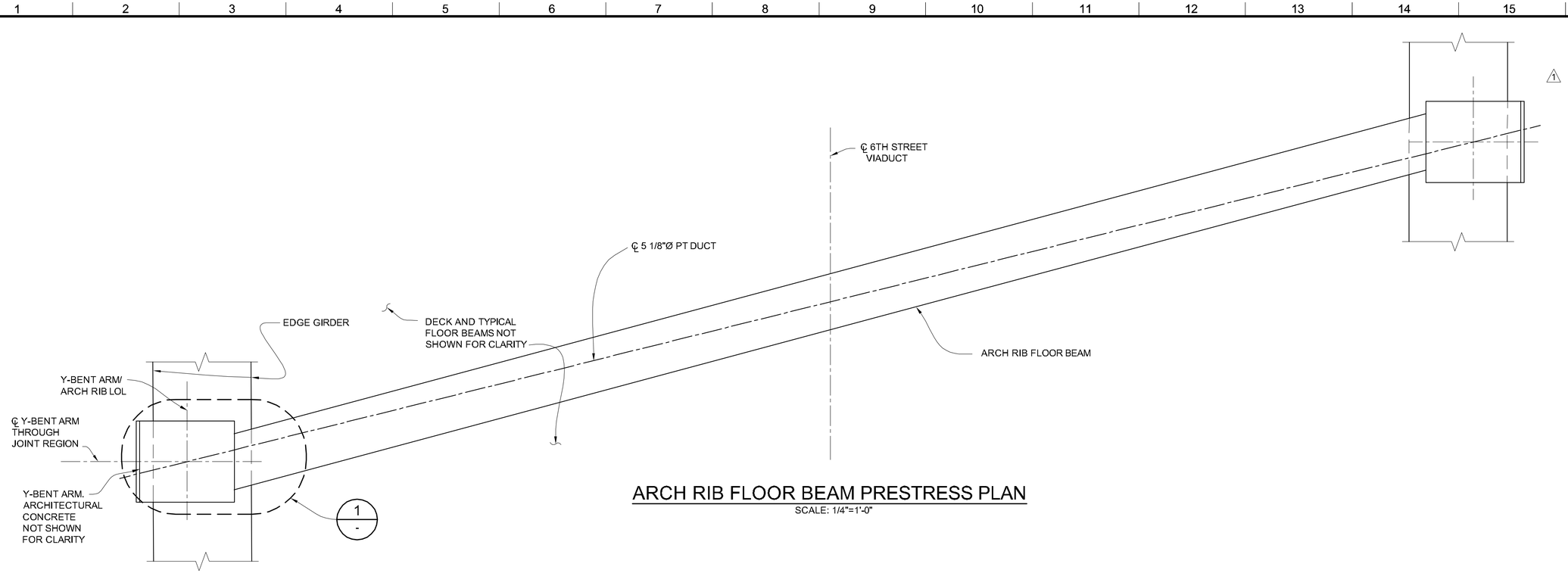

ARCH RIB FLOOR BEAM PRESTRESS PLAN

SCALE: 1/4"=1'-0"

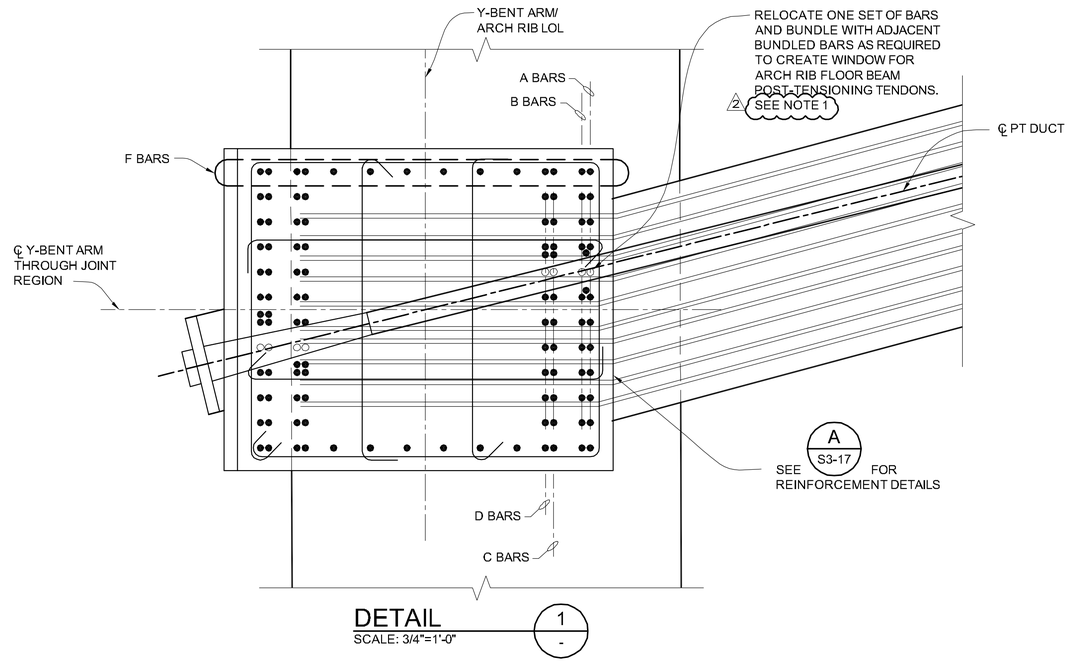

DETAIL

SCALE: 3/4"=1'-0"

1
-

2 NOTES:

1. WHERE 3-BAR OR 4-BAR BUNDLES ARE CREATED AT A, B, C AND D BARS TO CREATE A WINDOW FOR THE ARCH RIB FLOOR BEAM 5 1/8" Ø PT DUCT, MINIMUM SPACING REQUIREMENTS FOR 2-BAR BUNDLES CAN BE MAINTAINED.

LEGEND:

- ● Y-BENT ARM LONGITUDINAL REINFORCEMENT
- ◌ REINFORCEMENT TO BE RELOCATED AND BUNDLED

THE CITY OF LOS ANGELES OR ITS OFFICERS OR AGENTS SHALL NOT BE RESPONSIBLE FOR THE ACCURACY OR COMPLETENESS OF ELECTRONIC COPIES OF THIS PLAN SHEET.

C:\caddlib\pw\pwwestcoast\zhang\dms576831\S3-20-FB01-03.dwg 2/22/18 14:47

REVISION DATES (DESIGN STAGE ONLY)

Sheet Version 3.0

BUREAU OF ENGINEERING

ENGINEERING
CITY OF LOS ANGELES

NO.	REVISIONS:	DATE:	BY:
1	ARCH RIB FLOOR BEAM MODIFCATIONS ECO 11	01/17/17	MHJ
2	BIM REVISION 4	02/18/18	MHJ

STRUCTURE NO. 53C-2329

INDEX NO.

THIS PLAN WAS ELECTRONICALLY SIGNED AND STAMPED.

REGISTERED PROFESSIONAL ENGINEER MICHAEL H. JONES No. S3033 EXP. 06-30-19 CIVIL STATE OF CALIFORNIA

CITY OF LOS ANGELES DEPARTMENT OF PUBLIC WORKS

GARY LEE MOORE, P.E. CITY ENGINEER

		DATE:
ENGINEER:	DESIGN GROUP	
DESIGNED BY:	MICHAEL H. JONES	1/29/2016
DRAWN BY:	SEAN XIN	1/29/2016
CHECKED BY:	LI ZHANG	1/29/2016
APPROVED BY:	CHARLES REDFIELD	1/29/2016
	MICHAEL H. JONES	1/29/2016

LIC. NO. S3033

VERTICAL CONTROL: BM 12-04070,1929 (NGVD 29) - 1988 ADJUSTMENT
HORIZONTAL CONTROL: GRS; PID AE 1704, EPOCH 1991.35

SHEET TITLE: ARCH RIB FLOOR BEAM POST TENSIONING DETAILS NO. 2

PROJECT: SIXTH STREET VIADUCT REPLACEMENT

ADDRESS: SIXTH STREET VIADUCT (WHITTIER BLVD) LOS ANGELES, CA

HNTB
HNTB Corporation
601 W. 5TH STREET SUITE 1000
LOS ANGELES, CALIFORNIA 90071
TEL (213) 403-1000 FAX (213) 403-1001

WORK ORDER NO. E700224F

DRAWING NO. S3-26

SHEET OF 560 SHEETS

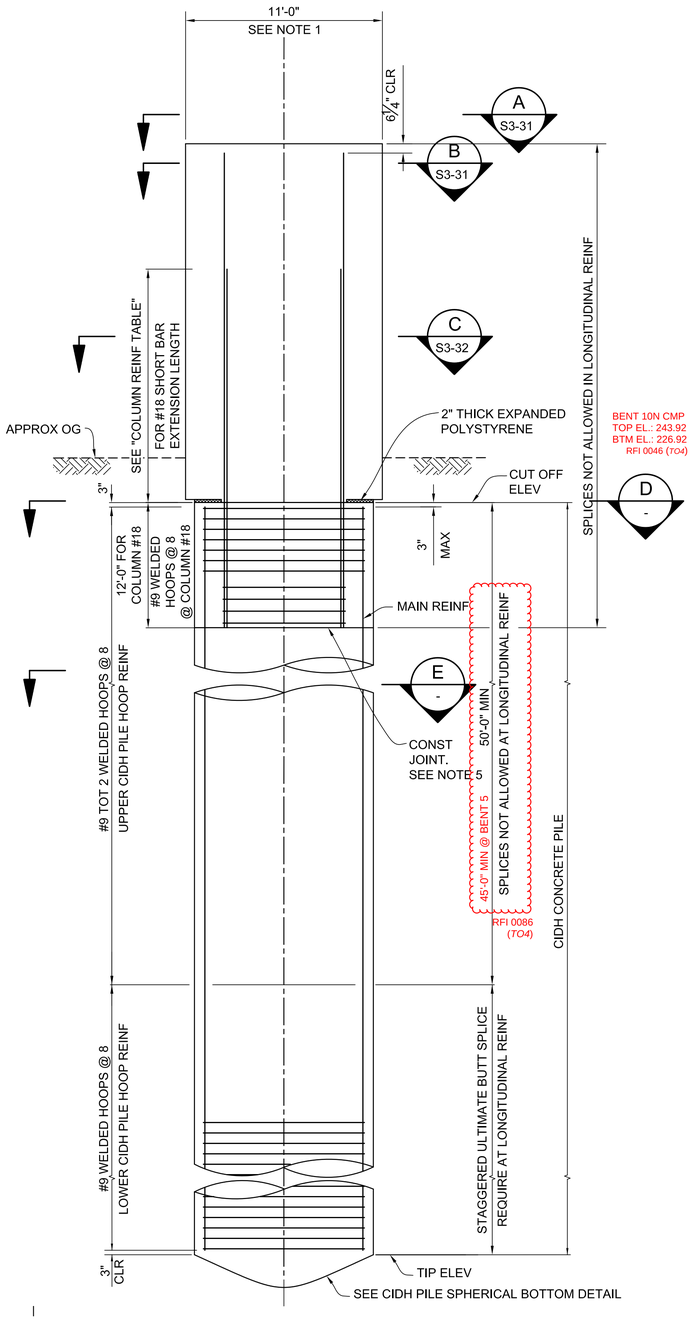

LOWER COLUMN AND CIDH CONCRETE PILE ELEVATION

SCALE: 1/4" =1'-0"

COLUMN REINF TABLE SEE C S3-32	
BENT	#18 SHORT BAR EXTENSION
4S, 5, 6, 9S, 10	10'-0"
3, 11 & 12	13'-0"
4N	9'-1 1/2"
9N	9'-10"

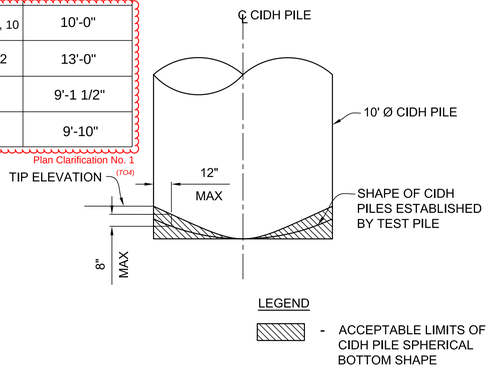

CIDH PILE SPHERICAL BOTTOM DETAIL

SCALE: 1/4" =1'-0"

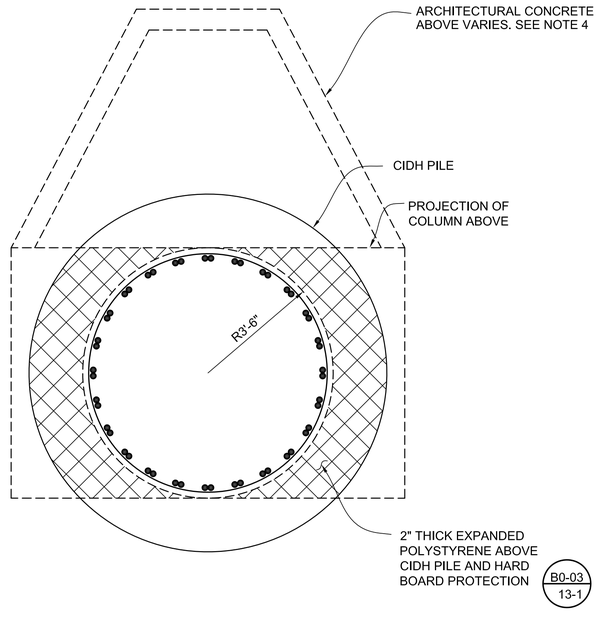

SECTION D

SCALE: 1/2"=1'-0"

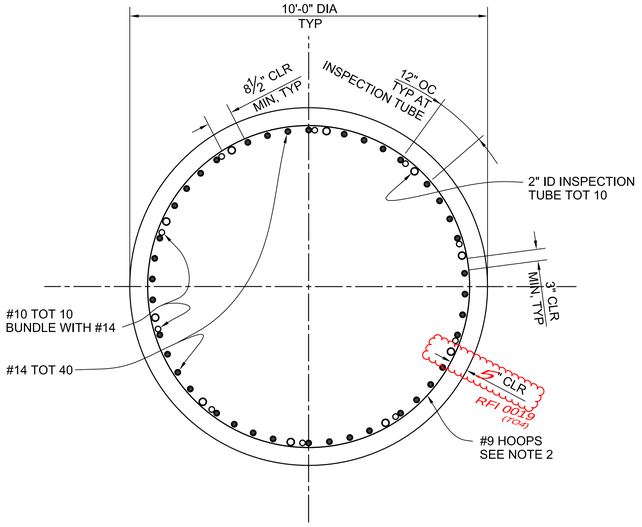

BENTS 1 THRU 5 AND 7 THRU 9

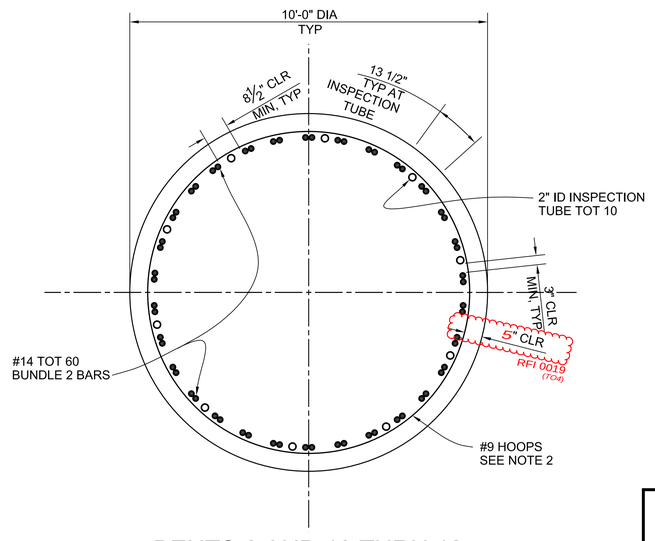

BENTS 6 AND 10 THRU 12

SECTION E

SCALE: 1/2"=1'-0"

NOTES:

1. FOR ORIENTATION OF COLUMN, SEE DRAWING NOS. S3-01 THRU S3-05 AND S3-12.
2. ALL HOOPS ARE ULTIMATE BUTT SPLICED CONTINUOUS.
3. ISOLATION CASING IS REQUIRED AT BENT 8. SEE DRAWINGS NOS. S3-36 AND S3-37.
4. ARCHITECTURAL CONCRETE ATTACHED TO COLUMN IS NOT SHOWN FOR CLARITY. SEE DRAWING NOS. S3-03, S3-04, S3-09 AND S3-14.
5. AT THE CONSTRUCTION JOINT AT THE BOTTOM OF COLUMN LONGITUDINAL REINFORCEMENT, PRIOR TO CONTINUING CONCRETE PLACEMENT THE EXISTING CONCRETE SURFACE SHALL BE PREPARED BY REMOVING ALL LAITANCE AND INTENTIONALLY ROUGHENING THE SURFACE TO AN AMPLITUDE OF ¼ ".

THE CITY OF LOS ANGELES OR ITS OFFICERS OR AGENTS SHALL NOT BE RESPONSIBLE FOR THE ACCURACY OR COMPLETENESS OF ELECTRONIC COPIES OF THIS PLAN SHEET.

REVISION DATES (DESIGN STAGE ONLY)

C:\caddlib\pw\pwwestcoast\zhang\dms57683\S3-25-PD01-04.dwg 6/27/16 16:45

Sheet Version 3.0

HNTB
HNTB Corporation
601 W. 5TH STREET SUITE 1000
LOS ANGELES, CALIFORNIA 90071
TEL (213) 403-1000 FAX (213) 403-1001

BUREAU OF ENGINEERING OFFICIAL RECORD

CITY OF LOS ANGELES DEPARTMENT OF PUBLIC WORKS
BUREAU OF ENGINEERING

ENGINEERING
CITY OF LOS ANGELES

GARY LEE MOORE, P.E. CITY ENGINEER

ENGINEER:	DESIGN GROUP	LIC. NO. S3033	DATE:
DESIGNED BY:	MICHAEL H. JONES		1/29/2016
DESIGNED BY:	TRAN LE		1/29/2016
DRAWN BY:	LI ZHANG		1/29/2016
CHECKED BY:	CHARLES REDFIELD		1/29/2016
APPROVED BY:	MICHAEL H. JONES		1/29/2016

NO.	REVISIONS:	DATE	BY:

STRUCTURE NO. 53C-2329

INDEX NO. P-38113

THIS PLAN WAS ELECTRONICALLY SIGNED AND STAMPED.

REGISTERED PROFESSIONAL ENGINEER MICHAEL H. JONES No. S3033 CIVIL STATE OF CALIFORNIA

VERTICAL CONTROL:	BM 12-04070, 1929 (NGVD 29) – 1985 ADJUSTMENT
HORIZONTAL CONTROL:	GPS; PID AE 1704, EPOCH 1991.35
SHEET TITLE:	LOWER COLUMN AND CIDH CONCRETE PILE DETAILS NO. 1
PROJECT:	SIXTH STREET VIADUCT REPLACEMENT
ADDRESS:	SIXTH STREET VIADUCT (WHITTIER BLVD) LOS ANGELES, CA

WORK ORDER NO. E700224F

DRAWING NO. S3-30

SHEET 236 OF 560 SHEETS

ADDENDUM 5

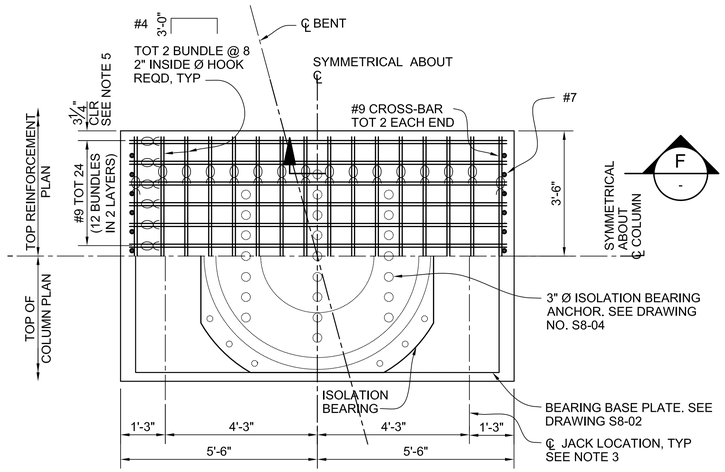

SECTION
SCALE: 1/2"=1'-0"

A
S3-30

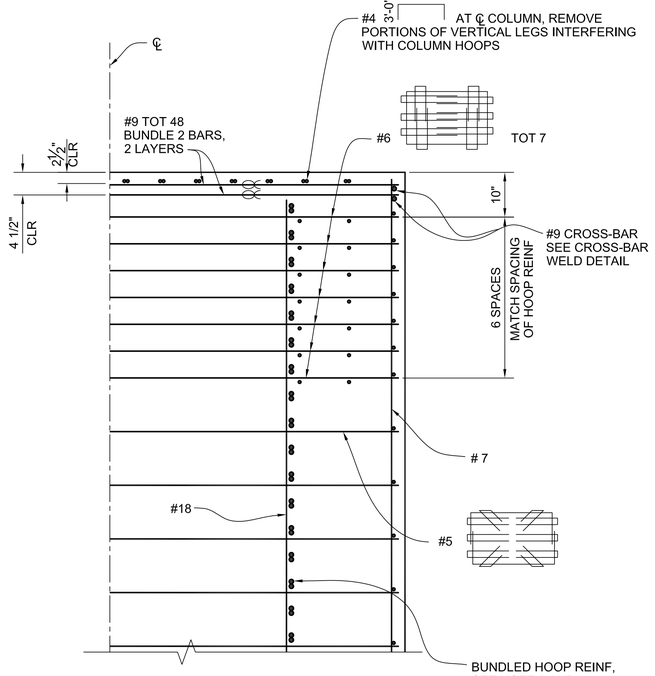

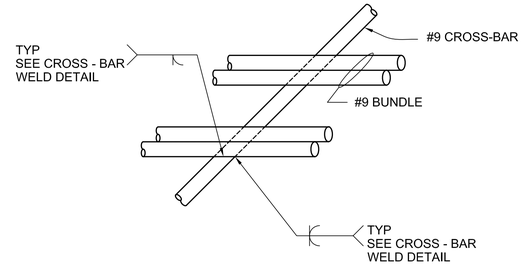

CROSS - BAR ISOMETRIC

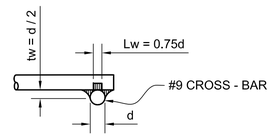

CROSS - BAR WELD DETAIL
NO SCALE

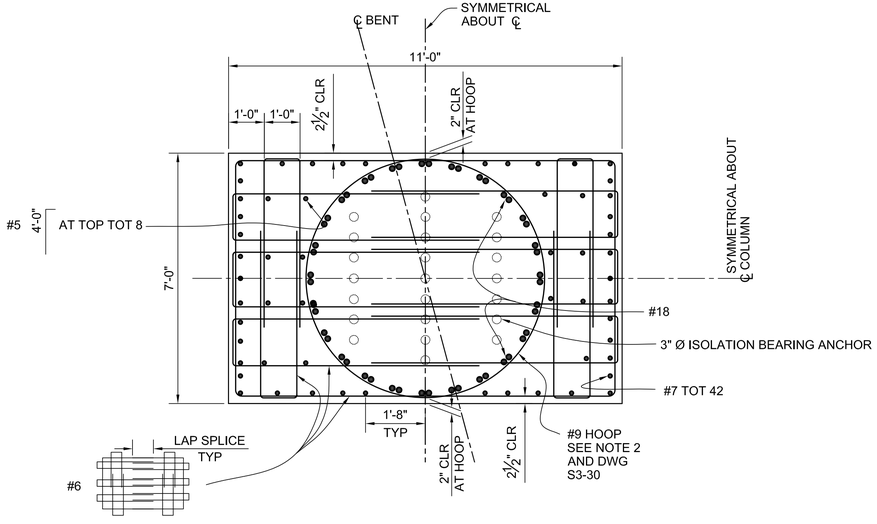

SECTION
SCALE: 1/2"=1'-0"

B
S3-30

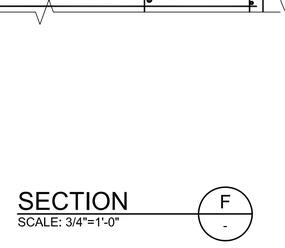

SECTION
SCALE: 3/4"=1'-0"

F
-

LEGEND:

BUNDLE BAR

NOTES:

1. ALL #18 BARS ARE ASTM A706 GRADE 80.
2. ALL HOOPS ARE ULTIMATE BUTT SPLICED CONTINUOUS.
3. FOR REQUIRED JACKING DEAD LOADS AT EACH BEARING, SEE DRAWING NO. S8-01. JACKING LOADS SHALL BE DISTRIBUTED EQUALLY ON EACH SIDE OF THE BEARING OVER THE FULL 6'-6" LENGTH OF THE BEARING BASE PLATE AND FOR A MINIMUM WIDTH OF 20".
4. ARCHITECTURAL CONCRETE ATTACHED TO COLUMN IS NOT SHOWN FOR CLARITY. SEE DRAWING NO. S3-14.
5. AT BENTS 5 AND 6, ADJUST REINFORCEMENT CLEAR COVER AS REQUIRED BY "REINFORCEMENT CLEAR COVER DETAIL AT BENT 5 AND 6" ON DRAWING NO. S3-32.

BUREAU OF ENGINEERING
OFFICIAL RECORD

HNTB
HNTB Corporation
601 W. 5TH STREET SUITE 1000
LOS ANGELES, CALIFORNIA 90071
TEL (213) 403-1000 FAX (213) 403-1001

CITY OF LOS ANGELES DEPARTMENT OF PUBLIC WORKS BUREAU OF ENGINEERING

ENGINEERING
CITY OF LOS ANGELES

NO.	REVISIONS:	DATE	BY:

STRUCTURE NO. 53C-2329

INDEX NO. P-38113

THIS PLAN WAS ELECTRONICALLY SIGNED AND STAMPED.

REGISTERED PROFESSIONAL ENGINEER
MICHAEL H. JONES
No. S3033
CIVIL
STATE OF CALIFORNIA

CITY ENGINEER		DATE:
GARY LEE MOORE, P.E.	CITY ENGINEER	1/29/2016
DESIGN GROUP	LIC. NO. S3033	1/29/2016
ENGINEER: MICHAEL H. JONES		1/29/2016
DESIGNED BY: TRAN LE		1/29/2016
DRAWN BY: LI ZHANG		1/29/2016
CHECKED BY: CHARLES REDFIELD		1/29/2016
APPROVED BY: MICHAEL H. JONES		

SHEET TITLE: LOWER COLUMN AND CIDH CONCRETE PILE DETAILS NO. 2

PROJECT: SIXTH STREET VIADUCT REPLACEMENT

ADDRESS: SIXTH STREET VIADUCT (WHITTIER BLVD) LOS ANGELES, CA

VERTICAL CONTROL: BM 12-04070, 1929 (NGVD 29) - 1988 ADJUSTMENT
HORIZONTAL CONTROL: GPS; PID AE 1704, EPOCH 1991.35

WORK ORDER NO. E700224F

DRAWING NO. S3-31

SHEET 237 OF 560 SHEETS

REVISION DATES (DESIGN STAGE ONLY)

THE CITY OF LOS ANGELES OR ITS OFFICERS OR AGENTS SHALL NOT BE RESPONSIBLE FOR THE ACCURACY OR COMPLETENESS OF ELECTRONIC COPIES OF THIS PLAN SHEET.

C:\caddlib\pw\pwwestcoast\zhang\dms57683\S3-25-PD01-04.dwg 6/27/16 16:46

Sheet Version 3.0

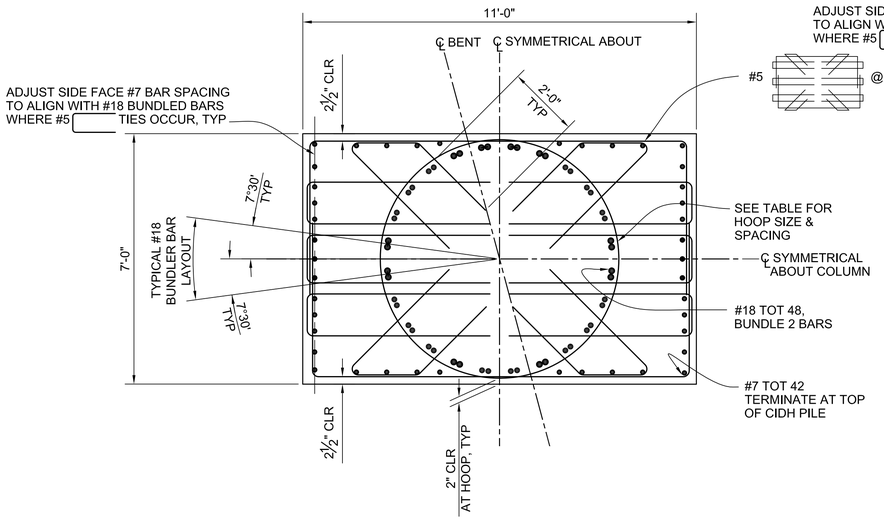

BENTS 7 AND 8

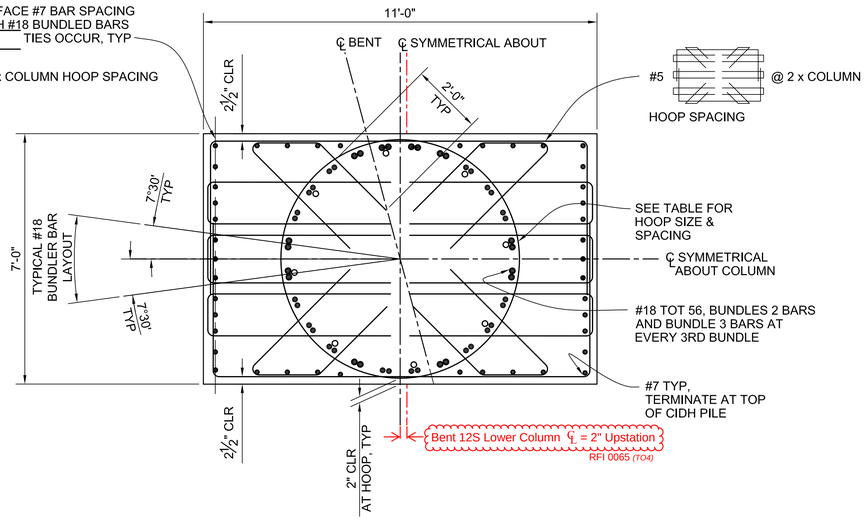

BENTS 3 THRU 6 AND 9 THRU 12

(AT BENTS 5 AND 6, SEE NOTE 4 AND "REINFORCEMENT CLEAR COVER DETAIL AT BENTS 5 AND 6)

SECTION C
SCALE: 1/2"=1'-0"
S3-30

LEGEND:

- • FULL LENGTH BAR
- ○ SHORT BAR. SEE TABLE ON DRAWING S3-30.

NOTES:

1. ALL HOOPS ARE ULTIMATE BUTT SPLICED CONTINUOUS.
2. ALL #18 BARS ARE ASTM A706 GRADE 80.
3. ARCHITECTURAL CONCRETE ATTACHED TO COLUMN IS NOT SHOWN FOR CLARITY. SEE DRAWING NO. S3-14.
4. AT BENTS 5 AND 6, STRUCTURAL AND ARCHITECTURE CONCRETE BELOW ISOLATION BEARING IS OFFSET 1" FROM THE COLUMN ABOVE ISOLATION BEARING AS SHOWN TO PROVIDE A MINIMUM OF 3" CONCRETE CLEAR COVER AT REINFORCEMENT.

COLUMN HOOP REINFORCEMENT		
BENT	SIZE	SPACING
3	#8 TCT 2	6 1/4"
4	#9 TCT 2	7"
5	#8 TCT 2	7"
6	#8 TCT 2	6 1/2"
7	#9 TCT 2	7 1/2"
8	#9 TCT 2	8"
9	#8 TCT 2	5 1/2"
10	#8 TCT 2	6 3/4"
11	#8 TCT 2	7 1/2"
12	#8 TCT 2	7 3/4"

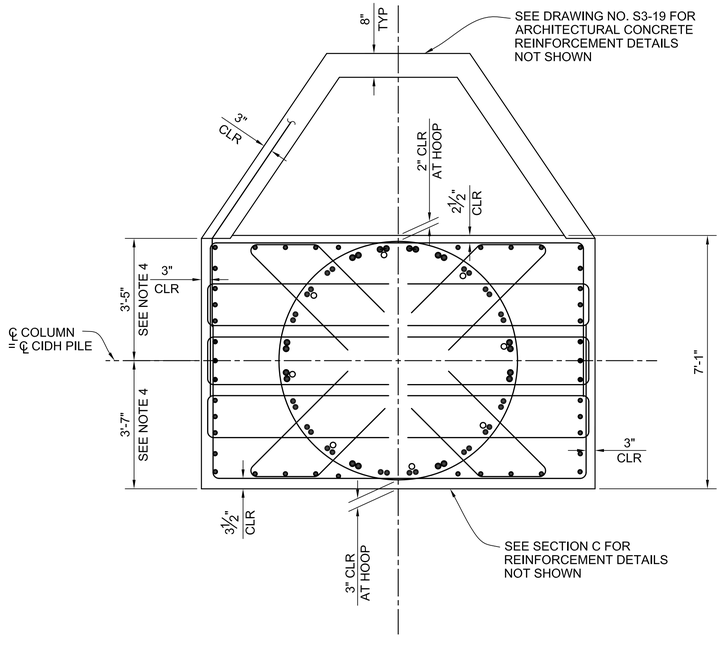

REINFORCEMENT CLEAR COVER DETAIL AT BENTS 5 AND 6
SCALE: 1/2"=1'-0"

THE CITY OF LOS ANGELES OR ITS OFFICERS OR AGENTS SHALL NOT BE RESPONSIBLE FOR THE ACCURACY OR COMPLETENESS OF ELECTRONIC COPIES OF THIS PLAN SHEET.

C:\caddlib\pw\pwwestcoast\lzhang\dms57683\S3-25-PD01-04.dwg 8/23/16 14:01

REVISION DATES (DESIGN STAGE ONLY)

Sheet Version 3.0

HNTB
HNTB Corporation
601 W. 5TH STREET SUITE 1000
LOS ANGELES, CALIFORNIA 90071
TEL (213) 403-1000 FAX (213) 403-1001

CITY OF LOS ANGELES DEPARTMENT OF PUBLIC WORKS
BUREAU OF ENGINEERING

ENGINEERING
CITY OF LOS ANGELES

NO.	REVISIONS:	DATE	BY:
1	ADDENDUM NO. 1	08/23/16	MHJ

STRUCTURE NO. 53C-2329

INDEX NO.

THIS PLAN WAS ELECTRONICALLY SIGNED AND STAMPED.
REGISTERED PROFESSIONAL ENGINEER MICHAEL H. JONES No. S3033 CIVIL STATE OF CALIFORNIA
EXP. 12-31-16

ENGINEER		DATE:
GARY LEE MOORE, P.E.	CITY ENGINEER	
DESIGN GROUP		
ENGINEER: MICHAEL H. JONES	LIC. NO. S3033	1/29/2016
DESIGNED BY: TRAN LE		1/29/2016
DRAWN BY: LI ZHANG		1/29/2016
CHECKED BY: CHARLES REDFIELD		1/29/2016
APPROVED BY: MICHAEL H. JONES		1/29/2016

VERTICAL CONTROL: BM 12-04070, 1929 (NGVD 29) – 1985 ADJUSTMENT
HORIZONTAL CONTROL: GPS; PID AE 1704, EPOCH 1991.35

SHEET TITLE: LOWER COLUMN AND CIDH CONCRETE PILE DETAILS NO. 3

PROJECT: SIXTH STREET VIADUCT REPLACEMENT

ADDRESS: SIXTH STREET VIADUCT (WHITTIER BLVD) LOS ANGELES, CA

WORK ORDER NO. E700224F

DRAWING NO. S3-32

SHEET 31 OF SHEETS

ADDENDUM 5

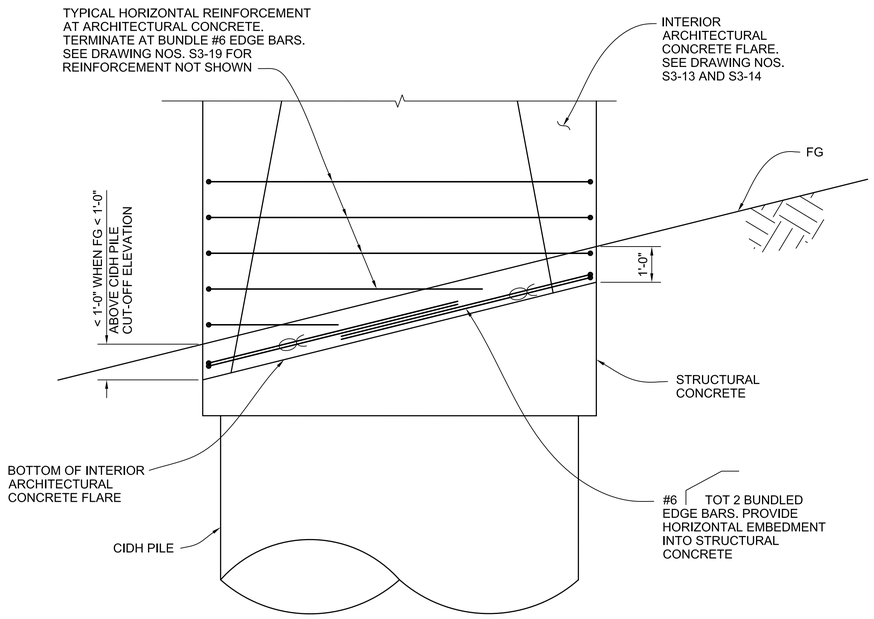

ARCHITECTURAL CONCRETE AT SLOPING GRADE - BENTS 6 & 12

SCALE: 1/2" =1'-0"

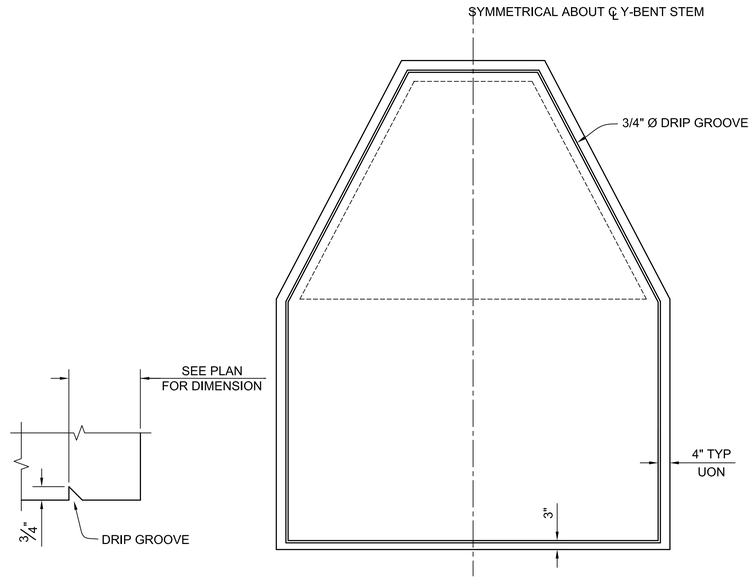

ELEVATION

SCALE: 3" =1'-0"

PLAN

SCALE: 1/2" =1'-0"

REFLECTED Y-BENT STEM SOFFIT - DRIP GROOVE LAYOUT

THE CITY OF LOS ANGELES OR ITS OFFICERS OR AGENTS SHALL NOT BE RESPONSIBLE FOR THE ACCURACY OR COMPLETENESS OF ELECTRONIC COPIES OF THIS PLAN SHEET.

C:\caddlib\pw\pwwestcoast\zhang\dms57683\S3-19-LT06.dwg 6/27/16 16:31

REVISION DATES (DESIGN STAGE ONLY)

Sheet Version 3.0

BUREAU OF ENGINEERING

OFFICIAL RECORD

HNTB
HNTB Corporation
601 W. 5TH STREET SUITE 1000
LOS ANGELES, CALIFORNIA 90071
TEL (213) 403-1000 FAX (213) 403-1001

CITY OF LOS ANGELES DEPARTMENT OF PUBLIC WORKS BUREAU OF ENGINEERING

ENGINEERING CITY OF LOS ANGELES

NO.	REVISIONS:	DATE	BY:

STRUCTURE NO. 53C-2329

INDEX NO. P-38113

REGISTERED PROFESSIONAL ENGINEER MICHAEL H. JONES No. S3033 CIVIL STATE OF CALIFORNIA

THIS PLAN WAS ELECTRONICALLY SIGNED AND STAMPED

GARY LEE MOORE, P.E. CITY ENGINEER

DESIGN GROUP

		DATE:
ENGINEER:	MICHAEL H. JONES LIC. NO. S3033	1/29/2016
DESIGNED BY:	SEAN XIN	1/29/2016
DRAWN BY:	LI ZHANG	1/29/2016
CHECKED BY:	CHARLES REDFIELD	1/29/2016
APPROVED BY:	MICHAEL H. JONES	1/29/2016

VERTICAL CONTROL: BM 12-04070, 1929 (NGVD 29) - 1985 ADJUSTMENT
HORIZONTAL CONTROL: GPS; PID AE 1704, EPOCH 1991.35

SHEET TITLE: Y-BENT COLUMN MISCELLANEOUS DETAILS

PROJECT: SIXTH STREET VIADUCT REPLACEMENT

ADDRESS: SIXTH STREET VIADUCT (WHITTIER BLVD) LOS ANGELES, CA

WORK ORDER NO. E700224F

DRAWING NO. S3-33

SHEET 239 OF 560 SHEETS

ADDENDUM 5

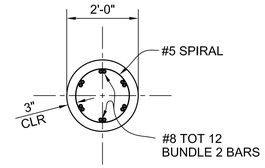

SECTION D
SCALE: 1/2"=1'-0"

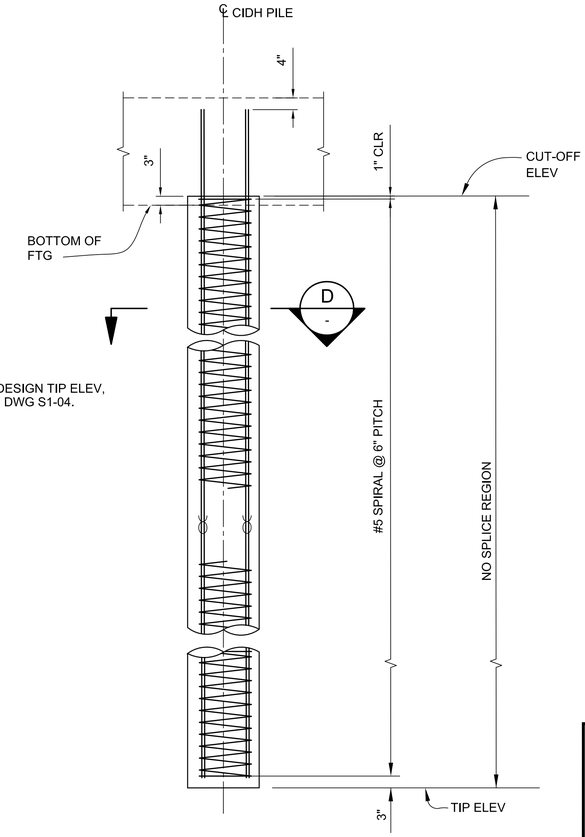

24" Ø CIDH CONCRETE PILE
SCALE: 1/2" =1'-0"

PILE NOTES:

1. FOR CUT-OFF ELEV AND DESIGN TIP ELEV, SEE PILE DATA TABLE ON DWG S1-04.

LEGEND:

BUNDLED BAR

THE CITY OF LOS ANGELES OR ITS OFFICERS OR AGENTS SHALL NOT BE RESPONSIBLE FOR THE ACCURACY OR COMPLETENESS OF ELECTRONIC COPIES OF THIS PLAN SHEET.

C:\caddlib\pw\pwwestcoast\zhong\dms57683\S3-25-PD01-04.dwg 6/27/16 16:47

REVISION DATES (DESIGN STAGE ONLY)

Sheet Version 3.0

BUREAU OF ENGINEERING

ENGINEERING
CITY OF LOS ANGELES

NO.	REVISIONS:	DATE	BY:

STRUCTURE NO.
53C-2329

INDEX NO. **P-38113**

REGISTERED PROFESSIONAL ENGINEER MICHAEL H. JONES No. S3033 STATE OF CALIFORNIA

THIS PLAN WAS ELECTRONICALLY SIGNED AND STAMPED.

BUREAU OF ENGINEERING
OFFICIAL RECORD

HNTB
HNTB Corporation
601 W. 5TH STREET SUITE 1000
LOS ANGELES, CALIFORNIA 90071
TEL (213) 403-1000 FAX (213) 403-1001

CITY OF LOS ANGELES DEPARTMENT OF PUBLIC WORKS
BUREAU OF ENGINEERING

VERTICAL CONTROL: BM 12-04070, 1929 (NGVD 29) - 1985 ADJUSTMENT
HORIZONTAL CONTROL: GPS; PID AE 1704, EPOCH 1991.35

SHEET TITLE: 24" DIAMETER CIDH CONCRETE PILE

PROJECT: SIXTH STREET VIADUCT REPLACEMENT

ADDRESS: SIXTH STREET VIADUCT (WHITTIER BLVD)
LOS ANGELES, CA

GARY LEE MOORE, P.E. CITY ENGINEER

		DESIGN GROUP	LIC. NO. S3033	DATE:
ENGINEER:	MICHAEL H. JONES			1/29/2016
DESIGNED BY:	TRAN LE			1/29/2016
DRAWN BY:	LI ZHANG			1/29/2016
CHECKED BY:	CHARLES REDFIELD			1/29/2016
APPROVED BY:	MICHAEL H. JONES			1/29/2016

WORK ORDER NO.
E700224F

DRAWING NO.
S3-35

SHEET 240 OF 560 SHEETS

ADDENDUM 5

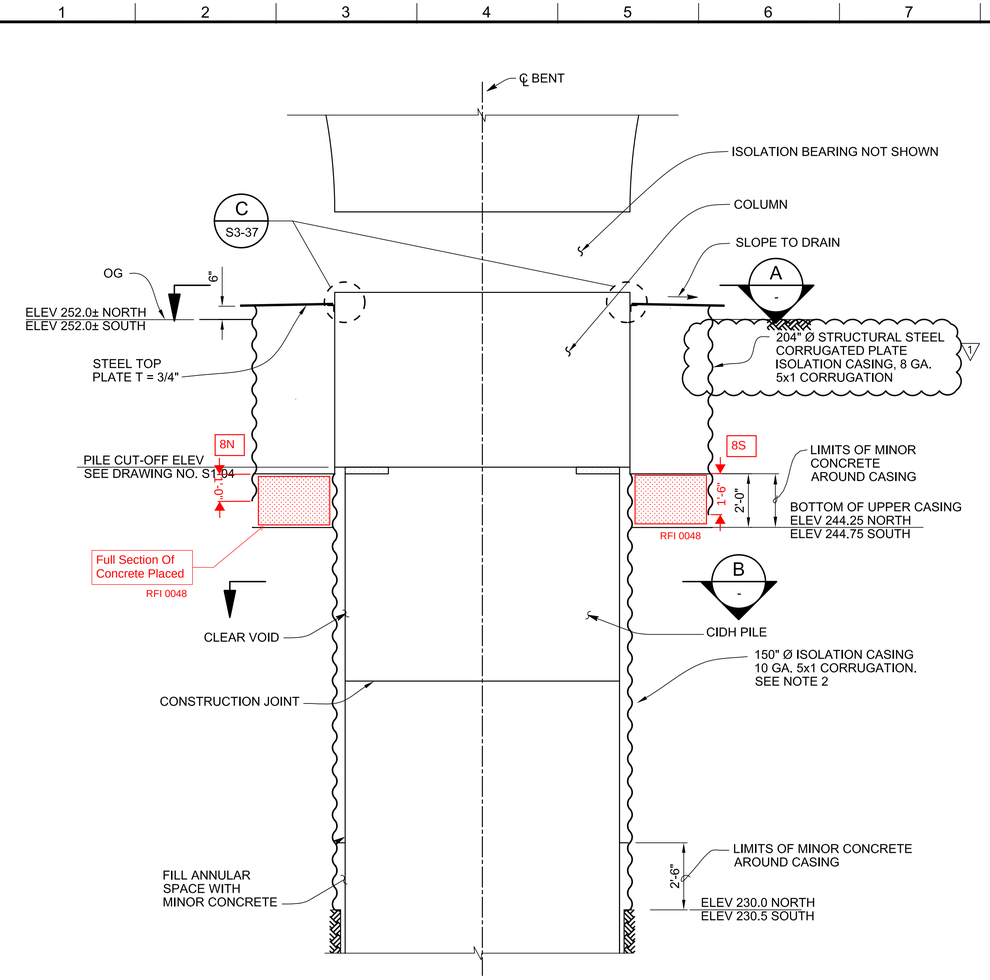

ISOLATION CASING DETAIL AT BENT 8

NO SCALE

NOTES:

1. ISOLATION CASING REQUIRED AT BENT 8 ONLY.
2. THE 150" DIAMETER ISOLATION CASING HAS BEEN SIZED TO PROVIDE ADEQUATE SEISMIC CLEARANCE FOR A MAXIMUM 126" DIAMETER INTERNAL CMP CASING USED FOR FORMING THE CIDH CONCRETE PILE.

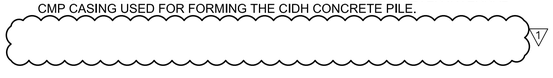

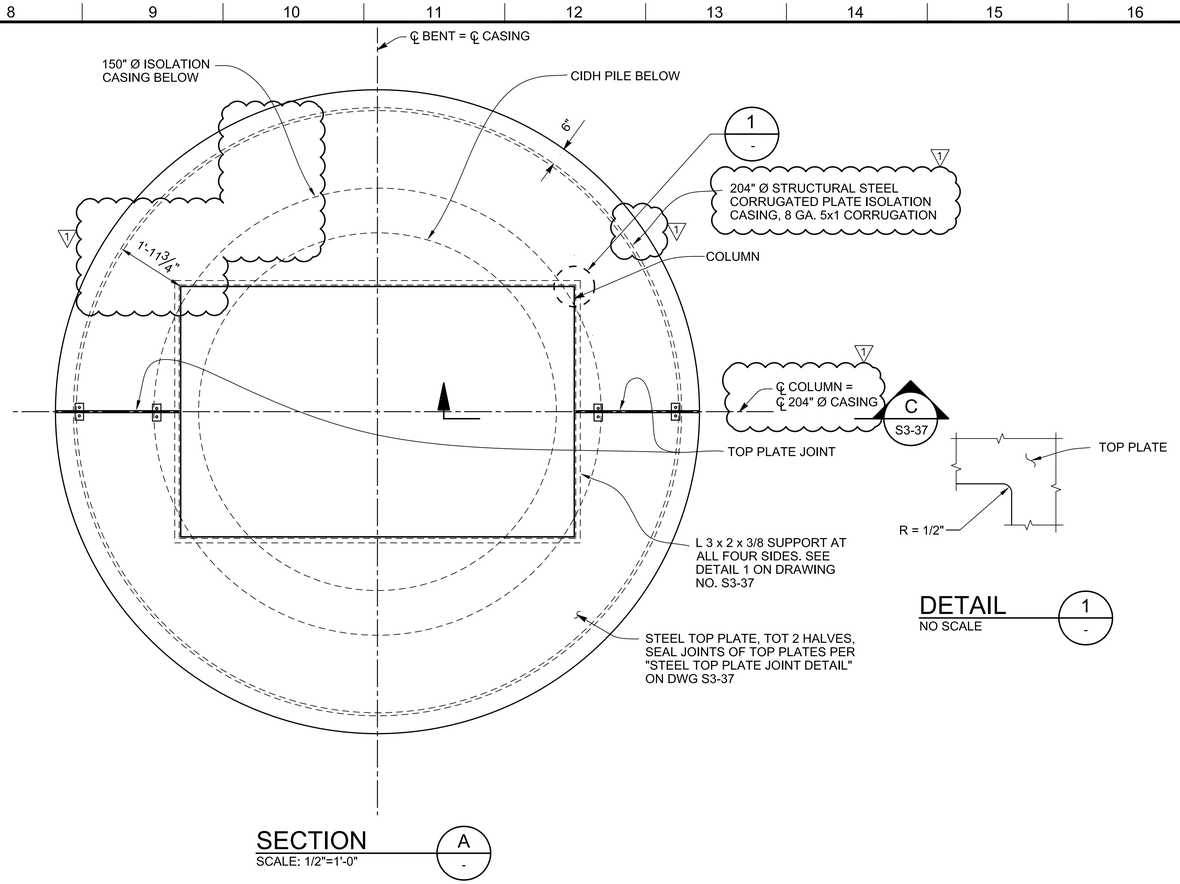

DETAIL 1

NO SCALE

SECTION A

SCALE: 1/2"=1'-0"

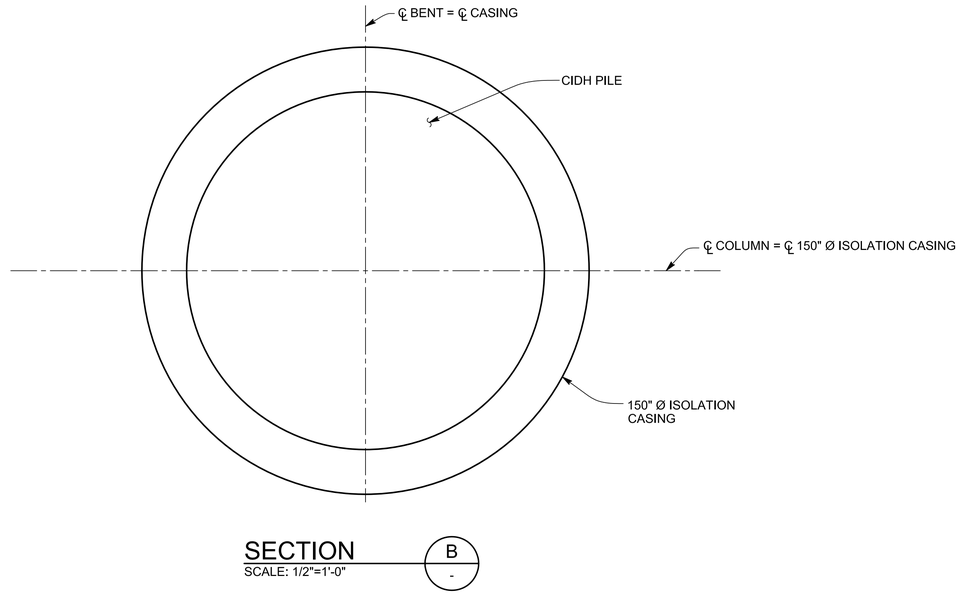

SECTION B

SCALE: 1/2"=1'-0"

HNTB
HNTB Corporation
601 W. 5TH STREET SUITE 1000
LOS ANGELES, CALIFORNIA 90071
TEL (213) 403-1000 FAX (213) 403-1001

CITY OF LOS ANGELES DEPARTMENT OF PUBLIC WORKS
BUREAU OF ENGINEERING

ENGINEERING
CITY OF LOS ANGELES

NO.	REVISIONS:	DATE	BY:
1	ADDENDUM NO. 1	08/23/16	MHJ

STRUCTURE NO.
53C-2329

INDEX NO.

THIS PLAN WAS ELECTRONICALLY SIGNED AND STAMPED

REGISTERED PROFESSIONAL ENGINEER
MICHAEL H. JONES
No. S3033
CIVIL
STATE OF CALIFORNIA

CITY ENGINEER		DATE:
GARY LEE MOORE, P.E.		1/29/2016
	DESIGN GROUP	
ENGINEER:	MICHAEL H. JONES	1/29/2016
	LIC. NO. S3033	
DESIGNED BY:	MICHAEL H. JONES	1/29/2016
DRAWN BY:	LI ZHANG	1/29/2016
CHECKED BY:	CHARLES REDFIELD	1/29/2016
APPROVED BY:	MICHAEL H. JONES	1/29/2016

SHEET TITLE: CIDH PILE ISOLATION CASING DETAILS NO. 1

PROJECT: SIXTH STREET VIADUCT REPLACEMENT

ADDRESS: SIXTH STREET VIADUCT (WHITTIER BLVD) LOS ANGELES, CA

VERTICAL CONTROL: BM 12-04070, 1929 (NGVD 29) - 1985 ADJUSTMENT
HORIZONTAL CONTROL: GPS; PID AE 1704, EPOCH 1991.35

WORK ORDER NO.
E700224F

DRAWING NO.
S3-36

SHEET 33 OF SHEETS

THE CITY OF LOS ANGELES OR ITS OFFICERS OR AGENTS SHALL NOT BE RESPONSIBLE FOR THE ACCURACY OR COMPLETENESS OF ELECTRONIC COPIES OF THIS PLAN SHEET.

REVISION DATES (DESIGN STAGE ONLY)

C:\caddlib\pw\pwwestcoast\zhang\dms57683\S3-29-DT01-02.dwg 8/23/16 14:35

Sheet Version 3.0

ADDENDUM 5

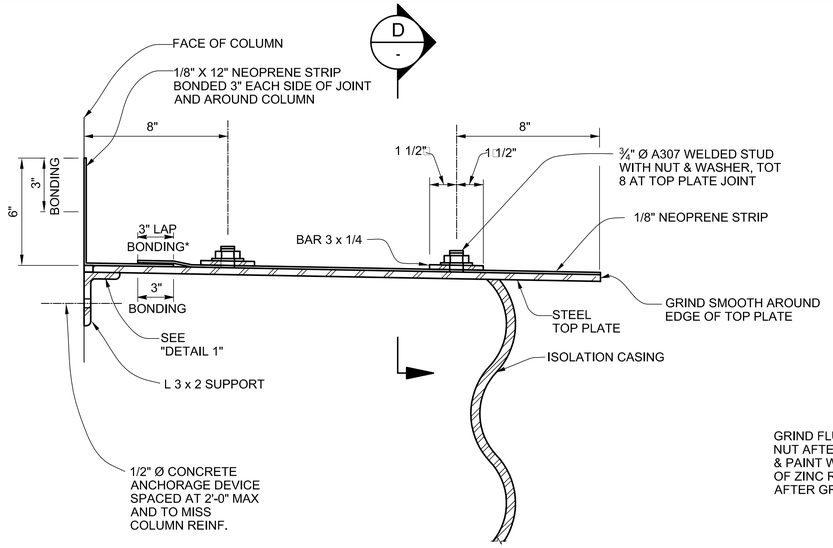

SECTION D
SCALE: 3"=1'-0"

NOTES:

1. ALL STEEL PLATES AND BARS SHALL BE ASTM A36.
2. ALL STEEL COMPONENTS SHALL BE GALVANIZED.
3. BONDING OF NEOPRENE STRIP SHALL BE ACHIEVED USING A NEOPRENE ADHESIVE THAT SHALL COMPLY WITH FEDERAL SPEC MMM-A-121.
4. AT CANTED ARCHITECTURAL CONCRETE WALLS, REPLACE L 3 x 2 x 3/8 SUPPORT ANGLE WITH A FABRICATED ANGLE TO MATCH THE SLOPE OF THE ARCHITECTURAL CONCRETE WALL

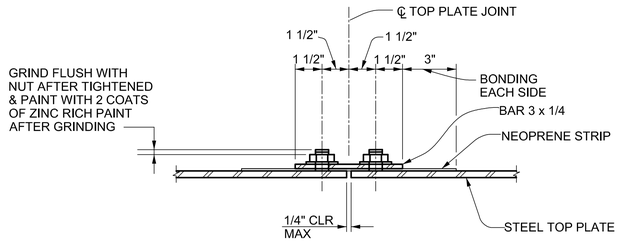

STEEL TOP PLATE JOINT DETAIL

SECTION D
SCALE: 3"=1'-0"

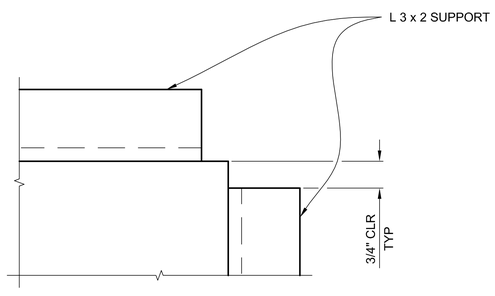

CORNER PLAN

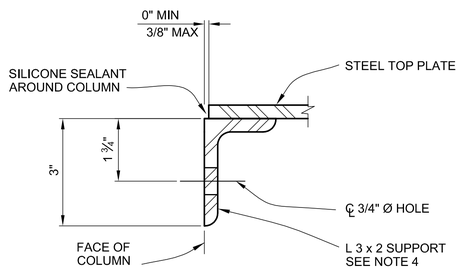

ANGLE SUPPORT

STEEL ANGLE SUPPORT DETAIL 1

SCALE: 6"=1'-0"

THE CITY OF LOS ANGELES OR ITS OFFICERS OR AGENTS SHALL NOT BE RESPONSIBLE FOR THE ACCURACY OR COMPLETENESS OF ELECTRONIC COPIES OF THIS PLAN SHEET.

C:\caddlib\pw\pwwestcoast\zhang\dms57683\S3-29-DT01-02.dwg 6/27/16 16:49

REVISION DATES (DESIGN STAGE ONLY)

Sheet Version 3.0

HNTB
HNTB Corporation
601 W. 5TH STREET SUITE 1000
LOS ANGELES, CALIFORNIA 90071
TEL (213) 403-1000 FAX (213) 403-1001

BUREAU OF ENGINEERING
OFFICIAL RECORD

CITY OF LOS ANGELES DEPARTMENT OF PUBLIC WORKS

BUREAU OF ENGINEERING

ENGINEERING
CITY OF LOS ANGELES

NO.	REVISIONS:	DATE:	BY:

STRUCTURE NO. 53C-2329

INDEX NO. P-38113

THIS PLAN WAS ELECTRONICALLY SIGNED AND STAMPED

REGISTERED PROFESSIONAL ENGINEER MICHAEL H. JONES No. S3033 CIVIL STATE OF CALIFORNIA

GARY LEE MOORE, P.E. CITY ENGINEER

		DATE:
DESIGN GROUP		
ENGINEER:	MICHAEL H. JONES	1/29/2016
LIC. NO.	S3033	
DESIGNED BY:	MICHAEL H. JONES	1/29/2016
DRAWN BY:	LI ZHANG	1/29/2016
CHECKED BY:	CHARLES REDFIELD	1/29/2016
APPROVED BY:	MICHAEL H. JONES	1/29/2016

VERTICAL CONTROL: BM 12-04070, 1929 (NGVD 29) - 1985 ADJUSTMENT
HORIZONTAL CONTROL: GPS; PID AE 1704, EPOCH 1991.35

SHEET TITLE: CIDH PILE ISOLATION CASING DETAILS NO. 2

PROJECT: SIXTH STREET VIADUCT REPLACEMENT

ADDRESS: SIXTH STREET VIADUCT (WHITTIER BLVD) LOS ANGELES, CA

WORK ORDER NO. E700224F

DRAWING NO. S3-37

SHEET 242 OF 560 SHEETS

ADDENDUM 5

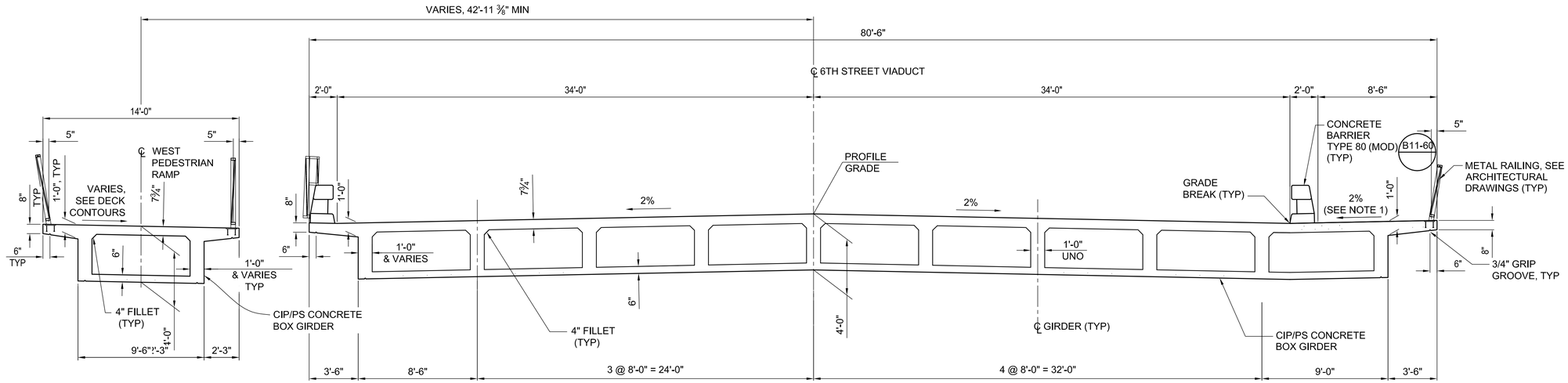

TYPICAL SECTION AT SPAN 1

SCALE: 1/4" = 1'-0"

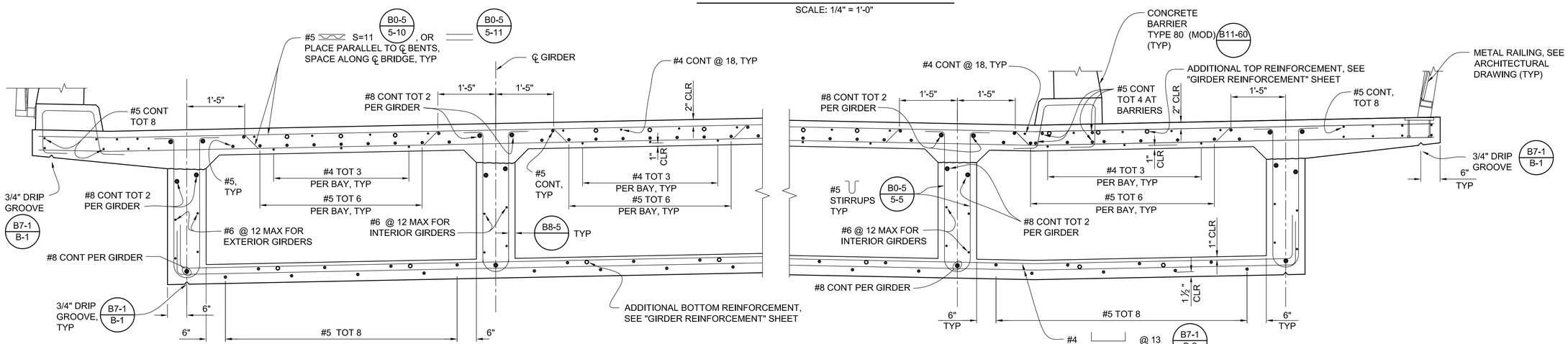

PART TYPICAL SECTION

SCALE: 3/4" = 1'-0"

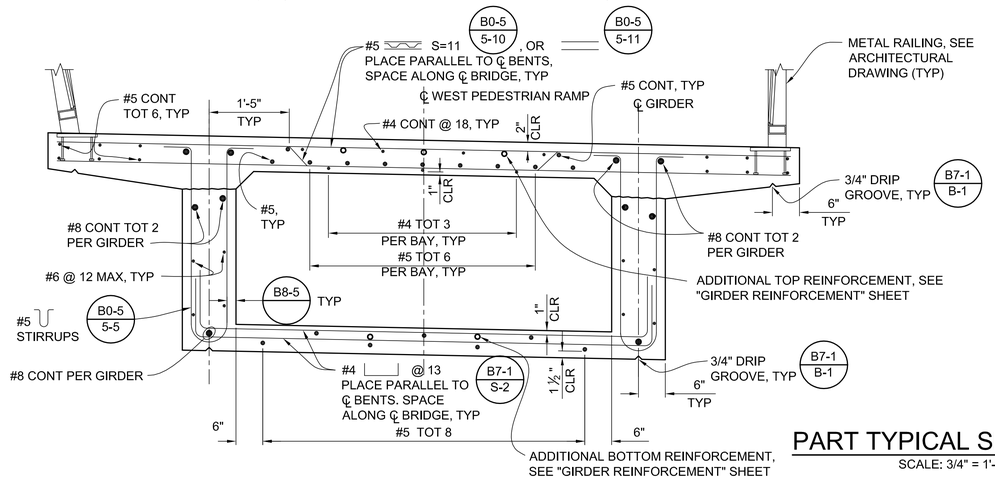

NOTES:

1. EAST OF ABUTMENT 1, THE WALKWAY TRANSITIONS FROM A 2% CROSS SLOPE DRAINING TOWARDS THE EDGE OF SLAB TO A 2% CROSS SLOPE DRAINING TOWARDS THE TYPICAL INTERIOR GRADE BREAK. SEE DECK CONTOURS ON DRAWING NO. S1-01.

HNTB
HNTB Corporation
601 W. 5TH STREET SUITE 1000
LOS ANGELES, CALIFORNIA 90071
TEL (213) 403-1000 FAX (213) 403-1001

BUREAU OF ENGINEERING
OFFICIAL RECORD

CITY OF LOS ANGELES DEPARTMENT OF PUBLIC WORKS
BUREAU OF ENGINEERING

ENGINEERING
CITY OF LOS ANGELES

NO.	REVISIONS:	DATE	BY:

STRUCTURE NO. 53C-2329

INDEX NO. P-38113

"THIS PLAN WAS ELECTRONICALLY SIGNED AND STAMPED."

REGISTERED PROFESSIONAL ENGINEER MICHAEL H. JONES No. S3033 CIVIL STATE OF CALIFORNIA

CITY ENGINEER	DATE:
GARY LEE MOORE, P.E.	1/29/2016
DESIGN GROUP	1/29/2016
ENGINEER: MICHAEL H. JONES LIC. NO. S3033	1/29/2016
DESIGNED BY: JIAHWA WANG / HAO LUO	1/29/2016
DRAWN BY: LI ZHANG	1/29/2016
CHECKED BY: PETER ZHAO	1/29/2016
APPROVED BY: MICHAEL H. JONES	

VERTICAL CONTROL: BM 12-04070, 1929 (NGVD 29) - 1985 ADJUSTMENT
HORIZONTAL CONTROL: GPS; PID AE 1704, EPOCH 1991.35

SHEET TITLE: TYPICAL SECTIONS NO. 1 GIRDER SPANS

PROJECT: SIXTH STREET VIADUCT REPLACEMENT

ADDRESS: SIXTH STREET VIADUCT (WHITTIER BLVD) LOS ANGELES, CA

WORK ORDER NO. E700224F

DRAWING NO. S4-01

SHEET 243 OF 560 SHEETS

THE CITY OF LOS ANGELES OR ITS OFFICERS OR AGENTS SHALL NOT BE RESPONSIBLE FOR THE ACCURACY OR COMPLETENESS OF ELECTRONIC COPIES OF THIS PLAN SHEET.

REVISION DATES (DESIGN STAGE ONLY)

C:\cadd\b\pw\pwwestcoast\vzhang\dms57683\S4-01-SC01-04.dwg 6/29/16 11:31

Sheet Version 3.0

ADDENDUM 5

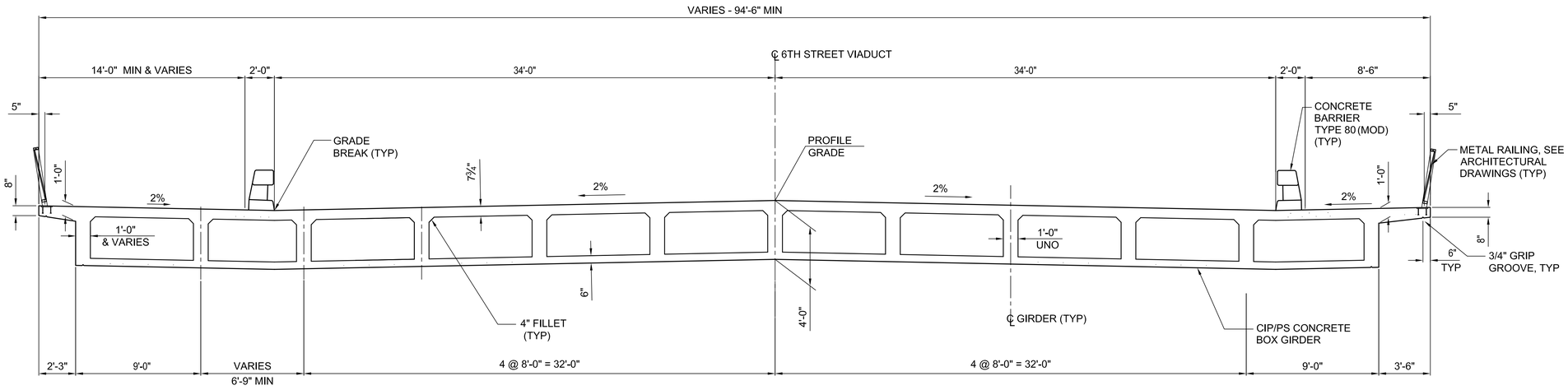

TYPICAL SECTION AT SPAN 2

SCALE: 1/4" = 1'-0"

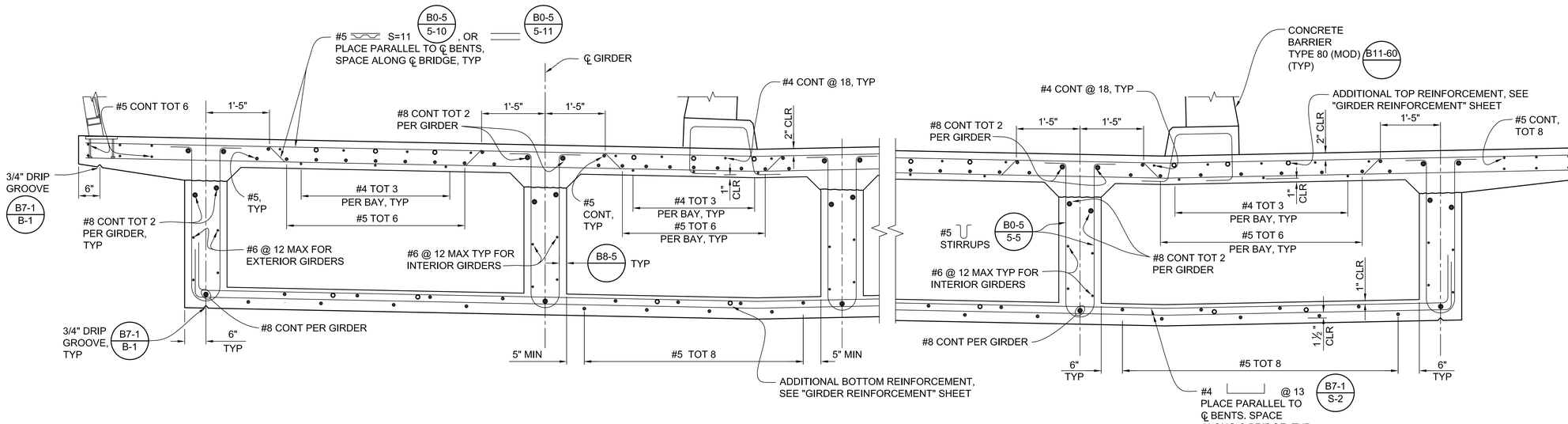

PART TYPICAL SECTION B0-5 B7-1 B8-5

SCALE: 3/4" = 1'-0"

BUREAU OF ENGINEERING OFFICIAL RECORD

HNTB
HNTB Corporation
601 W. 5TH STREET SUITE 1000
LOS ANGELES, CALIFORNIA 90071
TEL (213) 403-1000 FAX (213) 403-1001

CITY OF LOS ANGELES DEPARTMENT OF PUBLIC WORKS
BUREAU OF ENGINEERING

ENGINEERING
CITY OF LOS ANGELES

NO.	REVISIONS:	DATE	BY:

STRUCTURE NO. 53C-2329

INDEX NO. P-38113

"THIS PLAN WAS ELECTRONICALLY SIGNED AND STAMPED."

REGISTERED PROFESSIONAL ENGINEER MICHAEL H. JONES No. S3033 CIVIL STATE OF CALIFORNIA

ENGINEER		DATE:
GARY LEE MOORE, P.E.	CITY ENGINEER	
ENGINEER: MICHAEL H. JONES	LIC. NO. S3033	1/29/2016
DESIGNED BY: JIANHA WANG / HAO LUO	DESIGN GROUP	1/29/2016
DRAWN BY: LI ZHANG		1/29/2016
CHECKED BY: PETER ZHAO		1/29/2016
APPROVED BY: MICHAEL H. JONES		1/29/2016

VERTICAL CONTROL: BM 12-04070, 1929 (NGVD 29) - 1985 ADJUSTMENT
HORIZONTAL CONTROL: GPS; PID AE 1704, EPOCH 1991.35

SHEET TITLE: TYPICAL SECTIONS NO. 2 GIRDER SPANS

PROJECT: SIXTH STREET VIADUCT REPLACEMENT

ADDRESS: SIXTH STREET VIADUCT (WHITTIER BLVD) LOS ANGELES, CA

WORK ORDER NO. E700224F

DRAWING NO. S4-02

SHEET 244 OF 560 SHEETS

REVISION DATES (DESIGN STAGE ONLY)

THE CITY OF LOS ANGELES OR ITS OFFICERS OR AGENTS SHALL NOT BE RESPONSIBLE FOR THE ACCURACY OR COMPLETENESS OF ELECTRONIC COPIES OF THIS PLAN SHEET.

C:\caddlib\pw\pwwestcoast\zhang\dms57683\S4-01-SC01-04.dwg 6/29/16 10:58

Sheet Version 3.0

ADDENDUM 5

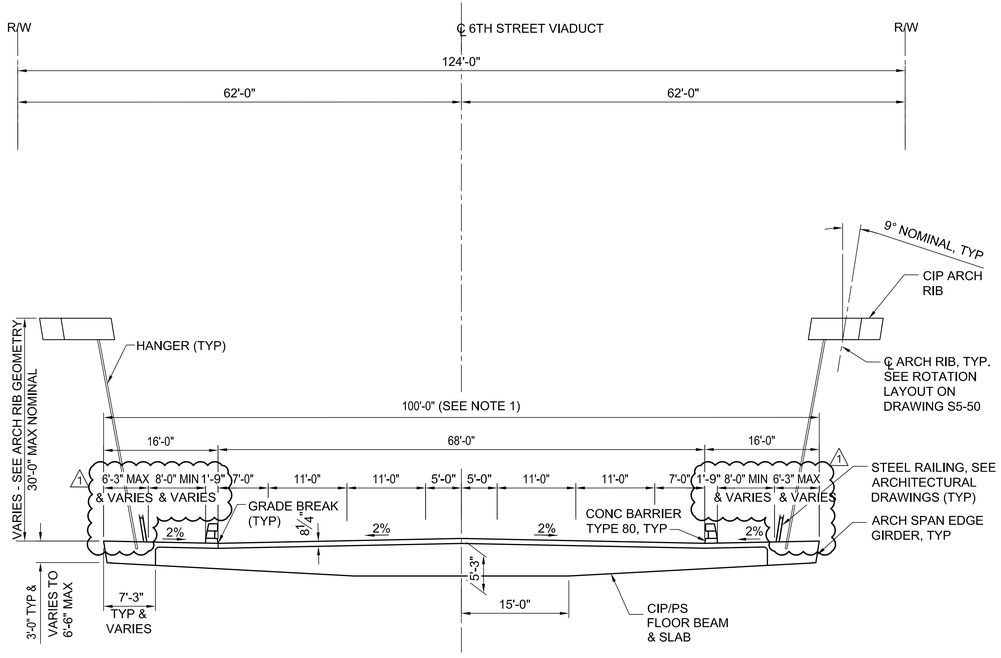

TYPICAL SECTION AT TYPICAL ARCH SPANS

SCALE: 1" = 10'-0"

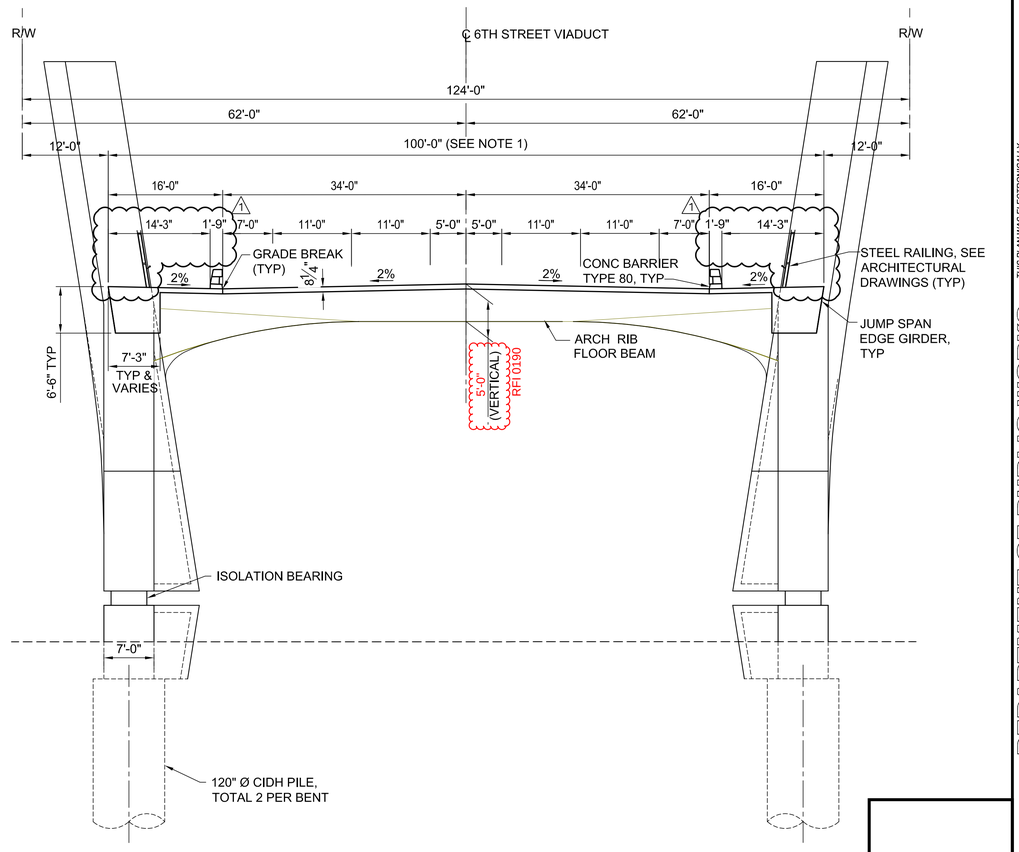

TYPICAL SECTION AT JUMP SPANS

SCALE: 1" = 10'-0"

NOTES:

1. ALL TYPICAL SECTION TRANSVERSE DIMENSIONS ARE RADIAL OR NORMAL TO ℄ 6TH STREET VIADUCT.

THE CITY OF LOS ANGELES OR ITS OFFICERS OR AGENTS SHALL NOT BE RESPONSIBLE FOR THE ACCURACY OR COMPLETENESS OF ELECTRONIC COPIES OF THIS PLAN SHEET.

C:\caddlib\pw\pwwestcoast\zhang\dms57683\S4-01-SC01-04.dwg 6/20/19 11:15

REVISION DATES (DESIGN STAGE ONLY)

Sheet Version 3.0

Time & Materials Change Order Serial Sketch No. 112 - Page 1 of 4

HNTB
HNTB Corporation
601 W. 5TH STREET SUITE 1000
LOS ANGELES, CALIFORNIA 90071
TEL (213) 403-1000 FAX (213) 403-1001

CITY OF LOS ANGELES DEPARTMENT OF PUBLIC WORKS

BUREAU OF ENGINEERING

ENGINEERING
CITY OF LOS ANGELES

NO.	REVISIONS:	DATE	BY:
1	BARRIER & RAILING UPDATE	6/28/19	MHJ

STRUCTURE NO.
53C-2329

INDEX NO.

THIS PLAN WAS ELECTRONICALLY SIGNED AND STAMPED

REGISTERED PROFESSIONAL ENGINEER MICHAEL H. JONES No. S3033 CIVIL STATE OF CALIFORNIA

GARY LEE MOORE, P.E.	CITY ENGINEER
ENGINEER:	MICHAEL H. JONES
DESIGNED BY:	MICHAEL H. JONES
DRAWN BY:	LI ZHANG
CHECKED BY:	CHARLES REDFIELD
APPROVED BY:	MICHAEL H. JONES
DESIGN GROUP	
LIC. NO. S3033	
DATE:	1/29/2016
	1/29/2016
	1/29/2016
	1/29/2016
	1/29/2016

VERTICAL CONTROL:	BM 12-04070,1929 (NGVD 29) - 1985 ADJUSTMENT
HORIZONTAL CONTROL:	GPS; PID AE 1704, EPOCH 1991.35
SHEET TITLE:	TYPICAL SECTIONS NO. 1 ARCH SPANS
PROJECT:	SIXTH STREET VIADUCT REPLACEMENT
ADDRESS:	SIXTH STREET VIADUCT (WHITTIER BLVD) LOS ANGELES, CA

WORK ORDER NO.
E700224F

DRAWING NO.
S4-03

SHEET 245 OF 560 SHEETS

ADDENDUM 5

NOTES:

1. ALL TYPICAL SECTION TRANSVERSE DIMENSIONS ARE RADIAL OR NORMAL TO ℄ 6TH STREET VIADUCT.

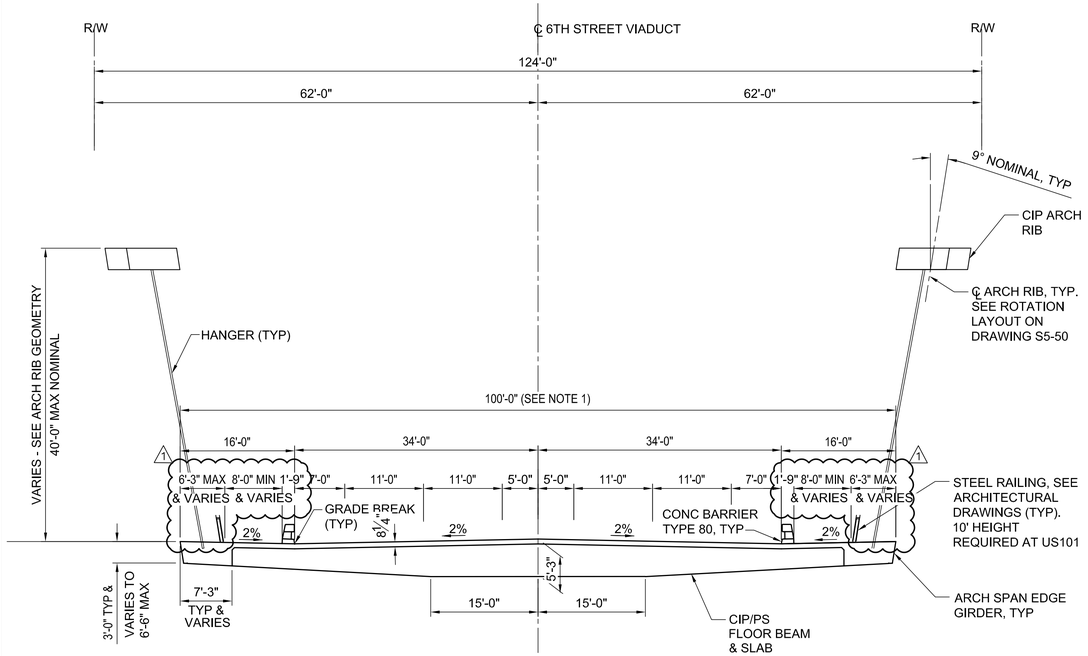

TYPICAL SECTION AT LA RIVER & US101 ARCH SPANS

SCALE: 1" = 10'

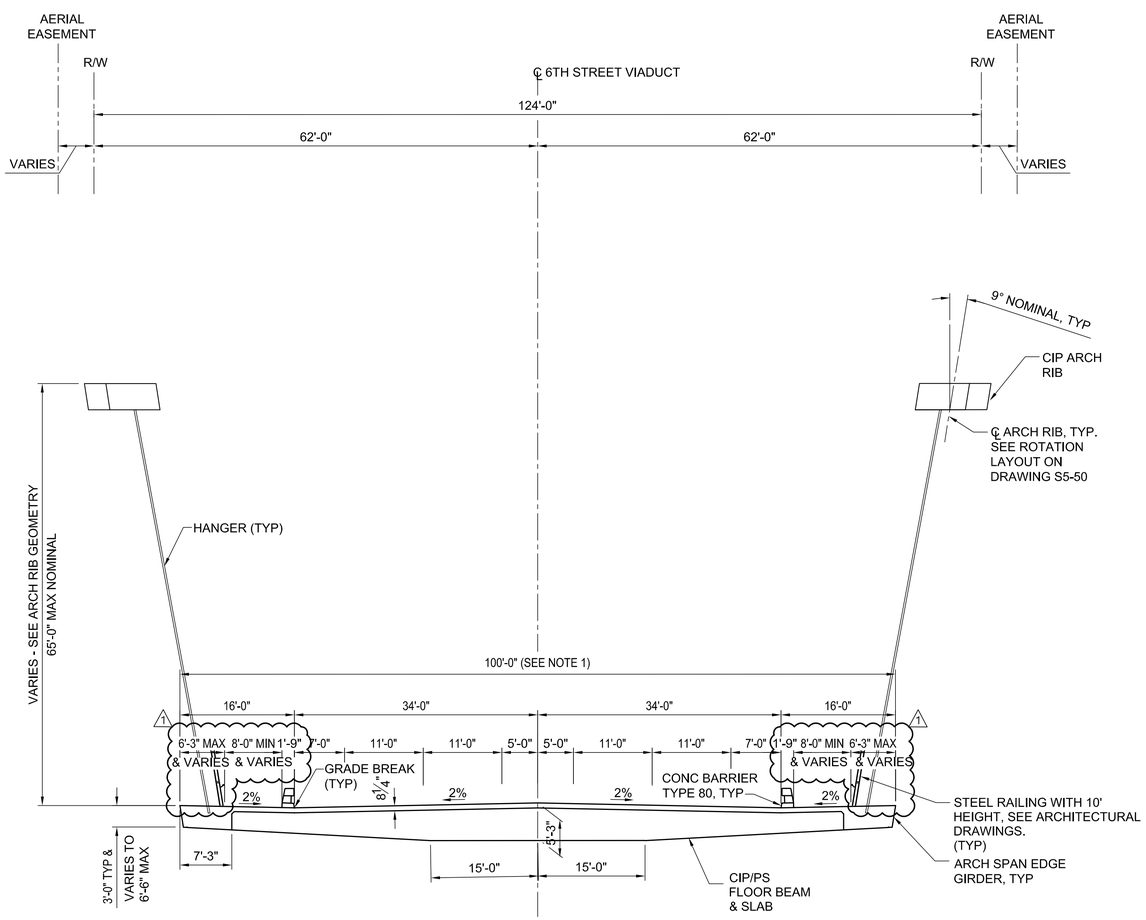

TYPICAL SECTION AT RAILROAD ARCH SPANS

SCALE: 1" = 10'

Time & Materials Change Order Serial Sketch No. 112 - Page 2 of 4

HNTB
HNTB Corporation
601 W. 5TH STREET SUITE 1000
LOS ANGELES, CALIFORNIA 90071
TEL (213) 403-1000 FAX (213) 403-1001

CITY OF LOS ANGELES DEPARTMENT OF PUBLIC WORKS
BUREAU OF ENGINEERING

ENGINEERING
CITY OF LOS ANGELES

NO.	REVISIONS:	DATE:	BY:
1	BARRIER & RAILING UPDATE	6/28/19	MHJ

STRUCTURE NO. 53C-2329

INDEX NO.

REGISTERED PROFESSIONAL ENGINEER MICHAEL H. JONES No. S3033 CIVIL STATE OF CALIFORNIA

THIS PLAN WAS ELECTRONICALLY SIGNED AND STAMPED

CITY ENGINEER
GARY LEE MOORE, P.E.

		DATE:
DESIGN GROUP		
ENGINEER:	MICHAEL H. JONES	1/29/2016
LIC. NO. S3033		1/29/2016
DESIGNED BY:	MICHAEL H. JONES	1/29/2016
DRAWN BY:	LI ZHANG	
CHECKED BY:	CHARLES REDFIELD	1/29/2016
APPROVED BY:	MICHAEL H. JONES	1/29/2016

VERTICAL CONTROL: BM 12-04070 1929 (NGVD 29) - 1985 ADJUSTMENT
HORIZONTAL CONTROL: GPS; PID AE 1704, EPOCH 1991.35

SHEET TITLE: TYPICAL SECTIONS NO. 2 ARCH SPANS

PROJECT: SIXTH STREET VIADUCT REPLACEMENT

ADDRESS: SIXTH STREET VIADUCT (WHITTIER BLVD) LOS ANGELES, CA

WORK ORDER NO. E700224F

DRAWING NO. S4-04

SHEET 246 OF 560 SHEETS

REVISION DATES: (DESIGN STAGE ONLY)

THE CITY OF LOS ANGELES OR ITS OFFICERS OR AGENTS SHALL NOT BE RESPONSIBLE FOR THE ACCURACY OR COMPLETENESS OF ELECTRONIC COPIES OF THIS PLAN SHEET.

C:\coddlib\pw\pwwestcoast\lzhang\dms57683\S4-01-SC01-04.dwg 6/20/19 11:17

Sheet Version 3.0

ADDENDUM 5

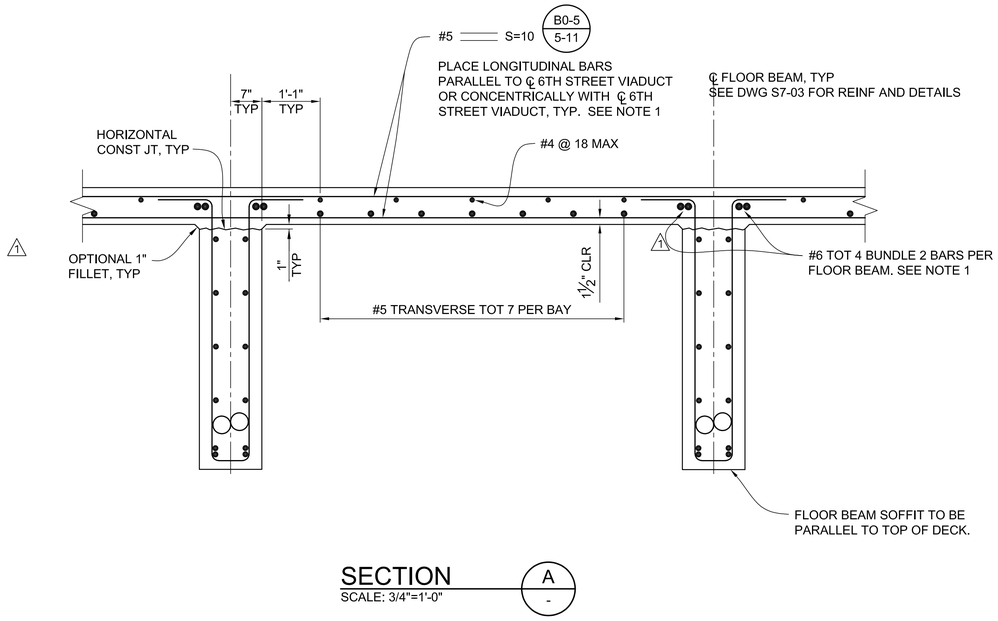

SECTION A
SCALE: 3/4"=1'-0"

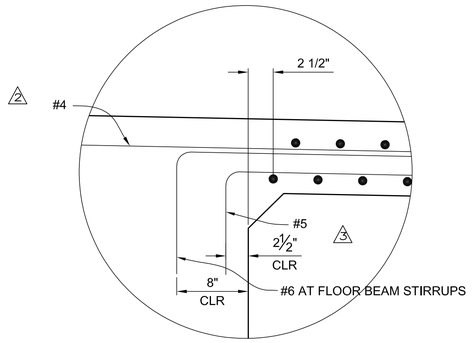

DETAIL 1
SCALE: 1 1/2"=1'-0"

Delta 1: ECO 41
Delta 2: ECO 63
Delta 3: ECO 71
Delta 4: ECO 77

NOTES:

1. PLACE DECK TRANSVERSE BARS PARALLEL TO FLOOR BEAMS AT A 15° SKEW FROM LINES RADIAL OR NORMAL TO THE CENTERLINE OF 6TH STREET VIADUCT.
2. FOR DECK LONGITUDINAL POST TENSIONING, SEE DRAWINGS S6-11 THROUGH S6-17, AND S6-93.

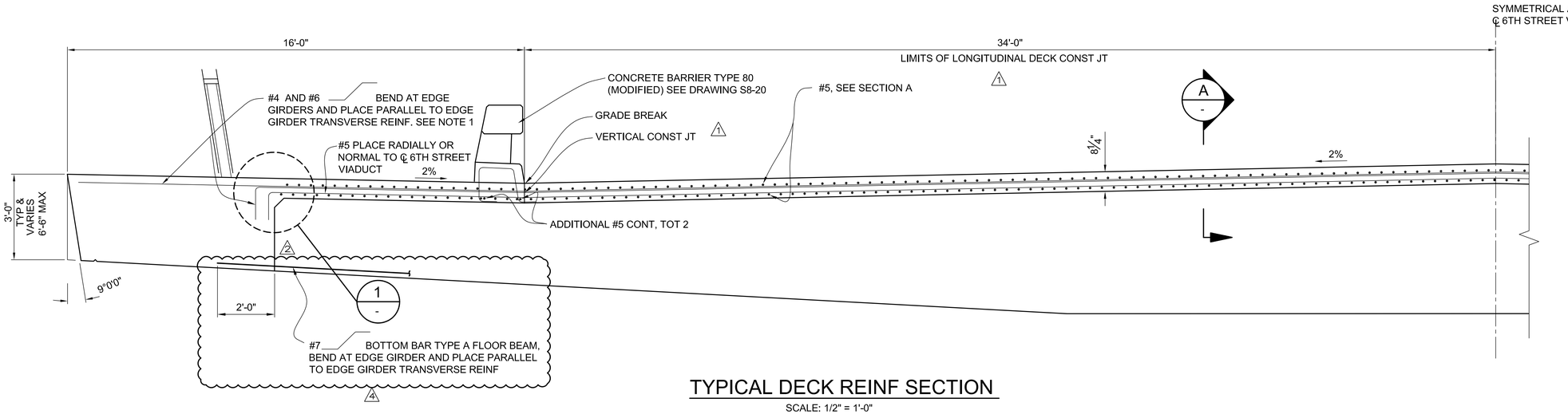

TYPICAL DECK REINF SECTION
SCALE: 1/2" = 1'-0"

THE CITY OF LOS ANGELES OR ITS OFFICERS OR AGENTS SHALL NOT BE RESPONSIBLE FOR THE ACCURACY OR COMPLETENESS OF ELECTRONIC COPIES OF THIS PLAN SHEET.

C:\caddlib\pw\pwwestcoast\zhang\dms57683\S4-01-SC01-04.dwg 11/08/18 17:59

Sheet Version 3.0

REVISION DATES (DESIGN STAGE ONLY)

HNTB
HNTB Corporation
601 W. 5TH STREET SUITE 1000
LOS ANGELES, CALIFORNIA 90071
TEL (213) 403-1000 FAX (213) 403-1001

CITY OF LOS ANGELES DEPARTMENT OF PUBLIC WORKS BUREAU OF ENGINEERING

ENGINEERING
CITY OF LOS ANGELES

NO.	REVISIONS:	DATE:	BY:
1.	DECK LONGITUDINAL CONSTRUCTION JOINT ADDED	09/01/17	MHJ
2.	BIM REVISION 6	4/27/18	MHJ
3.	FRAME CONSTRUCTION JOINT AND ARCH RIB UPDATES	07/13/18	MHJ
4.	FLOOR BEAM MODIFICATION - DECK JOINT	09/19/18	MHJ

STRUCTURE NO. 53C-2329

INDEX NO.

THIS PLAN WAS ELECTRONICALLY SIGNED AND STAMPED

REGISTERED PROFESSIONAL ENGINEER MICHAEL H. JONES No. S3033 CIVIL STATE OF CALIFORNIA

GARY LEE MOORE, P.E. CITY ENGINEER

		DATE:
ENGINEER:	MICHAEL H. JONES	1/29/2016
	LIC. NO. S3033	
DESIGNED BY:	MICHAEL H. JONES	1/29/2016
DRAWN BY:	LI ZHANG	1/29/2016
CHECKED BY:	CHARLES REDFIELD	1/29/2016
APPROVED BY:	MICHAEL H. JONES	1/29/2016

DESIGN GROUP

VERTICAL CONTROL: BM 12-04070, 1929 (NGVD 29) - 1985 ADJUSTMENT
HORIZONTAL CONTROL: GPS; PID AE 1704, EPOCH 1991.35

SHEET TITLE: TYPICAL SECTIONS NO. 3 ARCH SPANS

PROJECT: SIXTH STREET VIADUCT REPLACEMENT

ADDRESS: SIXTH STREET VIADUCT (WHITTIER BLVD) LOS ANGELES, CA

WORK ORDER NO. E700224F

DRAWING NO. S4-05

SHEET 247 OF 560 SHEETS

T.O. 5 - Change Order Serial Sketch No. 77-R1 - Page 1 of 2

ADDENDUM 5

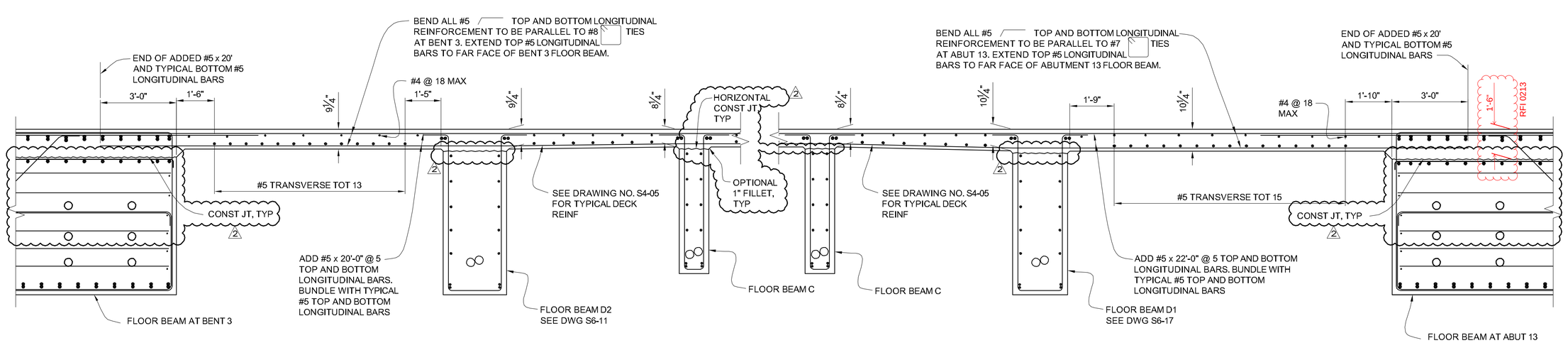

SECTION B
SCALE: 1/2"=1'-0"
S6-11

SECTION C
SCALE: 1/2"=1'-0"
S6-17

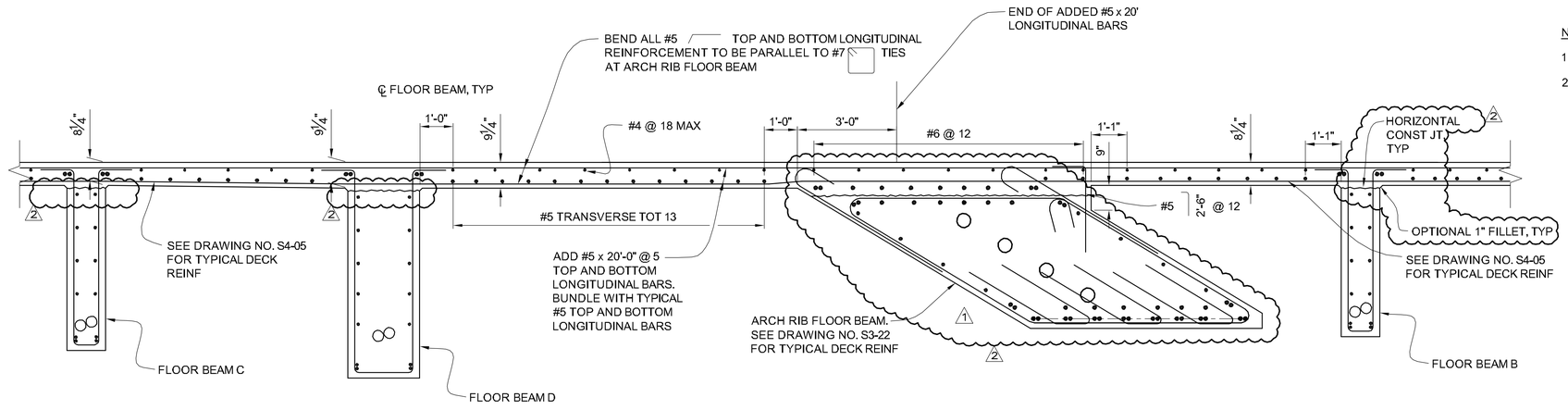

SECTION D
SCALE: 1/2"=1'-0"
S6-12
S6-14
S6-15

NOTES:

1. SEE DWG S6-10 FOR LAYOUT OF FLOOR BEAMS.
2. PROVIDE 1 1/2" CLEAR CONCRETE COVER TO BOTTOM #5 LONGITUDINAL REINFORCEMENT. SEE SECTION A ON DRAWING NO. S4-05. USE A 12 HORIZ : 1 VERT (MAX) TRANSITION.

THE CITY OF LOS ANGELES OR ITS OFFICERS OR AGENTS SHALL NOT BE RESPONSIBLE FOR THE ACCURACY OR COMPLETENESS OF ELECTRONIC COPIES OF THIS PLAN SHEET.

C:\caddlib\pw\pwwestcoast\zhang\dms57683\S4-01-SC01-04.dwg 8/25/17 10:57

REVISION DATES (DESIGN STAGE ONLY)

Sheet Version 3.0

HNTB
HNTB Corporation
601 W. 5TH STREET SUITE 1000
LOS ANGELES, CALIFORNIA 90071
TEL (213) 403-1000 FAX (213) 403-1001

CITY OF LOS ANGELES DEPARTMENT OF PUBLIC WORKS

BUREAU OF ENGINEERING

ENGINEERING CITY OF LOS ANGELES

NO.	REVISIONS:	DATE:	BY:
1	ARCH RIB FLOOR BEAM MODIFICATIONS	01/17/17	MHJ
2	DECK LONGITUDINAL CONSTRUCTION JOINT ADDED	03/01/17	MHJ

STRUCTURE NO. 53C-2329

INDEX NO.

THIS PLAN WAS ELECTRONICALLY SIGNED AND STAMPED.

REGISTERED PROFESSIONAL ENGINEER MICHAEL H. JONES No. S3033 CIVIL STATE OF CALIFORNIA

GARY LEE MOORE, P.E. CITY ENGINEER

DESIGN GROUP		LIC. NO.	S3033
ENGINEER:	MICHAEL H. JONES	DATE:	1/29/2016
DESIGNED BY:	MICHAEL H. JONES		1/29/2016
DRAWN BY:	LI ZHANG		1/29/2016
CHECKED BY:	CHARLES REDFIELD		1/29/2016
APPROVED BY:	MICHAEL H. JONES		1/29/2016

VERTICAL CONTROL: BM 12-04070, 1929 (NGVD 29) - 1985 ADJUSTMENT
HORIZONTAL CONTROL: GPS; PID AE 1704, EPOCH 1991.35

SHEET TITLE: TYPICAL SECTIONS NO. 4 ARCH SPANS

PROJECT: SIXTH STREET VIADUCT REPLACEMENT

ADDRESS: SIXTH STREET VIADUCT (WHITTIER BLVD) LOS ANGELES, CA

WORK ORDER NO. E700224F

DRAWING NO. S4-06

SHEET 2 OF 560 SHEETS

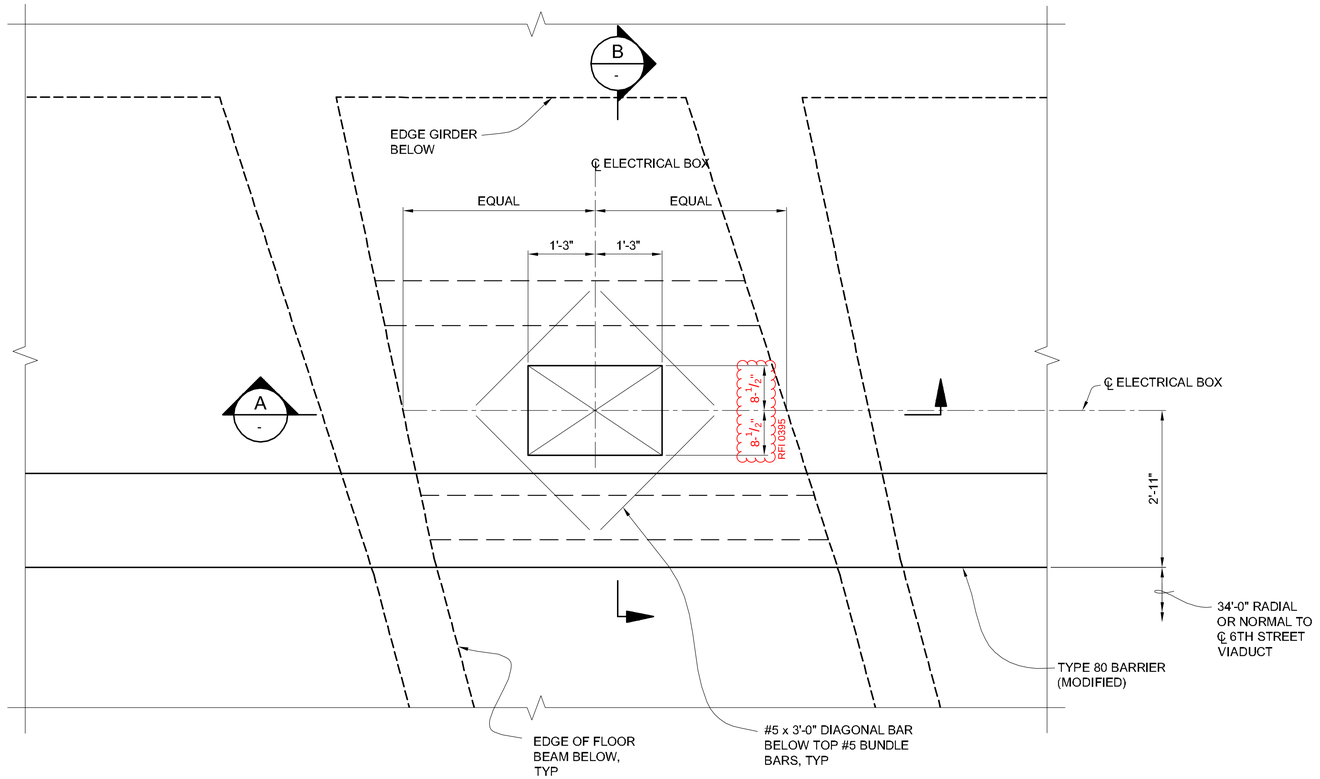

PLAN - AT ELECTRICAL BOX

SCALE: 1/2" = 1'-0"

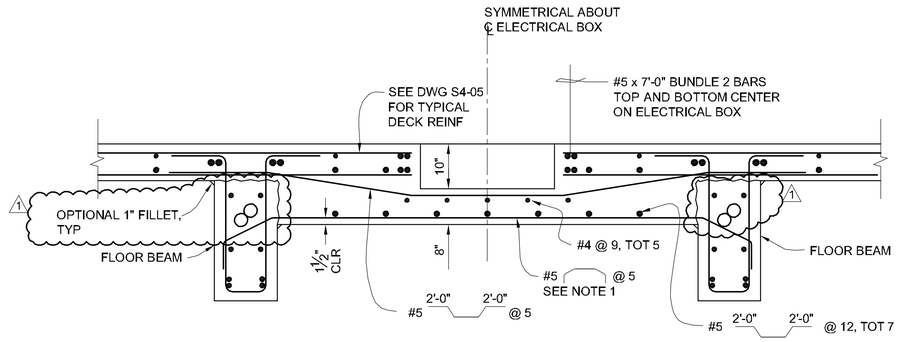

SECTION A

SCALE: 3/4"=1'-0"

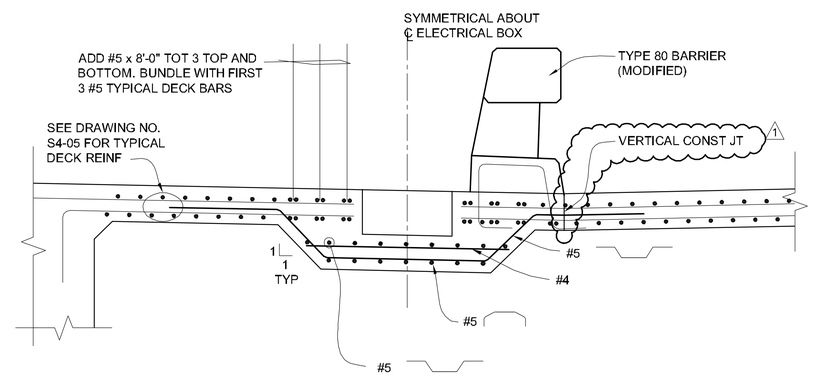

SECTION B

SCALE: 3/4"=1'-0"

NOTES:

1. ENDS OF #5 ⌒ BARS BELOW ELECTRICAL BOX SHALL BE BENT UP OR DOWN TO AVOID INTERFERENCE WITH FLOOR BEAM POST TENSIONING DUCTS.

THE CITY OF LOS ANGELES OR ITS OFFICERS OR AGENTS SHALL NOT BE RESPONSIBLE FOR THE ACCURACY OR COMPLETENESS OF ELECTRONIC COPIES OF THIS PLAN SHEET.

C:\caddlib\pw\pwwestcoast\lzhang\dms57683\S4-01-SC01-04.dwg 9/08/17 14:09

REVISION DATES (DESIGN STAGE ONLY)

Sheet Version 3.0

HNTB
HNTB Corporation
601 W. 5TH STREET SUITE 1000
LOS ANGELES, CALIFORNIA 90071
TEL (213) 403-1000 FAX (213) 403-1001

CITY OF LOS ANGELES DEPARTMENT OF PUBLIC WORKS • THIS PLAN WAS ELECTRONICALLY SIGNED AND STAMPED.

BUREAU OF ENGINEERING

ENGINEERING CITY OF LOS ANGELES

NO.	REVISIONS:	DATE:	BY:
1	DECK LONGITUDINAL CONSTRUCTION JOINT ADDED	09/01/17	MHJ

STRUCTURE NO. 53C-2329

INDEX NO.

REGISTERED PROFESSIONAL ENGINEER MICHAEL H. JONES No. S3033 EXP. 09-31-16 STATE OF CALIFORNIA

GARY LEE MOORE, P.E. CITY ENGINEER

	DESIGN GROUP	DATE:
ENGINEER:	MICHAEL H. JONES LIC. NO. S3033	1/29/2016
DESIGNED BY:	MICHAEL H. JONES	1/29/2016
DRAWN BY:	LI ZHANG	1/29/2016
CHECKED BY:	CHARLES REDFIELD	1/29/2016
APPROVED BY:	MICHAEL H. JONES	1/29/2016

VERTICAL CONTROL: BM 12-04070.1928 (NGVD 29) - 1985 ADJUSTMENT
HORIZONTAL CONTROL: GPS; PID AE 1704, EPOCH 1991.35

SHEET TITLE: DECK REINFORCEMENT DETAILS

PROJECT: SIXTH STREET VIADUCT REPLACEMENT

ADDRESS: SIXTH STREET VIADUCT (WHITTIER BLVD) LOS ANGELES, CA

WORK ORDER NO. E700224F

DRAWING NO. S4-07

SHEET 2 OF 560 SHEETS

ADDENDUM 5

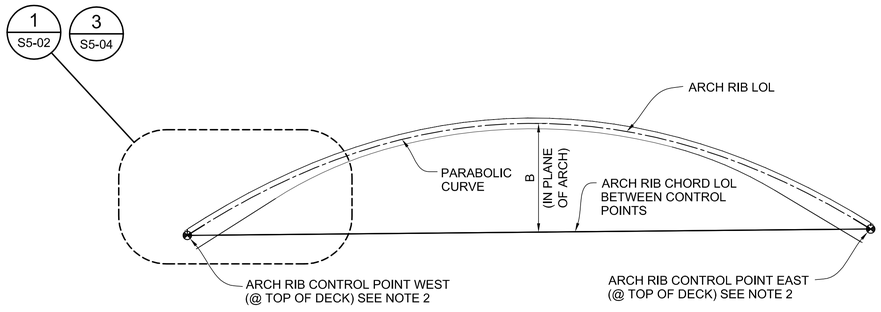

ARCH RIB GEOMETRIC CONTROL

SCALE: 1" = 20'

ARCH SPANS 3, 5 AND 7 THROUGH 11

SPAN NO.	LOCATION	ARCH RIB CONTROL POINT WEST						ARCH RIB CONTROL POINT EAST					
		STATION	OFFSET FROM ℄ 6TH ST VIADUCT	ELEVATION	X COORD	Y COORD	"B" (FT)	STATION	OFFSET FROM ℄ 6TH ST VIADUCT	ELEVATION	X COORD	Y COORD
3	NORTH	17+30.47	47.5'	275.615	-15.501	44.995	33.500	19+37.48	47.5'	284.448	186.993	96.591
	SOUTH	17+55.93	47.5'	276.866	34.176	-39.891	33.500	19+62.94	47.5'	285.333	233.113	9.723
5	NORTH	23+20.01	47.5'	293.120	566.072	169.712	30.709	25+11.01	47.5'	294.914	757.168	195.315
	SOUTH	23+45.47	47.5'	293.360	605.419	79.571	30.131	25+36.47	47.5'	295.153	793.043	103.739
7	NORTH	29+03.54	47.5'	298.598	1152.215	224.935	31.500	31+05.56	47.5'	300.494	1356.110	228.072
	SOUTH	29+29.00	47.5'	298.837	1180.797	130.829	31.500	31+31.02	47.5'	300.732	1380.867	132.889
8	NORTH	32+05.56	47.5'	301.432	1457.049	226.576	30.000	34+07.57	47.5'	303.328	1660.761	217.400
	SOUTH	32+31.02	47.5'	301.671	1479.898	130.917	30.000	34+33.03	47.5'	303.567	1679.728	120.894
9	NORTH	35+07.58	47.5'	304.267	1761.426	209.814	30.000	37+09.59	47.5'	306.162	1964.212	188.358
	SOUTH	35+33.03	47.5'	304.505	1778.459	112.948	30.000	37+35.05	47.5'	306.401	1977.319	90.881
10	NORTH	38+09.59	47.5'	307.101	2064.235	174.709	30.000	40+11.61	47.5'	308.997	2265.357	141.048
	SOUTH	38+35.05	47.5'	307.340	2075.390	76.990	30.000	40+37.06	47.5'	309.236	2272.556	42.959
11	NORTH	41+11.61	47.5'	309.935	2364.374	121.386	31.500	43+13.62	47.5'	311.831	2563.097	75.645
	SOUTH	41+37.07	47.5'	310.174	2369.609	23.173	31.500	43+39.08	47.5'	312.070	2564.361	-22.697

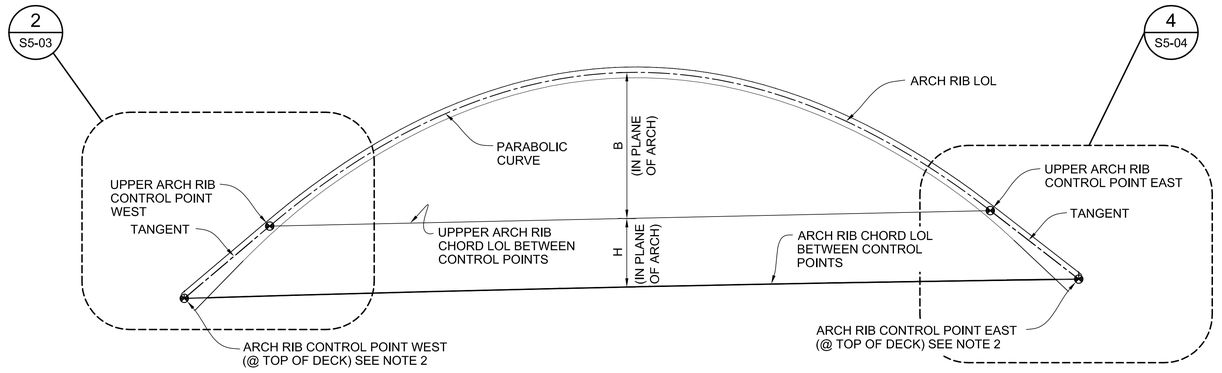

ARCH RIB GEOMETRIC CONTROL

SCALE: 1" = 20'

ARCH SPANS 4, 6, AND 12

SPAN NO.	LOCATION	ARCH RIB CONTROL POINT WEST					UPPER ARCH RIB CONTROL POINT WEST				
		STATION	OFFSET FROM ℄ 6TH ST VIADUCT	ELEVATION	X COORD	Y COORD	ELEVATION	X COORD	Y COORD	"B" (FT)	"H" (FT)
4	NORTH	20+07.49	47.5'	286.775	255.927	112.136	304.875	276.639	118.927	42.190	17.830
	SOUTH	20+32.94	47.5'	287.539	300.826	24.631	307.637	325.055	26.030	40.227	19.830
6	NORTH	25+73.52	47.5'	295.500	819.897	202.105	313.316	841.474	206.554	42.179	17.830
	SOUTH	25+98.97	47.5'	295.739	854.624	110.090	315.560	879.088	108.737	40.216	19.833
12	NORTH	43+95.62	47.5'	312.601	2643.207	54.794	329.632	2668.539	50.565	23.115	17.000
	SOUTH	44+21.08	47.5'	312.840	2642.858	-43.555	332.136	2670.988	-54.446	20.785	19.250

SPAN NO.	LOCATION	ARCH RIB CONTROL POINT EAST					UPPER ARCH RIB CONTROL POINT EAST		
		STATION	OFFSET FROM ℄ 6TH ST VIADUCT	ELEVATION	X COORD	Y COORD	ELEVATION	X COORD	Y COORD
4	NORTH	22+57.51	47.5'	292.380	503.770	159.749	309.502	481.247	158.234
	SOUTH	22+82.97	47.5'	292.713	544.239	70.109	311.787	520.335	62.515
6	NORTH	28+23.54	47.5'	297.847	1071.532	221.416	315.253	1049.203	222.495
	SOUTH	28+49.00	47.5'	298.086	1101.616	127.780	317.443	1077.223	122.927
12	NORTH	45+86.49	47.5'	314.392	2827.529	3.981	330.942	2803.304	13.413
	SOUTH	46+11.95	47.5'	314.631	2826.760	-94.367	333.361	2796.684	-89.176

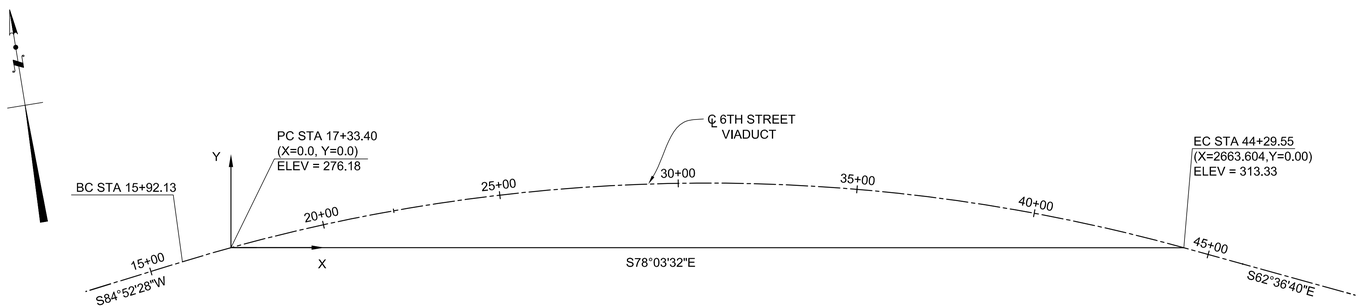

GEOMETRIC CONTROL - X AND Y COORDINATE LAYOUT

SCALE: 1" = 200'

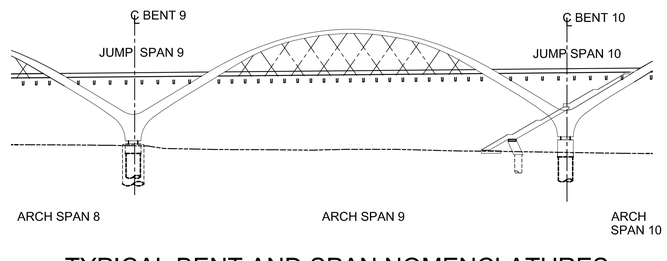

TYPICAL BENT AND SPAN NOMENCLATURES

SCALE: 1" =50'

NOTES:

1. Z AXIS IS VERTICAL, ELEVATIONS ARE RELATIVE TO DATUM SHOWN ON GENERAL PLAN.
2. FOR LOCATION OF ARCH RIB CONTROL POINTS RELATIVE TO Y-BENTS. SEE DRAWING NOS. S3-11 AND S3-12.
3. FOR REQUIRED ROTATION OF THE ARCH RIB PLANE, SEE DRAWING NO. S5-50.

BUREAU OF ENGINEERING
OFFICIAL RECORD

HNTB
HNTB Corporation
601 W. 5TH STREET SUITE 1000
LOS ANGELES, CALIFORNIA 90071
TEL (213) 403-1000 FAX (213) 403-1001

CITY OF LOS ANGELES DEPARTMENT OF PUBLIC WORKS BUREAU OF ENGINEERING

ENGINEERING
CITY OF LOS ANGELES

NO.	REVISIONS:	DATE:	BY:

STRUCTURE NO. 53C-2329

INDEX NO. P-38113

THIS PLAN WAS ELECTRONICALLY SIGNED AND STAMPED.
REGISTERED PROFESSIONAL ENGINEER GARY LEE MOORE No. S3033 CIVIL STATE OF CALIFORNIA

CITY ENGINEER: GARY LEE MOORE, P.E. — DATE: 1/29/2016

ENGINEER:	MICHAEL H. JONES	LIC. NO. S3033	1/29/2016
DESIGNED BY:	MICHAEL H. JONES		1/29/2016
DRAWN BY:	LI ZHANG		1/29/2016
CHECKED BY:	CHARLES REDFIELD		1/29/2016
APPROVED BY:	MICHAEL H. JONES		1/29/2016

DESIGN GROUP

VERTICAL CONTROL: BM 12-04070, 1929 (NGVD 29) - 1985 ADJUSTMENT
HORIZONTAL CONTROL: GPS; PID AE 1704, EPOCH 1991.35

SHEET TITLE: ARCH RIB GEOMETRY LAYOUT NO. 1

PROJECT: SIXTH STREET VIADUCT REPLACEMENT

ADDRESS: SIXTH STREET VIADUCT (WHITTIER BLVD) LOS ANGELES, CA

WORK ORDER NO. E700224F

DRAWING NO. S5-01

SHEET 250 OF 560 SHEETS

REVISION DATES (DESIGN STAGE ONLY)

THE CITY OF LOS ANGELES OR ITS OFFICERS OR AGENTS SHALL NOT BE RESPONSIBLE FOR THE ACCURACY OR COMPLETENESS OF ELECTRONIC COPIES OF THIS PLAN SHEET.

C:\caddlb\pw\pwwestcoast\zhang\dms57683\S5-01-LT01.dwg 6/27/16 17:05

Sheet Version 3.0

ADDENDUM 5

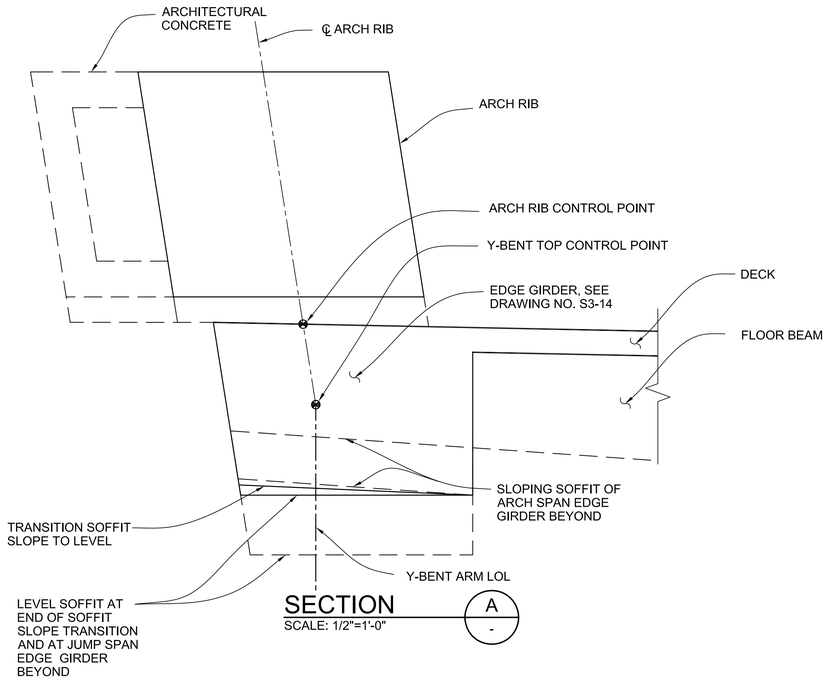

SECTION A-

SCALE: 1/2"=1'-0"

RFI 446

1. Two-pieces ties are limited to the crown region of each arch rib only, defined as the length of the arch rib between the X= 60' long arch rib intrados transitions defined on Contract drawings S5-02 S5-03. At all arch ribs, this crown region exceeds the length of 60' to 80' requested by RFI 0446.

2. At both the "U" and cap element used to form the two-piece closed tie, all bars shall terminate with 135-degree hooks having a six-bar diameter extension at each end. The 180-degree hooks shown by RFI 0446 are not permitted.

3. At one-piece closed ties, all bars shall terminate with 135-degree hooks having a six-bar diameter extension at each end. The 180-degree hooks shown by RFI 0446 are not permitted.

TABLE 1

SPAN NO.	LOCATION	ARCH RIB TRANSITION X (FT)	ARCH RIB TRANSITION Y (FT)	INTRADOS CURVE DATA R (FT)	INTRADOS CURVE DATA △	INTRADOS CURVE DATA T (FT)	INTRADOS CURVE DATA L (FT)	a1 SEE NOTE 1	a2 SEE NOTE 1
3	NORTH	60	-	124.91	15°33'29"	17.06	33.92	23°56'46"	-
	SOUTH	60	-	122.91	16°02'46"	17.33	34.42	24°14'20"	
4	NORTH	60	28.33	135.49	11°42'05"	13.88	27.67	35°38'03"	43°00'00"
	SOUTH	60	31.51	131.25	11°12'26"	12.88	25.67	35°56'07"	
5	NORTH	60	-	119.55	17°07'26	18.00	35.73	23°06'01"	-
	SOUTH	60	-	118.13	17°31'27"	18.21	36.13	22°55'23"	
6	NORTH	60	28.33	135.46	11°42'13"	13.88	27.67	35°38'01"	43°00'00"
	SOUTH	60	31.52	131.23	11°12'28"	12.88	25.67	35°56'07"	
7	NORTH	60	-	124.74	15°46'53"	17.29	34.36	22°53'18"	-
	SOUTH	60	-	122.68	16°17'13"	17.56	34.87	23°09'48"	
8	NORTH	60	-	126.79	15°24'32"	17.15	34.10	21°47'31"	
	SOUTH	60	-	124.77	15°54'43"	17.44	34.65	22°03'16"	
9	NORTH	60	-	126.79	15°24'32"	17.15	34.10	21°47'31"	
	SOUTH	60	-	124.77	15°54'43"	17.44	34.65	22°03'16"	
10	NORTH	60	-	126.79	15°24'32"	17.15	34.10	21°47'31"	
	SOUTH	60	-	124.77	15°54'43"	17.44	34.65	22°03'16"	
11	NORTH	60	-	124.74	15°46'52"	17.29	34.36	22°53'18"	
	SOUTH	60	-	122.68	16°17'13"	17.56	34.87	23°09'48"	
12	NORTH	60	30.82	116.15	16°24'27"	16.75	33.26	29°32'17"	39°00'00"
	SOUTH	60	35.81	111.20	14°23'14"	14.04	27.92	29°16'31"	37°30'00"

1

NOTES:

1. ANGLE "a1" IS MEASURED FROM THE ARCH RIB CHORD LOL IN THE PLANE OF ARCH RIB LOL.

2. ARCH RIB DEPTH DIMENSIONS SHOW ARE IN THE PLANE OF THE ARCH RIB ROTATED PLANE AS SHOWN ON DRAWING NO. S5-50.

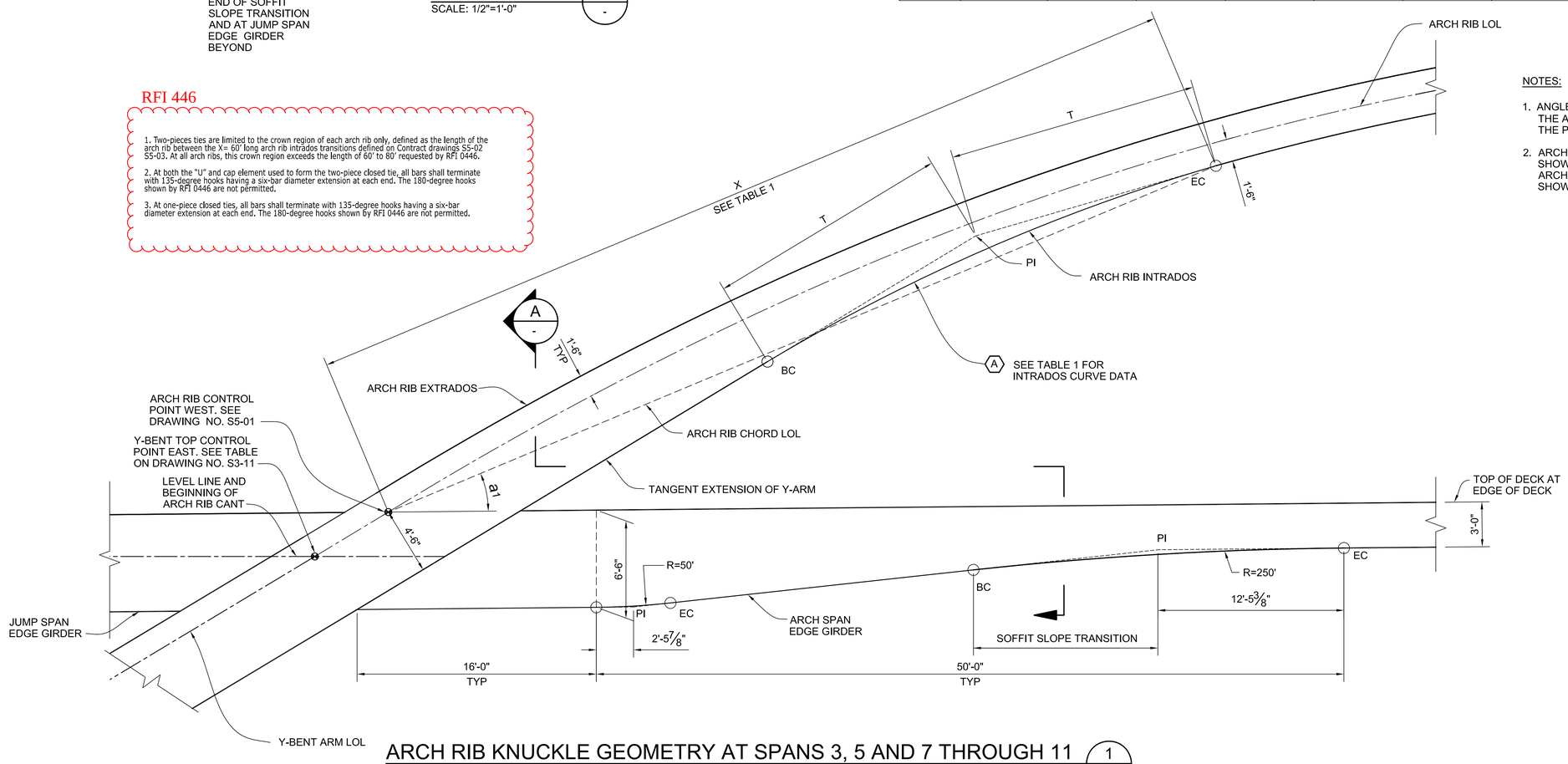

ARCH RIB KNUCKLE GEOMETRY AT SPANS 3, 5 AND 7 THROUGH 11

SCALE: 1/4" =1'-0"

1
S5-01

T.O. 5 - Change Order Serial Sketch No. 75 - Page 1 of 1

THE CITY OF LOS ANGELES OR ITS OFFICERS OR AGENTS SHALL NOT BE RESPONSIBLE FOR THE ACCURACY OR COMPLETENESS OF ELECTRONIC COPIES OF THIS PLAN SHEET.

C:\caddlib\pw\pwwestcoast\zhang\dms57683\S5-02-LT02-03.dwg 8/15/18 15:28

REVISION DATES (DESIGN STAGE ONLY)

Sheet Version 3.0

HNTB
HNTB Corporation
601 W. 5TH STREET SUITE 1000
LOS ANGELES, CALIFORNIA 90071
TEL (213) 403-1000 FAX (213) 403-1001

CITY OF LOS ANGELES DEPARTMENT OF PUBLIC WORKS BUREAU OF ENGINEERING

ENGINEERING CITY OF LOS ANGELES

REVISIONS:

NO.	DATE	BY:
1	08/15/18	MHJ
2		

ARCH RIB 7N INTRADOS REVISION PCO 75

STRUCTURE NO. 53C-2329

INDEX NO.

THIS PLAN WAS ELECTRONICALLY SIGNED AND STAMPED

REGISTERED PROFESSIONAL ENGINEER MICHAEL H. JONES No. S3033 CIVIL STATE OF CALIFORNIA

GARY LEE MOORE, P.E. CITY ENGINEER

	DESIGN GROUP	LIC. NO. S3033	DATE
ENGINEER:	MICHAEL H. JONES		1/29/2016
DESIGNED BY:	MICHAEL H. JONES		1/29/2016
DRAWN BY:	LI ZHANG		1/29/2016
CHECKED BY:	CHARLES REDFIELD		1/29/2016
APPROVED BY:	MICHAEL H. JONES		1/29/2016

VERTICAL CONTROL: BM 12-04070,1928 (NGVD 29) - 1985 ADJUSTMENT

HORIZONTAL CONTROL: GPS; PID AE 1704, EPOCH 1991.35

SHEET TITLE: ARCH RIB GEOMETRY LAYOUT NO. 2

PROJECT: SIXTH STREET VIADUCT REPLACEMENT

ADDRESS: SIXTH STREET VIADUCT (WHITTIER BLVD) LOS ANGELES, CA

WORK ORDER NO. E700224F

DRAWING NO. S5-02

SHEET 251 OF 560 SHEETS

ADDENDUM 5

RFI 446

1. Two-pieces ties are limited to the crown region of each arch rib only, defined as the length of the arch rib between the X= 60' long arch rib intrados transitions defined on Contract drawings S5-02 S5-03. At all arch ribs, this crown region exceeds the length of 60' to 80' requested by RFI 0446.

2. At both the "U" and cap element used to form the two-piece closed tie, all bars shall terminate with 135-degree hooks having a six-bar diameter extension at each end. The 180-degree hooks shown by RFI 0446 are not permitted.

3. At one-piece closed ties, all bars shall terminate with 135-degree hooks having a six-bar diameter extension at each end. The 180-degree hooks shown by RFI 0446 are not permitted.

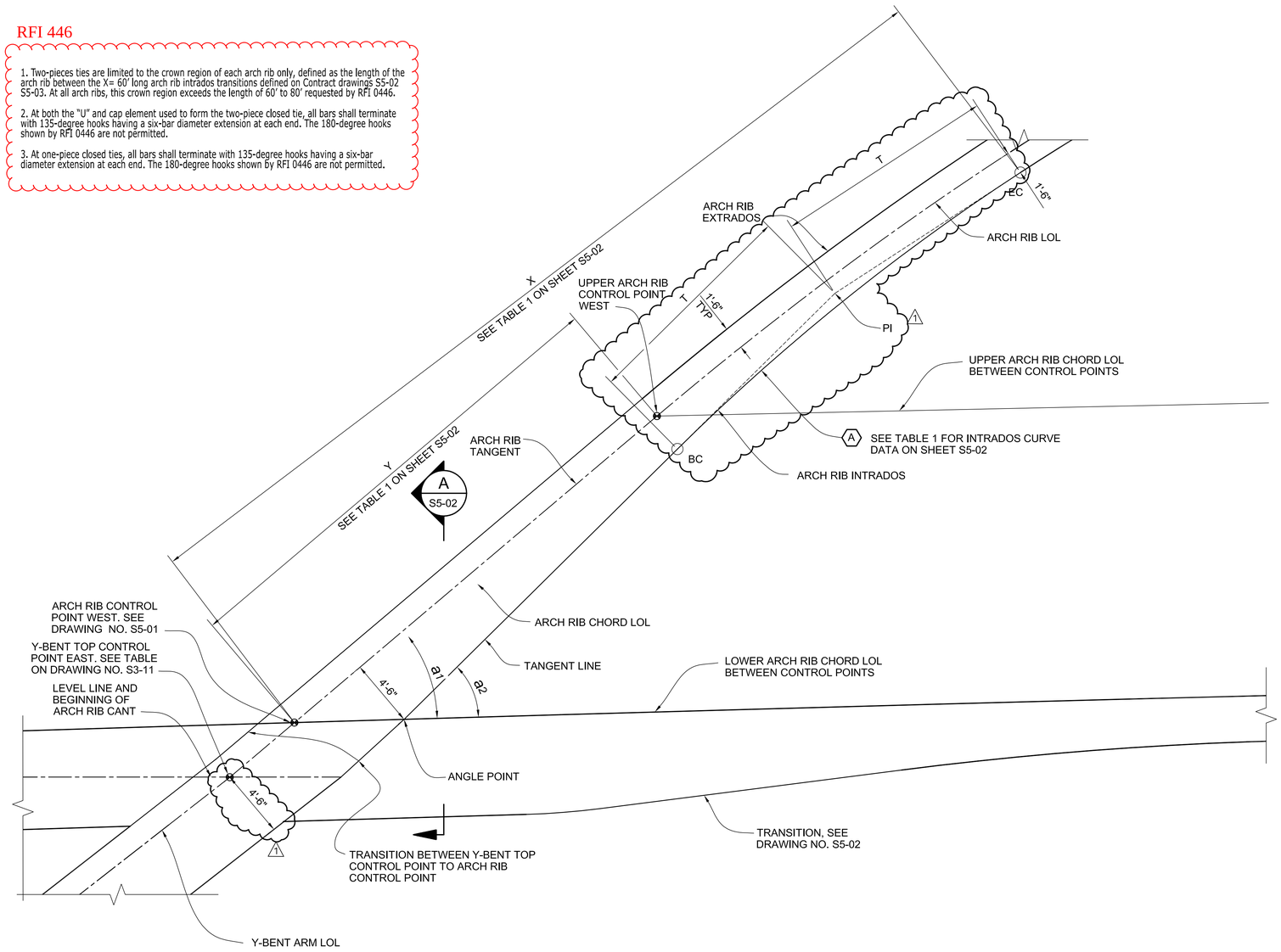

ARCH RIB KNUCKLE GEOMETRY AT SPANS 4, 6 AND 12

SCALE: 1/4" =1'-0"

2 / S5-01

NOTES:

1. ANGLE "a1" IS MEASURED FROM THE ARCH RIB CHORD LOL IN THE PLANE OF ARCH RIB LOL.
2. FOR VALUES OF DIMENSIONS AND ANGLES NOT SHOWN, SEE TABLE 1 ON SHEET S5-02.

BUREAU OF ENGINEERING

ENGINEERING
CITY OF LOS ANGELES

NO.	REVISIONS:	DATE	BY:
1	FRAME CONSTRUCTION JOINT AND ARCH RIB UPDATES • ECO 71	07/13/18	MHJ

STRUCTURE NO.
53C-2329

INDEX NO.

THIS PLAN WAS ELECTRONICALLY SIGNED AND STAMPED

REGISTERED PROFESSIONAL ENGINEER
MICHAEL H. JONES
No. S3033
CIVIL
STATE OF CALIFORNIA

BUREAU OF ENGINEERING
CITY OF LOS ANGELES
DEPARTMENT OF PUBLIC WORKS

CITY ENGINEER

		DATE:
GARY LEE MOORE, P.E.	CITY ENGINEER	
ENGINEER:	MICHAEL H. JONES	1/29/2016
DESIGNED BY:	MICHAEL H. JONES	1/29/2016
DRAWN BY:	LI ZHANG	1/29/2016
CHECKED BY:	CHARLES REDFIELD	1/29/2016
APPROVED BY:	MICHAEL H. JONES	1/29/2016

DESIGN GROUP
LIC. NO. S3033

VERTICAL CONTROL: BM 12-04070, 1929 (NGVD 29) - 1985 ADJUSTMENT
HORIZONTAL CONTROL: GPS; PID AE 1704, EPOCH 1991.35

SHEET TITLE: ARCH RIB GEOMETRY LAYOUT NO. 3

PROJECT: SIXTH STREET VIADUCT REPLACEMENT

ADDRESS: SIXTH STREET VIADUCT (WHITTIER BLVD) LOS ANGELES, CA

HNTB
HNTB Corporation
601 W. 5TH STREET SUITE 1000
LOS ANGELES, CALIFORNIA 90071
TEL (213) 403-1000 FAX (213) 403-1001

WORK ORDER NO.
E700224F

DRAWING NO.
S5-03

SHEET 252 OF 560 SHEETS

THE CITY OF LOS ANGELES OR ITS OFFICERS OR AGENTS SHALL NOT BE RESPONSIBLE FOR THE ACCURACY OR COMPLETENESS OF ELECTRONIC COPIES OF THIS PLAN SHEET.

REVISION DATES (DESIGN STAGE ONLY)

C:\caddlib\pw\pwwestcoast\zhang\dms57683\S5-02-LT02-03.dwg 7/09/18 11:22

Sheet Version 3.0

ADDENDUM 5

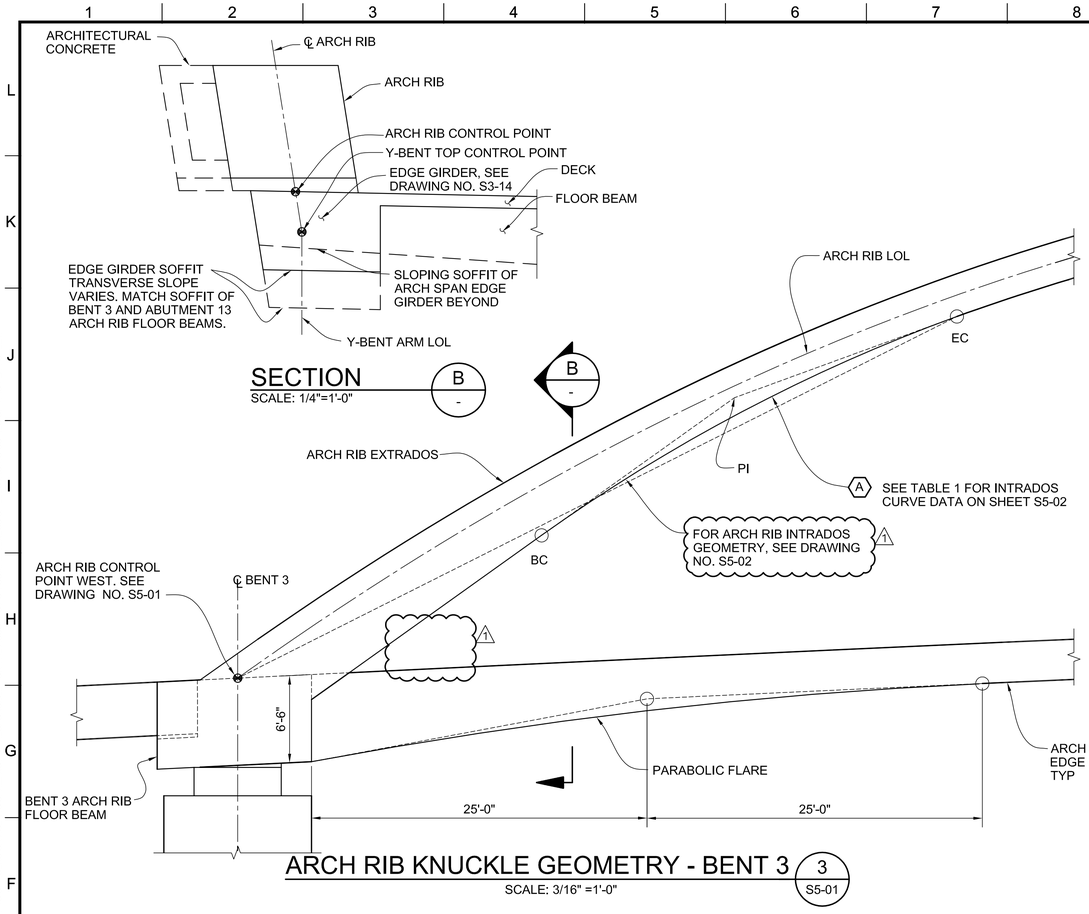

SECTION B - B
SCALE: 1/4"=1'-0"

ARCH RIB KNUCKLE GEOMETRY - BENT 3 (3 / S5-01)
SCALE: 3/16" =1'-0"

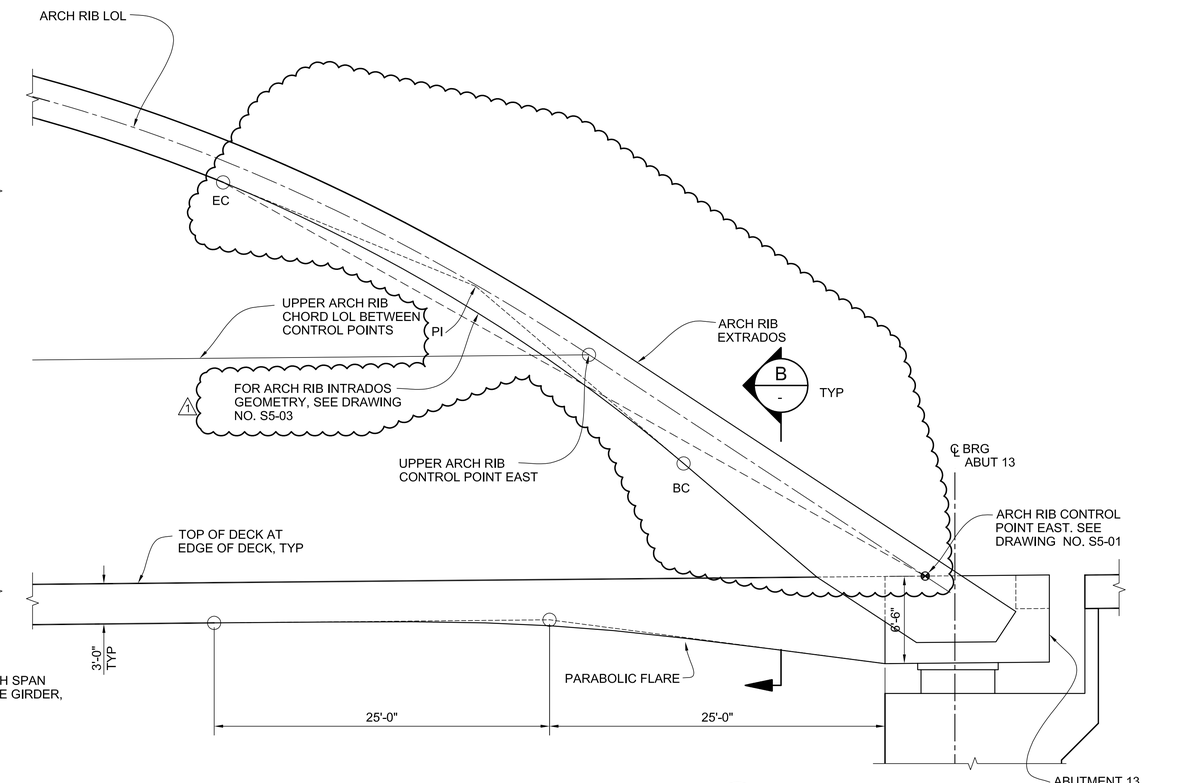

ARCH RIB KNUCKLE GEOMETRY - ABUT 13 (4 / S5-01)
SCALE: 3/16" =1'-0"

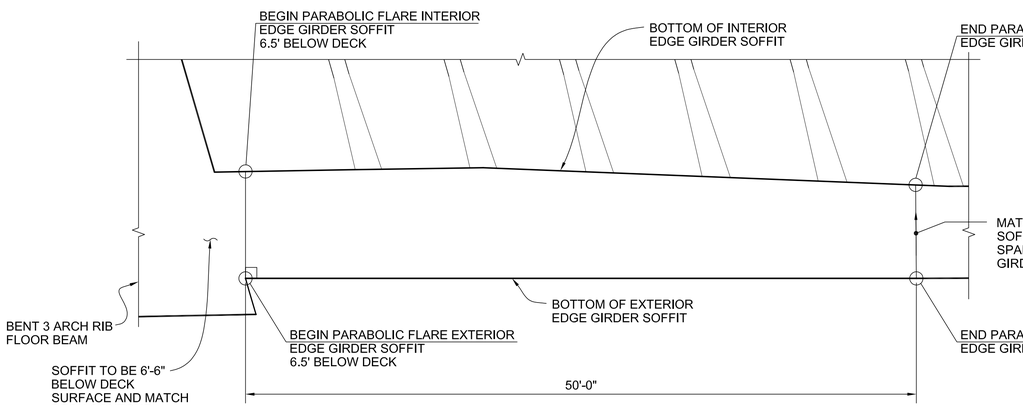

BOTTOM EDGE GIRDER SOFFIT PLAN - BENT 3
SCALE: 3/16" =1'-0"

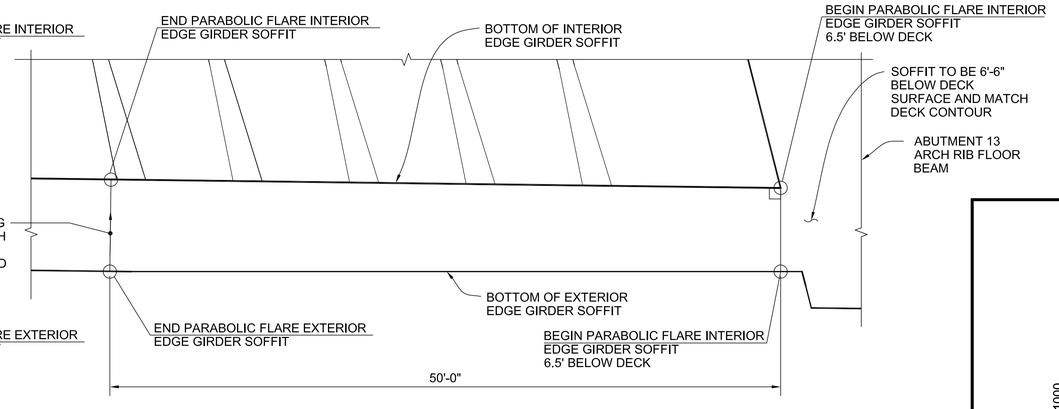

BOTTOM EDGE GIRDER SOFFIT PLAN - ABUT 13
SCALE: 3/16" =1'-0"

THE CITY OF LOS ANGELES OR ITS OFFICERS OR AGENTS SHALL NOT BE RESPONSIBLE FOR THE ACCURACY OR COMPLETENESS OF ELECTRONIC COPIES OF THIS PLAN SHEET.

C:\cddlib\pw\pwwestcoast\zhong\dms576831\S5-02-L702-03.dwg 7/10/18 18:12

REVISION DATES (DESIGN STAGE ONLY)

Sheet Version 3.0

HNTB
HNTB Corporation
601 W. 5TH STREET SUITE 1000
LOS ANGELES, CALIFORNIA 90071
TEL (213) 403-1000 FAX (213) 403-1001

CITY OF LOS ANGELES DEPARTMENT OF PUBLIC WORKS BUREAU OF ENGINEERING

ENGINEERING — CITY OF LOS ANGELES

NO.	REVISIONS:	DATE	BY:
1	FRAME CONSTRUCTION JOINT AND ARCH RIB UPDATES ECO 71	07/13/16	MHJ

STRUCTURE NO. 53C-2329

INDEX NO.

THIS PLAN WAS ELECTRONICALLY SIGNED AND STAMPED

REGISTERED PROFESSIONAL ENGINEER MICHAEL H. JONES No. S3033 EXP. 6-30-16 CIVIL STATE OF CALIFORNIA

CITY ENGINEER: GARY LEE MOORE, P.E.

		DATE:
ENGINEER:	MICHAEL H. JONES	1/29/2016
DESIGNED BY:	MICHAEL H. JONES	1/29/2016
DRAWN BY:	LI ZHANG	1/29/2016
CHECKED BY:	CHARLES REDFIELD	1/29/2016
APPROVED BY:	MICHAEL H. JONES	1/29/2016

LIC. NO. S3033

DESIGN GROUP

VERTICAL CONTROL: BM 12-04070,1929 (NGVD 29) - 1985 ADJUSTMENT
HORIZONTAL CONTROL: GPS; PID AE 1704, EPOCH 1991.35

SHEET TITLE: ARCH RIB GEOMETRY LAYOUT NO. 4

PROJECT: SIXTH STREET VIADUCT REPLACEMENT

ADDRESS: SIXTH STREET VIADUCT (WHITTIER BLVD) LOS ANGELES, CA

WORK ORDER NO. E700224F

DRAWING NO. S5-04

SHEET 253 OF 560 SHEETS

ADDENDUM 5

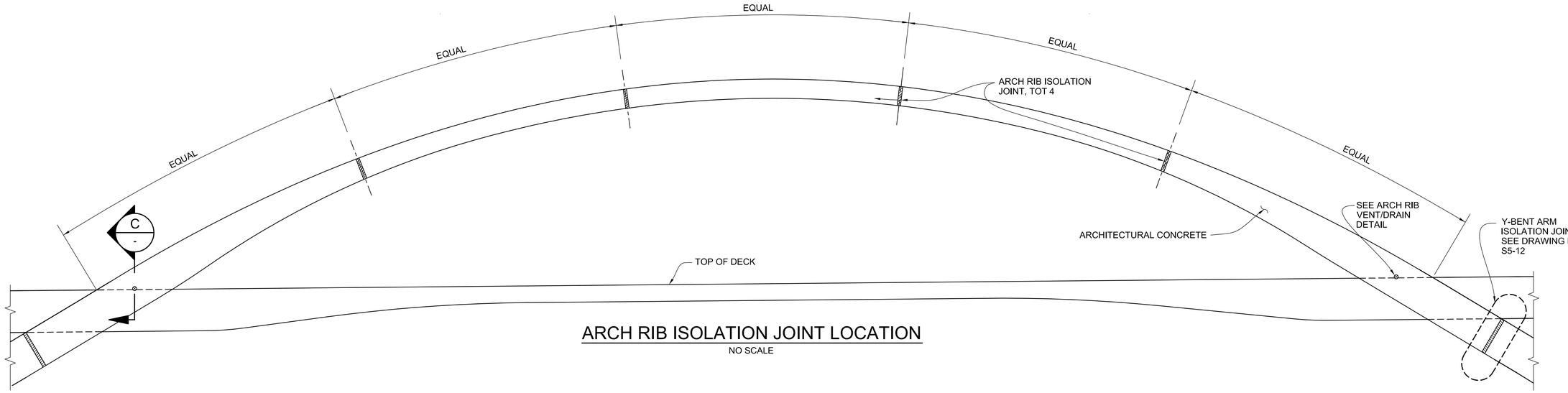

ARCH RIB ISOLATION JOINT LOCATION

NO SCALE

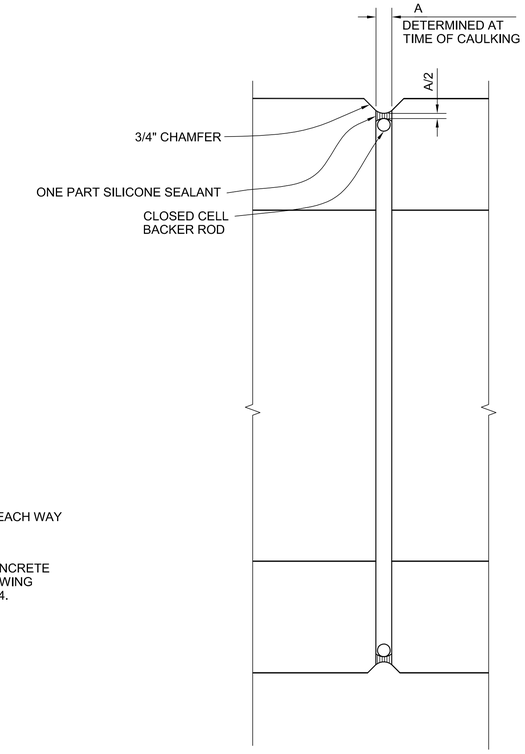

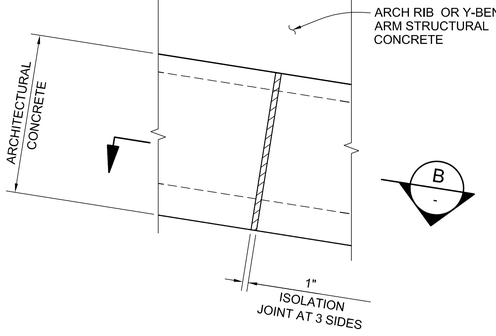

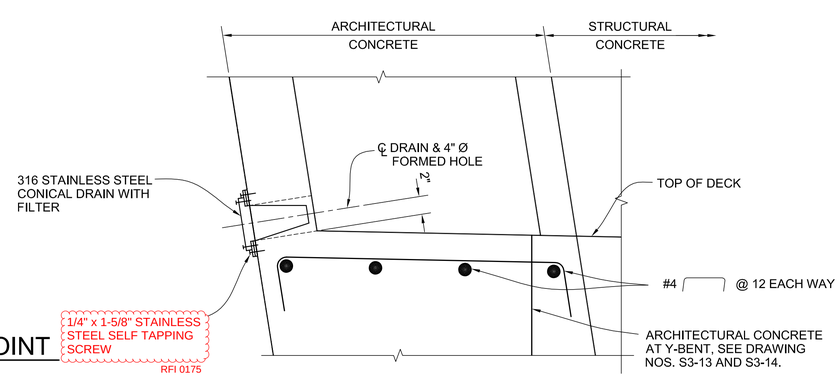

PLAN - ARCH RIB AND Y-BENT ARM ISOLATION JOINT

SCALE: 3/4" =1'-0"

RFI No.266

In 2 locations (SW corners of bents 5 and 7) the concrete wedge behind the PT anchor plates for the TARFB post tensioning interferes with the isolation joint shown on S5-11 and S5-12. See attached emails with renderings. SSW proposes to shift the isolation joints down the y-arm 5 1/16" at 7 SW and 6 1/16" at 5 SW to eliminate the conflict and accommodate our block out forming.

Response: No exception is taken to the Contractor's request to adjust the position of the Y-Bent arm/arch rib architectural concrete isolation joint located below the edge girder as proposed in RFI 0266 to avoid interference with the Contractor's block-out forming system. When relocating the joint, it is suggested to ensure the relocation is sufficient to avoid interference between the architectural concrete end reinforcement shown on Contract Drawing S5-12 and the Contractor's block-out form.

SECTION C -

ARCH RIB VENT/DRAIN

SCALE: 1 1/2" =1'-0"

SECTION B -

SCALE: 3"=1'-0"

THE CITY OF LOS ANGELES OR ITS OFFICERS OR AGENTS SHALL NOT BE RESPONSIBLE FOR THE ACCURACY OR COMPLETENESS OF ELECTRONIC COPIES OF THIS PLAN SHEET.

C:\cadlib\pw\pwwestcoast\zhang\dms57683\S5-11-ARM01.dwg 6/27/16 17:06

REVISION DATES (DESIGN STAGE ONLY)

Sheet Version 3.0

BUREAU OF ENGINEERING

ENGINEERING
CITY OF LOS ANGELES

NO.	REVISIONS:	DATE	BY:

STRUCTURE NO. 53C-2329

INDEX NO. P-38113

REGISTERED PROFESSIONAL ENGINEER MICHAEL H. JONES No. S3033 CIVIL STATE OF CALIFORNIA

THIS PLAN WAS ELECTRONICALLY SIGNED AND STAMPED.

BUREAU OF ENGINEERING OFFICIAL RECORD

CITY OF LOS ANGELES DEPARTMENT OF PUBLIC WORKS

GARY LEE MOORE, P.E. CITY ENGINEER

		DATE:
DESIGN GROUP	LIC. NO. S3033	
ENGINEER:	MICHAEL H. JONES	1/29/2016
DESIGNED BY:	MICHAEL H. JONES	1/29/2016
DRAWN BY:	LI ZHANG	1/29/2016
CHECKED BY:	CHARLES REDFIELD	1/29/2016
APPROVED BY:	MICHAEL H. JONES	1/29/2016

VERTICAL CONTROL: BM 12-04070, 1929 (NGVD 29) - 1985 ADJUSTMENT
HORIZONTAL CONTROL: GPS; PID AE 1704, EPOCH 1991.35

SHEET TITLE: ARCH RIB MISCELLANEOUS DETAILS NO. 1

PROJECT: SIXTH STREET VIADUCT REPLACEMENT

ADDRESS: SIXTH STREET VIADUCT (WHITTIER BLVD) LOS ANGELES, CA

HNTB
HNTB Corporation
601 W. 5TH STREET SUITE 1000
LOS ANGELES, CALIFORNIA 90071
TEL (213) 403-1000 FAX (213) 403-1001

WORK ORDER NO. E700224F

DRAWING NO. S5-11

SHEET 254 OF 560 SHEETS

ADDENDUM 5

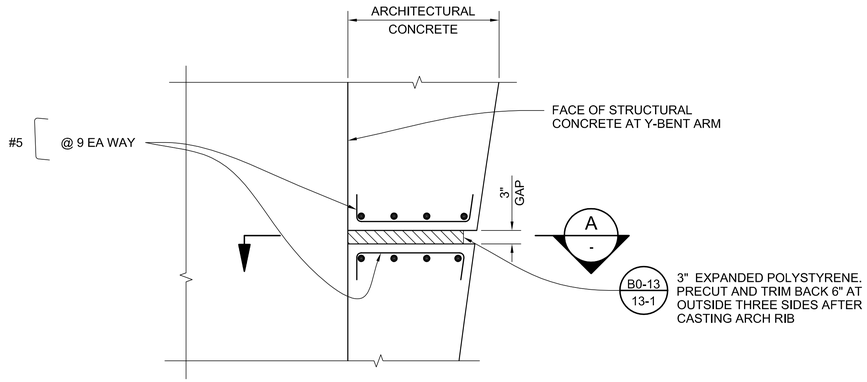

Y-BENT ARM ISOLATION JOINT

SCALE: 3/4" =1'-0"

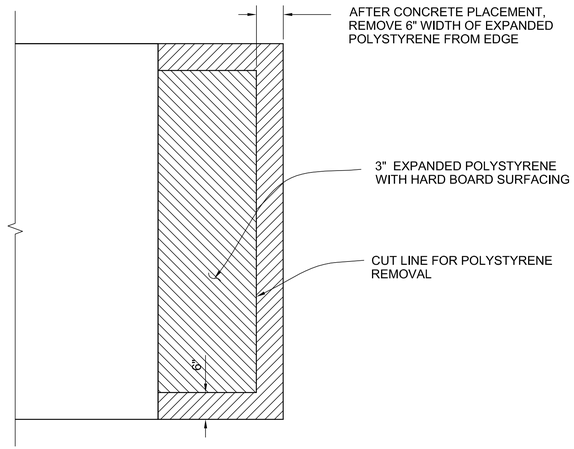

SECTION A

SCALE: 3/4"=1'-0"

RFI No.266

In 2 locations (SW corners of bents 5 and 7) the concrete wedge behind the PT anchor plates for the TARFB post tensioning interferes with the isolation joint shown on S5-11 and S5-12. See attached emails with renderings. SSW proposes to shift the isolation joints down the y-arm 5 1/16" at 7 SW and 6 1/16" at 5 SW to eliminate the conflict and accommodate our block out forming.

Response: No exception is taken to the Contractor's request to adjust the position of the Y-Bent arm/arch rib architectural concrete isolation joint located below the edge girder as proposed in RFI 0266 to avoid interference with the Contractor's block-out forming system. When relocating the joint, it is suggested to ensure the relocation is sufficient to avoid interference between the architectural concrete end reinforcement shown on Contract Drawing S5-12 and the Contractor's block-out form.

THE CITY OF LOS ANGELES OR ITS OFFICERS OR AGENTS SHALL NOT BE RESPONSIBLE FOR THE ACCURACY OR COMPLETENESS OF ELECTRONIC COPIES OF THIS PLAN SHEET.

C:\caddlib\pw\pwwestcoast\zhang\dms57683\S5-11-ARM01.dwg 6/27/16 17:06

REVISION DATES (DESIGN STAGE ONLY)

Sheet Version 3.0

HNTB
HNTB Corporation
601 W. 5TH STREET SUITE 1000
LOS ANGELES, CALIFORNIA 90071
TEL (213) 403-1000 FAX (213) 403-1001

BUREAU OF ENGINEERING
OFFICIAL RECORD

CITY OF LOS ANGELES DEPARTMENT OF PUBLIC WORKS

BUREAU OF ENGINEERING

ENGINEERING
CITY OF LOS ANGELES

NO.	REVISIONS:	DATE	BY:

STRUCTURE NO. 53C-2329

INDEX NO. P-38113

THIS PLAN WAS ELECTRONICALLY SIGNED AND STAMPED.

REGISTERED PROFESSIONAL ENGINEER MICHAEL H. JONES No. S3033 CIVIL STATE OF CALIFORNIA

GARY LEE MOORE, P.E. CITY ENGINEER

		DATE:
DESIGN GROUP	LIC. NO. S3033	1/29/2016
ENGINEER:	MICHAEL H. JONES	1/29/2016
DESIGNED BY:	MICHAEL H. JONES	1/29/2016
DRAWN BY:	LI ZHANG	1/29/2016
CHECKED BY:	CHARLES REDFIELD	1/29/2016
APPROVED BY:	MICHAEL H. JONES	1/29/2016

VERTICAL CONTROL: BM 12-04070,1929 (NGVD 29) - 1985 ADJUSTMENT
HORIZONTAL CONTROL: GPS; PID AE 1704, EPOCH 1991.35

SHEET TITLE: ARCH RIB MISCELLANEOUS DETAILS NO. 2

PROJECT: SIXTH STREET VIADUCT REPLACEMENT

ADDRESS: SIXTH STREET VIADUCT (WHITTIER BLVD)
LOS ANGELES, CA

WORK ORDER NO. E700224F

DRAWING NO. S5-12

SHEET 255 OF 560 SHEETS

ADDENDUM 5

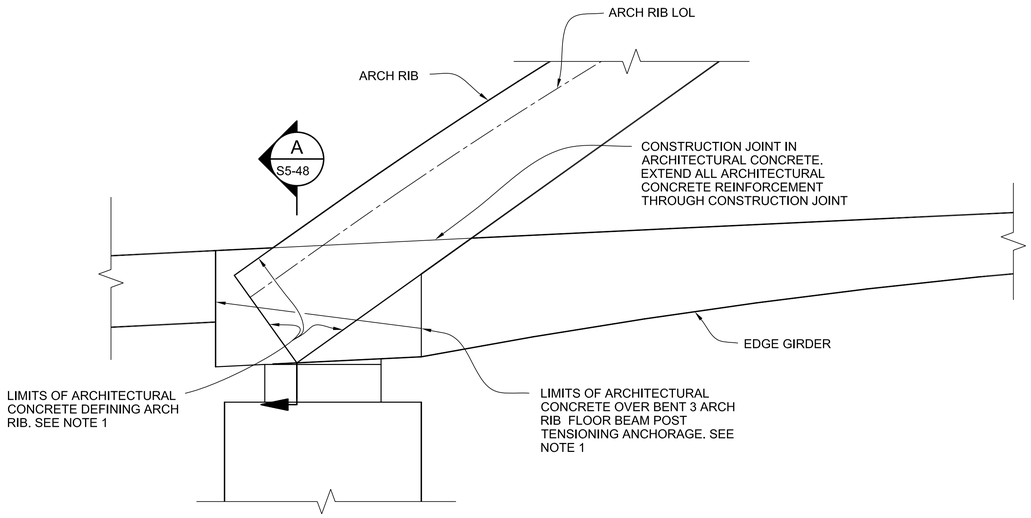

BENT 3

NOTES:

1. PLACE ARCHITECTURAL CONCRETE BELOW CONSTRUCTION JOINT AFTER COMPLETION OF BENT 3 AND ABUTMENT 13 ARCH RIB FLOOR BEAM POST TENSIONING. SEE DRAWING NOS. S3-06, S3-07, S6-06 AND S6-07.

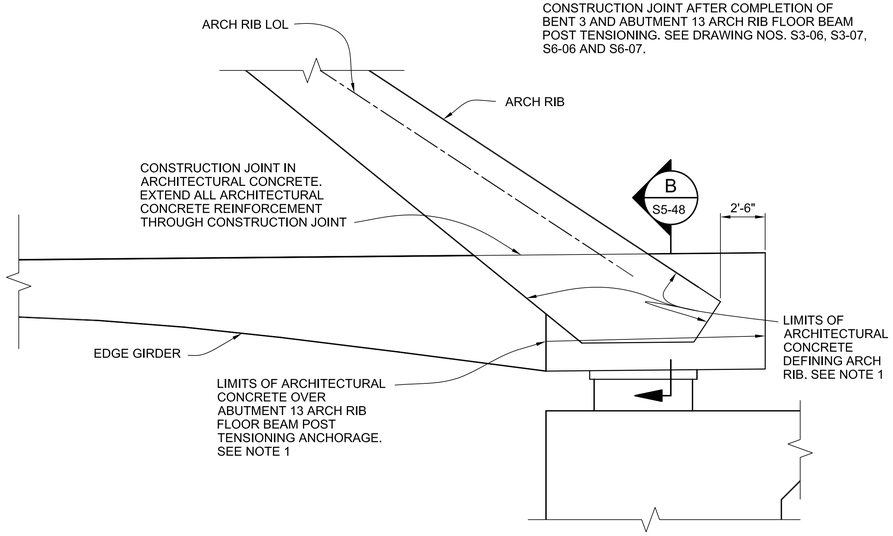

ABUTMENT 13

ELEVATION

SCALE: N.T.S.

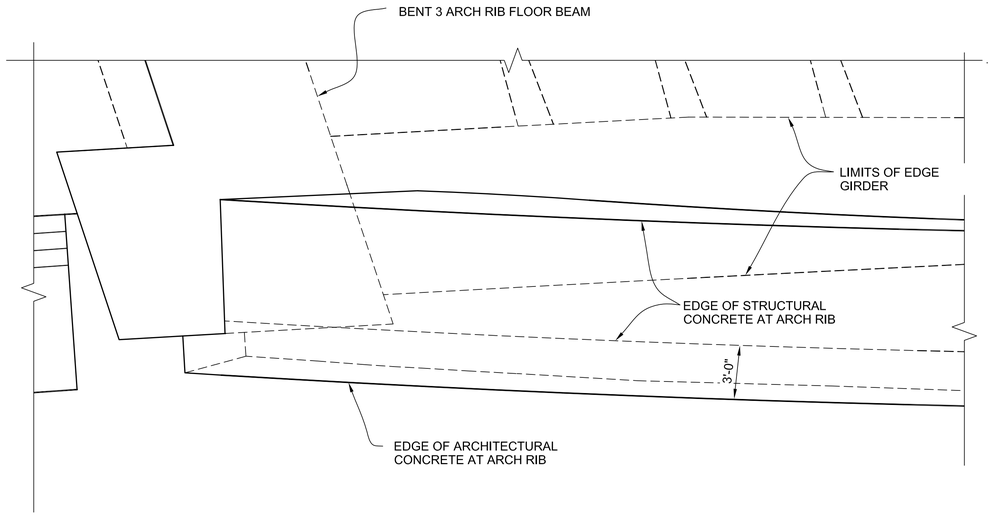

BENT 3

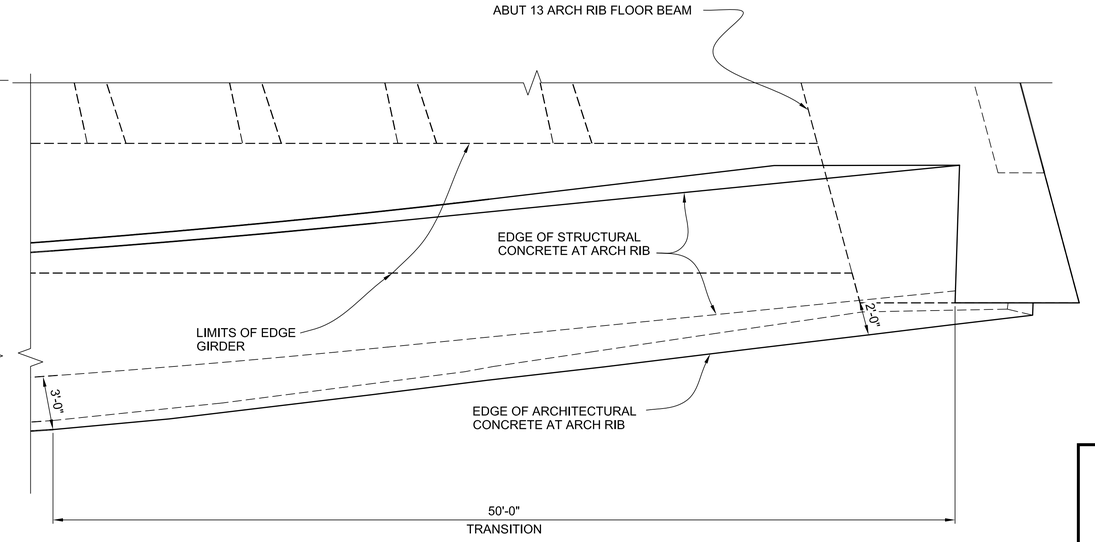

PLAN

SCALE: N.T.S.

ABUT 13

BUREAU OF ENGINEERING
OFFICIAL RECORD

HNTB
HNTB Corporation
601 W. 5TH STREET SUITE 1000
LOS ANGELES, CALIFORNIA 90071
TEL (213) 403-1000 FAX (213) 403-1001

CITY OF LOS ANGELES DEPARTMENT OF PUBLIC WORKS BUREAU OF ENGINEERING

ENGINEERING
CITY OF LOS ANGELES

STRUCTURE NO. 53C-2329

INDEX NO. P-38113

NO.	REVISIONS:	DATE	BY:

REGISTERED PROFESSIONAL ENGINEER MICHAEL H. JONES No. S3033 CIVIL STATE OF CALIFORNIA

THIS PLAN WAS ELECTRONICALLY SIGNED AND STAMPED.

GARY LEE MOORE, P.E. CITY ENGINEER

		DESIGN GROUP	LIC. NO.	DATE:
ENGINEER:	MICHAEL H. JONES		S3033	1/29/2016
DESIGNED BY:	MICHAEL H. JONES			1/29/2016
DRAWN BY:	LI ZHANG			1/29/2016
CHECKED BY:	CHARLES REDFIELD			1/29/2016
APPROVED BY:	MICHAEL H. JONES			1/29/2016

VERTICAL CONTROL: BM 12-04070,1929 (NGVD 29) - 1985 ADJUSTMENT
HORIZONTAL CONTROL: GPS; PID AE 1704, EPOCH 1991.35

SHEET TITLE: ARCH RIB MISCELLANEOUS DETAILS NO. 3

PROJECT: SIXTH STREET VIADUCT REPLACEMENT

ADDRESS: SIXTH STREET VIADUCT (WHITTIER BLVD) LOS ANGELES, CA

WORK ORDER NO. E700224F

DRAWING NO. S5-13

SHEET 256 OF 560 SHEETS

REVISION DATES (DESIGN STAGE ONLY)

THE CITY OF LOS ANGELES OR ITS OFFICERS OR AGENTS SHALL NOT BE RESPONSIBLE FOR THE ACCURACY OR COMPLETENESS OF ELECTRONIC COPIES OF THIS PLAN SHEET.

C:\caddlib\pw\pwwestcoast\lzhang\dms57683\S5-13-AR01.dwg 6/28/16 17:06

Sheet Version 3.0

ADDENDUM 5

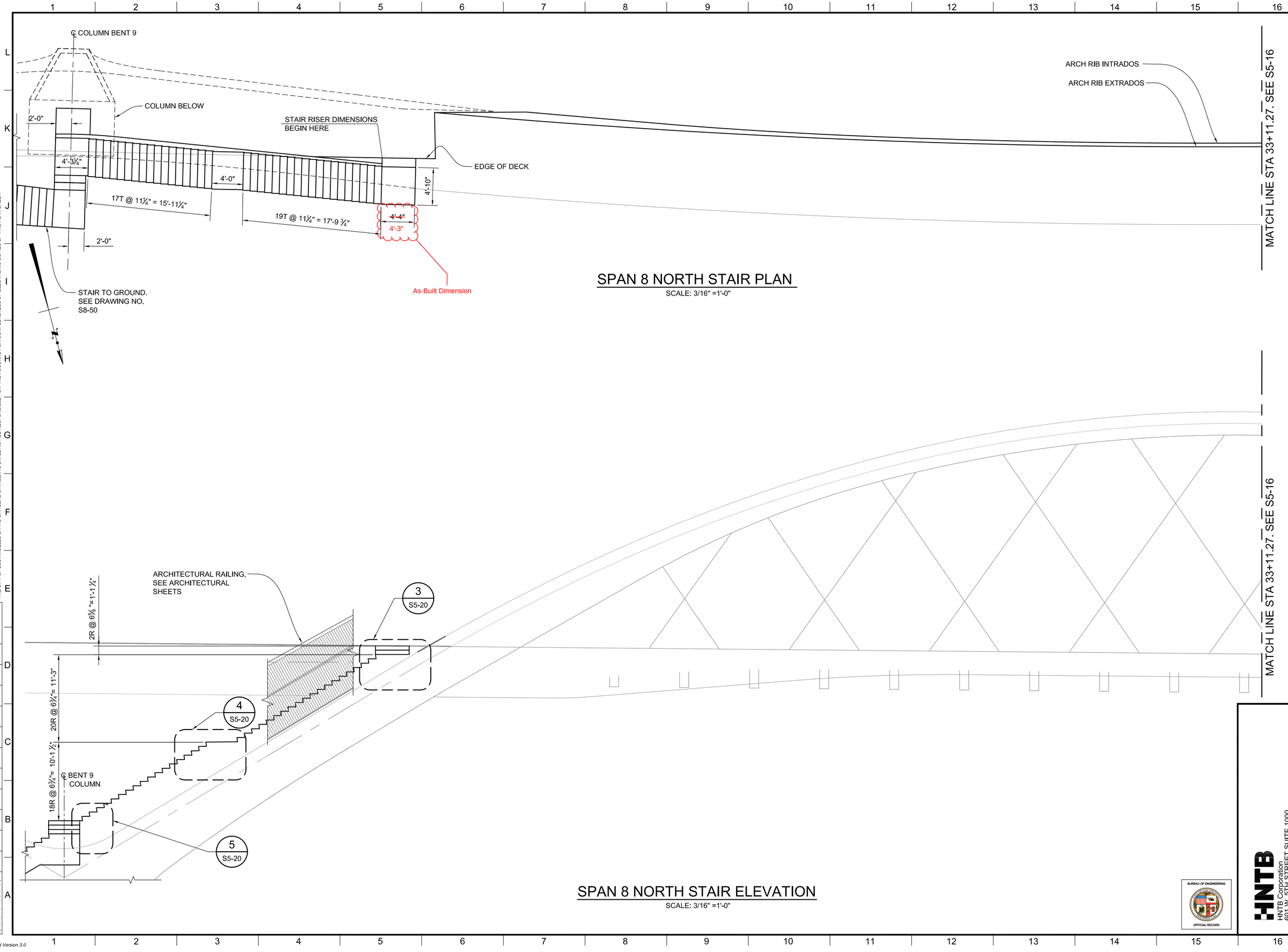

SPAN 8 NORTH STAIR PLAN

SCALE: 3/16" =1'-0"

SPAN 8 NORTH STAIR ELEVATION

SCALE: 3/16" =1'-0"

THE CITY OF LOS ANGELES OR ITS OFFICERS OR AGENTS SHALL NOT BE RESPONSIBLE FOR THE ACCURACY OR COMPLETENESS OF ELECTRONIC COPIES OF THIS PLAN SHEET.

C:\caddlib\pw\pwwestcoast\zhang\dms57683\S5-15-ARS.dwg 6/27/16 17:22

REVISION DATES (DESIGN STAGE ONLY)

Sheet Version 3.0

BUREAU OF ENGINEERING

ENGINEERING
CITY OF LOS ANGELES

NO.	REVISIONS:	DATE	BY:

STRUCTURE NO. 53C-2329

INDEX NO. P-38113

THIS PLAN WAS ELECTRONICALLY SIGNED AND STAMPED.

REGISTERED PROFESSIONAL ENGINEER MICHAEL H. JONES No. S3033 CIVIL STATE OF CALIFORNIA

CITY OF LOS ANGELES DEPARTMENT OF PUBLIC WORKS

GARY LEE MOORE, P.E.	CITY ENGINEER	DATE:
ENGINEER:	MICHAEL H. JONES	1/29/2016
	DESIGN GROUP	
	LIC. NO. S3033	1/29/2016
DESIGNED BY:	RUI LU	1/29/2016
DRAWN BY:	LYUBOV KINGSBURY	1/29/2016
CHECKED BY:	CHARLES REDFIELD	1/29/2016
APPROVED BY:	MICHAEL H. JONES	1/29/2016

VERTICAL CONTROL: BM 12-04070, 1929 (NGVD 29) - 1985 ADJUSTMENT
HORIZONTAL CONTROL: GPS; PID AE 1704, EPOCH 1991.35

SHEET TITLE: ARCH RIB STAIR DETAILS NO. 1

PROJECT: SIXTH STREET VIADUCT REPLACEMENT

ADDRESS: SIXTH STREET VIADUCT (WHITTIER BLVD) LOS ANGELES, CA

HNTB
HNTB Corporation
601 W. 5TH STREET SUITE 1000
LOS ANGELES, CALIFORNIA 90071
TEL (213) 403-1000 FAX (213) 403-1001

BUREAU OF ENGINEERING OFFICIAL RECORD

WORK ORDER NO. E700224F

DRAWING NO. S5-15

SHEET 257 OF 560 SHEETS

ADDENDUM 5

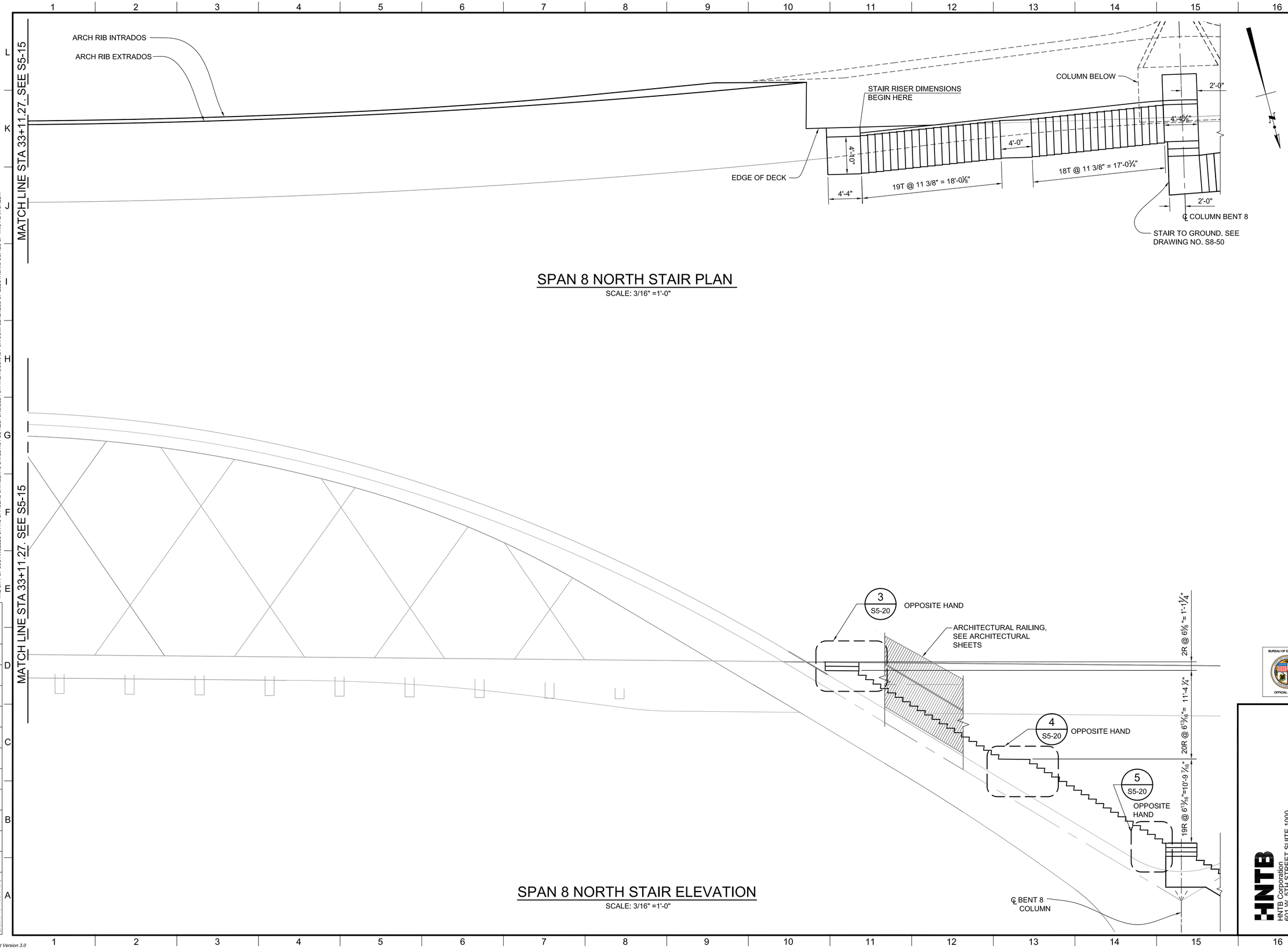

SPAN 8 NORTH STAIR PLAN

SCALE: 3/16" =1'-0"

SPAN 8 NORTH STAIR ELEVATION

SCALE: 3/16" =1'-0"

THE CITY OF LOS ANGELES OR ITS OFFICERS OR AGENTS SHALL NOT BE RESPONSIBLE FOR THE ACCURACY OR COMPLETENESS OF ELECTRONIC COPIES OF THIS PLAN SHEET.

C:\caddlib\pw\pwwestcoast\lzhang\dms57683\S5-15-ARS.dwg 6/27/16 17:22

REVISION DATES (DESIGN STAGE ONLY)

Sheet Version 3.0

BUREAU OF ENGINEERING
OFFICIAL RECORD

HNTB
HNTB Corporation
601 W. 5TH STREET SUITE 1000
LOS ANGELES, CALIFORNIA 90071
TEL (213) 403-1000 FAX (213) 403-1001

CITY OF LOS ANGELES DEPARTMENT OF PUBLIC WORKS BUREAU OF ENGINEERING

ENGINEERING
CITY OF LOS ANGELES

NO.	REVISIONS:	DATE:	BY:

STRUCTURE NO. 53C-2329

INDEX NO. P-38113

REGISTERED PROFESSIONAL ENGINEER MICHAEL H. JONES No. S3033 CIVIL STATE OF CALIFORNIA

THIS PLAN WAS ELECTRONICALLY SIGNED AND STAMPED

GARY LEE MOORE, P.E. CITY ENGINEER

			DATE:
ENGINEER:	MICHAEL H. JONES	LIC. NO. S3033	1/29/2016
DESIGNED BY:	RUI LU		1/29/2016
DRAWN BY:	LYUBOV KINGSBURY		1/29/2016
CHECKED BY:	CHARLES REDFIELD		1/29/2016
APPROVED BY:	MICHAEL H. JONES		1/29/2016

DESIGN GROUP

VERTICAL CONTROL: BM 12-04070 1929 (NGVD 29) - 1985 ADJUSTMENT
HORIZONTAL CONTROL: GPS; PID AE 1704, EPOCH 1991.35

SHEET TITLE: ARCH RIB STAIR DETAILS NO. 2

PROJECT: SIXTH STREET VIADUCT REPLACEMENT

ADDRESS: SIXTH STREET VIADUCT (WHITTIER BLVD) LOS ANGELES, CA

WORK ORDER NO. E700224F

DRAWING NO. S5-16

SHEET 258 OF 560 SHEETS

ADDENDUM 5

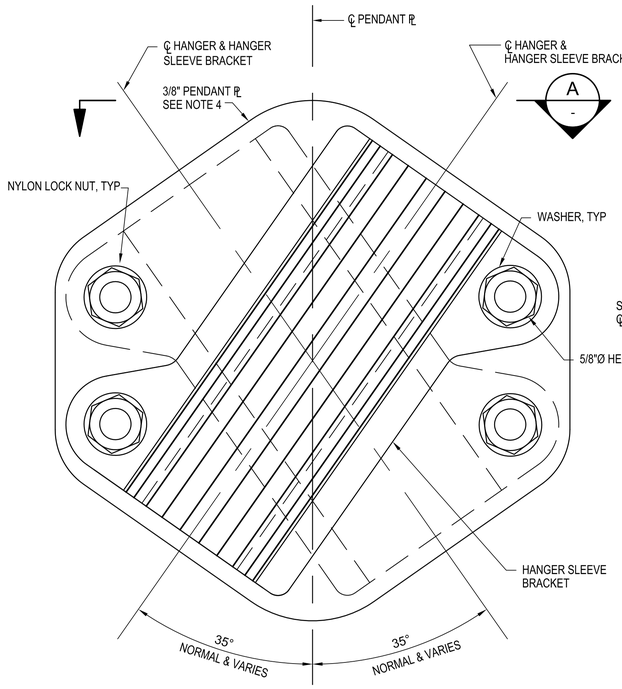

ELEVATION

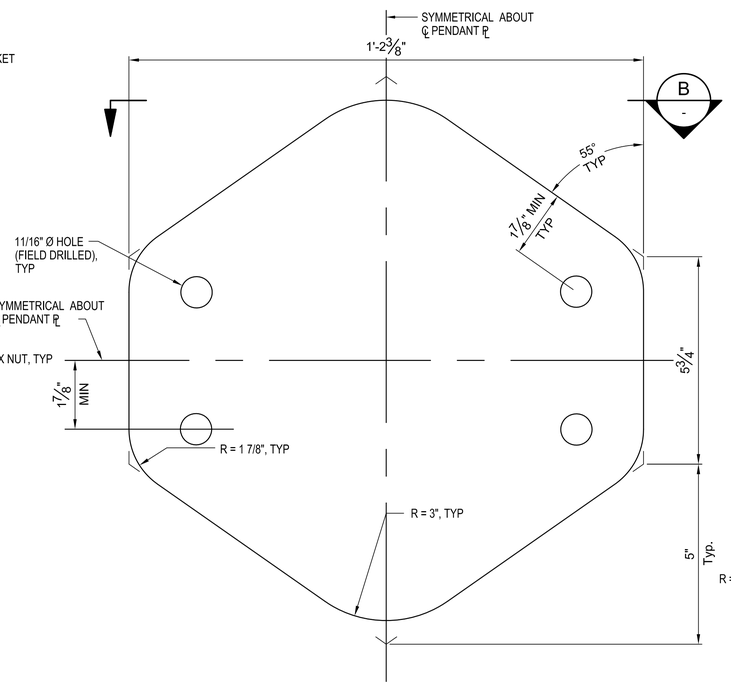

ELEVATION

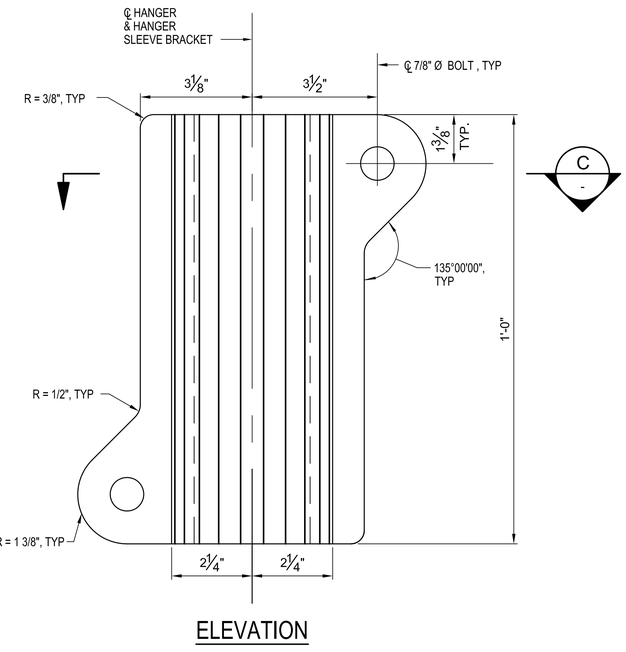

ELEVATION

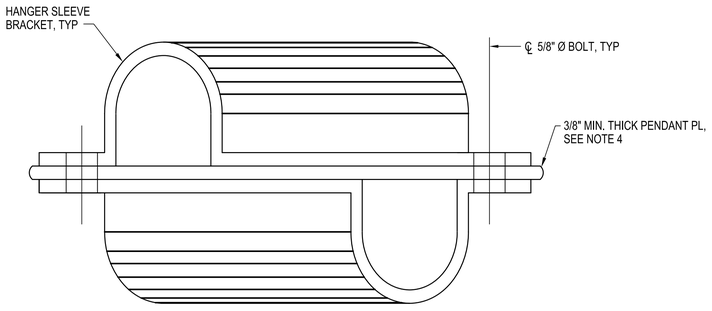

VIEW A-A

ASSEMBLY - HANGER SPACER

SCALE: 6"=1'-0"

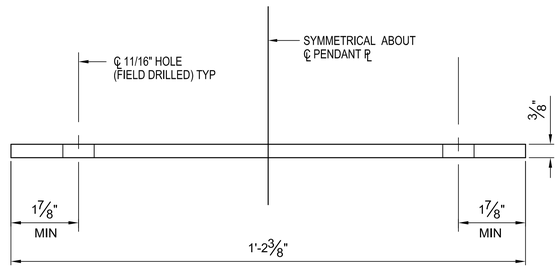

VIEW B-B

PENDANT PLATE

SCALE: 6"=1'-0"

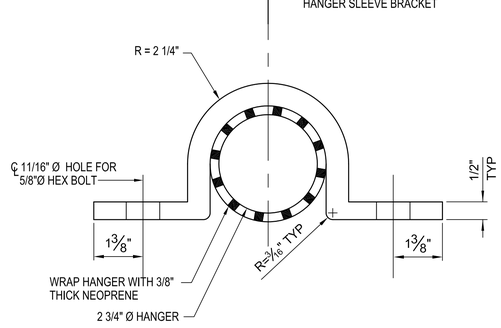

VIEW C-C

HANGER SLEEVE BRACKET

SCALE 6"=1'-0"

NOTES:

1. FOR HANGER GEOMETRY, SEE DWGS. S5-49 TO S5-66.
2. PENDANT PLATE AND HANGER SLEEVE BRACKET SHALL BE ULTRA HIGH MOLECULAR WEIGHT POLYETHYLENE (UHMW-PE). UHMW-PE COMPONENTS SHALL MEET FEDERAL STANDARD 595B, NO. 363.7 GRAY. BOLTS, NUTS, AND WASHERS SHALL BE GALVANIZED IN CONFORMANCE WITH ASTM A153.
3. HANGER SPACER DETAILS SHOWN ARE FOR NOMINAL HANGER DIAMETER. ACTUAL FIT-UP SHALL BE VERIFIED BY CONTRACTOR AND REQUIRED CHANGES SHALL BE SUBMITTED WITH SHOP DRAWINGS FOR APPROVAL. AFTER BOTH HANGERS HAVE BEEN FULLY TENSIONED PER THE SPECIAL PROVISION, THE HANGER SPACER BOLTS SHALL BE FULLY TIGHTENED.
4. DISTANCE BETWEEN HANGERS VARY. VARY THICKNESS OF PENDANT PLATE SO THAT HANGER OFFSET DISTANCE IS NOT INCREASED OR DECREASED BY MORE THAN 3/16" DURING INSTALLING OF HANGER SPACERS. MULTIPLE PENDANT PLATES MAY BE USED WITH A MINIMUM THICKNESS OF 3/8" PER PLATE.

THE CITY OF LOS ANGELES OR ITS OFFICERS OR AGENTS SHALL NOT BE RESPONSIBLE FOR THE ACCURACY OR COMPLETENESS OF ELECTRONIC COPIES OF THIS PLAN SHEET.

C:\caddlib\pw\pwwestcoast\lzhang\dms57683\S5-71-HD02-03.dwg 6/27/16 17:49

Sheet Version 3.0

REVISION DATES (DESIGN STAGE ONLY)

HNTB
HNTB Corporation
601 W. 5TH STREET SUITE 1000
LOS ANGELES, CALIFORNIA 90071
TEL (213) 403-1000 FAX (213) 403-1001

BUREAU OF ENGINEERING
OFFICIAL RECORD

CITY OF LOS ANGELES DEPARTMENT OF PUBLIC WORKS

BUREAU OF ENGINEERING

ENGINEERING
CITY OF LOS ANGELES

NO.	REVISIONS:	DATE	BY:

STRUCTURE NO. 53C-2329

INDEX NO. P-38113

THIS PLAN WAS ELECTRONICALLY SIGNED AND STAMPED

REGISTERED PROFESSIONAL ENGINEER MICHAEL H. JONES No. S3033 CIVIL STATE OF CALIFORNIA

GARY LEE MOORE, P.E. CITY ENGINEER

			DATE:
ENGINEER:	MICHAEL H. JONES	LIC. NO. S3033	1/29/2016
DESIGNED BY:	SEAN XIN		1/29/2016
DRAWN BY:	LI ZHANG		1/29/2016
CHECKED BY:	CHARLES REDFIELD		1/29/2016
APPROVED BY:	MICHAEL H. JONES		1/29/2016

DESIGN GROUP

VERTICAL CONTROL: BM 12-04070,1929 (NGVD 29) - 1985 ADJUSTMENT
HORIZONTAL CONTROL: GPS; PID AE 1704, EPOCH 1991.35

SHEET TITLE: HANGER CONNECTION DETAILS NO. 5

PROJECT: SIXTH STREET VIADUCT REPLACEMENT

ADDRESS: SIXTH STREET VIADUCT (WHITTIER BLVD) LOS ANGELES, CA

WORK ORDER NO. E700224F

DRAWING NO. S5-74

SHEET 303 OF 560 SHEETS

ADDENDUM 5

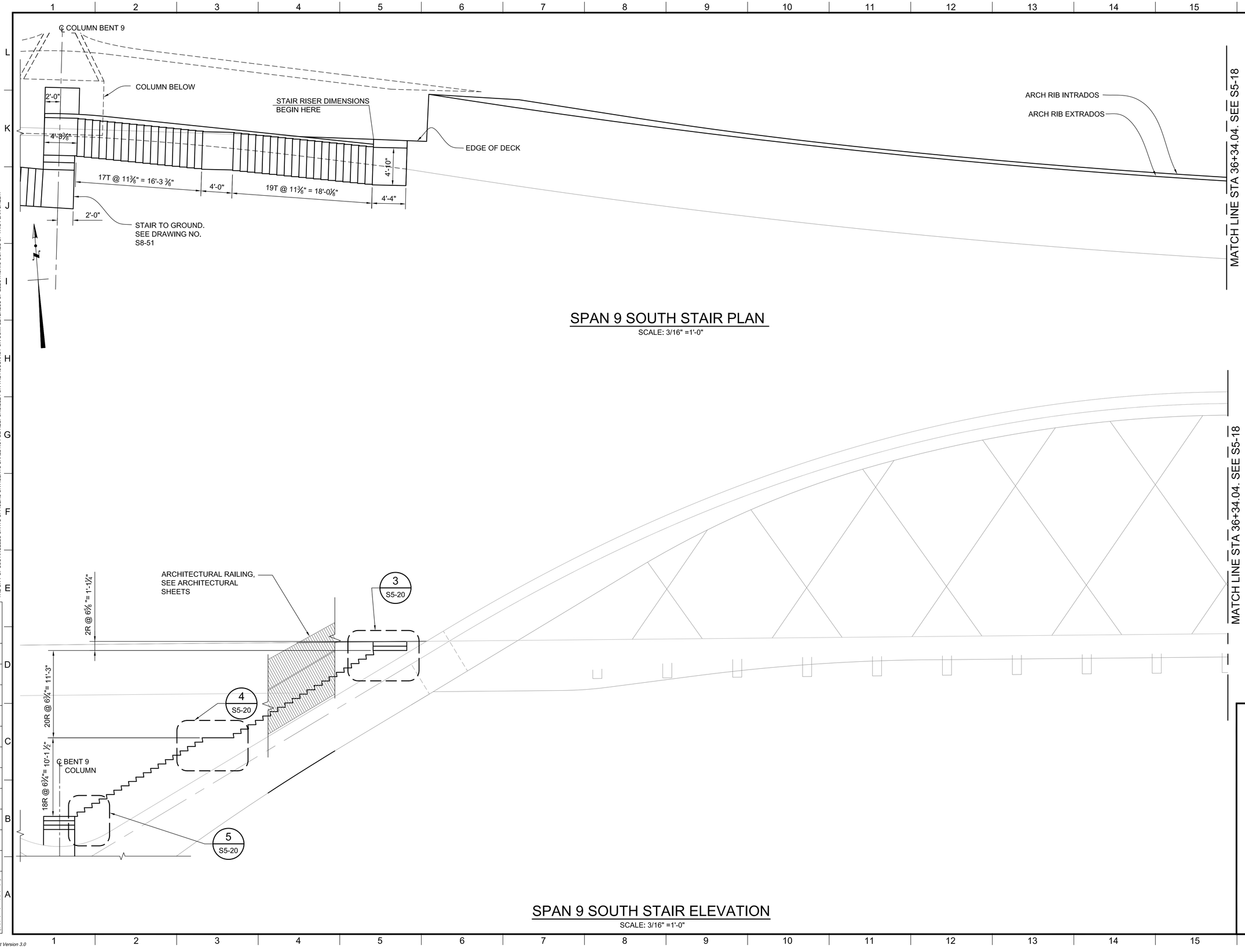

SPAN 9 SOUTH STAIR PLAN

SCALE: 3/16" =1'-0"

SPAN 9 SOUTH STAIR ELEVATION

SCALE: 3/16" =1'-0"

THE CITY OF LOS ANGELES OR ITS OFFICERS OR AGENTS SHALL NOT BE RESPONSIBLE FOR THE ACCURACY OR COMPLETENESS OF ELECTRONIC COPIES OF THIS PLAN SHEET.

C:\caddlib\pw\pwwestcoast\zhang\dms57683\S5-15-ARS.dwg 6/27/16 17:22

REVISION DATES (DESIGN STAGE ONLY)

Sheet Version 3.0

BUREAU OF ENGINEERING
OFFICIAL RECORD

HNTB
HNTB Corporation
601 W. 5TH STREET SUITE 1000
LOS ANGELES, CALIFORNIA 90071
TEL (213) 403-1000 FAX (213) 403-1001

CITY OF LOS ANGELES DEPARTMENT OF PUBLIC WORKS

BUREAU OF ENGINEERING

ENGINEERING
CITY OF LOS ANGELES

NO.	REVISIONS:	DATE	BY:

STRUCTURE NO. 53C-2329

INDEX NO. P-38113

THIS PLAN WAS ELECTRONICALLY SIGNED AND STAMPED

REGISTERED PROFESSIONAL ENGINEER
MICHAEL H. JONES
No. S3033
CIVIL
STATE OF CALIFORNIA

ENGINEER		DATE:
GARY LEE MOORE, P.E.	CITY ENGINEER	
DESIGN GROUP		
ENGINEER: MICHAEL H. JONES	LIC. NO. S3033	1/29/2016
DESIGNED BY: RUI LU		1/29/2016
DRAWN BY: LY'UBOV KINGSBURY		1/29/2016
CHECKED BY: CHARLES REDFIELD		1/29/2016
APPROVED BY: MICHAEL H. JONES		1/29/2016

VERTICAL CONTROL: BM 12-04070, 1929 (NGVD 29) – 1985 ADJUSTMENT
HORIZONTAL CONTROL: GPS; PID AE 1704, EPOCH 1991.35

SHEET TITLE: ARCH RIB STAIR DETAILS NO. 3

PROJECT: SIXTH STREET VIADUCT REPLACEMENT

ADDRESS: SIXTH STREET VIADUCT (WHITTIER BLVD) LOS ANGELES, CA

WORK ORDER NO. E700224F

DRAWING NO. S5-17

SHEET 259 OF 560 SHEETS

ADDENDUM 5

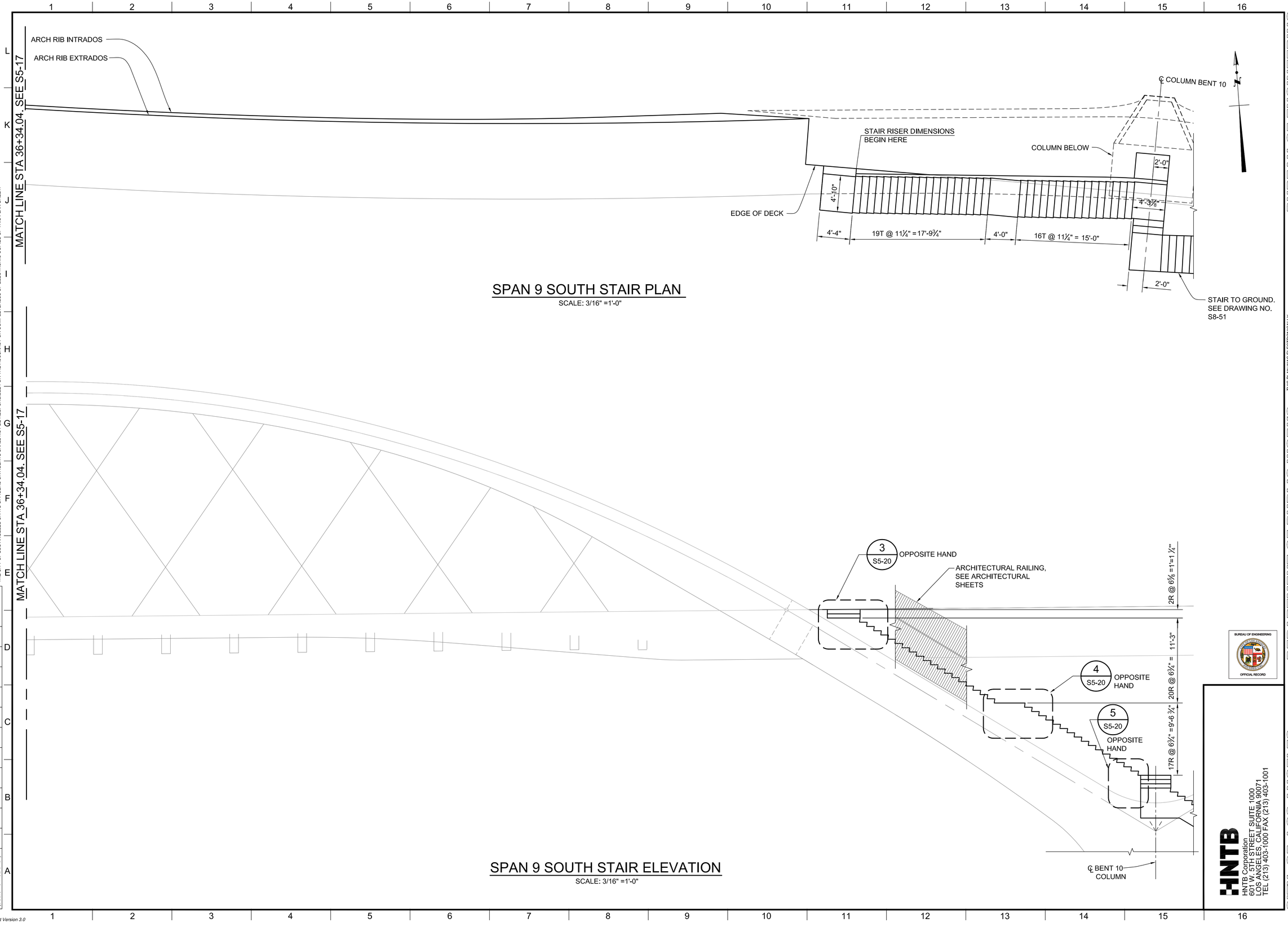

SPAN 9 SOUTH STAIR PLAN

SCALE: 3/16" =1'-0"

SPAN 9 SOUTH STAIR ELEVATION

SCALE: 3/16" =1'-0"

THE CITY OF LOS ANGELES OR ITS OFFICERS OR AGENTS SHALL NOT BE RESPONSIBLE FOR THE ACCURACY OR COMPLETENESS OF ELECTRONIC COPIES OF THIS PLAN SHEET.

C:\caddlb\pw\pwwestcoast\zhang\dms57683\S5-15-ARS.dwg 6/27/16 17:21

REVISION DATES (DESIGN STAGE ONLY)

Sheet Version 3.0

BUREAU OF ENGINEERING
OFFICIAL RECORD

HNTB
HNTB Corporation
601 W. 5TH STREET SUITE 1000
LOS ANGELES, CALIFORNIA 90071
TEL (213) 403-1000 FAX (213) 403-1001

CITY OF LOS ANGELES DEPARTMENT OF PUBLIC WORKS

VERTICAL CONTROL: BM 12-04070, 1929 (NGVD 29) - 1985 ADJUSTMENT
HORIZONTAL CONTROL: GPS; PID AE 1704, EPOCH 1991.35

SHEET TITLE: ARCH RIB STAIR DETAILS NO. 4

PROJECT: SIXTH STREET VIADUCT REPLACEMENT

ADDRESS: SIXTH STREET VIADUCT (WHITTIER BLVD) LOS ANGELES, CA

WORK ORDER NO. E700224F

DRAWING NO. S5-18

SHEET 260 OF 560 SHEETS

BUREAU OF ENGINEERING

NO.	REVISIONS:	DATE:	BY:

INDEX NO. P-38113

STRUCTURE NO. 53C-2329

ENGINEERING
CITY OF LOS ANGELES

REGISTERED PROFESSIONAL ENGINEER
MICHAEL H. JONES
No. S3033
CIVIL
STATE OF CALIFORNIA
6/27/16

THIS PLAN WAS ELECTRONICALLY SIGNED AND STAMPED.

GARY LEE MOORE, P.E. CITY ENGINEER

DESIGN GROUP		DATE:
ENGINEER:	MICHAEL H. JONES LIC. NO. S3033	1/29/2016
DESIGNED BY:	RUI LU	1/29/2016
DRAWN BY:	LYUBOV KINGSBURY	1/29/2016
CHECKED BY:	CHARLES REDFIELD	1/29/2016
APPROVED BY:	MICHAEL H. JONES	1/29/2016

ADDENDUM 5

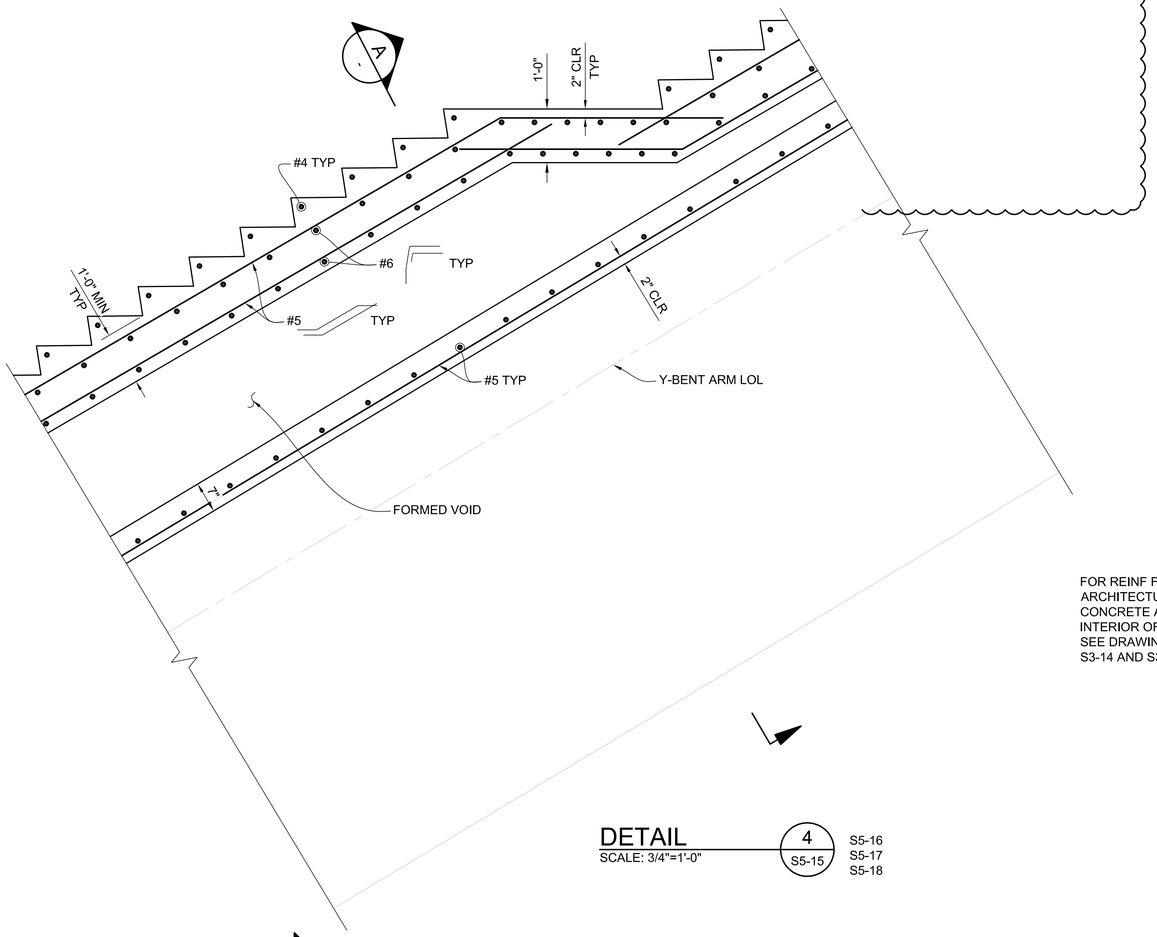

DETAIL 4 S5-15
SCALE: 3/4"=1'-0"
S5-16
S5-17
S5-18

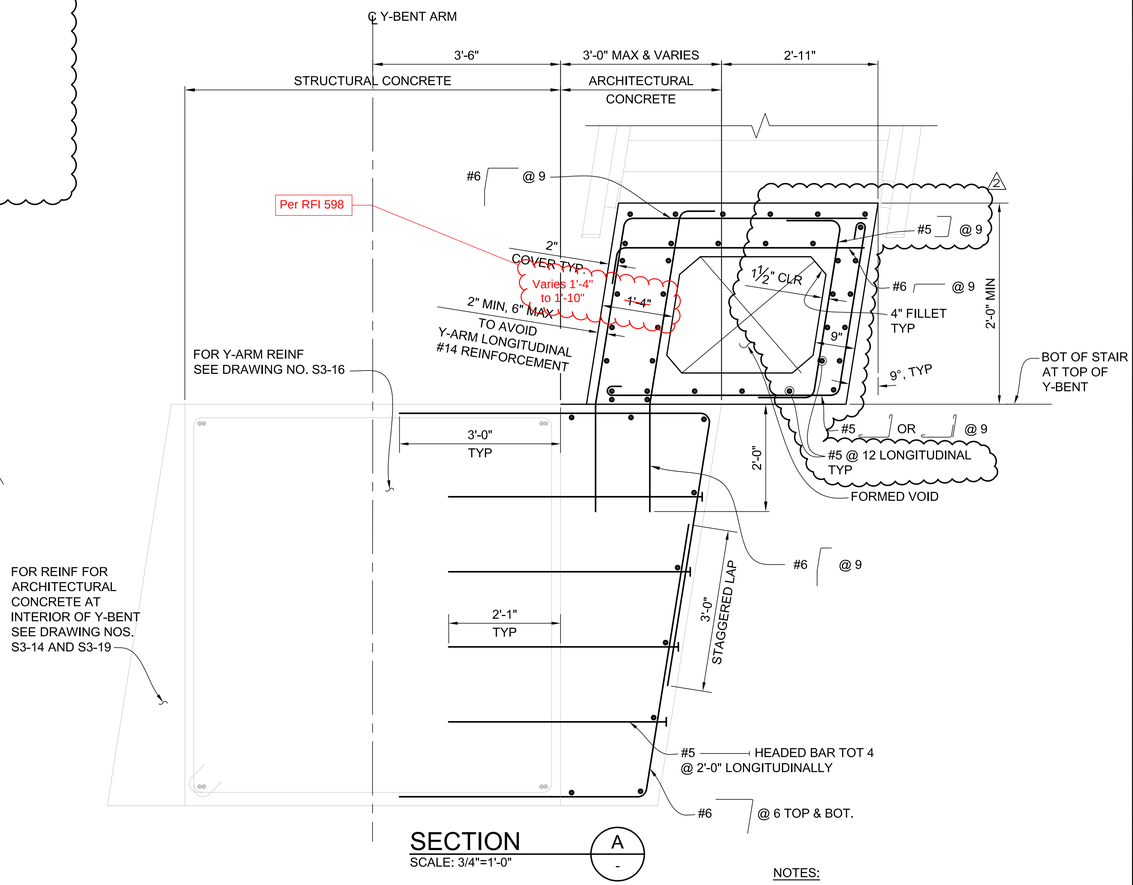

SECTION A
SCALE: 3/4"=1'-0"

NOTES:

1. ALL ARCHITECTURAL CONCRETE IS CAST MONOLITHICALLY WITH STRUCTURAL CONCRETE.
2. INTERNAL FORMS USED TO FORM ARCHITECTURAL CONCRETE MAY BE LEFT IN PLACE.
3. ALL # 4, 5 AND 6 REINFORCING BARS AT ARCHITECTURAL AND STAIR CONCRETE SHALL BE EPOXY COATED.
4. ALL STAIR TREADS AND LANDINGS SHALL BE SLOPED TO DRAIN. SEE DRAWING NOS. A312 THROUGH A-316. PROVIDE SLIP-RESISTANT STAIR NOSING, SEE DRAWING NOS. A-404 AND A-405.
5. ALL STAIR TREADS AND LANDINGS SHALL BE FINISHED WITH A NONSKID ABRASIVE FINISH.

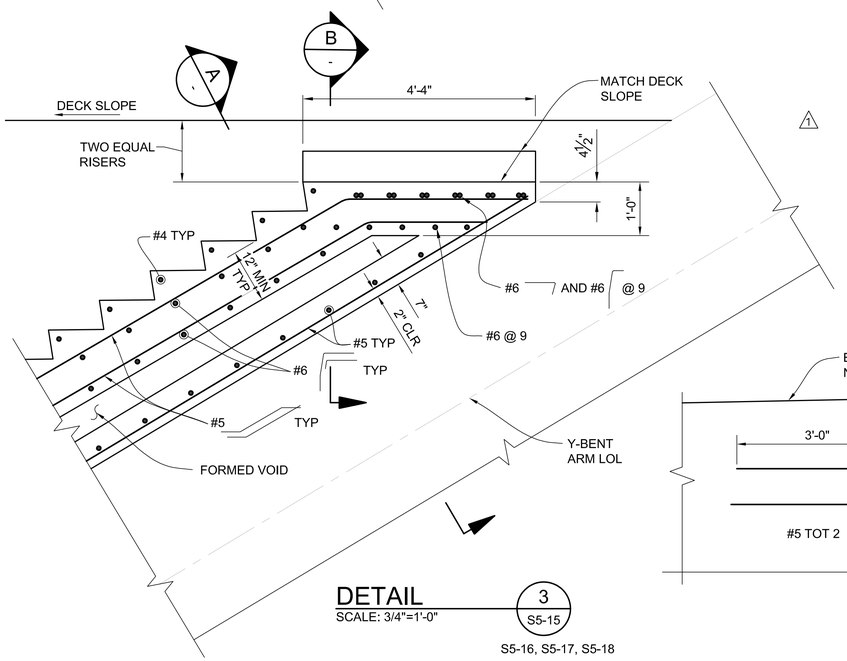

DETAIL 3 S5-15
SCALE: 3/4"=1'-0"
S5-16, S5-17, S5-18

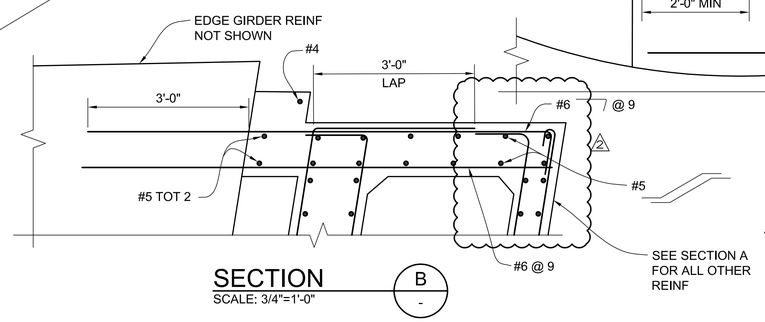

SECTION B
SCALE: 3/4"=1'-0"

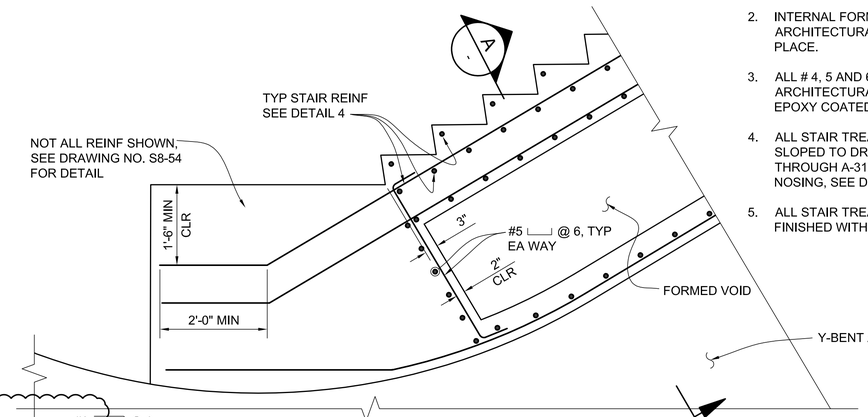

DETAIL 5 S5-15
SCALE: 3/4"=1'-0"
S5-16
S5-17
S5-18

T.O. 5 - Change Order Serial Sketch No. 153r3 - Page 9 of 15

THIS PLAN WAS ELECTRONICALLY SIGNED AND STAMPED

REGISTERED PROFESSIONAL ENGINEER MICHAEL H. JONES No. S3033 CIVIL STATE OF CALIFORNIA

NO.	REVISIONS:	DATE:	BY:
1.	Y-BENT STAIR LANDING AT DECK CO 97 ECO 153	3/29/19	MHJ
2.	POST-INSTALLED ANCHORS	2/5/22	MHJ

ENGINEERING
CITY OF LOS ANGELES

BUREAU OF ENGINEERING

STRUCTURE NO. 53C-2329

INDEX NO.

CITY OF LOS ANGELES DEPARTMENT OF PUBLIC WORKS

GARY LEE MOORE, P.E. CITY ENGINEER

		DATE:
ENGINEER:	MICHAEL H. JONES	1/29/2016
DESIGNED BY:	RUI LU	1/29/2016
DRAWN BY:	LYUBOV KINGSBURY	1/29/2016
CHECKED BY:	CHARLES REDFIELD	1/29/2016
APPROVED BY:	MICHAEL H. JONES	1/29/2016

DESIGN GROUP
LIC. NO. S3033

VERTICAL CONTROL: BM 12-04070 1929 (NGVD 29) - 1985 ADJUSTMENT
HORIZONTAL CONTROL: GPS; PID AE 1704, EPOCH 1991.35

SHEET TITLE: Y-BENT STAIR DETAILS

PROJECT: SIXTH STREET VIADUCT REPLACEMENT

ADDRESS: SIXTH STREET VIADUCT (WHITTIER BLVD) LOS ANGELES, CA

HNTB
HNTB Corporation
601 W. 5TH STREET SUITE 1000
LOS ANGELES, CALIFORNIA 90071
TEL (213) 403-1000 FAX (213) 403-1001

WORK ORDER NO. E700224F

DRAWING NO. S5-20

SHEET 261 OF 562 SHEETS

THE CITY OF LOS ANGELES OR ITS OFFICERS OR AGENTS SHALL NOT BE RESPONSIBLE FOR THE ACCURACY OR COMPLETENESS OF ELECTRONIC COPIES OF THIS PLAN SHEET.

REVISION DATES (DESIGN STAGE ONLY)

C:\caddlib\pw\west_c3d\dms57683\S5-15-APS.dwg 2/16/22 12:20

Sheet Version 3.0

ADDENDUM 5

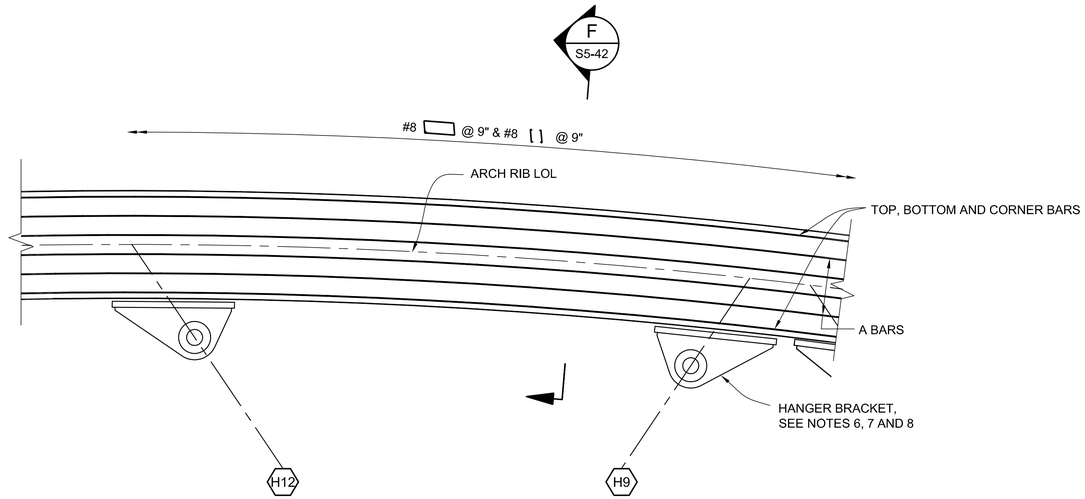

ARCH RIB CROWN REINFORCEMENT

SCALE: 1/2" =1'-0"

NOTES:

1. SEE DRAWING NO. S5-23 FOR NOTES.

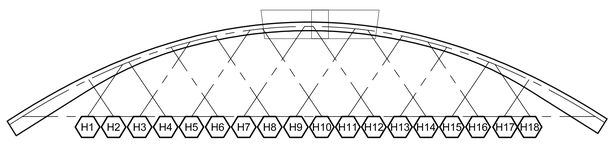

SPAN 5, 7, 8
TYPICAL KEY ELEVATION

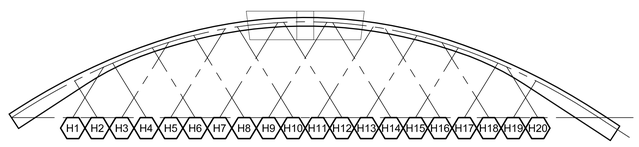

SPAN 3
KEY ELEVATION

THE CITY OF LOS ANGELES OR ITS OFFICERS OR AGENTS SHALL NOT BE RESPONSIBLE FOR THE ACCURACY OR COMPLETENESS OF ELECTRONIC COPIES OF THIS PLAN SHEET.

C:\caddlib\pw\pwwestcoast\zhang\dms57683\S5-21-AR01-30.dwg 6/27/16 17:25

REVISION DATES (DESIGN STAGE ONLY)

Sheet Version 3.0

BUREAU OF ENGINEERING
OFFICIAL RECORD

HNTB
HNTB Corporation
601 W. 5TH STREET SUITE 1000
LOS ANGELES, CALIFORNIA 90071
TEL (213) 403-1000 FAX (213) 403-1001

CITY OF LOS ANGELES DEPARTMENT OF PUBLIC WORKS BUREAU OF ENGINEERING

ENGINEERING CITY OF LOS ANGELES

NO.	REVISIONS:	DATE	BY:

STRUCTURE NO. 53C-2329

INDEX NO. P-38113

THIS PLAN WAS ELECTRONICALLY SIGNED AND STAMPED.

REGISTERED PROFESSIONAL ENGINEER MICHAEL H. JONES No. S3033 CIVIL STATE OF CALIFORNIA

CITY ENGINEER		DATE:
GARY LEE MOORE, P.E.		1/29/2016
DESIGN GROUP	LIC. NO. S3033	1/29/2016
ENGINEER: MICHAEL H. JONES		1/29/2016
DESIGNED BY: RUI LU		1/29/2016
DRAWN BY: TIMOTHY SEVERSON / LI ZHANG		1/29/2016
CHECKED BY: CHARLES REDFIELD		1/29/2016
APPROVED BY: MICHAEL H. JONES		

VERTICAL CONTROL: BM 12-04070,1929 (NGVD 29) - 1985 ADJUSTMENT
HORIZONTAL CONTROL: GPS; PID AE 1704, EPOCH 1991.35

SHEET TITLE: ARCH RIB REINFORCEMENT NO. 1

PROJECT: SIXTH STREET VIADUCT REPLACEMENT

ADDRESS: SIXTH STREET VIADUCT (WHITTIER BLVD) LOS ANGELES, CA

WORK ORDER NO. E700224F

DRAWING NO. S5-21

SHEET 262 OF 560 SHEETS

ADDENDUM 5

NOTES:

1. SEE DRAWING NO. S5-23 FOR NOTES.

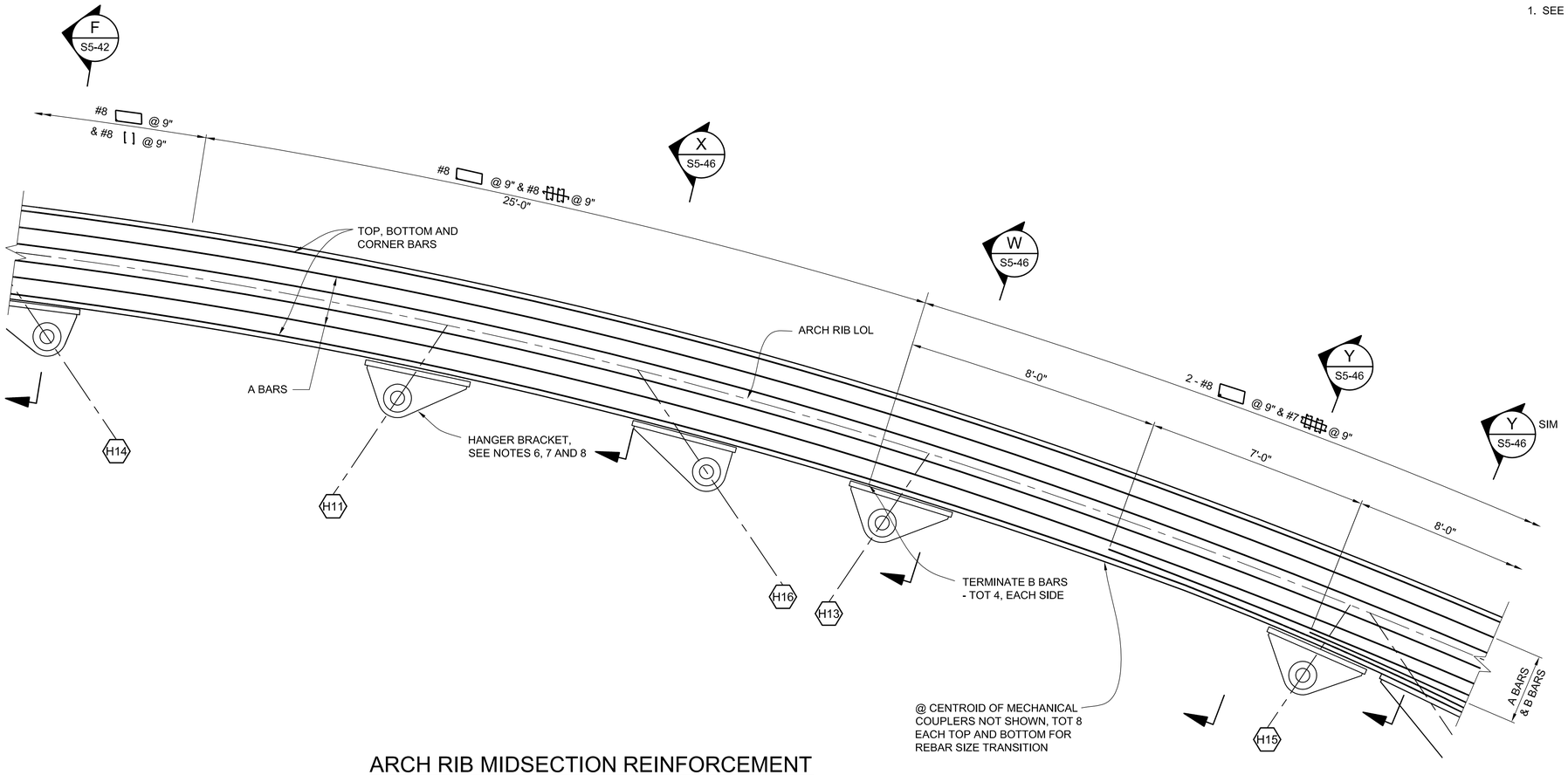

ARCH RIB MIDSECTION REINFORCEMENT

SCALE: 1/2" =1'-0"

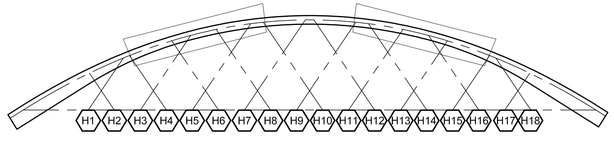

SPAN 5, 7, 8

TYPICAL KEY ELEVATION

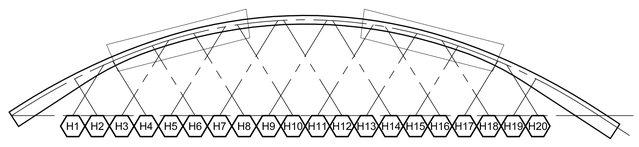

SPAN 3

KEY ELEVATION

THE CITY OF LOS ANGELES OR ITS OFFICERS OR AGENTS SHALL NOT BE RESPONSIBLE FOR THE ACCURACY OR COMPLETENESS OF ELECTRONIC COPIES OF THIS PLAN SHEET.

C:\caddlib\pw\pwwestcoast\zhang\dms57683\S5-21-AR01-30.dwg 6/27/16 17:25

REVISION DATES (DESIGN STAGE ONLY)

Sheet Version 3.0

BUREAU OF ENGINEERING • CITY OF LOS ANGELES • DEPARTMENT OF PUBLIC WORKS

ENGINEERING
CITY OF LOS ANGELES

NO.	REVISIONS:	DATE	BY:

STRUCTURE NO.
53C-2329

INDEX NO. **P-38113**

THIS PLAN WAS ELECTRONICALLY SIGNED AND STAMPED.

REGISTERED PROFESSIONAL ENGINEER
MICHAEL H. JONES
No. S3033
CIVIL
STATE OF CALIFORNIA

GARY LEE MOORE, P.E. CITY ENGINEER

		DESIGN GROUP	LIC. NO. S3033	DATE:
ENGINEER:	MICHAEL H. JONES			1/29/2016
DESIGNED BY:	RUI LU			1/29/2016
DRAWN BY:	TIMOTHY SEVERSON / LI ZHANG			1/29/2016
CHECKED BY:	CHARLES REDFIELD			1/29/2016
APPROVED BY:	MICHAEL H. JONES			1/29/2016

BUREAU OF ENGINEERING
OFFICIAL RECORD

HNTB
HNTB Corporation
601 W. 5TH STREET SUITE 1000
LOS ANGELES, CALIFORNIA 90071
TEL (213) 403-1000 FAX (213) 403-1001

VERTICAL CONTROL: BM 12-04070.1929 (NGVD 29) - 1985 ADJUSTMENT
HORIZONTAL CONTROL: GPS; PID AE 1704, EPOCH 1991.35

SHEET TITLE: ARCH RIB REINFORCEMENT NO. 2

PROJECT: SIXTH STREET VIADUCT REPLACEMENT

ADDRESS: SIXTH STREET VIADUCT (WHITTIER BLVD)
LOS ANGELES, CA

WORK ORDER NO.
E700224F

DRAWING NO.
S5-22

SHEET 263 OF 560 SHEETS

ADDENDUM 5

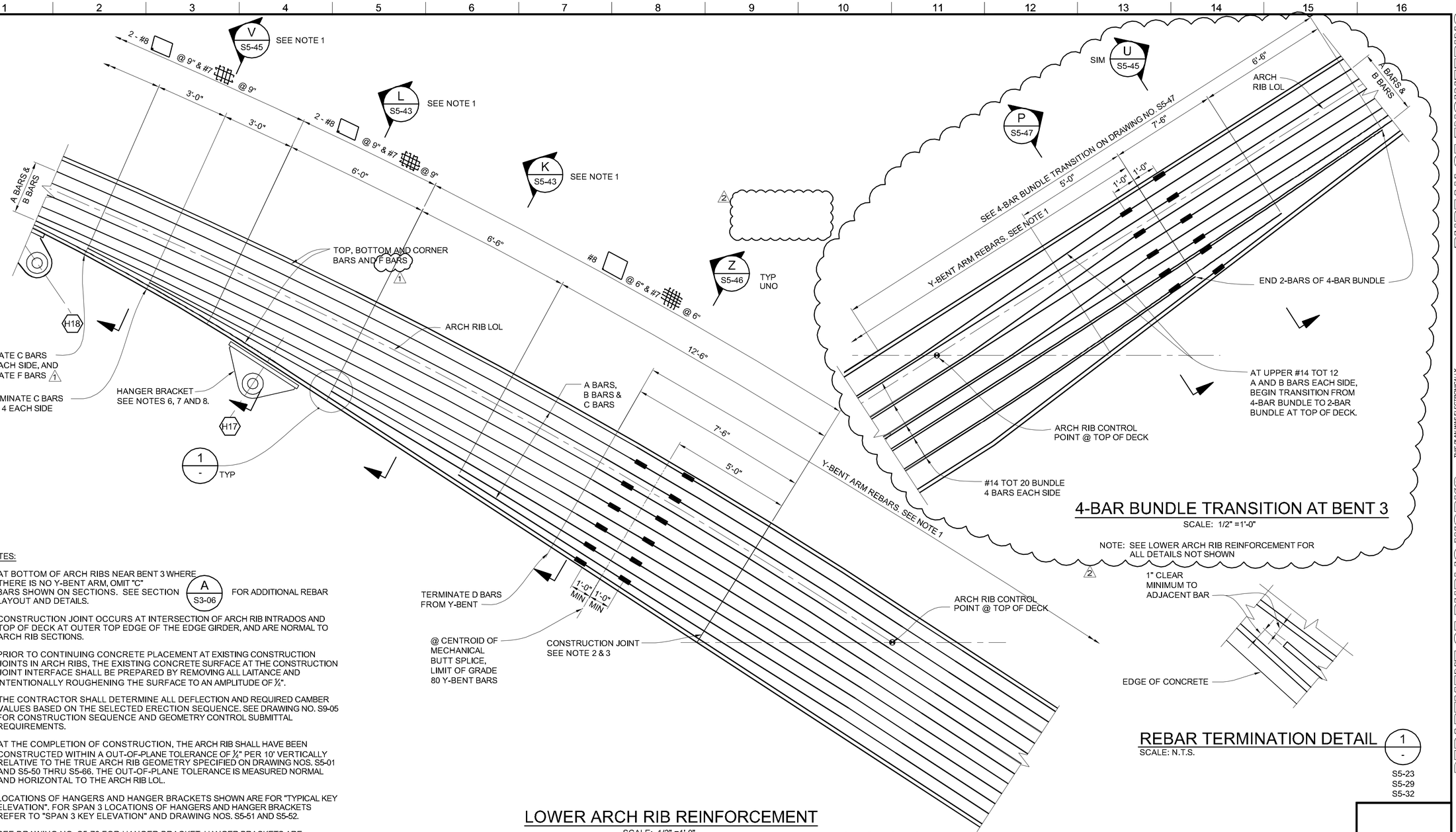

4-BAR BUNDLE TRANSITION AT BENT 3

SCALE: 1/2" =1'-0"

NOTE: SEE LOWER ARCH RIB REINFORCEMENT FOR ALL DETAILS NOT SHOWN

REBAR TERMINATION DETAIL

SCALE: N.T.S.

1
-

S5-23
S5-29
S5-32

NOTES:

1. AT BOTTOM OF ARCH RIBS NEAR BENT 3 WHERE THERE IS NO Y-BENT ARM, OMIT "C" BARS SHOWN ON SECTIONS. SEE SECTION A / S3-06 FOR ADDITIONAL REBAR LAYOUT AND DETAILS.
2. CONSTRUCTION JOINT OCCURS AT INTERSECTION OF ARCH RIB INTRADOS AND TOP OF DECK AT OUTER TOP EDGE OF THE EDGE GIRDER, AND ARE NORMAL TO ARCH RIB SECTIONS.
3. PRIOR TO CONTINUING CONCRETE PLACEMENT AT EXISTING CONSTRUCTION JOINTS IN ARCH RIBS, THE EXISTING CONCRETE SURFACE AT THE CONSTRUCTION JOINT INTERFACE SHALL BE PREPARED BY REMOVING ALL LAITANCE AND INTENTIONALLY ROUGHENING THE SURFACE TO AN AMPLITUDE OF ¼".
4. THE CONTRACTOR SHALL DETERMINE ALL DEFLECTION AND REQUIRED CAMBER VALUES BASED ON THE SELECTED ERECTION SEQUENCE. SEE DRAWING NO. S9-05 FOR CONSTRUCTION SEQUENCE AND GEOMETRY CONTROL SUBMITTAL REQUIREMENTS.
5. AT THE COMPLETION OF CONSTRUCTION, THE ARCH RIB SHALL HAVE BEEN CONSTRUCTED WITHIN A OUT-OF-PLANE TOLERANCE OF ¼" PER 10' VERTICALLY RELATIVE TO THE TRUE ARCH RIB GEOMETRY SPECIFIED ON DRAWING NOS. S5-01 AND S5-50 THRU S5-66. THE OUT-OF-PLANE TOLERANCE IS MEASURED NORMAL AND HORIZONTAL TO THE ARCH RIB LOL.
6. LOCATIONS OF HANGERS AND HANGER BRACKETS SHOWN ARE FOR "TYPICAL KEY ELEVATION". FOR SPAN 3 LOCATIONS OF HANGERS AND HANGER BRACKETS REFER TO "SPAN 3 KEY ELEVATION" AND DRAWING NOS. S5-51 AND S5-52.
7. SEE DRAWING NO. S5-72 FOR HANGER BRACKET. HANGER BRACKETS ARE INSTALLED ECCENTRIC TO THE CENTER LINE OF THE ARCH RIB AND ECCENTRICITY IS VARIED TO AVOID INTERFERENCE BETWEEN HANGER SOCKETS. SEE "PLAN VIEW OF HANGER ECCENTRICITY" ON DRAWING NO. S5-71 AND NOTE 14 ON DRAWING NO. S5-72.
8. THE ALTERNATE HANGER BRACKET SHOWN ON S5-73 MAY BE USED EXCEPT AT THE FIRST TWO HANGERS ABOVE THE ARCH RIB KNUCKLE AND WHERE INSUFFICIENT CLEARANCE EXIST BETWEEN BRACKET AT THE ARCH EXTRADOS. THE ALTERNATE DETAIL CANNOT ALSO BE USED AT THE NORTH ARCH RIB OF SPAN 8 AND THE SOUTH ARCH RIB OF SPAN 9 TO ACCOMMODATE POSSIBLE FUTURE STAIRS.

LOWER ARCH RIB REINFORCEMENT

SCALE: 1/2" =1'-0"

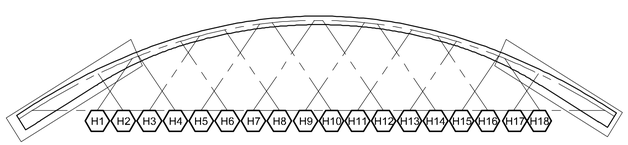

SPAN 5, 7, 8

TYPICAL KEY ELEVATION

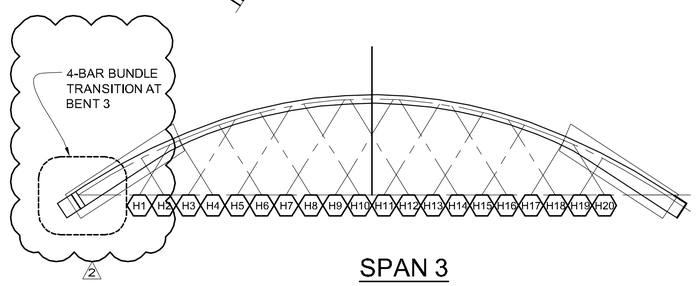

SPAN 3

KEY ELEVATION

THE CITY OF LOS ANGELES OR ITS OFFICERS OR AGENTS SHALL NOT BE RESPONSIBLE FOR THE ACCURACY OR COMPLETENESS OF ELECTRONIC COPIES OF THIS PLAN SHEET.

REVISION DATES (DESIGN STAGE ONLY)

C:\caddlib\pw\pwwestcoast\zhang\dms576831\S5-21-AR01-30.dwg 3/14/18 17:27

Sheet Version 3.0

BUREAU OF ENGINEERING

ENGINEERING
CITY OF LOS ANGELES

NO.	REVISIONS:	DATE:	BY:
1	BIM REVISION 4 ECO 57	02/16/18	MHJ
2	BIM REVISION 5 ECO 59	3/16/18	MHJ

STRUCTURE NO. 53C-2329

INDEX NO.

THIS PLAN WAS ELECTRONICALLY SIGNED AND STAMPED.

REGISTERED PROFESSIONAL ENGINEER MICHAEL H. JONES No. S3033 RENEWAL 06/30/2019 STATE OF CALIFORNIA

GARY LEE MOORE, P.E. CITY ENGINEER

ENGINEER:	MICHAEL H. JONES	LIC.NO. S3033	DATE: 1/29/2016
DESIGNED BY:	RUI LU	DESIGN GROUP	1/29/2016
DRAWN BY:	TIMOTHY SEVERSON / LI ZHANG		1/29/2016
CHECKED BY:	CHARLES REDFIELD		1/29/2016
APPROVED BY:	MICHAEL H. JONES		1/29/2016

CITY OF LOS ANGELES DEPARTMENT OF PUBLIC WORKS

VERTICAL CONTROL: BM 12-04070, 1929 (NGVD 29) - 1985 ADJUSTMENT
HORIZONTAL CONTROL: GPS, PID AE 1704, EPOCH 1991.35

SHEET TITLE: ARCH RIB REINFORCEMENT NO. 3

PROJECT: SIXTH STREET VIADUCT REPLACEMENT

ADDRESS: SIXTH STREET VIADUCT (WHITTIER BLVD) LOS ANGELES, CA

HNTB
HNTB Corporation
601 W. 5TH STREET SUITE 1000
LOS ANGELES, CALIFORNIA 90071
TEL (213) 403-1000 FAX (213) 403-1001

WORK ORDER NO. E700224F

DRAWING NO. S5-23

SHEET 264 OF 560 SHEETS

ADDENDUM 5

NOTES:

1. SEE DRAWING NO. S5-23 FOR NOTES.

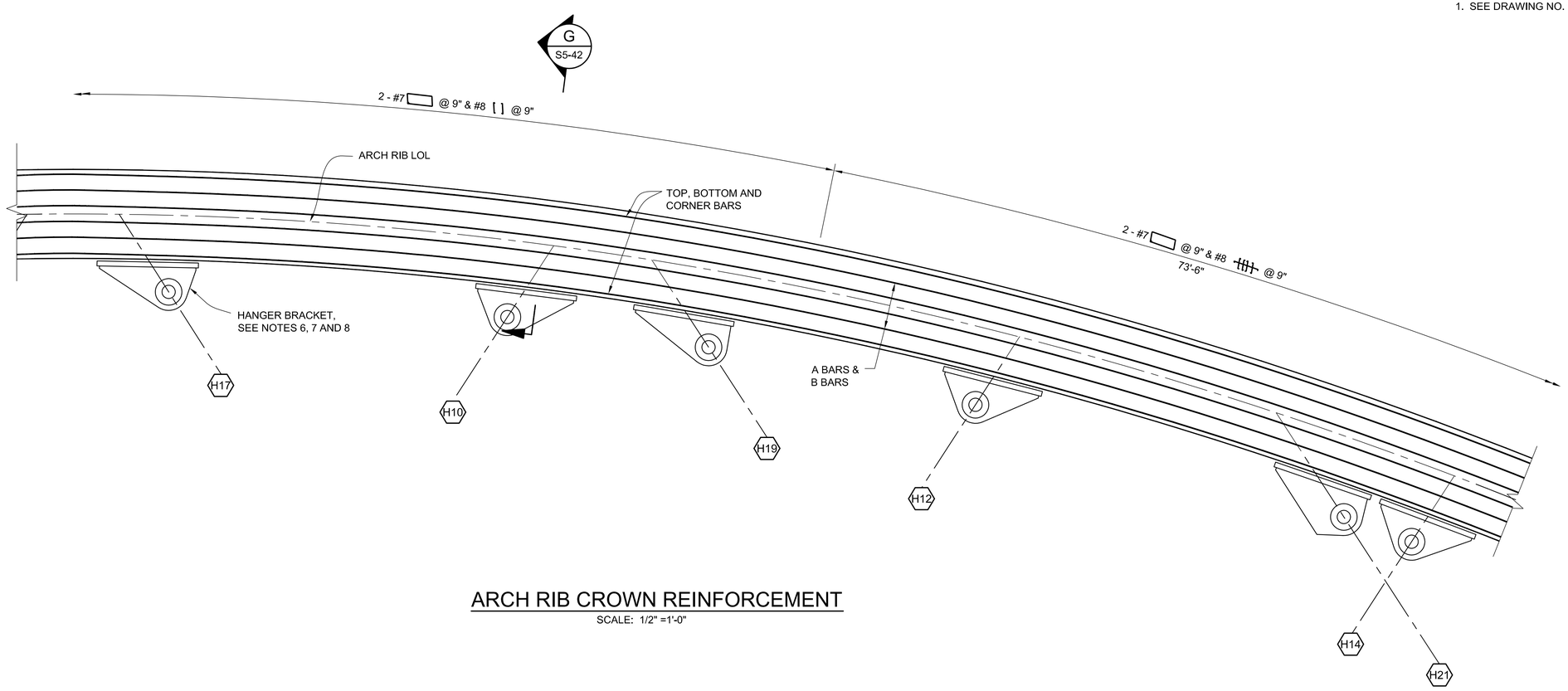

ARCH RIB CROWN REINFORCEMENT

SCALE: 1/2" =1'-0"

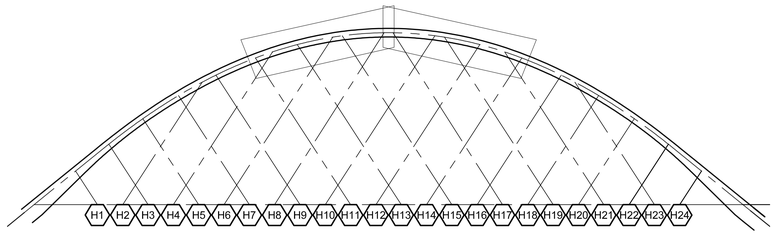

SPAN 4 AND 6
KEY ELEVATION

BUREAU OF ENGINEERING
OFFICIAL RECORD

HNTB
HNTB Corporation
601 W. 5TH STREET SUITE 1000
LOS ANGELES, CALIFORNIA 90071
TEL (213) 403-1000 FAX (213) 403-1001

CITY OF LOS ANGELES DEPARTMENT OF PUBLIC WORKS

BUREAU OF ENGINEERING

ENGINEERING
CITY OF LOS ANGELES

NO.	REVISIONS:	DATE	BY:

STRUCTURE NO. 53C-2329

INDEX NO. P-38113

REGISTERED PROFESSIONAL ENGINEER
MICHAEL H. JONES
No. S3033
CIVIL
STATE OF CALIFORNIA

THIS PLAN WAS ELECTRONICALLY SIGNED AND STAMPED.

CITY ENGINEER	GARY LEE MOORE, P.E.
DESIGN GROUP	
ENGINEER:	MICHAEL H. JONES
LIC. NO. S3033	DATE: 1/29/2016
DESIGNED BY: RUI LU	1/29/2016
DRAWN BY: TIMOTHY SEVERSON / LI ZHANG	1/29/2016
CHECKED BY: CHARLES REDFIELD	1/29/2016
APPROVED BY: MICHAEL H. JONES	1/29/2016

VERTICAL CONTROL: BM 12-04070,1929 (NGVD 29) - 1985 ADJUSTMENT
HORIZONTAL CONTROL: GPS; PID AE 1704, EPOCH 1991.35

SHEET TITLE: ARCH RIB REINFORCEMENT NO. 4

PROJECT: SIXTH STREET VIADUCT REPLACEMENT

ADDRESS: SIXTH STREET VIADUCT (WHITTIER BLVD)
LOS ANGELES, CA

WORK ORDER NO. E700224F

DRAWING NO. S5-24

SHEET 265 OF 560 SHEETS

THE CITY OF LOS ANGELES OR ITS OFFICERS OR AGENTS SHALL NOT BE RESPONSIBLE FOR THE ACCURACY OR COMPLETENESS OF ELECTRONIC COPIES OF THIS PLAN SHEET.

C:\caddlib\pw\pwwestcoast\zhang\dms57683\S5-21-AR01-30.dwg 6/27/16 17:26

REVISION DATES (DESIGN STAGE ONLY)

Sheet Version 3.0

ADDENDUM 5

NOTES:

1. SEE DRAWING NO. S5-23 FOR NOTES.

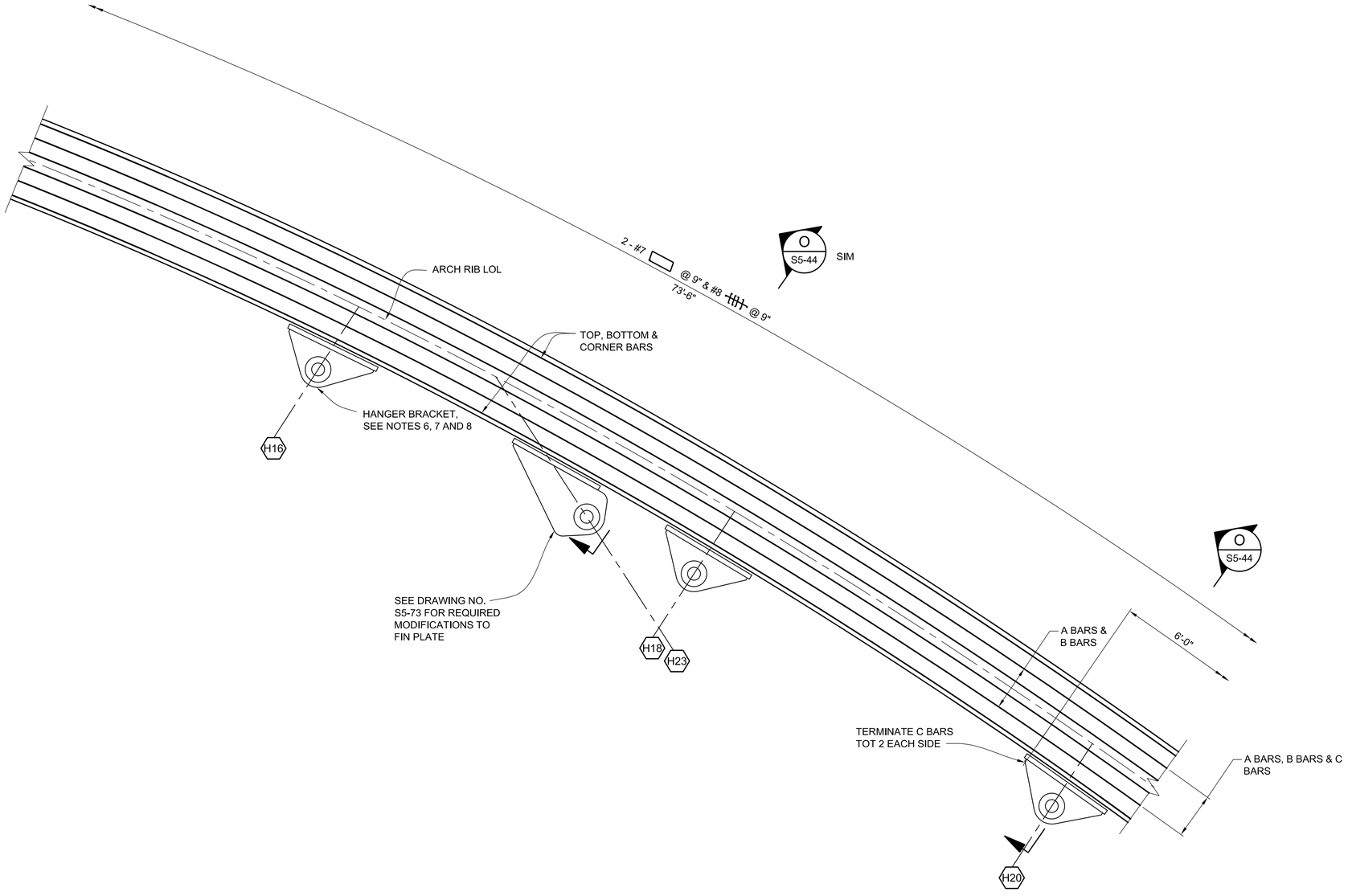

ARCH RIB MIDSECTION REINFORCEMENT

SCALE: 1/2" =1'-0"

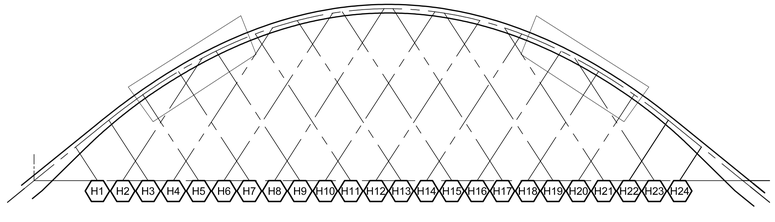

SPAN 4 AND 6

KEY ELEVATION

THE CITY OF LOS ANGELES OR ITS OFFICERS OR AGENTS SHALL NOT BE RESPONSIBLE FOR THE ACCURACY OR COMPLETENESS OF ELECTRONIC COPIES OF THIS PLAN SHEET.

REVISION DATES (DESIGN STAGE ONLY)

C:\caddlib\pw\pwwestcoast\zhang\dms57683\S5-21-AR01-30.dwg 6/27/16 17:26

Sheet Version 3.0

HNTB
HNTB Corporation
601 W. 5TH STREET SUITE 1000
LOS ANGELES, CALIFORNIA 90071
TEL (213) 403-1000 FAX (213) 403-1001

BUREAU OF ENGINEERING
OFFICIAL RECORD

CITY OF LOS ANGELES DEPARTMENT OF PUBLIC WORKS

BUREAU OF ENGINEERING

ENGINEERING
CITY OF LOS ANGELES

NO.	REVISIONS:	DATE	BY:

STRUCTURE NO.
53C-2329

INDEX NO. P-38113

THIS PLAN WAS ELECTRONICALLY SIGNED AND STAMPED.

REGISTERED PROFESSIONAL ENGINEER
MICHAEL H. JONES
No. S3033
CIVIL
STATE OF CALIFORNIA

GARY LEE MOORE, P.E. CITY ENGINEER

		DATE:
DESIGN GROUP		
ENGINEER:	MICHAEL H. JONES LIC. NO. S3033	1/29/2016
DESIGNED BY:	RUI LU	1/29/2016
DRAWN BY:	TIMOTHY SEVERSON / LI ZHANG	1/29/2016
CHECKED BY:	CHARLES REDFIELD	1/29/2016
APPROVED BY:	MICHAEL H. JONES	1/29/2016

VERTICAL CONTROL: BM 12-04070, 1929 (NGVD 29) - 1985 ADJUSTMENT
HORIZONTAL CONTROL: GPS; PID AE 1704, EPOCH 1991.35

SHEET TITLE: ARCH RIB REINFORCEMENT NO. 5

PROJECT: SIXTH STREET VIADUCT REPLACEMENT

ADDRESS: SIXTH STREET VIADUCT (WHITTIER BLVD)
LOS ANGELES, CA

WORK ORDER NO.
E700224F

DRAWING NO.
S5-25

SHEET 266 OF 560 SHEETS

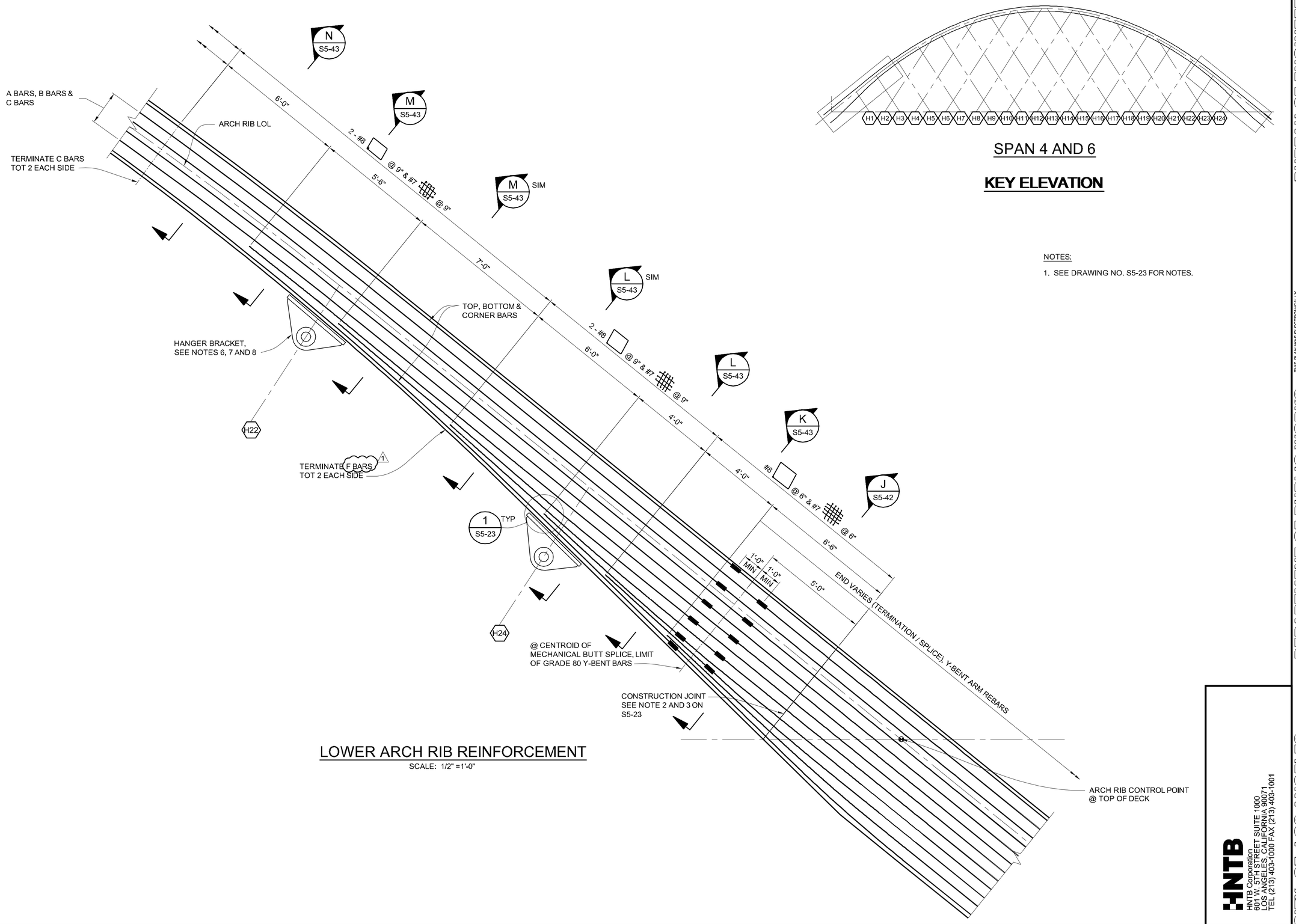

LOWER ARCH RIB REINFORCEMENT

SCALE: 1/2" =1'-0"

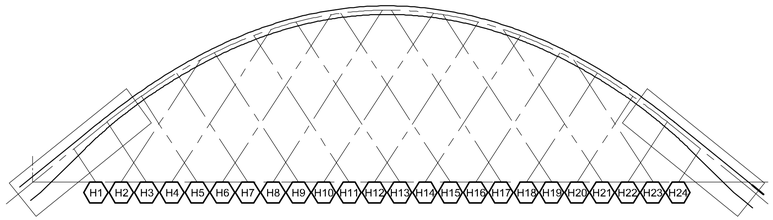

SPAN 4 AND 6

KEY ELEVATION

NOTES:

1. SEE DRAWING NO. S5-23 FOR NOTES.

HNTB
HNTB Corporation
601 W. 5TH STREET SUITE 1000
LOS ANGELES, CALIFORNIA 90071
TEL (213) 403-1000 FAX (213) 403-1001

CITY OF LOS ANGELES DEPARTMENT OF PUBLIC WORKS

BUREAU OF ENGINEERING

ENGINEERING
CITY OF LOS ANGELES

NO.	REVISIONS:	DATE:	BY:
1	BIM REVISION 4	02/18/18	MHJ

STRUCTURE NO. 53C-2329

INDEX NO.

THIS PLAN WAS ELECTRONICALLY SIGNED AND STAMPED.

REGISTERED PROFESSIONAL ENGINEER MICHAEL H. JONES No. S3033 EXP. 05-31-16 STRUCTURAL STATE OF CALIFORNIA

GARY LEE MOORE, P.E. CITY ENGINEER

		DATE:
ENGINEER:	DESIGN GROUP MICHAEL H. JONES LIC. NO. S3033	1/29/2016
DESIGNED BY:	RUI LU	1/29/2016
DRAWN BY:	TIMOTHY SEVERSON / LI ZHANG	1/29/2016
CHECKED BY:	CHARLES REDFIELD	1/29/2016
APPROVED BY:	MICHAEL H. JONES	1/29/2016

VERTICAL CONTROL: BM 12-04070, 1929 (NGVD 29) - 1985 ADJUSTMENT
HORIZONTAL CONTROL: GPS; PID AE 1704, EPOCH 1991.35

SHEET TITLE: ARCH RIB REINFORCEMENT NO. 6

PROJECT: SIXTH STREET VIADUCT REPLACEMENT

ADDRESS: SIXTH STREET VIADUCT (WHITTIER BLVD) LOS ANGELES, CA

WORK ORDER NO. E700224F

DRAWING NO. S5-26

SHEET 267 OF 560 SHEETS

THE CITY OF LOS ANGELES OR ITS OFFICERS OR AGENTS SHALL NOT BE RESPONSIBLE FOR THE ACCURACY OR COMPLETENESS OF ELECTRONIC COPIES OF THIS PLAN SHEET.

REVISION DATES (DESIGN STAGE ONLY)

C:\caddlib\pw\pwwestcoast\lzhang\dms57683\S5-21-AR01-30.dwg 2/16/18 17:00

Sheet Version 3.0

ADDENDUM 5

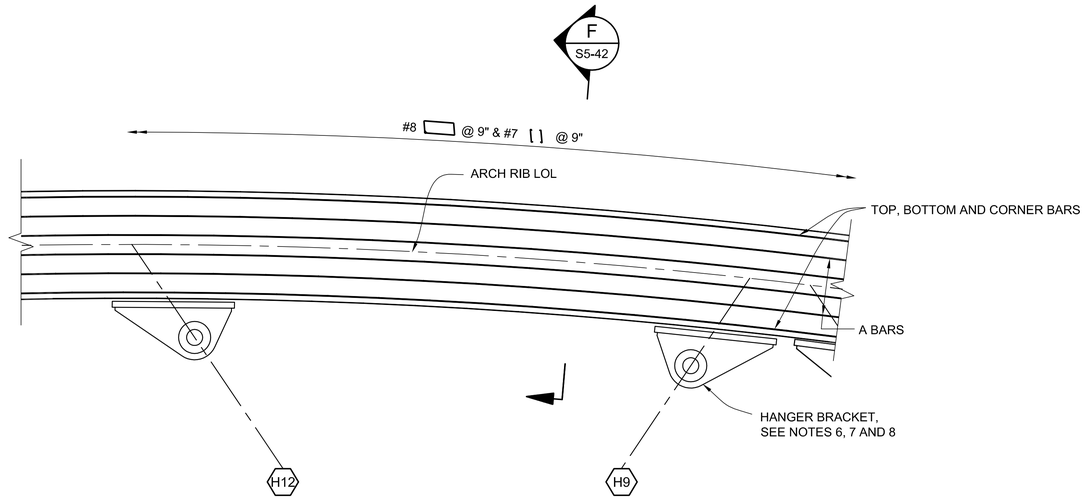

ARCH RIB CROWN REINFORCEMENT

SCALE: 1/2" =1'-0"

NOTES:

1. SEE DRAWING NO. S5-23 FOR NOTES.

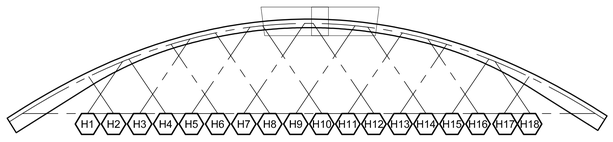

SPAN 9, 10, 11
TYPICAL KEY ELEVATION

THE CITY OF LOS ANGELES OR ITS OFFICERS OR AGENTS SHALL NOT BE RESPONSIBLE FOR THE ACCURACY OR COMPLETENESS OF ELECTRONIC COPIES OF THIS PLAN SHEET.

C:\caddlib\pw\pwwestcoast\zhang\dms57683\S5-21-AR01-30.dwg 6/27/16 17:26

Sheet Version 3.0

REVISION DATES (DESIGN STAGE ONLY)

BUREAU OF ENGINEERING

OFFICIAL RECORD

HNTB
HNTB Corporation
601 W. 5TH STREET SUITE 1000
LOS ANGELES, CALIFORNIA 90071
TEL (213) 403-1000 FAX (213) 403-1001

CITY OF LOS ANGELES DEPARTMENT OF PUBLIC WORKS

BUREAU OF ENGINEERING

ENGINEERING
CITY OF LOS ANGELES

NO.	REVISIONS:	DATE	BY:

STRUCTURE NO. 53C-2329

INDEX NO. P-38113

THIS PLAN WAS ELECTRONICALLY SIGNED AND STAMPED.

REGISTERED PROFESSIONAL ENGINEER MICHAEL H. JONES No. S3033 CIVIL STATE OF CALIFORNIA

CITY ENGINEER		DATE:
GARY LEE MOORE, P.E.		1/29/2016
DESIGN GROUP	LIC. NO. S3033	1/29/2016
ENGINEER: MICHAEL H. JONES		1/29/2016
DESIGNED BY: RUI LU		1/29/2016
DRAWN BY: TIMOTHY SEVERSON / LI ZHANG		1/29/2016
CHECKED BY: CHARLES REDFIELD		1/29/2016
APPROVED BY: MICHAEL H. JONES		

VERTICAL CONTROL: BM 12-04070,1929 (NGVD 29) - 1985 ADJUSTMENT
HORIZONTAL CONTROL: GPS; PID AE 1704, EPOCH 1991.35

SHEET TITLE: ARCH RIB REINFORCEMENT NO. 7

PROJECT: SIXTH STREET VIADUCT REPLACEMENT

ADDRESS: SIXTH STREET VIADUCT (WHITTIER BLVD) LOS ANGELES, CA

WORK ORDER NO. E700224F

DRAWING NO. S5-27

SHEET 268 OF 560 SHEETS

ADDENDUM 5

NOTES:

1. SEE DRAWING NO. S5-23 FOR NOTES.

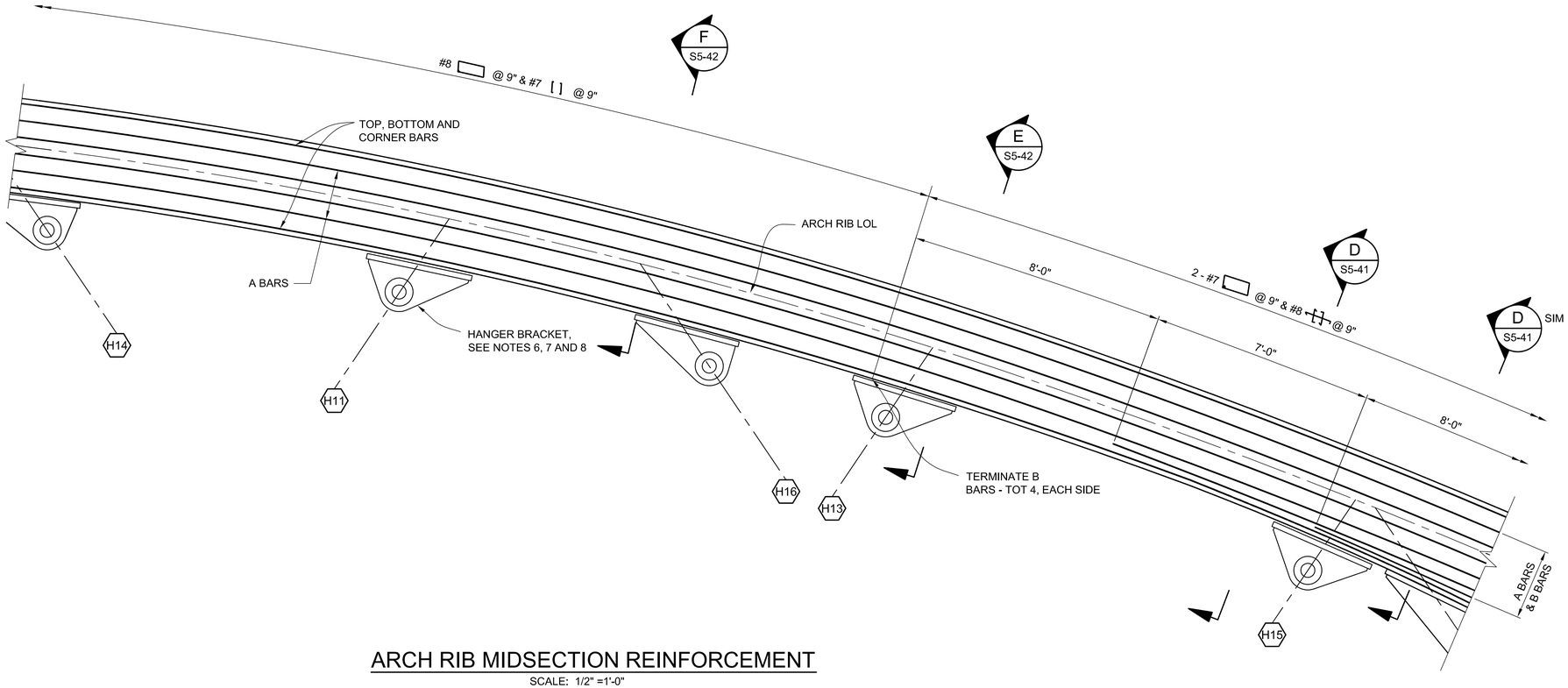

ARCH RIB MIDSECTION REINFORCEMENT

SCALE: 1/2" =1'-0"

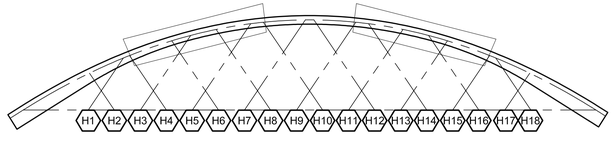

SPAN 9, 10, 11

TYPICAL KEY ELEVATION

THE CITY OF LOS ANGELES OR ITS OFFICERS OR AGENTS SHALL NOT BE RESPONSIBLE FOR THE ACCURACY OR COMPLETENESS OF ELECTRONIC COPIES OF THIS PLAN SHEET.

C:\caddlib\pw\pwwestcoast\zhang\dms57683\S5-21-AR01-30.dwg 6/27/16 17:26

REVISION DATES (DESIGN STAGE ONLY)

Sheet Version 3.0

BUREAU OF ENGINEERING OFFICIAL RECORD

HNTB
HNTB Corporation
601 W. 5TH STREET SUITE 1000
LOS ANGELES, CALIFORNIA 90071
TEL (213) 403-1000 FAX (213) 403-1001

CITY OF LOS ANGELES DEPARTMENT OF PUBLIC WORKS BUREAU OF ENGINEERING

ENGINEERING CITY OF LOS ANGELES

NO.	REVISIONS:	DATE	BY:

STRUCTURE NO. 53C-2329

INDEX NO. P-38113

THIS PLAN WAS ELECTRONICALLY SIGNED AND STAMPED.

REGISTERED PROFESSIONAL ENGINEER MICHAEL H. JONES No. S3033 CIVIL STATE OF CALIFORNIA

GARY LEE MOORE, P.E. CITY ENGINEER

		DATE:
ENGINEER:	MICHAEL H. JONES LIC. NO. S3033	1/29/2016
DESIGNED BY:	RUI LU	1/29/2016
DRAWN BY:	TIMOTHY SEVERSON / LI ZHANG	1/29/2016
CHECKED BY:	CHARLES REDFIELD	1/29/2016
APPROVED BY:	MICHAEL H. JONES	1/29/2016

DESIGN GROUP

VERTICAL CONTROL: BM 12-04070, 1929 (NGVD 29) - 1985 ADJUSTMENT
HORIZONTAL CONTROL: GPS; PID AE 1704, EPOCH 1991.35

SHEET TITLE: ARCH RIB REINFORCEMENT NO. 8

PROJECT: SIXTH STREET VIADUCT REPLACEMENT

ADDRESS: SIXTH STREET VIADUCT (WHITTIER BLVD) LOS ANGELES, CA

WORK ORDER NO. E700224F

DRAWING NO. S5-28

SHEET 269 OF 560 SHEETS

ADDENDUM 5

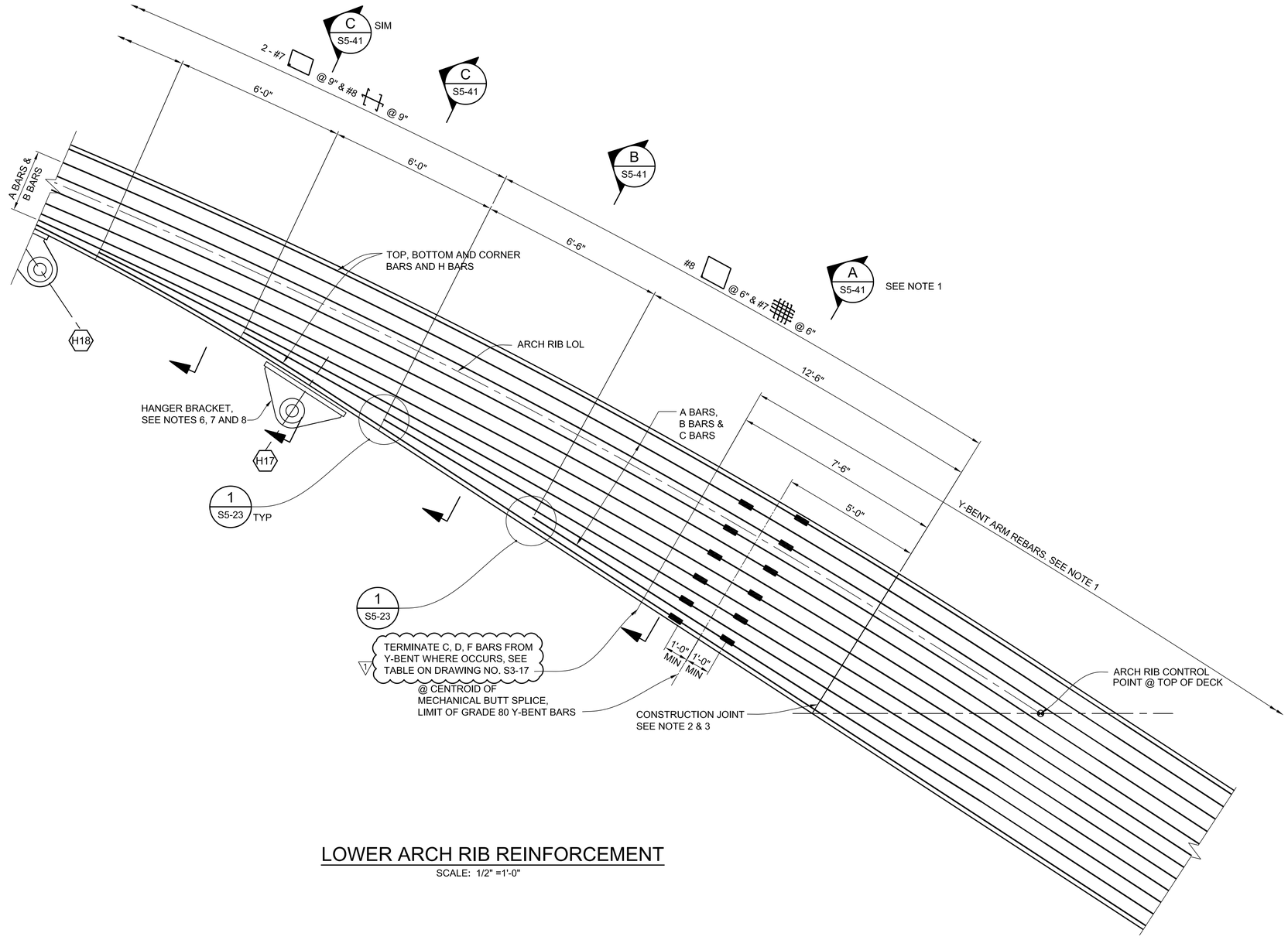

NOTES:

1. SEE DRAWING NO. S5-23 FOR NOTES.

LOWER ARCH RIB REINFORCEMENT

SCALE: 1/2" =1'-0"

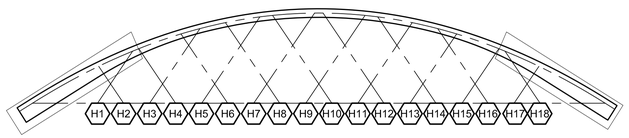

SPAN 9, 10, 11

TYPICAL KEY ELEVATION

THE CITY OF LOS ANGELES OR ITS OFFICERS OR AGENTS SHALL NOT BE RESPONSIBLE FOR THE ACCURACY OR COMPLETENESS OF ELECTRONIC COPIES OF THIS PLAN SHEET.

REVISION DATES (DESIGN STAGE ONLY)

C:\caddlib\pw\pwwestcoast\zhang\dms57683\S5-21-AR01-30.dwg 9/08/16 11:40

Sheet Version 3.0

HNTB
HNTB Corporation
601 W. 5TH STREET SUITE 1000
LOS ANGELES, CALIFORNIA 90071
TEL (213) 403-1000 FAX (213) 403-1001

CITY OF LOS ANGELES DEPARTMENT OF PUBLIC WORKS BUREAU OF ENGINEERING

ENGINEERING
CITY OF LOS ANGELES

NO.	REVISIONS:	DATE	BY:
1	ADDENDUM NO. 1	08/23/16	MHJ

STRUCTURE NO.
53C-2329

INDEX NO.

THIS PLAN WAS ELECTRONICALLY SIGNED AND STAMPED.

REGISTERED PROFESSIONAL ENGINEER
MICHAEL H. JONES
No. S3033
CIVIL
STATE OF CALIFORNIA

GARY LEE MOORE, P.E. CITY ENGINEER

		DATE:
ENGINEER:	MICHAEL H. JONES	1/29/2016
DESIGNED BY:	RUI LU	1/29/2016
DRAWN BY:	TIMOTHY SEVERSON / LI ZHANG	1/29/2016
CHECKED BY:	CHARLES REDFIELD	1/29/2016
APPROVED BY:	MICHAEL H. JONES	1/29/2016

DESIGN GROUP
LIC. NO. S3033

VERTICAL CONTROL: BM 12-04070, 1929 (NGVD 29) - 1985 ADJUSTMENT
HORIZONTAL CONTROL: GPS; PID AE 1704, EPOCH 1991.35

SHEET TITLE: ARCH RIB REINFORCEMENT NO. 9

PROJECT: SIXTH STREET VIADUCT REPLACEMENT

ADDRESS: SIXTH STREET VIADUCT (WHITTIER BLVD)
LOS ANGELES, CA

WORK ORDER NO.
E700224F

DRAWING NO.
S5-29

SHEET 20 OF SHEETS

ADDENDUM 5

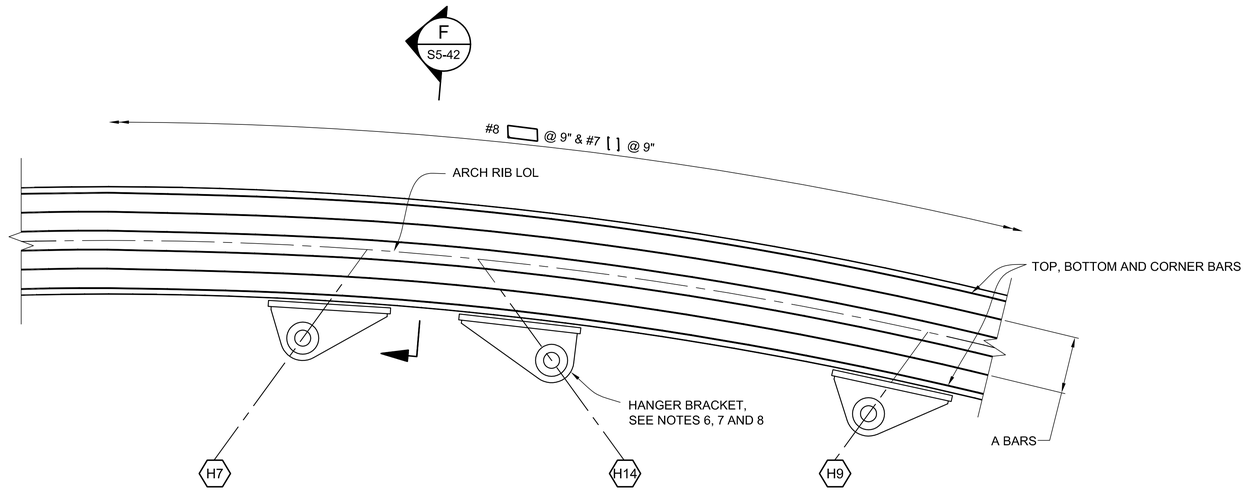

ARCH RIB CROWN REINFORCEMENT

SCALE: 1/2" =1'-0"

NOTES:

1. SEE DRAWING NO. S5-23 FOR NOTES.

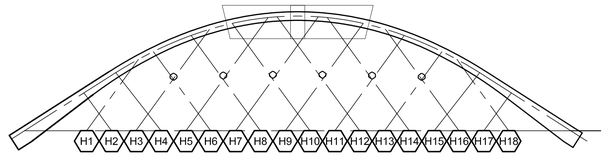

SPAN 12

KEY ELEVATION

THE CITY OF LOS ANGELES OR ITS OFFICERS OR AGENTS SHALL NOT BE RESPONSIBLE FOR THE ACCURACY OR COMPLETENESS OF ELECTRONIC COPIES OF THIS PLAN SHEET.

C:\caddlib\pw\pwwestcoast\zhang\dms57683\S5-21-AR01-30.dwg 6/27/16 17:26

REVISION DATES (DESIGN STAGE ONLY)

Sheet Version 3.0

BUREAU OF ENGINEERING

OFFICIAL RECORD

HNTB
HNTB Corporation
601 W. 5TH STREET SUITE 1000
LOS ANGELES, CALIFORNIA 90071
TEL (213) 403-1000 FAX (213) 403-1001

CITY OF LOS ANGELES DEPARTMENT OF PUBLIC WORKS

BUREAU OF ENGINEERING

ENGINEERING
CITY OF LOS ANGELES

NO.	REVISIONS:	DATE	BY:

STRUCTURE NO. 53C-2329

INDEX NO. P-38113

THIS PLAN WAS ELECTRONICALLY SIGNED AND STAMPED.

REGISTERED PROFESSIONAL ENGINEER
MICHAEL H. JONES
No. S3033
CIVIL
STATE OF CALIFORNIA

CITY ENGINEER

GARY LEE MOORE, P.E.

DESIGN GROUP

		LIC. NO. S3033	DATE:
ENGINEER:	MICHAEL H. JONES		1/29/2016
DESIGNED BY:	RUI LU		1/29/2016
DRAWN BY:	TIMOTHY SEVERSON / LI ZHANG		1/29/2016
CHECKED BY:	CHARLES REDFIELD		1/29/2016
APPROVED BY:	MICHAEL H. JONES		1/29/2016

VERTICAL CONTROL: BM 12-04070,1929 (NGVD 29) - 1985 ADJUSTMENT
HORIZONTAL CONTROL: GPS; PID AE 1704, EPOCH 1991.35

SHEET TITLE: ARCH RIB REINFORCEMENT NO. 10

PROJECT: SIXTH STREET VIADUCT REPLACEMENT

ADDRESS: SIXTH STREET VIADUCT (WHITTIER BLVD)
LOS ANGELES, CA

WORK ORDER NO. E700224F

DRAWING NO. S5-30

SHEET 271 OF 560 SHEETS

ADDENDUM 5

NOTES:

1. SEE DRAWING NO. S5-23 FOR NOTES.

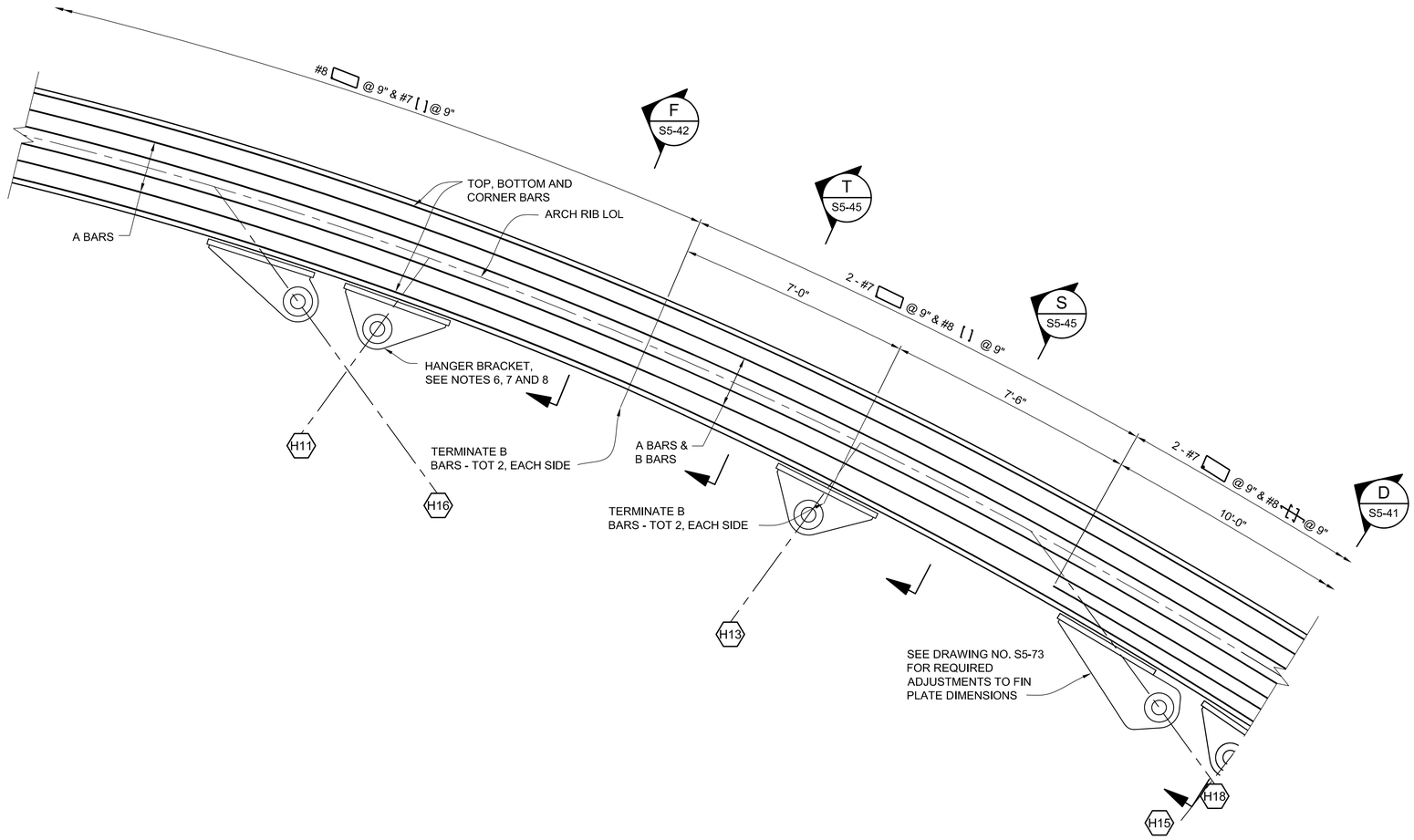

ARCH RIB MIDSECTION REINFORCEMENT

SCALE: 1/2" =1'-0"

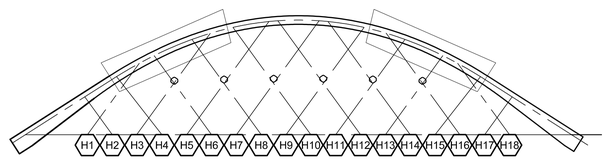

SPAN 12

KEY ELEVATION

THE CITY OF LOS ANGELES OR ITS OFFICERS OR AGENTS SHALL NOT BE RESPONSIBLE FOR THE ACCURACY OR COMPLETENESS OF ELECTRONIC COPIES OF THIS PLAN SHEET.

REVISION DATES (DESIGN STAGE ONLY)

C:\caddlib\pw\pwwestcoast\zhang\dms57683\S5-21-AR01-30.dwg 6/27/16 17:26

Sheet Version 3.0

BUREAU OF ENGINEERING

OFFICIAL RECORD

HNTB
HNTB Corporation
601 W. 5TH STREET SUITE 1000
LOS ANGELES, CALIFORNIA 90071
TEL (213) 403-1000 FAX (213) 403-1001

CITY OF LOS ANGELES DEPARTMENT OF PUBLIC WORKS BUREAU OF ENGINEERING

ENGINEERING CITY OF LOS ANGELES

NO.	REVISIONS:	DATE	BY:

STRUCTURE NO. 53C-2329

INDEX NO. P-38113

THIS PLAN WAS ELECTRONICALLY SIGNED AND STAMPED.

REGISTERED PROFESSIONAL ENGINEER MICHAEL H. JONES No. S3033 CIVIL STATE OF CALIFORNIA

GARY LEE MOORE, P.E.	CITY ENGINEER	DATE: 1/29/2016
DESIGN GROUP		LIC. NO. S3033
ENGINEER:	MICHAEL H. JONES	1/29/2016
DESIGNED BY:	RUI LU	1/29/2016
DRAWN BY:	TIMOTHY SEVERSON / LI ZHANG	1/29/2016
CHECKED BY:	CHARLES REDFIELD	1/29/2016
APPROVED BY:	MICHAEL H. JONES	1/29/2016

VERTICAL CONTROL: BM 12-04070, 1929 (NGVD 29) - 1985 ADJUSTMENT
HORIZONTAL CONTROL: GPS; PID AE 1704, EPOCH 1991.35

SHEET TITLE: ARCH RIB REINFORCEMENT NO. 11

PROJECT: SIXTH STREET VIADUCT REPLACEMENT

ADDRESS: SIXTH STREET VIADUCT (WHITTIER BLVD) LOS ANGELES, CA

WORK ORDER NO. E700224F

DRAWING NO. S5-31

SHEET 272 OF 560 SHEETS

ADDENDUM 5

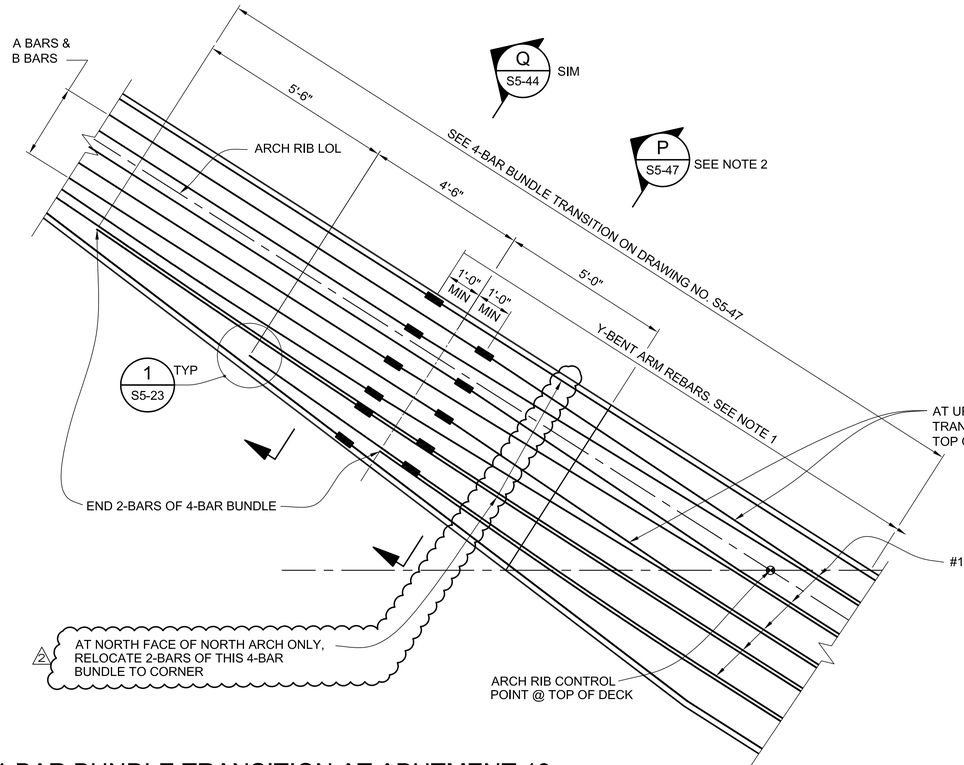

4-BAR BUNDLE TRANSITION AT ABUTMENT 13

SCALE: 1/2" =1'-0"

NOTE: SEE LOWER ARCH RIB REINFORCEMENT FOR ALL DETAILS NOT SHOWN

1

NOTES:

1. SEE DRAWING NO. S5-23 FOR ADDITIONAL NOTES.
2. AT BOTTOM OF ARCH RIBS NEAR ABUTMENT 13, THERE IS NO Y-BENT ARM. SEE A S6-06 FOR REBAR LAYOUT AND DETAILS.

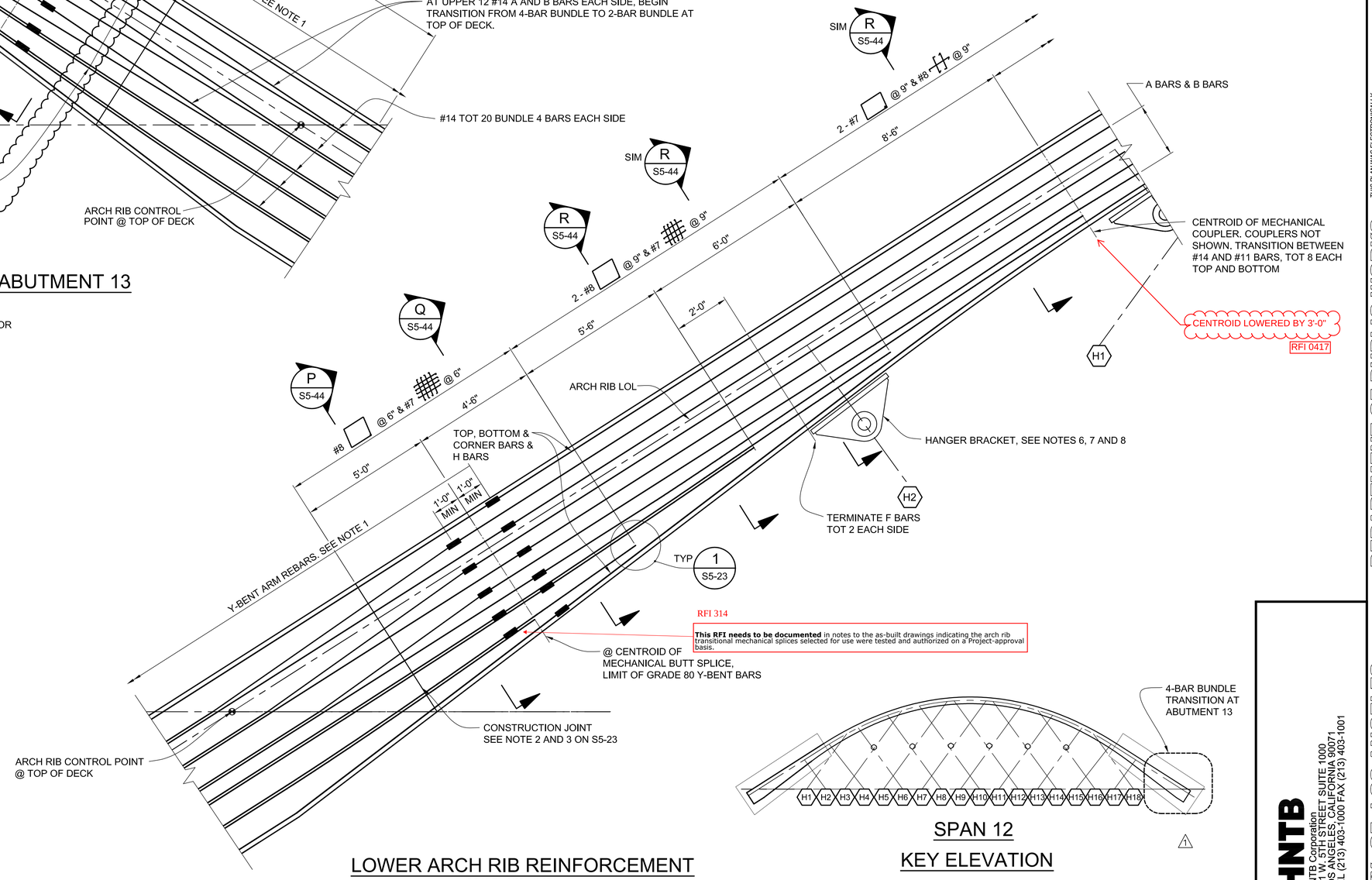

LOWER ARCH RIB REINFORCEMENT

SCALE: 1/2" =1'-0"

SPAN 12
KEY ELEVATION

1

T.O. 5 Change Order Serial Sketch No. 59 - Page 7 of 13

HNTB
HNTB Corporation
601 W. 5TH STREET SUITE 1000
LOS ANGELES, CALIFORNIA 90071
TEL (213) 403-1000 FAX (213) 403-1001

CITY OF LOS ANGELES DEPARTMENT OF PUBLIC WORKS BUREAU OF ENGINEERING

ENGINEERING
CITY OF LOS ANGELES

NO.	REVISIONS:	DATE:	BY:
1	BIM REVISION 4 ECO 57	02/16/18	MHJ
2	BIM REVISION 5 ECO 59	03/16/18	MHJ

STRUCTURE NO. 53C-2329

INDEX NO.

REGISTERED PROFESSIONAL ENGINEER MICHAEL H. JONES No. S3033 CIVIL STATE OF CALIFORNIA

THIS PLAN WAS ELECTRONICALLY SIGNED AND STAMPED

CITY ENGINEER: GARY LEE MOORE, P.E.
DESIGN GROUP
LIC. NO. S3033

		DATE:
ENGINEER:	MICHAEL H. JONES	1/29/2016
DESIGNED BY:	RUI LU	1/29/2016
DRAWN BY:	TIMOTHY SEVERSON / LI ZHANG	1/29/2016
CHECKED BY:	CHARLES REDFIELD	1/29/2016
APPROVED BY:	MICHAEL H. JONES	1/29/2016

VERTICAL CONTROL: BM 12-04070, 1929 (NGVD 29) - 1985 ADJUSTMENT
HORIZONTAL CONTROL: GPS; PID AE 1704, EPOCH 1991.35

SHEET TITLE: ARCH RIB REINFORCEMENT NO. 12

PROJECT: SIXTH STREET VIADUCT REPLACEMENT

ADDRESS: SIXTH STREET VIADUCT (WHITTIER BLVD) LOS ANGELES, CA

WORK ORDER NO. E700224F

DRAWING NO. S5-32

SHEET 273 OF 560 SHEETS

REVISION DATES (DESIGN STAGE ONLY)

C:\caddlib\pw\pwwestcoast\zhang\dms57683\S5-21-AR01-30.dwg 3/14/18 17:29

THE CITY OF LOS ANGELES OR ITS OFFICERS OR AGENTS SHALL NOT BE RESPONSIBLE FOR THE ACCURACY OR COMPLETENESS OF ELECTRONIC COPIES OF THIS PLAN SHEET.

Sheet Version 3.0

ADDENDUM 5

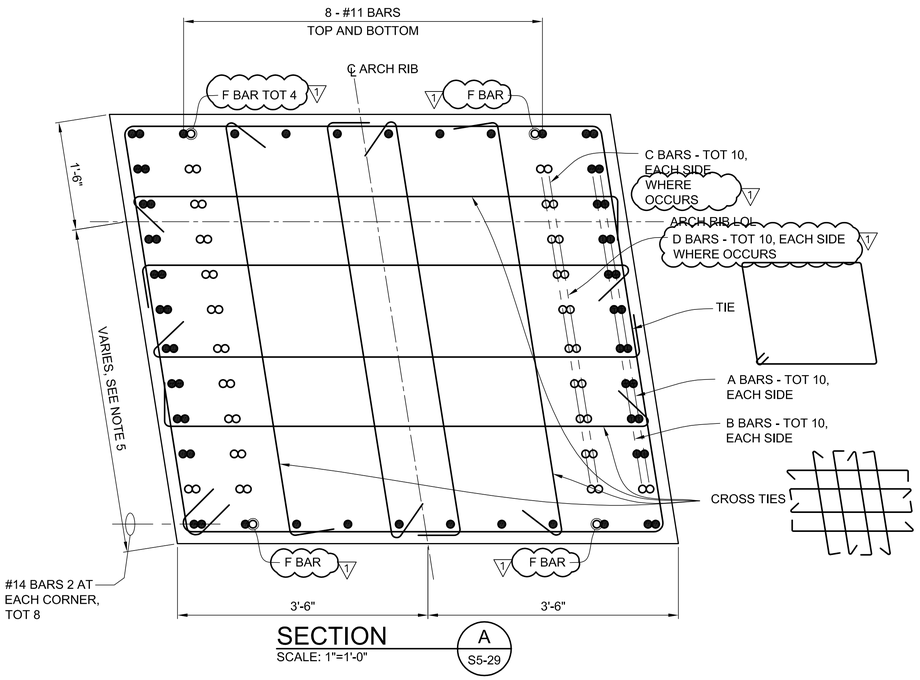

SECTION A
SCALE: 1"=1'-0"
S5-29

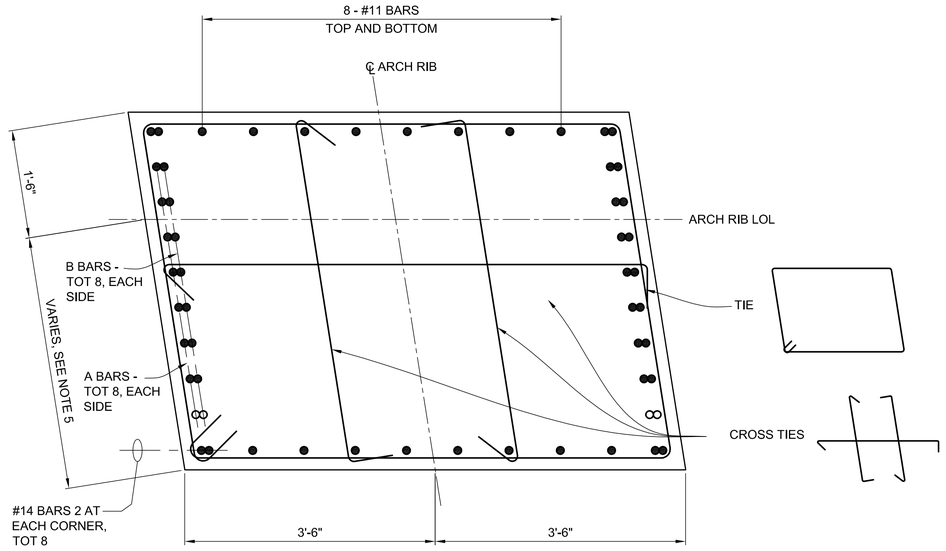

SECTION C
SCALE: 1"=1'-0"
S5-29

LEGEND:

- O INDICATES BARS TO BE TERMINATED.

NOTES:

1. FOR ARCH RIB GEOMETRY, SEE DRAWING NOS. S3-15 AND S5-01 THROUGH S5-04.
2. FOR ARCHITECTURAL CONCRETE ATTACHED TO ARCH RIB, SEE DRAWING NO. S5-48.
3. α ANGLE α ON SECTIONS VARY ALONG ARCH RIB LOL. SEE NOTE 2 ON DRAWING NOS. S3-15 AND S5-48.
4. A BARS, B BARS, C BARS & F BARS ARE #14 BARS.
5. THE DIMENSION VARIES AND SHALL BE DETERMINED BASED ON ARCH RIB GEOMETRY SHEETS S5-02 AND S5-03.

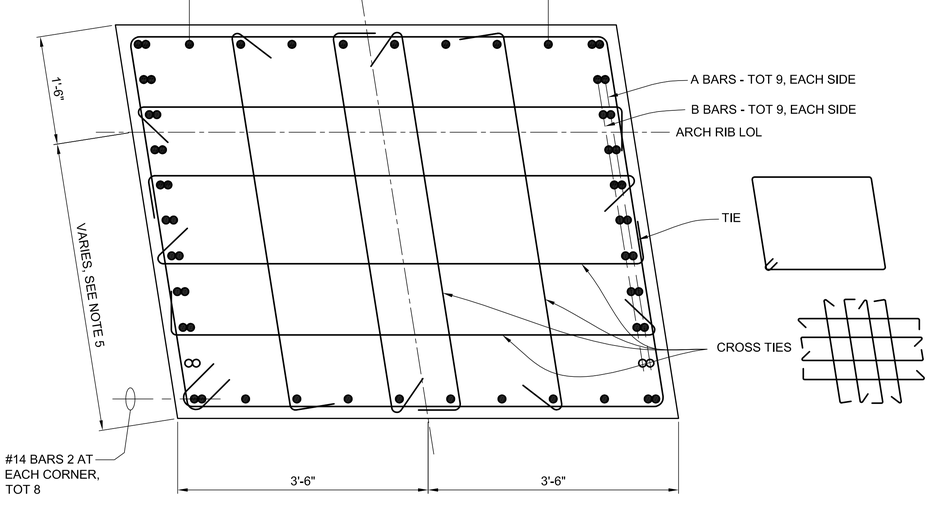

SECTION B
SCALE: 1"=1'-0"
S5-29

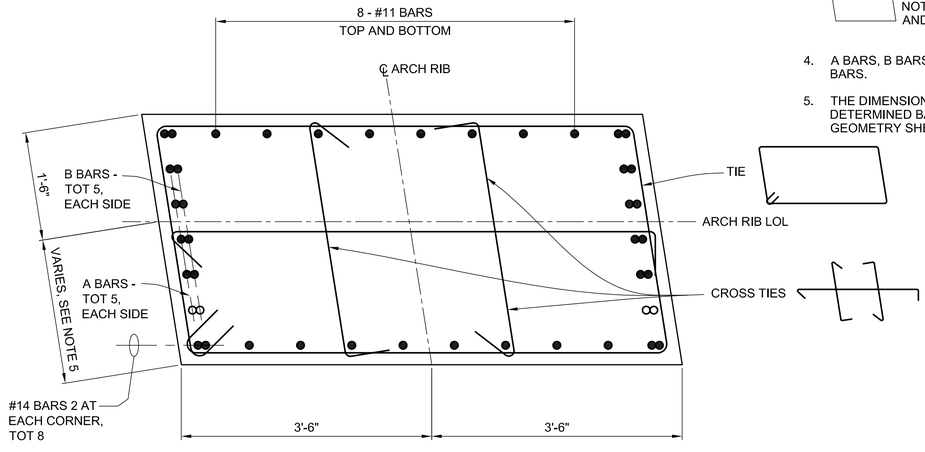

SECTION D
SCALE: 1"=1'-0"
S5-31
S5-28

HNTB
HNTB Corporation
601 W. 5TH STREET SUITE 1000
LOS ANGELES, CALIFORNIA 90071
TEL (213) 403-1000 FAX (213) 403-1001

CITY OF LOS ANGELES DEPARTMENT OF PUBLIC WORKS
BUREAU OF ENGINEERING

ENGINEERING
CITY OF LOS ANGELES

NO.	REVISIONS:	DATE	BY:
1	ADDENDUM NO. 1	08/23/16	MHJ

STRUCTURE NO.
53C-2329

INDEX NO.

REGISTERED PROFESSIONAL ENGINEER
MICHAEL H. JONES
No. S3033
CIVIL
STATE OF CALIFORNIA

THIS PLAN WAS ELECTRONICALLY SIGNED AND STAMPED.

CITY ENGINEER	DATE:
GARY LEE MOORE, P.E.	1/29/2016
LIC. NO. S3033	1/29/2016
DESIGN GROUP	1/29/2016
ENGINEER: MICHAEL H. JONES	1/29/2016
DESIGNED BY: RUI LU	1/29/2016
DRAWN BY: TIMOTH SEVERSON	1/29/2016
CHECKED BY: CHARLES REDFIELD	1/29/2016
APPROVED BY: MICHAEL H. JONES	1/29/2016

VERTICAL CONTROL: BM 12-04070, 1929 (NGVD 29) - 1985 ADJUSTMENT
HORIZONTAL CONTROL: GPS; PID AE 1704, EPOCH 1991.35

SHEET TITLE: ARCH RIB REINFORCEMENT DETAILS NO. 1
PROJECT: SIXTH STREET VIADUCT REPLACEMENT
ADDRESS: SIXTH STREET VIADUCT (WHITTIER BLVD) LOS ANGELES, CA

WORK ORDER NO.
E700224F

DRAWING NO.
S5-41

SHEET 20 OF SHEETS

REVISION DATES (DESIGN STAGE ONLY)

THE CITY OF LOS ANGELES OR ITS OFFICERS OR AGENTS SHALL NOT BE RESPONSIBLE FOR THE ACCURACY OR COMPLETENESS OF ELECTRONIC COPIES OF THIS PLAN SHEET.

C:\caddlib\pw\pwwestcoast\zhang\dms57683\S5-41-AR01-05.dwg 9/08/16 11:22

Sheet Version 3.0

ADDENDUM 5

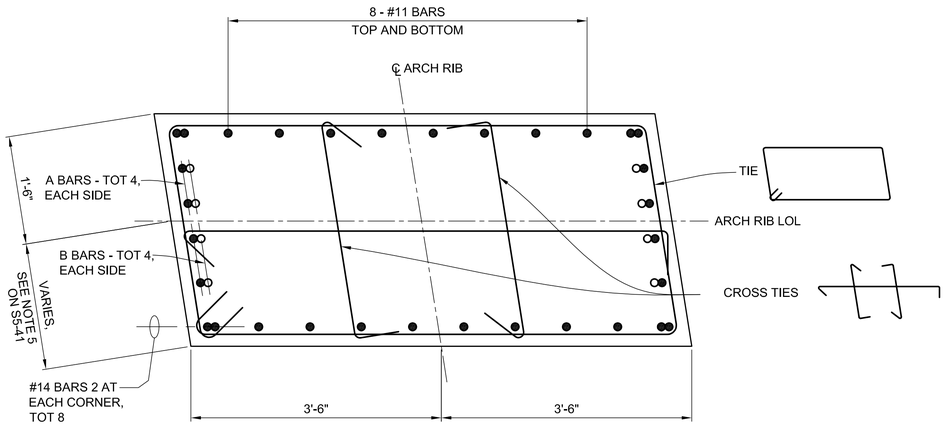

SECTION E
SCALE: 1"=1'-0"
S5-28

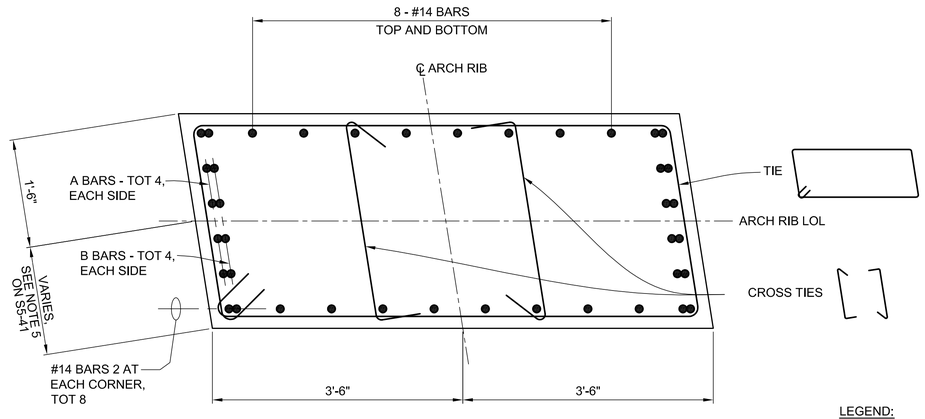

SECTION G
SCALE: 1"=1'-0"
S5-24

LEGEND:

O INDICATES BARS TO BE TERMINATED.

NOTES:

1. SEE DRAWING NO. S5-41 FOR TYPICAL NOTES.

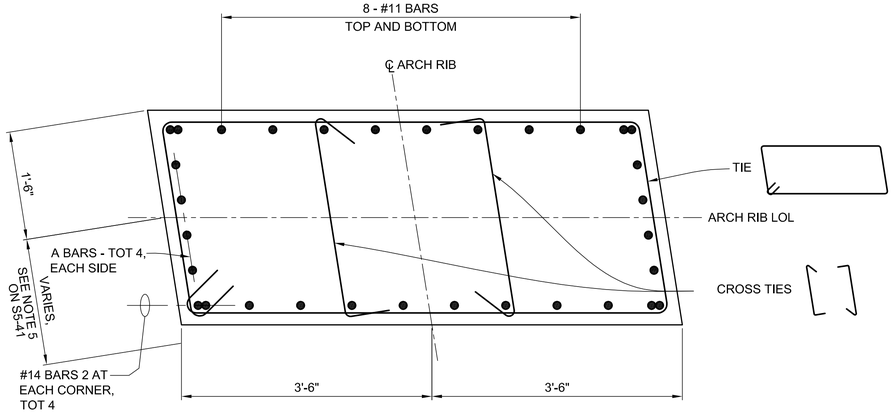

SECTION F
SCALE: 1"=1'-0"
S5-21

S5-22, S5-27, S5-28, S5-30, S5-31

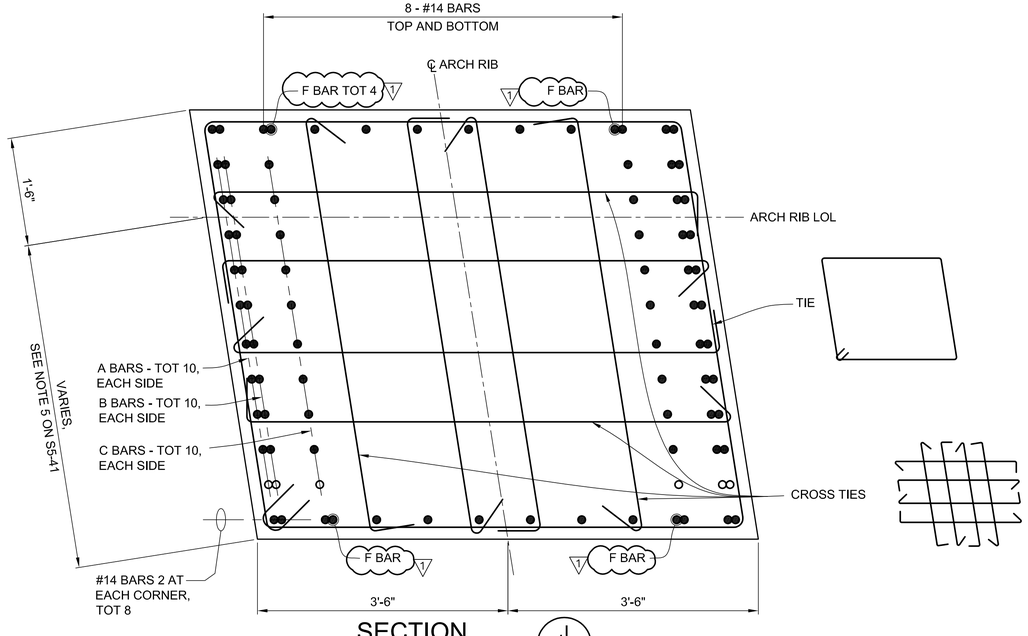

SECTION J
SCALE: 1"=1'-0"
S5-26

THE CITY OF LOS ANGELES OR ITS OFFICERS OR AGENTS SHALL NOT BE RESPONSIBLE FOR THE ACCURACY OR COMPLETENESS OF ELECTRONIC COPIES OF THIS PLAN SHEET.

C:\caddlib\pw\pwwestcoast\zhang\dms57683\S5-41-AR01-05.dwg 9/08/16 11:28

REVISION DATES (DESIGN STAGE ONLY)

Sheet Version 3.0

BUREAU OF ENGINEERING

ENGINEERING
CITY OF LOS ANGELES

NO.	REVISIONS:	DATE	BY:
1	ADDENDUM NO. 1	08/23/16	MHJ

STRUCTURE NO.
53C-2329

INDEX NO.

THIS PLAN WAS ELECTRONICALLY SIGNED AND STAMPED.

REGISTERED PROFESSIONAL ENGINEER MICHAEL H. JONES No. S3033 CIVIL STATE OF CALIFORNIA

CITY OF LOS ANGELES DEPARTMENT OF PUBLIC WORKS

GARY LEE MOORE, P.E. CITY ENGINEER

		DATE
ENGINEER:	MICHAEL H. JONES	1/29/2016
	LIC. NO. S3033	1/29/2016
DESIGNED BY:	RUI LU	1/29/2016
DRAWN BY:	TIMOTH SEVERSON	1/29/2016
CHECKED BY:	CHARLES REDFIELD	1/29/2016
APPROVED BY:	MICHAEL H. JONES	1/29/2016

VERTICAL CONTROL: BM 12-04070, 1929 (NGVD 29) – 1985 ADJUSTMENT
HORIZONTAL CONTROL: GPS; PID AE 1704, EPOCH 1991.35

SHEET TITLE: ARCH RIB REINFORCEMENT DETAILS NO. 2

PROJECT: SIXTH STREET VIADUCT REPLACEMENT

ADDRESS: SIXTH STREET VIADUCT (WHITTIER BLVD) LOS ANGELES, CA

HNTB
HNTB Corporation
601 W. 5TH STREET SUITE 1000
LOS ANGELES, CALIFORNIA 90071
TEL (213) 403-1000 FAX (213) 403-1001

WORK ORDER NO.
E700224F

DRAWING NO.
S5-42

SHEET 20 OF SHEETS

ADDENDUM 5

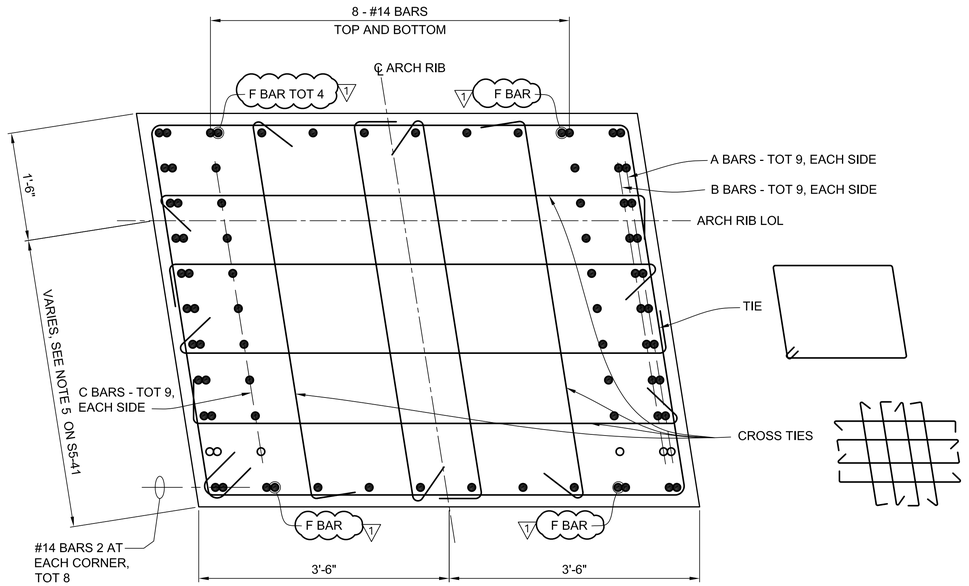

SECTION K
SCALE: 1"=1'-0"
S5-26
S5-23

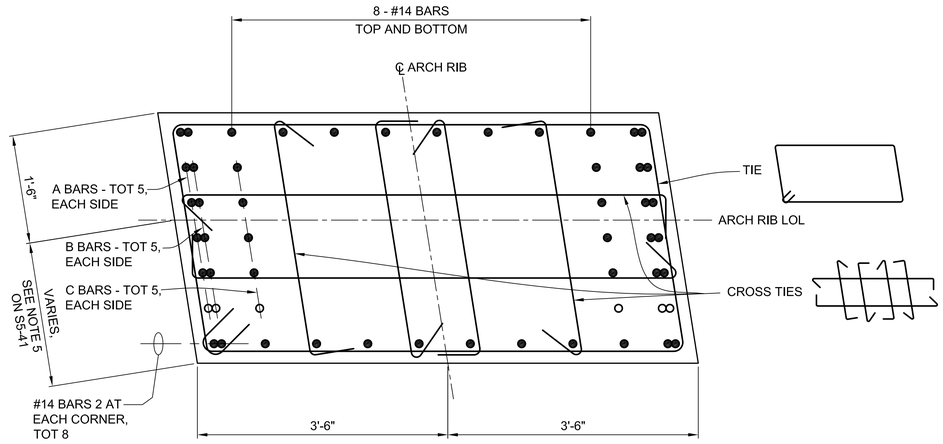

SECTION M
SCALE: 1"=1'-0"
S5-26

LEGEND:

O INDICATES BARS TO BE TERMINATED.

NOTES:

1. SEE DRAWING NO. S5-41 FOR TYPICAL NOTES.

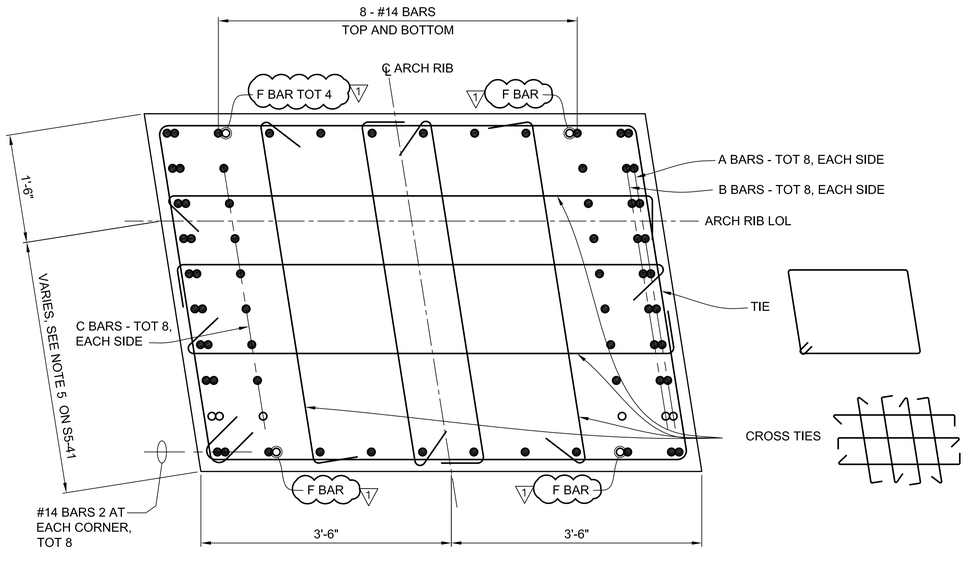

SECTION L
SCALE: 1"=1'-0"
S5-26
S5-23

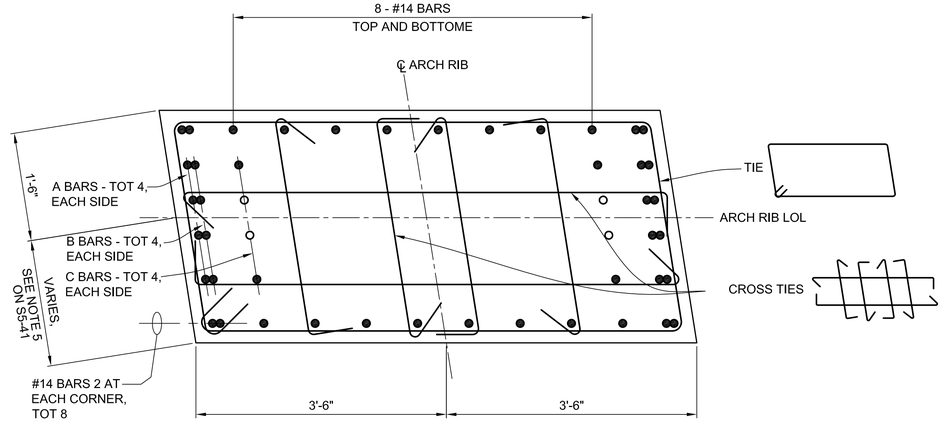

SECTION N
SCALE: 1"=1'-0"
S5-26

THE CITY OF LOS ANGELES OR ITS OFFICERS OR AGENTS SHALL NOT BE RESPONSIBLE FOR THE ACCURACY OR COMPLETENESS OF ELECTRONIC COPIES OF THIS PLAN SHEET.

C:\caddlib\pw\pwwestcoast\lzhang\dms57683\S5-41-AR01-05.dwg 9/08/16 11:29

REVISION DATES (DESIGN STAGE ONLY)

Sheet Version 3.0

HNTB
HNTB Corporation
601 W. 5TH STREET SUITE 1000
LOS ANGELES, CALIFORNIA 90071
TEL (213) 403-1000 FAX (213) 403-1001

CITY OF LOS ANGELES DEPARTMENT OF PUBLIC WORKS
BUREAU OF ENGINEERING

ENGINEERING
CITY OF LOS ANGELES

NO.	REVISIONS:	DATE	BY:
1	ADDENDUM NO. 1	08/23/16	MHJ

STRUCTURE NO.
53C-2329

INDEX NO.

THIS PLAN WAS ELECTRONICALLY SIGNED AND STAMPED.

REGISTERED PROFESSIONAL ENGINEER MICHAEL H. JONES No. S3033 CIVIL STATE OF CALIFORNIA

GARY LEE MOORE, P.E. CITY ENGINEER

ENGINEER:	MICHAEL H. JONES	LIC. NO. S3033	DESIGN GROUP	DATE: 1/29/2016
DESIGNED BY:	RUI LU			1/29/2016
DRAWN BY:	TIMOTH SEVERSON			1/29/2016
CHECKED BY:	CHARLES REDFIELD			1/29/2016
APPROVED BY:	MICHAEL H. JONES			1/29/2016

VERTICAL CONTROL: BM 12-04070, 1929 (NGVD 29) - 1985 ADJUSTMENT
HORIZONTAL CONTROL: GPS; PID AE 1704, EPOCH 1991.35

SHEET TITLE: ARCH RIB REINFORCEMENT DETAILS NO. 3

PROJECT: SIXTH STREET VIADUCT REPLACEMENT

ADDRESS: SIXTH STREET VIADUCT (WHITTIER BLVD) LOS ANGELES, CA

WORK ORDER NO.
E700224F

DRAWING NO.
S5-43

SHEET 20 OF SHEETS

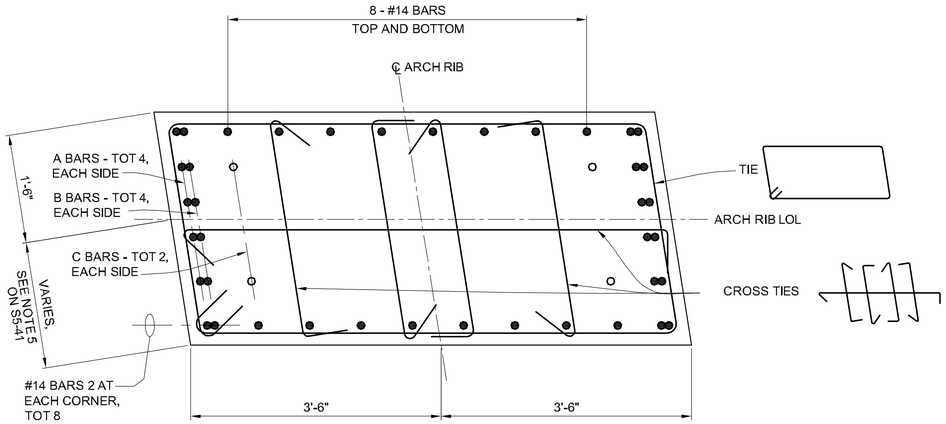

SECTION O S5-25
SCALE: 1"=1'-0"

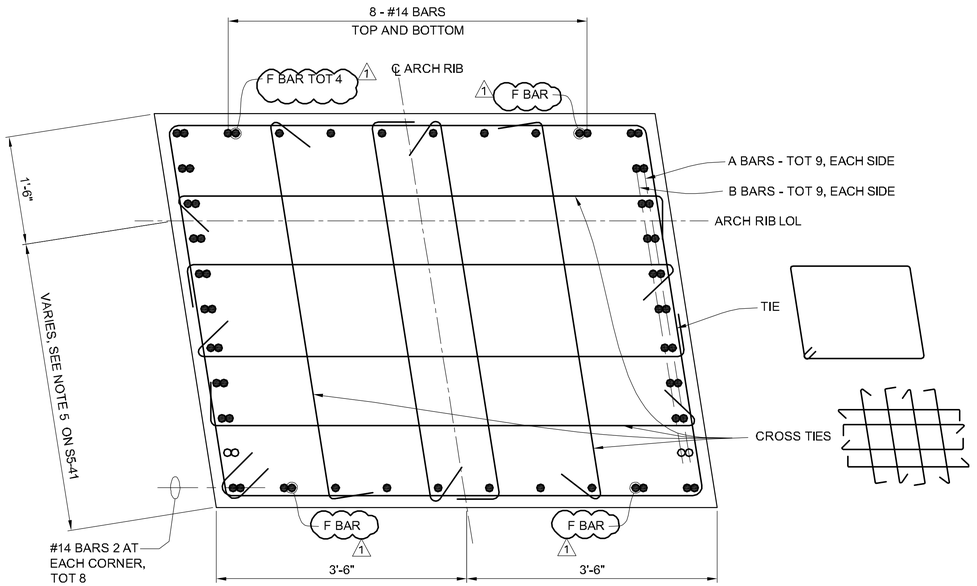

SECTION Q S5-32
SCALE: 1"=1'-0"

LEGEND:

o INDICATES BARS TO BE TERMINATED.

NOTES:

1. SEE DRAWING NO. S5-41 FOR TYPICAL NOTES.

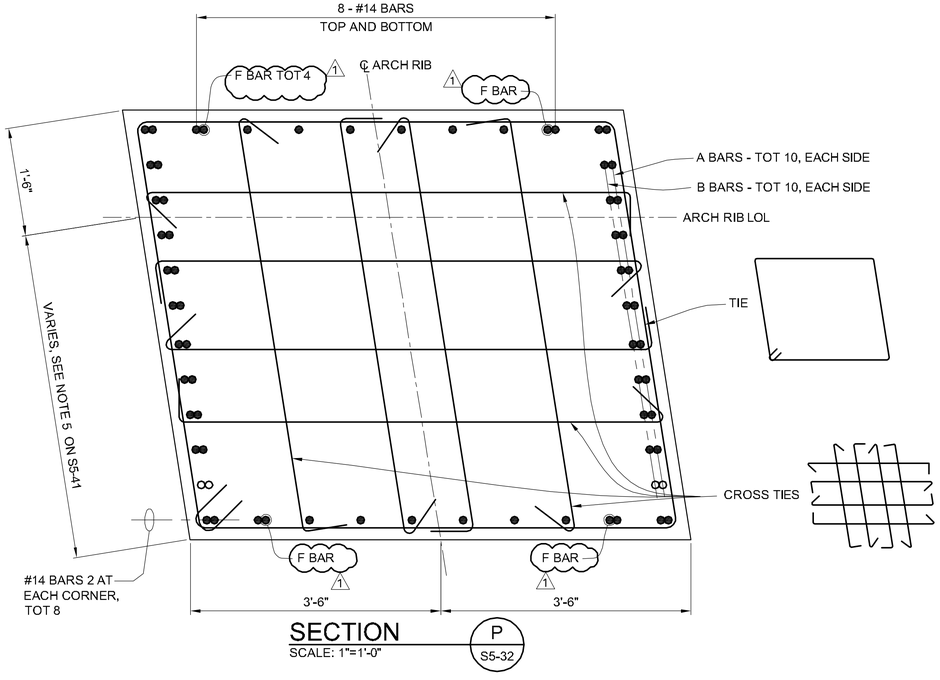

SECTION P S5-32
SCALE: 1"=1'-0"

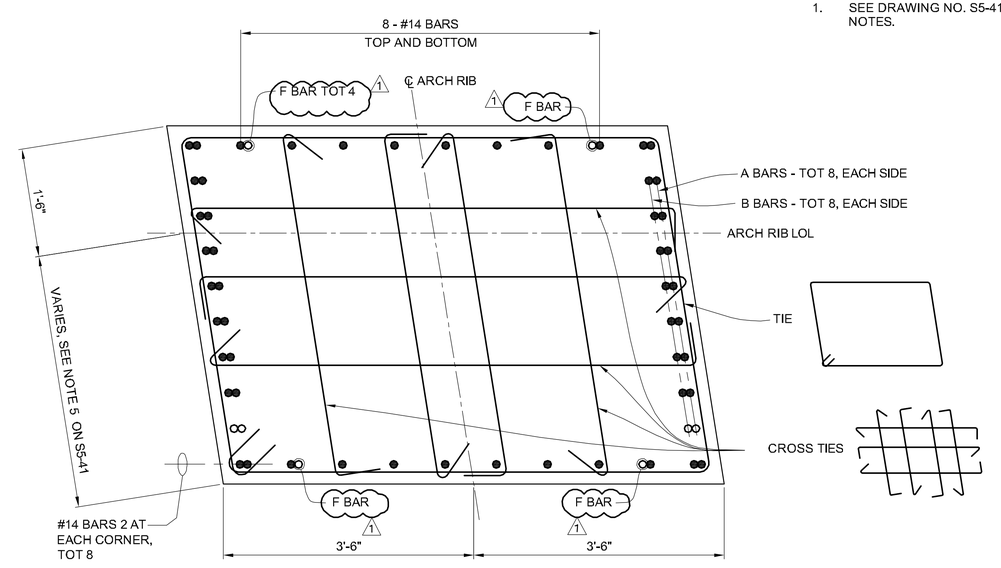

SECTION R S5-32
SCALE: 1"=1'-0"

THE CITY OF LOS ANGELES OR ITS OFFICERS OR AGENTS SHALL NOT BE RESPONSIBLE FOR THE ACCURACY OR COMPLETENESS OF ELECTRONIC COPIES OF THIS PLAN SHEET.

C:\caddlib\pw\pwwestcoast\lzhang\dms57683\S5-41-AR01-05.dwg 2/23/18 10:49

REVISION DATES (DESIGN STAGE ONLY)

Sheet Version 3.0

BUREAU OF ENGINEERING

ENGINEERING
CITY OF LOS ANGELES

NO.	REVISIONS:	DATE:	BY:
1	BIM REVISION 4	02/18/18	MHJ

STRUCTURE NO. 53C-2329

INDEX NO.

THIS PLAN WAS ELECTRONICALLY SIGNED AND STAMPED.

REGISTERED PROFESSIONAL ENGINEER MICHAEL H. JONES No. S3033 EXP. 05-31-16 STRUCTURAL STATE OF CALIFORNIA

DEPARTMENT OF PUBLIC WORKS

GARY LEE MOORE, P.E. CITY ENGINEER

	DESIGN GROUP	DATE:
ENGINEER:	MICHAEL H. JONES LIC. NO. S3033	1/29/2016
DESIGNED BY:	RUI LU	1/29/2016
DRAWN BY:	TIMOTH SEVERSON	1/29/2016
CHECKED BY:	CHARLES REDFIELD	1/29/2016
APPROVED BY:	MICHAEL H. JONES	1/29/2016

VERTICAL CONTROL: BM 12-04070,1929 (NGVD 29) - 1985 ADJUSTMENT
HORIZONTAL CONTROL: GPS; PID AE 1704, EPOCH 1991.35

SHEET TITLE: ARCH RIB REINFORCEMENT DETAILS NO. 4

PROJECT: SIXTH STREET VIADUCT REPLACEMENT

ADDRESS: SIXTH STREET VIADUCT (WHITTIER BLVD) LOS ANGELES, CA

HNTB
HNTB Corporation
601 W. 5TH STREET SUITE 1000
LOS ANGELES, CALIFORNIA 90071
TEL (213) 403-1000 FAX (213) 403-1001

WORK ORDER NO. E700224F

DRAWING NO. S5-44

SHEET 277 OF 560 SHEETS

CITY OF LOS ANGELES

ADDENDUM 5

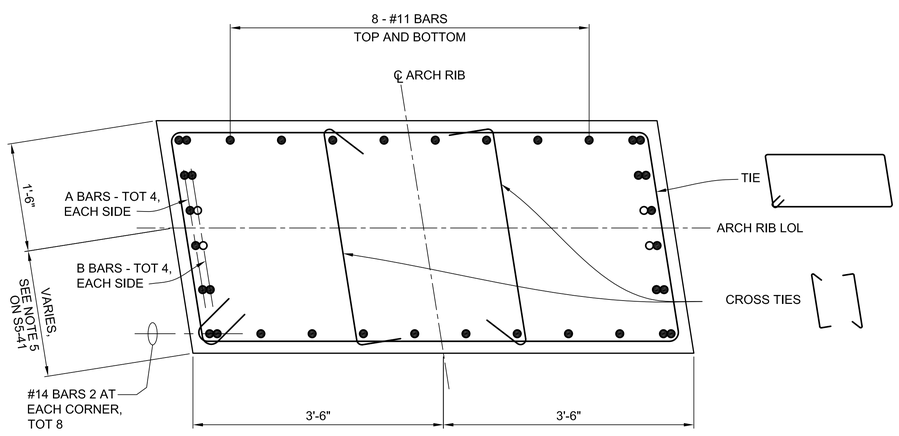

SECTION
SCALE: 1"=1'-0"
S
S5-31

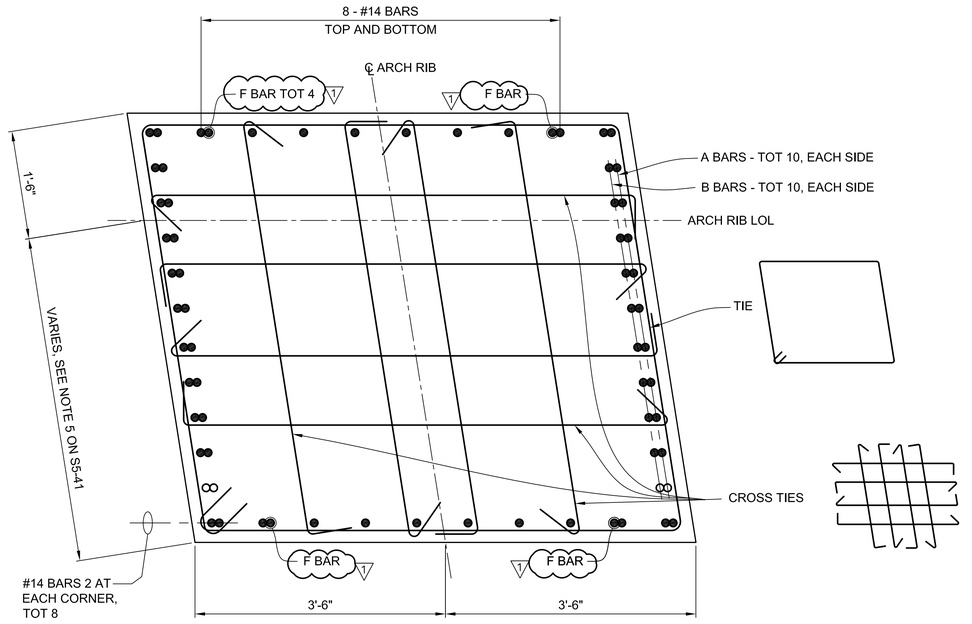

SECTION
SCALE: 1"=1'-0"
U
S5-23

LEGEND:

O INDICATES BARS TO BE TERMINATED.

NOTES:

1. SEE DRAWING NO. S5-41 FOR TYPICAL NOTES.

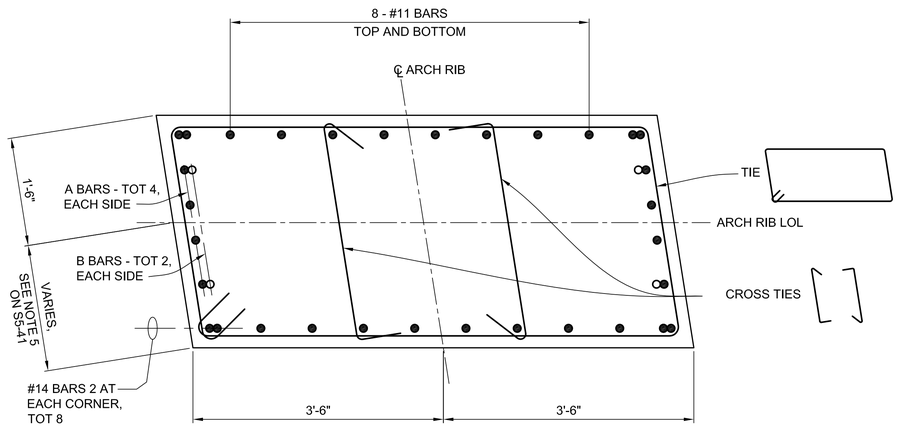

SECTION
SCALE: 1"=1'-0"
T
S5-31

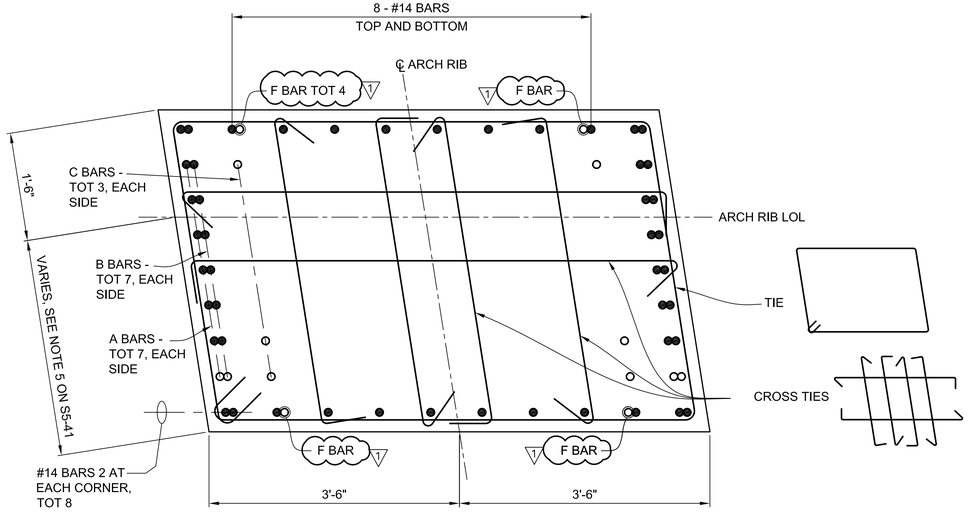

SECTION
SCALE: 1"=1'-0"
V
S5-23

THIS PLAN WAS ELECTRONICALLY SIGNED AND STAMPED.

REGISTERED PROFESSIONAL ENGINEER MICHAEL H. JONES No. S3033 CIVIL STATE OF CALIFORNIA

BUREAU OF ENGINEERING

ENGINEERING
CITY OF LOS ANGELES

NO.	REVISIONS:	DATE	BY:
1	ADDENDUM NO. 1	08/23/16	MHJ

STRUCTURE NO.
53C-2329

INDEX NO.

CITY OF LOS ANGELES DEPARTMENT OF PUBLIC WORKS

GARY LEE MOORE, P.E. CITY ENGINEER

		DATE:
ENGINEER:	MICHAEL H. JONES	1/29/2016
DESIGNED BY:	RUI LU	1/29/2016
DRAWN BY:	TIMOTH SEVERSON	1/29/2016
CHECKED BY:	CHARLES REDFIELD	1/29/2016
APPROVED BY:	MICHAEL H. JONES	1/29/2016

DESIGN GROUP
LIC. NO. S3033

VERTICAL CONTROL: BM 12-04070,1929 (NGVD 29) - 1985 ADJUSTMENT
HORIZONTAL CONTROL: GPS; PID AE 1704, EPOCH 1991.35

SHEET TITLE: ARCH RIB REINFORCEMENT DETAILS NO. 5

PROJECT: SIXTH STREET VIADUCT REPLACEMENT

ADDRESS: SIXTH STREET VIADUCT (WHITTIER BLVD) LOS ANGELES, CA

HNTB
HNTB Corporation
601 W. 5TH STREET SUITE 1000
LOS ANGELES, CALIFORNIA 90071
TEL (213) 403-1000 FAX (213) 403-1001

WORK ORDER NO.
E700224F

DRAWING NO.
S5-45

SHEET 20 OF SHEETS

REVISION DATES (DESIGN STAGE ONLY)

THE CITY OF LOS ANGELES OR ITS OFFICERS OR AGENTS SHALL NOT BE RESPONSIBLE FOR THE ACCURACY OR COMPLETENESS OF ELECTRONIC COPIES OF THIS PLAN SHEET.

C:\caddlib\pw\pwwestcoast\lzhang\dms57683\S5-41-AR01-05.dwg 9/08/16 11:33

Sheet Version 3.0

ADDENDUM 5

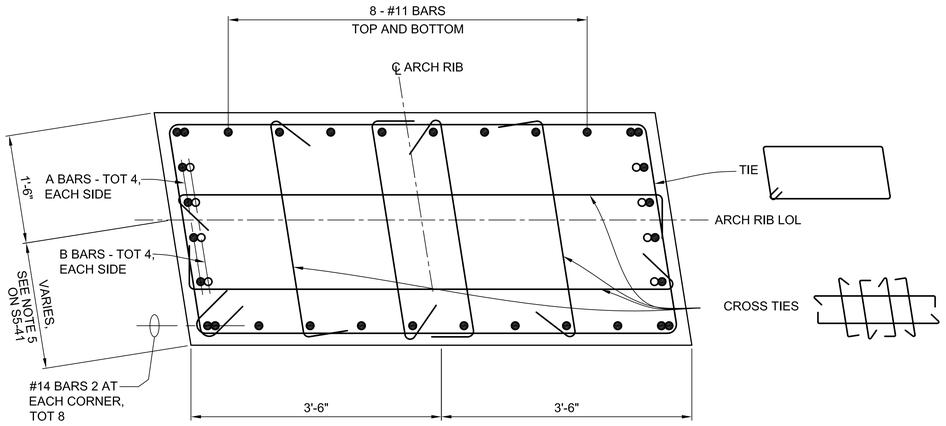

SECTION W
SCALE: 1"=1'-0" S5-22

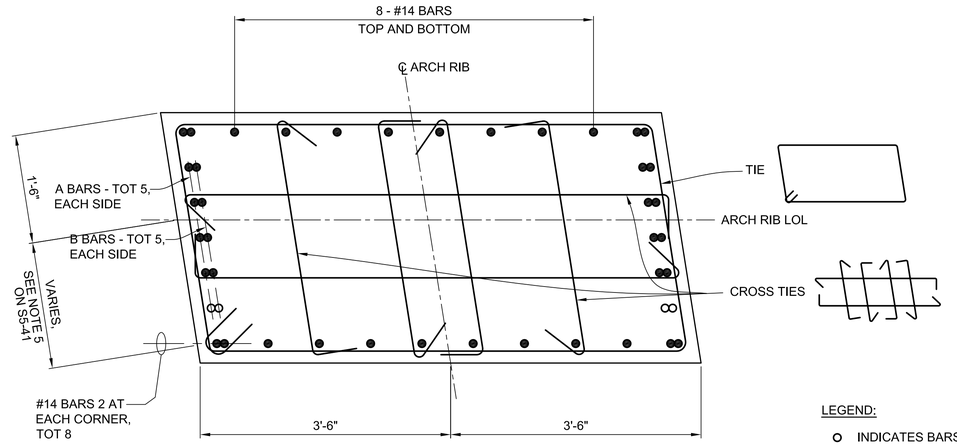

SECTION Y
SCALE: 1"=1'-0" S5-22

LEGEND:

O INDICATES BARS TO BE TERMINATED.

NOTES:

1. SEE DRAWING NO. S5-41 FOR TYPICAL NOTES.

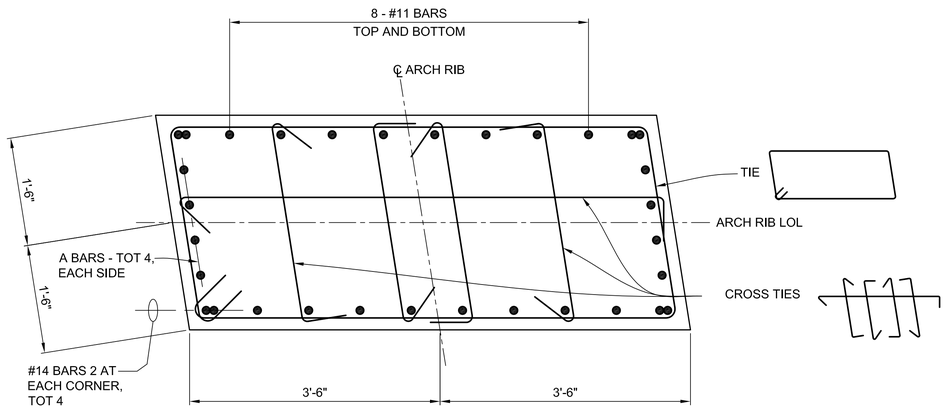

SECTION X
SCALE: 1"=1'-0" S5-22

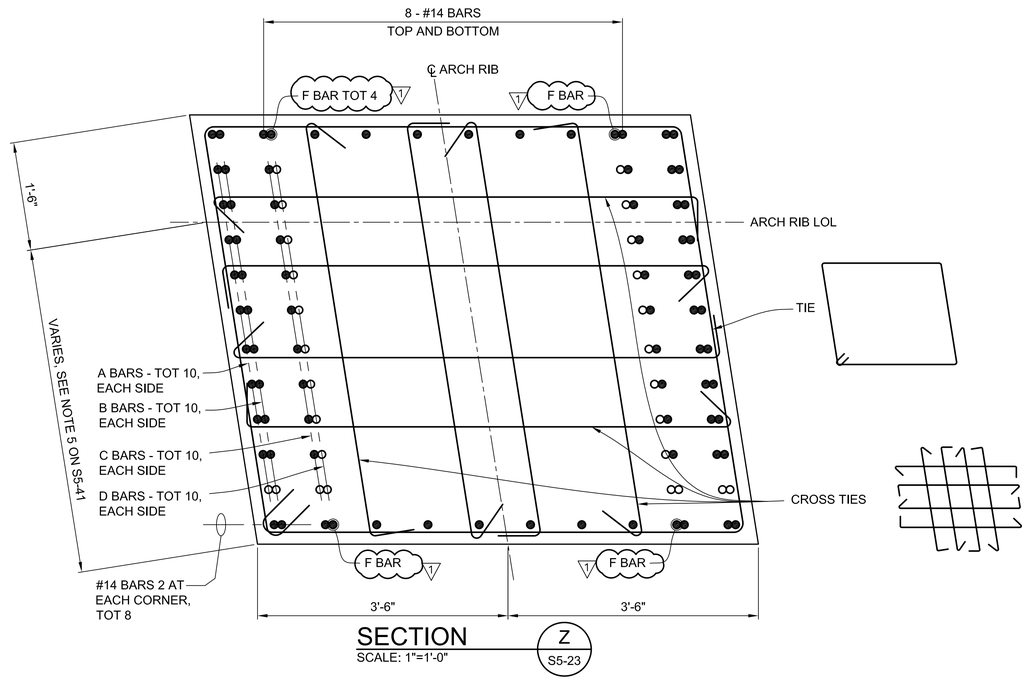

SECTION Z
SCALE: 1"=1'-0" S5-23

HNTB
HNTB Corporation
601 W. 5TH STREET SUITE 1000
LOS ANGELES, CALIFORNIA 90071
TEL (213) 403-1000 FAX (213) 403-1001

CITY OF LOS ANGELES DEPARTMENT OF PUBLIC WORKS BUREAU OF ENGINEERING

ENGINEERING CITY OF LOS ANGELES

NO.	REVISIONS:	DATE	BY:
1	ADDENDUM NO. 1	08/23/16	MHJ

STRUCTURE NO. 53C-2329

INDEX NO.

THIS PLAN WAS ELECTRONICALLY SIGNED AND STAMPED.

REGISTERED PROFESSIONAL ENGINEER MICHAEL H. JONES No. S3033 CIVIL STATE OF CALIFORNIA

GARY LEE MOORE, P.E. CITY ENGINEER

		DATE:
ENGINEER:	MICHAEL H. JONES	1/29/2016
DESIGNED BY:	RUI LU	1/29/2016
DRAWN BY:	TIMOTH SEVERSON	1/29/2016
CHECKED BY:	CHARLES REDFIELD	1/29/2016
APPROVED BY:	MICHAEL H. JONES	1/29/2016

LIC. NO. S3033 DESIGN GROUP

VERTICAL CONTROL: BM 12-04070,1929 (NGVD 29) - 1985 ADJUSTMENT
HORIZONTAL CONTROL: GPS; PID AE 1704, EPOCH 1991.35

SHEET TITLE: ARCH RIB REINFORCEMENT DETAILS NO. 6

PROJECT: SIXTH STREET VIADUCT REPLACEMENT

ADDRESS: SIXTH STREET VIADUCT (WHITTIER BLVD) LOS ANGELES, CA

WORK ORDER NO. E700224F

DRAWING NO. S5-46

SHEET 20 OF SHEETS

THE CITY OF LOS ANGELES OR ITS OFFICERS OR AGENTS SHALL NOT BE RESPONSIBLE FOR THE ACCURACY OR COMPLETENESS OF ELECTRONIC COPIES OF THIS PLAN SHEET.

REVISION DATES (DESIGN STAGE ONLY)

C:\caddlib\pw\pwwestcoast\lzhang\dms57683\S5-41-AR01-05.dwg 9/08/16 11:33

Sheet Version 3.0

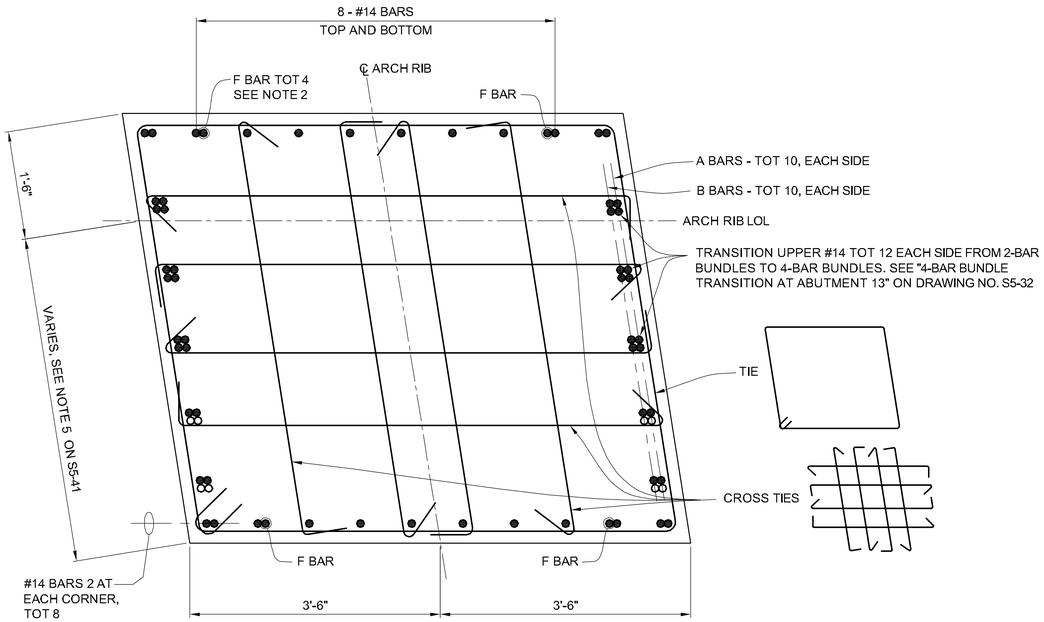

4- BAR BUNDLE TRANSITION

SCALE: 1"=1'-0"

SECTION P / S5-32

LEGEND:

o INDICATES BARS TO BE TERMINATED.

NOTES:

1. SEE DRAWING NO. S5-41 FOR TYPICAL NOTES.
2. LOCATION OF TOP AND BOTTOM F BARS CAN VARY ACROSS THE TOP AND BOTTOM REINFORCEMENT LAYER.

1

HNTB
HNTB Corporation
601 W. 5TH STREET SUITE 1000
LOS ANGELES, CALIFORNIA 90071
TEL (213) 403-1000 FAX (213) 403-1001

CITY OF LOS ANGELES DEPARTMENT OF PUBLIC WORKS

BUREAU OF ENGINEERING

ENGINEERING CITY OF LOS ANGELES

NO.	REVISIONS:	DATE:	BY:
1	BIM REVISION 4	02/18/18	MHJ

STRUCTURE NO. 53C-2329

INDEX NO.

THIS PLAN WAS ELECTRONICALLY SIGNED AND STAMPED.

REGISTERED PROFESSIONAL ENGINEER MICHAEL H. JONES No. S3033 EXP. 06-31-16 STRUCTURAL STATE OF CALIFORNIA

GARY LEE MOORE, P.E. CITY ENGINEER

		DATE:
DESIGN GROUP		
ENGINEER:	MICHAEL H. JONES LIC. NO. S3033	1/29/2016
DESIGNED BY:	RUI LU	1/29/2016
DRAWN BY:	TIMOTH SEVERSON	1/29/2016
CHECKED BY:	CHARLES REDFIELD	1/29/2016
APPROVED BY:	MICHAEL H. JONES	1/29/2016

VERTICAL CONTROL: BM 12-04070,1929 (NGVD 29) - 1985 ADJUSTMENT
HORIZONTAL CONTROL: GPS; PID AE 1704, EPOCH 1991.35

SHEET TITLE: ARCH RIB REINFORCEMENT DETAILS NO. 7

PROJECT: SIXTH STREET VIADUCT REPLACEMENT

ADDRESS: SIXTH STREET VIADUCT (WHITTIER BLVD) LOS ANGELES, CA

WORK ORDER NO. E700224F

DRAWING NO. S5-47

SHEET 277 OF 560 SHEETS

THE CITY OF LOS ANGELES OR ITS OFFICERS OR AGENTS SHALL NOT BE RESPONSIBLE FOR THE ACCURACY OR COMPLETENESS OF ELECTRONIC COPIES OF THIS PLAN SHEET.

REVISION DATES (DESIGN STAGE ONLY)

C:\caddlib\pw\pwwestcoast\lzhang\dms57683\S5-41-AR01-05.dwg 2/23/18 10:45

Sheet Version 3.0

ARCHITECTURAL REBAR DETAIL 1

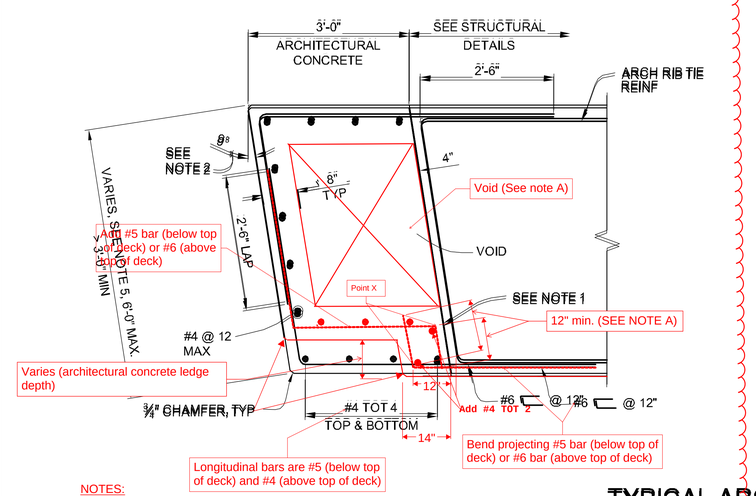

NOTES:
A. Architectural concrete ledge depth varies. To maintain cover, and achieve 12" rebar tail length, bend #5 or #6 bars at 'Point X' about the horizontal axis (i.e. into or out of page) as necessary. Bend all #5 or #6 bars in same direction to avoid interference.

TYPICAL ARCH RIB SECTION

SCALE: 3/4"=1'-0"

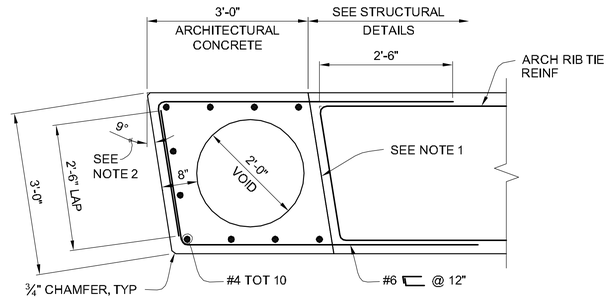

NOTES:

1. ALL ARCHITECTURAL CONCRETE IS CAST MONOLITHICALLY WITH STRUCTURAL CONCRETE.
2. CANT OF ARCH RIB FACE IS 9° MEASURED FROM A VERTICAL PLANE TO A PLANE ROTATED ABOUT THE ARCH RIB CHORD, DEFINED ON DRAWING NO. S5-01. SEE "ARCH RIB ROTATION LAYOUT" ON DRAWING NO. S5-50. TO MAINTAIN A LEVEL ARCH RIB EXTRADOS AND INTRADOS, THE ARCH RIB CROSS SECTION CORNER ANGLE IS 9° AT THE ARCH RIB CROWN AND VARIES AT OTHER LOCATIONS.
3. INTERNAL FORMS USED TO FORM ARCHITECTURAL CONCRETE MAY BE LEFT IN PLACE.
4. ALL # 4, 5 AND 6 REINFORCING BARS AT ARCHITECTURAL CONCRETE SHALL BE EPOXY COATED.
5. AT ARCHITECTURAL CONCRETE REINFORCEMENT, USE COUPLERS AS REQUIRED TO PROVIDE CLEARANCE FOR POST TENSIONING JACKS.
6. SEE DRAWING NO. S5-11 FOR DRAINS/VENTS AND ISOLATION JOINTS FOR ARCH RIB ARCHITECTURAL CONCRETE.
7. ALL ARCHITECTURAL CONCRETE BELOW TOP OF DECK CONSTRUCTION JOINT OVER POST TENSIONING ANCHORAGE SHALL BE PLACED AT ONE TIME.

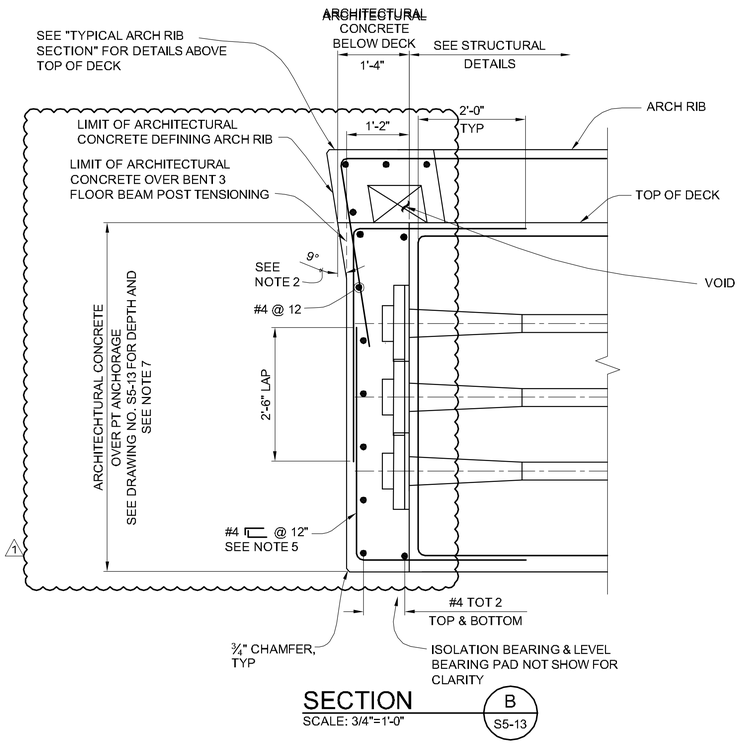

SECTION B S5-13
SCALE: 3/4"=1'-0"

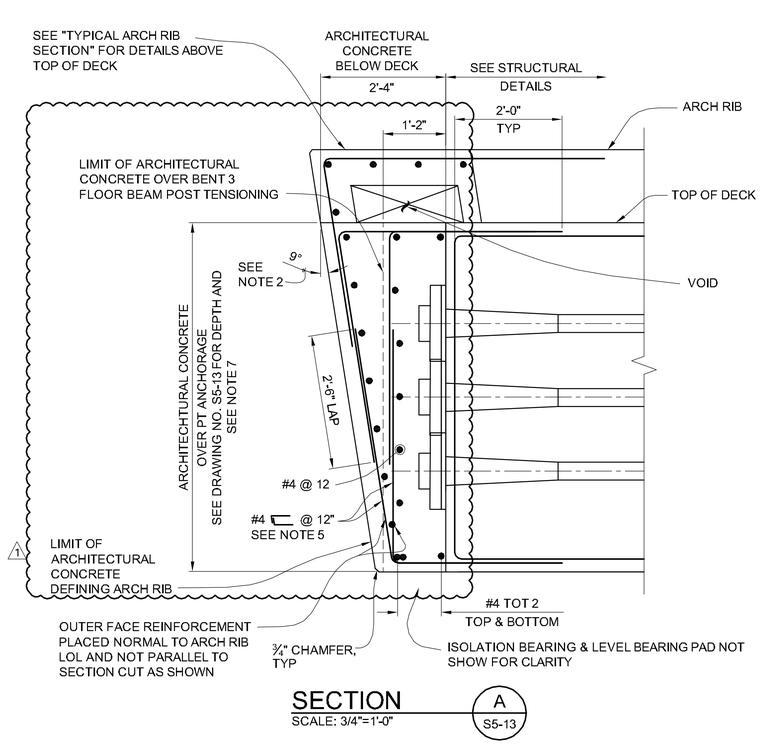

SECTION A S5-13
SCALE: 3/4"=1'-0"

THE CITY OF LOS ANGELES OR ITS OFFICERS OR AGENTS SHALL NOT BE RESPONSIBLE FOR THE ACCURACY OR COMPLETENESS OF ELECTRONIC COPIES OF THIS PLAN SHEET.

C:\coditb\pw\pwwestcoast\zhang\dms576831\S5-41-AR01-05.dwg 9/08/17 13:59
Sheet Version 3.0
REVISION DATES (DESIGN STAGE ONLY)

T.O. 5 - Emergency Change Order Serial Sketch No. 42 - Page 6 of 11

HNTB
HNTB Corporation
601 W. 5TH STREET SUITE 1000
LOS ANGELES, CALIFORNIA 90071
TEL (213) 403-1000 FAX (213) 403-1001

CITY OF LOS ANGELES DEPARTMENT OF PUBLIC WORKS
BUREAU OF ENGINEERING
ENGINEERING CITY OF LOS ANGELES

NO.	REVISIONS:	DATE:	BY:
1	GENERAL BIM UPDATES	09/01/17	MHJ

STRUCTURE NO. 53C-2329
INDEX NO.

THIS PLAN WAS ELECTRONICALLY SIGNED AND STAMPED.
REGISTERED PROFESSIONAL ENGINEER RICHARD H. JONES No. S3033 CIVIL STATE OF CALIFORNIA

CITY ENGINEER
GARY LEE MOORE, P.E.

		DATE:
ENGINEER:	MICHAEL H. JONES, DESIGN GROUP, LIC. NO. S3033	1/29/2016
DESIGNED BY:	MICHAEL H. JONES	1/29/2016
DRAWN BY:	LYUBOV KINGSBURY	1/29/2016
CHECKED BY:	CHARLES REDFIELD	1/29/2016
APPROVED BY:	MICHAEL H. JONES	1/29/2016

VERTICAL CONTROL: BM 12-04070, 1929 (NGVD 29) - 1985 ADJUSTMENT
HORIZONTAL CONTROL: GPS; PID AE 1704, EPOCH 1991.35

SHEET TITLE: ARCH RIB ARCHITECTURAL CONCRETE REINFORCEMENT DETAILS
PROJECT: SIXTH STREET VIADUCT REPLACEMENT
ADDRESS: SIXTH STREET VIADUCT (WHITTIER BLVD) LOS ANGELES, CA

WORK ORDER NO. E700224F
DRAWING NO. S5-48
SHEET 20 OF 560 SHEETS

ADDENDUM 5

ARCHITECTURAL REBAR DETAIL 2

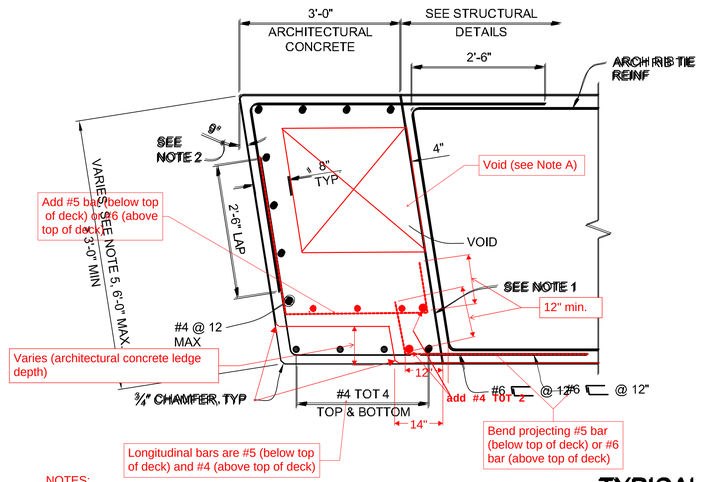

NOTES:
A. Architectural void depth in arch rib section varies near the top of deck. This detail applies where the void does not exist or where the void is present but does not interfere with the added #5 or #6 bar. If there is interference, use Detail 1.

TYPICAL ARCH RIB SECTION

SCALE: 3/4"=1'-0"

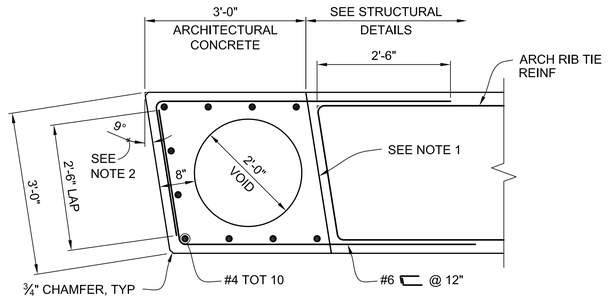

NOTES:

1. ALL ARCHITECTURAL CONCRETE IS CAST MONOLITHICALLY WITH STRUCTURAL CONCRETE.
2. CANT OF ARCH RIB FACE IS 9° MEASURED FROM A VERTICAL PLANE TO A PLANE ROTATED ABOUT THE ARCH RIB CHORD, DEFINED ON DRAWING NO. S5-01. SEE "ARCH RIB ROTATION LAYOUT" ON DRAWING NO. S5-50, TO MAINTAIN A LEVEL ARCH RIB EXTRADOS AND INTRADOS, THE ARCH RIB CROSS SECTION CORNER ANGLE IS 9° AT THE ARCH RIB CROWN AND VARIES AT OTHER LOCATIONS.
3. INTERNAL FORMS USED TO FORM ARCHITECTURAL CONCRETE MAY BE LEFT IN PLACE.
4. ALL # 4, 5 AND 6 REINFORCING BARS AT ARCHITECTURAL CONCRETE SHALL BE EPOXY COATED.
5. AT ARCHITECTURAL CONCRETE REINFORCEMENT, USE COUPLERS AS REQUIRED TO PROVIDE CLEARANCE FOR POST TENSIONING JACKS.
6. SEE DRAWING NO. S5-11 FOR DRAINS/VENTS AND ISOLATION JOINTS FOR ARCH RIB ARCHITECTURAL CONCRETE.
7. ALL ARCHITECTURAL CONCRETE BELOW TOP OF DECK CONSTRUCTION JOINT OVER POST TENSIONING ANCHORAGE SHALL BE PLACED AT ONE TIME.

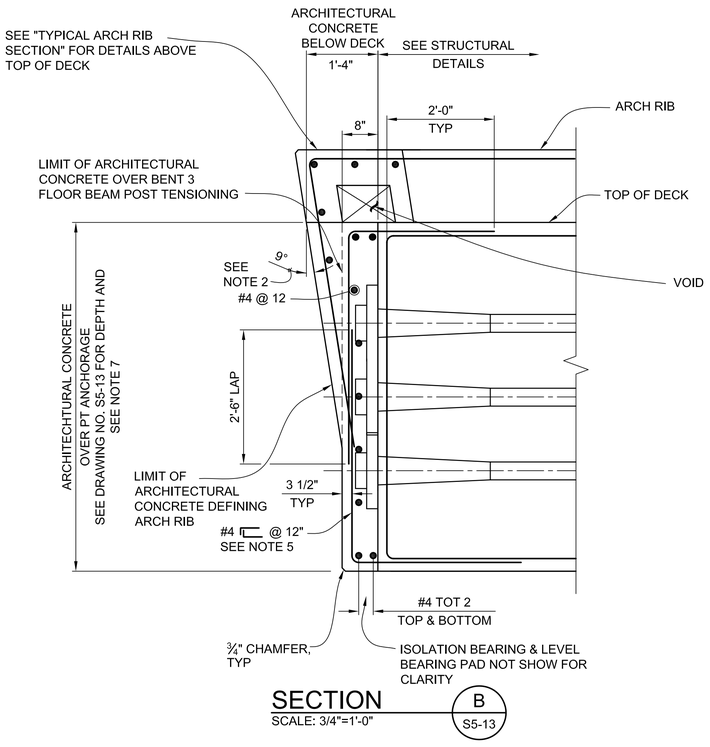

SECTION B S5-13
SCALE: 3/4"=1'-0"

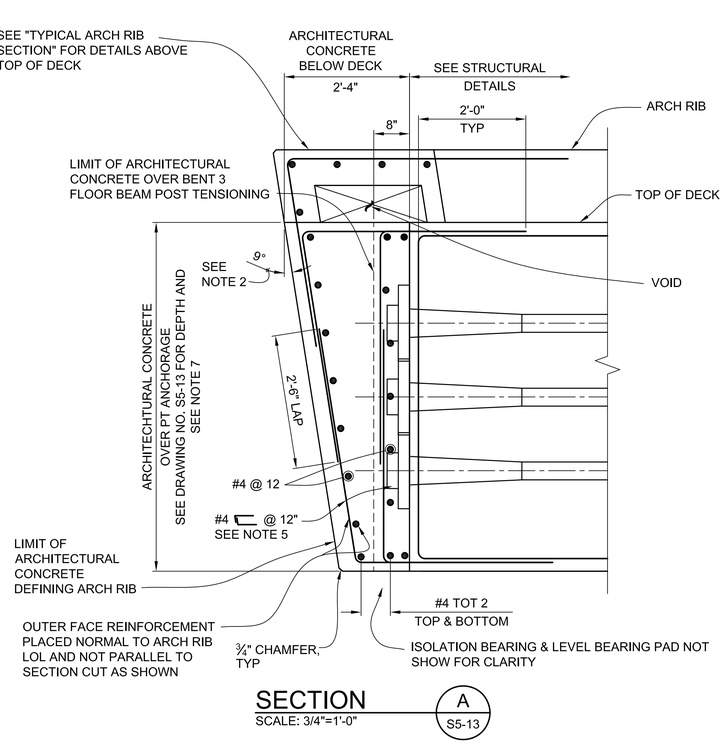

SECTION A S5-13
SCALE: 3/4"=1'-0"

THE CITY OF LOS ANGELES OR ITS OFFICERS OR AGENTS SHALL NOT BE RESPONSIBLE FOR THE ACCURACY OR COMPLETENESS OF ELECTRONIC COPIES OF THIS PLAN SHEET.

C:\caddlib\pw\pwwestcoast\zhang\dms57683\S5-41-AR01-05.dwg 6/28/16 17:10

REVISION DATES (DESIGN STAGE ONLY)

Sheet Version 3.0

BUREAU OF ENGINEERING
ENGINEERING
CITY OF LOS ANGELES

NO.	REVISIONS:	DATE:	BY:

STRUCTURE NO. 53C-2329

INDEX NO. P-38113

"THIS PLAN WAS ELECTRONICALLY SIGNED AND STAMPED."

REGISTERED PROFESSIONAL ENGINEER MICHAEL H. JONES No. S3033 CIVIL STATE OF CALIFORNIA

BUREAU OF ENGINEERING OFFICIAL RECORD

CITY OF LOS ANGELES DEPARTMENT OF PUBLIC WORKS BUREAU OF ENGINEERING

CITY ENGINEER: GARY LEE MOORE, P.E.

ENGINEER:	MICHAEL H. JONES	LIC. NO. S3033	DATE: 1/29/2016
DESIGNED BY:	MICHAEL H. JONES	DESIGN GROUP	1/29/2016
DRAWN BY:	LYUBOV KINGSBURY		1/29/2016
CHECKED BY:	CHARLES REDFIELD		1/29/2016
APPROVED BY:	MICHAEL H. JONES		1/29/2016

VERTICAL CONTROL: BM 12-04070, 1929 (NGVD 29) - 1985 ADJUSTMENT
HORIZONTAL CONTROL: GPS; PID AE 1704, EPOCH 1991.35

SHEET TITLE: ARCH RIB ARCHITECTURAL CONCRETE REINFORCEMENT DETAILS

PROJECT: SIXTH STREET VIADUCT REPLACEMENT

ADDRESS: SIXTH STREET VIADUCT (WHITTIER BLVD) LOS ANGELES, CA

HNTB
HNTB Corporation
601 W. 5TH STREET SUITE 1000
LOS ANGELES, CALIFORNIA 90071
TEL (213) 403-1000 FAX (213) 403-1001

WORK ORDER NO. E700224F

DRAWING NO. S5-48

SHEET 280 OF 560 SHEETS

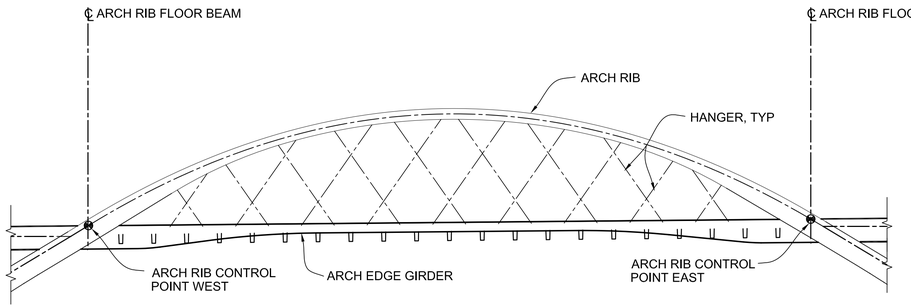

HANGER LAYOUT - ARCH SPANS 7 THROUGH 11

SCALE: 1" = 20'

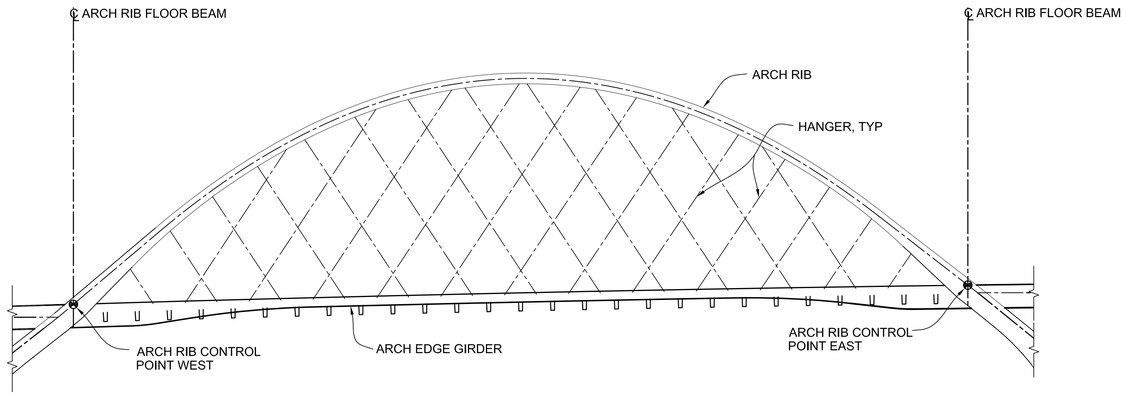

HANGER LAYOUT - ARCH SPANS 4 & 6

SCALE: 1" = 20'

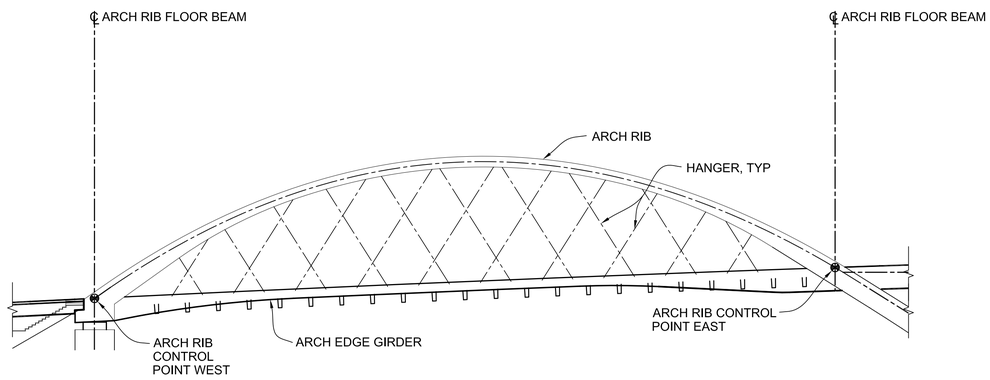

HANGER LAYOUT - ARCH SPAN 3

SCALE: 1" = 20'

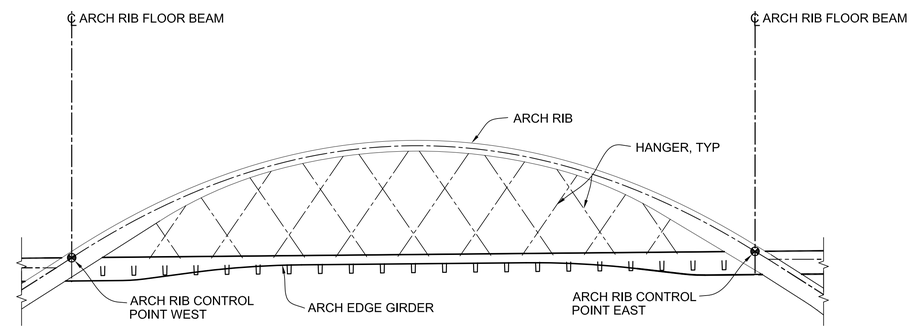

HANGER LAYOUT - ARCH SPAN 5

SCALE: 1" = 20'

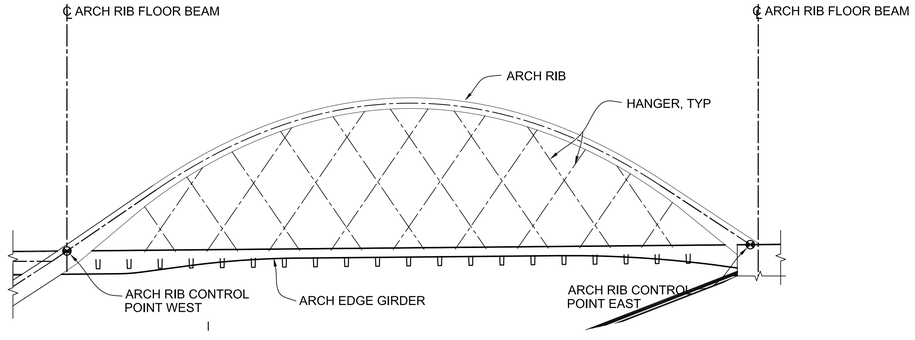

HANGER LAYOUT - ARCH SPAN 12

SCALE: 1" = 20'

NOTES:

1. FOR DETAILED HANGER LAYOUT INFORMATION, SEE DRAWINGS S5-50 THROUGH S5-65.

BUREAU OF ENGINEERING
OFFICIAL RECORD

HNTB
HNTB Corporation
601 W. 5TH STREET SUITE 1000
LOS ANGELES, CALIFORNIA 90071
TEL (213) 403-1000 FAX (213) 403-1001

CITY OF LOS ANGELES DEPARTMENT OF PUBLIC WORKS

BUREAU OF ENGINEERING

ENGINEERING
CITY OF LOS ANGELES

NO.	REVISIONS:	DATE:	BY:

STRUCTURE NO. 53C-2329

INDEX NO. P-38113

THIS PLAN WAS ELECTRONICALLY SIGNED AND STAMPED.

REGISTERED PROFESSIONAL ENGINEER MICHAEL H. JONES No. S3033 Exp. 06-31-16 STRUCTURAL STATE OF CALIFORNIA

GARY LEE MOORE, P.E. CITY ENGINEER

	DESIGN GROUP	DATE:
ENGINEER:	MICHAEL H. JONES LIC. NO. S3033	1/29/2016
DESIGNED BY:	MICHAEL H. JONES	1/29/2016
DRAWN BY:	LI ZHANG	1/29/2016
CHECKED BY:	CHARLES REDFIELD	1/29/2016
APPROVED BY:	MICHAEL H. JONES	1/29/2016

VERTICAL CONTROL: BM 12-04070.1929 (NGVD 29) - 1985 ADJUSTMENT
HORIZONTAL CONTROL: GPS; PID AE 1704, EPOCH 1991.35

SHEET TITLE: ARCH HANGER GENERAL LAYOUT NO. 1
PROJECT: SIXTH STREET VIADUCT REPLACEMENT
ADDRESS: SIXTH STREET VIADUCT (WHITTIER BLVD) LOS ANGELES, CA

WORK ORDER NO. E700224F

DRAWING NO. S5-49

SHEET 281 OF 560 SHEETS

THE CITY OF LOS ANGELES OR ITS OFFICERS OR AGENTS SHALL NOT BE RESPONSIBLE FOR THE ACCURACY OR COMPLETENESS OF ELECTRONIC COPIES OF THIS PLAN SHEET.

REVISION DATES (DESIGN STAGE ONLY)

C:\caddlib\pw\pwwestcoast\lzhang\dms57683\S5-49-HL1.dwg 6/27/16 17:36

Sheet Version 3.0

ADDENDUM 5

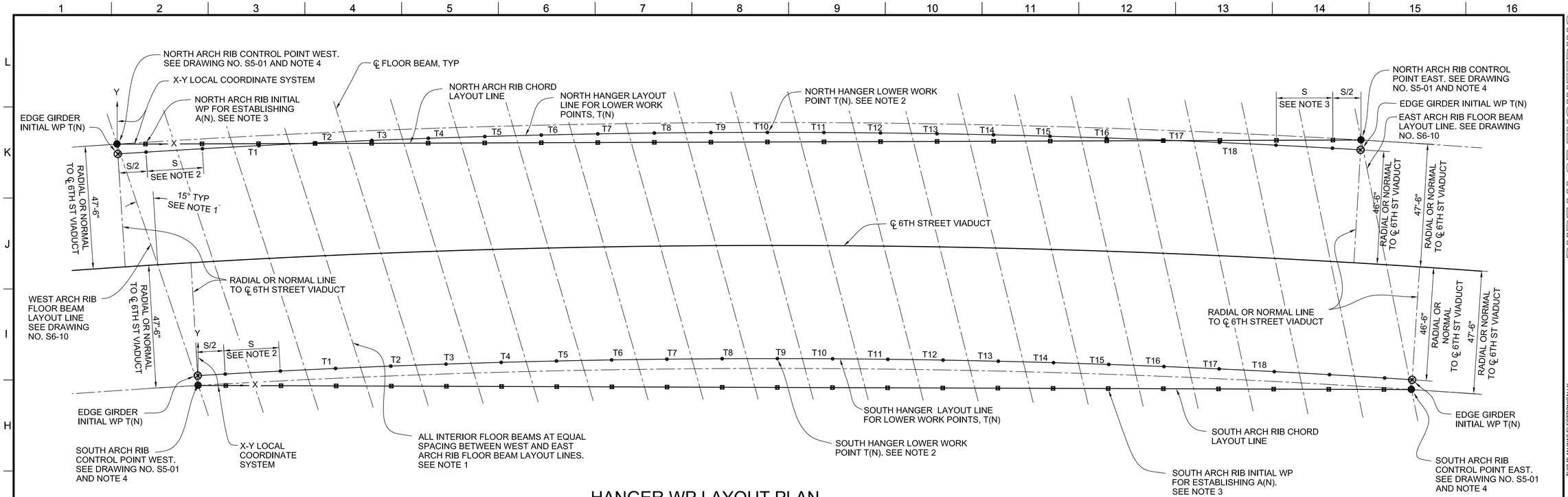

HANGER WP LAYOUT PLAN

NO SCALE

NOTES:

1. ALL ARCH RIB FLOOR BEAMS AND INTERIOR FLOOR BEAMS HAVE A 15° SKEW WITH RADIAL & NORMAL LINES TO THE ℄ OF 6TH STREET VIADUCT.
2. ALL HANGER LOWER WORK POINTS T(N) ARE SET AT EQUAL DIVISIONS "S" MEASURED CONCENTRIC OR PARALLEL TO THE EDGE OF DECK BETWEEN INITIAL EDGE GIRDER WP T(N). THE NUMBER OF DIVISIONS EQUALS THE NUMBER FLOOR BEAM SPACES.
3. ALL ARCH RIB INITIAL WP USED TO ESTABLISH ARCH RIB WP A(N) ARE SET MID-WAY BETWEEN EQUAL DIVISIONS "S" MEASURED ALONG THE NORTH AND SOUTH CHORD LAYOUT LINE. THE NUMBER OF DIVISIONS EQUALS THE NUMBER FLOOR BEAM SPACES.
4. COORDINATES FOR HANGER WORK POINTS A(N) AND T(N) ARE PROVIDED ON DRAWINGS S5-51 THROUGH S5-66. BOTH THE NORTH AND SOUTH ARCH RIB CONTROL POINT WEST ARE USE TO ESTABLISH THE LOCAL COORDINATE SYSTEM FOR THE HANGER WORK POINTS A(N) AND T(N) AND HAVE COORDINATES OF (X=0, Y=0, Z). COORDINATES "Z" ARE SET EQUAL TO ACTUAL ELEVATIONS.

LEGEND:

- HANGER LOWER WORK POINTS T(N) (SEE NOTE 2)
- ARCH RIB INITIAL WP (SEE NOTE 2)
- ARCH RIB CONTROL POINT
- EDGE GIRDER INITIAL WP T(N) (SEE NOTE 2)

WP - WORK POINT

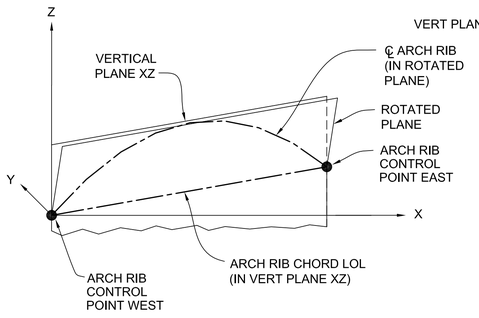

ISOMETRIC VIEW

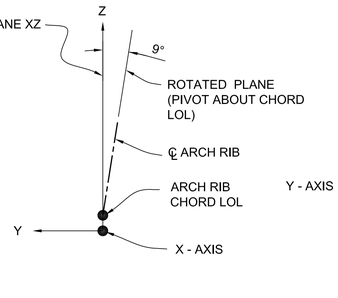

TYPICAL SECTION

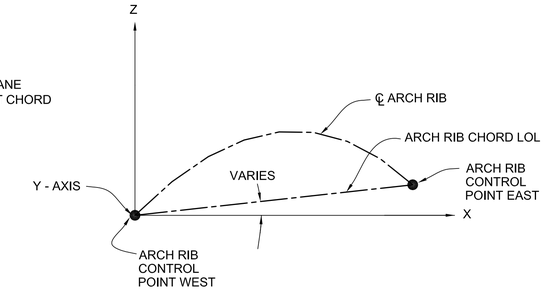

ELEVATION

ARCH RIB ROTATION LAYOUT

NO SCALE

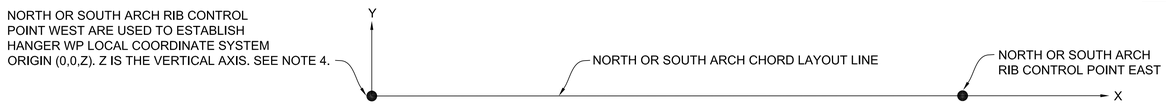

HANGER WP LOCAL COORDINATE SYSTEM

NO SCALE

(CLOCKWISE ROTATION SHOWN FOR SOUTH ARCH RIBS, NORTH ARCH RIBS SIMILAR BUT ROTATION IS COUNTERCLOCKWISE)

NOTES:

1. X-AXIS AND Y-AXIS ARE IN A LEVEL PLANE.
2. Z-AXIS IS VERTICAL.

BUREAU OF ENGINEERING OFFICIAL RECORD

HNTB
HNTB Corporation
601 W. 5TH STREET SUITE 1000
LOS ANGELES, CALIFORNIA 90071
TEL (213) 403-1000 FAX (213) 403-1001

CITY OF LOS ANGELES DEPARTMENT OF PUBLIC WORKS
BUREAU OF ENGINEERING

GARY LEE MOORE, P.E. CITY ENGINEER

ENGINEER:	MICHAEL H. JONES	LIC. NO. S3033	DATE: 1/29/2016
DESIGNED BY:	MICHAEL H. JONES	DESIGN GROUP	1/29/2016
DRAWN BY:	LI ZHANG		1/29/2016
CHECKED BY:	CHARLES REDFIELD		1/29/2016
APPROVED BY:	MICHAEL H. JONES		1/29/2016

VERTICAL CONTROL: BM 12-04070, 1929 (NGVD 29) - 1985 ADJUSTMENT
HORIZONTAL CONTROL: GPS; PID AE 1704, EPOCH 1991.35

SHEET TITLE: ARCH HANGER GENERAL LAYOUT NO. 2

PROJECT: SIXTH STREET VIADUCT REPLACEMENT

ADDRESS: SIXTH STREET VIADUCT (WHITTIER BLVD) LOS ANGELES, CA

STRUCTURE NO. 53C-2329

INDEX NO. P-38113

NO.	REVISIONS:	DATE	BY:

THIS PLAN WAS ELECTRONICALLY SIGNED AND STAMPED

REGISTERED PROFESSIONAL ENGINEER MICHAEL H. JONES No. S3033 CIVIL STATE OF CALIFORNIA

WORK ORDER NO. E700224F

DRAWING NO. S5-50

SHEET 282 OF 560 SHEETS

REVISION DATES (DESIGN STAGE ONLY)

THE CITY OF LOS ANGELES OR ITS OFFICERS OR AGENTS SHALL NOT BE RESPONSIBLE FOR THE ACCURACY OR COMPLETENESS OF ELECTRONIC COPIES OF THIS PLAN SHEET.

C:\caddlib\pw\pwwestcoast\lzhang\dms57683\S5-50-HL1.dwg 6/27/16 17:37

Sheet Version 3.0

ADDENDUM 5

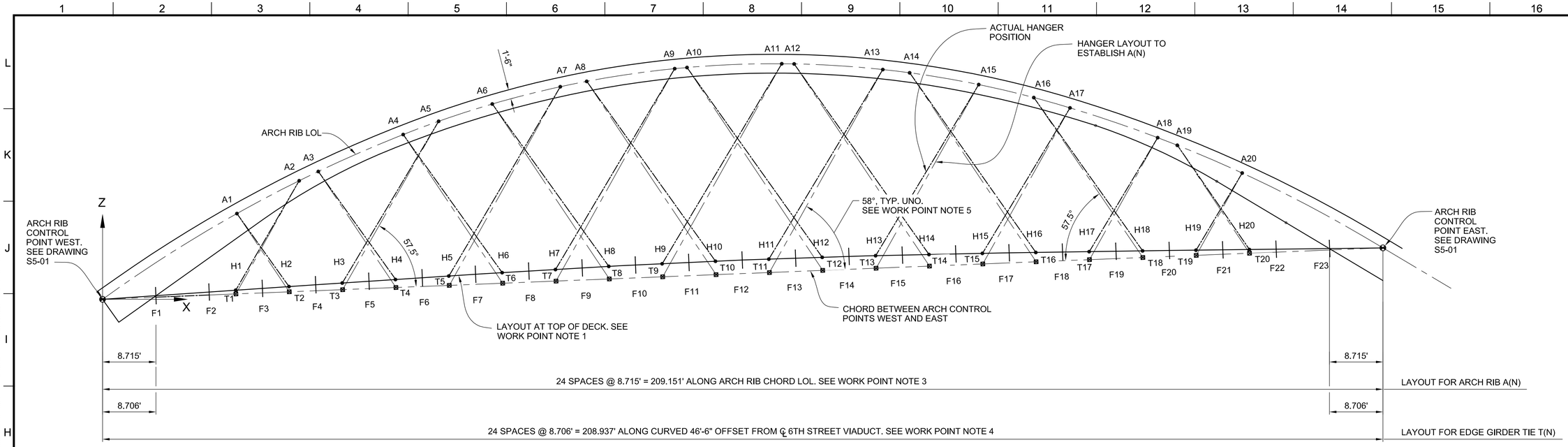

ARCH RIB ELEVATION - SPAN 3 NORTH

NO SCALE

LEGEND:

T(N)	INDICATES HANGER WORK POINT AT TOP OF DECK
A(N)	INDICATES HANGER WORK POINT ALONG ARCH RIB LAYOUT LINE
H(N)	INDICATES HANGER MEMBER
F(N)	INDICATES FLOOR BEAM CENTER LINE WITH RESPECT TO ℄ 6TH STREET VIADUCT
LL+ I	HL93 LIVE LOAD
PL	PEDESTRIAN LIVE LOAD
FULL PL	PEDESTRIAN LOAD ACROSS ENTIRE VIADUCT
•	T(N) AND A(N) WORK POINTS
⊠	ARCH RIB A(N) WP

WORK POINT NOTES:

1. SEE DRAWING S5-50 FOR LAYOUT OF A(N) AND T(N) WORK POINTS.
2. HANGER LENGTH SHOWN IS BASED ON THE THEORETICAL STRAIGHT LINE DIMENSIONS. WORK POINT TO WORK POINT, AND DOES NOT INCLUDE HANGER SAG. WORK POINTS ARE FINAL THEORETICAL COORDINATES REPRESENTING THE VERTICAL AND HORIZONTAL ALIGNMENT.
3. WORK POINT A(N) IS ALONG ARCH RIB LOL AT ℄ ARCH RIB.
4. WORK POINTS T(N) ARE STATIONS OFFSET 46'-6" RELATIVE TO ℄ 6TH STREET VIADUCT.
5. THE HANGER ANGLE SHOWN IS APPROXIMATE AND IS MEASURED FROM THE CHORD BETWEEN ARCH CONTROL POINTS WEST AND EAST AND IS USED TO ESTABLISH ARCH RIB WORK POINTS A(N). THE ACTUAL HANGER INSTALLATION ANGLE WILL BE ESTABLISHED BETWEEN WORK POINTS A(N) AND T(N).

HANGER FORCE NOTES:

1. FOR HANGER ANCHORAGE DETAILS, SEE DRAWING S5-70 TO S5-74.
2. LOAD "DEAD LOAD W/O FWS" INCLUDES ALL DEAD LOAD (EXCEPT FUTURE WEARING SURFACE), ERECTION STRESSES, HANGER PRESTRESS, AND DECK POST-TENSION FOR THE COMPLETED BRIDGE CONDITION. LOAD "FWS" INCLUDES MASS OF FUTURE WEARING SURFACE ONLY. ALL FORCES ARE UNFACTORED.
3. DEAD LOAD HANGER FORCES PROVIDED ARE VALUES DEVELOPED IN DESIGN. CONTRACTOR SHALL INSTALL AND TENSION HANGERS ACCORDING TO APPROVED ERECTION MANUAL. SEE DRAWING NOS. S9-05 THROUGH S9-07 FOR CONSTRUCTION SEQUENCE.

CAMBER NOTES:

1. THE CONTRACTOR SHALL DETERMINE ALL DEFLECTION AND CAMBER VALUES BASED ON THE SELECTED ERECTION SEQUENCE.
2. SEE DRAWING NO. S9-05 FOR CONSTRUCTION SEQUENCE AND GEOMETRY CONTROL SUBMITTAL REQUIREMENTS.
3. SEE NOTE NO. 5 ON DRAWING NO. S5-23 FOR CONSTRUCTION TOLERANCE REQUIREMENTS AT ARCH RIB.

HANGER WORK POINT COORDINATES

HANGER NO.	LOWER WORK POINTS				UPPER WORK POINTS				DISTANCE BETWEEN WORK POINTS (FT)
	POINT	X (FT)	Y (FT)	Z (FT)	POINT	X (FT)	Y (FT)	Z (FT)	
H1	T1	21.781	-0.596	276.657	A2	32.111	2.778	294.526	20.91
H2	T2	30.486	-0.461	277.070	A1	21.918	2.009	289.240	15.09
H3	T3	39.191	-0.341	277.478	A5	54.791	4.106	303.878	30.98
H4	T4	47.896	-0.236	277.881	A3	35.170	2.987	295.978	22.36
H5	T5	56.601	-0.146	278.279	A7	74.656	4.850	309.420	36.34
H6	T6	65.307	-0.071	278.672	A4	49.042	3.819	301.821	28.56
H7	T7	74.012	-0.010	279.060	A9	93.354	5.195	312.391	38.89
H8	T8	82.718	0.035	279.442	A6	63.623	4.484	306.641	33.53
H9	T9	91.423	0.065	279.820	A11	110.828	5.211	313.230	38.98
H10	T10	100.129	0.080	280.193	A8	79.009	4.960	310.301	37.10
H11	T11	108.835	0.080	280.560	A13	127.308	4.960	312.343	37.08
H12	T12	117.541	0.065	280.923	A10	95.355	5.211	312.576	39.00
H13	T13	126.246	0.035	281.281	A15	142.952	4.485	310.002	33.52
H14	T14	134.952	-0.010	281.633	A12	112.837	5.195	313.214	38.90
H15	T15	143.657	-0.071	281.981	A17	157.884	3.819	306.422	28.55
H16	T16	152.363	-0.146	282.323	A14	131.720	4.850	311.830	36.36
H17	T17	161.068	-0.236	282.660	A18	172.200	2.987	301.770	22.35
H18	T18	169.773	-0.341	282.993	A16	151.976	4.107	307.994	31.01
H19	T19	178.478	-0.461	283.320	A20	185.976	2.010	296.180	15.09
H20	T20	187.183	-0.596	283.642	A19	175.371	2.777	300.580	20.92

HANGER FORCE SUMMARY

HANGER NO.	STRUCTURAL STRAND DIAMETER (IN)	GROSS METALLIC AREA (IN^2)	FINAL DEAD LOAD		(LL+I) + PL		FULL PL		PERMIT	
			DEAD LOAD W/O FWS (KIPS)	FWS (KIPS)	MAX (KIPS)	MIN (KIPS)	MAX (KIPS)	MIN (KIPS)	MAX (KIPS)	MIN (KIPS)
H1	2¼	4.54	149	4	20	-2	15	-3	20	-1
H2	2¼	4.54	217	12	37	-3	39	-5	55	-3
H3	2¼	4.54	133	7	47	-15	37	-17	47	-17
H4	2¼	4.54	163	15	46	-4	49	-6	71	-6
H5	2¼	4.54	112	9	63	-25	54	-27	68	-30
H6	2¼	4.54	155	16	52	-8	55	-10	80	-9
H7	2¼	4.54	112	11	66	-28	61	-29	77	-35
H8	2¼	4.54	151	15	58	-15	59	-17	86	-12
H9	2¼	4.54	112	12	62	-28	61	-27	76	-33
H10	2¼	4.54	153	14	64	-20	63	-23	92	-16
H11	2¼	4.54	115	13	57	-25	59	-22	73	-27
H12	2¼	4.54	157	13	69	-24	67	-30	97	-22
H13	2¼	4.54	127	14	51	-17	56	-16	68	-18
H14	2¼	4.54	159	12	73	-27	69	-36	98	-30
H15	2¼	4.54	144	15	47	-11	54	-11	63	-9
H16	2¼	4.54	151	10	71	-30	65	-38	90	-38
H17	2¼	4.54	156	15	43	-8	50	-9	55	-5
H18	2¼	4.54	149	7	54	-26	52	-31	63	-34
H19	2¼	4.54	200	13	37	-8	43	-8	43	-5
H20	2¼	4.54	144	4	26	-12	26	-14	29	-15

THE CITY OF LOS ANGELES OR ITS OFFICERS OR AGENTS SHALL NOT BE RESPONSIBLE FOR THE ACCURACY OR COMPLETENESS OF ELECTRONIC COPIES OF THIS PLAN SHEET.

C:\caddlib\pw\pwwestcoast\lzhang\dms57683\S5-51-HL01-16.dwg 6/27/16 17:41

REVISION DATES (DESIGN STAGE ONLY)

Sheet Version 3.0

BUREAU OF ENGINEERING

OFFICIAL RECORD

HNTB
HNTB Corporation
601 W. 5TH STREET SUITE 1000
LOS ANGELES, CALIFORNIA 90071
TEL (213) 403-1000 FAX (213) 403-1001

CITY OF LOS ANGELES DEPARTMENT OF PUBLIC WORKS

BUREAU OF ENGINEERING

ENGINEERING
CITY OF LOS ANGELES

NO.	REVISIONS:	DATE	BY:

STRUCTURE NO. 53C-2329

INDEX NO. P-38113

THIS PLAN WAS ELECTRONICALLY SIGNED AND STAMPED.

REGISTERED PROFESSIONAL ENGINEER — MICHAEL H. JONES — No. S3033 — CIVIL — STATE OF CALIFORNIA

GARY LEE MOORE, P.E. — CITY ENGINEER

		DESIGN GROUP	LIC. NO. S3033	DATE:
ENGINEER:	MICHAEL H. JONES			1/29/2016
DESIGNED BY:	MICHAEL H. JONES			1/29/2016
DRAWN BY:	LI ZHANG			1/29/2016
CHECKED BY:	CHARLES REDFIELD			1/29/2016
APPROVED BY:	MICHAEL H. JONES			1/29/2016

VERTICAL CONTROL: BM 12-04070, 1929 (NGVD 29) - 1985 ADJUSTMENT
HORIZONTAL CONTROL: GPS; PID AE 1704, EPOCH 1991.35

SHEET TITLE: ARCH HANGER LAYOUT NO. 1

PROJECT: SIXTH STREET VIADUCT REPLACEMENT

ADDRESS: SIXTH STREET VIADUCT (WHITTIER BLVD) LOS ANGELES, CA

WORK ORDER NO. E700224F

DRAWING NO. S5-51

SHEET 283 OF 560 SHEETS

ADDENDUM 5

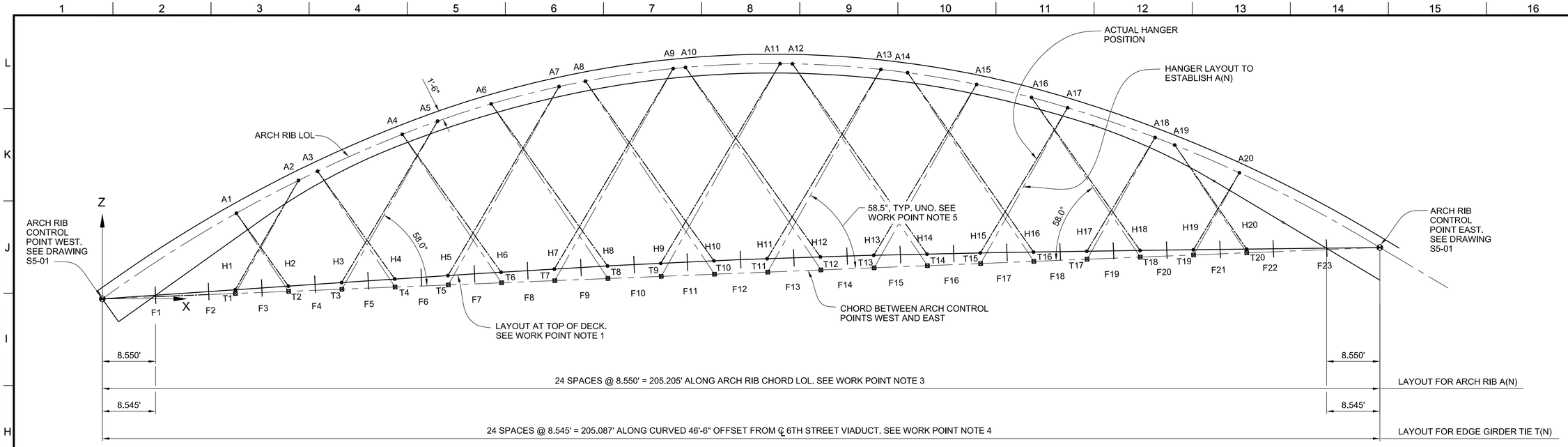

ARCH RIB ELEVATION - SPAN 3 SOUTH

NO SCALE

NOTES:

1. FOR NOTES AND LEGEND, SEE DRAWING S5-51.

HANGER WORK POINT COORDINATES

HANGER NO.	LOWER WORK POINTS				UPPER WORK POINTS				DISTANCE BETWEEN WORK POINTS (FT)
	POINT	X (FT)	Y (FT)	Z (FT)	POINT	X (FT)	Y (FT)	Z (FT)	
H1	T1	21.339	1.396	277.862	A2	31.503	-2.777	295.717	20.97
H2	T2	29.883	1.529	278.260	A1	21.511	-2.010	290.453	15.21
H3	T3	38.428	1.647	278.653	A5	53.758	-4.106	305.029	31.05
H4	T4	46.972	1.750	279.041	A3	34.515	-2.987	297.168	22.50
H5	T5	55.517	1.838	279.424	A7	73.246	-4.850	310.537	36.43
H6	T6	64.062	1.912	279.802	A4	48.129	-3.819	302.987	28.71
H7	T7	72.607	1.971	280.175	A9	91.593	-5.195	313.476	39.00
H8	T8	81.152	2.015	280.543	A6	62.437	-4.484	307.782	33.68
H9	T9	89.698	2.045	280.905	A11	108.738	-5.211	314.286	39.11
H10	T10	98.243	2.059	281.263	A8	77.535	-4.961	311.414	37.24
H11	T11	106.788	2.059	281.616	A13	124.909	-4.961	313.371	37.23
H12	T12	115.333	2.045	281.964	A10	93.575	-5.211	313.660	39.12
H13	T13	123.878	2.015	282.306	A15	140.255	-4.484	310.996	33.67
H14	T14	132.423	1.971	282.644	A12	110.728	-5.195	314.266	39.01
H15	T15	140.968	1.912	282.977	A17	154.910	-3.819	307.396	28.70
H16	T16	149.513	1.838	283.304	A14	129.255	-4.850	312.850	36.44
H17	T17	158.058	1.750	283.627	A18	168.957	-2.987	302.720	22.49
H18	T18	166.603	1.647	283.944	A16	149.131	-4.106	308.968	31.06
H19	T19	175.147	1.529	284.257	A20	182.472	-2.010	297.100	15.20
H20	T20	183.692	1.396	284.564	A19	172.079	-2.777	301.522	20.97

HANGER FORCE SUMMARY

HANGER NO.	STRUCTURAL STRAND DIAMETER (IN)	GROSS METALLIC AREA (IN^2)	FINAL DEAD LOAD		(LL+I) + PL		FULL PL		PERMIT	
			DEAD LOAD W/O FWS (KIPS)	FWS (KIPS)	MAX (KIPS)	MIN (KIPS)	MAX (KIPS)	MIN (KIPS)	MAX (KIPS)	MIN (KIPS)
H1	2¾	4.54	130	3	20	-4	14	-5	19	-3
H2	2¾	4.54	214	12	37	-3	38	-5	52	-4
H3	2¾	4.54	113	6	47	-15	36	-19	48	-14
H4	2¾	4.54	165	15	45	-5	48	-6	67	-7
H5	2¾	4.54	97	8	63	-28	54	-31	68	-31
H6	2¾	4.54	158	15	53	-9	55	-11	78	-9
H7	2¾	4.54	104	10	65	-30	60	-31	76	-35
H8	2¾	4.54	153	15	59	-16	60	-18	85	-13
H9	2¾	4.54	110	12	62	-28	62	-27	78	-32
H10	2¾	4.54	151	13	66	-23	65	-27	92	-18
H11	2¾	4.54	116	13	57	-25	61	-23	74	-28
H12	2¾	4.54	152	12	70	-24	67	-32	96	-24
H13	2¾	4.54	128	15	51	-16	57	-15	70	-17
H14	2¾	4.54	151	10	73	-29	68	-38	96	-32
H15	2¾	4.54	143	16	47	-9	54	-9	66	-8
H16	2¾	4.54	143	8	69	-33	63	-41	88	-40
H17	2¾	4.54	153	15	44	-6	50	-7	59	-4
H18	2¾	4.54	140	5	51	-28	49	-34	60	-36
H19	2¾	4.54	196	12	37	-6	42	-6	46	-4
H20	2¾	4.54	136	3	24	-12	24	-15	27	-15

THE CITY OF LOS ANGELES OR ITS OFFICERS OR AGENTS SHALL NOT BE RESPONSIBLE FOR THE ACCURACY OR COMPLETENESS OF ELECTRONIC COPIES OF THIS PLAN SHEET.

C:\caddlib\pw\pwwestcost\zhang\dms57683\S5-51-HL01-16.dwg 6/27/16 17:41

REVISION DATES (DESIGN STAGE ONLY)

Sheet Version 3.0

BUREAU OF ENGINEERING

OFFICIAL RECORD

HNTB
HNTB Corporation
601 W. 5TH STREET SUITE 1000
LOS ANGELES, CALIFORNIA 90071
TEL (213) 403-1000 FAX (213) 403-1001

CITY OF LOS ANGELES DEPARTMENT OF PUBLIC WORKS BUREAU OF ENGINEERING

ENGINEERING CITY OF LOS ANGELES

NO.	REVISIONS:	DATE	BY:

STRUCTURE NO. 53C-2329

INDEX NO. P-38113

THIS PLAN WAS ELECTRONICALLY SIGNED AND STAMPED.

REGISTERED PROFESSIONAL ENGINEER MICHAEL H. JONES No. S3033 CIVIL STATE OF CALIFORNIA

GARY LEE MOORE, P.E. CITY ENGINEER

		DATE:
ENGINEER:	MICHAEL H. JONES	1/29/2016
LIC. NO.	S3033	1/29/2016
DESIGNED BY:	MICHAEL H. JONES	1/29/2016
DRAWN BY:	LI ZHANG	1/29/2016
CHECKED BY:	CHARLES REDFIELD	1/29/2016
APPROVED BY:	MICHAEL H. JONES	1/29/2016

DESIGN GROUP

VERTICAL CONTROL: BM 12-04070, 1929 (NGVD 29) - 1985 ADJUSTMENT
HORIZONTAL CONTROL: GPS; PID AE 1704, EPOCH 1991.35

SHEET TITLE: ARCH HANGER LAYOUT NO. 2

PROJECT: SIXTH STREET VIADUCT REPLACEMENT

ADDRESS: SIXTH STREET VIADUCT (WHITTIER BLVD) LOS ANGELES, CA

WORK ORDER NO. E700224F

DRAWING NO. S5-52

SHEET 284 OF 560 SHEETS

ADDENDUM 5

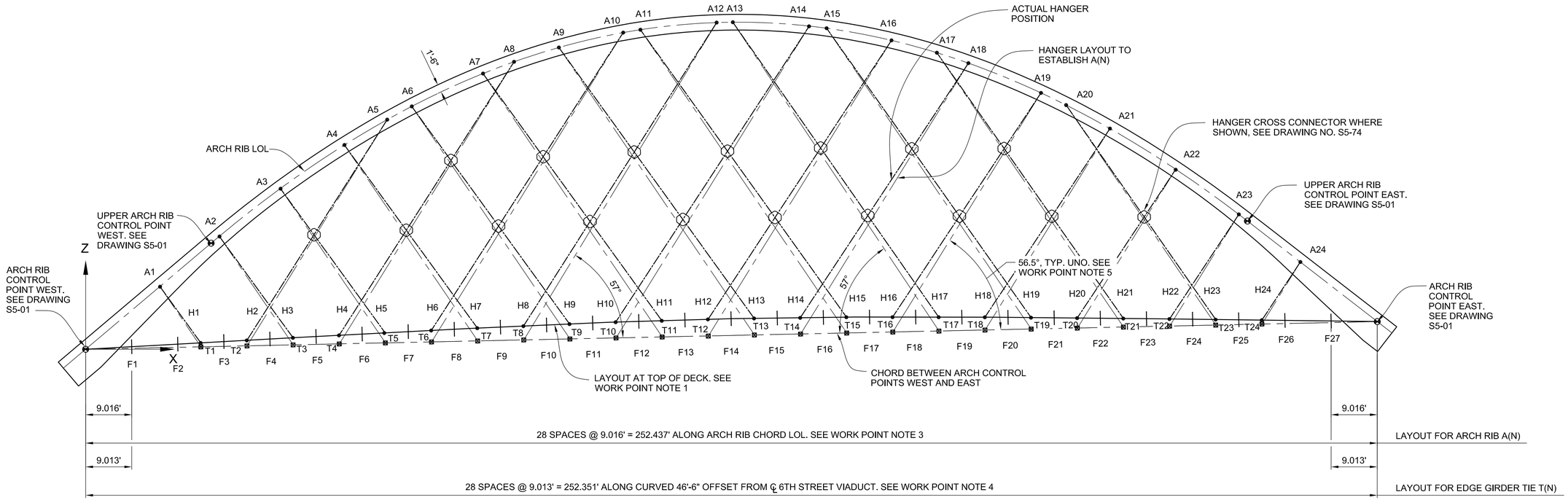

NOTES:

1. FOR NOTES AND LEGEND, SEE DRAWING S5-51.

ARCH RIB ELEVATION - SPAN 4 NORTH

NO SCALE

HANGER WORK POINT COORDINATES

HANGER NO.	LOWER WORK POINTS				UPPER WORK POINTS				DISTANCE BETWEEN WORK POINTS (FT)
	POINT	X (FT)	Y (FT)	Z (FT)	POINT	X (FT)	Y (FT)	Z (FT)	
H1	T1	22.551	-0.487	287.426	A1	14.410	1.859	298.831	14.21
H2	T2	31.561	-0.310	287.686	A5	59.069	6.728	330.587	51.45
H3	T3	40.572	-0.149	287.940	A2	25.977	3.338	308.438	25.40
H4	T4	49.584	-0.004	288.188	A8	83.748	8.355	341.410	63.79
H5	T5	58.595	0.125	288.432	A3	37.947	4.724	317.459	35.92
H6	T6	67.607	0.238	288.670	A10	105.027	9.150	346.905	69.79
H7	T7	76.619	0.334	288.902	A4	50.490	5.979	325.664	45.45
H8	T8	85.631	0.415	289.129	A12	123.275	9.387	348.809	71.13
H9	T9	94.644	0.479	289.351	A6	63.673	7.087	332.958	53.89
H10	T10	103.656	0.527	289.567	A14	141.385	9.224	348.184	70.25
H11	T11	112.669	0.559	289.778	A7	77.622	8.020	339.162	61.01
H12	T12	121.681	0.576	289.984	A16	157.461	8.747	345.528	66.57
H13	T13	130.694	0.576	290.184	A9	92.472	8.747	344.084	66.58
H14	T14	139.706	0.559	290.379	A18	172.515	8.020	341.269	61.01
H15	T15	148.719	0.527	290.568	A11	108.414	9.224	347.452	70.26
H16	T16	157.731	0.479	290.752	A19	186.725	7.087	335.690	53.89
H17	T17	166.744	0.415	290.931	A13	126.479	9.387	348.880	71.13
H18	T18	175.756	0.334	291.104	A21	200.219	5.979	328.989	45.45
H19	T19	184.768	0.238	291.272	A15	144.793	9.150	347.788	69.80
H20	T20	193.780	0.125	291.434	A22	213.114	4.724	321.349	35.91
H21	T21	202.791	-0.004	291.591	A17	166.295	8.355	343.244	63.80
H22	T22	211.803	-0.149	291.743	A23	225.472	3.338	312.868	25.40
H23	T23	220.814	-0.310	291.889	A20	191.431	6.728	333.526	51.44
H24	T24	229.825	-0.487	292.030	A24	237.440	1.859	303.783	14.20

HANGER FORCE SUMMARY

HANGER NO.	STRUCTURAL STRAND DIAMETER (IN)	GROSS METALLIC AREA (IN^2)	FINAL DEAD LOAD		(LL+I) + PL		FULL PL		PERMIT	
			DEAD LOAD W/O FWS (KIPS)	FWS (KIPS)	MAX (KIPS)	MIN (KIPS)	MAX (KIPS)	MIN (KIPS)	MAX (KIPS)	MIN (KIPS)
H1	2¾	4.54	178	9	26	-4	30	-3	29	-3
H2	2¾	4.54	150	3	38	-22	36	-27	47	-27
H3	2¾	4.54	151	12	34	-3	37	-3	44	-2
H4	2¾	4.54	144	7	58	-26	56	-35	75	-28
H5	2¾	4.54	155	14	40	-2	43	-3	55	-2
H6	2¾	4.54	156	11	64	-23	63	-32	86	-22
H7	2¾	4.54	148	15	44	-3	46	-4	62	-3
H8	2¾	4.54	156	13	63	-18	62	-25	86	-15
H9	2¾	4.54	138	15	45	-3	45	-4	64	-3
H10	2¾	4.54	150	14	58	-14	58	-18	79	-13
H11	2¾	4.54	141	15	49	-5	49	-6	70	-4
H12	2¾	4.54	142	14	53	-11	53	-13	73	-10
H13	2¾	4.54	143	15	53	-10	54	-11	75	-10
H14	2¾	4.54	133	13	48	-9	48	-10	66	-8
H15	2¾	4.54	150	15	60	-14	61	-17	84	-13
H16	2¾	4.54	130	13	44	-5	45	-6	61	-3
H17	2¾	4.54	152	15	64	-18	64	-23	90	-16
H18	2¾	4.54	127	12	39	-5	41	-6	52	-3
H19	2¾	4.54	145	13	66	-21	65	-29	90	-22
H20	2¾	4.54	136	13	38	-2	40	-4	51	-2
H21	2¾	4.54	122	9	60	-24	57	-32	76	-29
H22	2¾	4.54	136	11	34	-4	37	-5	41	-2
H23	2¾	4.54	124	4	38	-20	36	-25	44	-26
H24	2¾	4.54	168	9	27	-6	33	-7	28	-4

THE CITY OF LOS ANGELES OR ITS OFFICERS OR AGENTS SHALL NOT BE RESPONSIBLE FOR THE ACCURACY OR COMPLETENESS OF ELECTRONIC COPIES OF THIS PLAN SHEET.

C:\caddlib\pw\pwwestcoast\zhang\dms57683\S5-51-HL01-16.dwg 6/27/16 17:41

REVISION DATES (DESIGN STAGE ONLY)

Sheet Version 3.0

BUREAU OF ENGINEERING

ENGINEERING
CITY OF LOS ANGELES

NO.	REVISIONS:	DATE:	BY:

STRUCTURE NO. 53C-2329

INDEX NO. P-38113

THIS PLAN WAS ELECTRONICALLY SIGNED AND STAMPED.

REGISTERED PROFESSIONAL ENGINEER MICHAEL H. JONES No. S3033 CIVIL STATE OF CALIFORNIA

BUREAU OF ENGINEERING OFFICIAL RECORD

HNTB
HNTB Corporation
601 W. 5TH STREET SUITE 1000
LOS ANGELES, CALIFORNIA 90071
TEL (213) 403-1000 FAX (213) 403-1001

CITY OF LOS ANGELES DEPARTMENT OF PUBLIC WORKS BUREAU OF ENGINEERING

VERTICAL CONTROL:	BM 12-04070, 1929 (NGVD 29) - 1985 ADJUSTMENT
HORIZONTAL CONTROL:	GPS; PID AE 1704, EPOCH 1991.35
SHEET TITLE:	ARCH HANGER LAYOUT NO. 3
PROJECT:	SIXTH STREET VIADUCT REPLACEMENT
ADDRESS:	SIXTH STREET VIADUCT (WHITTIER BLVD) LOS ANGELES, CA

CITY ENGINEER	GARY LEE MOORE, P.E.	DATE:	1/29/2016
DESIGN GROUP		LIC. NO. S3033	1/29/2016
ENGINEER:	MICHAEL H. JONES		1/29/2016
DESIGNED BY:	MICHAEL H. JONES		
DRAWN BY:	LI ZHANG		1/29/2016
CHECKED BY:	CHARLES REDFIELD		1/29/2016
APPROVED BY:	MICHAEL H. JONES		1/29/2016

WORK ORDER NO. E700224F

DRAWING NO. S5-53

SHEET 285 OF 560 SHEETS

ADDENDUM 5

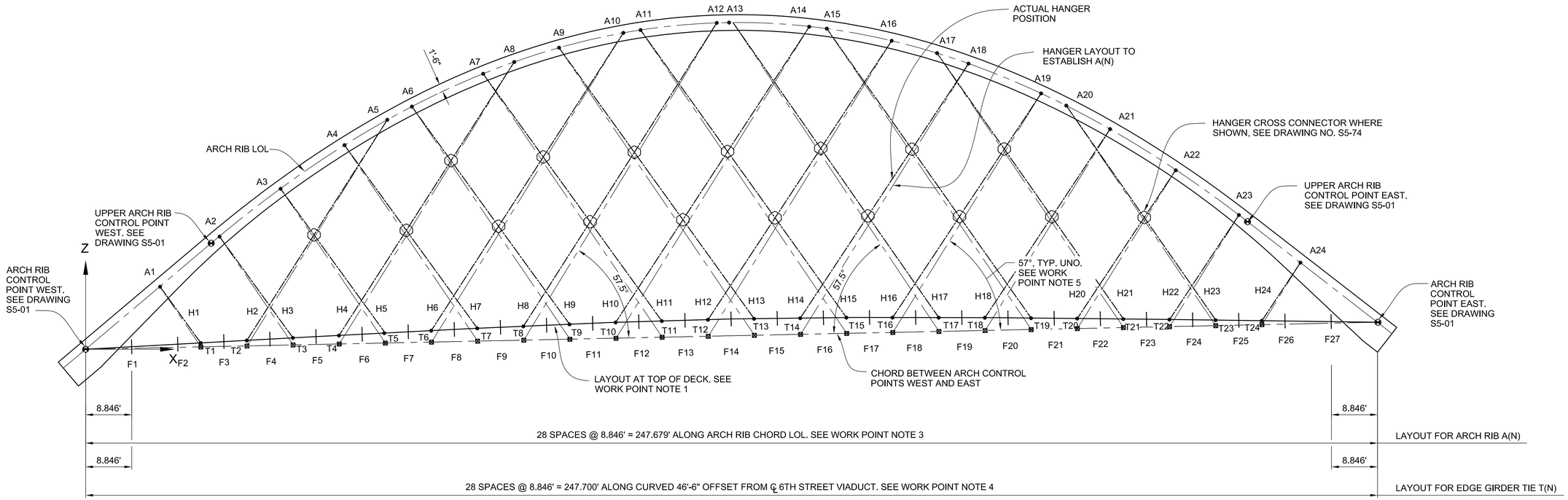

NOTES:

1. FOR NOTES AND LEGEND, SEE DRAWING S5-51.

ARCH RIB ELEVATION - SPAN 4 SOUTH

NO SCALE

HANGER WORK POINT COORDINATES

HANGER NO.	LOWER WORK POINTS				UPPER WORK POINTS				DISTANCE BETWEEN WORK POINTS (FT)
	POINT	X (FT)	Y (FT)	Z (FT)	POINT	X (FT)	Y (FT)	Z (FT)	
H1	T1	22.085	1.503	288.152	A1	14.247	-1.836	299.428	14.13
H2	T2	30.930	1.677	288.396	A5	57.860	-6.694	331.033	51.12
H3	T3	39.775	1.835	288.635	A2	25.655	-3.304	308.942	25.26
H4	T4	48.621	1.977	288.868	A8	82.191	-8.348	341.983	63.68
H5	T5	57.466	2.104	289.096	A3	37.375	-4.697	317.989	35.84
H6	T6	66.312	2.214	289.318	A10	103.125	-9.156	347.525	69.80
H7	T7	75.158	2.309	289.536	A4	49.652	-5.961	326.227	45.44
H8	T8	84.004	2.388	289.747	A12	121.026	-9.393	349.397	71.19
H9	T9	92.850	2.451	289.954	A6	62.568	-7.075	333.534	53.92
H10	T10	101.696	2.499	290.155	A14	138.795	-9.229	348.733	70.32
H11	T11	110.543	2.530	290.350	A7	76.231	-8.015	339.756	61.07
H12	T12	119.389	2.546	290.540	A16	154.548	-8.747	346.021	66.65
H13	T13	128.236	2.546	290.725	A9	90.780	-8.747	344.689	66.65
H14	T14	137.082	2.530	290.905	A18	169.290	-8.015	341.700	61.06
H15	T15	145.929	2.499	291.078	A11	106.406	-9.229	348.057	70.33
H16	T16	154.775	2.451	291.247	A19	183.201	-7.075	336.054	53.91
H17	T17	163.621	2.388	291.410	A13	124.132	-9.393	349.462	71.19
H18	T18	172.467	2.309	291.568	A21	196.412	-5.961	329.293	45.44
H19	T19	181.313	2.214	291.720	A15	142.095	-9.156	348.339	69.81
H20	T20	190.159	2.104	291.867	A22	209.022	-4.697	321.575	35.84
H21	T21	199.004	1.977	292.009	A17	163.243	-8.348	343.676	63.68
H22	T22	207.850	1.835	292.145	A23	221.109	-3.304	313.025	25.26
H23	T23	216.695	1.677	292.276	A20	188.010	-6.694	333.752	51.12
H24	T24	225.540	1.503	292.401	A24	232.890	-1.836	303.995	14.13

HANGER FORCE SUMMARY

HANGER NO.	STRUCTURAL STRAND DIAMETER (IN)	GROSS METALLIC AREA (IN^2)	FINAL DEAD LOAD		(LL+I) + PL		FULL PL		PERMIT	
			DEAD LOAD W/O FWS (KIPS)	FWS (KIPS)	MAX (KIPS)	MIN (KIPS)	MAX (KIPS)	MIN (KIPS)	MAX (KIPS)	MIN (KIPS)
H1	2¼	4.54	167	9	24	-5	28	-4	25	-4
H2	2¼	4.54	143	2	36	-21	33	-26	43	-27
H3	2¼	4.54	140	11	32	-3	34	-3	39	-2
H4	2¼	4.54	144	7	58	-26	55	-35	74	-29
H5	2¼	4.54	144	13	37	-3	40	-4	50	-3
H6	2¼	4.54	160	10	64	-23	63	-33	87	-23
H7	2¼	4.54	138	14	42	-3	43	-3	58	-3
H8	2¼	4.54	157	12	62	-20	62	-26	86	-17
H9	2¼	4.54	133	14	45	-5	46	-5	62	-4
H10	2¼	4.54	147	13	57	-17	58	-20	79	-16
H11	2¼	4.54	137	15	50	-7	50	-8	69	-6
H12	2¼	4.54	140	13	53	-13	53	-14	73	-12
H13	2¼	4.54	141	15	55	-11	55	-13	76	-10
H14	2¼	4.54	136	14	48	-9	49	-10	68	-8
H15	2¼	4.54	145	15	60	-15	60	-18	83	-13
H16	2¼	4.54	134	14	44	-5	46	-7	63	-4
H17	2¼	4.54	143	14	65	-18	64	-25	89	-16
H18	2¼	4.54	131	13	40	-4	43	-5	56	-3
H19	2¼	4.54	135	11	65	-23	63	-31	86	-24
H20	2¼	4.54	134	13	37	-3	40	-4	50	-2
H21	2¼	4.54	119	8	58	-26	55	-33	74	-30
H22	2¼	4.54	126	11	32	-4	35	-5	40	-2
H23	2¼	4.54	125	4	37	-21	35	-25	43	-27
H24	2¼	4.54	153	8	25	-6	29	-6	28	-3

THE CITY OF LOS ANGELES OR ITS OFFICERS OR AGENTS SHALL NOT BE RESPONSIBLE FOR THE ACCURACY OR COMPLETENESS OF ELECTRONIC COPIES OF THIS PLAN SHEET.

C:\caddlib\pw\pwwestcoast\zhang\dms57683\S5-51-HL01-16.dwg 6/27/16 17:41

REVISION DATES (DESIGN STAGE ONLY)

Sheet Version 3.0

BUREAU OF ENGINEERING

ENGINEERING CITY OF LOS ANGELES

NO.	REVISIONS:	DATE:	BY:

STRUCTURE NO. 53C-2329

INDEX NO. P-38113

THIS PLAN WAS ELECTRONICALLY SIGNED AND STAMPED.

REGISTERED PROFESSIONAL ENGINEER MICHAEL H. JONES No. S3033 CIVIL STATE OF CALIFORNIA

BUREAU OF ENGINEERING OFFICIAL RECORD

HNTB
HNTB Corporation
601 W. 5TH STREET SUITE 1000
LOS ANGELES, CALIFORNIA 90071
TEL (213) 403-1000 FAX (213) 403-1001

CITY OF LOS ANGELES DEPARTMENT OF PUBLIC WORKS BUREAU OF ENGINEERING

GARY LEE MOORE, P.E. CITY ENGINEER

ENGINEER:	MICHAEL H. JONES	DESIGN GROUP	CITY ENGINEER
DESIGNED BY:	MICHAEL H. JONES	LIC. NO.	S3033
DRAWN BY:	LI ZHANG	DATE:	1/29/2016
CHECKED BY:	CHARLES REDFIELD		1/29/2016
APPROVED BY:	MICHAEL H. JONES		1/29/2016
			1/29/2016

VERTICAL CONTROL: BM 12-04070, 1929 (NGVD 29) - 1988 ADJUSTMENT
HORIZONTAL CONTROL: GPS; PID AE 1704, EPOCH 1991.35

SHEET TITLE: ARCH HANGER LAYOUT NO. 4

PROJECT: SIXTH STREET VIADUCT REPLACEMENT

ADDRESS: SIXTH STREET VIADUCT (WHITTIER BLVD) LOS ANGELES, CA

WORK ORDER NO. E700224F

DRAWING NO. S5-54

SHEET 286 OF 560 SHEETS

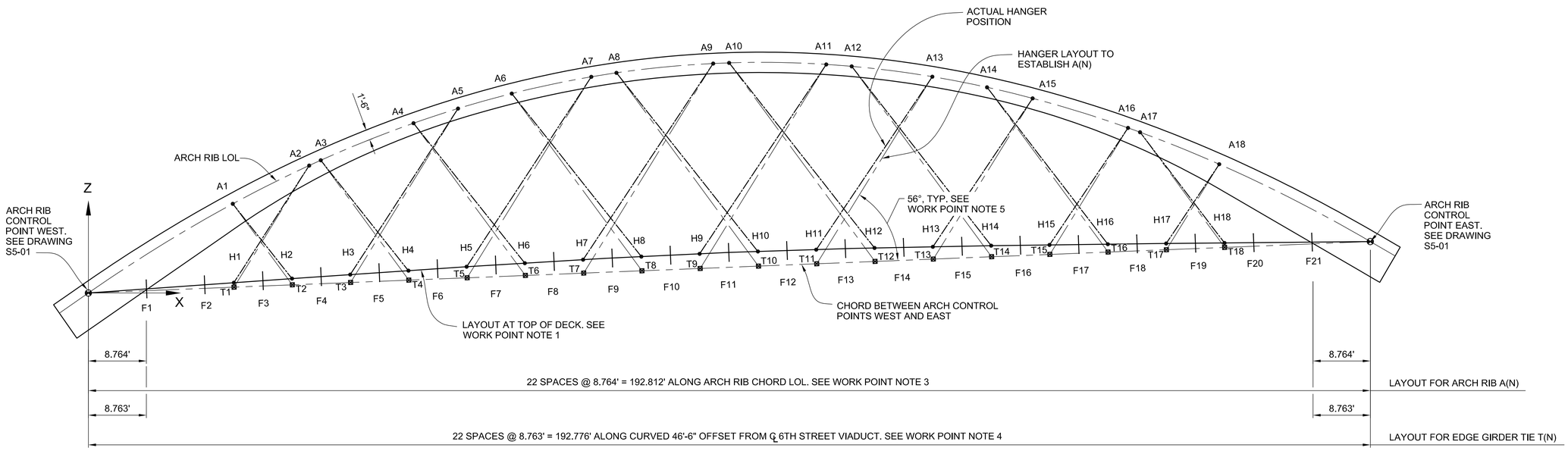

ARCH RIB ELEVATION - SPAN 5 NORTH

NO SCALE

NOTES:

1. FOR NOTES AND LEGEND, SEE DRAWING S5-51.

HANGER WORK POINT COORDINATES

HANGER NO.	LOWER WORK POINTS				UPPER WORK POINTS				DISTANCE BETWEEN WORK POINTS (FT)
	POINT	X (FT)	Y (FT)	Z (FT)	POINT	X (FT)	Y (FT)	Z (FT)	
H1	T1	21.922	-0.629	293.307	A2	33.758	2.786	311.026	21.58
H2	T2	30.684	-0.507	293.388	A1	22.113	1.959	305.694	15.20
H3	T3	39.446	-0.401	293.470	A5	56.398	3.988	318.827	30.82
H4	T4	48.208	-0.309	293.551	A3	35.530	2.899	311.757	22.42
H5	T5	56.970	-0.233	293.633	A7	76.540	4.603	322.895	35.53
H6	T6	65.733	-0.173	293.714	A4	49.630	3.684	316.840	28.44
H7	T7	74.495	-0.127	293.796	A9	94.920	4.803	324.331	37.07
H8	T8	83.258	-0.096	293.877	A6	64.525	4.286	320.783	33.08
H9	T9	92.020	-0.081	293.959	A11	111.903	4.675	323.681	36.07
H10	T10	100.783	-0.081	294.040	A8	80.352	4.675	323.387	36.07
H11	T11	109.546	-0.096	294.122	A13	127.775	4.286	321.371	33.08
H12	T12	118.308	-0.127	294.203	A10	97.319	4.803	324.354	37.07
H13	T13	127.071	-0.173	294.285	A15	142.741	3.684	317.706	28.44
H14	T14	135.833	-0.233	294.366	A12	115.723	4.603	323.260	35.53
H15	T15	144.595	-0.309	294.448	A16	156.933	2.899	312.886	22.42
H16	T16	153.357	-0.401	294.529	A14	135.937	3.988	319.567	30.82
H17	T17	162.119	-0.507	294.611	A18	170.461	1.959	307.074	15.20
H18	T18	170.881	-0.629	294.692	A17	158.718	2.786	312.189	21.58

HANGER FORCE SUMMARY

HANGER NO.	STRUCTURAL STRAND DIAMETER (IN)	GROSS METALLIC AREA (IN^2)	FINAL DEAD LOAD		(LL+I) + PL		FULL PL		PERMIT	
			DEAD LOAD W/O FWS (KIPS)	FWS (KIPS)	MAX (KIPS)	MIN (KIPS)	MAX (KIPS)	MIN (KIPS)	MAX (KIPS)	MIN (KIPS)
H1	2¼	4.54	152	3	25	-13	24	-15	30	-16
H2	2¼	4.54	196	13	39	-6	43	-6	52	-5
H3	2¼	4.54	143	5	54	-27	49	-33	66	-32
H4	2¼	4.54	166	15	48	-7	52	-9	67	-7
H5	2¼	4.54	148	9	72	-32	69	-43	90	-34
H6	2¼	4.54	165	15	53	-9	56	-12	76	-10
H7	2¼	4.54	140	11	72	-28	72	-39	92	-26
H8	2¼	4.54	161	14	59	-18	62	-22	81	-15
H9	2¼	4.54	136	13	66	-22	67	-29	87	-18
H10	2¼	4.54	169	13	66	-23	68	-31	90	-21
H11	2¼	4.54	139	14	57	-15	60	-20	77	-13
H12	2¼	4.54	184	10	70	-28	70	-39	93	-30
H13	2¼	4.54	155	15	50	-9	54	-12	71	-9
H14	2¼	4.54	192	8	68	-31	66	-41	88	-37
H15	2¼	4.54	154	14	43	-7	48	-10	60	-6
H16	2¼	4.54	171	5	51	-25	49	-31	64	-33
H17	2¼	4.54	174	11	34	-7	40	-9	43	-4
H18	2¼	4.54	151	3	24	-12	26	-15	31	-15

THIS PLAN WAS ELECTRONICALLY SIGNED AND STAMPED.
REGISTERED PROFESSIONAL ENGINEER MICHAEL H. JONES No. S3033 CIVIL STATE OF CALIFORNIA
BUREAU OF ENGINEERING OFFICIAL RECORD
THE CITY OF LOS ANGELES OR ITS OFFICERS OR AGENTS SHALL NOT BE RESPONSIBLE FOR THE ACCURACY OR COMPLETENESS OF ELECTRONIC COPIES OF THIS PLAN SHEET.

BUREAU OF ENGINEERING
ENGINEERING
CITY OF LOS ANGELES

NO.	REVISIONS:	DATE	BY:

STRUCTURE NO. 53C-2329
INDEX NO. P-38113

DEPARTMENT OF PUBLIC WORKS
CITY OF LOS ANGELES

GARY LEE MOORE, P.E. CITY ENGINEER

		DATE:
DESIGN GROUP	LIC. NO. S3033	1/29/2016
ENGINEER:	MICHAEL H. JONES	1/29/2016
DESIGNED BY:	MICHAEL H. JONES	1/29/2016
DRAWN BY:	LI ZHANG	1/29/2016
CHECKED BY:	CHARLES REDFIELD	1/29/2016
APPROVED BY:	MICHAEL H. JONES	1/29/2016

VERTICAL CONTROL: BM 12-04070,1929 (NGVD 29) - 1985 ADJUSTMENT
HORIZONTAL CONTROL: GPS; PID AE 1704, EPOCH 1991.35

SHEET TITLE: ARCH HANGER LAYOUT NO. 5

PROJECT: SIXTH STREET VIADUCT REPLACEMENT

ADDRESS: SIXTH STREET VIADUCT (WHITTIER BLVD) LOS ANGELES, CA

HNTB
HNTB Corporation
601 W. 5TH STREET SUITE 1000
LOS ANGELES, CALIFORNIA 90071
TEL (213) 403-1000 FAX (213) 403-1001

WORK ORDER NO. E700224F

DRAWING NO. S5-55

SHEET 287 OF 560 SHEETS

REVISION DATES (DESIGN STAGE ONLY)

C:\caddlib\pw\pwwestcoast\zhang\dms57683\S5-51-HL01-16.dwg 6/27/16 17:41

Sheet Version 3.0

ADDENDUM 5

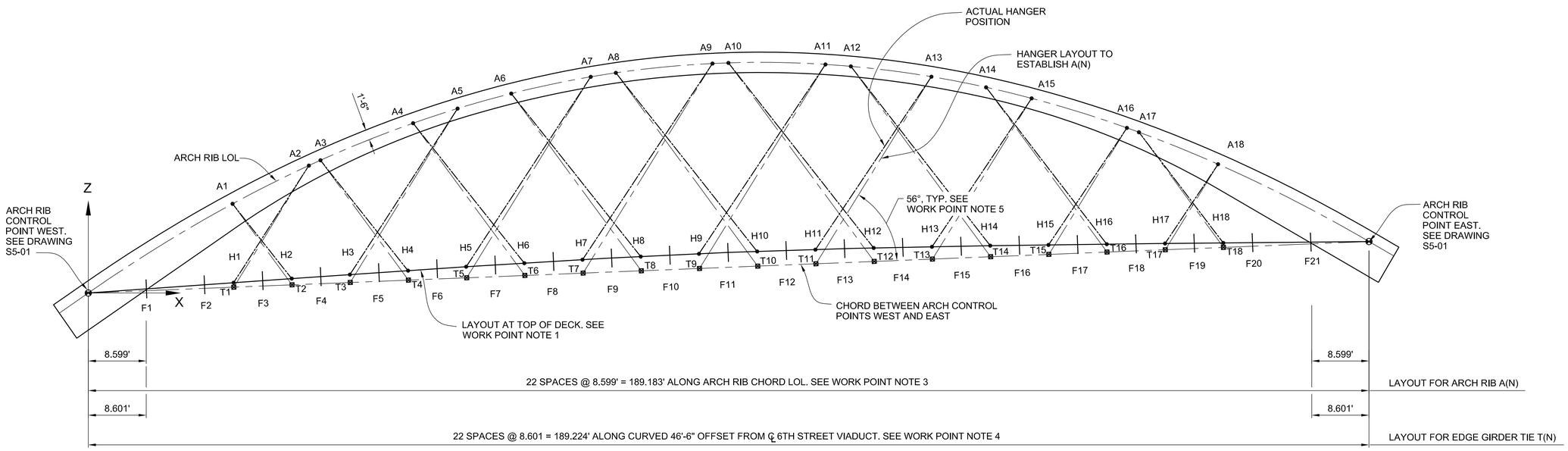

ARCH RIB ELEVATION - SPAN 5 SOUTH

NO SCALE

NOTES:

1. FOR NOTES AND LEGEND, SEE DRAWING S5-51.

HANGER WORK POINT COORDINATES

HANGER NO.	LOWER WORK POINTS				UPPER WORK POINTS				DISTANCE BETWEEN WORK POINTS (FT)
	POINT	X (FT)	Y (FT)	Z (FT)	POINT	X (FT)	Y (FT)	Z (FT)	
H1	T1	21.481	1.364	293.546	A2	33.120	-2.734	310.935	21.32
H2	T2	30.081	1.483	293.627	A1	21.691	-1.923	305.706	15.10
H3	T3	38.681	1.588	293.709	A5	55.332	-3.913	318.592	30.44
H4	T4	47.282	1.677	293.790	A3	34.858	-2.845	311.652	22.22
H5	T5	55.883	1.752	293.872	A7	75.094	-4.516	322.588	35.11
H6	T6	64.484	1.812	293.953	A4	48.692	-3.614	316.642	28.17
H7	T7	73.085	1.857	294.035	A9	93.128	-4.713	324.000	36.64
H8	T8	81.686	1.887	294.116	A6	63.302	-4.206	320.518	32.74
H9	T9	90.287	1.901	294.198	A11	109.791	-4.587	323.364	35.68
H10	T10	98.887	1.901	294.279	A8	78.833	-4.587	323.072	35.68
H11	T11	107.488	1.887	294.361	A13	125.365	-4.205	321.101	32.74
H12	T12	116.089	1.857	294.442	A10	95.482	-4.713	324.023	36.64
H13	T13	124.690	1.812	294.524	A15	140.050	-3.614	317.508	28.17
H14	T14	133.291	1.752	294.605	A12	113.526	-4.519	322.971	35.14
H15	T15	141.892	1.677	294.687	A16	153.975	-2.845	312.781	22.22
H16	T16	150.493	1.588	294.768	A14	133.382	-3.911	319.320	30.43
H17	T17	159.093	1.483	294.850	A18	167.250	-1.922	307.081	15.09
H18	T18	167.694	1.364	294.931	A17	155.727	-2.734	312.097	21.32

HANGER FORCE SUMMARY

HANGER NO.	STRUCTURAL STRAND DIAMETER (IN)	GROSS METALLIC AREA (IN^2)	FINAL DEAD LOAD		(LL+I) + PL		FULL PL		PERMIT	
			DEAD LOAD W/O FWS (KIPS)	FWS (KIPS)	MAX (KIPS)	MIN (KIPS)	MAX (KIPS)	MIN (KIPS)	MAX (KIPS)	MIN (KIPS)
H1	2¾	4.54	142	3	25	-12	23	-15	30	-15
H2	2¾	4.54	189	12	38	-6	41	-7	49	-5
H3	2¾	4.54	139	5	53	-25	47	-32	65	-32
H4	2¾	4.54	159	14	46	-8	50	-11	61	-8
H5	2¾	4.54	145	8	71	-31	67	-42	88	-34
H6	2¾	4.54	166	15	54	-11	58	-15	74	-12
H7	2¾	4.54	137	11	71	-27	70	-39	91	-27
H8	2¾	4.54	166	14	61	-19	64	-25	83	-17
H9	2¾	4.54	132	13	64	-22	66	-29	86	-19
H10	2¾	4.54	170	12	67	-25	69	-34	89	-24
H11	2¾	4.54	135	14	56	-15	60	-20	77	-13
H12	2¾	4.54	179	9	70	-31	70	-43	91	-32
H13	2¾	4.54	152	15	49	-8	53	-12	72	-9
H14	2¾	4.54	184	6	66	-34	64	-44	83	-39
H15	2¾	4.54	155	13	42	-7	48	-10	63	-6
H16	2¾	4.54	162	3	47	-28	46	-34	59	-35
H17	2¾	4.54	176	11	33	-6	39	-8	46	-4
H18	2¾	4.54	145	2	22	-13	23	-16	28	-16

THE CITY OF LOS ANGELES OR ITS OFFICERS OR AGENTS SHALL NOT BE RESPONSIBLE FOR THE ACCURACY OR COMPLETENESS OF ELECTRONIC COPIES OF THIS PLAN SHEET.

C:\caddlib\pw\pwwestcoast\zhang\dms57683\S5-51-HL01-16.dwg 6/27/16 17:41

REVISION DATES (DESIGN STAGE ONLY)

Sheet Version 3.0

HNTB
HNTB Corporation
601 W. 5TH STREET, SUITE 1000
LOS ANGELES, CALIFORNIA 90071
TEL (213) 403-1000 FAX (213) 403-1001

BUREAU OF ENGINEERING
OFFICIAL RECORD

CITY OF LOS ANGELES DEPARTMENT OF PUBLIC WORKS

BUREAU OF ENGINEERING

ENGINEERING
CITY OF LOS ANGELES

NO.	REVISIONS:	DATE	BY:

STRUCTURE NO. 53C-2329

INDEX NO. P-38113

THIS PLAN WAS ELECTRONICALLY SIGNED AND STAMPED.

REGISTERED PROFESSIONAL ENGINEER
MICHAEL H. JONES
No. S3033
EXP. 12-31-16
CIVIL
STATE OF CALIFORNIA

CITY ENGINEER	DATE:
GARY LEE MOORE, P.E.	
LIC. NO. S3033	1/29/2016
DESIGN GROUP	1/29/2016
ENGINEER: MICHAEL H. JONES	1/29/2016
DESIGNED BY: MICHAEL H. JONES	1/29/2016
DRAWN BY: LI ZHANG	1/29/2016
CHECKED BY: CHARLES REDFIELD	1/29/2016
APPROVED BY: MICHAEL H. JONES	1/29/2016

VERTICAL CONTROL: BM 12-04070, 1929 (NGVD 29) - 1985 ADJUSTMENT
HORIZONTAL CONTROL: GPS; PID AE 1704, EPOCH 1991.35

SHEET TITLE: ARCH HANGER LAYOUT NO. 6

PROJECT: SIXTH STREET VIADUCT REPLACEMENT

ADDRESS: SIXTH STREET VIADUCT (WHITTIER BLVD) LOS ANGELES, CA

WORK ORDER NO. E700224F

DRAWING NO. S5-56

SHEET 288 OF 560 SHEETS

ADDENDUM 5

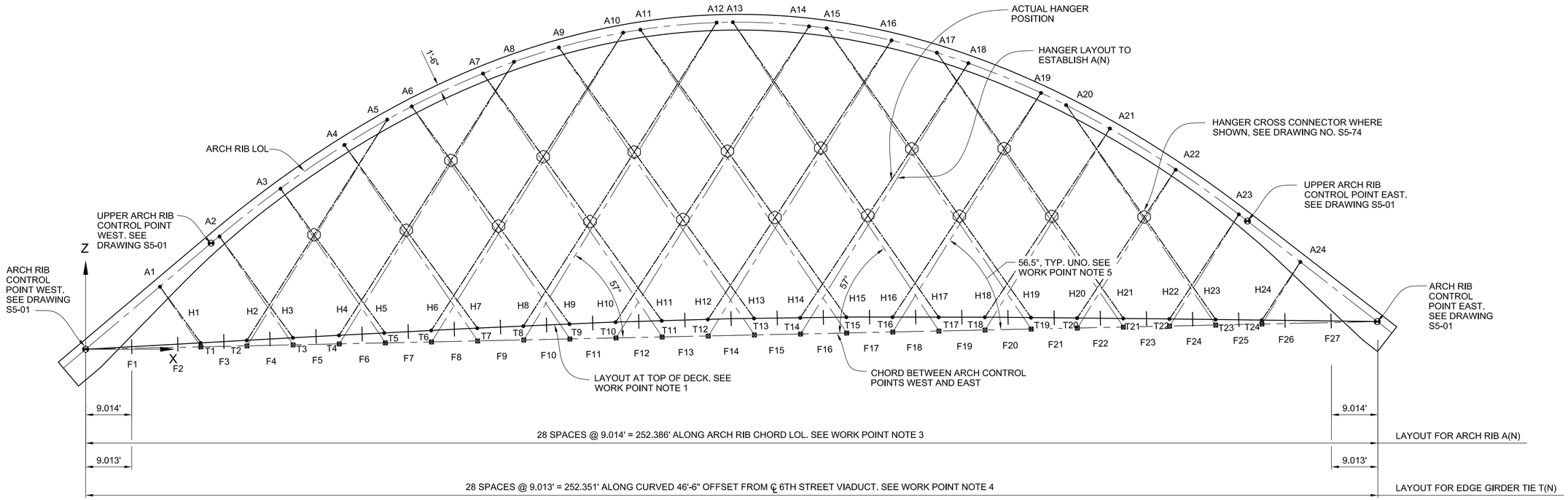

NOTES:

1. FOR NOTES AND LEGEND, SEE DRAWING S5-51.

ARCH RIB ELEVATION - SPAN 6 NORTH

NO SCALE

HANGER WORK POINT COORDINATES

HANGER NO.	LOWER WORK POINTS				UPPER WORK POINTS				DISTANCE BETWEEN WORK POINTS (FT)
	POINT	X (FT)	Y (FT)	Z (FT)	POINT	X (FT)	Y (FT)	Z (FT)	
H1	T1	22.550	-0.487	295.692	A1	14.561	1.858	307.369	14.34
H2	T2	31.561	-0.310	295.776	A5	59.613	6.727	338.529	51.62
H3	T3	40.572	-0.149	295.859	A2	26.245	3.337	316.818	25.63
H4	T4	49.584	-0.004	295.943	A8	84.426	8.353	349.030	64.05
H5	T5	58.595	0.125	296.027	A3	38.328	4.723	325.680	36.21
H6	T6	67.607	0.238	296.111	A10	105.769	9.148	354.248	70.11
H7	T7	76.619	0.334	296.195	A4	50.973	5.978	333.719	45.80
H8	T8	85.631	0.415	296.278	A12	124.037	9.385	355.915	71.50
H9	T9	94.644	0.479	296.362	A6	64.246	7.086	340.839	54.28
H10	T10	103.656	0.527	296.446	A14	142.134	9.223	355.056	70.65
H11	T11	112.669	0.559	296.530	A7	78.271	8.019	346.861	61.42
H12	T12	121.681	0.576	296.614	A16	158.171	8.746	352.194	66.99
H13	T13	130.694	0.576	296.697	A9	93.179	8.746	351.590	66.99
H14	T14	139.706	0.559	296.781	A18	173.165	8.019	347.743	61.42
H15	T15	148.719	0.527	296.865	A11	109.160	9.223	354.750	70.65
H16	T16	157.731	0.479	296.949	A19	187.299	7.086	341.983	54.28
H17	T17	166.743	0.415	297.033	A13	127.238	9.385	355.944	71.50
H18	T18	175.756	0.334	297.116	A21	200.702	5.978	335.111	45.80
H19	T19	184.768	0.238	297.200	A15	145.533	9.148	354.617	70.11
H20	T20	193.779	0.125	297.284	A22	213.495	4.723	327.308	36.21
H21	T21	202.791	-0.004	297.368	A17	166.970	8.353	349.798	64.05
H22	T22	211.802	-0.149	297.452	A23	225.740	3.337	318.672	25.63
H23	T23	220.814	-0.310	297.536	A20	191.974	6.727	339.760	51.62
H24	T24	229.824	-0.487	297.619	A24	237.595	1.858	309.443	14.34

HANGER FORCE SUMMARY

HANGER NO.	STRUCTURAL STRAND DIAMETER (IN)	GROSS METALLIC AREA (IN^2)	FINAL DEAD LOAD		(LL+I) + PL		FULL PL		PERMIT	
			DEAD LOAD W/O FWS (KIPS)	FWS (KIPS)	MAX (KIPS)	MIN (KIPS)	MAX (KIPS)	MIN (KIPS)	MAX (KIPS)	MIN (KIPS)
H1	2¾	4.54	164	9	26	-4	30	-4	29	-3
H2	2¾	4.54	131	4	38	-21	36	-25	46	-26
H3	2¾	4.54	136	12	34	-3	37	-4	43	-2
H4	2¾	4.54	125	9	58	-25	56	-33	75	-28
H5	2¾	4.54	140	13	39	-3	42	-4	53	-2
H6	2¾	4.54	145	12	66	-22	65	-31	88	-22
H7	2¾	4.54	135	14	41	-2	42	-3	57	-3
H8	2¾	4.54	148	14	63	-18	64	-24	87	-16
H9	2¾	4.54	135	14	45	-3	45	-4	64	-3
H10	2¾	4.54	144	14	58	-15	59	-18	80	-14
H11	2¾	4.54	137	14	48	-7	49	-8	68	-6
H12	2¾	4.54	140	14	53	-11	53	-12	73	-10
H13	2¾	4.54	144	15	53	-11	54	-12	76	-9
H14	2¾	4.54	131	13	47	-8	48	-9	65	-7
H15	2¾	4.54	149	15	59	-14	60	-17	84	-12
H16	2¾	4.54	127	13	43	-5	43	-5	59	-3
H17	2¾	4.54	146	14	64	-18	63	-24	88	-15
H18	2¾	4.54	127	13	40	-3	41	-4	54	-3
H19	2¾	4.54	135	12	65	-22	63	-32	88	-23
H20	2¾	4.54	134	13	38	-3	40	-4	50	-2
H21	2¾	4.54	112	8	60	-26	57	-36	77	-30
H22	2¾	4.54	135	11	34	-4	38	-5	41	-2
H23	2¾	4.54	116	4	39	-22	37	-28	46	-28
H24	2¾	4.54	170	9	27	-6	34	-7	26	-4

THE CITY OF LOS ANGELES OR ITS OFFICERS OR AGENTS SHALL NOT BE RESPONSIBLE FOR THE ACCURACY OR COMPLETENESS OF ELECTRONIC COPIES OF THIS PLAN SHEET.

C:\caddlib\pw\pwwestcoast\zhang\dms57683\S5-51-HL01-16.dwg 6/27/16 17:41

REVISION DATES (DESIGN STAGE ONLY)

Sheet Version 3.0

BUREAU OF ENGINEERING

OFFICIAL RECORD

HNTB
HNTB Corporation
601 W. 5TH STREET SUITE 1000
LOS ANGELES, CALIFORNIA 90071
TEL (213) 403-1000 FAX (213) 403-1001

CITY OF LOS ANGELES DEPARTMENT OF PUBLIC WORKS BUREAU OF ENGINEERING

ENGINEERING CITY OF LOS ANGELES

NO.	REVISIONS:	DATE:	BY:

STRUCTURE NO. 53C-2329

INDEX NO. P-38113

THIS PLAN WAS ELECTRONICALLY SIGNED AND STAMPED.

REGISTERED PROFESSIONAL ENGINEER MICHAEL H. JONES No. S3033 CIVIL STATE OF CALIFORNIA

GARY LEE MOORE, P.E. CITY ENGINEER

		DATE:
ENGINEER:	MICHAEL H. JONES	1/29/2016
DESIGN GROUP	LIC. NO. S3033	1/29/2016
DESIGNED BY:	MICHAEL H. JONES	1/29/2016
DRAWN BY:	LI ZHANG	1/29/2016
CHECKED BY:	CHARLES REDFIELD	1/29/2016
APPROVED BY:	MICHAEL H. JONES	1/29/2016

VERTICAL CONTROL: BM 12-04070, 1929 (NGVD 29) - 1985 ADJUSTMENT
HORIZONTAL CONTROL: GPS; PID AE 1704, EPOCH 1991.35

SHEET TITLE: ARCH HANGER LAYOUT NO. 7

PROJECT: SIXTH STREET VIADUCT REPLACEMENT

ADDRESS: SIXTH STREET VIADUCT (WHITTIER BLVD) LOS ANGELES, CA

WORK ORDER NO. E700224F

DRAWING NO. S5-57

SHEET 289 OF 560 SHEETS

ADDENDUM 5

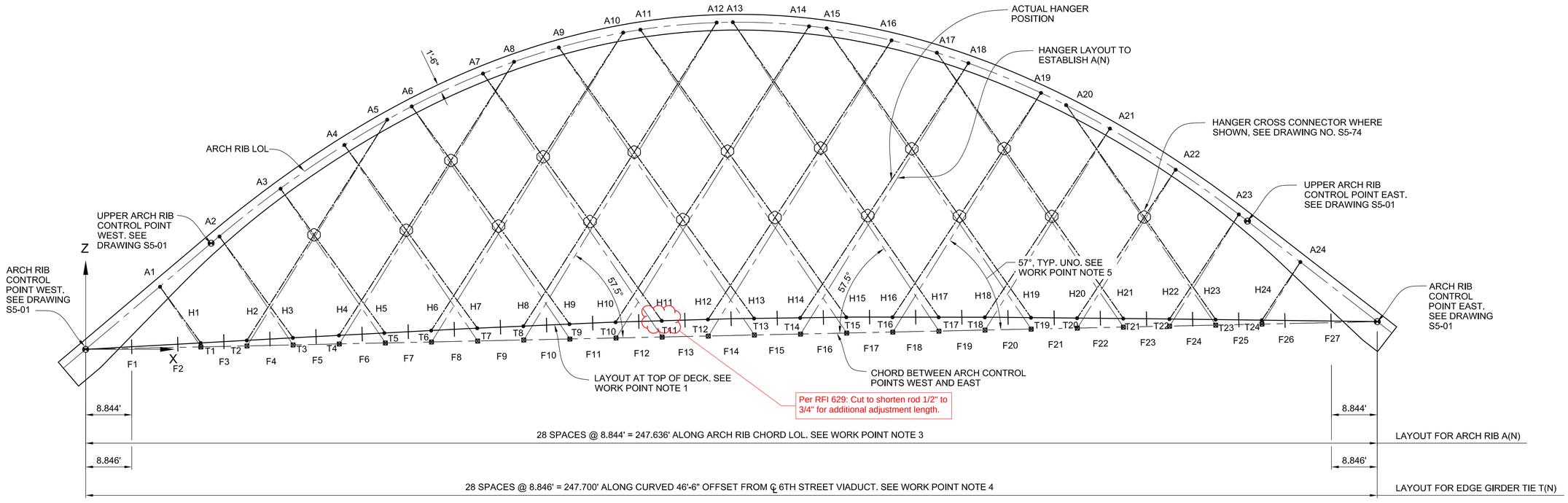

ARCH RIB ELEVATION - SPAN 6 SOUTH

NO SCALE

NOTES:

1. FOR NOTES AND LEGEND, SEE DRAWING S5-51.

HANGER WORK POINT COORDINATES

HANGER NO.	LOWER WORK POINTS				UPPER WORK POINTS				DISTANCE BETWEEN WORK POINTS (FT)
	POINT	X (FT)	Y (FT)	Z (FT)	POINT	X (FT)	Y (FT)	Z (FT)	
H1	T1	22.085	1.503	295.931	A1	14.380	-1.836	307.465	14.27
H2	T2	30.930	1.677	296.015	A5	58.339	-6.694	338.557	51.30
H3	T3	39.775	1.835	296.098	A2	25.889	-3.303	316.841	25.48
H4	T4	48.620	1.977	296.182	A8	82.807	-8.351	349.253	63.97
H5	T5	57.466	2.104	296.266	A3	37.709	-4.696	325.751	36.14
H6	T6	66.312	2.214	296.350	A10	103.783	-9.154	354.527	70.13
H7	T7	75.158	2.309	296.434	A4	50.076	-5.960	333.846	45.79
H8	T8	84.004	2.388	296.517	A12	121.700	-9.392	356.194	71.56
H9	T9	92.850	2.451	296.601	A6	63.073	-7.074	341.003	54.30
H10	T10	101.696	2.499	296.685	A14	139.457	-9.228	355.328	70.73
H11	T11	110.543	2.530	296.769	A7	76.803	-8.013	347.067	61.48
H12	T12	119.389	2.546	296.853	A16	155.175	-8.746	352.437	67.07
H13	T13	128.235	2.546	296.936	A9	91.405	-8.746	351.832	67.06
H14	T14	137.082	2.530	297.020	A18	169.864	-8.013	347.949	61.48
H15	T15	145.928	2.499	297.104	A11	107.065	-9.228	355.021	70.73
H16	T16	154.775	2.451	297.188	A19	183.707	-7.074	342.147	54.31
H17	T17	163.621	2.388	297.272	A13	124.803	-9.392	356.224	71.56
H18	T18	172.467	2.309	297.355	A21	196.837	-5.960	335.237	45.80
H19	T19	181.313	2.214	297.439	A15	142.749	-9.154	354.896	70.13
H20	T20	190.159	2.104	297.523	A22	209.356	-4.696	327.378	36.14
H21	T21	199.004	1.977	297.607	A17	163.821	-8.351	350.021	63.97
H22	T22	207.850	1.835	297.691	A23	221.342	-3.303	318.693	25.49
H23	T23	216.695	1.677	297.774	A20	188.486	-6.694	339.791	51.30
H24	T24	225.539	1.503	297.858	A24	233.025	-1.836	309.537	14.27

HANGER FORCE SUMMARY

HANGER NO.	STRUCTURAL STRAND DIAMETER (IN)	GROSS METALLIC AREA (IN^2)	FINAL DEAD LOAD		(LL+I) + PL		FULL PL		PERMIT	
			DEAD LOAD W/O FWS (KIPS)	FWS (KIPS)	MAX (KIPS)	MIN (KIPS)	MAX (KIPS)	MIN (KIPS)	MAX (KIPS)	MIN (KIPS)
H1	2¼	4.54	154	8	24	-4	27	-4	26	-3
H2	2¼	4.54	127	4	37	-20	34	-24	43	-25
H3	2¼	4.54	128	11	32	-3	34	-4	39	-2
H4	2¼	4.54	123	8	57	-25	54	-33	73	-28
H5	2¼	4.54	136	13	38	-3	40	-4	51	-2
H6	2¼	4.54	139	11	63	-22	62	-31	84	-22
H7	2¼	4.54	132	13	40	-3	42	-4	56	-3
H8	2¼	4.54	143	13	62	-20	62	-25	85	-18
H9	2¼	4.54	134	14	45	-4	46	-5	63	-4
H10	2¼	4.54	142	14	58	-16	59	-19	80	-16
H11	2¼	4.54	134	14	49	-7	50	-9	69	-6
H12	2¼	4.54	140	14	53	-12	54	-13	74	-12
H13	2¼	4.54	135	14	54	-11	54	-14	74	-10
H14	2¼	4.54	136	14	49	-8	50	-9	68	-7
H15	2¼	4.54	135	14	59	-16	59	-20	81	-14
H16	2¼	4.54	132	14	44	-5	46	-6	62	-4
H17	2¼	4.54	133	13	63	-19	62	-27	86	-16
H18	2¼	4.54	133	14	42	-3	44	-4	59	-3
H19	2¼	4.54	127	11	64	-24	62	-33	85	-24
H20	2¼	4.54	134	13	38	-3	41	-5	51	-2
H21	2¼	4.54	110	7	58	-28	55	-36	75	-31
H22	2¼	4.54	126	11	32	-4	36	-5	39	-2
H23	2¼	4.54	118	3	37	-23	36	-29	44	-28
H24	2¼	4.54	155	8	25	-6	30	-6	26	-4

THE CITY OF LOS ANGELES OR ITS OFFICERS OR AGENTS SHALL NOT BE RESPONSIBLE FOR THE ACCURACY OR COMPLETENESS OF ELECTRONIC COPIES OF THIS PLAN SHEET.

C:\caddlib\pw\pwwestcoast\zhang\dms57683\S5-51-HL01-16.dwg 6/27/16 17:41

REVISION DATES (DESIGN STAGE ONLY)

Sheet Version 3.0

BUREAU OF ENGINEERING

ENGINEERING CITY OF LOS ANGELES

NO.	REVISIONS:	DATE:	BY:

STRUCTURE NO. 53C-2329

INDEX NO. P-38113

REGISTERED PROFESSIONAL ENGINEER MICHAEL H. JONES No. S3033 CIVIL STATE OF CALIFORNIA

THIS PLAN WAS ELECTRONICALLY SIGNED AND STAMPED.

BUREAU OF ENGINEERING OFFICIAL RECORD

CITY OF LOS ANGELES DEPARTMENT OF PUBLIC WORKS

GARY LEE MOORE, P.E. CITY ENGINEER

		DATE:
LIC. NO. S3033	DESIGN GROUP	
ENGINEER:	MICHAEL H. JONES	1/29/2016
DESIGNED BY:	MICHAEL H. JONES	1/29/2016
DRAWN BY:	LI ZHANG	1/29/2016
CHECKED BY:	CHARLES REDFIELD	1/29/2016
APPROVED BY:	MICHAEL H. JONES	1/29/2016

VERTICAL CONTROL: BM 12-04070,1929 (NGVD 29) - 1985 ADJUSTMENT
HORIZONTAL CONTROL: GPS; PID AE 1704, EPOCH 1991.35

SHEET TITLE: ARCH HANGER LAYOUT NO. 8

PROJECT: SIXTH STREET VIADUCT REPLACEMENT

ADDRESS: SIXTH STREET VIADUCT (WHITTIER BLVD) LOS ANGELES, CA

HNTB
HNTB Corporation
601 W. 5TH STREET SUITE 1000
LOS ANGELES, CALIFORNIA 90071
TEL (213) 403-1000 FAX (213) 403-1001

WORK ORDER NO. E700224F

DRAWING NO. S5-58

SHEET 290 OF 560 SHEETS

ADDENDUM 5

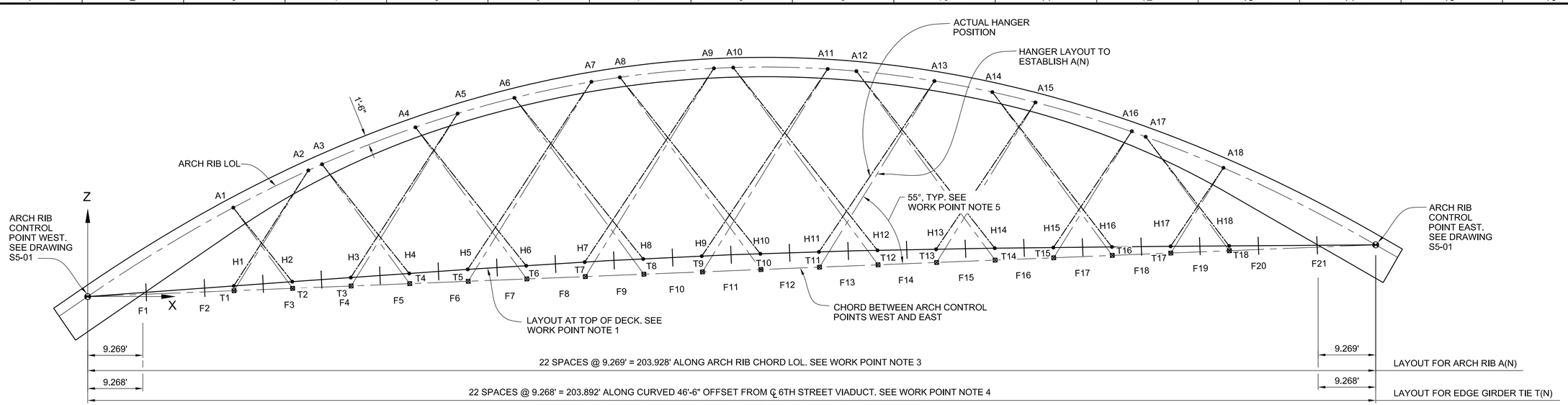

ARCH RIB ELEVATION - SPANS 7 & 11 NORTH

NO SCALE

HANGER WORK POINT COORDINATES

HANGER NO.	LOWER WORK POINTS					UPPER WORK POINTS					DISTANCE BETWEEN WORK POINTS (FT)
	POINT	X (FT)	Y (FT)	Z (FT) (SPAN 7)	Z (FT) (SPAN 11)	POINT	X (FT)	Y (FT)	Z (FT) (SPAN 7)	Z (FT) (SPAN 11)	
H1	T1	23.186	-0.585	298.795	310.133	A2	35.830	2.865	317.023	328.360	22.45
H2	T2	32.453	-0.449	298.881	310.219	A1	23.346	2.006	311.480	322.817	15.74
H3	T3	41.720	-0.330	298.967	310.305	A5	59.807	4.097	325.022	336.359	32.03
H4	T4	50.987	-0.228	299.054	310.391	A3	37.514	2.970	317.697	329.034	23.22
H5	T5	60.255	-0.142	299.140	310.477	A7	81.118	4.725	329.183	340.520	36.90
H6	T6	69.522	-0.074	299.226	310.564	A4	52.404	3.774	322.914	334.251	29.48
H7	T7	78.790	-0.023	299.312	310.650	A9	100.551	4.927	330.643	341.980	38.47
H8	T8	88.058	0.011	299.398	310.736	A6	68.137	4.393	326.967	338.304	34.29
H9	T9	97.326	0.028	299.484	310.822	A11	118.498	4.793	329.966	341.303	37.42
H10	T10	106.593	0.028	299.571	310.908	A8	84.858	4.793	329.653	340.990	37.42
H11	T11	115.861	0.011	299.657	310.994	A13	135.267	4.393	327.592	338.929	34.29
H12	T12	125.129	-0.023	299.743	311.081	A10	102.790	4.927	330.664	342.001	38.47
H13	T13	134.397	-0.074	299.829	311.167	A15	151.072	3.774	323.832	335.169	29.48
H14	T14	143.664	-0.142	299.915	311.253	A12	122.247	4.725	329.566	340.903	36.90
H15	T15	152.932	-0.228	300.002	311.339	A16	166.057	2.970	318.892	330.229	23.22
H16	T16	162.199	-0.330	300.088	311.425	A14	143.631	4.097	325.802	337.139	32.02
H17	T17	171.466	-0.449	300.174	311.512	A18	180.338	2.006	312.940	324.277	15.74
H18	T18	180.733	-0.585	300.260	311.598	A17	167.753	2.865	318.250	329.587	22.45

NOTES:

1. FOR NOTES AND LEGEND, SEE DRAWING S5-51.

HANGER FORCE SUMMARY - SPAN 7 NORTH

HANGER NO.	STRUCTURAL STRAND DIAMETER (IN)	GROSS METALLIC AREA (IN^2)	FINAL DEAD LOAD		(LL+I) + PL		FULL PL		PERMIT	
			DEAD LOAD W/O FWS (KIPS)	FWS (KIPS)	MAX (KIPS)	MIN (KIPS)	MAX (KIPS)	MIN (KIPS)	MAX (KIPS)	MIN (KIPS)
H1	2¼	4.54	156	3	28	-14	28	-17	32	-17
H2	2¼	4.54	194	13	42	-8	48	-9	54	-5
H3	2¼	4.54	170	7	61	-29	60	-37	73	-34
H4	2¼	4.54	161	16	51	-8	56	-10	71	-6
H5	2¼	4.54	163	10	80	-34	80	-48	99	-34
H6	2¼	4.54	156	15	55	-12	61	-16	78	-10
H7	2¼	4.54	156	12	79	-30	81	-42	100	-26
H8	2¼	4.54	152	14	62	-20	66	-25	86	-15
H9	2¼	4.54	152	14	71	-23	75	-31	93	-18
H10	2¼	4.54	155	13	69	-27	72	-35	94	-21
H11	2¼	4.54	155	15	62	-15	67	-21	83	-12
H12	2¼	4.54	162	10	73	-31	75	-44	98	-28
H13	2¼	4.54	161	15	53	-9	59	-13	73	-9
H14	2¼	4.54	165	8	71	-34	70	-47	93	-36
H15	2¼	4.54	162	15	46	-6	52	-9	64	-6
H16	2¼	4.54	161	5	54	-28	52	-35	68	-33
H17	2¼	4.54	181	12	37	-7	44	-8	47	-4
H18	2¼	4.54	137	3	24	-13	26	-17	31	-16

HANGER FORCE SUMMARY - SPAN 11 NORTH

HANGER NO.	STRUCTURAL STRAND DIAMETER (IN)	GROSS METALLIC AREA (IN^2)	FINAL DEAD LOAD		(LL+I) + PL		FULL PL		PERMIT	
			DEAD LOAD W/O FWS (KIPS)	FWS (KIPS)	MAX (KIPS)	MIN (KIPS)	MAX (KIPS)	MIN (KIPS)	MAX (KIPS)	MIN (KIPS)
H1	2¼	4.54	159	4	30	-16	32	-19	35	-20
H2	2¼	4.54	209	13	43	-9	49	-10	54	-6
H3	2¼	4.54	169	8	66	-32	65	-39	79	-40
H4	2¼	4.54	168	16	52	-8	57	-11	72	-6
H5	2¼	4.54	162	12	85	-37	85	-49	105	-41
H6	2¼	4.54	160	15	56	-13	62	-17	79	-10
H7	2¼	4.54	156	13	83	-32	86	-45	106	-31
H8	2¼	4.54	154	14	63	-21	68	-26	87	-17
H9	2¼	4.54	151	15	75	-27	80	-35	98	-22
H10	2¼	4.54	156	13	71	-28	75	-36	97	-23
H11	2¼	4.54	151	16	66	-21	73	-25	87	-17
H12	2¼	4.54	163	11	79	-33	80	-47	105	-31
H13	2¼	4.54	159	16	57	-13	66	-17	77	-11
H14	2¼	4.54	169	9	82	-38	79	-52	105	-42
H15	2¼	4.54	166	16	52	-8	59	-10	68	-7
H16	2¼	4.54	173	6	64	-33	60	-41	80	-41
H17	2¼	4.54	204	14	42	-9	50	-9	49	-7
H18	2¼	4.54	159	3	30	-16	29	-20	36	-20

THE CITY OF LOS ANGELES OR ITS OFFICERS OR AGENTS SHALL NOT BE RESPONSIBLE FOR THE ACCURACY OR COMPLETENESS OF ELECTRONIC COPIES OF THIS PLAN SHEET.

C:\caddlib\pw\pwwestcoast\zhang\dms57683\S5-51-HL01-16.dwg 6/27/16 17:41

Sheet Version 3.0

REVISION DATES (DESIGN STAGE ONLY)

BUREAU OF ENGINEERING

ENGINEERING CITY OF LOS ANGELES

NO.	REVISIONS:	DATE	BY:

STRUCTURE NO. 53C-2329

INDEX NO. P-38113

THIS PLAN WAS ELECTRONICALLY SIGNED AND STAMPED.

REGISTERED PROFESSIONAL ENGINEER MICHAEL H. JONES No. S3033 CIVIL STATE OF CALIFORNIA

BUREAU OF ENGINEERING OFFICIAL RECORD

BUREAU OF PUBLIC WORKS DEPARTMENT OF CITY OF LOS ANGELES

GARY LEE MOORE, P.E. CITY ENGINEER

		DATE:
ENGINEER:	MICHAEL H. JONES	1/29/2016
LIC. NO. S3033		1/29/2016
DESIGN GROUP		1/29/2016
DESIGNED BY:	MICHAEL H. JONES	1/29/2016
DRAWN BY:	LI ZHANG	1/29/2016
CHECKED BY:	CHARLES REDFIELD	1/29/2016
APPROVED BY:	MICHAEL H. JONES	1/29/2016

VERTICAL CONTROL: BM 12-04070, 1929 (NGVD 29) - 1985 ADJUSTMENT
HORIZONTAL CONTROL: GPS; PID AE 1704, EPOCH 1991.35

SHEET TITLE: ARCH HANGER LAYOUT NO. 9

PROJECT: SIXTH STREET VIADUCT REPLACEMENT

ADDRESS: SIXTH STREET VIADUCT (WHITTIER BLVD) LOS ANGELES, CA

HNTB
HNTB Corporation
601 W. 5TH STREET SUITE 1000
LOS ANGELES, CALIFORNIA 90071
TEL (213) 403-1000 FAX (213) 403-1001

WORK ORDER NO. E700224F

DRAWING NO. S5-59

SHEET 291 OF 560 SHEETS

ADDENDUM 5

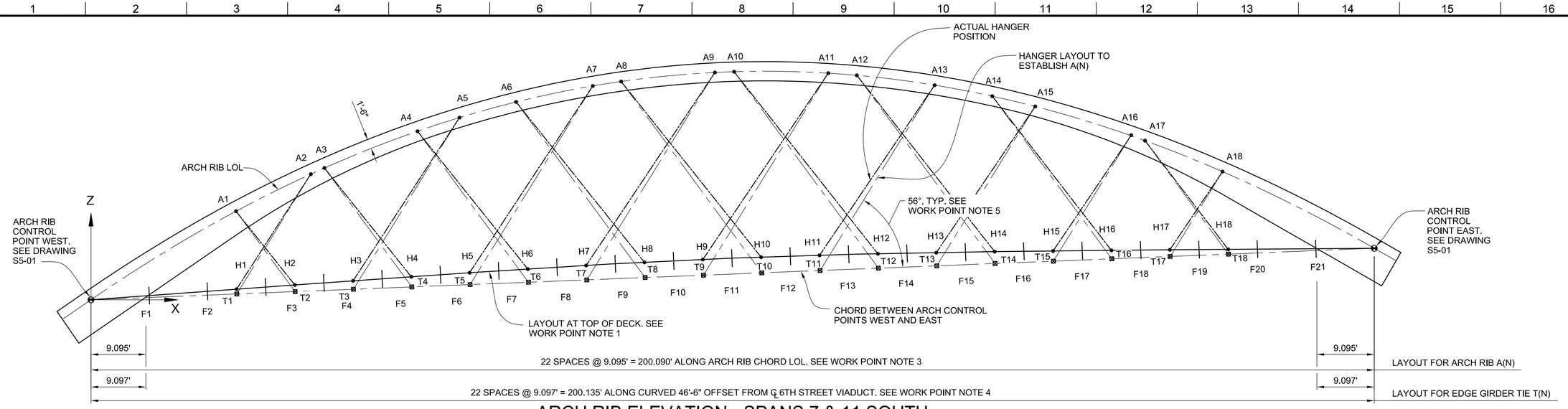

ARCH RIB ELEVATION - SPANS 7 & 11 SOUTH

NO SCALE

HANGER FORCE SUMMARY - SPAN 7 SOUTH

HANGER NO.	STRUCTURAL STRAND DIAMETER (IN)	GROSS METALLIC AREA (IN^2)	FINAL DEAD LOAD		(LL+I) + PL		FULL PL		PERMIT	
			DEAD LOAD W/O FWS (KIPS)	FWS (KIPS)	MAX (KIPS)	MIN (KIPS)	MAX (KIPS)	MIN (KIPS)	MAX (KIPS)	MIN (KIPS)
H1	2¼	4.54	145	3	27	-12	26	-16	31	-15
H2	2¼	4.54	186	12	40	-8	45	-9	50	-5
H3	2¼	4.54	159	6	57	-27	55	-35	69	-33
H4	2¼	4.54	158	15	50	-8	55	-12	67	-7
H5	2¼	4.54	155	9	77	-33	76	-47	95	-34
H6	2¼	4.54	155	15	55	-13	61	-18	76	-11
H7	2¼	4.54	149	12	76	-30	79	-43	97	-26
H8	2¼	4.54	153	13	63	-21	68	-28	85	-16
H9	2¼	4.54	142	14	68	-24	73	-32	91	-20
H10	2¼	4.54	153	12	70	-28	73	-37	92	-22
H11	2¼	4.54	150	15	59	-14	64	-19	83	-12
H12	2¼	4.54	156	8	72	-32	74	-47	94	-30
H13	2¼	4.54	162	15	52	-8	58	-12	77	-9
H14	2¼	4.54	156	5	68	-36	67	-50	85	-37
H15	2¼	4.54	161	14	45	-6	52	-10	67	-6
H16	2¼	4.54	157	3	50	-29	49	-37	62	-34
H17	2¼	4.54	177	11	35	-6	42	-8	49	-4
H18	2¼	4.54	135	2	23	-13	25	-17	29	-16

HANGER WORK POINT COORDINATES

HANGER NO.	LOWER WORK POINTS					UPPER WORK POINTS					DISTANCE BETWEEN WORK POINTS (FT)
	POINT	X (FT)	Y (FT)	Z (FT) (SPAN 7)	Z (FT) (SPAN 11)	POINT	X (FT)	Y (FT)	Z (FT) (SPAN 7)	Z (FT) (SPAN 11)	
H1	T1	22.719	1.407	299.034	310.372	A2	34.834	-2.845	317.132	328.469	22.19
H2	T2	31.815	1.541	299.120	310.458	A1	23.019	-2.016	311.784	323.121	15.82
H3	T3	40.911	1.658	299.206	310.544	A5	58.276	-4.081	325.155	336.493	31.75
H4	T4	50.008	1.758	299.293	310.630	A3	36.988	-2.981	318.011	329.349	23.29
H5	T5	59.104	1.841	299.379	310.716	A7	79.166	-4.716	329.364	340.702	36.67
H6	T6	68.201	1.908	299.465	310.803	A4	51.659	-3.786	323.231	334.568	29.51
H7	T7	77.298	1.958	299.551	310.889	A9	98.251	-4.927	330.875	342.212	38.31
H8	T8	86.395	1.992	299.637	310.975	A6	67.149	-4.404	327.277	338.615	34.28
H9	T9	95.492	2.008	299.723	311.061	A11	115.898	-4.799	330.237	341.575	37.33
H10	T10	104.589	2.008	299.810	311.147	A8	83.607	-4.799	329.933	341.270	37.34
H11	T11	113.686	1.992	299.896	311.233	A13	132.401	-4.403	327.890	339.228	34.28
H12	T12	122.783	1.958	299.982	311.320	A10	101.240	-4.927	330.903	342.241	38.31
H13	T13	131.880	1.908	300.068	311.406	A15	147.968	-3.786	324.143	335.481	29.51
H14	T14	140.976	1.841	300.154	311.492	A12	120.336	-4.719	329.775	341.113	36.69
H15	T15	150.073	1.758	300.240	311.578	A16	162.736	-2.981	319.202	330.540	23.29
H16	T16	159.169	1.658	300.327	311.664	A14	141.326	-4.079	325.929	337.266	31.73
H17	T17	168.266	1.541	300.413	311.750	A18	176.817	-2.015	313.235	324.573	15.82
H18	T18	177.362	1.407	300.499	311.837	A17	164.906	-2.845	318.364	329.702	22.19

HANGER FORCE SUMMARY -SPAN 11 SOUTH

HANGER NO.	STRUCTURAL STRAND DIAMETER (IN)	GROSS METALLIC AREA (IN^2)	FINAL DEAD LOAD		(LL+I) + PL		FULL PL		PERMIT	
			DEAD LOAD W/O FWS (KIPS)	FWS (KIPS)	MAX (KIPS)	MIN (KIPS)	MAX (KIPS)	MIN (KIPS)	MAX (KIPS)	MIN (KIPS)
H1	2¼	4.54	149	4	29	-13	29	-17	34	-16
H2	2¼	4.54	198	12	40	-8	46	-10	49	-5
H3	2¼	4.54	162	7	61	-28	58	-35	74	-37
H4	2¼	4.54	162	15	50	-8	56	-11	67	-6
H5	2¼	4.54	161	11	81	-34	79	-47	101	-39
H6	2¼	4.54	155	15	56	-14	62	-18	76	-10
H7	2¼	4.54	159	13	80	-31	82	-43	103	-29
H8	2¼	4.54	149	14	64	-21	69	-27	86	-16
H9	2¼	4.54	150	14	72	-28	77	-34	95	-23
H10	2¼	4.54	148	12	73	-30	77	-40	95	-24
H11	2¼	4.54	150	15	63	-20	69	-24	87	-16
H12	2¼	4.54	153	10	81	-35	82	-50	103	-32
H13	2¼	4.54	159	16	57	-11	64	-14	80	-10
H14	2¼	4.54	153	7	81	-40	79	-54	99	-41
H15	2¼	4.54	164	16	50	-8	58	-9	69	-7
H16	2¼	4.54	158	5	61	-33	58	-41	72	-38
H17	2¼	4.54	203	13	42	-8	50	-8	52	-5
H18	2¼	4.54	150	2	28	-15	28	-19	33	-18

NOTES:

1. FOR NOTES AND LEGEND, SEE DRAWING S5-51.

THIS PLAN WAS ELECTRONICALLY SIGNED AND STAMPED.

REGISTERED PROFESSIONAL ENGINEER MICHAEL H. JONES No. S3033 CIVIL STATE OF CALIFORNIA

BUREAU OF ENGINEERING OFFICIAL RECORD

HNTB
HNTB Corporation
601 W. 5TH STREET SUITE 1000
LOS ANGELES, CALIFORNIA 90071
TEL (213) 403-1000 FAX (213) 403-1001

CITY OF LOS ANGELES DEPARTMENT OF PUBLIC WORKS
BUREAU OF ENGINEERING

ENGINEERING — CITY OF LOS ANGELES

GARY LEE MOORE, P.E.
CITY ENGINEER

DESIGN GROUP	DATE:
ENGINEER: MICHAEL H. JONES	LIC. NO. S3033 1/29/2016
DESIGNED BY: MICHAEL H. JONES	1/29/2016
DRAWN BY: LI ZHANG	1/29/2016
CHECKED BY: CHARLES REDFIELD	1/29/2016
APPROVED BY: MICHAEL H. JONES	1/29/2016

VERTICAL CONTROL: BM 12-04070, 1929 (NGVD 29) - 1985 ADJUSTMENT
HORIZONTAL CONTROL: GPS; PID AE 1704, EPOCH 1991.35

SHEET TITLE: ARCH HANGER LAYOUT NO. 10

PROJECT: SIXTH STREET VIADUCT REPLACEMENT

ADDRESS: SIXTH STREET VIADUCT (WHITTIER BLVD) LOS ANGELES, CA

NO.	REVISIONS:	DATE	BY:

STRUCTURE NO. 53C-2329

INDEX NO. P-38113

WORK ORDER NO. E700224F

DRAWING NO. S5-60

SHEET 292 OF 560 SHEETS

REVISION DATES (DESIGN STAGE ONLY)

C:\caddlb\pw\pwwestcoast\zhang\dms57683\S5-51-HL01-16.dwg 6/27/16 17:41

Sheet Version 3.0

THE CITY OF LOS ANGELES OR ITS OFFICERS OR AGENTS SHALL NOT BE RESPONSIBLE FOR THE ACCURACY OR COMPLETENESS OF ELECTRONIC COPIES OF THIS PLAN SHEET.

ADDENDUM 5

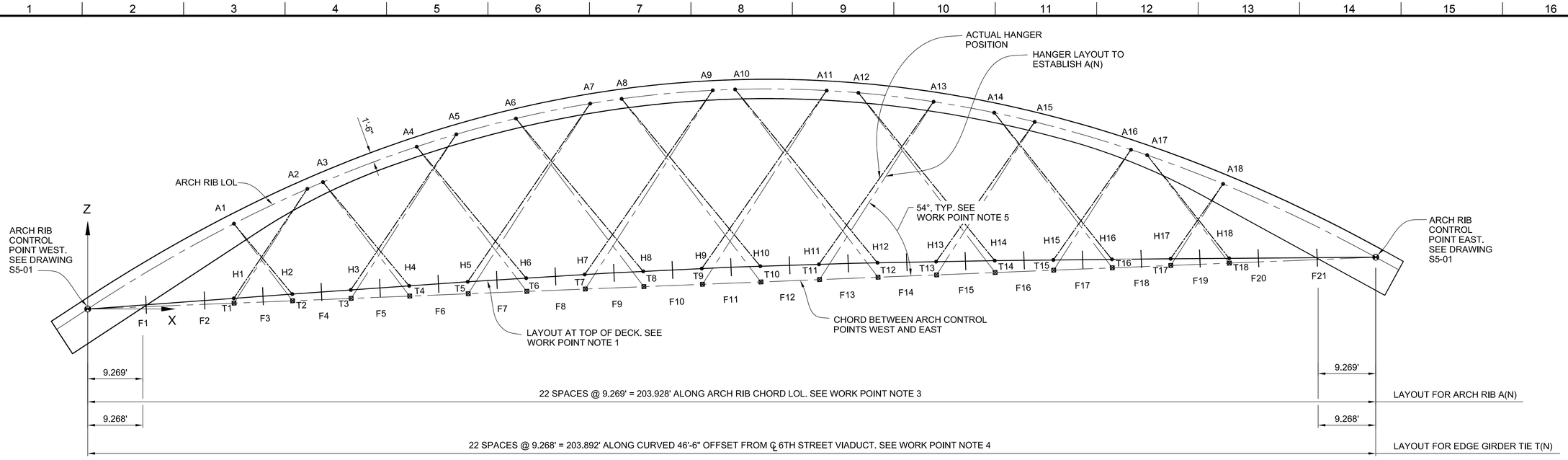

ARCH RIB ELEVATION - SPANS 8 THRU 10 NORTH

NO SCALE

NOTES:

1. FOR NOTES AND LEGEND, SEE DRAWING S5-51.
2. FOR HANGER FORCE SUMMARY AT SPANS 9 & 10 NORTH, SEE DRAWING NO. S5-62.

HANGER WORK POINT COORDINATES

HANGER NO.	LOWER WORK POINTS						UPPER WORK POINTS						DISTANCE BETWEEN WORK POINTS (FT)
	POINT	X (FT)	Y (FT)	Z (FT) (SPAN 8)	Z (FT) (SPAN 9)	Z (FT) (SPAN 10)	POINT	X (FT)	Y (FT)	Z (FT) (SPAN 8)	Z (FT) (SPAN 9)	Z (FT) (SPAN 10)	
H1	T1	23.186	-0.585	301.629	304.464	307.298	A2	35.629	2.716	318.915	321.750	324.582	21.55
H2	T2	32.453	-0.449	301.716	304.550	307.384	A1	23.431	1.916	313.748	316.583	319.416	15.22
H3	T3	41.720	-0.330	301.802	304.636	307.471	A5	59.557	3.892	326.559	329.394	332.213	30.80
H4	T4	50.987	-0.228	301.888	304.722	307.557	A3	37.653	2.834	319.675	322.509	325.344	22.44
H5	T5	60.255	-0.142	301.974	304.809	307.643	A7	80.858	4.494	330.562	333.396	336.248	35.54
H6	T6	69.522	-0.074	302.060	304.895	307.729	A4	52.580	3.602	324.662	327.496	330.331	28.48
H7	T7	78.790	-0.023	302.147	304.981	307.815	A9	100.303	4.692	331.992	334.826	337.659	37.09
H8	T8	88.058	0.011	302.233	305.067	307.902	A6	68.352	4.190	328.521	331.356	334.195	33.12
H9	T9	97.325	0.028	302.319	305.153	307.988	A11	118.275	4.569	331.379	334.213	337.048	36.11
H10	T10	106.593	0.028	302.405	305.239	308.074	A8	85.107	4.569	331.071	333.905	336.740	36.11
H11	T11	115.861	0.011	302.491	305.326	308.160	A13	135.075	4.190	329.142	331.976	334.815	33.12
H12	T12	125.129	-0.023	302.577	305.412	308.246	A10	103.065	4.692	332.017	334.852	337.685	37.09
H13	T13	134.396	-0.074	302.664	305.498	308.332	A15	150.916	3.602	325.576	328.410	331.245	28.48
H14	T14	143.664	-0.142	302.750	305.584	308.419	A12	122.533	4.494	330.949	333.783	336.635	35.54
H15	T15	152.931	-0.228	302.836	305.670	308.505	A16	165.933	2.834	320.867	323.701	326.536	22.44
H16	T16	162.199	-0.330	302.922	305.757	308.591	A14	143.905	3.892	327.344	330.178	332.998	30.80
H17	T17	171.466	-0.449	303.008	305.843	308.677	A18	180.263	1.916	315.206	318.040	320.874	15.22
H18	T18	180.733	-0.585	303.094	305.929	308.763	A17	167.971	2.716	320.146	322.980	325.812	21.55

HANGER FORCE SUMMARY - SPAN 8 NORTH

HANGER NO.	STRUCTURAL STRAND DIAMETER (IN)	GROSS METALLIC AREA (IN^2)	FINAL DEAD LOAD		(LL+I) + PL		FULL PL		PERMIT	
			DEAD LOAD W/O FWS (KIPS)	FWS (KIPS)	MAX (KIPS)	MIN (KIPS)	MAX (KIPS)	MIN (KIPS)	MAX (KIPS)	MIN (KIPS)
H1	2¼	4.54	149	4	29	-14	30	-17	33	-16
H2	2¼	4.54	200	13	45	-10	51	-11	56	-6
H3	2¼	4.54	150	8	61	-29	59	-37	71	-34
H4	2¼	4.54	168	16	54	-10	61	-13	73	-6
H5	2¼	4.54	144	11	82	-36	81	-49	97	-36
H6	2¼	4.54	164	16	60	-13	65	-17	82	-9
H7	2¼	4.54	145	13	82	-34	84	-46	100	-27
H8	2¼	4.54	153	15	65	-21	69	-25	87	-15
H9	2¼	4.54	141	14	75	-31	79	-38	94	-24
H10	2¼	4.54	150	13	72	-31	75	-38	94	-24
H11	2¼	4.54	147	15	67	-22	72	-26	86	-15
H12	2¼	4.54	153	11	79	-34	80	-47	101	-27
H13	2¼	4.54	156	17	61	-15	68	-18	79	-10
H14	2¼	4.54	150	8	79	-36	76	-52	96	-35
H15	2¼	4.54	159	16	54	-11	62	-14	67	-7
H16	2¼	4.54	157	7	61	-29	57	-37	73	-34
H17	2¼	4.54	189	14	44	-11	53	-12	50	-6
H18	2¼	4.54	148	4	29	-13	29	-17	34	-16

THE CITY OF LOS ANGELES OR ITS OFFICERS OR AGENTS SHALL NOT BE RESPONSIBLE FOR THE ACCURACY OR COMPLETENESS OF ELECTRONIC COPIES OF THIS PLAN SHEET.

C:\caddlib\pw\pwwestcoast\zhang\dms57683\S5-51-HL01-16.dwg 6/27/16 17:41

REVISION DATES (DESIGN STAGE ONLY)

Sheet Version 3.0

BUREAU OF ENGINEERING

ENGINEERING CITY OF LOS ANGELES

NO.	REVISIONS:	DATE:	BY:

STRUCTURE NO. 53C-2329

INDEX NO. P-38113

THIS PLAN WAS ELECTRONICALLY SIGNED AND STAMPED.

REGISTERED PROFESSIONAL ENGINEER MICHAEL H. JONES No. S3033 CIVIL STATE OF CALIFORNIA

BUREAU OF ENGINEERING OFFICIAL RECORD

HNTB
HNTB Corporation
601 W. 5TH STREET SUITE 1000
LOS ANGELES, CALIFORNIA 90071
TEL (213) 403-1000 FAX (213) 403-1001

CITY OF LOS ANGELES DEPARTMENT OF PUBLIC WORKS BUREAU OF ENGINEERING

GARY LEE MOORE, P.E. CITY ENGINEER

		DATE:
ENGINEER:	MICHAEL H. JONES	1/29/2016
DESIGNED BY:	MICHAEL H. JONES	1/29/2016
DRAWN BY:	LI ZHANG	1/29/2016
CHECKED BY:	CHARLES REDFIELD	1/29/2016
APPROVED BY:	MICHAEL H. JONES	1/29/2016

DESIGN GROUP
LIC. NO. S3033

VERTICAL CONTROL: BM 12-04070, 1929 (NGVD 29) - 1985 ADJUSTMENT
HORIZONTAL CONTROL: GPS; PID AE 1704, EPOCH 1991.35

SHEET TITLE: ARCH HANGER LAYOUT NO. 11

PROJECT: SIXTH STREET VIADUCT REPLACEMENT

ADDRESS: SIXTH STREET VIADUCT (WHITTIER BLVD) LOS ANGELES, CA

WORK ORDER NO. E700224F

DRAWING NO. S5-61

SHEET 293 OF 560 SHEETS

ADDENDUM 5

HANGER FORCE SUMMARY - SPAN 9 NORTH

HANGER NO.	STRUCTURAL STRAND DIAMETER (IN)	GROSS METALLIC AREA (IN^2)	FINAL DEAD LOAD		(LL+I) + PL		FULL PL		PERMIT	
			DEAD LOAD W/O FWS (KIPS)	FWS (KIPS)	MAX (KIPS)	MIN (KIPS)	MAX (KIPS)	MIN (KIPS)	MAX (KIPS)	MIN (KIPS)
H1	2¾	4.54	161	4	29	-14	30	-17	34	-16
H2	2¾	4.54	200	13	44	-9	51	-10	56	-6
H3	2¾	4.54	150	7	61	-30	60	-38	73	-34
H4	2¾	4.54	168	16	53	-9	60	-12	73	-7
H5	2¾	4.54	134	11	81	-36	81	-49	98	-36
H6	2¾	4.54	166	16	58	-12	64	-16	83	-11
H7	2¾	4.54	132	13	80	-32	82	-44	100	-27
H8	2¾	4.54	159	14	64	-20	69	-26	89	-15
H9	2¾	4.54	131	14	71	-26	76	-34	92	-22
H10	2¾	4.54	161	12	71	-29	75	-38	96	-23
H11	2¾	4.54	142	16	62	-16	67	-21	84	-13
H12	2¾	4.54	167	10	77	-32	78	-47	101	-31
H13	2¾	4.54	156	16	54	-10	60	-13	76	-9
H14	2¾	4.54	166	6	74	-36	73	-51	94	-39
H15	2¾	4.54	160	15	46	-7	54	-9	65	-7
H16	2¾	4.54	168	5	57	-29	55	-37	71	-36
H17	2¾	4.54	187	13	37	-8	45	-8	47	-5
H18	2¾	4.54	155	3	26	-13	27	-16	33	-16

HANGER FORCE SUMMARY - SPAN 10 NORTH

HANGER NO.	STRUCTURAL STRAND DIAMETER (IN)	GROSS METALLIC AREA (IN^2)	FINAL DEAD LOAD		(LL+I) + PL		FULL PL		PERMIT	
			DEAD LOAD W/O FWS (KIPS)	FWS (KIPS)	MAX (KIPS)	MIN (KIPS)	MAX (KIPS)	MIN (KIPS)	MAX (KIPS)	MIN (KIPS)
H1	2¾	4.54	152	5	30	-14	30	-18	35	-18
H2	2¾	4.54	185	13	43	-9	50	-10	56	-6
H3	2¾	4.54	137	8	62	-31	60	-38	74	-37
H4	2¾	4.54	164	16	53	-9	59	-12	73	-7
H5	2¾	4.54	127	11	81	-36	80	-49	99	-38
H6	2¾	4.54	164	16	58	-12	64	-16	83	-10
H7	2¾	4.54	133	14	82	-32	84	-44	104	-29
H8	2¾	4.54	154	14	64	-20	68	-26	89	-16
H9	2¾	4.54	133	14	74	-30	79	-37	96	-27
H10	2¾	4.54	149	12	71	-31	75	-39	97	-26
H11	2¾	4.54	140	16	66	-22	72	-26	87	-18
H12	2¾	4.54	152	11	79	-33	80	-48	105	-31
H13	2¾	4.54	158	17	59	-13	66	-16	79	-10
H14	2¾	4.54	147	8	80	-37	77	-53	102	-40
H15	2¾	4.54	169	17	52	-9	60	-10	68	-7
H16	2¾	4.54	151	5	60	-31	56	-40	75	-38
H17	2¾	4.54	200	14	43	-9	51	-9	50	-7
H18	2¾	4.54	156	4	30	-14	29	-18	37	-18

NOTES:

1. FOR NOTES, SEE DRAWING S5-51.

THE CITY OF LOS ANGELES OR ITS OFFICERS OR AGENTS SHALL NOT BE RESPONSIBLE FOR THE ACCURACY OR COMPLETENESS OF ELECTRONIC COPIES OF THIS PLAN SHEET.

HNTB
HNTB Corporation
601 W. 5TH STREET SUITE 1000
LOS ANGELES, CALIFORNIA 90071
TEL (213) 403-1000 FAX (213) 403-1001

BUREAU OF ENGINEERING
OFFICIAL RECORD

BUREAU OF ENGINEERING
ENGINEERING
CITY OF LOS ANGELES

NO.	REVISIONS:	DATE	BY:

STRUCTURE NO. 53C-2329

INDEX NO. P-38113

REGISTERED PROFESSIONAL ENGINEER MICHAEL H. JONES No. S3033 CIVIL STATE OF CALIFORNIA

THIS PLAN WAS ELECTRONICALLY SIGNED AND STAMPED.

CITY OF LOS ANGELES DEPARTMENT OF PUBLIC WORKS

GARY LEE MOORE, P.E. CITY ENGINEER

		DATE:
DESIGN GROUP		
ENGINEER:	MICHAEL H. JONES	1/29/2016
LIC. NO.	S3033	
DESIGNED BY:	MICHAEL H. JONES	1/29/2016
DRAWN BY:	LI ZHANG	1/29/2016
CHECKED BY:	CHARLES REDFIELD	1/29/2016
APPROVED BY:	MICHAEL H. JONES	1/29/2016

VERTICAL CONTROL: BM 12-04070, 1929 (NGVD 29) - 1985 ADJUSTMENT
HORIZONTAL CONTROL: GPS; PID AE 1704, EPOCH 1991.35

SHEET TITLE: ARCH HANGER LAYOUT NO. 12

PROJECT: SIXTH STREET VIADUCT REPLACEMENT

ADDRESS: SIXTH STREET VIADUCT (WHITTIER BLVD)
LOS ANGELES, CA

WORK ORDER NO. E700224F

DRAWING NO. S5-62

SHEET 294 OF 560 SHEETS

REVISION DATES (DESIGN STAGE ONLY)

C:\caddlib\pw\pwwestcoast\zhang\dms57683\S5-51-HL01-16.dwg 6/27/16 17:42

Sheet Version 3.0

ADDENDUM 5

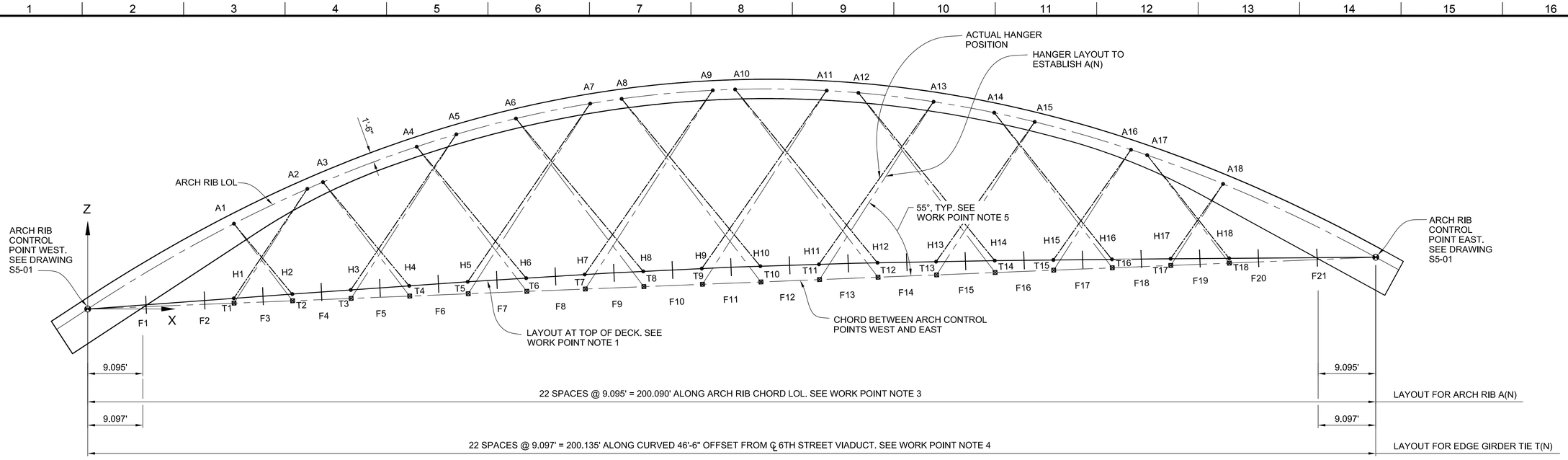

ARCH RIB ELEVATION - SPANS 8 THRU 10 SOUTH

NO SCALE

NOTES:

1. FOR NOTES AND LEGEND, SEE DRAWING S5-51.
2. FOR HANGER FORCE SUMMARY AT SPANS 9 & 10 SOUTH, SEE DRAWING NO. S5-64.

HANGER WORK POINT COORDINATES

HANGER NO.	LOWER WORK POINTS						UPPER WORK POINTS						DISTANCE BETWEEN WORK POINTS (FT)
	POINT	X (FT)	Y (FT)	Z (FT) (SPAN 8)	Z (FT) (SPAN 9)	Z (FT) (SPAN 10)	POINT	X (FT)	Y (FT)	Z (FT) (SPAN 8)	Z (FT) (SPAN 9)	Z (FT) (SPAN 10)	
H1	T1	22.719	1.407	301.868	304.703	307.537	A2	34.651	-2.698	319.035	321.869	324.704	21.31
H2	T2	31.815	1.541	301.955	304.789	307.623	A1	23.097	-1.926	314.049	316.883	319.718	15.31
H3	T3	40.911	1.658	302.041	304.875	307.710	A5	58.047	-3.877	326.701	329.535	332.370	30.54
H4	T4	50.007	1.758	302.127	304.961	307.796	A3	37.107	-2.847	319.998	322.832	325.667	22.52
H5	T5	59.104	1.841	302.213	305.048	307.882	A7	78.927	-4.486	330.747	333.581	336.416	35.32
H6	T6	68.201	1.908	302.299	305.134	307.968	A4	51.817	-3.614	324.981	327.815	330.650	28.52
H7	T7	77.298	1.958	302.385	305.220	308.054	A9	98.023	-4.692	332.224	335.058	337.893	36.93
H8	T8	86.395	1.992	302.472	305.306	308.140	A6	67.340	-4.202	328.840	331.674	334.509	33.12
H9	T9	95.492	2.008	302.558	305.392	308.227	A11	115.692	-4.574	331.648	334.482	337.317	36.02
H10	T10	104.589	2.008	302.644	305.478	308.313	A8	83.841	-4.574	331.347	334.181	337.016	36.02
H11	T11	113.686	1.992	302.730	305.565	308.399	A13	132.225	-4.199	329.436	332.270	335.105	33.09
H12	T12	122.783	1.958	302.816	305.651	308.485	A10	101.484	-4.695	332.274	335.108	337.943	36.96
H13	T13	131.880	1.908	302.903	305.737	308.571	A15	147.825	-3.613	325.882	328.716	331.551	28.51
H14	T14	140.977	1.841	302.989	305.823	308.658	A12	120.603	-4.490	331.161	333.995	336.830	35.34
H15	T15	150.074	1.758	303.075	305.909	308.744	A16	162.622	-2.845	321.173	324.006	326.842	22.50
H16	T16	159.170	1.658	303.161	305.995	308.830	A14	141.578	-3.875	327.482	330.316	333.151	30.52
H17	T17	168.266	1.541	303.247	306.082	308.916	A18	176.749	-1.925	315.497	318.331	321.166	15.30
H18	T18	177.363	1.407	303.333	306.168	309.002	A17	165.100	-2.700	320.282	323.116	325.951	21.32

HANGER FORCE SUMMARY - SPAN 8 SOUTH

HANGER NO.	STRUCTURAL STRAND DIAMETER (IN)	GROSS METALLIC AREA (IN^2)	FINAL DEAD LOAD		(LL+I) + PL		FULL PL		PERMIT	
			DEAD LOAD W/O FWS (KIPS)	FWS (KIPS)	MAX (KIPS)	MIN (KIPS)	MAX (KIPS)	MIN (KIPS)	MAX (KIPS)	MIN (KIPS)
H1	2¼	4.54	136	4	27	-12	26	-15	31	-15
H2	2¼	4.54	192	13	41	-8	47	-9	51	-5
H3	2¼	4.54	141	7	58	-27	55	-34	69	-34
H4	2¼	4.54	160	15	51	-8	56	-12	68	-6
H5	2¼	4.54	142	10	78	-33	76	-46	96	-36
H6	2¼	4.54	156	15	56	-13	62	-18	77	-10
H7	2¼	4.54	144	12	78	-32	80	-43	99	-28
H8	2¼	4.54	150	14	64	-21	69	-27	86	-16
H9	2¼	4.54	142	14	71	-28	75	-34	93	-24
H10	2¼	4.54	144	13	72	-28	74	-37	94	-22
H11	2¼	4.54	146	15	64	-19	69	-23	86	-16
H12	2¼	4.54	138	10	77	-34	77	-48	98	-28
H13	2¼	4.54	157	17	58	-11	64	-15	80	-10
H14	2¼	4.54	132	8	76	-38	74	-53	94	-36
H15	2¼	4.54	161	16	52	-8	59	-11	71	-7
H16	2¼	4.54	137	4	56	-32	53	-41	66	-34
H17	2¼	4.54	193	14	43	-7	50	-9	55	-5
H18	2¼	4.54	137	3	27	-15	26	-19	31	-17

HNTB
HNTB Corporation
601 W. 5TH STREET SUITE 1000
LOS ANGELES, CALIFORNIA 90071
TEL (213) 403-1000 FAX (213) 403-1001

BUREAU OF ENGINEERING
OFFICIAL RECORD

CITY OF LOS ANGELES DEPARTMENT OF PUBLIC WORKS BUREAU OF ENGINEERING

ENGINEERING CITY OF LOS ANGELES

NO.	REVISIONS:	DATE	BY:

STRUCTURE NO. 53C-2329

INDEX NO. P-38113

THIS PLAN WAS ELECTRONICALLY SIGNED AND STAMPED.

REGISTERED PROFESSIONAL ENGINEER MICHAEL H. JONES No. S3033 CIVIL STATE OF CALIFORNIA

CITY ENGINEER:	GARY LEE MOORE, P.E.	DATE: 1/29/2016
	DESIGN GROUP	
LIC. NO.	S3033	1/29/2016
ENGINEER:	MICHAEL H. JONES	1/29/2016
DESIGNED BY:	MICHAEL H. JONES	1/29/2016
DRAWN BY:	LI ZHANG	1/29/2016
CHECKED BY:	CHARLES REDFIELD	1/29/2016
APPROVED BY:	MICHAEL H. JONES	1/29/2016

VERTICAL CONTROL: BM 12-04070, 1929 (NGVD 29) - 1985 ADJUSTMENT
HORIZONTAL CONTROL: GPS; PID AE 1704, EPOCH 1991.35

SHEET TITLE: ARCH HANGER LAYOUT NO. 13

PROJECT: SIXTH STREET VIADUCT REPLACEMENT

ADDRESS: SIXTH STREET VIADUCT (WHITTIER BLVD) LOS ANGELES, CA

WORK ORDER NO. E700224F

DRAWING NO. S5-63

SHEET 295 OF 560 SHEETS

THE CITY OF LOS ANGELES OR ITS OFFICERS OR AGENTS SHALL NOT BE RESPONSIBLE FOR THE ACCURACY OR COMPLETENESS OF ELECTRONIC COPIES OF THIS PLAN SHEET.

C:\caddlib\pw\pwwestcoast\zhang\dms57683\S5-51-HL01-16.dwg 6/27/16 17:42

REVISION DATES (DESIGN STAGE ONLY)

Sheet Version 3.0

ADDENDUM 5

Arch Span	Hanger No.	Structural Strand Diameter (in)	Gross Mettalic Area (in^2)	Final Dead Load		(LL + I) + PL		FULL PL		PERMIT		CSI Identification
				Dead Load W/O FWS (kips)	FWS (kips)	Max (kips)	Min (kips)	Max (kips)	Min (kips)	Max (kips)	Min (kips)	
	H1	2¾	4.54	153	3	28	-13	27	-16	31	-15	HR8498
	H2	2¾	4.54	185	12	43	-10	49	-13	51	-5	HL8500
	H3	2¾	4.54	158	7	61	-27	58	-35	71	-34	HR8502
	H4	2¾	4.54	157	14	53	-11	59	-15	68	-8	HL8504
	H5	2¾	4.54	150	10	81	-35	80	-48	97	-36	HR8506
	H6	2¾	4.54	157	14	60	-17	66	-23	77	-12	HL8508
	H7	2¾	4.54	145	13	80	-33	83	-45	99	-27	HR8510
	H8	2¾	4.54	157	13	68	-25	73	-32	87	-17	HL8512
9-South	H9	2¾	4.54	138	15	72	-27	77	-34	92	-21	HR8514
	H10	2¾	4.54	158	11	75	-32	78	-43	96	-24	HL8516
	H11	2¾	4.54	143	16	63	-18	69	-22	84	-13	HR8518
	H12	2¾	4.54	161	8	78	-38	80	-53	98	-33	HL8520
	H13	2¾	4.54	158	16	55	-11	62	-14	78	-9	HR8522
	H14	2¾	4.54	161	4	74	-40	73	-55	90	-41	HL8524
	H15	2¾	4.54	164	15	48	-8	55	-11	68	-7	HR8526
	H16	2¾	4.54	164	2	53	-32	52	-41	63	-36	HL8528
	H17	2¾	4.54	189	12	38	-8	45	-9	50	-4	HR8530
	H18	2¾	4.54	153	2	25	-15	26	-19	29	-17	HL8532

Total Force: 2851 kips

T.O. 5 - Change Order Serial Sketch No. 32 - page 1 of 1

HANGER FORCE SUMMARY - SPAN 10 SOUTH

HANGER NO.	STRUCTURAL STRAND DIAMETER (IN)	GROSS METALLIC AREA (IN^2)	FINAL DEAD LOAD		(LL+I) + PL		FULL PL		PERMIT	
			DEAD LOAD W/O FWS (KIPS)	FWS (KIPS)	MAX (KIPS)	MIN (KIPS)	MAX (KIPS)	MIN (KIPS)	MAX (KIPS)	MIN (KIPS)
H1	2¾	4.54	138	4	28	-14	27	-17	32	-17
H2	2¾	4.54	178	12	42	-8	48	-10	51	-5
H3	2¾	4.54	128	7	60	-30	57	-38	72	-37
H4	2¾	4.54	157	15	52	-8	57	-12	69	-7
H5	2¾	4.54	126	11	80	-36	79	-49	99	-39
H6	2¾	4.54	160	15	58	-14	64	-19	77	-11
H7	2¾	4.54	134	13	79	-33	81	-44	102	-29
H8	2¾	4.54	154	14	65	-21	70	-28	87	-16
H9	2¾	4.54	134	14	72	-29	77	-35	95	-24
H10	2¾	4.54	149	12	74	-30	77	-41	97	-24
H11	2¾	4.54	140	16	64	-20	70	-24	87	-17
H12	2¾	4.54	148	10	81	-35	81	-51	105	-33
H13	2¾	4.54	153	17	57	-12	64	-15	80	-10
H14	2¾	4.54	141	7	80	-41	77	-57	100	-42
H15	2¾	4.54	162	16	51	-8	58	-10	70	-7
H16	2¾	4.54	144	4	60	-33	56	-43	73	-39
H17	2¾	4.54	195	14	42	-8	49	-8	53	-6
H18	2¾	4.54	147	2	28	-16	26	-20	33	-19

NOTES:

1. FOR NOTES, SEE DRAWING S5-51.

BUREAU OF ENGINEERING
OFFICIAL RECORD

HNTB
HNTB Corporation
601 W. 5TH STREET SUITE 1000
LOS ANGELES, CALIFORNIA 90071
TEL (213) 403-1000 FAX (213) 403-1001

BUREAU OF ENGINEERING

ENGINEERING
CITY OF LOS ANGELES

NO.	REVISIONS:	DATE	BY:

STRUCTURE NO. 53C-2329

INDEX NO. P-38113

THIS PLAN WAS ELECTRONICALLY SIGNED AND STAMPED

REGISTERED PROFESSIONAL ENGINEER
MICHAEL H. JONES
No. S3033
CIVIL
STATE OF CALIFORNIA

CITY OF LOS ANGELES DEPARTMENT OF PUBLIC WORKS

GARY LEE MOORE, P.E. CITY ENGINEER

DESIGN GROUP

		DATE:
ENGINEER:	MICHAEL H. JONES	1/29/2016
DESIGNED BY:	MICHAEL H. JONES	1/29/2016
DRAWN BY:	LI ZHANG	1/29/2016
CHECKED BY:	CHARLES REDFIELD	1/29/2016
APPROVED BY:	MICHAEL H. JONES	1/29/2016

LIC. NO. S3033

VERTICAL CONTROL: BM 12-04070, 1929 (NGVD 29) - 1985 ADJUSTMENT
HORIZONTAL CONTROL: GPS; PID AE 1704, EPOCH 1991.35

SHEET TITLE: ARCH HANGER LAYOUT NO. 14

PROJECT: SIXTH STREET VIADUCT REPLACEMENT

ADDRESS: SIXTH STREET VIADUCT (WHITTIER BLVD)
LOS ANGELES, CA

WORK ORDER NO. E700224F

DRAWING NO. S5-64

SHEET 296 OF 560 SHEETS

THE CITY OF LOS ANGELES OR ITS OFFICERS OR AGENTS SHALL NOT BE RESPONSIBLE FOR THE ACCURACY OR COMPLETENESS OF ELECTRONIC COPIES OF THIS PLAN SHEET.

REVISION DATES (DESIGN STAGE ONLY)

C:\caddlib\pw\pwwestcoast\zhang\dms57683\S5-51-HL01-16.dwg 6/27/16 17:42

Sheet Version 3.0

ADDENDUM 5

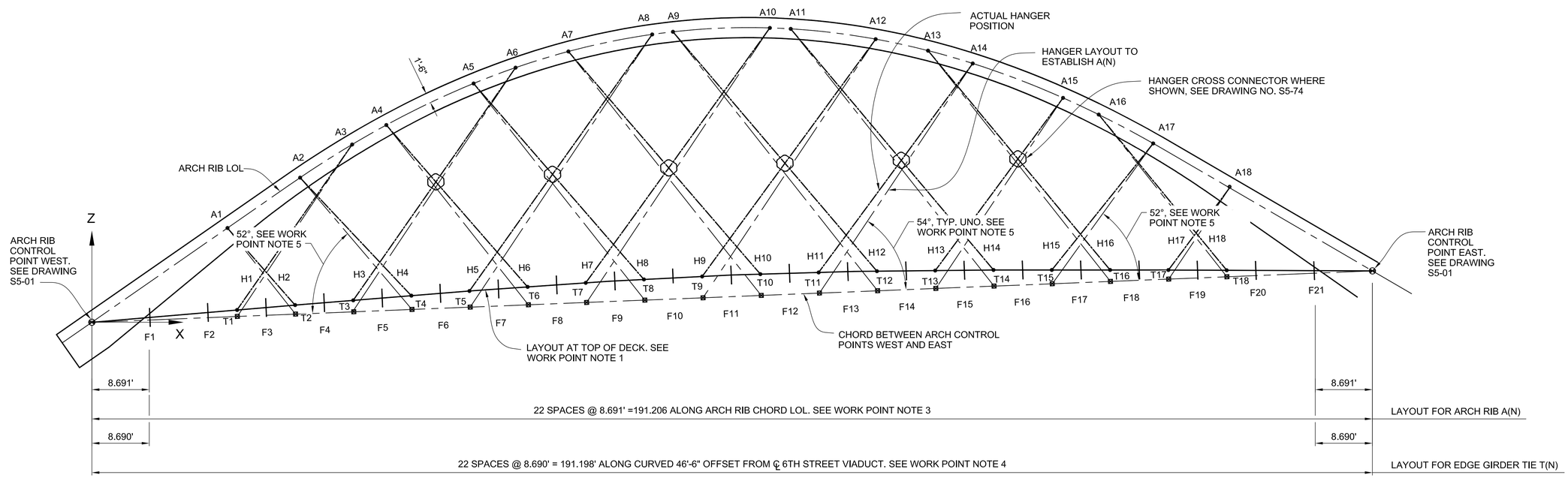

ARCH RIB ELEVATION - SPAN12 NORTH

NO SCALE

NOTES:

1. FOR NOTES AND LEGEND, SEE DRAWING S5-51.

HANGER WORK POINT COORDINATES

HANGER NO.	LOWER WORK POINTS				UPPER WORK POINTS				DISTANCE BETWEEN WORK POINTS (FT)
	POINT	X (FT)	Y (FT)	Z (FT)	POINT	X (FT)	Y (FT)	Z (FT)	
H1	T1	21.732	-0.912	312.786	A3	40.154	4.019	338.353	31.90
H2	T2	30.423	-0.904	312.868	A1	20.420	2.126	326.214	16.95
H3	T3	39.113	-0.906	312.949	A6	64.713	5.584	348.467	44.26
H4	T4	47.804	-0.911	313.031	A2	32.195	3.318	333.854	26.37
H5	T5	56.494	-0.916	313.112	A8	84.901	6.196	352.521	49.10
H6	T6	65.185	-0.922	313.194	A4	44.623	4.371	340.621	34.69
H7	T7	73.875	-0.927	313.275	A10	102.467	6.237	352.940	49.42
H8	T8	82.566	-0.933	313.357	A5	57.915	5.241	346.234	41.55
H9	T9	91.256	-0.938	313.438	A12	118.227	5.883	350.855	46.63
H10	T10	99.947	-0.943	313.520	A7	72.277	5.883	350.424	46.63
H11	T11	108.637	-0.949	313.601	A14	132.664	5.241	346.935	41.55
H12	T12	117.328	-0.954	313.683	A9	87.994	6.237	352.805	49.42
H13	T13	126.018	-0.960	313.764	A15	146.060	4.371	341.571	34.69
H14	T14	134.709	-0.965	313.846	A11	105.566	6.196	352.715	49.11
H15	T15	143.399	-0.970	313.927	A17	158.613	3.318	335.038	26.37
H16	T16	152.090	-0.976	314.009	A13	125.827	5.584	349.039	44.27
H17	T17	160.780	-0.981	314.090	A18	170.526	2.126	327.620	16.96
H18	T18	169.471	-0.986	314.172	A16	150.570	4.019	339.388	31.91

HANGER FORCE SUMMARY

HANGER NO.	STRUCTURAL STRAND DIAMETER (IN)	GROSS METALLIC AREA (IN^2)	FINAL DEAD LOAD		(LL+I) + PL		FULL PL		PERMIT	
			DEAD LOAD W/O FWS (KIPS)	FWS (KIPS)	MAX (KIPS)	MIN (KIPS)	MAX (KIPS)	MIN (KIPS)	MAX (KIPS)	MIN (KIPS)
H1	2¼	4.54	143	3	32	-21	33	-24	37	-27
H2	2¼	4.54	188	10	31	-6	35	-6	36	-5
H3	2¼	4.54	155	8	62	-32	61	-38	78	-42
H4	2¼	4.54	136	13	41	-2	39	-2	56	-2
H5	2¼	4.54	152	13	75	-32	73	-38	99	-39
H6	2¼	4.54	135	14	44	-3	43	-2	63	-2
H7	2¼	4.54	156	14	72	-23	69	-29	97	-28
H8	2¼	4.54	141	15	50	-4	47	-4	70	-3
H9	2¼	4.54	149	14	62	-15	60	-20	85	-18
H10	2¼	4.54	149	16	56	-8	53	-8	77	-7
H11	2¼	4.54	141	14	54	-10	52	-12	75	-11
H12	2¼	4.54	156	15	62	-13	57	-13	80	-13
H13	2¼	4.54	134	13	46	-6	44	-8	64	-7
H14	2¼	4.54	155	15	66	-17	57	-17	79	-18
H15	2¼	4.54	131	11	40	-4	38	-5	54	-5
H16	2¼	4.54	134	11	57	-18	46	-16	63	-20
H17	2¼	4.54	180	9	32	-2	29	-3	42	-3
H18	2¼	4.54	137	5	28	-10	20	-8	28	-11

T.O. 5 - Change Order Serial Sketch No. 65 - Page 2 of 5

THE CITY OF LOS ANGELES OR ITS OFFICERS OR AGENTS SHALL NOT BE RESPONSIBLE FOR THE ACCURACY OR COMPLETENESS OF ELECTRONIC COPIES OF THIS PLAN SHEET.

C:\caddlib\pw\pwwestcoast\zhang\dms57683\S5-51-HL01-16.dwg 5/30/18 16:03

REVISION DATES (DESIGN STAGE ONLY)

Sheet Version 3.0

HNTB
HNTB Corporation
601 W. 5TH STREET SUITE 1000
LOS ANGELES, CALIFORNIA 90071
TEL (213) 403-1000 FAX (213) 403-1001

CITY OF LOS ANGELES DEPARTMENT OF PUBLIC WORKS

BUREAU OF ENGINEERING

ENGINEERING CITY OF LOS ANGELES

NO.	REVISIONS:	DATE	BY:
1	BIM REVISION 7 ECO 65	5/31/18	MHJ

STRUCTURE NO. 53C-2329

INDEX NO.

THIS PLAN WAS ELECTRONICALLY SIGNED AND STAMPED

REGISTERED PROFESSIONAL ENGINEER MICHAEL H. JONES No. S3033 CIVIL STATE OF CALIFORNIA

P.E.	CITY ENGINEER	DATE:
GARY LEE MOORE, P.E.	DESIGN GROUP	
ENGINEER:	MICHAEL H. JONES LIC. NO. S3033	1/29/2016
DESIGNED BY:	MICHAEL H. JONES	1/29/2016
DRAWN BY:	LI ZHANG	1/29/2016
CHECKED BY:	CHARLES REDFIELD	1/29/2016
APPROVED BY:	MICHAEL H. JONES	1/29/2016

VERTICAL CONTROL: BM 12-04070, 1929 (NGVD 29) - 1985 ADJUSTMENT
HORIZONTAL CONTROL: GPS; PID AE 1704, EPOCH 1991.35

SHEET TITLE: ARCH HANGER LAYOUT NO. 15

PROJECT: SIXTH STREET VIADUCT REPLACEMENT

ADDRESS: SIXTH STREET VIADUCT (WHITTIER BLVD) LOS ANGELES, CA

WORK ORDER NO. E700224F

DRAWING NO. S5-65

SHEET 297 OF 560 SHEETS

ADDENDUM 5

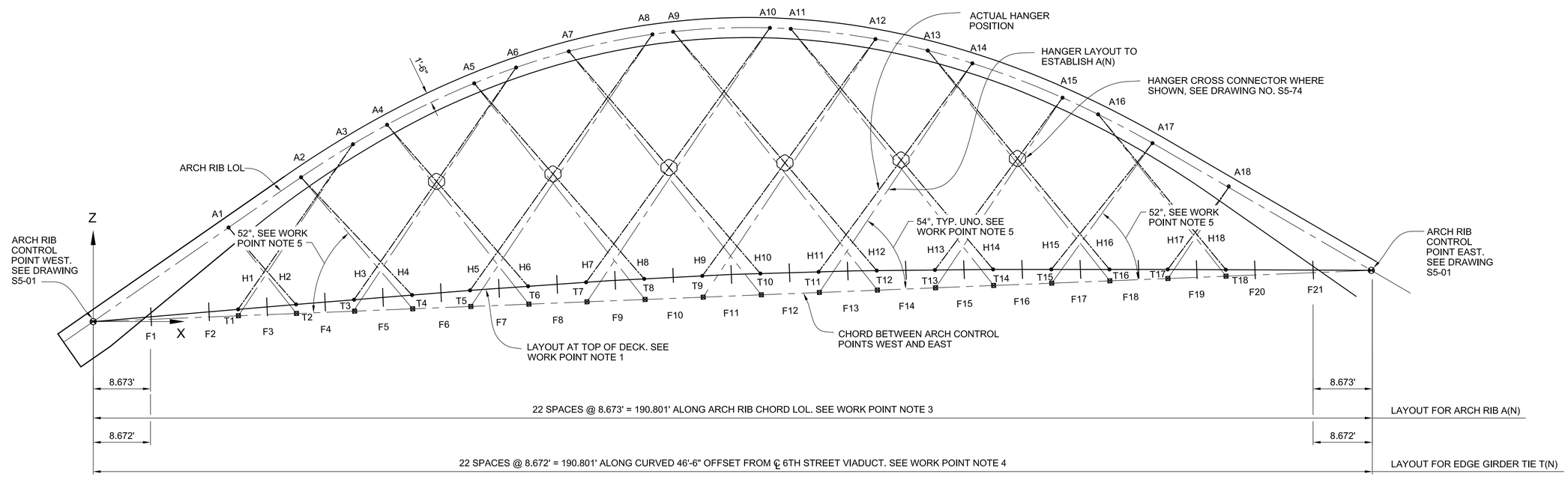

ARCH RIB ELEVATION - SPAN12 SOUTH

NO SCALE

NOTES:

1. FOR NOTES AND LEGEND, SEE DRAWING S5-51.

HANGER WORK POINT COORDINATES

HANGER NO.	LOWER WORK POINTS				UPPER WORK POINTS				DISTANCE BETWEEN WORK POINTS (FT)
	POINT	X (FT)	Y (FT)	Z (FT)	POINT	X (FT)	Y (FT)	Z (FT)	
H1	T1	21.680	1.007	313.025	A3	39.550	-3.897	337.819	30.95
H2	T2	30.352	1.007	313.107	A1	20.622	-2.069	326.097	16.52
H3	T3	39.025	1.006	313.188	A6	64.454	-5.546	348.463	43.98
H4	T4	47.697	1.006	313.270	A2	32.422	-3.248	333.655	25.83
H5	T5	56.370	1.006	313.351	A8	84.712	-5.181	352.666	49.00
H6	T6	65.042	1.005	313.433	A4	44.729	-4.319	340.533	34.28
H7	T7	73.714	1.005	313.514	A10	102.248	-6.223	353.094	49.33
H8	T8	82.387	1.005	313.596	A5	57.907	-5.205	346.250	41.28
H9	T9	91.059	1.004	313.677	A12	117.933	-5.861	350.956	46.47
H10	T10	99.732	1.004	313.759	A7	72.167	-5.861	350.526	46.46
H11	T11	108.404	1.004	313.840	A14	132.271	-5.205	346.949	41.28
H12	T12	117.077	1.003	313.922	A9	87.809	-6.223	352.958	49.32
H13	T13	125.749	1.003	314.003	A15	145.554	-4.319	341.480	34.29
H14	T14	134.422	1.002	314.085	A11	105.350	-6.181	352.860	48.99
H15	T15	143.094	1.002	314.166	A17	157.988	-3.248	334.834	25.83
H16	T16	151.767	1.002	314.248	A13	125.684	-5.546	349.038	43.97
H17	T17	160.439	1.001	314.329	A18	169.924	-2.069	327.499	16.52
H18	T18	169.112	1.001	314.410	A16	150.783	-3.897	338.864	30.95

HANGER FORCE SUMMARY

HANGER NO.	STRUCTURAL STRAND DIAMETER (IN)	GROSS METALLIC AREA (IN^2)	FINAL DEAD LOAD		(LL+I) + PL		FULL PL		PERMIT	
			DEAD LOAD W/O FWS (KIPS)	FWS (KIPS)	MAX (KIPS)	MIN (KIPS)	MAX (KIPS)	MIN (KIPS)	MAX (KIPS)	MIN (KIPS)
H1	2¾	4.54	146	3	29	-17	29	-20	33	-22
H2	2¾	4.54	173	9	28	-8	33	-7	28	-6
H3	2¾	4.54	169	9	62	-29	60	-35	78	-38
H4	2¾	4.54	127	12	38	-3	38	-3	48	-2
H5	2¾	4.54	169	13	76	-28	73	-35	99	-36
H6	2¾	4.54	134	14	45	-2	43	-2	61	-1
H7	2¾	4.54	165	14	71	-21	69	-26	95	-25
H8	2¾	4.54	140	15	50	-4	48	-4	68	-3
H9	2¾	4.54	157	15	64	-13	63	-17	88	-16
H10	2¾	4.54	152	16	58	-11	55	-8	76	-13
H11	2¾	4.54	141	14	55	-10	54	-12	75	-10
H12	2¾	4.54	163	16	65	-15	59	-12	81	-15
H13	2¾	4.54	131	13	46	-6	45	-7	65	-7
H14	2¾	4.54	166	15	68	-17	59	-17	81	-16
H15	2¾	4.54	124	11	36	-4	34	-5	52	-5
H16	2¾	4.54	150	11	58	-15	47	-16	63	-12
H17	2¾	4.54	177	8	30	-3	26	-3	41	-4
H18	2¾	4.54	146	4	26	-7	20	-7	26	-5

T.O. 5 - Change Order Serial Sketch No. 65 - Page 3 of 5

HNTB
HNTB Corporation
601 W. 5TH STREET, SUITE 1000
LOS ANGELES, CALIFORNIA 90071
TEL (213) 403-1000 FAX (213) 403-1001

BUREAU OF ENGINEERING
ENGINEERING
CITY OF LOS ANGELES

NO.	REVISIONS:	DATE	BY:
1	BIM REVISION 7 ECO 65	5/31/18	MHJ

STRUCTURE NO. 53C-2329

INDEX NO.

THIS PLAN WAS ELECTRONICALLY SIGNED AND STAMPED

REGISTERED PROFESSIONAL ENGINEER MICHAEL H. JONES No. S3033 CIVIL STATE OF CALIFORNIA

CITY OF LOS ANGELES DEPARTMENT OF PUBLIC WORKS

G.M.P.E.	GARY LEE MOORE, P.E.
CITY ENGINEER	
DESIGN GROUP	
ENGINEER:	MICHAEL H. JONES
LIC. NO.	S3033
DESIGNED BY:	MICHAEL H. JONES
DRAWN BY:	LI ZHANG
CHECKED BY:	CHARLES REDFIELD
APPROVED BY:	MICHAEL H. JONES
DATE:	1/29/2016

VERTICAL CONTROL: BM 12-04070, 1929 (NGVD 29) - 1985 ADJUSTMENT
HORIZONTAL CONTROL: GPS; PID AE 1704, EPOCH 1991.35

SHEET TITLE: ARCH HANGER LAYOUT NO. 16

PROJECT: SIXTH STREET VIADUCT REPLACEMENT

ADDRESS: SIXTH STREET VIADUCT (WHITTIER BLVD) LOS ANGELES, CA

WORK ORDER NO. E700224F

DRAWING NO. S5-66

SHEET 298 OF 560 SHEETS

THE CITY OF LOS ANGELES OR ITS OFFICERS OR AGENTS SHALL NOT BE RESPONSIBLE FOR THE ACCURACY OR COMPLETENESS OF ELECTRONIC COPIES OF THIS PLAN SHEET.

C:\caddlib\pw\pwwestcoast\zhang\dms57683\S5-51-HL01-16.dwg 5/30/18 16:03

REVISION DATES (DESIGN STAGE ONLY)

Sheet Version 3.0

ADDENDUM 5

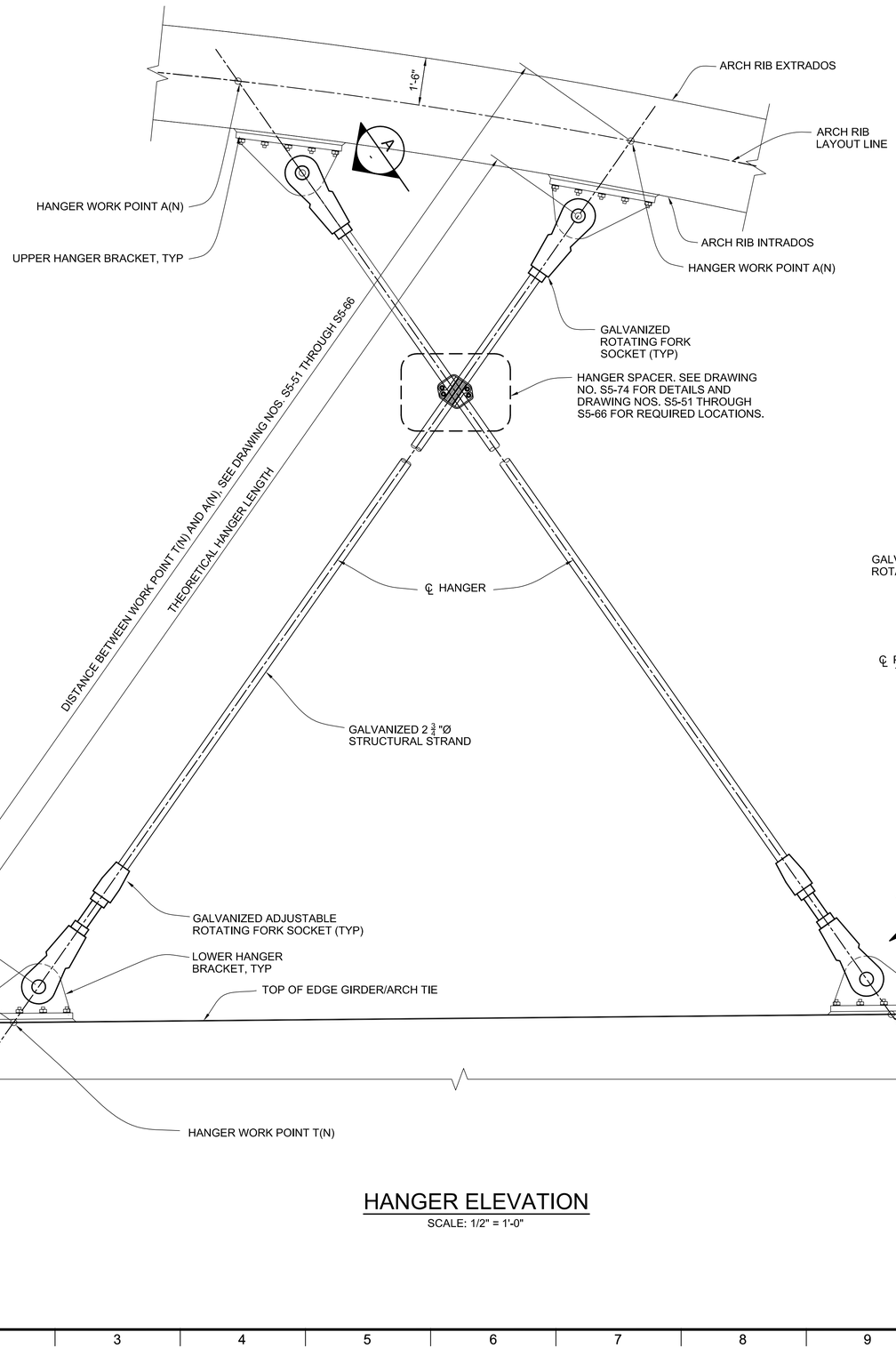

HANGER ELEVATION

SCALE: 1/2" = 1'-0"

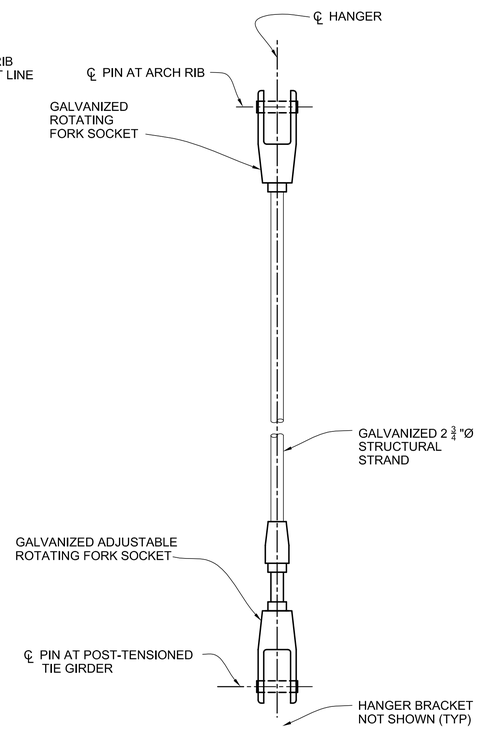

VIEW A

SCALE: 1/2"=1'-0"

LEGEND:

T(N) INDICATES HANGER WORK POINT AT TOP OF DECK

A(N) INDICATES HANGER WORK POINT ALONG ARCH RIB LAYOUT LINE

THE CITY OF LOS ANGELES OR ITS OFFICERS OR AGENTS SHALL NOT BE RESPONSIBLE FOR THE ACCURACY OR COMPLETENESS OF ELECTRONIC COPIES OF THIS PLAN SHEET.

C:\caddlib\pw\pwwestcoast\zhang\dms57683\S5-65-HD01-02.dwg 6/27/16 17:47

REVISION DATES (DESIGN STAGE ONLY)

Sheet Version 3.0

CITY OF LOS ANGELES DEPARTMENT OF PUBLIC WORKS

BUREAU OF ENGINEERING

ENGINEERING CITY OF LOS ANGELES

NO.	REVISIONS:	DATE	BY:

STRUCTURE NO. 53C-2329

INDEX NO. P-38113

THIS PLAN WAS ELECTRONICALLY SIGNED AND STAMPED.

REGISTERED PROFESSIONAL ENGINEER MICHAEL H. JONES No. S3033 CIVIL STATE OF CALIFORNIA

CITY ENGINEER	DATE:
GARY LEE MOORE, P.E.	
DESIGN GROUP	
ENGINEER: MICHAEL H. JONES LIC. NO. S3033	1/29/2016
DESIGNED BY: SEAN XIN	1/29/2016
DRAWN BY: LI ZHANG	1/29/2016
CHECKED BY: CHARLES REDFIELD	1/29/2016
APPROVED BY: MICHAEL H. JONES	1/29/2016

VERTICAL CONTROL: BM 12-04070, 1929 (NGVD 29) - 1985 ADJUSTMENT

HORIZONTAL CONTROL: GPS; PID AE 1704, EPOCH 1991.35

SHEET TITLE: HANGER CONNECTION DETAILS NO. 1

PROJECT: SIXTH STREET VIADUCT REPLACEMENT

ADDRESS: SIXTH STREET VIADUCT (WHITTIER BLVD) LOS ANGELES, CA

HNTB

HNTB Corporation
601 W. 5TH STREET SUITE 1000
LOS ANGELES, CALIFORNIA 90071
TEL (213) 403-1000 FAX (213) 403-1001

BUREAU OF ENGINEERING OFFICIAL RECORD

WORK ORDER NO. E700224F

DRAWING NO. S5-70

SHEET 299 OF 560 SHEETS

ADDENDUM 5

NOTES:

1. FOR NOTES, CONSTRUCTION SEQUENCE AND ANCHOR BOLT STRESSING SEQUENCE SEE DRAWING S5-72.

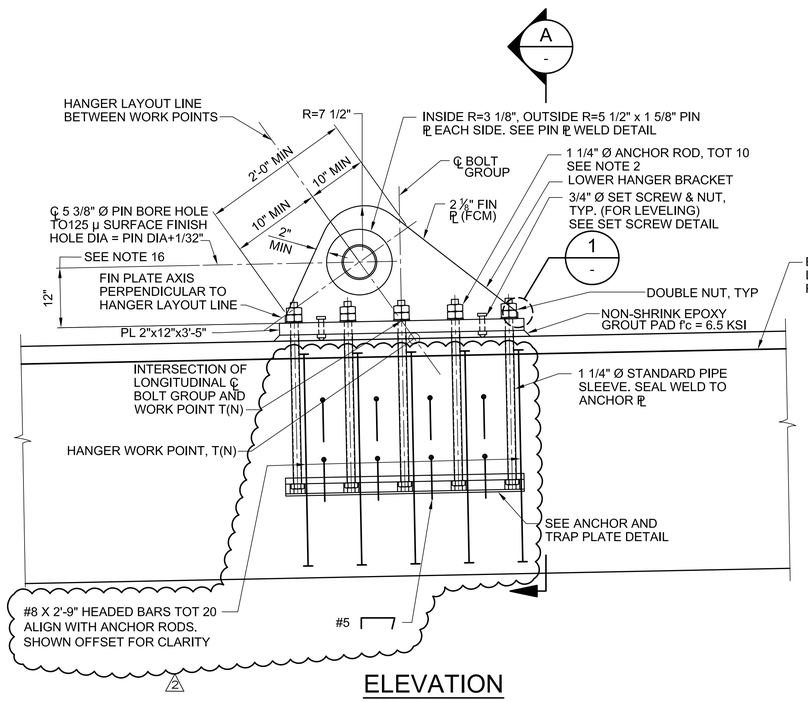

ELEVATION

SCALE: 1"=1'-0"

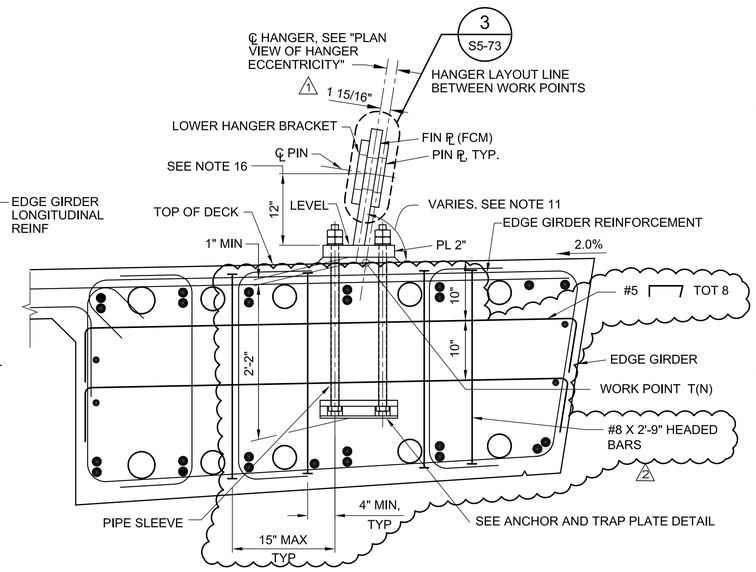

INSIDE ECCENTRICITY

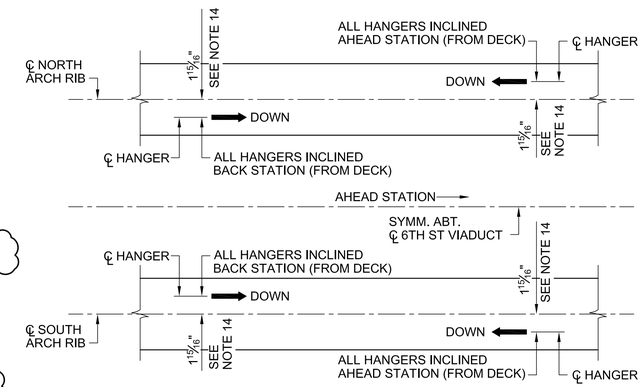

PLAN VIEW OF HANGER ECCENTRICITY

NO SCALE

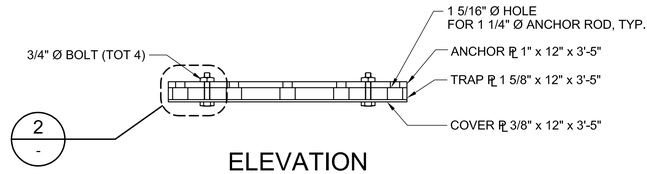

ELEVATION

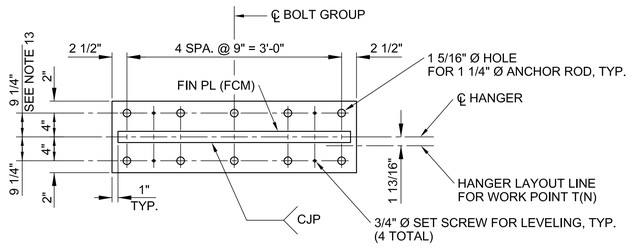

PLAN

SCALE: 1"=1'-0"

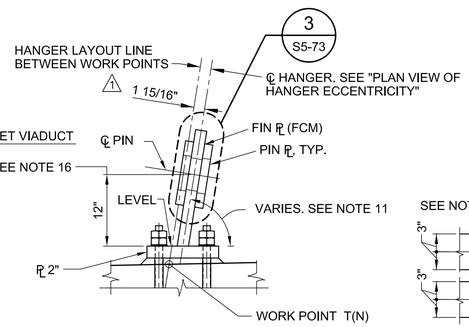

OUTSIDE ECCENTRICITY

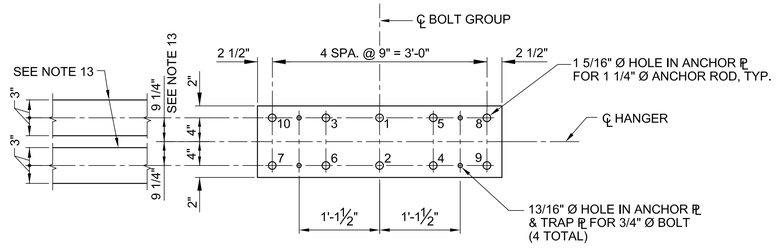

PLAN

ANCHOR AND TRAP PLATE DETAIL

SCALE: 1"=1'-0"

SECTION

SCALE: 1"=1'-0"

A
S5-71

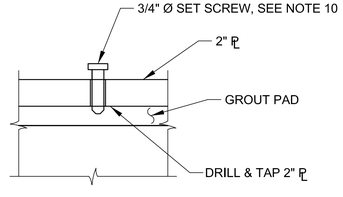

SET SCREW DETAIL

NO SCALE

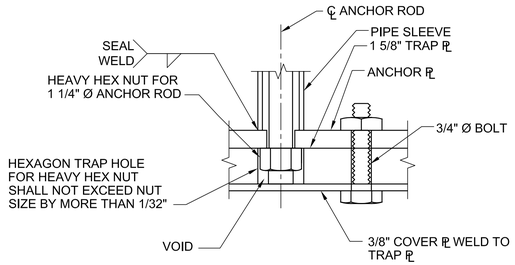

DETAIL

NO SCALE

2
S5-71

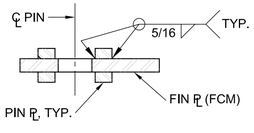

PIN ℄ WELD DETAIL

SCALE: 2"=1'-0"

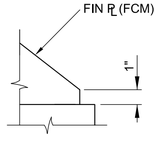

DETAIL

NO SCALE

1
S5-71

T.O. 5 - Change Order Serial Sketch No. 102 - Page 1 of 1

ENGINEERING
CITY OF LOS ANGELES

BUREAU OF ENGINEERING

NO.	REVISIONS:	DATE:	BY:
1.	FRAME CONSTRUCTION JOINT AND ARCH RIB UPDATES ECO 71	07/13/16	MHJ
2.	HANGER BRACKET REINFORCEMENT PCO 102	05/30/18	MHJ

STRUCTURE NO. 53C-2329

INDEX NO.

THIS PLAN WAS ELECTRONICALLY SIGNED AND STAMPED.

REGISTERED PROFESSIONAL ENGINEER — MICHAEL H. JONES — No. S3033 — CIVIL — STATE OF CALIFORNIA

CITY OF LOS ANGELES DEPARTMENT OF PUBLIC WORKS

GARY LEE MOORE, P.E.	CITY ENGINEER
	DATE: 1/29/2016
LIC. NO. S3033	1/29/2016
DESIGN GROUP	1/29/2016
ENGINEER: MICHAEL H. JONES	1/29/2016
DESIGNED BY: SEAN XIN	1/29/2016
DRAWN BY: LI ZHANG	
CHECKED BY: CHARLES REDFIELD	
APPROVED BY: MICHAEL H. JONES	

VERTICAL CONTROL: BM 12-04070,1929 (NGVD 29) - 1985 ADJUSTMENT
HORIZONTAL CONTROL: GPS; PID AE 1704, EPOCH 1991.35

SHEET TITLE: HANGER CONNECTION DETAILS NO. 2

PROJECT: SIXTH STREET VIADUCT REPLACEMENT

ADDRESS: SIXTH STREET VIADUCT (WHITTIER BLVD) LOS ANGELES, CA

HNTB
HNTB Corporation
601 W. 5TH STREET SUITE 1000
LOS ANGELES, CALIFORNIA 90071
TEL (213) 403-1000 FAX (213) 403-1001

WORK ORDER NO. E700224F

DRAWING NO. S5-71

SHEET 300 OF 560 SHEETS

REVISION DATES (DESIGN STAGE ONLY)

C:\caddlib\pw\pwwestcoast\zhang\dms57683\S5-71-HD02-03.dwg 5/06/19 18:13

Sheet Version 3.0

THE CITY OF LOS ANGELES OR ITS OFFICERS OR AGENTS SHALL NOT BE RESPONSIBLE FOR THE ACCURACY OR COMPLETENESS OF ELECTRONIC COPIES OF THIS PLAN SHEET.

ADDENDUM 5

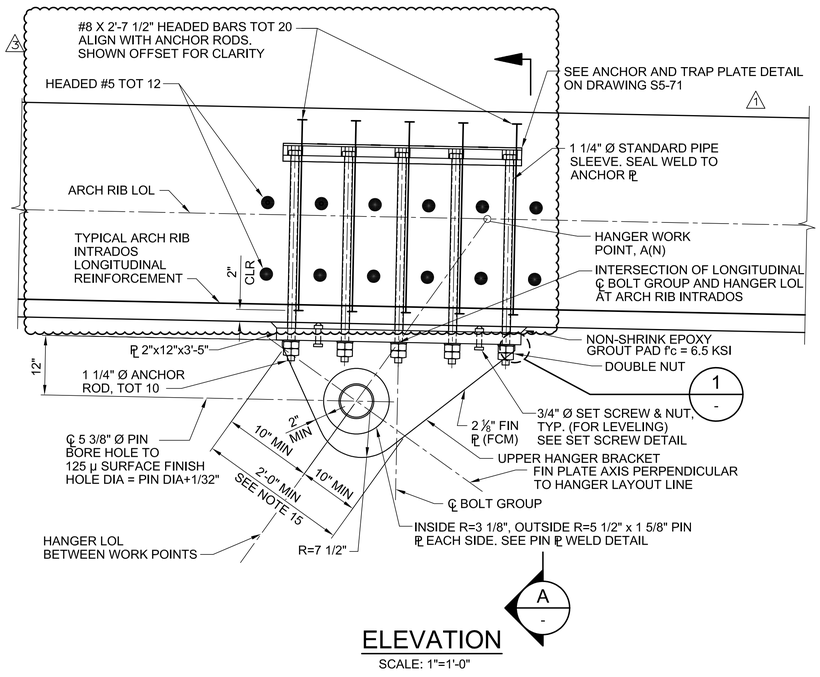

ELEVATION

SCALE: 1"=1'-0"

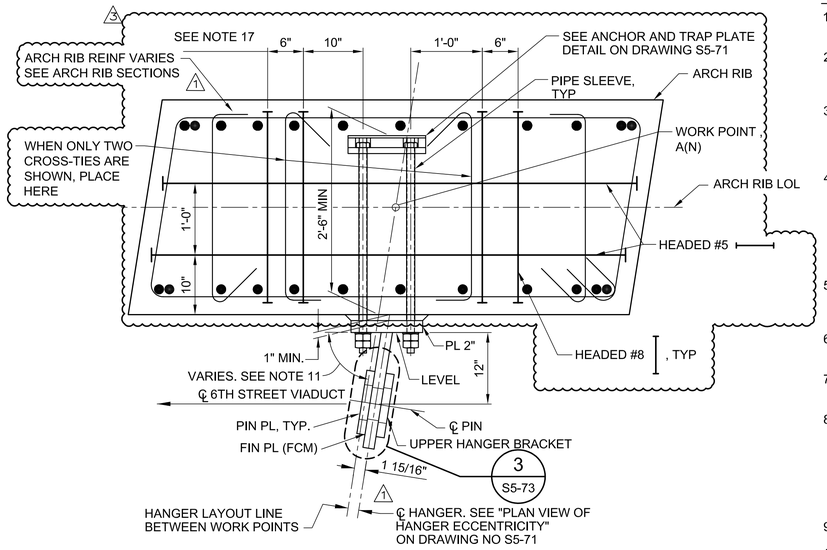

OUTSIDE ECCENTRICITY

NOTES:

1. STRUCTURAL STEEL SHALL BE ASTM A709 GRADE 50, Fy = 50 KSI. ALL STRUCTURAL STEEL SHALL BE HOT DIPPED GALVANIZED.
2. ANCHOR RODS SHALL BE ASTM F1554 GRADE 105, Fy=105 KSI WITH WASHER. RODS, NUTS AND WASHERS SHALL BE GALVANIZED IN ACCORDANCE WITH ASTM A153. S5 CHARPY V-NOTCH TESTING REQUIRED.
3. CONTRACTOR SHALL SEAL THE PIPE SLEEVE IN A MANNER THAT WILL NOT ALLOW COMPRESSION OF THE PIPE SLEEVE DURING ROD TENSIONING. CONTRACTOR SHALL KEEP ROD OPENINGS AND PIPE SLEEVES FREE OF GROUT DURING INSTALLATION OF GROUT PAD.
4. THE ANCHOR AND TRAP PLATE, RODS AND PIPE SLEEVE SHALL BE CAST IN CONCRETE. THE GROUT PAD AND UPPER HANGER BRACKET WILL BE INSTALLED AT A LATER DATE. RODS SHALL BE PERPENDICULAR TO THE LOCAL PROFILE OF THE ARCH RIB OR EDGE GIRDER. GROUT PAD WILL FOLLOW THE LOCAL GRADE AND WILL BE TAPERED TO ACCOUNT FOR CROSS SLOPE. GROUT PAD HEIGHT SHOWN ON THE PLANS IS THE MINIMUM DIMENSION AT THE ℄ OF HANGER BRACKET.
5. HANGER BRACKETS AT ARCH RIBS SHALL BE PLACED PARALLEL TO THE LOCAL TANGENT OF THE ARCH RIB INTRADOS. PROVIDE 1" THICK GROUT PAD & VARY THICKNESS.
6. PIN AND COTTER PIN SHALL BE STAINLESS STEEL WITH A MINIMUM YIELD STRENGTH OF 50 KSI, NITRONIC 60 OR APPROVED EQUAL.
7. ANCHOR RODS SHALL BE INSTALLED WITH A TENSILE FORCE EQUAL TO 90 KIPS AFTER SEATING.
8. HANGER BRACKETS ARE DETAILED BASED ON THE DIMENSIONAL REQUIREMENTS OF PROLITE SOCKETS AS MANUFACTURED BY CLODFELTER BRIDGE AND STRUCTURES INTERNATIONAL, INC. IF A DIFFERENT HANGER TYPE OR MANUFACTURER IS SELECTED, THE CONTRACTOR'S ENGINEER SHALL VERIFY FIT UP AND CAPACITY OF THE HANGER FORK, PIN, AND FIN PLATES, AND ADJUST DIMENSIONS AND PLATE THICKNESS IF REQUIRED. DESIGN CALCULATIONS SHALL BE SUBMITTED WITH SHOP DRAWINGS.
9. FOR HANGER WORK POINT A(N) AND T(N) LOCATIONS, SEE DRAWING S5-50.
10. AFTER PLACING NON-SHRINK EPOXY GROUT, REPLACE 3/4" Ø SET SCREW WITH HS BOLT AND TIGHTEN TO SEAL.
11. OUT-OF-PLANE ANGLE OF PIN PLATE SHALL BE ESTABLISHED FROM HANGER WORK POINTS SHOWN ON DRAWINGS NOS. S5-51 THROUGH S5-66.
12. THE INSTALLED OUT-OF-PLANE ANGLE DEVIATION BETWEEN THE HANGER AND BOTH THE ARCH RIB AND EDGE GIRDER FIN PLATES SHALL NOT EXCEED 0.75°. IF ANY ANGLE EXCEEDS THESE LIMITS, THE FIN PLATE AND BASE PLATE WHERE THE ANGLE IS EXCEEDED SHALL BE REPLACED.
13. WHERE INTERFERENCE WITH EDGE GIRDER POST TENSIONING DUCTS OCCURS, INCREASE ANCHOR BOLT SPACING AS SHOWN, INCREASE BASE PLATE THICKNESS TO 3" AND SPLIT TRAP PLATE INTO TWO 6" x 3'-5" PLATES. SEE DRAWING NO. S6-87 FOR LOCATIONS.
14. AT ARCH RIB INTRADOS, INCREASE HANGER ECCENTRICITY WHERE HANGER SOCKETS CROSS. CONTRACTOR SHALL DETERMINE THE REQUIRED ECCENTRICITY BASED ON THE DIMENSIONS OF HANGER SOCKETS FURNISHED. SEE "PLAN VIEW OF HANGER ECCENTRICITY" ON DRAWING NO. S5-71.
15. UNLESS SHOWN OTHER WISE ON DRAWING NOS. S5-21 THROUGH S5-32, DIMENSIONS PROVIDED FOR FIN PLATE MUST BE MAINTAINED. IN ALL CASES, THE SHAPE OF FIN PLATES SHALL BE ADJUSTED TO CONFORM TO THE INSTALLATION ANGLE BETWEEN THE HANGER AND ARCH RIB INTRADOS.
16. THE DISTANCE BETWEEN THE CENTER OF THE PIN AND TOP OF THE BASE PLATE MAY BE INCREASE TO 15" TO ACCOMMODATE HANGER SOCKET MOUNTED JACKS USE FOR HANGER STRESSING DURING HANGER INSTALLATION.
17. PLACE HANGER VERTICAL REINFORCEMENT UNSYMMETRICAL ABOUT THE HANGER BRACKET ANCHOR RODS AS SHOWN. THE LARGER REINFORCEMENT SPACING IS ALWAYS IN THE DIRECTION OF THE HANGER BRACKET ECCENTRICITY. THIS PLACEMENT WILL ALIGN TWO VERTICAL BARS EITHER SIDE OF THE HANGER BRACKET WHEN THE TYPICAL NOMINAL HANGER ECCENTRICITY IS 2". ADJUST REINFORCEMENT AS REQUIRED WHEN HANGER ECCENTRICITY EXCEEDS 2" NOMINAL. SEE NOTE 14.

CONSTRUCTION SEQUENCE FOR HANGER BRACKET:

1. FILL PIPE SLEEVES WITH GREASE. TAPE BOTH THREADED ENDS OF THE ANCHOR ROD THREADS THAT WILL RECEIVE NUTS, THEN GREASE THE ANCHOR RODS AND INSERT THEM INTO THE PIPE SLEEVES WHICH ARE SEAL-WELDED TO THE ANCHOR PLATE.
2. ATTACH THE SINGLE HEAVY HEX NUTS TO THE EMBEDDED END OF THE ANCHOR ROD, FILL THE TRAP PLATE HEX NUT HOLE WITH GREASE, INSTALL THE TRAP PLATE, THEN INSTALL AND SECURE THE COVER PLATE WITH THE 3/4" Ø BOLTS.
3. INSTALL THE ANCHOR ROD ASSEMBLY IN THE EDGE GIRDER/ARCH RIB FORMS AND USE A TEMPORARY TEMPLATE TO SECURE THE ANCHOR RODS AND ENSURE THEIR CORRECT ALIGNMENT AT THE FINISHED CONCRETE SURFACE. AT EDGE GIRDERS, SEAL THE ANNULAR SPACE BETWEEN THE PIPE SLEEVE AND ANCHOR ROD AT THE CONCRETE SURFACE TO PREVENT WATER INTRUSION INTO THE SLEEVE.
4. CAST THE EDGE GIRDER/ARCH RIB CONCRETE.
5. REMOVE THE TEMPORARY TEMPLATE AND INSTALL THE HANGER BRACKET. SECURE THE HANGER BRACKET WITH THE FIRST SET OF TEN SINGLE HEAVY HEX NUTS USING THE SET SCREWS TO POSITION THE ANCHOR ASSEMBLY AS SPECIFIED IN THE DETAILS.
6. TIGHTEN THE FIRST SET OF HEAVY HEX NUTS TO SNUG-TIGHT AND PLACE THE NON-SHRINK GROUT PAD.
7. PRE-TENSION EACH ANCHOR ROD IN THE STRESSING SEQUENCE DESCRIBED BELOW. THEN INSTALL AND TIGHTEN THE SECOND SET OF HEAVY HEX NUTS AS SPECIFIED FOR STANDARD DOUBLE NUT INSTALLATION.

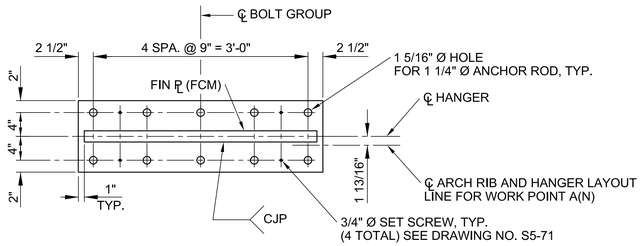

PLAN

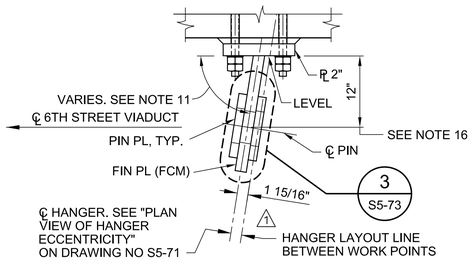

PIN ℄ WELD DETAIL

SCALE: 2"=1'-0"

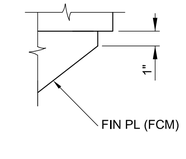

DETAIL

NO SCALE

1 / S5-72

INSIDE ECCENTRICITY

SECTION

SCALE: 1"=1'-0"

A / S5-72

ANCHOR ROD STRESSING SEQUENCE:

1. PRIOR TO STRESSING ANCHOR RODS, ANCHOR RODS SHALL BE VERIFIED TO FULLY ENGAGE HEAVY HEX NUTS IN TRAP PLATE EITHER BY VISUAL INSPECTION AT THE TIME OF INSTALLATION OR BY TIGHTENING THE ANCHOR ROD UNTIL THE END IS IN FLUSH CONTACT WITH THE BOTTOM COVER PLATE AND THE HEAVY HEX NUT IS IN CONTACT WITH THE ANCHOR PLATE.
2. ANCHOR RODS SHALL BE STRESSED IN THE NUMERICAL SEQUENCE SHOWN ON THE "ANCHOR AND TRAP PLATE DETAIL".
3. ALL ANCHOR RODS SHALL FIRST BE BROUGHT TO THE SNUG TIGHT CONDITION IN THE SAME SEQUENCE NOTED IN STEP 1.
4. SEE NOTE 7 FOR REQUIRED ANCHOR ROD TENSION.

HNTB
HNTB Corporation
601 W. 5TH STREET SUITE 1000
LOS ANGELES, CALIFORNIA 90071
TEL (213) 403-1000 FAX (213) 403-1001

T.O. 5 - Change Order Serial Sketch No 122 - Page 1 of 1

CITY OF LOS ANGELES DEPARTMENT OF PUBLIC WORKS
BUREAU OF ENGINEERING
ENGINEERING
CITY OF LOS ANGELES

NO.	REVISIONS:	DATE	BY:
1.	FRAME CONSTRUCTION JOINT AND ARCH RIB UPDATES	07/13/16	MHJ
2.	RESTORE AFC ANCHOR ROD TENSION	08/05/20	MHJ
3.	ARCH RIB ANCHOR REINFORCEMENT REVISION	09/25/20	MHJ

STRUCTURE NO. 53C-2329

INDEX NO.

THIS PLAN WAS ELECTRONICALLY SIGNED AND STAMPED.

REGISTERED PROFESSIONAL ENGINEER MICHAEL H. JONES No. 53033 CIVIL STATE OF CALIFORNIA

ENGINEER	GARY LEE MOORE, P.E.	CITY ENGINEER	DATE:
ENGINEER:	MICHAEL H. JONES	DESIGN GROUP	LIC. NO. 53033
DESIGNED BY:	SEAN XIN		1/29/2016
DRAWN BY:	LI ZHANG		1/29/2016
CHECKED BY:	CHARLES REDFIELD		1/29/2016
APPROVED BY:	MICHAEL H. JONES		1/29/2016

VERTICAL CONTROL: BM 12-04070, 1929 (NGVD 29) - 1985 ADJUSTMENT
HORIZONTAL CONTROL: GPS; PID AE 1704, EPOCH 1991.35

SHEET TITLE: HANGER CONNECTION DETAILS NO. 3

PROJECT: SIXTH STREET VIADUCT REPLACEMENT

ADDRESS: SIXTH STREET VIADUCT (WHITTIER BLVD) LOS ANGELES, CA

WORK ORDER NO. E700224F

DRAWING NO. S5-72

SHEET 301 OF 560 SHEETS

REVISION DATES (DESIGN STAGE ONLY)

C:\caddlib\pw\pwwestcoast\zhang\dms57683\S5-71-HD02-03.dwg 9/25/20 14:15

Sheet Version 3.0

THE CITY OF LOS ANGELES OR ITS OFFICERS OR AGENTS SHALL NOT BE RESPONSIBLE FOR THE ACCURACY OR COMPLETENESS OF ELECTRONIC COPIES OF THIS PLAN SHEET.

ADDENDUM 5

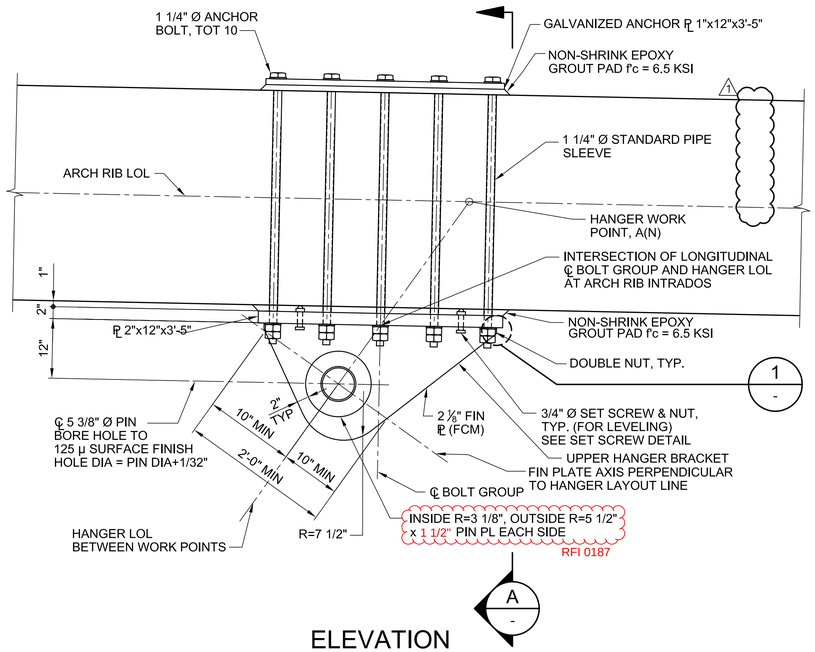

ELEVATION

SCALE: 1"=1'-0"

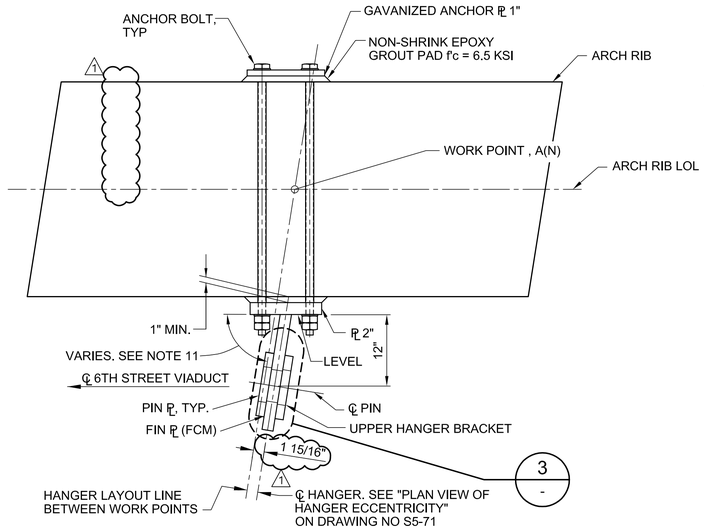

OUTSIDE ECCENTRICITY

SECTION

SCALE: 1"=1'-0"

A
-

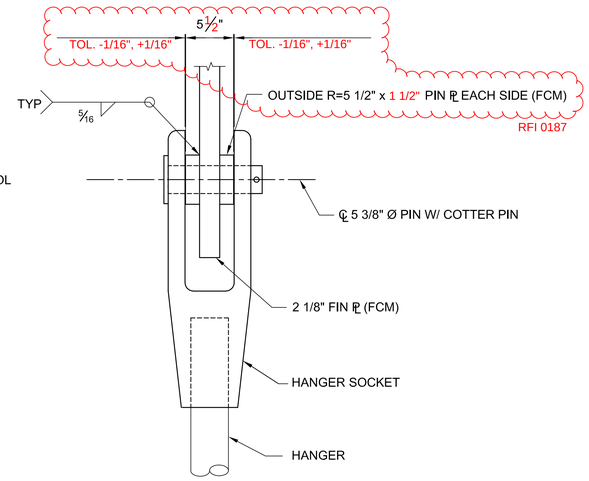

DETAIL

SCALE: 1 1/2"=1'-0"

3
-

S5-71
S5-72

NOTES:

1. FOR UPPER HANGER BRACKET DETAILS, ANCHOR REINFORCEMENT AND NOTES NOT SHOWN HERE SEE SHEET S5-72.
2. ANCHOR BOLTS SHALL BE ASTM F1554 GRADE 105, Fy=105 KSI WITH WASHER. RODS, NUTS AND WASHERS SHALL BE GALVANIZED IN ACCORDANCE WITH ASTM A153. S5 CHARPY V-NOTCH TESTING REQUIRED.

CONSTRUCTION SEQUENCE:

1. PLACE PIPE SLEEVES IN CORRECT LOCATIONS AND HOLD IN PLACE WITH TEMPLATE.
2. CAST THE ARCH RIB CONCRETE.
3. PLACE ARCH RIB EXTRADOS ANCHOR PLATE. FILL PIPE SLEEVES WITH GREASE. TAPE THREADED ENDS OF THE ANCHOR BOLTS THREADS THAT WILL RECEIVE NUTS, THEN GREASE THE ANCHOR RODS AND INSERT THEM INTO THE PIPE SLEEVES. PLACE NON-SHRINK GROUT BELOW ARCH RIB EXTRADOS ANCHOR PLATE.
4. REMOVE THE TEMPORARY TEMPLATE AND INSTALL THE HANGER BRACKET. SECURE THE HANGER BRACKET WITH THE FIRST SET OF TEN SINGLE HEAVY HEX NUTS USING THE SET SCREWS TO POSITION THE ANCHOR ASSEMBLY AS SPECIFIED IN THE DETAILS.
5. TIGHTEN THE FIRST SET OF HEAVY HEX NUTS TO SNUG-TIGHT AND PLACE THE INTRADOS NON-SHRINK GROUT PAD.
6. PRE-TENSION EACH ANCHOR BOLTS IN THE STRESSING SEQUENCE DESCRIBED ON DRAWING NO. S5-72. THEN INSTALL AND TIGHTEN THE SECOND SET OF HEAVY HEX NUTS AS SPECIFIED FOR STANDARD DOUBLE NUT INSTALLATION.

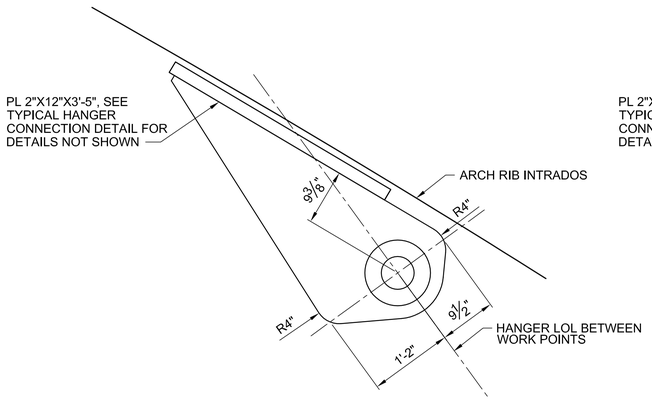

SPAN 12 - HANGERS H1 AND H18

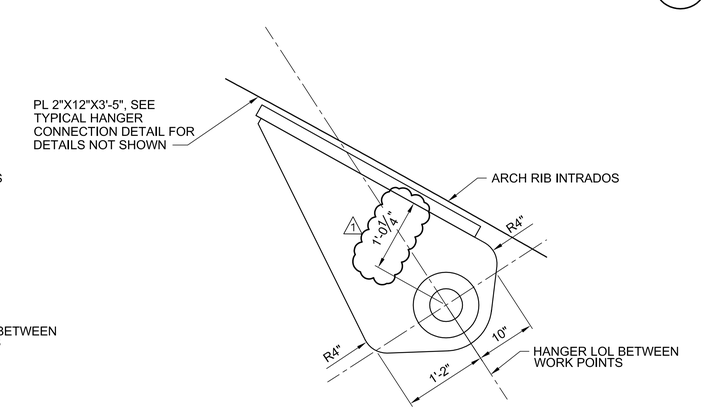

SPANS 4 AND 6 - HANGERS H2 AND H23

REQUIRED ARCH RIB FIN PLATE DIMENSION ADJUSTMENTS

SCALE: 1"=1'-0"

THE CITY OF LOS ANGELES OR ITS OFFICERS OR AGENTS SHALL NOT BE RESPONSIBLE FOR THE ACCURACY OR COMPLETENESS OF ELECTRONIC COPIES OF THIS PLAN SHEET.

C:\caddlb\pw\pwwestcoast\zhang\dms57683\S5-71-H002-03.dwg 7/09/18 13:16

REVISION DATES (DESIGN STAGE ONLY)

Sheet Version 3.0

HNTB
HNTB Corporation
601 W. 5TH STREET SUITE 1000
LOS ANGELES, CALIFORNIA 90071
TEL (213) 403-1000 FAX (213) 403-1001

CITY OF LOS ANGELES DEPARTMENT OF PUBLIC WORKS BUREAU OF ENGINEERING

ENGINEERING CITY OF LOS ANGELES

NO.	REVISIONS:	DATE	BY:
1	FRAME CONSTRUCTION JOINT AND ARCH RIB UPDATES • ECO 71	07/13/16	MHJ

STRUCTURE NO. 53C-2329

INDEX NO.

THIS PLAN WAS ELECTRONICALLY SIGNED AND STAMPED

REGISTERED PROFESSIONAL ENGINEER MICHAEL H. JONES No. S3033 CIVIL STATE OF CALIFORNIA

CITY ENGINEER: GARY LEE MOORE, P.E.

		DATE:
DESIGN GROUP		
ENGINEER:	MICHAEL H. JONES	1/29/2016
LIC. NO.	S3033	1/29/2016
DESIGNED BY:	SEAN XIN	1/29/2016
DRAWN BY:	LI ZHANG	1/29/2016
CHECKED BY:	CHARLES REDFIELD	1/29/2016
APPROVED BY:	MICHAEL H. JONES	1/29/2016

VERTICAL CONTROL: BM 12-04070, 1929 (NGVD 29) - 1985 ADJUSTMENT
HORIZONTAL CONTROL: GPS; PID AE 1704, EPOCH 1991.35

SHEET TITLE: HANGER CONNECTION DETAILS NO. 4

PROJECT: SIXTH STREET VIADUCT REPLACEMENT

ADDRESS: SIXTH STREET VIADUCT (WHITTIER BLVD) LOS ANGELES, CA

WORK ORDER NO. E700224F

DRAWING NO. S5-73

SHEET 302 OF 560 SHEETS

ADDENDUM 5

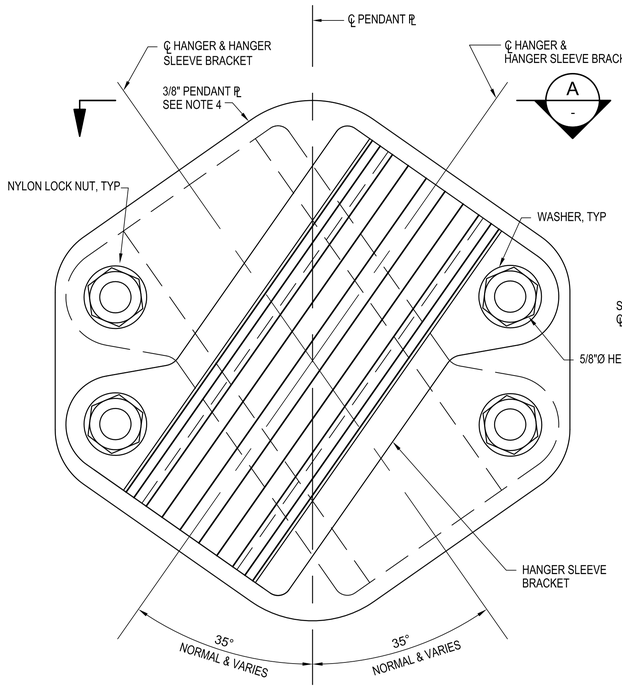

ELEVATION

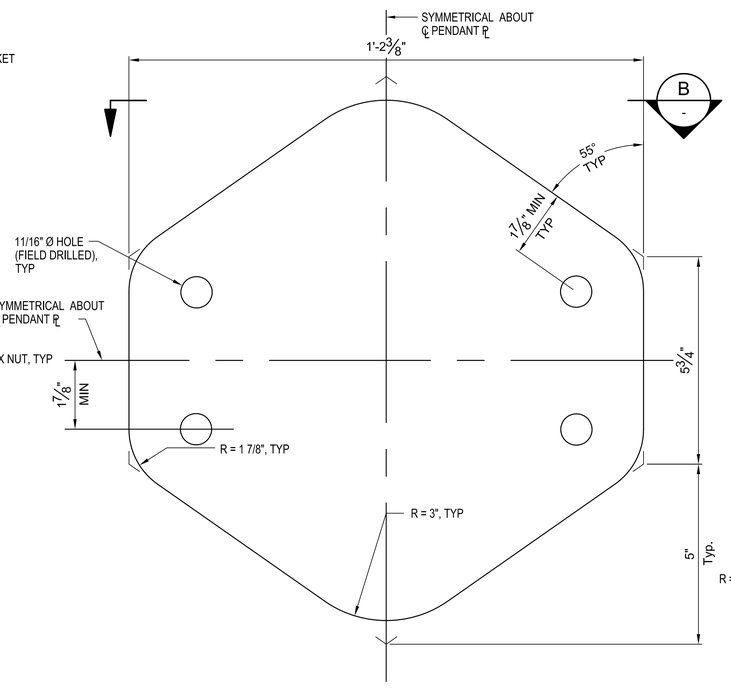

ELEVATION

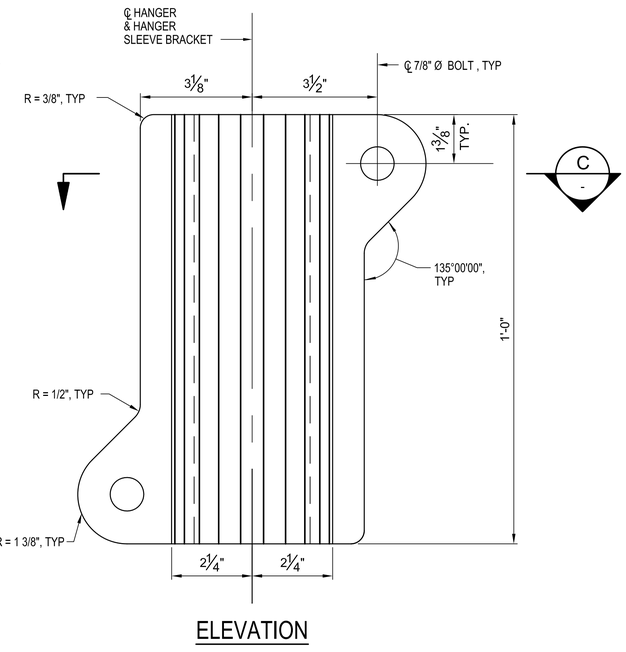

ELEVATION

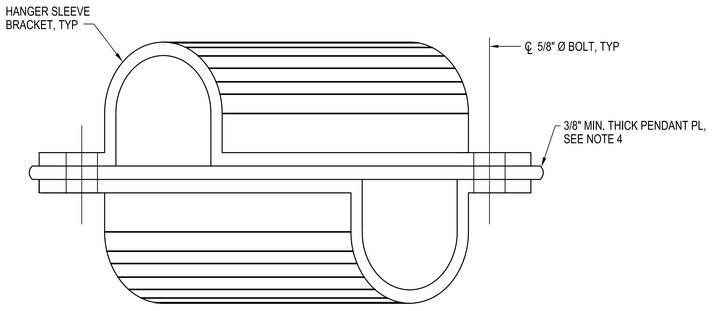

VIEW A-A

ASSEMBLY - HANGER SPACER

SCALE: 6"=1'-0"

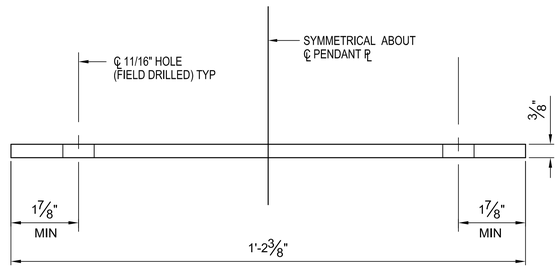

VIEW B-B

PENDANT PLATE

SCALE: 6"=1'-0"

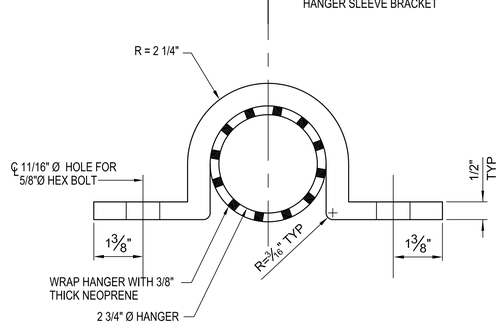

VIEW C-C

HANGER SLEEVE BRACKET

SCALE 6"=1'-0"

NOTES:

1. FOR HANGER GEOMETRY, SEE DWGS. S5-49 TO S5-66.
2. PENDANT PLATE AND HANGER SLEEVE BRACKET SHALL BE ULTRA HIGH MOLECULAR WEIGHT POLYETHYLENE (UHMW-PE). UHMW-PE COMPONENTS SHALL MEET FEDERAL STANDARD 595B, NO. 363.7 GRAY. BOLTS, NUTS, AND WASHERS SHALL BE GALVANIZED IN CONFORMANCE WITH ASTM A153.
3. HANGER SPACER DETAILS SHOWN ARE FOR NOMINAL HANGER DIAMETER. ACTUAL FIT-UP SHALL BE VERIFIED BY CONTRACTOR AND REQUIRED CHANGES SHALL BE SUBMITTED WITH SHOP DRAWINGS FOR APPROVAL. AFTER BOTH HANGERS HAVE BEEN FULLY TENSIONED PER THE SPECIAL PROVISION, THE HANGER SPACER BOLTS SHALL BE FULLY TIGHTENED.
4. DISTANCE BETWEEN HANGERS VARY. VARY THICKNESS OF PENDANT PLATE SO THAT HANGER OFFSET DISTANCE IS NOT INCREASED OR DECREASED BY MORE THAN 3/16" DURING INSTALLING OF HANGER SPACERS. MULTIPLE PENDANT PLATES MAY BE USED WITH A MINIMUM THICKNESS OF 3/8" PER PLATE.

THE CITY OF LOS ANGELES OR ITS OFFICERS OR AGENTS SHALL NOT BE RESPONSIBLE FOR THE ACCURACY OR COMPLETENESS OF ELECTRONIC COPIES OF THIS PLAN SHEET.

C:\caddlib\pw\pwwestcoast\lzhang\dms57683\S5-71-HD02-03.dwg 6/27/16 17:49

Sheet Version 3.0

REVISION DATES (DESIGN STAGE ONLY)

HNTB
HNTB Corporation
601 W. 5TH STREET SUITE 1000
LOS ANGELES, CALIFORNIA 90071
TEL (213) 403-1000 FAX (213) 403-1001

BUREAU OF ENGINEERING
OFFICIAL RECORD

CITY OF LOS ANGELES DEPARTMENT OF PUBLIC WORKS

BUREAU OF ENGINEERING

ENGINEERING
CITY OF LOS ANGELES

NO.	REVISIONS:	DATE	BY:

STRUCTURE NO. 53C-2329

INDEX NO. P-38113

THIS PLAN WAS ELECTRONICALLY SIGNED AND STAMPED

REGISTERED PROFESSIONAL ENGINEER MICHAEL H. JONES No. S3033 CIVIL STATE OF CALIFORNIA

GARY LEE MOORE, P.E. CITY ENGINEER

ENGINEER:	MICHAEL H. JONES	DESIGN GROUP	
DESIGNED BY:	SEAN XIN	LIC. NO. S3033	DATE: 1/29/2016
DRAWN BY:	LI ZHANG		1/29/2016
CHECKED BY:	CHARLES REDFIELD		1/29/2016
APPROVED BY:	MICHAEL H. JONES		1/29/2016

VERTICAL CONTROL: BM 12-04070,1929 (NGVD 29) - 1985 ADJUSTMENT
HORIZONTAL CONTROL: GPS; PID AE 1704, EPOCH 1991.35

SHEET TITLE: HANGER CONNECTION DETAILS NO. 5

PROJECT: SIXTH STREET VIADUCT REPLACEMENT

ADDRESS: SIXTH STREET VIADUCT (WHITTIER BLVD) LOS ANGELES, CA

WORK ORDER NO. E700224F

DRAWING NO. S5-74

SHEET 303 OF 560 SHEETS

ADDENDUM 5

LEGENDS:

[A] DENOTES GIRDER DESIGNATION

[12] DENOTES GIRDER STEM WIDTH IN INCHES

NOTES:

1. FOR DECK DRAIN DETAILS, SEE DRAWING NO. S8-34.

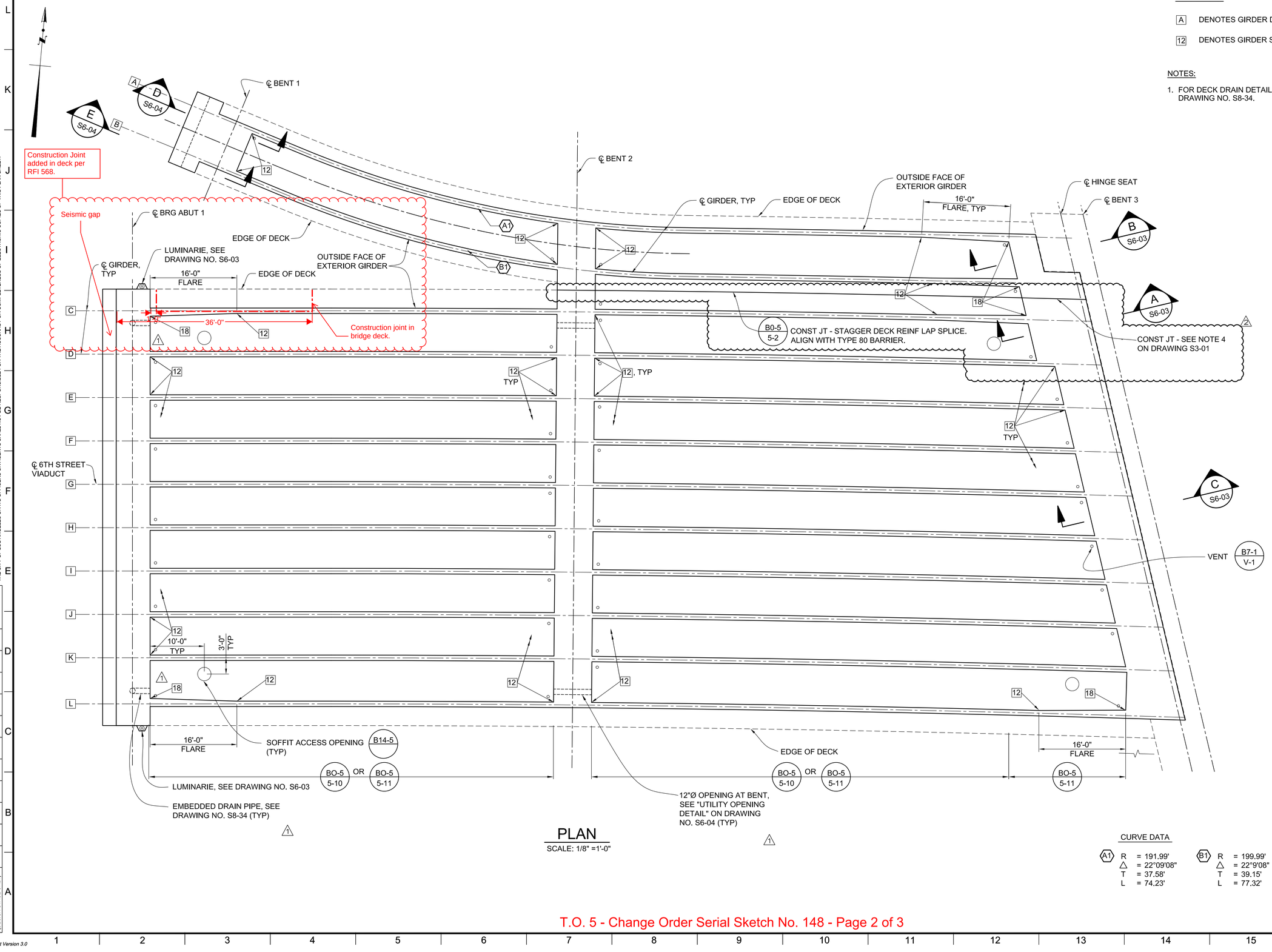

PLAN

SCALE: 1/8" =1'-0"

CURVE DATA

A1: R = 191.99', △ = 22°09'08", T = 37.58', L = 74.23'

B1: R = 199.99', △ = 22°9'08", T = 39.15', L = 77.32'

THE CITY OF LOS ANGELES OR ITS OFFICERS OR AGENTS SHALL NOT BE RESPONSIBLE FOR THE ACCURACY OR COMPLETENESS OF ELECTRONIC COPIES OF THIS PLAN SHEET.

C:\caddlb\pw\west_c3d\dms57683\S6-01-GRL01.dwg 10/13/21 16:58

REVISION DATES (DESIGN STAGE ONLY)

Sheet Version 3.0

HNTB
HNTB Corporation
601 W. 5TH STREET SUITE 1000
LOS ANGELES, CALIFORNIA 90071
TEL (213) 403-1000 FAX (213) 403-1001

CITY OF LOS ANGELES DEPARTMENT OF PUBLIC WORKS BUREAU OF ENGINEERING

ENGINEERING — CITY OF LOS ANGELES

NO.	REVISIONS:	DATE	BY:
1	RFI 0496 - UTILITY OPENING DETAIL CO 143	07/30/21	MHJ
2	RFI 0517 - SPAN 2 CONSTRUCTION JOINTS CO 148	10/15/21	MHJ

THIS PLAN WAS ELECTRONICALLY SIGNED AND STAMPED

REGISTERED PROFESSIONAL ENGINEER MICHAEL H. JONES No. S3033 CIVIL STATE OF CALIFORNIA

CITY ENGINEER: GARY LEE MOORE, P.E.

		DATE:
ENGINEER:	MICHAEL H. JONES	1/29/2016
DESIGNED BY:	JIAHWA WANG / HAO LUO	1/29/2016
DRAWN BY:	LI ZHANG	1/29/2016
CHECKED BY:	PETER ZHAO	1/29/2016
APPROVED BY:	MICHAEL H. JONES	1/29/2016

DESIGN GROUP: LIC. NO. S3033

VERTICAL CONTROL: BM 12-04070, 1929 (NGVD 29) - 1985 ADJUSTMENT
HORIZONTAL CONTROL: GPS; PID AE 1704, EPOCH 1991.35

SHEET TITLE: GIRDER LAYOUT - GIRDER SPANS

PROJECT: SIXTH STREET VIADUCT REPLACEMENT

ADDRESS: SIXTH STREET VIADUCT (WHITTIER BLVD) LOS ANGELES, CA

STRUCTURE NO. 53C-2329

INDEX NO.

WORK ORDER NO. E700224F

DRAWING NO. S6-01

SHEET 304 OF 560 SHEETS

ADDENDUM 5

PRESTRESSING NOTES GIRDERS A AND B

270 KSI; LOW RELAXATION STRAND:

PJACK = 1150 kips (PER GIRDER)
ANCHOR SET = 3/8 in
TOTAL NUMBER OF GIRDERS = 2

DISTRIBUTION OF FINAL PRESTRESS FORCE (PJACK) BETWEEN GIRDERS SHALL NOT EXCEED THE RATIO OF 3:2. DURING STRESSING MAX FINAL FORCE VARIATION BETWEEN GIRDERS SHALL NOT EXCEED 725 KIPS.

CONCRETE: f' c = 5000 psi @ 28 DAYS
f' ci = 3500 psi @ TIME OF STRESSING

CONTRACTOR SHALL SUBMIT ELONGATION CALCULATIONS BASED ON INITIAL STRESS AT ☒ = 0.875 TIMES JACKING STRESS.
ONE END STRESSING SHALL BE PERFORMED FROM THE ABUT 1 END. PRESTRESSING FORCE DESIGN BASED ON: μ =0.20, k=0.0002/FT

PRESTRESSING NOTES GIRDERS C THRU L

270 KSI; LOW RELAXATION STRAND:

PJACK = SEE TABLE kips
ANCHOR SET = 3/8 in
TOTAL NUMBER OF GIRDERS = 10

DISTRIBUTION OF FINAL PRESTRESS FORCE (PJACK) BETWEEN GIRDERS SHALL NOT EXCEED THE RATIO OF 3:2. DURING STRESSING MAX FINAL FORCE VARIATION BETWEEN GIRDERS SHALL NOT EXCEED 725 KIPS.

CONCRETE: f' c = 5000 psi @ 28 DAYS
f' ci = 3500 psi @ TIME OF STRESSING

CONTRACTOR SHALL SUBMIT ELONGATION CALCULATIONS BASED ON INITIAL STRESS AT ☒ = SEE TABLE TIMES JACKING STRESS.
ONE END STRESSING SHALL BE PERFORMED FROM THE ABUT 1 END. PRESTRESSING FORCE DESIGN BASED ON: μ =0.20, k=0.0002/FT

GIRDER NO.	PJACK / GIRDER (K)	X1	X2	X3	☒
C, D, E, F	1150	2'-9 1/2"	3'-0"	2'-8"	0.921
G, H, I	1300	2'-7"	2'-9"	2'-5 1/2"	0.922
J, K, L	1500	2'-7"	2'-9"	2'-5 1/2"	0.922

NOTES:

1. CAMBER SHOWN DOES NOT INCLUDE ALLOWANCE FOR FALSEWORK SETTLEMENT.
2. FOR "TOP SLAB REINFORCEMENT PLAN", SEE "GIRDER REINFORCEMENT" SHEET.

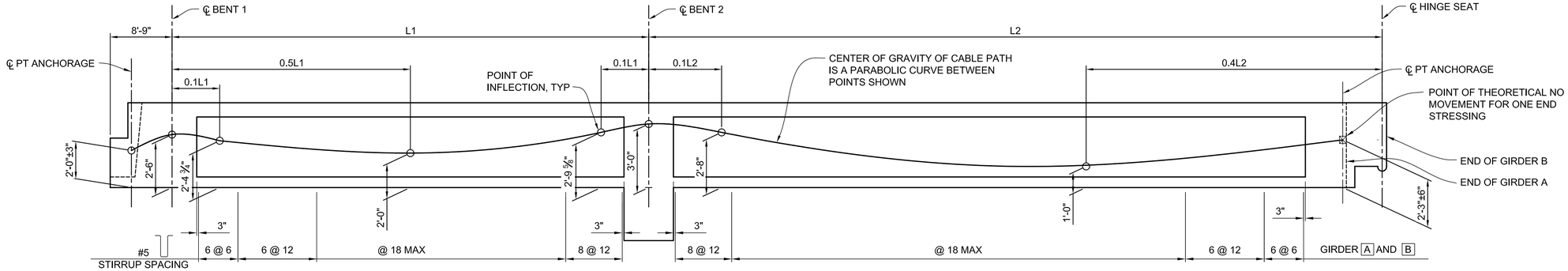

LONGITUDINAL SECTION - GIRDERS A AND B

B8-5

NO SCALE

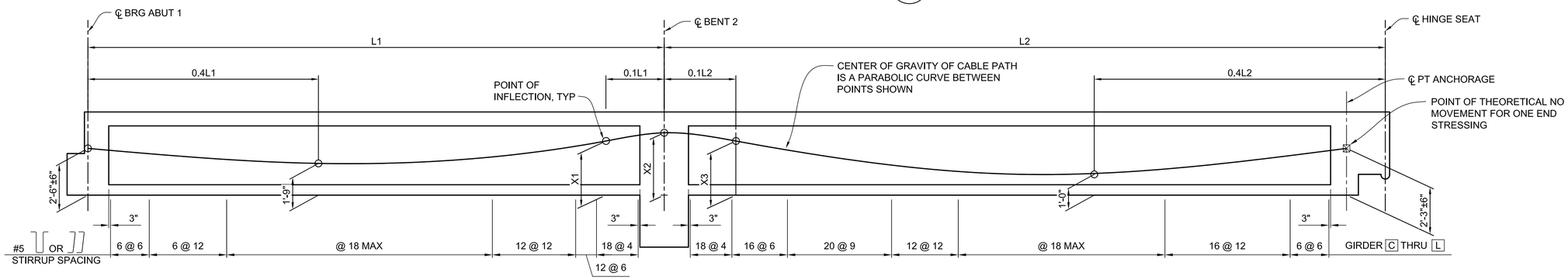

LONGITUDINAL SECTION - GIRDERS C THRU L

NO SCALE

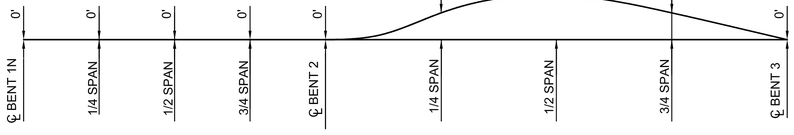

CAMBER DIAGRAM GIRDERS A AND B

NO SCALE

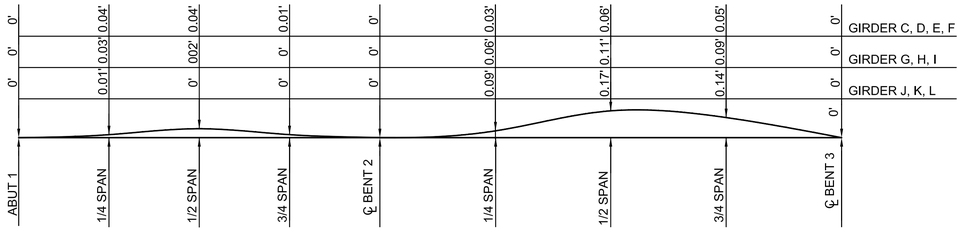

CAMBER DIAGRAM GIRDERS C THRU L

NO SCALE

THE CITY OF LOS ANGELES OR ITS OFFICERS OR AGENTS SHALL NOT BE RESPONSIBLE FOR THE ACCURACY OR COMPLETENESS OF ELECTRONIC COPIES OF THIS PLAN SHEET.

C:\caddlib\pw\pwwestcoast\zhang\dms57683\S6-01-GRL01.dwg 6/27/16 17:54

REVISION DATES (DESIGN STAGE ONLY)

Sheet Version 3.0

BUREAU OF ENGINEERING

NO.	REVISIONS:	DATE	BY:

STRUCTURE NO. 53C-2329

INDEX NO. P-38113

THIS PLAN WAS ELECTRONICALLY SIGNED AND STAMPED

REGISTERED PROFESSIONAL ENGINEER MICHAEL H. JONES No. S3033 CIVIL STATE OF CALIFORNIA

CITY OF LOS ANGELES DEPARTMENT OF PUBLIC WORKS

CITY ENGINEER
GARY LEE MOORE, P.E.
C.NO. S3033 DATE: 1/29/2016

ENGINEER: MICHAEL H. JONES — DESIGN GROUP — LIC. NO. S3033 — 1/29/2016
DESIGNED BY: JIAHWA WANG / HAO LUO — 1/29/2016
DRAWN BY: LI ZHANG — 1/29/2016
CHECKED BY: PETER ZHAO — 1/29/2016
APPROVED BY: MICHAEL H. JONES — 1/29/2016

SHEET TITLE: GIRDER DETAILS NO. 1
PROJECT: SIXTH STREET VIADUCT REPLACEMENT
ADDRESS: SIXTH STREET VIADUCT (WHITTIER BLVD) LOS ANGELES, CA

VERTICAL CONTROL: BM 12-04070, 1929 (NGVD 29) - 1985 ADJUSTMENT
HORIZONTAL CONTROL: GPS; PID AE 1704, EPOCH 1991.35

BUREAU OF ENGINEERING OFFICIAL RECORD

HNTB
HNTB Corporation
601 W. 5TH STREET SUITE 1000
LOS ANGELES, CALIFORNIA 90071
TEL (213) 403-1000 FAX (213) 403-1001

WORK ORDER NO. E700224F

DRAWING NO. S6-02

SHEET 305 OF 560 SHEETS

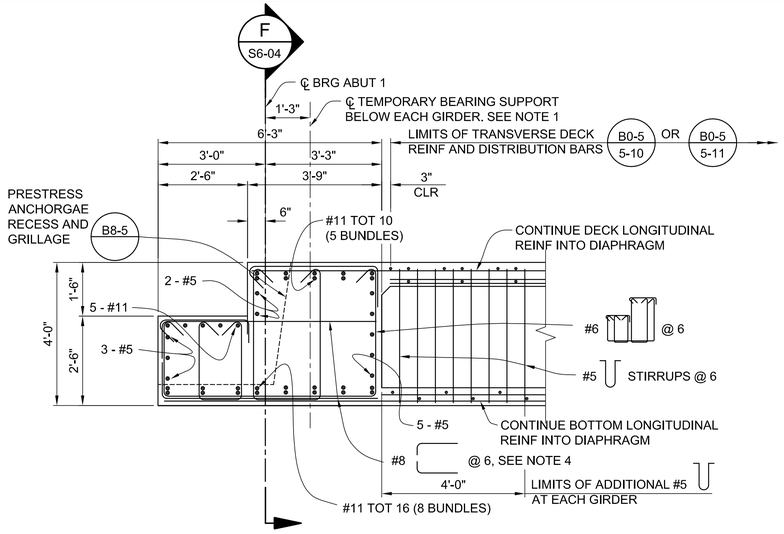

ABUTMENT 1 END DIAPHRAGM

SCALE: 1/2"=1'-0"

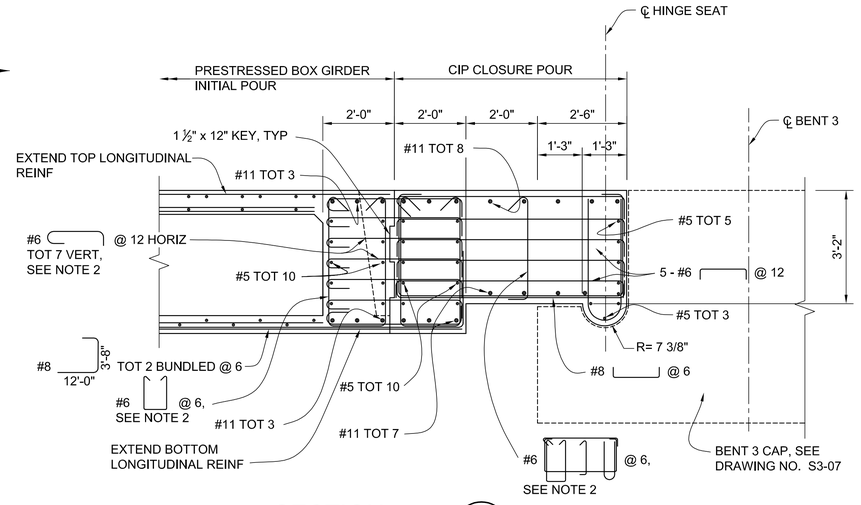

SECTION

SCALE: 1/2"=1'-0"

C S6-01

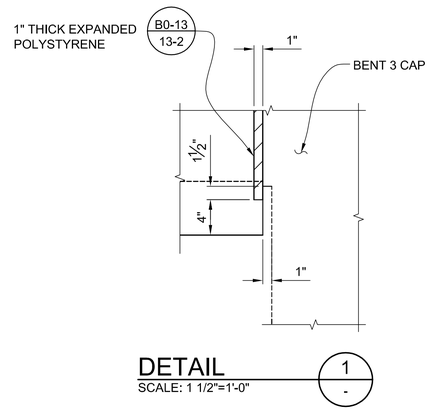

DETAIL

SCALE: 1 1/2"=1'-0"

1 -

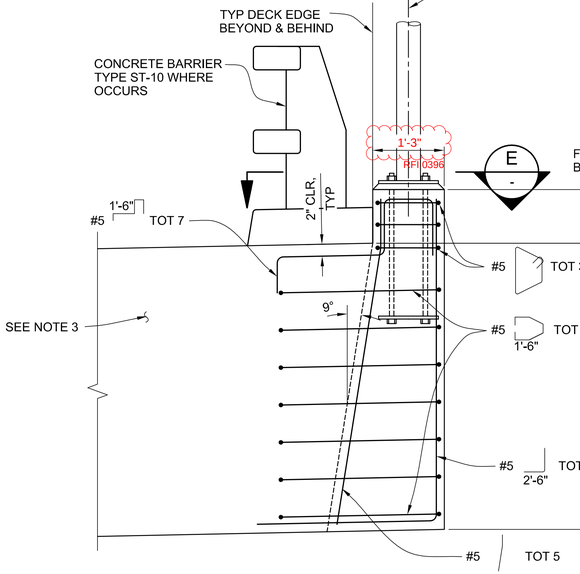

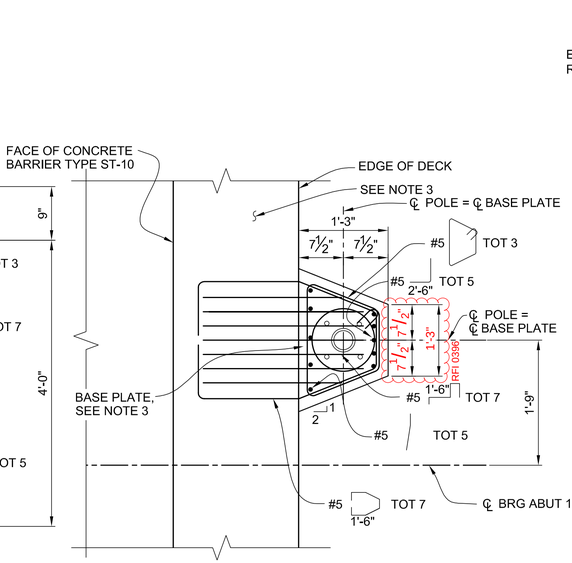

LIGHTING ANCHORAGE DETAILS

SCALE: 1"=1'-0"

SECTION

SCALE: 1"=1'-0"

E -

NOTES:

1. PROVIDE TEMPORARY BEARING BELOW EACH GIRDER. PLACE TWO GALVANIZED 14 GA SHEETS ON TOP OF BEARINGS. PLACE SILICONE GREASE BETWEEN GALVANIZED SHEETS. REMOVE TEMPORARY BEARINGS AFTER GIRDER POST TENSION IS COMPLETE AND POST TENSIONING BLOCKOUT CONCRETE IS PLACED AND ACHIEVES A 28 DAY STRENGTH, f'c, of 6000 PSI.
2. TRANSVERSE REINF ARE PLACED PARALLEL TO ℄ BRIDGE. AT EXTREME 8'-0" LENGTH AT NORTH AND SOUTH ENDS OF KEY, INCREASE #6 ⊔ TO #6 ⊔ TOT 2 @ 6 (BUNDLED).
3. TYPICAL REINFORCEMENT AT ABUTMENT 1 END DIAPHRAGM NOT SHOWN FOR CLARITY, SEE "STREET LIGHTING PLANS" FOR DETAILS OF ANCHOR BOLTS, BASE PLATE, ANCHOR PLATE AND RELATED PARTS.
4. PLACE ADDITIONAL #8 ⊔ @ 6 AND BUNDLE WITH TYPICAL #8 @ 6 WITHIN 6'-6" ON EACH SIDE OF ℄ OF ISOLATION BEARING. 1

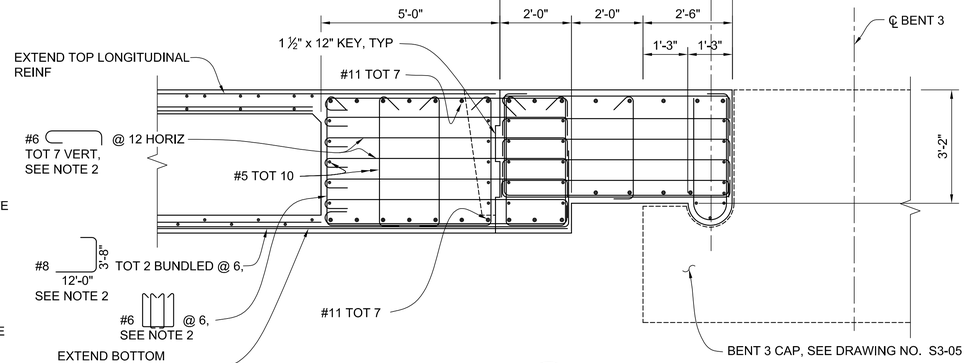

SECTION

SCALE: 1/2"=1'-0"

A S6-01

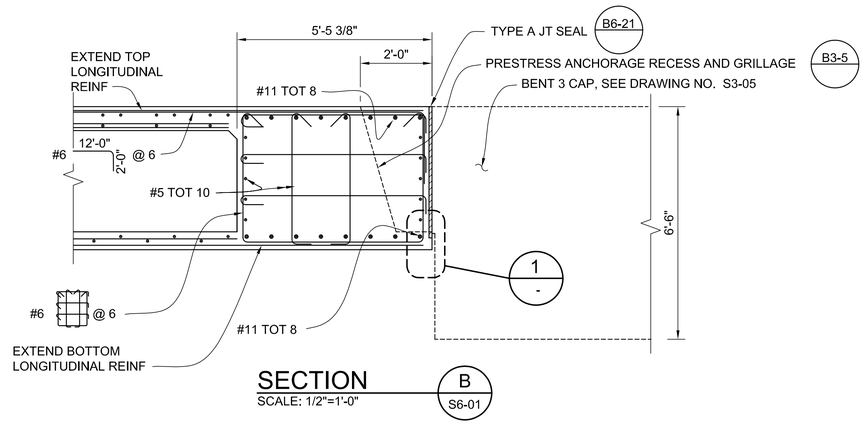

SECTION

SCALE: 1/2"=1'-0"

B S6-01

HNTB
HNTB Corporation
601 W. 5TH STREET SUITE 1000
LOS ANGELES, CALIFORNIA 90071
TEL (213) 403-1000 FAX (213) 403-1001

THE CITY OF LOS ANGELES OR ITS OFFICERS OR AGENTS SHALL NOT BE RESPONSIBLE FOR THE ACCURACY OR COMPLETENESS OF ELECTRONIC COPIES OF THIS PLAN SHEET.

C:\caddlib\pw\pwwestcoast\lydakobusch\dms57683\S6-02-GRD01.dwg 9/27/16 08:15

REVISION DATES (DESIGN STAGE ONLY)

Sheet Version 3.0

CITY OF LOS ANGELES DEPARTMENT OF PUBLIC WORKS BUREAU OF ENGINEERING

ENGINEERING CITY OF LOS ANGELES

NO.	REVISIONS:	DATE:	BY:
1	ADDENDUM NO. 1	09/23/16	MHJ

STRUCTURE NO. 53C-2329

INDEX NO.

THIS PLAN WAS ELECTRONICALLY SIGNED AND STAMPED.

REGISTERED PROFESSIONAL ENGINEER MICHAEL H. JONES No. S3033 CIVIL STATE OF CALIFORNIA

CITY ENGINEER	DATE:
GARY LEE MOORE, P.E.	1/29/2016
DESIGN GROUP	LIC. NO. S3033
ENGINEER: MICHAEL H. JONES	1/29/2016
DESIGNED BY: JIAHWA WANG / HAO LUO	1/29/2016
DRAWN BY: LI ZHANG	1/29/2016
CHECKED BY: PETER ZHAO	1/29/2016
APPROVED BY: MICHAEL H. JONES	1/29/2016

VERTICAL CONTROL: BM 12-04070, 1929 (NGVD 29) - 1985 ADJUSTMENT
HORIZONTAL CONTROL: GPS; PID AE 1704, EPOCH 1991.35

SHEET TITLE: GIRDER DETAILS NO. 2

PROJECT: SIXTH STREET VIADUCT REPLACEMENT

ADDRESS: SIXTH STREET VIADUCT (WHITTIER BLVD) LOS ANGELES, CA

WORK ORDER NO. E700224F

DRAWING NO. S6-03

SHEET 33 OF SHEETS

ADDENDUM 5

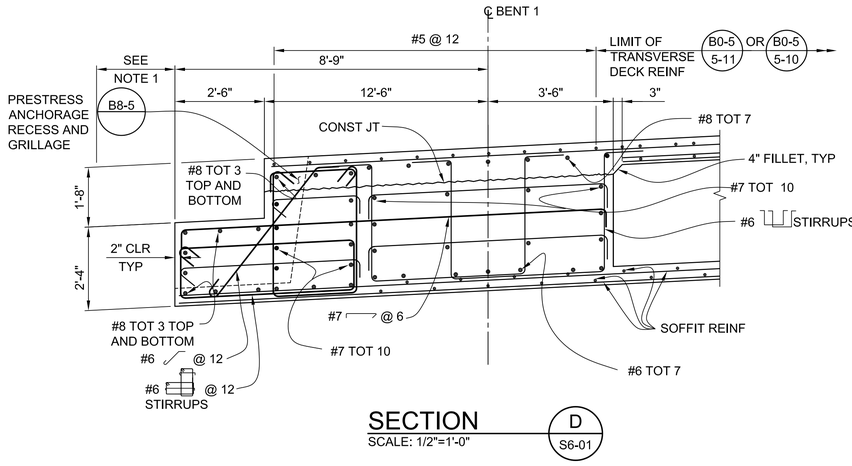

SECTION D
SCALE: 1/2"=1'-0"
S6-01

* INDICATE CLEARANCE TO MAIN CAP REINF

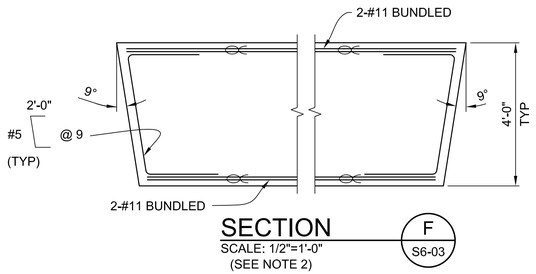

SECTION F
SCALE: 1/2"=1'-0"
(SEE NOTE 2)
S6-03

NOTES:

1. FOR SEISMIC GAP AND EXPANSION JOINT DETAILS, SEE DRAWING NOS. S90 THROUGH S96 AND S68.
2. NOT ALL ABUTMENT 1 END DIAPHRAGM REINFORCEMENT SHOWN FOR CLARITY.
3. THE "UTILITY OPENING DETAIL" SUPERSEDES DETAIL U-17 ON STANDARD PLAN B6-10.

1

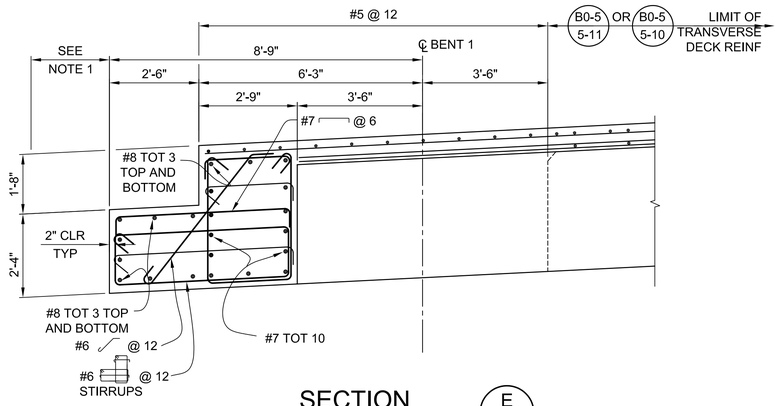

SECTION E
SCALE: 1/2"=1'-0"
S6-01

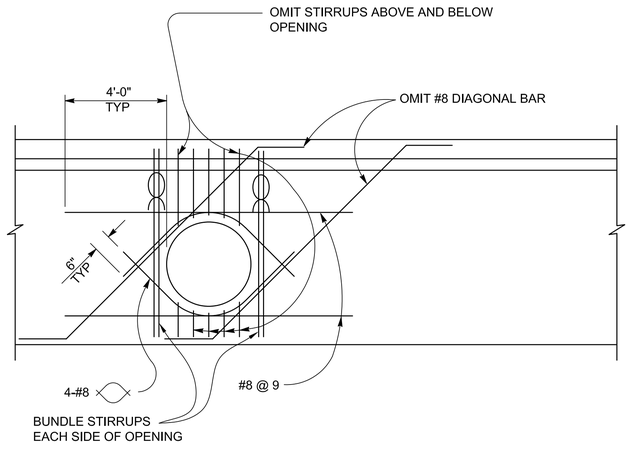

UTLITY OPENING DETAIL
NO SCALE

SEE B6-10 U-17 FOR ALL DETAILS, REINFORCEMENT, AND NOTES NOT SPECIFIED.

1

T.O. 5 - Change Order Serial Sketch No. 143 - Page 2 of 2

THE CITY OF LOS ANGELES OR ITS OFFICERS OR AGENTS SHALL NOT BE RESPONSIBLE FOR THE ACCURACY OR COMPLETENESS OF ELECTRONIC COPIES OF THIS PLAN SHEET.

C:\caddlib\pw\pwwestcoast\zhang\dms57683\S6-02-GRD01.dwg 7/21/21 09:38

REVISION DATES (DESIGN STAGE ONLY)

Sheet Version 3.0

BUREAU OF ENGINEERING
ENGINEERING
CITY OF LOS ANGELES

NO.	REVISIONS:	DATE	BY:
1	RFI 10496 - UTILITY OPENING DETAIL	07/30/21	MHJ

STRUCTURE NO. 53C-2329

INDEX NO.

THIS PLAN WAS ELECTRONICALLY SIGNED AND STAMPED

REGISTERED PROFESSIONAL ENGINEER MICHAEL H. JONES No. 53033 CIVIL STATE OF CALIFORNIA

CITY OF LOS ANGELES DEPARTMENT OF PUBLIC WORKS

GARY LEE MOORE, P.E. CITY ENGINEER

ENGINEER:	MICHAEL H. JONES	DESIGN GROUP	LIC. NO. 53033	DATE: 1/29/2016
DESIGNED BY:	JIANHA WANG / HAO LUO			1/29/2016
DRAWN BY:	LI ZHANG			1/29/2016
CHECKED BY:	PETER ZHAO			1/29/2016
APPROVED BY:	MICHAEL H. JONES			1/29/2016

VERTICAL CONTROL: BM 12-04070, 1929 (NGVD 29) - 1985 ADJUSTMENT
HORIZONTAL CONTROL: GPS; PID AE 1704, EPOCH 1991.35

SHEET TITLE: GIRDER DETAILS NO. 3

PROJECT: SIXTH STREET VIADUCT REPLACEMENT

ADDRESS: SIXTH STREET VIADUCT (WHITTIER BLVD) LOS ANGELES, CA

HNTB
HNTB Corporation
601 W. 5TH STREET SUITE 1000
LOS ANGELES, CALIFORNIA 90071
TEL (213) 403-1000 FAX (213) 403-1001

WORK ORDER NO. E700224F

DRAWING NO. S6-04

SHEET 307 OF 560 SHEETS

ADDENDUM 5

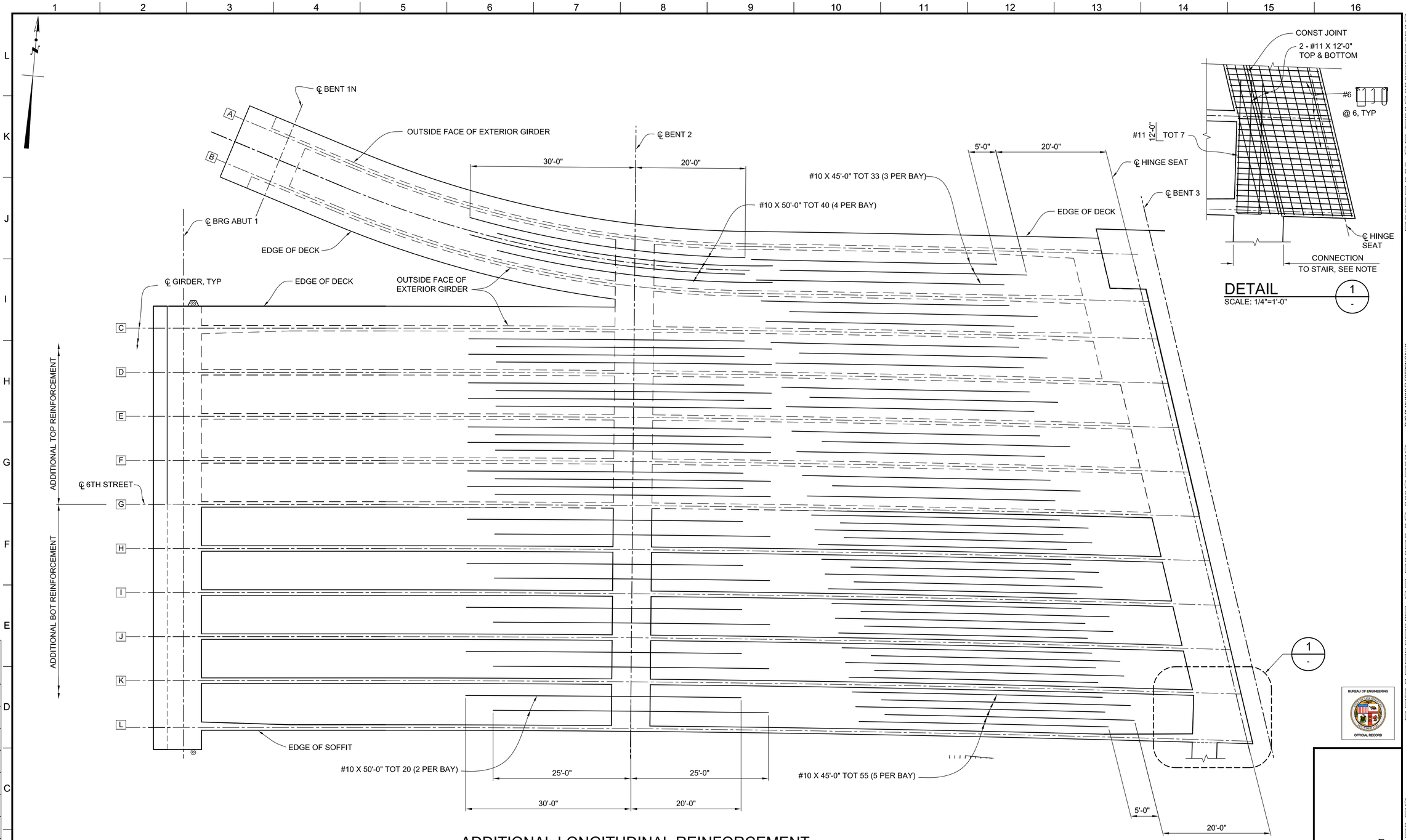

DETAIL
SCALE: 1/4"=1'-0"

1
-

ADDITIONAL LONGITUDINAL REINFORCEMENT
SCALE: 1/8" =1'-0"

LEGENDS:

A DENOTES GIRDER DESIGNATION

NOTES:

1. FOR CONNECTION DETAIL TO THE STAIR, SEE SHEET S8-52.

BUREAU OF ENGINEERING
OFFICIAL RECORD

HNTB
HNTB Corporation
601 W. 5TH STREET SUITE 1000
LOS ANGELES, CALIFORNIA 90071
TEL (213) 403-1000 FAX (213) 403-1001

BUREAU OF ENGINEERING
ENGINEERING
CITY OF LOS ANGELES

NO.	REVISIONS:	DATE:	BY:

STRUCTURE NO. 53C-2329

INDEX NO. P-38113

THIS PLAN WAS ELECTRONICALLY SIGNED AND STAMPED

REGISTERED PROFESSIONAL ENGINEER
MICHAEL H. JONES
No. S3033
CIVIL
STATE OF CALIFORNIA

DEPARTMENT OF PUBLIC WORKS
CITY OF LOS ANGELES

GARY LEE MOORE, P.E. CITY ENGINEER

		DESIGN GROUP	LIC. NO.	DATE:
ENGINEER:	MICHAEL H. JONES		S3033	1/29/2016
DESIGNED BY:	JIANHA WANG / HAO LUO			1/29/2016
DRAWN BY:	LI ZHANG			1/29/2016
CHECKED BY:	PETER ZHAO			1/29/2016
APPROVED BY:	MICHAEL H. JONES			1/29/2016

VERTICAL CONTROL: BM 12-04070,1929 (NGVD 29) - 1985 ADJUSTMENT
HORIZONTAL CONTROL: GPS; PID AE 1704, EPOCH 1991.35

SHEET TITLE: GIRDER REINFORCEMENT

PROJECT: SIXTH STREET VIADUCT REPLACEMENT

ADDRESS: SIXTH STREET VIADUCT (WHITTIER BLVD)
LOS ANGELES, CA

WORK ORDER NO.
E700224F

DRAWING NO.
S6-05

SHEET 308 OF 560 SHEETS

REVISION DATES (DESIGN STAGE ONLY)

THE CITY OF LOS ANGELES OR ITS OFFICERS OR AGENTS SHALL NOT BE RESPONSIBLE FOR THE ACCURACY OR COMPLETENESS OF ELECTRONIC COPIES OF THIS PLAN SHEET.

C:\caddlib\pw\pwwestcoast\lzhang\dms57683\S6-02-GRD01.dwg 6/27/16 17:55

Sheet Version 3.0

ADDENDUM 5

SEISMIC JOINT BLOCK-OUT
ABUT 13 ARCH RIB FLOOR BEAM
POST TENSIONING ANCHORAGE RECESS (TYP)
EDGE OF DECK LOL (TYP)
℄ ABUT 13 BRG
ABUT 13 FLOOR BEAM LOL BETWEEN ARCH RIB CONTROL POINTS
ARCH RIB CONTROL POINT, SEE DRAWING NOS. S3-11 AND S5-01
EDGE OF DECK. ARCH RIB NOT SHOWN FOR CLARITY (TYP)
ARCH RIB CONTROL POINT, SEE DRAWING NOS. S3-11 AND S5-01

ABUTMENT 13 PLAN
SCALE: 1/2"=1'-0"

SEE E2 S6-75
#11 EDGE GIRDER REINFORCEMENT

DETAIL 1
NO SCALE

SEE DRAWING NO. S5-32 FOR TIES
TYPE B TIES @ 6" SEE DRAWING NO. S3-18 SEE NOTE 5
ABOVE DECK, USE 4 ROWS OF HORIZONTAL CROSS TIES
ARCH RIB LOL
#8 5'-0" (SEE NOTE 2)
#8 @ 6 SEE NOTE 5
#8 @ 6 SEE NOTE 5
ABUT 13 ARCH RIB FLOOR BEAM LOL
ARCH RIB CONTROL POINT, SEE DRAWING NOS. S3-11 AND S5-01
3'-7 1/2" SEE NOTE 3
8'-7 1/2" SEE NOTE 3
5'-8 5/16" SEE NOTE 3
℄ ABUT 13 BRG
6'-6 11/16" SEE NOTE 3
2'-0 7/8" SEE NOTE 3
4 ROWS #8 CROSS-TIE @ 6 HORIZONTALLY, @ 18 MAX VERTICALLY PLACE OUTSIDE THE LIMITS OF ARCH RIB STIRRUPS, TYP
ARCH RIB LONGITUDINAL REINFORCEMENT SHALL EXTEND TO THE INSIDE FACE OF THE #11 BARS MAY BE SHORTENED WHERE INTERFERENCE OCCURS WITH TRUMPET OF EDGE GIRDER POST TENSIONING DUCT, BUT IN NO CASE SHALL THE EMBEDMENT WITHIN THE EDGE GIRDER BE LESS THAN 53" FOR SINGLE BARS AND 2-BAR BUNDLES AND 70" FOR 4-BAR BUNDLES
CONSTRUCTION JOINT = REI 0269
21'-9" 19'-9" #11 (TOT 14) BUNDLE 2 BARS MECHANICAL COUPLER WITH TOP & BOTTOM LONGITUDINAL EDGE GIRDER REINF. ADD #14 (TOT 4). SEE E2 S6-75 AND NOTE 4
20'-9"
#8 11'-3" HORIZONTAL STIRRUPS. 7 LAYERS VERTICALLY, 6 ROWS HORIZONTALLY. TOT 42 BARS
#5 @ 12
SEE NOTE 1
3 ¾ "Ø PT DUCTS, TYP
EDGE GIRDER REINF, #11 SIDE FACE BARS NOT SHOWN FOR CLARITY
EDGE GIRDER ℄ TENDONS
BOTTOM OF CONCRETE AT TOP OF BEARING SEE DRAWING NO. S2-02 FOR ELEVATION
#5 TOT 7
#4 2'-3" @ 6 EACH WAY
LEVEL BEARING PAD CONCRETE
ABUTMENT 13, SEE DRAWING NO. S2-02

SECTION A
SCALE: 3/4"=1'-0"

#4 BELOW SEISMIC JOINT BLOCK-OUT
BLOCK-OUT FOR SEISMIC JOINT SEE DRAWING NO. S8-05
#4 EACH WAY @ 12
3'-6"
1'-6" LAP, (TYP)
#4 @ 12
#8 BEYOND ARCH RIB
POST TENSIONING ANCHORAGE RECESS
4'-8"
#7 AND #7 @ 12 TOT 5
3"
#7 AND #7 @ 12 SEE C S3-07
C S6-07
B S6-07
4'-0"
4'-0"
1'-3" TYP
℄ ABUT 13 BRG
ABUT 13 LONGITUDINAL MAIN REINF
ABUT 13 FLOOR BEAM LOL
ARCH RIB CONTROL POINT, SEE DRAWING NO. S5-01
#5 BETWEEN #6
ARCH RIB
EDGE GIRDER
EDGE GIRDER LOL
#8 WHERE ARCH RIB OCCURS
ARCH RIB AND EDGE GIRDER LONGITUDINAL REINF NOT SHOWN FOR CLARITY
ARCH RIB ARCHITECTURAL CONCRETE. SEE DRAWING NO. S5-13

PLAN A
SCALE: 3/4"=1'-0"

LEGEND:

- HEADED REBAR AT TIE OR CROSS TIE
- BUNDLED BARS
- POST TENSIONING DUCT

NOTES:

1. FOR EDGE GIRDER POST TENSIONING ANCHORAGE DETAILS, SEE DRAWING NO. S6-83.
2. FOR EDGE GIRDER STIRRUP SPACING, SEE DRAWING NO. S6-67. OMIT #4 HORIZONTAL CROSS-TIE AT EACH STIRRUP.
3. DIMENSIONS ARE PARALLEL TO EDGE GIRDER.
4. AT SEISMIC JOINT BLOCKOUT, PLACE #11 FLUSH WITH VERTICAL BLOCKOUT FACE. 3
5. EXTERIOR #8 CLOSED TIES AT EDGE GIRDER AND ARCH RIB MAY BE 2-BAR BUNDLED AND SPACING VARIED, BUT SHALL PROVIDE AN EQUIVALENT QUANTITY TO #8 @ 6". MAXIMUM SPACING SHALL NOT EXCEED 6". 2 4
6. WHERE HEADED REBAR AT CROSS TIES ARE SHOWN, USE REDUCE SIZE HEADS (4x NET REBAR AREA).

VERTIC OCCUR

HNTB Corporation
601 W. 5TH STREET SUITE 1000
LOS ANGELES, CALIFORNIA 90071
TEL (213) 403-1000 FAX (213) 403-1001

ENGINEERING
CITY OF LOS ANGELES

BUREAU OF ENGINEERING

NO.	REVISIONS:	DATE:	BY:
1	GENERAL BIM UPDATES	09/01/17	MHJ
2	BIM REVISION 4 ECO 42 ECO 57	02/16/18	MHJ
3	BIM REVISION 5 ECO 59	3/16/18	MHJ
4	BIM REVISION 6 ECO 63	4/27/18	MHJ

STRUCTURE NO. 53C-2329

INDEX NO.

THIS PLAN WAS ELECTRONICALLY SIGNED AND STAMPED

REGISTERED PROFESSIONAL ENGINEER MICHAEL H. JONES No. S3033 CIVIL STATE OF CALIFORNIA

GARY LEE MOORE, P.E. CITY ENGINEER

DATE:	1/29/2016	1/29/2016	1/29/2016	1/29/2016	1/29/2016
LIC. NO. S3033					
ENGINEER: MICHAEL H. JONES	DESIGN GROUP				
DESIGNED BY: SEAN XIN					
DRAWN BY: LI ZHANG					
CHECKED BY: CHARLES REDFIELD					
APPROVED BY: MICHAEL H. JONES					

CITY OF LOS ANGELES DEPARTMENT OF PUBLIC WORKS

VERTICAL CONTROL: BM 12-04070, 1929 (NGVD 29) - 1985 ADJUSTMENT
HORIZONTAL CONTROL: GPS; PID AE 1704, EPOCH 1991.35

SHEET TITLE: ABUTMENT 13 FLOOR BEAM DETAILS NO. 1

PROJECT: SIXTH STREET VIADUCT REPLACEMENT

ADDRESS: SIXTH STREET VIADUCT (WHITTIER BLVD) LOS ANGELES, CA

WORK ORDER NO. E700224F

DRAWING NO. S6-06

SHEET 309 OF 560 SHEETS

THE CITY OF LOS ANGELES OR ITS OFFICERS OR AGENTS SHALL NOT BE RESPONSIBLE FOR THE ACCURACY OR COMPLETENESS OF ELECTRONIC COPIES OF THIS PLAN SHEET.

C:\caddfiles\pw\pwwestcoast\zhang\dms576831\S6-05-ABD01-03.dwg 5/03/18 13:54

REVISION DATES (DESIGN STAGE ONLY)

Sheet Version 3.0

ADDENDUM 5

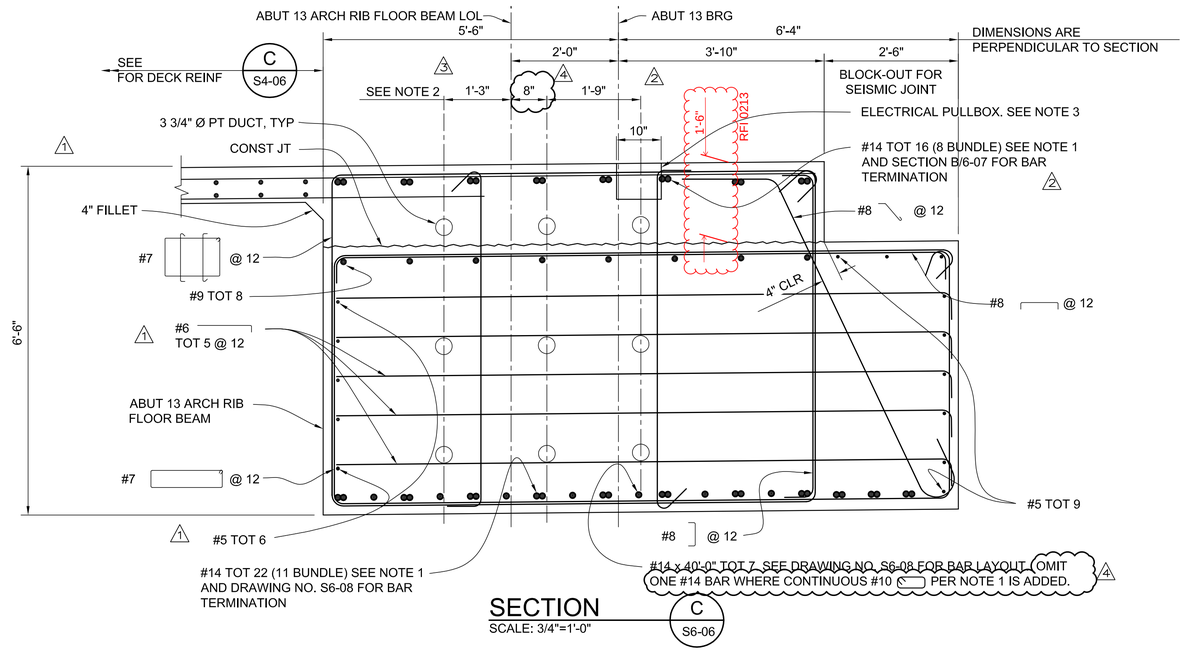

SECTION
SCALE: 3/4"=1'-0"
C S6-06

NOTES:

1. PROVIDE ADEQUATE SPACE BETWEEN #14 ARCH RIB FLOOR BEAM (ARFB) BARS TO PROVIDE CLEARANCE FOR #14 ARCH RIB TOP #14 BARS. WHERE #14 ARFB SPACING EXCEEDS 18" DUE TO INTERFERENCE WITH #14 ARCH RIB TOP BARS, ADD #10 ACROSS THE FULL LENGTH OF THE ARFB AND CUT AND REMOVE PORTIONS OF THE ADDED #10 BAR WHERE INTERFERENCE OCCURS WITH THE #14 ARCH RIB TOP BARS.
2. POST TENSIONING DUCTS FOR ABUT 13 ARCH RIB FLOOR BEAM CAN BE MOVED HORIZONTALLY ±3" AND ±2" VERTICALLY.
3. SEE DRAWING NO. SL-406 FOR 10" x 16" x 8" ELECTRICAL PULLBOX. ADJUST FLOOR BEAM REINFORCEMENT AS REQUIRED AND ORIENTATE PULLBOX AS SHOWN.

RFI 0215

RFI 0327

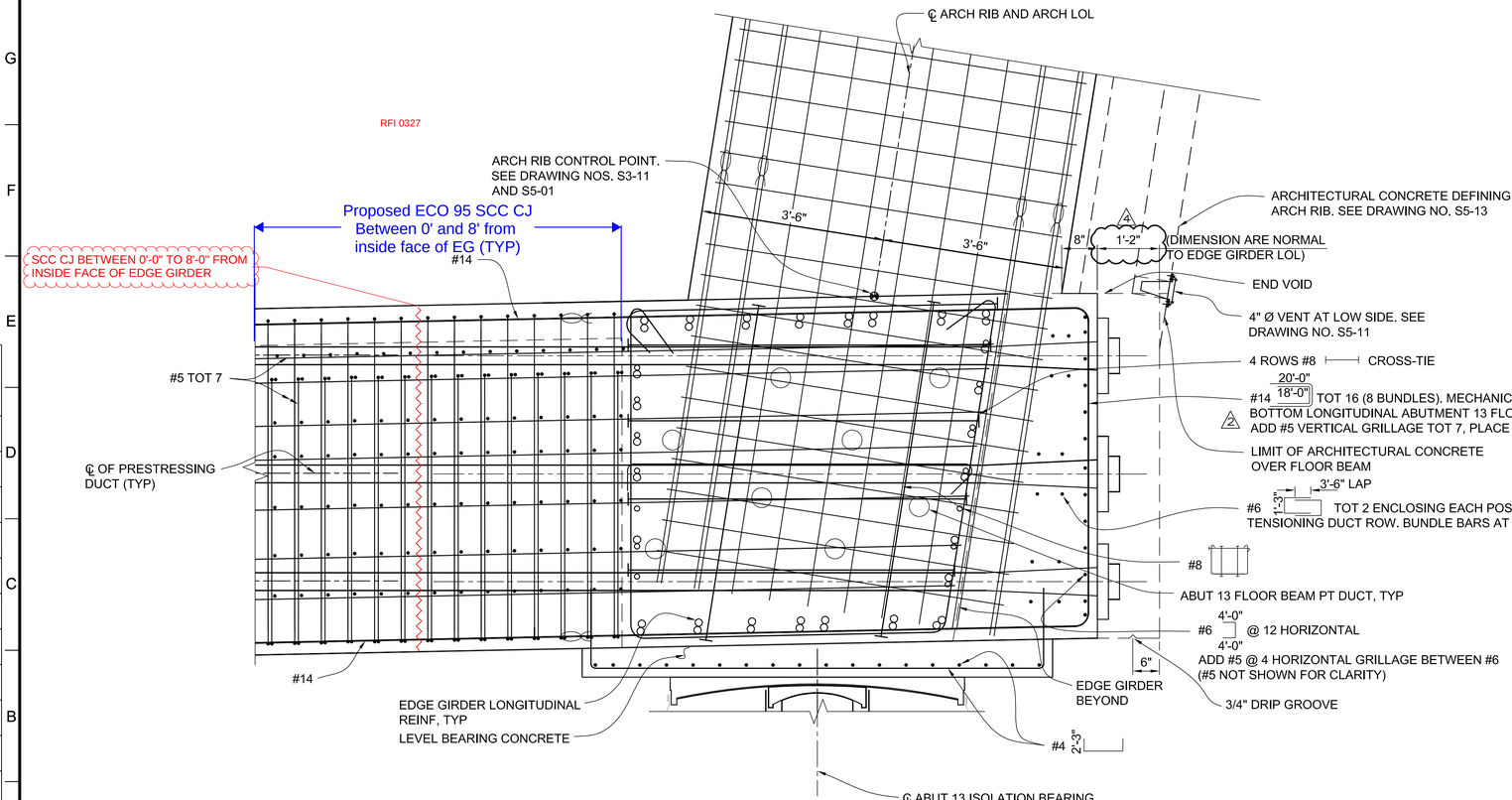

SECTION
SCALE: 3/4"=1'-0"
B S6-06

LEGEND:

- HEADED REBAR AT TIE OR CROSS TIE
- BUNDLED BARS
- POST TENSIONING DUCT

T.O. 5 Change Order Serial Sketch No. 63 - Page 10 of 26

HNTB
HNTB Corporation
601 W. 5TH STREET SUITE 1000
LOS ANGELES, CALIFORNIA 90071
TEL (213) 403-1000 FAX (213) 403-1001

CITY OF LOS ANGELES DEPARTMENT OF PUBLIC WORKS
BUREAU OF ENGINEERING
ENGINEERING
CITY OF LOS ANGELES

NO.	REVISIONS:	DATE	BY:
1.	DECK LONGITUDINAL CONSTRUCTION JOINT ECO 41	09/01/17	MHJ
2.	BIM REVISION 4 ECO 57	02/18/18	MHJ
3.	BIM REVISION 5 ECO 59	3/16/18	MHJ
4.	BIM REVISION 6 ECO 63	4/27/18	MHJ

STRUCTURE NO. 53C-2329
INDEX NO.

THIS PLAN WAS ELECTRONICALLY SIGNED AND STAMPED.
REGISTERED PROFESSIONAL ENGINEER MICHAEL H. JONES No. S3033 CIVIL STATE OF CALIFORNIA

GARY LEE MOORE, P.E. CITY ENGINEER

		DATE:
DESIGN GROUP		
ENGINEER:	MICHAEL H. JONES	1/29/2016
LIC. NO.	S3033	
DESIGNED BY:	SEAN XIN	1/29/2016
DRAWN BY:	LI ZHANG	1/29/2016
CHECKED BY:	CHARLES REDFIELD	1/29/2016
APPROVED BY:	MICHAEL H. JONES	1/29/2016

VERTICAL CONTROL: BM 12-04070, 1929 (NGVD 29) - 1985 ADJUSTMENT
HORIZONTAL CONTROL: GPS; PID AE 1704, EPOCH 1991.35

SHEET TITLE: ABUTMENT 13 FLOOR BEAM DETAILS NO. 2

PROJECT: SIXTH STREET VIADUCT REPLACEMENT

ADDRESS: SIXTH STREET VIADUCT (WHITTIER BLVD) LOS ANGELES, CA

WORK ORDER NO. E700224F
DRAWING NO. S6-07
SHEET 310 OF 560 SHEETS

REVISION DATES (DESIGN STAGE ONLY)

THE CITY OF LOS ANGELES OR ITS OFFICERS OR AGENTS SHALL NOT BE RESPONSIBLE FOR THE ACCURACY OR COMPLETENESS OF ELECTRONIC COPIES OF THIS PLAN SHEET.

C:\coddlib\pw\pwwestcoast\zhang\dms57683\S6-05-ABD01-03.dwg 5/03/18 13:56

Sheet Version 3.0

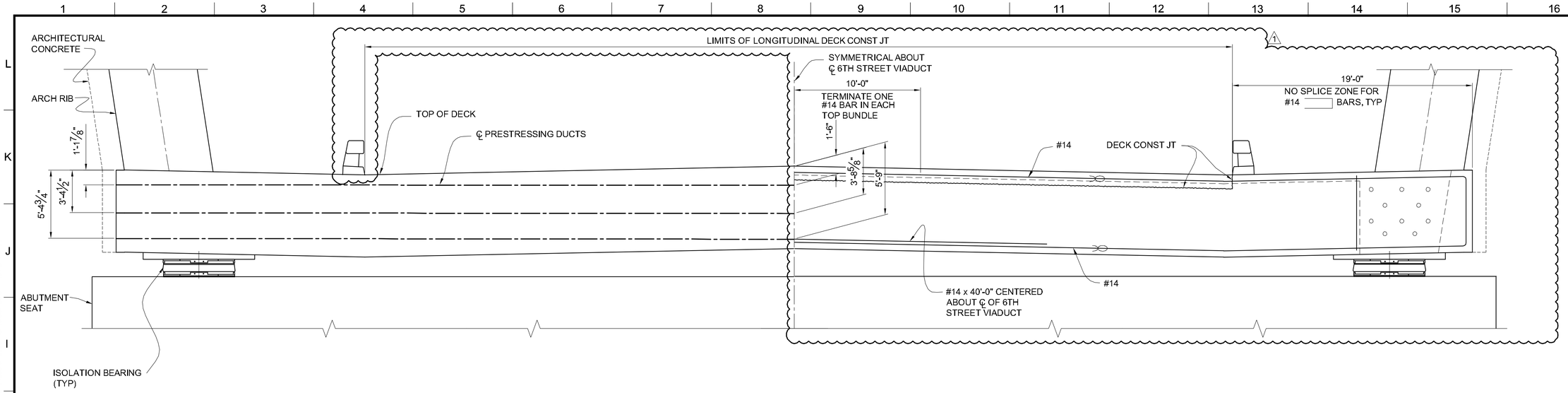

POST TENSIONING LAYOUT

REINFORCEMENT LAYOUT

ABUTMENT 13 ARCH RIB FLOOR BEAM ELEVATION

SCALE: 1/4"=1'-0"

PLAN

ELEVATION

ABUT 13 FLOOR BEAM ANCHORAGE

SCALE: 1/2"=1'-0"

PRESTRESSING NOTES

270 KSI LOW RELAXATION STRANDS
Pjack = 5932 KIPS
ANCHOR SET = ⅜"
K =0.0002 1/FT μ = 0.15

CONCRETE:

f'_c = 6, 000 PSI @ 28 DAYS
f'_{ci} = 5,000 PSI @ TIME OF STRESSING

CONTRACTOR SHALL SUBMIT ELONGATION CALCULATIONS BASED ON INITIAL STRESS AT ☒ = 0.924 TIMES JACKING STRESS FOR ALL DUCT.
ONE END STRESSING AT SOUTH END.

THE CITY OF LOS ANGELES OR ITS OFFICERS OR AGENTS SHALL NOT BE RESPONSIBLE FOR THE ACCURACY OR COMPLETENESS OF ELECTRONIC COPIES OF THIS PLAN SHEET.

C:\caddlib\pw\pwwestcoast\lzhang\dms57683\S6-05-AB001-03.dwg 8/25/17 11:18

Sheet Version 3.0

REVISION DATES (DESIGN STAGE ONLY)

BUREAU OF ENGINEERING

ENGINEERING — CITY OF LOS ANGELES

NO.	REVISIONS:	DATE:	BY:
1	DECK LONGITUDINAL CONSTRUCTION JOINT ADDED	09/01/17	MHJ

STRUCTURE NO. 53C-2329

INDEX NO.

REGISTERED PROFESSIONAL ENGINEER — MICHAEL H. JONES — No. S3033 — CIVIL — STATE OF CALIFORNIA

THIS PLAN WAS ELECTRONICALLY SIGNED AND STAMPED.

CITY OF LOS ANGELES DEPARTMENT OF PUBLIC WORKS

GARY LEE MOORE, P.E. — CITY ENGINEER — DATE: 1/29/2016

DESIGN GROUP — LIC. NO. S3033 — 1/29/2016

ENGINEER: MICHAEL H. JONES — 1/29/2016
DESIGNED BY: SEAN XIN
DRAWN BY: LI ZHANG
CHECKED BY: CHARLES REDFIELD — 1/29/2016
APPROVED BY: MICHAEL H. JONES — 1/29/2016

VERTICAL CONTROL: BM 12-04070, 1929 (NGVD 29) - 1985 ADJUSTMENT
HORIZONTAL CONTROL: GPS; PID AE 1704, EPOCH 1991.35

SHEET TITLE: ABUTMENT 13 FLOOR BEAM DETAILS NO. 3

PROJECT: SIXTH STREET VIADUCT REPLACEMENT

ADDRESS: SIXTH STREET VIADUCT (WHITTIER BLVD) LOS ANGELES, CA

HNTB
HNTB Corporation
601 W. 5TH STREET SUITE 1000
LOS ANGELES, CALIFORNIA 90071
TEL (213) 403-1000 FAX (213) 403-1001

WORK ORDER NO. E700224F

DRAWING NO. S6-08

SHEET 17 OF 560 SHEETS

Add 3 Bundled
Stirrups (3 Omitted /Cut Stirrups)

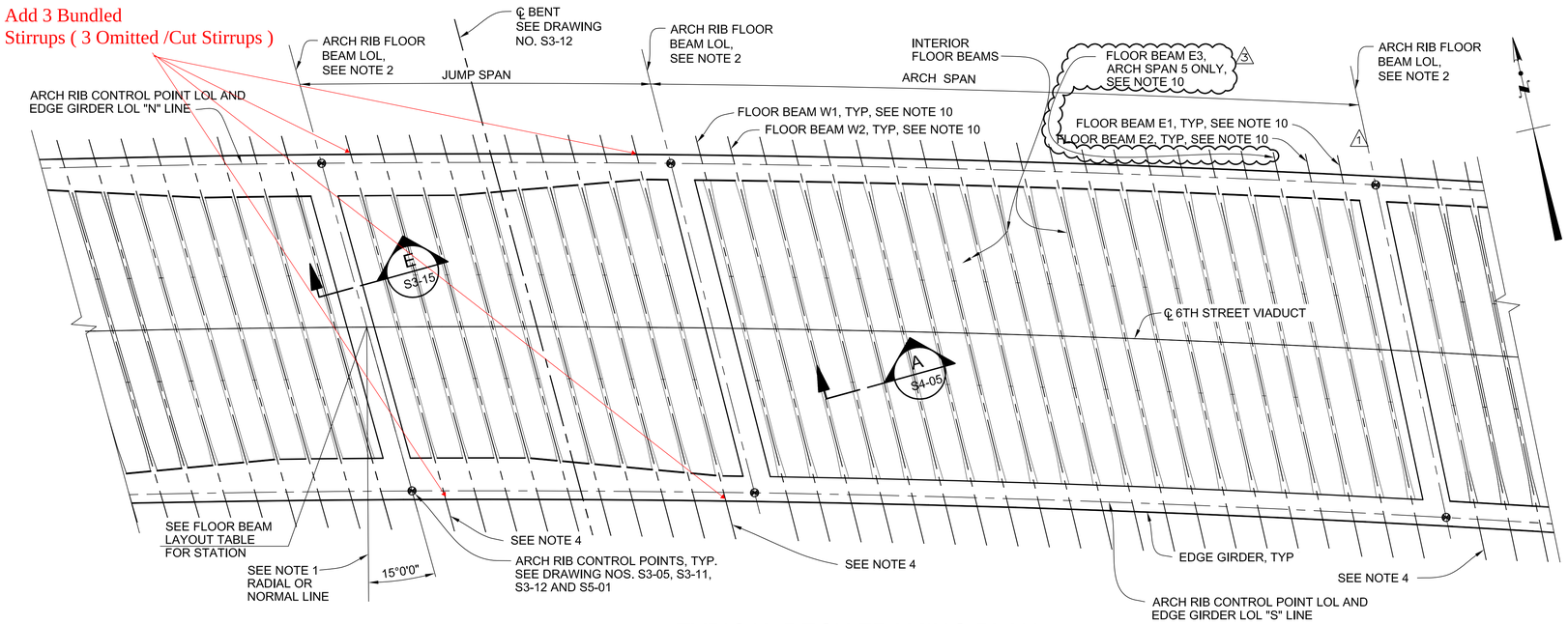

TYPICAL DECK FRAMING PLAN

SCALE: 1" =20'

T.O. 5 - Emergency Change Order Serial Sketch No. 52 - Page 1 of 2

FLOOR BEAM LAYOUT TABLE

LOCATION		ARCH RIB FLOOR BEAM STATION (SEE NOTE 2)	SPAN TYPE LOCATION	NO. OF INTERIOR FLOOR BEAMS (SEE NOTE 7)	INTERIOR FLOOR BEAM SPACING (FT) (SEE NOTES 3 & 4)
BENT 3	-	17+43.08	ARCH SPAN 3	23	8.63
BENT 4	WEST	19+50.09	JUMP SPAN 4	7	8.75
	EAST	20+20.10	ARCH SPAN 4	27	8.93
BENT 5	WEST	22+70.12	JUMP SPAN 5	6	8.93
	EAST	23+32.62	ARCH SPAN 5	21	8.68
BENT 6	WEST	25+23.62	JUMP SPAN 6	6	8.93
	EAST	25+86.12	ARCH SPAN 6	27	8.93
BENT 7	WEST	28+36.15	JUMP SPAN 7	8	8.89
	EAST	29+16.15	ARCH SPAN 7	21	9.18
BENT 8	WEST	31+18.16	JUMP SPAN 8	10	9.09
	EAST	32+18.16	ARCH SPAN 8	21	9.18
BENT 9	WEST	34+20.18	JUMP SPAN 9	10	9.09
	EAST	35+20.18	ARCH SPAN 9	21	9.18
BENT 10	WEST	37+22.19	JUMP SPAN 10	10	9.09
	EAST	38+22.19	ARCH SPAN 10	21	9.18
BENT 11	WEST	40+24.21	JUMP SPAN 11	10	9.09
	EAST	41+24.20	ARCH SPAN 11	21	9.18
BENT 12	WEST	43+26.22	JUMP SPAN 12	8	9.11
	EAST	44+08.22	ARCH SPAN 12	21	8.68
ABUT 13	-	45+99.22			

(SEE DRAWINGS NO.S S6-11 TO S6-17 AND NOTE 8 ON DRAWING NO. S6-11)

FRAME	EDGE GIRDER	TENDON (SEE NOTE 8)	DISTANCE TO POINT OF NO MOVEMENT (FT)	MEASURED FROM (SEE NOTE 9)
2	NORTH	D	95.51 * 2	BENT 5 EAST
		U	0	COUPLER AHD
		L	0	COUPLER AHD
	SOUTH	D	95.51 * 2	BENT 5 EAST
		U	0	COUPLER AHD
		L	0	COUPLER AHD
3	NORTH	D	0 * 2	DEAD END
		U	0	COUPLER AHD
		L	0	COUPLER AHD
	SOUTH	D	0 * 2	DEAD END
		U	0	COUPLER AHD
		L	0	COUPLER AHD
4	NORTH	D	72.73 * 2	BENT 9 WEST
		U	0	COUPLER AHD
		L	0	COUPLER AHD
	SOUTH	D	72.73 * 2	BENT 9 WEST
		U	0	COUPLER AHD
		L	0	COUPLER AHD
5	NORTH	D	--	--
		U1-U4	60.26	BENT 11 EAST
		L1-L4	23.21	
		U5	0	DEAD END
		L5	0	DEAD END
	SOUTH	D	--	--
		U1-U4	36.37	BENT 11 EAST
		L1-L4	18.20	
		U5	0	DEAD END
		L5	0	DEAD END

* DISTANCE IS MEASURED ALONG ℄ OF 6TH STREET VIADUCT FOR "D" TENDONS 2

NOTES:

1. ALL INTERIOR FLOOR BEAMS ARE PLACED ON A 15° SKEW TO RADIAL LINES AT CURVED ALIGNMENT AND TO NORMAL LINES AT TANGENT ALIGNMENT TO THE ℄ OF 6TH STREET VIADUCT, UON.
2. THE ARCH RIB FLOOR BEAM LOL IS THE PLAN VIEW PROJECTION OF THE LINE THAT CONNECTS THE WEST AND EAST ARCH RIB CONTROLS POINTS AND IS USED TO LAYOUT BENT GEOMETRY AS SHOWN ON DRAWING NO. S3-12 AND TO ESTABLISH TYPICAL FLOOR BEAM SPACING AS SHOWN ON THIS DRAWING. THE ACTUAL LAYOUT OF THE ARCH RIB FLOOR BEAMS USES THE PROJECTED ARCH FLOOR BEAM LOL SHOWN ON DRAWING NOS. S3-15 AND S3-21.
3. THE ℄ OF INTERIOR FLOOR BEAMS SHALL BE PLACED AT EQUAL SPACING ALONG THE ℄ OF 6TH STREET VIADUCT, BETWEEN STATIONS OF ARCH RIB FLOOR BEAMS. FLOOR BEAM SPACING SHOWN IS APPROXIMATE. SEE NOTES 4 & 10 FOR EXCEPTIONS TO THE EQUAL SPACING LAYOUT.
4. WITHIN THE JUMP SPANS, MODIFY THE 'EQUAL SPACING' LOCATION OF THE INTERIOR FLOOR BEAMS THAT ARE IMMEDIATELY ADJACENT TO ARCH RIB FLOOR BEAMS. THE LOCATION OF THESE FLOOR BEAMS ARE MODIFIED BY RELOCATING THEM AN ADDITIONAL 2'-6" OFFSET AWAY FROM THE ARCH RIB FLOOR BEAM, EXCEPT USE THE SMALLER OFFSET SHOWN IN THE TABLE BELOW AT THE LOCATIONS ALSO SHOWN IN THE TABLE.

ARCH RIB FLOOR BEAM LOCATION	ADDITIONAL FLOOR BEAM OFFSET
BENT 4, EAST	1'-0"
BENT 5, WEST	1'-0"
BENT 6, EAST	1'-0"
BENT 7, WEST	1'-0"

5. THE CONTRACTOR SHALL DETERMINE ALL DEFLECTION AND CAMBER VALUES BASED ON THE SELECTED ERECTION SEQUENCE. SEE DRAWING NO. S9-05 FOR CONSTRUCTION SEQUENCE AND GEOMETRY CONTROL SUBMITTAL REQUIREMENTS.
6. ARCH RIBS AND Y-BENT ARMS NOT SHOWN FOR CLARITY.
7. WHERE INDICATED IN THE TABLE BELOW, OMIT THE FLOOR BEAM ADJACENT TO THE ARCH RIB FLOOR BEAM. THE NUMBER OF FLOOR BEAMS SHOWN IN THE "FLOOR BEAM LAYOUT TABLE" INCLUDES THE OMITTED FLOOR BEAMS.

ARCH SPAN	LOCATION
3	WEST
5	EAST
7	EAST
9	EAST
12	EAST

8. FOR TENDON LAYOUT NOMENCLATURE, AND ADDITIONAL POST TENSIONING DATA, SEE DRAWING NO. S6-80. FOR "J" TENDON DATA, SEE DRAWING S6-18.
9. DISTANCE ARE MEASURED ALONG EDGE GIRDER LOL FROM THE FACE OF THE ANCHORAGE OR COUPLER PLATE. A POSITIVE NUMBER IS AHEAD STATION, A NEGATIVE NUMBER IS BACK STATION.
10. WITHIN THE ARCH SPANS, MODIFY THE 'EQUAL SPACING' LOCATION OF THE INDICATED INTERIOR FLOOR BEAMS THAT ARE IMMEDIATELY ADJACENT TO ARCH RIB FLOOR BEAMS. THE LOCATION OF THESE FLOOR BEAMS ARE MODIFIED BY RELOCATING THEM AN ADDITIONAL OFFSET DISTANCE AS INDICATED IN THE TABLE BELOW AWAY FROM THE ARCH RIB FLOOR BEAM. 3

ARCH RIB FLOOR BEAM LOCATION	FLOOR BEAM	ADDITIONAL FLOOR BEAM OFFSET
BENT 4, WEST	E1	2'-10"
	E2	1'-0"
BENT 4, EAST	W1	1'-6"
	W2	0
BENT 5, WEST	E1	1'-6"
	E2	0
BENT 5, EAST	W1	2'-6"
	W2	1'-0"
BENT 6, WEST	E1	0
	E2	0
	E3	4"
BENT 6, EAST	W1	1'-0"
	W2	0
BENT 7, WEST	E1	1'-6"
	E2	0
BENT 7, EAST	W1	2'-6"
	W2	1'-0"
BENT 8, WEST	E1	0
	E2	0
BENT 8, EAST	W1	2'-6"
	W2	1'-0"
BENT 9, WEST	E1	2'-6"
	E2	1'-0"
BENT 9, EAST	W1	2'-6"
	W2	1'-0"
BENT 10, WEST	E1	0
	E2	0
BENT 10, EAST	W1	2'-6"
	W2	1'-0"
BENT 11, WEST	E1	2'-6"
	E2	1'-0"
BENT 11, EAST	W1	2'-6"
	W2	1'-0"
BENT 12, WEST	E1	2'-6"
	E2	1'-0"
BENT 12, EAST	W1	1'-11"
	W2	0

HNTB
HNTB Corporation
601 W. 5TH STREET SUITE 1000
LOS ANGELES, CALIFORNIA 90071
TEL (213) 403-1000 FAX (213) 403-1001

CITY OF LOS ANGELES DEPARTMENT OF PUBLIC WORKS BUREAU OF ENGINEERING

ENGINEERING — CITY OF LOS ANGELES

NO.	REVISIONS:	DATE:	BY:
1.	FLOOR BEAM SPACING MODIFICATION CO 13	12/13/16	MHJ
2.	SUBMITTAL 0109 R1 REVISIONS ECO 51	12/01/17	M/D
3.	RFI 0080 CLOSURE POUR LIMITS ECO 52	12/22/17	M/D

STRUCTURE NO. 53C-2329

INDEX NO.

THIS PLAN WAS ELECTRONICALLY SIGNED AND STAMPED.

REGISTERED PROFESSIONAL ENGINEER — MICHAEL H. JONES — No. S3033 — CIVIL — STATE OF CALIFORNIA

CITY ENGINEER		DATE:
GARY LEE MOORE, P.E.		1/29/2016
ENGINEER:	MICHAEL H. JONES	LIC. NO. S3033
DESIGNED BY:	MICHAEL VAN DUYN	1/29/2016
DRAWN BY:	LI ZHANG	1/29/2016
CHECKED BY:	CHARLES REDFIELD	1/29/2016
APPROVED BY:	MICHAEL H. JONES	1/29/2016

VERTICAL CONTROL: BM 12-04070, 1929 (NGVD 29) - 1985 ADJUSTMENT
HORIZONTAL CONTROL: GPS; PID AE 1704, EPOCH 1991.35

SHEET TITLE: DECK FRAMING PLAN GENERAL LAYOUT

PROJECT: SIXTH STREET VIADUCT REPLACEMENT

ADDRESS: SIXTH STREET VIADUCT (WHITTIER BLVD) LOS ANGELES, CA

WORK ORDER NO. E700224F

DRAWING NO. S6-10

SHEET 312 OF 560 SHEETS

THE CITY OF LOS ANGELES OR ITS OFFICERS OR AGENTS SHALL NOT BE RESPONSIBLE FOR THE ACCURACY OR COMPLETENESS OF ELECTRONIC COPIES OF THIS PLAN SHEET.

C:\caddlib\pw\pwwestcoast\zhang\dms57683\S6-10-FM01.dwg 12/21/17 16:12

REVISION DATES (DESIGN STAGE ONLY)

Sheet Version 3.0

ADDENDUM 5

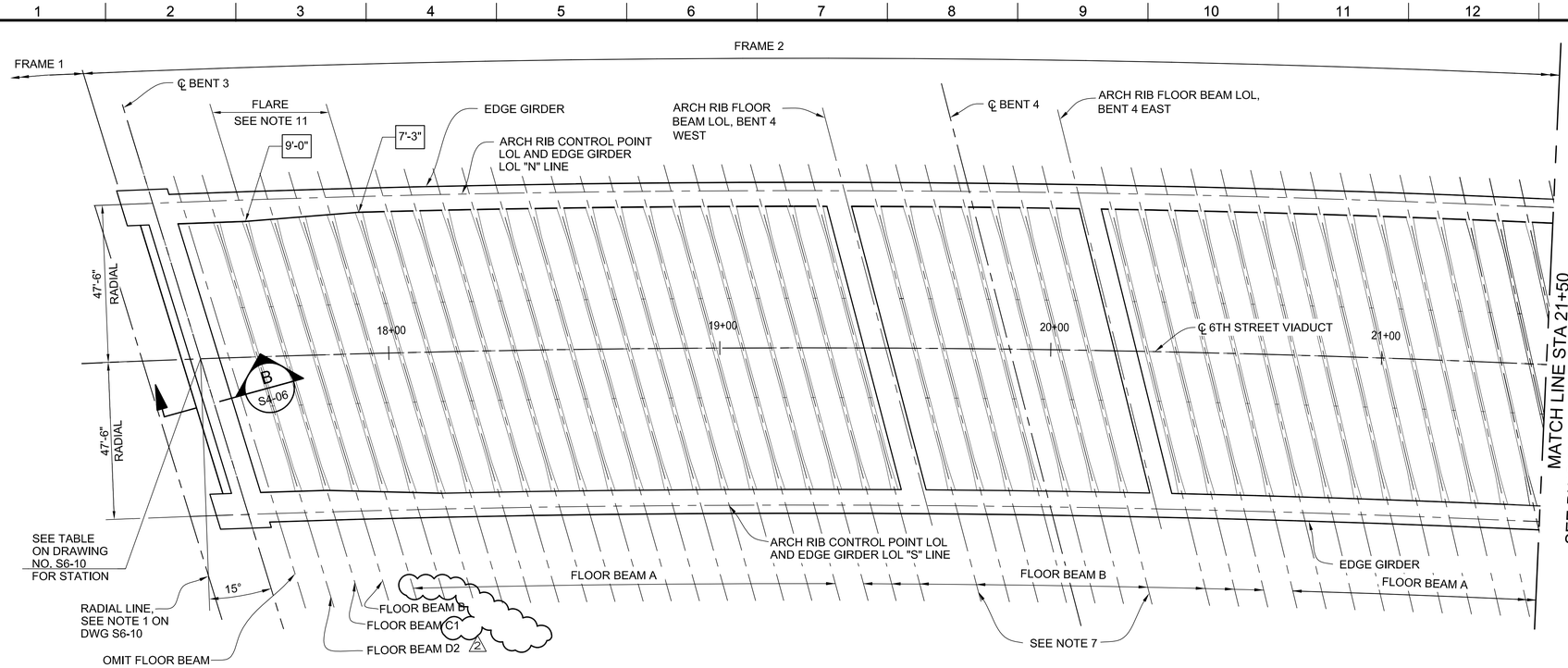

DECK FRAMING PLAN

SCALE: 1" =20'

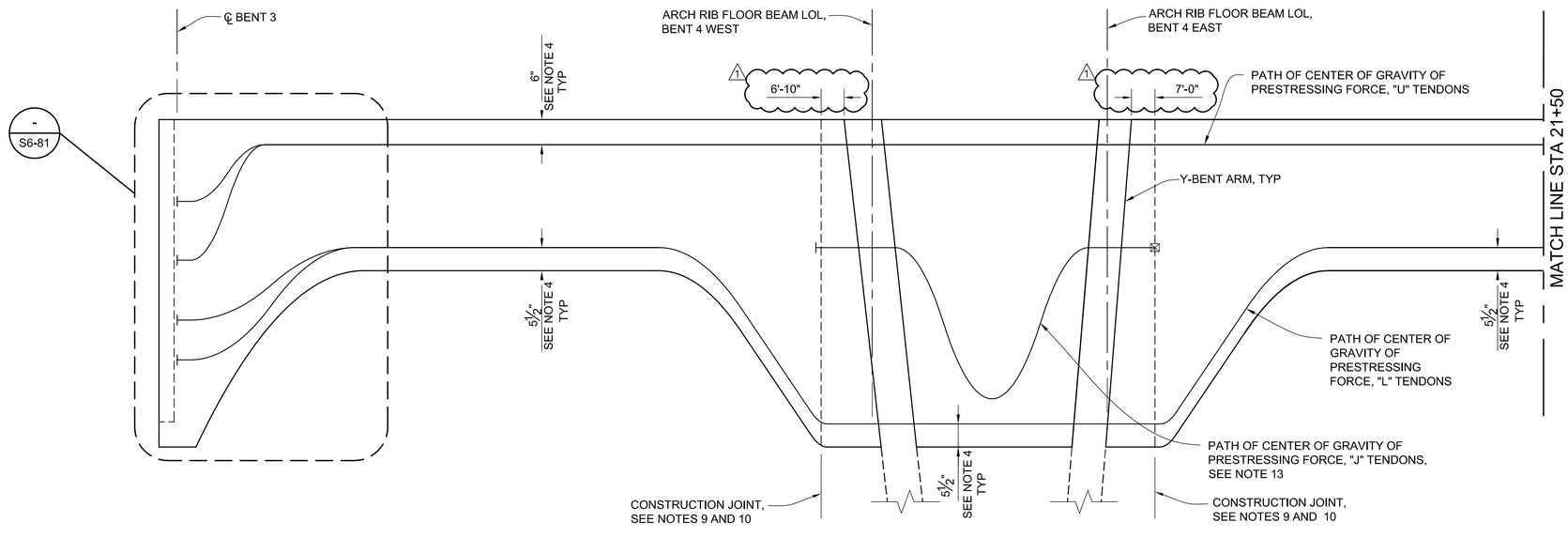

LONGITUDINAL SECTION

SCALE: HORIZ: 1" =20'
VERT: 3/4" =1'-0"

NOTES:

1. FOR INTERIOR FLOOR BEAM DETAILS, SEE DRAWING NOS. S7-01 THRU S7-05.
2. FOR ARCH RIB FLOOR BEAM DETAILS, SEE DRAWING NOS. S3-15 AND S3-20 THRU S3-25.
3. FOR TYPICAL FLOOR BEAM LAYOUT, SEE DRAWING NO. S6-10.
4. DISTANCE TO CENTER OF GRAVITY OF PRESTRESSING IS MEASURED NORMAL TO SURFACE.
5. FOR EDGE GIRDER AND DECK SLAB LONGITUDINAL POST TENSIONING NOTES AND ANCHORAGE DETAILS, SEE DRAWINGS S6-80 THROUGH S6-93.
6. ARCH RIBS AND Y-BENT ARMS NOT SHOWN FOR CLARITY.
7. SEE NOTE 4 ON DRAWING NO. S6-10.
8. FOR DISTANCE TO THEORETICAL POINT OF NO MOVEMENT, SEE POST TENSIONING DATA TABLE ON DRAWING NO. S6-10. DISTANCES TO THEORETICAL POINTS OF NO MOVEMENT ARE MEASURED ALONG EDGE GIRDER LOL'S TO THE INTERSECTION OF VERTICAL PLANES PASSING THROUGH THE INTERSECTING TRANSVERSE ELEMENT LOL'S. NEGATIVE VALUES ARE MEASURED BACK STATION, POSITIVE VALUES ARE MEASURED AHEAD STATION.
9. FOR CONSTRUCTION JOINT LOCATIONS, SEE DRAWING NOS. S6-85 & S9-08. (1)
10. PRIOR TO CONTINUING CONCRETE PLACEMENT AT CONSTRUCTION JOINTS IN EDGE GIRDERS, THE EXISTING CONCRETE SURFACE AT THE CONSTRUCTION JOINT INTERFACE SHALL BE PREPARED BY REMOVING ALL LAITANCE AND INTENTIONALLY ROUGHENING THE SURFACE TO AN AMPLITUDE OF ¼". AT DECK CONSTRUCTION JOINTS, SEE B0-5 / 5-2
11. EDGE GIRDER FLARE WIDTHS ARE MEASURED AT FLOOR BEAM CENTERLINE AND AT TOP OF DECK LEVEL. EDGE GIRDER WIDTHS AT FLARE ARE TYPICAL FOR NORTH AND SOUTH EDGE GIRDER. WHERE LONGITUDINAL REBAR INTERFERES WITH POST TENSIONING TRANSITION LAYOUT, ADJUST POST TENSIONING UPWARD OR DOWNWARD VERTICALLY TO CLEAR, SEE NOTE 1 ON DRAWING NO. S6-90.
12. CLOSURE POUR LENGTH WITHIN EDGE GIRDER TO BE AS REQUIRED FOR INSTALLATION OF POST TENSIONING COUPLER DEVICES. CONSTRUCTION JOINT IN DECK BETWEEN EDGE GIRDERS TO BE LOCATED AT MID-BAY OF FLOOR BEAMS. DECK POST TENSIONING DUCTS AT CONSTRUCTION JOINT TO BE COUPLED PRIOR TO CLOSURE POUR. DECK POST TENSIONING TENDONS TO BE INSTALLED AND STRESSED AFTER ADJOINING FRAMES ARE COMPLETE.
13. FOR "J" TENDON PROFILE GEOMETRY AND POST TENSIONING DATA, SEE DRAWING NO. S6-18.
14. FOR EDGE GIRDER AND DECK PRESTRESSING SUMMARY LAYOUT, SEE DRAWING NO. S6-20.
15. LAYOUT OF ARCH RIB FLOOR BEAMS BETWEEN FACES OF Y-BENT ARMS USES THE PROJECTED ARCH RIB FLOOR BEAM LOL. SEE DRAWING NO. S3-21

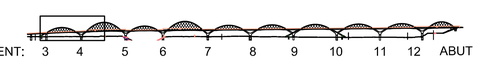

KEY ELEVATION

LEGEND:

- ⊠ - THEORETICAL POINT OF NO MOVEMENT SEE NOTE 8
- 9'-0" - INDICATES EDGE GIRDER WIDTH MEASURED AT TOP OF DECK

HNTB
HNTB Corporation
601 W. 5TH STREET SUITE 1000
LOS ANGELES, CALIFORNIA 90071
TEL (213) 403-1000 FAX (213) 403-1001

T.O. 5 - Change Order Serial Sketch No. 11R1 - Page 10 of 15

CITY OF LOS ANGELES DEPARTMENT OF PUBLIC WORKS
BUREAU OF ENGINEERING

ENGINEERING
CITY OF LOS ANGELES

NO.	REVISIONS:	DATE:	BY:
1	FLOOR BEAM SPACING MODIFICATION	12/13/16	MHJ
2	FLOOR BEAM PT CHANGES	03/24/17	MHJ

STRUCTURE NO. 53C-2329

INDEX NO.

THIS PLAN WAS ELECTRONICALLY SIGNED AND STAMPED.

REGISTERED PROFESSIONAL ENGINEER — MICHAEL H. JONES — No. S3033 — CIVIL — STATE OF CALIFORNIA

GARY LEE MOORE, P.E. — CITY ENGINEER

		DATE:
DESIGN GROUP	LIC. NO. S3033	1/29/2016
ENGINEER:	MICHAEL H. JONES	1/29/2016
DESIGNED BY:	MICHAEL VAN DUYN	1/29/2016
DRAWN BY:	LI ZHANG	1/29/2016
CHECKED BY:	CHARLES REDFIELD	1/29/2016
APPROVED BY:	MICHAEL H. JONES	1/29/2016

VERTICAL CONTROL: BM 12-04070,1928 (NGVD 29) - 1985 ADJUSTMENT
HORIZONTAL CONTROL: GPS; PID AE 1704, EPOCH 1991.35

SHEET TITLE: DECK FRAMING PLAN NO. 1

PROJECT: SIXTH STREET VIADUCT REPLACEMENT

ADDRESS: SIXTH STREET VIADUCT (WHITTIER BLVD) LOS ANGELES, CA

WORK ORDER NO. E700224F

DRAWING NO. S6-11

SHEET 313 OF 560 SHEETS

THE CITY OF LOS ANGELES OR ITS OFFICERS OR AGENTS SHALL NOT BE RESPONSIBLE FOR THE ACCURACY OR COMPLETENESS OF ELECTRONIC COPIES OF THIS PLAN SHEET.

C:\caddlib\pw\pwwestcoast\zhang\dms57683\S6-11-GL01-07.dwg 4/25/17 12:12

REVISION DATES (DESIGN STAGE ONLY)

Sheet Version 3.0

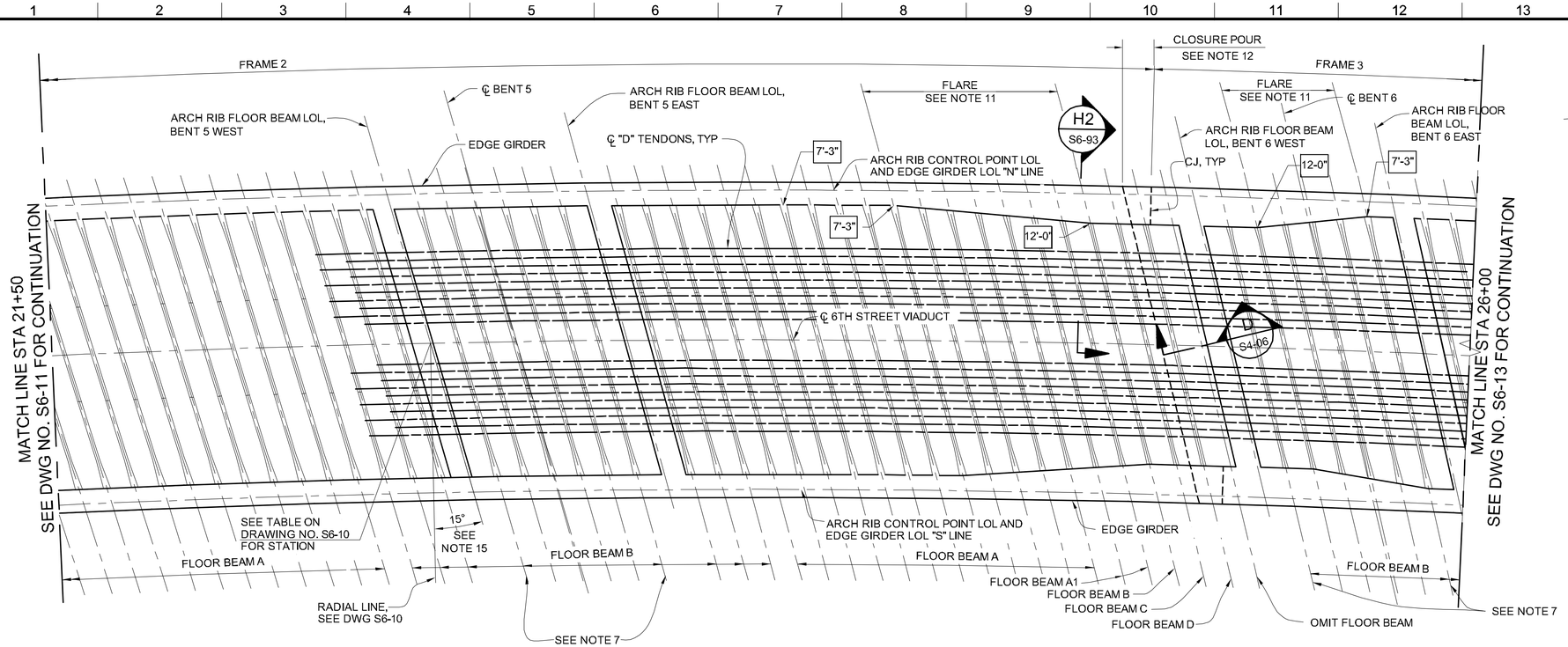

DECK FRAMING PLAN

SCALE: 1" =20'

NOTES:

1. FOR TYPICAL NOTES, SEE DRAWING NOS. S6-10 AND S6-11. WHEN A NOTE IS REFERENCED ON THIS SHEET, SEE DRAWING NO. S6-11 FOR THE NOTE.

LEGEND:

⊠ - THEORETICAL POINT OF NO MOVEMENT SEE NOTE 8

9'-0" - INDICATES EDGE GIRDER WIDTH MEASURED AT TOP OF DECK

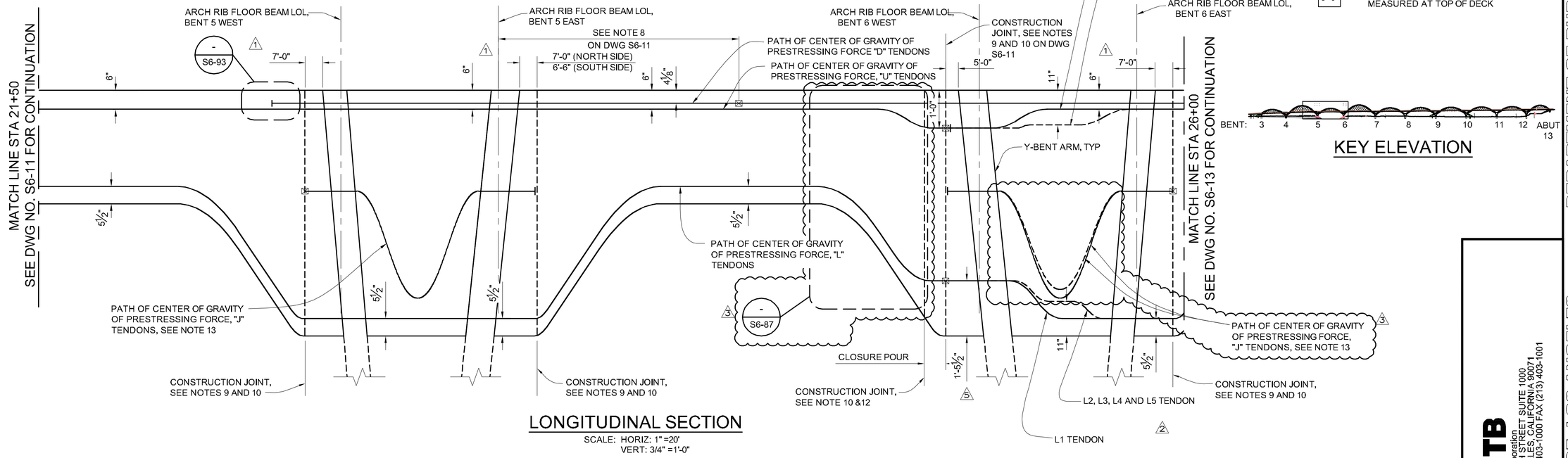

LONGITUDINAL SECTION

SCALE: HORIZ: 1" =20'
VERT: 3/4" =1'-0"

KEY ELEVATION

T.O. 5 Change Order Serial Sketch No. 63 - Page 11 of 26

HNTB
HNTB Corporation
601 W. 5TH STREET SUITE 1000
LOS ANGELES, CALIFORNIA 90071
TEL (213) 403-1000 FAX (213) 403-1001

BUREAU OF ENGINEERING
ENGINEERING
CITY OF LOS ANGELES

NO.	REVISIONS:	DATE:	BY:
1	FLOOR BEAM SPACING MODIFICATION ECO 13R1	12/13/16	MHJ
2	BIM REVISION 5 ECO 11R1	3/16/18	MHJ
3	BIM REVISION 6 ECO 63	04/27/18	MHJ

STRUCTURE NO. 53C-2329

INDEX NO.

THIS PLAN WAS ELECTRONICALLY SIGNED AND STAMPED.

REGISTERED PROFESSIONAL ENGINEER MICHAEL H. JONES No. S3033 CIVIL STATE OF CALIFORNIA

CITY OF LOS ANGELES DEPARTMENT OF PUBLIC WORKS

GARY LEE MOORE, P.E. CITY ENGINEER

ENGINEER:	DESIGN GROUP	LIC. NO. S3033	DATE: 1/29/2016
DESIGNED BY:	MICHAEL H. JONES		1/29/2016
DRAWN BY:	MICHAEL VAN DUYN		1/29/2016
CHECKED BY:	LI ZHANG		1/29/2016
APPROVED BY:	CHARLES REDFIELD		1/29/2016
APPROVED BY:	MICHAEL H. JONES		1/29/2016

VERTICAL CONTROL: BM 12-04070, 1929 (NGVD 29) - 1988 ADJUSTMENT
HORIZONTAL CONTROL: GRS; PID AE 1704, EPOCH 1991.35

SHEET TITLE: DECK FRAMING PLAN NO. 2

PROJECT: SIXTH STREET VIADUCT REPLACEMENT

ADDRESS: SIXTH STREET VIADUCT (WHITTIER BLVD) LOS ANGELES, CA

WORK ORDER NO. E700224F

DRAWING NO. S6-12

SHEET 314 OF 560 SHEETS

REVISION DATES (DESIGN STAGE ONLY)

THE CITY OF LOS ANGELES OR ITS OFFICERS OR AGENTS SHALL NOT BE RESPONSIBLE FOR THE ACCURACY OR COMPLETENESS OF ELECTRONIC COPIES OF THIS PLAN SHEET.

C:\caddlib\pw\pwwestcoast\zhang\dms576831\S6-11-GL01-07.dwg 5/03/18 14:16

Sheet Version 3.0

ADDENDUM 5

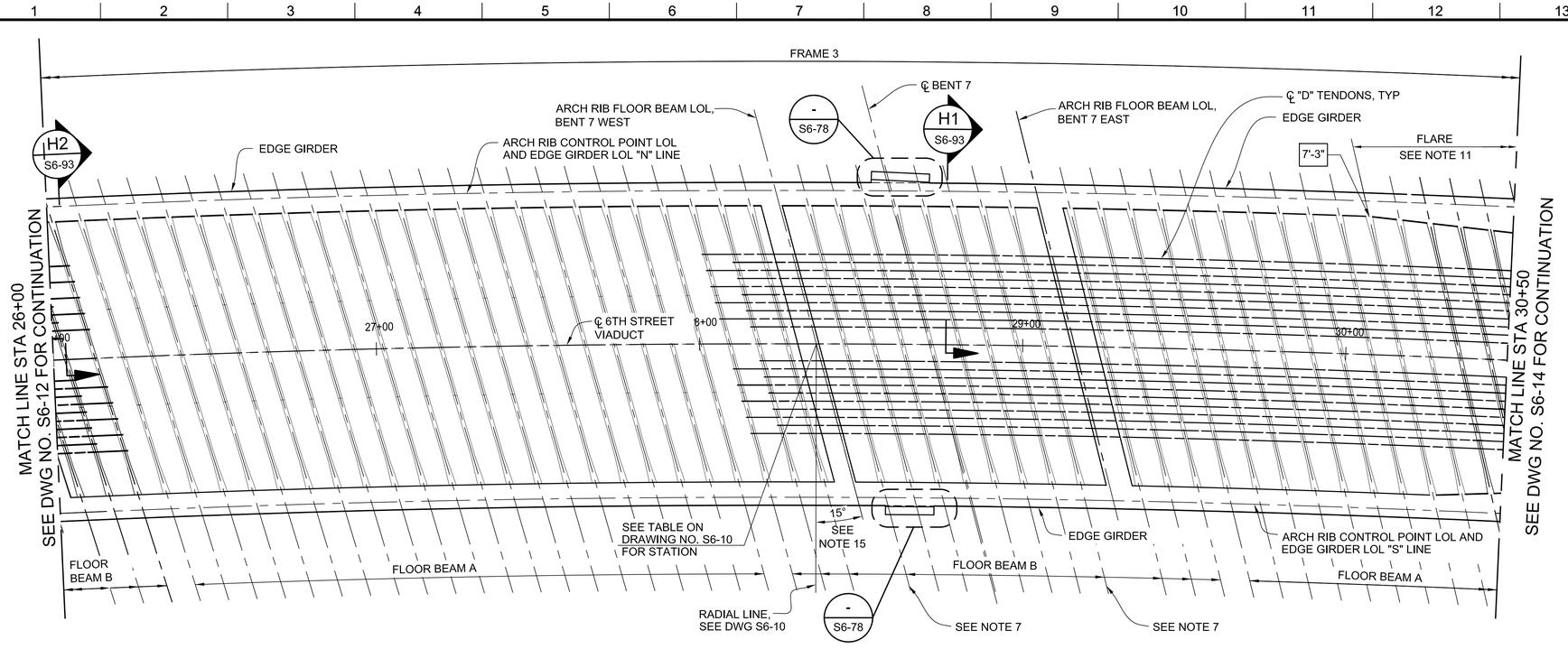

DECK FRAMING PLAN

SCALE: 1" =20'

NOTES:

1. FOR TYPICAL NOTES, SEE DRAWING NOS. S6-10 AND S6-11. WHEN A NOTE IS REFERENCED ON THIS SHEET, SEE DRAWING NO. S6-11 FOR THE NOTE.

LEGEND:

- ⊠ - THEORETICAL POINT OF NO MOVEMENT SEE NOTE 8
- 9'-0" - INDICATES EDGE GIRDER WIDTH MEASURED AT TOP OF DECK

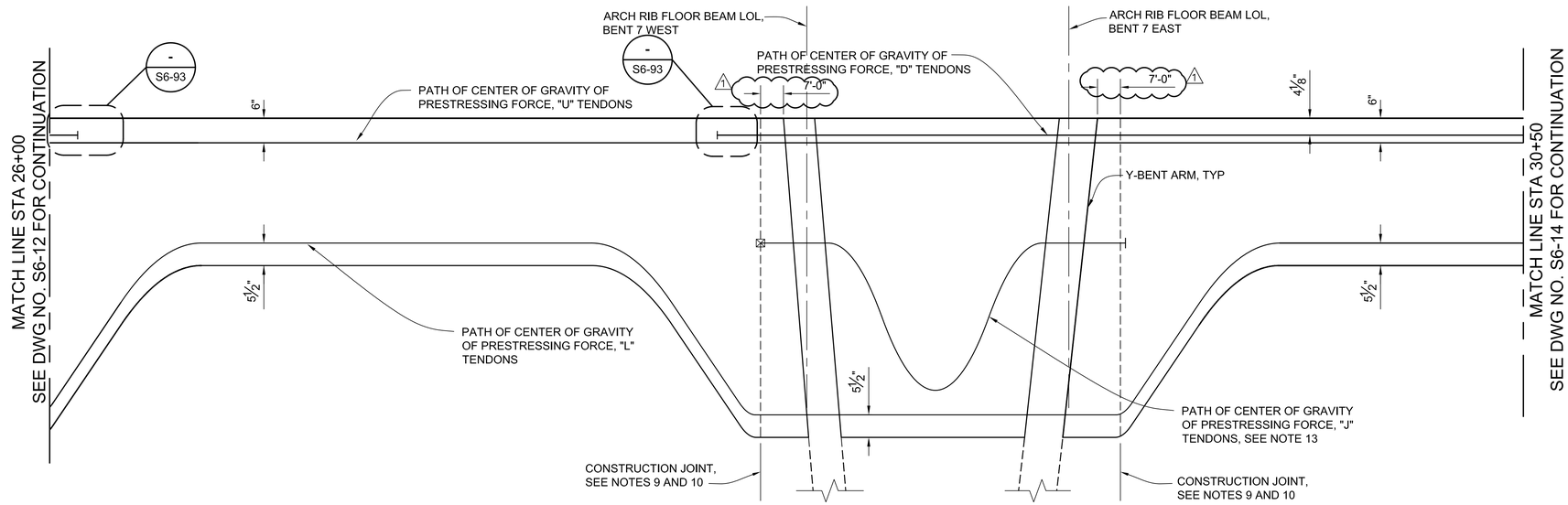

LONGITUDINAL SECTION

SCALE: HORIZ: 1" =20'
VERT: 3/4" =1'-0"

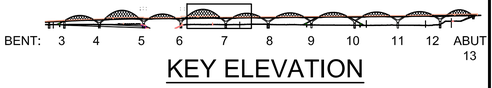

KEY ELEVATION

T.O. 5 - Change Order Sketch No. 13R1 (page 4 of 11)

HNTB
HNTB Corporation
601 W. 5TH STREET SUITE 1000
LOS ANGELES, CALIFORNIA 90071
TEL (213) 403-1000 FAX (213) 403-1001

CITY OF LOS ANGELES DEPARTMENT OF PUBLIC WORKS
BUREAU OF ENGINEERING

ENGINEERING
CITY OF LOS ANGELES

NO.	REVISIONS:	DATE	BY:
1	FLOOR BEAM SPACING MODIFICATION	12/13/16	MHJ

STRUCTURE NO.
53C-2329

INDEX NO.

THIS PLAN WAS ELECTRONICALLY SIGNED AND STAMPED.
REGISTERED PROFESSIONAL ENGINEER MICHAEL H. JONES No. S3033 CIVIL STATE OF CALIFORNIA

GARY LEE MOORE, P.E. CITY ENGINEER

		DATE:
ENGINEER:	MICHAEL H. JONES	1/29/2016
DESIGNED BY:	MICHAEL VAN DUYN	1/29/2016
DRAWN BY:	LI ZHANG	1/29/2016
CHECKED BY:	CHARLES REDFIELD	1/29/2016
APPROVED BY:	MICHAEL H. JONES	1/29/2016

DESIGN GROUP
LIC. NO. S3033

VERTICAL CONTROL: BM 12-04070, 1929 (NGVD 29) - 1985 ADJUSTMENT
HORIZONTAL CONTROL: GPS; PID AE 1704, EPOCH 1991.35

SHEET TITLE: DECK FRAMING PLAN NO. 3

PROJECT: SIXTH STREET VIADUCT REPLACEMENT

ADDRESS: SIXTH STREET VIADUCT (WHITTIER BLVD) LOS ANGELES, CA

WORK ORDER NO.
E700224F

DRAWING NO.
S6-13

SHEET 20 OF SHEETS

REVISION DATES (DESIGN STAGE ONLY)

C:\caddlib\pw\pwwestcoast\lzhang\dms57683\S6-11-GL01-07.dwg 12/13/16 10:32

Sheet Version 3.0

THE CITY OF LOS ANGELES OR ITS OFFICERS OR AGENTS SHALL NOT BE RESPONSIBLE FOR THE ACCURACY OR COMPLETENESS OF ELECTRONIC COPIES OF THIS PLAN SHEET.

ADDENDUM 5

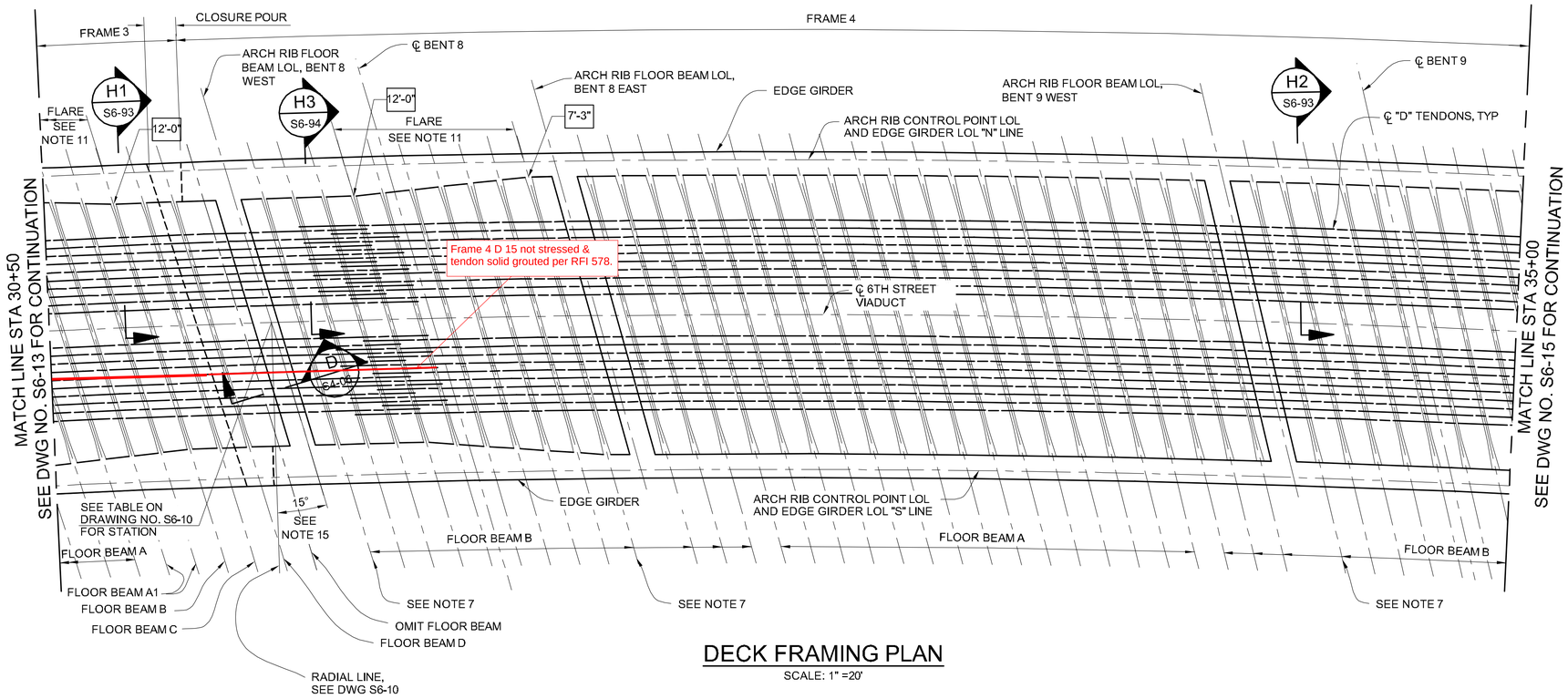

DECK FRAMING PLAN

SCALE: 1" =20'

NOTES:

1. FOR TYPICAL NOTES, SEE DRAWING NOS. S6-10 AND S6-11. WHEN A NOTE IS REFERENCED ON THIS SHEET, SEE DRAWING NO. S6-11 FOR THE NOTE.

LEGEND:

⊠ - THEORETICAL POINT OF NO MOVEMENT SEE NOTE 8

9'-0" - INDICATES EDGE GIRDER WIDTH MEASURED AT TOP OF DECK

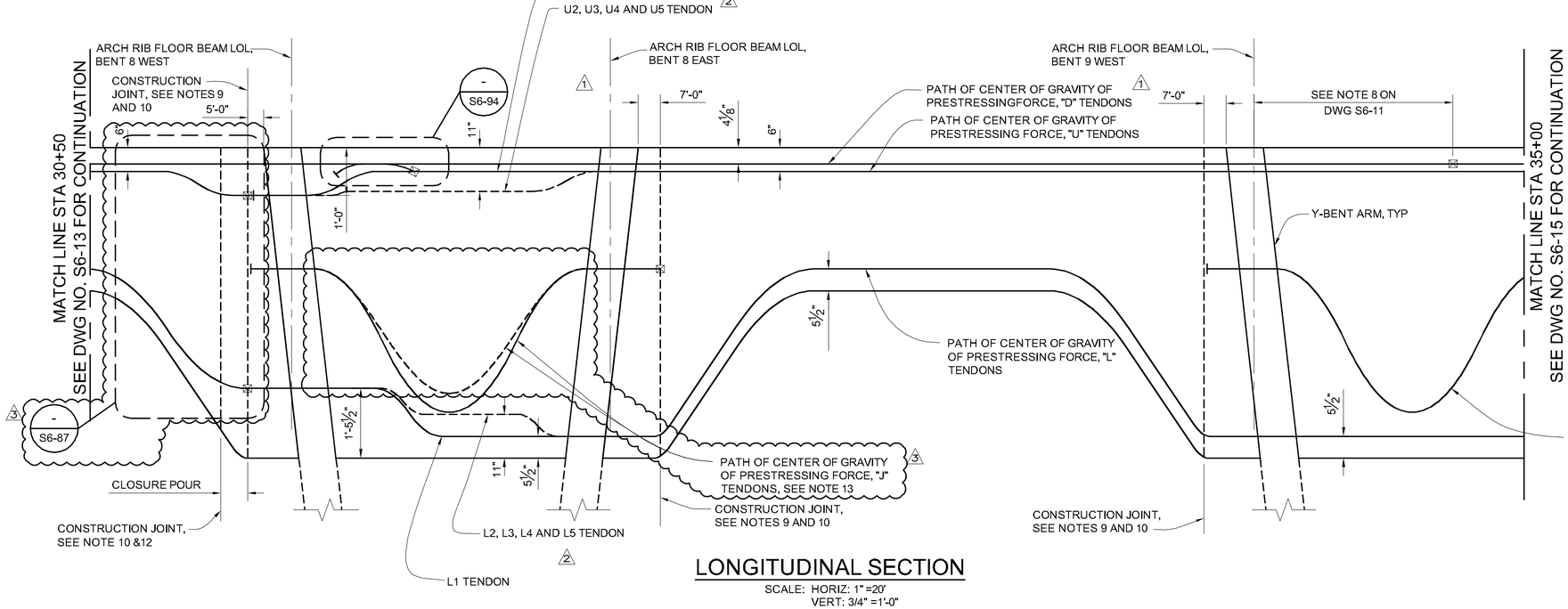

LONGITUDINAL SECTION

SCALE: HORIZ: 1" =20'
VERT: 3/4" =1'-0"

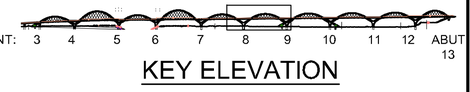

KEY ELEVATION

T.O. 5 Change Order Serial Sketch No. 63 - Page 12 of 26

HNTB
HNTB Corporation
601 W. 5TH STREET SUITE 1000
LOS ANGELES, CALIFORNIA 90071
TEL (213) 403-1000 FAX (213) 403-1001

BUREAU OF ENGINEERING
ENGINEERING
CITY OF LOS ANGELES

NO.	REVISIONS:	DATE:	BY:
1	FLOOR BEAM SPACING MODIFICATION ECO 13R1	12/13/16	MHJ
2	BIM REVISION 5 ECO 59 ECO 63	3/16/18	MHJ
3	BIM REVISION 6	04/27/18	MHJ

STRUCTURE NO. 53C-2329

INDEX NO.

THIS PLAN WAS ELECTRONICALLY SIGNED AND STAMPED.

REGISTERED PROFESSIONAL ENGINEER MICHAEL H. JONES No. S3033 CIVIL STATE OF CALIFORNIA

CITY OF LOS ANGELES DEPARTMENT OF PUBLIC WORKS

GARY LEE MOORE, P.E. CITY ENGINEER

		DATE:
DESIGN GROUP		
ENGINEER:	MICHAEL H. JONES	1/29/2016
	LIC. NO. S3033	1/29/2016
DESIGNED BY:	MICHAEL VAN DUYN	1/29/2016
DRAWN BY:	LI ZHANG	1/29/2016
CHECKED BY:	CHARLES REDFIELD	1/29/2016
APPROVED BY:	MICHAEL H. JONES	1/29/2016

VERTICAL CONTROL: BM 12-04070 1929 (NGVD 29) - 1985 ADJUSTMENT
HORIZONTAL CONTROL: GPS; PID AE 1704, EPOCH 1991.35

SHEET TITLE: DECK FRAMING PLAN NO. 4

PROJECT: SIXTH STREET VIADUCT REPLACEMENT

ADDRESS: SIXTH STREET VIADUCT (WHITTIER BLVD) LOS ANGELES, CA

WORK ORDER NO. E700224F

DRAWING NO. S6-14

SHEET 316 OF 560 SHEETS

REVISION DATES (DESIGN STAGE ONLY)

THE CITY OF LOS ANGELES OR ITS OFFICERS OR AGENTS SHALL NOT BE RESPONSIBLE FOR THE ACCURACY OR COMPLETENESS OF ELECTRONIC COPIES OF THIS PLAN SHEET.

C:\coddlib\pw\pwwestcoast\zhang\dms57683\S6-11-GL01-07.dwg 5/03/18 14:17

Sheet Version 3.0

ADDENDUM 5

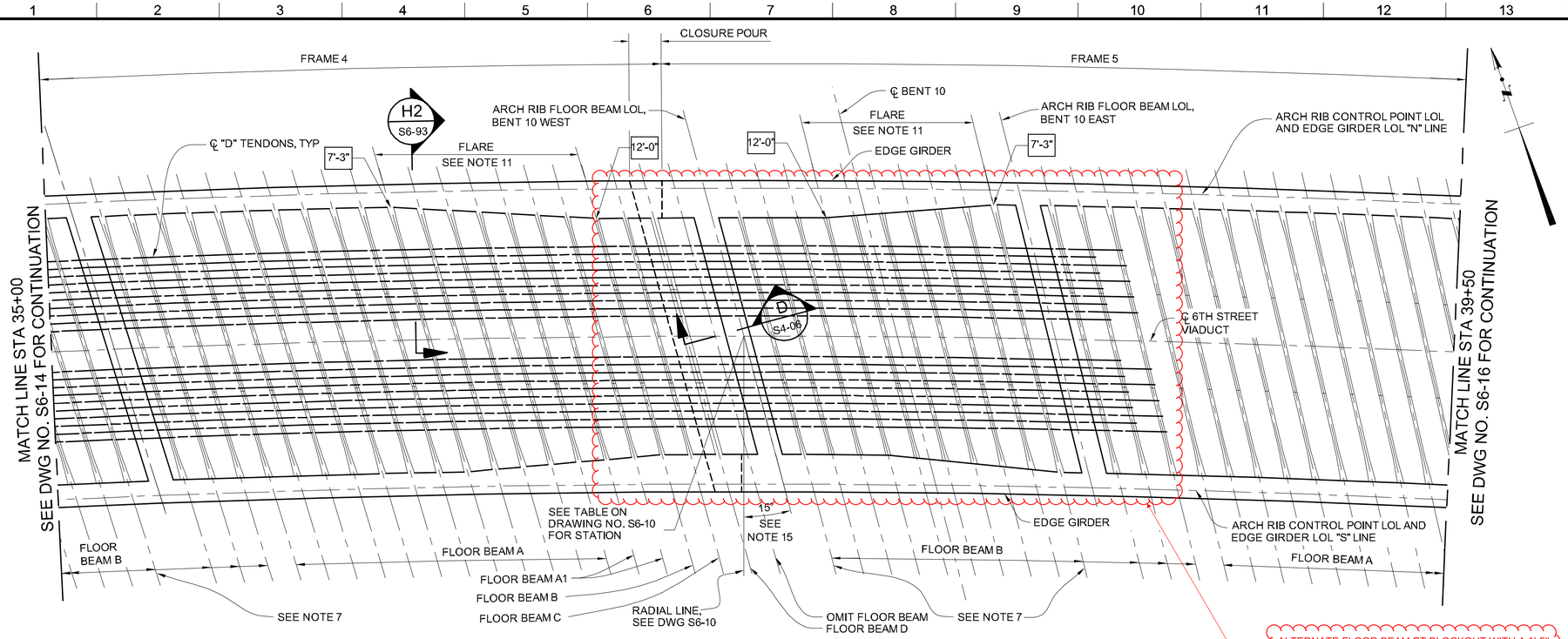

DECK FRAMING PLAN

SCALE: 1" =20'

ALTERNATE FLOOR BEAM PT BLOCKOUT WITH A 1'-5" VERTICAL OPENING. 2 CONFLCITING #8'S TO BE FLUSHED ABOVE AND BELOW WITH THE BLOCK-OUT
RFI 0243

NOTES:

1. FOR TYPICAL NOTES, SEE DRAWING NOS. S6-10 AND S6-11. WHEN A NOTE IS REFERENCED ON THIS SHEET, SEE DRAWING NO. S6-11 FOR THE NOTE.

LEGEND:

⊠ - THEORETICAL POINT OF NO MOVEMENT SEE NOTE 8

9'-0" - INDICATES EDGE GIRDER WIDTH MEASURED AT TOP OF DECK

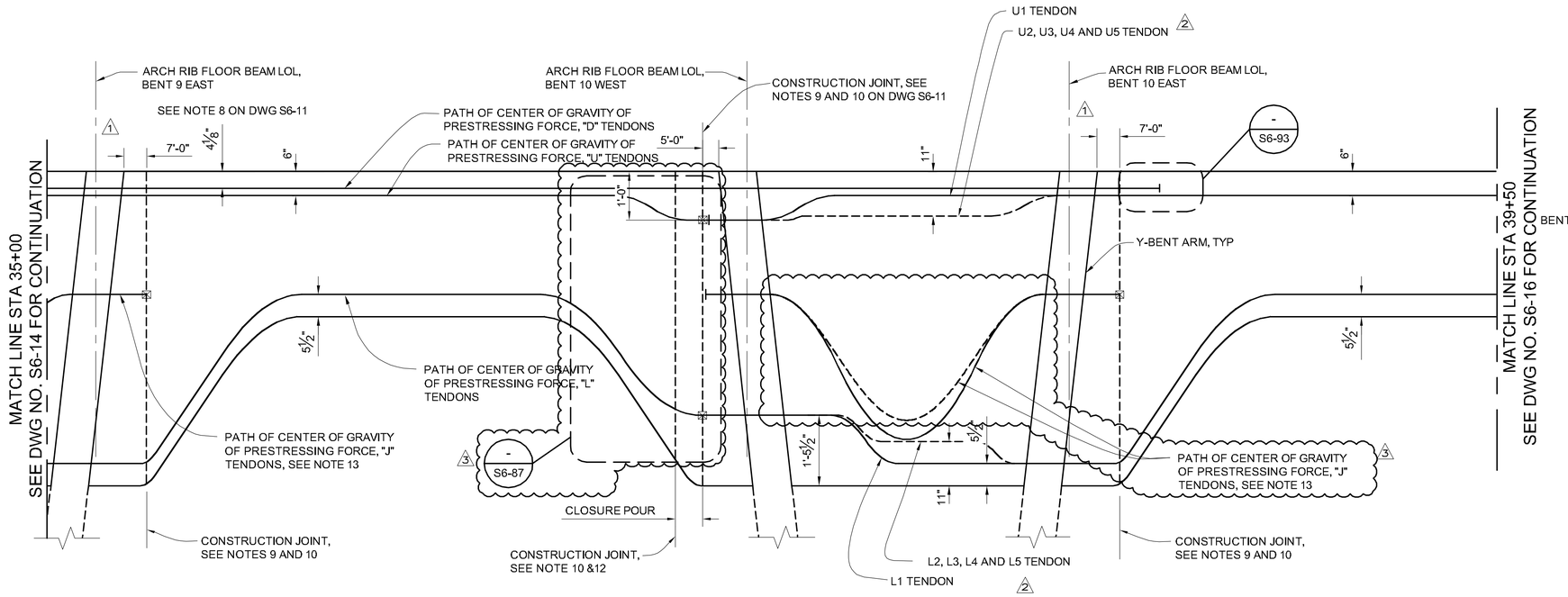

LONGITUDINAL SECTION

SCALE: HORIZ: 1" =20'
VERT: 3/4" =1'-0"

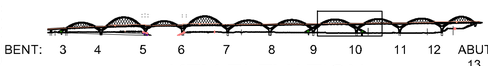

KEY ELEVATION

T.O. 5 Change Order Serial Sketch No. 63 - Page 13 of 26

HNTB
HNTB Corporation
601 W. 5TH STREET SUITE 1000
LOS ANGELES, CALIFORNIA 90071
TEL (213) 403-1000 FAX (213) 403-1001

CITY OF LOS ANGELES DEPARTMENT OF PUBLIC WORKS
BUREAU OF ENGINEERING
ENGINEERING CITY OF LOS ANGELES

NO.	REVISIONS:	DATE:	BY:
1	FLOOR BEAM SPACING MODIFICATION ECO 13R1	12/13/16	MHJ
2	BIM REVISION 5 ECO 59 ECO 63	3/16/18	MHJ
3	BIM REVISION 6	04/27/18	MHJ

STRUCTURE NO. 53C-2329
INDEX NO.

THIS PLAN WAS ELECTRONICALLY SIGNED AND STAMPED.
REGISTERED PROFESSIONAL ENGINEER MICHAEL H. JONES No. S3033 CIVIL STATE OF CALIFORNIA

CITY ENGINEER — DATE: 1/29/2016
GARY LEE MOORE, P.E. — LIC.NO. S3033
DESIGN GROUP
ENGINEER: MICHAEL H. JONES — 1/29/2016
DESIGNED BY: MICHAEL VAN DUYN — 1/29/2016
DRAWN BY: LI ZHANG — 1/29/2016
CHECKED BY: CHARLES REDFIELD — 1/29/2016
APPROVED BY: MICHAEL H. JONES — 1/29/2016

VERTICAL CONTROL: BM 12-04070,1929 (NGVD 29) - 1985 ADJUSTMENT
HORIZONTAL CONTROL: GPS; PID AE 1704, EPOCH 1991.35
SHEET TITLE: DECK FRAMING PLAN NO. 5
PROJECT: SIXTH STREET VIADUCT REPLACEMENT
ADDRESS: SIXTH STREET VIADUCT (WHITTIER BLVD) LOS ANGELES, CA

WORK ORDER NO. E700224F
DRAWING NO. S6-15
SHEET 317 OF 560 SHEETS

THE CITY OF LOS ANGELES OR ITS OFFICERS OR AGENTS SHALL NOT BE RESPONSIBLE FOR THE ACCURACY OR COMPLETENESS OF ELECTRONIC COPIES OF THIS PLAN SHEET.

REVISION DATES (DESIGN STAGE ONLY)

C:\caddlib\pw\pwwestcoast\zhang\dms576831\S6-11-GL01-07.dwg 5/03/18 14:18

Sheet Version 3.0

ADDENDUM 5

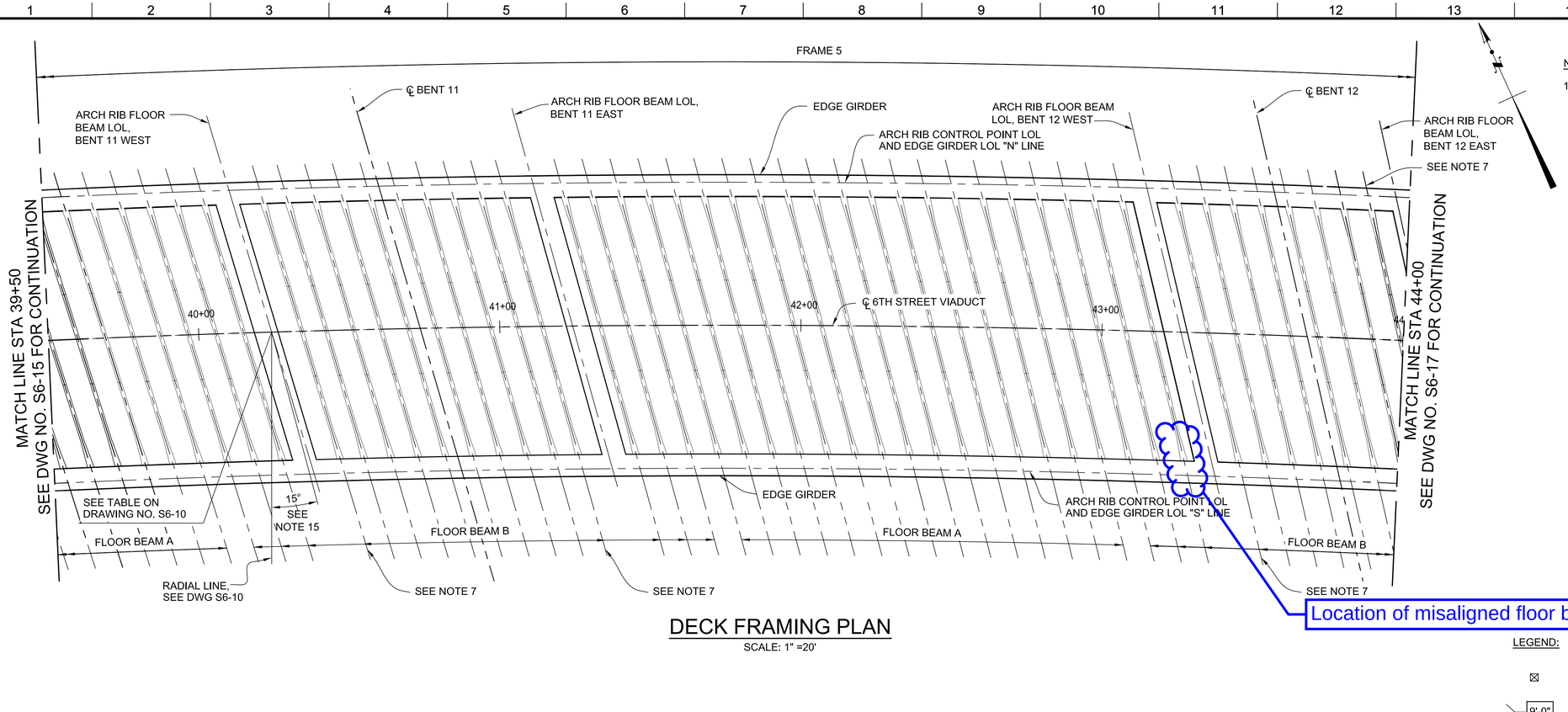

DECK FRAMING PLAN

SCALE: 1" =20'

NOTES:

1. FOR TYPICAL NOTES, SEE DRAWING NOS. S6-10 AND S6-11. WHEN A NOTE IS REFERENCED ON THIS SHEET, SEE DRAWING NO. S6-11 FOR THE NOTE.

LEGEND:

- ⊠ - THEORETICAL POINT OF NO MOVEMENT SEE NOTE 8
- 9'-0" - INDICATES EDGE GIRDER WIDTH MEASURED AT TOP OF DECK

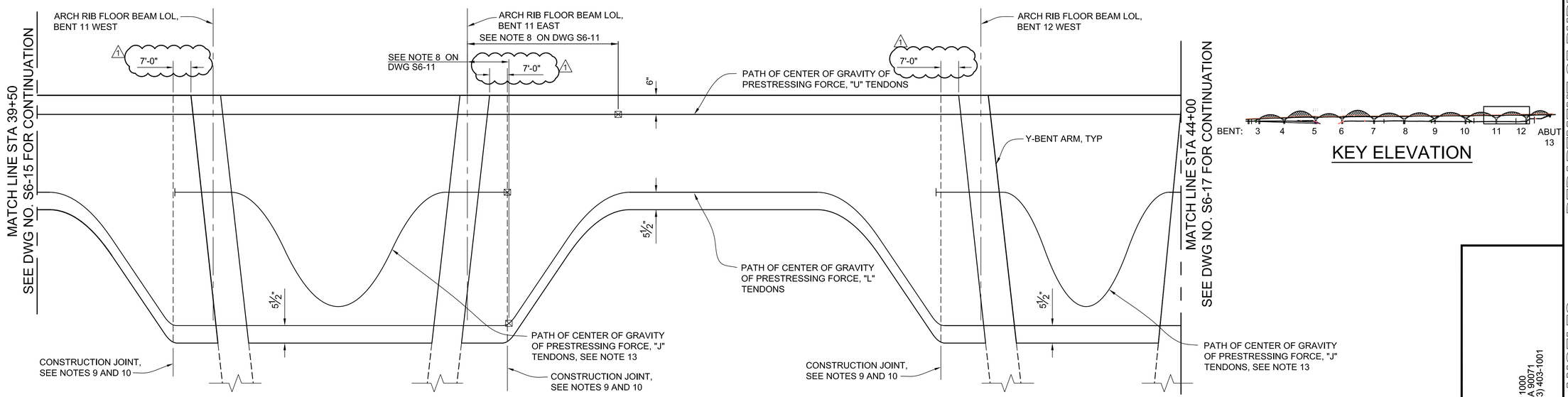

LONGITUDINAL SECTION

SCALE: HORIZ: 1" =20'
VERT: 3/4" =1'-0"

KEY ELEVATION

T.O. 5 - Change Order Sketch No. 13R1 (page 7 of 11)

THE CITY OF LOS ANGELES OR ITS OFFICERS OR AGENTS SHALL NOT BE RESPONSIBLE FOR THE ACCURACY OR COMPLETENESS OF ELECTRONIC COPIES OF THIS PLAN SHEET.

C:\caddlib\pw\pwwestcoast\lzhang\dms57683\S6-11-GL01-07.dwg 12/13/16 10:29

Sheet Version 3.0

REVISION DATES (DESIGN STAGE ONLY)

HNTB
HNTB Corporation
601 W. 5TH STREET SUITE 1000
LOS ANGELES, CALIFORNIA 90071
TEL (213) 403-1000 FAX (213) 403-1001

BUREAU OF ENGINEERING
CITY OF LOS ANGELES
ENGINEERING

NO.	REVISIONS:	DATE	BY:
1	FLOOR BEAM SPACING MODIFICATION	12/13/16	MHJ

STRUCTURE NO. 53C-2329

INDEX NO.

THIS PLAN WAS ELECTRONICALLY SIGNED AND STAMPED.

REGISTERED PROFESSIONAL ENGINEER MICHAEL H. JONES No. S3033 CIVIL STATE OF CALIFORNIA

DEPARTMENT OF PUBLIC WORKS
CITY OF LOS ANGELES

CITY ENGINEER:	GARY LEE MOORE, P.E.
DESIGN GROUP	
ENGINEER:	MICHAEL H. JONES
LIC. NO.	S3033
DATE:	1/29/2016
DESIGNED BY:	MICHAEL VAN DUYN
DATE:	1/29/2016
DRAWN BY:	LI ZHANG
DATE:	1/29/2016
CHECKED BY:	CHARLES REDFIELD
DATE:	1/29/2016
APPROVED BY:	MICHAEL H. JONES
DATE:	1/29/2016

VERTICAL CONTROL:	BM 12-04070,1929 (NGVD 29) – 1985 ADJUSTMENT
HORIZONTAL CONTROL:	GPS; PID AE 1704, EPOCH 1991.35
SHEET TITLE:	DECK FRAMING PLAN NO. 6
PROJECT:	SIXTH STREET VIADUCT REPLACEMENT
ADDRESS:	SIXTH STREET VIADUCT (WHITTIER BLVD) LOS ANGELES, CA

WORK ORDER NO. E700224F

DRAWING NO. S6-16

SHEET 20 OF SHEETS

ADDENDUM 5

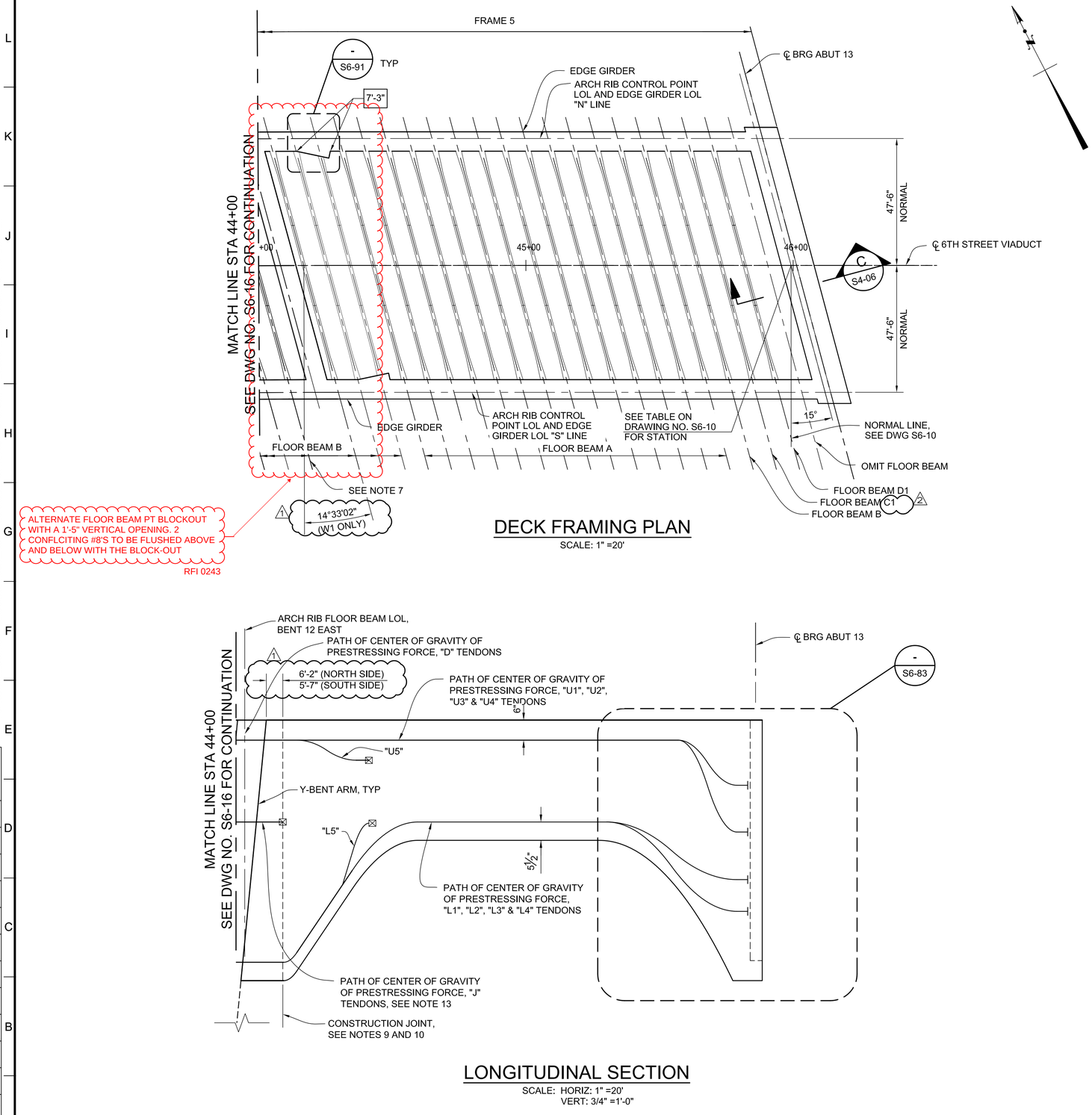

ALTERNATE FLOOR BEAM PT BLOCKOUT WITH A 1'-5" VERTICAL OPENING. 2 CONFLCITING #8'S TO BE FLUSHED ABOVE AND BELOW WITH THE BLOCK-OUT

RFI 0243

DECK FRAMING PLAN

SCALE: 1" =20'

NOTES:

1. FOR TYPICAL NOTES, SEE DRAWING NOS. S6-10 AND S6-11. WHEN A NOTE IS REFERENCED ON THIS SHEET, SEE DRAWING NO. S6-11 FOR THE NOTE.

LEGEND:

⊠ - THEORETICAL POINT OF NO MOVEMENT SEE NOTE 8

9'-0" - INDICATES EDGE GIRDER WIDTH MEASURED AT TOP OF DECK

LONGITUDINAL SECTION

SCALE: HORIZ: 1" =20'
VERT: 3/4" =1'-0"

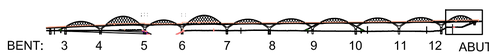

KEY ELEVATION

T.O. 5 - Change Order Serial Sketch No. 11R1 - Page 11 of 15

THE CITY OF LOS ANGELES OR ITS OFFICERS OR AGENTS SHALL NOT BE RESPONSIBLE FOR THE ACCURACY OR COMPLETENESS OF ELECTRONIC COPIES OF THIS PLAN SHEET.

C:\caddlib\pw\pwwestcoast\lzhang\dms57683\S6-11-GL01-07.dwg 4/25/17 12:24

REVISION DATES (DESIGN STAGE ONLY)

Sheet Version 3.0

CITY OF LOS ANGELES DEPARTMENT OF PUBLIC WORKS

BUREAU OF ENGINEERING

ENGINEERING CITY OF LOS ANGELES

NO.	REVISIONS:	DATE	BY:
1.	FLOOR BEAM SPACING MODIFICATION	12/13/16	MHJ
2.	FLOOR BEAM PT CHANGES	03/24/17	MHJ

STRUCTURE NO. 53C-2329

INDEX NO.

THIS PLAN WAS ELECTRONICALLY SIGNED AND STAMPED

REGISTERED PROFESSIONAL ENGINEER MICHAEL H. JONES No. S3033 CIVIL STATE OF CALIFORNIA

GARY LEE MOORE, P.E. CITY ENGINEER

		DESIGN GROUP	LIC. NO.	DATE:
ENGINEER:	MICHAEL H. JONES		S3033	1/29/2016
DESIGNED BY:	MICHAEL VAN DUYN			1/29/2016
DRAWN BY:	LI ZHANG			1/29/2016
CHECKED BY:	CHARLES REDFIELD			1/29/2016
APPROVED BY:	MICHAEL H. JONES			1/29/2016

VERTICAL CONTROL: BM 12-04070,1929 (NGVD 29) - 1985 ADJUSTMENT
HORIZONTAL CONTROL: GPS; PID AE 1704, EPOCH 1991.35

SHEET TITLE: DECK FRAMING PLAN NO. 7

PROJECT: SIXTH STREET VIADUCT REPLACEMENT

ADDRESS: SIXTH STREET VIADUCT (WHITTIER BLVD) LOS ANGELES, CA

HNTB
HNTB Corporation
601 W. 5TH STREET SUITE 1000
LOS ANGELES, CALIFORNIA 90071
TEL (213) 403-1000 FAX (213) 403-1001

WORK ORDER NO. E700224F

DRAWING NO. S6-17

SHEET 319 OF 560 SHEETS

ADDENDUM 5

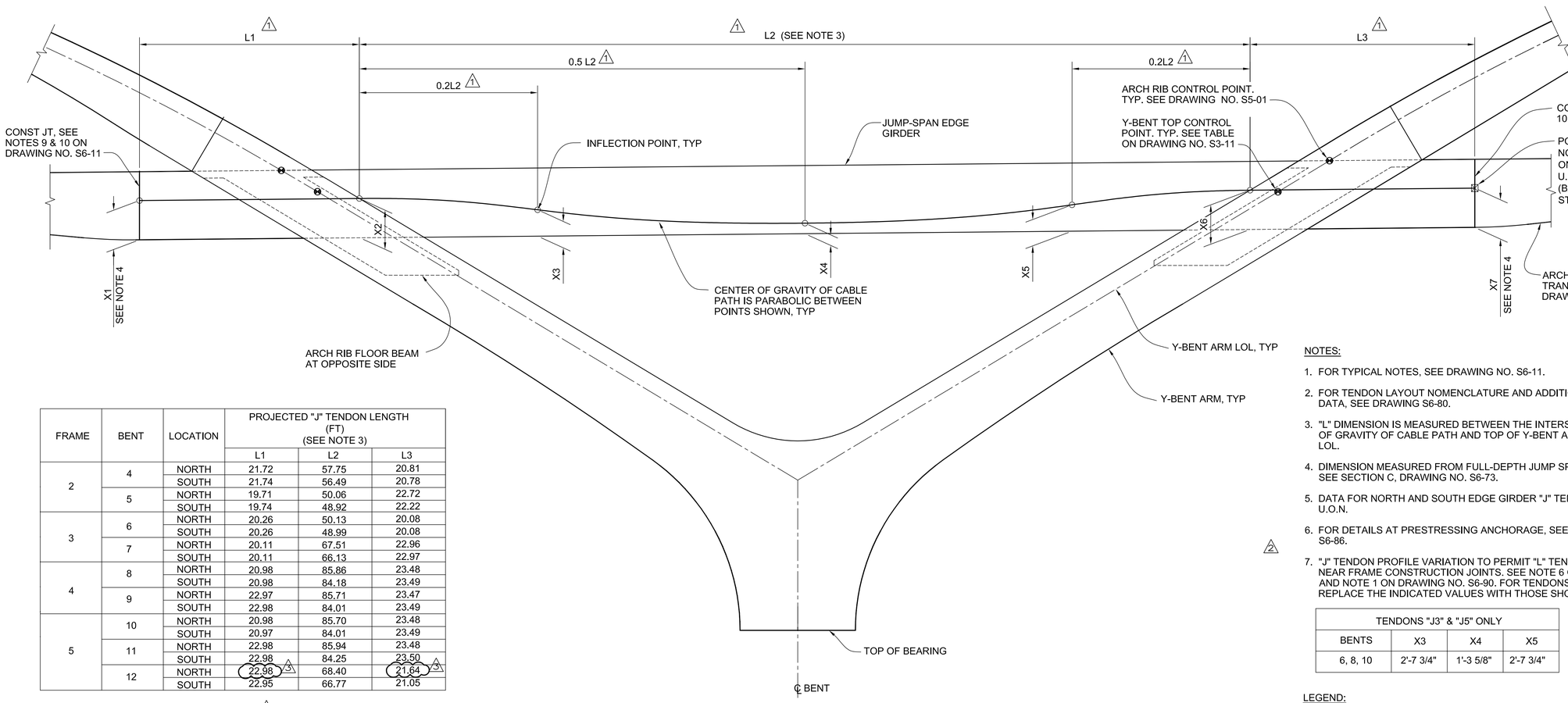

FRAME	BENT	LOCATION	PROJECTED "J" TENDON LENGTH (FT) (SEE NOTE 3)		
			L1	L2	L3
2	4	NORTH	21.72	57.75	20.81
		SOUTH	21.74	56.49	20.78
	5	NORTH	19.71	50.06	22.72
		SOUTH	19.74	48.92	22.22
3	6	NORTH	20.26	50.13	20.08
		SOUTH	20.26	48.99	20.08
	7	NORTH	20.11	67.51	22.96
		SOUTH	20.11	66.13	22.97
4	8	NORTH	20.98	85.86	23.48
		SOUTH	20.98	84.18	23.49
	9	NORTH	22.97	85.71	23.47
		SOUTH	22.98	84.01	23.49
5	10	NORTH	20.98	85.70	23.48
		SOUTH	20.97	84.01	23.49
	11	NORTH	22.98	85.94	23.48
		SOUTH	22.98	84.25	23.50
	12	NORTH	22.98	68.40	21.64
		SOUTH	22.95	66.77	21.05

△3 △3

△1

LONGITUDINAL SECTION - JUMP-SPAN EDGE GIRDER "J" TENDONS

SCALE: 3/16" =1'-0"

FRAME	BENT	P_{JACK} / TENDON (KIPS)	TENDON (SEE NOTE 2)	X1	X2	X3	X4	X5	X6	X7	INITIAL FORCE COEFFICIENT AT ☒ EDGE GIRDER		STRESSING LOCATION
											NORTH	SOUTH	
2	4	1011	J1, J3, J5	3'-9"	3'-9"	2'-6 5/8"	1'-0"	2'-6 5/8"	3'-9"	3'-9"	0.879	0.878	BACK
	5	1011	J1, J3, J5	3'-9"	3'-9"	2'-6 5/8"	1'-0"	2'-6 5/8"	3'-9"	3'-9"	0.867	0.865	AHEAD
3	6 *	1011	J1, J3, J5	3'-9"	3'-9"	2'-6 5/8"	1'-0"	2'-6 5/8"	3'-9"	3'-9"	0.867	0.865	BACK
	7	1011	J1, J3, J5	3'-9"	3'-9"	2'-6 3/4"	1'-0"	2'-6 3/4"	3'-9"	3'-9"	0.890	0.889	AHEAD
4	8 *	1011	J1, J3, J5	3'-9"	3'-9"	2'-6 3/4"	1'-0"	2'-6 3/4"	3'-9"	3'-9"	0.905	0.904	BACK
	9	1011	J1, J3, J5	3'-9"	3'-9"	2'-6 3/4"	1'-0"	2'-6 3/4"	3'-9"	3'-9"	0.905	0.904	BACK
5	10 *	1011	J1, J3, J5	3'-9"	3'-9"	2'-6 3/4"	1'-0"	2'-6 3/4"	3'-9"	3'-9"	0.905	0.904	BACK
	11	1011	J1, J3, J5	3'-9"	3'-9"	2'-6 3/4"	1'-0"	2'-6 3/4"	3'-9"	3'-9"	0.905	0.904	BACK
	12	1011	J1, J3, J5	3'-9"	3'-9"	2'-6 3/4"	1'-0"	2'-6 3/4"	3'-9"	3'-9"	0.892	0.891	BACK

△2 * TENDON "J1" ONLY, SEE NOTE 7

△1

NOTES:

1. FOR TYPICAL NOTES, SEE DRAWING NO. S6-11.
2. FOR TENDON LAYOUT NOMENCLATURE AND ADDITIONAL POST TENSIONING DATA, SEE DRAWING S6-80.
3. "L" DIMENSION IS MEASURED BETWEEN THE INTERSECTIONS OF THE CENTER OF GRAVITY OF CABLE PATH AND TOP OF Y-BENT ARMS ALONG EDGE GIRDER LOL.
4. DIMENSION MEASURED FROM FULL-DEPTH JUMP SPAN SOFFIT FOR CLARITY. SEE SECTION C, DRAWING NO. S6-73.
5. DATA FOR NORTH AND SOUTH EDGE GIRDER "J" TENDONS ARE EQUIVALENT U.O.N.
6. FOR DETAILS AT PRESTRESSING ANCHORAGE, SEE DRAWING NOS. S6-85 AND S6-86.
7. "J" TENDON PROFILE VARIATION TO PERMIT "L" TENDON ANCHORAGE FLARE NEAR FRAME CONSTRUCTION JOINTS. SEE NOTE 6 ON DRAWING NO. S6-87 AND NOTE 1 ON DRAWING NO. S6-90. FOR TENDONS "J3" AND "J5" ONLY REPLACE THE INDICATED VALUES WITH THOSE SHOWN IN THE TABLE BELOW:

△2

TENDONS "J3" & "J5" ONLY			
BENTS	X3	X4	X5
6, 8, 10	2'-7 3/4"	1'-3 5/8"	2'-7 3/4"

LEGEND:

☒ THEORETICAL POINT OF NO MOVEMENT

PRESTRESSING NOTES

JUMP SPAN EDGE GIRDER POST TENSIONING NOTES:

270 KSI; LOW RELAXATION STRAND:

PJACK / TENDON = SEE TABLE
ANCHOR SET = 3/8 in
TOTAL NUMBER OF GIRDERS = 2
FRICTION CURVATURE COEFFICIENT, μ = 0.15
FRICTION WOBBLE COEFFICIENT, k = 0.0002 (1/FT)

CONCRETE: f' c = 6,000 psi @ 28 DAYS
f' ci = 5,000 psi @ TIME OF STRESSING

CONTRACTOR SHALL SUBMIT ELONGATION CALCULATIONS BASED ON INITIAL STRESS AT
☒ = SEE TABLE TIMES JACKING STRESS.

SINGLE END STRESSING SHALL BE PERFORMED AT LOCATIONS INDICATED IN THE TABLE UNDER "STRESSING LOCATION".

FOR POST TENSIONING GENERAL NOTES AND ALLOWABLE TEMPORARY FORCE VARIATION DURING STRESSING, SEE DRAWING S6-80.

△1

T.O. 5 Change Order Serial Sketch No. 63 - Page 14 of 26

HNTB
HNTB Corporation
601 W. 5TH STREET SUITE 1000
LOS ANGELES, CALIFORNIA 90071
TEL (213) 403-1000 FAX (213) 403-1001

BUREAU OF ENGINEERING
ENGINEERING
CITY OF LOS ANGELES

NO.	REVISIONS:	DATE:	BY:
1.	SUBMITTAL 0109 R1 REVISIONS ECO 51	12/01/17	M/D
2.	ABUTMENT 13 / BENT 13 BIM ECO 50R1	12/15/17	M/D
3.	BIM REVISION 6 ECO 63	4/27/18	M/D

STRUCTURE NO. 53C-2329

INDEX NO.

THIS PLAN WAS ELECTRONICALLY SIGNED AND STAMPED

REGISTERED PROFESSIONAL ENGINEER GARY LEE MOORE No. S3033 CIVIL STATE OF CALIFORNIA

CITY OF LOS ANGELES DEPARTMENT OF PUBLIC WORKS

GARY LEE MOORE, P.E. CITY ENGINEER

		DATE:
ENGINEER:	MICHAEL H. JONES	1/29/2016
DESIGNED BY:	MICHAEL VAN DUYN	1/29/2016
DRAWN BY:	LI ZHANG	1/29/2016
CHECKED BY:	CHARLES REDFIELD	1/29/2016
APPROVED BY:	MICHAEL H. JONES	1/29/2016

DESIGN GROUP LIC.NO. S3033

VERTICAL CONTROL: BM 12-04070.1928 (NGVD 29) - 1985 ADJUSTMENT
HORIZONTAL CONTROL: GPS; PID AE 1704; EPOCH 1991.35

SHEET TITLE: JUMP SPAN EDGE GIRDER PRESTRESSING DETAILS

PROJECT: SIXTH STREET VIADUCT REPLACEMENT

ADDRESS: SIXTH STREET VIADUCT (WHITTIER BLVD) LOS ANGELES, CA

WORK ORDER NO. E700224F

DRAWING NO. S6-18

SHEET 320 OF 560 SHEETS

THE CITY OF LOS ANGELES OR ITS OFFICERS OR AGENTS SHALL NOT BE RESPONSIBLE FOR THE ACCURACY OR COMPLETENESS OF ELECTRONIC COPIES OF THIS PLAN SHEET.

REVISION DATES (DESIGN STAGE ONLY)

C:\caddlib\pw\pwwestcoast\zhang\dms57683\S6-18-BND01.dwg 5/01/18 14:35

Sheet Version 3.0

ADDENDUM 5

NOTES:

1. FOR EDGE GIRDER POST TENSIONING NOTES, SEE DRAWING S6-80.
2. FOR "J" TENDON DATA, SEE DRAWING S6-18.
3. FOR FRAME 1 POST TENSIONING DATA, SEE DRAWING S6-02.
4. FOR VIADUCT FRAME SEGMENT PHASING, SEE DRAWING S9-07.
5. FOR POST TENSIONING ANCHORAGE LAYOUTS, SEE DRAWING:
   - FRAME CONST JT..... S6-77
   - BENT 3..... S6-82
   - ABUTMENT 13..... S6-84
   - TYP JUMP SPAN..... S6-86
   - SPAN 12 DEAD END..... S6-92
   - DECK TENDONS..... S6-93

LEGEND:

- JACKING END
- DEAD END
- OVER HEAD/SOFFIT JACKING END
- PRESTRESSING COUPLER

2 x 4-23 Ø 0.6" — 2 - LOCATION (NORTH & SOUTH)

4 - NUMBER OF DUCTS
23 - NUMBER OF STRANDS
Ø 0.6 - NOMINAL STRAND DIAMETER
D - DECK PRESTRESSING
U - EDGE GIRDER UPPER PRESTRESSING
L - EDGE GIRDER LOWER PRESTRESSING
J - JUMP SPAN EDGE GIRDER PRESTRESSING

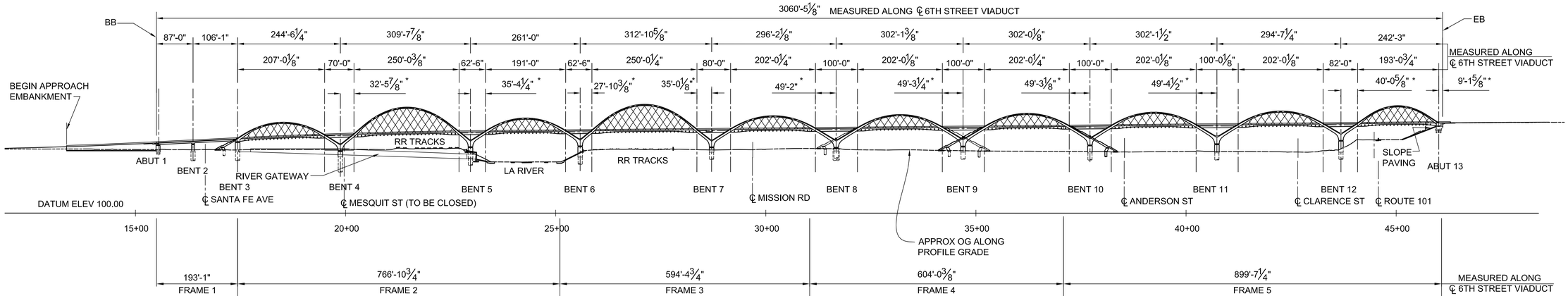

DEVELOPED ELEVATION

SCALE: 1" = 120'

* DIMENSIONS MEASURED ALONG ℄ 6TH STREET VIADUCT

TENDON:

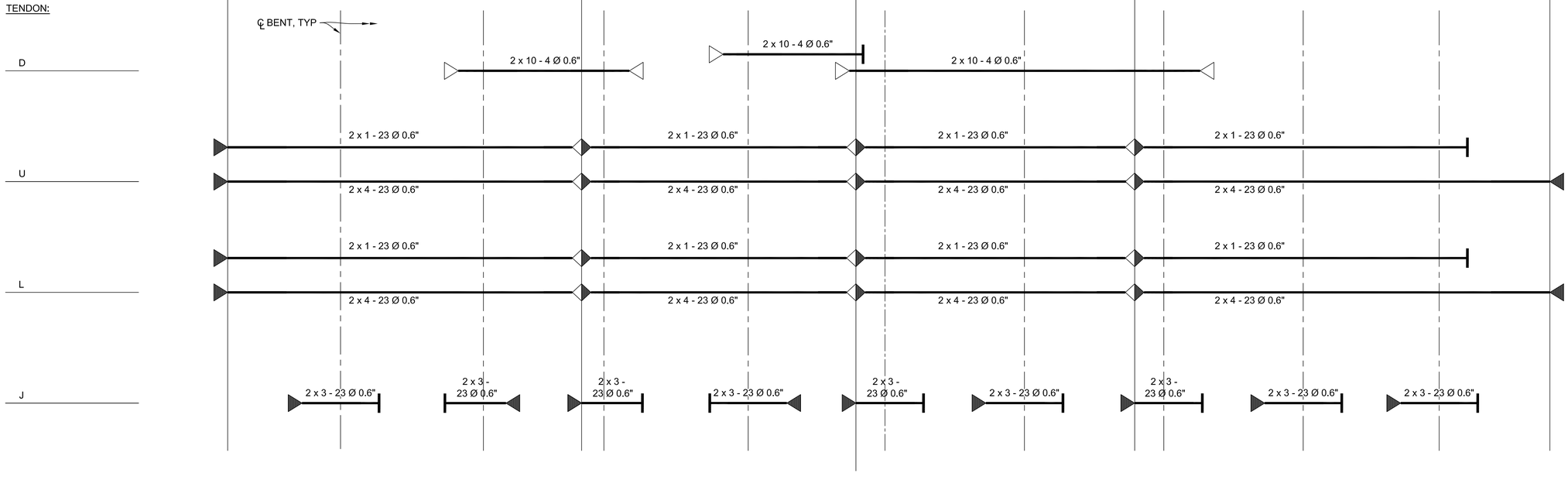

EDGE GIRDER PRESTRESSING LAYOUT

NO SCALE

BUREAU OF ENGINEERING OFFICIAL RECORD

HNTB
HNTB Corporation
601 W. 5TH STREET SUITE 1000
LOS ANGELES, CALIFORNIA 90071
TEL (213) 403-1000 FAX (213) 403-1001

CITY OF LOS ANGELES — DEPARTMENT OF PUBLIC WORKS — BUREAU OF ENGINEERING

ENGINEERING — CITY OF LOS ANGELES

STRUCTURE NO. 53C-2329

INDEX NO. P-38113

NO.	REVISIONS:	DATE	BY:

REGISTERED PROFESSIONAL ENGINEER — MICHAEL H. JONES — No. S3033 — CIVIL — STATE OF CALIFORNIA

THIS PLAN WAS ELECTRONICALLY SIGNED AND STAMPED.

GARY LEE MOORE, P.E.	CITY ENGINEER	DATE: 1/29/2016
	DESIGN GROUP	
ENGINEER:	MICHAEL H. JONES	LIC. NO. S3033 — 1/29/2016
DESIGNED BY:	MICHAEL VAN DUYN	1/29/2016
DRAWN BY:	LI ZHANG	1/29/2016
CHECKED BY:	CHARLES REDFIELD	1/29/2016
APPROVED BY:	MICHAEL H. JONES	1/29/2016

VERTICAL CONTROL: BM 12-04070, 1929 (NGVD 29) - 1985 ADJUSTMENT
HORIZONTAL CONTROL: GPS; PID AE 1704, EPOCH 1991.35

SHEET TITLE: EDGE GIRDER PRESTRESSING LAYOUT

PROJECT: SIXTH STREET VIADUCT REPLACEMENT

ADDRESS: SIXTH STREET VIADUCT (WHITTIER BLVD) LOS ANGELES, CA

WORK ORDER NO. E700224F

DRAWING NO. S6-20

SHEET 321 OF 560 SHEETS

THE CITY OF LOS ANGELES OR ITS OFFICERS OR AGENTS SHALL NOT BE RESPONSIBLE FOR THE ACCURACY OR COMPLETENESS OF ELECTRONIC COPIES OF THIS PLAN SHEET.

C:\caddlib\pw\pwwestcoast\zhang\dms57683\S6-20-EGL01.dwg 6/27/16 18:05

REVISION DATES (DESIGN STAGE ONLY)

Sheet Version 3.0

ADDENDUM 5

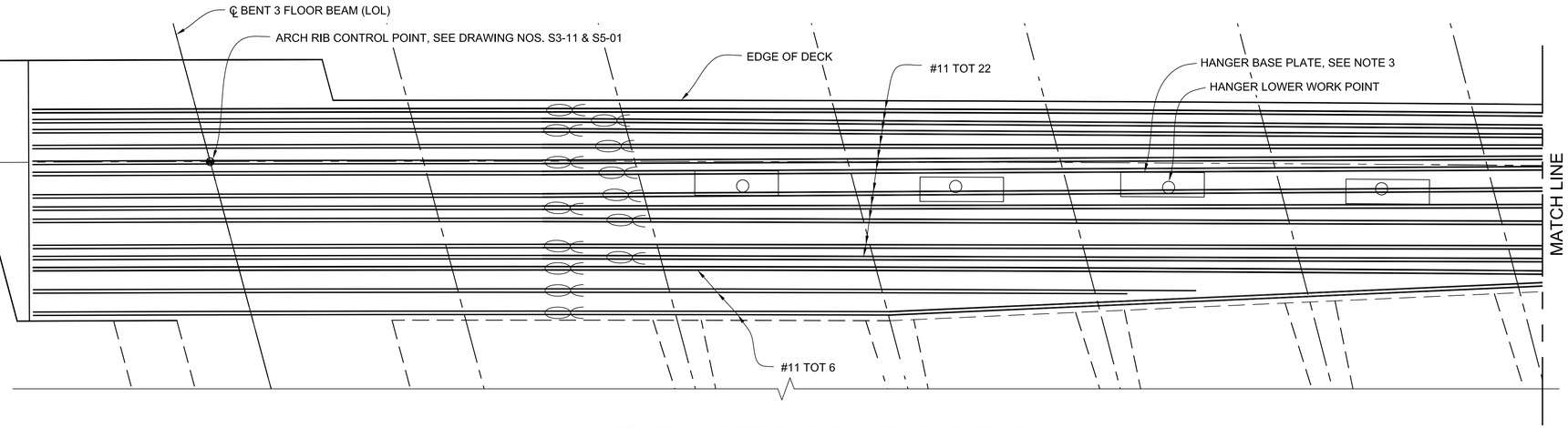

EDGE GIRDER TOP REINFORCEMENT

SCALE: 3/8" =1'-0"

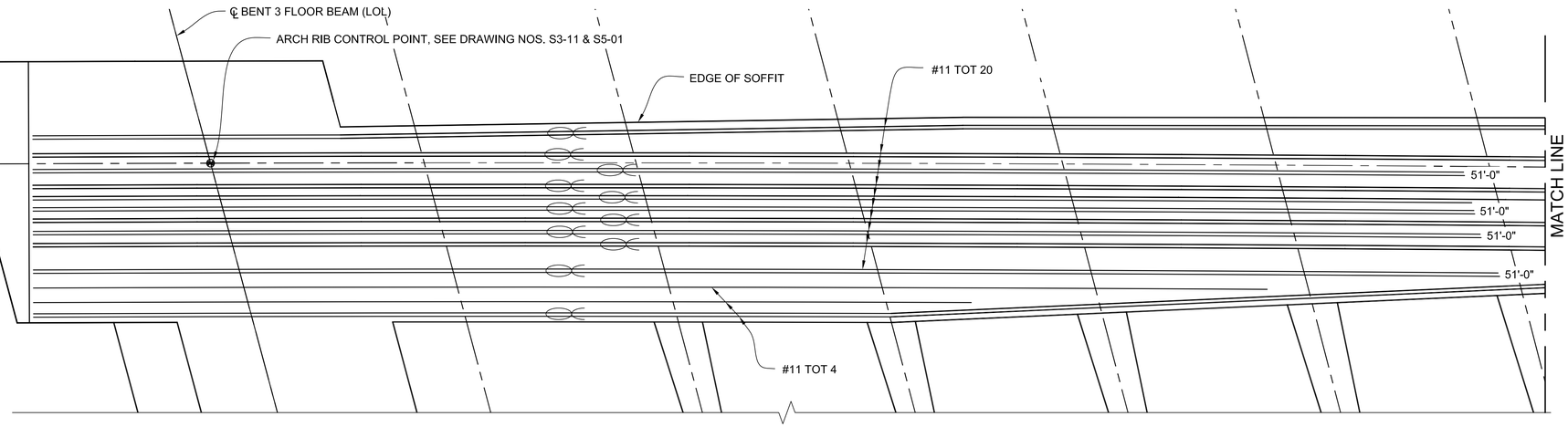

EDGE GIRDER BOTTOM REINFORCEMENT

SCALE: 3/8" =1'-0"

NOTES:

1. TRANSVERSE REINFORCEMENT SHALL BE PLACED RADIALLY OR NORMAL TO ℄ 6TH STREET VIADUCT.
2. FOR TRANSVERSE REINFORCEMENT LAYOUT MODIFICATION AT FLOOR BEAM POST TENSIONING ANCHORAGE LOCATIONS, SEE DRAWING S7-04.
3. FOR HANGER BRACKET AND EMBED DEPICTION, SEE DRAWING S6-72.
4. FOR EDGE GIRDER POST TENSIONING DETAILS, SEE DRAWINGS S6-20 AND S6-80 THROUGH S6-94.
5. NORTH EDGE GIRDER SHOWN, SOUTH EDGE GIRDER SIMILAR AND SYMMETRIC ABOUT ℄ 6TH ST VIADUCT.
6. DIMENSION AT END OF BARS INDICATES LENGTH FROM NEAREST BENT, ARCH RIB OR ABUTMENT FLOOR BEAM LOL.
7. FOR ADDITIONAL REINFORCEMENT TERMINATION DETAIL, SEE DETAIL 1, DRAWING S5-23.
8. FOR EDGE GIRDER STIRRUP DETAILS AT Y-BENT JOINT, SEE DRAWING S3-24.
9. FOR STIRRUP TYPES AND BUNDLE DETAILS, SEE TIE DETAIL ON DRAWING NO. S6-76.

LEGEND:

- BUNDLED BARS
- EMBEDDED PULL BOX (SEE DRAWING NO. SL-404)
- SURFACE MOUNTED JUNCTION BOX (SEE DRAWING NO. SL-404)
- HANGER BASE PLATE WITH WORK POINT



KEY ELEVATION

1. The rectangular shaped box with a circle does represent hanger brackets. Drawing S6-87 represents the typical transition of the widened edge girder at construction joints at Bents 6, 8 and 10 in arch spans to the typical edge girder width of 7'-3". See Note 3 on Drawing S6-87. All hanger work point locations are provided in Drawings S5-49 through S5-74. Provided dimensions and stations should always be used and drawings should never be scaled. The PT profile is provided in the Prestress Elevation. This elevation is applicable at all frame construction joints. See Note 6 on Drawing S6-87 for further information.

2. At the "Inside Eccentricity" and "Outside Eccentricity", all details below the baseplate are identical. Therefore, details below the baseplate at the Outside Eccentricity have not been repeated. Standard bridge detailing practice dictates that dimensions and details are only shown once to avoid confusion. This practice differs from shop drawings where details are repeated often to assist with fabrication. Details should not be scaled. Typical locations of PT ducts are provided on Drawing S6-72.

3. At the first, second, and third lower hanger bracket, note 13 on Drawing S5-72 provides requirements when preparing shop drawings for hanger brackets at these locations.

4. Deck drain required locations at Arch Spans are depicted on Drawing S8-30. These locations should be used in conjunction with Drawing S8-32 to further establish the location of the deck inlets. Any location between the arch rib floor beam and the first typical floor beam that complies with the framing requirements of Drawing S8-32 is acceptable.

5. During previous discussions with SSW, it was determined that deck drainage piping should remain outside of the edge girder to avoid conflict with edge girder reinforcement. This slight adjustment will be recorded on the as-built drawings.

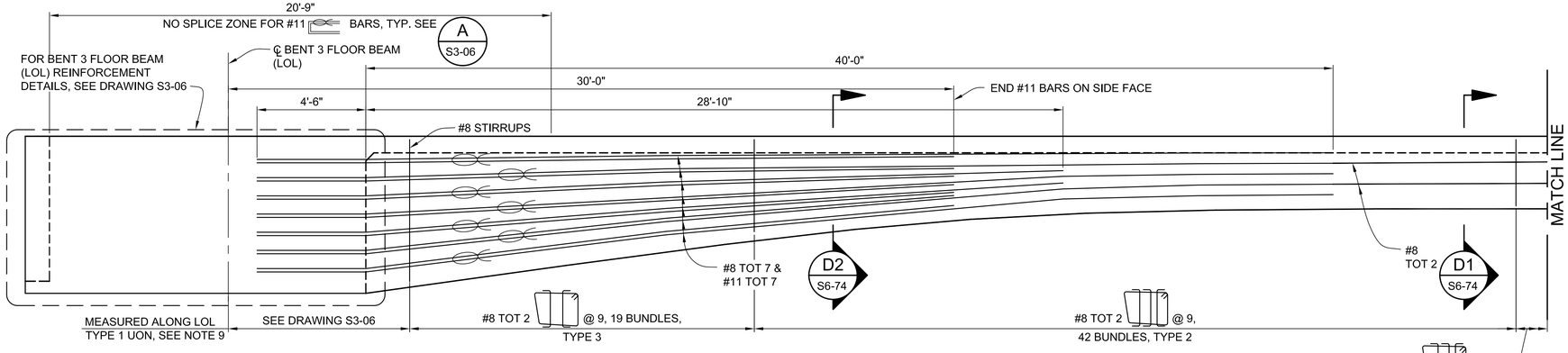

LONGITUDINAL SECTION

SCALE: 3/8" =1'-0"

HNTB
HNTB Corporation
601 W. 5TH STREET, SUITE 1000
LOS ANGELES, CALIFORNIA 90071
TEL (213) 403-1000 FAX (213) 403-1001

BUREAU OF ENGINEERING
OFFICIAL RECORD

CITY OF LOS ANGELES
DEPARTMENT OF PUBLIC WORKS
BUREAU OF ENGINEERING

ENGINEERING
CITY OF LOS ANGELES

NO.	REVISIONS:	DATE:	BY:

STRUCTURE NO. 53C-2329

INDEX NO. P-38113

THIS PLAN WAS ELECTRONICALLY SIGNED AND STAMPED

REGISTERED PROFESSIONAL ENGINEER MICHAEL H. JONES No. S3033 CIVIL STATE OF CALIFORNIA

GARY LEE MOORE, P.E. CITY ENGINEER

		DATE:
ENGINEER:	MICHAEL H. JONES DESIGN GROUP	1/29/2016
DESIGNED BY:	MICHAEL VAN DUYN LIC. NO. S3033	1/29/2016
DRAWN BY:	LI ZHANG	1/29/2016
CHECKED BY:	CHARLES REDFIELD	1/29/2016
APPROVED BY:	MICHAEL H. JONES	1/29/2016

CITY OF LOS ANGELES DEPARTMENT OF PUBLIC WORKS

VERTICAL CONTROL: BM 12-04070, 1929 (NGVD 29) - 1985 ADJUSTMENT
HORIZONTAL CONTROL: GPS; PID AE 1704, EPOCH 1991.35

SHEET TITLE: EDGE GIRDER REINFORCEMENT DETAILS NO. 1

PROJECT: SIXTH STREET VIADUCT REPLACEMENT

ADDRESS: SIXTH STREET VIADUCT (WHITTIER BLVD) LOS ANGELES, CA

WORK ORDER NO. E700224F

DRAWING NO. S6-21

SHEET 322 OF 560 SHEETS

THE CITY OF LOS ANGELES OR ITS OFFICERS OR AGENTS SHALL NOT BE RESPONSIBLE FOR THE ACCURACY OR COMPLETENESS OF ELECTRONIC COPIES OF THIS PLAN SHEET.

C:\caddlib\pw\pwwestcost\zhang\dms57683\S6-21-G001-47.dwg 6/28/16 17:26

REVISION DATES (DESIGN STAGE ONLY)

Sheet Version 3.0

ADDENDUM 5

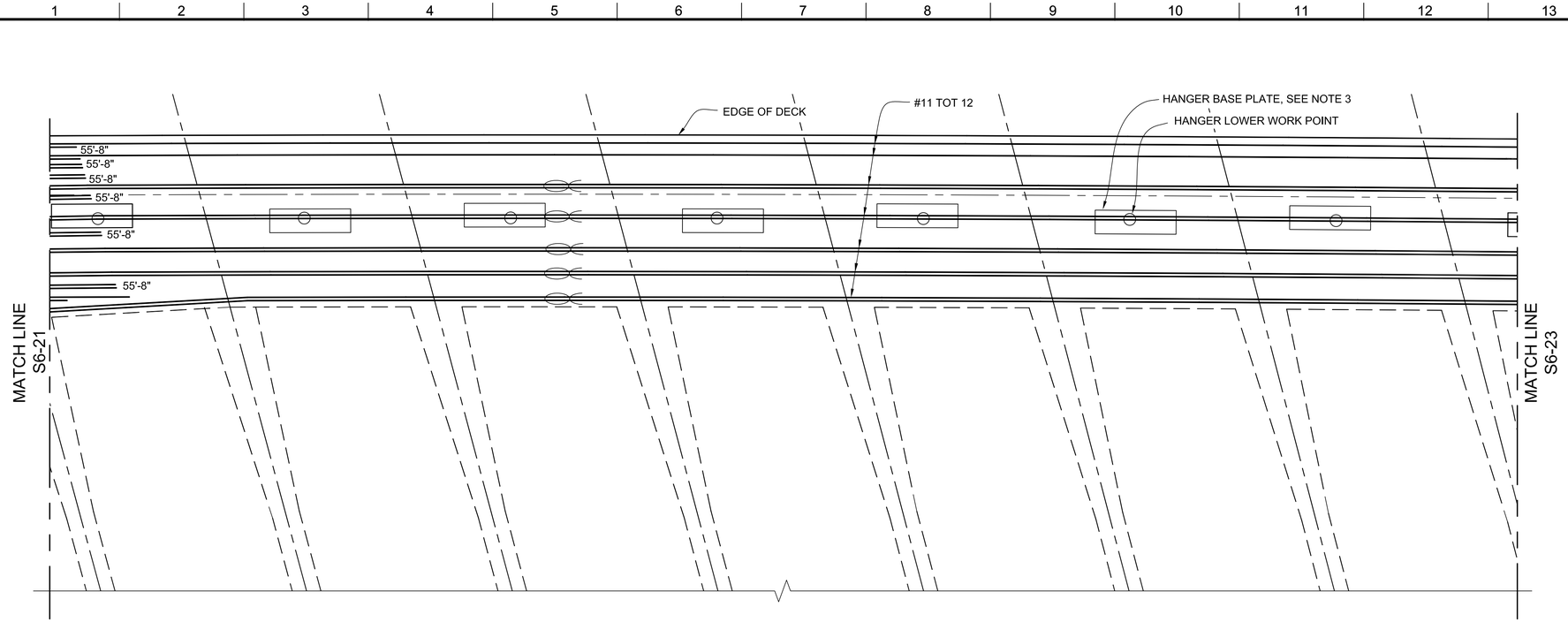

EDGE GIRDER TOP REINFORCEMENT

SCALE: 3/8" =1'-0"

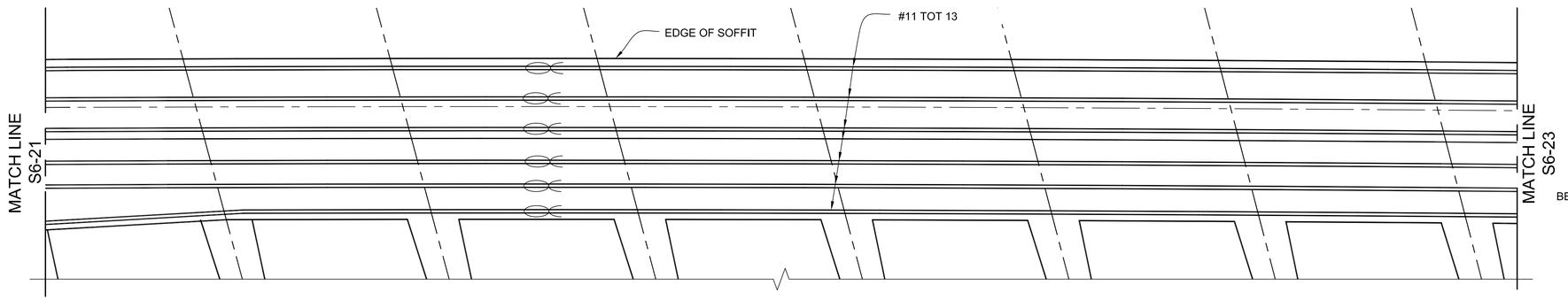

EDGE GIRDER BOTTOM REINFORCEMENT

SCALE: 3/8" =1'-0"

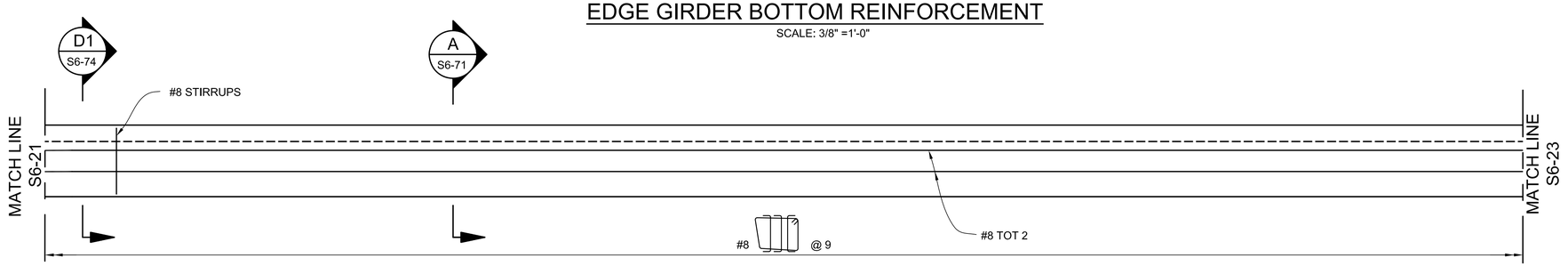

LONGITUDINAL SECTION

SCALE: 3/8" =1'-0"

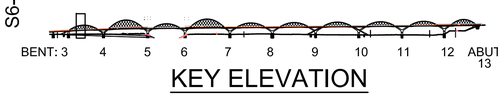

KEY ELEVATION

NOTES:

1. FOR NOTES AND LEGEND, SEE DRAWING S6-21.

THE CITY OF LOS ANGELES OR ITS OFFICERS OR AGENTS SHALL NOT BE RESPONSIBLE FOR THE ACCURACY OR COMPLETENESS OF ELECTRONIC COPIES OF THIS PLAN SHEET.

REVISION DATES (DESIGN STAGE ONLY)

C:\caddlib\pw\pwwestcoast\lzhang\dms57683\S6-21-GD01-47.dwg 6/28/16 17:26

Sheet Version 3.0

BUREAU OF ENGINEERING

ENGINEERING — CITY OF LOS ANGELES

NO.	REVISIONS:	DATE	BY:

STRUCTURE NO. 53C-2329

INDEX NO. P-38113

THIS PLAN WAS ELECTRONICALLY SIGNED AND STAMPED.

REGISTERED PROFESSIONAL ENGINEER — MICHAEL H. JONES — No. S3033 — CIVIL — STATE OF CALIFORNIA

BUREAU OF PUBLIC WORKS — CITY OF LOS ANGELES — DEPARTMENT OF PUBLIC WORKS

GARY LEE MOORE, P.E.	CITY ENGINEER	DATE: 1/29/2016
ENGINEER:	DESIGN GROUP	LIC. NO. S3033 — 1/29/2016
DESIGNED BY:	MICHAEL H. JONES / MICHAEL VAN DUYN	1/29/2016
DRAWN BY:	LI ZHANG	1/29/2016
CHECKED BY:	CHARLES REDFIELD	1/29/2016
APPROVED BY:	MICHAEL H. JONES	1/29/2016

VERTICAL CONTROL: BM 12-04070, 1929 (NGVD 29) - 1985 ADJUSTMENT
HORIZONTAL CONTROL: GPS; PID AE 1704, EPOCH 1991.35

SHEET TITLE: EDGE GIRDER REINFORCEMENT DETAILS NO. 2

PROJECT: SIXTH STREET VIADUCT REPLACEMENT

ADDRESS: SIXTH STREET VIADUCT (WHITTIER BLVD) LOS ANGELES, CA

HNTB
HNTB Corporation
601 W. 5TH STREET SUITE 1000
LOS ANGELES, CALIFORNIA 90071
TEL (213) 403-1000 FAX (213) 403-1001

BUREAU OF ENGINEERING — OFFICIAL RECORD

WORK ORDER NO. E700224F

DRAWING NO. S6-22

SHEET 323 OF 560 SHEETS

ADDENDUM 5

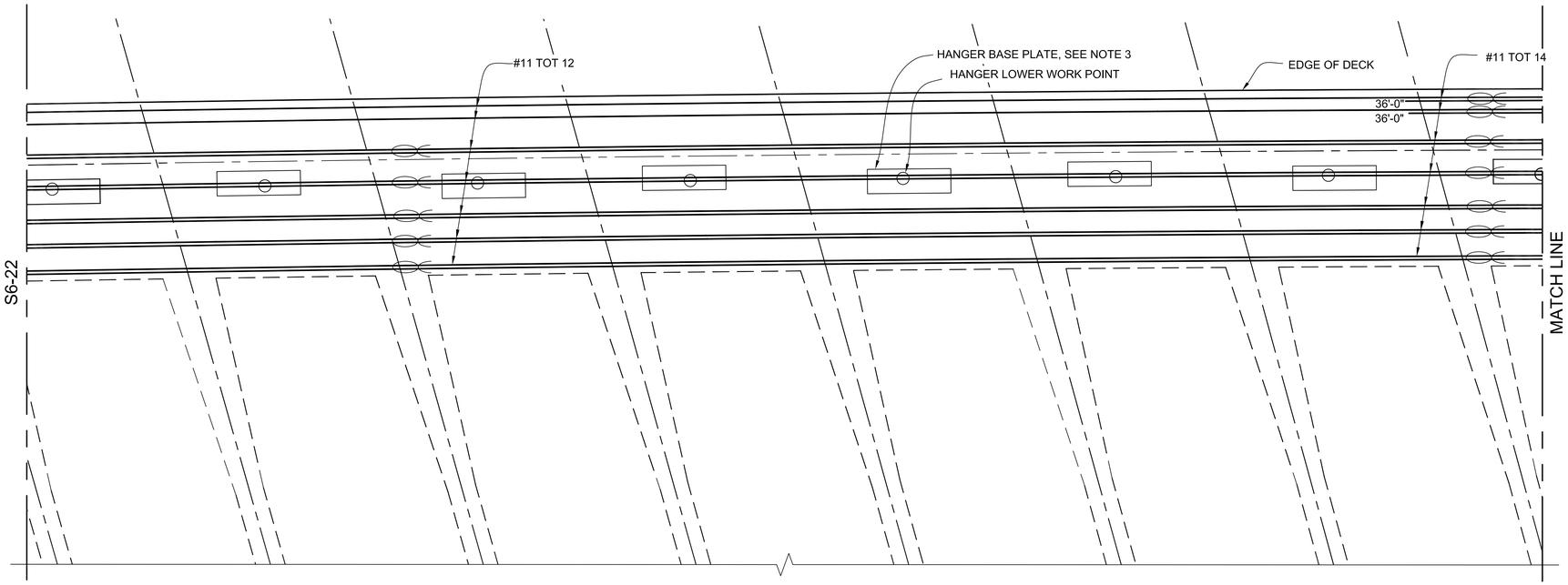

EDGE GIRDER TOP REINFORCEMENT

SCALE: 3/8" =1'-0"

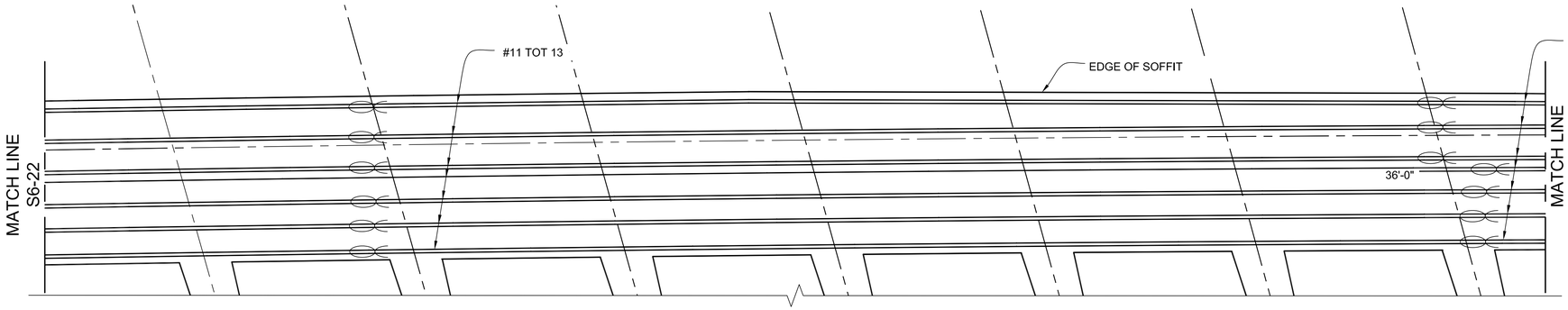

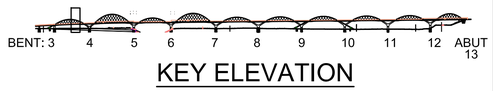

KEY ELEVATION

EDGE GIRDER BOTTOM REINFORCEMENT

SCALE: 3/8" =1'-0"

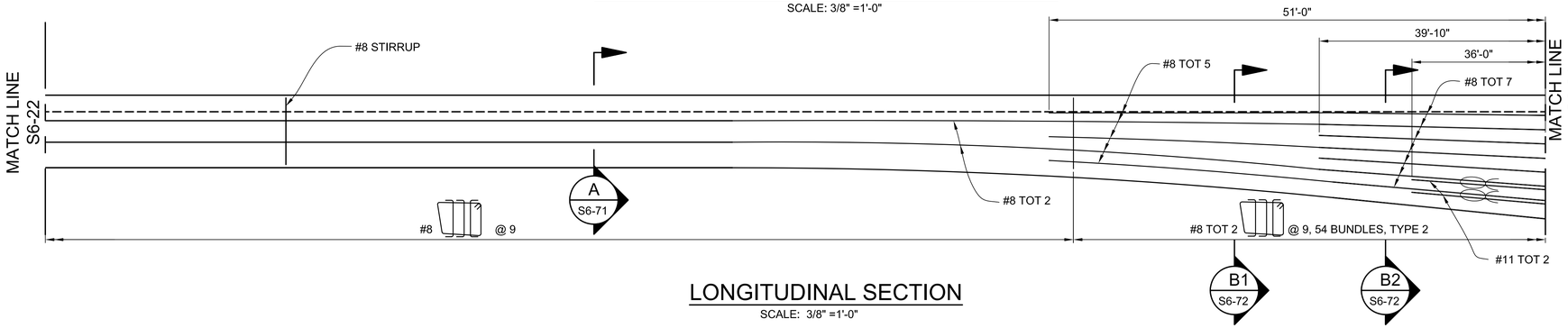

LONGITUDINAL SECTION

SCALE: 3/8" =1'-0"

NOTES:

1. FOR NOTES AND LEGEND, SEE DRAWING S6-21.

THE CITY OF LOS ANGELES OR ITS OFFICERS OR AGENTS SHALL NOT BE RESPONSIBLE FOR THE ACCURACY OR COMPLETENESS OF ELECTRONIC COPIES OF THIS PLAN SHEET.

C:\caddlib\pw\pwwestcoast\lzhang\dms57683\S6-21-GD01-47.dwg 6/28/16 17:26

REVISION DATES (DESIGN STAGE ONLY)

Sheet Version 3.0

BUREAU OF ENGINEERING

ENGINEERING
CITY OF LOS ANGELES

NO.	REVISIONS:	DATE	BY:

STRUCTURE NO. 53C-2329

INDEX NO. P-38113

THIS PLAN WAS ELECTRONICALLY SIGNED AND STAMPED.

REGISTERED PROFESSIONAL ENGINEER MICHAEL H. JONES No. S3033 CIVIL STATE OF CALIFORNIA

CITY OF LOS ANGELES DEPARTMENT OF PUBLIC WORKS

GARY LEE MOORE, P.E. CITY ENGINEER

		DATE:
ENGINEER:	MICHAEL H. JONES	1/29/2016
DESIGN GROUP	LIC. NO. S3033	1/29/2016
DESIGNED BY:	MICHAEL VAN DUYN	1/29/2016
DRAWN BY:	LI ZHANG	1/29/2016
CHECKED BY:	CHARLES REDFIELD	1/29/2016
APPROVED BY:	MICHAEL H. JONES	1/29/2016

VERTICAL CONTROL: BM 12-04070,1929 (NGVD 29) - 1985 ADJUSTMENT
HORIZONTAL CONTROL: GPS; PID AE 1704, EPOCH 1991.35

SHEET TITLE: EDGE GIRDER REINFORCEMENT DETAILS NO. 3

PROJECT: SIXTH STREET VIADUCT REPLACEMENT

ADDRESS: SIXTH STREET VIADUCT (WHITTIER BLVD) LOS ANGELES, CA

HNTB
HNTB Corporation
601 W. 5TH STREET SUITE 1000
LOS ANGELES, CALIFORNIA 90071
TEL (213) 403-1000 FAX (213) 403-1001

BUREAU OF ENGINEERING OFFICIAL RECORD

WORK ORDER NO. E700224F

DRAWING NO. S6-23

SHEET 324 OF 560 SHEETS

ADDENDUM 5

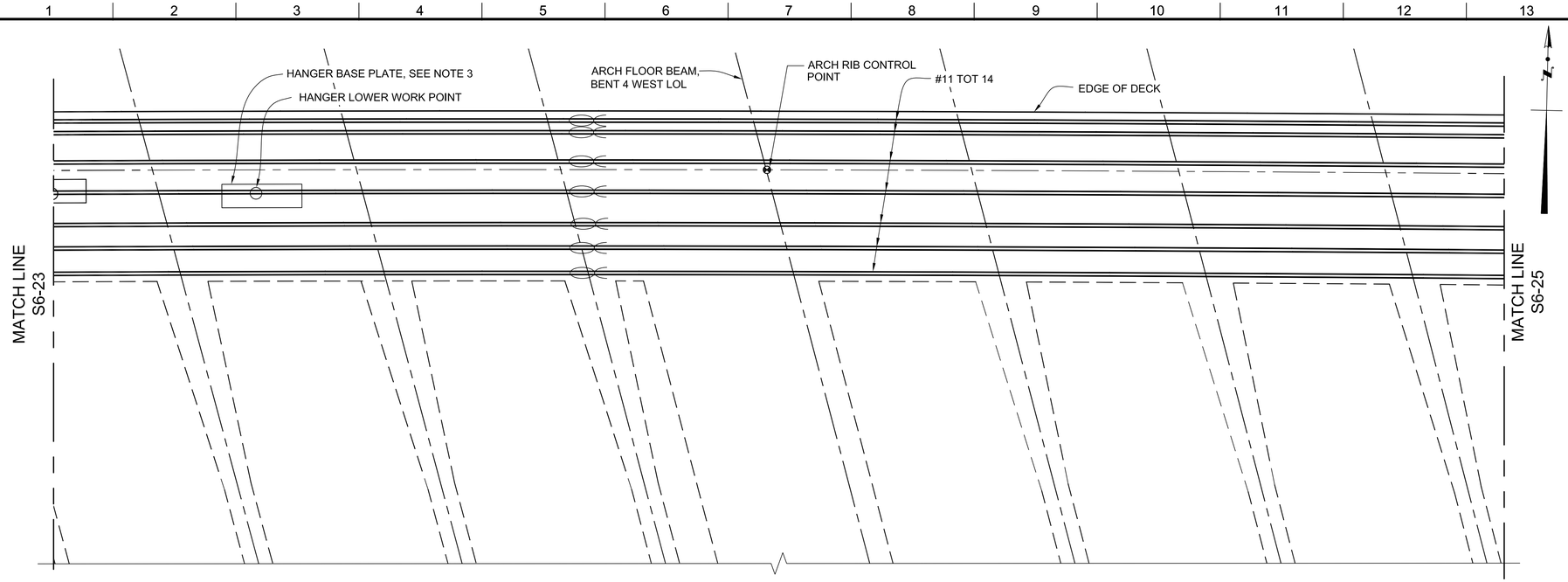

EDGE GIRDER TOP REINFORCEMENT

SCALE: 3/8" =1'-0"

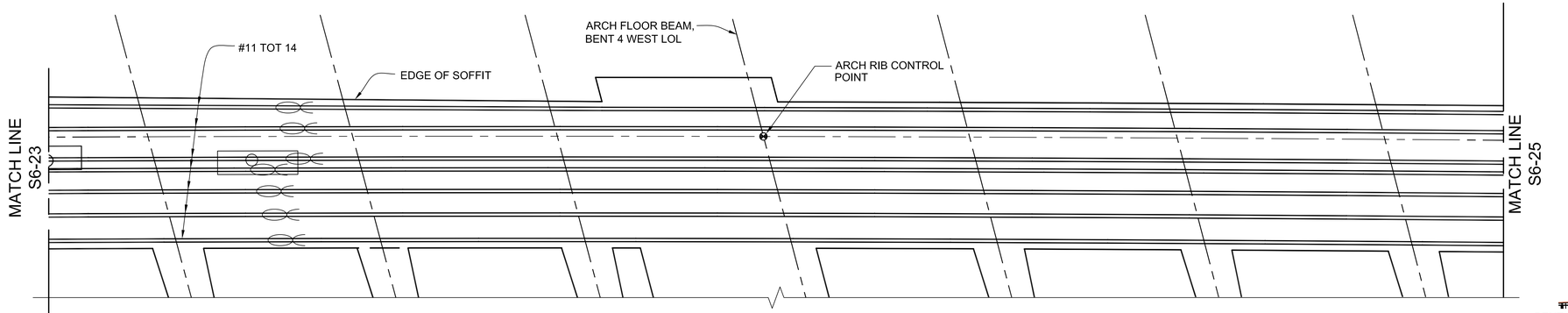

EDGE GIRDER BOTTOM REINFORCEMENT

SCALE: 3/8" =1'-0"

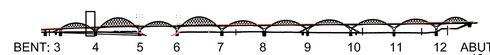

KEY ELEVATION

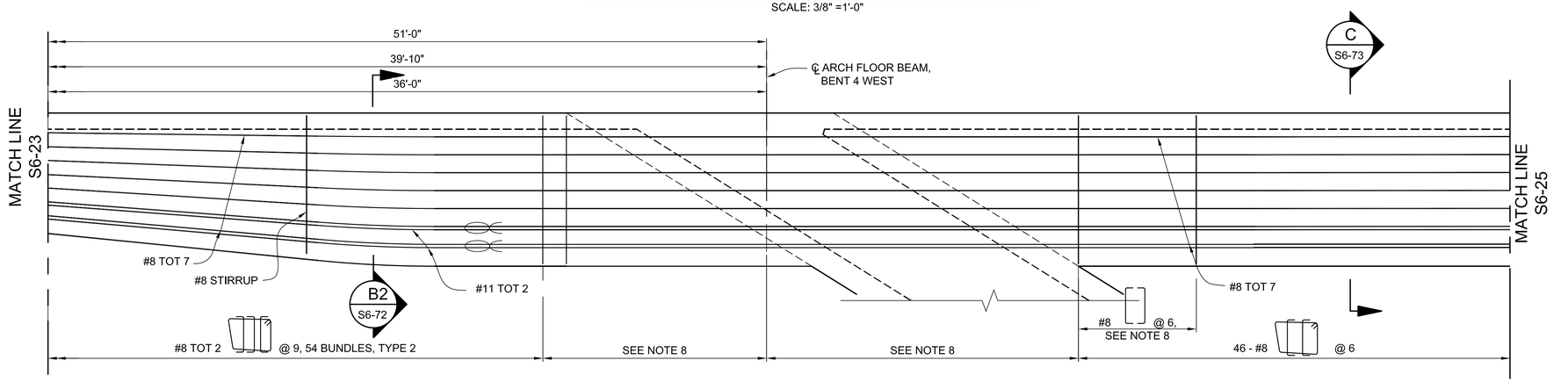

LONGITUDINAL SECTION

SCALE: 3/8" =1'-0"

NOTES:

1. FOR NOTES AND LEGEND, SEE DRAWING S6-21.

BUREAU OF ENGINEERING

ENGINEERING
CITY OF LOS ANGELES

STRUCTURE NO. 53C-2329

INDEX NO. P-38113

NO.	REVISIONS:	DATE	BY:

REGISTERED PROFESSIONAL ENGINEER MICHAEL H. JONES No. S3033 CIVIL STATE OF CALIFORNIA

"THIS PLAN WAS ELECTRONICALLY SIGNED AND STAMPED."

CITY OF LOS ANGELES DEPARTMENT OF PUBLIC WORKS

GARY LEE MOORE, P.E.	CITY ENGINEER		
DESIGN GROUP			DATE:
ENGINEER:	MICHAEL H. JONES	LIC. NO. S3033	1/29/2016
DESIGNED BY:	MICHAEL VAN DUYN		1/29/2016
DRAWN BY:	LI ZHANG		1/29/2016
CHECKED BY:	CHARLES REDFIELD		1/29/2016
APPROVED BY:	MICHAEL H. JONES		1/29/2016

VERTICAL CONTROL: BM 12-04070, 1929 (NGVD 29) - 1985 ADJUSTMENT
HORIZONTAL CONTROL: GPS; PID AE 1704, EPOCH 1991.35

SHEET TITLE: EDGE GIRDER REINFORCEMENT DETAILS NO. 4

PROJECT: SIXTH STREET VIADUCT REPLACEMENT

ADDRESS: SIXTH STREET VIADUCT (WHITTIER BLVD) LOS ANGELES, CA

HNTB
HNTB Corporation
601 W. 5TH STREET SUITE 1000
LOS ANGELES, CALIFORNIA 90071
TEL (213) 403-1000 FAX (213) 403-1001

BUREAU OF ENGINEERING OFFICIAL RECORD

WORK ORDER NO. E700224F

DRAWING NO. S6-24

SHEET 325 OF 560 SHEETS

REVISION DATES (DESIGN STAGE ONLY)

THE CITY OF LOS ANGELES OR ITS OFFICERS OR AGENTS SHALL NOT BE RESPONSIBLE FOR THE ACCURACY OR COMPLETENESS OF ELECTRONIC COPIES OF THIS PLAN SHEET.

C:\caddlib\pw\pwwestcoast\vthong\dms576831\S6-21-0001-47.dwg 6/28/16 17:26

Sheet Version 3.0

ADDENDUM 5

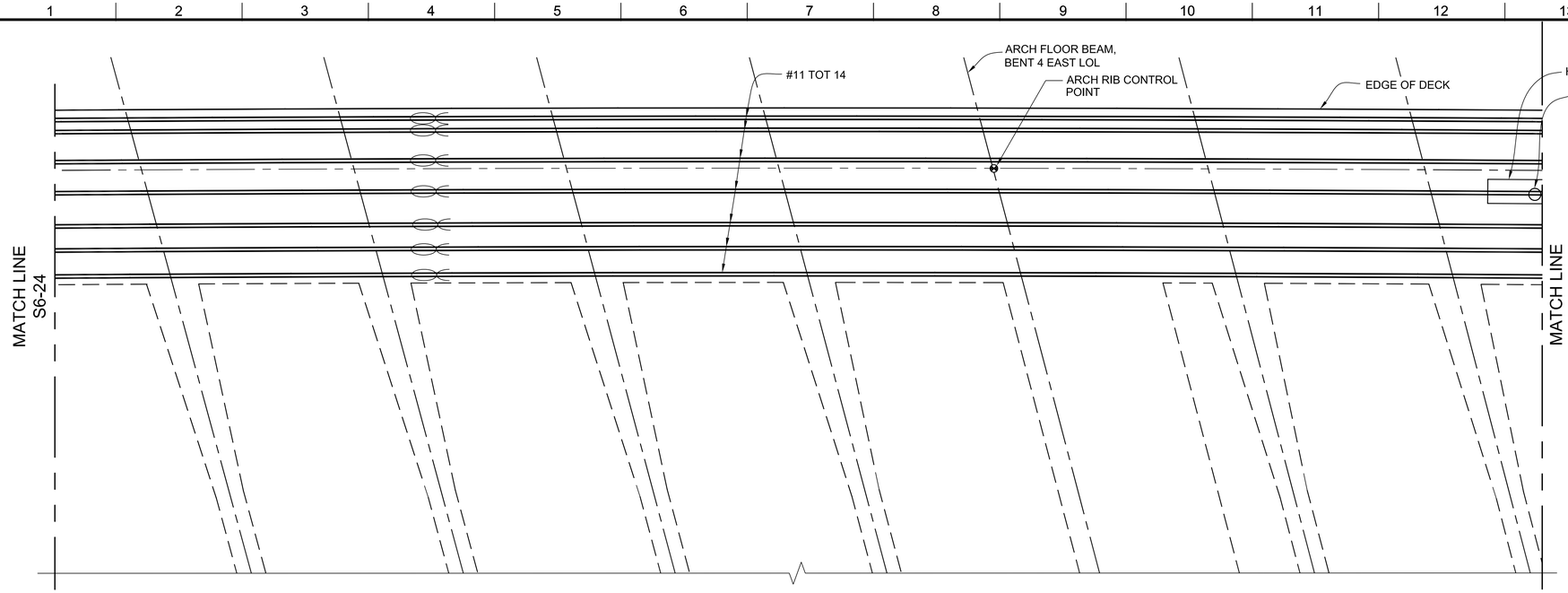

EDGE GIRDER TOP REINFORCEMENT

SCALE: 3/8" =1'-0"

NOTES:

1. FOR NOTES AND LEGEND, SEE DRAWING S6-21.

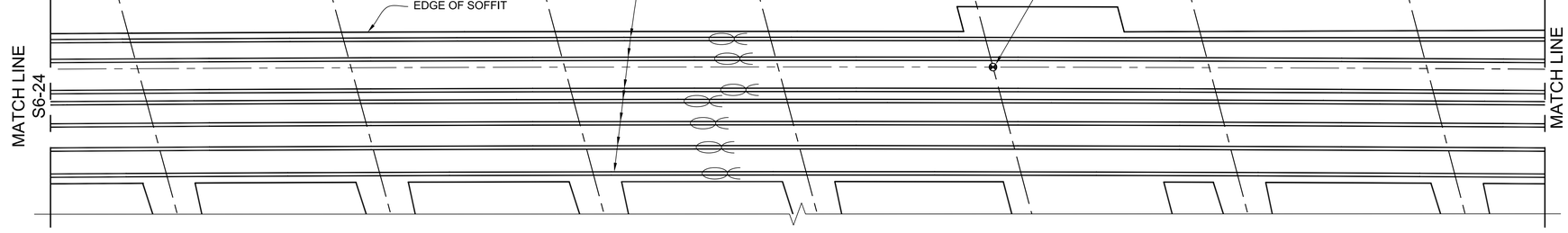

EDGE GIRDER BOTTOM REINFORCEMENT

SCALE: 3/8" =1'-0"



KEY ELEVATION

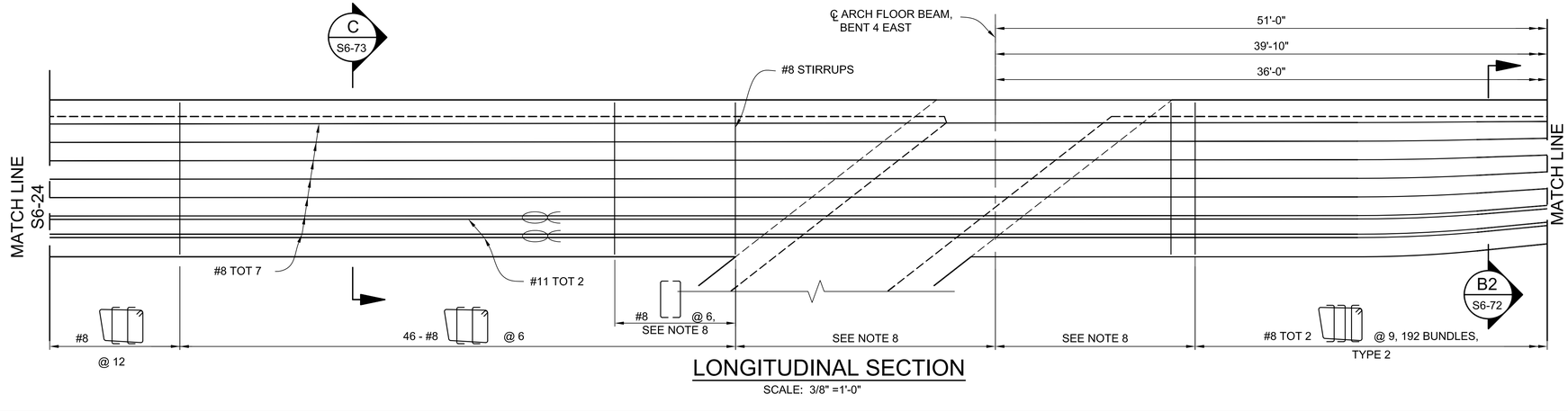

LONGITUDINAL SECTION

SCALE: 3/8" =1'-0"

THE CITY OF LOS ANGELES OR ITS OFFICERS OR AGENTS SHALL NOT BE RESPONSIBLE FOR THE ACCURACY OR COMPLETENESS OF ELECTRONIC COPIES OF THIS PLAN SHEET.

C:\caddlib\pw\pwwestcoast\zhang\dms576831\S6-21-G001-47.dwg 6/28/16 17:26

REVISION DATES (DESIGN STAGE ONLY)

Sheet Version 3.0

BUREAU OF ENGINEERING

ENGINEERING
CITY OF LOS ANGELES

NO.	REVISIONS:	DATE	BY:

STRUCTURE NO. 53C-2329

INDEX NO. P-38113

REGISTERED PROFESSIONAL ENGINEER MICHAEL H. JONES No. S3033 CIVIL STATE OF CALIFORNIA

THIS PLAN WAS ELECTRONICALLY SIGNED AND STAMPED.

CITY OF LOS ANGELES DEPARTMENT OF PUBLIC WORKS

GARY LEE MOORE, P.E. CITY ENGINEER

	DESIGN GROUP	LIC. NO. S3033	DATE:
ENGINEER:	MICHAEL H. JONES		1/29/2016
DESIGNED BY:	MICHAEL VAN DUYN		1/29/2016
DRAWN BY:	LI ZHANG		1/29/2016
CHECKED BY:	CHARLES REDFIELD		1/29/2016
APPROVED BY:	MICHAEL H. JONES		1/29/2016

VERTICAL CONTROL: BM 12-04070,1929 (NGVD 29) - 1985 ADJUSTMENT
HORIZONTAL CONTROL: GPS; PID AE 1704, EPOCH 1991.35

SHEET TITLE: EDGE GIRDER REINFORCEMENT DETAILS NO. 5

PROJECT: SIXTH STREET VIADUCT REPLACEMENT

ADDRESS: SIXTH STREET VIADUCT (WHITTIER BLVD) LOS ANGELES, CA

BUREAU OF ENGINEERING OFFICIAL RECORD

HNTB
HNTB Corporation
601 W. 5TH STREET SUITE 1000
LOS ANGELES, CALIFORNIA 90071
TEL (213) 403-1000 FAX (213) 403-1001

WORK ORDER NO. E700224F

DRAWING NO. S6-25

SHEET 326 OF 560 SHEETS

ADDENDUM 5

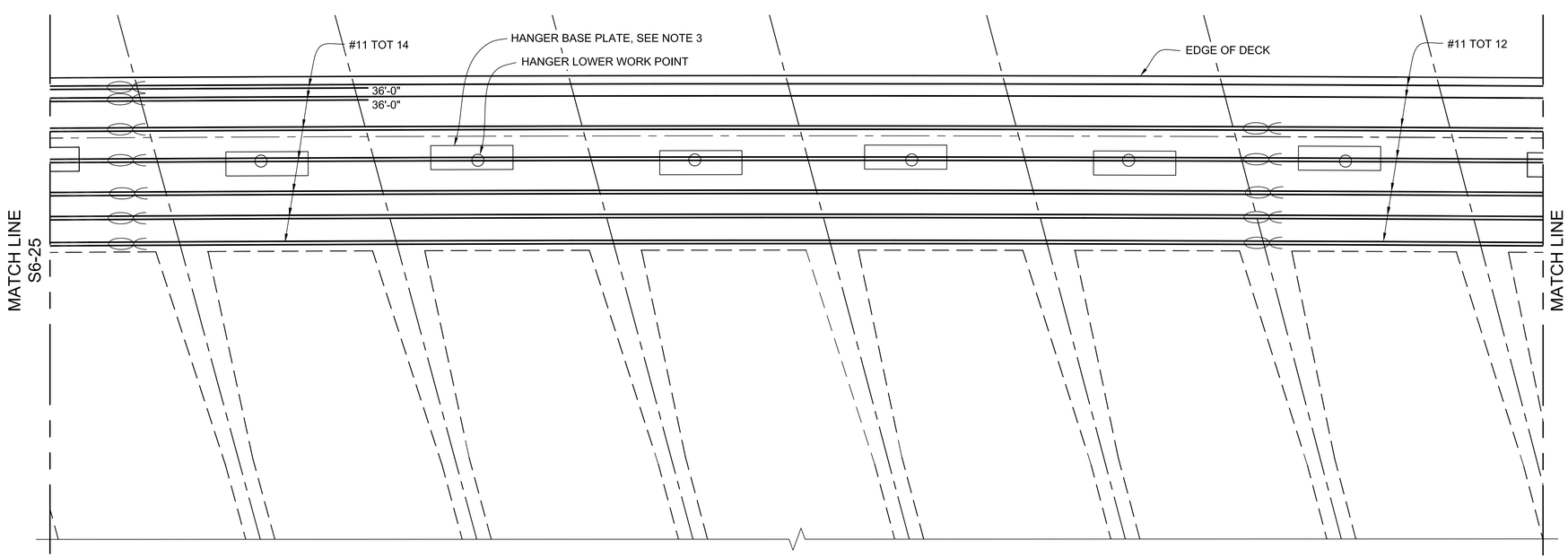

EDGE GIRDER TOP REINFORCEMENT

SCALE: 3/8" =1'-0"

NOTES:

1. FOR NOTES AND LEGEND, SEE DRAWING S6-21.

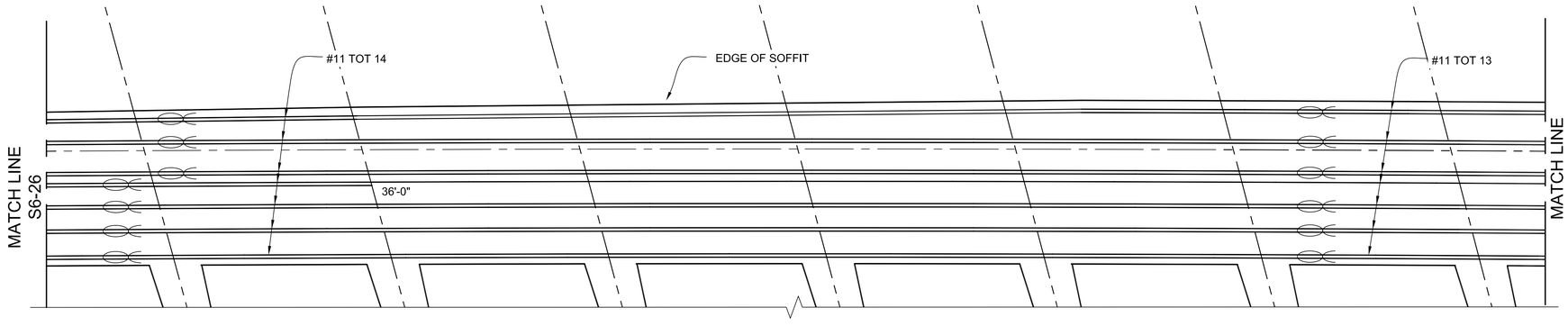

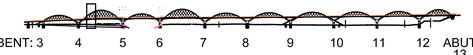

KEY ELEVATION

EDGE GIRDER BOTTOM REINFORCEMENT

SCALE: 3/8" =1'-0"

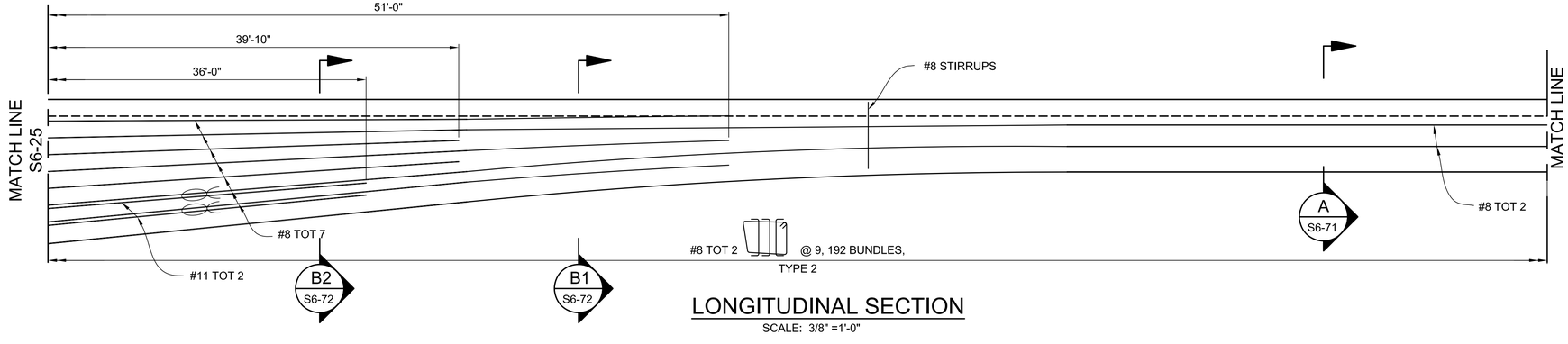

LONGITUDINAL SECTION

SCALE: 3/8" =1'-0"

BUREAU OF ENGINEERING
OFFICIAL RECORD

HNTB
HNTB Corporation
601 W. 5TH STREET SUITE 1000
LOS ANGELES, CALIFORNIA 90071
TEL (213) 403-1000 FAX (213) 403-1001

BUREAU OF ENGINEERING

ENGINEERING
CITY OF LOS ANGELES

NO.	REVISIONS:	DATE	BY:

STRUCTURE NO.
53C-2329

INDEX NO. **P-38113**

REGISTERED PROFESSIONAL ENGINEER
MICHAEL H. JONES
No. S3033
CIVIL
STATE OF CALIFORNIA

THIS PLAN WAS ELECTRONICALLY SIGNED AND STAMPED.

CITY OF LOS ANGELES DEPARTMENT OF PUBLIC WORKS

GARY LEE MOORE, P.E. CITY ENGINEER

ENGINEER:	MICHAEL H. JONES	LIC. NO. S3033	DATE: 1/29/2016
DESIGNED BY:	MICHAEL VAN DUYN	DESIGN GROUP	1/29/2016
DRAWN BY:	LI ZHANG		1/29/2016
CHECKED BY:	CHARLES REDFIELD		1/29/2016
APPROVED BY:	MICHAEL H. JONES		1/29/2016

VERTICAL CONTROL: BM 12-04070, 1929 (NGVD 29) – 1985 ADJUSTMENT
HORIZONTAL CONTROL: GPS; PID AE 1704, EPOCH 1991.35

SHEET TITLE: EDGE GIRDER REINFORCEMENT DETAILS NO. 6

PROJECT: SIXTH STREET VIADUCT REPLACEMENT

ADDRESS: SIXTH STREET VIADUCT (WHITTIER BLVD) LOS ANGELES, CA

WORK ORDER NO.
E700224F

DRAWING NO.
S6-26

SHEET 327 OF 560 SHEETS

REVISION DATES (DESIGN STAGE ONLY)

C:\caddlib\pw\pwwestcoast\lzhang\dms57683\S6-21-GD01-47.dwg 6/28/16 17:27

Sheet Version 3.0

THE CITY OF LOS ANGELES OR ITS OFFICERS OR AGENTS SHALL NOT BE RESPONSIBLE FOR THE ACCURACY OR COMPLETENESS OF ELECTRONIC COPIES OF THIS PLAN SHEET.

ADDENDUM 5

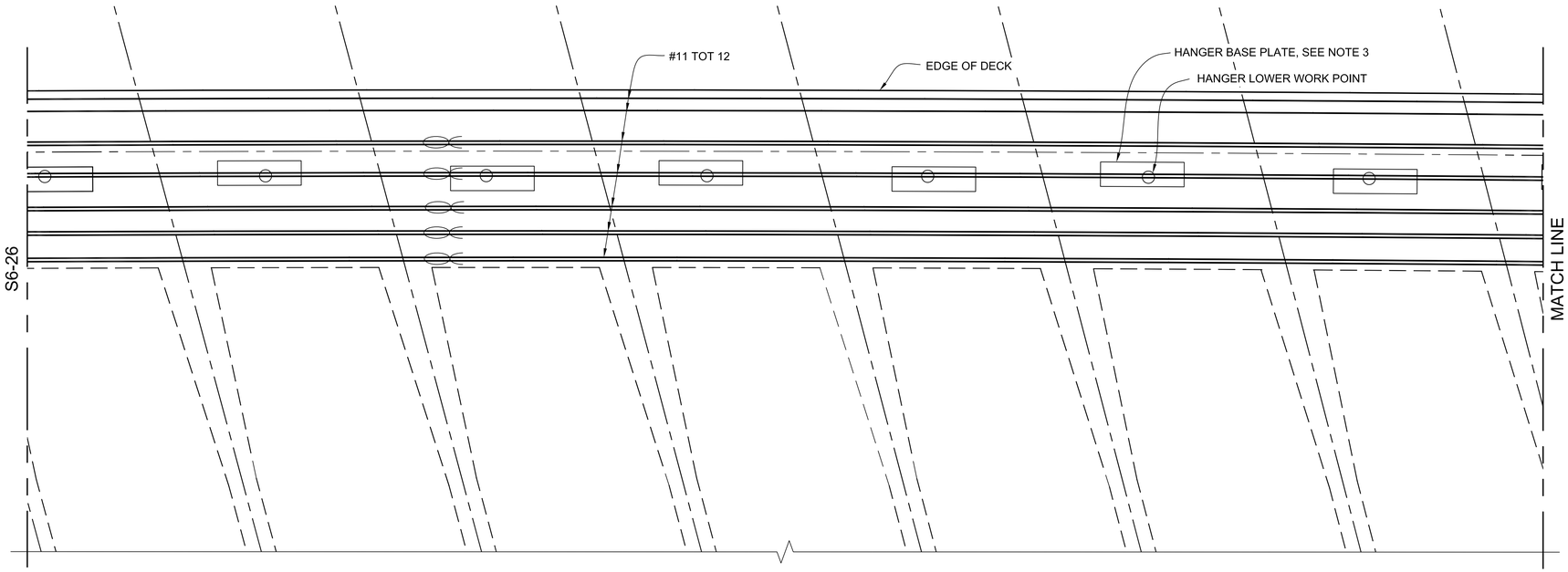

EDGE GIRDER TOP REINFORCEMENT

SCALE: 3/8" =1'-0"

NOTES:

1. FOR NOTES AND LEGEND, SEE DRAWING S6-21.

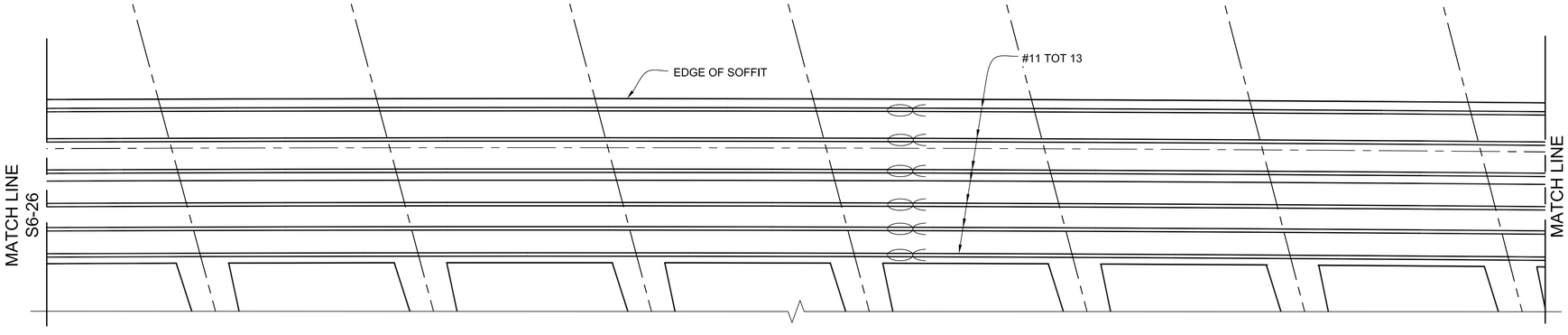

EDGE GIRDER BOTTOM REINFORCEMENT

SCALE: 3/8" =1'-0"

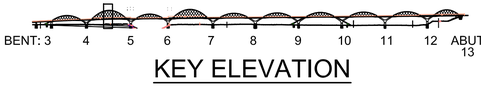

KEY ELEVATION

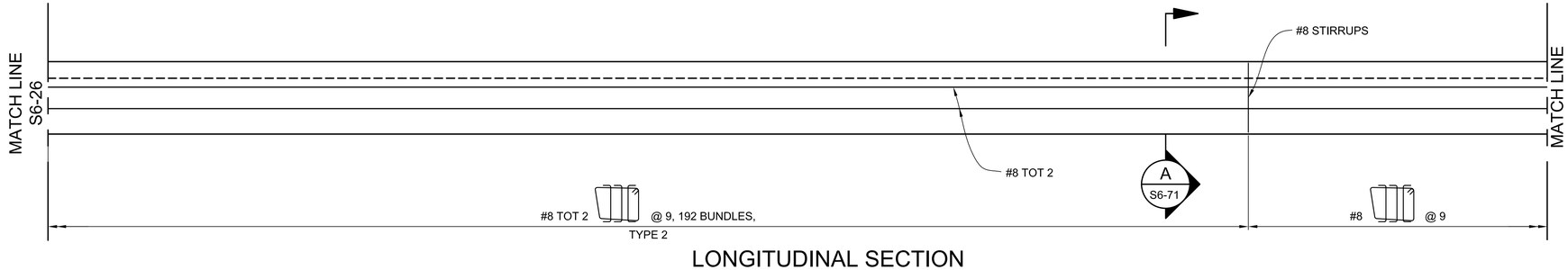

LONGITUDINAL SECTION

SCALE: 3/8" =1'-0"

BUREAU OF ENGINEERING

OFFICIAL RECORD

HNTB
HNTB Corporation
601 W. 5TH STREET SUITE 1000
LOS ANGELES, CALIFORNIA 90071
TEL (213) 403-1000 FAX (213) 403-1001

CITY OF LOS ANGELES DEPARTMENT OF PUBLIC WORKS
BUREAU OF ENGINEERING

ENGINEERING
CITY OF LOS ANGELES

NO.	REVISIONS:	DATE	BY:

STRUCTURE NO. 53C-2329

INDEX NO. P-38113

THIS PLAN WAS ELECTRONICALLY SIGNED AND STAMPED.

REGISTERED PROFESSIONAL ENGINEER MICHAEL H. JONES No. 53033 CIVIL STATE OF CALIFORNIA

GARY LEE MOORE, P.E. CITY ENGINEER

		DESIGN GROUP	LIC. NO. 53033	DATE
ENGINEER:	MICHAEL H. JONES			1/29/2016
DESIGNED BY:	MICHAEL VAN DUYN			1/29/2016
DRAWN BY:	LI ZHANG			1/29/2016
CHECKED BY:	CHARLES REDFIELD			1/29/2016
APPROVED BY:	MICHAEL H. JONES			1/29/2016

VERTICAL CONTROL: BM 12-04070,1929 (NGVD 29) - 1985 ADJUSTMENT
HORIZONTAL CONTROL: GPS; PID AE 1704, EPOCH 1991.35

SHEET TITLE: EDGE GIRDER REINFORCEMENT DETAILS NO. 7

PROJECT: SIXTH STREET VIADUCT REPLACEMENT

ADDRESS: SIXTH STREET VIADUCT (WHITTIER BLVD) LOS ANGELES, CA

WORK ORDER NO. E700224F

DRAWING NO. S6-27

SHEET 328 OF 560 SHEETS

REVISION DATES (DESIGN STAGE ONLY)

C:\caddlib\pw\pwwestcoast\zhang\dms57683\S6-21-GD01-47.dwg 6/28/16 17:27

Sheet Version 3.0

THE CITY OF LOS ANGELES OR ITS OFFICERS OR AGENTS SHALL NOT BE RESPONSIBLE FOR THE ACCURACY OR COMPLETENESS OF ELECTRONIC COPIES OF THIS PLAN SHEET.

ADDENDUM 5

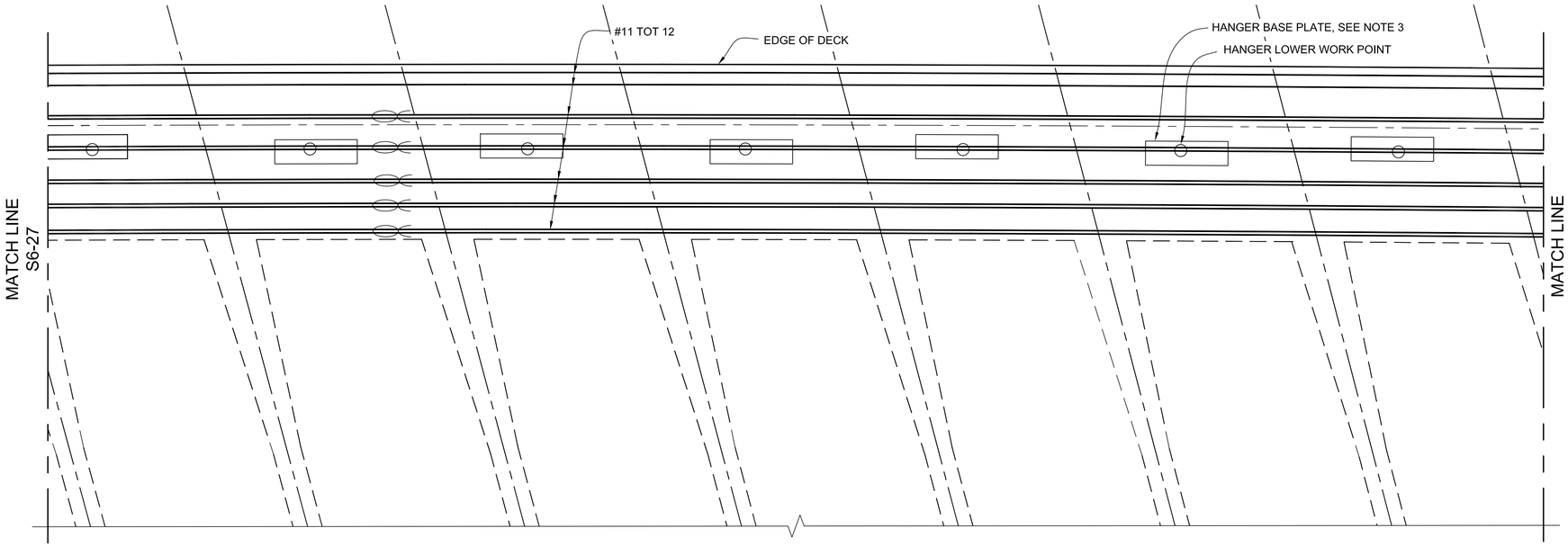

EDGE GIRDER TOP REINFORCEMENT

SCALE: 3/8" =1'-0"

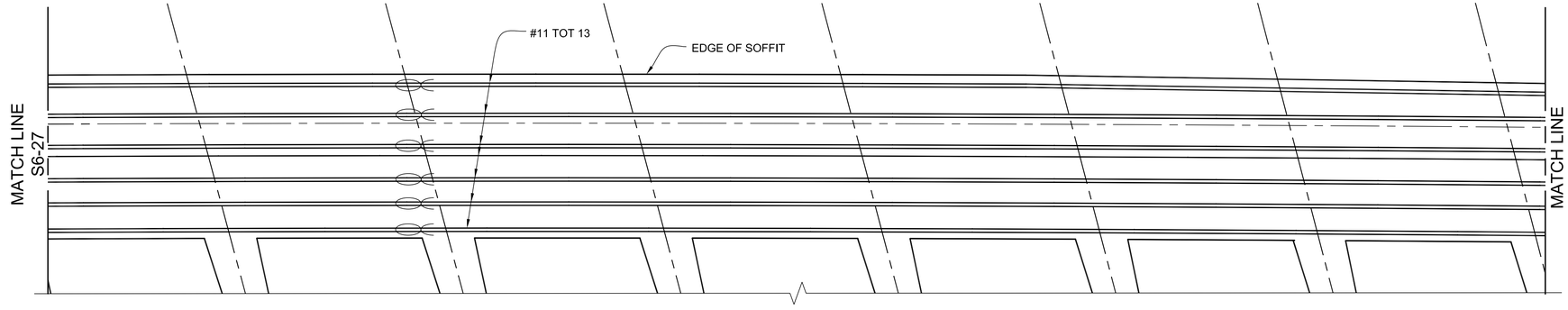

EDGE GIRDER BOTTOM REINFORCEMENT

SCALE: 3/8" =1'-0"

NOTES:

1. FOR NOTES AND LEGEND, SEE DRAWING S6-21.



KEY ELEVATION

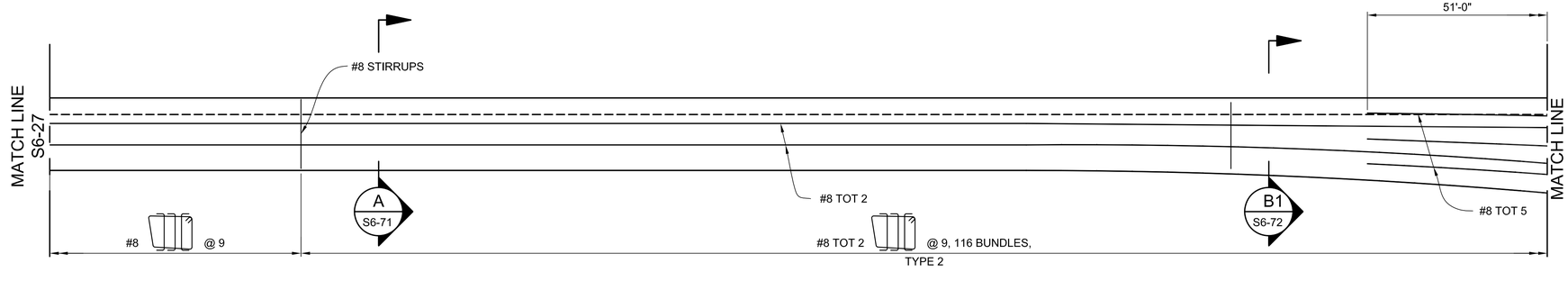

LONGITUDINAL SECTION

SCALE: 3/8" =1'-0"

THE CITY OF LOS ANGELES OR ITS OFFICERS OR AGENTS SHALL NOT BE RESPONSIBLE FOR THE ACCURACY OR COMPLETENESS OF ELECTRONIC COPIES OF THIS PLAN SHEET.

C:\caddlib\pw\pwwestcoast\lzhang\dms57683\S6-21-GD01-47.dwg 6/28/16 17:27

REVISION DATES (DESIGN STAGE ONLY)

Sheet Version 3.0

CITY OF LOS ANGELES DEPARTMENT OF PUBLIC WORKS

BUREAU OF ENGINEERING

ENGINEERING CITY OF LOS ANGELES

NO.	REVISIONS:	DATE	BY:

STRUCTURE NO. 53C-2329

INDEX NO. P-38113

THIS PLAN WAS ELECTRONICALLY SIGNED AND STAMPED.

REGISTERED PROFESSIONAL ENGINEER MICHAEL H. JONES No. 53033 CIVIL STATE OF CALIFORNIA

GARY LEE MOORE, P.E. CITY ENGINEER

		DATE:
DESIGN GROUP		
ENGINEER:	MICHAEL H. JONES LIC. NO. 53033	1/29/2016
DESIGNED BY:	MICHAEL VAN DUYN	1/29/2016
DRAWN BY:	LI ZHANG	1/29/2016
CHECKED BY:	CHARLES REDFIELD	1/29/2016
APPROVED BY:	MICHAEL H. JONES	1/29/2016

VERTICAL CONTROL: BM 12-04070,1929 (NGVD 29) - 1985 ADJUSTMENT

HORIZONTAL CONTROL: GPS; PID AE 1704, EPOCH 1991.35

SHEET TITLE: EDGE GIRDER REINFORCEMENT DETAILS NO. 8

PROJECT: SIXTH STREET VIADUCT REPLACEMENT

ADDRESS: SIXTH STREET VIADUCT (WHITTIER BLVD) LOS ANGELES, CA

BUREAU OF ENGINEERING OFFICIAL RECORD

HNTB
HNTB Corporation
601 W. 5TH STREET SUITE 1000
LOS ANGELES, CALIFORNIA 90071
TEL (213) 403-1000 FAX (213) 403-1001

WORK ORDER NO. E700224F

DRAWING NO. S6-28

SHEET 329 OF 560 SHEETS

ADDENDUM 5

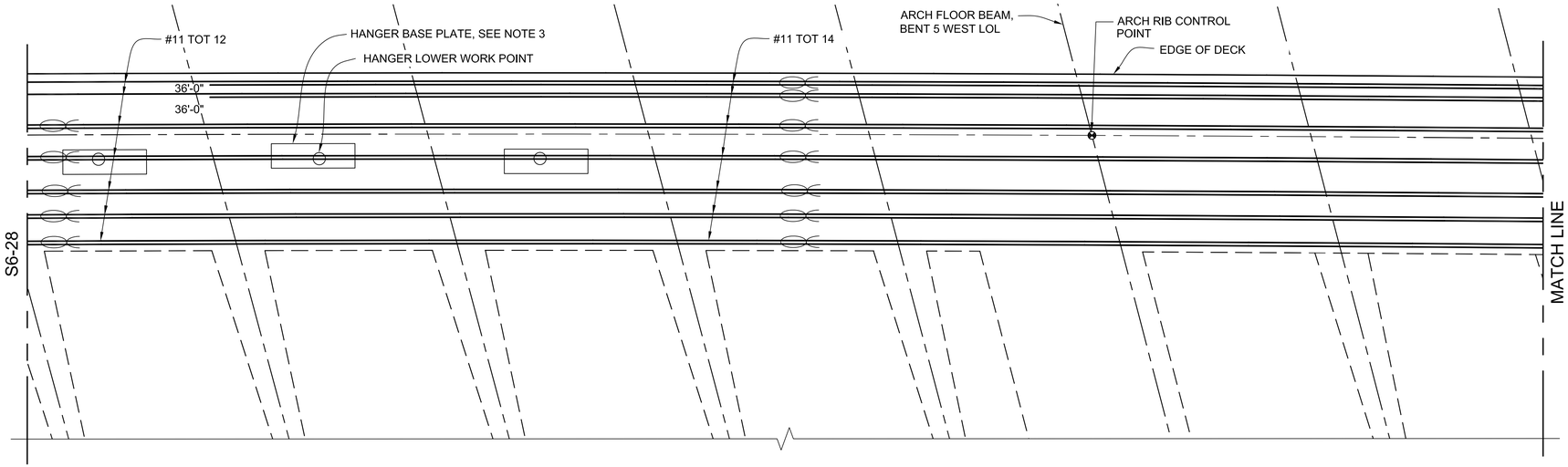

EDGE GIRDER TOP REINFORCEMENT

SCALE: 3/8" =1'-0"

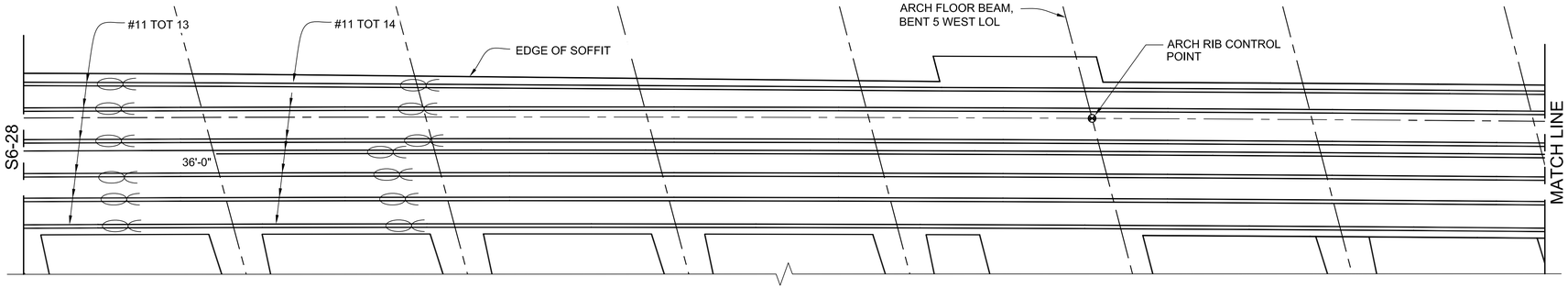

EDGE GIRDER BOTTOM REINFORCEMENT

SCALE: 3/8" =1'-0"

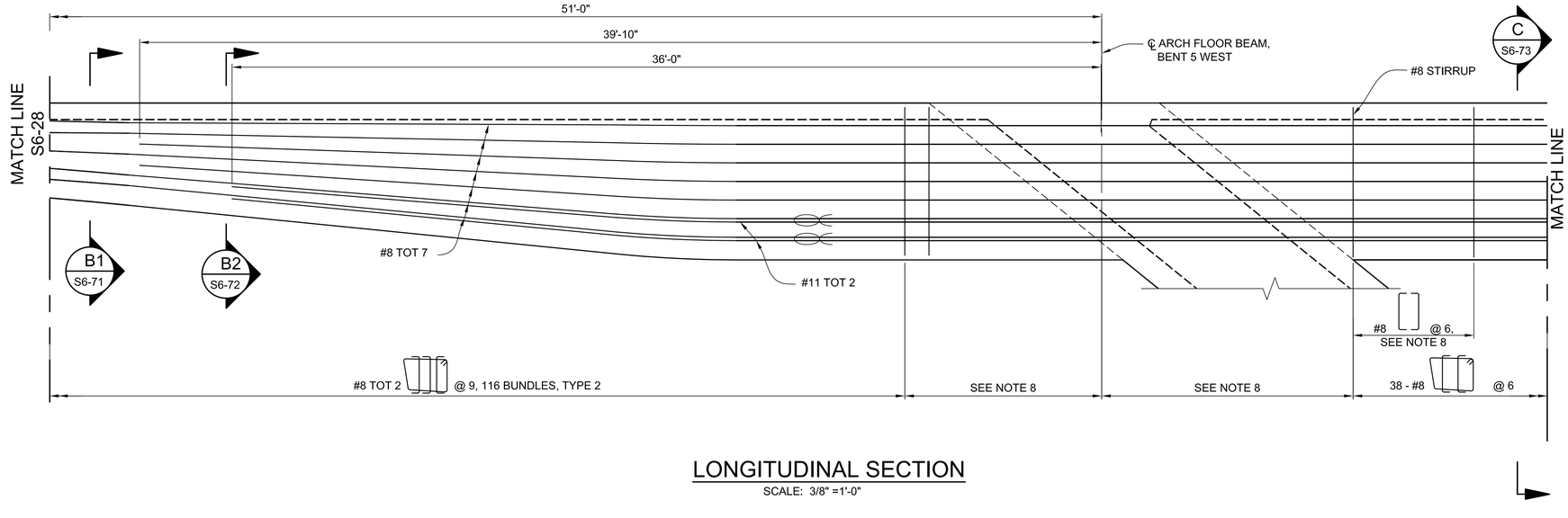

LONGITUDINAL SECTION

SCALE: 3/8" =1'-0"

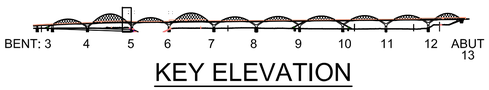

KEY ELEVATION

NOTES:

1. FOR NOTES AND LEGEND, SEE DRAWING S6-21.

HNTB
HNTB Corporation
601 W. 5TH STREET SUITE 1000
LOS ANGELES, CALIFORNIA 90071
TEL (213) 403-1000 FAX (213) 403-1001

BUREAU OF ENGINEERING
OFFICIAL RECORD

CITY OF LOS ANGELES DEPARTMENT OF PUBLIC WORKS
BUREAU OF ENGINEERING

ENGINEERING
CITY OF LOS ANGELES

NO.	REVISIONS:	DATE	BY:

STRUCTURE NO. 53C-2329

INDEX NO. P-38113

REGISTERED PROFESSIONAL ENGINEER
MICHAEL H. JONES
No. S3033
CIVIL
STATE OF CALIFORNIA

THIS PLAN WAS ELECTRONICALLY SIGNED AND STAMPED.

GARY LEE MOORE, P.E.	CITY ENGINEER
ENGINEER:	MICHAEL H. JONES
DESIGNED BY:	MICHAEL VAN DUYN
DRAWN BY:	LI ZHANG
CHECKED BY:	CHARLES REDFIELD
APPROVED BY:	MICHAEL H. JONES

DESIGN GROUP
LIC. NO. S3033
DATE: 1/29/2016

VERTICAL CONTROL:	BM 12-04070, 1929 (NGVD 29) - 1985 ADJUSTMENT
HORIZONTAL CONTROL:	GPS; PID AE 1704, EPOCH 1991.35
SHEET TITLE:	EDGE GIRDER REINFORCEMENT DETAILS NO. 9
PROJECT:	SIXTH STREET VIADUCT REPLACEMENT
ADDRESS:	SIXTH STREET VIADUCT (WHITTIER BLVD) LOS ANGELES, CA

WORK ORDER NO. E700224F

DRAWING NO. S6-29

SHEET 330 OF 560 SHEETS

REVISION DATES (DESIGN STAGE ONLY)

THE CITY OF LOS ANGELES OR ITS OFFICERS OR AGENTS SHALL NOT BE RESPONSIBLE FOR THE ACCURACY OR COMPLETENESS OF ELECTRONIC COPIES OF THIS PLAN SHEET.

C:\caddlib\pw\pwwestcoast\zhang\dms57683\S6-21-GD01-47.dwg 6/28/16 17:27

Sheet Version 3.0

ADDENDUM 5

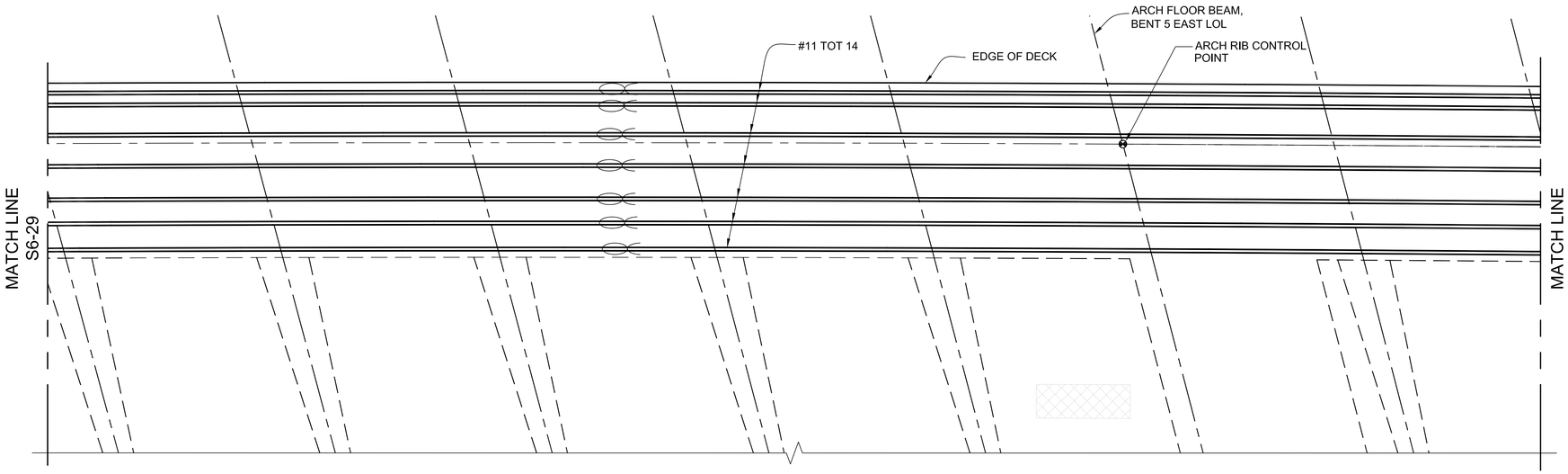

EDGE GIRDER TOP REINFORCEMENT

SCALE: 3/8" =1'-0"

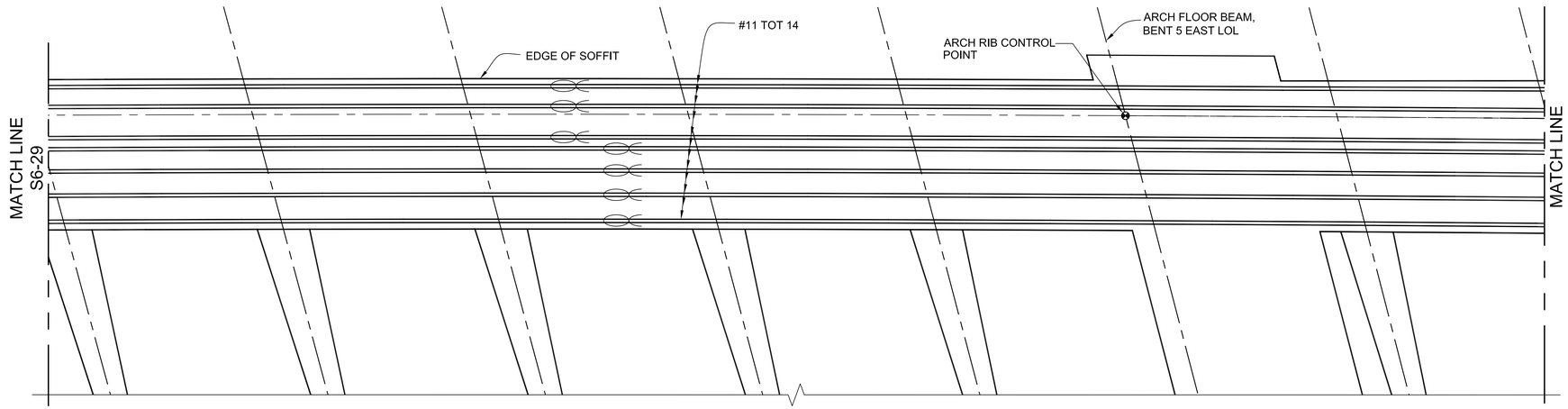

EDGE GIRDER BOTTOM REINFORCEMENT

SCALE: 3/8" =1'-0"

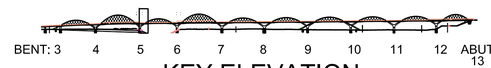

KEY ELEVATION

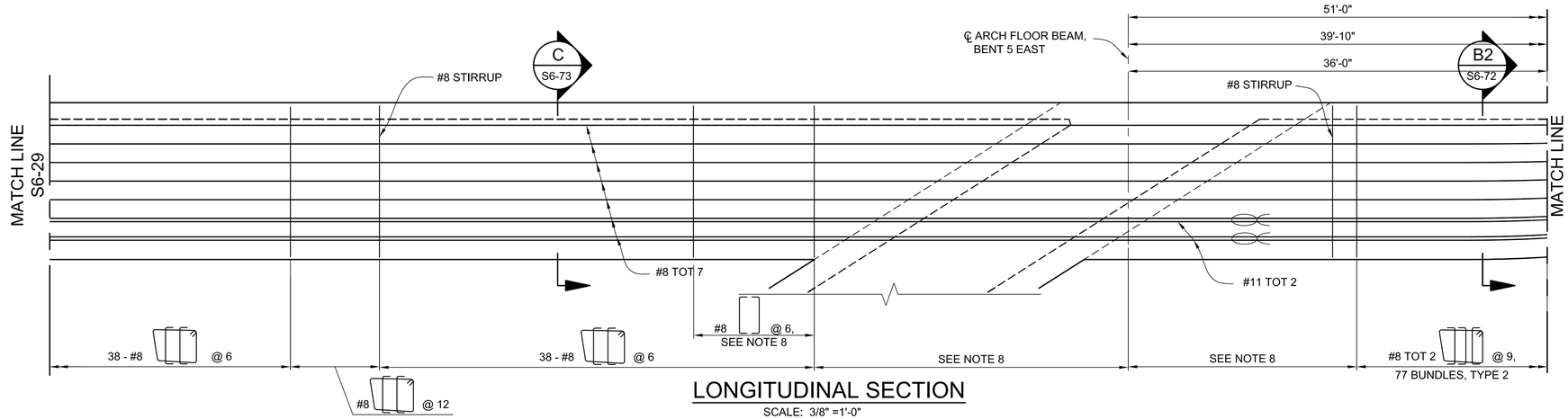

LONGITUDINAL SECTION

SCALE: 3/8" =1'-0"

NOTES:

1. FOR NOTES AND LEGEND, SEE DRAWING S6-21.

THE CITY OF LOS ANGELES OR ITS OFFICERS OR AGENTS SHALL NOT BE RESPONSIBLE FOR THE ACCURACY OR COMPLETENESS OF ELECTRONIC COPIES OF THIS PLAN SHEET.

C:\caddlib\pw\pwwestcoast\zhang\dms57683\S6-21-G001-47.dwg 6/28/16 17:27

REVISION DATES (DESIGN STAGE ONLY)

Sheet Version 3.0

CITY OF LOS ANGELES
DEPARTMENT OF PUBLIC WORKS
BUREAU OF ENGINEERING

ENGINEERING
CITY OF LOS ANGELES

NO.	REVISIONS:	DATE	BY:

STRUCTURE NO. 53C-2329

INDEX NO. P-38113

REGISTERED PROFESSIONAL ENGINEER MICHAEL H. JONES No. S3033 CIVIL STATE OF CALIFORNIA

THIS PLAN WAS ELECTRONICALLY SIGNED AND STAMPED.

CITY ENGINEER

		DATE:
GARY LEE MOORE, P.E.	CITY ENGINEER	
DESIGN GROUP	LIC. NO. S3033	
ENGINEER: MICHAEL H. JONES		1/29/2016
DESIGNED BY: MICHAEL VAN DUYN		1/29/2016
DRAWN BY: LI ZHANG		1/29/2016
CHECKED BY: CHARLES REDFIELD		1/29/2016
APPROVED BY: MICHAEL H. JONES		1/29/2016

VERTICAL CONTROL: BM 12-04070,1928 (NGVD 29) - 1985 ADJUSTMENT
HORIZONTAL CONTROL: GPS; PID AE 1704; EPOCH 1991.35

SHEET TITLE: EDGE GIRDER REINFORCEMENT DETAILS NO. 10

PROJECT: SIXTH STREET VIADUCT REPLACEMENT

ADDRESS: SIXTH STREET VIADUCT (WHITTIER BLVD) LOS ANGELES, CA

HNTB
HNTB Corporation
601 W. 5TH STREET SUITE 1000
LOS ANGELES, CALIFORNIA 90071
TEL (213) 403-1000 FAX (213) 403-1001

BUREAU OF ENGINEERING OFFICIAL RECORD

WORK ORDER NO. E700224F

DRAWING NO. S6-30

SHEET 331 OF 560 SHEETS

ADDENDUM 5

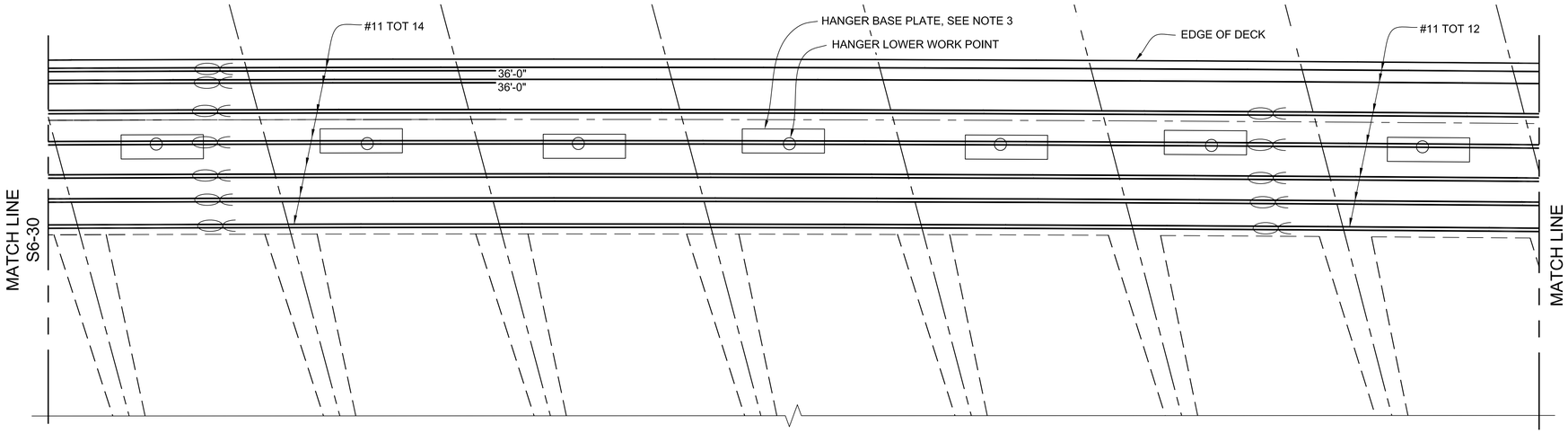

EDGE GIRDER TOP REINFORCEMENT

SCALE: 3/8" =1'-0"

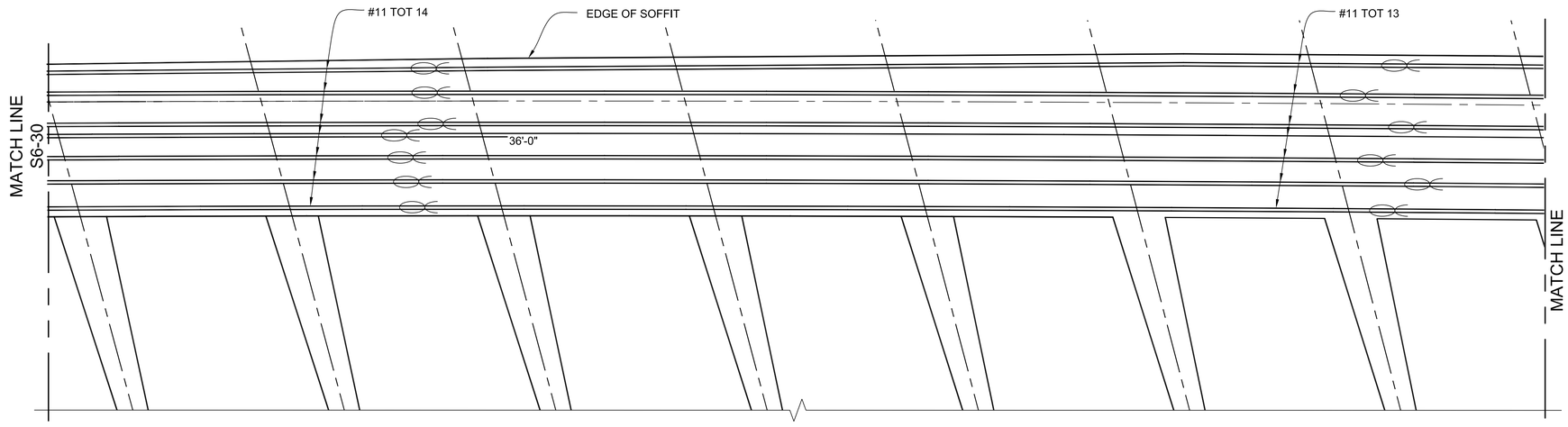

EDGE GIRDER BOTTOM REINFORCEMENT

SCALE: 3/8" =1'-0"

NOTES:

1. FOR NOTES AND LEGEND, SEE DRAWING S6-21.

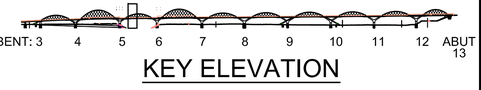

KEY ELEVATION

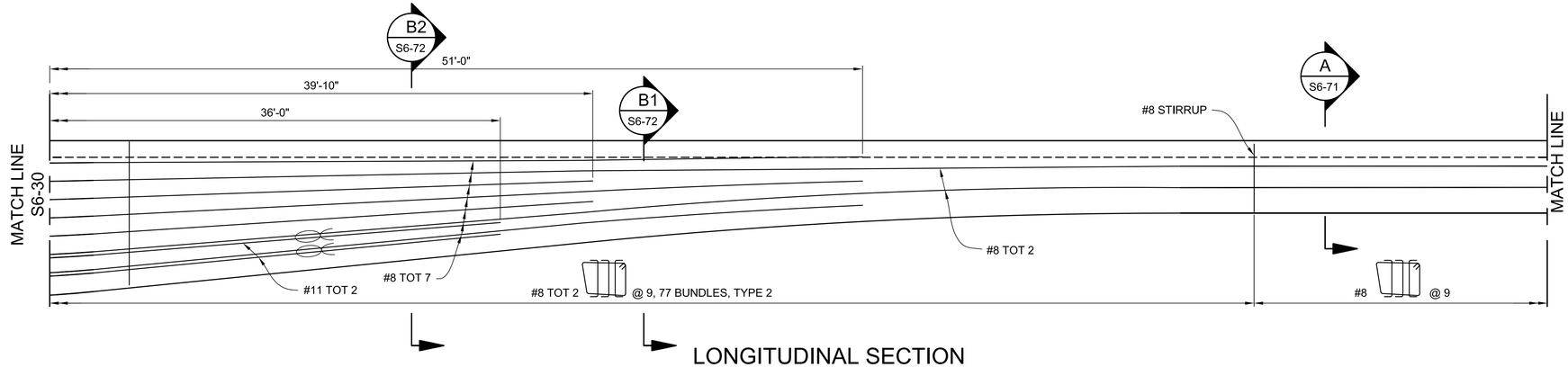

LONGITUDINAL SECTION

SCALE: 3/8" =1'-0"

HNTB
HNTB Corporation
601 W. 5TH STREET SUITE 1000
LOS ANGELES, CALIFORNIA 90071
TEL (213) 403-1000 FAX (213) 403-1001

BUREAU OF ENGINEERING
OFFICIAL RECORD

CITY OF LOS ANGELES DEPARTMENT OF PUBLIC WORKS

ENGINEERING
CITY OF LOS ANGELES

NO.	REVISIONS:	DATE	BY:

STRUCTURE NO. 53C-2329

INDEX NO. P-38113

THIS PLAN WAS ELECTRONICALLY SIGNED AND STAMPED.

REGISTERED PROFESSIONAL ENGINEER — MICHAEL H. JONES — No. S3033 — CIVIL — STATE OF CALIFORNIA

GARY LEE MOORE, P.E.	CITY ENGINEER	DATE: 1/29/2016
ENGINEER:	MICHAEL H. JONES	LIC. NO. S3033 — 1/29/2016
DESIGNED BY:	MICHAEL VAN DUYN	1/29/2016
DRAWN BY:	LI ZHANG	1/29/2016
CHECKED BY:	CHARLES REDFIELD	1/29/2016
APPROVED BY:	MICHAEL H. JONES	1/29/2016

DESIGN GROUP

VERTICAL CONTROL: BM 12-04070,1929 (NGVD 29) - 1985 ADJUSTMENT
HORIZONTAL CONTROL: GPS; PID AE 1704, EPOCH 1991.35

SHEET TITLE: EDGE GIRDER REINFORCEMENT DETAILS NO. 11

PROJECT: SIXTH STREET VIADUCT REPLACEMENT

ADDRESS: SIXTH STREET VIADUCT (WHITTIER BLVD) LOS ANGELES, CA

WORK ORDER NO. E700224F

DRAWING NO. S6-31

SHEET 332 OF 560 SHEETS

THE CITY OF LOS ANGELES OR ITS OFFICERS OR AGENTS SHALL NOT BE RESPONSIBLE FOR THE ACCURACY OR COMPLETENESS OF ELECTRONIC COPIES OF THIS PLAN SHEET.

C:\caddlib\pw\pwwestcoast\zhang\dms576831\S6-21-G001-47.dwg 6/28/16 17:27

REVISION DATES (DESIGN STAGE ONLY)

Sheet Version 3.0

ADDENDUM 5

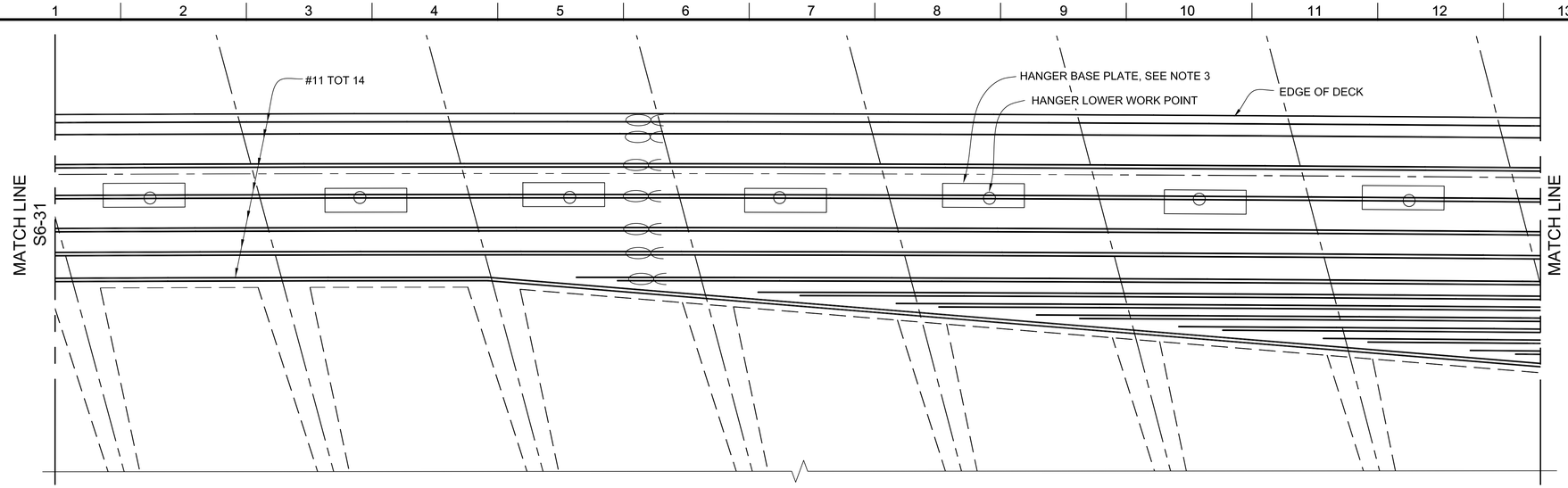

EDGE GIRDER TOP REINFORCEMENT

SCALE: 3/8" =1'-0"

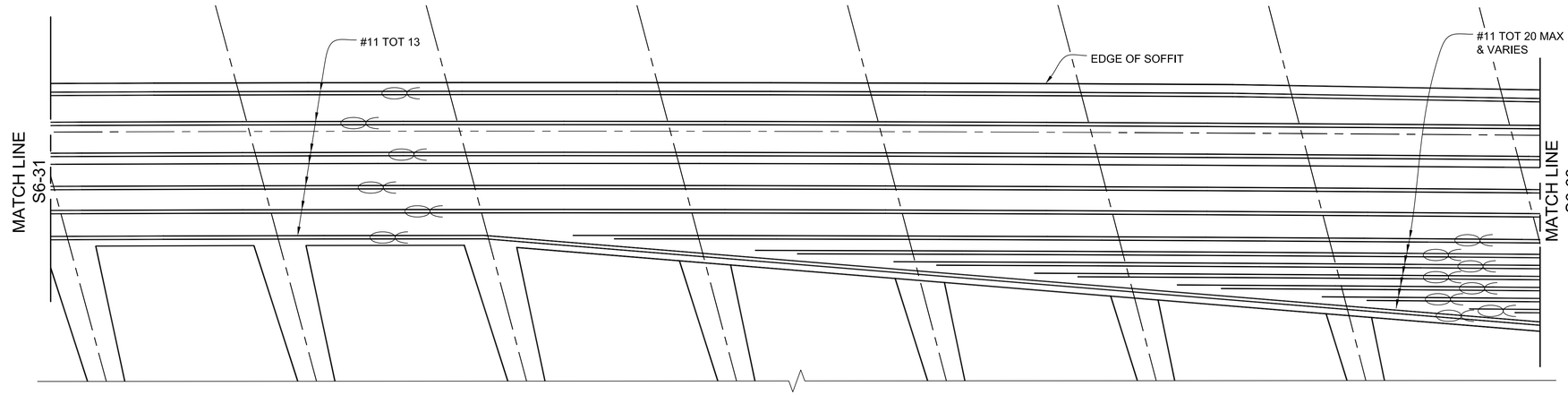

EDGE GIRDER BOTTOM REINFORCEMENT

SCALE: 3/8" =1'-0"

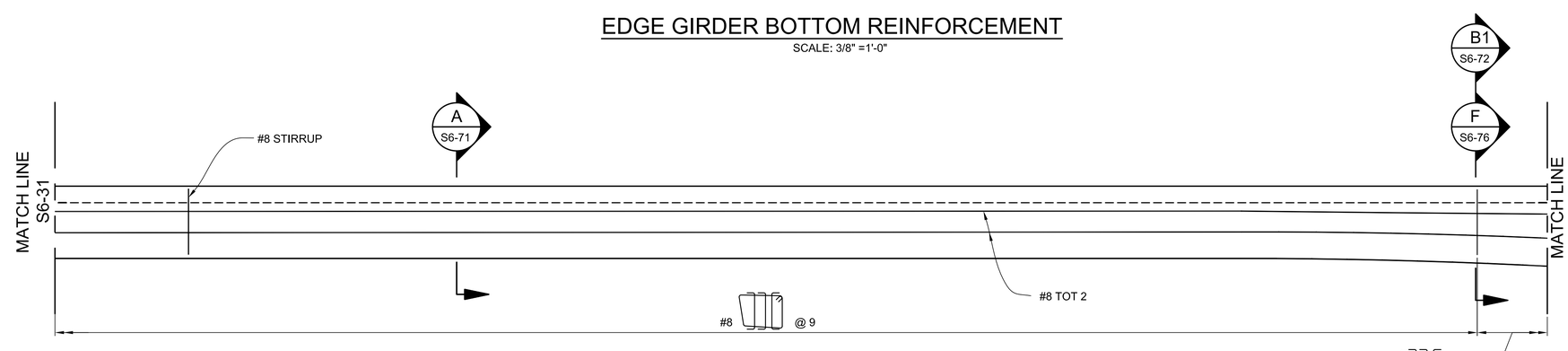

LONGITUDINAL SECTION

SCALE: 3/8" =1'-0"

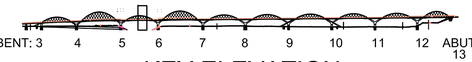

KEY ELEVATION

NOTES:

1. FOR NOTES AND LEGEND, SEE DRAWING S6-21.

THE CITY OF LOS ANGELES OR ITS OFFICERS OR AGENTS SHALL NOT BE RESPONSIBLE FOR THE ACCURACY OR COMPLETENESS OF ELECTRONIC COPIES OF THIS PLAN SHEET.

C:\caddlib\pw\pwwestcoast\zhang\dms57683\S6-21-GD01-47.dwg 6/28/16 17:28

REVISION DATES (DESIGN STAGE ONLY)

Sheet Version 3.0

BUREAU OF ENGINEERING

ENGINEERING
CITY OF LOS ANGELES

NO.	REVISIONS:	DATE	BY:

STRUCTURE NO. 53C-2329

INDEX NO. P-38113

REGISTERED PROFESSIONAL ENGINEER MICHAEL H. JONES No. S3033 CIVIL STATE OF CALIFORNIA

THIS PLAN WAS ELECTRONICALLY SIGNED AND STAMPED.

CITY OF LOS ANGELES DEPARTMENT OF PUBLIC WORKS

GARY LEE MOORE, P.E. CITY ENGINEER

ENGINEER:	MICHAEL H. JONES	LIC. NO. S3033	DATE: 1/29/2016
DESIGNED BY:	MICHAEL VAN DUYN		1/29/2016
DRAWN BY:	LI ZHANG		1/29/2016
CHECKED BY:	CHARLES REDFIELD		1/29/2016
APPROVED BY:	MICHAEL H. JONES		1/29/2016

DESIGN GROUP

VERTICAL CONTROL: BM 12-04070, 1929 (NGVD 29) - 1985 ADJUSTMENT
HORIZONTAL CONTROL: GPS; PID AE 1704, EPOCH 1991.35

SHEET TITLE: EDGE GIRDER REINFORCEMENT DETAILS NO. 12

PROJECT: SIXTH STREET VIADUCT REPLACEMENT

ADDRESS: SIXTH STREET VIADUCT (WHITTIER BLVD) LOS ANGELES, CA

HNTB
HNTB Corporation
601 W. 5TH STREET SUITE 1000
LOS ANGELES, CALIFORNIA 90071
TEL (213) 403-1000 FAX (213) 403-1001

BUREAU OF ENGINEERING OFFICIAL RECORD

WORK ORDER NO. E700224F

DRAWING NO. S6-32

SHEET 333 OF 560 SHEETS

ADDENDUM 5

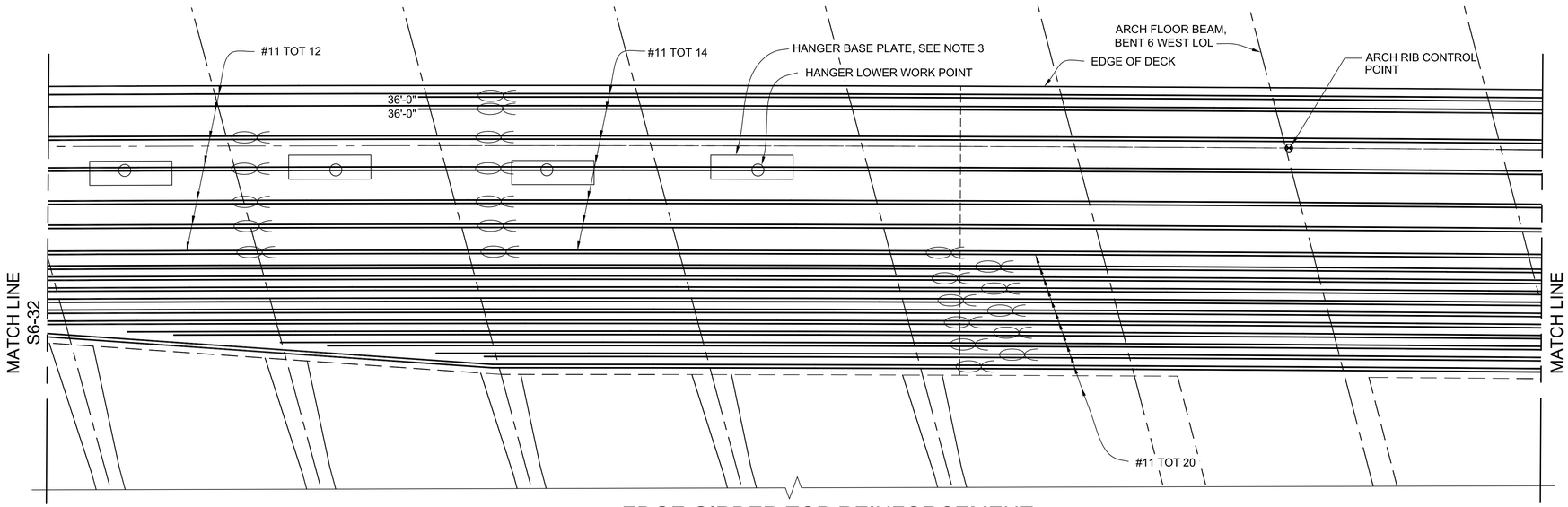

EDGE GIRDER TOP REINFORCEMENT

SCALE: 3/8" =1'-0"

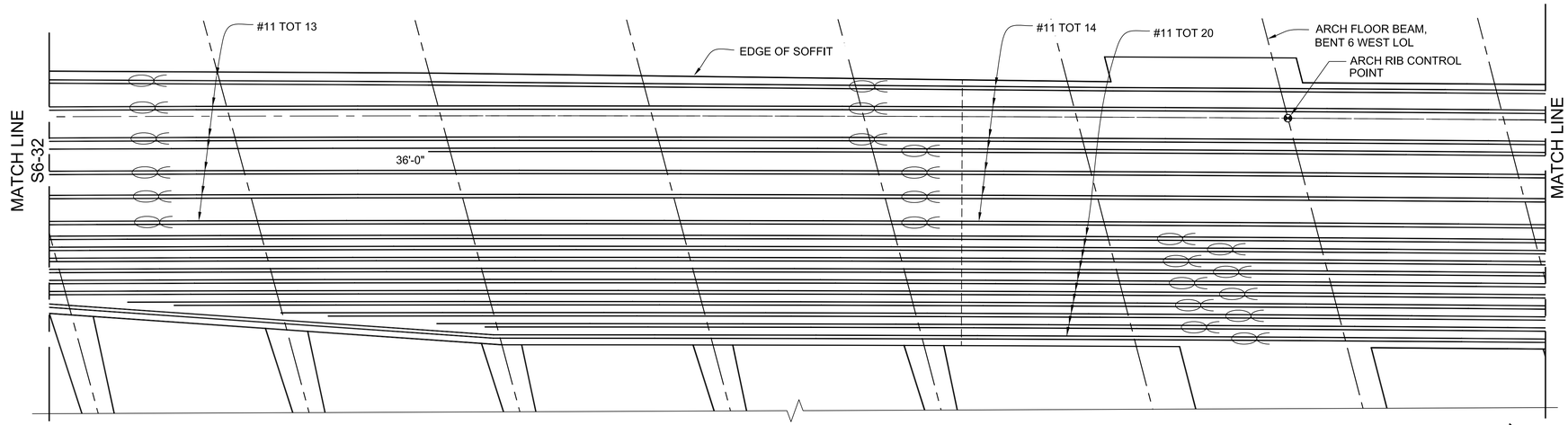

EDGE GIRDER BOTTOM REINFORCEMENT

SCALE: 3/8" =1'-0"

NOTES:

1. FOR NOTES AND LEGEND, SEE DRAWING S6-21.



KEY ELEVATION

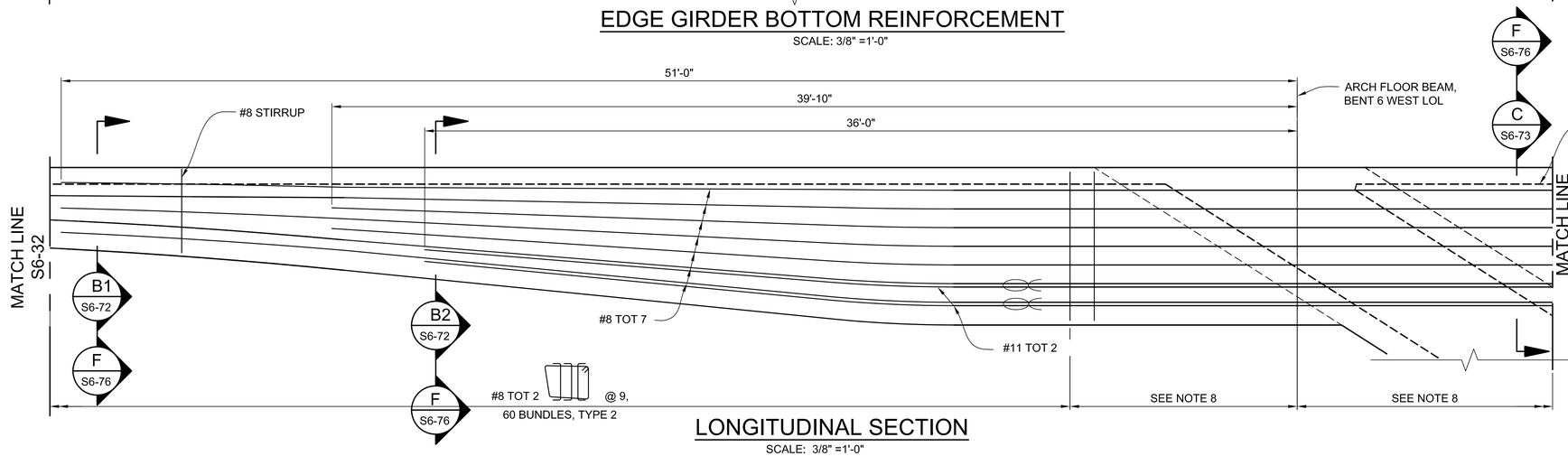

LONGITUDINAL SECTION

SCALE: 3/8" =1'-0"

THE CITY OF LOS ANGELES OR ITS OFFICERS OR AGENTS SHALL NOT BE RESPONSIBLE FOR THE ACCURACY OR COMPLETENESS OF ELECTRONIC COPIES OF THIS PLAN SHEET.

C:\caddlib\pw\pwwestcoast\zhang\dms57683\S6-21-0001-47.dwg 6/28/16 17:28

REVISION DATES (DESIGN STAGE ONLY)

Sheet Version 3.0

BUREAU OF ENGINEERING

ENGINEERING CITY OF LOS ANGELES

NO.	REVISIONS:	DATE	BY:

STRUCTURE NO. 53C-2329

INDEX NO. P-38113

REGISTERED PROFESSIONAL ENGINEER MICHAEL H. JONES No. S3033 CIVIL STATE OF CALIFORNIA

THIS PLAN WAS ELECTRONICALLY SIGNED AND STAMPED.

CITY OF LOS ANGELES DEPARTMENT OF PUBLIC WORKS

GARY LEE MOORE, P.E. CITY ENGINEER

DESIGN GROUP

ENGINEER:	MICHAEL H. JONES	LIC. NO. S3033
DESIGNED BY:	MICHAEL VAN DUYN	
DRAWN BY:	LI ZHANG	
CHECKED BY:	CHARLES REDFIELD	
APPROVED BY:	MICHAEL H. JONES	

DATE: 1/29/2016

VERTICAL CONTROL: BM 12-04070,1928 (NGVD 29) - 1985 ADJUSTMENT

HORIZONTAL CONTROL: GPS; PID AE 1704; EPOCH 1991.35

SHEET TITLE: EDGE GIRDER REINFORCEMENT DETAILS NO. 13

PROJECT: SIXTH STREET VIADUCT REPLACEMENT

ADDRESS: SIXTH STREET VIADUCT (WHITTIER BLVD) LOS ANGELES, CA

HNTB

HNTB Corporation
601 W. 5TH STREET SUITE 1000
LOS ANGELES, CALIFORNIA 90071
TEL (213) 403-1000 FAX (213) 403-1001

BUREAU OF ENGINEERING OFFICIAL RECORD

WORK ORDER NO. E700224F

DRAWING NO. S6-33

SHEET 334 OF 560 SHEETS

ADDENDUM 5

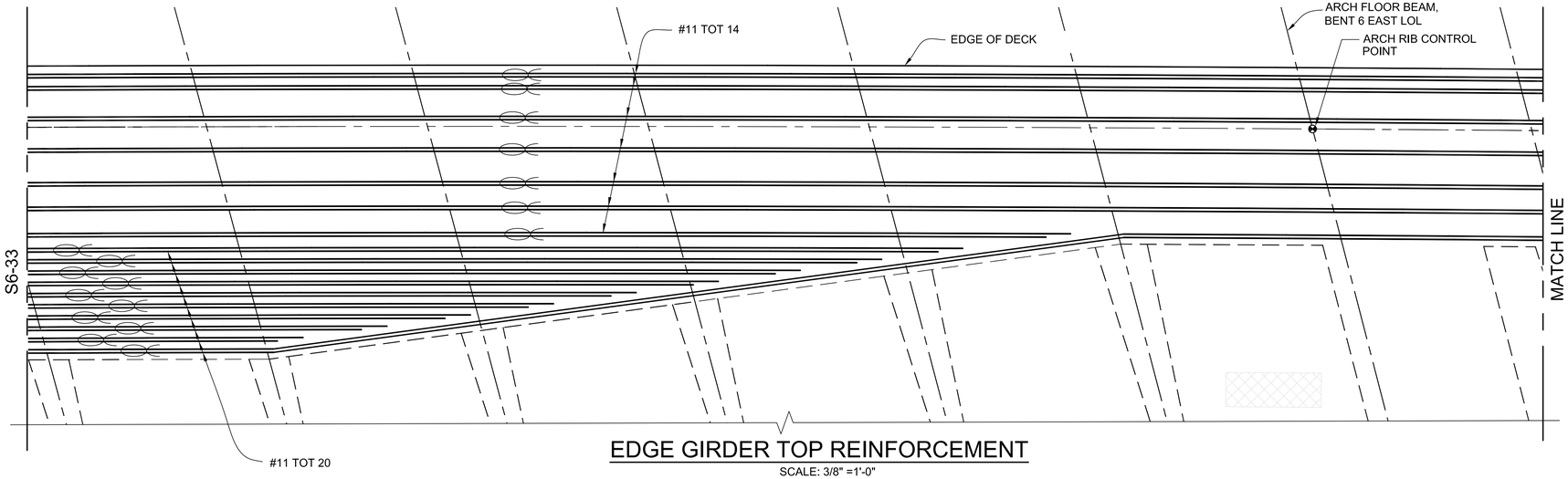

EDGE GIRDER TOP REINFORCEMENT

SCALE: 3/8" =1'-0"

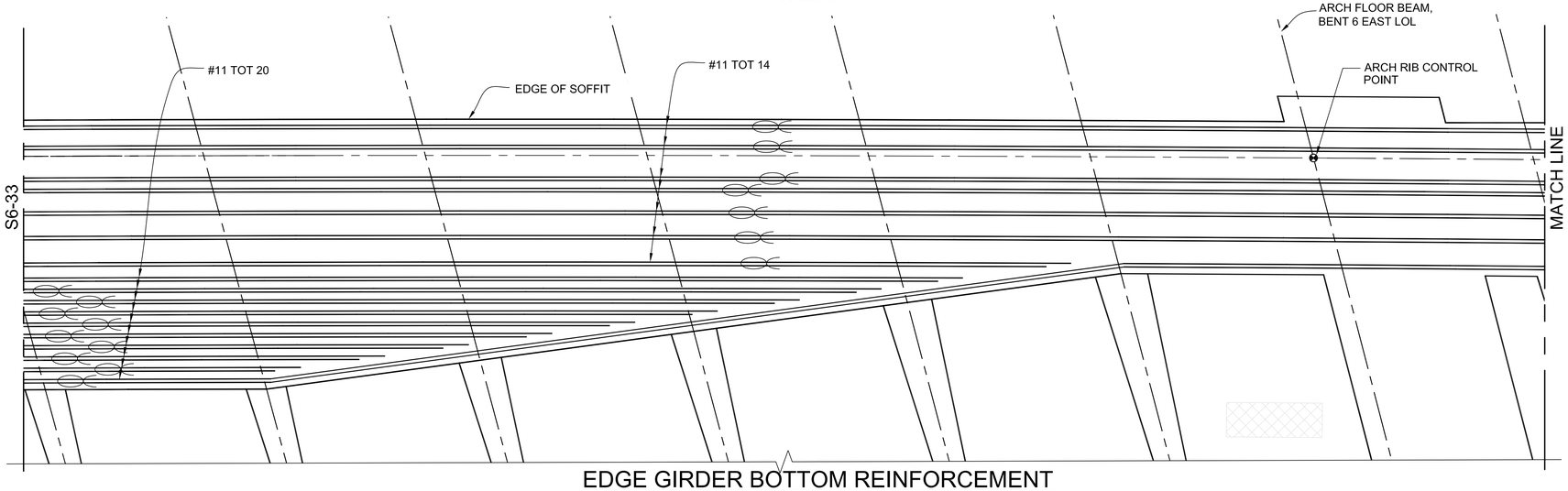

EDGE GIRDER BOTTOM REINFORCEMENT

SCALE: 3/8" =1'-0"

NOTES:

1. FOR NOTES AND LEGEND, SEE DRAWING S6-21.

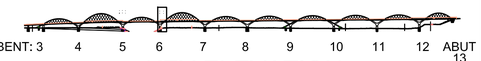

KEY ELEVATION

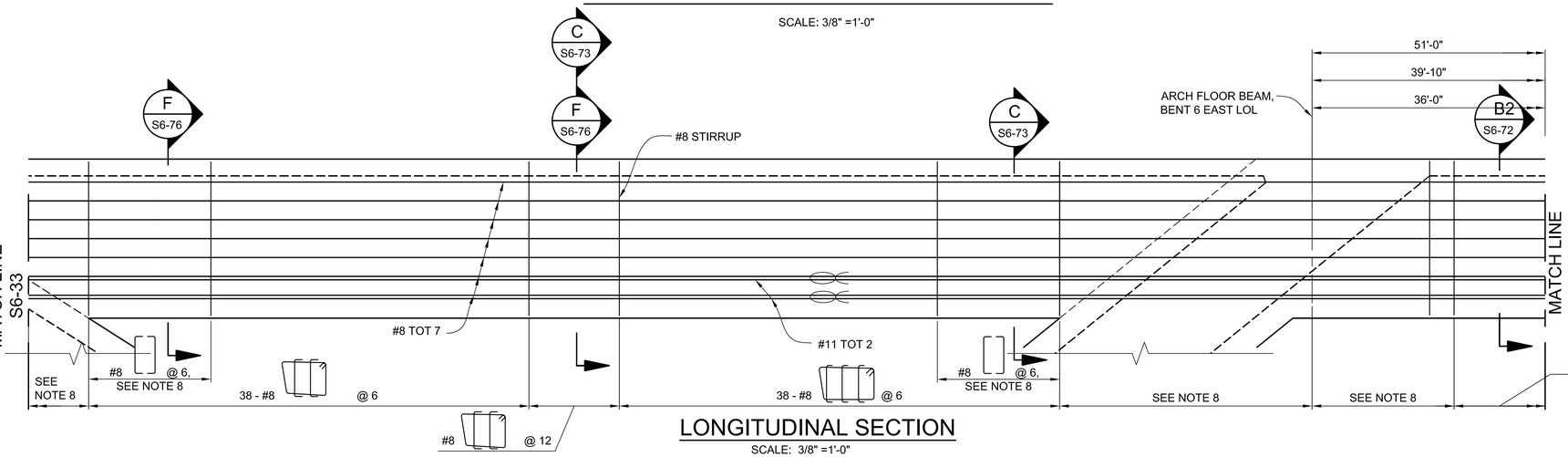

LONGITUDINAL SECTION

SCALE: 3/8" =1'-0"

THE CITY OF LOS ANGELES OR ITS OFFICERS OR AGENTS SHALL NOT BE RESPONSIBLE FOR THE ACCURACY OR COMPLETENESS OF ELECTRONIC COPIES OF THIS PLAN SHEET.

C:\caddlib\pw\pwwestcoast\zhang\dms57683\S6-21-GD01-47.dwg 6/28/16 17:28

REVISION DATES (DESIGN STAGE ONLY)

Sheet Version 3.0

CITY OF LOS ANGELES
DEPARTMENT OF PUBLIC WORKS
BUREAU OF ENGINEERING

GARY LEE MOORE, P.E.
CITY ENGINEER

DESIGN GROUP		DATE:
ENGINEER:	MICHAEL H. JONES	LIC. NO. S3033	1/29/2016
DESIGNED BY:	MICHAEL VAN DUYN		1/29/2016
DRAWN BY:	LI ZHANG		1/29/2016
CHECKED BY:	CHARLES REDFIELD		1/29/2016
APPROVED BY:	MICHAEL H. JONES		1/29/2016

ENGINEERING
CITY OF LOS ANGELES

STRUCTURE NO. 53C-2329

INDEX NO. P-38113

NO.	REVISIONS:	DATE	BY:

THIS PLAN WAS ELECTRONICALLY SIGNED AND STAMPED.

REGISTERED PROFESSIONAL ENGINEER MICHAEL H. JONES No. S3033 CIVIL STATE OF CALIFORNIA

VERTICAL CONTROL: BM 12-04070.1929 (NGVD 29) - 1985 ADJUSTMENT
HORIZONTAL CONTROL: GPS; PID AE 1704, EPOCH 1991.35

SHEET TITLE: EDGE GIRDER REINFORCEMENT DETAILS NO. 14

PROJECT: SIXTH STREET VIADUCT REPLACEMENT

ADDRESS: SIXTH STREET VIADUCT (WHITTIER BLVD) LOS ANGELES, CA

HNTB
HNTB Corporation
601 W. 5TH STREET SUITE 1000
LOS ANGELES, CALIFORNIA 90071
TEL (213) 403-1000 FAX (213) 403-1001

BUREAU OF ENGINEERING
OFFICIAL RECORD

WORK ORDER NO. E700224F

DRAWING NO. S6-34

SHEET 335 OF 560 SHEETS

ADDENDUM 5

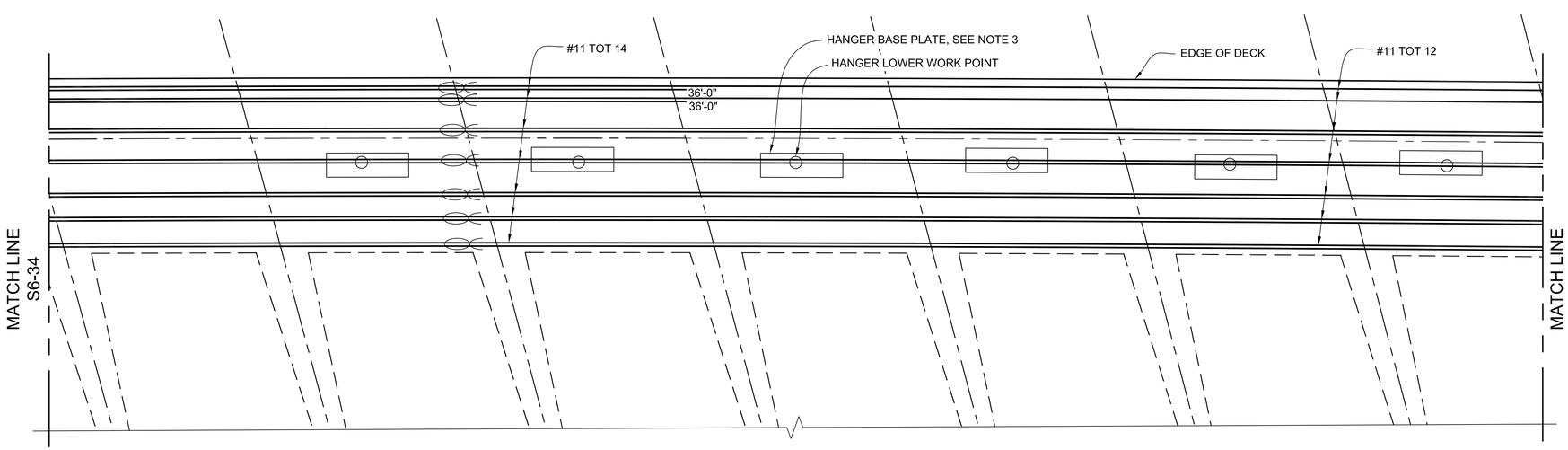

EDGE GIRDER TOP REINFORCEMENT

SCALE: 3/8" =1'-0"

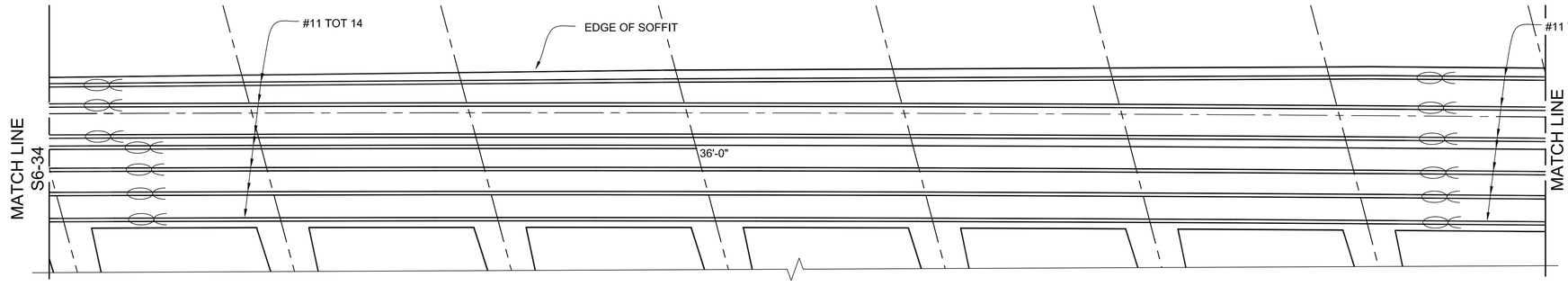

EDGE GIRDER BOTTOM REINFORCEMENT

SCALE: 3/8" =1'-0"

NOTES:

1. FOR NOTES AND LEGEND, SEE DRAWING S6-21.



KEY ELEVATION

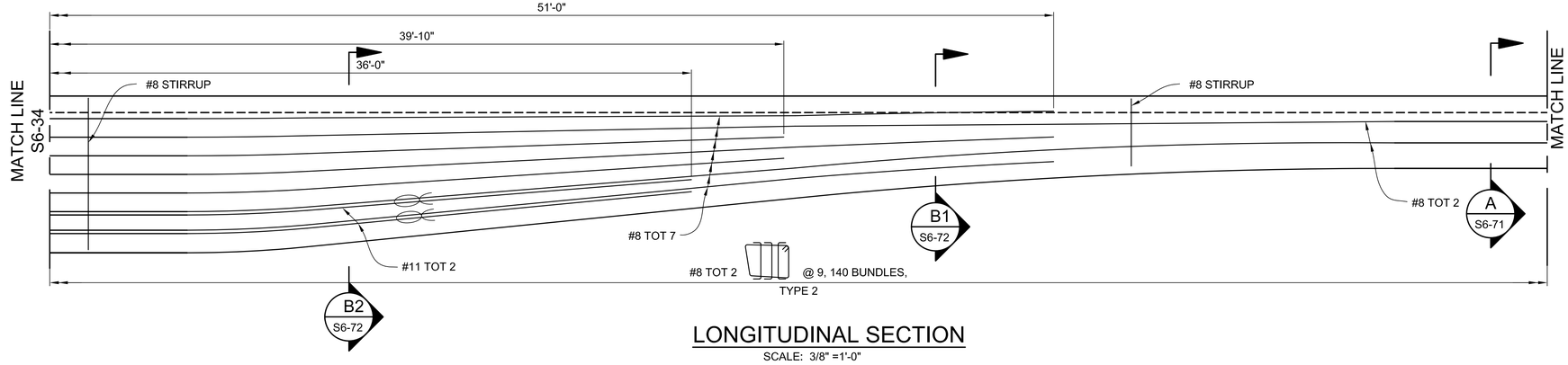

LONGITUDINAL SECTION

SCALE: 3/8" =1'-0"

THE CITY OF LOS ANGELES OR ITS OFFICERS OR AGENTS SHALL NOT BE RESPONSIBLE FOR THE ACCURACY OR COMPLETENESS OF ELECTRONIC COPIES OF THIS PLAN SHEET.

C:\caddlib\pw\pwwestcoast\zhang\dms57683\S6-21-G001-47.dwg 6/28/16 17:28

REVISION DATES (DESIGN STAGE ONLY)

Sheet Version 3.0

BUREAU OF ENGINEERING

ENGINEERING
CITY OF LOS ANGELES

NO.	REVISIONS:	DATE	BY:

STRUCTURE NO. 53C-2329

INDEX NO. P-38113

REGISTERED PROFESSIONAL ENGINEER MICHAEL H. JONES No. 53033 CIVIL STATE OF CALIFORNIA

THIS PLAN WAS ELECTRONICALLY SIGNED AND STAMPED.

CITY OF LOS ANGELES DEPARTMENT OF PUBLIC WORKS

CITY ENGINEER			
GARY LEE MOORE, P.E.		DATE:	
DESIGN GROUP			
ENGINEER:	MICHAEL H. JONES	LIC. NO. 53033	1/29/2016
DESIGNED BY:	MICHAEL VAN DUYN		1/29/2016
DRAWN BY:	LI ZHANG		1/29/2016
CHECKED BY:	CHARLES REDFIELD		1/29/2016
APPROVED BY:	MICHAEL H. JONES		1/29/2016

VERTICAL CONTROL:	BM 12-04070,1928 (NGVD 29) - 1985 ADJUSTMENT
HORIZONTAL CONTROL:	GPS; PID AE 1704; EPOCH 1991.35
SHEET TITLE:	EDGE GIRDER REINFORCEMENT DETAILS NO. 15
PROJECT:	SIXTH STREET VIADUCT REPLACEMENT
ADDRESS:	SIXTH STREET VIADUCT (WHITTIER BLVD) LOS ANGELES, CA

HNTB
HNTB Corporation
601 W. 5TH STREET SUITE 1000
LOS ANGELES, CALIFORNIA 90071
TEL (213) 403-1000 FAX (213) 403-1001

BUREAU OF ENGINEERING OFFICIAL RECORD

WORK ORDER NO. E700224F

DRAWING NO. S6-35

SHEET 336 OF 560 SHEETS

ADDENDUM 5

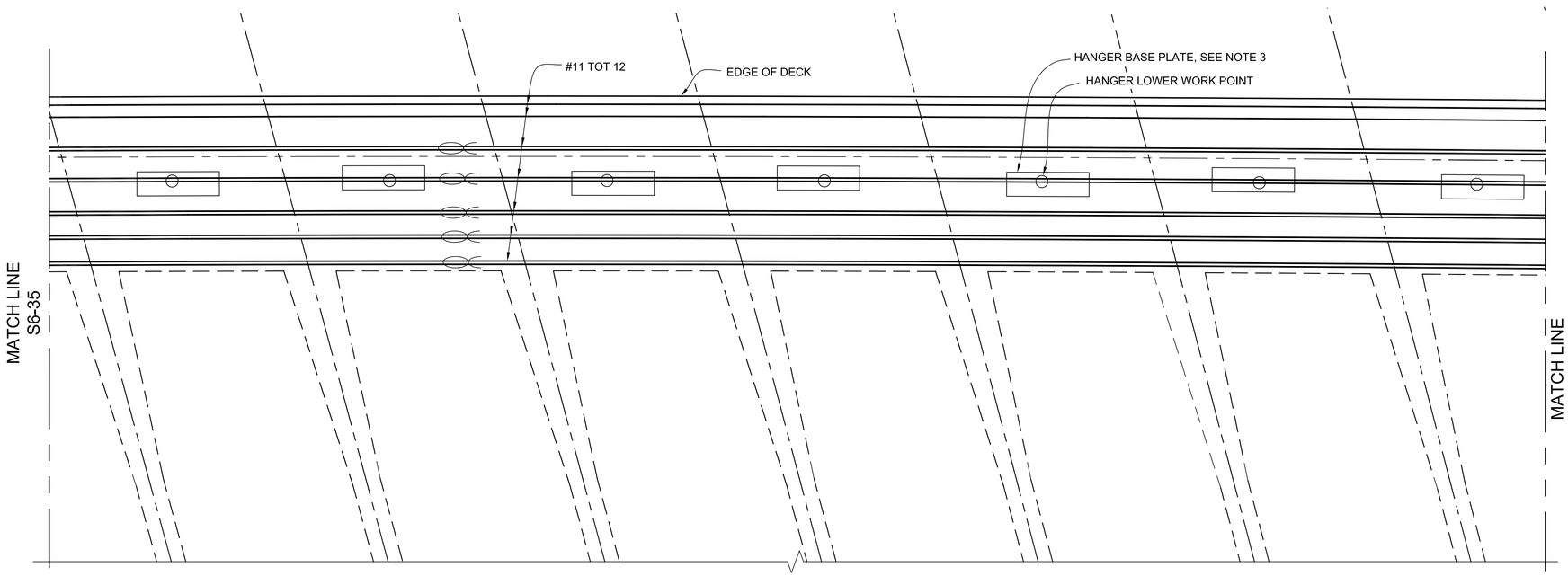

EDGE GIRDER TOP REINFORCEMENT

SCALE: 3/8" =1'-0"

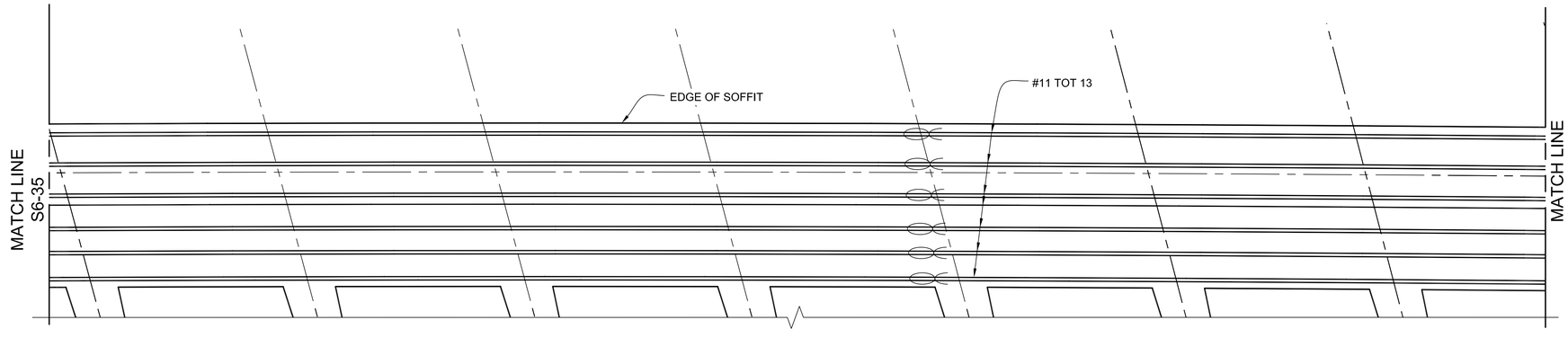

EDGE GIRDER BOTTOM REINFORCEMENT

SCALE: 3/8" =1'-0"

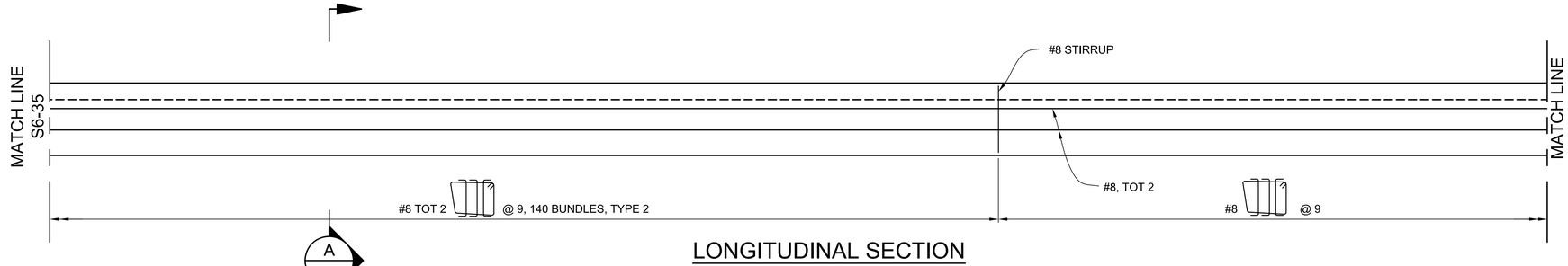

LONGITUDINAL SECTION

SCALE: 3/8" =1'-0"

NOTES:

1. FOR NOTES AND LEGEND, SEE DRAWING S6-21.

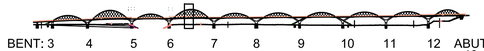

KEY ELEVATION

THE CITY OF LOS ANGELES OR ITS OFFICERS OR AGENTS SHALL NOT BE RESPONSIBLE FOR THE ACCURACY OR COMPLETENESS OF ELECTRONIC COPIES OF THIS PLAN SHEET.

C:\caddlib\pw\pwwestcoast\lzhang\dms57683\S6-21-GD01-47.dwg 6/28/16 17:28

REVISION DATES (DESIGN STAGE ONLY)

Sheet Version 3.0

CITY OF LOS ANGELES DEPARTMENT OF PUBLIC WORKS
BUREAU OF ENGINEERING

ENGINEERING
CITY OF LOS ANGELES

NO. | REVISIONS: | DATE | BY:

STRUCTURE NO. 53C-2329

INDEX NO. P-38113

"THIS PLAN WAS ELECTRONICALLY SIGNED AND STAMPED."

REGISTERED PROFESSIONAL ENGINEER MICHAEL H. JONES No. S3033 CIVIL STATE OF CALIFORNIA

GARY LEE MOORE, P.E. CITY ENGINEER

		DESIGN GROUP	DATE
ENGINEER:	MICHAEL H. JONES	LIC. NO. S3033	1/29/2016
DESIGNED BY:	MICHAEL VAN DUYN		1/29/2016
DRAWN BY:	LI ZHANG		1/29/2016
CHECKED BY:	CHARLES REDFIELD		1/29/2016
APPROVED BY:	MICHAEL H. JONES		1/29/2016

VERTICAL CONTROL: BM 12-04070, 1929 (NGVD 29) - 1985 ADJUSTMENT
HORIZONTAL CONTROL: GPS; PID AE 1704, EPOCH 1991.35

SHEET TITLE: EDGE GIRDER REINFORCEMENT DETAILS NO. 16

PROJECT: SIXTH STREET VIADUCT REPLACEMENT

ADDRESS: SIXTH STREET VIADUCT (WHITTIER BLVD) LOS ANGELES, CA

BUREAU OF ENGINEERING OFFICIAL RECORD

HNTB
HNTB Corporation
601 W. 5TH STREET SUITE 1000
LOS ANGELES, CALIFORNIA 90071
TEL (213) 403-1000 FAX (213) 403-1001

WORK ORDER NO. E700224F

DRAWING NO. S6-36

SHEET 337 OF 560 SHEETS

ADDENDUM 5

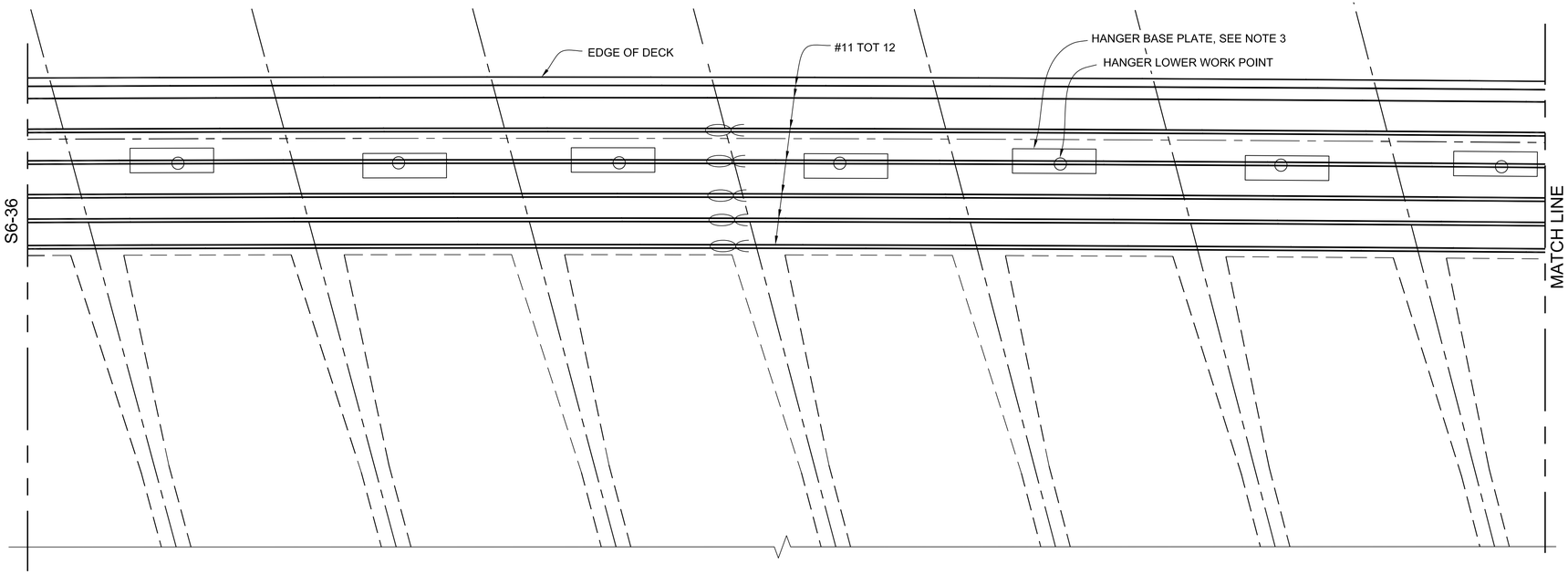

EDGE GIRDER TOP REINFORCEMENT

SCALE: 3/8" =1'-0"

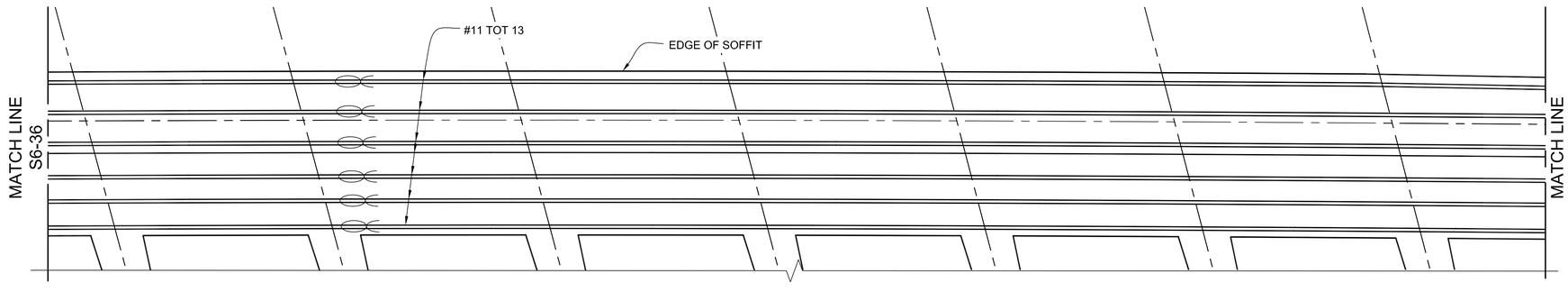

EDGE GIRDER BOTTOM REINFORCEMENT

SCALE: 3/8" =1'-0"

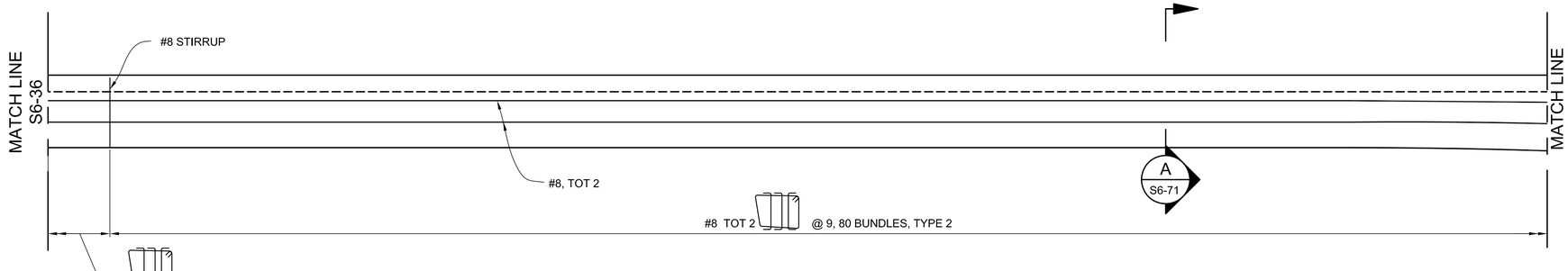

LONGITUDINAL SECTION

SCALE: 3/8" =1'-0"

NOTES:

1. FOR NOTES AND LEGEND, SEE DRAWING S6-21.

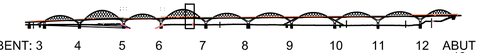

KEY ELEVATION

THE CITY OF LOS ANGELES OR ITS OFFICERS OR AGENTS SHALL NOT BE RESPONSIBLE FOR THE ACCURACY OR COMPLETENESS OF ELECTRONIC COPIES OF THIS PLAN SHEET.

C:\caddlib\pw\pwwestcoast\zhang\dms57683\S6-21-GD01-47.dwg 6/28/16 17:28

REVISION DATES (DESIGN STAGE ONLY)

Sheet Version 3.0

CITY OF LOS ANGELES DEPARTMENT OF PUBLIC WORKS

BUREAU OF ENGINEERING

ENGINEERING CITY OF LOS ANGELES

NO.	REVISIONS:	DATE	BY:

STRUCTURE NO. 53C-2329

INDEX NO. P-38113

"THIS PLAN WAS ELECTRONICALLY SIGNED AND STAMPED."

REGISTERED PROFESSIONAL ENGINEER MICHAEL H. JONES No. S3033 CIVIL STATE OF CALIFORNIA

CITY ENGINEER			
GARY LEE MOORE, P.E.			DATE:
DESIGN GROUP	LIC. NO.		
ENGINEER: MICHAEL H. JONES	S3033		1/29/2016
DESIGNED BY: MICHAEL VAN DUYN			1/29/2016
DRAWN BY: LI ZHANG			1/29/2016
CHECKED BY: CHARLES REDFIELD			1/29/2016
APPROVED BY: MICHAEL H. JONES			1/29/2016

VERTICAL CONTROL: BM 12-04070, 1929 (NGVD 29) - 1985 ADJUSTMENT

HORIZONTAL CONTROL: GPS; PID AE 1704, EPOCH 1991.35

SHEET TITLE: EDGE GIRDER REINFORCEMENT DETAILS NO. 1Z

PROJECT: SIXTH STREET VIADUCT REPLACEMENT

ADDRESS: SIXTH STREET VIADUCT (WHITTIER BLVD) LOS ANGELES, CA

HNTB

HNTB Corporation
601 W. 5TH STREET SUITE 1000
LOS ANGELES, CALIFORNIA 90071
TEL (213) 403-1000 FAX (213) 403-1001

BUREAU OF ENGINEERING OFFICIAL RECORD

WORK ORDER NO. E700224F

DRAWING NO. S6-37

SHEET 338 OF 560 SHEETS

ADDENDUM 5

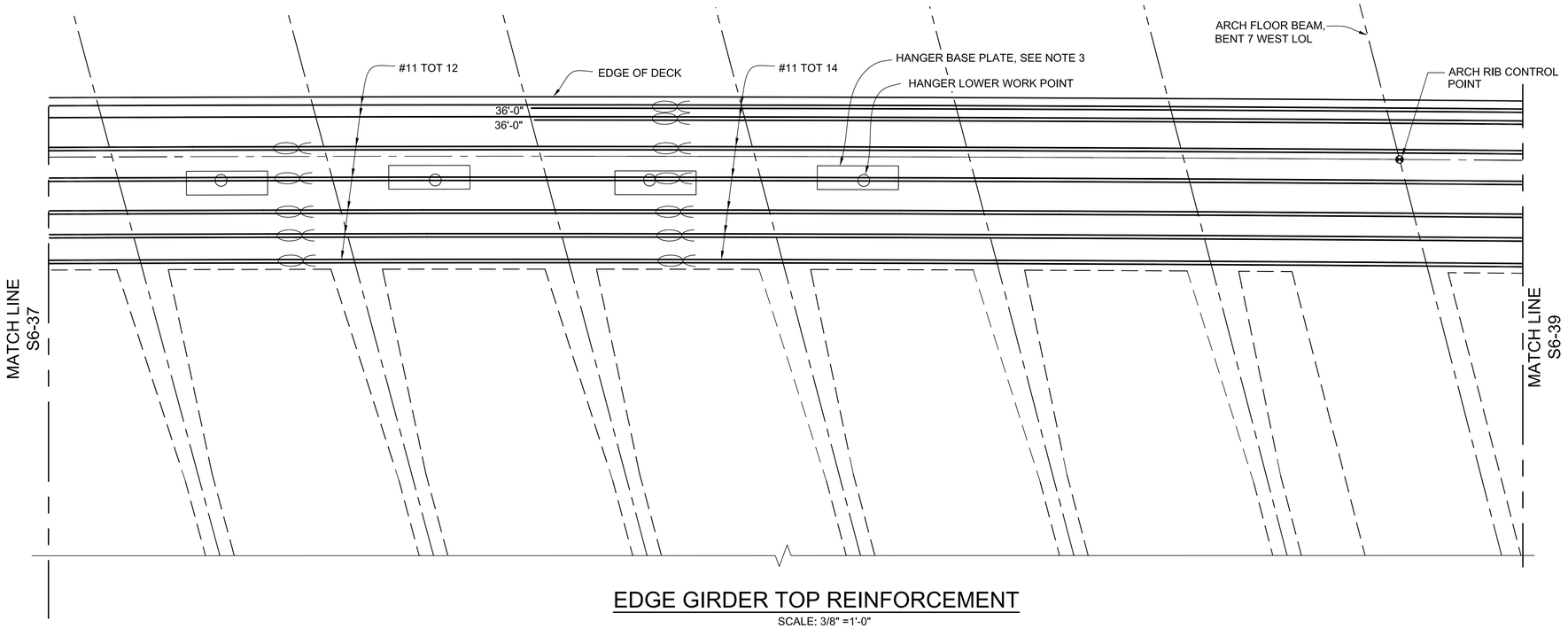

EDGE GIRDER TOP REINFORCEMENT

SCALE: 3/8" =1'-0"

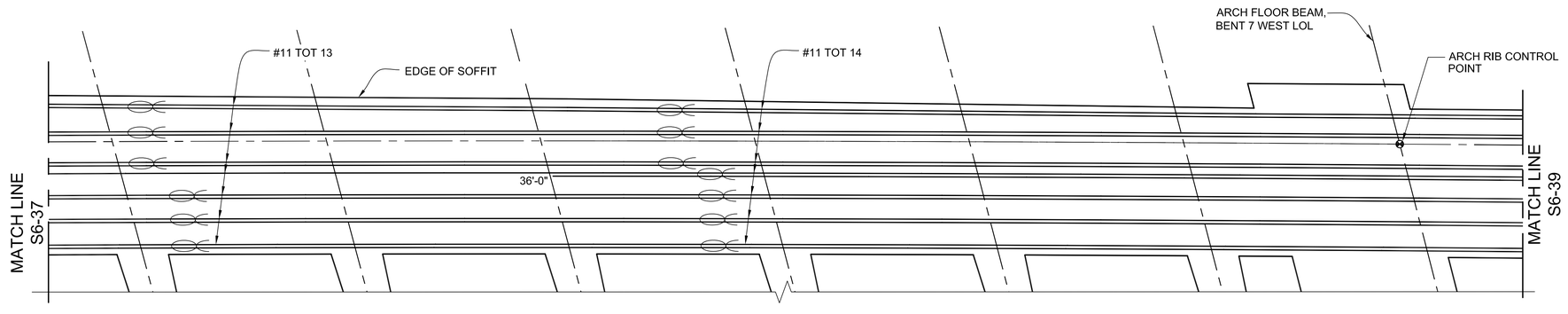

EDGE GIRDER BOTTOM REINFORCEMENT

SCALE: 3/8" =1'-0"

NOTES:

1. FOR NOTES AND LEGEND, SEE DRAWING S6-21.

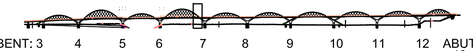

KEY ELEVATION

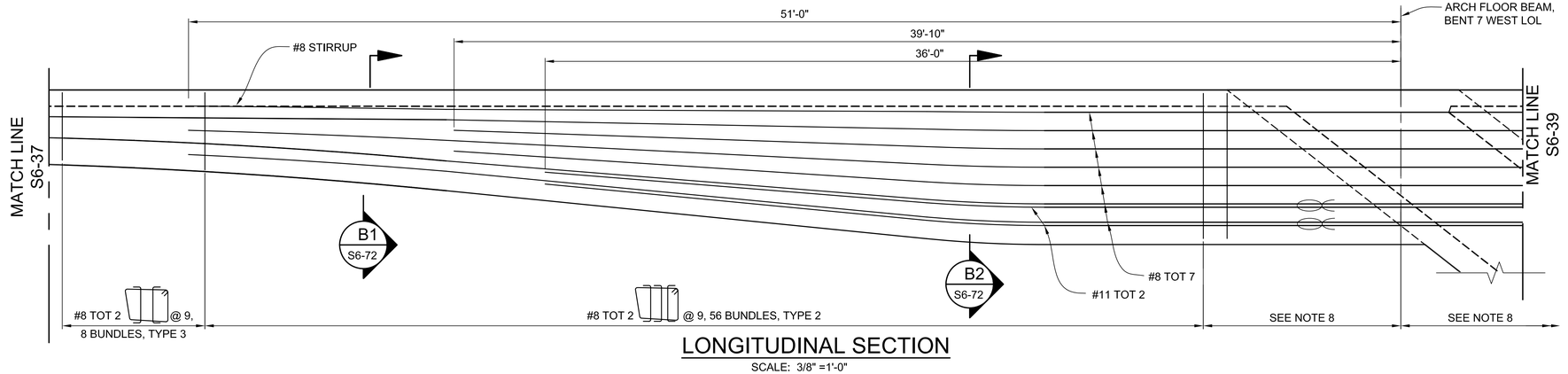

LONGITUDINAL SECTION

SCALE: 3/8" =1'-0"

THE CITY OF LOS ANGELES OR ITS OFFICERS OR AGENTS SHALL NOT BE RESPONSIBLE FOR THE ACCURACY OR COMPLETENESS OF ELECTRONIC COPIES OF THIS PLAN SHEET.

C:\caddlib\pw\pwwestcoast\lzhang\dms57683\S6-21-GD01-47.dwg 6/28/16 17:29

REVISION DATES (DESIGN STAGE ONLY)

Sheet Version 3.0

CITY OF LOS ANGELES DEPARTMENT OF PUBLIC WORKS
BUREAU OF ENGINEERING

ENGINEERING
CITY OF LOS ANGELES

NO.	REVISIONS:	DATE	BY:

STRUCTURE NO. 53C-2329

INDEX NO. P-38113

REGISTERED PROFESSIONAL ENGINEER MICHAEL H. JONES No. S3033 CIVIL STATE OF CALIFORNIA

"THIS PLAN WAS ELECTRONICALLY SIGNED AND STAMPED."

GARY LEE MOORE, P.E. CITY ENGINEER

			DATE:
ENGINEER:	DESIGN GROUP	LIC. NO. S3033	1/29/2016
DESIGNED BY:	MICHAEL H. JONES		1/29/2016
DRAWN BY:	MICHAEL VAN DUYN		1/29/2016
CHECKED BY:	LI ZHANG		1/29/2016
APPROVED BY:	CHARLES REDFIELD		1/29/2016
	MICHAEL H. JONES		1/29/2016

VERTICAL CONTROL: BM 12-04070, 1929 (NGVD 29) - 1985 ADJUSTMENT
HORIZONTAL CONTROL: GPS; PID AE 1704, EPOCH 1991.35

SHEET TITLE: EDGE GIRDER REINFORCEMENT DETAILS NO. 18

PROJECT: SIXTH STREET VIADUCT REPLACEMENT

ADDRESS: SIXTH STREET VIADUCT (WHITTIER BLVD) LOS ANGELES, CA

BUREAU OF ENGINEERING OFFICIAL RECORD

HNTB
HNTB Corporation
601 W. 5TH STREET SUITE 1000
LOS ANGELES, CALIFORNIA 90071
TEL (213) 403-1000 FAX (213) 403-1001

WORK ORDER NO. E700224F

DRAWING NO. S6-38

SHEET 339 OF 560 SHEETS

ADDENDUM 5

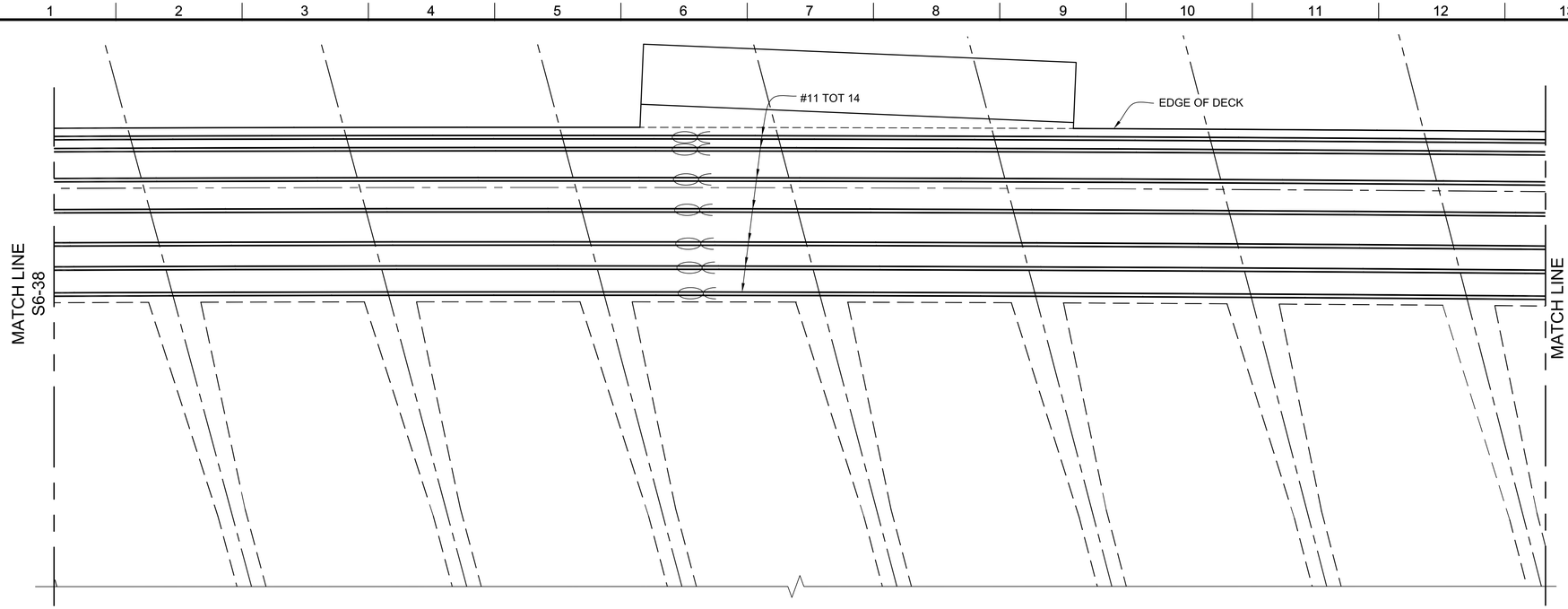

EDGE GIRDER TOP REINFORCEMENT

SCALE: 3/8" =1'-0"

NOTES:

1. FOR NOTES AND LEGEND, SEE DRAWING S6-21.

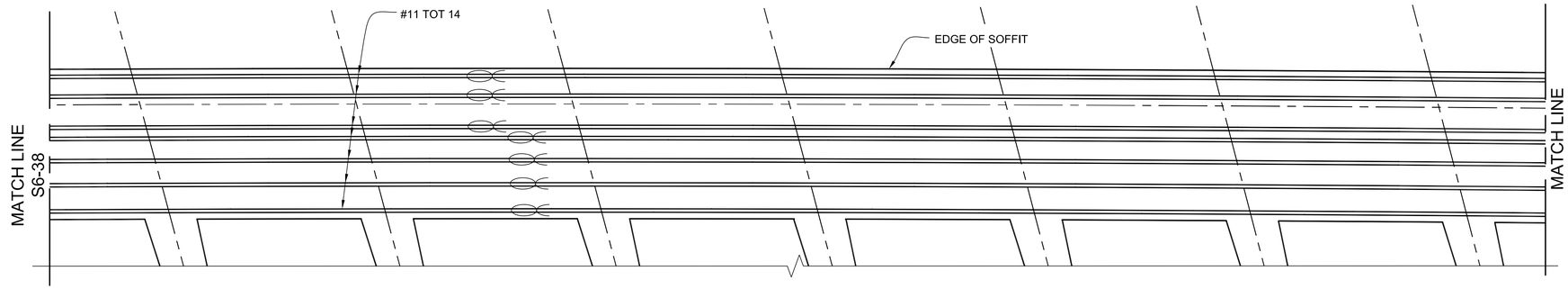

EDGE GIRDER BOTTOM REINFORCEMENT

SCALE: 3/8" =1'-0"

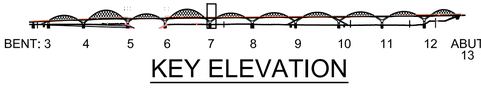

KEY ELEVATION

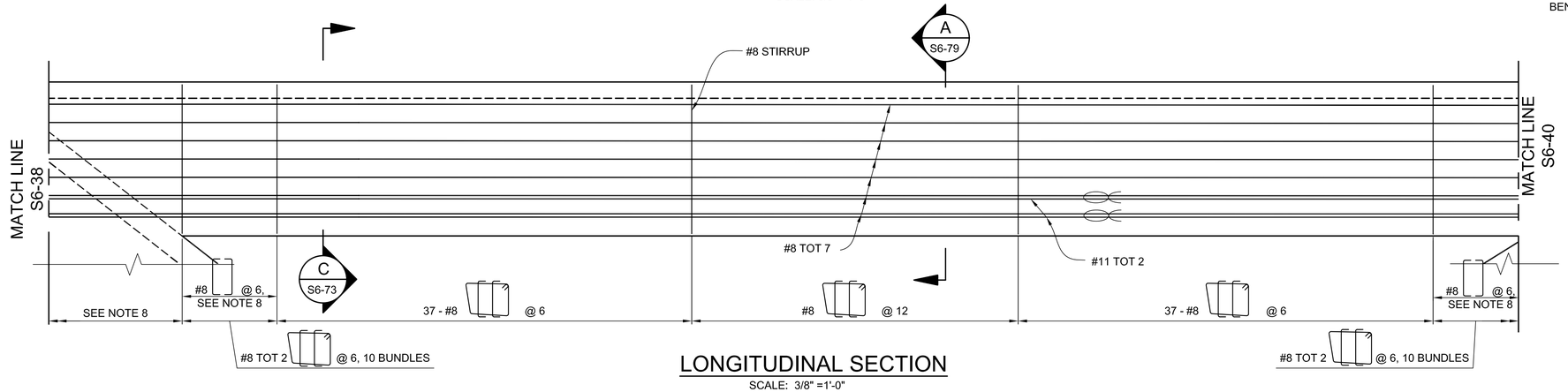

LONGITUDINAL SECTION

SCALE: 3/8" =1'-0"

THE CITY OF LOS ANGELES OR ITS OFFICERS OR AGENTS SHALL NOT BE RESPONSIBLE FOR THE ACCURACY OR COMPLETENESS OF ELECTRONIC COPIES OF THIS PLAN SHEET.

C:\caddlib\pw\pwwestcoast\zhang\dms57683\S6-21-GD01-47.dwg 6/28/16 17:29

REVISION DATES (DESIGN STAGE ONLY)

Sheet Version 3.0

BUREAU OF ENGINEERING

ENGINEERING
CITY OF LOS ANGELES

NO.	REVISIONS:	DATE	BY:

STRUCTURE NO.
53C-2329

INDEX NO. **P-38113**

REGISTERED PROFESSIONAL ENGINEER
MICHAEL H. JONES
No. S3033
CIVIL
STATE OF CALIFORNIA

THIS PLAN WAS ELECTRONICALLY SIGNED AND STAMPED.

CITY OF LOS ANGELES DEPARTMENT OF PUBLIC WORKS

GARY LEE MOORE, P.E. CITY ENGINEER

ENGINEER:	MICHAEL H. JONES	LIC. NO. S3033	DATE: 1/29/2016
DESIGNED BY:	MICHAEL VAN DUYN		1/29/2016
DRAWN BY:	LI ZHANG		1/29/2016
CHECKED BY:	CHARLES REDFIELD		1/29/2016
APPROVED BY:	MICHAEL H. JONES		1/29/2016

DESIGN GROUP

VERTICAL CONTROL: BM 12-04070, 1929 (NGVD 29) - 1985 ADJUSTMENT
HORIZONTAL CONTROL: GPS; PID AE 1704, EPOCH 1991.35

SHEET TITLE: EDGE GIRDER REINFORCEMENT DETAILS NO. 19

PROJECT: SIXTH STREET VIADUCT REPLACEMENT

ADDRESS: SIXTH STREET VIADUCT (WHITTIER BLVD) LOS ANGELES, CA

HNTB
HNTB Corporation
601 W. 5TH STREET SUITE 1000
LOS ANGELES, CALIFORNIA 90071
TEL (213) 403-1000 FAX (213) 403-1001

BUREAU OF ENGINEERING
OFFICIAL RECORD

WORK ORDER NO.
E700224F

DRAWING NO.
S6-39

SHEET 340 OF 560 SHEETS

ADDENDUM 5

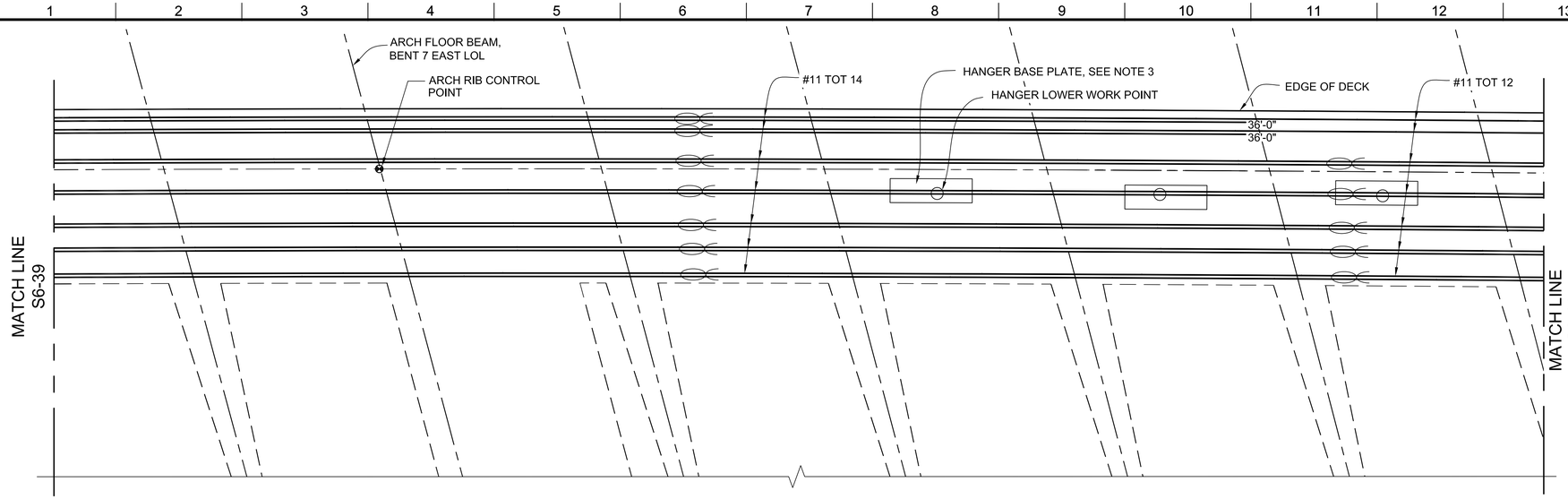

EDGE GIRDER TOP REINFORCEMENT

SCALE: 3/8" =1'-0"

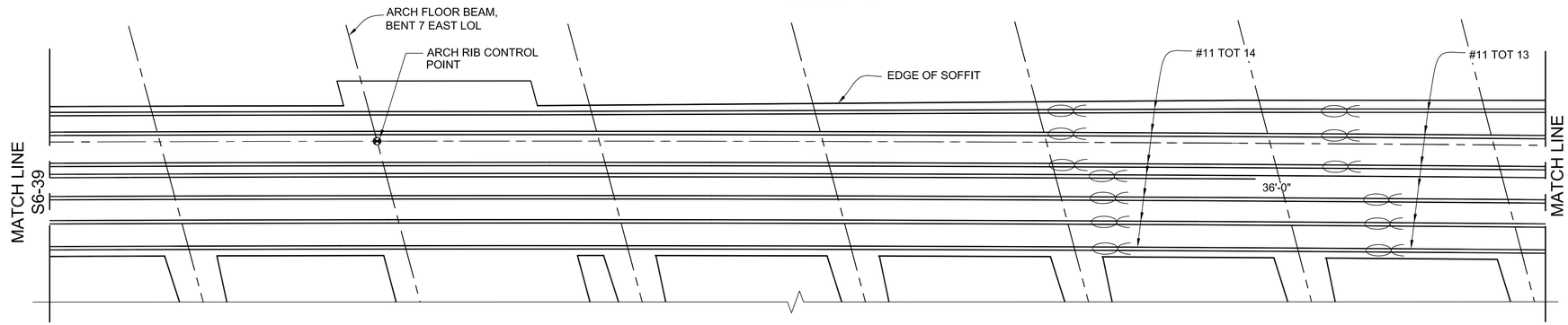

EDGE GIRDER BOTTOM REINFORCEMENT

SCALE: 3/8" =1'-0"

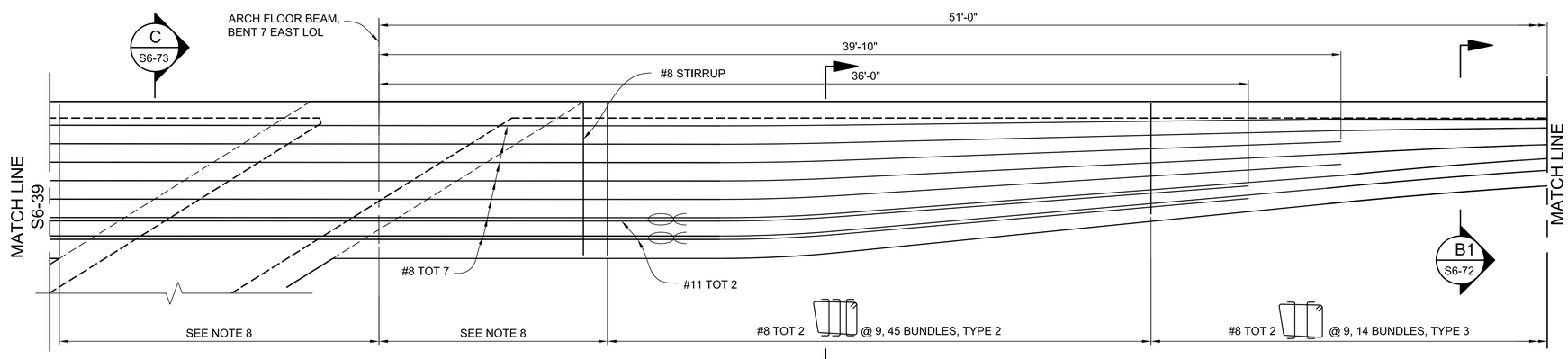

LONGITUDINAL SECTION

SCALE: 3/8" =1'-0"

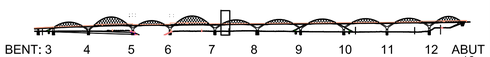

KEY ELEVATION

NOTES:

1. FOR NOTES AND LEGEND, SEE DRAWING S6-21.

THE CITY OF LOS ANGELES OR ITS OFFICERS OR AGENTS SHALL NOT BE RESPONSIBLE FOR THE ACCURACY OR COMPLETENESS OF ELECTRONIC COPIES OF THIS PLAN SHEET.

C:\caddlib\pw\pwwestcoast\zhang\dms57683\S6-21-GD01-47.dwg 6/28/16 17:29

REVISION DATES (DESIGN STAGE ONLY)

Sheet Version 3.0

CITY OF LOS ANGELES DEPARTMENT OF PUBLIC WORKS BUREAU OF ENGINEERING

ENGINEERING CITY OF LOS ANGELES

NO. | REVISIONS: | DATE | BY:

STRUCTURE NO. 53C-2329

INDEX NO. P-38113

THIS PLAN WAS ELECTRONICALLY SIGNED AND STAMPED.

REGISTERED PROFESSIONAL ENGINEER MICHAEL H. JONES No. S3033 CIVIL STATE OF CALIFORNIA

GARY LEE MOORE, P.E. CITY ENGINEER

		DESIGN GROUP	LIC. NO.	DATE:
ENGINEER:	MICHAEL H. JONES		S3033	1/29/2016
DESIGNED BY:	MICHAEL VAN DUYN			1/29/2016
DRAWN BY:	LI ZHANG			1/29/2016
CHECKED BY:	CHARLES REDFIELD			1/29/2016
APPROVED BY:	MICHAEL H. JONES			1/29/2016

VERTICAL CONTROL: BM 12-04070.1928 (NGVD 29) - 1985 ADJUSTMENT

HORIZONTAL CONTROL: GPS; PID AE 1704, EPOCH 1991.35

SHEET TITLE: EDGE GIRDER REINFORCEMENT DETAILS NO. 20

PROJECT: SIXTH STREET VIADUCT REPLACEMENT

ADDRESS: SIXTH STREET VIADUCT (WHITTIER BLVD) LOS ANGELES, CA

HNTB

HNTB Corporation
601 W. 5TH STREET SUITE 1000
LOS ANGELES, CALIFORNIA 90071
TEL (213) 403-1000 FAX (213) 403-1001

BUREAU OF ENGINEERING OFFICIAL RECORD

WORK ORDER NO. E700224F

DRAWING NO. S6-40

SHEET 341 OF 560 SHEETS

ADDENDUM 5

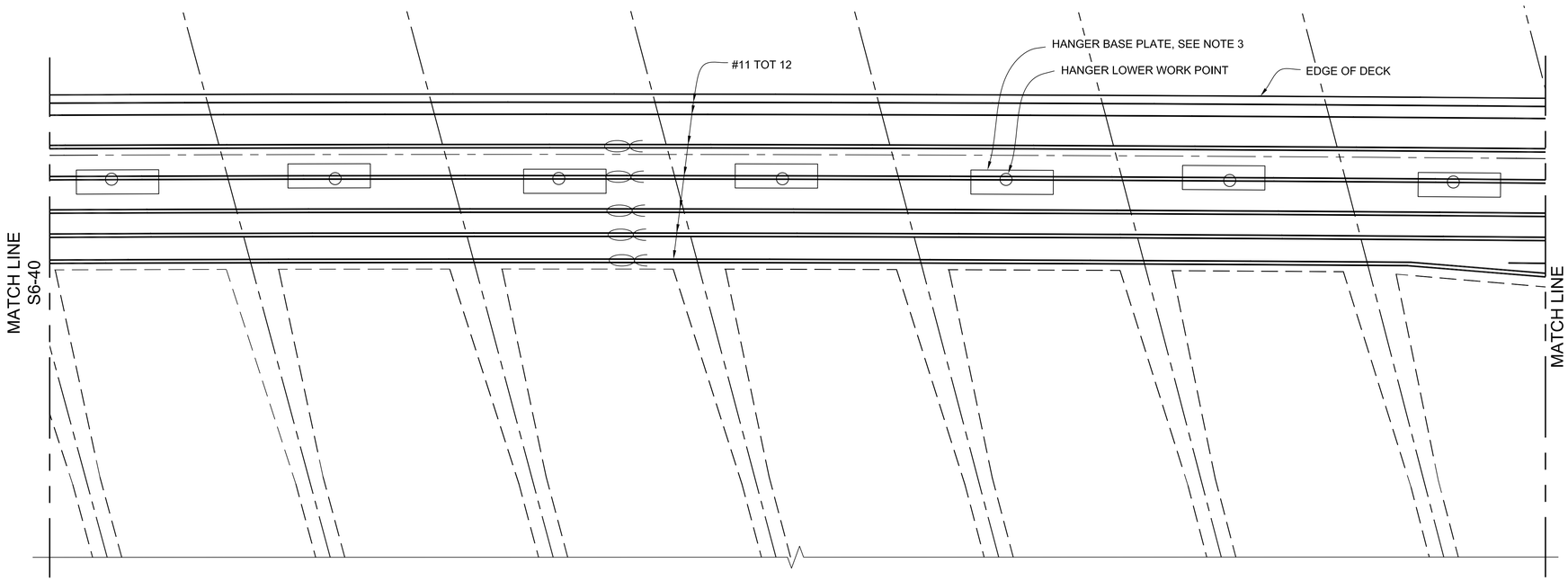

EDGE GIRDER TOP REINFORCEMENT

SCALE: 3/8" =1'-0"

NOTES:

1. FOR NOTES AND LEGEND, SEE DRAWING S6-21.

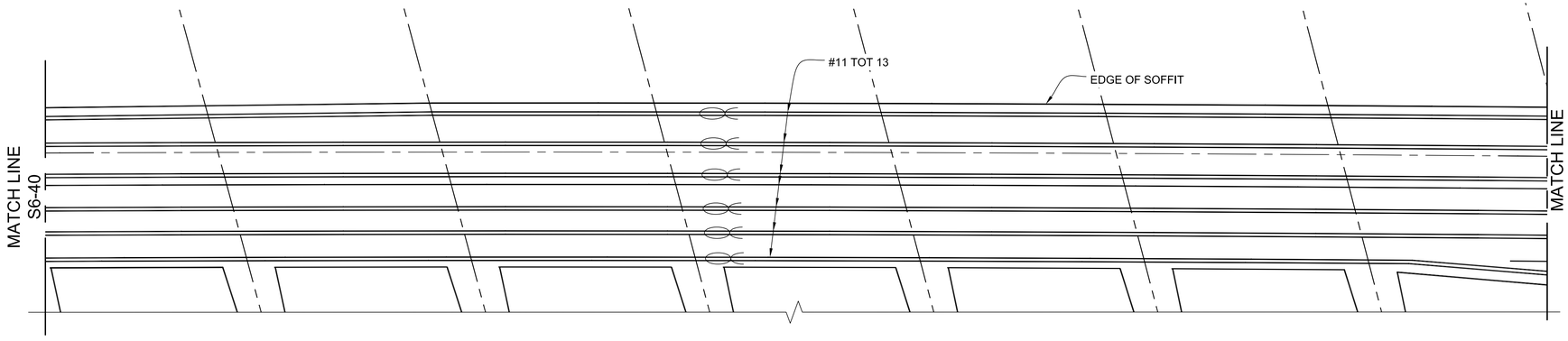

EDGE GIRDER BOTTOM REINFORCEMENT

SCALE: 3/8" =1'-0"

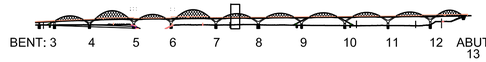

KEY ELEVATION

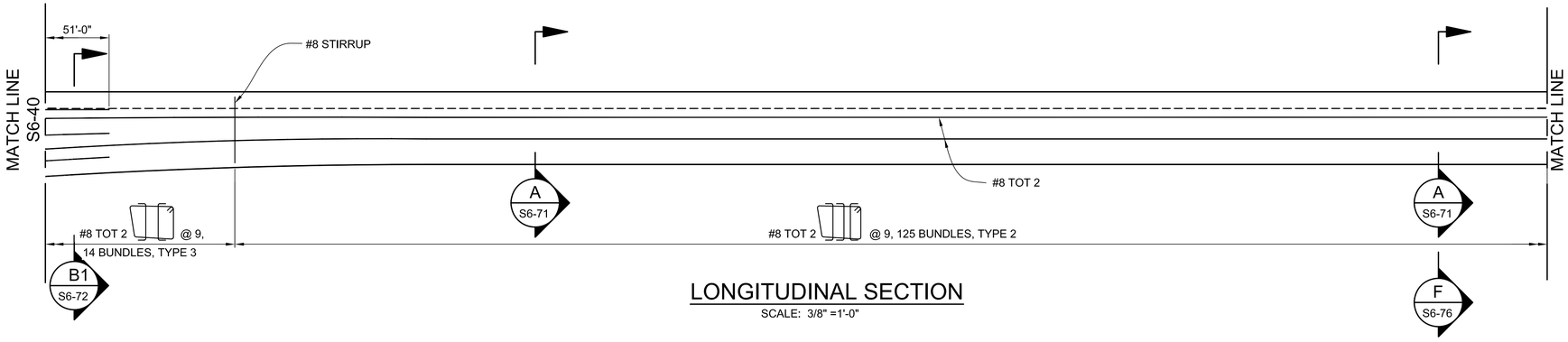

LONGITUDINAL SECTION

SCALE: 3/8" =1'-0"

BUREAU OF ENGINEERING
OFFICIAL RECORD

HNTB
HNTB Corporation
601 W. 5TH STREET SUITE 1000
LOS ANGELES, CALIFORNIA 90071
TEL (213) 403-1000 FAX (213) 403-1001

CITY OF LOS ANGELES DEPARTMENT OF PUBLIC WORKS
BUREAU OF ENGINEERING

ENGINEERING
CITY OF LOS ANGELES

NO.	REVISIONS:	DATE	BY:

STRUCTURE NO. 53C-2329

INDEX NO. P-38113

REGISTERED PROFESSIONAL ENGINEER MICHAEL H. JONES No. 53033 CIVIL STATE OF CALIFORNIA

THIS PLAN WAS ELECTRONICALLY SIGNED AND STAMPED.

CITY ENGINEER	DATE
GARY LEE MOORE, P.E.	
DESIGN GROUP	
ENGINEER: MICHAEL H. JONES LIC. NO. 53033	1/29/2016
DESIGNED BY: MICHAEL VAN DUYN	1/29/2016
DRAWN BY: LI ZHANG	1/29/2016
CHECKED BY: CHARLES REDFIELD	1/29/2016
APPROVED BY: MICHAEL H. JONES	1/29/2016

VERTICAL CONTROL: BM 12-04070, 1929 (NGVD 29) – 1985 ADJUSTMENT
HORIZONTAL CONTROL: GPS; PID AE 1704, EPOCH 1991.35

SHEET TITLE: EDGE GIRDER REINFORCEMENT DETAILS NO. 21

PROJECT: SIXTH STREET VIADUCT REPLACEMENT

ADDRESS: SIXTH STREET VIADUCT (WHITTIER BLVD) LOS ANGELES, CA

WORK ORDER NO. E700224F

DRAWING NO. S6-41

SHEET 342 OF 560 SHEETS

THE CITY OF LOS ANGELES OR ITS OFFICERS OR AGENTS SHALL NOT BE RESPONSIBLE FOR THE ACCURACY OR COMPLETENESS OF ELECTRONIC COPIES OF THIS PLAN SHEET.

REVISION DATES (DESIGN STAGE ONLY)

C:\caddlib\pw\pwwestcoast\zhang\dms57683\S6-21-GD01-47.dwg 6/28/16 17:29

Sheet Version 3.0

ADDENDUM 5

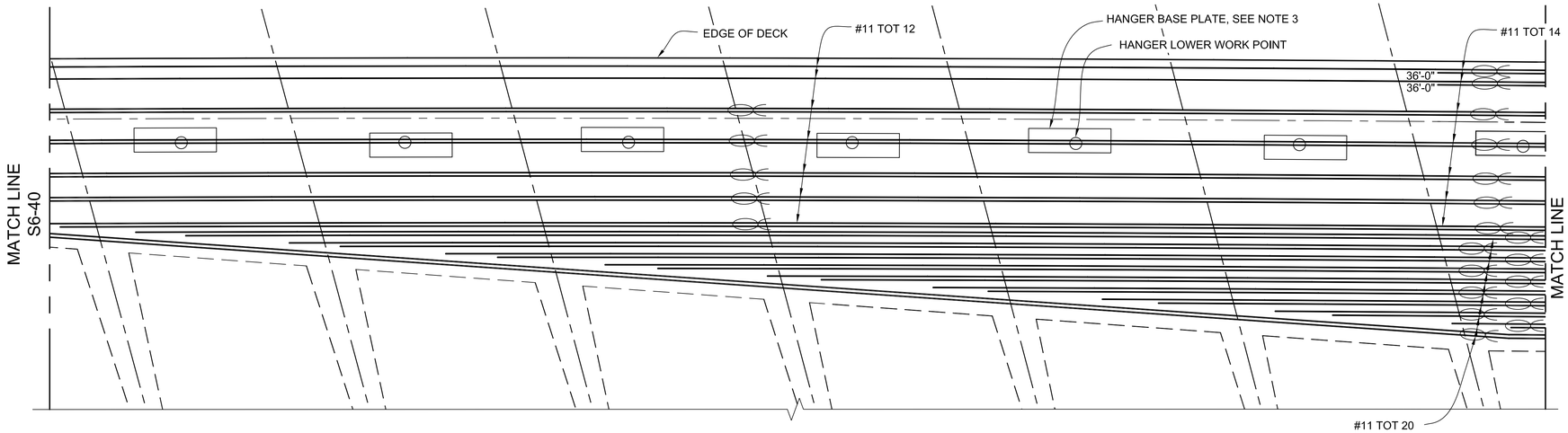

EDGE GIRDER TOP REINFORCEMENT

SCALE: 3/8" =1'-0"

NOTES:

1. FOR NOTES AND LEGEND, SEE DRAWING S6-21.

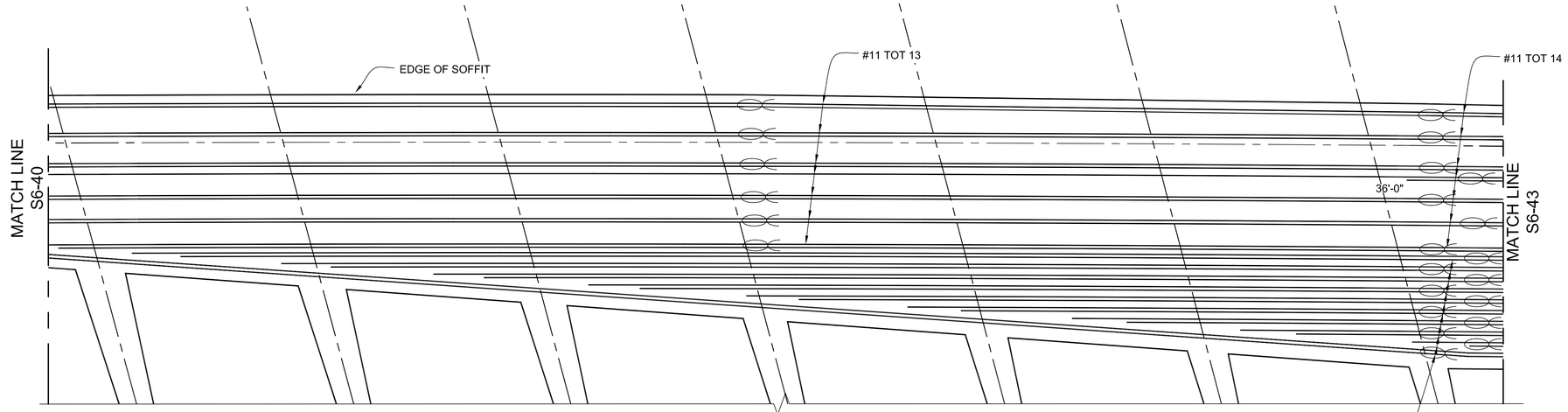

EDGE GIRDER BOTTOM REINFORCEMENT

SCALE: 3/8" =1'-0"

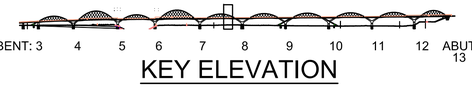

KEY ELEVATION

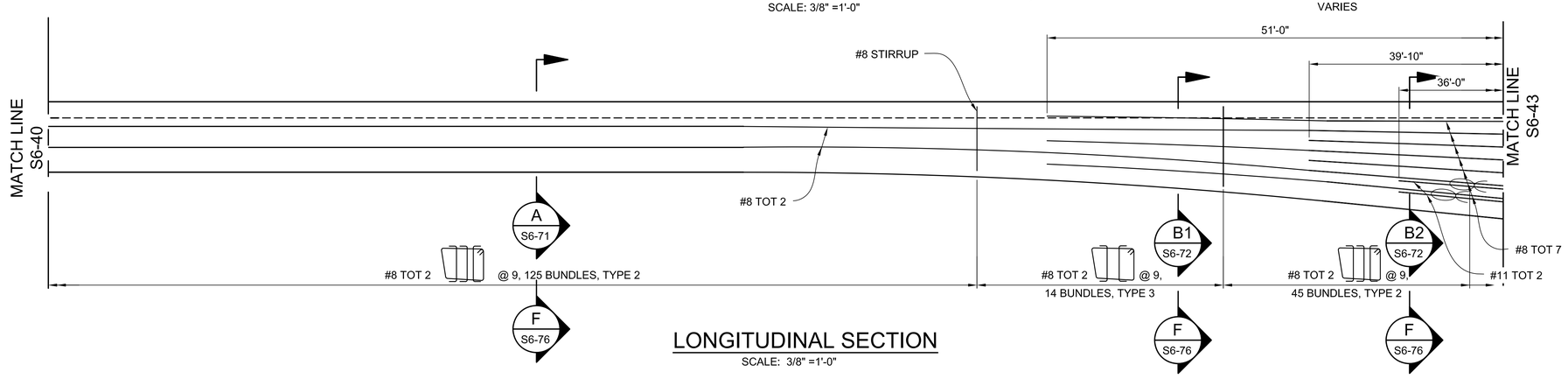

LONGITUDINAL SECTION

SCALE: 3/8" =1'-0"

BUREAU OF ENGINEERING
OFFICIAL RECORD

HNTB
HNTB Corporation
601 W. 5TH STREET SUITE 1000
LOS ANGELES, CALIFORNIA 90071
TEL (213) 403-1000 FAX (213) 403-1001

WORK ORDER NO.
E700224F

DRAWING NO.
S6-42

SHEET 343 OF 560 SHEETS

CITY OF LOS ANGELES
DEPARTMENT OF PUBLIC WORKS
BUREAU OF ENGINEERING

ENGINEERING
CITY OF LOS ANGELES

NO.	REVISIONS:	DATE	BY:

STRUCTURE NO.
53C-2329

INDEX NO.
P-38113

"THIS PLAN WAS ELECTRONICALLY SIGNED AND STAMPED."

REGISTERED PROFESSIONAL ENGINEER
MICHAEL H. JONES
No. S3033
CIVIL
STATE OF CALIFORNIA

CITY ENGINEER
GARY LEE MOORE, P.E.

		DATE:
DESIGN GROUP		
ENGINEER:	MICHAEL H. JONES LIC. NO. S3033	1/29/2016
DESIGNED BY:	MICHAEL VAN DUYN	1/29/2016
DRAWN BY:	LI ZHANG	1/29/2016
CHECKED BY:	CHARLES REDFIELD	1/29/2016
APPROVED BY:	MICHAEL H. JONES	1/29/2016

VERTICAL CONTROL: BM 12-04070,1928 (NGVD 29) - 1985 ADJUSTMENT
HORIZONTAL CONTROL: GPS; PID AE 1704; EPOCH 1991.35

SHEET TITLE: EDGE GIRDER REINFORCEMENT DETAILS NO. 22

PROJECT: SIXTH STREET VIADUCT REPLACEMENT

ADDRESS: SIXTH STREET VIADUCT (WHITTIER BLVD) LOS ANGELES, CA

REVISION DATES (DESIGN STAGE ONLY)

THE CITY OF LOS ANGELES OR ITS OFFICERS OR AGENTS SHALL NOT BE RESPONSIBLE FOR THE ACCURACY OR COMPLETENESS OF ELECTRONIC COPIES OF THIS PLAN SHEET.

C:\caddlib\pw\pwwestcoast\zhang\dms57683\S6-21-GD01-47.dwg 6/28/16 17:29

Sheet Version 3.0

ADDENDUM 5

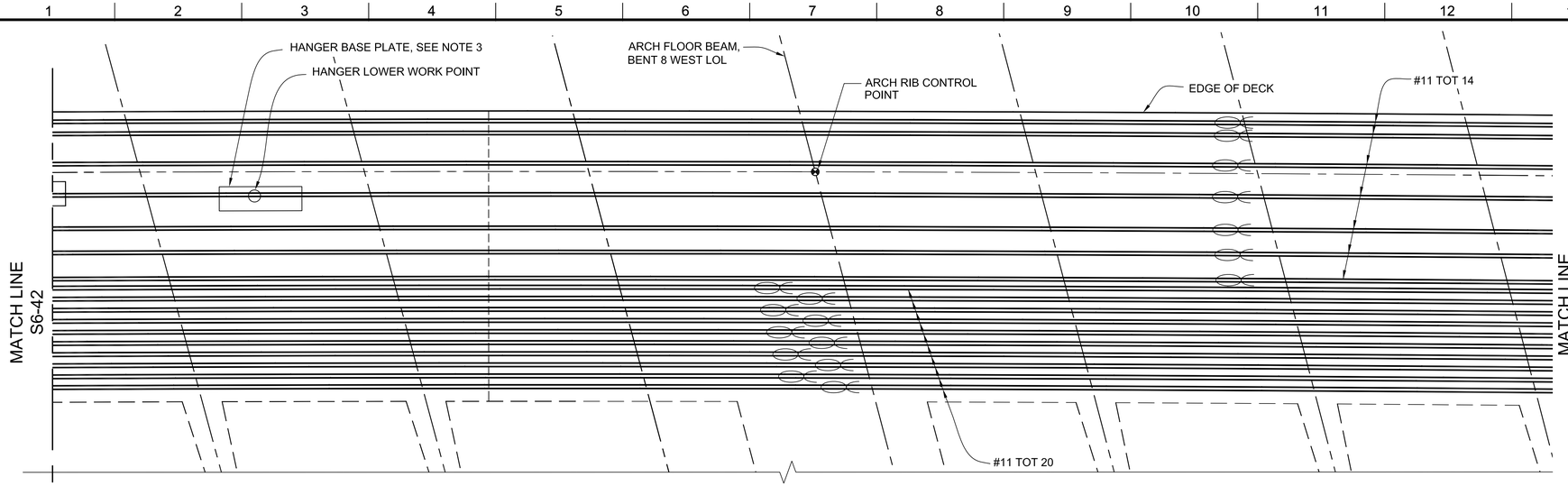

EDGE GIRDER TOP REINFORCEMENT

SCALE: 3/8" =1'-0"

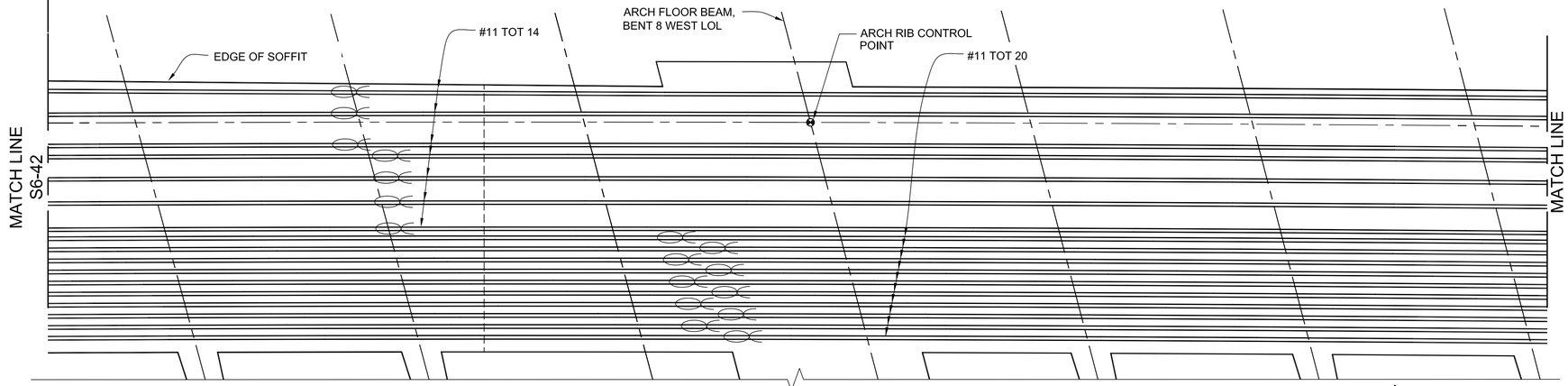

EDGE GIRDER BOTTOM REINFORCEMENT

SCALE: 3/8" =1'-0"

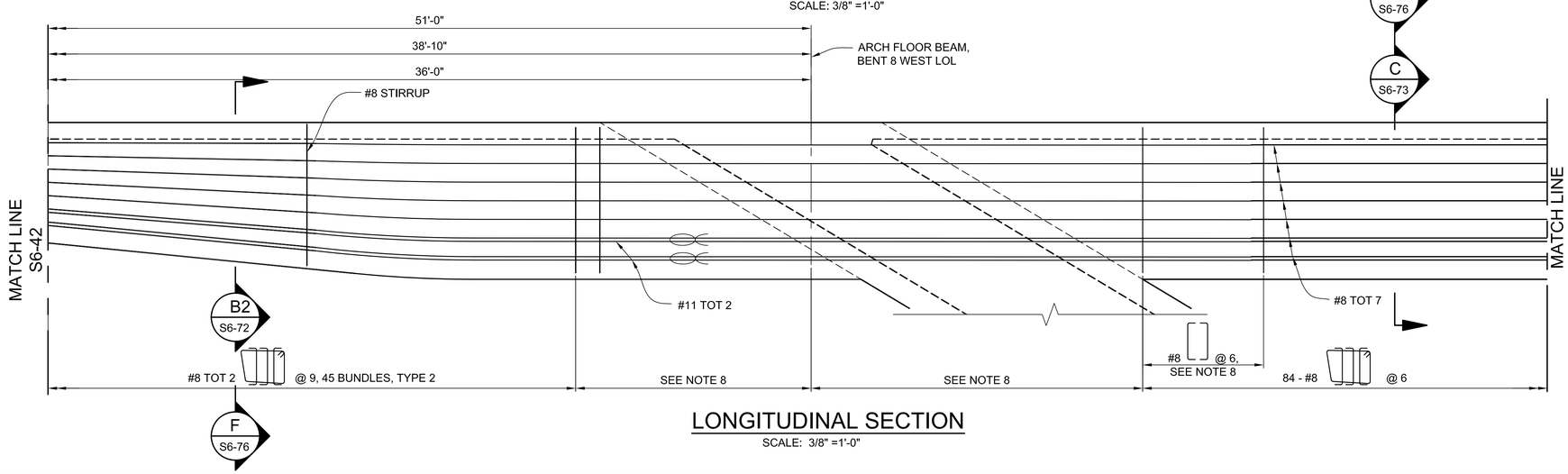

LONGITUDINAL SECTION

SCALE: 3/8" =1'-0"

NOTES:

1. FOR NOTES AND LEGEND, SEE DRAWING S6-21.

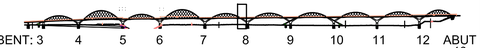

KEY ELEVATION

THE CITY OF LOS ANGELES OR ITS OFFICERS OR AGENTS SHALL NOT BE RESPONSIBLE FOR THE ACCURACY OR COMPLETENESS OF ELECTRONIC COPIES OF THIS PLAN SHEET.

C:\caddlib\pw\pwwestcoast\lzhang\dms57683\S6-21-GD01-47.dwg 6/28/16 17:29

REVISION DATES (DESIGN STAGE ONLY)

Sheet Version 3.0

BUREAU OF ENGINEERING

ENGINEERING
CITY OF LOS ANGELES

NO.	REVISIONS:	DATE	BY:

STRUCTURE NO. 53C-2329

INDEX NO. P-38113

THIS PLAN WAS ELECTRONICALLY SIGNED AND STAMPED.

REGISTERED PROFESSIONAL ENGINEER MICHAEL H. JONES No. S3033 CIVIL STATE OF CALIFORNIA

BUREAU OF PUBLIC WORKS

CITY OF LOS ANGELES DEPARTMENT OF PUBLIC WORKS

GARY LEE MOORE, P.E. CITY ENGINEER

ENGINEER:	MICHAEL H. JONES	LIC. NO. S3033	DATE: 1/29/2016
DESIGNED BY:	MICHAEL VAN DUYN		1/29/2016
DRAWN BY:	LI ZHANG		1/29/2016
CHECKED BY:	CHARLES REDFIELD		1/29/2016
APPROVED BY:	MICHAEL H. JONES		1/29/2016

DESIGN GROUP

VERTICAL CONTROL: BM 12-04070,1929 (NGVD 29) - 1985 ADJUSTMENT
HORIZONTAL CONTROL: GPS; PID AE 1704, EPOCH 1991.35

SHEET TITLE: EDGE GIRDER REINFORCEMENT DETAILS NO. 23

PROJECT: SIXTH STREET VIADUCT REPLACEMENT

ADDRESS: SIXTH STREET VIADUCT (WHITTIER BLVD) LOS ANGELES, CA

HNTB
HNTB Corporation
601 W. 5TH STREET SUITE 1000
LOS ANGELES, CALIFORNIA 90071
TEL (213) 403-1000 FAX (213) 403-1001

BUREAU OF ENGINEERING OFFICIAL RECORD

WORK ORDER NO. E700224F

DRAWING NO. S6-43

SHEET 344 OF 560 SHEETS

ADDENDUM 5

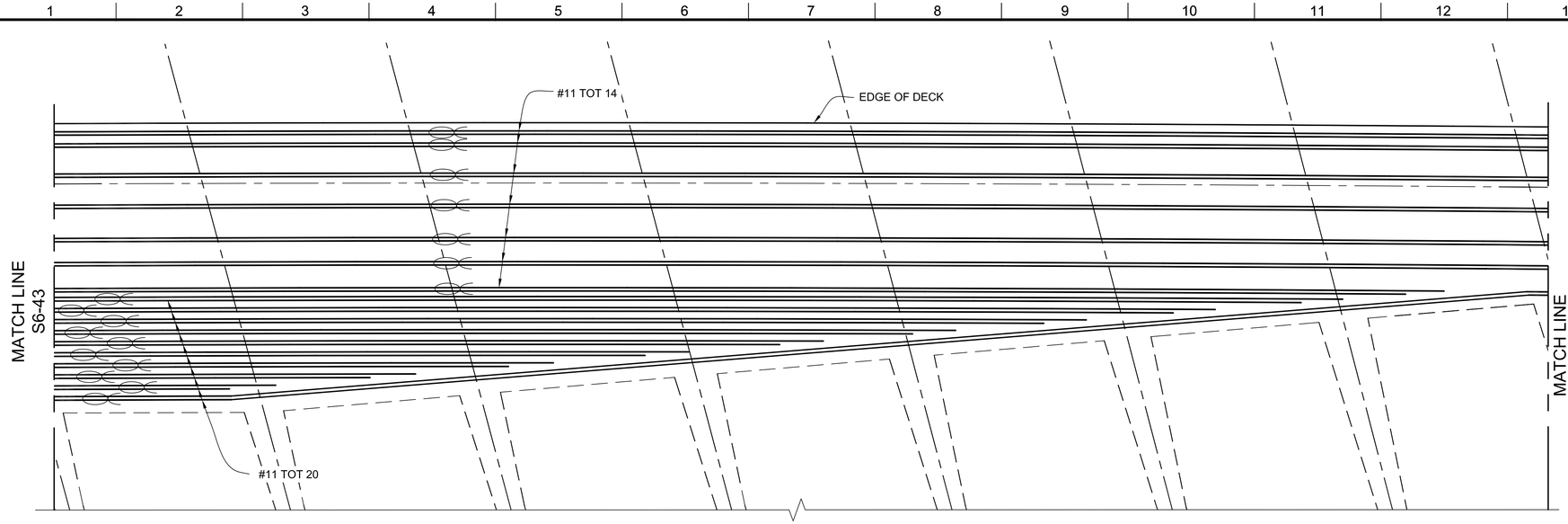

EDGE GIRDER TOP REINFORCEMENT

SCALE: 3/8" =1'-0"

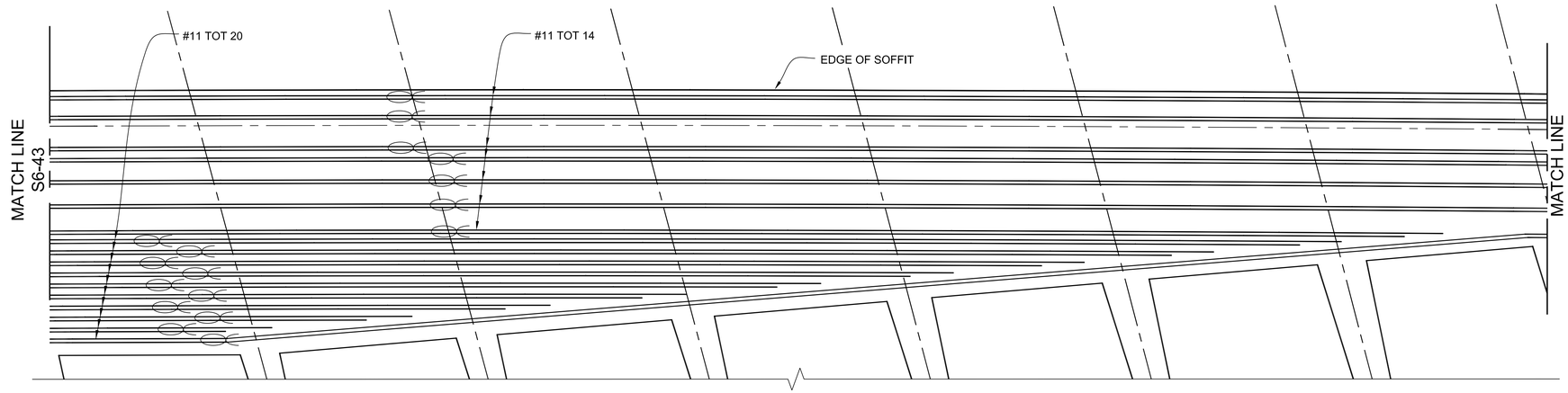

EDGE GIRDER BOTTOM REINFORCEMENT

SCALE: 3/8" =1'-0"

NOTES:

1. FOR NOTES AND LEGEND, SEE DRAWING S6-21.

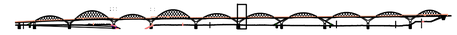

KEY ELEVATION

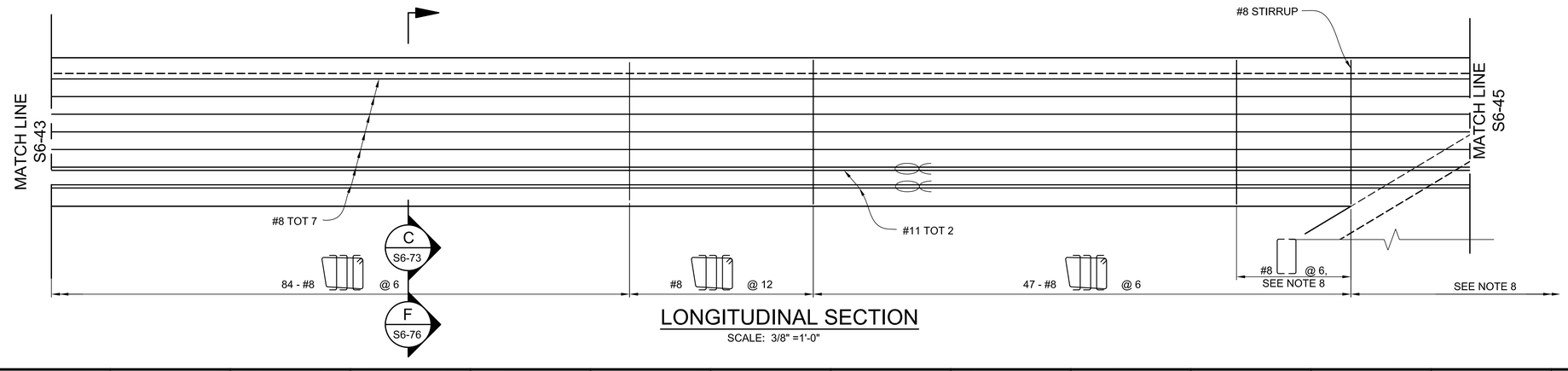

LONGITUDINAL SECTION

SCALE: 3/8" =1'-0"

THIS PLAN WAS ELECTRONICALLY SIGNED AND STAMPED.

REGISTERED PROFESSIONAL ENGINEER MICHAEL H. JONES No. S3033 STATE OF CALIFORNIA

BUREAU OF ENGINEERING

ENGINEERING CITY OF LOS ANGELES

NO.	REVISIONS:	DATE	BY:

STRUCTURE NO. 53C-2329

INDEX NO. P-38113

CITY OF LOS ANGELES DEPARTMENT OF PUBLIC WORKS

GARY LEE MOORE, P.E. CITY ENGINEER

DESIGN GROUP

		DATE:
ENGINEER:	MICHAEL H. JONES	1/29/2016
DESIGNED BY:	MICHAEL VAN DUYN	1/29/2016
DRAWN BY:	LI ZHANG	1/29/2016
CHECKED BY:	CHARLES REDFIELD	1/29/2016
APPROVED BY:	MICHAEL H. JONES	1/29/2016

LIC. NO. S3033

VERTICAL CONTROL: BM 12-04070, 1929 (NGVD 29) - 1985 ADJUSTMENT

HORIZONTAL CONTROL: GPS; PID AE 1704, EPOCH 1991.35

SHEET TITLE: EDGE GIRDER REINFORCEMENT DETAILS NO. 24

PROJECT: SIXTH STREET VIADUCT REPLACEMENT

ADDRESS: SIXTH STREET VIADUCT (WHITTIER BLVD) LOS ANGELES, CA

HNTB

HNTB Corporation
601 W. 5TH STREET SUITE 1000
LOS ANGELES, CALIFORNIA 90071
TEL (213) 403-1000 FAX (213) 403-1001

BUREAU OF ENGINEERING OFFICIAL RECORD

WORK ORDER NO. E700224F

DRAWING NO. S6-44

SHEET 345 OF 560 SHEETS

REVISION DATES (DESIGN STAGE ONLY)

THE CITY OF LOS ANGELES OR ITS OFFICERS OR AGENTS SHALL NOT BE RESPONSIBLE FOR THE ACCURACY OR COMPLETENESS OF ELECTRONIC COPIES OF THIS PLAN SHEET.

C:\cadd\b\pw\pwwestcoast\zhang\dms57683\S6-21-0001-47.dwg 6/28/16 17:30

Sheet Version 3.0

ADDENDUM 5

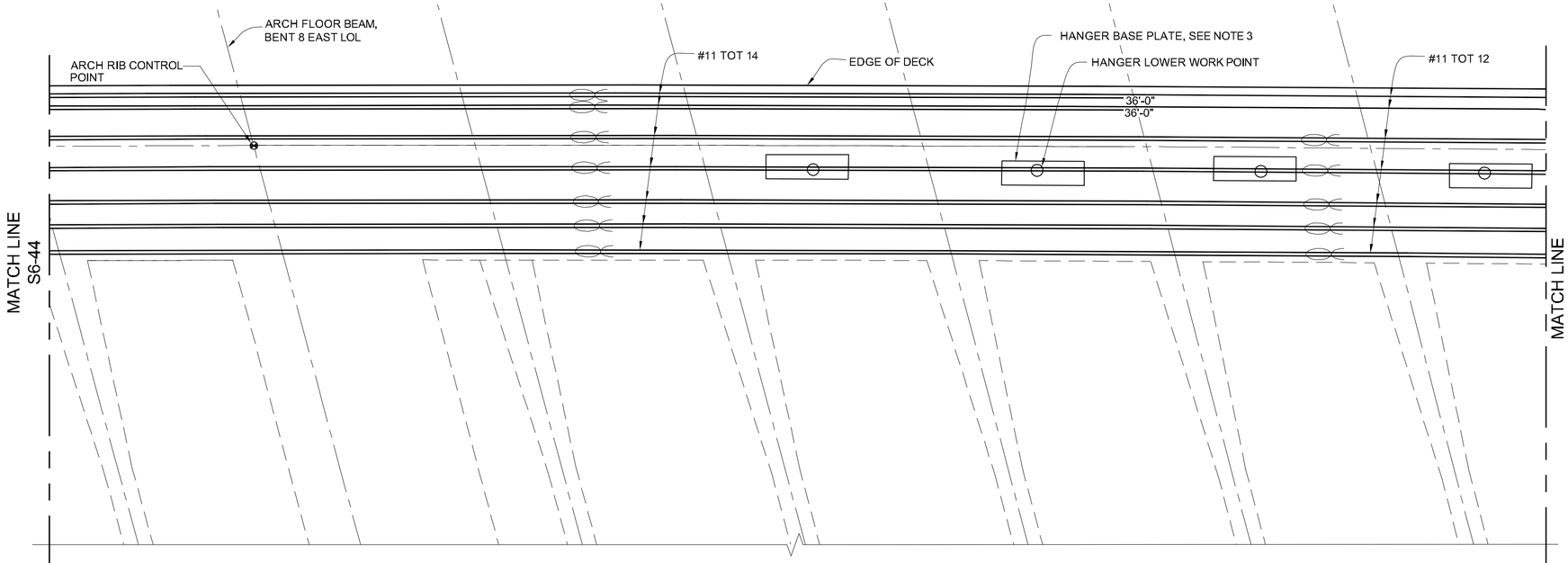

EDGE GIRDER TOP REINFORCEMENT

SCALE: 3/8" =1'-0"

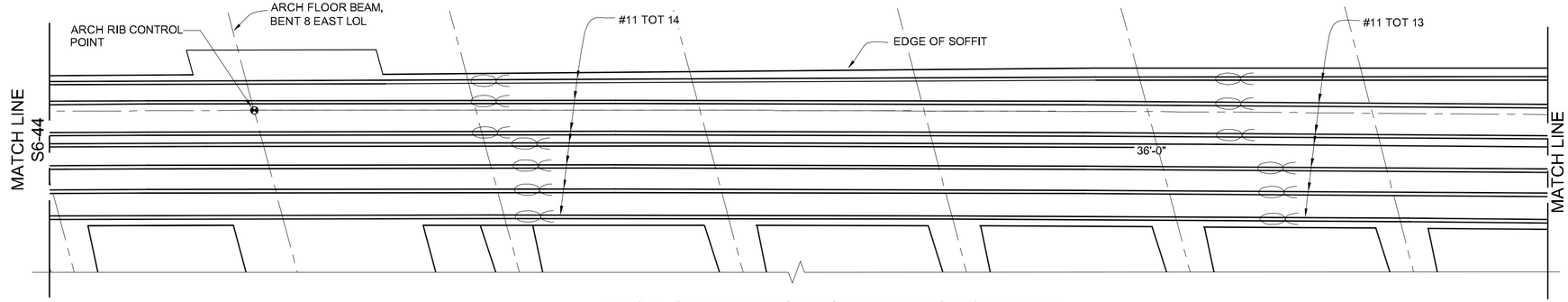

EDGE GIRDER BOTTOM REINFORCEMENT

SCALE: 3/8" =1'-0"

NOTES:

1. FOR NOTES AND LEGEND, SEE DRAWING S6-21.

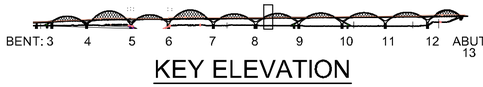

KEY ELEVATION

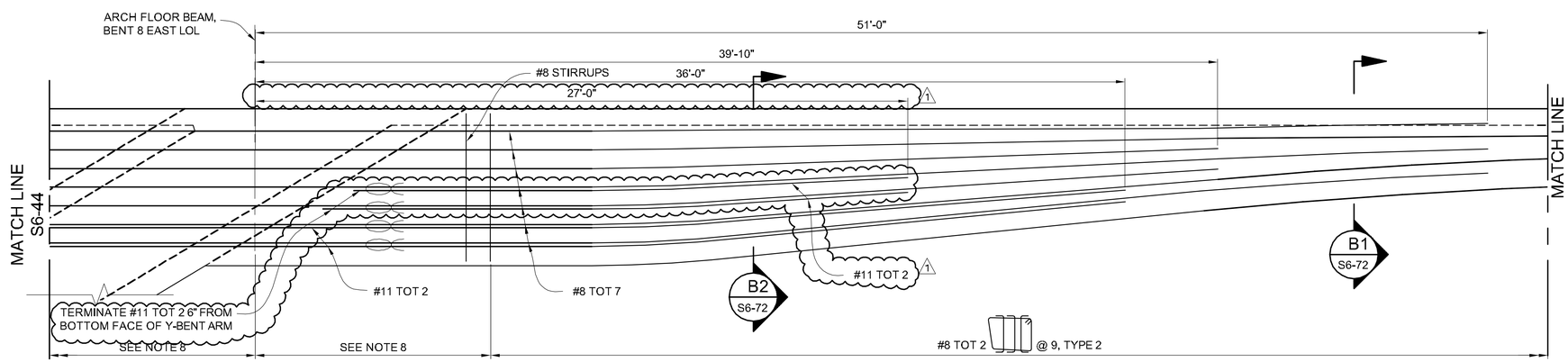

LONGITUDINAL SECTION

SCALE: 3/8" =1'-0"

T.O. 5 - Change Order Serial Sketch No. 53 - Page 1 of 3

HNTB
HNTB Corporation
601 W. 5TH STREET SUITE 1000
LOS ANGELES, CALIFORNIA 90071
TEL (213) 403-1000 FAX (213) 403-1001

WORK ORDER NO.
E700224F

DRAWING NO.
S6-45

SHEET 20 OF 560 SHEETS

CITY OF LOS ANGELES
DEPARTMENT OF PUBLIC WORKS
BUREAU OF ENGINEERING

ENGINEERING
CITY OF LOS ANGELES

NO.	REVISIONS:	DATE:	BY:
1	FALSEWORK REINF ECO 53	12/19/17	MHJ

STRUCTURE NO.
53C-2329

INDEX NO.

REGISTERED PROFESSIONAL ENGINEER MICHAEL H. JONES No. S3033 CIVIL STATE OF CALIFORNIA

THIS PLAN WAS ELECTRONICALLY SIGNED AND STAMPED.

CITY ENGINEER
GARY LEE MOORE, P.E.

		DATE:
DESIGN GROUP		
ENGINEER:	MICHAEL H. JONES LIC. NO. S3033	1/29/2016
DESIGNED BY:	MICHAEL VAN DLYN	1/29/2016
DRAWN BY:	LI ZHANG	1/29/2016
CHECKED BY:	CHARLES REDFIELD	1/29/2016
APPROVED BY:	MICHAEL H. JONES	1/29/2016

VERTICAL CONTROL: BM 12-04070 1929 (NGVD 29) - 1985 ADJUSTMENT
HORIZONTAL CONTROL: GPS; PID AE 1704, EPOCH 1991.35

SHEET TITLE: EDGE GIRDER REINFORCEMENT DETAILS NO. 25

PROJECT: SIXTH STREET VIADUCT REPLACEMENT

ADDRESS: SIXTH STREET VIADUCT (WHITTIER BLVD) LOS ANGELES, CA

REVISION DATES (DESIGN STAGE ONLY)

THE CITY OF LOS ANGELES OR ITS OFFICERS OR AGENTS SHALL NOT BE RESPONSIBLE FOR THE ACCURACY OR COMPLETENESS OF ELECTRONIC COPIES OF THIS PLAN SHEET.

C:\coddlib\pw\pwwestcoast\zhang\dms57683\S6-21-0001-47.dwg 12/19/17 10:54

Sheet Version 3.0

ADDENDUM 5

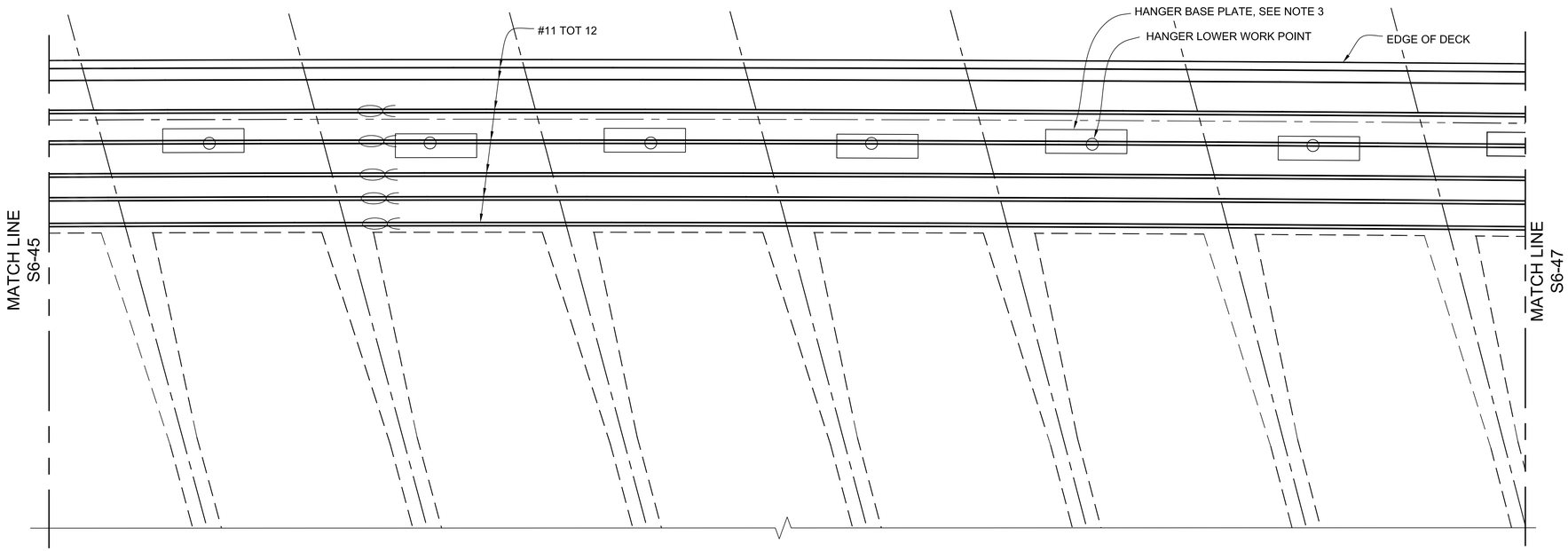

EDGE GIRDER TOP REINFORCEMENT

SCALE: 3/8" =1'-0"

NOTES:

1. FOR NOTES AND LEGEND, SEE DRAWING S6-21.

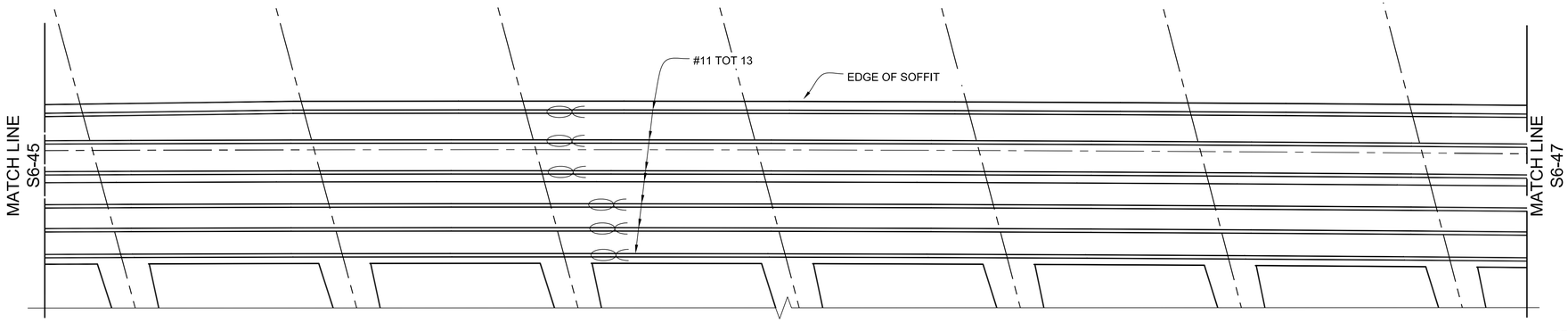

EDGE GIRDER BOTTOM REINFORCEMENT

SCALE: 3/8" =1'-0"



KEY ELEVATION

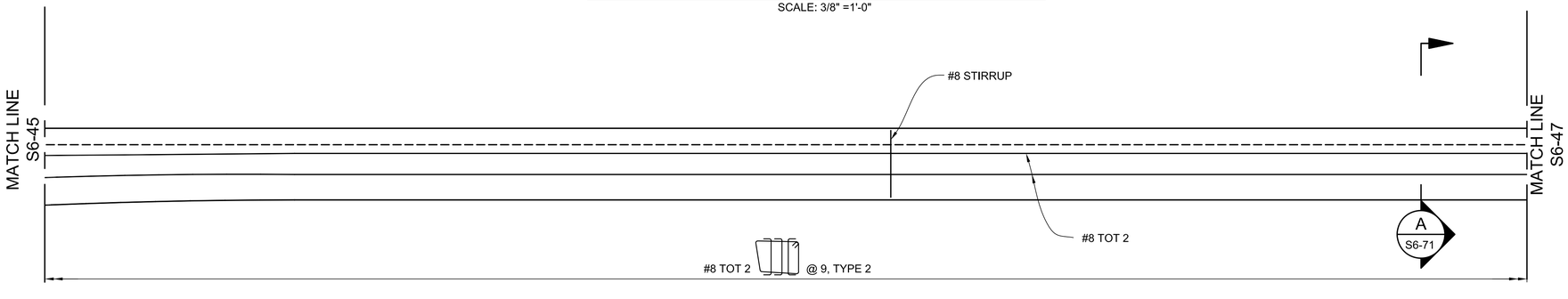

LONGITUDINAL SECTION

SCALE: 3/8" =1'-0"

THE CITY OF LOS ANGELES OR ITS OFFICERS OR AGENTS SHALL NOT BE RESPONSIBLE FOR THE ACCURACY OR COMPLETENESS OF ELECTRONIC COPIES OF THIS PLAN SHEET.

C:\caddlib\pw\pwwestcoast\jzhang\dms57683\S6-21-GD01-47.dwg 6/28/16 17:30

REVISION DATES (DESIGN STAGE ONLY)

Sheet Version 3.0

CITY OF LOS ANGELES DEPARTMENT OF PUBLIC WORKS
BUREAU OF ENGINEERING

ENGINEERING
CITY OF LOS ANGELES

NO.	REVISIONS:	DATE	BY:

STRUCTURE NO. 53C-2329

INDEX NO. P-38113

THIS PLAN WAS ELECTRONICALLY SIGNED AND STAMPED.

REGISTERED PROFESSIONAL ENGINEER MICHAEL H. JONES No. S3033 CIVIL STATE OF CALIFORNIA

CITY ENGINEER		DATE
GARY LEE MOORE, P.E.		
DESIGN GROUP	LIC. NO. S3033	
ENGINEER: MICHAEL H. JONES		1/29/2016
DESIGNED BY: MICHAEL VAN DUYN		1/29/2016
DRAWN BY: LI ZHANG		1/29/2016
CHECKED BY: CHARLES REDFIELD		1/29/2016
APPROVED BY: MICHAEL H. JONES		1/29/2016

VERTICAL CONTROL: BM 12-04070, 1929 (NGVD 29) – 1985 ADJUSTMENT
HORIZONTAL CONTROL: GPS; PID AE 1704, EPOCH 1991.35

SHEET TITLE: EDGE GIRDER REINFORCEMENT DETAILS NO. 26

PROJECT: SIXTH STREET VIADUCT REPLACEMENT

ADDRESS: SIXTH STREET VIADUCT (WHITTIER BLVD) LOS ANGELES, CA

BUREAU OF ENGINEERING OFFICIAL RECORD

HNTB
HNTB Corporation
601 W. 5TH STREET SUITE 1000
LOS ANGELES, CALIFORNIA 90071
TEL (213) 403-1000 FAX (213) 403-1001

WORK ORDER NO. E700224F

DRAWING NO. S6-46

SHEET 347 OF 560 SHEETS

ADDENDUM 5

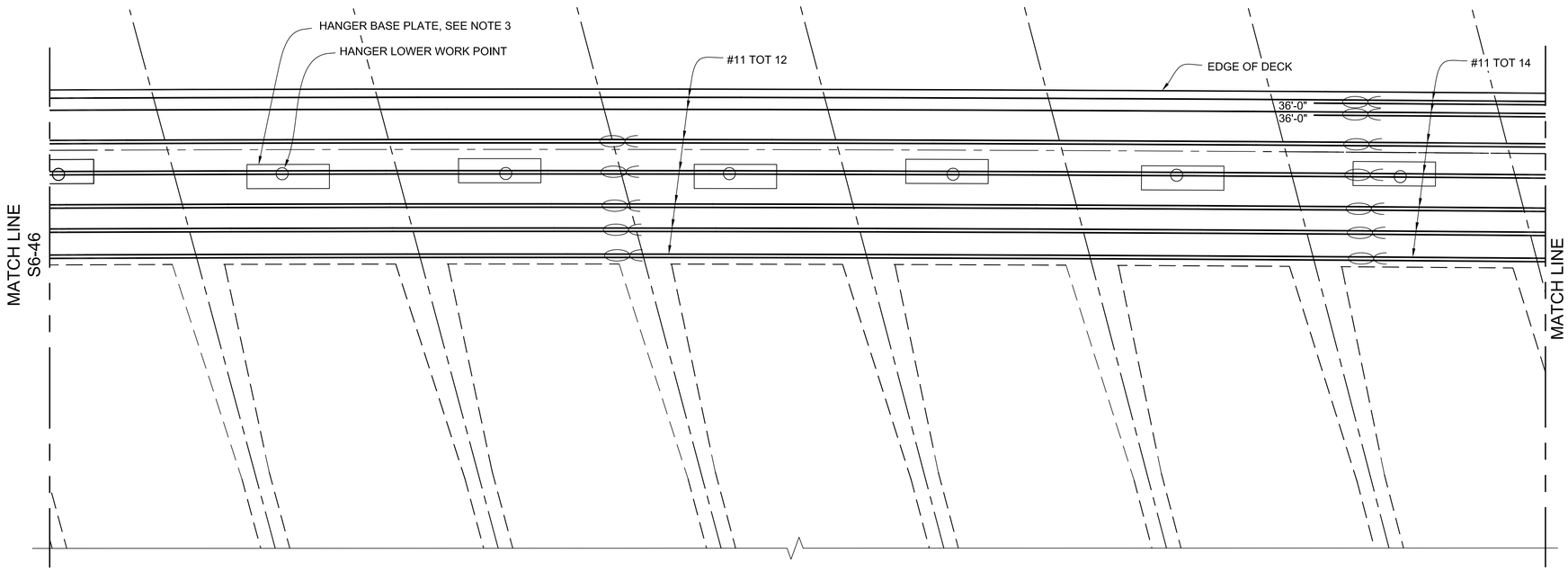

EDGE GIRDER TOP REINFORCEMENT

SCALE: 3/8" =1'-0"

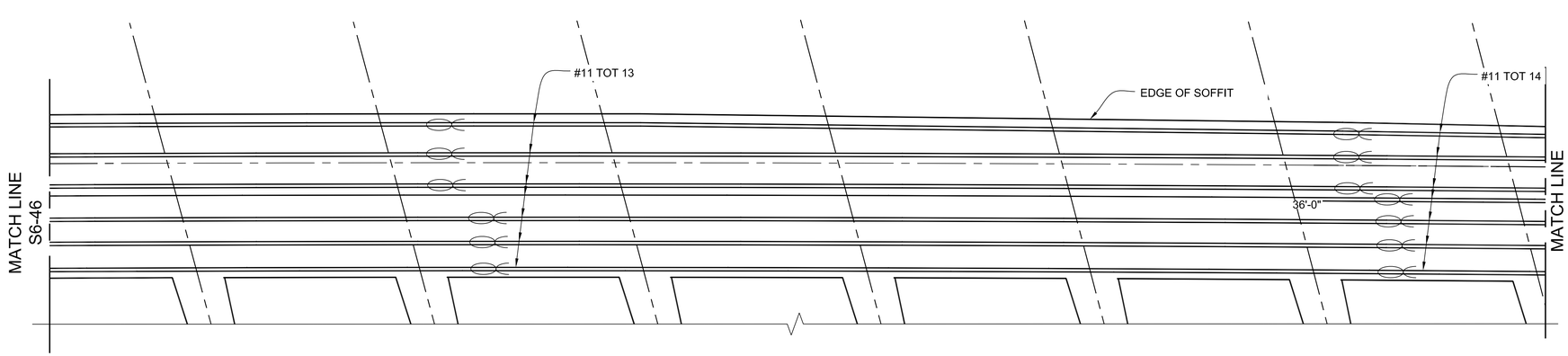

EDGE GIRDER BOTTOM REINFORCEMENT

SCALE: 3/8" =1'-0"

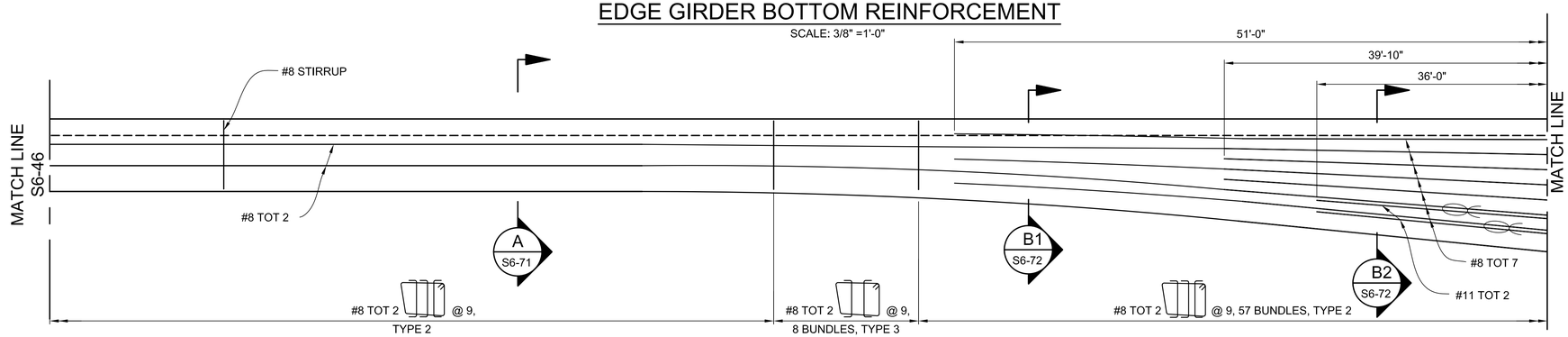

LONGITUDINAL SECTION

SCALE: 3/8" =1'-0"



KEY ELEVATION

NOTES:

1. FOR NOTES AND LEGEND, SEE DRAWING S6-21.

THE CITY OF LOS ANGELES OR ITS OFFICERS OR AGENTS SHALL NOT BE RESPONSIBLE FOR THE ACCURACY OR COMPLETENESS OF ELECTRONIC COPIES OF THIS PLAN SHEET.

REVISION DATES (DESIGN STAGE ONLY)

C:\caddlib\pw\pwwestcoast\zhang\dms57683\S6-21-G001-47.dwg 6/28/16 17:30

Sheet Version 3.0

BUREAU OF ENGINEERING

ENGINEERING
CITY OF LOS ANGELES

NO.	REVISIONS:	DATE	BY:

STRUCTURE NO. 53C-2329

INDEX NO. P-38113

REGISTERED PROFESSIONAL ENGINEER MICHAEL H. JONES No. S3033 CIVIL STATE OF CALIFORNIA

THIS PLAN WAS ELECTRONICALLY SIGNED AND STAMPED.

CITY OF LOS ANGELES DEPARTMENT OF PUBLIC WORKS

GARY LEE MOORE, P.E. CITY ENGINEER

DESIGN GROUP			DATE:
ENGINEER:	MICHAEL H. JONES	LIC. NO. S3033	1/29/2016
DESIGNED BY:	MICHAEL VAN DUYN		1/29/2016
DRAWN BY:	LI ZHANG		1/29/2016
CHECKED BY:	CHARLES REDFIELD		1/29/2016
APPROVED BY:	MICHAEL H. JONES		1/29/2016

VERTICAL CONTROL: BM 12-04070,1928 (NGVD 29) - 1985 ADJUSTMENT
HORIZONTAL CONTROL: GPS; PID AE 1704; EPOCH 1991.35

SHEET TITLE: EDGE GIRDER REINFORCEMENT DETAILS NO. 27

PROJECT: SIXTH STREET VIADUCT REPLACEMENT

ADDRESS: SIXTH STREET VIADUCT (WHITTIER BLVD) LOS ANGELES, CA

BUREAU OF ENGINEERING OFFICIAL RECORD

HNTB
HNTB Corporation
601 W. 5TH STREET SUITE 1000
LOS ANGELES, CALIFORNIA 90071
TEL (213) 403-1000 FAX (213) 403-1001

WORK ORDER NO. E700224F

DRAWING NO. S6-47

SHEET 348 OF 560 SHEETS

ADDENDUM 5

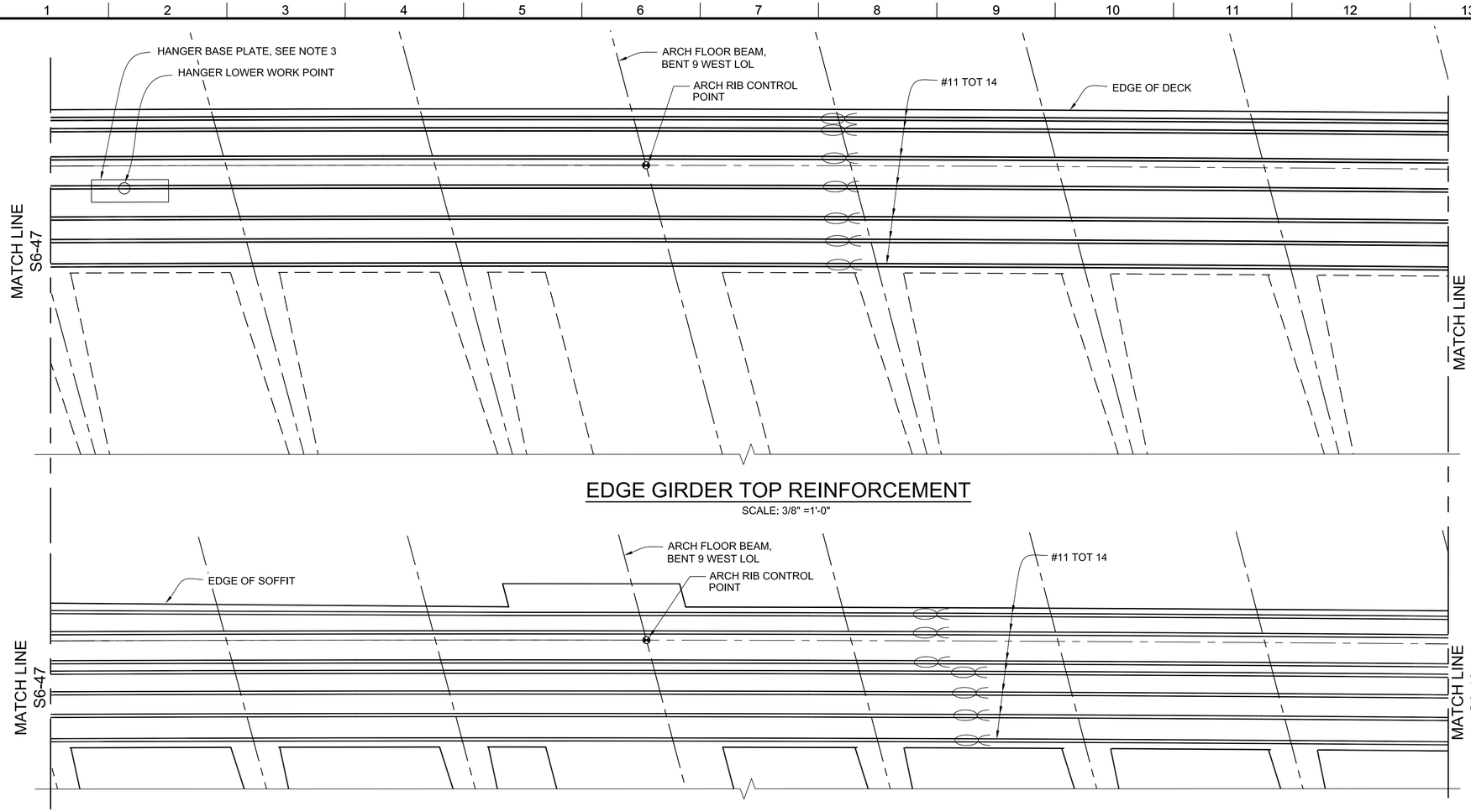

EDGE GIRDER TOP REINFORCEMENT

SCALE: 3/8" =1'-0"

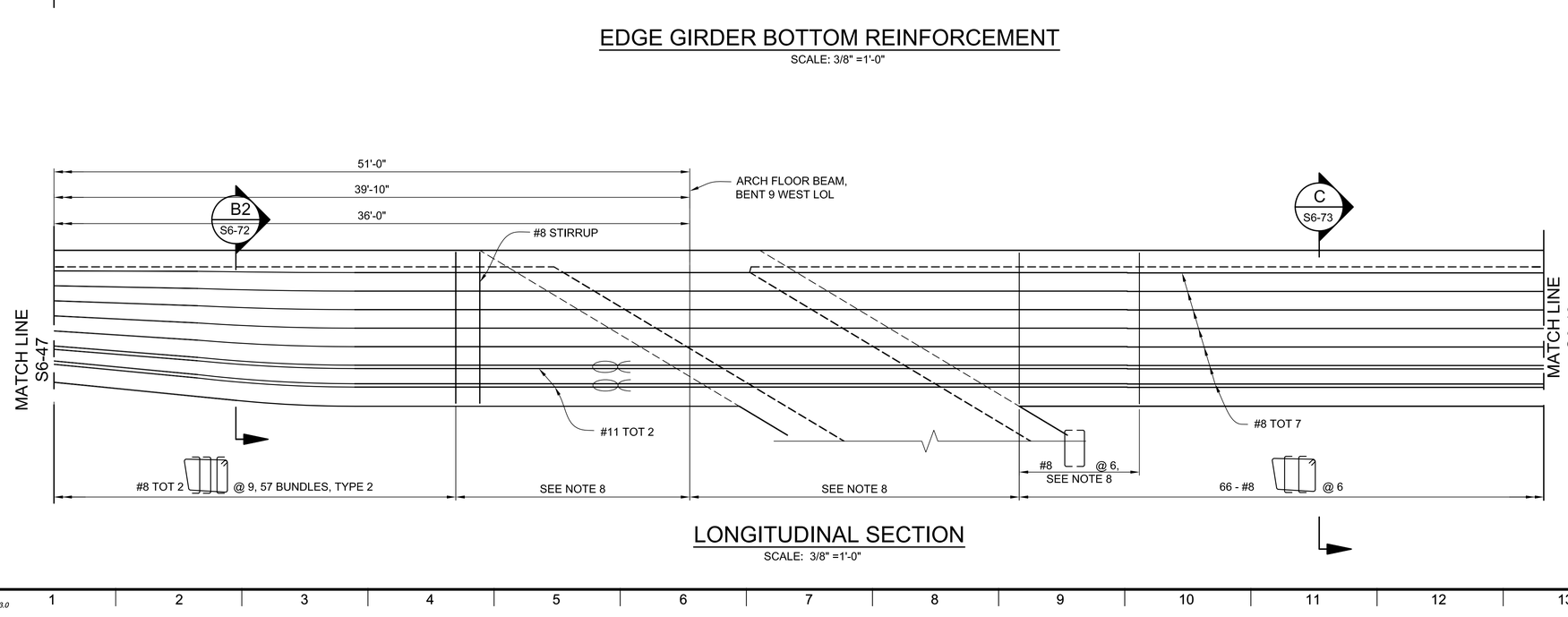

EDGE GIRDER BOTTOM REINFORCEMENT

SCALE: 3/8" =1'-0"

NOTES:

1. FOR NOTES AND LEGEND, SEE DRAWING S6-21.

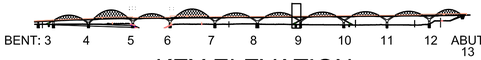

KEY ELEVATION

LONGITUDINAL SECTION

SCALE: 3/8" =1'-0"

THE CITY OF LOS ANGELES OR ITS OFFICERS OR AGENTS SHALL NOT BE RESPONSIBLE FOR THE ACCURACY OR COMPLETENESS OF ELECTRONIC COPIES OF THIS PLAN SHEET.

C:\caddlib\pw\pwwestcoast\zhang\dms57683\S6-21-G001-47.dwg 6/28/16 17:30

REVISION DATES (DESIGN STAGE ONLY)

Sheet Version 3.0

BUREAU OF ENGINEERING

ENGINEERING
CITY OF LOS ANGELES

NO.	REVISIONS:	DATE	BY:

STRUCTURE NO. 53C-2329

INDEX NO. P-38113

REGISTERED PROFESSIONAL ENGINEER MICHAEL H. JONES No. S3033 CIVIL STATE OF CALIFORNIA

THIS PLAN WAS ELECTRONICALLY SIGNED AND STAMPED.

DEPARTMENT OF PUBLIC WORKS

GARY LEE MOORE, P.E. CITY ENGINEER

		DATE:
DESIGN GROUP		
ENGINEER:	MICHAEL H. JONES	LIC. NO. S3033
DESIGNED BY:		1/29/2016
DRAWN BY:	LI ZHANG	1/29/2016
CHECKED BY:	CHARLES REDFIELD	1/29/2016
APPROVED BY:	MICHAEL H. JONES	1/29/2016

CITY OF LOS ANGELES

VERTICAL CONTROL: BM 12-04070,1928 (NGVD 29) - 1985 ADJUSTMENT
HORIZONTAL CONTROL: GPS; PID AE 1704; EPOCH 1991.35

SHEET TITLE: EDGE GIRDER REINFORCEMENT DETAILS NO. 28

PROJECT: SIXTH STREET VIADUCT REPLACEMENT

ADDRESS: SIXTH STREET VIADUCT (WHITTIER BLVD) LOS ANGELES, CA

BUREAU OF ENGINEERING
OFFICIAL RECORD

HNTB
HNTB Corporation
601 W. 5TH STREET SUITE 1000
LOS ANGELES, CALIFORNIA 90071
TEL (213) 403-1000 FAX (213) 403-1001

WORK ORDER NO. E700224F

DRAWING NO. S6-48

SHEET 349 OF 560 SHEETS

ADDENDUM 5

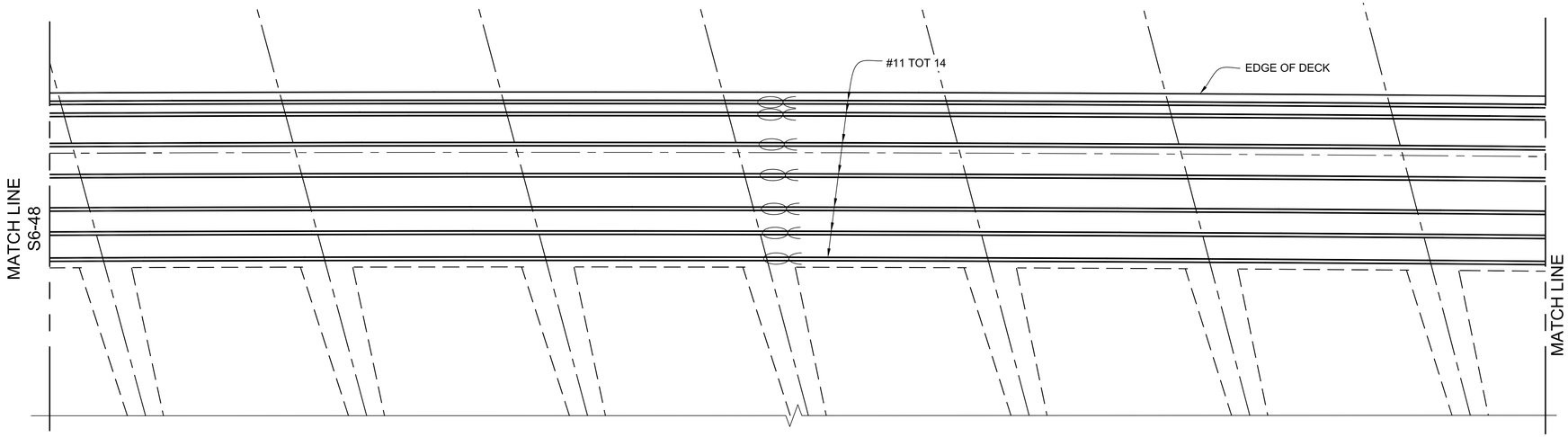

EDGE GIRDER TOP REINFORCEMENT

SCALE: 3/8" =1'-0"

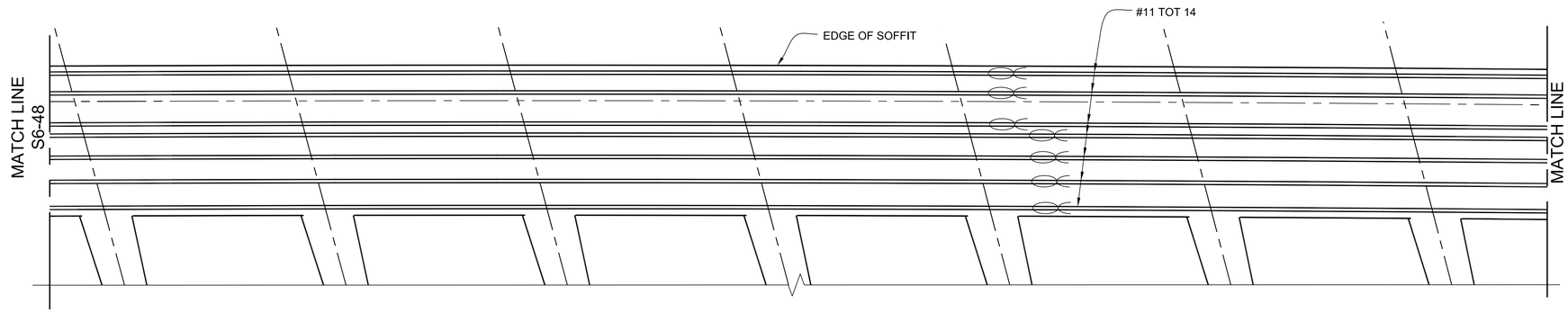

EDGE GIRDER BOTTOM REINFORCEMENT

SCALE: 3/8" =1'-0"

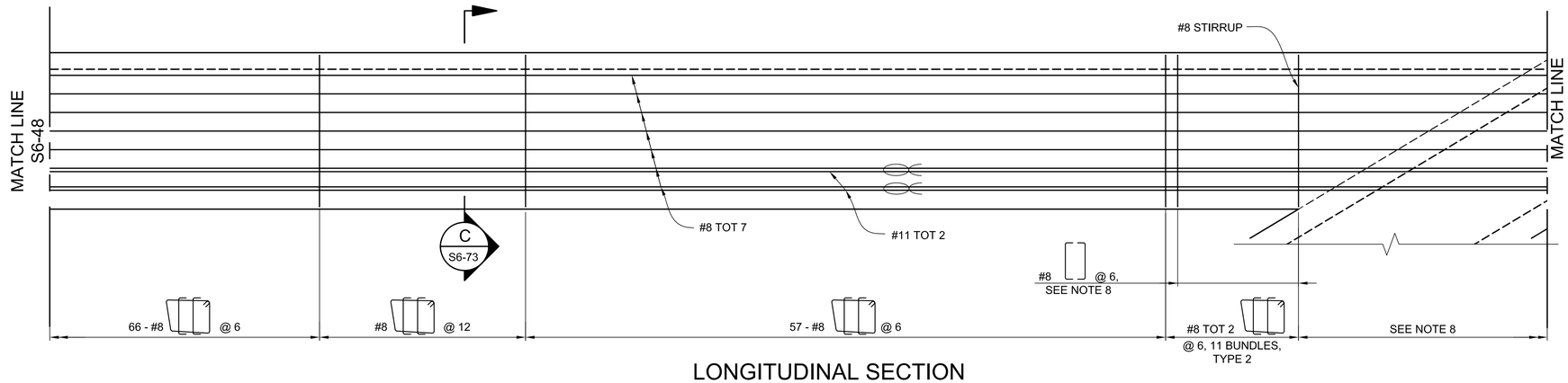

LONGITUDINAL SECTION

SCALE: 3/8" =1'-0"

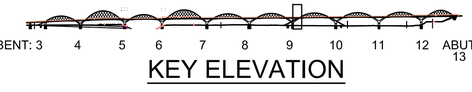

KEY ELEVATION

NOTES:

1. FOR NOTES AND LEGEND, SEE DRAWING S6-21.

THE CITY OF LOS ANGELES OR ITS OFFICERS OR AGENTS SHALL NOT BE RESPONSIBLE FOR THE ACCURACY OR COMPLETENESS OF ELECTRONIC COPIES OF THIS PLAN SHEET.

C:\caddi0\pw\pwwestcoast\zhang\dms57683\S6-21-GD01-47.dwg 6/28/16 17:31

REVISION DATES (DESIGN STAGE ONLY)

Sheet Version 3.0

BUREAU OF ENGINEERING

ENGINEERING CITY OF LOS ANGELES

NO.	REVISIONS:	DATE	BY:

STRUCTURE NO. 53C-2329

INDEX NO. P-38113

THIS PLAN WAS ELECTRONICALLY SIGNED AND STAMPED.

REGISTERED PROFESSIONAL ENGINEER MICHAEL H. JONES No. S3033 CIVIL STATE OF CALIFORNIA

BUREAU OF PUBLIC WORKS

GARY LEE MOORE, P.E. CITY ENGINEER

		DATE:
ENGINEER:	MICHAEL H. JONES LIC. NO. S3033	1/29/2016
DESIGNED BY:	MICHAEL VAN DUYN	1/29/2016
DRAWN BY:	LI ZHANG	1/29/2016
CHECKED BY:	CHARLES REDFIELD	1/29/2016
APPROVED BY:	MICHAEL H. JONES	1/29/2016

DESIGN GROUP

CITY OF LOS ANGELES DEPARTMENT OF PUBLIC WORKS

VERTICAL CONTROL: BM 12-04070, 1929 (NGVD 29) - 1985 ADJUSTMENT
HORIZONTAL CONTROL: GPS; PID AE 1704, EPOCH 1991.35

SHEET TITLE: EDGE GIRDER REINFORCEMENT DETAILS NO. 29

PROJECT: SIXTH STREET VIADUCT REPLACEMENT

ADDRESS: SIXTH STREET VIADUCT (WHITTIER BLVD) LOS ANGELES, CA

HNTB
HNTB Corporation
601 W. 5TH STREET SUITE 1000
LOS ANGELES, CALIFORNIA 90071
TEL (213) 403-1000 FAX (213) 403-1001

BUREAU OF ENGINEERING OFFICIAL RECORD

WORK ORDER NO. E700224F

DRAWING NO. S6-49

SHEET 350 OF 560 SHEETS

ADDENDUM 5

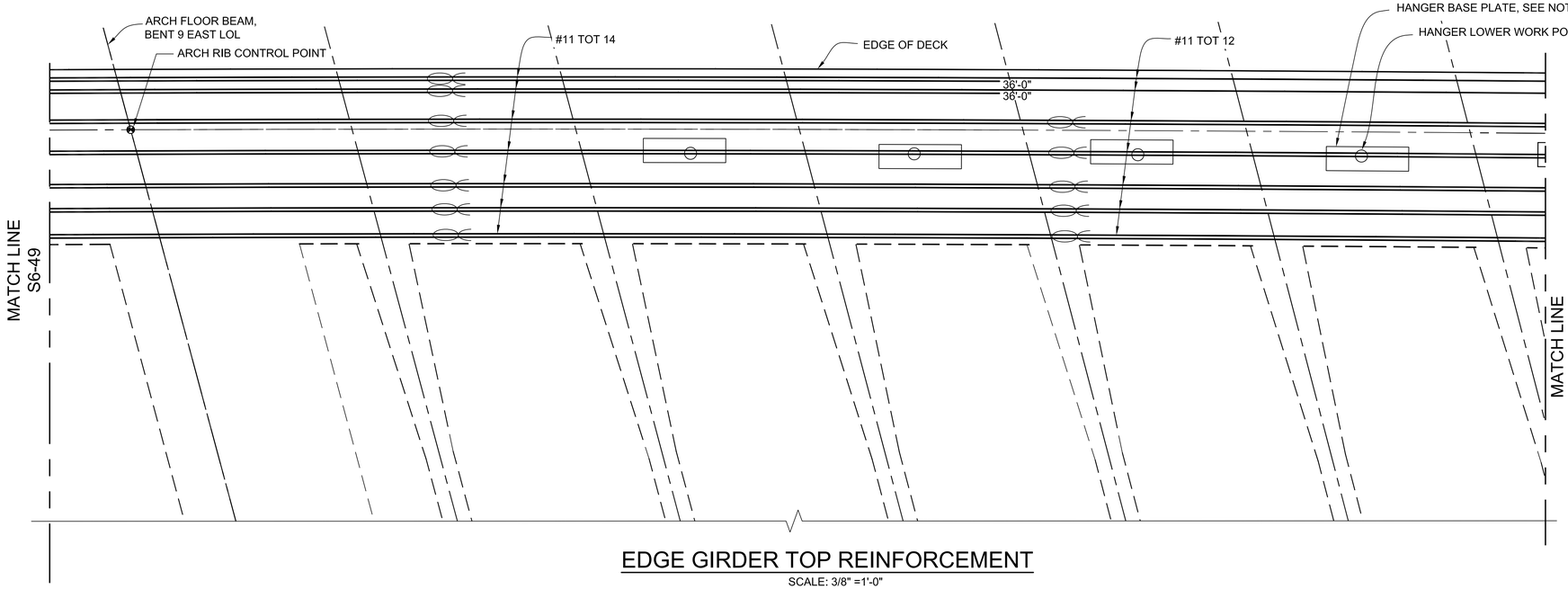

EDGE GIRDER TOP REINFORCEMENT

SCALE: 3/8" =1'-0"

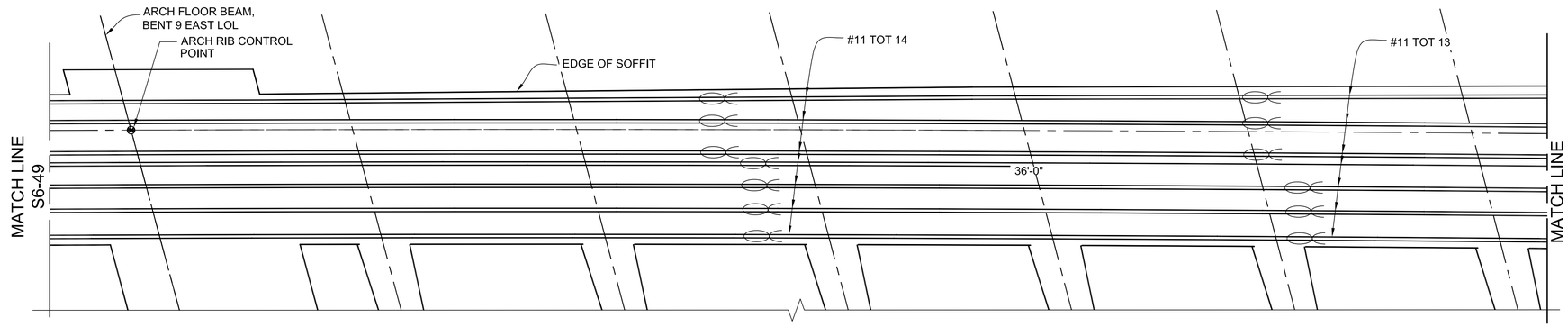

EDGE GIRDER BOTTOM REINFORCEMENT

SCALE: 3/8" =1'-0"



KEY ELEVATION

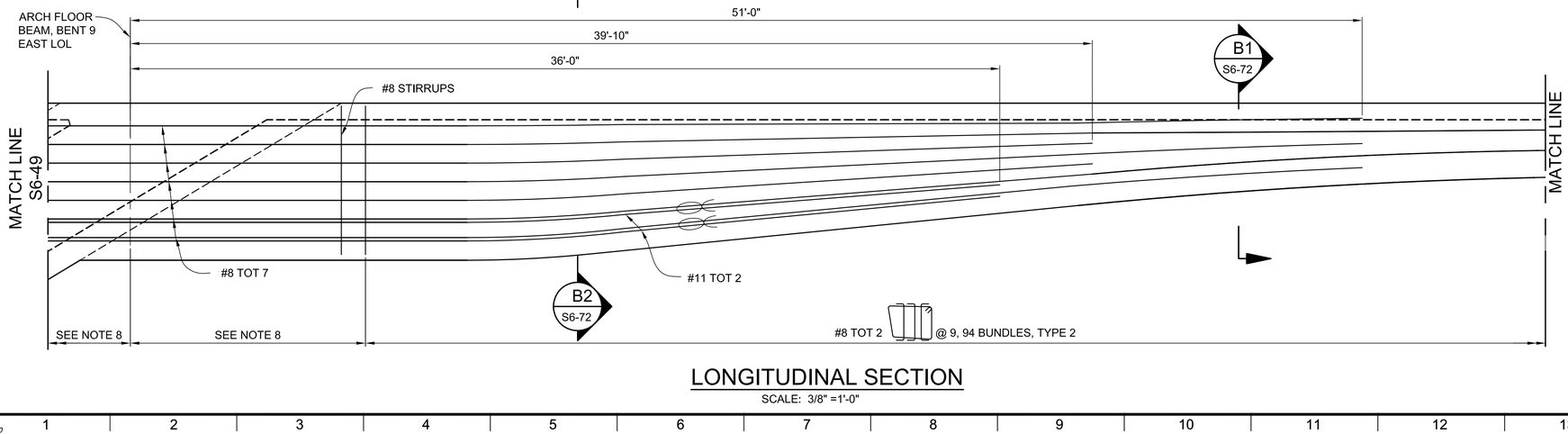

LONGITUDINAL SECTION

SCALE: 3/8" =1'-0"

NOTES:

1. FOR NOTES AND LEGEND, SEE DRAWING S6-21.

THE CITY OF LOS ANGELES OR ITS OFFICERS OR AGENTS SHALL NOT BE RESPONSIBLE FOR THE ACCURACY OR COMPLETENESS OF ELECTRONIC COPIES OF THIS PLAN SHEET.

C:\caddlib\pw\pwwestcoast\zhang\dms57683\S6-21-G001-47.dwg 6/28/16 17:31

REVISION DATES (DESIGN STAGE ONLY)

Sheet Version 3.0

BUREAU OF ENGINEERING

ENGINEERING CITY OF LOS ANGELES

NO.	REVISIONS:	DATE	BY:

STRUCTURE NO. 53C-2329

INDEX NO. P-38113

THIS PLAN WAS ELECTRONICALLY SIGNED AND STAMPED.

REGISTERED PROFESSIONAL ENGINEER MICHAEL H. JONES No. S3033 CIVIL STATE OF CALIFORNIA

CITY OF LOS ANGELES DEPARTMENT OF PUBLIC WORKS

GARY LEE MOORE, P.E. CITY ENGINEER

		DATE:
ENGINEER:	DESIGN GROUP	
DESIGNED BY:	MICHAEL H. JONES	1/29/2016
DRAWN BY:	MICHAEL VAN DUYN	1/29/2016
CHECKED BY:	LI ZHANG	1/29/2016
APPROVED BY:	CHARLES REDFIELD	1/29/2016
	MICHAEL H. JONES	1/29/2016

LIC. NO. S3033

VERTICAL CONTROL: BM 12-04070, 1929 (NGVD 29) - 1985 ADJUSTMENT

HORIZONTAL CONTROL: GPS; PID AE 1704, EPOCH 1991.35

SHEET TITLE: EDGE GIRDER REINFORCEMENT DETAILS NO. 30

PROJECT: SIXTH STREET VIADUCT REPLACEMENT

ADDRESS: SIXTH STREET VIADUCT (WHITTIER BLVD) LOS ANGELES, CA

HNTB

HNTB Corporation
601 W. 5TH STREET SUITE 1000
LOS ANGELES, CALIFORNIA 90071
TEL (213) 403-1000 FAX (213) 403-1001

BUREAU OF ENGINEERING OFFICIAL RECORD

WORK ORDER NO. E700224F

DRAWING NO. S6-50

SHEET 351 OF 560 SHEETS

ADDENDUM 5

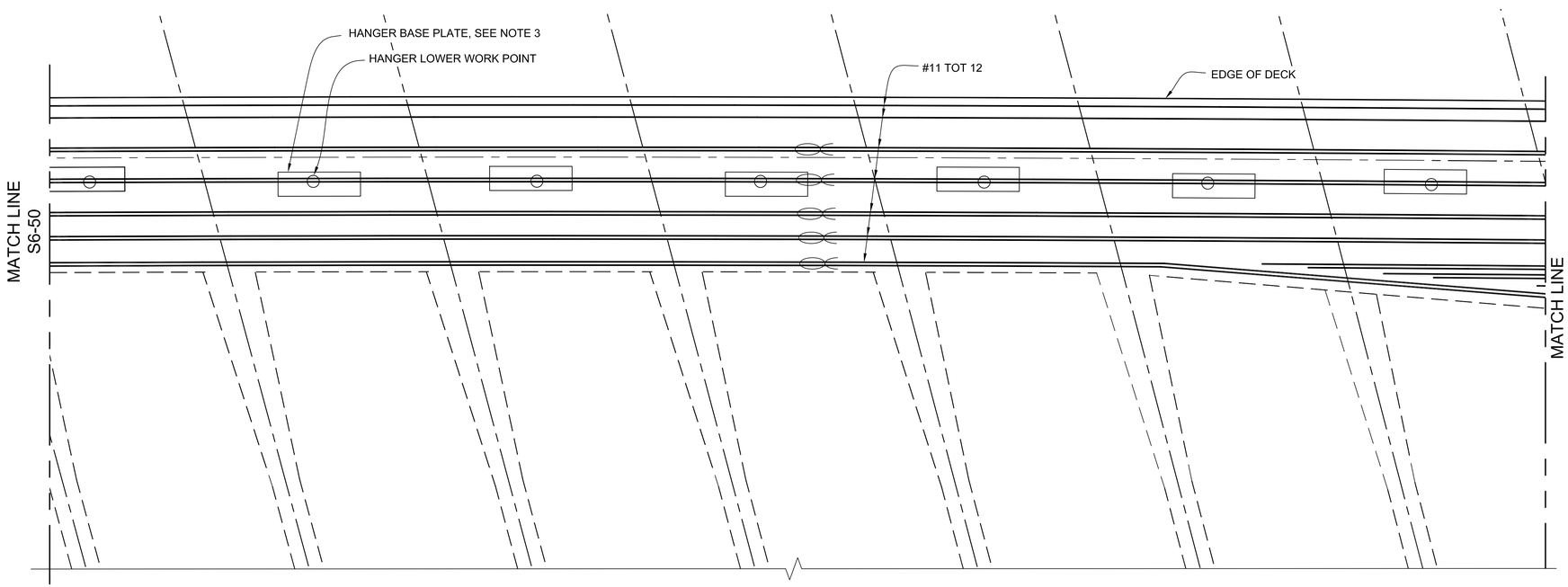

EDGE GIRDER TOP REINFORCEMENT

SCALE: 3/8" =1'-0"

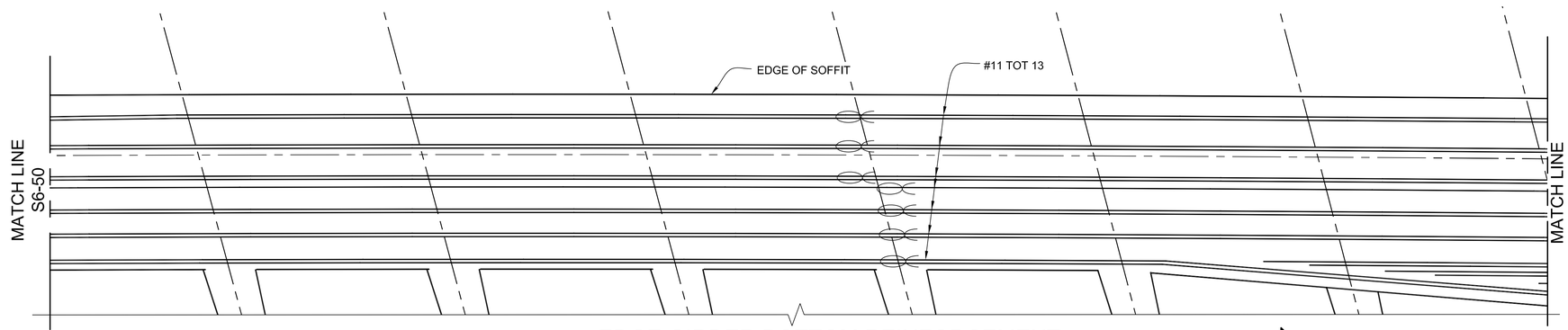

EDGE GIRDER BOTTOM REINFORCEMENT

SCALE: 3/8" =1'-0"



KEY ELEVATION

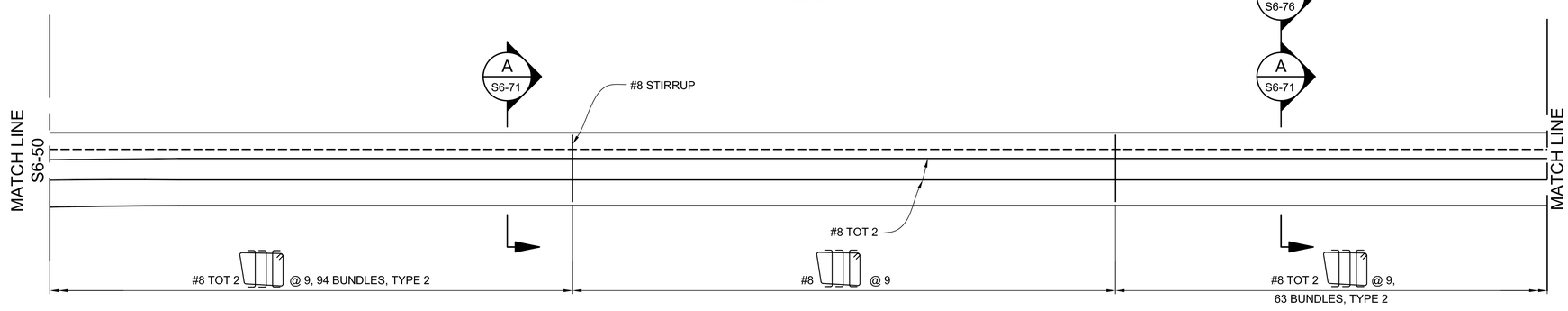

LONGITUDINAL SECTION

SCALE: 3/8" =1'-0"

NOTES:

1. FOR NOTES AND LEGEND, SEE DRAWING S6-21.

THE CITY OF LOS ANGELES OR ITS OFFICERS OR AGENTS SHALL NOT BE RESPONSIBLE FOR THE ACCURACY OR COMPLETENESS OF ELECTRONIC COPIES OF THIS PLAN SHEET.

C:\caddlib\pw\pwwestcoast\zhang\dms57683\S6-21-GD01-47.dwg 6/28/16 17:31

REVISION DATES (DESIGN STAGE ONLY)

Sheet Version 3.0

BUREAU OF ENGINEERING

ENGINEERING
CITY OF LOS ANGELES

NO.	REVISIONS:	DATE:	BY:

STRUCTURE NO. 53C-2329

INDEX NO. P-38113

THIS PLAN WAS ELECTRONICALLY SIGNED AND STAMPED.

REGISTERED PROFESSIONAL ENGINEER MICHAEL H. JONES No. S3033 CIVIL STATE OF CALIFORNIA

DEPARTMENT OF PUBLIC WORKS

GARY LEE MOORE, P.E. CITY ENGINEER

DESIGN GROUP		DATE:
ENGINEER:	MICHAEL H. JONES LIC. NO. S3033	1/29/2016
DESIGNED BY:	MICHAEL VAN DUYN	1/29/2016
DRAWN BY:	LI ZHANG	1/29/2016
CHECKED BY:	CHARLES REDFIELD	1/29/2016
APPROVED BY:	MICHAEL H. JONES	1/29/2016

CITY OF LOS ANGELES

VERTICAL CONTROL: BM 12-04070,1928 (NGVD 29) - 1985 ADJUSTMENT
HORIZONTAL CONTROL: GPS; PID AE 1704; EPOCH 1991.35

SHEET TITLE: EDGE GIRDER REINFORCEMENT DETAILS NO. 31

PROJECT: SIXTH STREET VIADUCT REPLACEMENT

ADDRESS: SIXTH STREET VIADUCT (WHITTIER BLVD) LOS ANGELES, CA

BUREAU OF ENGINEERING OFFICIAL RECORD

HNTB
HNTB Corporation
601 W. 5TH STREET SUITE 1000
LOS ANGELES, CALIFORNIA 90071
TEL (213) 403-1000 FAX (213) 403-1001

WORK ORDER NO. E700224F

DRAWING NO. S6-51

SHEET 352 OF 560 SHEETS

ADDENDUM 5

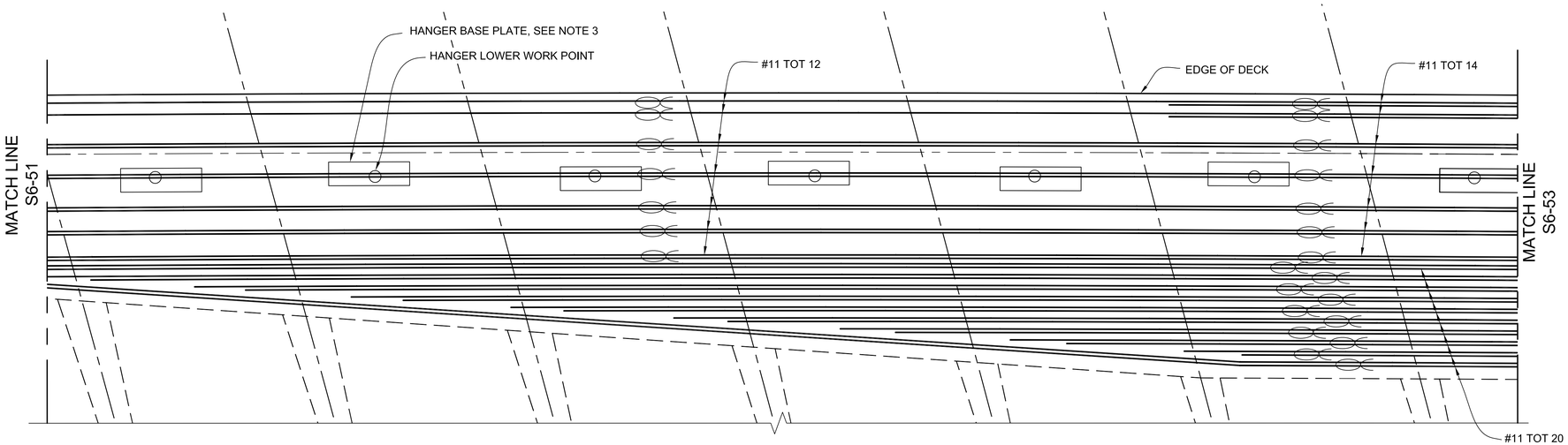

EDGE GIRDER TOP REINFORCEMENT

SCALE: 3/8" =1'-0"

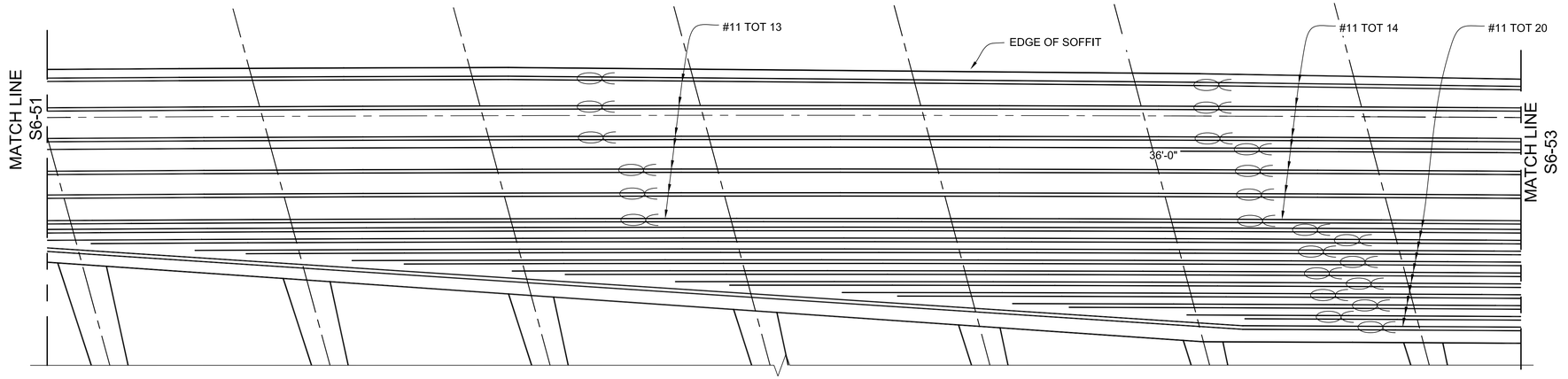

EDGE GIRDER BOTTOM REINFORCEMENT

SCALE: 3/8" =1'-0"

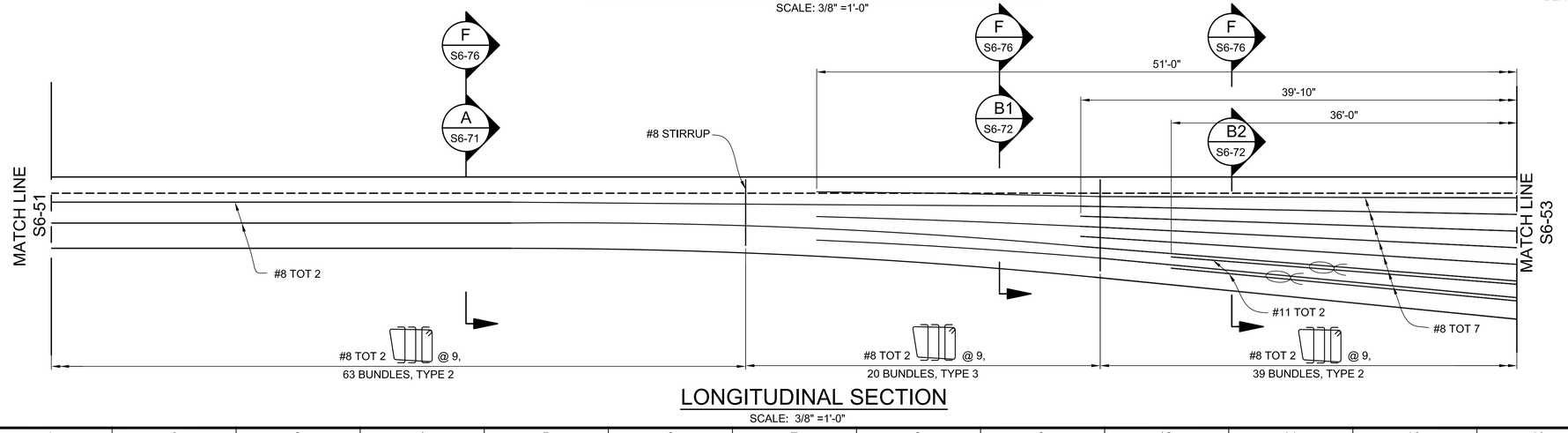

LONGITUDINAL SECTION

SCALE: 3/8" =1'-0"

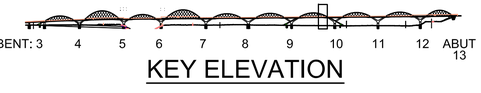

KEY ELEVATION

NOTES:

1. FOR NOTES AND LEGEND, SEE DRAWING S6-21.

THE CITY OF LOS ANGELES OR ITS OFFICERS OR AGENTS SHALL NOT BE RESPONSIBLE FOR THE ACCURACY OR COMPLETENESS OF ELECTRONIC COPIES OF THIS PLAN SHEET.

C:\caddlib\pw\pwwestcoast\zhang\dms57683\S6-21-GD01-47.dwg 6/28/16 17:31

REVISION DATES (DESIGN STAGE ONLY)

Sheet Version 3.0

BUREAU OF ENGINEERING

ENGINEERING CITY OF LOS ANGELES

NO.	REVISIONS:	DATE	BY:

STRUCTURE NO. 53C-2329

INDEX NO. P-38113

"THIS PLAN WAS ELECTRONICALLY SIGNED AND STAMPED."

REGISTERED PROFESSIONAL ENGINEER MICHAEL H. JONES No. S3033 CIVIL STATE OF CALIFORNIA

CITY OF LOS ANGELES DEPARTMENT OF PUBLIC WORKS

GARY LEE MOORE, P.E. CITY ENGINEER

		DATE:
ENGINEER:	MICHAEL H. JONES	1/29/2016
	DESIGN GROUP	
	LIC. NO. S3033	1/29/2016
DESIGNED BY:	MICHAEL VAN DUYN	1/29/2016
DRAWN BY:	LI ZHANG	1/29/2016
CHECKED BY:	CHARLES REDFIELD	1/29/2016
APPROVED BY:	MICHAEL H. JONES	1/29/2016

VERTICAL CONTROL: BM 12-04070.1929 (NGVD 29) - 1985 ADJUSTMENT

HORIZONTAL CONTROL: GPS; PID AE 1704, EPOCH 1991.35

SHEET TITLE: EDGE GIRDER REINFORCEMENT DETAILS NO. 32

PROJECT: SIXTH STREET VIADUCT REPLACEMENT

ADDRESS: SIXTH STREET VIADUCT (WHITTIER BLVD) LOS ANGELES, CA

HNTB

HNTB Corporation
601 W. 5TH STREET SUITE 1000
LOS ANGELES, CALIFORNIA 90071
TEL (213) 403-1000 FAX (213) 403-1001

BUREAU OF ENGINEERING OFFICIAL RECORD

WORK ORDER NO. E700224F

DRAWING NO. S6-52

SHEET 353 OF 560 SHEETS

ADDENDUM 5

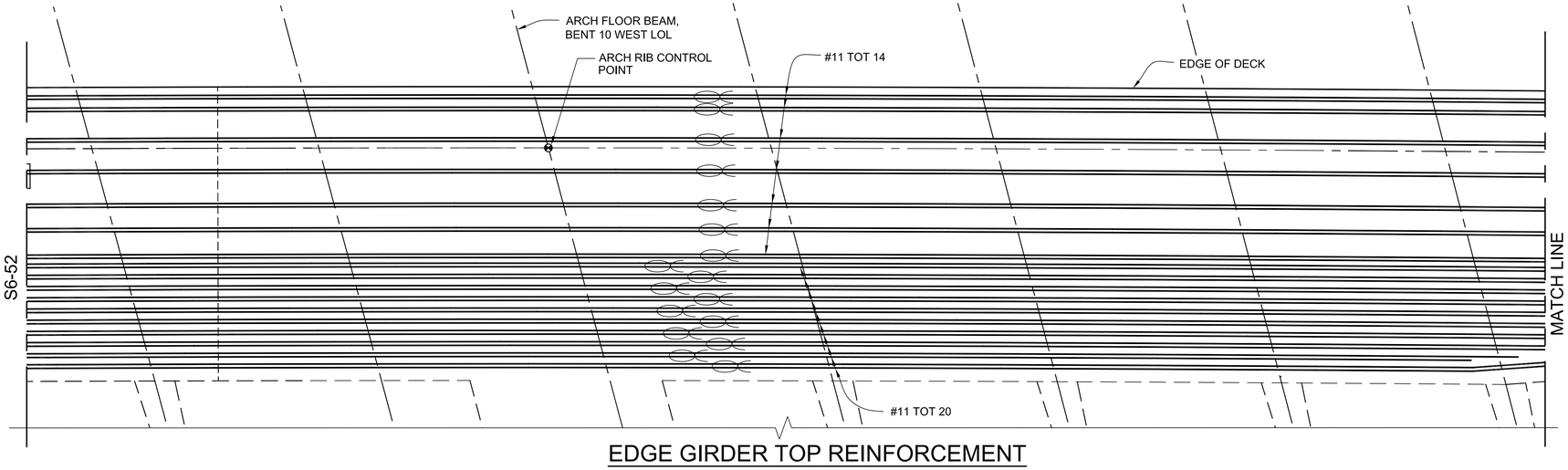

EDGE GIRDER TOP REINFORCEMENT

SCALE: 3/8" =1'-0"

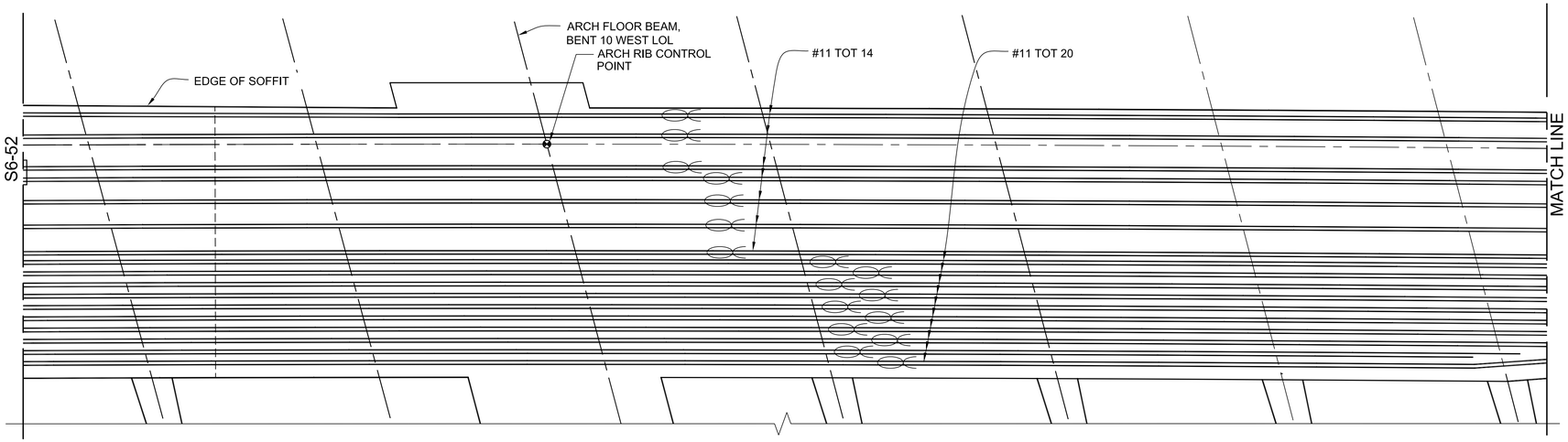

EDGE GIRDER BOTTOM REINFORCEMENT

SCALE: 3/8" =1'-0"

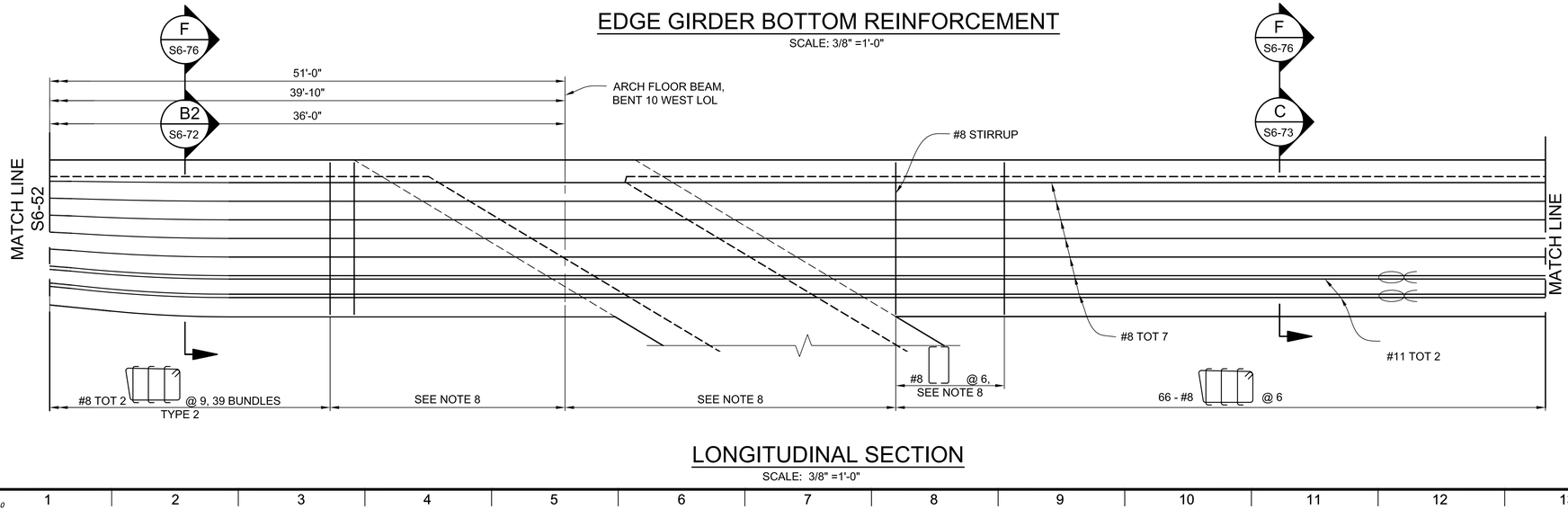

LONGITUDINAL SECTION

SCALE: 3/8" =1'-0"



KEY ELEVATION

NOTES:

1. FOR NOTES AND LEGEND, SEE DRAWING S6-21.

THE CITY OF LOS ANGELES OR ITS OFFICERS OR AGENTS SHALL NOT BE RESPONSIBLE FOR THE ACCURACY OR COMPLETENESS OF ELECTRONIC COPIES OF THIS PLAN SHEET.

C:\caddi5\pw\pwwestcoast\zhang\dms57683\S6-21-G001-47.dwg 6/28/16 17:31

REVISION DATES (DESIGN STAGE ONLY)

Sheet Version 3.0

HNTB
HNTB Corporation
601 W. 5TH STREET SUITE 1000
LOS ANGELES, CALIFORNIA 90071
TEL (213) 403-1000 FAX (213) 403-1001

BUREAU OF ENGINEERING
OFFICIAL RECORD

CITY OF LOS ANGELES DEPARTMENT OF PUBLIC WORKS
BUREAU OF ENGINEERING

ENGINEERING
CITY OF LOS ANGELES

NO.	REVISIONS:	DATE	BY:

STRUCTURE NO. 53C-2329

INDEX NO. P-38113

THIS PLAN WAS ELECTRONICALLY SIGNED AND STAMPED.

REGISTERED PROFESSIONAL ENGINEER MICHAEL H. JONES No. S3033 CIVIL STATE OF CALIFORNIA

GARY LEE MOORE, P.E.	CITY ENGINEER	DATE: 1/29/2016
ENGINEER:	MICHAEL H. JONES	LIC. NO. S3033
DESIGNED BY:	MICHAEL VAN DUYN	1/29/2016
DRAWN BY:	LI ZHANG	1/29/2016
CHECKED BY:	CHARLES REDFIELD	1/29/2016
APPROVED BY:	MICHAEL H. JONES	1/29/2016

DESIGN GROUP

VERTICAL CONTROL:	BM 12-04070, 1929 (NGVD 29) - 1985 ADJUSTMENT
HORIZONTAL CONTROL:	GPS; PID AE 1704, EPOCH 1991.35
SHEET TITLE:	EDGE GIRDER REINFORCEMENT DETAILS NO. 33
PROJECT:	SIXTH STREET VIADUCT REPLACEMENT
ADDRESS:	SIXTH STREET VIADUCT (WHITTIER BLVD) LOS ANGELES, CA

WORK ORDER NO. E700224F

DRAWING NO. S6-53

SHEET 354 OF 560 SHEETS

ADDENDUM 5

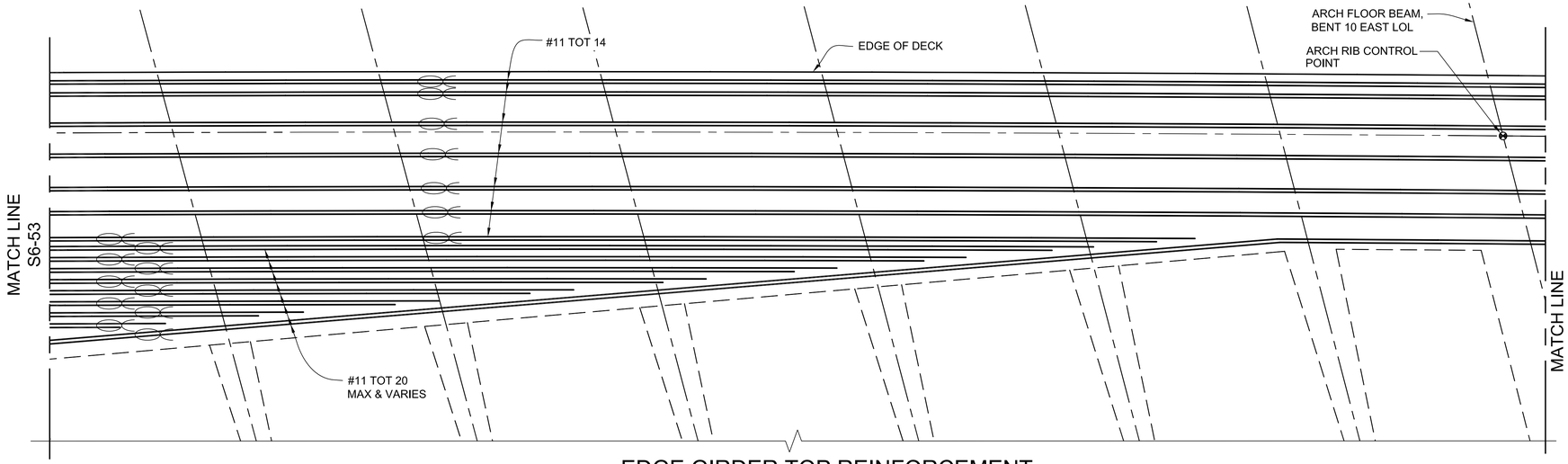

EDGE GIRDER TOP REINFORCEMENT

SCALE: 3/8" =1'-0"

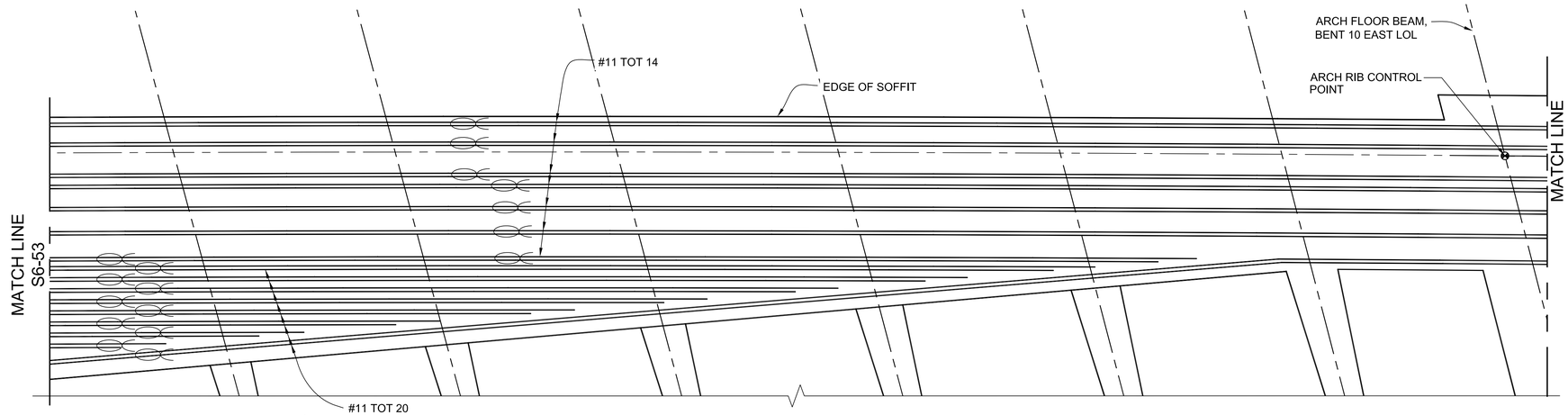

EDGE GIRDER BOTTOM REINFORCEMENT

SCALE: 3/8" =1'-0"

NOTES:

1. FOR NOTES AND LEGEND, SEE DRAWING S6-21.



KEY ELEVATION

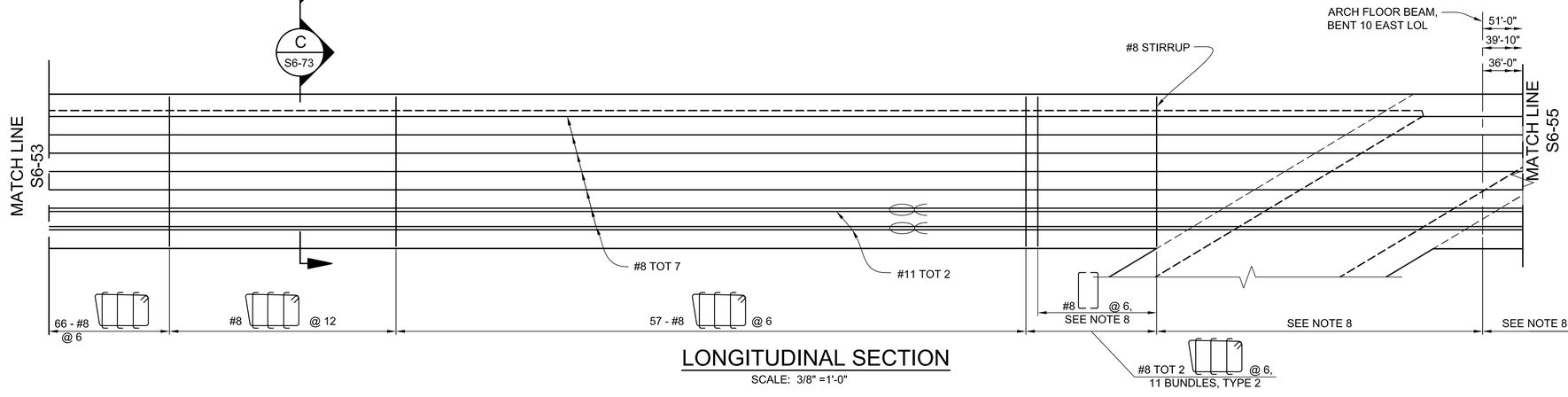

LONGITUDINAL SECTION

SCALE: 3/8" =1'-0"

THE CITY OF LOS ANGELES OR ITS OFFICERS OR AGENTS SHALL NOT BE RESPONSIBLE FOR THE ACCURACY OR COMPLETENESS OF ELECTRONIC COPIES OF THIS PLAN SHEET.

C:\caddlib\pw\pwwestcoast\zhang\dms57683\S6-21-0001-47.dwg 6/28/16 17:31

REVISION DATES (DESIGN STAGE ONLY)

Sheet Version 3.0

BUREAU OF ENGINEERING

ENGINEERING
CITY OF LOS ANGELES

NO.	REVISIONS:	DATE	BY:

STRUCTURE NO. 53C-2329

INDEX NO. P-38113

REGISTERED PROFESSIONAL ENGINEER MICHAEL H. JONES No. S3033 CIVIL STATE OF CALIFORNIA

THIS PLAN WAS ELECTRONICALLY SIGNED AND STAMPED.

BUREAU OF PUBLIC WORKS

GARY LEE MOORE, P.E. CITY ENGINEER

		LIC. NO.	DATE:
DESIGN GROUP			
ENGINEER:	MICHAEL H. JONES	S3033	1/29/2016
DESIGNED BY:	MICHAEL VAN DUYN		1/29/2016
DRAWN BY:	LI ZHANG		1/29/2016
CHECKED BY:	CHARLES REDFIELD		1/29/2016
APPROVED BY:	MICHAEL H. JONES		1/29/2016

CITY OF LOS ANGELES DEPARTMENT OF PUBLIC WORKS

VERTICAL CONTROL: BM 12-04070, 1929 (NGVD 29) - 1985 ADJUSTMENT
HORIZONTAL CONTROL: GPS; PID AE 1704, EPOCH 1991.35

SHEET TITLE: EDGE GIRDER REINFORCEMENT DETAILS NO. 34

PROJECT: SIXTH STREET VIADUCT REPLACEMENT

ADDRESS: SIXTH STREET VIADUCT (WHITTIER BLVD) LOS ANGELES, CA

HNTB
HNTB Corporation
601 W. 5TH STREET SUITE 1000
LOS ANGELES, CALIFORNIA 90071
TEL (213) 403-1000 FAX (213) 403-1001

BUREAU OF ENGINEERING OFFICIAL RECORD

WORK ORDER NO. E700224F

DRAWING NO. S6-54

SHEET 355 OF 560 SHEETS

ADDENDUM 5

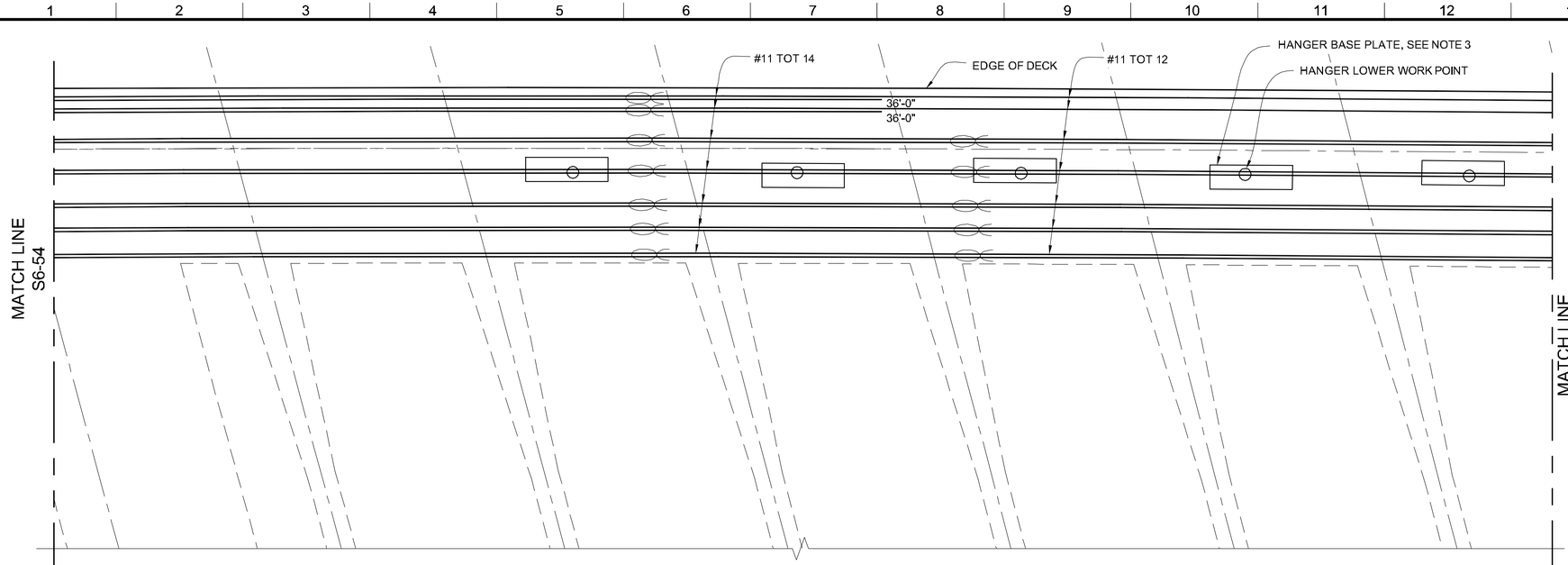

EDGE GIRDER TOP REINFORCEMENT

SCALE: 3/8" =1'-0"

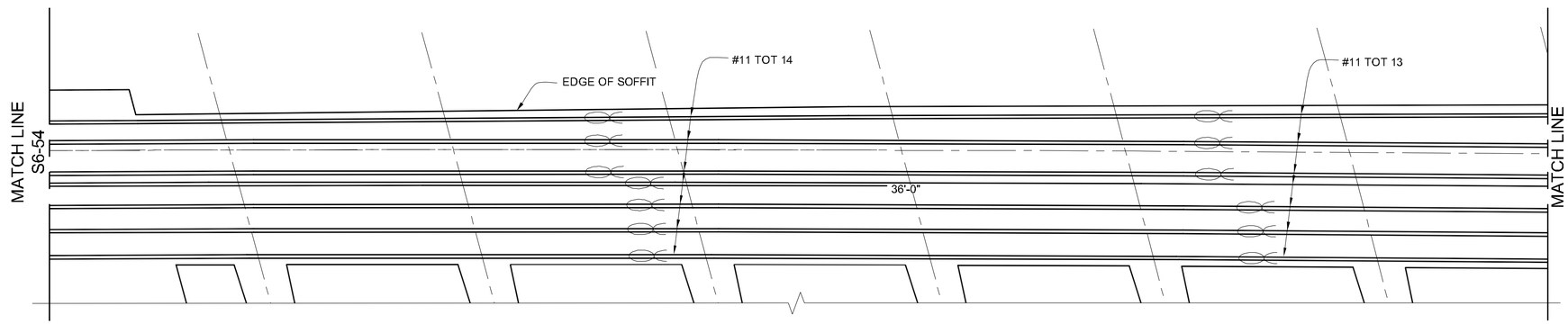

EDGE GIRDER BOTTOM REINFORCEMENT

SCALE: 3/8" =1'-0"

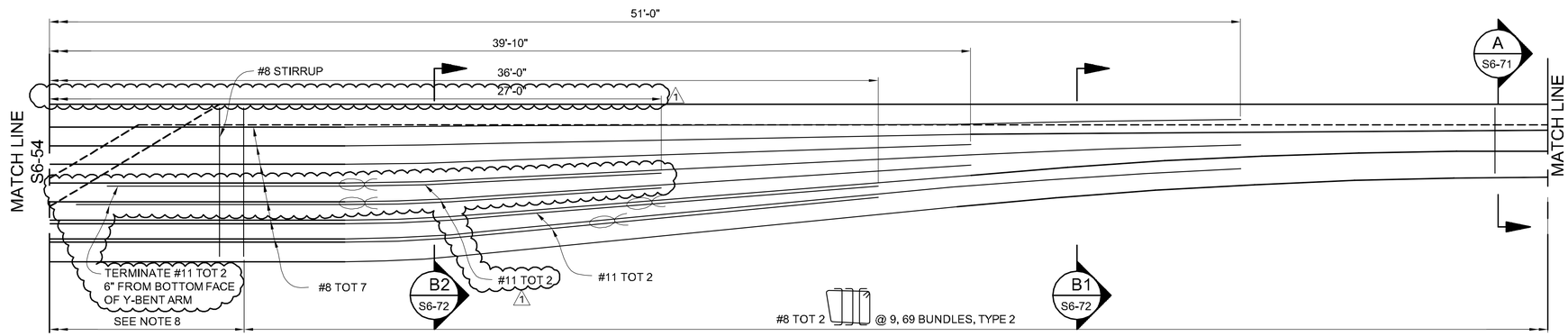

LONGITUDINAL SECTION

SCALE: 3/8" =1'-0"



KEY ELEVATION

NOTES:

1. FOR NOTES AND LEGEND, SEE DRAWING S6-21.

T.O. 5 - Change Order Serial Sketch No. 53 - Page 2 of 3

THE CITY OF LOS ANGELES OR ITS OFFICERS OR AGENTS SHALL NOT BE RESPONSIBLE FOR THE ACCURACY OR COMPLETENESS OF ELECTRONIC COPIES OF THIS PLAN SHEET.

C:\caddlib\pw\pwwestcoast\zhang\dms57683\S6-21-0001-47.dwg 12/19/17 10:42

REVISION DATES (DESIGN STAGE ONLY)

Sheet Version 3.0

BUREAU OF ENGINEERING

ENGINEERING — CITY OF LOS ANGELES

NO.	REVISIONS:	DATE:	BY:
1	FALSEWORK REINF ECO 53	12/19/17	MHJ

STRUCTURE NO. 53C-2329

INDEX NO.

THIS PLAN WAS ELECTRONICALLY SIGNED AND STAMPED.

REGISTERED PROFESSIONAL ENGINEER — MICHAEL H. JONES — No. S3033 — EXP. 06-30-16 — STATE OF CALIFORNIA

DEPARTMENT OF PUBLIC WORKS

GARY LEE MOORE, P.E. — CITY ENGINEER

		DATE:
DESIGN GROUP		
ENGINEER:	MICHAEL H. JONES — LIC. NO. S3033	1/29/2016
DESIGNED BY:	MICHAEL VAN DLYN	1/29/2016
DRAWN BY:	LI ZHANG	1/29/2016
CHECKED BY:	CHARLES REDFIELD	1/29/2016
APPROVED BY:	MICHAEL H. JONES	1/29/2016

CITY OF LOS ANGELES — DEPARTMENT OF PUBLIC WORKS

VERTICAL CONTROL: BM 12-04070 1929 (NGVD 29) - 1985 ADJUSTMENT
HORIZONTAL CONTROL: GPS; PID AE 1704, EPOCH 1991.35

SHEET TITLE: EDGE GIRDER REINFORCEMENT DETAILS NO. 35

PROJECT: SIXTH STREET VIADUCT REPLACEMENT

ADDRESS: SIXTH STREET VIADUCT (WHITTIER BLVD) LOS ANGELES, CA

HNTB
HNTB Corporation
601 W. 5TH STREET SUITE 1000
LOS ANGELES, CALIFORNIA 90071
TEL (213) 403-1000 FAX (213) 403-1001

WORK ORDER NO. E700224F

DRAWING NO. S6-55

SHEET 20 OF 560 SHEETS

ADDENDUM 5

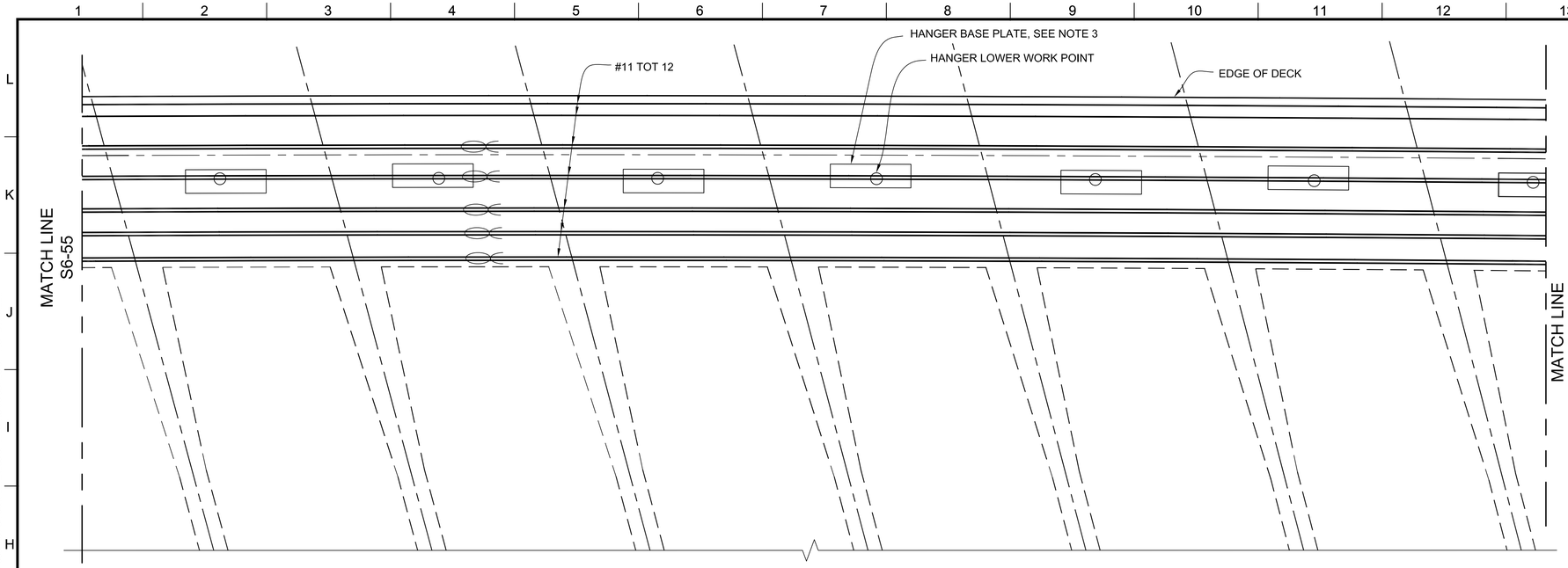

EDGE GIRDER TOP REINFORCEMENT

SCALE: 3/8" =1'-0"

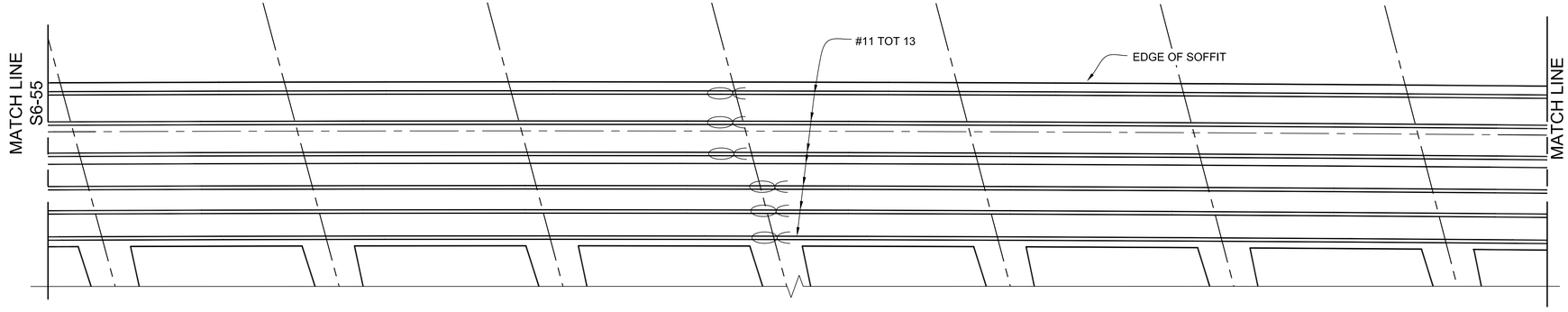

EDGE GIRDER BOTTOM REINFORCEMENT

SCALE: 3/8" =1'-0"

NOTES:

1. FOR NOTES AND LEGEND, SEE DRAWING S6-21.



KEY ELEVATION

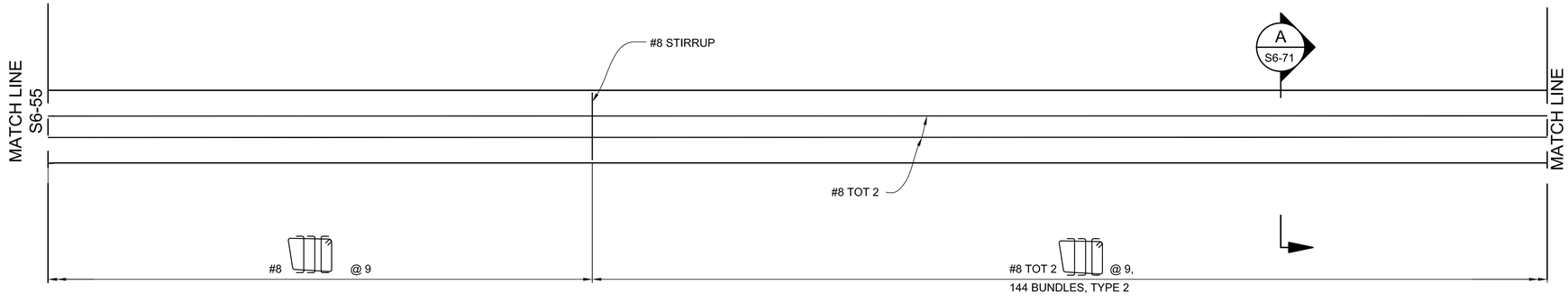

LONGITUDINAL SECTION

SCALE: 3/8" =1'-0"

THE CITY OF LOS ANGELES OR ITS OFFICERS OR AGENTS SHALL NOT BE RESPONSIBLE FOR THE ACCURACY OR COMPLETENESS OF ELECTRONIC COPIES OF THIS PLAN SHEET.

C:\caddlib\pw\pwwestcoast\zhang\dms57683\S6-21-GD01-47.dwg 6/28/16 17:32

REVISION DATES (DESIGN STAGE ONLY)

Sheet Version 3.0

CITY OF LOS ANGELES DEPARTMENT OF PUBLIC WORKS

BUREAU OF ENGINEERING

ENGINEERING CITY OF LOS ANGELES

NO.	REVISIONS:	DATE	BY:

STRUCTURE NO. 53C-2329

INDEX NO. P-38113

THIS PLAN WAS ELECTRONICALLY SIGNED AND STAMPED.

REGISTERED PROFESSIONAL ENGINEER MICHAEL H. JONES No. S3033 CIVIL STATE OF CALIFORNIA

CITY ENGINEER		DATE:
GARY LEE MOORE, P.E.		
DESIGN GROUP	LIC. NO. S3033	
ENGINEER: MICHAEL H. JONES		1/29/2016
DESIGNED BY: MICHAEL VAN DUYN		1/29/2016
DRAWN BY: LI ZHANG		1/29/2016
CHECKED BY: CHARLES REDFIELD		1/29/2016
APPROVED BY: MICHAEL H. JONES		1/29/2016

VERTICAL CONTROL: BM 12-04070, 1929 (NGVD 29) - 1985 ADJUSTMENT
HORIZONTAL CONTROL: GPS; PID AE 1704, EPOCH 1991.35

SHEET TITLE: EDGE GIRDER REINFORCEMENT DETAILS NO. 36

PROJECT: SIXTH STREET VIADUCT REPLACEMENT

ADDRESS: SIXTH STREET VIADUCT (WHITTIER BLVD) LOS ANGELES, CA

BUREAU OF ENGINEERING OFFICIAL RECORD

HNTB

HNTB Corporation
601 W. 5TH STREET SUITE 1000
LOS ANGELES, CALIFORNIA 90071
TEL (213) 403-1000 FAX (213) 403-1001

WORK ORDER NO. E700224F

DRAWING NO. S6-56

SHEET 357 OF 560 SHEETS

ADDENDUM 5

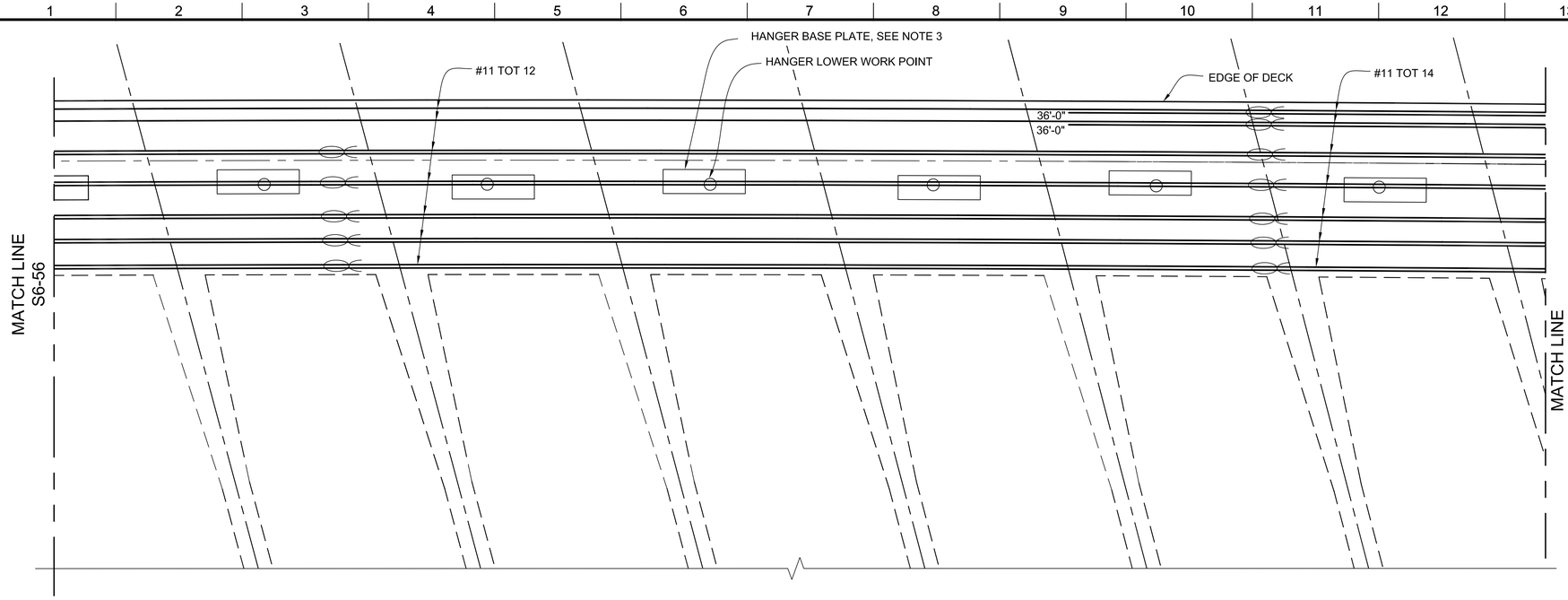

EDGE GIRDER TOP REINFORCEMENT

SCALE: 3/8" =1'-0"

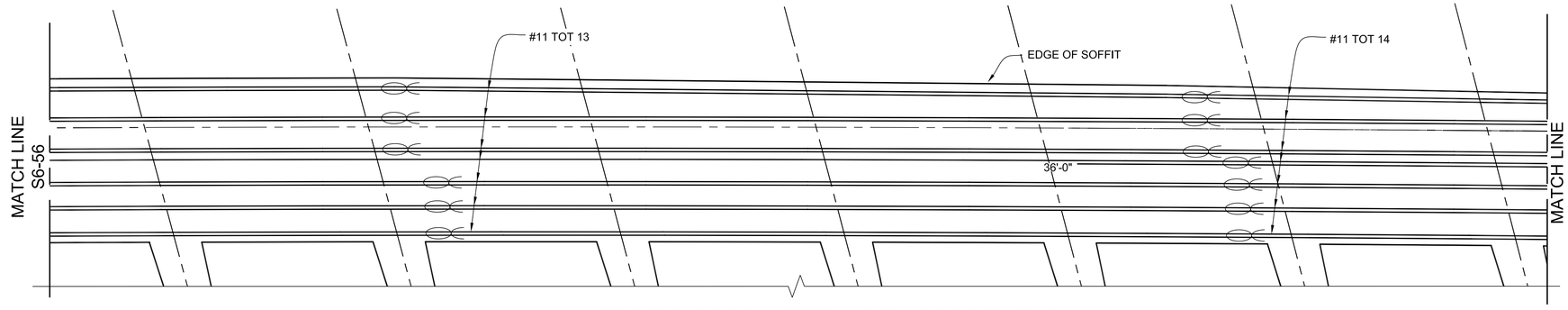

EDGE GIRDER BOTTOM REINFORCEMENT

SCALE: 3/8" =1'-0"

NOTES:

1. FOR NOTES AND LEGEND, SEE DRAWING S6-21.



KEY ELEVATION

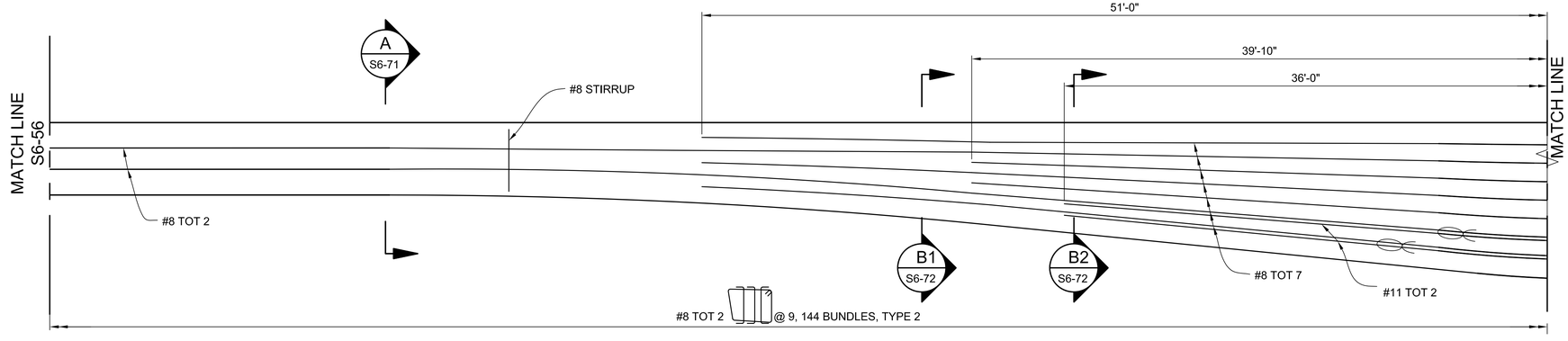

LONGITUDINAL SECTION

SCALE: 3/8" =1'-0"

THE CITY OF LOS ANGELES OR ITS OFFICERS OR AGENTS SHALL NOT BE RESPONSIBLE FOR THE ACCURACY OR COMPLETENESS OF ELECTRONIC COPIES OF THIS PLAN SHEET.

C:\caddlib\pw\pwwestcoast\lzhang\dms57683\S6-21-GD01-47.dwg 6/28/16 17:32

REVISION DATES (DESIGN STAGE ONLY)

Sheet Version 3.0

CITY OF LOS ANGELES DEPARTMENT OF PUBLIC WORKS
BUREAU OF ENGINEERING

ENGINEERING CITY OF LOS ANGELES

NO.	REVISIONS:	DATE	BY:

STRUCTURE NO. 53C-2329

INDEX NO. P-38113

THIS PLAN WAS ELECTRONICALLY SIGNED AND STAMPED.

REGISTERED PROFESSIONAL ENGINEER MICHAEL H. JONES No. 53033 CIVIL STATE OF CALIFORNIA

GARY LEE MOORE, P.E. CITY ENGINEER

		DATE:
DESIGN GROUP		
ENGINEER:	MICHAEL H. JONES LIC. NO. 53033	1/29/2016
DESIGNED BY:	MICHAEL VAN DUYN	1/29/2016
DRAWN BY:	LI ZHANG	1/29/2016
CHECKED BY:	CHARLES REDFIELD	1/29/2016
APPROVED BY:	MICHAEL H. JONES	1/29/2016

VERTICAL CONTROL: BM 12-04070, 1929 (NGVD 29) - 1985 ADJUSTMENT
HORIZONTAL CONTROL: GPS; PID AE 1704, EPOCH 1991.35

SHEET TITLE: EDGE GIRDER REINFORCEMENT DETAILS NO. 3Z

PROJECT: SIXTH STREET VIADUCT REPLACEMENT

ADDRESS: SIXTH STREET VIADUCT (WHITTIER BLVD) LOS ANGELES, CA

BUREAU OF ENGINEERING OFFICIAL RECORD

HNTB
HNTB Corporation
601 W. 5TH STREET SUITE 1000
LOS ANGELES, CALIFORNIA 90071
TEL (213) 403-1000 FAX (213) 403-1001

WORK ORDER NO. E700224F

DRAWING NO. S6-57

SHEET 358 OF 560 SHEETS

ADDENDUM 5

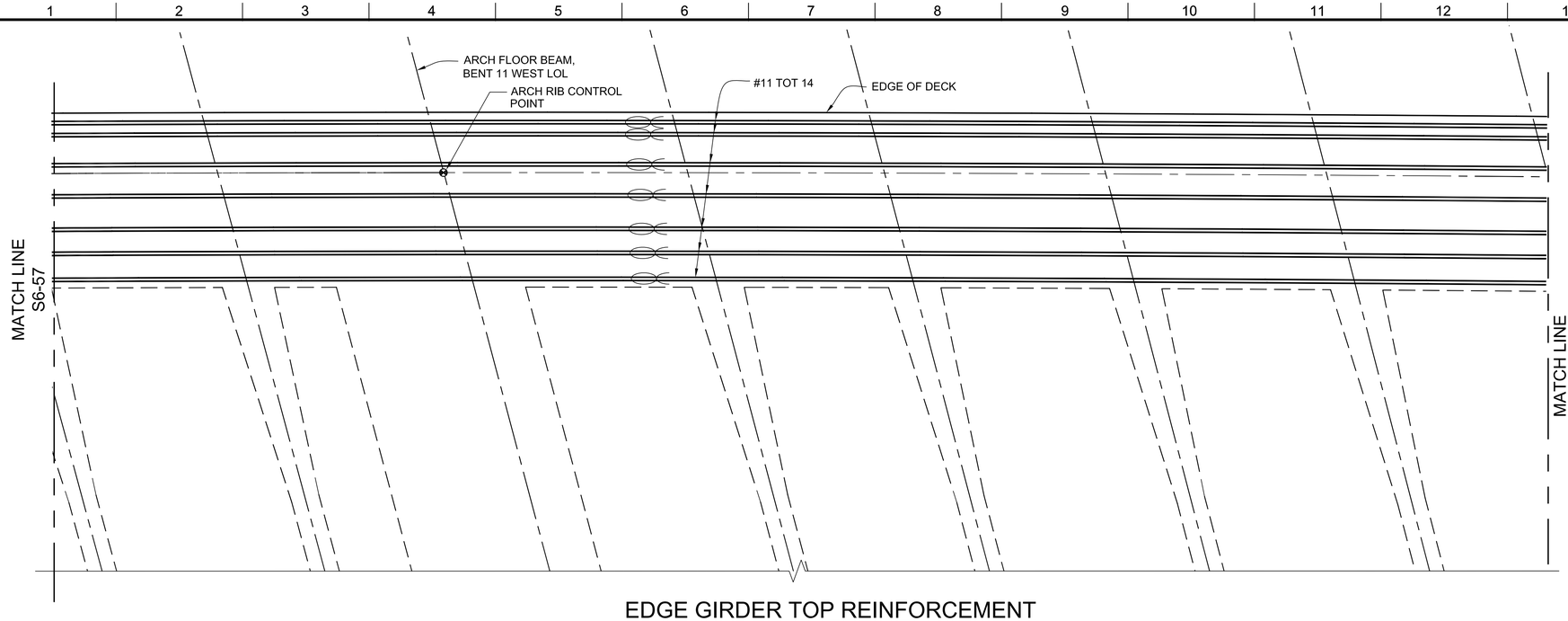

EDGE GIRDER TOP REINFORCEMENT

SCALE: 3/8" =1'-0"

NOTES:

1. FOR NOTES AND LEGEND, SEE DRAWING S6-21.

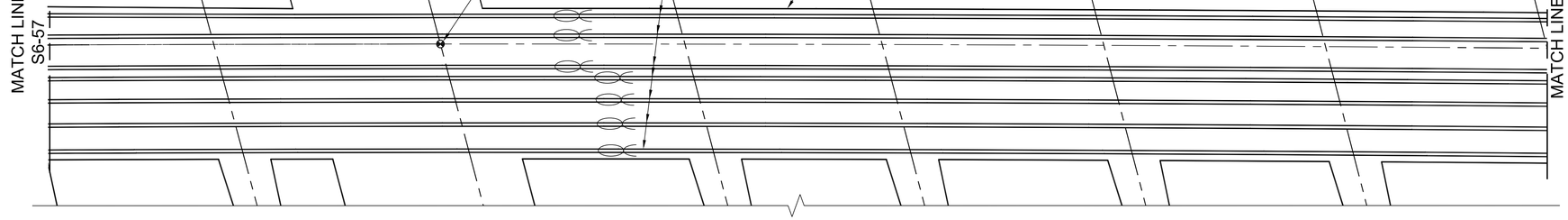

EDGE GIRDER BOTTOM REINFORCEMENT

SCALE: 3/8" =1'-0"

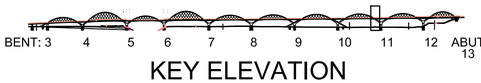

KEY ELEVATION

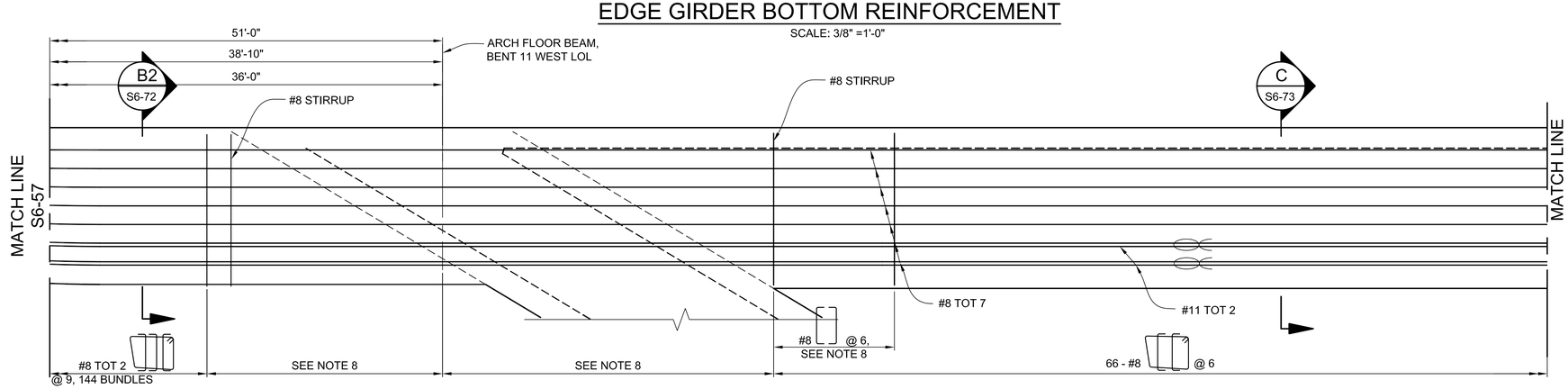

LONGITUDINAL SECTION

SCALE: 3/8" =1'-0"

THIS PLAN WAS ELECTRONICALLY SIGNED AND STAMPED.

REGISTERED PROFESSIONAL ENGINEER MICHAEL H. JONES No. S3033 CIVIL STATE OF CALIFORNIA

BUREAU OF ENGINEERING OFFICIAL RECORD

HNTB Corporation
601 W. 5TH STREET SUITE 1000
LOS ANGELES, CALIFORNIA 90071
TEL (213) 403-1000 FAX (213) 403-1001

WORK ORDER NO. E700224F

DRAWING NO. S6-58

SHEET 359 OF 560 SHEETS

CITY OF LOS ANGELES — DEPARTMENT OF PUBLIC WORKS — BUREAU OF ENGINEERING

ENGINEERING — CITY OF LOS ANGELES

NO.	REVISIONS:	DATE	BY:

STRUCTURE NO. 53C-2329

INDEX NO. P-38113

CITY ENGINEER

GARY LEE MOORE, P.E.

		DATE:
DESIGN GROUP		
ENGINEER:	MICHAEL H. JONES	1/29/2016
LIC. NO.	S3033	1/29/2016
DESIGNED BY:	MICHAEL VAN DUYN	1/29/2016
DRAWN BY:	LI ZHANG	1/29/2016
CHECKED BY:	CHARLES REDFIELD	1/29/2016
APPROVED BY:	MICHAEL H. JONES	1/29/2016

VERTICAL CONTROL: BM 12-04070,1929 (NGVD 29) - 1985 ADJUSTMENT
HORIZONTAL CONTROL: GPS; PID AE 1704, EPOCH 1991.35

SHEET TITLE: EDGE GIRDER REINFORCEMENT DETAILS NO. 38

PROJECT: SIXTH STREET VIADUCT REPLACEMENT

ADDRESS: SIXTH STREET VIADUCT (WHITTIER BLVD) LOS ANGELES, CA

THE CITY OF LOS ANGELES OR ITS OFFICERS OR AGENTS SHALL NOT BE RESPONSIBLE FOR THE ACCURACY OR COMPLETENESS OF ELECTRONIC COPIES OF THIS PLAN SHEET.

REVISION DATES (DESIGN STAGE ONLY)

C:\caddlib\pw\pwwestcoast\zhang\dms57683\S6-21-G001-47.dwg 6/28/16 17:32

Sheet Version 3.0

ADDENDUM 5

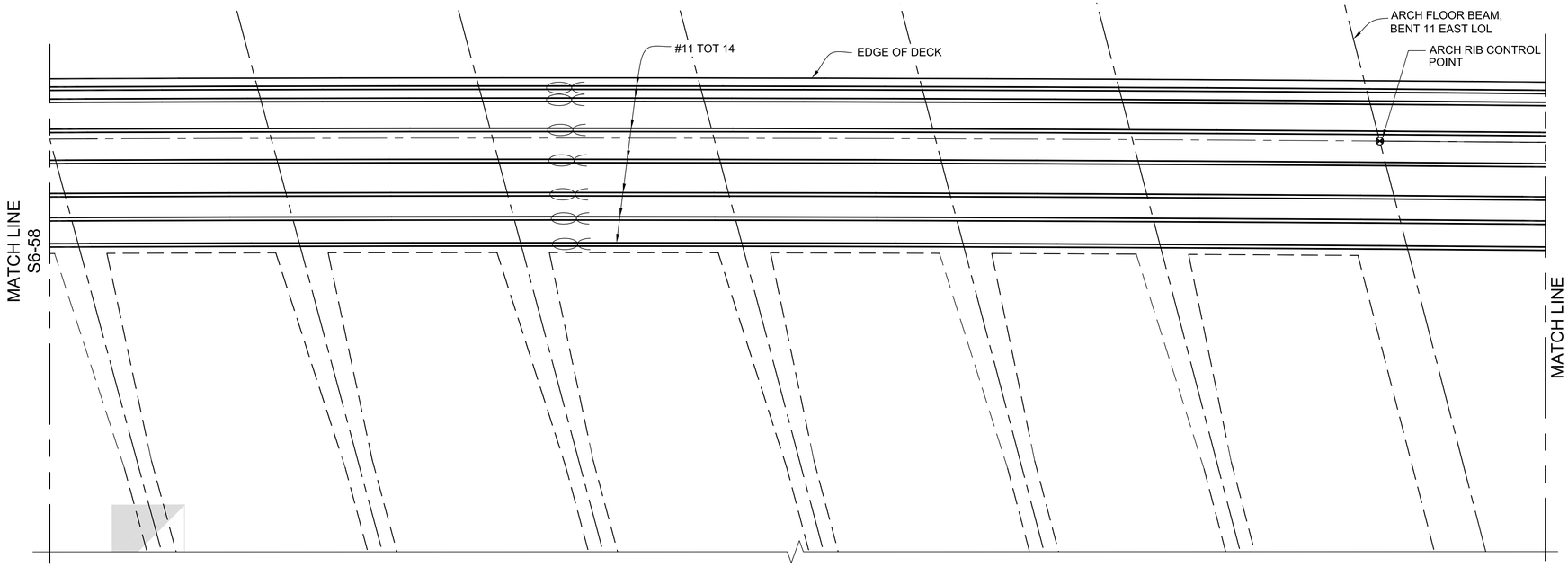

EDGE GIRDER TOP REINFORCEMENT

SCALE: 3/8" =1'-0"

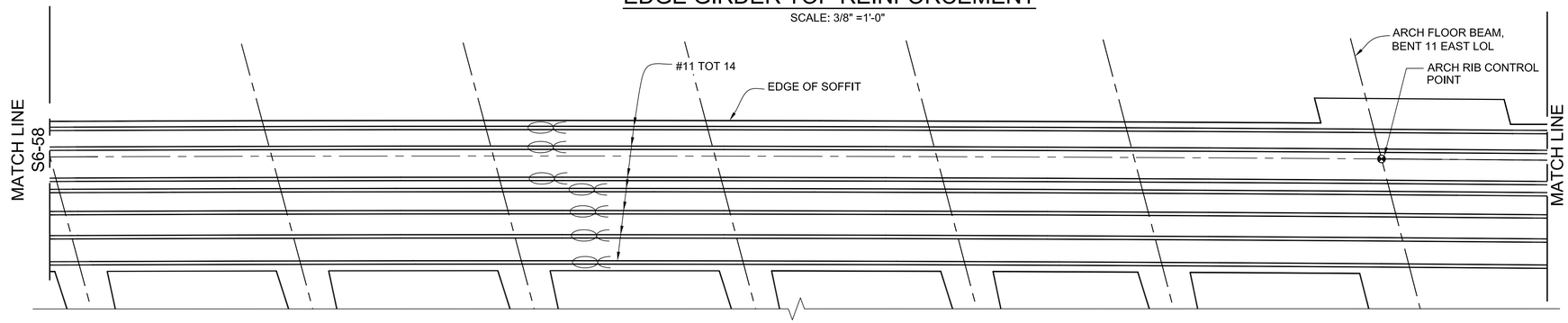

EDGE GIRDER BOTTOM REINFORCEMENT

SCALE: 3/8" =1'-0"

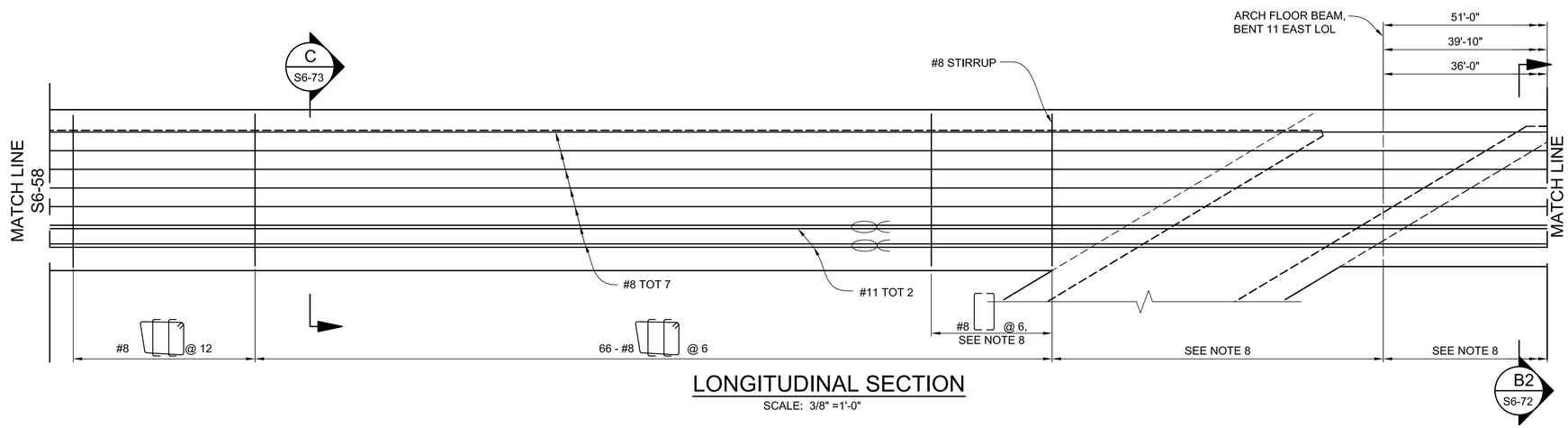

LONGITUDINAL SECTION

SCALE: 3/8" =1'-0"

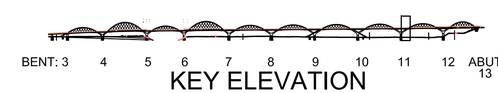

KEY ELEVATION

NOTES:

1. FOR NOTES AND LEGEND, SEE DRAWING S6-21.

THE CITY OF LOS ANGELES OR ITS OFFICERS OR AGENTS SHALL NOT BE RESPONSIBLE FOR THE ACCURACY OR COMPLETENESS OF ELECTRONIC COPIES OF THIS PLAN SHEET.

C:\caddlib\pw\pwwestcoast\lzhang\dms57683\S6-21-GD01-47.dwg 6/28/16 17:32

REVISION DATES (DESIGN STAGE ONLY)

Sheet Version 3.0

BUREAU OF ENGINEERING

ENGINEERING CITY OF LOS ANGELES

NO.	REVISIONS:	DATE:	BY:

STRUCTURE NO. 53C-2329

INDEX NO. P-38113

THIS PLAN WAS ELECTRONICALLY SIGNED AND STAMPED.

REGISTERED PROFESSIONAL ENGINEER MICHAEL H. JONES No. S3033 Exp. 06-31-16 STRUCTURAL STATE OF CALIFORNIA

CITY OF LOS ANGELES DEPARTMENT OF PUBLIC WORKS

GARY LEE MOORE, P.E. CITY ENGINEER

DESIGN GROUP		DATE:
ENGINEER:	MICHAEL H. JONES LIC. NO. S3033	1/29/2016
DESIGNED BY:	MICHAEL VAN DUYN	1/29/2016
DRAWN BY:	LI ZHANG	1/29/2016
CHECKED BY:	CHARLES REDFIELD	1/29/2016
APPROVED BY:	MICHAEL H. JONES	1/29/2016

VERTICAL CONTROL: BM 12-04070.1929 (NGVD 29) - 1985 ADJUSTMENT
HORIZONTAL CONTROL: GPS; PID AE 1704, EPOCH 1991.35

SHEET TITLE: EDGE GIRDER REINFORCEMENT DETAILS NO. 39

PROJECT: SIXTH STREET VIADUCT REPLACEMENT

ADDRESS: SIXTH STREET VIADUCT (WHITTIER BLVD) LOS ANGELES, CA

HNTB

HNTB Corporation
601 W. 5TH STREET SUITE 1000
LOS ANGELES, CALIFORNIA 90071
TEL (213) 403-1000 FAX (213) 403-1001

BUREAU OF ENGINEERING OFFICIAL RECORD

WORK ORDER NO. E700224F

DRAWING NO. S6-59

SHEET 360 OF 560 SHEETS

ADDENDUM 5

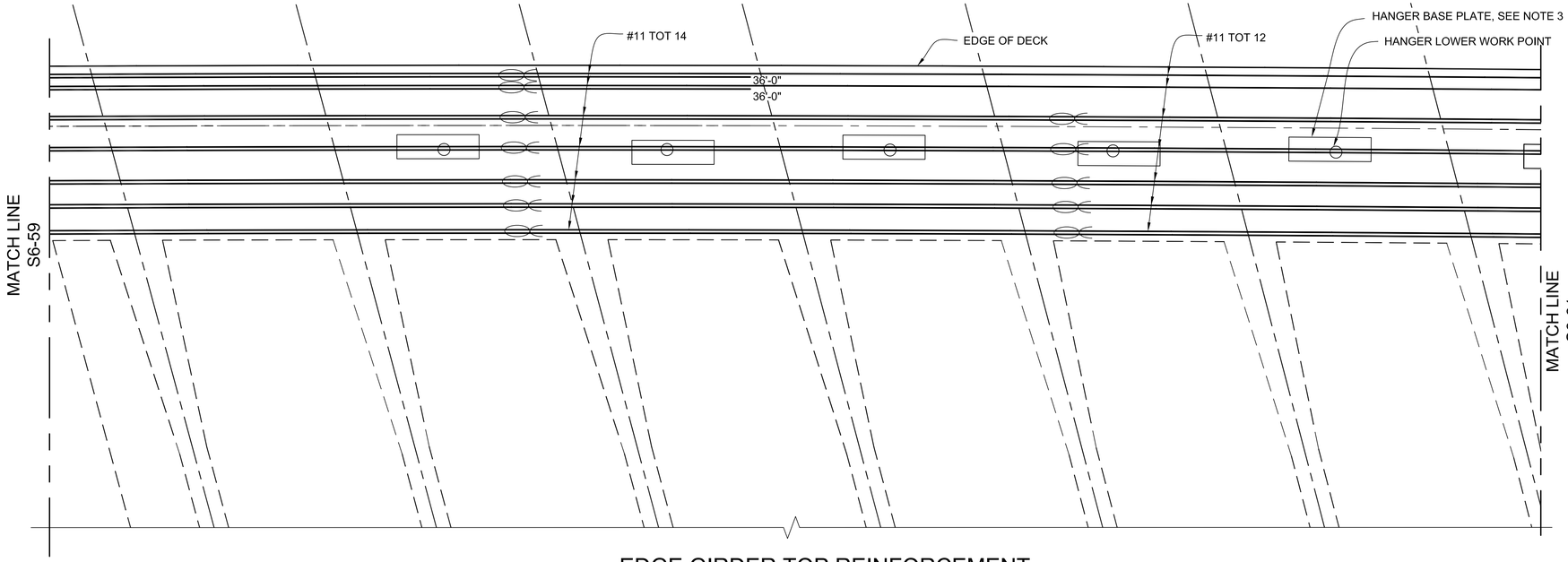

EDGE GIRDER TOP REINFORCEMENT

SCALE: 3/8" =1'-0"

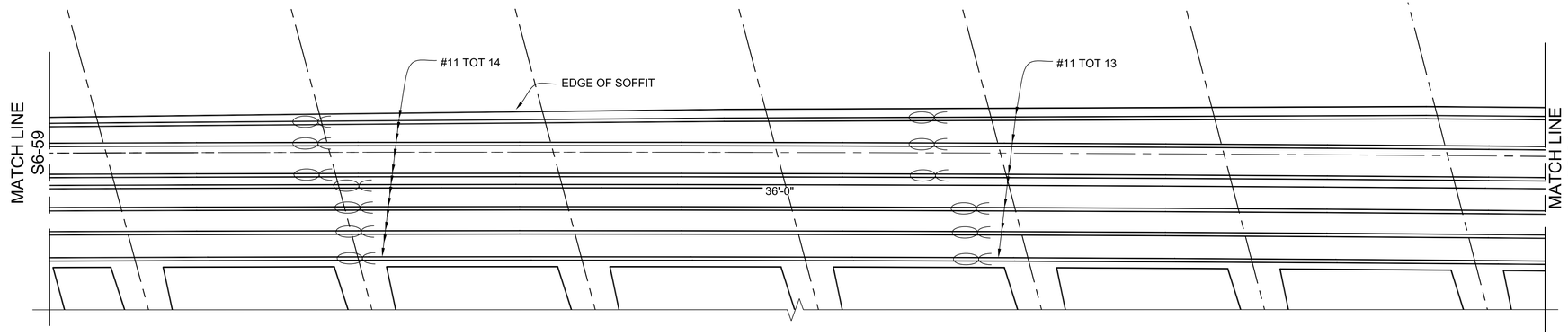

EDGE GIRDER BOTTOM REINFORCEMENT

SCALE: 3/8" =1'-0"

NOTES:

1. FOR NOTES AND LEGEND, SEE DRAWING S6-21.

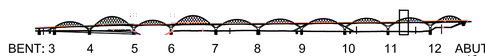

KEY ELEVATION

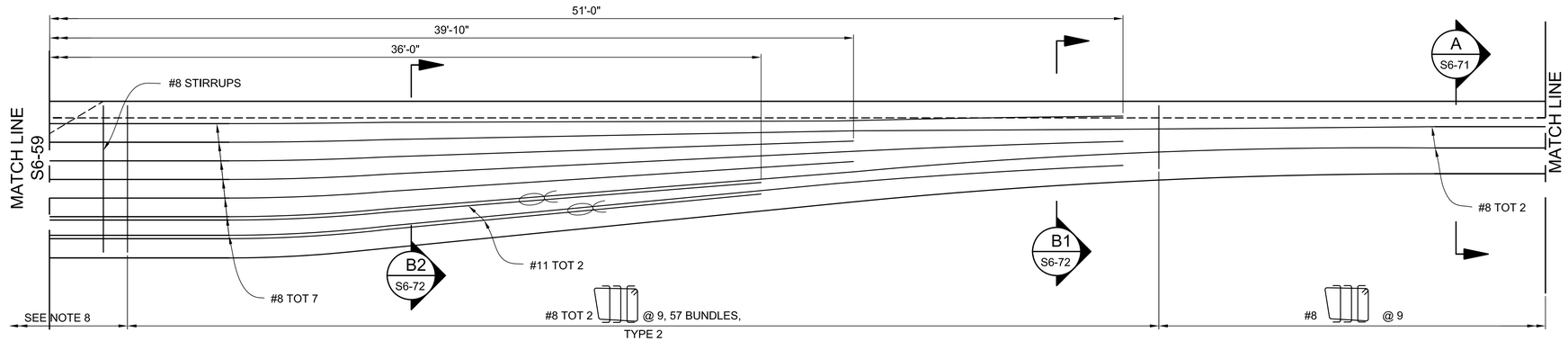

LONGITUDINAL SECTION

SCALE: 3/8" =1'-0"

HNTB
HNTB Corporation
601 W. 5TH STREET SUITE 1000
LOS ANGELES, CALIFORNIA 90071
TEL (213) 403-1000 FAX (213) 403-1001

BUREAU OF ENGINEERING
OFFICIAL RECORD

CITY OF LOS ANGELES DEPARTMENT OF PUBLIC WORKS
BUREAU OF ENGINEERING

ENGINEERING
CITY OF LOS ANGELES

NO.	REVISIONS:	DATE	BY:

STRUCTURE NO. 53C-2329

INDEX NO. P-38113

REGISTERED PROFESSIONAL ENGINEER
MICHAEL H. JONES
No. S3033
EXP. 12-31-16
STATE OF CALIFORNIA

THIS PLAN WAS ELECTRONICALLY SIGNED AND STAMPED.

GARY LEE MOORE, P.E. CITY ENGINEER

	DESIGN GROUP	LIC. NO. S3033	DATE:
ENGINEER:	MICHAEL H. JONES		1/29/2016
DESIGNED BY:	MICHAEL VAN DUYN		1/29/2016
DRAWN BY:	LI ZHANG		1/29/2016
CHECKED BY:	CHARLES REDFIELD		1/29/2016
APPROVED BY:	MICHAEL H. JONES		1/29/2016

VERTICAL CONTROL: BM 12-04070, 1929 (NGVD 29) - 1985 ADJUSTMENT
HORIZONTAL CONTROL: GPS; PID AE 1704, EPOCH 1991.35

SHEET TITLE: EDGE GIRDER REINFORCEMENT DETAILS NO. 40

PROJECT: SIXTH STREET VIADUCT REPLACEMENT

ADDRESS: SIXTH STREET VIADUCT (WHITTIER BLVD) LOS ANGELES, CA

WORK ORDER NO. E700224F

DRAWING NO. S6-60

SHEET 361 OF 560 SHEETS

THE CITY OF LOS ANGELES OR ITS OFFICERS OR AGENTS SHALL NOT BE RESPONSIBLE FOR THE ACCURACY OR COMPLETENESS OF ELECTRONIC COPIES OF THIS PLAN SHEET.

C:\caddlib\pw\pwwestcoast\zhang\dms57683\S6-21-G001-47.dwg 6/28/16 17:32

REVISION DATES (DESIGN STAGE ONLY)

Sheet Version 3.0

ADDENDUM 5

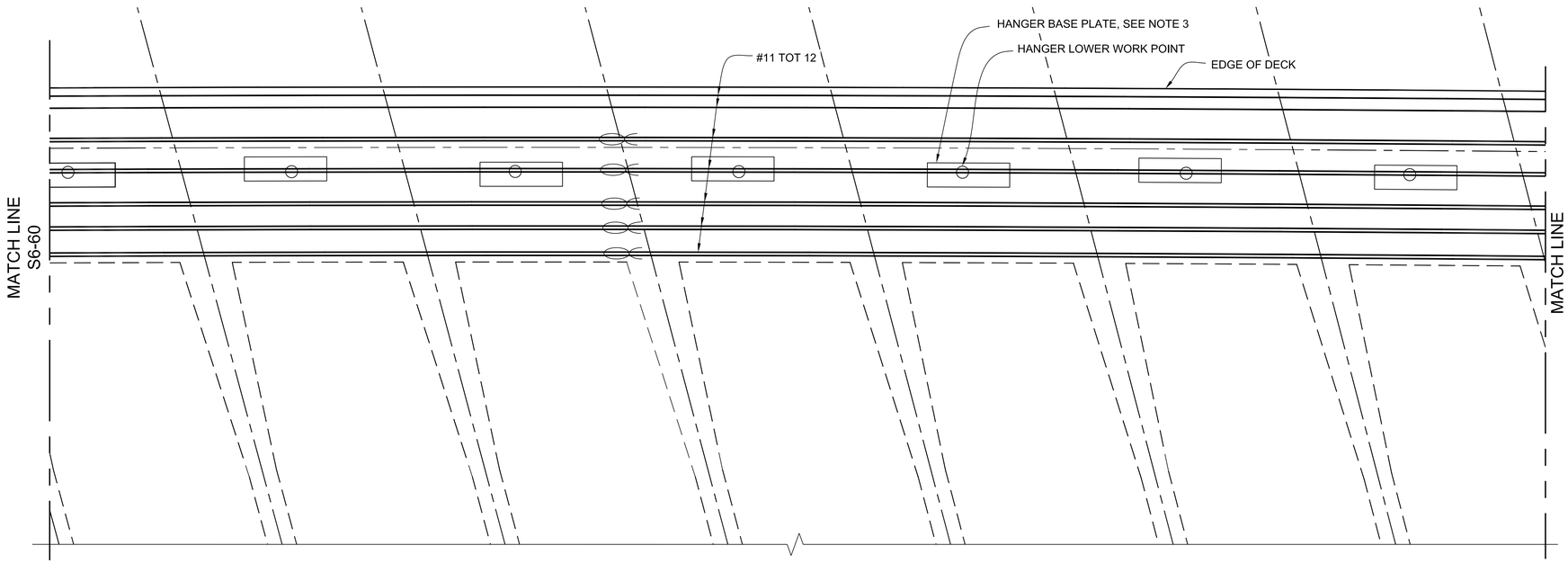

EDGE GIRDER TOP REINFORCEMENT

SCALE: 3/8" =1'-0"

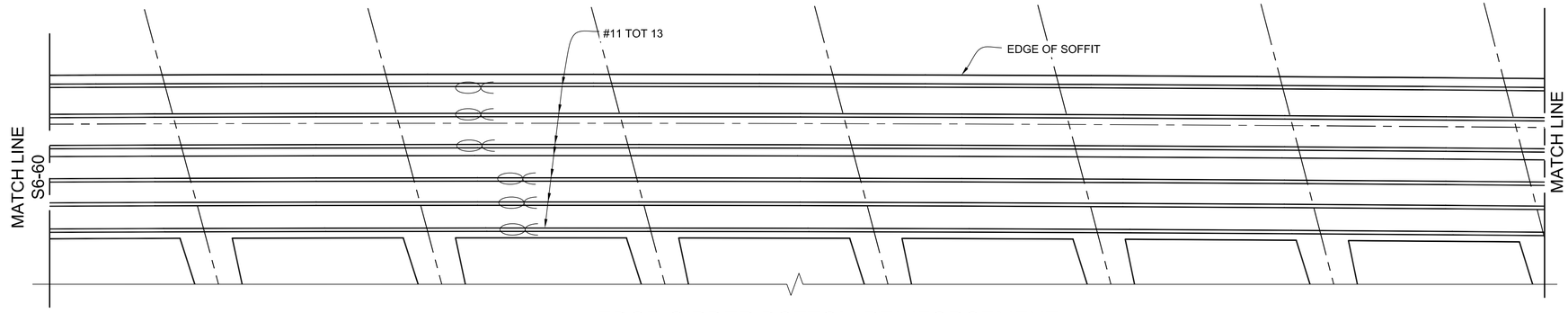

EDGE GIRDER BOTTOM REINFORCEMENT

SCALE: 3/8" =1'-0"

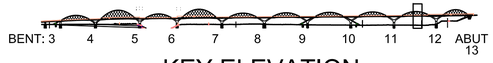

KEY ELEVATION

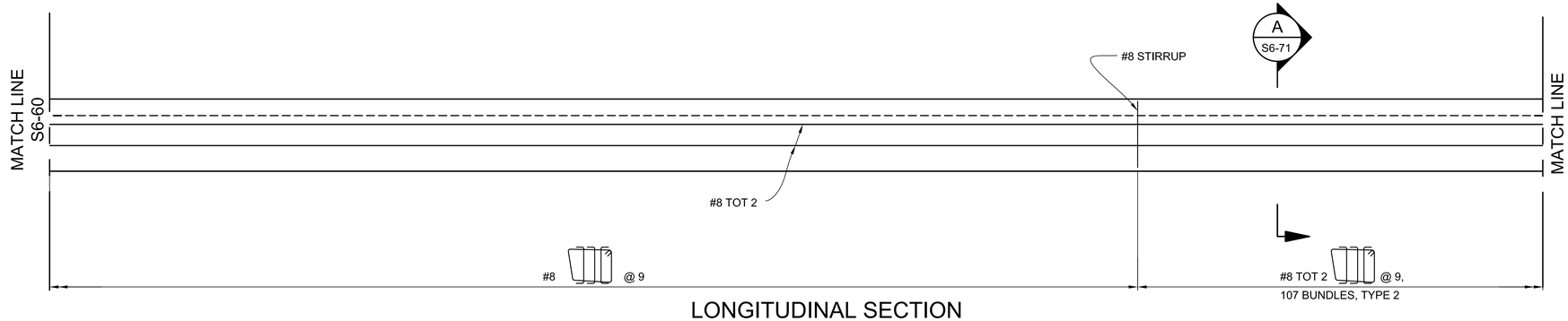

LONGITUDINAL SECTION

SCALE: 3/8" =1'-0"

NOTES:

1. FOR NOTES AND LEGEND, SEE DRAWING S6-21.

THE CITY OF LOS ANGELES OR ITS OFFICERS OR AGENTS SHALL NOT BE RESPONSIBLE FOR THE ACCURACY OR COMPLETENESS OF ELECTRONIC COPIES OF THIS PLAN SHEET.

C:\caddlib\pw\pwwestcoast\zhang\dms57683\S6-21-GD01-47.dwg 6/28/16 17:33

REVISION DATES (DESIGN STAGE ONLY)

Sheet Version 3.0

CITY OF LOS ANGELES DEPARTMENT OF PUBLIC WORKS

BUREAU OF ENGINEERING

ENGINEERING CITY OF LOS ANGELES

NO.	REVISIONS:	DATE	BY:

STRUCTURE NO. 53C-2329

INDEX NO. P-38113

THIS PLAN WAS ELECTRONICALLY SIGNED AND STAMPED.

REGISTERED PROFESSIONAL ENGINEER MICHAEL H. JONES No. S3033 CIVIL STATE OF CALIFORNIA

GARY LEE MOORE, P.E. CITY ENGINEER

			DATE:
ENGINEER:	MICHAEL H. JONES	LIC. NO. S3033	1/29/2016
DESIGNED BY:	MICHAEL VAN DUYN		1/29/2016
DRAWN BY:	LI ZHANG		1/29/2016
CHECKED BY:	CHARLES REDFIELD		1/29/2016
APPROVED BY:	MICHAEL H. JONES		1/29/2016

DESIGN GROUP

VERTICAL CONTROL: BM 12-04070, 1929 (NGVD 29) - 1985 ADJUSTMENT

HORIZONTAL CONTROL: GPS; PID AE 1704, EPOCH 1991.35

SHEET TITLE: EDGE GIRDER REINFORCEMENT DETAILS NO. 41

PROJECT: SIXTH STREET VIADUCT REPLACEMENT

ADDRESS: SIXTH STREET VIADUCT (WHITTIER BLVD) LOS ANGELES, CA

HNTB

HNTB Corporation
601 W. 5TH STREET SUITE 1000
LOS ANGELES, CALIFORNIA 90071
TEL (213) 403-1000 FAX (213) 403-1001

BUREAU OF ENGINEERING OFFICIAL RECORD

WORK ORDER NO. E700224F

DRAWING NO. S6-61

SHEET 362 OF 560 SHEETS

ADDENDUM 5

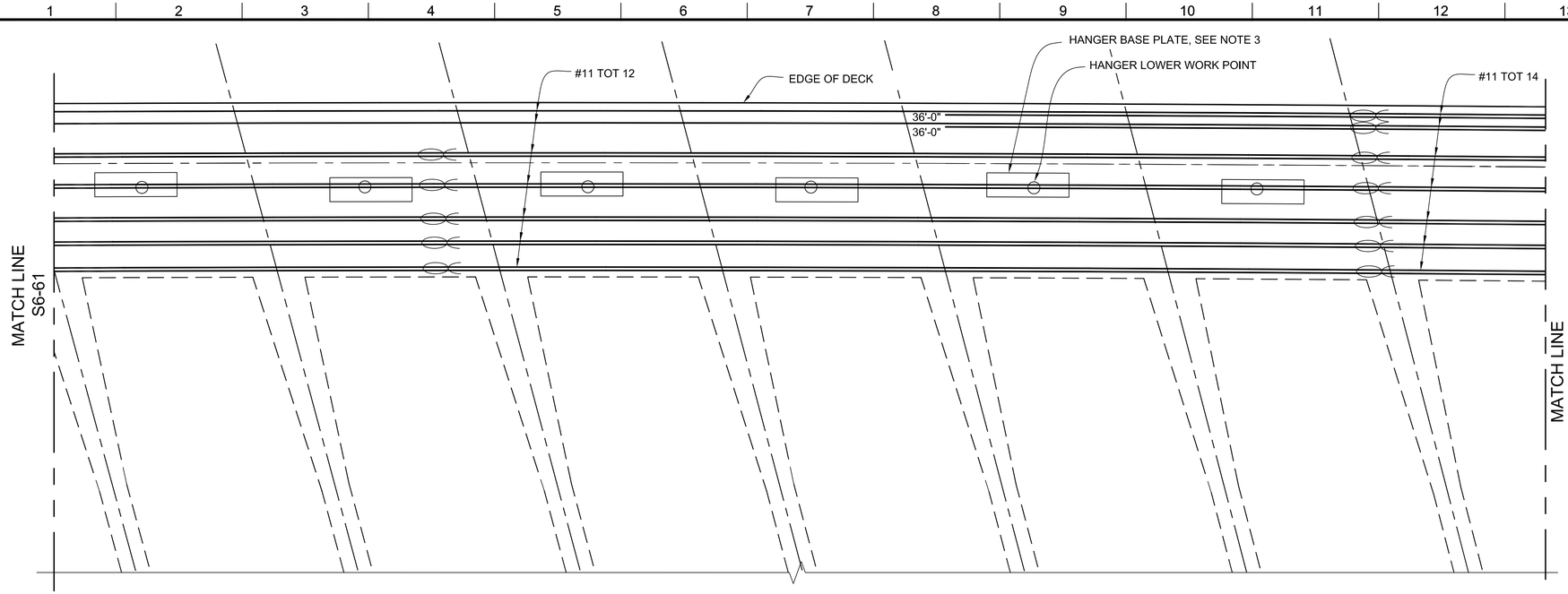

EDGE GIRDER TOP REINFORCEMENT

SCALE: 3/8" =1'-0"

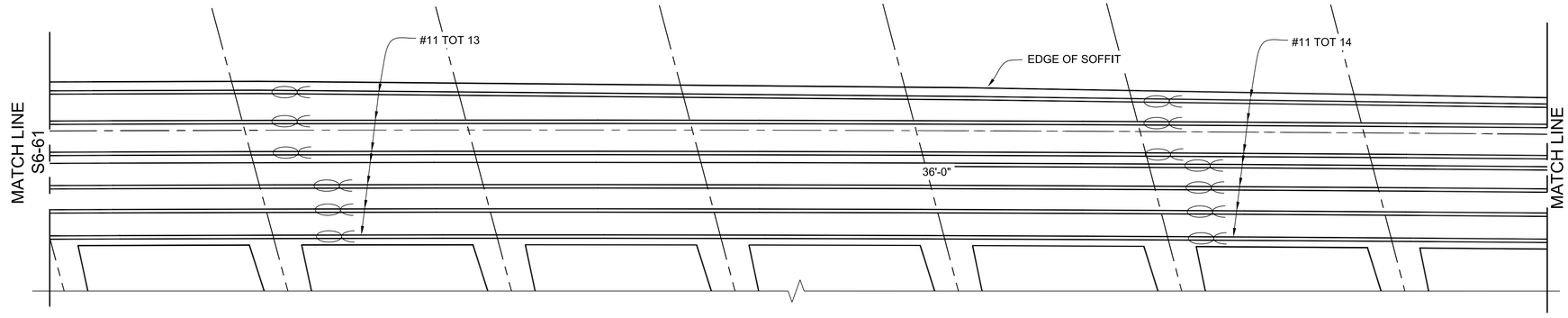

EDGE GIRDER BOTTOM REINFORCEMENT

SCALE: 3/8" =1'-0"

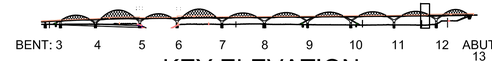

KEY ELEVATION

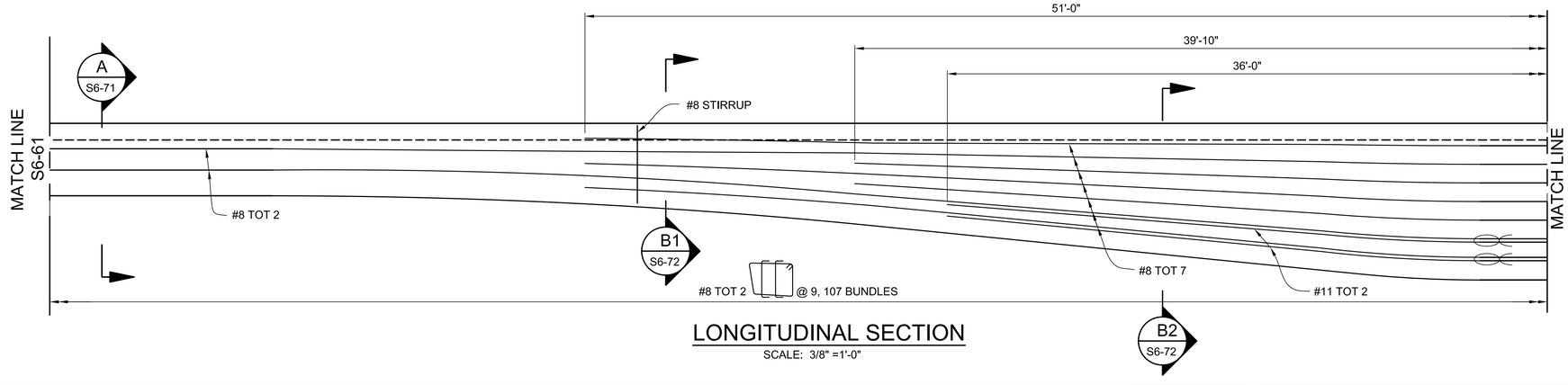

LONGITUDINAL SECTION

SCALE: 3/8" =1'-0"

NOTES:

1. FOR NOTES AND LEGEND, SEE DRAWING S6-21.

THE CITY OF LOS ANGELES OR ITS OFFICERS OR AGENTS SHALL NOT BE RESPONSIBLE FOR THE ACCURACY OR COMPLETENESS OF ELECTRONIC COPIES OF THIS PLAN SHEET.

C:\caddlib\pw\pwwestcoast\zhang\dms57683\S6-21-GD01-47.dwg 6/28/16 17:33

REVISION DATES (DESIGN STAGE ONLY)

Sheet Version 3.0

BUREAU OF ENGINEERING

ENGINEERING
CITY OF LOS ANGELES

NO.	REVISIONS:	DATE	BY:

STRUCTURE NO. 53C-2329

INDEX NO. P-38113

REGISTERED PROFESSIONAL ENGINEER MICHAEL H. JONES No. S3033 CIVIL STATE OF CALIFORNIA

THIS PLAN WAS ELECTRONICALLY SIGNED AND STAMPED.

CITY OF LOS ANGELES DEPARTMENT OF PUBLIC WORKS

GARY LEE MOORE, P.E. CITY ENGINEER

ENGINEER:	MICHAEL H. JONES	LIC. NO. S3033	DATE: 1/29/2016
DESIGNED BY:	MICHAEL VAN DUYN		1/29/2016
DRAWN BY:	LI ZHANG		1/29/2016
CHECKED BY:	CHARLES REDFIELD		1/29/2016
APPROVED BY:	MICHAEL H. JONES		1/29/2016

DESIGN GROUP

VERTICAL CONTROL: BM 12-04070, 1929 (NGVD 29) - 1985 ADJUSTMENT
HORIZONTAL CONTROL: GPS; PID AE 1704, EPOCH 1991.35

SHEET TITLE: EDGE GIRDER REINFORCEMENT DETAILS NO. 42

PROJECT: SIXTH STREET VIADUCT REPLACEMENT

ADDRESS: SIXTH STREET VIADUCT (WHITTIER BLVD) LOS ANGELES, CA

BUREAU OF ENGINEERING OFFICIAL RECORD

HNTB
HNTB Corporation
601 W. 5TH STREET SUITE 1000
LOS ANGELES, CALIFORNIA 90071
TEL (213) 403-1000 FAX (213) 403-1001

WORK ORDER NO. E700224F

DRAWING NO. S6-62

SHEET 363 OF 560 SHEETS

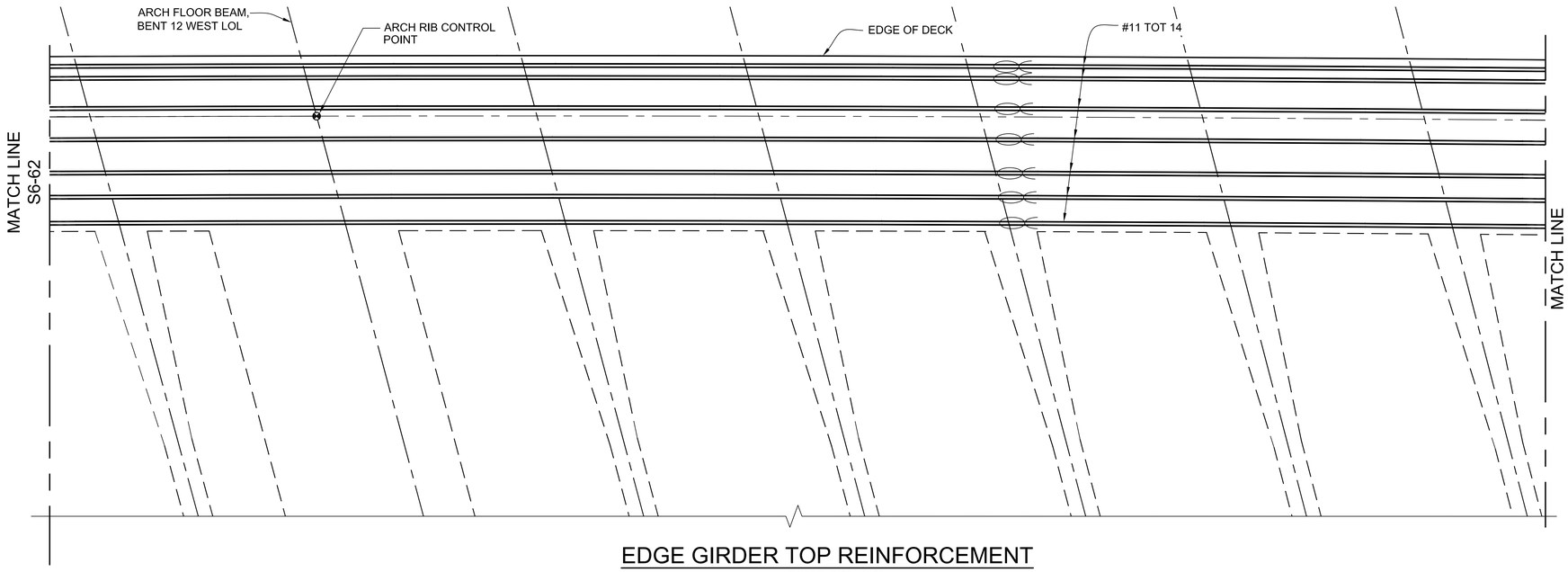

EDGE GIRDER TOP REINFORCEMENT

SCALE: 3/8" =1'-0"

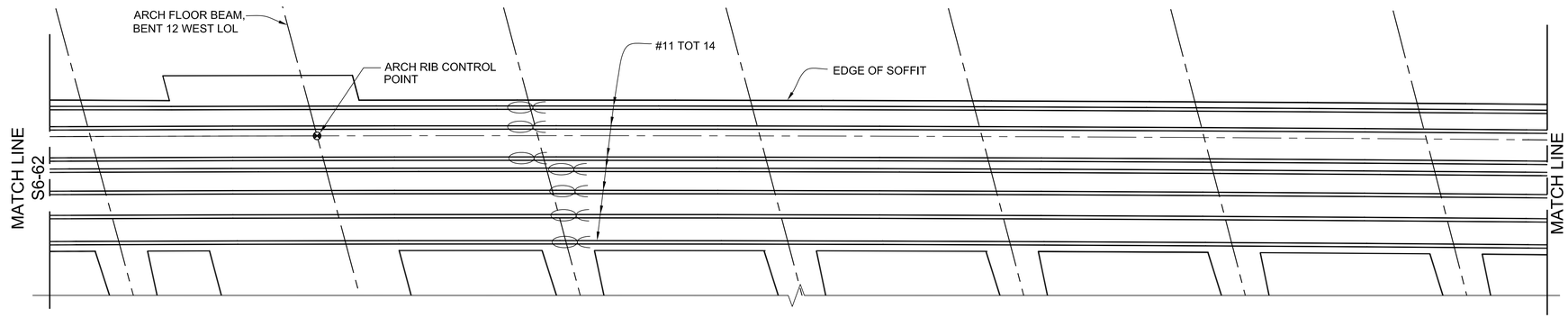

EDGE GIRDER BOTTOM REINFORCEMENT

SCALE: 3/8" =1'-0"

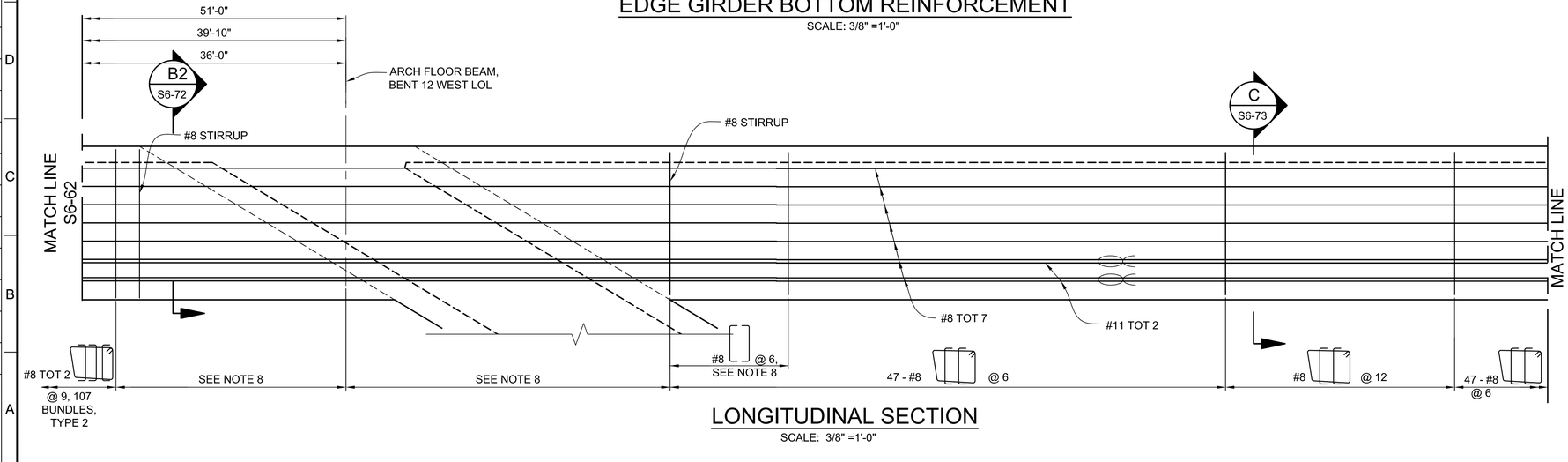

LONGITUDINAL SECTION

SCALE: 3/8" =1'-0"

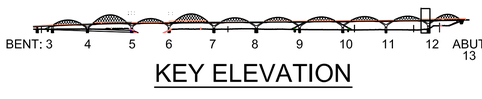

KEY ELEVATION

NOTES:

1. FOR NOTES AND LEGEND, SEE DRAWING S6-21.

THE CITY OF LOS ANGELES OR ITS OFFICERS OR AGENTS SHALL NOT BE RESPONSIBLE FOR THE ACCURACY OR COMPLETENESS OF ELECTRONIC COPIES OF THIS PLAN SHEET.

C:\caddlib\pw\pwwestcoast\lzhang\dms57683\S6-21-GD01-47.dwg 6/28/16 17:33

REVISION DATES (DESIGN STAGE ONLY)

Sheet Version 3.0

BUREAU OF ENGINEERING

ENGINEERING CITY OF LOS ANGELES

NO.	REVISIONS:	DATE	BY:

STRUCTURE NO. 53C-2329

INDEX NO. P-38113

THIS PLAN WAS ELECTRONICALLY SIGNED AND STAMPED

REGISTERED PROFESSIONAL ENGINEER MICHAEL H. JONES No. S3033 CIVIL STATE OF CALIFORNIA

CITY OF LOS ANGELES DEPARTMENT OF PUBLIC WORKS

GARY LEE MOORE, P.E. CITY ENGINEER

		DATE:
ENGINEER:	MICHAEL H. JONES	1/29/2016
DESIGNED BY:	MICHAEL VAN DUYN	1/29/2016
DRAWN BY:	LI ZHANG	1/29/2016
CHECKED BY:	CHARLES REDFIELD	1/29/2016
APPROVED BY:	MICHAEL H. JONES	1/29/2016

LIC. NO. S3033 DESIGN GROUP

VERTICAL CONTROL: BM 12-04070, 1929 (NGVD 29) - 1985 ADJUSTMENT

HORIZONTAL CONTROL: GPS; PID AE 1704, EPOCH 1991.35

SHEET TITLE: EDGE GIRDER REINFORCEMENT DETAILS NO. 43

PROJECT: SIXTH STREET VIADUCT REPLACEMENT

ADDRESS: SIXTH STREET VIADUCT (WHITTIER BLVD) LOS ANGELES, CA

BUREAU OF ENGINEERING OFFICIAL RECORD

HNTB

HNTB Corporation
601 W. 5TH STREET SUITE 1000
LOS ANGELES, CALIFORNIA 90071
TEL (213) 403-1000 FAX (213) 403-1001

WORK ORDER NO. E700224F

DRAWING NO. S6-63

SHEET 364 OF 560 SHEETS

ADDENDUM 5

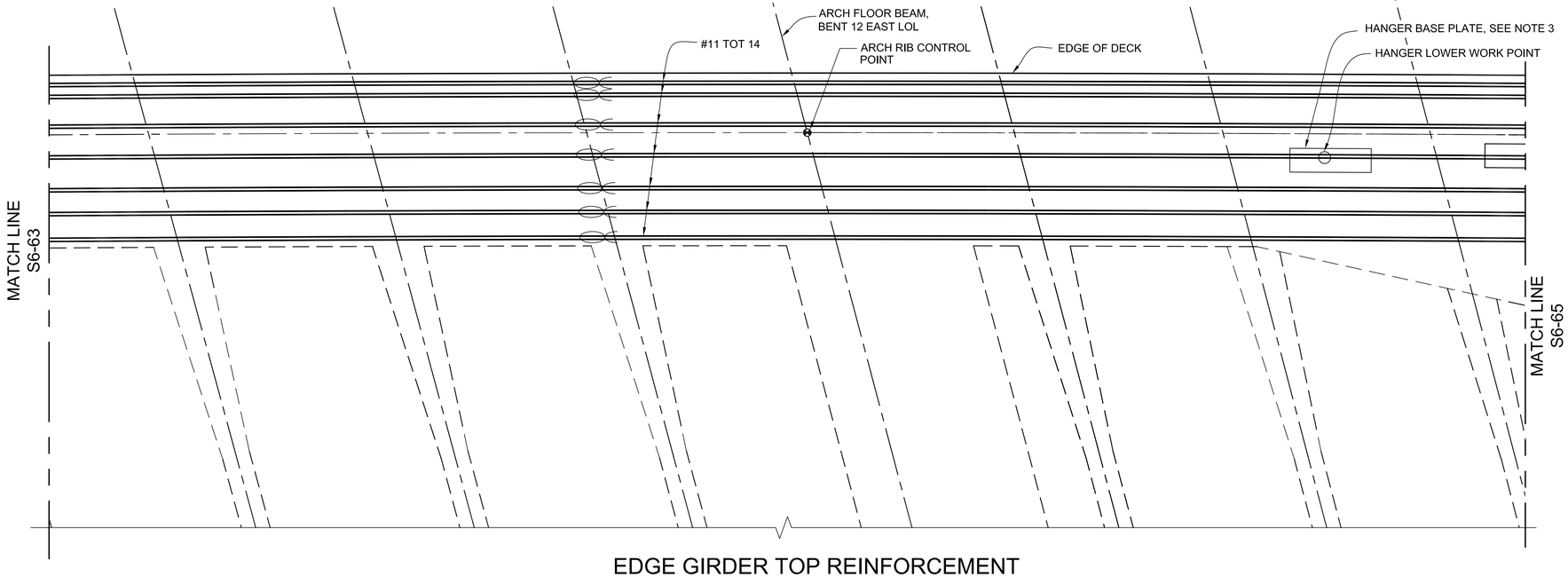

EDGE GIRDER TOP REINFORCEMENT

SCALE: 3/8" =1'-0"

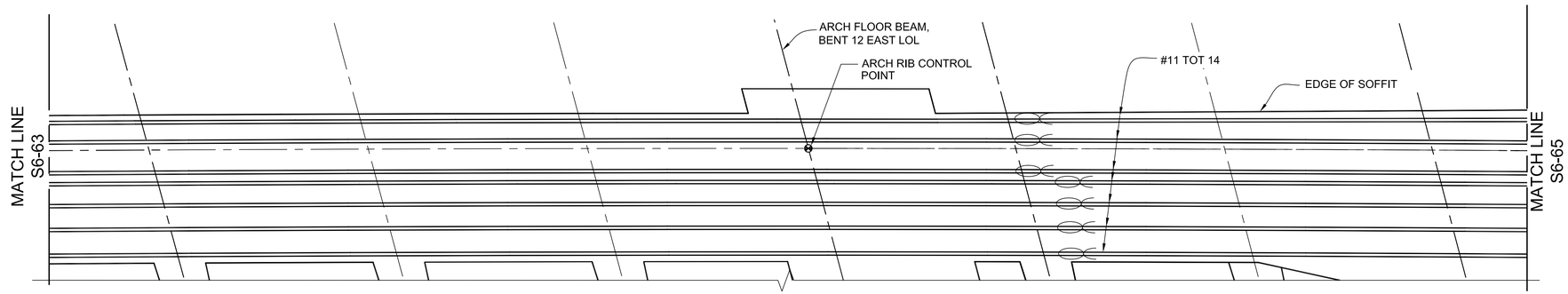

EDGE GIRDER BOTTOM REINFORCEMENT

SCALE: 3/8" =1'-0"

NOTES:

1. FOR NOTES AND LEGEND, SEE DRAWING S6-21.



KEY ELEVATION

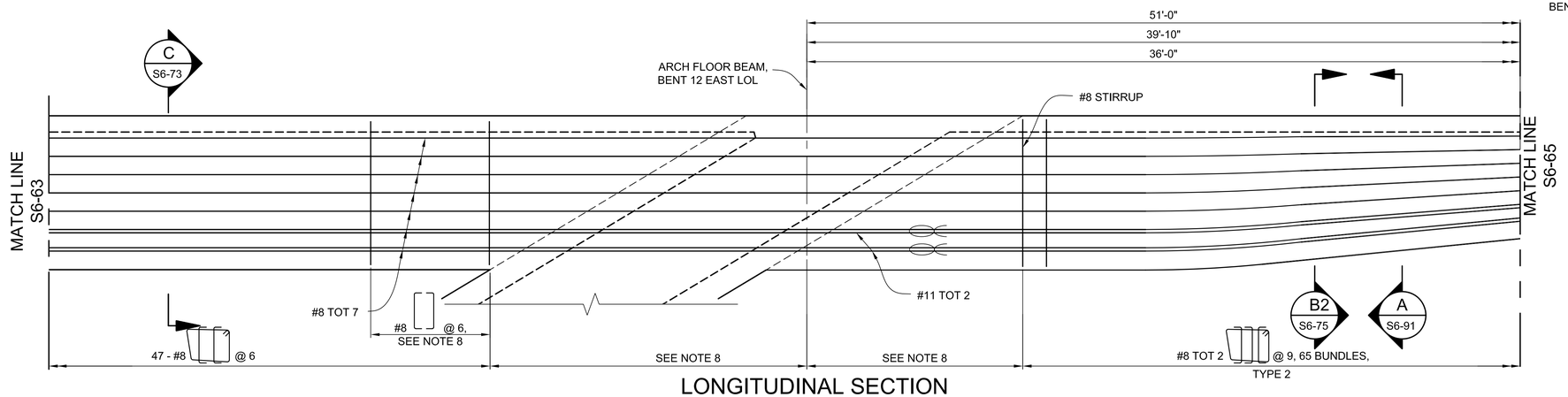

LONGITUDINAL SECTION

SCALE: 3/8" =1'-0"

THE CITY OF LOS ANGELES OR ITS OFFICERS OR AGENTS SHALL NOT BE RESPONSIBLE FOR THE ACCURACY OR COMPLETENESS OF ELECTRONIC COPIES OF THIS PLAN SHEET.

C:\caddlib\pw\pwwestcoast\zhang\dms576831\S6-21-G001-47.dwg 6/28/16 17:33

REVISION DATES (DESIGN STAGE ONLY)

Sheet Version 3.0

BUREAU OF ENGINEERING

ENGINEERING
CITY OF LOS ANGELES

NO.	REVISIONS:	DATE	BY:

STRUCTURE NO. 53C-2329

INDEX NO. P-38113

REGISTERED PROFESSIONAL ENGINEER
MICHAEL H. JONES
No. S3033
CIVIL
STATE OF CALIFORNIA

THIS PLAN WAS ELECTRONICALLY SIGNED AND STAMPED.

BUREAU OF PUBLIC WORKS

GARY LEE MOORE, P.E.
CITY ENGINEER

		DATE:
ENGINEER:	DESIGN GROUP	
DESIGNED BY:	MICHAEL H. JONES	1/29/2016
DRAWN BY:	MICHAEL VAN DUYN	1/29/2016
CHECKED BY:	LI ZHANG	1/29/2016
APPROVED BY:	CHARLES REDFIELD	1/29/2016
	MICHAEL H. JONES	1/29/2016

LIC. NO. S3033

CITY OF LOS ANGELES DEPARTMENT OF PUBLIC WORKS

VERTICAL CONTROL: BM 12-04070,1929 (NGVD 29) - 1985 ADJUSTMENT
HORIZONTAL CONTROL: GPS; PID AE 1704, EPOCH 1991.35

SHEET TITLE: EDGE GIRDER REINFORCEMENT DETAILS NO. 44

PROJECT: SIXTH STREET VIADUCT REPLACEMENT

ADDRESS: SIXTH STREET VIADUCT (WHITTIER BLVD) LOS ANGELES, CA

HNTB
HNTB Corporation
601 W. 5TH STREET SUITE 1000
LOS ANGELES, CALIFORNIA 90071
TEL (213) 403-1000 FAX (213) 403-1001

BUREAU OF ENGINEERING
OFFICIAL RECORD

WORK ORDER NO. E700224F

DRAWING NO. S6-64

SHEET 365 OF 560 SHEETS

ADDENDUM 5

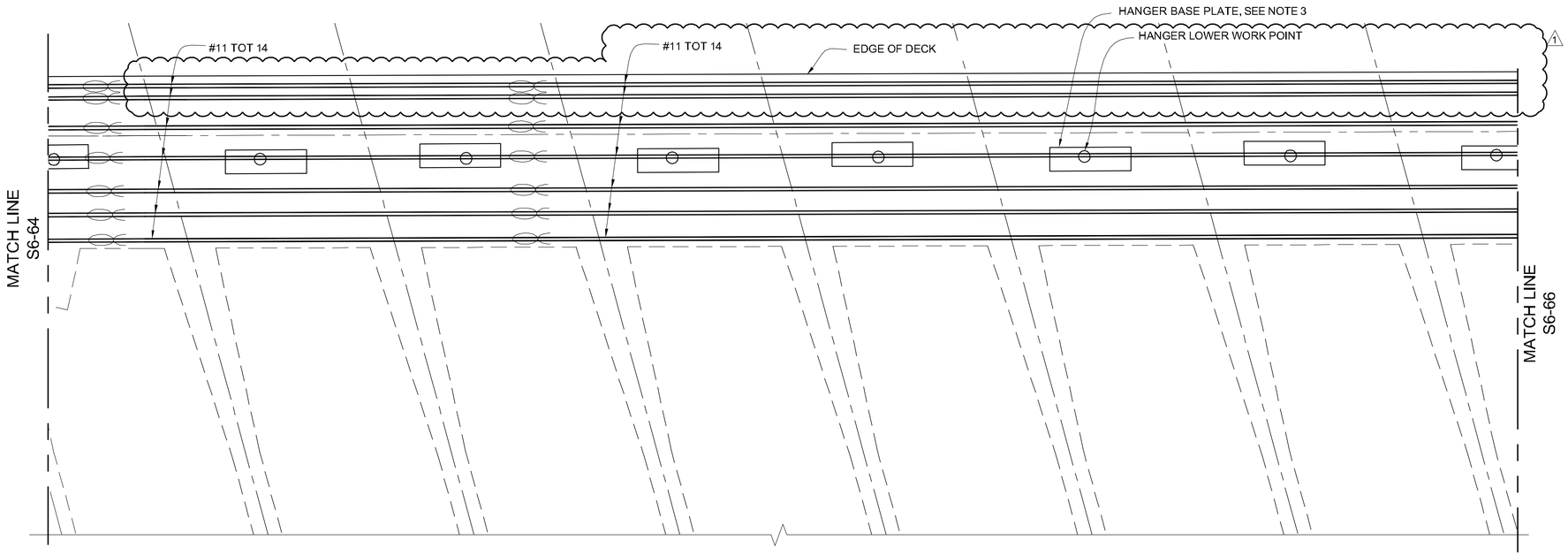

EDGE GIRDER TOP REINFORCEMENT

SCALE: 3/8" =1'-0"

NOTES:

1. FOR NOTES AND LEGEND, SEE DRAWING S6-21.

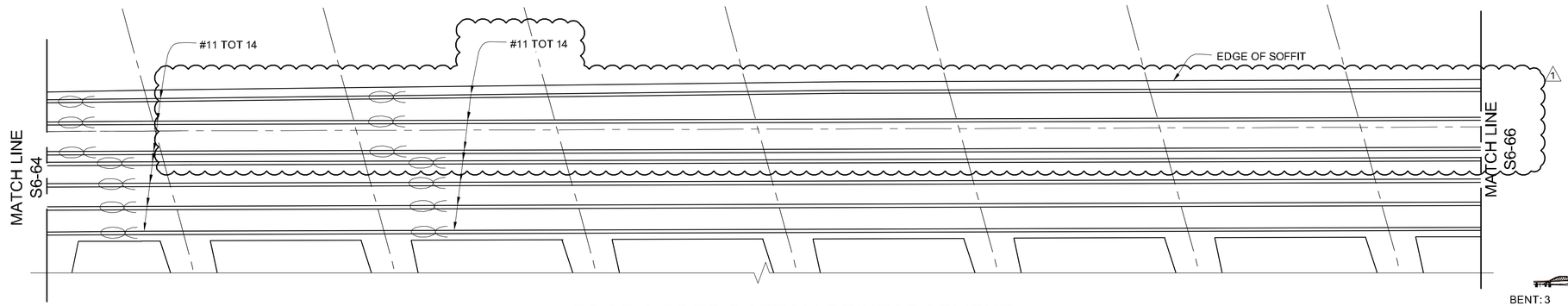

EDGE GIRDER BOTTOM REINFORCEMENT

SCALE: 3/8" =1'-0"



KEY ELEVATION

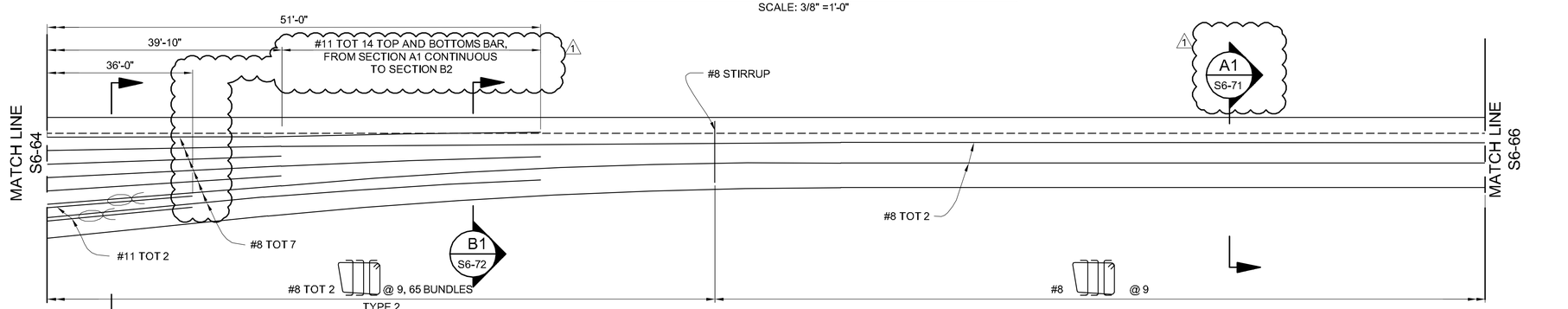

LONGITUDINAL SECTION

SCALE: 3/8" =1'-0"

T.O. 5 - Change Order Serial Sketch No. 45 - Page 1 of 5

HNTB
HNTB Corporation
601 W. 5TH STREET SUITE 1000
LOS ANGELES, CALIFORNIA 90071
TEL (213) 403-1000 FAX (213) 403-1001

WORK ORDER NO.
E700224F

DRAWING NO.
S6-65

SHEET 20 OF 560 SHEETS

CITY OF LOS ANGELES
DEPARTMENT OF PUBLIC WORKS
BUREAU OF ENGINEERING

ENGINEERING
CITY OF LOS ANGELES

NO.	REVISIONS:	DATE:	BY:
1	FRAME 6 F/V SUBMITTAL	11/7/17	MHJ

STRUCTURE NO.
53C-2329

INDEX NO.

REGISTERED PROFESSIONAL ENGINEER
MICHAEL H. JONES
No. S3033
EXP. 06-30-16
CIVIL
STATE OF CALIFORNIA

THIS PLAN WAS ELECTRONICALLY SIGNED AND STAMPED.

GARY LEE MOORE, P.E. CITY ENGINEER

		DESIGN GROUP	LIC. NO.	DATE:
ENGINEER:	MICHAEL H. JONES		S3033	1/29/2016
DESIGNED BY:	MICHAEL VAN DUYN			1/29/2016
DRAWN BY:	LI ZHANG			1/29/2016
CHECKED BY:	CHARLES REDFIELD			1/29/2016
APPROVED BY:	MICHAEL H. JONES			1/29/2016

VERTICAL CONTROL: BM 12-04070 1929 (NGVD 29) - 1985 ADJUSTMENT
HORIZONTAL CONTROL: GPS; PID AE 1704, EPOCH 1991.35

SHEET TITLE: EDGE GIRDER REINFORCEMENT DETAILS NO. 45

PROJECT: SIXTH STREET VIADUCT REPLACEMENT

ADDRESS: SIXTH STREET VIADUCT (WHITTIER BLVD) LOS ANGELES, CA

REVISION DATES (DESIGN STAGE ONLY)

THE CITY OF LOS ANGELES OR ITS OFFICERS OR AGENTS SHALL NOT BE RESPONSIBLE FOR THE ACCURACY OR COMPLETENESS OF ELECTRONIC COPIES OF THIS PLAN SHEET.

C:\coddlib\pw\pwwestcoast\zhang\dms57683\S6-21-0001-47.dwg 11/10/17 15:11

Sheet Version 3.0

ADDENDUM 5

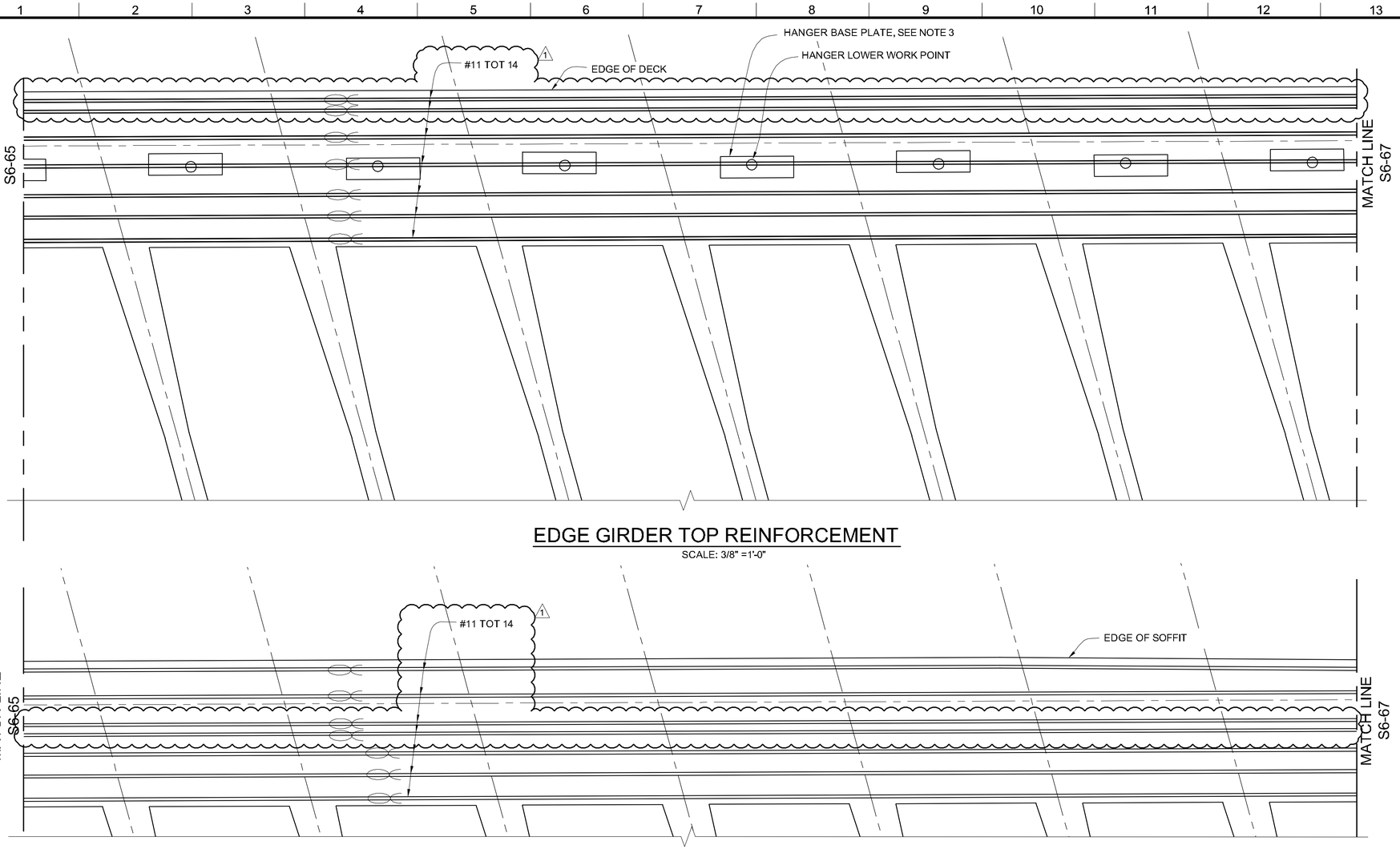

EDGE GIRDER TOP REINFORCEMENT

SCALE: 3/8" =1'-0"

EDGE GIRDER BOTTOM REINFORCEMENT

SCALE: 3/8" =1'-0"

NOTES:

1. FOR NOTES AND LEGEND, SEE DRAWING S6-21.

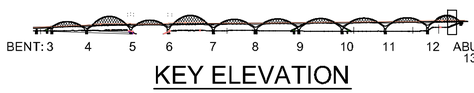

KEY ELEVATION

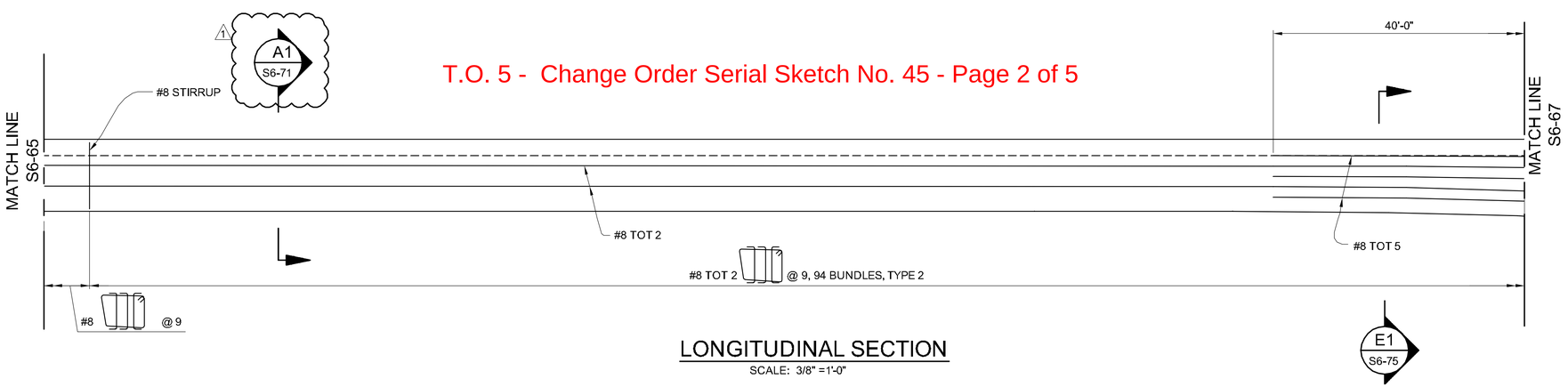

LONGITUDINAL SECTION

SCALE: 3/8" =1'-0"

T.O. 5 - Change Order Serial Sketch No. 45 - Page 2 of 5

HNTB
HNTB Corporation
801 W. 5TH STREET SUITE 1000
LOS ANGELES, CALIFORNIA 90071
TEL (213) 403-1000 FAX (213) 403-1001

CITY OF LOS ANGELES DEPARTMENT OF PUBLIC WORKS BUREAU OF ENGINEERING

ENGINEERING — CITY OF LOS ANGELES

NO.	REVISIONS:	DATE:	BY:
1	FRAME 6 F/V SUBMITTAL	11/7/17	MHJ

STRUCTURE NO. 53C-2329

INDEX NO.

THIS PLAN WAS ELECTRONICALLY SIGNED AND STAMPED.

REGISTERED PROFESSIONAL ENGINEER — MICHAEL H. JONES — No. S3033 — CIVIL — STATE OF CALIFORNIA

CITY ENGINEER	DATE:
GARY LEE MOORE, P.E.	1/29/2016
DESIGN GROUP	1/29/2016
ENGINEER: MICHAEL H. JONES — LIC. NO. S3033	1/29/2016
DESIGNED BY: MICHAEL VAN DUYN	1/29/2016
DRAWN BY: LI ZHANG	1/29/2016
CHECKED BY: CHARLES REDFIELD	1/29/2016
APPROVED BY: MICHAEL H. JONES	1/29/2016

VERTICAL CONTROL: BM 12-04070,1929 (NGVD 29) - 1985 ADJUSTMENT
HORIZONTAL CONTROL: GPS; PID AE 1704, EPOCH 1991.35

SHEET TITLE: EDGE GIRDER REINFORCEMENT DETAILS NO. 46

PROJECT: SIXTH STREET VIADUCT REPLACEMENT

ADDRESS: SIXTH STREET VIADUCT (WHITTIER BLVD) LOS ANGELES, CA

WORK ORDER NO. E700224F

DRAWING NO. S6-66

SHEET 20 OF 560 SHEETS

THE CITY OF LOS ANGELES OR ITS OFFICERS OR AGENTS SHALL NOT BE RESPONSIBLE FOR THE ACCURACY OR COMPLETENESS OF ELECTRONIC COPIES OF THIS PLAN SHEET.

REVISION DATES (DESIGN STAGE ONLY)

C:\coddfib\pw\pwwestcoast\zhang\dms576831\S6-21-0001-47.dwg 11/07/17 14:50

Sheet Version 3.0

ADDENDUM 5

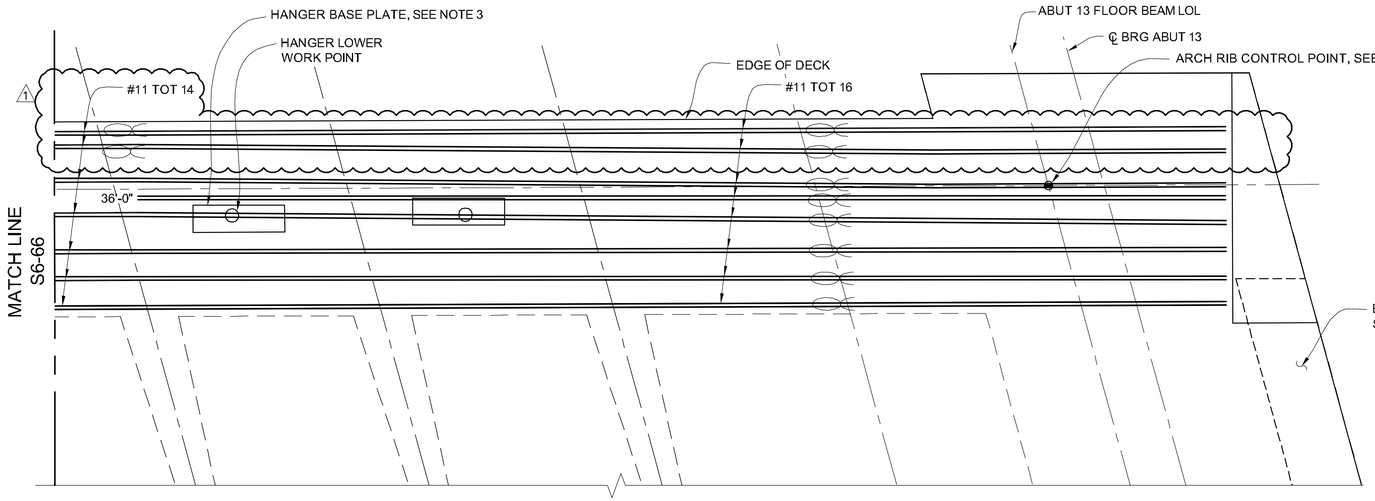

EDGE GIRDER TOP REINFORCEMENT

SCALE: 3/8" =1'-0"

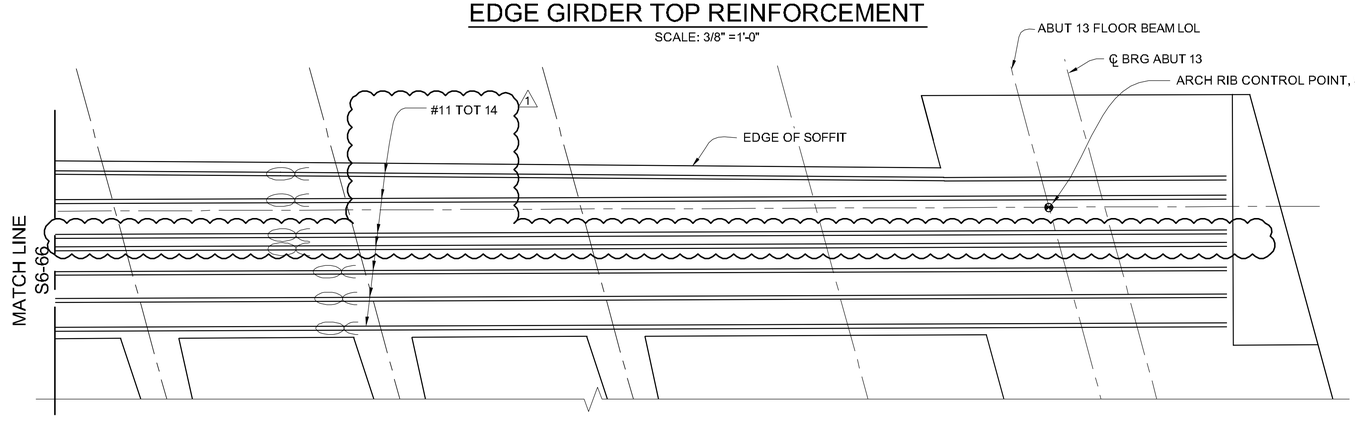

EDGE GIRDER BOTTOM REINFORCEMENT

SCALE: 3/8" =1'-0"

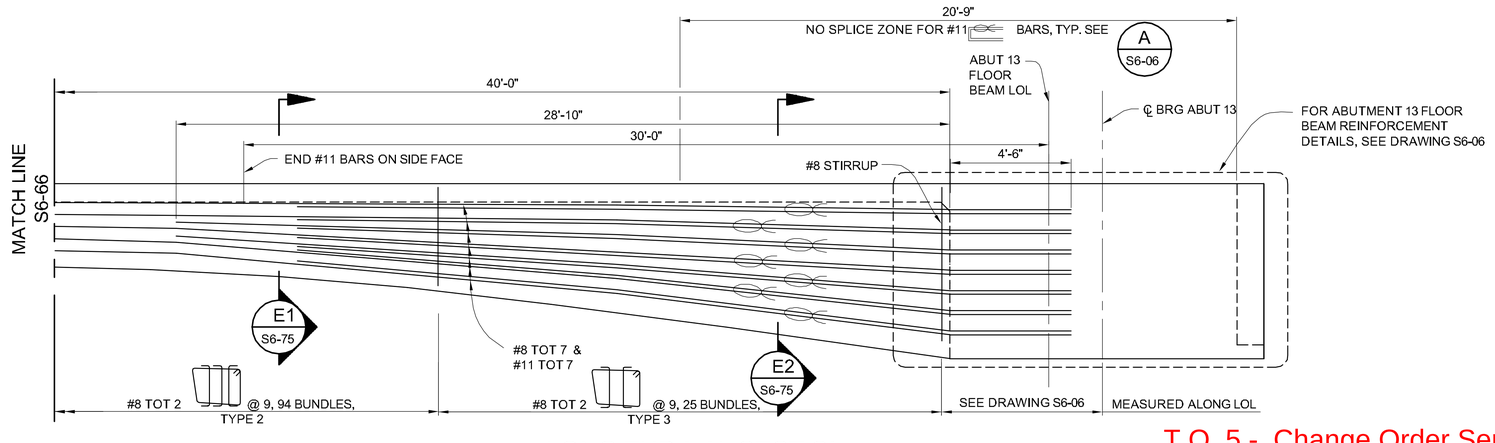

LONGITUDINAL SECTION

SCALE: 3/8" =1'-0"

NOTES:

1. FOR NOTES AND LEGEND, SEE DRAWING S6-21.

1. The rectangular shaped box with a circle does represent hanger brackets. Drawing S6-87 represents the typical transition of the widened edge girder at construction joints at Bents 6, 8 and 10 in arch spans to the typical edge girder width of 7'-3". See Note 3 on Drawing S6-87. All hanger work point locations are provided in Drawings S5-49 through S5-74. Provided dimensions and stations should always be used and drawings should never be scaled. The PT profile is provided in the Prestress Elevation. This elevation is applicable at all frame construction joints. See Note 6 on Drawing S6-87 for further information.

2. At the "Inside Eccentricity" and "Outside Eccentricity", all details below the baseplate are identical. Therefore, details below the baseplate at the Outside Eccentricity have not been repeated. Standard bridge detailing practice dictates that dimensions and details are only shown once to avoid confusion. This practice differs from shop drawings where details are repeated often to assist with fabrication. Details should not be scaled. Typical locations of PT ducts are provided on Drawing S6-72.

3. At the first, second, and third lower hanger bracket, note 13 on Drawing S5-72 provides requirements when preparing shop drawings for hanger brackets at these locations.

4. Deck drain required locations at Arch Spans are depicted on Drawing S8-30. These locations should be used in conjunction with Drawing S8-32 to further establish the location of the deck inlets. Any location between the arch rib floor beam and the first typical floor beam that complies with the framing requirements of Drawing S8-32 is acceptable.

5. During previous discussions with SSW, it was determined that deck drainage piping should remain outside of the edge girder to avoid conflict with edge girder reinforcement. This slight adjustment will be recorded on the as-built drawings.

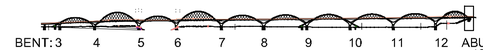

KEY ELEVATION

T.O. 5 - Change Order Serial Sketch No. 45 - Page 3 of 5

THE CITY OF LOS ANGELES OR ITS OFFICERS OR AGENTS SHALL NOT BE RESPONSIBLE FOR THE ACCURACY OR COMPLETENESS OF ELECTRONIC COPIES OF THIS PLAN SHEET.

C:\caddlib\pw\pwwestcoast\zhang\dms57683\S6-21-G001-47.dwg 11/10/17 15:36

REVISION DATES (DESIGN STAGE ONLY)

Sheet Version 3.0

BUREAU OF ENGINEERING

ENGINEERING — CITY OF LOS ANGELES

NO.	REVISIONS:	DATE	BY:
1	FRAME 6 F/V SUBMITTAL	11/7/17	MHJ

STRUCTURE NO. 53C-2329

INDEX NO.

THIS PLAN WAS ELECTRONICALLY SIGNED AND STAMPED.

REGISTERED PROFESSIONAL ENGINEER — RICHARD H. JONES — No. S3033 — CIVIL — STATE OF CALIFORNIA

BUREAU OF PUBLIC WORKS

GARY LEE MOORE, P.E. — CITY ENGINEER — DATE: 1/29/2016

DESIGN GROUP	LIC. NO. S3033		
ENGINEER:	MICHAEL H. JONES		
DESIGNED BY:	MICHAEL VAN DUYN		
DRAWN BY:	LI ZHANG		
CHECKED BY:	CHARLES REDFIELD		
APPROVED BY:	MICHAEL H. JONES		

CITY OF LOS ANGELES — DEPARTMENT OF PUBLIC WORKS

VERTICAL CONTROL: BM 12-04070, 1929 (NGVD 29) - 1985 ADJUSTMENT
HORIZONTAL CONTROL: GPS; PID AE 1704, EPOCH 1991.35

SHEET TITLE: EDGE GIRDER REINFORCEMENT DETAILS NO. 47

PROJECT: SIXTH STREET VIADUCT REPLACEMENT

ADDRESS: SIXTH STREET VIADUCT (WHITTIER BLVD) LOS ANGELES, CA

HNTB
HNTB Corporation
601 W. 5TH STREET SUITE 1000
LOS ANGELES, CALIFORNIA 90071
TEL (213) 403-1000 FAX (213) 403-1001

WORK ORDER NO. E700224F

DRAWING NO. S6-67

SHEET 20 OF 560 SHEETS

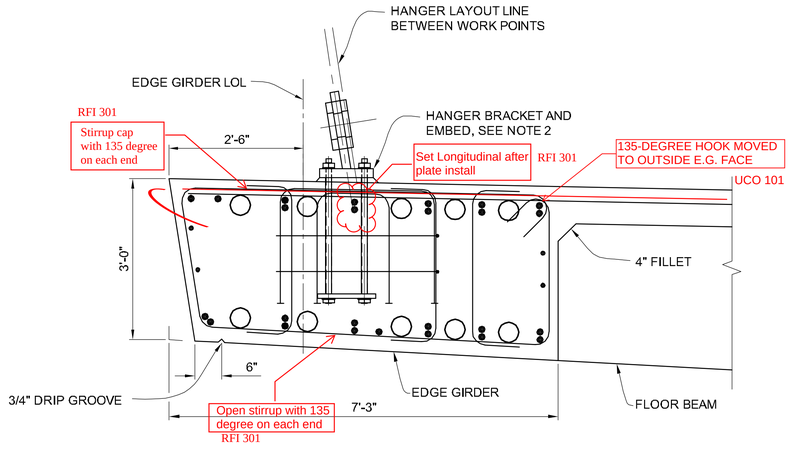

GEOMETRY

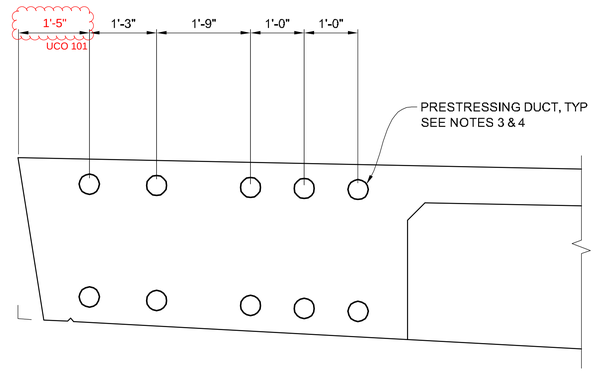

PRESTRESSING DUCT LAYOUT

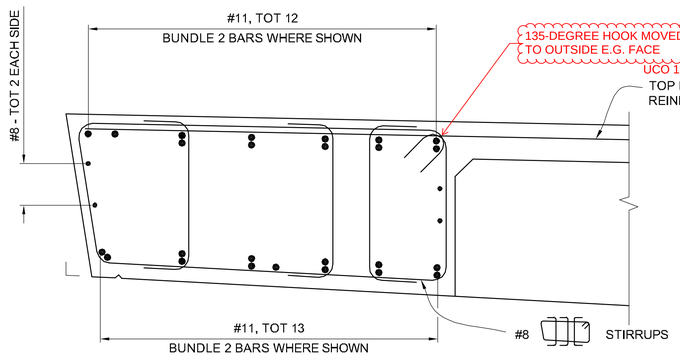

REINFORCEMENT

1

NOTES:

1. FOR DECK REINFORCEMENT AND TYPICAL EDGE GIRDER GEOMETRY, SEE DRAWING NO. S4-05.
2. FOR HANGER BRACKET AND EMBED DETAILS, SEE DRAWING NO. S5-71.
3. SEE DRAWING S6-80 FOR TENDON LAYOUT NOMENCLATURE.
4. TENDONS "U5" & "L5" TERMINATE NEAR BENT 12 EAST.
5. BUNDLE OUTER TIE ONLY WHERE OCCURS EXCEPT AS NOTED. SEE TIE DETAIL ON DRAWING NO. S6-76.

LEGEND:

- ○ DENOTES ADDITIONAL REINFORCEMENT
- ● DENOTES CONTINUOUS REINFORCEMENT

SECTION

SCALE: 3/4"=1'-0"

A
S6-22 TO S6-66

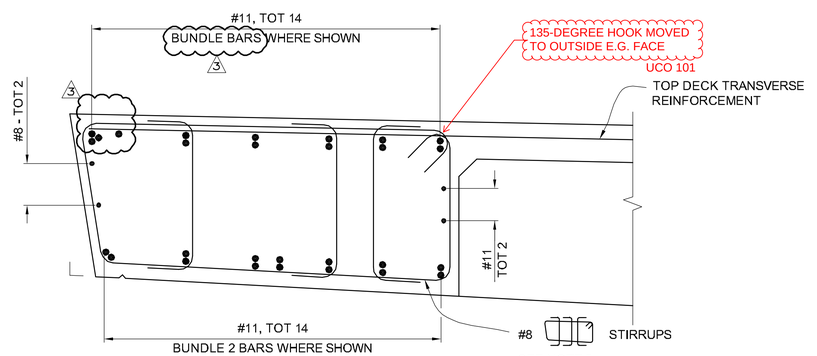

REINFORCEMENT

2

SECTION

SCALE: 3/4"=1'-0"

A1
S6-65
S6-66

THE CITY OF LOS ANGELES OR ITS OFFICERS OR AGENTS SHALL NOT BE RESPONSIBLE FOR THE ACCURACY OR COMPLETENESS OF ELECTRONIC COPIES OF THIS PLAN SHEET.

C:\caddlib\pw\pwwestcoast1\zhang\dms576831\S6-81-0001-03.dwg 1/24/18 18:56

REVISION DATES (DESIGN STAGE ONLY)

Sheet Version 3.0

HNTB
HNTB Corporation
601 W. 5TH STREET SUITE 1000
LOS ANGELES, CALIFORNIA 90071
TEL (213) 403-1000 FAX (213) 403-1001

CITY OF LOS ANGELES DEPARTMENT OF PUBLIC WORKS

BUREAU OF ENGINEERING

ENGINEERING
CITY OF LOS ANGELES

NO.	REVISIONS:	DATE:	BY:
1	FLOOR BEAM SPACING MODIFICATION PCO 13R1	12/13/16	MHJ
2	FRAME 6 FYI SUBMITTAL ECO 45	11/7/17	MHJ
3	BIM REVISION 3 ECO 58	1/26/18	MHJ

STRUCTURE NO.
53C-2329

INDEX NO.

THIS PLAN WAS ELECTRONICALLY SIGNED AND STAMPED.

REGISTERED PROFESSIONAL ENGINEER MICHAEL H. JONES No. S3033 CIVIL STATE OF CALIFORNIA

GARY LEE MOORE, P.E. CITY ENGINEER

	DESIGN GROUP	LIC.NO.	DATE:
ENGINEER:	MICHAEL H. JONES	S3033	1/29/2016
DESIGNED BY:	MICHAEL VAN DLYN		1/29/2016
DRAWN BY:	LI ZHANG		1/29/2016
CHECKED BY:	CHARLES REDFIELD		1/29/2016
APPROVED BY:	MICHAEL H. JONES		1/29/2016

VERTICAL CONTROL: BM 12-04070 1929 (NGVD 29) - 1985 ADJUSTMENT
HORIZONTAL CONTROL: GPS; PID AE 1704, EPOCH 1991.35

SHEET TITLE: EDGE GIRDER DETAILS NO. 1

PROJECT: SIXTH STREET VIADUCT REPLACEMENT

ADDRESS: SIXTH STREET VIADUCT (WHITTIER BLVD)
LOS ANGELES, CA

WORK ORDER NO.
E700224F

DRAWING NO.
S6-71

SHEET 369 OF 560 SHEETS

T.O. 5 - Change Order Serial Sketch No. 58 - Page 1 of 6

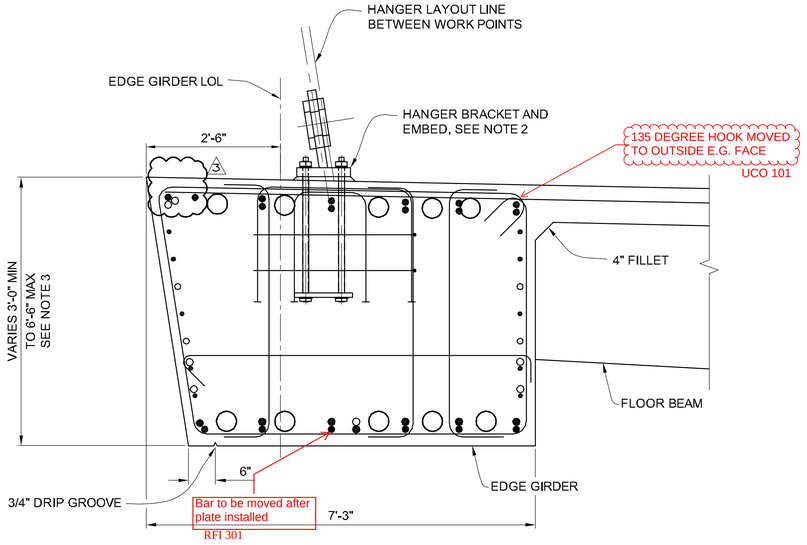

GEOMETRY

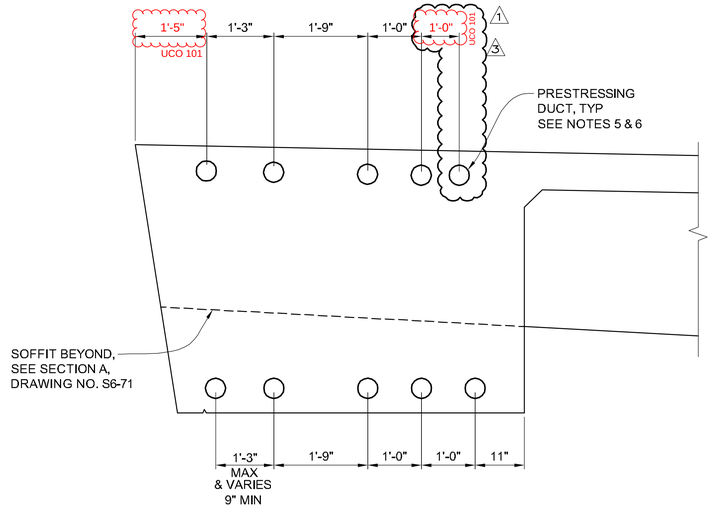

PRESTRESSING DUCT LAYOUT

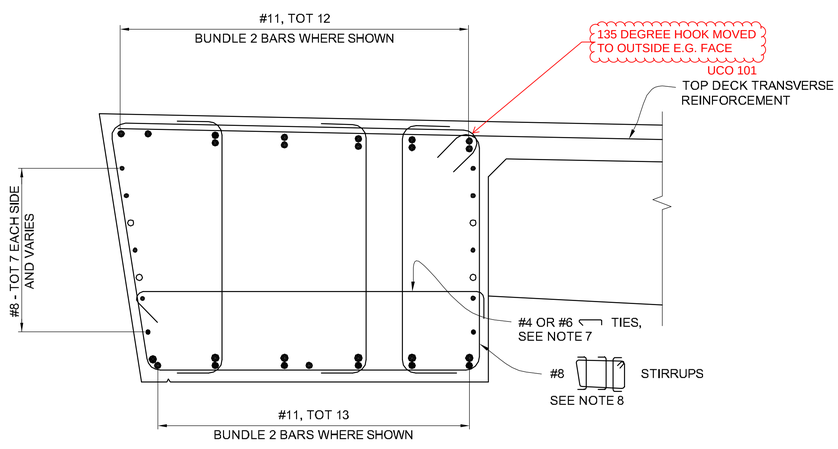

REINFORCEMENT

SECTION B1
SCALE: 3/4"=1'-0"
S6-23 TO S6-65

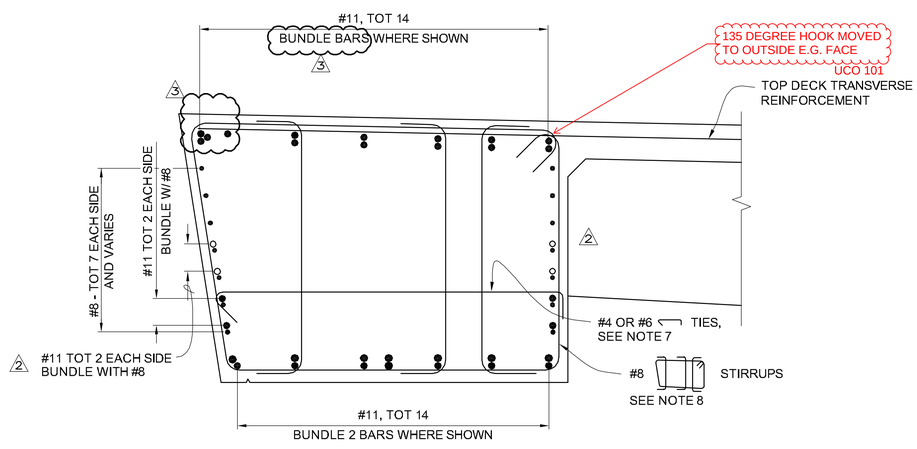

REINFORCEMENT

SECTION B2
SCALE: 3/4"=1'-0"
S6-23 TO S6-65

LEGEND:

- ○ DENOTES ADDITIONAL REINFORCEMENT
- ● DENOTES CONTINUOUS REINFORCEMENT

NOTES:

1. FOR DECK REINFORCEMENT, SEE DRAWING NO. S4-05.
2. FOR HANGER BRACKET AND EMBED DETAILS, SEE DRAWING NO. S5-71.
3. FOR SOFFIT SLOPE TRANSITION, SEE DRAWINGS S5-02 THROUGH S5-04.
4. SECTION GEOMETRY AND PRESTRESSING DUCT LAYOUT APPLY TO ALL SECTIONS SHOWN ON THIS DRAWING.
5. SEE DRAWING S6-80 FOR TENDON LAYOUT NOMENCLATURE.
6. TENDONS "U5" & "L5" TERMINATE NEAR BENT 12 EAST.
7. MATCH STIRRUP SPACING. WHERE STIRRUPS ARE SHOWN BUNDLED, REPLACE 2 #4 TIES WITH SINGLE #6 TIE, TYP EACH BUNDLE.
8. BUNDLE OUTER TIE ONLY WHERE OCCURS EXCEPT AS NOTED. SEE TIE DETAIL ON DRAWING NO. S6-76.

THE CITY OF LOS ANGELES OR ITS OFFICERS OR AGENTS SHALL NOT BE RESPONSIBLE FOR THE ACCURACY OR COMPLETENESS OF ELECTRONIC COPIES OF THIS PLAN SHEET.

C:\caddlib\pw\pwwestcoast\lzhang\dms57683\S6-81-6001-03.dwg 1/24/18 18:55

REVISION DATES (DESIGN STAGE ONLY)

Sheet Version 3.0

HNTB
HNTB Corporation
601 W. 5TH STREET SUITE 1000
LOS ANGELES, CALIFORNIA 90071
TEL (213) 403-1000 FAX (213) 403-1001

CITY OF LOS ANGELES DEPARTMENT OF PUBLIC WORKS
BUREAU OF ENGINEERING

ENGINEERING
CITY OF LOS ANGELES

NO.	REVISIONS:	DATE:	BY:
1	BENT 12 BIM	07/12/17	MHJ
2	FALSEWORK REINF	12/19/17	MHJ
3	BIM REVISION 3	1/26/18	MHJ
4			
5			

INDEX NO.

STRUCTURE NO.
53C-2329

THIS PLAN WAS ELECTRONICALLY SIGNED AND STAMPED.

REGISTERED PROFESSIONAL ENGINEER
MICHAEL H. JONES
No. S3033
RENEWAL 06/30/2019
STATE OF CALIFORNIA

GARY LEE MOORE, P.E. CITY ENGINEER

DESIGN GROUP		DATE:	
ENGINEER:	MICHAEL H. JONES	LIC. NO. S3033	1/29/2016
DESIGNED BY:	MICHAEL VAN DUYN		1/29/2016
DRAWN BY:	LI ZHANG		1/29/2016
CHECKED BY:	CHARLES REDFIELD		1/29/2016
APPROVED BY:	MICHAEL H. JONES		1/29/2016

VERTICAL CONTROL: BM 12-04070, 1929 (NGVD 29) - 1985 ADJUSTMENT
HORIZONTAL CONTROL: GPS; PID AE 1704, EPOCH 1991.35

SHEET TITLE: EDGE GIRDER DETAILS NO. 2

PROJECT: SIXTH STREET VIADUCT REPLACEMENT

ADDRESS: SIXTH STREET VIADUCT (WHITTIER BLVD)
LOS ANGELES, CA

WORK ORDER NO.
E700224F

DRAWING NO.
S6-72

SHEET 370 OF 560 SHEETS

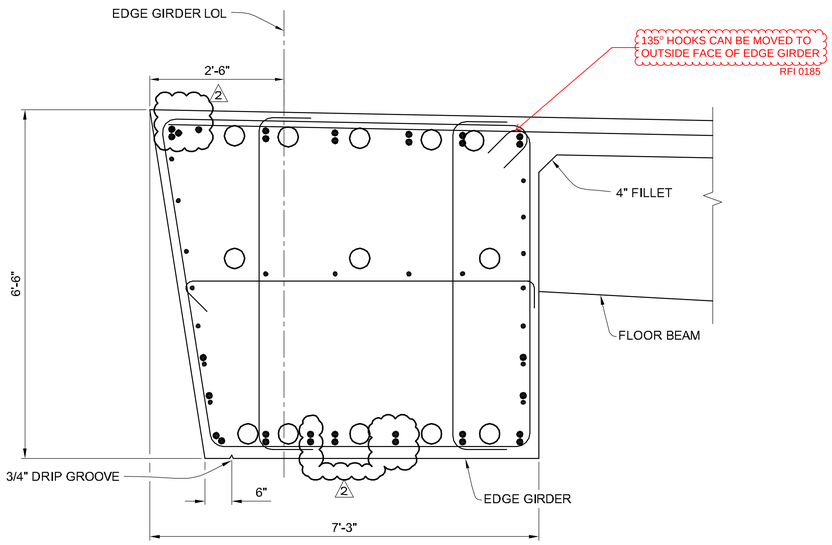

GEOMETRY

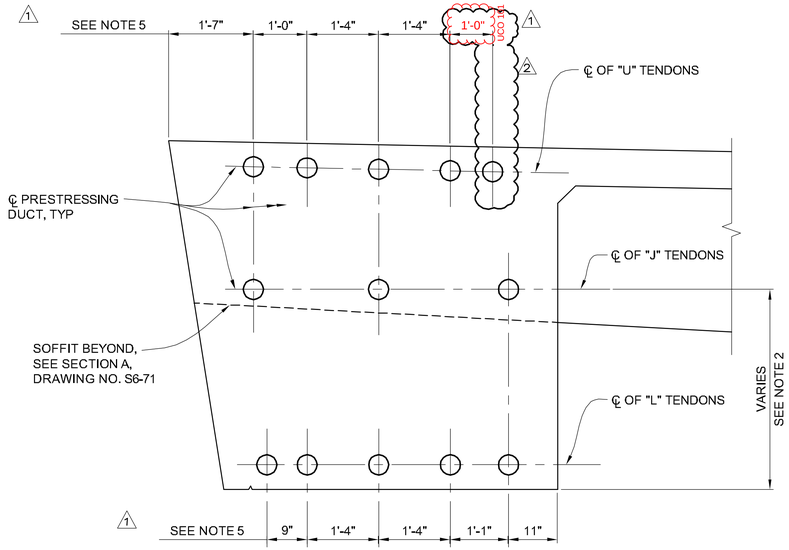

PRESTRESSING DUCT LAYOUT

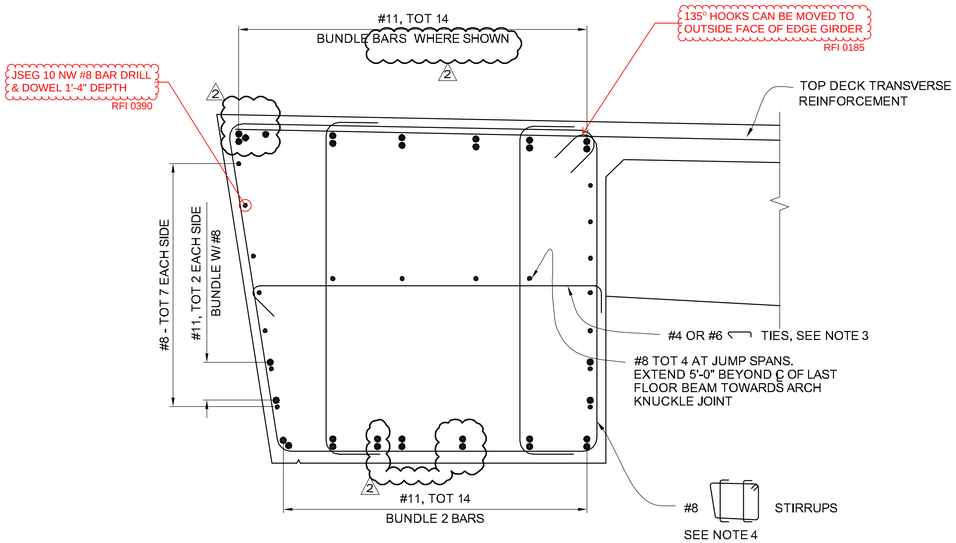

REINFORCEMENT

NOTES:

1. FOR DECK REINFORCEMENT, SEE DRAWING NO. S4-05.
2. FOR ℄ OF "J" TENDONS, SEE DRAWING NO. S6-18.
3. MATCH STIRRUP SPACING. USE #4 ⌐ AT SINGLE #8 STIRRUP AND #6 ⌐ AT BUNDLE #8 STIRRUP.
4. BUNDLE OUTER TIE ONLY WHERE OCCURS EXCEPT AS NOTED. SEE TIE DETAIL ON DRAWING NO. S6-76.
5. SPACING CAN VARY SEE NOTE 8 ON DRAWING NO. S6-85.

LEGEND:

- ○ DENOTES ADDITIONAL REINFORCEMENT
- ● DENOTES CONTINUOUS REINFORCEMENT

SECTION C
SCALE: 3/4"=1'-0"
S6-24 TO S6-64

THE CITY OF LOS ANGELES OR ITS OFFICERS OR AGENTS SHALL NOT BE RESPONSIBLE FOR THE ACCURACY OR COMPLETENESS OF ELECTRONIC COPIES OF THIS PLAN SHEET.

C:\caddlib\pw\pwwestcoast\lzhang\dms57683\S6-81-GD01-03.dwg 1/26/18 15:41

REVISION DATES (DESIGN STAGE ONLY)

Sheet Version 3.0

BUREAU OF ENGINEERING

NO.	REVISIONS:	DATE:	BY:
1	BENT 12 BIM	07/12/17	MHJ
2	BIM REVISION 3	1/26/18	MHJ

ECO 36R1
ECO 58

STRUCTURE NO. 53C-2329

INDEX NO.

THIS PLAN WAS ELECTRONICALLY SIGNED AND STAMPED.

REGISTERED PROFESSIONAL ENGINEER MICHAEL H. JONES No. S3033 Exp. 05-31-16 STATE OF CALIFORNIA

GARY LEE MOORE, P.E. CITY ENGINEER

	DESIGN GROUP	DATE:
ENGINEER:	MICHAEL H. JONES LIC. NO. S3033	1/29/2016
DESIGNED BY:	MICHAEL VAN DUYN	1/29/2016
DRAWN BY:	LI ZHANG	1/29/2016
CHECKED BY:	CHARLES REDFIELD	1/29/2016
APPROVED BY:	MICHAEL H. JONES	1/29/2016

DEPARTMENT OF PUBLIC WORKS

VERTICAL CONTROL: BM 12-04070.1929 (NGVD 29) - 1985 ADJUSTMENT
HORIZONTAL CONTROL: GPS; PID AE 1704, EPOCH 1991.35

SHEET TITLE: EDGE GIRDER DETAILS NO. 3

PROJECT: SIXTH STREET VIADUCT REPLACEMENT

ADDRESS: SIXTH STREET VIADUCT (WHITTIER BLVD) LOS ANGELES, CA

HNTB
HNTB Corporation
601 W. 5TH STREET SUITE 1000
LOS ANGELES, CALIFORNIA 90071
TEL (213) 403-1000 FAX (213) 403-1001

WORK ORDER NO. E700224F

DRAWING NO. S6-73

SHEET 371 OF 560 SHEETS

CITY OF LOS ANGELES

T.O. 5 - Change Order Serial Sketch No. 58 - Page 3 of 6

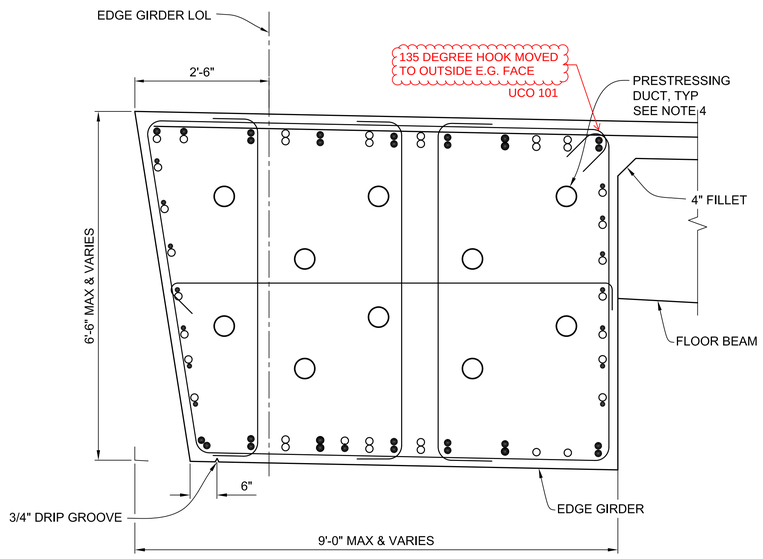

GEOMETRY

NOTES:

1. FOR DECK REINFORCEMENT, SEE DRAWING NO. S4-05.
2. FOR HANGER BRACKET AND EMBED DETAILS, SEE DRAWING NO. S5-71.
3. FOR SOFFIT SLOPE TRANSITION, SEE DRAWINGS S5-02 THROUGH S5-04.
4. FOR PRESTRESSING DUCT GEOMETRY DETAILS, SEE DRAWING S6-81.
5. FOR ADDITIONAL REINFORCEMENT TERMINATION DETAIL, SEE DRAWING NO. S6-77.
6. MATCH STIRRUP SPACING. USE #4 ⊂⊃ AT SINGLE #8 STIRRUP AND #6 ⊂⊃ AT BUNDLE #8 STIRRUP.
7. BETWEEN SECTIONS D1 AND REINFORCEMENT MECHANICAL COUPLER AT SECTION D2 (REFER TO SECTION A ON DRAWING NO. S3-06), TRANSITION BETWEEN CANTED AND PLUMB REBAR COLUMN. ADJUST BARS LATERALLY TO CLEAR POST TENSIONING DUCTS AT ANCHORAGE.
8. SECTION GEOMETRY AND PRESTRESSING DUCT LAYOUT APPLY TO BOTH SECTIONS SHOWN ON THIS DRAWING.
9. BUNDLE OUTER TIE ONLY WHERE OCCURS EXCEPT AS NOTED. SEE TIE DETAIL ON DRAWING NO. S6-76.

LEGEND:

- ○ DENOTES ADDITIONAL REINFORCEMENT
- ● DENOTES CONTINUOUS REINFORCEMENT

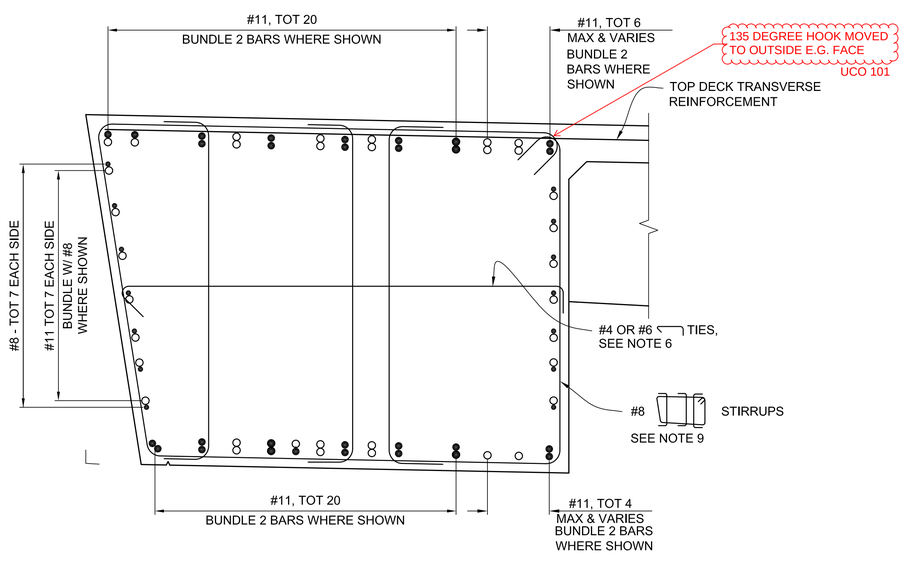

REINFORCEMENT

SECTION D1 (S6-22)
SCALE: 3/4"=1'-0"

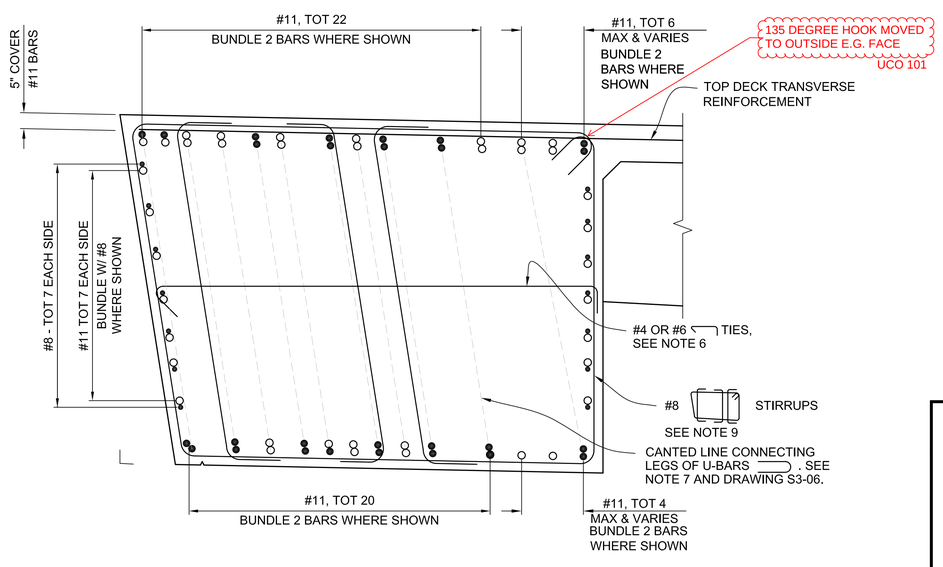

REINFORCEMENT

SECTION D2 (S6-21)
SCALE: 3/4"=1'-0"

NEAR BENT 3

BUREAU OF ENGINEERING
OFFICIAL RECORD

HNTB
HNTB Corporation
601 W. 5TH STREET SUITE 1000
LOS ANGELES, CALIFORNIA 90071
TEL (213) 403-1000 FAX (213) 403-1001

BUREAU OF ENGINEERING

ENGINEERING
CITY OF LOS ANGELES

NO.	REVISIONS:	DATE	BY:

STRUCTURE NO. 53C-2329

INDEX NO. P-38113

"THIS PLAN WAS ELECTRONICALLY SIGNED AND STAMPED"

REGISTERED PROFESSIONAL ENGINEER MICHAEL H. JONES No. S3033 CIVIL STATE OF CALIFORNIA

BUREAU OF PUBLIC WORKS

CITY OF LOS ANGELES DEPARTMENT OF PUBLIC WORKS

GARY LEE MOORE, P.E. CITY ENGINEER

	DESIGN GROUP	LIC. NO. S3033	DATE:
ENGINEER:	MICHAEL H. JONES		1/29/2016
DESIGNED BY:	MICHAEL VAN DUYN		1/29/2016
DRAWN BY:	LI ZHANG		1/29/2016
CHECKED BY:	CHARLES REDFIELD		1/29/2016
APPROVED BY:	MICHAEL H. JONES		1/29/2016

VERTICAL CONTROL: BM 12-04070,1929 (NGVD 29) - 1985 ADJUSTMENT
HORIZONTAL CONTROL: GPS; PID AE 1704, EPOCH 1991.35

SHEET TITLE: EDGE GIRDER DETAILS NO. 4

PROJECT: SIXTH STREET VIADUCT REPLACEMENT

ADDRESS: SIXTH STREET VIADUCT (WHITTIER BLVD)
LOS ANGELES, CA

WORK ORDER NO. E700224F

DRAWING NO. S6-74

SHEET 372 OF 560 SHEETS

THE CITY OF LOS ANGELES OR ITS OFFICERS OR AGENTS SHALL NOT BE RESPONSIBLE FOR THE ACCURACY OR COMPLETENESS OF ELECTRONIC COPIES OF THIS PLAN SHEET.

C:\caddlib\pw\pwwestcoast\zhang\dms576831\S6-81-G001-03.dwg 6/28/16 17:40

REVISION DATES (DESIGN STAGE ONLY)

Sheet Version 3.0

ADDENDUM 5

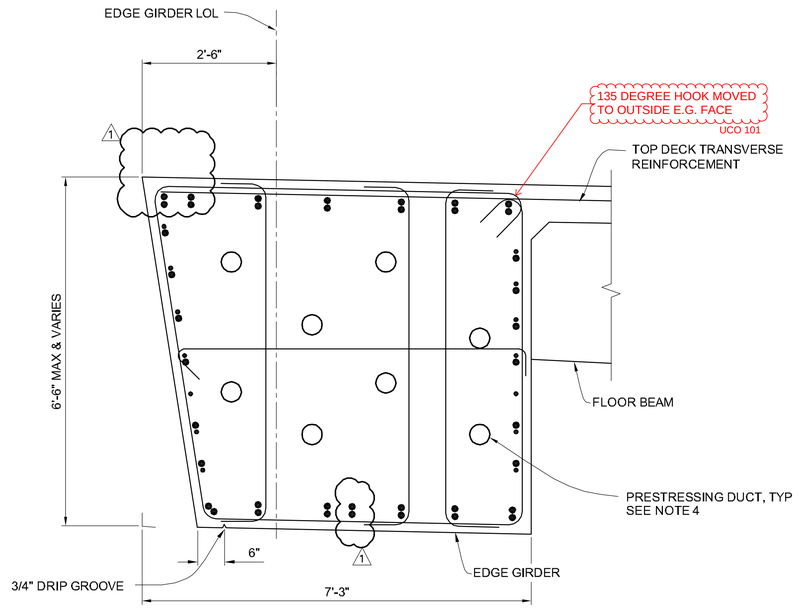

GEOMETRY

NOTES:

1. FOR DECK REINFORCEMENT, SEE DRAWING NO. S4-05.
2. FOR HANGER BRACKET AND EMBED DETAILS, SEE DRAWING NO. S5-71.
3. FOR SOFFIT SLOPE TRANSITION, SEE DRAWINGS S5-02 THROUGH S5-04.
4. FOR PRESTRESSING DUCT GEOMETRY DETAILS, SEE DRAWING S6-83.
5. MATCH STIRRUP SPACING. USE #4⌐¬ AT SINGLE #8 STIRRUP AND #6 ⌐¬ AT BUNDLE #8 STIRRUP.
6. BETWEEN SECTIONS E1 AND REINFORCEMENT MECHANICAL COUPLER AT SECTION E2 (REFER TO SECTION A ON DRAWING NO. S6-06), TRANSITION BETWEEN CANTED AND PLUMB REBAR COLUMN. ADJUST BARS LATERALLY TO CLEAR POST TENSIONING DUCTS AT ANCHORAGE.
7. SECTION GEOMETRY AND PRESTRESSING DUCT LAYOUT APPLY TO BOTH SECTIONS SHOWN ON THIS DRAWING.
8. BUNDLE OUTER TIE ONLY WHERE OCCURS EXCEPT AS NOTED. SEE TIE DETAIL ON DRAWING NO. S6-76.
9. FOR ADDITIONAL REINFORCEMENT TERMINATION DETAIL, SEE DRAWING NO. S6-77.

LEGEND:

- ○ DENOTES ADDITIONAL REINFORCEMENT
- ● DENOTES CONTINUOUS REINFORCEMENT

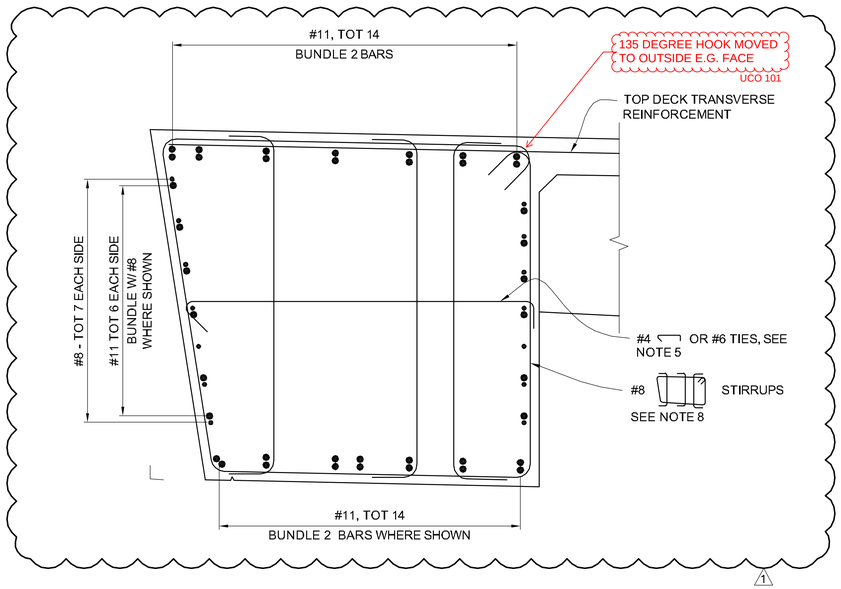

REINFORCEMENT

SECTION E1 — S6-66

SCALE: 3/4"=1'-0"

S6-67

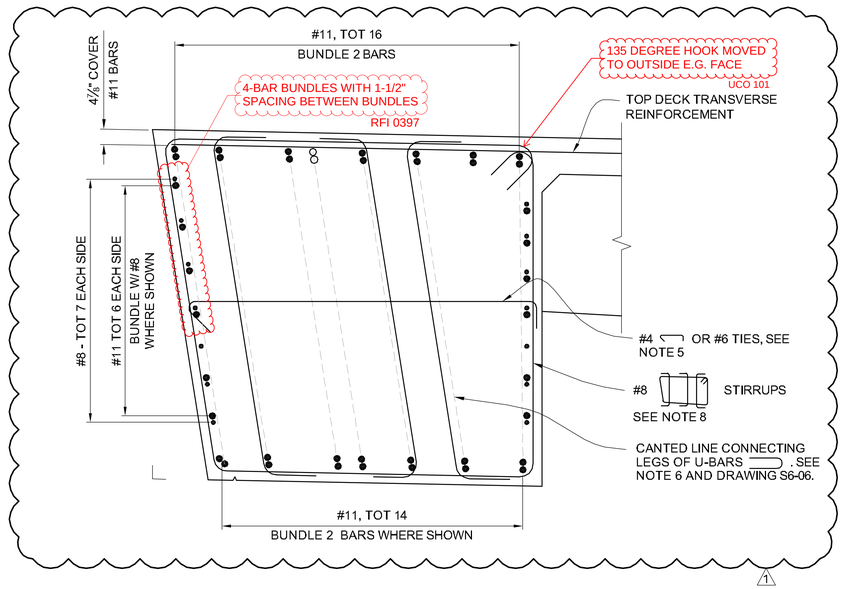

REINFORCEMENT

SECTION E2 — S6-67

SCALE: 3/4"=1'-0"

NEAR ABUTMENT 13

T.O. 5 - Change Order Serial Sketch No. 45 - Page 5 of 5

THE CITY OF LOS ANGELES OR ITS OFFICERS OR AGENTS SHALL NOT BE RESPONSIBLE FOR THE ACCURACY OR COMPLETENESS OF ELECTRONIC COPIES OF THIS PLAN SHEET.

C:\caddlib\pw\pwwestcoast\lzhang\dms57683\S6-81-6001-03.dwg 11/08/17 16:50

Sheet Version 3.0

REVISION DATES (DESIGN STAGE ONLY)

ENGINEERING — CITY OF LOS ANGELES

BUREAU OF ENGINEERING

NO.	REVISIONS:	DATE:	BY:
1	FRAME 6 F/V SUBMITTAL	11/7/17	MHJ

STRUCTURE NO. 53C-2329

INDEX NO.

REGISTERED PROFESSIONAL ENGINEER — MICHAEL H. JONES — No. S3033 — CIVIL — STATE OF CALIFORNIA

THIS PLAN WAS ELECTRONICALLY SIGNED AND STAMPED.

CITY OF LOS ANGELES DEPARTMENT OF PUBLIC WORKS

GARY LEE MOORE, P.E. — CITY ENGINEER

DESIGN GROUP

ENGINEER:	MICHAEL H. JONES	LIC. NO. S3033
DESIGNED BY:	MICHAEL VAN DUYN	
DRAWN BY:	LI ZHANG	
CHECKED BY:	CHARLES REDFIELD	
APPROVED BY:	MICHAEL H. JONES	

DATE: 1/29/2016

VERTICAL CONTROL: BM 12-04070, 1929 (NGVD 29) - 1985 ADJUSTMENT

HORIZONTAL CONTROL: GPS; PID AE 1704, EPOCH 1991.35

SHEET TITLE: EDGE GIRDER DETAILS NO. 5

PROJECT: SIXTH STREET VIADUCT REPLACEMENT

ADDRESS: SIXTH STREET VIADUCT (WHITTIER BLVD) LOS ANGELES, CA

HNTB

HNTB Corporation
601 W. 5TH STREET SUITE 1000
LOS ANGELES, CALIFORNIA 90071
TEL (213) 403-1000 FAX (213) 403-1001

WORK ORDER NO. E700224F

DRAWING NO. S6-75

SHEET 17 OF 560 SHEETS

ADDENDUM 5

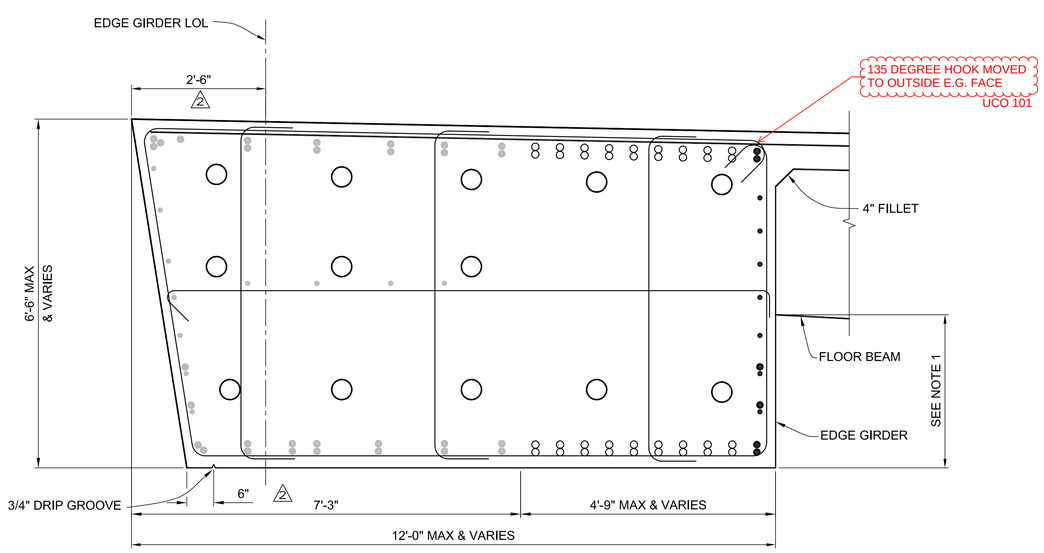

GEOMETRY

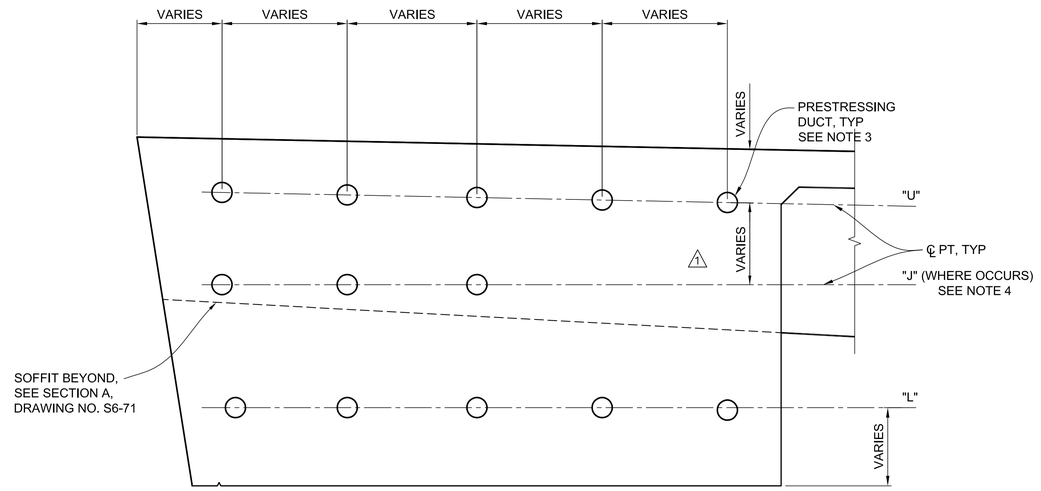

PRESTRESSING DUCT LAYOUT

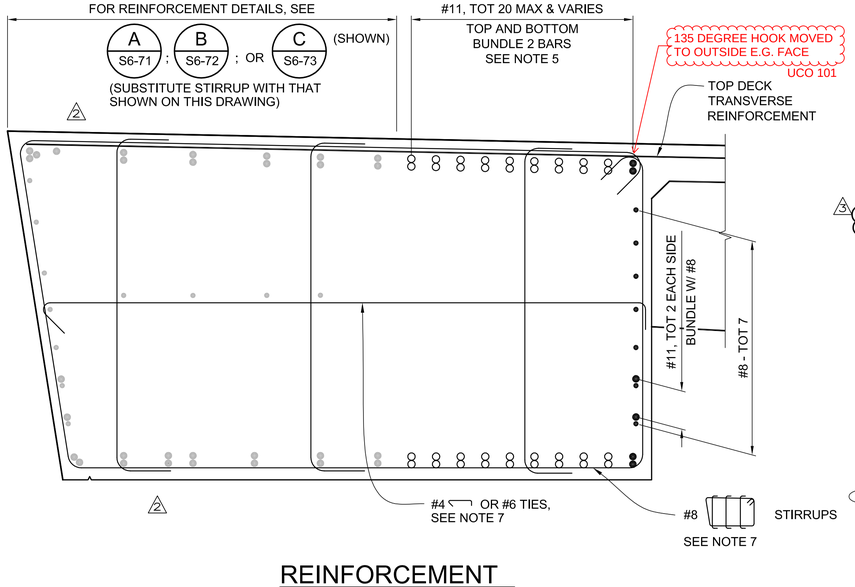

REINFORCEMENT

NOTES:

1. FOR SOFFIT SLOPE TRANSITION, SEE DRAWING NO. S5-02 THROUGH S5-04.
2. FOR DECK REINFORCEMENT, SEE DRAWING NO. S4-05.
3. FOR PRESTRESSING TRANSITION AT FRAME CONSTRUCTION JOINT, SEE DRAWINGS S6-86 THROUGH S6-90. FOR PT ANCHORAGE LAYOUT, SEE DRAWING S6-77.
4. FOR "J" TENDON LAYOUT, SEE DRAWING S6-18.
5. FOR ADDITIONAL REINFORCEMENT TERMINATION DETAIL, SEE DRAWING NO. S6-77.
3. TRANSITION TO 3-BAR BUNDLES MAY BE USED AT POST-TENSIONING COUPLERS. SEE SECTION G ON DRAWING NO. S6-77.
6. MATCH STIRRUP SPACING. USE #4 ⌐¬ AT SINGLE #8 STIRRUP AND #6 ⌐¬ AT BUNDLE #8 STIRRUP.
7. BUNDLE OUTER TIE ONLY WHERE OCCURS EXCEPT AS NOTED. SEE TIE DETAIL ON DRAWING NO. S6-76.
8. JUMP SPAN IS SIMILAR. CENTER STIRRUP LEG IS OMITTED AT JUMP SPAN. SEE SECTION C ON DRAWING NO. S6-73

LEGEND:

- ○ DENOTES ADDITIONAL REINFORCEMENT
- ● DENOTES CONTINUOUS REINFORCEMENT
- BUNDLED BARS

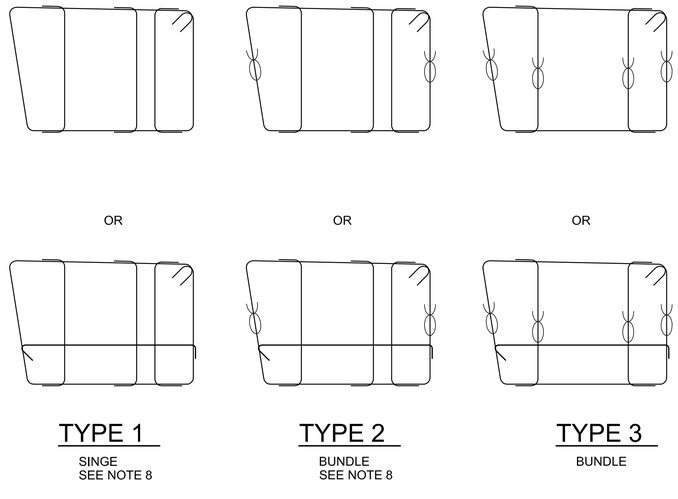

TIE DETAIL

NO SCALE

SECTION

SCALE: 3/4"=1'-0"

F
S6-32 TO S6-34
S6-41 TO S6-45
S6-51 TO S6-54

NEAR CONSTRUCTION JOINT AT BENT 6 WEST, BENT 8 WEST & BENT 10 WEST

T.O. 5 - Change Order Serial Sketch No. 71 - Page 8 of 15

THE CITY OF LOS ANGELES OR ITS OFFICERS OR AGENTS SHALL NOT BE RESPONSIBLE FOR THE ACCURACY OR COMPLETENESS OF ELECTRONIC COPIES OF THIS PLAN SHEET.

C:\caddlib\pw\pwwestcoast\lzhang\dms57683\S6-81-GD01-03.dwg 7/10/18 10:17

REVISION DATES (DESIGN STAGE ONLY)

Sheet Version 3.0

BUREAU OF ENGINEERING

NO.	REVISIONS:	DATE:	BY:
1.	FLOOR BEAM SPACING MODIFICATION CO13R1	12/19/16	MHJ
2.	BIM REVISION 3 ECO 58	1/26/18	MHJ
3.	FRAME CONSTRUCTION JOINT AND ARCH RIB UPDATES ECO 71	07/10/18	MHJ

ENGINEERING
CITY OF LOS ANGELES

STRUCTURE NO. 53C-2329

INDEX NO.

THIS PLAN WAS ELECTRONICALLY SIGNED AND STAMPED.

REGISTERED PROFESSIONAL ENGINEER MICHAEL H. JONES No. S3033 CIVIL STATE OF CALIFORNIA

CITY OF LOS ANGELES DEPARTMENT OF PUBLIC WORKS

GARY LEE MOORE, P.E. CITY ENGINEER

ENGINEER:	DESIGN GROUP	LIC. NO. S3033	DATE: 1/29/2016
DESIGNED BY:	MICHAEL H. JONES		1/29/2016
DRAWN BY:	MICHAEL VAN DUYN		1/29/2016
CHECKED BY:	LI ZHANG		1/29/2016
APPROVED BY:	CHARLES REDFIELD		1/29/2016
	MICHAEL H. JONES		1/29/2016

VERTICAL CONTROL: BM 12-04070, 1929 (NGVD 29) - 1985 ADJUSTMENT
HORIZONTAL CONTROL: GPS; PID AE 1704, EPOCH 1991.35

SHEET TITLE: EDGE GIRDER DETAILS NO. 6

PROJECT: SIXTH STREET VIADUCT REPLACEMENT

ADDRESS: SIXTH STREET VIADUCT (WHITTIER BLVD) LOS ANGELES, CA

HNTB
HNTB Corporation
601 W. 5TH STREET SUITE 1000
LOS ANGELES, CALIFORNIA 90071
TEL (213) 403-1000 FAX (213) 403-1001

WORK ORDER NO. E700224F

DRAWING NO. S6-76

SHEET 374 OF 560 SHEETS

ADDENDUM 5

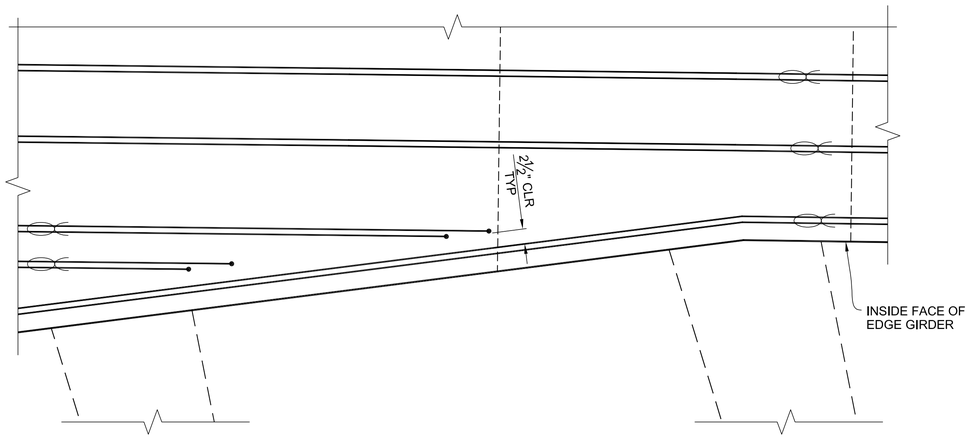

PLAN - ADDITIONAL REINFORCEMENT TERMINATION DETAIL

SCALE: 1"=1'-0"

TOP AND BOTTOM REINFORCEMENT SIMILAR

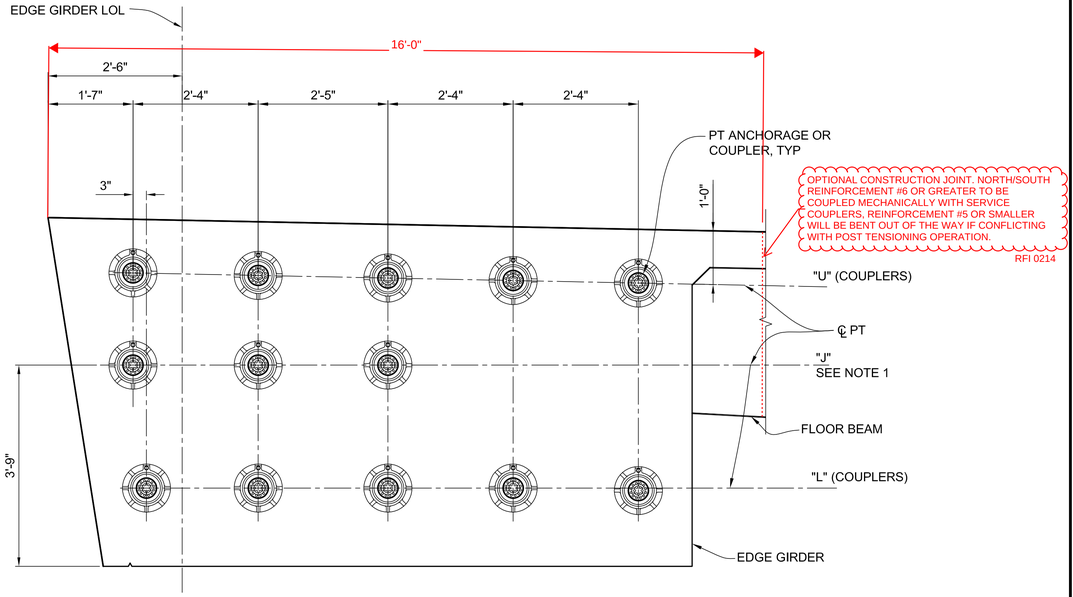

PRESTRESSING ANCHORAGE LAYOUTS AT CONSTRUCTION JOINT

SCALE: 3/4"=1'-0"

FOR DETAILS NOT SHOWN, SEE DRAWING S6-76

BENT 6 WEST, BENT 8 WEST, AND BENT 10 WEST

NOTES:

1. FOR "J" TENDON LAYOUT, SEE DRAWING NO.S S6-18, S6-85, AND S6-86.
2. REPLACE EDGE GIRDER CROSS TIE WITH CROSS TIES SHOWN IN SECTION G, THIS DRAWING.

LEGEND:

BUNDLED BARS

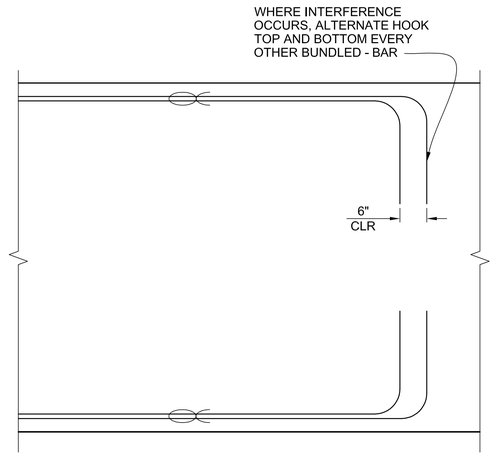

ELEVATION - ADDITIONAL REINFORCEMENT TERMINATION DETAIL

SCALE: 3/4"=1'-0"

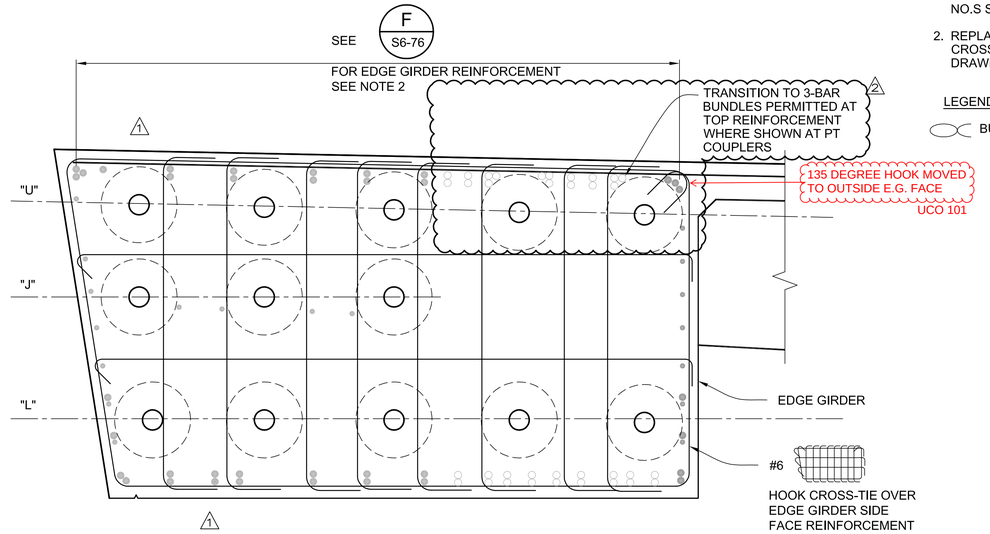

SECTION G

SCALE: 3/4"=1'-0"

S6-90

THE CITY OF LOS ANGELES OR ITS OFFICERS OR AGENTS SHALL NOT BE RESPONSIBLE FOR THE ACCURACY OR COMPLETENESS OF ELECTRONIC COPIES OF THIS PLAN SHEET.

REVISION DATES (DESIGN STAGE ONLY)

C:\caddlib\pw\pwwestcoast\zhang\dms57683\S6-81-GD01-03.dwg 7/10/18 18:24

Sheet Version 3.0

HNTB
HNTB Corporation
601 W. 5TH STREET SUITE 1000
LOS ANGELES, CALIFORNIA 90071
TEL (213) 403-1000 FAX (213) 403-1001

CITY OF LOS ANGELES DEPARTMENT OF PUBLIC WORKS

BUREAU OF ENGINEERING

ENGINEERING CITY OF LOS ANGELES

NO.	REVISIONS:	DATE:	BY:
1	BIM REVISION 3 ECO 58	1/26/18	MHJ
2	FRAME CONSTRUCTION JOINT AND ARCH RIB UPDATES ECO 71	07/13/18	MHJ

STRUCTURE NO. 53C-2329

INDEX NO.

THIS PLAN WAS ELECTRONICALLY SIGNED AND STAMPED

REGISTERED PROFESSIONAL ENGINEER MICHAEL H. JONES No. S3033 CIVIL STATE OF CALIFORNIA

GARY LEE MOORE, P.E. CITY ENGINEER

		DATE:
ENGINEER:	DESIGN GROUP	
DESIGNED BY:	MICHAEL H. JONES	1/29/2016
DRAWN BY:	MICHAEL VAN DUYN	1/29/2016
CHECKED BY:	LI ZHANG	1/29/2016
APPROVED BY:	CHARLES REDFIELD	1/29/2016
	MICHAEL H. JONES	1/29/2016

LIC. NO. S3033

VERTICAL CONTROL: BM 12-04070.1929 (NGVD 29) - 1985 ADJUSTMENT

HORIZONTAL CONTROL: GPS; PID AE 1704, EPOCH 1991.35

SHEET TITLE: EDGE GIRDER DETAILS NO. 7

PROJECT: SIXTH STREET VIADUCT REPLACEMENT

ADDRESS: SIXTH STREET VIADUCT (WHITTIER BLVD) LOS ANGELES, CA

WORK ORDER NO. E700224F

DRAWING NO. S6-77

SHEET 375 OF 560 SHEETS

ADDENDUM 5

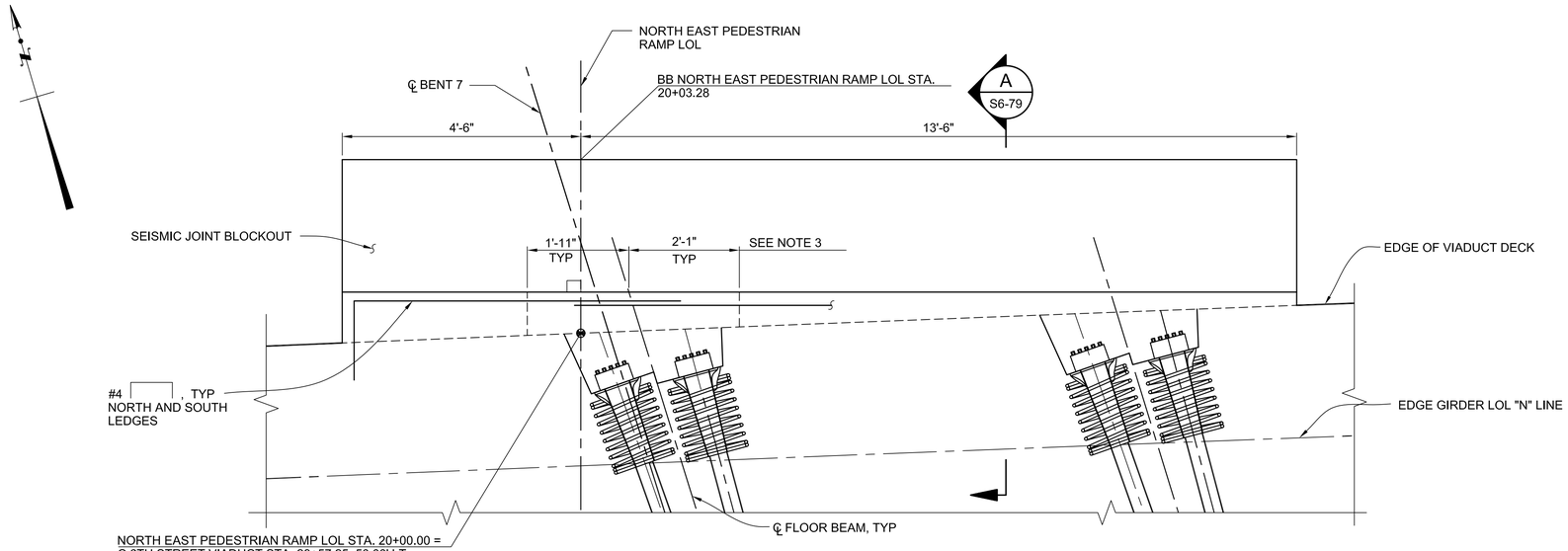

PLAN - NORTH EAST PEDESTRIAN RAMP EDGE GIRDER LEDGE

SCALE: 3/4"=1'-0"

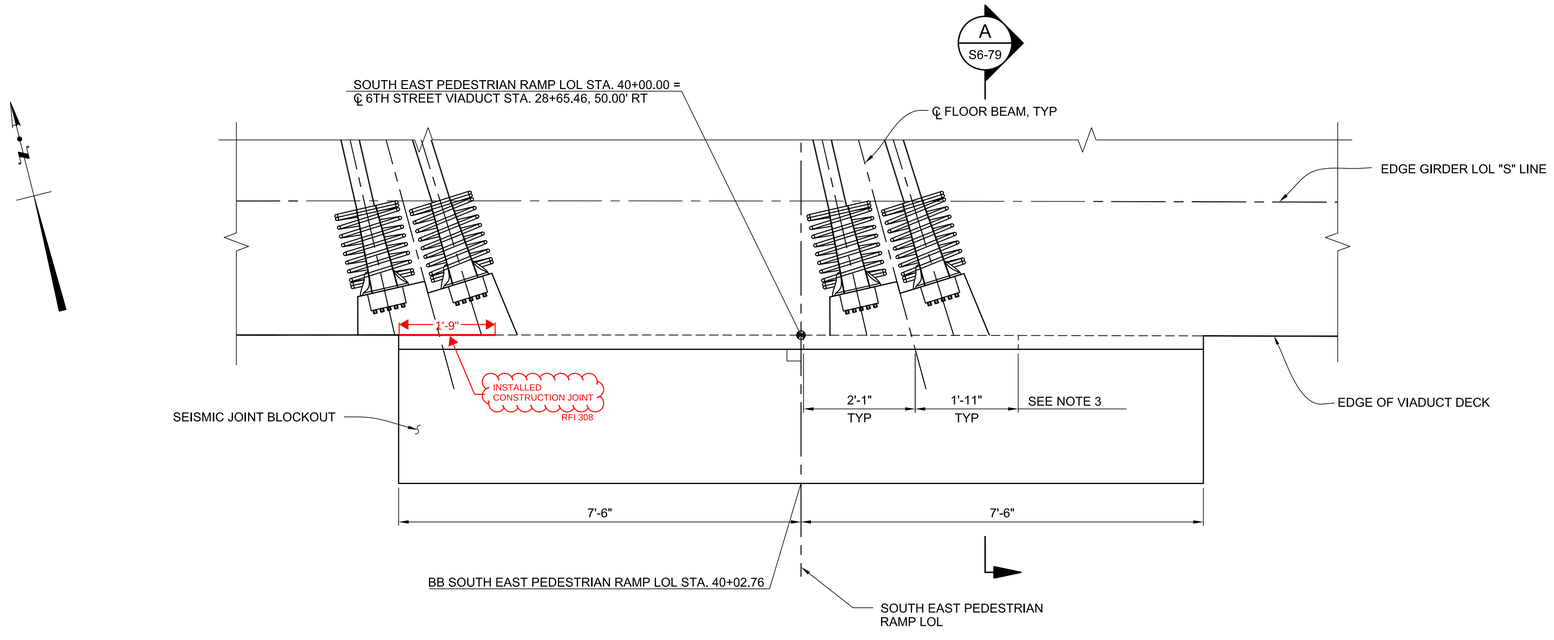

PLAN - SOUTH EAST PEDESTRIAN RAMP EDGE GIRDER LEDGE

SCALE: 3/4"=1'-0"

NOTES:

1. FOR PEDESTRIAN RAMP NOTES, LAYOUT, AND DETAILS, SEE PEDESTRIAN RAMP PLAN SET.
2. FOR SEISMIC EXPANSION JOINT, BLOCKOUT, AND REINFORCEMENT DETAILS, SEE PEDESTRIAN RAMP DRAWINGS S20 THROUGH S26.
3. IF REQUIRED FOR INSTALLATION AND STRESSING OF POST TENSIONING AT FLOOR BEAM PRESTRESSING BLOCKOUTS, OMIT INITIAL LEDGE CONCRETE UNTIL FLOOR BEAM STRESSING IS COMPLETE. PROVIDE LAP SPLICE IN #4 LONGITUDINAL LEDGE REINFORCEMENT. FIELD BENDING OF #4 BARS IS PERMITTED FOR FLOOR BEAM STRESSING ACCESS.

THE CITY OF LOS ANGELES OR ITS OFFICERS OR AGENTS SHALL NOT BE RESPONSIBLE FOR THE ACCURACY OR COMPLETENESS OF ELECTRONIC COPIES OF THIS PLAN SHEET.

C:\caddlib\pw\pwwestcoast\zhang\dms57683\S6-81-G001-03.dwg 6/28/16 17:41

REVISION DATES (DESIGN STAGE ONLY)

Sheet Version 3.0

BUREAU OF ENGINEERING

ENGINEERING
CITY OF LOS ANGELES

NO.	REVISIONS:	DATE	BY:

STRUCTURE NO. 53C-2329

INDEX NO. P-38113

THIS PLAN WAS ELECTRONICALLY SIGNED AND STAMPED

REGISTERED PROFESSIONAL ENGINEER MICHAEL H. JONES No. S3033 CIVIL STATE OF CALIFORNIA

CITY OF LOS ANGELES DEPARTMENT OF PUBLIC WORKS

GARY LEE MOORE, P.E. CITY ENGINEER

	DESIGN GROUP	LIC. NO. S3033	DATE:
ENGINEER:	MICHAEL H. JONES		1/29/2016
DESIGNED BY:	MICHAEL VAN DUYN		1/29/2016
DRAWN BY:	LI ZHANG		1/29/2016
CHECKED BY:	CHARLES REDFIELD		1/29/2016
APPROVED BY:	MICHAEL H. JONES		1/29/2016

VERTICAL CONTROL: BM 12-04070,1929 (NGVD 29) - 1985 ADJUSTMENT
HORIZONTAL CONTROL: GPS; PID AE 1704, EPOCH 1991.35

SHEET TITLE: PEDESTRIAN RAMP EDGE GIRDER LEDGE LAYOUT

PROJECT: SIXTH STREET VIADUCT REPLACEMENT

ADDRESS: SIXTH STREET VIADUCT (WHITTIER BLVD) LOS ANGELES, CA

HNTB
HNTB Corporation
601 W. 5TH STREET SUITE 1000
LOS ANGELES, CALIFORNIA 90071
TEL (213) 403-1000 FAX (213) 403-1001

BUREAU OF ENGINEERING OFFICIAL RECORD

WORK ORDER NO. E700224F

DRAWING NO. S6-78

SHEET 376 OF 560 SHEETS

ADDENDUM 5

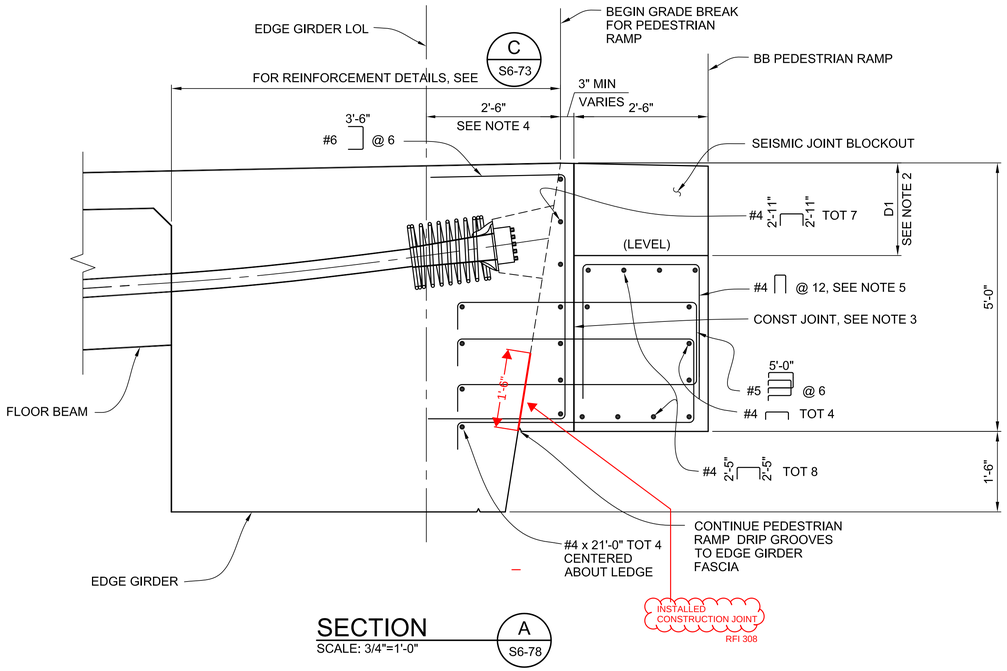

SECTION
SCALE: 3/4"=1'-0"
A
S6-78

NOTES:

1. FOR PEDESTRIAN RAMP PROFILE GEOMETRY, SEE PEDESTRIAN RAMP PLAN DRAWING S1 FOR NORTH PEDESTRIAN RAMP; AND DRAWING S31 FOR SOUTH PEDESTRIAN RAMP.
2. FOR SEISMIC EXPANSION JOINT, BLOCKOUT, AND REINFORCEMENT DETAILS, SEE PEDESTRIAN RAMP DRAWINGS S20 THROUGH S26.
3. EXISTING CONCRETE SURFACE AT THE CONSTRUCTION JOINT INTERFACE SHALL BE PREPARED BY REMOVING ALL LAITANCE AND INTENTIONALLY ROUGHEN THE SURFACE TO AN AMPLITUDE OF 1/4".
4. DIMENSION MEASURED NORMAL OR RADIAL TO EDGE GIRDER LOL.
5. IF REQUIRED FOR INSTALLATION AND STRESSING ACCESS OF FLOOR BEAM POST TENSIONING USE #4 @ 12 DRILL AND GROUT OR DRILL AND BOND DOWEL FOR INSTALLATION AFTER FLOOR BEAM STRESSING IS COMPLETE WITHIN FLOOR BEAM STRESSING ACCESS REGION.

THE CITY OF LOS ANGELES OR ITS OFFICERS OR AGENTS SHALL NOT BE RESPONSIBLE FOR THE ACCURACY OR COMPLETENESS OF ELECTRONIC COPIES OF THIS PLAN SHEET.

REVISION DATES (DESIGN STAGE ONLY)

C:\caddlib\pw\pwwestcoast\lzhang\dms57683\S6-81-GD01-03.dwg 6/28/16 17:41

Sheet Version 3.0

HNTB
HNTB Corporation
601 W. 5TH STREET SUITE 1000
LOS ANGELES, CALIFORNIA 90071
TEL (213) 403-1000 FAX (213) 403-1001

BUREAU OF ENGINEERING
OFFICIAL RECORD

CITY OF LOS ANGELES DEPARTMENT OF PUBLIC WORKS
BUREAU OF ENGINEERING

ENGINEERING
CITY OF LOS ANGELES

NO.	REVISIONS:	DATE:	BY:

STRUCTURE NO. 53C-2329
INDEX NO. P-38113

REGISTERED PROFESSIONAL ENGINEER
MICHAEL H. JONES
No. S3033
CIVIL
STATE OF CALIFORNIA

THIS PLAN WAS ELECTRONICALLY SIGNED AND STAMPED.

GARY LEE MOORE, P.E. CITY ENGINEER

DESIGN GROUP

ENGINEER:	MICHAEL H. JONES	LIC. NO. S3033
DESIGNED BY:	MICHAEL VAN DUYN	
DRAWN BY:	LI ZHANG	
CHECKED BY:	CHARLES REDFIELD	
APPROVED BY:	MICHAEL H. JONES	

DATE: 1/29/2016 (all)

VERTICAL CONTROL: BM 12-04070,1929 (NGVD 29) - 1985 ADJUSTMENT
HORIZONTAL CONTROL: GPS; PID AE 1704, EPOCH 1991.35

SHEET TITLE: PEDESTRIAN RAMP EDGE GIRDER LEDGE DETAILS

PROJECT: SIXTH STREET VIADUCT REPLACEMENT

ADDRESS: SIXTH STREET VIADUCT (WHITTIER BLVD) LOS ANGELES, CA

WORK ORDER NO. E700224F

DRAWING NO. S6-79

SHEET 377 OF 560 SHEETS

ADDENDUM 5

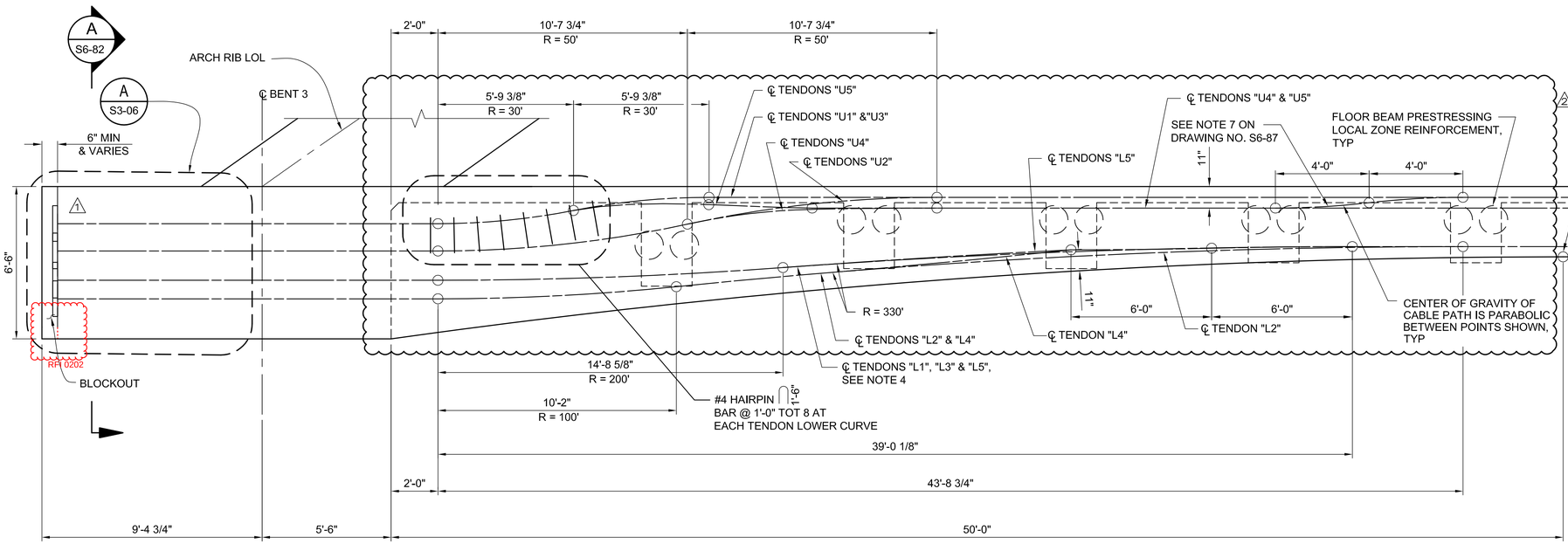

PRESTRESS ELEVATION - SPAN 3 AT BENT 3

SCALE: 3/8"=1'-0"

NOTES:

1. SOUTH EDGE GIRDER ELEVATION SHOWN, NORTH EDGE GIRDER ELEVATION SIMILAR.
2. FOR NORTH EDGE GIRDER PRESTRESS PLAN LAYOUT, SEE DRAWING S6-82.
3. CENTERLINE OF TENDONS ARE PARALLEL TO CENTERLINE OF 6TH STREET VIADUCT U.N.O.
4. FOR ℄ TENDON "L3" ADJUST VERTICAL CURVES TO ACHIEVE POSITION SHOWN AT SECTION A, DRAWING S6-82.
5. HORIZONTAL TENDON LAYOUT AND DATA SHOWN FOR "U" TENDONS. "L" TENDON LAYOUT SIMILAR, BUT OFFSET BY 9" NOMINAL CANT AT THE ANCHORAGE AS SHOWN BY SECTION A/S6-82. LONGITUDINAL TRANSITION FOR CANT OFFSET SHALL OCCUR GRADUALLY BETWEEN FACE OF BENT 3 FLOOR BEAM AND MINIMUM EDGE GIRDER FLARE WIDTH.
6. POST TENSIONING LAYOUT SHOWN AND CURVE DATA MEASURED ALONG HORIZONTAL PLANE PASSING THROUGH TENDONS "U1" AND "U5".
7. FOR BLOCKOUT POUR BACK DETAILS, SEE DRAWING S3-06.
8. HAIRPIN BAR GROUPS SHALL BE CENTERED ABOUT POST TENSIONING CURVE SEGMENT.

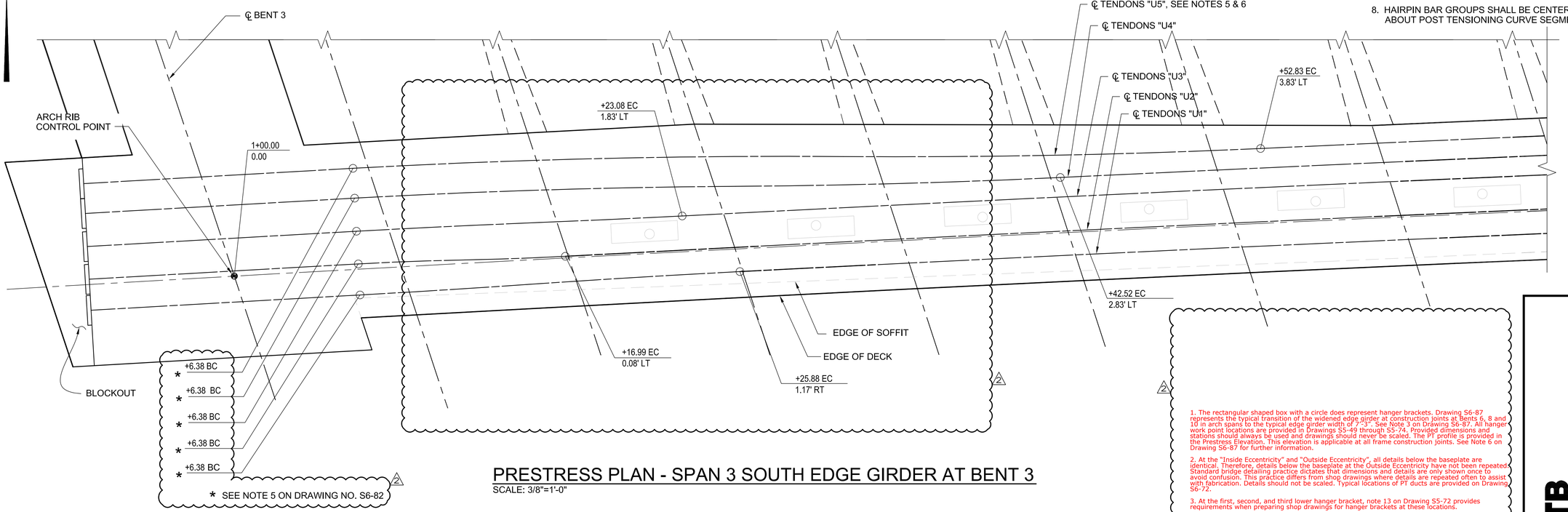

PRESTRESS PLAN - SPAN 3 SOUTH EDGE GIRDER AT BENT 3

SCALE: 3/8"=1'-0"

1. The rectangular shaped box with a circle does represent hanger brackets, Drawing S6-87 represents the typical transition of the widened edge girder at construction joints at Bents 6, 8 and 10 in arch spans to the typical edge girder width of 7'-3". See Note 3 on Drawing S6-87. All hanger work point locations are provided in Drawings S5-49 through S5-74. Provided dimensions and stations should always be used and drawings should never be scaled. The PT profile is provided in the Prestress Elevation. This elevation is applicable at all frame construction joints. See Note 6 on Drawing S6-87 for further information.

2. At the "Inside Eccentricity" and "Outside Eccentricity", all details below the baseplate are identical. Therefore, details below the baseplate at the Outside Eccentricity have not been repeated Standard bridge detailing practice dictates that dimensions and details are only shown once to avoid confusion. This practice differs from shop drawings where details are repeated often to assist with fabrication. Details should not be scaled. Typical locations of PT ducts are provided on Drawing S6-72.

3. At the first, second, and third lower hanger bracket, note 13 on Drawing S5-72 provides requirements when preparing shop drawings for hanger brackets at these locations.

4. Deck drain required locations at Arch Spans are depicted on Drawing S8-30. These locations should be used in conjunction with Drawing S8-32 to further establish the location of the deck inlets. Any location between the arch rib floor beam and the first typical floor beam that complies with the framing requirements of Drawing S8-32 is acceptable.

5. During previous discussions with SSW, it was determined that deck drainage piping should remain outside of the edge girder to avoid conflict with edge girder reinforcement. This slight adjustment will be recorded on the as-built drawings.

T.O. 5 Change Order Serial Sketch No. 63 - Page 16 of 26

THE CITY OF LOS ANGELES OR ITS OFFICERS OR AGENTS SHALL NOT BE RESPONSIBLE FOR THE ACCURACY OR COMPLETENESS OF ELECTRONIC COPIES OF THIS PLAN SHEET.

C:\caddlib\pw\pwwestcoast\zhang\dms576837\S6-81-GD01-03.dwg 5/02/18 16:17

Sheet Version 3.0

REVISION DATES (DESIGN STAGE ONLY)

BUREAU OF ENGINEERING

ENGINEERING
CITY OF LOS ANGELES

NO.	REVISIONS:	DATE:	BY:
1.	SUBMITTAL 0109 R1 REVISIONS PC 1	12/1/17	MVD
2.	BIM REVISION 6 ECO 63	4/27/18	MHJ

STRUCTURE NO. 53C-2329

INDEX NO.

THIS PLAN WAS ELECTRONICALLY SIGNED AND STAMPED

REGISTERED PROFESSIONAL ENGINEER MICHAEL H. JONES No. S3033 CIVIL STATE OF CALIFORNIA

CITY OF LOS ANGELES DEPARTMENT OF PUBLIC WORKS

CITY ENGINEER: GARY LEE MOORE, P.E.

DESIGN GROUP	LIC. NO. S3033	DATE:
ENGINEER:	MICHAEL H. JONES	1/29/2016
DESIGNED BY:	MICHAEL VAN DUYN	1/29/2016
DRAWN BY:	LI ZHANG	1/29/2016
CHECKED BY:	CHARLES REDFIELD	1/29/2016
APPROVED BY:	MICHAEL H. JONES	1/29/2016

VERTICAL CONTROL: BM 12-04070.1929 (NGVD 29) - 1985 ADJUSTMENT
HORIZONTAL CONTROL: GPS; PID AE 1704; EPOCH 1991.35

SHEET TITLE: EDGE GIRDER POST TENSIONING DETAILS NO. 1

PROJECT: SIXTH STREET VIADUCT REPLACEMENT

ADDRESS: SIXTH STREET VIADUCT (WHITTIER BLVD) LOS ANGELES, CA

HNTB
HNTB Corporation
601 W. 5TH STREET SUITE 1000
LOS ANGELES, CALIFORNIA 90071
TEL (213) 403-1000 FAX (213) 403-1001

WORK ORDER NO. E700224F

DRAWING NO. S6-81

SHEET 379 OF 560 SHEETS

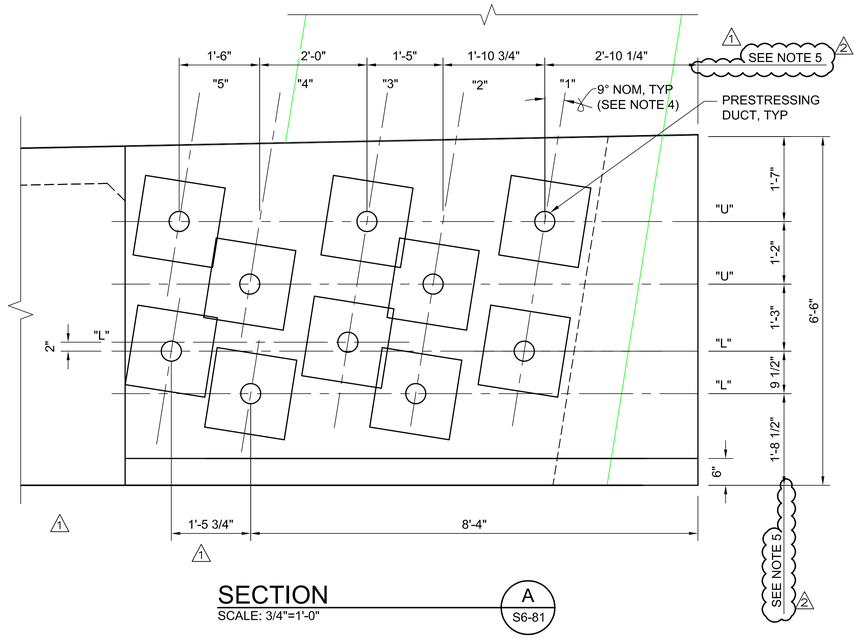

SECTION
SCALE: 3/4"=1'-0"
A
S6-81

NOTES:

1. FOR ADDITIONAL NOTES, SEE DRAWING NO. S6-81.
2. ALIGN PRESTRESSING ANCHORAGE DEVICES IN THE PLANE NORMAL TO THE CENTERLINE OF EDGE GIRDER.
3. PRESTRESSING DUCTS ARE PLACED IN CLEARANCE WINDOWS BETWEEN ARCH RIB LONGITUDINAL REINFORCEMENT.
4. SEE NOTE 2 ON DRAWING NO. S3-15 AND NOTE 5 ON DRAWING NO. S6-81.
5. LOCATION OF TENDON ANCHORAGE DETERMINED THROUGH BIM MAY BE FURTHER ADJUSTED ±2" HORIZONTALLY AND VERTICALLY. PURSUANT TO FINAL ANCHORAGE LAYOUT, TRANSITION "U" DUCTS BY USING A REVERSED CURVE WITH EQUAL RADII BETWEEN CONTROL POINTS SHOWN AT EACH END. SET "L" DUCT LAYOUT AS REQUIRED BY NOTE 5 ON DRAWING NO. S6-81.

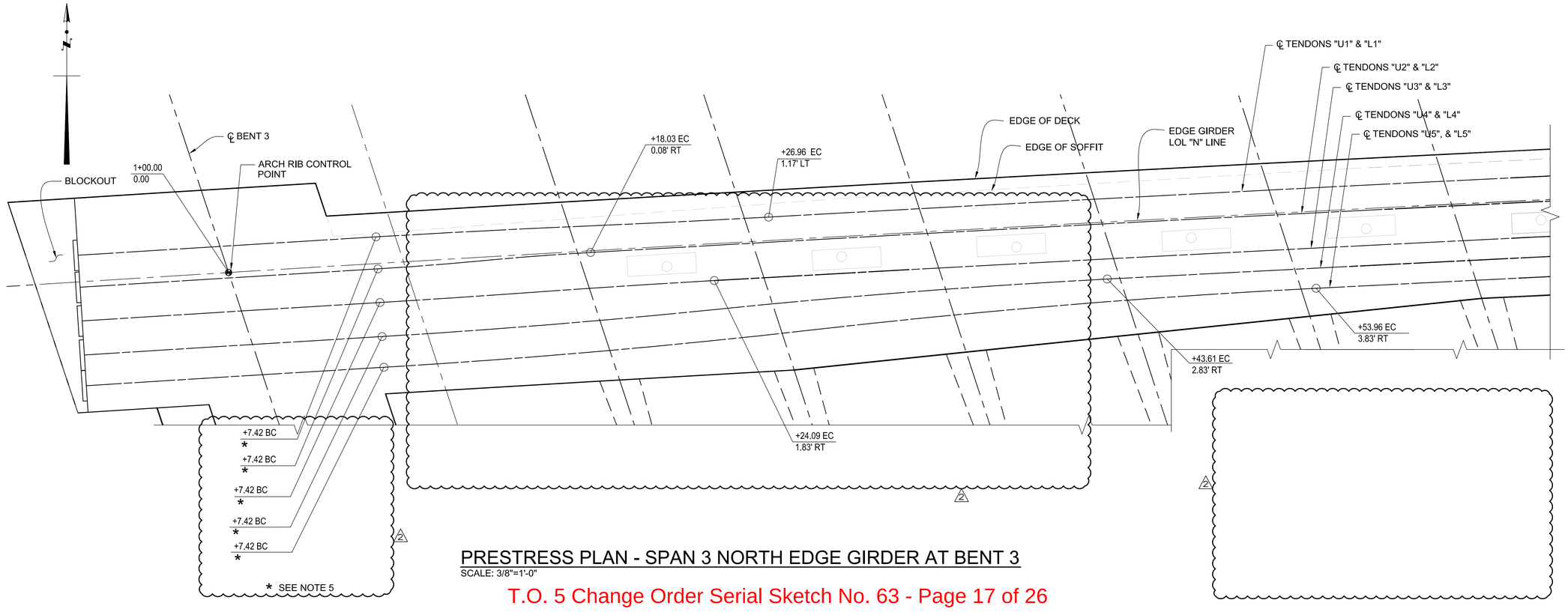

PRESTRESS PLAN - SPAN 3 NORTH EDGE GIRDER AT BENT 3
SCALE: 3/8"=1'-0"

T.O. 5 Change Order Serial Sketch No. 63 - Page 17 of 26

THE CITY OF LOS ANGELES OR ITS OFFICERS OR AGENTS SHALL NOT BE RESPONSIBLE FOR THE ACCURACY OR COMPLETENESS OF ELECTRONIC COPIES OF THIS PLAN SHEET.

C:\caddlib\pw\pwwestcoast\lzhang\dms57683\S6-81-GD01-03.dwg 5/03/18 14:21

REVISION DATES (DESIGN STAGE ONLY)

Sheet Version 3.0

BUREAU OF ENGINEERING
CITY OF LOS ANGELES

NO.	REVISIONS:	DATE:	BY:
1.	BIM REVISION 5 ECO 59	3/16/18	MHJ
2.	BIM REVISION 6 ECO 63	4/27/18	MHJ

STRUCTURE NO.
53C-2329

INDEX NO.

THIS PLAN WAS ELECTRONICALLY SIGNED AND STAMPED

REGISTERED PROFESSIONAL ENGINEER
MICHAEL H. JONES
No. S3033
CIVIL
STATE OF CALIFORNIA

CITY OF LOS ANGELES DEPARTMENT OF PUBLIC WORKS

GARY LEE MOORE, P.E. CITY ENGINEER

ENGINEER:	MICHAEL H. JONES	DESIGN GROUP	
DESIGNED BY:	MICHAEL VAN DUYN	LIC. NO. S3033	1/29/2016
DRAWN BY:	LI ZHANG		1/29/2016
CHECKED BY:	CHARLES REDFIELD		1/29/2016
APPROVED BY:	MICHAEL H. JONES		1/29/2016

VERTICAL CONTROL: BM 12-04070, 1929 (NGVD 29) - 1985 ADJUSTMENT
HORIZONTAL CONTROL: GPS; PID AE 1704, EPOCH 1991.35

SHEET TITLE: EDGE GIRDER POST TENSIONING DETAILS NO. 2

PROJECT: SIXTH STREET VIADUCT REPLACEMENT

ADDRESS: SIXTH STREET VIADUCT (WHITTIER BLVD) LOS ANGELES, CA

HNTB
HNTB Corporation
601 W. 5TH STREET SUITE 1000
LOS ANGELES, CALIFORNIA 90071
TEL (213) 403-1000 FAX (213) 403-1001

WORK ORDER NO.
E700224F

DRAWING NO.
S6-82

SHEET 380 OF 560 SHEETS

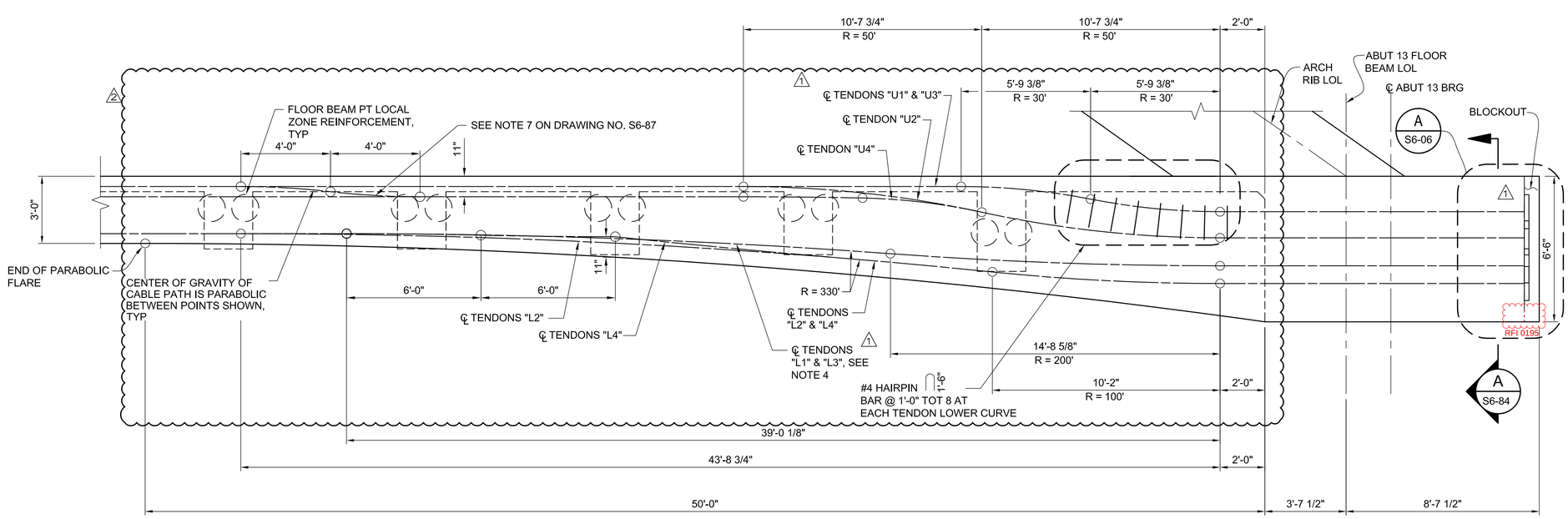

NOTES:

1. SOUTH EDGE GIRDER ELEVATION SHOWN, NORTH EDGE GIRDER ELEVATION SIMILAR.
2. FOR NORTH EDGE GIRDER PRESTRESS PLAN LAYOUT, SEE DRAWING NO. S6-84.
3. CENTERLINE OF TENDONS ARE PARALLEL TO CENTERLINE OF 6TH STREET VIADUCT U.N.O.
4. FOR ℄ TENDON "L3" ADJUST VERTICAL CURVES TO ACHIEVE POSITION SHOWN AT SECTION A, DRAWING NO. S6-84.
5. HORIZONTAL TENDON LAYOUT AND DATA SHOWN FOR "U" TENDONS. "L" TENDON LAYOUT SIMILAR, BUT OFFSET BY 9° NOMINAL CANT AT THE ANCHORAGE AS SHOWN BY SECTION A/S6-84. LONGITUDINAL TRANSITION FOR CANT OFFSET SHALL OCCUR GRADUALLY BETWEEN FACE OF ABUTMENT 13 FLOOR BEAM AND MINIMUM EDGE GIRDER FLARE DEPTH.
6. POST TENSIONING LAYOUT SHOWN AND CURVE DATA MEASURED ALONG HORIZONTAL PLANE PASSING THROUGH TENDONS "U1" AND "U3".
7. FOR BLOCKOUT POUR BACK DETAILS, SEE DRAWING NO. S6-06.
8. HAIRPIN BAR GROUPS SHALL BE CENTERED ABOUT POST TENSIONING CURVE SEGMENT.

PRESTRESS ELEVATION - SPAN 12 AT ABUTMENT 13

SCALE: 3/8"=1'-0"

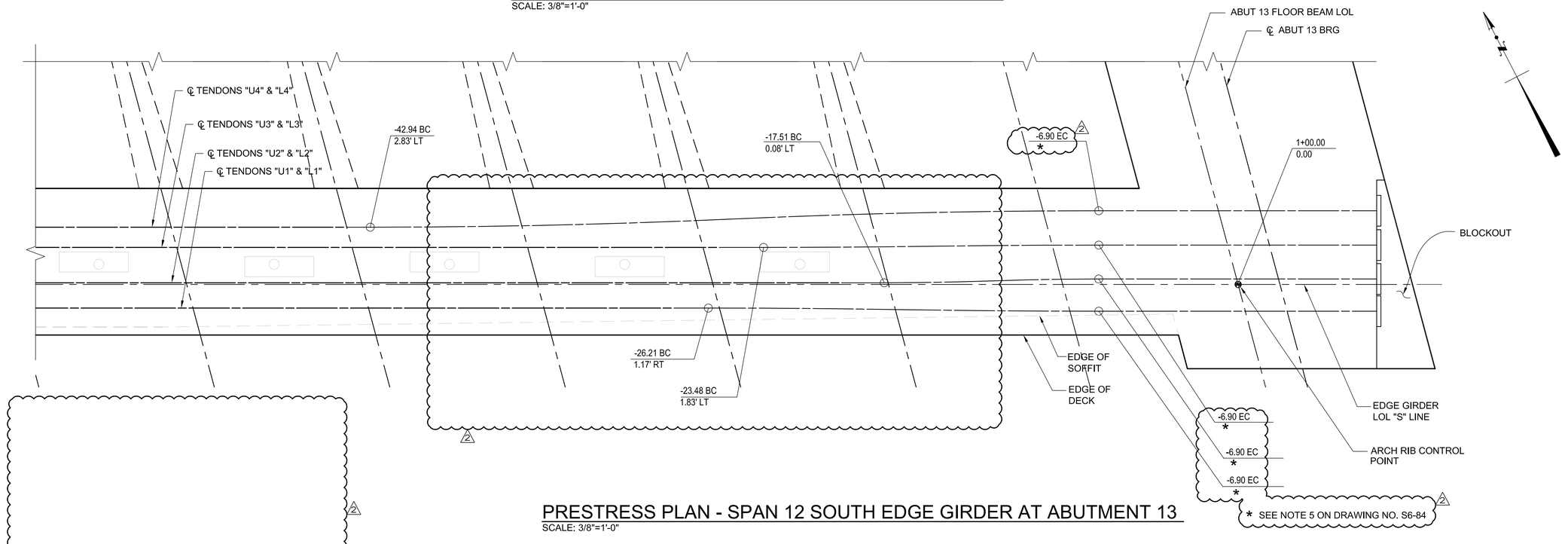

PRESTRESS PLAN - SPAN 12 SOUTH EDGE GIRDER AT ABUTMENT 13

SCALE: 3/8"=1'-0"

T.O. 5 Change Order Serial Sketch No. 63 - Page 18 of 26

HNTB
HNTB Corporation
601 W. 5TH STREET SUITE 1000
LOS ANGELES, CALIFORNIA 90071
TEL (213) 403-1000 FAX (213) 403-1001

CITY OF LOS ANGELES DEPARTMENT OF PUBLIC WORKS
BUREAU OF ENGINEERING

ENGINEERING
CITY OF LOS ANGELES

NO.	REVISIONS:	DATE	BY:
1	SUBMITTAL 0109 R1 REVISIONS	12/1/17	MVD
2	BIM REVISION 6 ECO 63 PC 1	4/27/18	MHJ

STRUCTURE NO. 53C-2329

INDEX NO.

THIS PLAN WAS ELECTRONICALLY SIGNED AND STAMPED.
REGISTERED PROFESSIONAL ENGINEER MICHAEL H. JONES No. 53033 CIVIL STATE OF CALIFORNIA

ENGINEER	CITY ENGINEER	DATE:
GARY LEE MOORE, P.E.		
DESIGN GROUP	LIC. NO. 53033	
ENGINEER: MICHAEL H. JONES		1/29/2016
DESIGNED BY: MICHAEL VAN DUYN		1/29/2016
DRAWN BY: LI ZHANG		1/29/2016
CHECKED BY: CHARLES REDFIELD		1/29/2016
APPROVED BY: MICHAEL H. JONES		1/29/2016

VERTICAL CONTROL: BM 12-04070, 1929 (NGVD 29) – 1985 ADJUSTMENT
HORIZONTAL CONTROL: GPS; PID AE 1704, EPOCH 1991.35

SHEET TITLE: EDGE GIRDER POST TENSIONING DETAILS NO. 3
PROJECT: SIXTH STREET VIADUCT REPLACEMENT
ADDRESS: SIXTH STREET VIADUCT (WHITTIER BLVD) LOS ANGELES, CA

WORK ORDER NO. E700224F
DRAWING NO. S6-83
SHEET 381 OF 560 SHEETS

REVISION DATES (DESIGN STAGE ONLY)

C:\caddlib\pw\pwwestcoast\lzhang\dms57683\S6-81-GD01-03.dwg 5/02/18 15:43

Sheet Version 3.0

THE CITY OF LOS ANGELES OR ITS OFFICERS OR AGENTS SHALL NOT BE RESPONSIBLE FOR THE ACCURACY OR COMPLETENESS OF ELECTRONIC COPIES OF THIS PLAN SHEET.

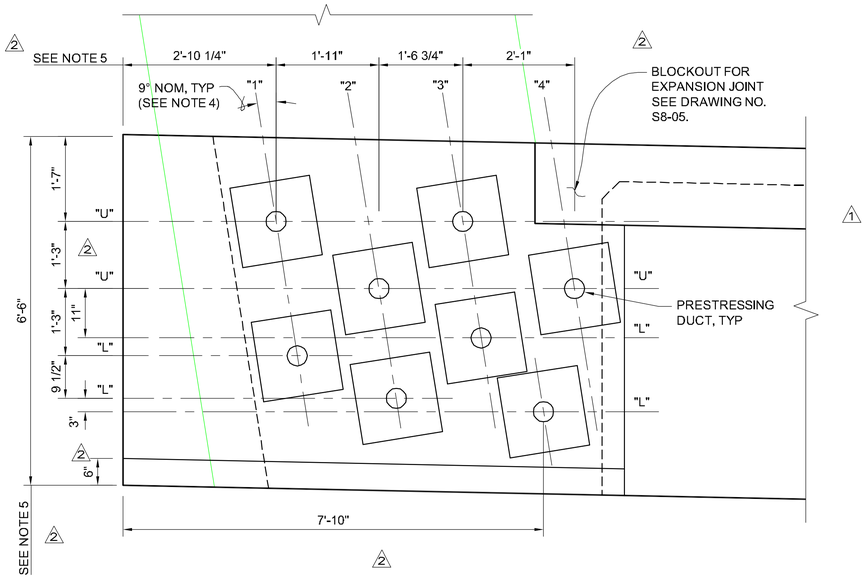

SECTION
SCALE: 3/4"=1'-0"

A
S6-83

NOTES:

1. FOR ADDITIONAL NOTES, SEE DRAWING NO. S6-83.
2. ALIGN PRESTRESSING ANCHORAGE DEVICES IN THE PLANE NORMAL TO THE CENTERLINE OF EDGE GIRDER.
3. PRESTRESSING DUCTS ARE PLACED IN CLEARANCE WINDOWS BETWEEN ARCH RIB LONGITUDINAL REINFORCEMENT.
4. SEE NOTE 2 ON DRAWING NO. S3-15 AND NOTE 5 ON DRAWING NO. S6-83.
5. TENDON ANCHORAGE LOCATION MAY BE MODIFIED TO ACCOMMODATE THE SELECTED PLATE ANCHORAGE SYSTEM. PURSUANT TO FINAL ANCHORAGE LAYOUT, TRANSITION "U" DUCTS BY USING A REVERSED CURVE WITH EQUAL RADII BETWEEN CONTROL POINTS SHOWN AT EACH END. SET "L" DUCT LAYOUT AS REQUIRED BY NOTE 5 ON DRAWING NO. S6-83.

UCO 105

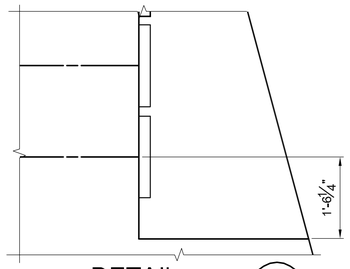

DETAIL
SCALE: 1"=1'-0"

2
-

PRESTRESS PLAN - SPAN 12 NORTH EDGE GIRDER AT ABUTMENT 13
SCALE: 3/8"=1'-0"

T.O. 5 Change Order Serial Sketch No. 63 - Page 19 of 26

THE CITY OF LOS ANGELES OR ITS OFFICERS OR AGENTS SHALL NOT BE RESPONSIBLE FOR THE ACCURACY OR COMPLETENESS OF ELECTRONIC COPIES OF THIS PLAN SHEET.

C:\caddlib\pw\pwwestcoast\zhang\dms576831\S6-81-6001-03.dwg 5/01/18 16:50

Sheet Version 3.0

REVISION DATES (DESIGN STAGE ONLY)

CITY OF LOS ANGELES DEPARTMENT OF PUBLIC WORKS
BUREAU OF ENGINEERING
ENGINEERING
CITY OF LOS ANGELES

NO.	REVISIONS:	DATE:	BY:
1	SUBMITTAL 0103 R1 REVISIONS PC 1	12/1/17	MVD
2	BIM REVISION 4 ECO 57 ECO 63	02/18/16	MHJ
3	BIM REVISION 6	4/27/16	MHJ

STRUCTURE NO. 53C-2329

INDEX NO.

THIS PLAN WAS ELECTRONICALLY SIGNED AND STAMPED.

REGISTERED PROFESSIONAL ENGINEER MICHAEL H. JONES No. S3033 CIVIL STATE OF CALIFORNIA

GARY LEE MOORE, P.E. CITY ENGINEER

DESIGN GROUP	LIC. NO. S3033	DATE:	1/29/2016
ENGINEER:	MICHAEL H. JONES		1/29/2016
DESIGNED BY:	MICHAEL VAN DUYN		1/29/2016
DRAWN BY:	LI ZHANG		1/29/2016
CHECKED BY:	CHARLES REDFIELD		1/29/2016
APPROVED BY:	MICHAEL H. JONES		1/29/2016

VERTICAL CONTROL: BM 12-04070,1929 (NGVD 29) - 1985 ADJUSTMENT
HORIZONTAL CONTROL: GPS; P/O AE 1704, EPOCH 1991.35

SHEET TITLE: EDGE GIRDER POST TENSIONING DETAILS NO. 4

PROJECT: SIXTH STREET VIADUCT REPLACEMENT

ADDRESS: SIXTH STREET VIADUCT (WHITTIER BLVD) LOS ANGELES, CA

HNTB
HNTB Corporation
601 W. 5TH STREET SUITE 1000
LOS ANGELES, CALIFORNIA 90071
TEL (213) 403-1000 FAX (213) 403-1001

WORK ORDER NO. E700224F

DRAWING NO. S6-84

SHEET 382 OF 560 SHEETS

ADDENDUM 5

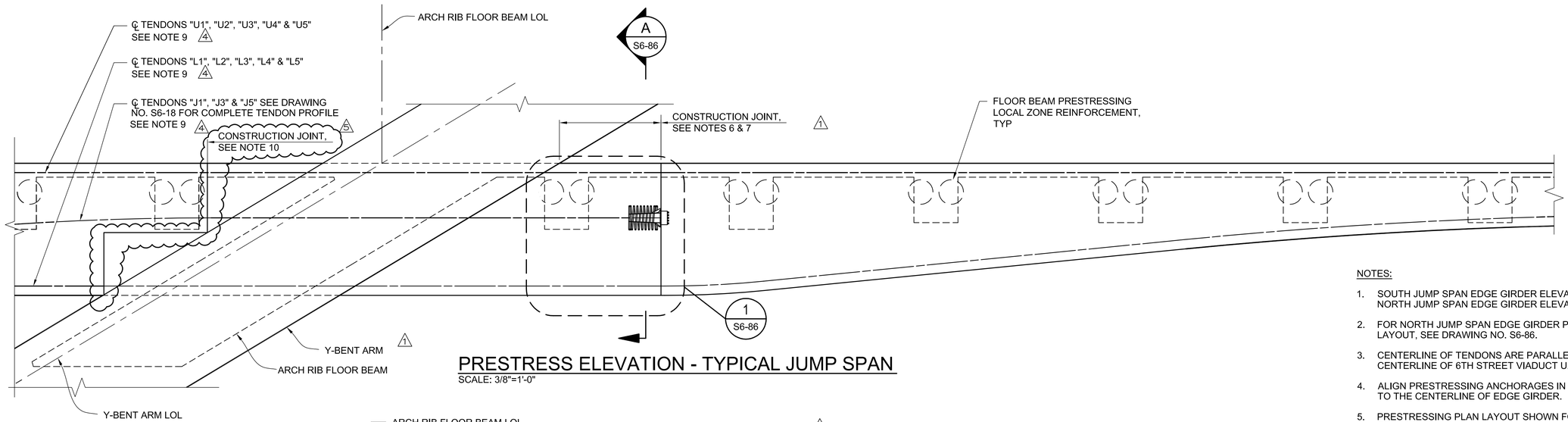

PRESTRESS ELEVATION - TYPICAL JUMP SPAN

SCALE: 3/8"=1'-0"

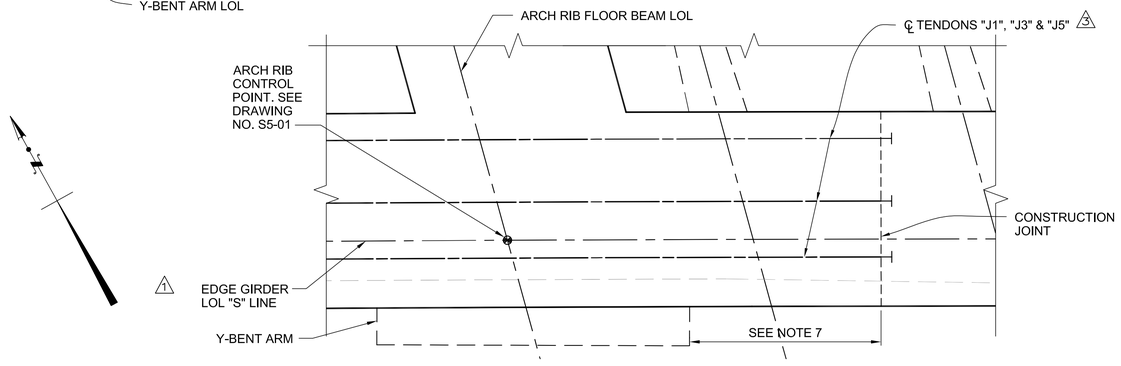

PRESTRESS PLAN - TYPICAL JUMP SPAN, J - TENDONS

SCALE: 3/8"=1'-0"

(SOUTH EDGE GIRDER SHOWN, NORTH EDGE GIRDER SIMILAR)

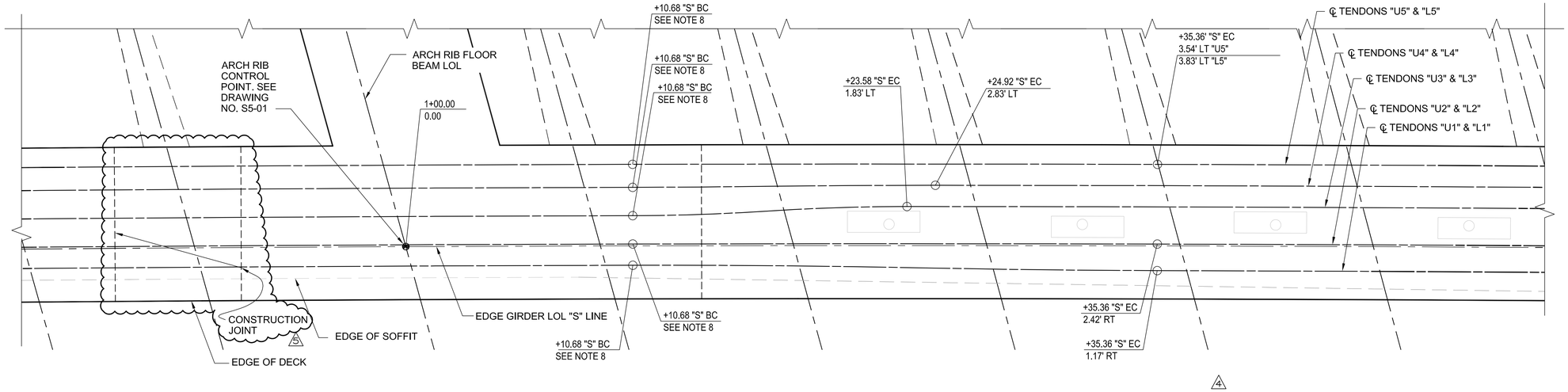

PRESTRESS PLAN - TYPICAL JUMP SPAN, SOUTH EDGE GIRDER

SCALE: 3/8"=1'-0"

(BENT 11 EAST SHOWN, OTHERS SIMILAR)

NOTES:

1. SOUTH JUMP SPAN EDGE GIRDER ELEVATION SHOWN, NORTH JUMP SPAN EDGE GIRDER ELEVATION SIMILAR.
2. FOR NORTH JUMP SPAN EDGE GIRDER PRESTRESS PLAN LAYOUT, SEE DRAWING NO. S6-86.
3. CENTERLINE OF TENDONS ARE PARALLEL TO CENTERLINE OF 6TH STREET VIADUCT U.N.O.
4. ALIGN PRESTRESSING ANCHORAGES IN THE PLANE NORMAL TO THE CENTERLINE OF EDGE GIRDER.
5. PRESTRESSING PLAN LAYOUT SHOWN FOR EAST Y-BENT TRANSITION.
   WEST TRANSITION SIMILAR AND OPPOSITE.
6. FOR CONSTRUCTION JOINT DELINEATION DETAILS, SEE DRAWING NO. S9-08.
7. FOR DIMENSION TO CONSTRUCTION JOINT, SEE DRAWINGS S6-11 TO S6-17. DIMENSION IS MEASURED AT TOP OF DECK. 1
8. THE CHANGE IN ALIGNMENT AT U AND L PRESTRESS DUCTS FACILITATES DUCT CLEARANCE THROUGH THE KNUCKLE REGION OF Y-BENTS. AS DETERMINED BY BIM. TRANSITION POST-TENSIONING DUCTS, BY USING A CIRCULAR REVERSED CURVE. SEE NOTE 2 ON DRAWING NO. S6-80. 4
9. THE CHANGE IN TRANSVERSE ALIGNMENT OF POST-TENSIONING DUCTS THROUGH Y-BENT KNUCKLE JOINTS IS ESTABLISHED THROUGH BIM. IF POST-TENSIONING DUCT TRANSVERSE OFFSETS VARY BETWEEN EAST AND WEST KNUCKLE JOINTS AT JUMP SPANS, MAKE THE TRANSITION WITH A FULL LENGTH CIRCULAR REVERSED CURVE BETWEEN THE EAST FACE OF THE WEST KNUCKLE JOINT AND THE WEST FACE OF THE EAST KNUCKLE JOINT. 2 4
10. LOCATION OF CONSTRUCTION JOINT DETERMINED BY PROVIDING CLEARANCE FOR FLOOR BEAM AND FLOOR BEAM POST TENSIONING ANCHORAGE AND DUCTS. FOR JOINT PREPARATION, SEE NOTE 10 ON DRAWING NO. S6-11. 5

THIS PLAN WAS ELECTRONICALLY SIGNED AND STAMPED.

REGISTERED PROFESSIONAL ENGINEER GARY LEE MOORE No. S3033 CIVIL STATE OF CALIFORNIA

BUREAU OF ENGINEERING

ENGINEERING CITY OF LOS ANGELES

NO.	REVISIONS:	DATE	BY:
1	FLOOR BEAM SPACING MODIFICATION CO 13R1	12/13/16	MHJ
2	BENT 12 BIM ECO 36R1	07/12/17	MHJ
3	ABUTMENT 13 / BENT 10 BIM ECO 50R1	12/15/17	MYD
4	BIM REVISION 6 ECO 63	4/27/18	MHJ
5	FRAME CONSTRUCTION JOINT AND ARCH RIB UPDATES ECO 71	07/13/18	MHJ

STRUCTURE NO. 53C-2329

INDEX NO.

CITY OF LOS ANGELES DEPARTMENT OF PUBLIC WORKS

GARY LEE MOORE, P.E. CITY ENGINEER

		DATE:
ENGINEER:	MICHAEL H. JONES	DESIGN GROUP
DESIGNED BY:	MICHAEL VAN DUYN	1/29/2016
DRAWN BY:	LI ZHANG	1/29/2016
CHECKED BY:	CHARLES REDFIELD	1/29/2016
APPROVED BY:	MICHAEL H. JONES	1/29/2016

LIC. NO. S3033

VERTICAL CONTROL: BM 12-04070,1929 (NGVD 29) – 1985 ADJUSTMENT
HORIZONTAL CONTROL: GPS; PID AE 1704, EPOCH 1991.35

SHEET TITLE: EDGE GIRDER POST TENSIONING DETAILS NO. 5

PROJECT: SIXTH STREET VIADUCT REPLACEMENT

ADDRESS: SIXTH STREET VIADUCT (WHITTIER BLVD) LOS ANGELES, CA

HNTB
HNTB Corporation
601 W. 5TH STREET SUITE 1000
LOS ANGELES, CALIFORNIA 90071
TEL (213) 403-1000 FAX (213) 403-1001

WORK ORDER NO. E700224F

DRAWING NO. S6-85

SHEET 383 OF 560 SHEETS

T.O. 5 - Change Order Serial Sketch No. 71 - Page 10 of 15

THE CITY OF LOS ANGELES OR ITS OFFICERS OR AGENTS SHALL NOT BE RESPONSIBLE FOR THE ACCURACY OR COMPLETENESS OF ELECTRONIC COPIES OF THIS PLAN SHEET.

REVISION DATES (DESIGN STAGE ONLY)

C:\caddlib\pw\pwwestcoast\lzhang\dms57683\S6-81-6D01-03.dwg 7/10/18 18:26

Sheet Version 3.0

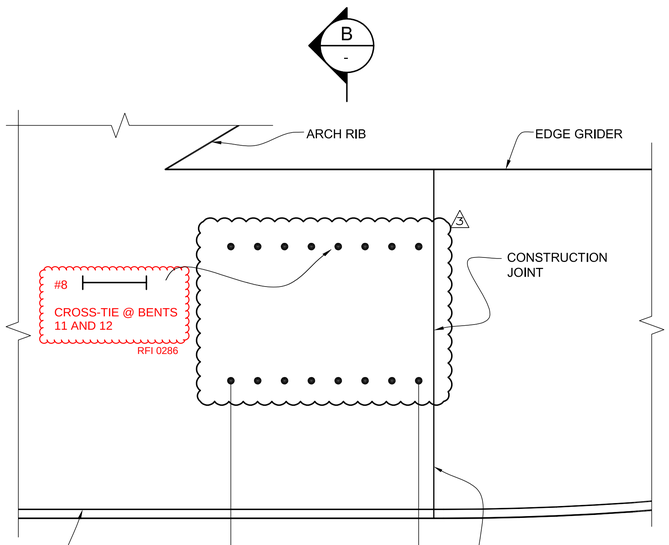

DETAIL 1 / S6-85
SCALE: 3/4"=1'-0"

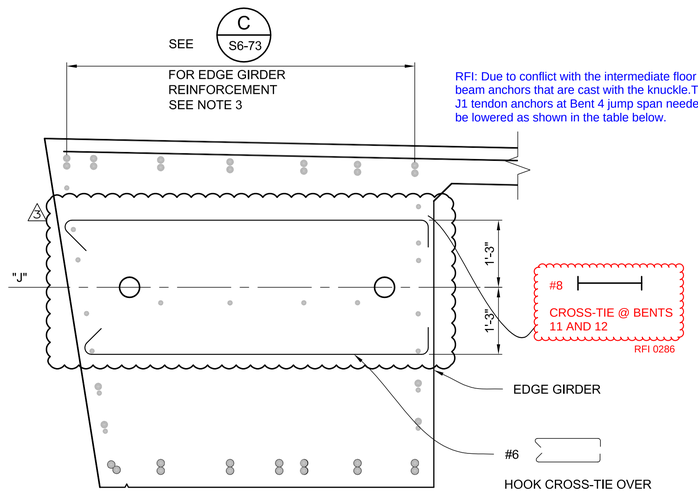

SECTION B / -
SCALE: 3/4"=1'-0"

"U" AND "L" TENDON DUCTS NOT SHOWN

RFI: Due to conflict with the intermediate floor beam anchors that are cast with the knuckle.The J1 tendon anchors at Bent 4 jump span needed to be lowered as shown in the table below.

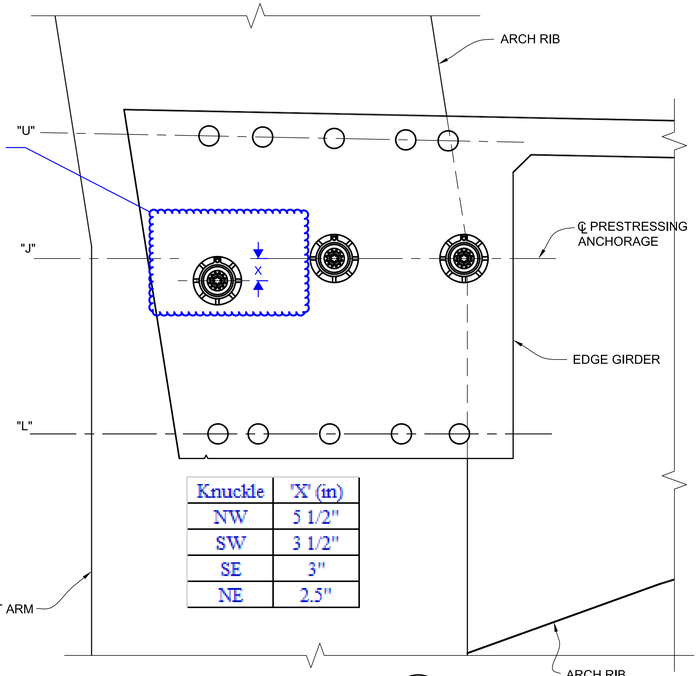

Knuckle	'X' (in)
NW	5 1/2"
SW	3 1/2"
SE	3"
NE	2.5"

SECTION A / S6-85
SCALE: 3/4"=1'-0"

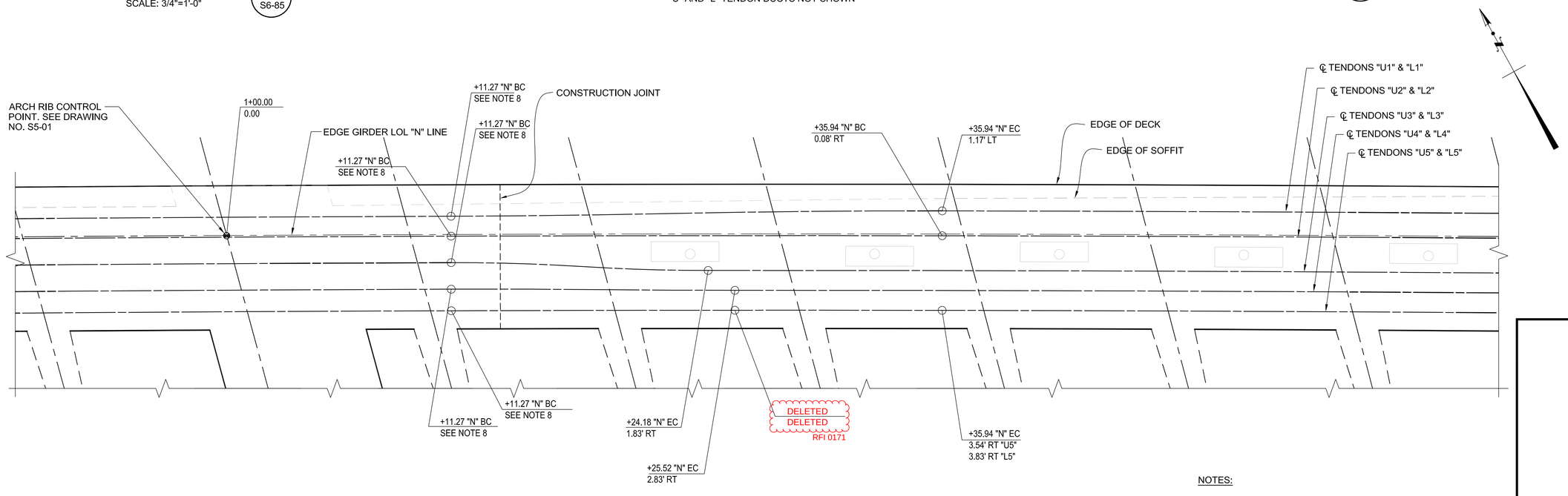

PRESTRESS PLAN - TYPICAL JUMP SPAN, NORTH EDGE GIRDER

SCALE: 3/8"=1'-0"

(BENT 11 EAST SHOWN, OTHERS SIMILAR)

NOTES:

1. FOR ADDITIONAL NOTES, SEE DRAWING S6-85.
2. ALIGN PRESTRESSING ANCHORAGES IN THE PLANE NORMAL TO THE CENTERLINE OF EDGE GIRDER.
3. REPLACE EDGE GIRDER CROSS TIE WITH CROSS TIES SHOWN IN SECTION B, THIS DRAWING.
4. OMIT #6 CROSS-TIES WHERE #8 HEADED REBAR CROSS-TIES OCCUR. SEE DRAWING S3-24. △1

T.O. 5 - Change Order Serial Sketch No. 71 - Page 11 of 15

HNTB
HNTB Corporation
601 W. 5TH STREET SUITE 1000
LOS ANGELES, CALIFORNIA 90071
TEL (213) 403-1000 FAX (213) 403-1001

THE CITY OF LOS ANGELES OR ITS OFFICERS OR AGENTS SHALL NOT BE RESPONSIBLE FOR THE ACCURACY OR COMPLETENESS OF ELECTRONIC COPIES OF THIS PLAN SHEET.

C:\caddlib\pw\pwwestcoast\zhang\dms57683\S6-81-GD01-03.dwg 7/26/18 09:53

REVISION DATES (DESIGN STAGE ONLY)

Sheet Version 3.0

CITY OF LOS ANGELES DEPARTMENT OF PUBLIC WORKS

BUREAU OF ENGINEERING

ENGINEERING
CITY OF LOS ANGELES

NO.	REVISIONS:	DATE:	BY:
1.	FLOOR BEAM SPACING MODIFICATION CO 13R1	12/13/16	MHJ
2.	BIM REVISION 6 ECO 63	4/27/18	MHJ
3.	FRAME CONSTRUCTION JOINT AND ARCH RIB UPDATES *ECO 71	7/13/18	MHJ

STRUCTURE NO.
53C-2329

INDEX NO.

THIS PLAN WAS ELECTRONICALLY SIGNED AND STAMPED

REGISTERED PROFESSIONAL ENGINEER
MICHAEL H. JONES
No. S3033
CIVIL
STATE OF CALIFORNIA

GARY LEE MOORE, P.E.
CITY ENGINEER

	DESIGN GROUP	LIC. NO. S3033	DATE:
ENGINEER:	MICHAEL H. JONES		1/29/2016
DESIGNED BY:	MICHAEL VAN DUYN		1/29/2016
DRAWN BY:	LI ZHANG		1/29/2016
CHECKED BY:	CHARLES REDFIELD		1/29/2016
APPROVED BY:	MICHAEL H. JONES		1/29/2016

VERTICAL CONTROL: BM 12-04070, 1929 (NGVD 29) - 1985 ADJUSTMENT
HORIZONTAL CONTROL: GPS; PID AE 1704, EPOCH 1991.35

SHEET TITLE: EDGE GIRDER POST TENSIONING DETAILS NO. 6

PROJECT: SIXTH STREET VIADUCT REPLACEMENT

ADDRESS: SIXTH STREET VIADUCT (WHITTIER BLVD) LOS ANGELES, CA

WORK ORDER NO.
E700224F

DRAWING NO.
S6-86

SHEET 384 OF 560 SHEETS

ADDENDUM 5

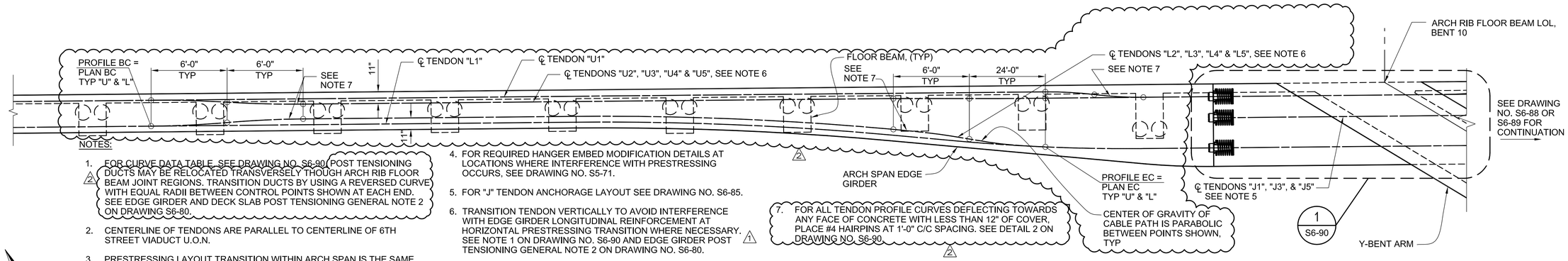

NOTES:

1. FOR CURVE DATA TABLE, SEE DRAWING NO. S6-90. POST TENSIONING DUCTS MAY BE RELOCATED TRANSVERSELY THOUGH ARCH RIB FLOOR BEAM JOINT REGIONS. TRANSITION DUCTS BY USING A REVERSED CURVE WITH EQUAL RADII BETWEEN CONTROL POINTS SHOWN AT EACH END. SEE EDGE GIRDER AND DECK SLAB POST TENSIONING GENERAL NOTE 2 ON DRAWING S6-80.
2. CENTERLINE OF TENDONS ARE PARALLEL TO CENTERLINE OF 6TH STREET VIADUCT U.O.N.
3. PRESTRESSING LAYOUT TRANSITION WITHIN ARCH SPAN IS THE SAME FOR EACH FRAME CONSTRUCTION JOINT, BUT VARIES AT THE JUMP SPAN. PRESTRESSING LAYOUT SHOWN IS AT BENT 10 AT CONSTRUCTION JOINT BETWEEN FRAMES 4 & 5. PRESTRESSING LAYOUT AT BENT 8 AT CONSTRUCTION JOINT BETWEEN FRAMES 3 & 4, AND AT BENT 6 AT CONSTRUCTION JOINT BETWEEN FRAMES 2 & 3 SIMILAR.
4. FOR REQUIRED HANGER EMBED MODIFICATION DETAILS AT LOCATIONS WHERE INTERFERENCE WITH PRESTRESSING OCCURS, SEE DRAWING NO. S5-71.
5. FOR "J" TENDON ANCHORAGE LAYOUT SEE DRAWING NO. S6-85.
6. TRANSITION TENDON VERTICALLY TO AVOID INTERFERENCE WITH EDGE GIRDER LONGITUDINAL REINFORCEMENT AT HORIZONTAL PRESTRESSING TRANSITION WHERE NECESSARY. SEE NOTE 1 ON DRAWING NO. S6-90 AND EDGE GIRDER POST TENSIONING GENERAL NOTE 2 ON DRAWING NO. S6-80.
7. FOR ALL TENDON PROFILE CURVES DEFLECTING TOWARDS ANY FACE OF CONCRETE WITH LESS THAN 12" OF COVER, PLACE #4 HAIRPINS AT 1'-0" C/C SPACING. SEE DETAIL 2 ON DRAWING NO. S6-90.

PRESTRESS ELEVATION - FRAME CONSTRUCTION JOINT

SCALE: 1/4"=1'-0"

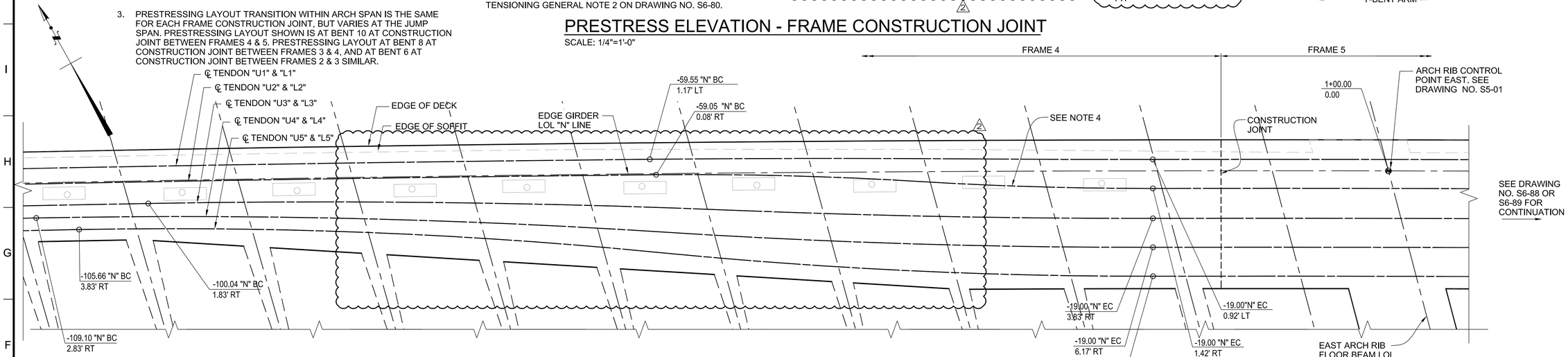

PRESTRESS PLAN - FRAME CONSTRUCTION JOINT, NORTH EDGE GIRDER

SCALE: 1/4"=1'-0"

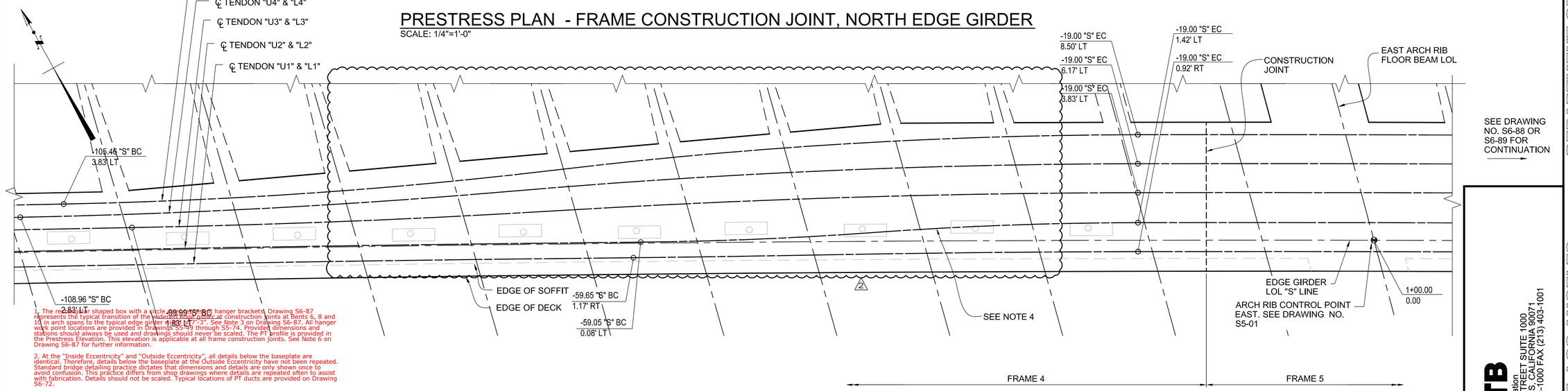

1. The rectangular shaped box with a circle around the hanger brackets Drawing S6-87 represents the typical transition of the vertical edge girder at construction joints at Bents 6, 8 and 10 in arch spans to the typical edge girder at "2-3". See Note 3 on Drawing S6-87. All hanger work point locations are provided in Drawings S5-70 through S5-74. Provided dimensions and stations should always be used and drawings should never be scaled. The PT profile is provided in the Prestress Elevation. This elevation is applicable at all frame construction joints. See Note 6 on Drawing S6-87 for further information.

2. At the "Inside Eccentricity" and "Outside Eccentricity", all details below the baseplate are identical. Therefore, details below the baseplate at the Outside Eccentricity have not been repeated. Standard bridge detailing practice dictates that dimensions and details are only shown once to avoid confusion. This practice differs from shop drawings where details are repeated often to assist with fabrication. Details should not be scaled. Typical locations of PT ducts are provided on Drawing S6-72.

3. At the first, second, and third lower hanger bracket, note 13 on Drawing S5-72 provides requirements when preparing shop drawings for hanger brackets at these locations.

4. Deck drain required locations at Arch Spans are depicted on Drawing S8-30. These locations should be used in conjunction with Drawing S8-32 to further establish the location of the deck inlets. Any location between the arch rib floor beam and the first typical floor beam that complies with the framing requirements of Drawing S8-32 is acceptable.

5. During previous discussions with SSW, it was determined that deck drainage piping should remain outside of the edge girder to avoid conflict with edge girder reinforcement. This slight adjustment will be recorded on the as-built drawings.

PRESTRESS PLAN - FRAME CONSTRUCTION JOINT, SOUTH EDGE GIRDER

SCALE: 1/4"=1'-0"

T.O. 5 Change Order Serial Sketch No. 63 - Page 22 of 26

THE CITY OF LOS ANGELES OR ITS OFFICERS OR AGENTS SHALL NOT BE RESPONSIBLE FOR THE ACCURACY OR COMPLETENESS OF ELECTRONIC COPIES OF THIS PLAN SHEET.

C:\caddlib\pw\pwwestcoast\zhang\dms57683\S6-87-G001-03.dwg 5/03/18 14:24

REVISION DATES (DESIGN STAGE ONLY)

Sheet Version 3.0

BUREAU OF ENGINEERING

ENGINEERING
CITY OF LOS ANGELES

NO.	REVISIONS:	DATE:	BY:
1.	ABUTMENT 13 / BENT 10 BIM ECO 50R1	12/15/17	M/D
2.	BIM REVISION 6 ECO 63	4/27/18	MHJ

STRUCTURE NO. 53C-2329

INDEX NO.

THIS PLAN WAS ELECTRONICALLY SIGNED AND STAMPED

REGISTERED PROFESSIONAL ENGINEER MICHAEL H. JONES No. S3033 CIVIL STATE OF CALIFORNIA

CITY OF LOS ANGELES DEPARTMENT OF PUBLIC WORKS

GARY LEE MOORE, P.E. CITY ENGINEER

		DATE:
ENGINEER:	MICHAEL H. JONES	1/29/2016
DESIGNED BY:	MICHAEL VAN DUYN	1/29/2016
DRAWN BY:	LI ZHANG	1/29/2016
CHECKED BY:	CHARLES REDFIELD	1/29/2016
APPROVED BY:	MICHAEL H. JONES	1/29/2016

DESIGN GROUP
LIC. NO. S3033

VERTICAL CONTROL: BM 12-04070, 1929 (NGVD 29) - 1985 ADJUSTMENT
HORIZONTAL CONTROL: GPS; PID AE 1704, EPOCH 1991.35

SHEET TITLE: EDGE GIRDER POST TENSIONING DETAILS NO. 7

PROJECT: SIXTH STREET VIADUCT REPLACEMENT

ADDRESS: SIXTH STREET VIADUCT (WHITTIER BLVD) LOS ANGELES, CA

HNTB
HNTB Corporation
601 W. 5TH STREET SUITE 1000
LOS ANGELES, CALIFORNIA 90071
TEL (213) 403-1000 FAX (213) 403-1001

WORK ORDER NO. E700224F

DRAWING NO. S6-87

SHEET 385 OF 560 SHEETS

ADDENDUM 5

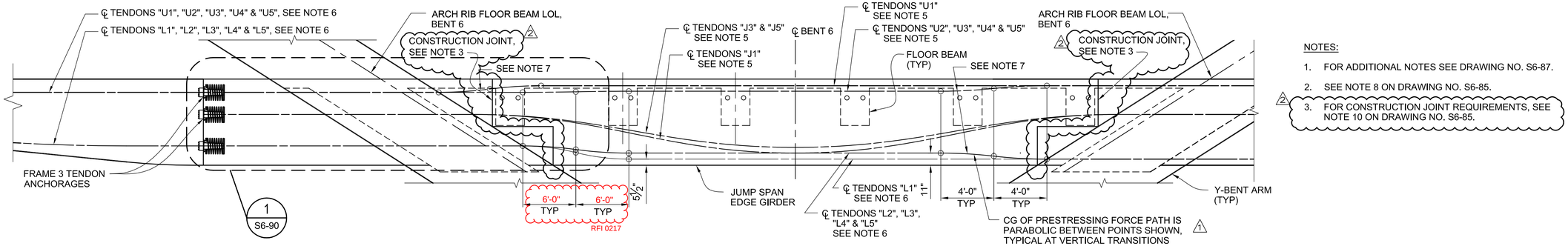

NOTES:

1. FOR ADDITIONAL NOTES SEE DRAWING NO. S6-87.
2. SEE NOTE 8 ON DRAWING NO. S6-85.
3. FOR CONSTRUCTION JOINT REQUIREMENTS, SEE NOTE 10 ON DRAWING NO. S6-85.

PRESTRESS ELEVATION - FRAME CONSTRUCTION JOINT

SCALE: 1/4"=1'-0"

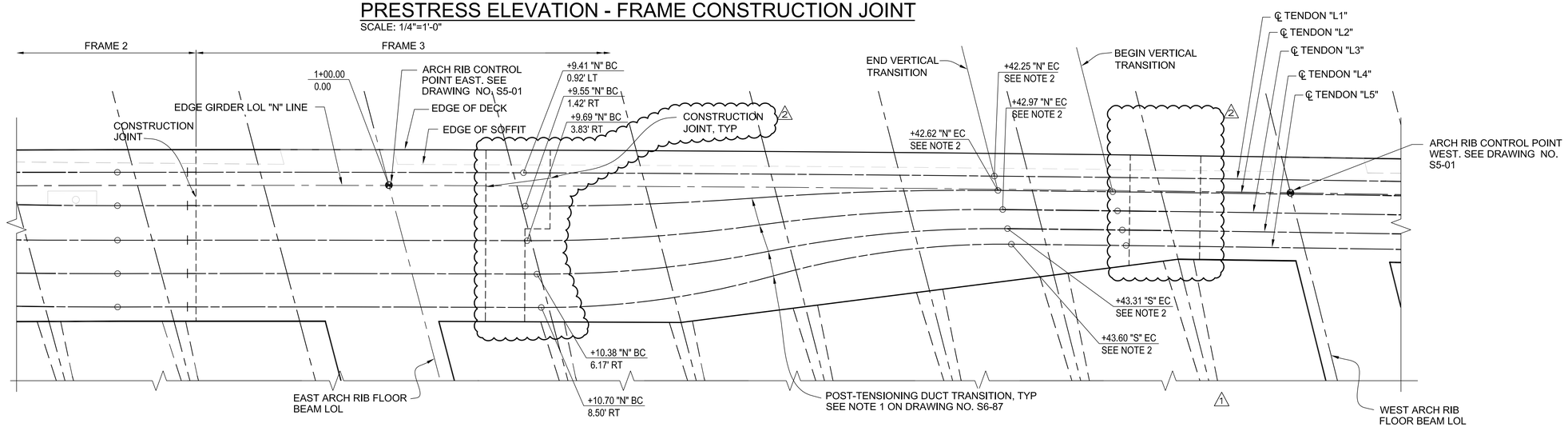

PRESTRESS PLAN - FRAME CONSTRUCTION JOINT, NORTH EDGE GIRDER

SCALE: 1/4"=1'-0"

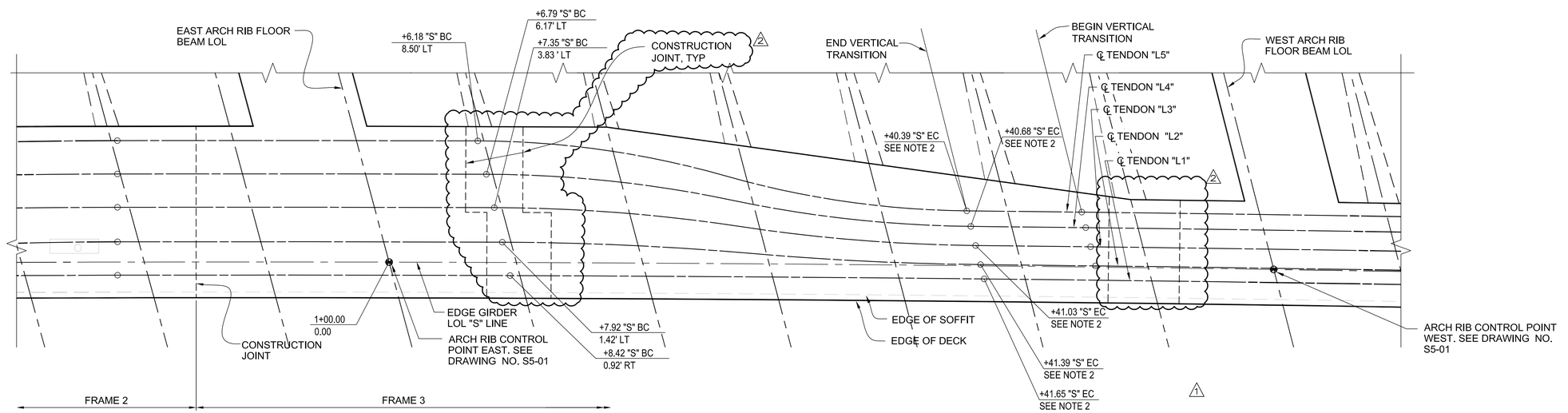

PRESTRESS PLAN - FRAME CONSTRUCTION JOINT, SOUTH EDGE GIRDER

SCALE: 1/4"=1'-0"

T.O. 5 - Change Order Serial Sketch No. 71 - Page 13 of 15

THE CITY OF LOS ANGELES OR ITS OFFICERS OR AGENTS SHALL NOT BE RESPONSIBLE FOR THE ACCURACY OR COMPLETENESS OF ELECTRONIC COPIES OF THIS PLAN SHEET.

C:\caddlib\pw\pwwestcoast\zhang\dms57683\S6-81-0001-03.dwg 7/12/18 18:05

REVISION DATES (DESIGN STAGE ONLY)

Sheet Version 3.0

BUREAU OF ENGINEERING

ENGINEERING
CITY OF LOS ANGELES

NO.	REVISIONS:	DATE	BY:
1.	BIM REVISION 6 ECO 63	4/27/18	MHJ
2.	FRAME CONSTRUCTION JOINT AND ARCH RIB UPDATES. *ECO 71	07/13/18	MHJ

STRUCTURE NO. 53C-2329

INDEX NO.

THIS PLAN WAS ELECTRONICALLY SIGNED AND STAMPED.

REGISTERED PROFESSIONAL ENGINEER MICHAEL H. JONES No. S3033 CIVIL STATE OF CALIFORNIA

CITY OF LOS ANGELES DEPARTMENT OF PUBLIC WORKS

GARY LEE MOORE, P.E. CITY ENGINEER

	DESIGN GROUP	LIC. NO. S3033	DATE:
ENGINEER:	MICHAEL H. JONES		1/29/2016
DESIGNED BY:	MICHAEL VAN DUYN		1/29/2016
DRAWN BY:	LI ZHANG		1/29/2016
CHECKED BY:	CHARLES REDFIELD		1/29/2016
APPROVED BY:	MICHAEL H. JONES		1/29/2016

VERTICAL CONTROL: BM 12-04070,1929 (NGVD 29) - 1985 ADJUSTMENT
HORIZONTAL CONTROL: GPS; PID AE 1704, EPOCH 1991.35

SHEET TITLE: EDGE GIRDER POST TENSIONING DETAILS NO. 9

PROJECT: SIXTH STREET VIADUCT REPLACEMENT

ADDRESS: SIXTH STREET VIADUCT (WHITTIER BLVD) LOS ANGELES, CA

HNTB
HNTB Corporation
601 W. 5TH STREET SUITE 1000
LOS ANGELES, CALIFORNIA 90071
TEL (213) 403-1000 FAX (213) 403-1001

WORK ORDER NO. E700224F

DRAWING NO. S6-89

SHEET 387 OF 560 SHEETS

ADDENDUM 5

NOTES:

1. WITHIN EDGE GIRDER HORIZONTAL FLARE, ADJUST PRESTRESSING TO MAINTAIN 2" MINIMUM VERTICAL CLEARANCE BETWEEN PRESTRESSING DUCTS AND EDGE GIRDER LONGITUDINAL BUNDLED REINFORCEMENT. SEE EDGE GIRDER POST TENSIONING GENERAL NOTE 2 ON DRAWING NO. S6-80. (2)
2. FOR POST TENSIONING OFFSET DIMENSIONS NOT SHOWN, SEE DRAWING NO.S S6-11 THROUGH S6-18.
3. DIMENSION IS MEASURED BETWEEN THE INTERSECTIONS OF THE CENTER OF GRAVITY OF CABLE PATH AND TOP OF Y-BENT ARMS ALONG EDGE GIRDER LOL.
4. HAIRPIN BAR GROUPS SHALL BE CENTERED ABOUT POST TENSIONING CURVE SEGMENT.
5. FOR "U" & "L" TENDON PROFILE VARIATIONS, SEE DRAWINGS S6-88 & S6-89. (3)

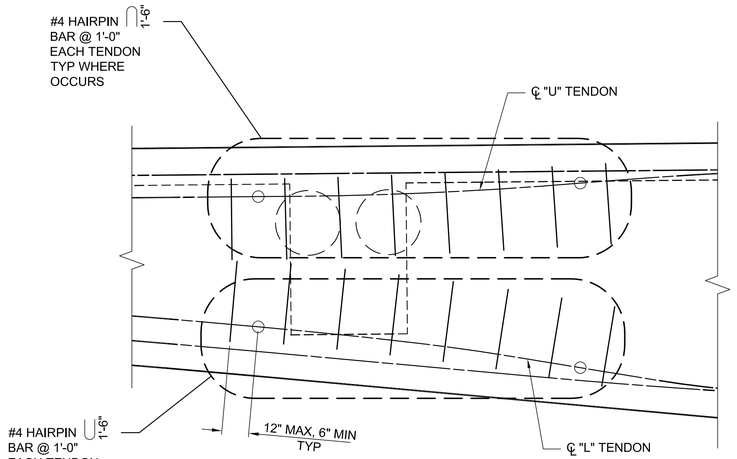

DETAIL 2 — SCALE: 3/4"=1'-0" — S6-87, S6-88, S6-89

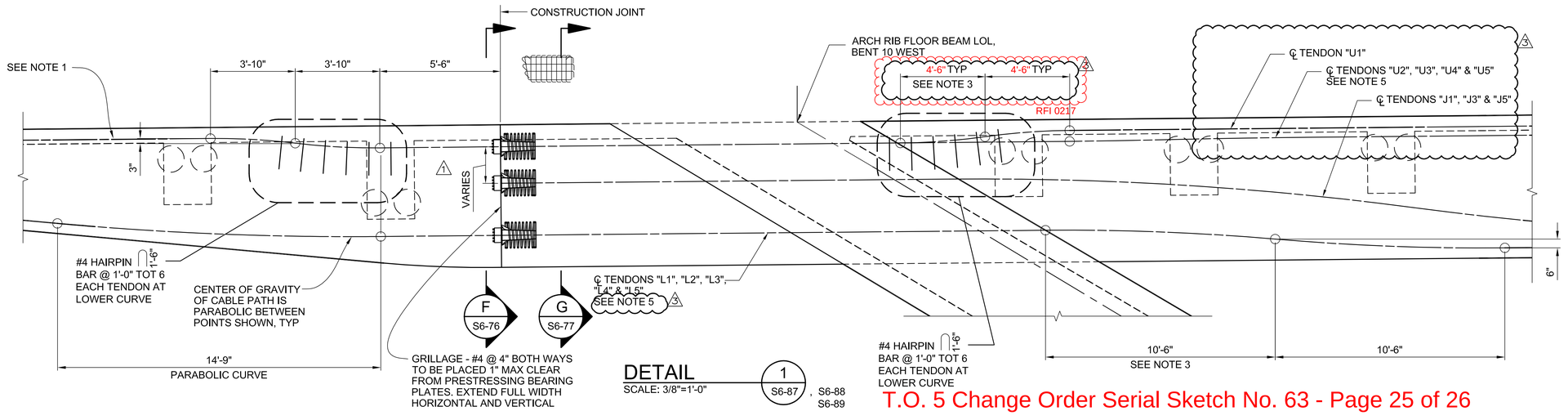

DETAIL 1 — SCALE: 3/8"=1'-0" — S6-87, S6-88, S6-89

T.O. 5 Change Order Serial Sketch No. 63 - Page 25 of 26

BUREAU OF ENGINEERING — DEPARTMENT OF PUBLIC WORKS — CITY OF LOS ANGELES

ENGINEERING — CITY OF LOS ANGELES

NO.	REVISIONS:	DATE	BY:
1.	SUBMITTAL 0109 R1 REVISIONS PC 1	12/1/17	MVD
2.	ABUTMENT 13 / BENT 10 BIM ECO 50R1	12/15/17	MVD
3.	BIM REVISION 6 ECO 63	04/27/18	MHJ

STRUCTURE NO. 53C-2329

INDEX NO.

THIS PLAN WAS ELECTRONICALLY SIGNED AND STAMPED

REGISTERED PROFESSIONAL ENGINEER — MICHAEL H. JONES — No. S3033 — CIVIL — STATE OF CALIFORNIA

GARY LEE MOORE, P.E. — CITY ENGINEER

		DATE:
DESIGN GROUP		
ENGINEER:	MICHAEL H. JONES LIC. NO. S3033	1/29/2016
DESIGNED BY:	MICHAEL VAN DUYN	1/29/2016
DRAWN BY:	LI ZHANG	1/29/2016
CHECKED BY:	CHARLES REDFIELD	1/29/2016
APPROVED BY:	MICHAEL H. JONES	1/29/2016

VERTICAL CONTROL: BM 12-04070.1928 (NGVD 29) - 1985 ADJUSTMENT
HORIZONTAL CONTROL: GPS; PID AE 1704, EPOCH 1991.35

SHEET TITLE: EDGE GIRDER POST TENSIONING DETAILS NO. 10

PROJECT: SIXTH STREET VIADUCT REPLACEMENT

ADDRESS: SIXTH STREET VIADUCT (WHITTIER BLVD) LOS ANGELES, CA

HNTB
HNTB Corporation
601 W. 5TH STREET SUITE 1000
LOS ANGELES, CALIFORNIA 90071
TEL (213) 403-1000 FAX (213) 403-1001

WORK ORDER NO. E700224F

DRAWING NO. S6-90

SHEET 388 OF 560 SHEETS

THE CITY OF LOS ANGELES OR ITS OFFICERS OR AGENTS SHALL NOT BE RESPONSIBLE FOR THE ACCURACY OR COMPLETENESS OF ELECTRONIC COPIES OF THIS PLAN SHEET.

C:\caddlib\pw\pwwestcoast\zhang\dms57683\S6-81-6001-03.dwg 5/02/18 15:47

REVISION DATES (DESIGN STAGE ONLY)

Sheet Version 3.0

ADDENDUM 5

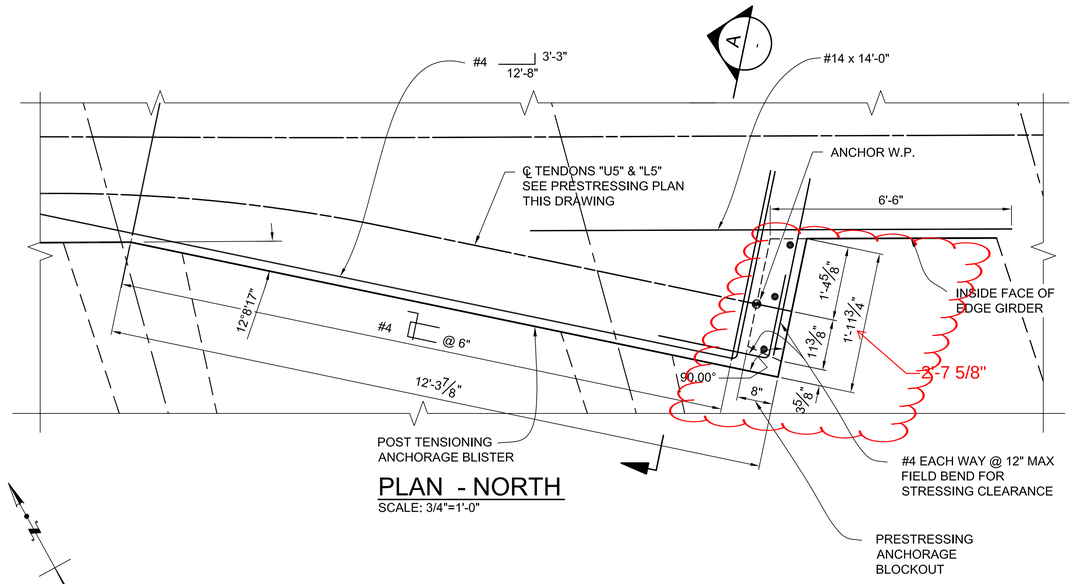

PLAN - NORTH

SCALE: 3/4"=1'-0"

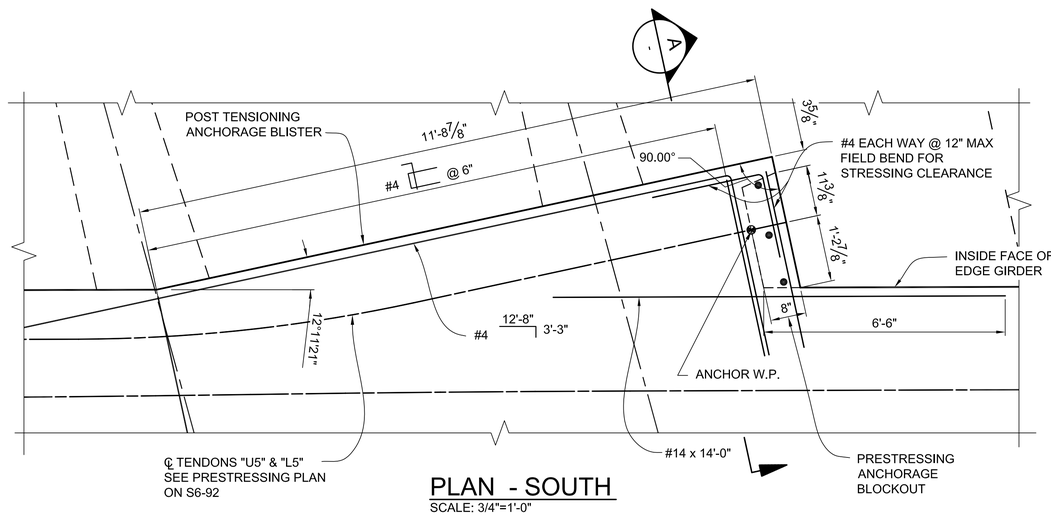

PLAN - SOUTH

SCALE: 3/4"=1'-0"

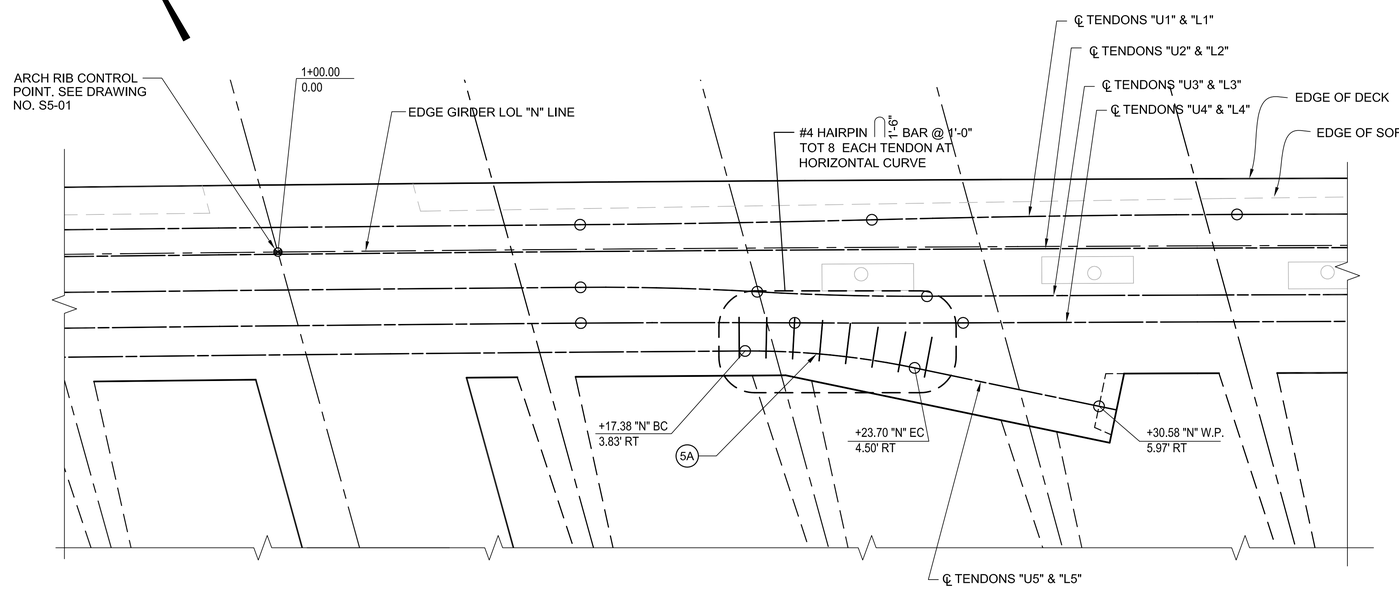

PRESTRESS PLAN - "U5" & "L5" ANCHORAGE AT SPAN 12, NORTH EDGE GIRDER

SCALE: 3/8"=1'-0"

CURVE TABLE				
NO.	R	Δ	T	L
5A	30	12°09'01"	3.19	6.36

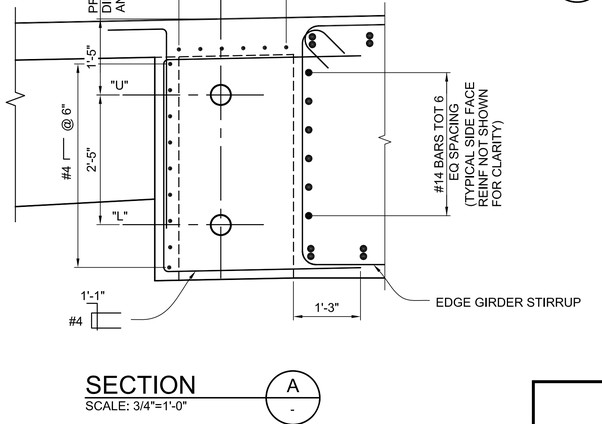

SECTION A

SCALE: 3/4"=1'-0"

NOTES:

1. SEE DRAWING NO. S6-92 FOR NORTH JUMP SPAN EDGE GIRDER ELEVATION, SOUTH JUMP SPAN EDGE GIRDER ELEVATION SIMILAR.
2. CENTERLINE OF TENDONS ARE PARALLEL TO CENTERLINE OF 6TH STREET VIADUCT UON.
3. ALIGN PRESTRESSING ANCHORAGE DEVICES IN THE PLANE NORMAL TO THE FACE OF BLISTER.
4. FOR PRESTRESSING PLAN LAYOUT OF DATA NOT SHOWN AT TYPICAL JUMP SPAN TRANSITION, SEE DRAWING S6-85.
5. FOR CONSTRUCTION JOINT DETAILS, SEE DRAWING NO. S6-17.
6. HAIRPIN BAR GROUPS SHALL BE CENTERED ABOUT POST TENSIONING CURVE SEGMENT.

HNTB
HNTB Corporation
601 W. 5TH STREET SUITE 1000
LOS ANGELES, CALIFORNIA 90071
TEL (213) 403-1000 FAX (213) 403-1001

BUREAU OF ENGINEERING OFFICIAL RECORD

THE CITY OF LOS ANGELES OR ITS OFFICERS OR AGENTS SHALL NOT BE RESPONSIBLE FOR THE ACCURACY OR COMPLETENESS OF ELECTRONIC COPIES OF THIS PLAN SHEET.

C:\caddlib\pw\pwwestcoast\zhong\dms576831\S6-81-0001-03.dwg 6/28/16 17:43

REVISION DATES (DESIGN STAGE ONLY)

Sheet Version 3.0

BUREAU OF ENGINEERING

ENGINEERING
CITY OF LOS ANGELES

NO.	REVISIONS:	DATE	BY:

STRUCTURE NO. 53C-2329

INDEX NO. P-38113

"THIS PLAN WAS ELECTRONICALLY SIGNED AND STAMPED"

REGISTERED PROFESSIONAL ENGINEER MICHAEL H. JONES No. S3033 CIVIL STATE OF CALIFORNIA

CITY OF LOS ANGELES DEPARTMENT OF PUBLIC WORKS

GARY LEE MOORE, P.E. CITY ENGINEER

		DATE:
ENGINEER:	MICHAEL H. JONES	1/29/2016
DESIGNED BY:	MICHAEL VAN DUYN	1/29/2016
DRAWN BY:	LI ZHANG	1/29/2016
CHECKED BY:	CHARLES REDFIELD	1/29/2016
APPROVED BY:	MICHAEL H. JONES	1/29/2016

LIC. NO. S3033

DESIGN GROUP

VERTICAL CONTROL: BM 12-04070,1929 (NGVD 29) - 1985 ADJUSTMENT
HORIZONTAL CONTROL: GPS; PID AE 1704, EPOCH 1991.35

SHEET TITLE: EDGE GIRDER POST TENSIONING DETAILS NO. 11

PROJECT: SIXTH STREET VIADUCT REPLACEMENT

ADDRESS: SIXTH STREET VIADUCT (WHITTIER BLVD) LOS ANGELES, CA

WORK ORDER NO. E700224F

DRAWING NO. S6-91

SHEET 389 OF 560 SHEETS

ADDENDUM 5

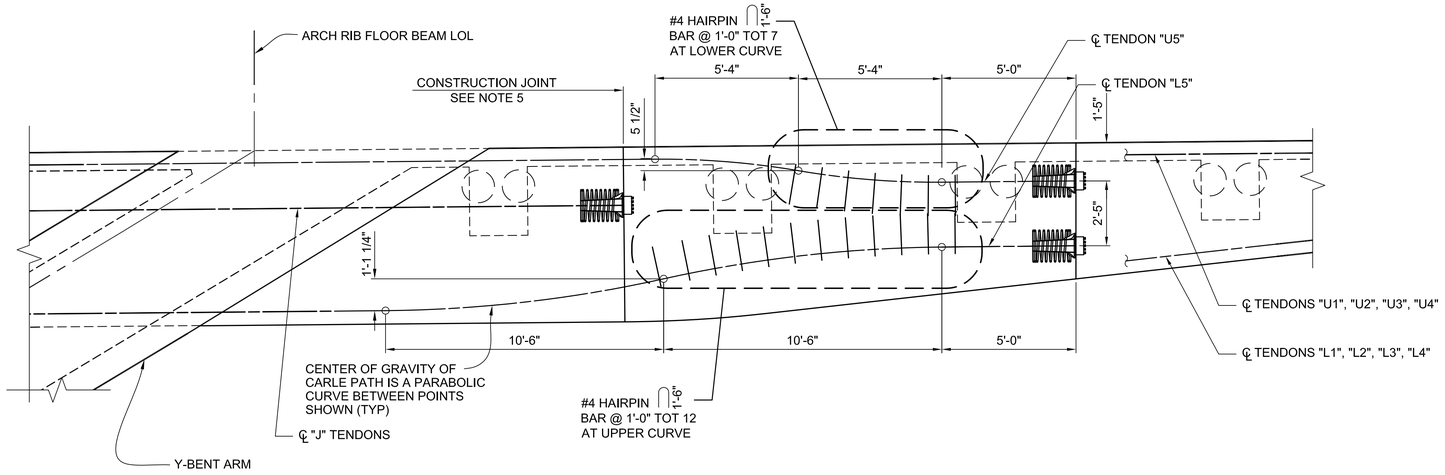

PRESTRESS ELEVATION - "U5" & "L5" ANCHORAGE AT SPAN 12

SCALE: 3/8"=1'-0"

NOTES:

1. FOR ADDITIONAL NOTES SEE DRAWING NO. S6-91.

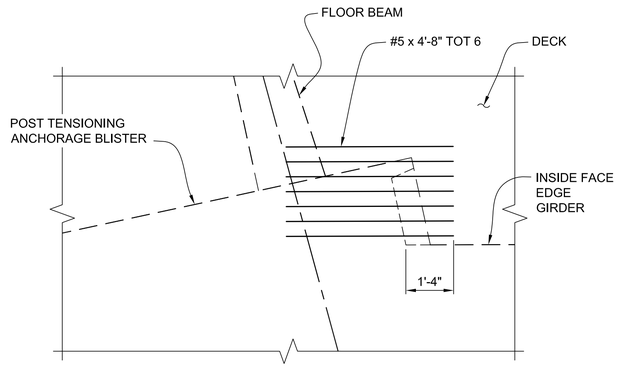

DETAIL 1 / S6-91

SCALE: 1/2"=1'-0"

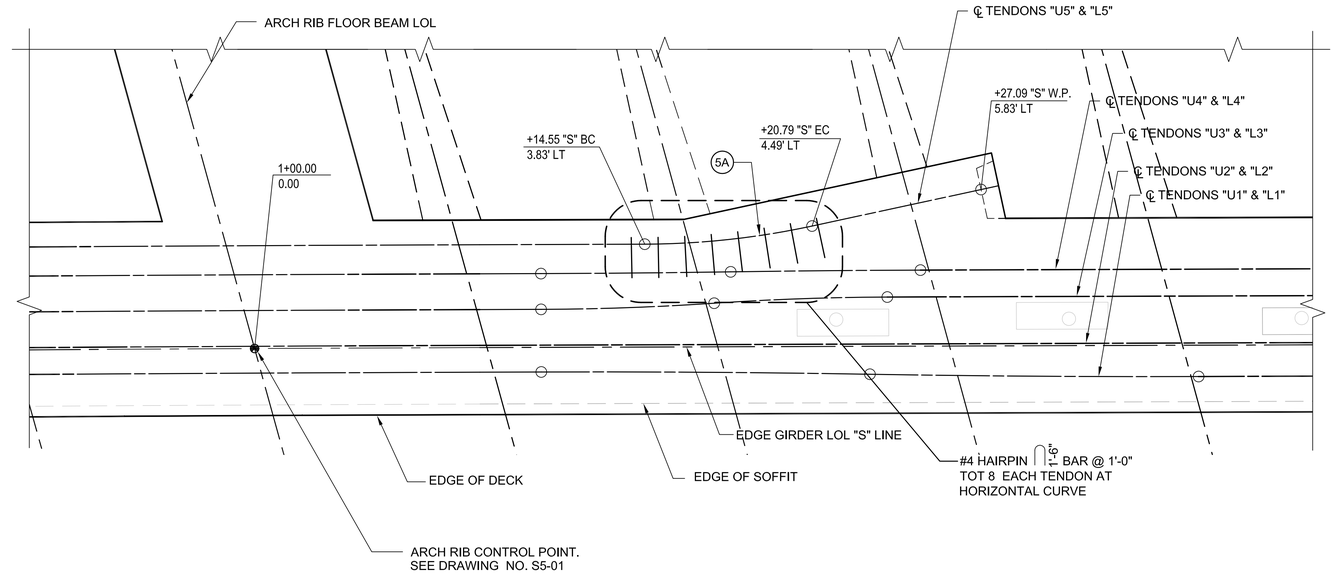

PRESTRESS PLAN - "U5" & "L5" ANCHORAGE AT SPAN 12, SOUTH EDGE GIRDER

SCALE: 3/8"=1'-0"

CURVE TABLE				
NO.	R	Δ	T	L
5A	30	12°00'00"	3.15	6.28

THIS PLAN WAS ELECTRONICALLY SIGNED AND STAMPED.

REGISTERED PROFESSIONAL ENGINEER — MICHAEL H. JONES — No. S3033 — 1/29/16 — STATE OF CALIFORNIA — CIVIL

BUREAU OF ENGINEERING — OFFICIAL RECORD

HNTB
HNTB Corporation
601 W. 5TH STREET SUITE 1000
LOS ANGELES, CALIFORNIA 90071
TEL (213) 403-1000 FAX (213) 403-1001

CITY OF LOS ANGELES — DEPARTMENT OF PUBLIC WORKS — BUREAU OF ENGINEERING

ENGINEERING — CITY OF LOS ANGELES

GARY LEE MOORE, P.E. — CITY ENGINEER

ENGINEER:	MICHAEL H. JONES	LIC. NO. S3033	DATE: 1/29/2016
DESIGNED BY:	MICHAEL VAN DUYN		1/29/2016
DRAWN BY:	LI ZHANG		1/29/2016
CHECKED BY:	CHARLES REDFIELD		1/29/2016
APPROVED BY:	MICHAEL H. JONES		1/29/2016

DESIGN GROUP

NO. | REVISIONS: | DATE | BY:

STRUCTURE NO. 53C-2329

INDEX NO. P-38113

VERTICAL CONTROL: BM 12-04070, 1929 (NGVD 29) – 1985 ADJUSTMENT
HORIZONTAL CONTROL: GPS; PID AE 1704, EPOCH 1991.35

SHEET TITLE: EDGE GIRDER POST TENSIONING DETAILS NO. 12

PROJECT: SIXTH STREET VIADUCT REPLACEMENT

ADDRESS: SIXTH STREET VIADUCT (WHITTIER BLVD) LOS ANGELES, CA

WORK ORDER NO. E700224F

DRAWING NO. S6-92

SHEET 390 OF 560 SHEETS

REVISION DATES (DESIGN STAGE ONLY)

C:\caddlib\pw\pwwestcoast\lzhang\dms57683\S6-81-GD01-03.dwg 6/28/16 17:43

Sheet Version 3.0

THE CITY OF LOS ANGELES OR ITS OFFICERS OR AGENTS SHALL NOT BE RESPONSIBLE FOR THE ACCURACY OR COMPLETENESS OF ELECTRONIC COPIES OF THIS PLAN SHEET.

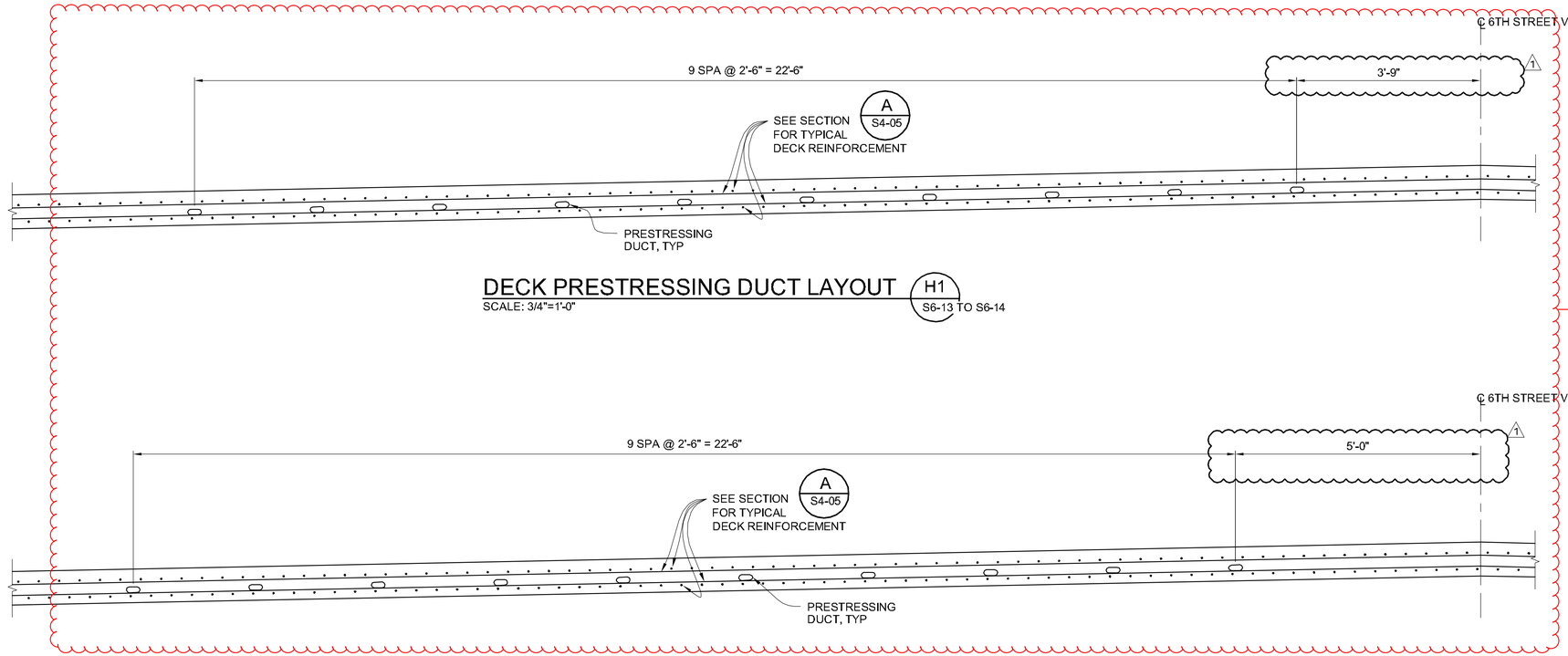

DECK PRESTRESSING DUCT LAYOUT

SCALE: 3/4"=1'-0"

H1 — S6-13 TO S6-14

NOTES:

1. ALL DIMENSIONS ARE MEASURED RADIALLY OR NORMAL TO CENTERLINE OF 6TH ST VIADUCT.
2. FOR TYPICAL DECK REINFORCEMENT AND DIMENSIONS, SEE SECTION A, DRAWING NO. S4-05.
3. FOR POST TENSIONING DATA AND NOTES, SEE DRAWING NO. S6-80.
4. PLACE BARS D1, D2, & D3 PARALLEL TO FLOOR BEAM.

The PT deck duct as-built spacing vary ±4" to avoid conflicts with vertical floor beam reinforcement. Please confirm if this is acceptable.

DECK PRESTRESSING DUCT LAYOUT

SCALE: 3/4"=1'-0"

H2 — S6-12 TO S6-15

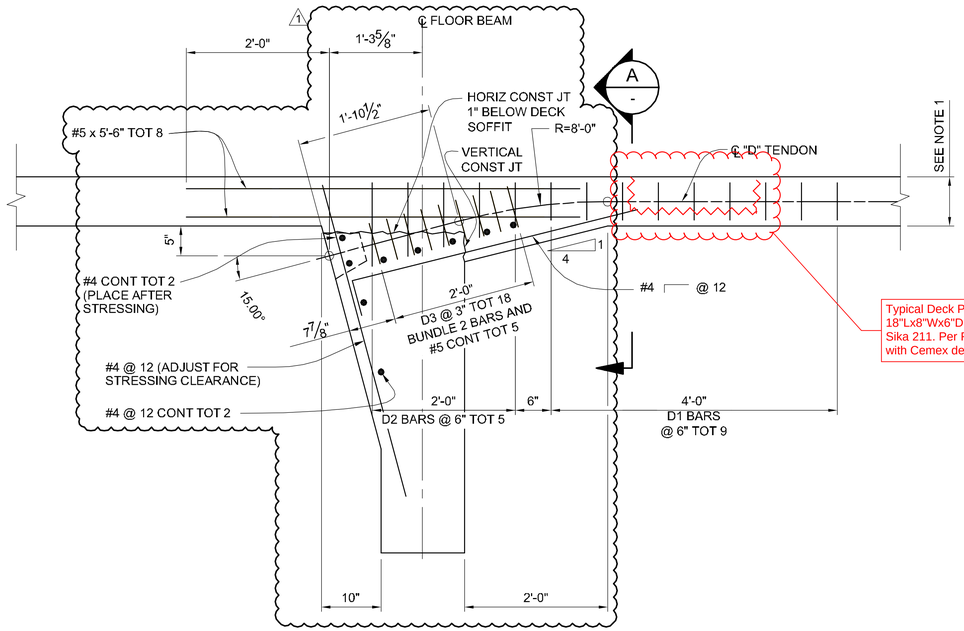

Typical Deck PT access hole near anchor, 18"Lx8"Wx6"D. Frame 5 & 3 repaired with Sika 211. Per RFI 572, Frame 4 repaired with Cemex deck mix 1617088.

TYP. DECK PRESTRESSING STRESSING ANCHORAGE - ELEVATION

SCALE: 1"=1'-0"

B — S6-94

TYPICAL DECK AND FLOOR BEAM REINFORCEMENT OMITTED FOR CLARITY, SEE NOTE 2

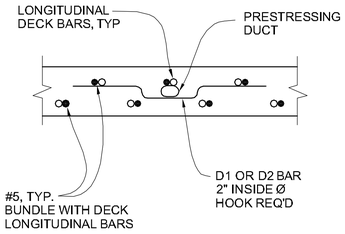

SECTION

SCALE: 1"=1'-0"

A — -

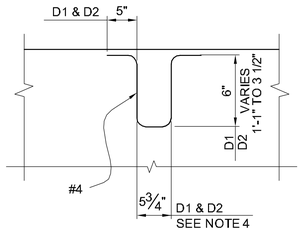

REINFORCEMENT DETAIL - D1 & D2 BARS

SCALE: 1"=1'-0"

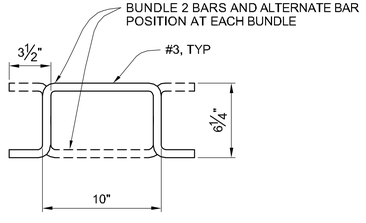

REINFORCEMENT DETAIL - D3 BUNDLED BARS

SCALE: 2"=1'-0"

THE CITY OF LOS ANGELES OR ITS OFFICERS OR AGENTS SHALL NOT BE RESPONSIBLE FOR THE ACCURACY OR COMPLETENESS OF ELECTRONIC COPIES OF THIS PLAN SHEET.

THIS PLAN WAS ELECTRONICALLY SIGNED AND STAMPED.

REVISION DATES (DESIGN STAGE ONLY)

NO.	REVISIONS:	DATE:	BY:
1	DECK LONGITUDINAL CONSTRUCTION JOINT ADDED	08/01/17	MHJ

STRUCTURE NO. 53C-2329

INDEX NO.

REGISTERED PROFESSIONAL ENGINEER — RICHARD H. JONES — No. S3033 — CIVIL — STATE OF CALIFORNIA

BUREAU OF ENGINEERING — ENGINEERING — CITY OF LOS ANGELES

CITY OF LOS ANGELES DEPARTMENT OF PUBLIC WORKS

GARY LEE MOORE, P.E. — CITY ENGINEER

		LIC. NO.	DATE:
ENGINEER:	DESIGN GROUP		
DESIGNED BY:	MICHAEL H. JONES	S3033	1/29/2016
DRAWN BY:	MICHAEL VAN DUYN		1/29/2016
CHECKED BY:	LI ZHANG		1/29/2016
APPROVED BY:	CHARLES REDFIELD		1/29/2016
	MICHAEL H. JONES		1/29/2016

VERTICAL CONTROL: BM 12-04070, 1929 (NGVD 29) - 1985 ADJUSTMENT
HORIZONTAL CONTROL: GPS; PID AE 1704, EPOCH 1991.35

SHEET TITLE: EDGE GIRDER, POST TENSIONING DETAILS NO. 13

PROJECT: SIXTH STREET VIADUCT REPLACEMENT

ADDRESS: SIXTH STREET VIADUCT (WHITTIER BLVD) LOS ANGELES, CA

HNTB
HNTB Corporation
601 W. 5TH STREET SUITE 1000
LOS ANGELES, CALIFORNIA 90071
TEL (213) 403-1000 FAX (213) 403-1001

WORK ORDER NO. E700224F

DRAWING NO. S6-93

SHEET 17 OF 560 SHEETS

C:\caddlib\pw\pwwestcoast\ltzhang\dms57683\S6-81-6001-03.dwg 8/25/17 11:24
Sheet Version 3.0

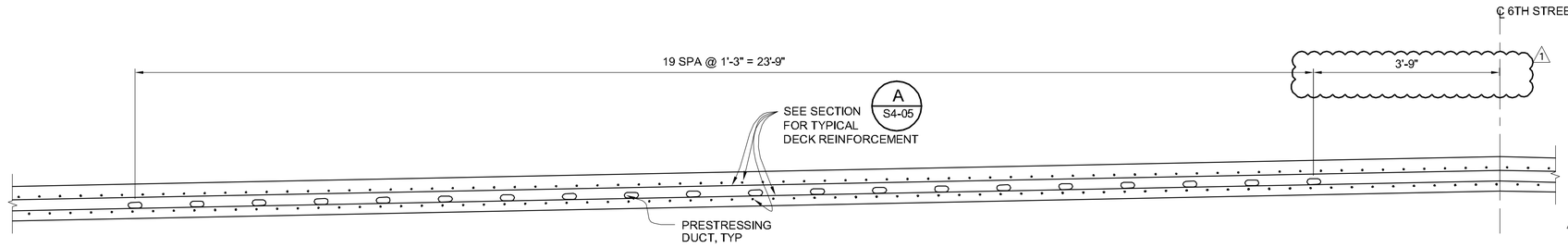

DECK PRESTRESSING DUCT LAYOUT

SCALE: 3/4"=1'-0"

H3 / S6-14

NOTES:

1. ALL DIMENSIONS ARE MEASURED RADIALLY OR NORMAL TO CENTERLINE OF 6TH ST VIADUCT.
2. FOR TYPICAL DECK REINFORCEMENT AND DIMENSIONS, SEE SECTION A, DRAWING NO. S4-05.
3. FOR POST TENSIONING DATA, NOTES AND NOMENCLATURE, SEE DRAWING NO. S6-80.
4. FOR DETAILS NOT SHOWN, SEE DRAWING NO. S6-93.
5. FOR SKEW ANGLE, SEE DRAWING NO. S7-03.
6. "D" TENDON ANCHORAGE BLISTER LENGTH MAY BE REDUCED TO MATCH EDGE OF DECK DRAIN TYPE C (MODIFIED) WHERE INTERFERENCE OCCURS.

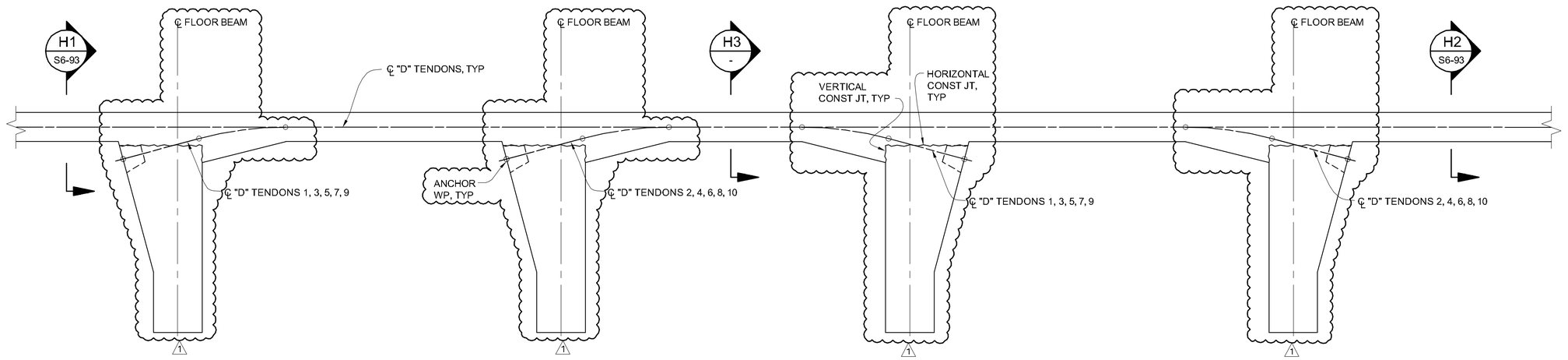

DECK PRESTRESSING LAP SPLICE - ELEVATION

SCALE: 3/4"=1'-0"

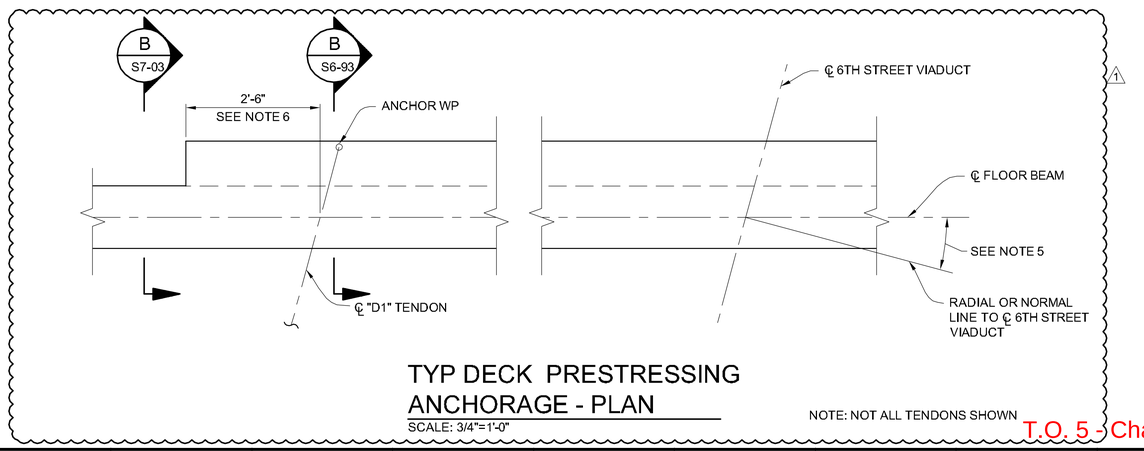

TYP DECK PRESTRESSING ANCHORAGE - PLAN

SCALE: 3/4"=1'-0"

NOTE: NOT ALL TENDONS SHOWN

THE CITY OF LOS ANGELES OR ITS OFFICERS OR AGENTS SHALL NOT BE RESPONSIBLE FOR THE ACCURACY OR COMPLETENESS OF ELECTRONIC COPIES OF THIS PLAN SHEET.

C:\coddlib\pw\pwwestcoast\zhang\dms57683\S6-81-G001-03.dwg 9/08/17 15:29

REVISION DATES (DESIGN STAGE ONLY)

Sheet Version 3.0

T.O. 5 - Change Order Serial Sketch No. 41 - Page 11 of 12

BUREAU OF ENGINEERING

ENGINEERING CITY OF LOS ANGELES

NO.	REVISIONS:	DATE:	BY:
1	DECK LONGITUDINAL CONSTRUCTION JOINT ADDED	09/01/17	MHJ

STRUCTURE NO. 53C-2329

INDEX NO.

THIS PLAN WAS ELECTRONICALLY SIGNED AND STAMPED.

REGISTERED PROFESSIONAL ENGINEER — MICHAEL H. JONES — No. S3033 — CIVIL — STATE OF CALIFORNIA

DEPARTMENT OF PUBLIC WORKS

CITY OF LOS ANGELES

GARY LEE MOORE, P.E. — CITY ENGINEER

		DATE:
DESIGN GROUP		
ENGINEER:	MICHAEL H. JONES	1/29/2016
DESIGNED BY:	MICHAEL VAN DUYN	1/29/2016
DRAWN BY:	LI ZHANG	1/29/2016
CHECKED BY:	CHARLES REDFIELD	1/29/2016
APPROVED BY:	MICHAEL H. JONES	1/29/2016

LIC. NO. S3033

VERTICAL CONTROL: BM 12-04070 1929 (NGVD 29) - 1985 ADJUSTMENT
HORIZONTAL CONTROL: GPS; PID AE 1704, EPOCH 1991.35

SHEET TITLE: EDGE GIRDER POST TENSIONING DETAILS NO. 14

PROJECT: SIXTH STREET VIADUCT REPLACEMENT

ADDRESS: SIXTH STREET VIADUCT (WHITTIER BLVD) LOS ANGELES, CA

HNTB
HNTB Corporation
601 W. 5TH STREET SUITE 1000
LOS ANGELES, CALIFORNIA 90071
TEL (213) 403-1000 FAX (213) 403-1001

WORK ORDER NO. E700224F

DRAWING NO. S6-94

SHEET 17 OF 560 SHEETS

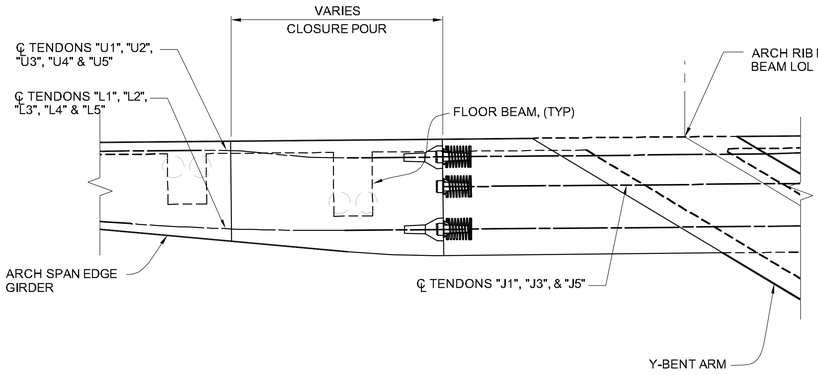

ELEVATION - EDGE GIRDER FRAME CONSTRUCTION JOINT

SCALE: 1/4"=1'-0"

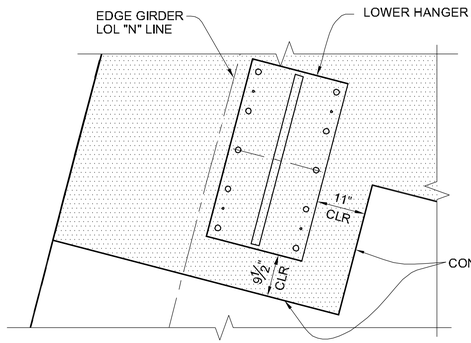

DETAIL 1

SCALE: 3/4"=1'-0"

S6-95

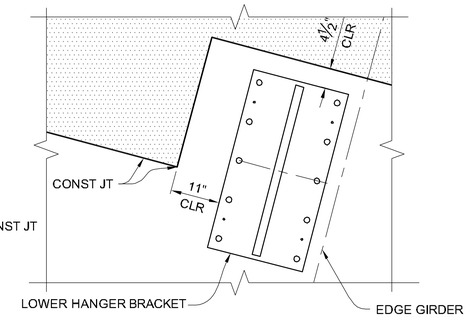

DETAIL 2

SCALE: 3/4"=1'-0"

S6-95

NOTES:

1. FOR LIMITS OF LONGITUDINAL DECK CONST JT, SEE DRAWING S4-05.
2. FOR HANGER BRACKET DETAILS, SEE DRAWING S5-71. HANGER SHALL NOT BE INSTALLED OR STRESSED UNTIL CLOSURE POUR CONCRETE HAS REACHED DESIGN STRENGTH, SEE DRAWING S0-05. FOR HANGER BRACKET LAYOUT, SEE DRAWING S5-49.
3. ADJUST LONGITUDINAL CLOSURE POUR DIMENSIONS AS REQUIRED TO PROVIDE ADEQUATE CLEARANCE FOR REINFORCEMENT COVER, HANGER BRACKET, AND POST TENSIONING COUPLERS.
4. FOR EDGE GIRDER WIDTHS, SEE DRAWINGS S6-10 THROUGH S6-17.
5. FOR EDGE GIRDER POST TENSIONING DETAILS, SEE DRAWINGS S6-85 THROUGH S6-90.
6. FOR FLOOR BEAM LAYOUT, SEE DRAWING S6-10.
7. CONST JT FACE IS NORMAL TO EDGE GIRDER LOL. ADJUST AS REQUIRED FOR POST TENSIONING.
8. TRANSVERSE CONST JT IS ALONG LINE SKEWED 15° IN THE SAME DIRECTION AS THE FLOOR BEAMS FROM THE RADIAL OR NORMAL LINE TO ℄ 6TH ST VIADUCT.
9. DIMENSIONS SHOWN ARE THEORETICAL AND MAY VARY DUE TO FRAME MOVEMENT DURING CONSTRUCTION. THE CONTRACTOR SHALL VERIFY ALL CONTROLLING FIELD DIMENSIONS BEFORE ORDERING OR FABRICATING ANY MATERIAL.

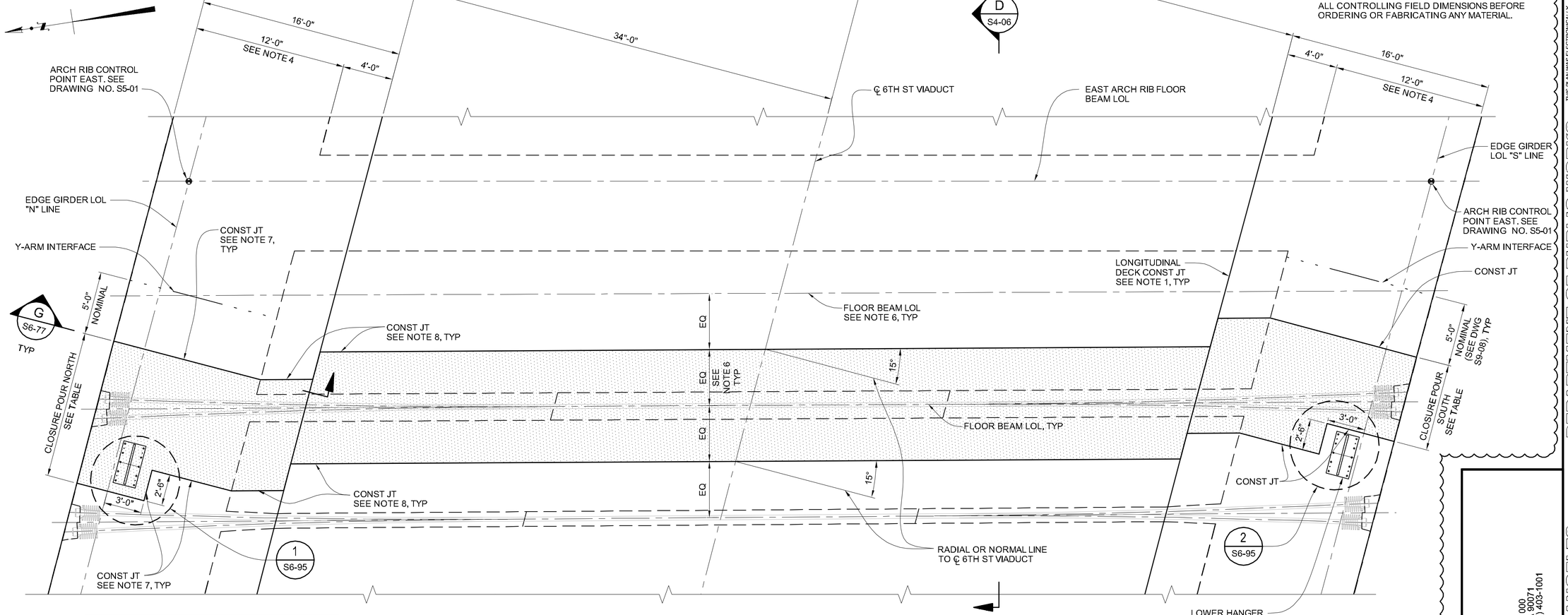

FRAME CLOSURE POUR LENGTH (FT) (MEASURED ALONG EG LOL), SEE NOTE 9			
LOCATION		NORTH	SOUTH
NEAR BENT	6	10'-10"	6'-11"
	8	11'-7½"	6'-11"
	10	11'-7½"	6'-11"

T.O. 5 - Emergency Change Order Serial Sketch No. 52 - Page 2 of 2

DECK PLAN - TYPICAL FRAME CLOSURE POUR

SCALE: 1/4"=1'-0"

NOTE: NOT ALL REINFORCEMENT AND POST TENSIONING SHOWN FOR CLARITY

LEGEND:

- CLOSURE POUR, SEE NOTE 3

HNTB
HNTB Corporation
601 W. 5TH STREET SUITE 1000
LOS ANGELES, CALIFORNIA 90071
TEL (213) 403-1000 FAX (213) 403-1001

CITY OF LOS ANGELES DEPARTMENT OF PUBLIC WORKS BUREAU OF ENGINEERING

ENGINEERING CITY OF LOS ANGELES

NO.	REVISIONS:	DATE:	BY:
1	RFI 0380 - CLOSURE POUR LIMITS ECO 52	12/22/17	MVD

STRUCTURE NO. 53C-2329

INDEX NO.

THIS PLAN WAS ELECTRONICALLY SIGNED AND STAMPED.

REGISTERED PROFESSIONAL ENGINEER — MICHAEL H. JONES — No. S3933 — CIVIL — STATE OF CALIFORNIA

CITY ENGINEER	DATE:
GARY LEE MOORE, P.E.	1/29/2016
ENGINEER: MICHAEL H. JONES — DESIGN GROUP — LIC. NO. S3933	1/29/2016
DESIGNED BY: MICHAEL VAN DUYN	1/29/2016
DRAWN BY: LI ZHANG	1/29/2016
CHECKED BY: CHARLES REDFIELD	1/29/2016
APPROVED BY: MICHAEL H. JONES	1/29/2016

VERTICAL CONTROL: BM 12-04070,1929 (NGVD 29) - 1988 ADJUSTMENT
HORIZONTAL CONTROL: GPS; PID AE 1704, EPOCH 1991.35

SHEET TITLE: FRAME CONSTRUCTION JOINT CLOSURE POUR DETAILS

PROJECT: SIXTH STREET VIADUCT REPLACEMENT

ADDRESS: SIXTH STREET VIADUCT (WHITTIER BLVD) LOS ANGELES, CA

WORK ORDER NO. E700224F

DRAWING NO. S6-95

SHEET OF 560 SHEETS

THE CITY OF LOS ANGELES OR ITS OFFICERS OR AGENTS SHALL NOT BE RESPONSIBLE FOR THE ACCURACY OR COMPLETENESS OF ELECTRONIC COPIES OF THIS PLAN SHEET.

REVISION DATES (DESIGN STAGE ONLY)

C:\caddlib\pw\pwwestcoast\zhang\dms576831\S6-82-G001.dwg 12/21/17 16:18

Sheet Version 3.0

ADDENDUM 5

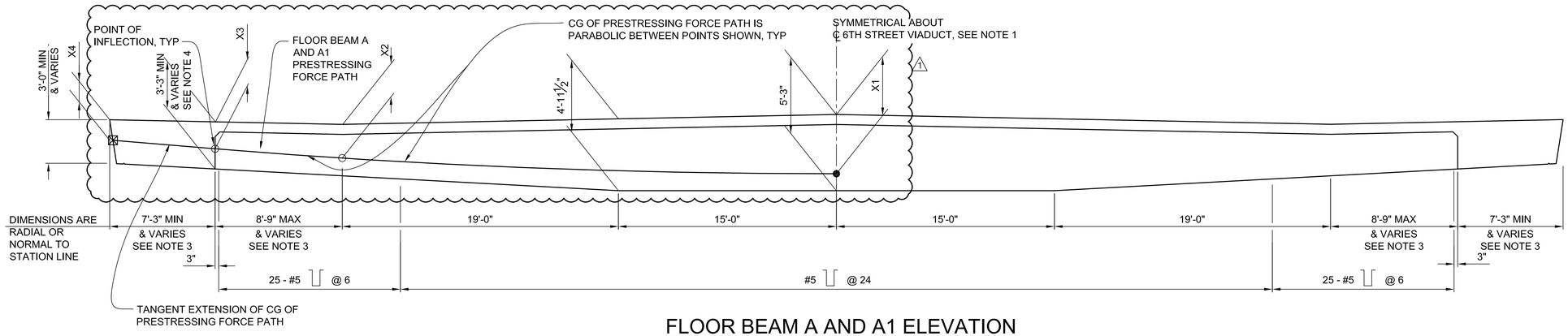

FLOOR BEAM A AND A1 ELEVATION

SCALE: 1/4" =1'-0"

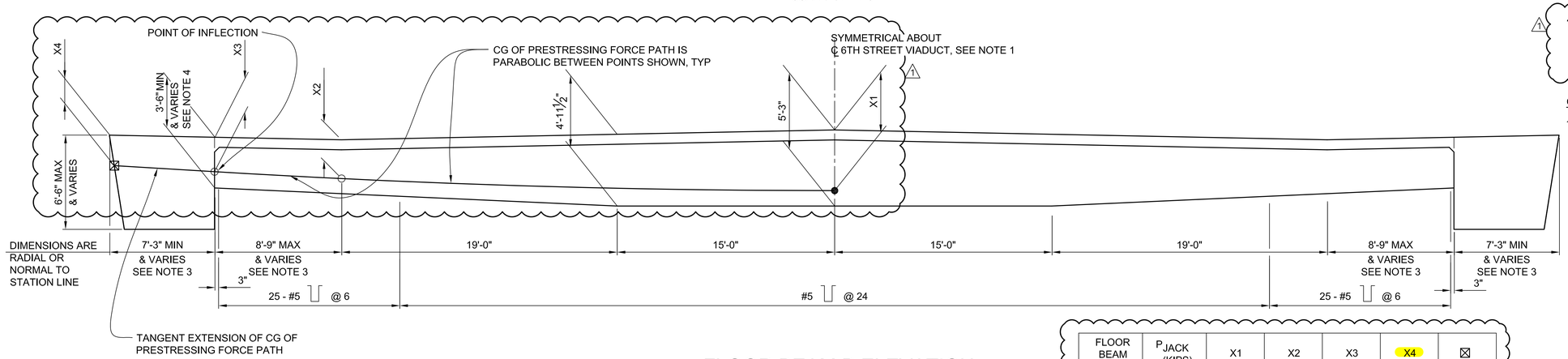

FLOOR BEAM B ELEVATION

SCALE: 1/4" =1'-0"

FLOOR BEAM TYPE	P_{JACK} (KIPS)	X1	X2	X3	X4	☒
A	1406	4'-1"	2'-3 3/4"	1'-10 1/4"	1'-5"	0.852
A1	1406	4'-1"	2'-3 3/4"	1'-10 1/4"	1'-5"	0.852
B	1582	4'-2 1/4"	2'-8 1/4"	2'-4 3/4"	2'-1 1/4"	0.875
C	1582	3'-10"	2'-6"	2'-3 1/2"	2'-1"	0.896
C1	1582	4'-10"	3'-3"	2'-11"	2'-7"	0.865
D	1670	4'-1"	2'-6 1/2"	2'-2 3/4"	1'-11"	0.884
D1 & D2	1670	5'-11"	3'-11 5/8"	3'-4 7/8"	2'-10 1/2"	0.840

NOTES:

1. FLOOR BEAM DEPTH AND PRESTRESSING SYMMETRICAL ABOUT ℄ OF 6TH STREET VIADUCT EXCEPT FOR ONE END STRESSING.
2. SEE DRAWING NOS. S6-10 THROUGH S6-17 FOR FLOOR BEAM LAYOUT.
3. WHEN EDGE GIRDER IS WIDER THAN 7'-3", MAINTAIN THE PRESTRESSING FORCE PATH SHOWN.
1. 4. MINIMUM DEPTH APPLIES TO 7'-3" WIDE EDGE GIRDER. WHEN EDGE GIRDER IS WIDER THAN 7'-3", MAINTAIN THE SOFFIT OF FLOOR BEAM CONSISTENT WITH THOSE AT 7'-3" WIDE EDGE GIRDERS.

CAMBER NOTES:

1. REQUIRED CAMBER SHALL BE SPECIFIED BY THE CONTRACTORS ERECTION MANUAL. SEE "ERECTION SEQUENCE NOTES" ON DRAWING NO. S9-05 FOR SUBMITTAL REQUIREMENTS.

PRESTRESSING NOTES

270 KSI LOW RELAXATION STRAND:

ANCHOR SET = 3/8"
K = 0.0002 1/FT μ = 0.15

CONCRETE:

f'_c = 6, 000 PSI @ 28 DAYS
f'_{ci} = 5, 000 PSI @ TIME OF STRESSING

CONTRACTOR SHALL SUBMIT ELONGATION CALCULATIONS BASED ON INITIAL STRESS AT ☒ = (SEE TABLE) TIMES JACKING STRESS. ONE END STRESSING AT SOUTH END.

T.O. 5 - Change Order Serial Sketch No. 11R1 - Page 12 of 15

HNTB
HNTB Corporation
601 W. 5TH STREET SUITE 1000
LOS ANGELES, CALIFORNIA 90071
TEL (213) 403-1000 FAX (213) 403-1001

CITY OF LOS ANGELES DEPARTMENT OF PUBLIC WORKS BUREAU OF ENGINEERING

ENGINEERING CITY OF LOS ANGELES

NO.	REVISIONS:	DATE	BY:
1	FLOOR BEAM PT CHANGES	03/24/17	MHJ

STRUCTURE NO. 53C-2329

INDEX NO.

THIS PLAN WAS ELECTRONICALLY SIGNED AND STAMPED

REGISTERED PROFESSIONAL ENGINEER MICHAEL H. JONES No. S3033 CIVIL STATE OF CALIFORNIA

GARY LEE MOORE, P.E. CITY ENGINEER

		DATE:
ENGINEER:	MICHAEL H. JONES	1/29/2016
DESIGN GROUP	LIC. NO. S3033	1/29/2016
DESIGNED BY:	TRAN LE	1/29/2016
DRAWN BY:	LI ZHANG	1/29/2016
CHECKED BY:	CHARLES REDFIELD	1/29/2016
APPROVED BY:	MICHAEL H. JONES	1/29/2016

VERTICAL CONTROL:	BM 12-04070,1929 (NGVD 29) - 1985 ADJUSTMENT
HORIZONTAL CONTROL:	GPS; PID AE 1704, EPOCH 1991.35
SHEET TITLE:	FLOOR BEAM DETAILS NO. 1
PROJECT:	SIXTH STREET VIADUCT REPLACEMENT
ADDRESS:	SIXTH STREET VIADUCT (WHITTIER BLVD) LOS ANGELES, CA

WORK ORDER NO. E700224F

DRAWING NO. S7-01

SHEET 393 OF 560 SHEETS

THE CITY OF LOS ANGELES OR ITS OFFICERS OR AGENTS SHALL NOT BE RESPONSIBLE FOR THE ACCURACY OR COMPLETENESS OF ELECTRONIC COPIES OF THIS PLAN SHEET.

REVISION DATES (DESIGN STAGE ONLY)

C:\caddlib\pw\pwwestcoast\zhang\dms57683\S7-01-FB01-02.dwg 4/25/17 12:26

Sheet Version 3.0

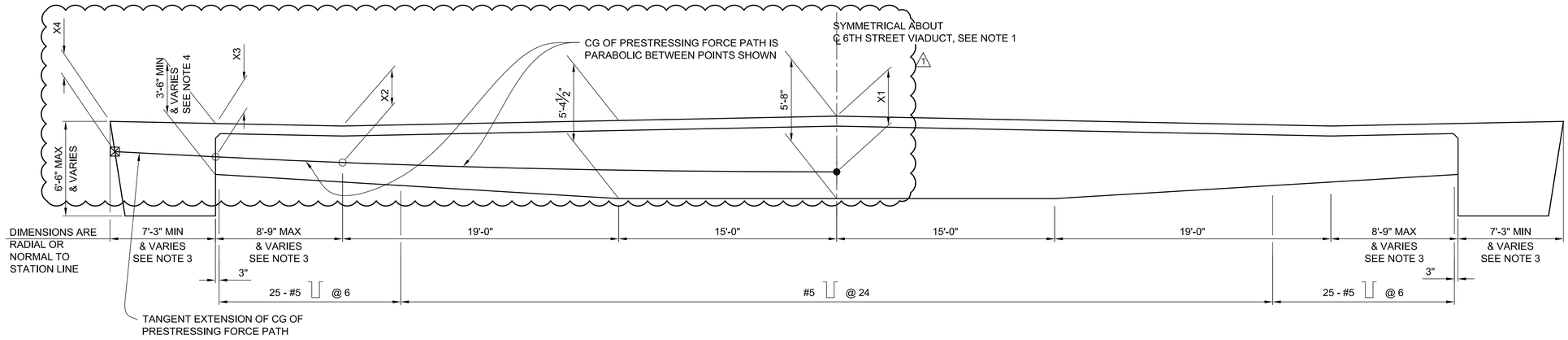

FLOOR BEAM C AND C1 ELEVATION

SCALE: 1/4" =1'-0"

NOTES:

1. SEE DRAWING NO. S7-01 FOR NOTES AND TABLE.

CAMBER NOTES:

1. SEE DRAWING NO. S7-01.

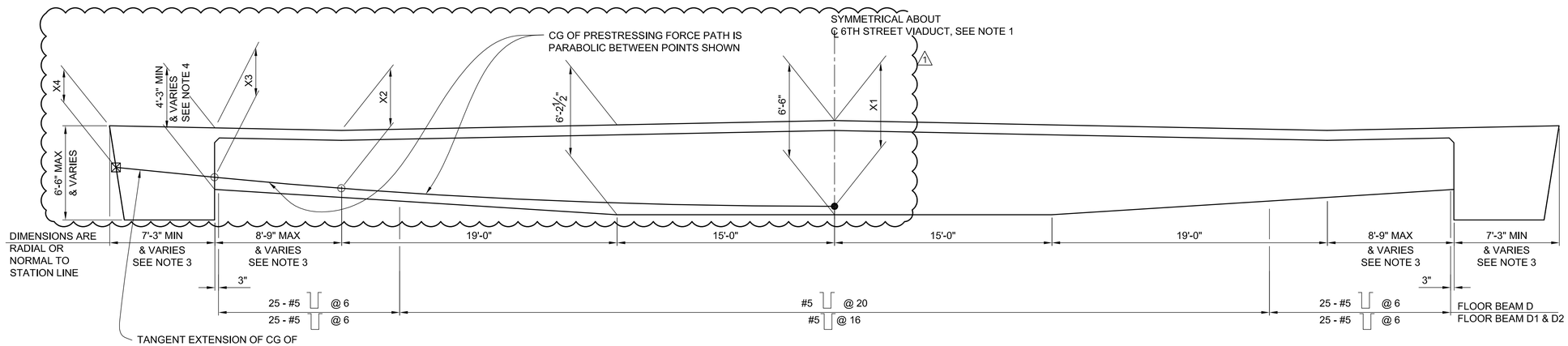

FLOOR BEAM D, D1 AND D2 ELEVATION

SCALE: 1/4" =1'-0"

T.O. 5 - Change Order Serial Sketch No. 11R1 - Page 13 of 15

THE CITY OF LOS ANGELES OR ITS OFFICERS OR AGENTS SHALL NOT BE RESPONSIBLE FOR THE ACCURACY OR COMPLETENESS OF ELECTRONIC COPIES OF THIS PLAN SHEET.

C:\caddlib\pw\pwwestcoast\zhang\dms57683\S7-01-FB01-02.dwg 4/25/17 12:27

REVISION DATES (DESIGN STAGE ONLY)

Sheet Version 3.0

BUREAU OF ENGINEERING

ENGINEERING CITY OF LOS ANGELES

NO.	REVISIONS:	DATE	BY:
1	FLOOR BEAM PT CHANGES	03/24/17	MHJ

STRUCTURE NO. 53C-2329

INDEX NO.

THIS PLAN WAS ELECTRONICALLY SIGNED AND STAMPED.

REGISTERED PROFESSIONAL ENGINEER MICHAEL H. JONES No. S3033 CIVIL STATE OF CALIFORNIA

CITY OF LOS ANGELES DEPARTMENT OF PUBLIC WORKS

CITY ENGINEER	GARY LEE MOORE, P.E.	DATE:	1/29/2016
DESIGN GROUP			
ENGINEER:	MICHAEL H. JONES	LIC. NO. S3033	1/29/2016
DESIGNED BY:	TRAN LE		1/29/2016
DRAWN BY:	LI ZHANG		1/29/2016
CHECKED BY:	CHARLES REDFIELD		1/29/2016
APPROVED BY:	MICHAEL H. JONES		1/29/2016

VERTICAL CONTROL: BM 12-04070, 1929 (NGVD 29) - 1985 ADJUSTMENT
HORIZONTAL CONTROL: GPS; PID AE 1704, EPOCH 1991.35

SHEET TITLE: FLOOR BEAM DETAILS NO. 2

PROJECT: SIXTH STREET VIADUCT REPLACEMENT

ADDRESS: SIXTH STREET VIADUCT (WHITTIER BLVD)
LOS ANGELES, CA

HNTB
HNTB Corporation
601 W. 5TH STREET SUITE 1000
LOS ANGELES, CALIFORNIA 90071
TEL (213) 403-1000 FAX (213) 403-1001

WORK ORDER NO. E700224F

DRAWING NO. S7-02

SHEET 394 OF 560 SHEETS

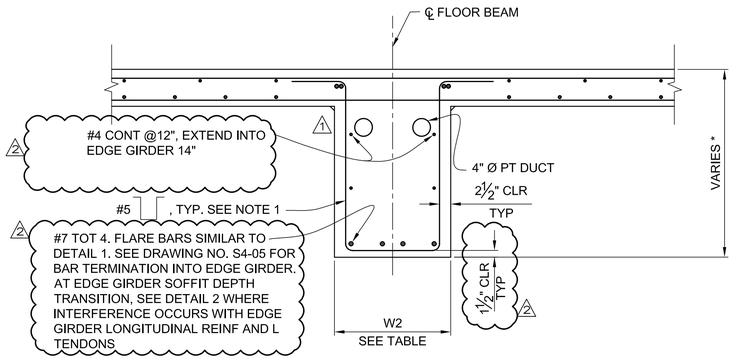

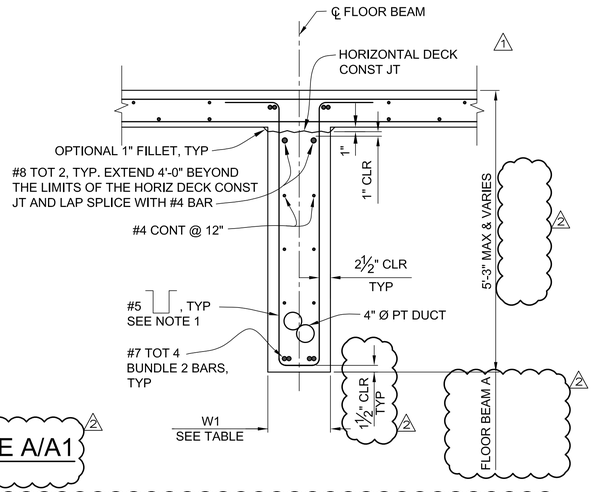

FLOOR BEAM TYPE A/A1

(SEE NOTE 5)

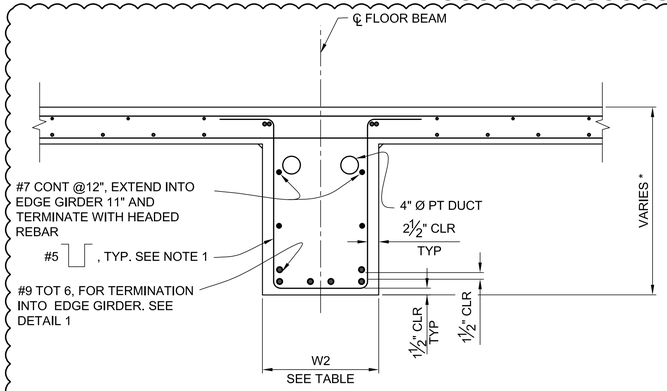

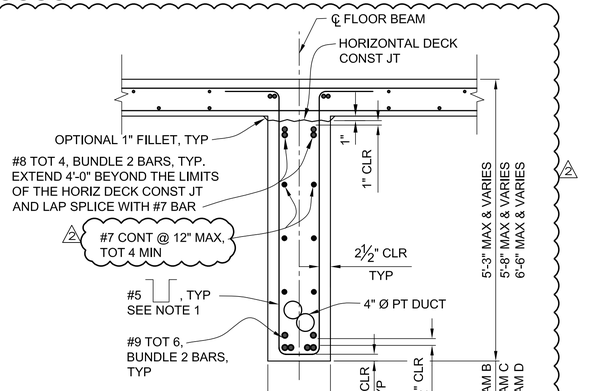

FLOOR BEAM OTHER THAN TYPE A/A1

(SEE NOTE 5)

SECTION A

SCALE: 3/4"=1'-0"

SECTION B

SCALE: 3/4"=1'-0"

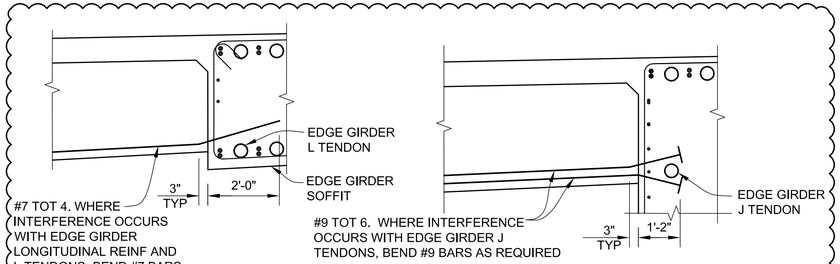

FLOOR BEAM TYPE A/A1 FLOOR BEAM OTHER THAN TYPE A/A1

DETAIL 2

SCALE: 1/2"=1'-0"

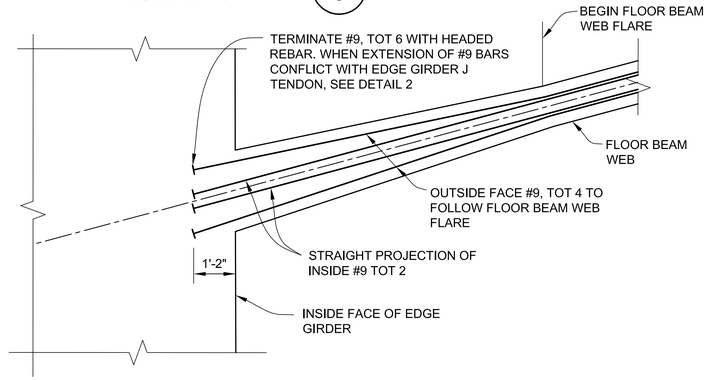

DETAIL 1

SCALE: 1/2"=1'-0"

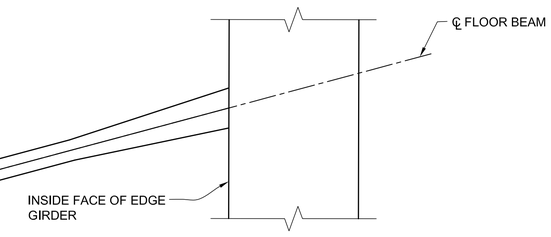

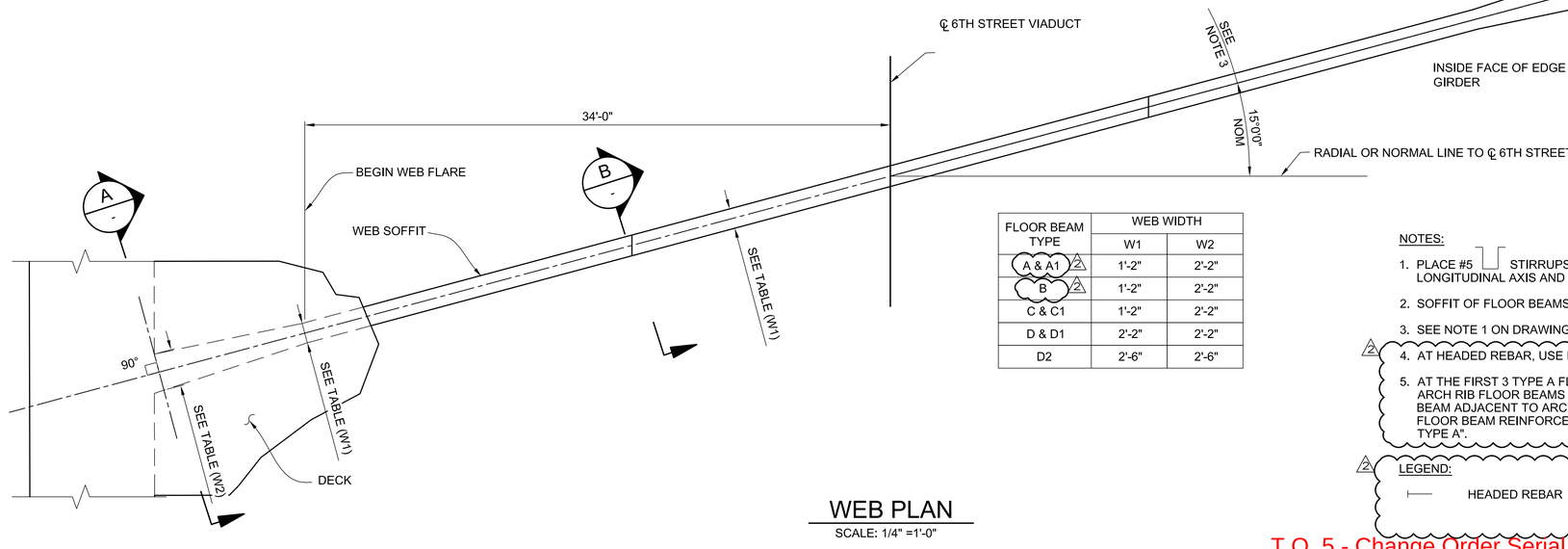

WEB PLAN

SCALE: 1/4" =1'-0"

FLOOR BEAM TYPE	WEB WIDTH	
	W1	W2
A & A1 (2)	1'-2"	2'-2"
B (2)	1'-2"	2'-2"
C & C1	1'-2"	2'-2"
D & D1	2'-2"	2'-2"
D2	2'-6"	2'-6"

NOTES:

1. PLACE #5 ⌊⌋ STIRRUPS AT A 15° SKEW WITH THE FLOOR BEAM LONGITUDINAL AXIS AND PARALLEL TO CENTERLINE OF 6TH STREET VIADUCT.
2. SOFFIT OF FLOOR BEAMS SHALL BE PARALLEL TO TOP OF DECK.
3. SEE NOTE 1 ON DRAWING S6-10.

(2)
4. AT HEADED REBAR, USE REDUCED SIZE HEADS (4 x NET REBAR AREA).
5. AT THE FIRST 3 TYPE A FLOOR BEAMS ADJACENT TO THE WEST AND EAST ARCH RIB FLOOR BEAMS AT BENT 12 AND THE FIRST TYPE A OR A1 FLOOR BEAM ADJACENT TO ARCH RIB FLOOR BEAMS AT ALL OTHER Y-BENTS, USE FLOOR BEAM REINFORCEMENT SHOWN FOR "FLOOR BEAMS OTHER THAN TYPE A".

(2) LEGEND:

⊢ HEADED REBAR

Delta 1: ECO 41
Delta 2: ECO 77

THIS PLAN WAS ELECTRONICALLY SIGNED AND STAMPED.

REGISTERED PROFESSIONAL ENGINEER
RICHARD H. JONES
No. S3033
EXP. 12-31-19
CIVIL
STATE OF CALIFORNIA

HNTB
HNTB Corporation
601 W. 5TH STREET SUITE 1000
LOS ANGELES, CALIFORNIA 90071
TEL (213) 403-1000 FAX (213) 403-1001

THE CITY OF LOS ANGELES OR ITS OFFICERS OR AGENTS SHALL NOT BE RESPONSIBLE FOR THE ACCURACY OR COMPLETENESS OF ELECTRONIC COPIES OF THIS PLAN SHEET.

C:\caddlib\pw\pwwestcoast\jzhang\dms57683\S7-01-FB01-02.dwg 11/09/18 13:35
REVISION DATES (DESIGN STAGE ONLY)
Sheet Version 3.0

BUREAU OF ENGINEERING
ENGINEERING
CITY OF LOS ANGELES
STRUCTURE NO. 53C-2329
INDEX NO.
REVISIONS:
NO. 1. DECK LONGITUDINAL CONSTRUCTION JOINT ADDED 09/01/17 MHJ
NO. 2. FLOOR BEAM MODIFICATION - DECK JOINT 09/19/18 MHJ
DEPARTMENT OF PUBLIC WORKS
CITY OF LOS ANGELES
GARY LEE MOORE, P.E. CITY ENGINEER
DESIGN GROUP ENGINEER: MICHAEL H. JONES DATE: 1/29/2016
DESIGNED BY: TRAN LE 1/29/2016
DRAWN BY: LI ZHANG 1/29/2016
CHECKED BY: CHARLES REDFIELD 1/29/2016
APPROVED BY: MICHAEL H. JONES 1/29/2016
LIC. NO. S3033
VERTICAL CONTROL: BM 12-04070, 1929 (NGVD 29) – 1985 ADJUSTMENT
HORIZONTAL CONTROL: GPS; PID AE 1704, EPOCH 1991.35
SHEET TITLE: FLOOR BEAM DETAILS NO. 3
PROJECT: SIXTH STREET VIADUCT REPLACEMENT
ADDRESS: SIXTH STREET VIADUCT (WHITTIER BLVD) LOS ANGELES, CA
WORK ORDER NO. E700224F
DRAWING NO. S7-03
SHEET 15 OF 560 SHEETS

T.O. 5 - Change Order Serial Sketch No. 77-R1 - Page 2 of 2

ADDENDUM 5

Horizontal reinforcement to be installed above and below proposed blockout

WHERE EDGE GIRDER WIDENS BEYOND 7'-3", PLACE "A" ⌈ TIES WITHIN 6'-0" FROM EDGE GIRDER OUTSIDE EDGE

8'-9" TYPICAL & VARIES RADIAL OR NORMAL

#4 ⌈ @ 6 DUCT TIE. SEE DUCT TIE DETAIL ON DRAWING NO. S7-05

BEGIN FLOOR BEAM FLARE

EDGE GIRDER

℄ OF FLOOR BEAM

℄ PT SEE DRAWING NO. S7-05 FOR LAYOUT

3'-0"

3'-0"

FLOOR BEAM WEB. SEE NOTE 3

DETAIL 2 / S7-05

TYPICAL GIRDER STIRRUP SPACING SEE NOTE 2

ANCHORAGE ZONE SEE TABLE ON DRAWING NO. S7-05 FOR STIRRUPS AND SEE NOTE 1

3'-9" TYPICAL & 4'-3" MAX

4½" 1'-6" 2'-0" MAX 4½" MIN

4½" 1'-6" 2'-0" MAX 4½" MIN

TYPICAL GIRDER STIRRUP SPACING SEE NOTE 2

AT TYPICAL 3'-9" WIDTH

AT 3'-9" TO 4'-3" WIDTH

15° NOM, SEE S7-03

RADIAL OR NORMAL LINE TO ℄ OF 6TH STREET VIADUCT

EQUAL EQUAL TYP TYP

#8 "A" ⌈ TIES. SEE TABLE ON DRAWING NO. S7-05. BUNDLE WITH TYPICAL #8 ⌈ WHERE SHOWN AND SEE NOTE 6.

S1 VARIES

EDGE OF PT BLOCK-OUT

OMIT OUTER CLOSED TIES WHERE S1≤ 9". MAINTAIN ALL #8 ⌈ INTERIOR VERTICAL TIES.

1 1/4" Ø ANCHOR ROD

BLOCK OUT

HANGER BRACKET TRAP PLATE WHERE OCCURS SEE DRAWING NO. S5-7

One set of bundles stirrups to be installed in the middle of two tendons as shown here.

These constraints will be maintained.

PLAN

NOTES:

1. THE 3'-9" ANCHORAGE WIDTH SHOWN AT FLOOR BEAM ANCHORAGE ALLOWS UNEQUAL CLOSED STIRRUP SPACING TO ACCOMMODATE FLOOR BEAM POST TENSIONING ANCHORAGE AT ARCH AND JUMP SPANS. THE ANCHORAGE WIDTH MAY BE INCREASED FROM BETWEEN 3'-9" AND 4'-3" ONLY WHERE THE EDGE GIRDER WIDTH AT THE TOP OF DECK EXCEEDS 7'-3" AND AT THE KNUCKLE JOINT REGION SHOWN ON DRAWING NO. S3-24. VERTICAL CROSS TIE AND CLOSED TIE SPACING ARE NOT REQUIRED TO MATCH. VERTICAL CROSS TIES MAY BE BUNDLED.
2. FOR EDGE GIRDER STIRRUP LAYOUT BEYOND ANCHORAGE ZONE, SEE DRAWING NOS. S6-21 TO S6-67. FIRST STIRRUP SPACING FROM ANCHORAGE ZONE SHALL BE EQUAL TO OR LESS THAN THE SPECIFIED TYPICAL STIRRUP SPACING.
3. FLOOR BEAM A SHOWN, OTHER TYPES FLOOR BEAMS ARE SIMILAR.
4. FOR FLOOR BEAM POST TENSIONING LAYOUT, SEE DRAWING NOS. S7-01 AND S7-02.
5. RELOCATE EDGE GIRDER EXTERIOR SIDE FACE REINFORCEMENT AS REQUIRED TO PROVIDE CLEARANCE FOR POST TENSIONING JACKS.
6. WHEN 12 "A" ⌈ TIES ARE SHOWN, OMIT ROW TOWARDS INSIDE FACE OF EDGE GIRDER. WHEN 7 "A" ⌈ TIES ARE SHOWN, OMIT TWO ROWS TOWARDS INSIDE FACE OF EDGE GIRDER.
7. AT THE PT BLOCK-OUT CENTER CLOSED TIE ONLY, THE CLOSED TIE HOOKS CAN USE 90° HOOKS AND BE PLACED AT THE INSIDE OF THE EDGE GIRDER.

SPACING CAN VARY, SEE NOTE 8 ON DRAWING S6-85

1'-7" 1'-0" 1'-4" 1'-4" 1'-1"

EDGE GIRDER PT DUCT, TYP

SEE NOTE 5

DETAIL 1 / S7-05

6'-6"

EDGE GIRDER

REDUCE EXTERIOR 90° HOOK EXTENSION TO PROVIDE 2" END COVER

#8

7'-3"

ELEVATION AT JUMP SPANS

1'-4" 1'-3" 1'-9" 1'-0" 1'-0"

ADJUST SPACING OF BUNDLED BARS TO PREVENT OVERLAP OF ⌈ TIE 90° HOOKS AND TO AVOID INTERFERENCE WITH 1¼" Ø ANCHOR RODS AT HANGER CONNECTION SHOWN ON DRAWING NO. S5-71

EDGE GIRDER PT DUCT, TYP

SEE NOTE 7

3'-0"

SEE NOTE 5

DETAIL 1 / S7-05

#8

EDGE GIRDER

FLOOR BEAM

#4 ⌈ @ 6 DUCT TIE.

7'-3"

ELEVATION AT ARCH SPANS

It does not appear possible to maintain these spacing requirements with the proposed enlarged blocked-out dimensions shown on attached DSI Shop Drawing PT-9D.

LEGEND:

- BUNDLED BARS
- ADDED #8 "A" ⌈ TIES
- POST-TENSIONING DUCT
- TYPICAL REINFORCEMENT

FLOOR BEAM ANCHORAGE

SCALE: 1" =1'-0"

T.O. 5 _ Emergency Change Order Serial Sketch No. 101 (Page 1 of 1) (Delta 7)

THE CITY OF LOS ANGELES OR ITS OFFICERS OR AGENTS SHALL NOT BE RESPONSIBLE FOR THE ACCURACY OR COMPLETENESS OF ELECTRONIC COPIES OF THIS PLAN SHEET.

REVISION DATES (DESIGN STAGE ONLY)

C:\caddlib\pw\pwwestcost\zhang\dms57683\S7-01-FB01-02.dwg 4/16/19 09:57

Sheet Version 3.0

CITY OF LOS ANGELES DEPARTMENT OF PUBLIC WORKS BUREAU OF ENGINEERING

ENGINEERING CITY OF LOS ANGELES

NO.	REVISIONS:	DATE	BY:
3.	BIM REVISION 6 ECO 63	4/27/18	MHJ
4.	BIM REVISION 7 ECO 85	5/31/18	MHJ
5.	FRAME CONSTRUCTION JOINT AND ARCH RIB UPDATES ECO 71	7/13/18	MHJ
6.	TIES AT HANGER BRACKET CLARIFICATION ECO 100	4/18/19	MHJ
7.	BIM EDGE GIRDER TIE CONFORMANCE ECO 101	4/18/19	MHJ

STRUCTURE NO. 53C-2329

INDEX NO.

REGISTERED PROFESSIONAL ENGINEER — MICHAEL H. JONES — No. S3033 — CIVIL — STATE OF CALIFORNIA

THIS PLAN WAS ELECTRONICALLY SIGNED AND STAMPED.

CITY ENGINEER

GARY LEE MOORE, P.E.	CITY ENGINEER
ENGINEER: MICHAEL H. JONES	DESIGN GROUP LIC. NO. S3033 DATE: 1/29/2016
DESIGNED BY: TRAN LE	1/29/2016
DRAWN BY: LI ZHANG	1/29/2016
CHECKED BY: CHARLES REDFIELD	1/29/2016
APPROVED BY: MICHAEL H. JONES	1/29/2016

VERTICAL CONTROL: BM 12-04070, 1929 (NGVD 29) - 1985 ADJUSTMENT
HORIZONTAL CONTROL: GPS; PID AE 1704, EPOCH 1991.35

SHEET TITLE: FLOOR BEAM DETAILS NO. 4

PROJECT: SIXTH STREET VIADUCT REPLACEMENT

ADDRESS: SIXTH STREET VIADUCT (WHITTIER BLVD) LOS ANGELES, CA

HNTB
HNTB Corporation
601 W. 5TH STREET SUITE 1000
LOS ANGELES, CALIFORNIA 90071
TEL (213) 403-1000 FAX (213) 403-1001

WORK ORDER NO. E700224F

DRAWING NO. S7-04

SHEET 396 OF 560 SHEETS

NOTES:

1. FOR STIRRUP DETAILS AT Y-BENT ARM AND EDGE GIRDER JOINT REGION, SEE DRAWING NO. S3-24. USE HEADED REBAR AT ALL TIES WHERE SHOWN ON DRAWING NO. S3-24.

LEGEND:

BUNDLED BARS

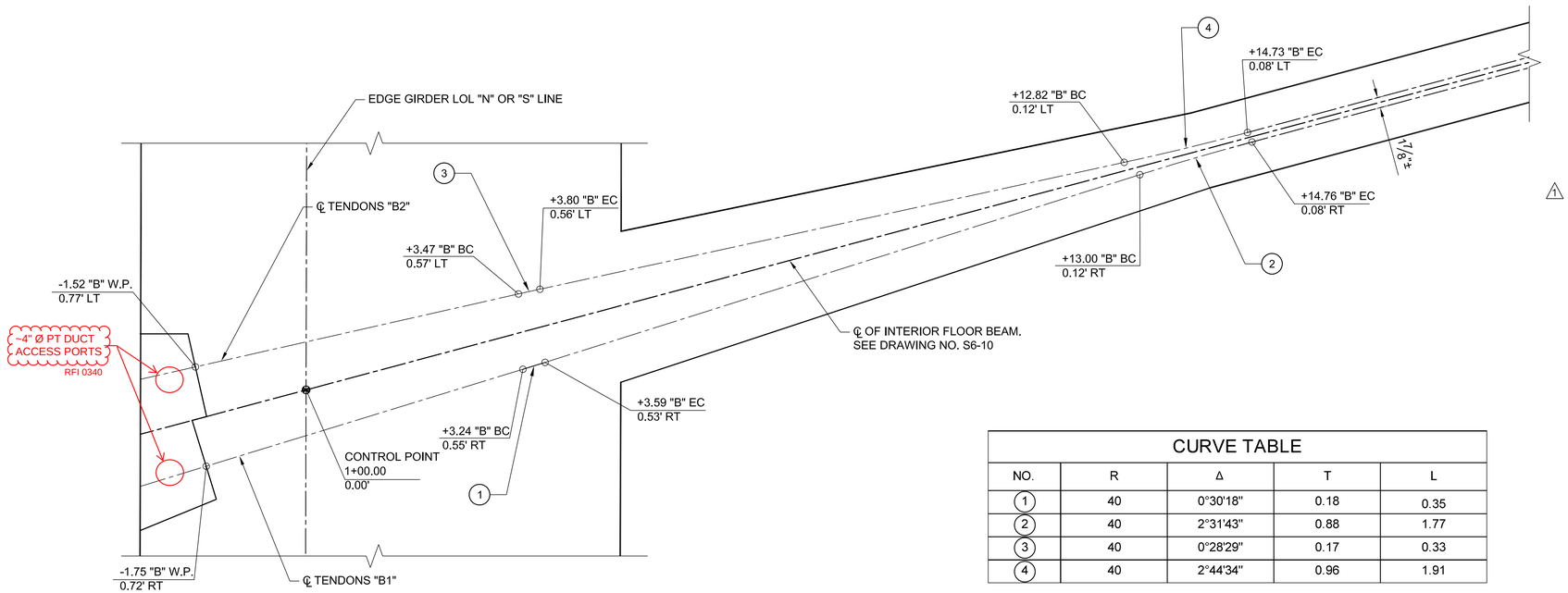

CURVE TABLE				
NO.	R	Δ	T	L
1	40	0°30'18"	0.18	0.35
2	40	2°31'43"	0.88	1.77
3	40	0°28'29"	0.17	0.33
4	40	2°44'34"	0.96	1.91

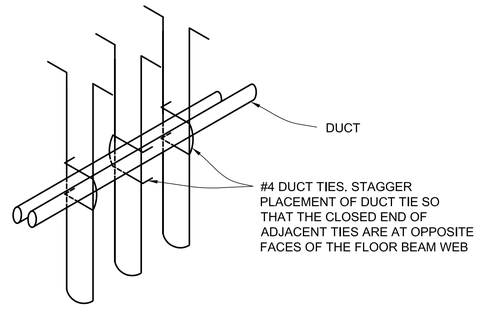

TYPICAL FLOOR BEAM POST-TENSIONING LAYOUT - PLAN

SCALE: 1"=1'-0"

FLOOR BEAM REBAR NOT SHOWN FOR CLARITY

RFI 244 proposes to increase the edge girder floor beam block-out dimensions from the size shown on Contract Drawing S7-05 and the block-out dimensions used for portions of Frame 6 pursuant to RFI 243 as follows:

	Drawing S7-05	RFI 243	RFI 244
Block-out Height:	14″	17″	24″
Block-out Width:	36″	36″	44″

RFI 244 does not provide shop drawing details showing the rearrangement of reinforcement to accommodate the proposed increased block-out dimension as required by Standard Specification Section 50-1.01C(3). The following reinforcement rearrangement requirements and other concerns are identified, which have also been illustrated on the attached redlined drawings:

1. With a depth of 1'-1" between the top of the edge girder and the enlarged block-out, there appears to be insufficient clearance to rearrange the horizontal edge girder side face reinforcement above the block-out as proposed by RFI 244.

2. Contract Drawing S7-04 shows edge girder bundled #8 ties at a spacing of 18". The proposed 44" wide block-out will require increasing this spacing to approximately 24". The reinforcement rearrangement must be provided. No reinforcement can be deleted, and contract required placement tolerances must be complied with. Clashes with floor beam post-tensioning (PT) ducts are likely with the increased spacing.

3. The internal concrete step between the two floor beam PT anchorages has been increased from the step size provided by the block-out details provided on Contract Plan S7-05. The greatest stress on this concrete step will occur during PT jacking. DSI must verify stresses within this local anchorage zone at the larger step are acceptable during PT stressing if the proposed increased step dimension is used.

RFI 243 proposed a block-out currently being used at Frame 6 with only slight increases to the block-out dimensions provided on Contract Plan S7-05. This detail requires only minimal rearrangement of reinforcement and will minimize possible clashes with PT ducts when making deviations from the clash-free BIM models previously prepared by SSW for this joint type. If the smaller block-out dimensions are adequate at portions of Frame 6, their use throughout the Viaduct should be considered. Additionally, most floor beams are Type A, where the edge girder has a nominal depth of 36". The 24" block-out depth proposed by RFI 244 will likely not provide sufficient clearance above and below the block-out for required reinforcement. Using a smaller block-out would have the advantage of standardizing the block-out at all floor beam types.

Follow-up: Please standardize the blockouts for the entire structure.

DUCT TIE DETAIL

NO SCALE

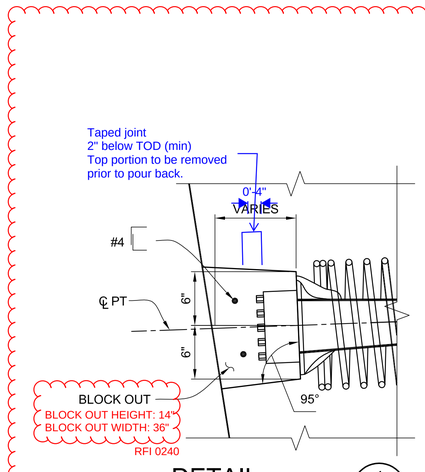

DETAIL 1

SCALE: 1 1/2"=1'-0"

S7-04

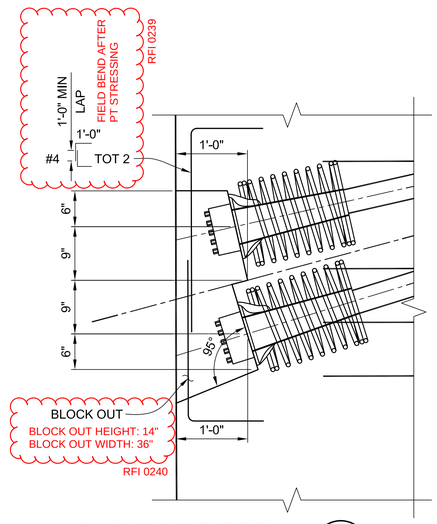

BLOCKOUT DETAIL 2

SCALE: 1"=1'-0"

S7-04

EDGE GIRDER STIRRUPS AT FLOOR BEAM POST TENSIONING ANCHORAGE ZONE								
STIRRUP TYPE/NUMBER	LOCATION							
	ARCH SPAN				JUMP SPAN			
TYPICAL EDGE GIRDER STIRRUPS	TYPE 1 @ 9	TYPE 2 @ 9	TYPE 3 @ 9	JOINT REGION (SEE NOTE 1)	TYPE 1 @ 12	TYPE 1 @ 6	TYPE 2 @ 6	JOINT REGION (SEE NOTE 1)
STIRRUPS TYPE AT POST-TENSIONING ANCHORAGE ZONE								
NUMBER OF ADDED "A" ⌐ TIES	--	12	17	17	--	7	17	17

T.O. 5 - Change Order Serial Sketch No. 71 - Page 15 of 15

HNTB
HNTB Corporation
601 W. 5TH STREET, SUITE 1000
LOS ANGELES, CALIFORNIA 90071
TEL (213) 403-1000 FAX (213) 403-1001

BUREAU OF ENGINEERING

ENGINEERING CITY OF LOS ANGELES

NO.	REVISIONS:	DATE:	BY:
1	FLOOR BEAM SPACING MODIFICATION ECO 11R1	12/13/16	MHJ
2	BIM REVISION 7 ECO 65	5/31/18	MHJ
3	FRAME CONSTRUCTION JOINT AND ARCH RIB UPDATES ECO 71	07/13/18	MHJ

STRUCTURE NO. 53C-2329

INDEX NO.

THIS PLAN WAS ELECTRONICALLY SIGNED AND STAMPED

REGISTERED PROFESSIONAL ENGINEER MICHAEL H. JONES No. S3033 CIVIL STATE OF CALIFORNIA

CITY OF LOS ANGELES DEPARTMENT OF PUBLIC WORKS

GARY LEE MOORE, P.E. CITY ENGINEER

		DATE:
ENGINEER:	MICHAEL H. JONES	1/29/2016
DESIGNED BY:	TRAN LE	1/29/2016
DRAWN BY:	LI ZHANG	1/29/2016
CHECKED BY:	CHARLES REDFIELD	1/29/2016
APPROVED BY:	MICHAEL H. JONES	1/29/2016

DESIGN GROUP

LIC. NO. S3033

VERTICAL CONTROL: BM 12-04070, 1929 (NGVD 29) - 1985 ADJUSTMENT
HORIZONTAL CONTROL: GPS; PID AE 1704, EPOCH 1991.35

SHEET TITLE: FLOOR BEAM DETAILS NO. 5

PROJECT: SIXTH STREET VIADUCT REPLACEMENT

ADDRESS: SIXTH STREET VIADUCT (WHITTIER BLVD) LOS ANGELES, CA

WORK ORDER NO. E700224F

DRAWING NO. S7-05

SHEET 15 OF 560 SHEETS

THE CITY OF LOS ANGELES OR ITS OFFICERS OR AGENTS SHALL NOT BE RESPONSIBLE FOR THE ACCURACY OR COMPLETENESS OF ELECTRONIC COPIES OF THIS PLAN SHEET.

REVISION DATES (DESIGN STAGE ONLY)

C:\caddlib\pw\pwwestcost\zhang\dms57683\S7-01-FB01-02.dwg 7/13/18 11:19

Sheet Version 3.0

NOTES:

1. THE CONTRACTOR SHALL VERIFY ALL CONTROLLING FIELD DIMENSIONS BEFORE ORDERING OR FABRICATING ANY MATERIALS.
2. ISOLATION BEARINGS AS SHOWN ARE "TRIPLE FRICTION PENDULUM" BEARINGS WITH ARTICULATED SLIDER ELEMENT AND CONCAVE PLATES WHICH PROVIDE LATERAL RESTORING STIFFNESS.
3. ISOLATION BEARING PROPERTIES SHALL MEET REQUIREMENTS SHOWN IN THE "ISOLATION BEARING PERFORMANCE CRITERIA TABLE".
4. EDC IS THE ENERGY DISSIPATED PER CYCLE BY THE BEARING AT THE MAXIMUM DEAD LOAD AND TOTAL DESIGN DISPLACEMENT (TDD) SHOWN IN THE TABLE. EDC IS EQUAL TO THE AREA WITHIN THE CORRESPONDING HYSTERESIS LOOP.
5. TDD IS THE NOMINAL TOTAL DESIGN DISPLACEMENT CORRESPONDING TO THE DESIGN BASIS SEISMIC EVENT. VALUE SHOWN IS A CONSERVATIVE UPPER BOUND VALUE BASED ON A RANGE OF ACTUAL ISOLATOR PROPERTIES.
6. ISOLATION BEARING LATERAL DISPLACEMENT CAPACITIES SHALL BE AT LEAST 25% HIGHER THAN THE TDD.
7. SEISMIC LATERAL FORCED F TRANSFERRED THROUGH THE ISOLATION BEARING, AT DESIGN DISPLACEMENT TDD, EXPRESSED AS RATIO OF THE VERTICAL LOAD ON THE BEARING.
8. NON-SEISMIC LATERAL FORCE- THE DESIGN NON-SEISMIC LATERAL FORCE, (WIND ON STRUCTURE) TRANSFERRED THROUGH THE ISOLATION BEARING.
9. ALL HOLES IN MOUNTING PLATES, HOUSING PLATES AND OTHER CONNECTING PLATES SHALL BE DRILLED WITH MATCHING METAL TEMPLATES.
10. ISOLATION BEARING MANUFACTURER SHALL PROVIDE CLEARANCE BETWEEN UPPER AND LOWER CONCAVE UNITS FOR THE SPECIFIED MAXIMUM RELATIVE ROTATION.
11. ISOLATION BEARING INSTALLATION SHALL BE PER MANUFACTURER'S INSTRUCTIONS AND RECOMMENDATIONS, SUBJECT TO APPROVAL OF THE ENGINEER.
12. THE MAXIMUM THERMAL LONGITUDINAL DISPLACEMENT TRANSFERRED THROUGH THE ISOLATION BEARING UNDER VERTICAL DEAD LOAD CONDITION (DL). DISPLACEMENT IS APPROXIMATE BASED ON INITIAL ASSUMED STIFFNESS OF BEARING.
13. THE MINIMUM BEARING LATERAL FORCE TO ACTIVATE THE SECONDARY EARTHQUAKE RESISTANCE SYSTEM (SERS) IS THE FORCE NECESSARY TO INITIATE PLASTIC HINGING IN SUPPORTING DRILLED SHAFTS. EXPRESSED AS A RATIO OF THE VERTICAL DEAD LOAD ON THE BEARING WITH OVERTURNING EFFECTS.
14. STIFFNESS Keff IS THE BEARING EFFECTIVE LATERAL STIFFNESS AT A DISPLACEMENT OF TDD EXPRESSED AS A RATIO OF THE VERTICAL DEAD LOAD ON THE BEARING WITHOUT OVERTURNING EFFECTS.
15. MAXIMUM RELATIVE ROTATION IS THE NET ROTATION BETWEEN THE TOP AND BOTTOM OF THE ISOLATION OCCURRING AT THE MAXIMUM OF THE 7 GROUND MOTIONS (MAXIMUM VALUE OF APPROXIMATELY 22") AND EXTRAPOLATED TO A DISPLACEMENT OF 1.75 TDD (42").
16. FOR REQUIRED INITIAL OFFSETS OF THE INTERNAL BEARING SLIDER FROM THE CENTROID OF THE BEARING, SEE DRAWING NO. S8-03.

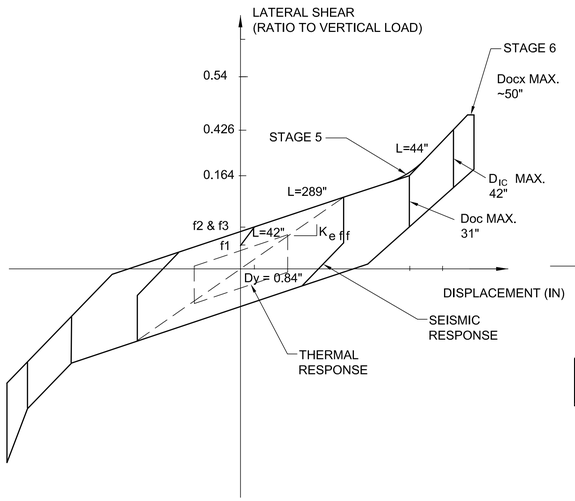

BENTS 3 THRU 12

SEE DRAWING NO. S8-02

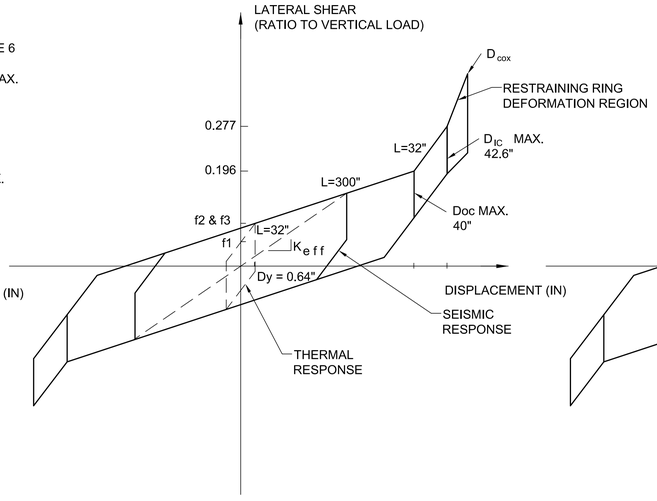

ABUTMENTS 1 AND 13 AND BENTS 1 AND 2

SEE DRAWING NO. S8-03

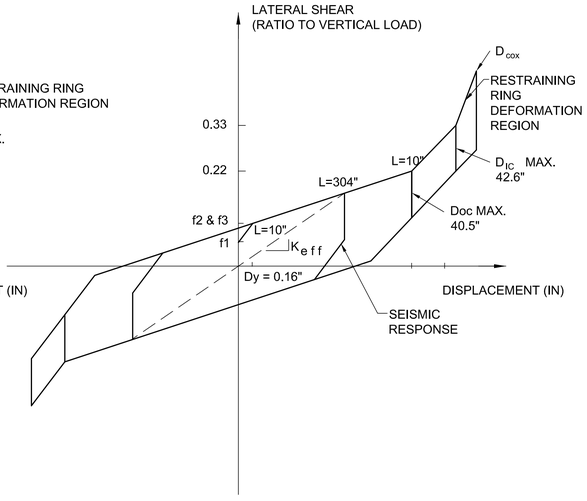

STAIRS

SEE DRAWING NO. S8-03

FORCE DISPLACEMENT LOOP

NO SCALE

NOTATIONS

- D_y - YIELD DISPLACEMENT OF INNER SLIDER
- L - EFFECTIVE PENDULUM RADIUS
- f_1 - DYNAMIC COEFFICIENT OF FRICTION AT INNER CONCAVE SLIDING SURFACE
- f_2 ,f_3 - DYNAMIC COEFFICIENT OF FRICTION AT THE TOP AND BOTTOM OF THE OUTER CONCAVE SLIDING SURFACE. ALWAYS EQUAL.
- Doc - DISPLACEMENT LIMIT ON OUTER CONCAVE SLIDING SURFACE PRIOR TO STIFFENING.
- D_{IC} - DISPLACEMENT LIMIT ON INNER CONCAVE SLIDING SURFACE
- Docx - DISPLACEMENT LIMIT AT BOTH THE INNER AND OUTER CONCAVE SLIDING SURFACE AT END OF STIFFENING REGION

ISOLATION BEARING PERFORMANCE CRITERIA TABLE

BEARING TYPE	TRIPLE FRICTION PENDULUM														
BEARING LOCATION	ABUT 1	BENT 1	BENT 2	BENT 3	BENT 4	BENT 5	BENT 6	BENT 7	BENT 8	BENT 9	BENT 10	BENT 11	BENT 12	ABUT 13	STAIRS
NUMBER OF BEARINGS	2	1	2	2										2	5
DYNAMIC COEFFICIENT OF FRICTION f1, INNER SLIDER	0.045			4%										0.045	7%
DYNAMIC COEFFICIENT OF FRICTION f2 & f3, OUTER SLIDER	0.065			6%										0.065	9%
THERMAL COEFFICIENT OF FRICTION f1, f2 & f3	0.04			0.04										0.04	
STIFFNESS K_{eff} (NOTE 14)	0.00617			0.00583										0.00617	0.00702
EDC @ TDD (NOTE 4)	2828 KIP-IN	834 KIP-IN	7707 KIP-IN	16,303 KIP-IN	38,183 KIP-IN	36,884 KIP-IN	37,094 KIP-IN	39,356 KIP-IN	41,940 KIP-IN	41,638 KIP-IN	41,544 KIP-IN	40,402 KIP-IN	37,195 KIP-IN	12,995 KIP-IN	1540 KIP-IN
DESIGN SEISMIC LATERAL FORCE, F_D (NOTE 7)	0.15			0.14										0.15	0.17
TOTAL DESIGN DISPLACEMENT, (TDD) (NOTE 5)	24"														
MAXIMUM RELATIVE ROTATION (NOTE 15)	0.54 DEG	0.50 DEG	0.53 DEG	0.91 DEG	0.49 DEG	0.54 DEG	0.63 DEG	0.63 DEG	0.66 DEG	0.66 DEG	0.56 DEG	0.65 DEG	0.67 DEG	0.73 DEG	0.72 DEG
NON-SEISMIC LATERAL FORCE, WS (NOTE 8)	59 KIP	24 KIP	107 KIP	209 KIP	485 KIP	477 KIP	482 KIP	524 KIP	508 KIP	510 KIP	505 KIP	497 KIP	441 KIP	147 KIP	15 KIP
MAXIMUM DEAD LOAD ON BEARING (DL)	376 KIP	129 KIP	1769 KIP	3240 KIP	7085 KIP	7229 KIP	7239 KIP	7364 KIP	8061KIP	7726 KIP	7956 KIP	7494 KIP	6890 KIP	2353 KIP	200 KIP
MAXIMUM LIVE LOAD ON BEARING (LL)	313 KIP	93 KIP	597 KIP	601 KIP	1150 KIP	1132 KIP	1132 KIP	1229 KIP	1218 KIP	1217 KIP	1215 KIP	1212 KIP	1096 KIP	453 KIP	32 KIP
MAXIMUM SERVICE LOAD (DL+LL+0.3 WS)	679 KIP	220 KIP	2258 KIP	3900 KIP	8381 KIP	8504 KIP	8515 KIP	8750 KIP	9432 KIP	9096 KIP	9286 KIP	8855 KIP	8119 KIP	2810 KIP	233 KIP
MAXIMUM SEISMIC LOAD (1.05DL+0.15LL+EQ)	2430 KIP	1145 KIP	3801 KIP	4736 KIP	10,662 KIP	10,202 KIP	10,242 KIP	11,528 KIP	12,826 KIP	12,121 KIP	12,198 KIP	10,816 KIP	11,213 KIP	3973 KIP	480 KIP
MAXIMUM SEISMIC LOAD (0.8DL-EQ)	- 66 KIP	- 22 KIP	- 486 KIP	901 KIP	2142 KIP	2187 KIP	2341 KIP	2028 KIP	1301 KIP	2050 KIP	2282 KIP	2044 KIP	1794 KIP	443 KIP	140 KIP
MAXIMUM THERMAL LONGITUDINAL DISPLACEMENT (NOTE 12)	4.4"	4.1"	4.1"	3.7"	2.8"	1.8"	1.2"	0.3"	0.1"	0.4"	0.8"	1.7"	2.3"	4.1"	VARIES
BEARING HEIGHT, H (NOTE 13)	15 1/2"			28"										15 1/2"	12 3/8"
TARGET PERIOD FOR ISOLATOR @ TDD	4.07 SEC			4.19 SEC										4.07 SEC	3.82 SEC
MINIMUM BEARING LATERAL FORCE TO ACTIVATE SERS	-	1.36	0.28	0.35	0.22	0.18	0.17	0.19	0.15	0.16	0.15	0.15	0.17	-	-

1 1

THE CITY OF LOS ANGELES OR ITS OFFICERS OR AGENTS SHALL NOT BE RESPONSIBLE FOR THE ACCURACY OR COMPLETENESS OF ELECTRONIC COPIES OF THIS PLAN SHEET.

REVISION DATES (DESIGN STAGE ONLY)

C:\caddlib\pw\west_c3d\dms57683\S8-01-BG01.dwg 12/17/21 10:51

Sheet Version 3.0

HNTB
HNTB Corporation
601 W. 5TH STREET SUITE 1000
LOS ANGELES, CALIFORNIA 90071
TEL (213) 403-1000 FAX (213) 403-1001

CITY OF LOS ANGELES DEPARTMENT OF PUBLIC WORKS BUREAU OF ENGINEERING

ENGINEERING CITY OF LOS ANGELES

NO.	REVISIONS:	DATE	BY:
1	ADDENDUM NO. 1	08/23/16	MHJ
2	PARC STAIR ELEVATION REVISION ECO 153	12/03/21	MHJ

STRUCTURE NO. 53C-2329

INDEX NO.

THIS PLAN WAS ELECTRONICALLY SIGNED AND STAMPED

REGISTERED PROFESSIONAL ENGINEER MICHAEL H. JONES No. S3033 STATE OF CALIFORNIA

CITY ENGINEER: GARY LEE MOORE, P.E.

		DATE:
ENGINEER:	MICHAEL H. JONES	1/29/2016
DESIGNED BY:	MICHAEL H. JONES	1/29/2016
DRAWN BY:	LI ZHANG	1/29/2016
CHECKED BY:	TOMAS KOMPFNER	1/29/2016
APPROVED BY:	MICHAEL H. JONES	1/29/2016

LIC. NO. S3033 DESIGN GROUP

VERTICAL CONTROL: BM 12-04070, 1929 (NGVD 29) - 1985 ADJUSTMENT
HORIZONTAL CONTROL: GPS; PID AE 1704, EPOCH 1991.35

SHEET TITLE: ISOLATION BEARING DETAILS NO. 1

PROJECT: SIXTH STREET VIADUCT REPLACEMENT

ADDRESS: SIXTH STREET VIADUCT (WHITTIER BLVD) LOS ANGELES, CA

WORK ORDER NO. E700224F

DRAWING NO. S8-01

SHEET 23 OF 562 SHEETS

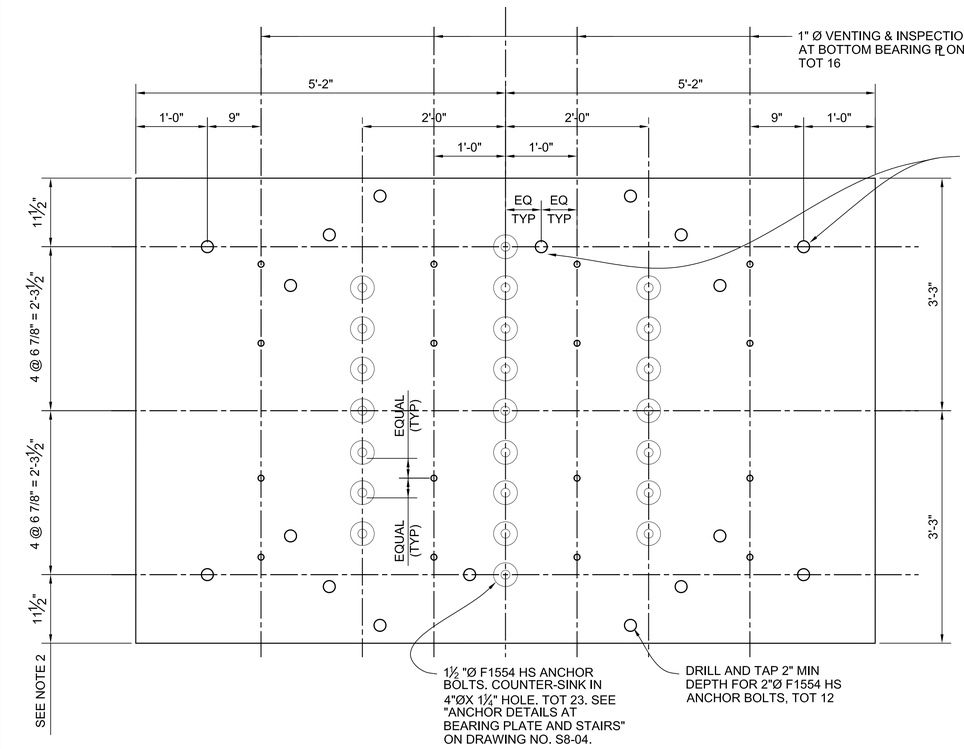

PLAN

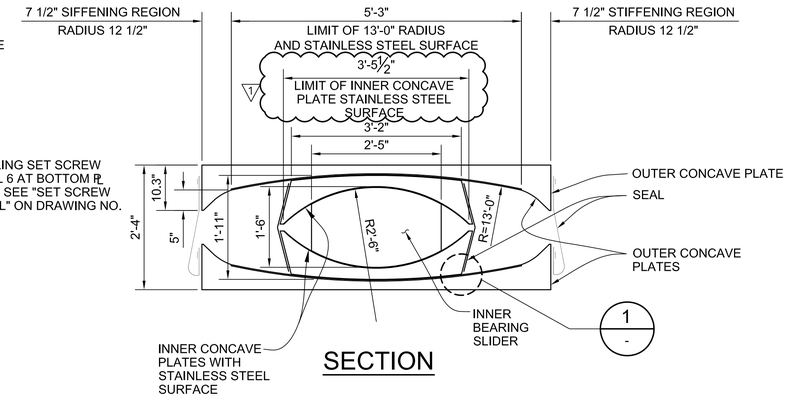

SECTION

NOTES:

1. TOP AND BOTTOM RADIUS OF CONCAVE SURFACES ARE EQUAL.
2. ADJUST SPACING OF 1 1/2" Ø ISOLATION BEARING ANCHOR BOLTS SO THAT THEY ARE PLACED BETWEEN BUNDLED #9 TOP REINFORCEMENT AT A / S3-31.
3. CONTRACTOR SHALL PROVIDE A GAP AND SEAL THE ANCHOR EMBED IN A MANNER THAT WILL NOT ALLOW COMPRESSION OF THE ANCHOR EMBED DURING BOLT TENSIONING. CONTRACTOR SHALL KEEP ANCHOR EMBED BOLT OPENING FREE OF GROUT DURING INSTALLATION OF GROUT PAD.
4. NON-SHRINK GROUT BELOW ISOLATION BEARING PLATES SHALL HAVE A STRENGTH OF f'c=7.5 KSI. GROUT SHALL BE PLACED PRIOR TO BEARING PLACEMENT.
5. AT BENTS 3 THROUGH 12, THE BEARING RAIN SHIELD SHOWN ON THIS DRAWING SHALL BE ADDED ALONG THE LONG SIDE OF THE BEARING PLATE AT THE BEARING SIDE FACING THE EXTERIOR OF THE VIADUCT. CENTER THE RAIN SHIELD ON THE BEARING PLATE.
6. BEARING HS BOLTS SHALL BE ASTM F1544 GRADE 105, fy = 105 KSI WITH WASHERS.
7. HS ANCHOR BOLTS SHALL BE INSTALLED TO A SNUG-TIGHT CONDITION AND A MEDIUM STRENGTH ANAEROBIC THREAD LOCK APPLIED TO ALL THREADS.
8. AT THE BENT 3 NORTH COLUMN, A MODIFIED BEARING PLATE IS REQUIRED AT THE TOP BEARING PLATE. SEE DRAWING NO. S8-04 FOR DETAILS.

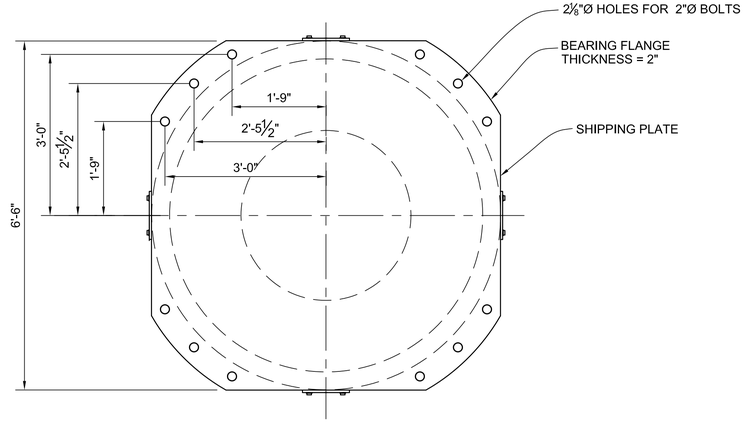

PLAN

ISOLATION BEARING - BENTS 3 THROUGH 12

SCALE: ¾"=1'-0"

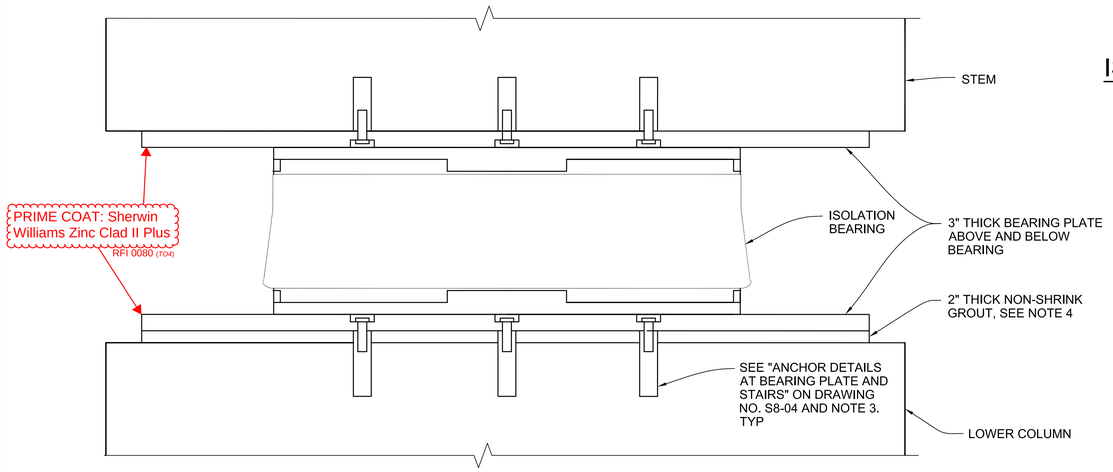

ELEVATION

BEARING PLATE - BENTS 3 THROUGH 12

SCALE: 1"=1'-0"

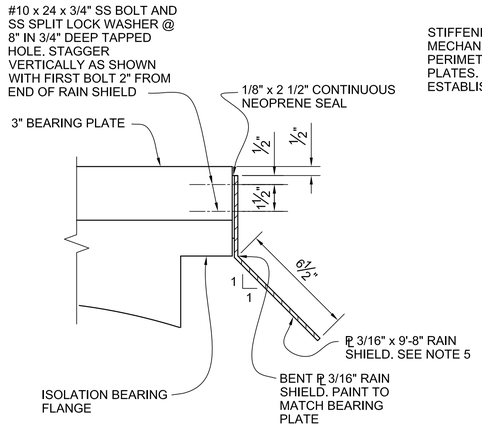

RAIN SHIELD

SCALE: 3"=1'-0"

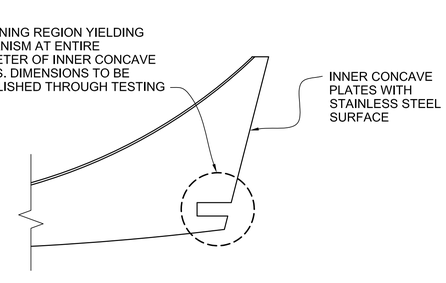

STIFFENING REGION YIELDING MECHANISM

SCALE: 3"=1'-0"

1 / -

HNTB
HNTB Corporation
601 W. 5TH STREET SUITE 1000
LOS ANGELES, CALIFORNIA 90071
TEL (213) 403-1000 FAX (213) 403-1001

CITY OF LOS ANGELES DEPARTMENT OF PUBLIC WORKS
BUREAU OF ENGINEERING
ENGINEERING
CITY OF LOS ANGELES

NO.	REVISIONS:	DATE	BY:
1	ADDENDUM NO. 1	08/23/16	MHJ

STRUCTURE NO. 53C-2329

INDEX NO.

THIS PLAN WAS ELECTRONICALLY SIGNED AND STAMPED.

REGISTERED PROFESSIONAL ENGINEER — MICHAEL H. JONES — No. S3033 — CIVIL — STATE OF CALIFORNIA

GARY LEE MOORE, P.E.	CITY ENGINEER
ENGINEER:	MICHAEL H. JONES
DESIGNED BY:	MICHAEL H. JONES
DRAWN BY:	LI ZHANG
CHECKED BY:	TOMAS KOMPFNER
APPROVED BY:	MICHAEL H. JONES

DESIGN GROUP
LIC. NO. S3033
DATE: 1/29/2016 (all)

VERTICAL CONTROL: BM 12-04070,1928 (NGVD 29) - 1985 ADJUSTMENT
HORIZONTAL CONTROL: GPS; PID AE 1704, EPOCH 1991.35

SHEET TITLE: ISOLATION BEARING DETAILS NO. 2
PROJECT: SIXTH STREET VIADUCT REPLACEMENT
ADDRESS: SIXTH STREET VIADUCT (WHITTIER BLVD) LOS ANGELES, CA

WORK ORDER NO. E700224F

DRAWING NO. S8-02

SHEET 29 OF SHEETS

THE CITY OF LOS ANGELES OR ITS OFFICERS OR AGENTS SHALL NOT BE RESPONSIBLE FOR THE ACCURACY OR COMPLETENESS OF ELECTRONIC COPIES OF THIS PLAN SHEET.

C:\caddlib\pw\pwwestcoast\zhang\dms576831\S8-02-IBD01-02.dwg 8/23/16 14:20

REVISION DATES (DESIGN STAGE ONLY)

Sheet Version 3.0

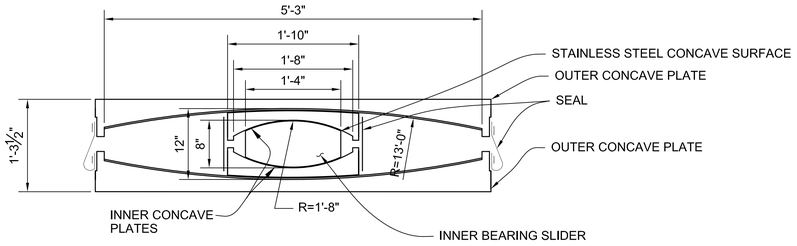

SECTION

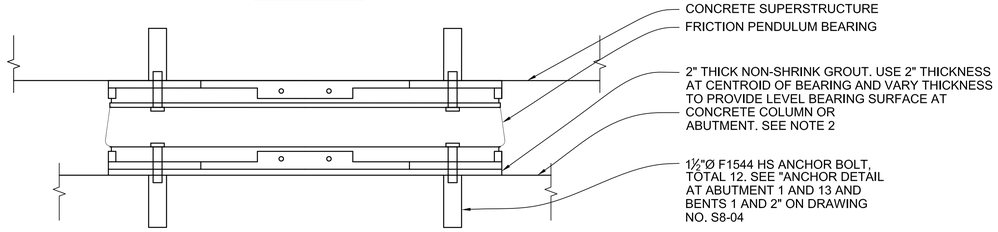

ELEVATION

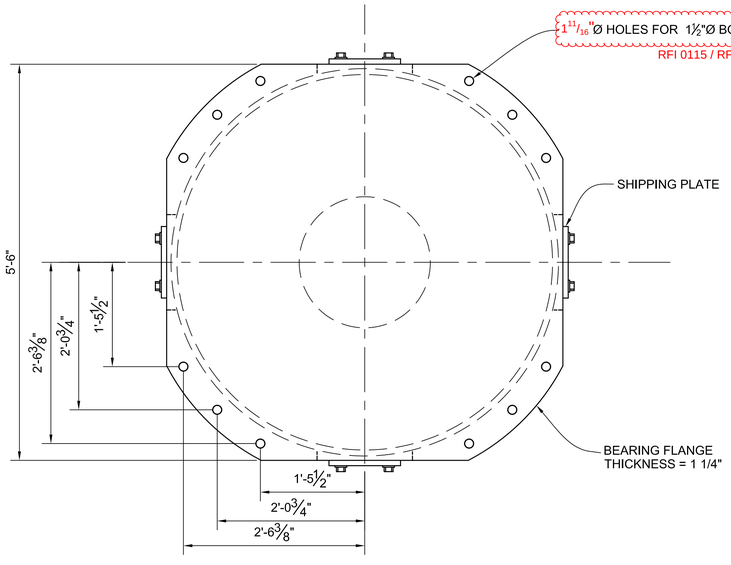

PLAN

ISOLATION BEARING - ABUTMENT 1 AND 13 AND BENTS 1 AND 2

SCALE: 1"=1'-0"

ISOLATION BEARING INITIAL OFFSET

(SEE NOTES 1 AND 2)

LOCATION	X	Y	RESULTANT
	SEE NOTE 3		
ABUT 1	- 3 3/8"	- 1"	3 1/2"
BENT 1	- 3 1/2"	- 7/8"	3 5/8"
BENT 2	- 3 1/8"	- 7/8"	3 1/4"
BENT 3	- 3 3/4"	- 7/8"	3 7/8"
BENT 4	- 2 1/2"	- 3/8"	2 1/2"
BENT 5	- 5/8"	1/8"	5/8"
BENT 6	- 2"	1/8"	2"
BENT 7	1/8"	1/8"	3/16"
BENT 8	- 1/4"	1/4"	3/8"
BENT 9	5/8"	1/8"	5/8"
BENT 10	1/4"	1/4"	3/8"
BENT 11	1 3/8"	- 1/8"	1 3/8"
BENT 12	2 1/8"	- 3/8"	2 1/8"
ABUT 13	4 1/8"	- 1 1/8"	4 1/4"

ISOLATION BEARING INITIAL OFFSET NOTES:

1. AT THE TIME OF BEARING INSTALLATION, THE ISOLATION BEARING SHALL BE OFFSET FROM THE NEUTRAL POSITION SO THAT AT A TIME OF 10 YEARS AFTER THE COMPLETION OF CONSTRUCTION, BOTH THE TOP AND BOTTOM OUTER CONCAVE PLATES WILL BE WITHIN 1" OF THE NEUTRAL POSITION. THE BEARING IS IN NEUTRAL POSITION WHEN THE CENTROIDS OF THE INNER SLIDER AND OUTER AND INNER CONCAVE PLATES ALIGN. THE REQUIRED OFFSET SHALL BE OBTAINED BY OFFSETTING THE UPPER AND LOWER OUTER CONCAVE PLATES EQUAL AMOUNTS WITH THE INNER SLIDER AND INNER CONCAVE PLATES AT THE NEUTRAL POSITION. THE ISOLATOR SHALL BE SHIPPED FROM THE FACTORY IN THIS POSITION AND LOCKED IN THE POSITION WITH THE EXTERNAL RESTRAINING PLATES.
2. ESTIMATES OF THE ISOLATOR OFFSET AT A TIME OF 10 YEARS AFTER THE COMPLETION OF CONSTRUCTION ARE PROVIDED IN THE "ISOLATION BEARING INITIAL OFFSET" TABLE. THE CONTRACTOR SHALL PROVIDE THE ACTUAL OFFSETS BASED ON THE SPECIFIC ERECTION SEQUENCE AND CONCRETE MATERIAL PROPERTIES USED TO CONSTRUCT THE VIADUCT. SEE "CONTRACTOR RESPONSIBILITIES AND GEOMETRIC CONTROL NOTES" ON DRAWING NO. S9-05.
3. FOR X AND Y COORDINATE ORIENTATION, SEE DRAWING NO. S3-12.

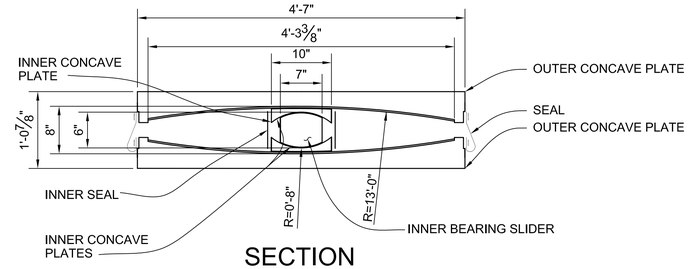

SECTION

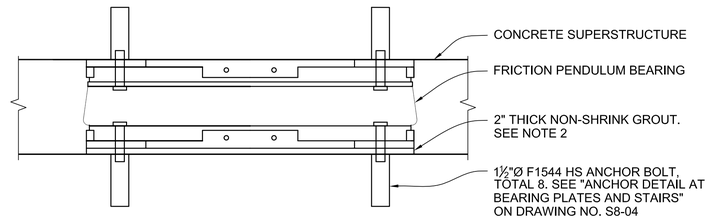

ELEVATION

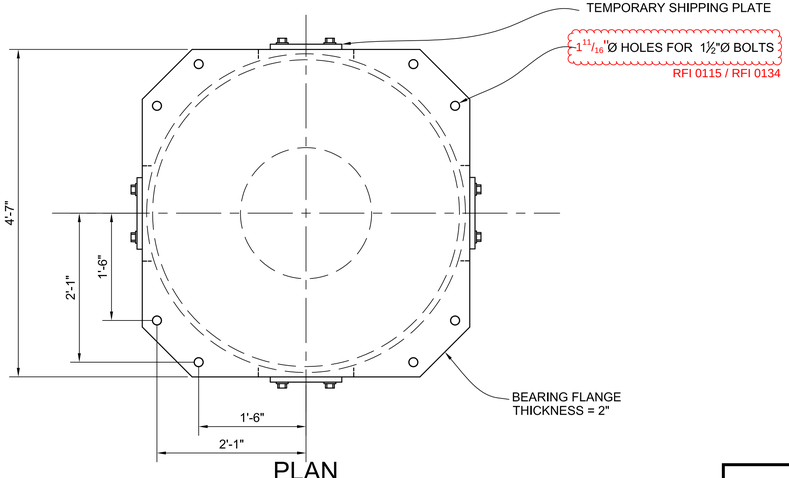

PLAN

ISOLATION BEARING AT STAIRS

SCALE: 1"=1'-0"

NOTES:

1. SEE DRAWING NO. S8-02 FOR ADDITIONAL NOTES.
2. NON-SHRINK GROUT BELOW ISOLATION BEARING PLATES SHALL HAVE A STRENGTH OF F'c=7.5 KSI. GROUT SHALL BE PLACED PRIOR TO BEARING PLACEMENT.

THE CITY OF LOS ANGELES OR ITS OFFICERS OR AGENTS SHALL NOT BE RESPONSIBLE FOR THE ACCURACY OR COMPLETENESS OF ELECTRONIC COPIES OF THIS PLAN SHEET.

C:\caddlib\pw\pwwestcoast\zhang\dms57683\S8-02-IBD01-02.dwg 6/28/16 10:32

REVISION DATES (DESIGN STAGE ONLY)

Sheet Version 3.0

HNTB
HNTB Corporation
601 W. 5TH STREET SUITE 1000
LOS ANGELES, CALIFORNIA 90071
TEL (213) 403-1000 FAX (213) 403-1001

BUREAU OF ENGINEERING
OFFICIAL RECORD

CITY OF LOS ANGELES DEPARTMENT OF PUBLIC WORKS
BUREAU OF ENGINEERING

ENGINEERING
CITY OF LOS ANGELES

"THIS PLAN WAS ELECTRONICALLY SIGNED AND STAMPED"

REGISTERED PROFESSIONAL ENGINEER
MICHAEL H. JONES
No. S3033
STATE OF CALIFORNIA

NO.	REVISIONS:	DATE:	BY:

STRUCTURE NO. 53C-2329

INDEX NO. P-38113

GARY LEE MOORE, P.E. CITY ENGINEER

	DESIGN GROUP	LIC. NO. S3033	DATE:
ENGINEER:	MICHAEL H. JONES		1/29/2016
DESIGNED BY:	MICHAEL H. JONES		1/29/2016
DRAWN BY:	LI ZHANG		1/29/2016
CHECKED BY:	TOMAS KOMPFNER		1/29/2016
APPROVED BY:	MICHAEL H. JONES		1/29/2016

VERTICAL CONTROL: BM 12-04070,1928 (NGVD 29) - 1985 ADJUSTMENT
HORIZONTAL CONTROL: GPS; PID AE 1704, EPOCH 1991.35

SHEET TITLE: ISOLATION BEARING DETAILS NO. 3

PROJECT: SIXTH STREET VIADUCT REPLACEMENT

ADDRESS: SIXTH STREET VIADUCT (WHITTIER BLVD) LOS ANGELES, CA

WORK ORDER NO. E700224F

DRAWING NO. S8-03

SHEET 400 OF 560 SHEETS

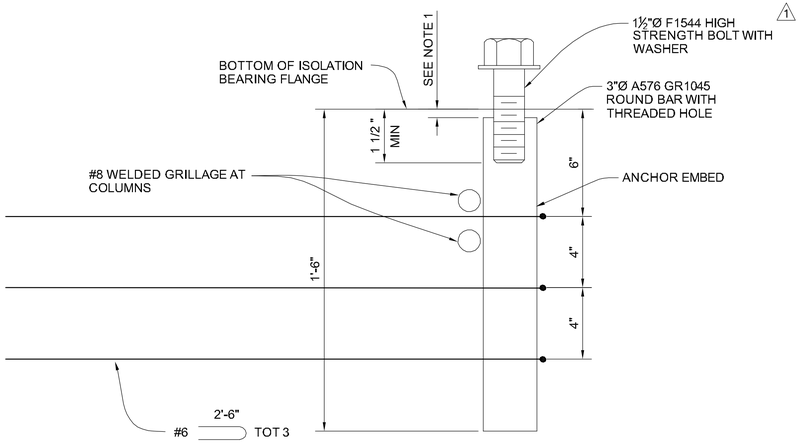

COLUMN OR ABUTMENT

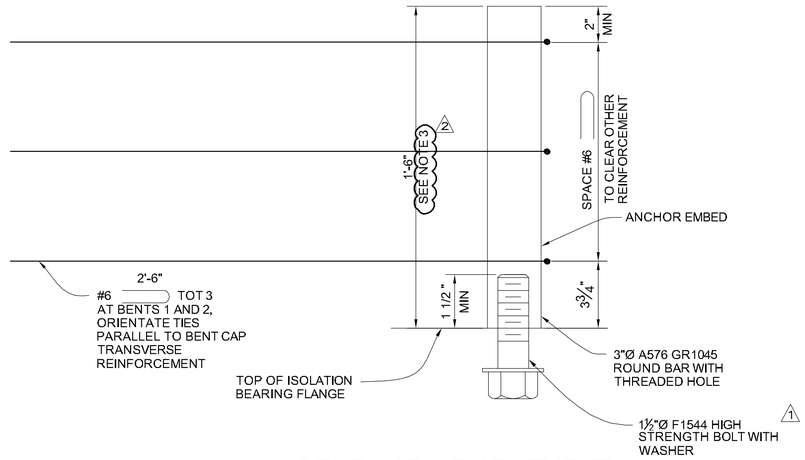

BENT CAP OR ABUTMENT

NOTES:

1. CONTRACTOR SHALL PROVIDE A GAP AND SEAL THE ANCHOR EMBED IN A MANNER THAT WILL NOT ALLOW COMPRESSION OF THE ANCHOR EMBED DURING BOLT TENSIONING. CONTRACTOR SHALL KEEP ANCHOR EMBED BOLT OPENING FREE OF GROUT DURING INSTALLATION OF GROUT PAD.
2. FOR REQUIRED HS BOLT INSTALLATION TENSION, SEE NOTE 7 ON DRAWING NO. S8-02.
3. WHERE ANCHOR EMBED INTERFERES WITH EDGE GIRDER POST TENSIONING DUCTS, ANCHOR EMBED LENGTH MAY BE REDUCE TO 1'-3", NO MORE THAN 3 EMBEDS PER BEARING MAY BE REDUCED.

2

ANCHOR DETAIL AT ABUTMENT 1 AND 13 AND BENTS 1 AND 2

SCALE: 3"=1'-0"

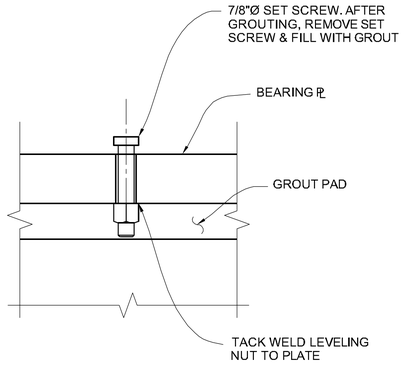

SET SCREW DETAIL

NO SCALE

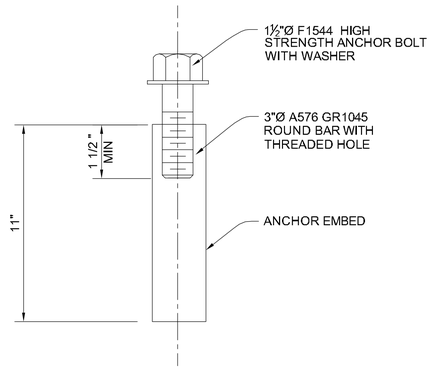

ANCHOR DETAIL AT BEARING PLATES AND STAIRS

SCALE: 3"=1'-0"

See attached Drawing. TO 5 RFI No. 487

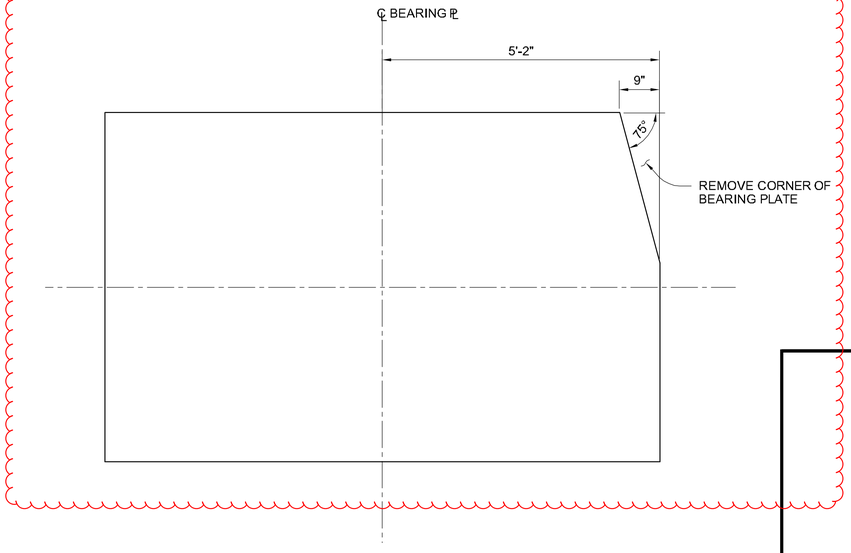

MODIFIED TOP BEARING PLATE AT BENT 3 - NORTH COLUMN

SCALE: 3/4"=1'-0"

THE CITY OF LOS ANGELES OR ITS OFFICERS OR AGENTS SHALL NOT BE RESPONSIBLE FOR THE ACCURACY OR COMPLETENESS OF ELECTRONIC COPIES OF THIS PLAN SHEET.

C:\caddlib\pw\pwwestcoast\zhang\dms576831\S8-02-IBD01-02.dwg 2/16/18 17:28

Sheet Version 3.0

REVISION DATES (DESIGN STAGE ONLY)

BUREAU OF ENGINEERING

ENGINEERING
CITY OF LOS ANGELES

NO.	REVISIONS:	DATE:	BY:
1	CHANGE ORDER NO. 1 - BEARING TESTING CHANGES	CO-1 TO 4 08/15/16	MHJ
2	BIM REVISION 4	02/16/18	MHJ

STRUCTURE NO. 53C-2329

INDEX NO.

THIS PLAN WAS ELECTRONICALLY SIGNED AND STAMPED.

REGISTERED PROFESSIONAL ENGINEER — MICHAEL H. JONES — No. S3033 — RENEWAL 08-31-2017 — STATE OF CALIFORNIA

CITY OF LOS ANGELES DEPARTMENT OF PUBLIC WORKS

GARY LEE MOORE, P.E. — CITY ENGINEER

		DATE:
ENGINEER:	DESIGN GROUP	
DESIGNED BY:	MICHAEL H. JONES	1/29/2016
DRAWN BY:	LI ZHANG	1/29/2016
CHECKED BY:	TOMAS KOMPFNER	1/29/2016
APPROVED BY:	MICHAEL H. JONES	1/29/2016

LIC. NO. S3033

VERTICAL CONTROL: BM 12-04070, 1929 (NGVD 29) - 1988 ADJUSTMENT
HORIZONTAL CONTROL: GPS; PID AE 1704, EPOCH 1991.35

SHEET TITLE: ISOLATION BEARING DETAILS NO. 4

PROJECT: SIXTH STREET VIADUCT REPLACEMENT

ADDRESS: SIXTH STREET VIADUCT (WHITTIER BLVD) LOS ANGELES, CA

HNTB
HNTB Corporation
601 W. 5TH STREET SUITE 1000
LOS ANGELES, CALIFORNIA 90071
TEL (213) 403-1000 FAX (213) 403-1001

WORK ORDER NO. E700224F

DRAWING NO. S8-04

SHEET 401 OF 560 SHEETS

Bent 3 North: Looking Up at Soffit - Option 3

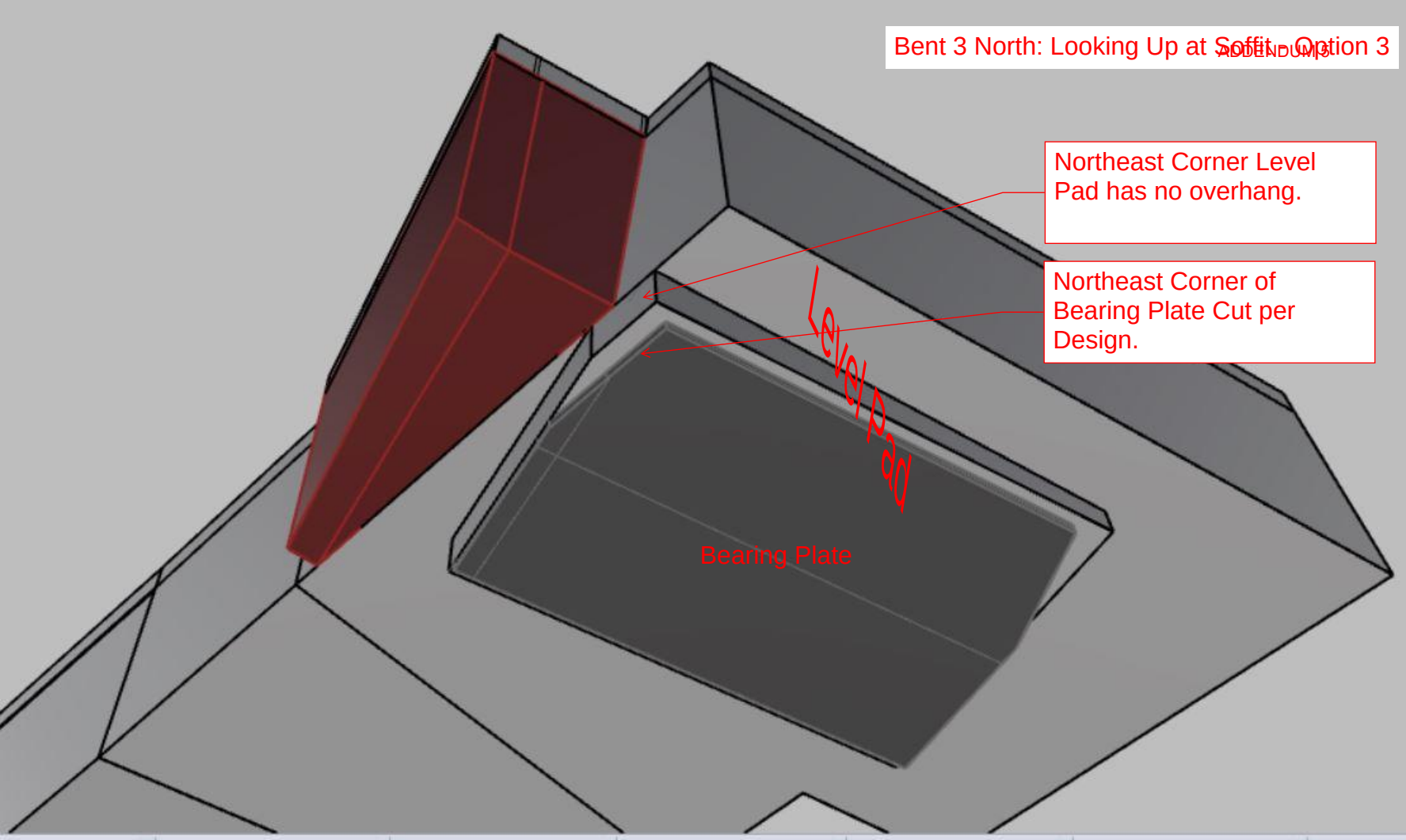

ADDENDUM 5

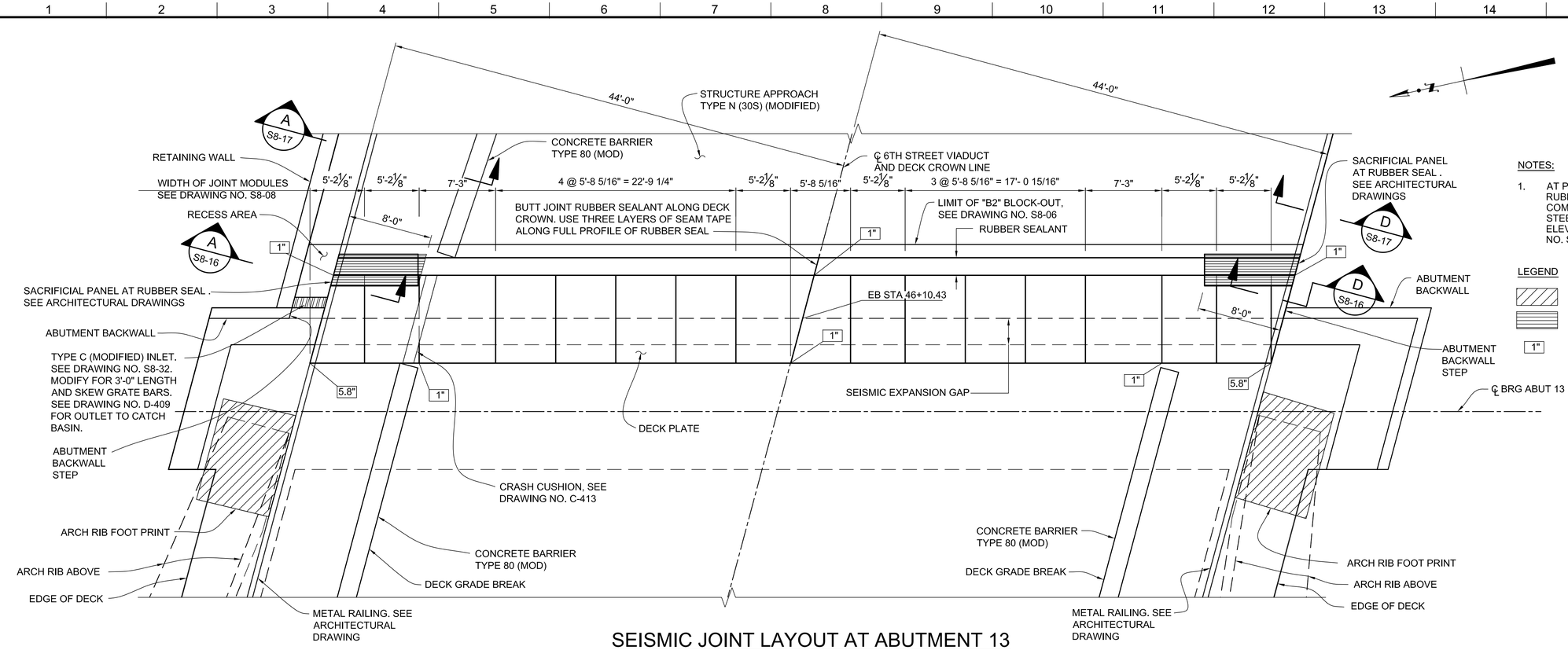

SEISMIC JOINT LAYOUT AT ABUTMENT 13

SCALE: 3/16" = 1'-0"

NOTES:

1. AT PEDESTRIAN WALKWAYS, COVER RUBBER SEALANT WITH ADA COMPLIANT RUBBER ENCAPSULATED STEEL COVER SYSTEM. SEE "JOINT ELEVATION AT WALKWAY" ON DRAWING NO. S8-07 FOR DETAILS.

LEGEND

- ARCH RIB FOOT PRINT
- ADA COMPLIANT COVER (SEE NOTE 1)
- 1" - DEPTH OF POLYESTER CONCRETE OVERLAY

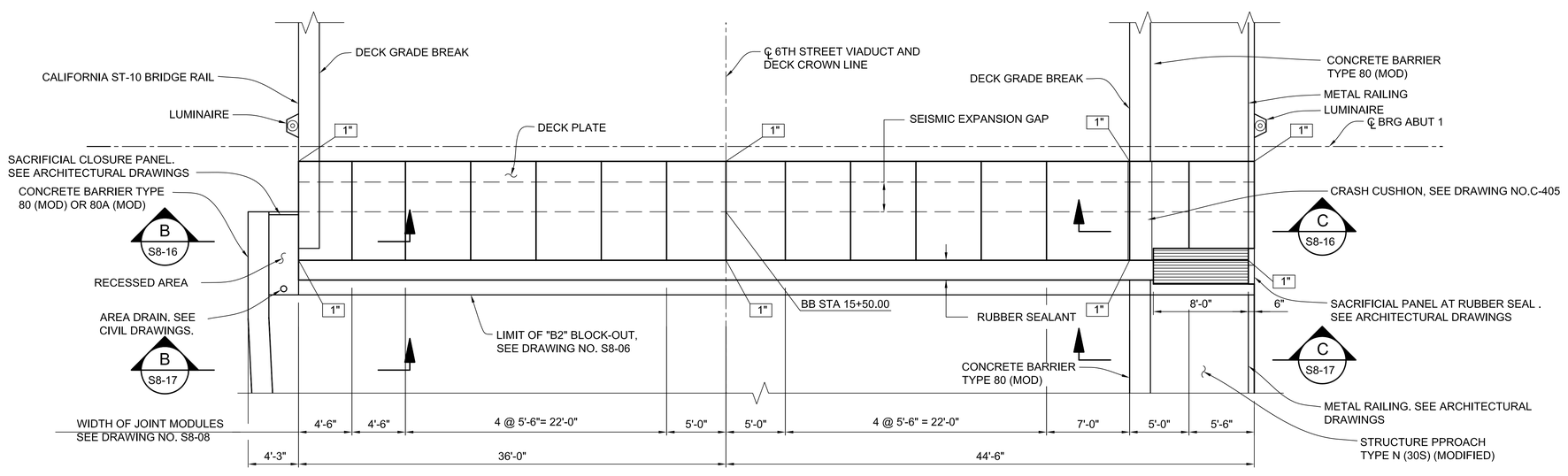

SEISMIC JOINT LAYOUT AT ABUTMENT 1

SCALE: 3/16" = 1'-0"

THE CITY OF LOS ANGELES OR ITS OFFICERS OR AGENTS SHALL NOT BE RESPONSIBLE FOR THE ACCURACY OR COMPLETENESS OF ELECTRONIC COPIES OF THIS PLAN SHEET.

C:\caddlib\pw\pwwestcoast\zhang\dms57683\S8-05-JL01.dwg 6/28/16 10:32

REVISION DATES (DESIGN STAGE ONLY)

Sheet Version 3.0

BUREAU OF ENGINEERING

ENGINEERING
CITY OF LOS ANGELES

NO.	REVISIONS:	DATE:	BY:

STRUCTURE NO. 53C-2329

INDEX NO. P-38113

THIS PLAN WAS ELECTRONICALLY SIGNED AND STAMPED

REGISTERED PROFESSIONAL ENGINEER MICHAEL H. JONES No. 53033 CIVIL STATE OF CALIFORNIA

CITY OF LOS ANGELES DEPARTMENT OF PUBLIC WORKS

CITY ENGINEER	GARY LEE MOORE, P.E.	DATE: 1/29/2016
	DESIGN GROUP	
ENGINEER:	MICHAEL H. JONES	LIC. NO. S3033
DESIGNED BY:	MICHAEL H. JONES	1/29/2016
DRAWN BY:	LI ZHANG	1/29/2016
CHECKED BY:	CHARLES REDFIELD	1/29/2016
APPROVED BY:	MICHAEL H. JONES	1/29/2016

VERTICAL CONTROL: BM 12-04070, 1929 (NGVD 29) - 1985 ADJUSTMENT
HORIZONTAL CONTROL: GPS; PID AE 1704, EPOCH 1991.35

SHEET TITLE: SEISMIC JOINT LAYOUT

PROJECT: SIXTH STREET VIADUCT REPLACEMENT

ADDRESS: SIXTH STREET VIADUCT (WHITTIER BLVD) LOS ANGELES, CA

HNTB
HNTB Corporation
601 W. 5TH STREET SUITE 1000
LOS ANGELES, CALIFORNIA 90071
TEL (213) 403-1000 FAX (213) 403-1001

BUREAU OF ENGINEERING OFFICIAL RECORD

WORK ORDER NO. E700224F

DRAWING NO. S8-05

SHEET 402 OF 560 SHEETS

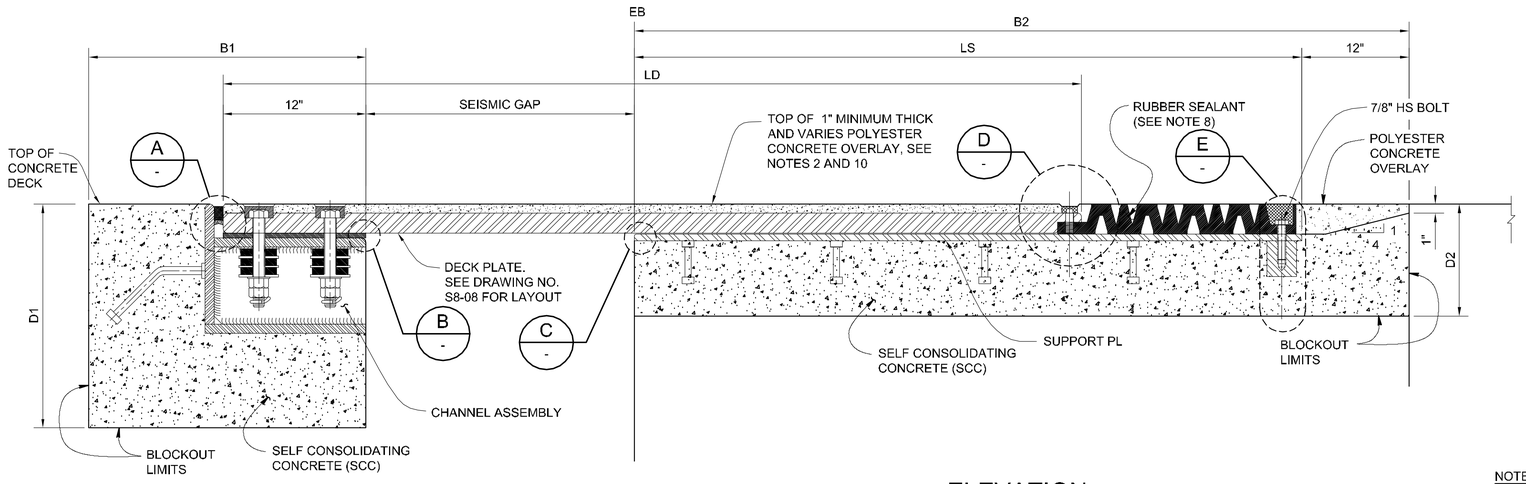

ELEVATION

NO SCALE

JOINT INFORMATION (MAXIMUM NON-SEISMIC MR=14")			
LOCATION		ABUT 1	ABUT 13
SKEW (°)		0°	15°
DECK PLATE	THICKNESS TD (IN)	2 1/4	2 1/4
	LENGTH LD (IN)	90	90
SUPPORT PLATE	THICKNESS TS (IN)	3/4	3/4
	LENGTH LS (IN)	72	72
SEISMIC GAP (SEE NOTE 16)	(IN)	30	30
BLOCKOUT	B1 (IN)	30	30
	B2 (IN)	84	84
	D1 (IN)	18	18
	D2 (IN)	12	12

NOTES:

1. INSTALL SEISMIC JOINT AFTER THE VIADUCT IS FULLY CONSTRUCTED.
2. TOP OF POLYESTER CONCRETE OVERLAY, RUBBER SEALANT AND SCC SHALL MATCH TOP OF DECK PROFILE.
3. FOR DECK PLATE DETAILS SEE DRAWING NOS. S8-07 & S8-08.
4. FOR MILD REINFORCEMENT IN BLOCKOUT AREAS, SEE DRAWING NOS. S8-12 AND S8-14.
5. FOR ANCHOR PLATE DETAILS, SEE DRAWING NO. S8-09.
6. PLACE DECK PLATE, SUPPORT PLATE AND ANCHOR PLATE SO THAT FULL BEARING IS ACHIEVED BETWEEN DECK PLATE AND SUPPORT PLATES AND BETWEEN DECK PLATE AND ANCHOR PLATE.
7. SELF-CONSOLIDATING CONCRETE SHALL BE USED IN JOINT BLOCKOUT.
8. STEEL REINFORCED MOLDED RUBBER EXPANSION JOINT SYSTEM WITH A MOVEMENT RATING (MR) OF 14". AT THE TIME OF INSTALLATION, RUBBER SEALANT SHALL BE COMPRESSED FROM THE NEUTRAL POSITION SO THAT AT A VIADUCT TEMPERATURE OF 70°F ONLY 4" OF ADDITIONAL CONTRACTION CAPACITY REMAINS AND 10" OF EXPANSION CAPACITY IS PROVIDED.
9. FOR SUPPORT PLATE DETAILS SEE DRAWING NO. S8-11.
10. TYPICAL DEPTH OF POLYESTER CONCRETE OVERLAY ON THE DECK PLATE IS 1". DEPTH OF OVERLAY VARIES AT WALKWAYS, SEE DRAWING NO. S8-05. APPLY POLYESTER OVERLAY AT MANUFACTURING SHOP.
11. ANCHOR PLATE AND ANCHOR PLATE CONCRETE ANCHOR STUDS AND SHEAR LUGS MUST BE GALVANIZED IN ACCORDANCE WITH ASTM A153. ANCHOR STUDS AND SHEAR LUGS AT SUPPORT PLATE MUST BE ZINC COATED.
12. APPLY MEDIUM STRENGTH ANAEROBIC THREAD LOCKER TO THREADS.
13. PIN MUST BE MADE FROM ASTM A449 ROD. PIN AND/OR HS BOLT SIZE MAY CHANGE PER RUBBER SEALANT SUPPLIER RECOMMENDATIONS. GALVANIZED PIN AND BOLT THREADS SHALL MATCH RUBBER SEALANT STEEL PLATE THREADS.
14. PINS AND BOLTS ARE PROVIDED BY THE RUBBER SEALANT SUPPLIER AND SHALL FIT TO RUBBER SEALANT HOLES.
15. RUBBER SEALANT SHALL NOT BE PLACED UNTIL ALL CONSTRUCTION OF THE ENTIRE VIADUCT BETWEEN ABUTMENTS 1 AND 13 IS COMPLETE.
16. SEISMIC GAP IS AT A VIADUCT TEMPERATURE OF 70°F AT THE END OF VIADUCT CONSTRUCTION.

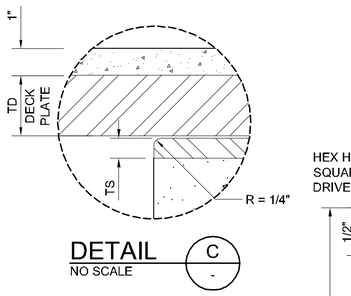

DETAIL C
NO SCALE

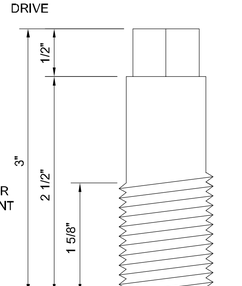

PIN DETAIL
NO SCALE

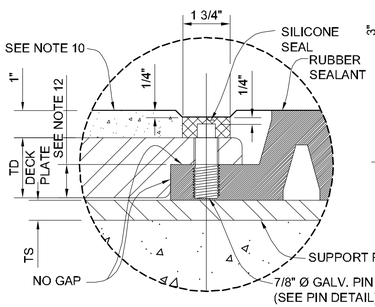

DETAIL D
NO SCALE

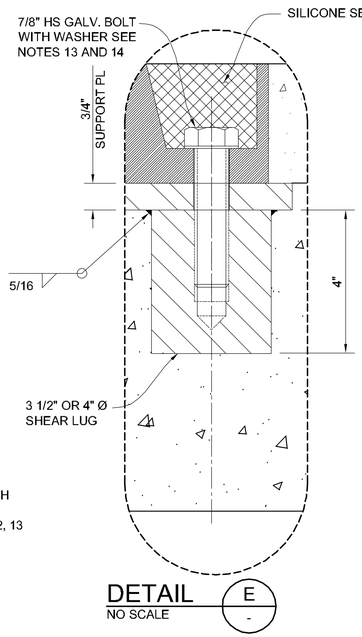

DETAIL E
NO SCALE

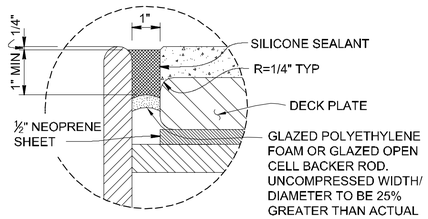

DETAIL A
NO SCALE

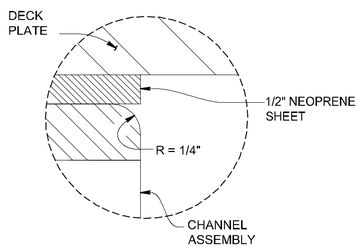

DETAIL B
NO SCALE

THE CITY OF LOS ANGELES OR ITS OFFICERS OR AGENTS SHALL NOT BE RESPONSIBLE FOR THE ACCURACY OR COMPLETENESS OF ELECTRONIC COPIES OF THIS PLAN SHEET

C:\coditb\pw\pwwestcoast\zhang\dms57683\S8-06-J001-08A.dwg 9/08/17 14:03
Sheet Version 3.0

REVISION DATES (DESIGN STAGE ONLY)

HNTB
HNTB Corporation
601 W. 5TH STREET SUITE 1000
LOS ANGELES, CALIFORNIA 90071
TEL (213) 403-1000 FAX (213) 403-1001

CITY OF LOS ANGELES DEPARTMENT OF PUBLIC WORKS BUREAU OF ENGINEERING

ENGINEERING CITY OF LOS ANGELES

NO.	REVISIONS:	DATE:	BY:
1	GENERAL BIM UPDATES	08/31/17	MHJ
	ECO 42		

STRUCTURE NO. 53C-2329

INDEX NO.

THIS PLAN WAS ELECTRONICALLY SIGNED AND STAMPED

REGISTERED PROFESSIONAL ENGINEER MICHAEL H. JONES No. S3033 STATE OF CALIFORNIA

GARY LEE MOORE, P.E. CITY ENGINEER

DESIGN GROUP		DATE:
ENGINEER:	MICHAEL H. JONES LIC. NO. S3033	1/29/2016
DESIGNED BY:	MICHAEL H. JONES	1/29/2016
DRAWN BY:	LI ZHANG	1/29/2016
CHECKED BY:	CHARLES REDFIELD	1/29/2016
APPROVED BY:	MICHAEL H. JONES	1/29/2016

VERTICAL CONTROL: BM 12-04070,1929 (NGVD 29) - 1985 ADJUSTMENT
HORIZONTAL CONTROL: GPS; PID AE 1704, EPOCH 1991.35

SHEET TITLE: SEISMIC JOINT CROSS SECTION

PROJECT: SIXTH STREET VIADUCT REPLACEMENT

ADDRESS: SIXTH STREET VIADUCT (WHITTIER BLVD) LOS ANGELES, CA

WORK ORDER NO. E700224F

DRAWING NO. S8-06

SHEET 23 OF 560 SHEETS

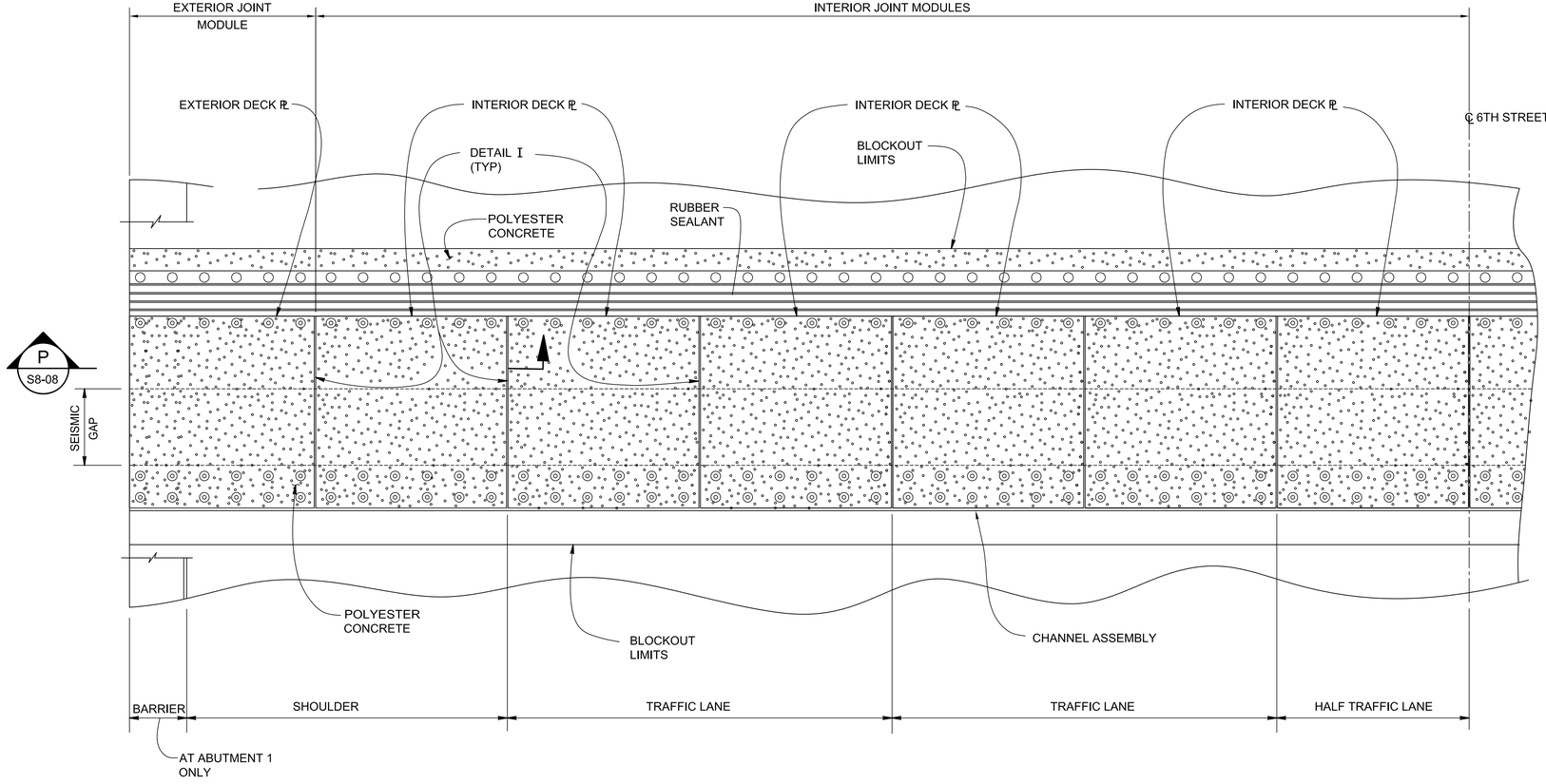

SEISMIC JOINT - SCHEMATIC (HALF) PLAN

NO SCALE

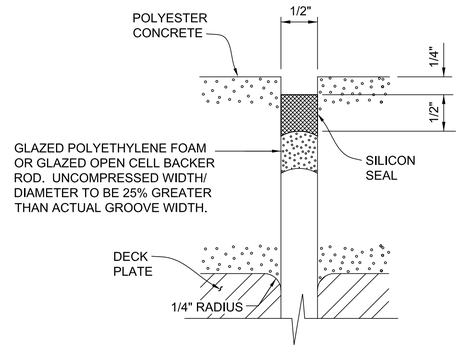

DETAIL I

NO SCALE

NOTES:

1. EACH JOINT MODULE CONSIST OF A SUPPORT PLATE, ANCHOR PLATE, DECK PLATE AND RUBBER SEALANT.
2. FOR INTERIOR AND EXTERIOR DECK PLATES SEE DRAWING NO. S8-08.
3. EXTERIOR DECK PLATE MATCHES WITH EXTERIOR SUPPORT PLATE AND THE EXTERIOR ANCHOR PLATE AT THE EXTERIOR SIDE. CHANNEL ASSEMBLIES ARE 1/4" WIDER AT EXTERIOR CHANNELS AND 1/2" WIDER AT INTERIOR CHANNELS THAN THEIR CORRESPONDING DECK PLATES.
4. ONLY PORTIONS OF BARRIERS ARE SHOWN FOR CLARITY.

LEGEND:

DENOTES POLYESTER CONCRETE OVERLAY

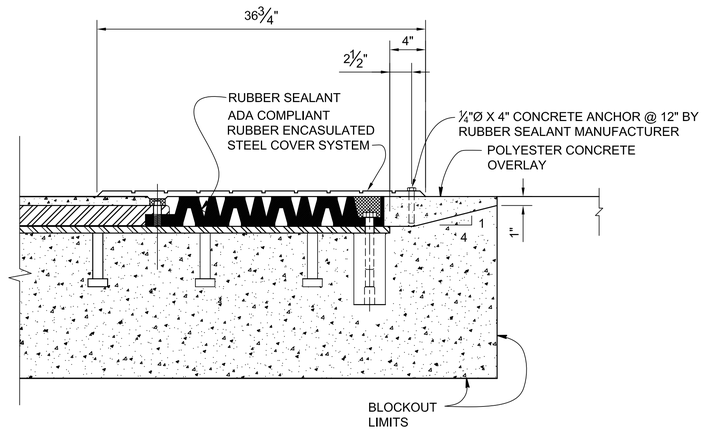

JOINT ELEVATION AT WALKWAY

NO SCALE

BUREAU OF ENGINEERING

CITY OF LOS ANGELES

ENGINEERING

CITY OF LOS ANGELES

STRUCTURE NO. 53C-2329

INDEX NO. P-38113

NO. | REVISIONS: | DATE: | BY:

THIS PLAN WAS ELECTRONICALLY SIGNED AND STAMPED.

REGISTERED PROFESSIONAL ENGINEER MICHAEL H. JONES No. S3033 Exp. 06-31-16 STATE OF CALIFORNIA

DEPARTMENT OF PUBLIC WORKS

GARY LEE MOORE, P.E. CITY ENGINEER

		DATE:
ENGINEER:	MICHAEL H. JONES LIC. NO. S3033	1/29/2016
DESIGNED BY:	MICHAEL H. JONES	1/29/2016
DRAWN BY:	LI ZHANG	1/29/2016
CHECKED BY:	CHARLES REDFIELD	1/29/2016
APPROVED BY:	MICHAEL H. JONES	1/29/2016

VERTICAL CONTROL: BM 12-04070.1929 (NGVD 29) - 1985 ADJUSTMENT
HORIZONTAL CONTROL: GPS; PID AE 1704, EPOCH 1991.35

SHEET TITLE: DECK PLATE DETAILS NO. 1

PROJECT: SIXTH STREET VIADUCT REPLACEMENT

ADDRESS: SIXTH STREET VIADUCT (WHITTIER BLVD) LOS ANGELES, CA

HNTB

HNTB Corporation
601 W. 5TH STREET SUITE 1000
LOS ANGELES, CALIFORNIA 90071
TEL (213) 403-1000 FAX (213) 403-1001

BUREAU OF ENGINEERING OFFICIAL RECORD

WORK ORDER NO. E700224F

DRAWING NO. S8-07

SHEET 404 OF 560 SHEETS

THE CITY OF LOS ANGELES OR ITS OFFICERS OR AGENTS SHALL NOT BE RESPONSIBLE FOR THE ACCURACY OR COMPLETENESS OF ELECTRONIC COPIES OF THIS PLAN SHEET.

C:\caddlib\pw\pwwestcoast\lzhang\dms57683\S8-06-JD01-08A.dwg 6/28/16 10:33

REVISION DATES (DESIGN STAGE ONLY)

Sheet Version 3.0

NOTES:

1. FOR DECK PLATE PLAN SEE DRAWING NOS S8-05 AND S8-07.
2. FOR TD AND LP VALUES SEE "JOINT INFORMATION TABLE" ON DRAWING NO. S8-06.
3. STANDARD HOLES MAY BE REPLACED BY SLOTTED HOLES ORIENTED IN THE TRANSVERSE DIRECTION.

DECK PLATE DIMENSIONS					
JOINT MODULE TYPE	W	A	N	B	LOCATION
EXTERIOR	5'-2 1/8"	6 15/16"	4	1'-0"	13
INTERIOR	5'-2 1/8"	6 13/16"	4	1'-0"	
INTERIOR	5'-8 5/16"	9 29/32"	4	1'-0"	
INTERIOR	7'-3"	7 1/4"	6	1'-0"	
INTERIOR	5'-8 5/16"	7 29/32"	4	1'-1"	1
EXTERIOR	4'-6"	4 7/8"	4	11"	
INTERIOR	4'-6"	4 3/4"	4	11"	
INTERIOR	5'-6"	8 3/4"	4	1'-0"	
INTERIOR	5'-0"	5 3/4"	4	1'-0"	
INTERIOR	7'-0"	5 3/4"	6	1'-0"	
EXTERIOR	5'-6"	5 3/8"	5	11"	

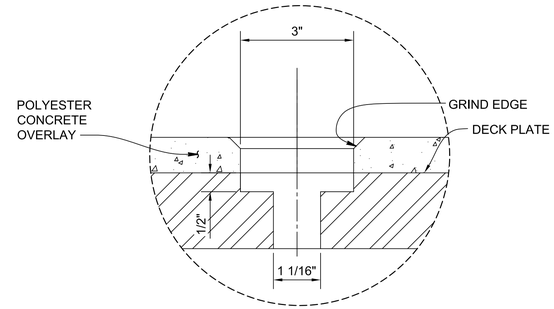

DETAIL L / NO SCALE

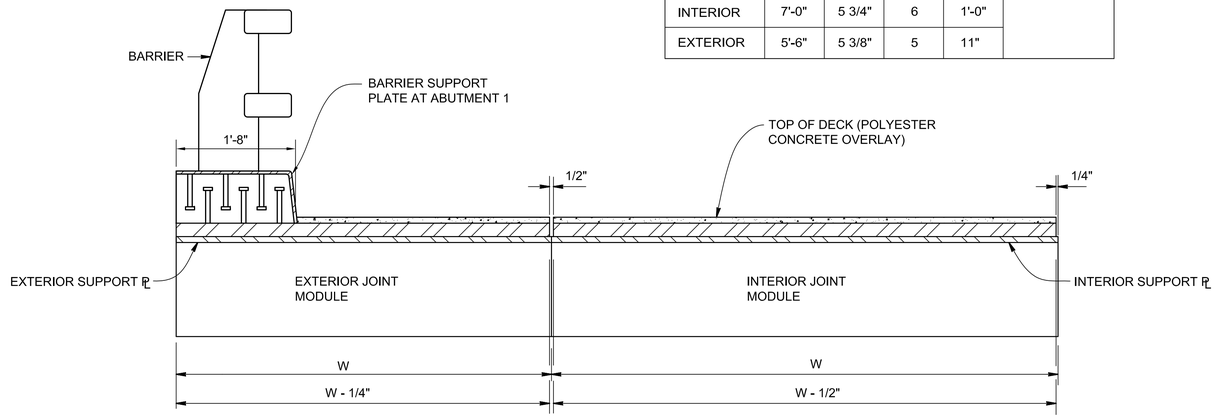

SECTION P / NO SCALE / S8-07

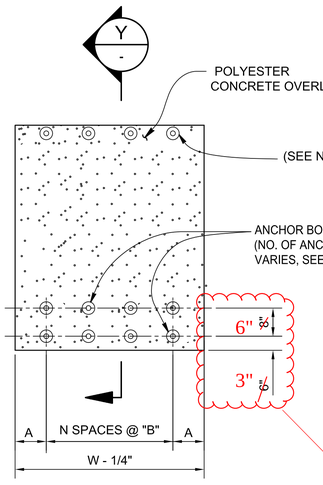

EXTERIOR DECK PLATE / NO SCALE

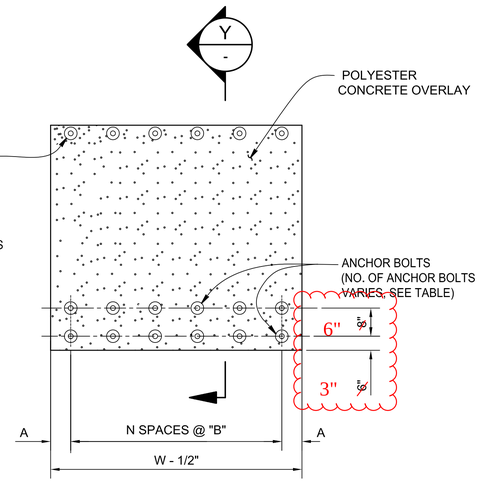

INTERIOR DECK PLATE / NO SCALE

NOTE:

BARRIER NOT SHOWN FOR CLARITY

RFI 494
Refer to S8-11 Section F.

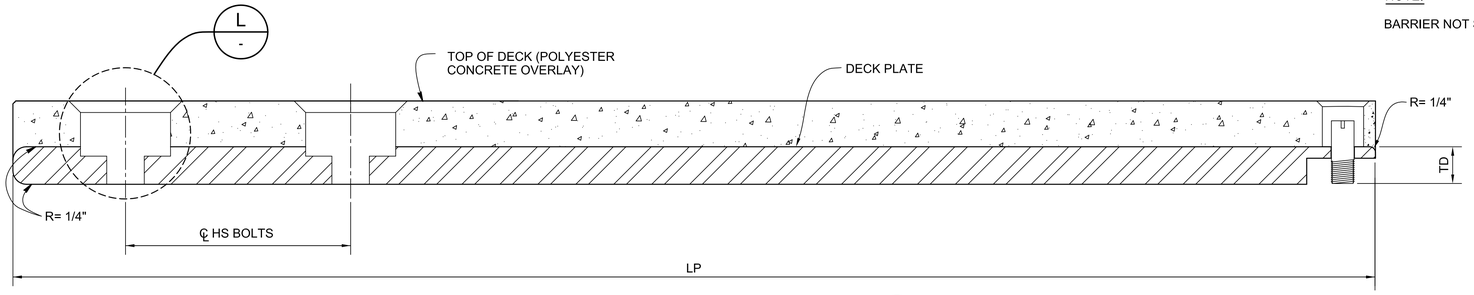

SECTION Y / NO SCALE / S8-08

THE CITY OF LOS ANGELES OR ITS OFFICERS OR AGENTS SHALL NOT BE RESPONSIBLE FOR THE ACCURACY OR COMPLETENESS OF ELECTRONIC COPIES OF THIS PLAN SHEET.

C:\coddlib\pw\pwwestcoast\zhang\dms57683\S8-06-JD01-08A.dwg 6/28/16 10:33

REVISION DATES (DESIGN STAGE ONLY)

Sheet Version 3.0

HNTB
HNTB Corporation
601 W. 5TH STREET SUITE 1000
LOS ANGELES, CALIFORNIA 90071
TEL (213) 403-1000 FAX (213) 403-1001

OFFICIAL RECORD

CITY OF LOS ANGELES DEPARTMENT OF PUBLIC WORKS
BUREAU OF ENGINEERING

ENGINEERING
CITY OF LOS ANGELES

NO.	REVISIONS:	DATE	BY:

STRUCTURE NO. 53C-2329

INDEX NO. P-38113

REGISTERED PROFESSIONAL ENGINEER MICHAEL H. JONES No. S3033 CIVIL STATE OF CALIFORNIA

THIS PLAN WAS ELECTRONICALLY SIGNED AND STAMPED

GARY LEE MOORE, P.E. CITY ENGINEER

DESIGN GROUP		DATE:	1/29/2016
ENGINEER:	MICHAEL H. JONES	LIC. NO.	S3033
DESIGNED BY:	MICHAEL H. JONES		1/29/2016
DRAWN BY:	LI ZHANG		1/29/2016
CHECKED BY:	CHARLES REDFIELD		1/29/2016
APPROVED BY:	MICHAEL H. JONES		1/29/2016

VERTICAL CONTROL: BM 12-04070 1929 (NGVD 29) - 1985 ADJUSTMENT
HORIZONTAL CONTROL: GPS; PID AE 1704, EPOCH 1991.35

SHEET TITLE: DECK PLATE DETAILS NO. 2

PROJECT: SIXTH STREET VIADUCT REPLACEMENT

ADDRESS: SIXTH STREET VIADUCT (WHITTIER BLVD) LOS ANGELES, CA

WORK ORDER NO. E700224F

DRAWING NO. S8-08

SHEET 405 OF 560 SHEETS

ADDENDUM 5

NOTES:

1. STANDARD HOLES MAY BE REPLACED BY SLOTTED HOLES ORIENTED IN THE TRANSVERSE DIRECTION.
2. SEE TABLE ON DRAWING NO. S8-08 FOR DECK PLATE AND BOLT SPACING DIMENSIONS.

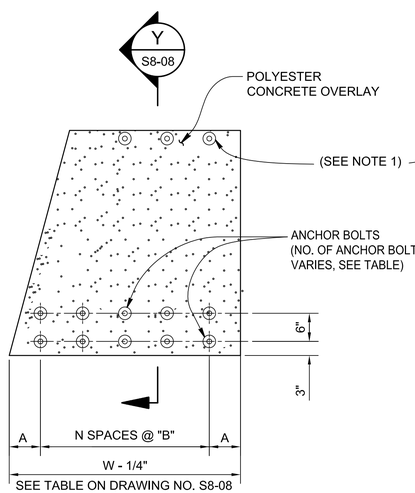

NORTH EXTERIOR DECK PLATE

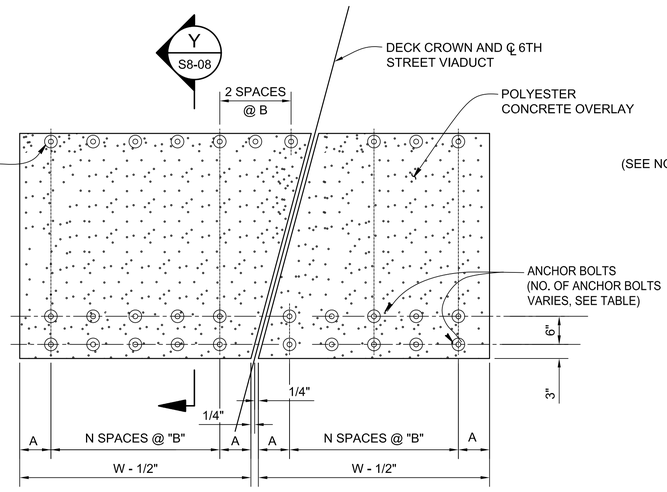

MEDIAN DECK PLATE

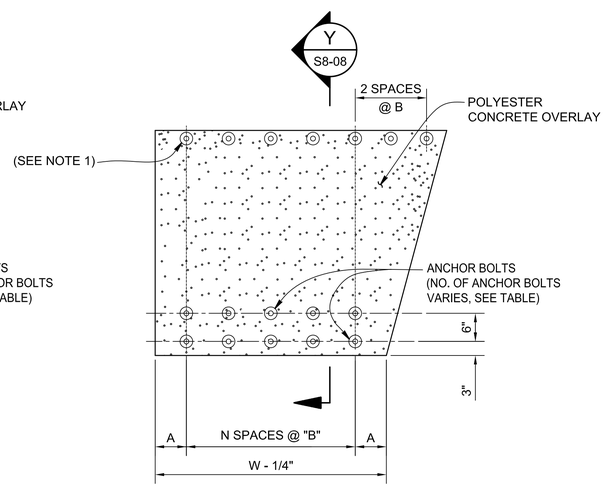

SOUTH EXTERIOR DECK PLATE

ABUTMENT 13 SKEWED DECK PLATE

NO SCALE

THE CITY OF LOS ANGELES OR ITS OFFICERS OR AGENTS SHALL NOT BE RESPONSIBLE FOR THE ACCURACY OR COMPLETENESS OF ELECTRONIC COPIES OF THIS PLAN SHEET.

C:\caddlib\pw\pwwestcoast\zhang\dms57683\36-06-J001-08A.dwg 6/28/16 10:33

Sheet Version 3.0

REVISION DATES (DESIGN STAGE ONLY)

BUREAU OF ENGINEERING

ENGINEERING
CITY OF LOS ANGELES

NO.	REVISIONS:	DATE:	BY:

STRUCTURE NO. 53C-2329

INDEX NO. P-38113

THIS PLAN WAS ELECTRONICALLY SIGNED AND STAMPED

REGISTERED PROFESSIONAL ENGINEER MICHAEL H. JONES No. S3033 CIVIL STATE OF CALIFORNIA

CITY OF LOS ANGELES DEPARTMENT OF PUBLIC WORKS

GARY LEE MOORE, P.E. CITY ENGINEER

		DATE:
DESIGN GROUP		
ENGINEER:	MICHAEL H. JONES	1/29/2016
LIC. NO.	S3033	1/29/2016
DESIGNED BY:	MICHAEL H. JONES	1/29/2016
DRAWN BY:	LI ZHANG	1/29/2016
CHECKED BY:	CHARLES REDFIELD	1/29/2016
APPROVED BY:	MICHAEL H. JONES	1/29/2016

VERTICAL CONTROL: BM 12-04070 1929 (NGVD 29) - 1985 ADJUSTMENT
HORIZONTAL CONTROL: GPS; PID AE 1704, EPOCH 1991.35

SHEET TITLE: DECK PLATE DETAILS NO. 3

PROJECT: SIXTH STREET VIADUCT REPLACEMENT

ADDRESS: SIXTH STREET VIADUCT (WHITTIER BLVD) LOS ANGELES, CA

BUREAU OF ENGINEERING OFFICIAL RECORD

HNTB
HNTB Corporation
601 W. 5TH STREET SUITE 1000
LOS ANGELES, CALIFORNIA 90071
TEL (213) 403-1000 FAX (213) 403-1001

WORK ORDER NO. E700224F

DRAWING NO. S8-09

SHEET 406 OF 560 SHEETS

ADDENDUM 5

NOTES:

1. SIDE PLATES SHALL BE SKEWED AT ABUTMENT 13 EXTERIOR CHANNEL ASSEMBLY.

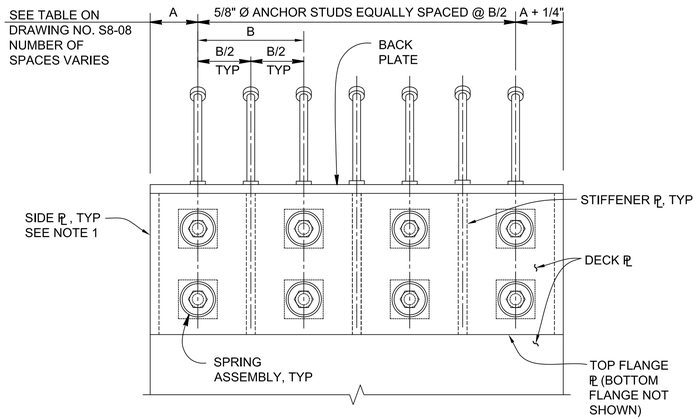

PLAN - BUILT UP EXTERIOR CHANNEL ASSEMBLY

NO SCALE

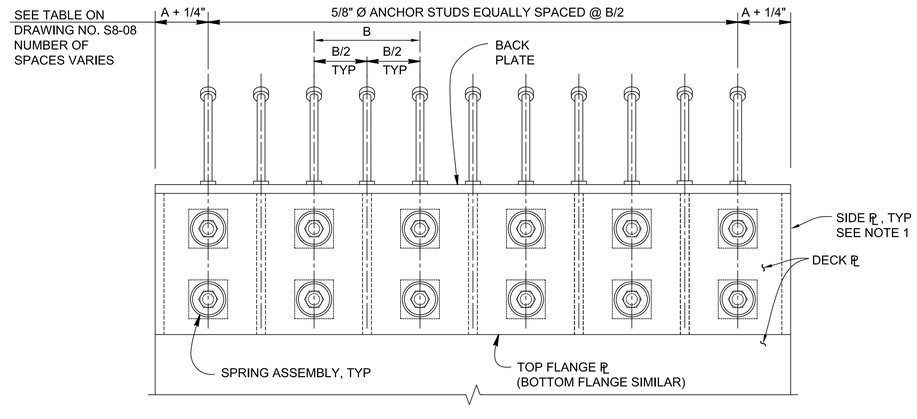

PLAN - BUILT UP INTERIOR CHANNEL ASSEMBLY

NO SCALE

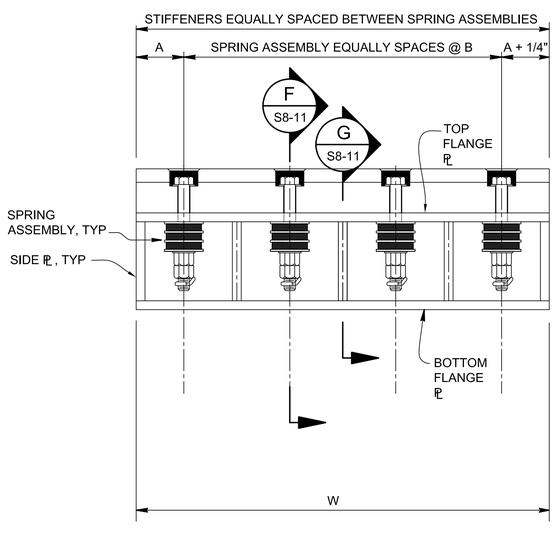

ELEVATION - BUILT UP EXTERIOR CHANNEL ASSEMBLY

NO SCALE

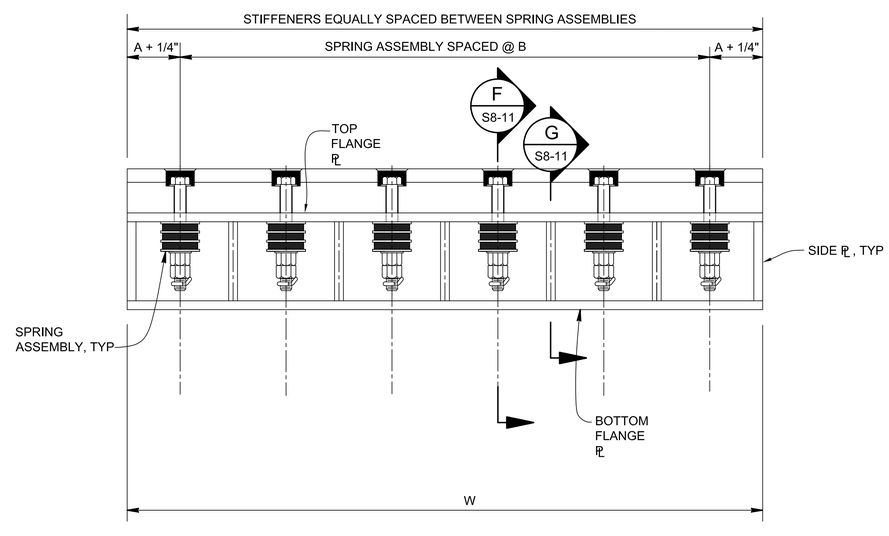

ELEVATION - BUILT UP INTERIOR CHANNEL ASSEMBLY

NO SCALE

THE CITY OF LOS ANGELES OR ITS OFFICERS OR AGENTS SHALL NOT BE RESPONSIBLE FOR THE ACCURACY OR COMPLETENESS OF ELECTRONIC COPIES OF THIS PLAN SHEET.

C:\caddlib\pw\pwwestcoast\jzhang\dms57683\S8-06-JD01-08A.dwg 6/28/16 10.33

REVISION DATES (DESIGN STAGE ONLY)

Sheet Version 3.0

BUREAU OF ENGINEERING

OFFICIAL RECORD

HNTB Corporation
601 W. 5TH STREET SUITE 1000
LOS ANGELES, CALIFORNIA 90071
TEL (213) 403-1000 FAX (213) 403-1001

CITY OF LOS ANGELES DEPARTMENT OF PUBLIC WORKS BUREAU OF ENGINEERING

ENGINEERING
CITY OF LOS ANGELES

NO.	REVISIONS:	DATE	BY:

STRUCTURE NO. 53C-2329

INDEX NO. P-38113

THIS PLAN WAS ELECTRONICALLY SIGNED AND STAMPED

REGISTERED PROFESSIONAL ENGINEER MICHAEL H. JONES No. S3033 CIVIL STATE OF CALIFORNIA

GARY LEE MOORE, P.E. CITY ENGINEER

ENGINEER:	MICHAEL H. JONES	LIC. NO. S3033	DATE: 1/29/2016
DESIGNED BY:	MICHAEL H. JONES		1/29/2016
DRAWN BY:	LI ZHANG		1/29/2016
CHECKED BY:	CHARLES REDFIELD		1/29/2016
APPROVED BY:	MICHAEL H. JONES		1/29/2016

DESIGN GROUP

VERTICAL CONTROL: BM 12-04070, 1929 (NGVD 29) – 1985 ADJUSTMENT
HORIZONTAL CONTROL: GPS; PID AE 1704, EPOCH 1991.35

SHEET TITLE: CHANNEL ASSEMBLY DETAILS NO. 1

PROJECT: SIXTH STREET VIADUCT REPLACEMENT

ADDRESS: SIXTH STREET VIADUCT (WHITTIER BLVD) LOS ANGELES, CA

WORK ORDER NO. E700224F

DRAWING NO. S8-10

SHEET 407 OF 560 SHEETS

ADDENDUM 5

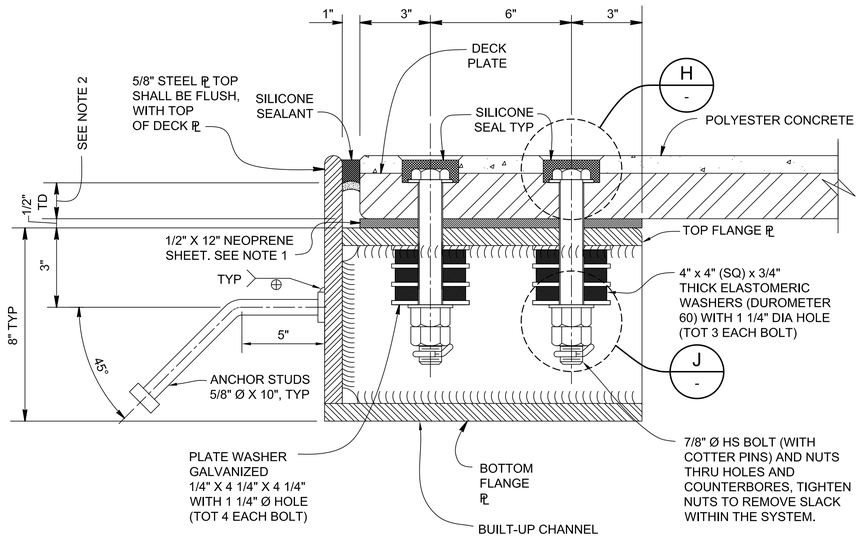

SECTION F
NO SCALE
S8-09

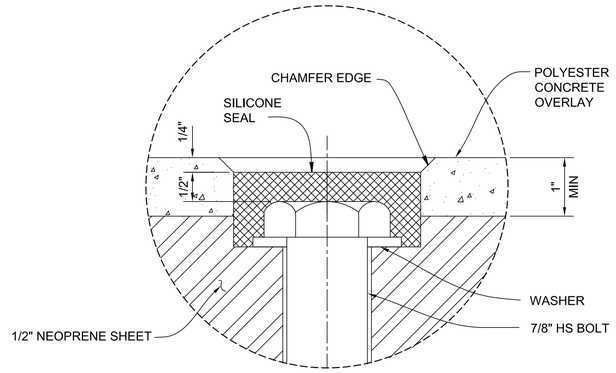

DETAIL H
NO SCALE
-

NOTES:

1. 1 1/2" Ø HOLES IN NEOPRENE SHEETS SHALL BE DRILLED OR PUNCHED SO THAT THE NEOPRENE IS NOT DISTORTED AT THE TIME OF INSTALLATION.
2. FOR TD VALUES SEE DRAWING NO. S8-06.
3. INSTALL AND TIGHTEN NUT A TO REMOVE ANY SLACK AT ALL SPRING ASSEMBLIES. THEN TIGHTEN NUT B AS SPECIFIED FOR STANDARD DOUBLE NUT INSTALLATION AT ALL SPRING ASSEMBLIES.

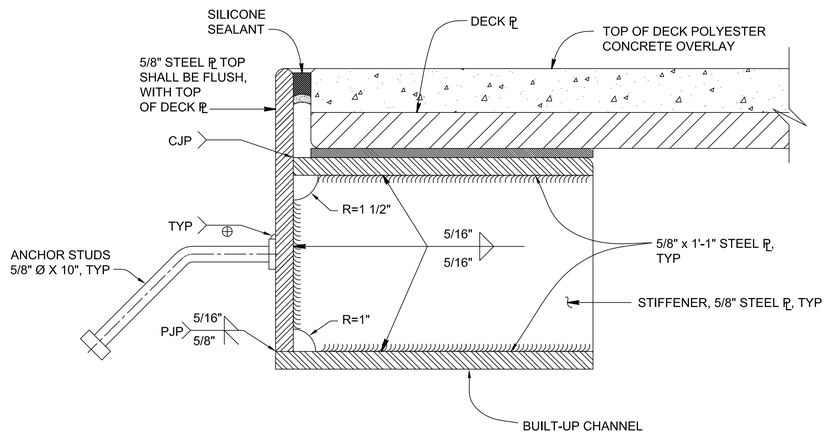

SECTION G
NO SCALE
S8-09

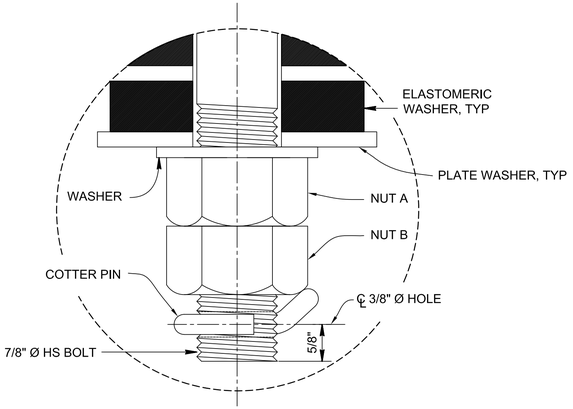

DETAIL J
NO SCALE
-

THIS PLAN WAS ELECTRONICALLY SIGNED AND STAMPED

REGISTERED PROFESSIONAL ENGINEER MICHAEL H. JONES No. S3033 CIVIL STATE OF CALIFORNIA

ENGINEERING CITY OF LOS ANGELES

BUREAU OF ENGINEERING

NO.	REVISIONS:	DATE	BY:

STRUCTURE NO. 53C-2329

INDEX NO. P-38113

CITY OF LOS ANGELES DEPARTMENT OF PUBLIC WORKS

GARY LEE MOORE, P.E. CITY ENGINEER

ENGINEER:	MICHAEL H. JONES	LIC. NO. S3033	DATE: 1/29/2016
DESIGNED BY:	MICHAEL H. JONES	DESIGN GROUP	1/29/2016
DRAWN BY:	LI ZHANG		1/29/2016
CHECKED BY:	CHARLES REDFIELD		1/29/2016
APPROVED BY:	MICHAEL H. JONES		1/29/2016

VERTICAL CONTROL: BM 12-04070, 1929 (NGVD 29) – 1985 ADJUSTMENT
HORIZONTAL CONTROL: GPS; PID AE 1704, EPOCH 1991.35

SHEET TITLE: CHANNEL ASSEMBLY DETAILS NO. 2

PROJECT: SIXTH STREET VIADUCT REPLACEMENT

ADDRESS: SIXTH STREET VIADUCT (WHITTIER BLVD) LOS ANGELES, CA

HNTB
HNTB Corporation
601 W. 5TH STREET SUITE 1000
LOS ANGELES, CALIFORNIA 90071
TEL (213) 403-1000 FAX (213) 403-1001

BUREAU OF ENGINEERING OFFICIAL RECORD

WORK ORDER NO. E700224F

DRAWING NO. S8-11

SHEET 408 OF 560 SHEETS

REVISION DATES (DESIGN STAGE ONLY)

C:\caddlib\pw\pwwestcoast\lzhang\dms57683\S8-06-J001-08A.dwg 6/28/16 10:34

Sheet Version 3.0

THE CITY OF LOS ANGELES OR ITS OFFICERS OR AGENTS SHALL NOT BE RESPONSIBLE FOR THE ACCURACY OR COMPLETENESS OF ELECTRONIC COPIES OF THIS PLAN SHEET.

ADDENDUM 5

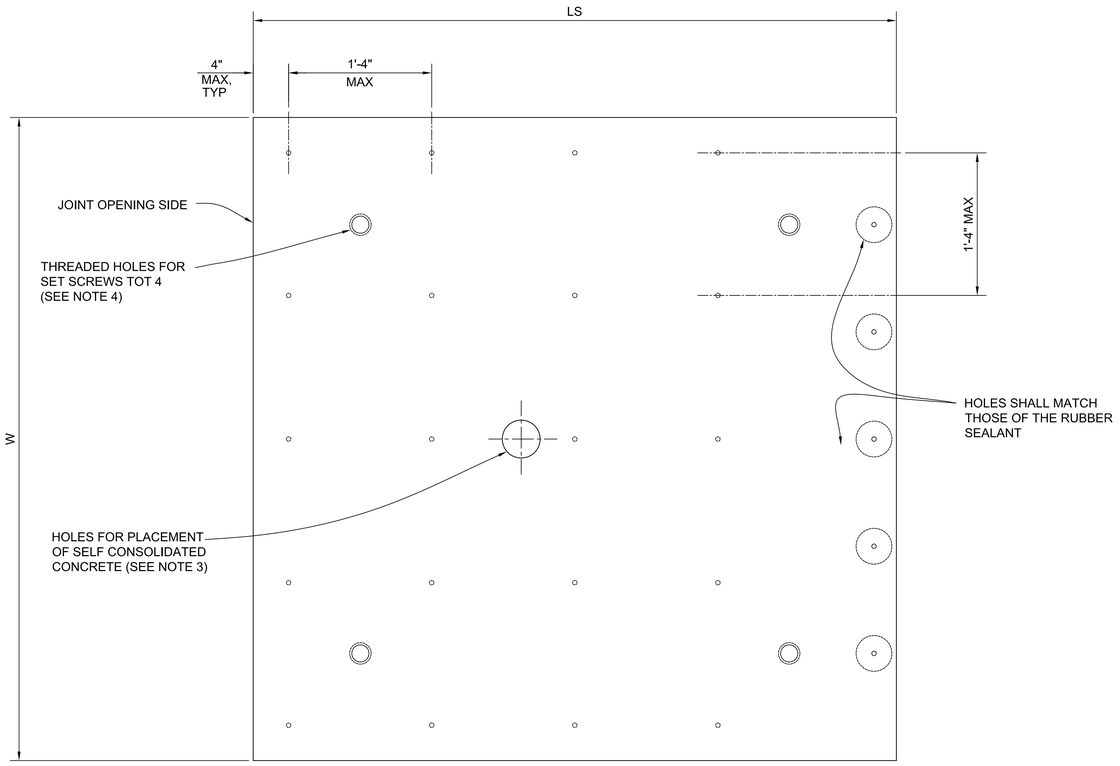

PLAN VIEW

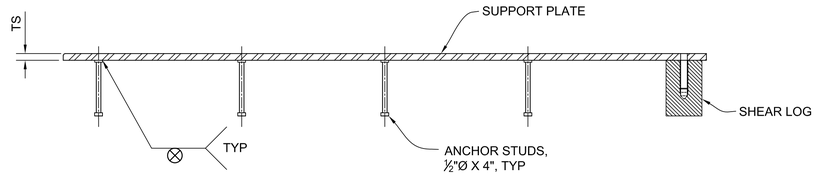

ELEVATION VIEW

SUPPORT PLATE DETAIL

NO SCALE

NOTES:

1. FOR LS AND TS VALUES SEE DRAWING NO. S8-06.
2. INTERIOR SUPPORT PLATE SHOWN, EXTERNAL SIMILAR.
3. HOLES FOR SCC OPTIONAL. EXACT LOCATION AND SIZE OF HOLE TO BE DETERMINED PRIOR TO SUPPORT PLATE FABRICATION. SIMILAR HOLE REQUIRED AT DECK PLATE.
4. THREADED HOLES FOR INSTALLATION. REPAIR AFTER SUPPORT PLATE PLACEMENT.

THE CITY OF LOS ANGELES OR ITS OFFICERS OR AGENTS SHALL NOT BE RESPONSIBLE FOR THE ACCURACY OR COMPLETENESS OF ELECTRONIC COPIES OF THIS PLAN SHEET.

REVISION DATES (DESIGN STAGE ONLY)

C:\caddlib\pw\pwwestcoast\jzhang\dms57683\S8-06-JD01-08A.dwg 6/28/16 10:34

Sheet Version 3.0

HNTB
HNTB Corporation
601 W. 5TH STREET SUITE 1000
LOS ANGELES, CALIFORNIA 90071
TEL (213) 403-1000 FAX (213) 403-1001

BUREAU OF ENGINEERING

OFFICIAL RECORD

WORK ORDER NO. E700224F

DRAWING NO. S8-12

SHEET 409 OF 560 SHEETS

CITY OF LOS ANGELES DEPARTMENT OF PUBLIC WORKS

BUREAU OF ENGINEERING

ENGINEERING CITY OF LOS ANGELES

NO.	REVISIONS:	DATE	BY:

STRUCTURE NO. 53C-2329

INDEX NO. P-38113

THIS PLAN WAS ELECTRONICALLY SIGNED AND STAMPED

REGISTERED PROFESSIONAL ENGINEER MICHAEL H. JONES No. S3033 CIVIL STATE OF CALIFORNIA

VERTICAL CONTROL:	BM 12-04070, 1929 (NGVD 29) - 1985 ADJUSTMENT	
HORIZONTAL CONTROL:	GPS; PID AE 1704, EPOCH 1991.35	
SHEET TITLE:	SUPPORT PLATE DETAILS	
PROJECT:	SIXTH STREET VIADUCT REPLACEMENT	
ADDRESS:	SIXTH STREET VIADUCT (WHITTIER BLVD) LOS ANGELES, CA	

CITY ENGINEER	GARY LEE MOORE, P.E.	DATE:
ENGINEER:	MICHAEL H. JONES	DESIGN GROUP
DESIGNED BY:	MICHAEL H. JONES	LIC. NO. S3033
DRAWN BY:	LI ZHANG	1/29/2016
CHECKED BY:	CHARLES REDFIELD	1/29/2016
APPROVED BY:	MICHAEL H. JONES	1/29/2016

ADDENDUM 5

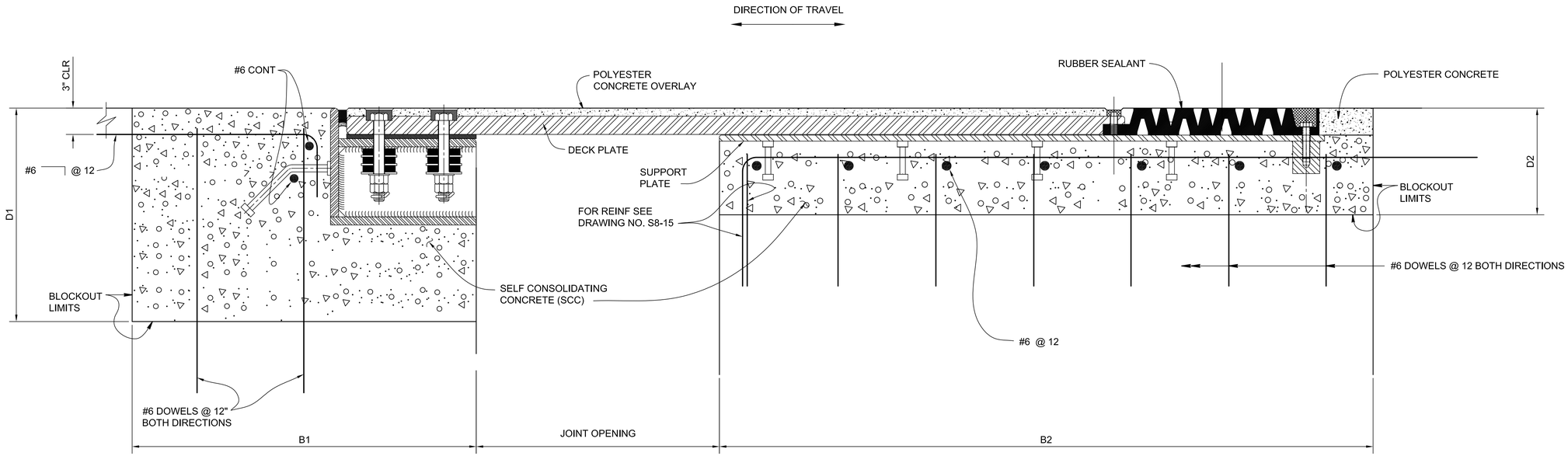

ELEVATION

NO SCALE

NOTES:

1. UNLESS NOTED ALL DOWELS ARE DRILLED AND BONDED WITH MINIMUM EMBEDMENT LENGTH OF 8".
2. TOP OF POLYESTER CONCRETE OVERLAY, POLYESTER CONCRETE AND SCC PLACED AT DECK PROFILE.
3. SEISMIC JOINT POSITION SHOWN AT 70 °F.

THE CITY OF LOS ANGELES OR ITS OFFICERS OR AGENTS SHALL NOT BE RESPONSIBLE FOR THE ACCURACY OR COMPLETENESS OF ELECTRONIC COPIES OF THIS PLAN SHEET.

REVISION DATES (DESIGN STAGE ONLY)

C:\caddlib\pw\pwwestcoast\lzhang\dms57683\S8-06-JD01-08A.dwg 6/28/16 10:34

Sheet Version 3.0

HNTB
HNTB Corporation
601 W. 5TH STREET SUITE 1000
LOS ANGELES, CALIFORNIA 90071
TEL (213) 403-1000 FAX (213) 403-1001

BUREAU OF ENGINEERING
OFFICIAL RECORD

WORK ORDER NO.
E700224F

DRAWING NO.
S8-13

SHEET 410 OF 560 SHEETS

CITY OF LOS ANGELES DEPARTMENT OF PUBLIC WORKS
BUREAU OF ENGINEERING

ENGINEERING
CITY OF LOS ANGELES

NO.	REVISIONS:	DATE:	BY:

STRUCTURE NO.
53C-2329

INDEX NO. P-38113

"THIS PLAN WAS ELECTRONICALLY SIGNED AND STAMPED"

REGISTERED PROFESSIONAL ENGINEER
MICHAEL H. JONES
No. S3033
CIVIL
STATE OF CALIFORNIA

GARY LEE MOORE, P.E.
CITY ENGINEER

		DATE:
DESIGN GROUP		
ENGINEER:	MICHAEL H. JONES	1/29/2016
LIC. NO. S3033		
DESIGNED BY:	MICHAEL H. JONES	1/29/2016
DRAWN BY:	LI ZHANG	1/29/2016
CHECKED BY:	CHARLES REDFIELD	1/29/2016
APPROVED BY:	MICHAEL H. JONES	1/29/2016

VERTICAL CONTROL: BM 12-04070, 1929 (NGVD 29) – 1985 ADJUSTMENT
HORIZONTAL CONTROL: GPS; PID AE 1704, EPOCH 1991.35

SHEET TITLE: REINFOCEMENT DETAILS

PROJECT: SIXTH STREET VIADUCT REPLACEMENT

ADDRESS: SIXTH STREET VIADUCT (WHITTIER BLVD)
LOS ANGELES, CA

ADDENDUM 5

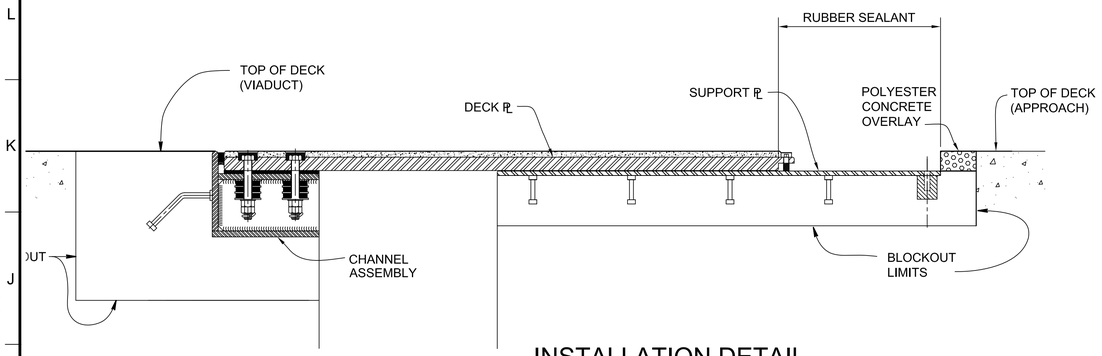

INSTALLATION DETAIL

NO SCALE

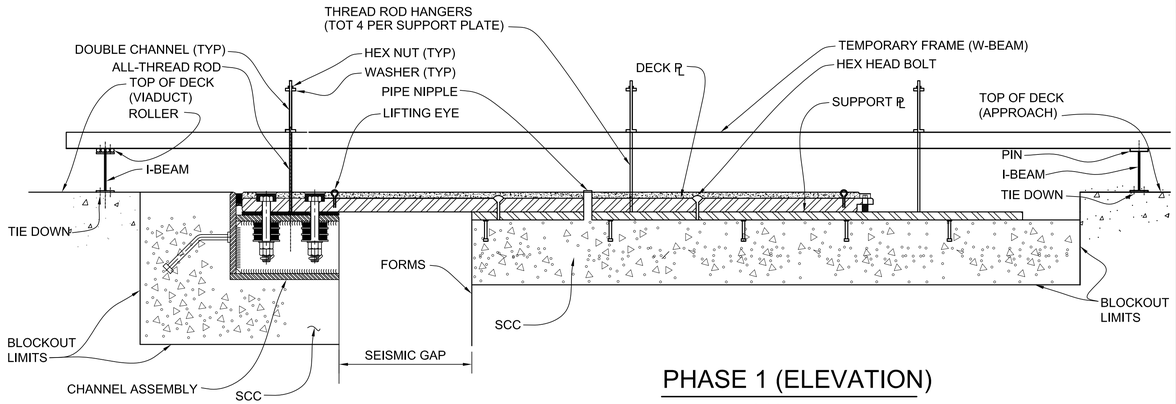

PHASE 1 (ELEVATION)

NO SCALE

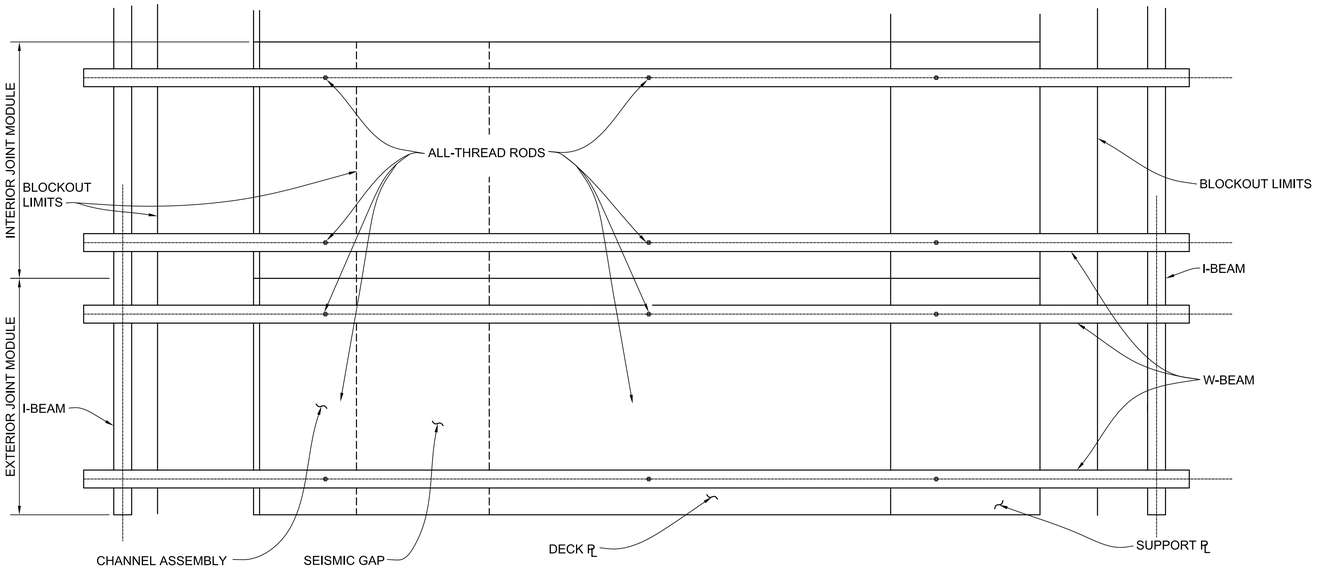

PARTIAL PLAN

NO SCALE

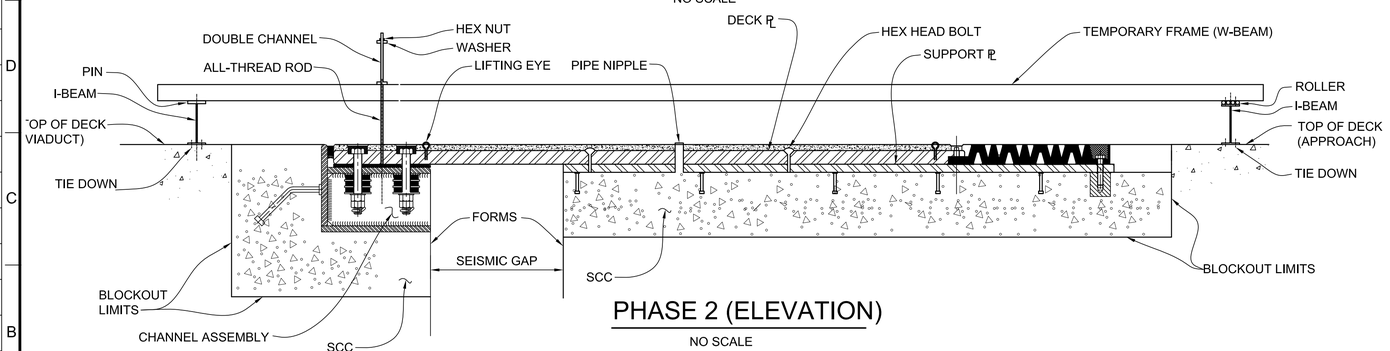

PHASE 2 (ELEVATION)

NO SCALE

PHASE 1 NOTES:

1. CLEAN JOINT BLOCKOUT, PLACE FORMS AND MILD REINFORCEMENT.
2. SET FULLY ASSEMBLED JOINT MODULES INTO PLACE SO THAT THE SUPPORT PLATE ALIGNS WITH THE FACE OF THE SEISMIC GAP (APPROACH SLAB SIDE). TEMPORARILY SUPPORT JOINT MODULES ON TIMBER TO CORRECT POSITION ½ " BELOW FINAL ELEVATION. EACH JOINT MODULE CONSISTS OF THE CHANNEL ASSEMBLY AND THE DECK AND SUPPORT PLATES CLAMPED TOGETHER AT THE SHOP WITH JOINT OPENING DETERMINED FROM FIELD MEASUREMENTS AND SHIPPED TO THE SITE.
3. INSTALL TEMPORARY STEEL FRAME, WITH ROLLER ON ANCHOR PLATE SIDE AND PIN ON SUPPORT PLATE SIDE.
4. SET ALL-THREAD RODS TO SUPPORT AND ADJUST JOINT MODULES.
5. ALIGN AND SECURE ALL JOINT MODULES TOGETHER TO FINAL POSITION, REMOVE TEMPORARY TIMBER SUPPORTS.
6. POUR SCC BELOW SUPPORT PLATES. LET CONCRETE SET, THEN REMOVE PIPE NIPPLE AND THREADED ROD HANGERS AT SUPPORT PLATE.

PHASE 2 NOTES:

1. CHANGE THE PIN SUPPORT OF THE TEMPORARY FRAME TO ROLLER. RELEASE DECK PLATE FROM SUPPORT PLATE. SLIDE DECK PLATE AND CHANNEL ASSEMBLY TOGETHER SO THE FACE OF THE JOINT OPENING (CHANNEL ASSEMBLY SIDE) IS ALIGNED WITH THE CHANNEL ASSEMBLY. CHANGE THE ROLLER SUPPORT OF THE TEMPORARY FRAME TO PIN (CHANNEL ASSEMBLY SIDE). SECURE ALL JOINT MODULES TOGETHER TO FINAL POSITION.
2. JUST PRIOR TO PLACING SCC AT ANCHOR PLATE, REMOVE HEX HEAD BOLTS SECURING DECK PLATE TO SUPPORT PLATE. POUR SCC AT THE CHANNEL ASSEMBLY.
3. RELEASE JOINT AND REMOVE TEMPORARY STEEL FRAME.
4. REMOVE PIPES, BOLTS, FORMS AND CLEAN SURFACES.
5. PLACE RUBBER SEALANT.
6. PLACE POLYESTER CONCRETE.
7. IF PIPE NIPPLES USED, PLUG PIPE NIPPLE HOLES WITH THREADED STEEL PLUGS; FILL DECK HOLES AND SEAL JOINT WITH SILICONE.

NOTES:

1. NOT ALL REINFORCEMENT AND JOINT DETAILS ARE SHOWN FOR CLARITY.
2. PIPE NIPPLES ARE OPTIONAL.
3. AFTER INSTALLATION FILL ALL DECK HOLES WITH SILICONE AND PIPE NIPPLE HOLES, IF USED, WITH THREADED STEEL PLUGS.

THE CITY OF LOS ANGELES OR ITS OFFICERS OR AGENTS SHALL NOT BE RESPONSIBLE FOR THE ACCURACY OR COMPLETENESS OF ELECTRONIC COPIES OF THIS PLAN SHEET.

C:\caddlib\pw\pwwestcoast\zhang\dms57683\S8-06-JD01-08A.dwg 6/28/16 10:34

REVISION DATES (DESIGN STAGE ONLY)

Sheet Version 3.0

BUREAU OF ENGINEERING

ENGINEERING
CITY OF LOS ANGELES

NO.	REVISIONS:	DATE:	BY:

STRUCTURE NO. 53C-2329

INDEX NO. P-38113

THIS PLAN WAS ELECTRONICALLY SIGNED AND STAMPED

REGISTERED PROFESSIONAL ENGINEER
MICHAEL H. JONES
No. S3033
CIVIL
STATE OF CALIFORNIA

CITY OF LOS ANGELES DEPARTMENT OF PUBLIC WORKS

GARY LEE MOORE, P.E. CITY ENGINEER

		DESIGN GROUP	LIC. NO.	DATE:
ENGINEER:	MICHAEL H. JONES		S3033	1/29/2016
DESIGNED BY:	MICHAEL H. JONES			1/29/2016
DRAWN BY:	LI ZHANG			1/29/2016
CHECKED BY:	CHARLES REDFIELD			1/29/2016
APPROVED BY:	MICHAEL H. JONES			1/29/2016

VERTICAL CONTROL: BM 12-04070,1923 (NGVD 29) - 1985 ADJUSTMENT
HORIZONTAL CONTROL: GPS; PID AE 1704, EPOCH 1991.35

SHEET TITLE: SEISMIC JOINT CONSTRUCTION SEQUENCE

PROJECT: SIXTH STREET VIADUCT REPLACEMENT

ADDRESS: SIXTH STREET VIADUCT (WHITTIER BLVD) LOS ANGELES, CA

HNTB
HNTB Corporation
601 W. 5TH STREET SUITE 1000
LOS ANGELES, CALIFORNIA 90071
TEL (213) 403-1000 FAX (213) 403-1001

BUREAU OF ENGINEERING
OFFICIAL RECORD

WORK ORDER NO. E700224F

DRAWING NO. S8-14

SHEET 411 OF 560 SHEETS

ADDENDUM 5

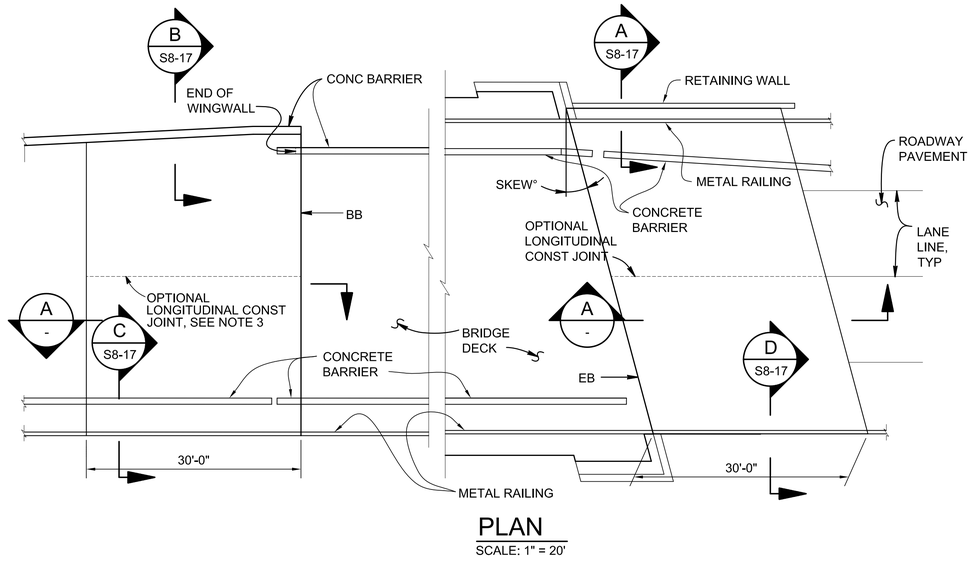

PLAN

SCALE: 1" = 20'

DESIGN NOTES

DESIGN: AASHTO LRFD BRIDGE DESIGN SPECIFICATIONS, 2012 EDITION WITH CALTRANS AMENDMENTS, PREFACE DATED JANUARY 2014

LIMIT STATES: SERVICE I, STRENGTH I & II , EXTREME II AND FATIGUE I (γ_{FAT} = 1.0)

DEAD LOAD: INCLUDES 35 PSF FOR FUTURE WEARING SURFACE

LIVE LOAD: HL93 AND PERMIT DESIGN LOAD
EQUIVALENT STRIP WIDTH METHOD: W_1 = 12 FT
SLAB SPAN: L_1 = 24.5 FT

REINFORCED CONCRETE:
F_y = 60 KSI
F'_c = 3.6 KSI
N = 8

NOTES:

1. FOR JOINT PROTECTION DETAILS, BLOCKOUT DIMENSIONS FOR JOINT SEAL PLATE, AND OTHER DETAILS NOT SHOWN, SEE OTHER PLAN SHEETS.
2. FOR DRAINAGE DETAILS, SEE DRAWING NO. S8-17.
3. TRANSVERSE JOINT MUST BE A MINIMUM OF 5'-0" FROM AN EXISTING OR CONSTRUCTED WEAKENED PLANE JOINT IN APPROACH PCC ROADWAY PAVEMENT. REFER TO STANDARD PLANS P10 AND P14.
4. AT THE CONTRACTOR'S OPTION, APPROACH SLAB TRANSVERSE REINFORCEMENT MAY BE PLACED PARALLEL TO BB OR EB. SPACING OF TRANSVERSE REINFORCEMENT IS MEASURED ALONG ROADWAY.
5. SEE DRAWING S8-08 FOR B. STAGGER SPACING AT B/2 WITH SUPPORT PLATE CONCRETE ANCHORS.

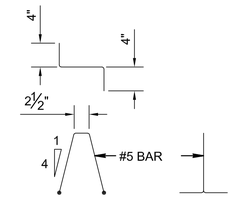

BAR CHAIR DETAIL

SCALE: 1" = 1'-0"

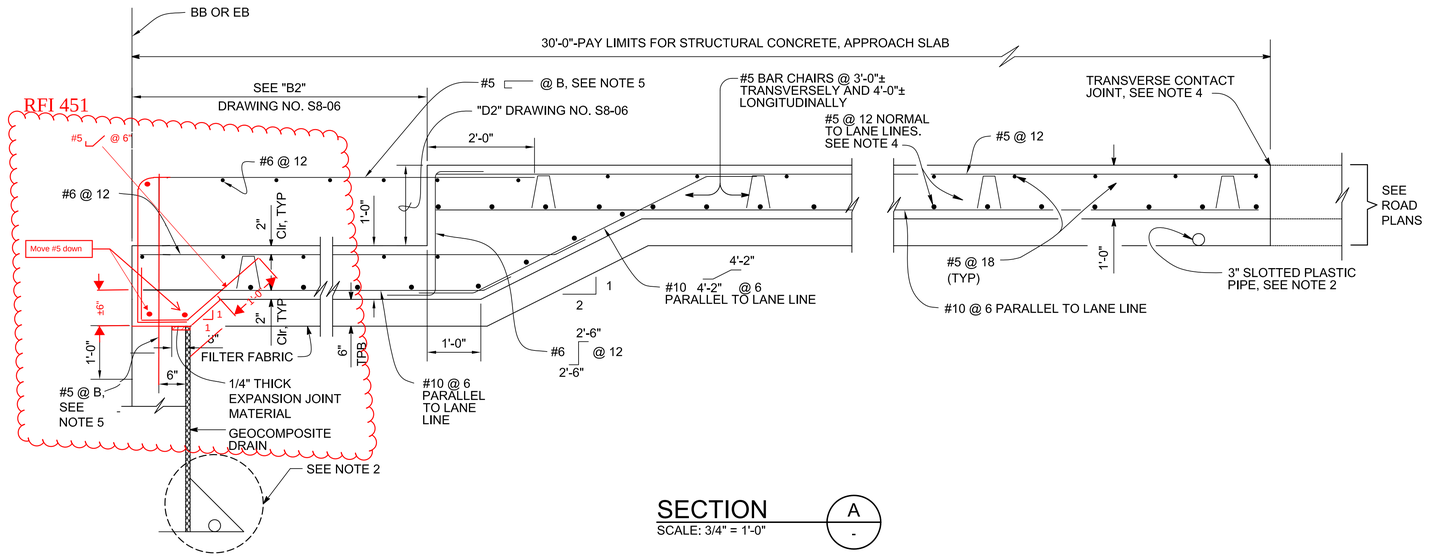

SECTION

SCALE: 3/4" = 1'-0"

A
-

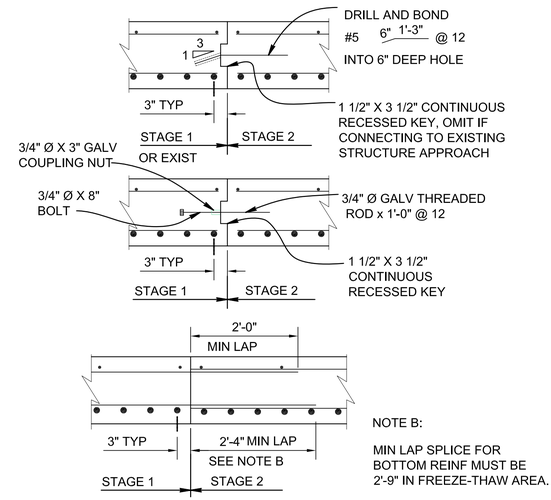

NOTE B:

MIN LAP SPLICE FOR BOTTOM REINF MUST BE 2'-9" IN FREEZE-THAW AREA.

LONGITUDINAL CONSTRUCTION JOINT ALTERNATIVES

SCALE: 3/4" = 1'-0"

THE CITY OF LOS ANGELES OR ITS OFFICERS OR AGENTS SHALL NOT BE RESPONSIBLE FOR THE ACCURACY OR COMPLETENESS OF ELECTRONIC COPIES OF THIS PLAN SHEET.

C:\caddlib\pw\pwwestcoast\zhong\dms57683\S8-06-JD01-08A.dwg 6/28/16 10:34

Sheet Version 3.0

REVISION DATES (DESIGN STAGE ONLY)

BUREAU OF ENGINEERING

ENGINEERING
CITY OF LOS ANGELES

NO.	REVISIONS:	DATE:	BY:

STRUCTURE NO. 53C-2329

INDEX NO. P-38113

THIS PLAN WAS ELECTRONICALLY SIGNED AND STAMPED

REGISTERED PROFESSIONAL ENGINEER
MICHAEL H. JONES
No. S3033
STATE OF CALIFORNIA

CITY OF LOS ANGELES DEPARTMENT OF PUBLIC WORKS

GARY LEE MOORE, P.E. CITY ENGINEER

		DATE:
ENGINEER:	MICHAEL H. JONES	1/29/2016
DESIGN GROUP	LIC. NO. S3033	1/29/2016
DESIGNED BY:	MICHAEL H. JONES	1/29/2016
DRAWN BY:	LI ZHANG	1/29/2016
CHECKED BY:	CHARLES REDFIELD	1/29/2016
APPROVED BY:	MICHAEL H. JONES	1/29/2016

VERTICAL CONTROL: BM 12-04070.1929 (NGVD 29) - 1985 ADJUSTMENT
HORIZONTAL CONTROL: GPS; PID AE 1704, EPOCH 1991.35

SHEET TITLE: STRUCTURE APPROACH TYPE N (30S)

PROJECT: SIXTH STREET VIADUCT REPLACEMENT

ADDRESS: SIXTH STREET VIADUCT (WHITTIER BLVD) LOS ANGELES, CA

HNTB
HNTB Corporation
601 W. 5TH STREET SUITE 1000
LOS ANGELES, CALIFORNIA 90071
TEL (213) 403-1000 FAX (213) 403-1001

BUREAU OF ENGINEERING OFFICIAL RECORD

WORK ORDER NO. E700224F

DRAWING NO. S8-15

SHEET 412 OF 560 SHEETS

ADDENDUM 5

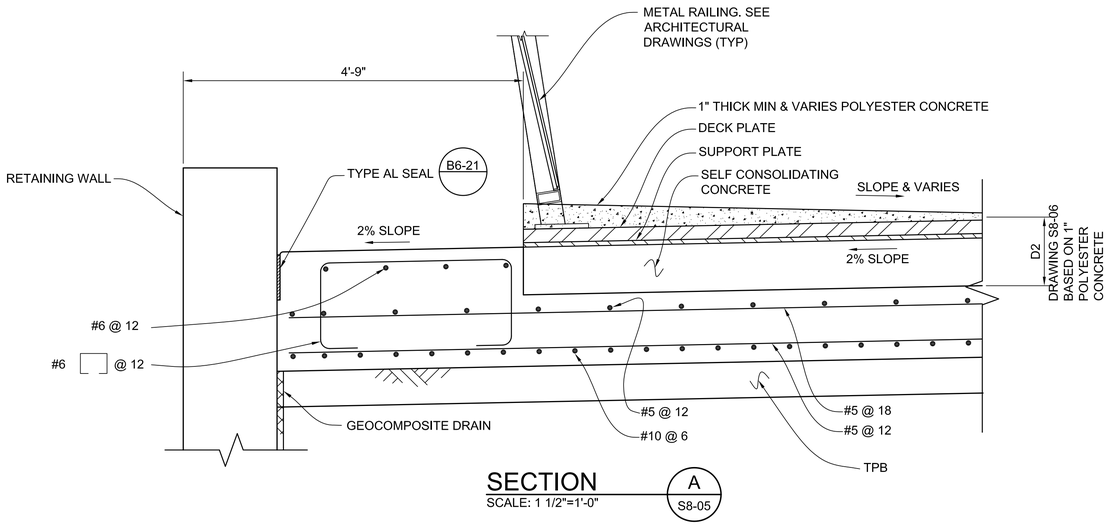

SECTION A
SCALE: 1 1/2"=1'-0"
S8-05

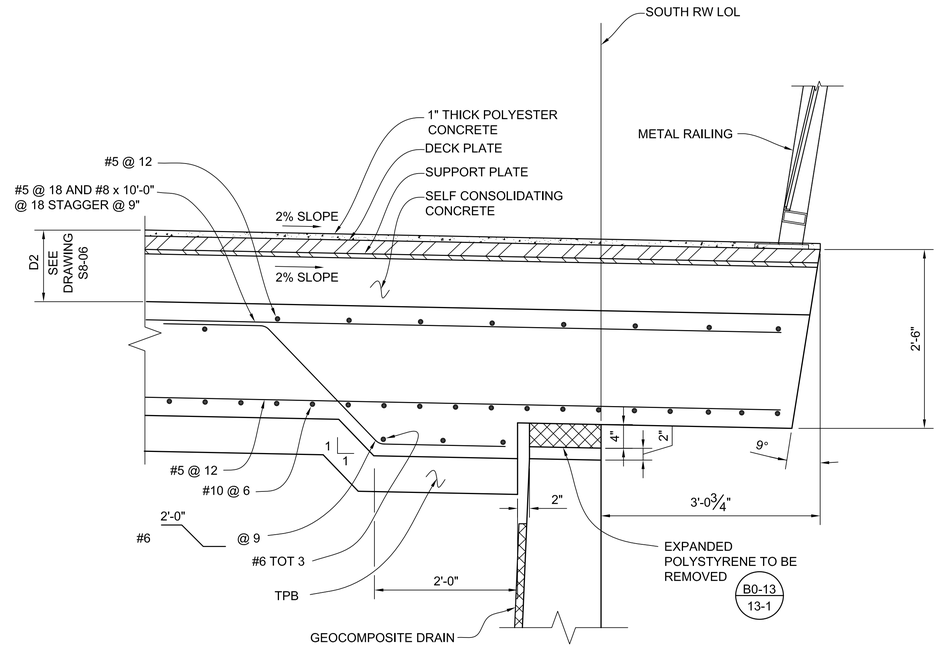

SECTION C
SCALE: 1 1/2"=1'-0"
S8-05

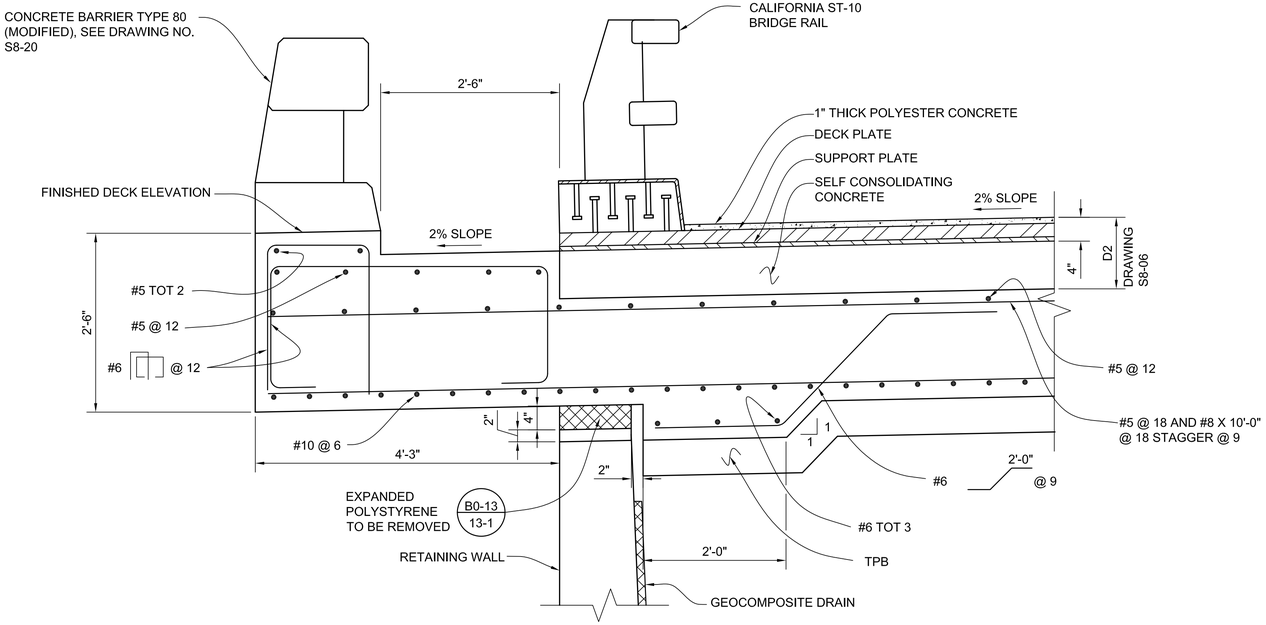

SECTION B
SCALE: 1 1/2"=1'-0"
S8-05

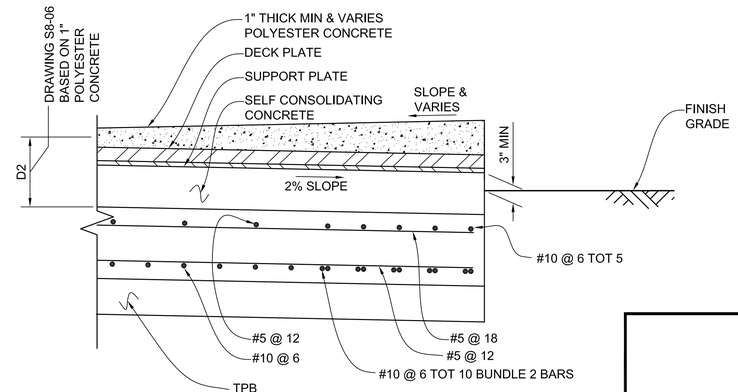

SECTION D
SCALE: 1 1/2"=1'-0"
S8-05

THE CITY OF LOS ANGELES OR ITS OFFICERS OR AGENTS SHALL NOT BE RESPONSIBLE FOR THE ACCURACY OR COMPLETENESS OF ELECTRONIC COPIES OF THIS PLAN SHEET.

C:\caddlib\pw\pwwestcoast\zhang\dms57683\S8-15-J001.dwg 6/28/16 10:35

REVISION DATES (DESIGN STAGE ONLY)

Sheet Version 3.0

BUREAU OF ENGINEERING

ENGINEERING
CITY OF LOS ANGELES

NO.	REVISIONS:	DATE	BY:

STRUCTURE NO. 53C-2329

INDEX NO. P-38113

THIS PLAN WAS ELECTRONICALLY SIGNED AND STAMPED.

REGISTERED PROFESSIONAL ENGINEER
MICHAEL H. JONES
No. S3033
CIVIL
STATE OF CALIFORNIA

CITY OF LOS ANGELES DEPARTMENT OF PUBLIC WORKS

CITY ENGINEER: GARY LEE MOORE, P.E.

		DATE:
ENGINEER:	MICHAEL H. JONES	1/29/2016
DESIGNED BY:	MICHAEL H. JONES	1/29/2016
DRAWN BY:	LI ZHANG	1/29/2016
CHECKED BY:	CHARLES REDFIELD	1/29/2016
APPROVED BY:	MICHAEL H. JONES	1/29/2016

DESIGN GROUP
LIC. NO. S3033

VERTICAL CONTROL: BM 12-04070, 1929 (NGVD 29) - 1985 ADJUSTMENT
HORIZONTAL CONTROL: GPS; PID AE 1704, EPOCH 1991.35

SHEET TITLE: STRUCTURAL APPROACH TYPE N(30S) DETAILS NO. 1

PROJECT: SIXTH STREET VIADUCT REPLACEMENT

ADDRESS: SIXTH STREET VIADUCT (WHITTIER BLVD) LOS ANGELES, CA

HNTB
HNTB Corporation
601 W. 5TH STREET SUITE 1000
LOS ANGELES, CALIFORNIA 90071
TEL (213) 403-1000 FAX (213) 403-1001

BUREAU OF ENGINEERING
OFFICIAL RECORD

WORK ORDER NO.
E700224F

DRAWING NO.
S8-16

SHEET 413 OF 560 SHEETS

ADDENDUM 5

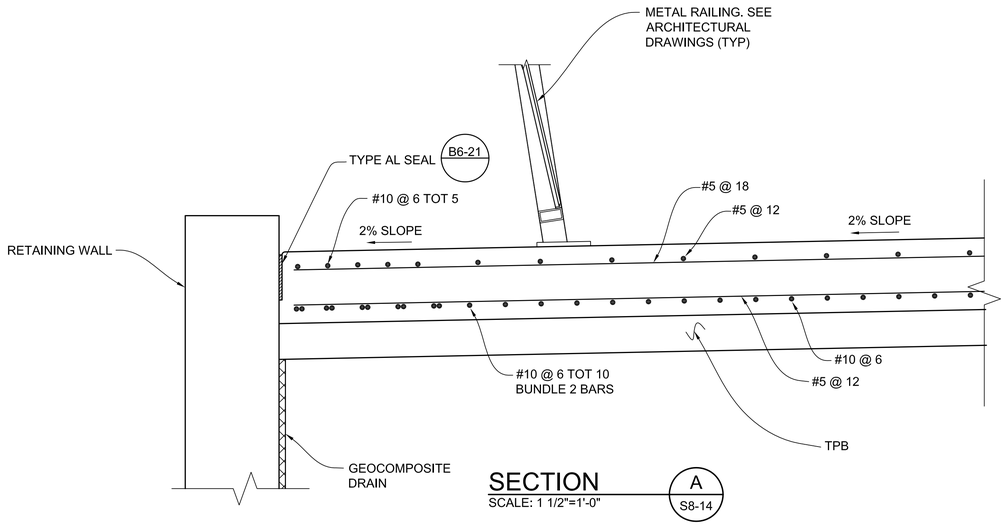

SECTION A
SCALE: 1 1/2"=1'-0"
S8-14

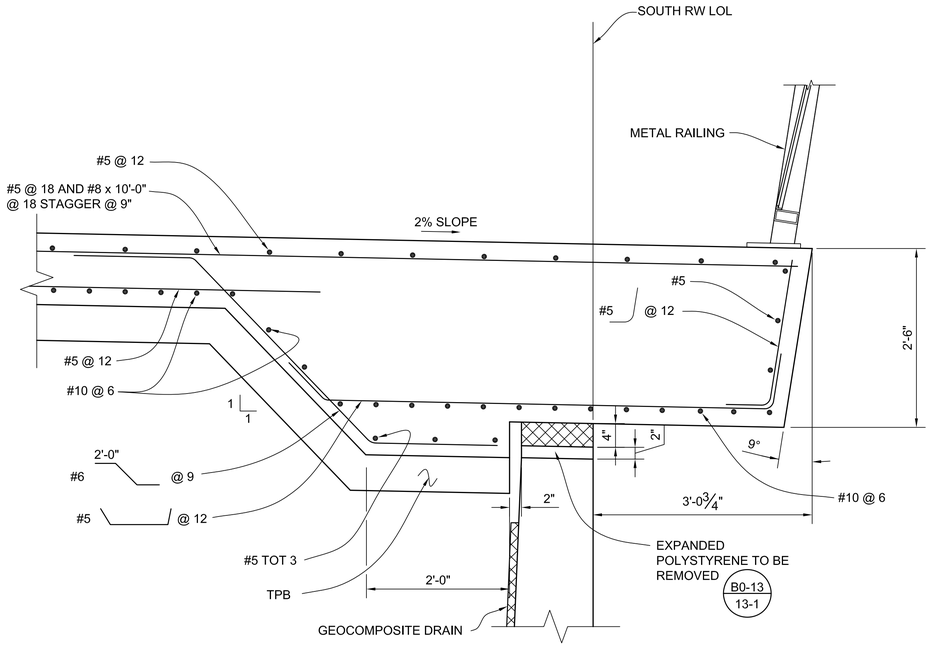

SECTION C
SCALE: 1 1/2"=1'-0"
S8-14

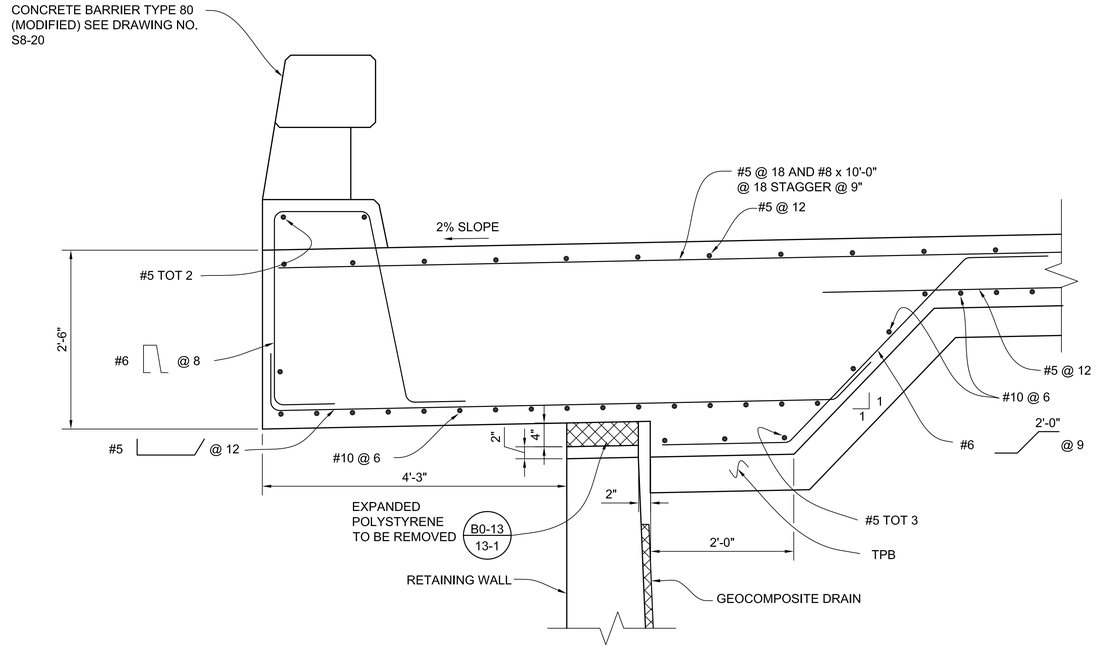

SECTION B
SCALE: 1 1/2"=1'-0"
S8-14

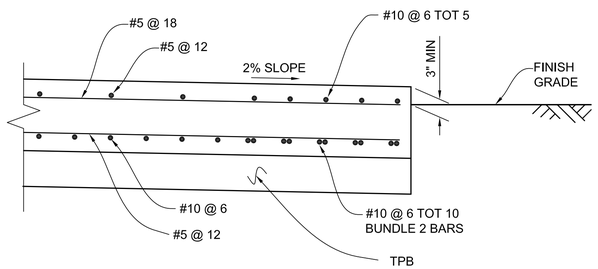

SECTION D
SCALE: 1 1/2"=1'-0"
S8-14

THIS PLAN WAS ELECTRONICALLY SIGNED AND STAMPED.

BUREAU OF ENGINEERING

ENGINEERING
CITY OF LOS ANGELES

NO.	REVISIONS:	DATE	BY:

STRUCTURE NO. 53C-2329

INDEX NO. P-38113

REGISTERED PROFESSIONAL ENGINEER MICHAEL H. JONES No. S3033 CIVIL STATE OF CALIFORNIA

CITY OF LOS ANGELES DEPARTMENT OF PUBLIC WORKS

GARY LEE MOORE, P.E. CITY ENGINEER

		DESIGN GROUP	LIC. NO.	DATE:
ENGINEER:	MICHAEL H. JONES		S3033	1/29/2016
DESIGNED BY:	MICHAEL H. JONES			1/29/2016
DRAWN BY:	LI ZHANG			1/29/2016
CHECKED BY:	CHARLES REDFIELD			1/29/2016
APPROVED BY:	MICHAEL H. JONES			1/29/2016

VERTICAL CONTROL: BM 12-04070,1929 (NGVD 29) - 1985 ADJUSTMENT
HORIZONTAL CONTROL: GPS; PID AE 1704, EPOCH 1991.35

SHEET TITLE: STRUCTURAL APPROACH TYPE N(30S) DETAILS NO. 2

PROJECT: SIXTH STREET VIADUCT REPLACEMENT

ADDRESS: SIXTH STREET VIADUCT (WHITTIER BLVD) LOS ANGELES, CA

HNTB
HNTB Corporation
601 W. 5TH STREET SUITE 1000
LOS ANGELES, CALIFORNIA 90071
TEL (213) 403-1000 FAX (213) 403-1001

BUREAU OF ENGINEERING
OFFICIAL RECORD

WORK ORDER NO. E700224F

DRAWING NO. S8-17

SHEET 414 OF 560 SHEETS

REVISION DATES (DESIGN STAGE ONLY)

THE CITY OF LOS ANGELES OR ITS OFFICERS OR AGENTS SHALL NOT BE RESPONSIBLE FOR THE ACCURACY OR COMPLETENESS OF ELECTRONIC COPIES OF THIS PLAN SHEET.

C:\caddlib\pw\pwwestcoast\zhang\dms57683\S8-15-JD01.dwg 6/28/16 10:35

Sheet Version 3.0

ADDENDUM 5

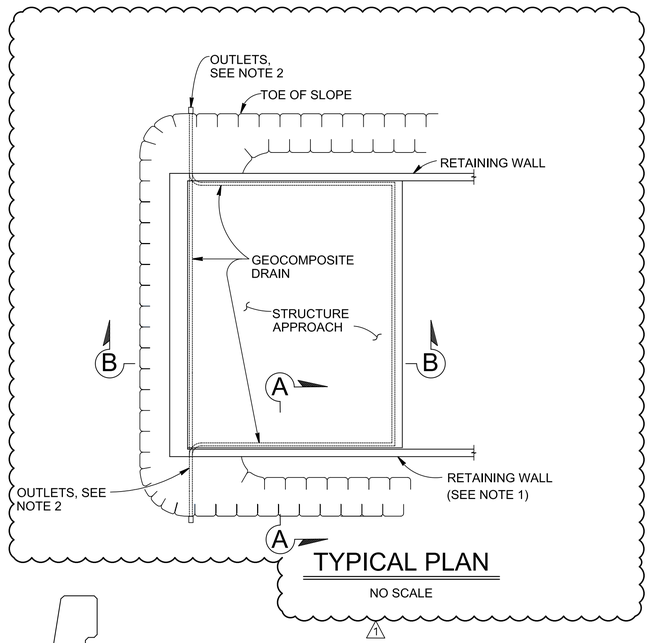

TYPICAL PLAN

NO SCALE

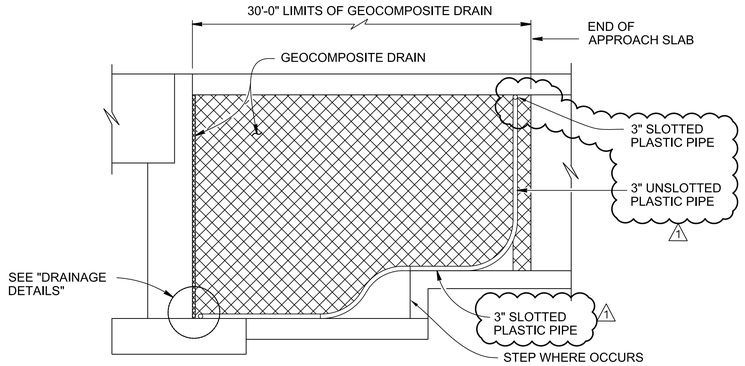

RETAINING WALL WINGWALL DRAINAGE DETAILS

SECTION B-B

NO SCALE

NOTE:
1. FOR STRUCTURAL APPROACH AND OTHER DETAILS NOT SHOWN, SEE OTHER PLAN SHEETS.
2. AT ABUTMENT 13, ROUTE DRAIN OUTLET OVER PILE CAP AND UNDER ABUTMENT SLOPE PAVING TO OUTLET THROUGH ABUTMENT SLOPE PAVING. AT ABUTMENT 1, ROUTE DRAIN OUTLET ON NORTH SIDE OF ABUTMENT ONLY AND OUTLET TO CATCH BASIN SHOWN ON DRAINAGE PLAN D-402.
3. ALL BENDS IN PLASTIC PIPE MUST HAVE 3'-0" MINIMUM RADIUS. PLASTIC PIPE USED FOR BENDS IS NOT REQUIRED TO BE SLOTTED.

Six Street Viaduct Replacement Project

Task Order 5

Change Order 6

Sketch No. 6

Page 3 of 5

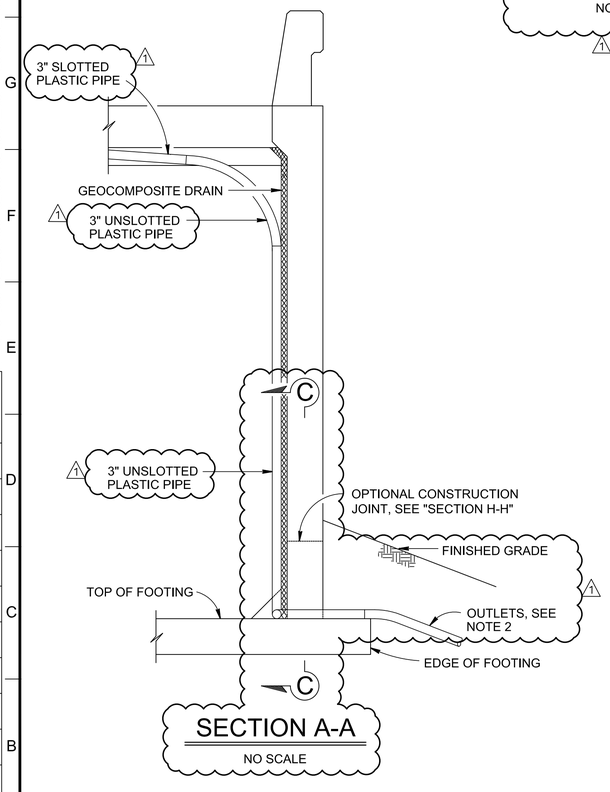

SECTION A-A

NO SCALE

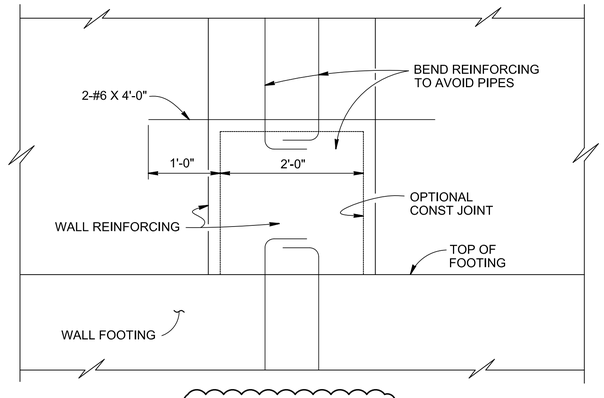

SECTION C-C

NO SCALE

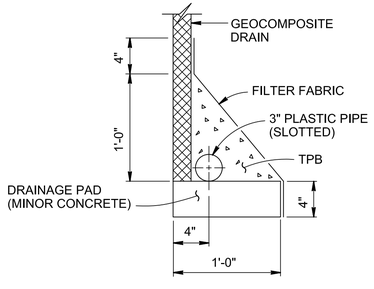

WITHOUT FOOTING

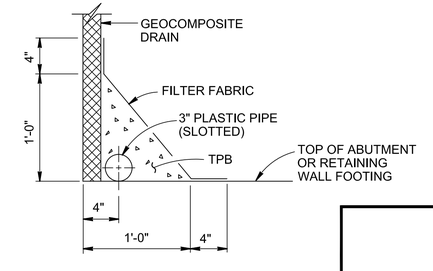

WITH FOOTING

DRAINAGE DETAILS

NO SCALE

HNTB
HNTB Corporation
601 W. 5TH STREET SUITE 1000
LOS ANGELES, CALIFORNIA 90071
TEL (213) 403-1000 FAX (213) 403-1001

WORK ORDER NO. E700224F

DRAWING NO. S8-18

SHEET 23 OF SHEETS

CITY OF LOS ANGELES DEPARTMENT OF PUBLIC WORKS BUREAU OF ENGINEERING

ENGINEERING CITY OF LOS ANGELES

GARY LEE MOORE, P.E. CITY ENGINEER

ENGINEER:	MICHAEL H. JONES	DESIGN GROUP
DESIGNED BY:	MICHAEL H. JONES	LIC. NO. S3033 DATE: 1/29/2016
DRAWN BY:	LI ZHANG	1/29/2016
CHECKED BY:	CHARLES REDFIELD	1/29/2016
APPROVED BY:	MICHAEL H. JONES	1/29/2016

VERTICAL CONTROL: BM 12-04070, 1929 (NGVD 29) – 1985 ADJUSTMENT
HORIZONTAL CONTROL: GPS; PID AE 1704, EPOCH 1991.35

SHEET TITLE: STRUCTURE APPROACH DRAINAGE DETAILS

PROJECT: SIXTH STREET VIADUCT REPLACEMENT

ADDRESS: SIXTH STREET VIADUCT (WHITTIER BLVD) LOS ANGELES, CA

REVISIONS:

NO.	REVISIONS:	DATE:	BY:
1	RFI 0008 DRAINAGE	02/13/17	MHJ

STRUCTURE NO. 53C-2329

INDEX NO.

REGISTERED PROFESSIONAL ENGINEER MICHAEL H. JONES No. S3033 CIVIL STATE OF CALIFORNIA

THIS PLAN WAS ELECTRONICALLY SIGNED AND STAMPED

REVISION DATES (DESIGN STAGE ONLY)

C:\caddlib\pw\pwwestcoast\lzhang\dms57683\S8-06-J001-08A.dwg 2/21/17 17:22

Sheet Version 3.0

THE CITY OF LOS ANGELES OR ITS OFFICERS OR AGENTS SHALL NOT BE RESPONSIBLE FOR THE ACCURACY OR COMPLETENESS OF ELECTRONIC COPIES OF THIS PLAN SHEET.

ADDENDUM 5

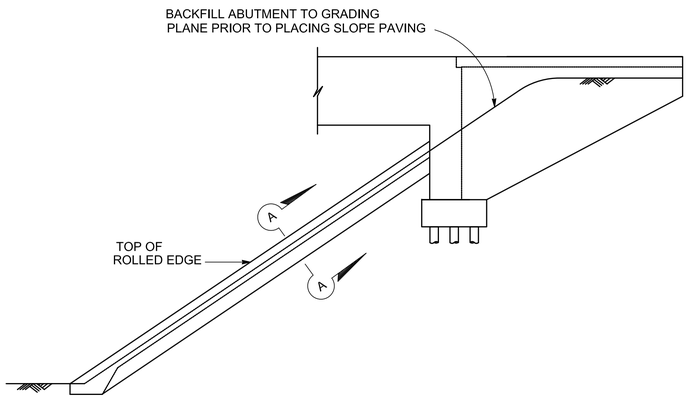

ABUTMENT ELEVATION

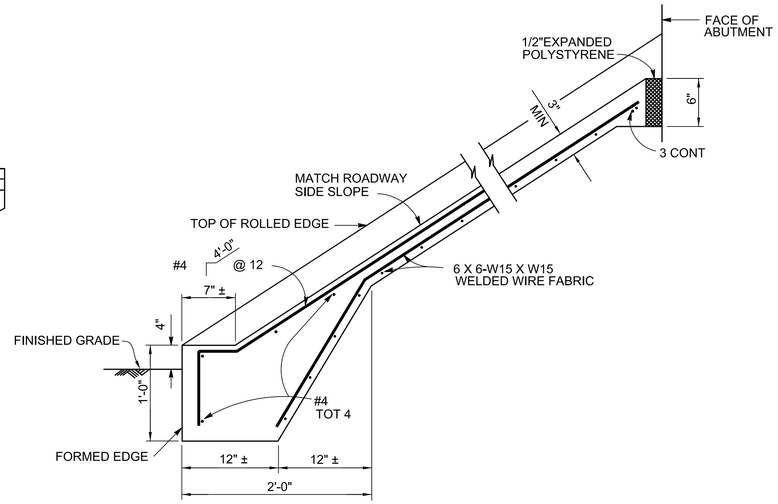

TYPICAL SECTION - CONCRETE PAVING

NOTES:

1. PLACE PREFORMED GROOVES AT THE APPROXIMATE SPACING SHOWN TO PROVIDE UNIFORM SPACING.

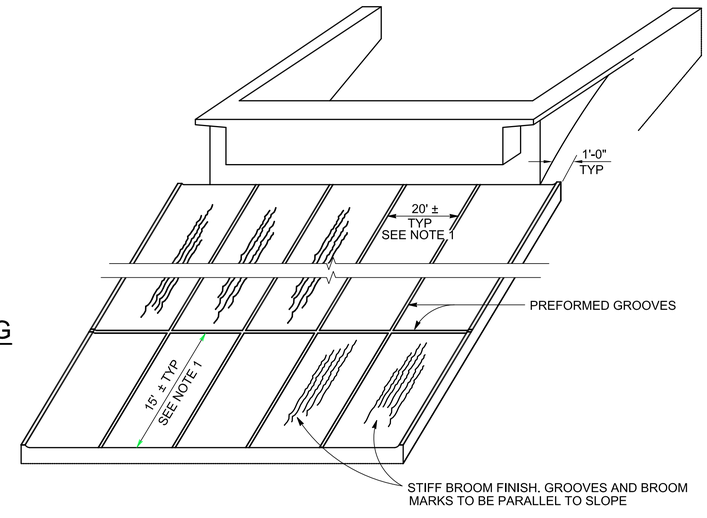

PICTORIAL VIEW OF CONCRETE PAVING INSTALLATION

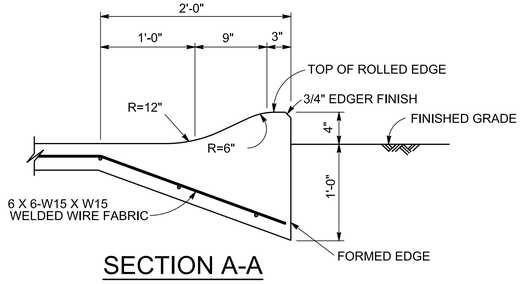

SECTION A-A

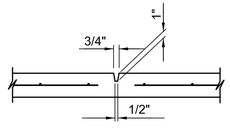

PREFORMED GROOVE

THE CITY OF LOS ANGELES OR ITS OFFICERS OR AGENTS SHALL NOT BE RESPONSIBLE FOR THE ACCURACY OR COMPLETENESS OF ELECTRONIC COPIES OF THIS PLAN SHEET.

C:\caddlib\pw\pwwestcoast\lzhang\dms57683\S8-06-J001-08A.dwg 6/28/16 10:35

REVISION DATES (DESIGN STAGE ONLY)

Sheet Version 3.0

BUREAU OF ENGINEERING

ENGINEERING
CITY OF LOS ANGELES

NO.	REVISIONS:	DATE	BY:

STRUCTURE NO. 53C-2329

INDEX NO. P-38113

THIS PLAN WAS ELECTRONICALLY SIGNED AND STAMPED

REGISTERED PROFESSIONAL ENGINEER MICHAEL H. JONES No. S3033 CIVIL STATE OF CALIFORNIA

CITY OF LOS ANGELES DEPARTMENT OF PUBLIC WORKS

GARY LEE MOORE, P.E. CITY ENGINEER

ENGINEER:	MICHAEL H. JONES	LIC. NO. S3033	DATE: 1/29/2016
DESIGNED BY:	MICHAEL H. JONES	DESIGN GROUP	1/29/2016
DRAWN BY:	LI ZHANG		1/29/2016
CHECKED BY:	CHARLES REDFIELD		1/29/2016
APPROVED BY:	MICHAEL H. JONES		1/29/2016

VERTICAL CONTROL: BM 12-04070, 1929 (NGVD 29) – 1985 ADJUSTMENT
HORIZONTAL CONTROL: GPS; PID AE 1704, EPOCH 1991.35

SHEET TITLE: SLOPE PAVING AT ABUTMENT 13

PROJECT: SIXTH STREET VIADUCT REPLACEMENT

ADDRESS: SIXTH STREET VIADUCT (WHITTIER BLVD) LOS ANGELES, CA

HNTB
HNTB Corporation
601 W. 5TH STREET SUITE 1000
LOS ANGELES, CALIFORNIA 90071
TEL (213) 403-1000 FAX (213) 403-1001

BUREAU OF ENGINEERING OFFICIAL RECORD

WORK ORDER NO. E700224F

DRAWING NO. S8-19

SHEET 416 OF 560 SHEETS

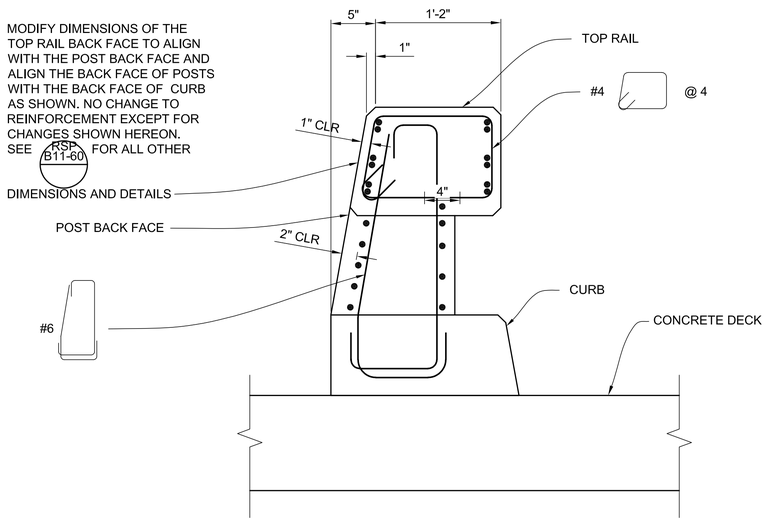

TYPE 80 MODIFIED
SCALE: 1 1/2"=1'-0"

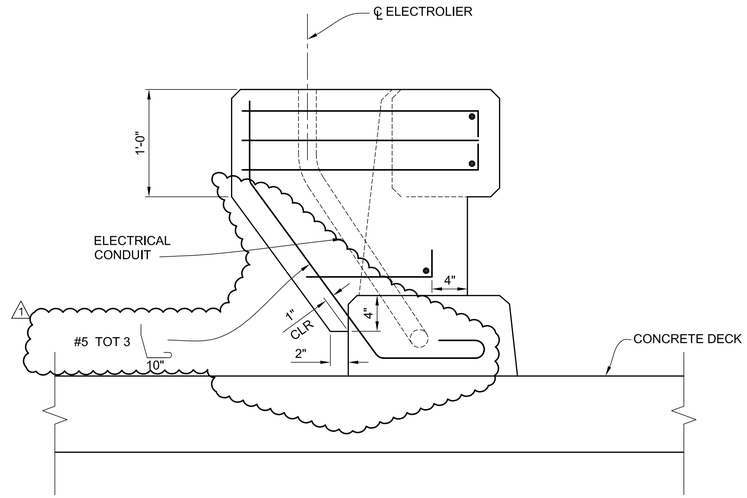

SECTION D-D MODIFIED
NO SCALE

SEE B11-61 FOR ALL REINFORCEMENT NOT SPECIFIED

NOTES:

1. THE "TYPE 80 MODIFIED" DETAIL SUPERSEDES THE "TYPE 80" DETAIL ON STANDARD PLAN SHEET NO. RSP B11-60.
2. "SECTION A-A MODIFIED" SUPERSEDES "SECTION A-A" ON STANDARD PLAN SHEET NO. RSP B11-60.
3. "SECTION D-D MODIFIED" SUPERSEDES "SECTION D-D" ON STANDARD PLAN B11-61.
4. TYPE 80A MODIFIED BARRIER ON TOP OF NORTH RETAINING WALL NEAR WEST APPROACH AS DETAILED ON DWG S2-11 SHALL ADOPT THE SAME BACK FACE OF CONCRETE TOP RAIL AS TYPE 80 MODIFIED.

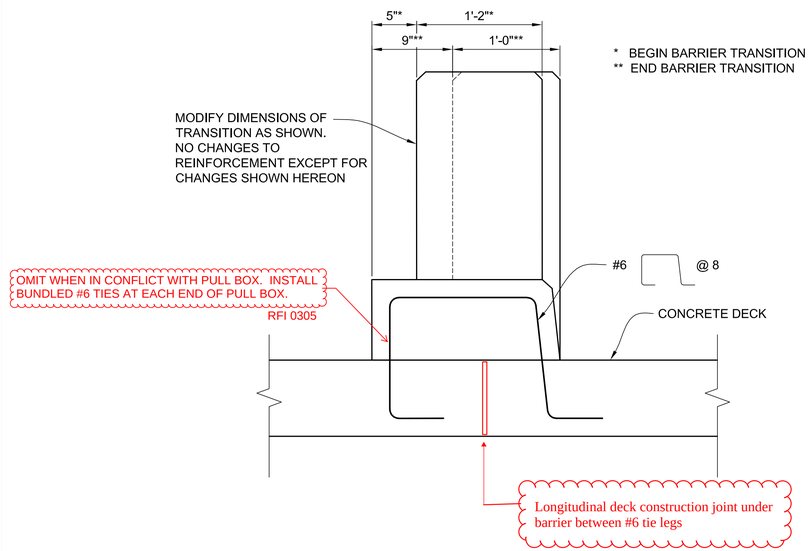

SECTION A-A MODIFIED
NO SCALE

SEE RSP B11-60 FOR ALL REINFORCEMENT AND OTHER DETAILS NOT SPECIFIED

T.O. 5 - Change Order Serial Sketch No. 119 - Page 1 of 1

THE CITY OF LOS ANGELES OR ITS OFFICERS OR AGENTS SHALL NOT BE RESPONSIBLE FOR THE ACCURACY OR COMPLETENESS OF ELECTRONIC COPIES OF THIS PLAN SHEET.

C:\caddlib\pw\pwwestcoast\zhang\dms576837\S8-20-BD01.dwg 5/14/20 10:29

Sheet Version 3.0

REVISION DATES (DESIGN STAGE ONLY)

BUREAU OF ENGINEERING

ENGINEERING
CITY OF LOS ANGELES

NO.	REVISIONS:	DATE:	BY:
1	ELECTROLIER FOUNDATION MODIFICATION PCO 119	05/15/20	MHJ

STRUCTURE NO.
53C-2329

INDEX NO.

THIS PLAN WAS ELECTRONICALLY SIGNED AND STAMPED.

REGISTERED PROFESSIONAL ENGINEER MICHAEL H. JONES No. S3033 CIVIL STATE OF CALIFORNIA

CITY OF LOS ANGELES DEPARTMENT OF PUBLIC WORKS

GARY LEE MOORE, P.E. CITY ENGINEER

		DATE:
DESIGN GROUP		
ENGINEER:	MICHAEL H. JONES LIC. NO. S3033	1/29/2016
DESIGNED BY:	MICHAEL H. JONES	1/29/2016
DRAWN BY:	LI ZHANG	1/29/2016
CHECKED BY:	CHARLES REDFIELD	1/29/2016
APPROVED BY:	MICHAEL H. JONES	1/29/2016

VERTICAL CONTROL: BM 12-04070.1928 (NGVD 29) - 1985 ADJUSTMENT
HORIZONTAL CONTROL: GPS; PID AE 1704; EPOCH 1991.35

SHEET TITLE: BARRIER TYPE 80 MODIFICATIONS

PROJECT: SIXTH STREET VIADUCT REPLACEMENT

ADDRESS: SIXTH STREET VIADUCT (WHITTIER BLVD) LOS ANGELES, CA

HNTB
HNTB Corporation
601 W. 5TH STREET SUITE 1000
LOS ANGELES, CALIFORNIA 90071
TEL (213) 403-1000 FAX (213) 403-1001

WORK ORDER NO.
E700224F

DRAWING NO.
S8-20

SHEET 2 OF 560 SHEETS

ADDENDUM 5

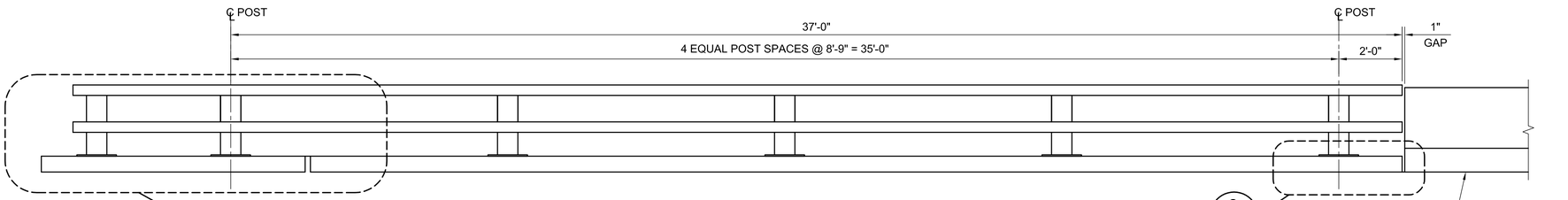

BRIDGE RAILING ELEVATION

SCALE: 1/2"=1'-0"

NOTES:

1. DETAILS ON THIS DRAWING SUPERSEDE DETAIL SHOWN ON CALTRANS STANDARD PLAN SHEET NOS. RSP B11-68, B11-69 AND RSP B11-70. ALL OTHER DETAILS NOT MODIFIED OF SHEETS RSP B11-68, B11-69 AND RSP B11-70 REMAIN APPLICABLE.

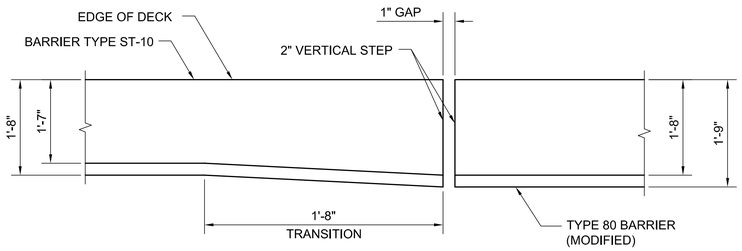

BOTTOM CURB TRANSITION PLAN

SCALE: 2"=1'-0"

2
-

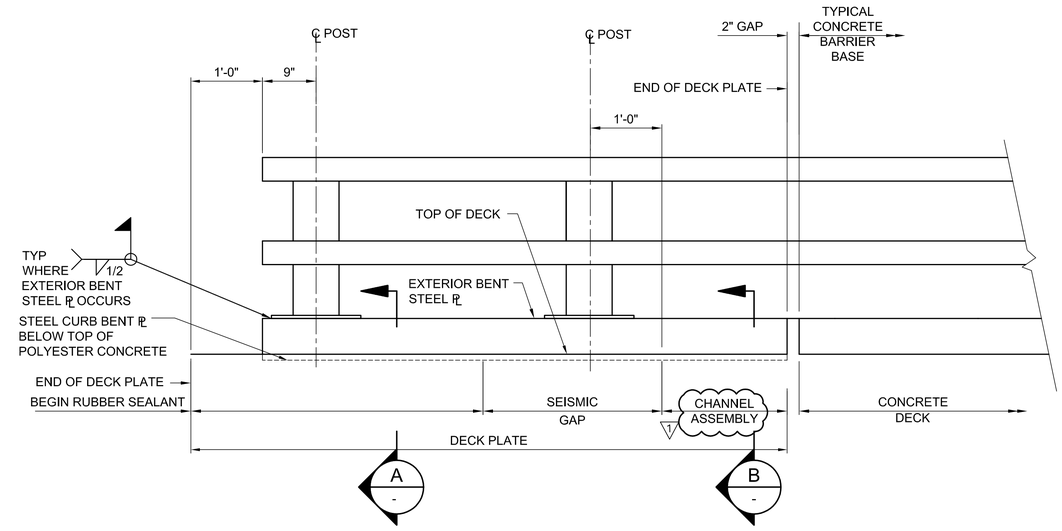

END OF RAILING ELEVATION AT SEISMIC JOINT

SCALE: 1"=1'-0"

1
-

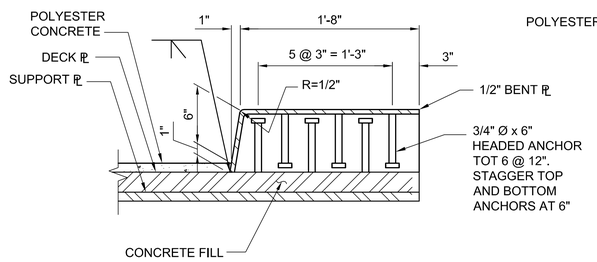

SECTION

SCALE: 1 1/2"=1'-0"

A
-

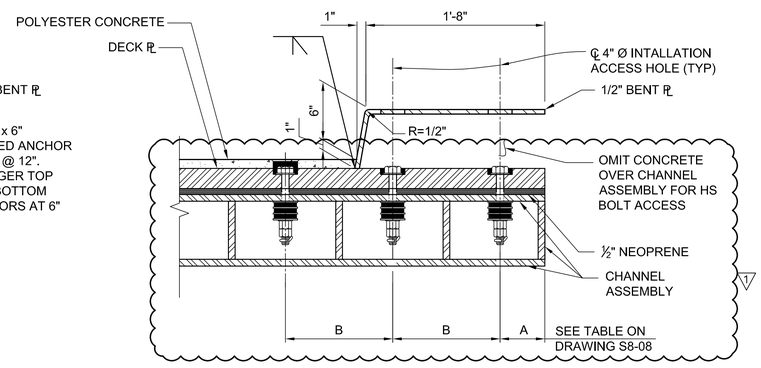

SECTION

SCALE: 1 1/2"=1'-0"

B
-

HNTB

HNTB Corporation
601 W. 5TH STREET SUITE 1000
LOS ANGELES, CALIFORNIA 90071
TEL (213) 403-1000 FAX (213) 403-1001

CITY OF LOS ANGELES DEPARTMENT OF PUBLIC WORKS BUREAU OF ENGINEERING

ENGINEERING
CITY OF LOS ANGELES

NO.	REVISIONS:	DATE:	BY:
1	ADDENDUM NO. 1	08/23/16	MHJ

STRUCTURE NO. 53C-2329

INDEX NO.

THIS PLAN WAS ELECTRONICALLY SIGNED AND STAMPED

REGISTERED PROFESSIONAL ENGINEER MICHAEL H. JONES No. S3033 Exp. 06-31-16 STATE OF CALIFORNIA

GARY LEE MOORE, P.E. CITY ENGINEER

	DESIGN GROUP	DATE:
ENGINEER:	MICHAEL H. JONES LIC. NO. S3033	1/29/2016
DESIGNED BY:	MICHAEL H. JONES	1/29/2016
DRAWN BY:	LI ZHANG	1/29/2016
CHECKED BY:	CHARLES REDFIELD	1/29/2016
APPROVED BY:	MICHAEL H. JONES	1/29/2016

VERTICAL CONTROL: BM 12-04070.1929 (NGVD 29) - 1985 ADJUSTMENT
HORIZONTAL CONTROL: GPS; PID AE 1704, EPOCH 1991.35

SHEET TITLE: CALIFORNIA ST-10 BRIDGE RAIL (MODIFIED)

PROJECT: SIXTH STREET VIADUCT REPLACEMENT

ADDRESS: SIXTH STREET VIADUCT (WHITTIER BLVD) LOS ANGELES, CA

WORK ORDER NO. E700224F

DRAWING NO. S8-21

SHEET 8 OF SHEETS

THE CITY OF LOS ANGELES OR ITS OFFICERS OR AGENTS SHALL NOT BE RESPONSIBLE FOR THE ACCURACY OR COMPLETENESS OF ELECTRONIC COPIES OF THIS PLAN SHEET.

REVISION DATES (DESIGN STAGE ONLY)

C:\caddlib\pw\pwwestcoast\lzhang\dms57683\S8-21-BD01.dwg 9/08/16 11:02

Sheet Version 3.0

ADDENDUM 5

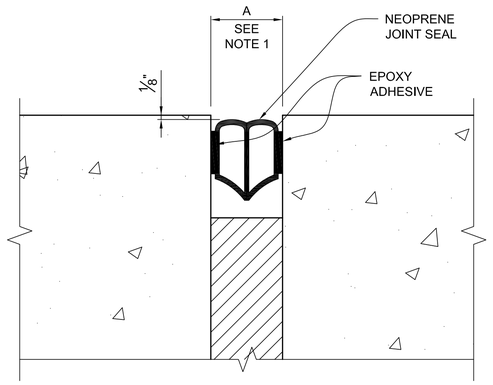

ADA COMPLIANT JOINT SEAL

NO SCALE

NOTES:

1. JOINT WIDTH "A" SHALL BE DETERMINED AT THE TIME OF JOINT SEAL INSTALLATION. SEAL SIZE SHALL BE SELECTED SO THAT IT IS INSTALLED IN A NEUTRAL POSITION WITH THE ABILITY TO EXPAND AND CONTRACT A MINIMUM OF 35%.
2. JOINT SEAL MUST BE ADA COMPLIANT.
3. AN ACCEPTABLE JOINT SEAL IS JEENE BRIDGE SERIES FW PROFILE MANUFACTURED BY WATSON BOWMAN ACME CORPORATION, AMHERST, NY.

THE CITY OF LOS ANGELES OR ITS OFFICERS OR AGENTS SHALL NOT BE RESPONSIBLE FOR THE ACCURACY OR COMPLETENESS OF ELECTRONIC COPIES OF THIS PLAN SHEET.

REVISION DATES (DESIGN STAGE ONLY)

C:\caddlib\pw\pwwestcoast\lzhang\dms57683\S8-21-BD01.dwg 6/28/16 10:36

Sheet Version 3.0

BUREAU OF ENGINEERING
OFFICIAL RECORD

HNTB
HNTB Corporation
601 W. 5TH STREET SUITE 1000
LOS ANGELES, CALIFORNIA 90071
TEL (213) 403-1000 FAX (213) 403-1001

CITY OF LOS ANGELES DEPARTMENT OF PUBLIC WORKS

BUREAU OF ENGINEERING

ENGINEERING
CITY OF LOS ANGELES

NO.	REVISIONS:	DATE	BY:

STRUCTURE NO. 53C-2329

INDEX NO. P-38113

THIS PLAN WAS ELECTRONICALLY SIGNED AND STAMPED

REGISTERED PROFESSIONAL ENGINEER
MICHAEL H. JONES
No. S3033
CIVIL
STATE OF CALIFORNIA

GARY LEE MOORE, P.E. CITY ENGINEER

DESIGN GROUP

ENGINEER:	MICHAEL H. JONES	LIC. NO. S3033	DATE: 1/29/2016
DESIGNED BY:	MICHAEL H. JONES		1/29/2016
DRAWN BY:	LI ZHANG		1/29/2016
CHECKED BY:	CHARLES REDFIELD		1/29/2016
APPROVED BY:	MICHAEL H. JONES		1/29/2016

VERTICAL CONTROL: BM 12-04070.1929 (NGVD 29) - 1985 ADJUSTMENT
HORIZONTAL CONTROL: GPS: PID AE 1704, EPOCH 1991.35

SHEET TITLE: ADA COMPLIANT JOINT SEAL

PROJECT: SIXTH STREET VIADUCT REPLACEMENT

ADDRESS: SIXTH STREET VIADUCT (WHITTIER BLVD) LOS ANGELES, CA

WORK ORDER NO. E700224F

DRAWING NO. S8-22

SHEET 419 OF 560 SHEETS

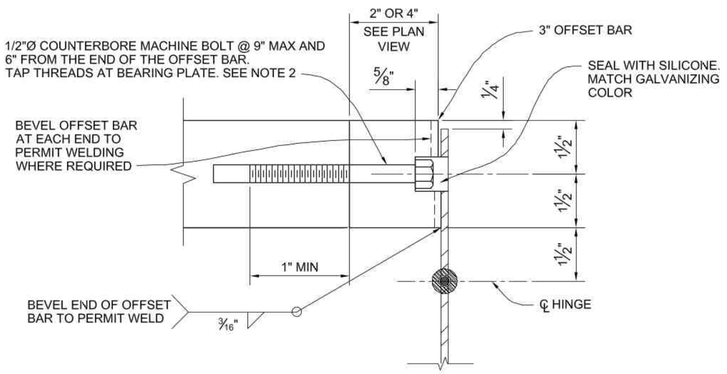

DETAIL 2

SCALE: 6"=1'-0"

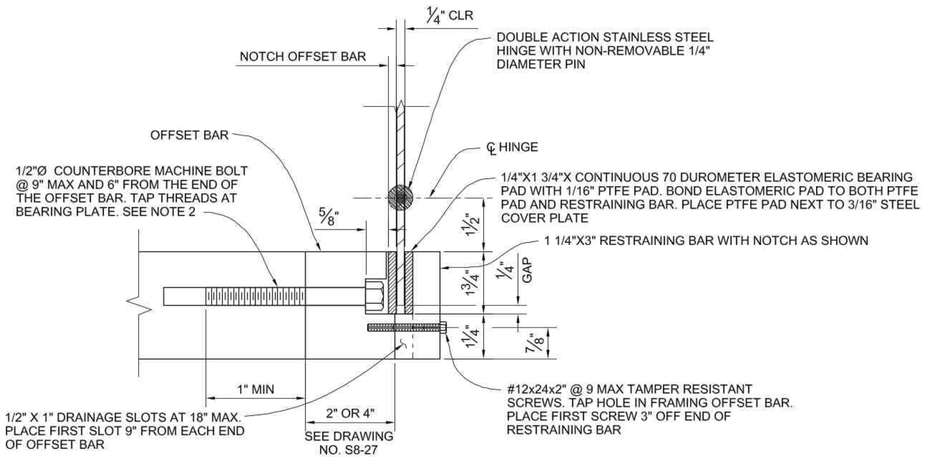

DETAIL 1

SCALE: 6"=1'-0"

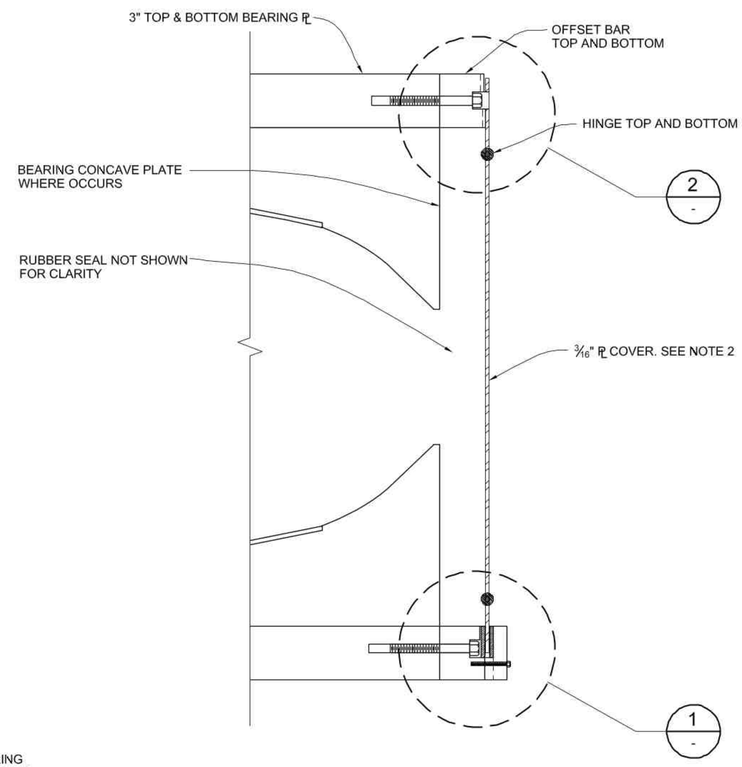

BEARING ARTICULATED COVER

SCALE: 3"=1'-0"

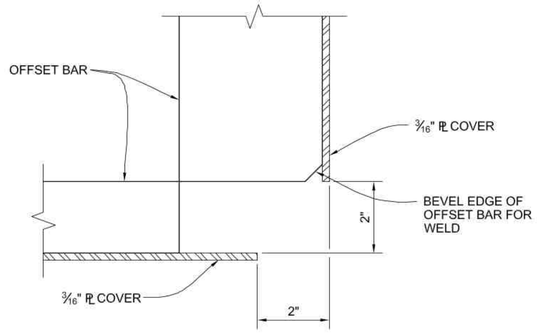

COVER PLATE CORNER DETAIL

SCALE: 6"=1'-0"

3 S8-27

NOTES:

1. ALL BEARING ARTICULATED COVER AND BEARING SHIELD COMPONENTS, INCLUDING FASTENERS, ARE GALVANIZED.
2. APPLY MEDIUM STRENGTH ANAEROBIC THREAD LOCKER TO THREADS.
3. PROVIDE ONE COVER PLATE ACROSS 6'-6" WIDTH OF THE BEARING PLATES AND 2 EQUAL WIDTH COVER PLATES WITH A 2" GAP BETWEEN COVER PLATES AT THE 10'-4" WIDTH OF THE BEARING PLATES.
4. PAINT ALL GALVANIZED STEEL, EXCLUDING ISOLATION BEARING PLATES, IN ACCORDANCE WITH TECHNICAL SPECIFICATION SECTION 59-3. FINISH COATS ARE IN ACCORDANCE WITH TECHNICAL SPECIFICATION SECTION 59-2. COLOR WILL BE SELECTED BY THE ENGINEER.
5. AT THE 6'-6" WIDTH OF THE BEARING PLATE, PROVIDE AN OPEN COVER PLATE INSPECTION RESTRAINT AT EACH OF THE COVER PLATES CONSISTING OF A 3/8" DIAMETER EYE HOOK PLACED AT 2" ABOVE THE LOWER HINGE AND CENTERED ON EACH COVER PLATE AND EITHER WELDED OR BOLTED TO THE COVER PLATE. WITH THE COVER PLATE IN THE OPEN POSITION, PROVIDE A MATCHING 3/8" DIAMETER EYE-HOOK INSTALLED IN A 3" DEEP CONCRETE SLEEVE ANCHOR, CHAIN, AND SWIVEL EYE SNAP HOOK TO PROVIDE A RESTRAINT IN THE OPEN POSITION, ALL STAINLESS STEEL.

BUREAU OF ENGINEERING

ENGINEERING
CITY OF LOS ANGELES

NO.	REVISIONS:	DATE	BY:
1.	ISOLATION BEARING SCREEN PCO 154	1/28/22	MHJ

STRUCTURE NO. 53C-2329

INDEX NO.

REGISTERED PROFESSIONAL ENGINEER MICHAEL H. JONES No. S3033 CIVIL STATE OF CALIFORNIA

THIS PLAN WAS ELECTRONICALLY SIGNED AND STAMPED

CITY OF LOS ANGELES DEPARTMENT OF PUBLIC WORKS

GARY LEE MOORE, P.E. CITY ENGINEER

		DATE:
ENGINEER:	MICHAEL H. JONES	1/29/2016
DESIGNED BY:	MICHAEL H. JONES	1/29/2016
DRAWN BY:	LI ZHANG	1/29/2016
CHECKED BY:	RUI LU	1/29/2016
APPROVED BY:	MICHAEL H. JONES	1/29/2016

DESIGN GROUP
LIC. NO. S3033

VERTICAL CONTROL: BM 12-04070, 1929 (NGVD 29) - 1985 ADJUSTMENT
HORIZONTAL CONTROL: GPS; PID AE 1704, EPOCH 1991.35

SHEET TITLE: ISOLATION BEARING SCREEN DETAILS NO. 1

PROJECT: SIXTH STREET VIADUCT REPLACEMENT

ADDRESS: SIXTH STREET VIADUCT (WHITTIER BLVD) LOS ANGELES, CA

HNTB
HNTB Corporation
601 W. 5TH STREET SUITE 1000
LOS ANGELES, CALIFORNIA 90071
TEL (213) 403-1000 FAX (213) 403-1001

WORK ORDER NO. E700224F

DRAWING NO. S8-26

SHEET 420 OF 562 SHEETS

T.O. 5 - Change Order Serial Sketch No. 154r1 - Page 1 of 3

THE CITY OF LOS ANGELES OR ITS OFFICERS OR AGENTS SHALL NOT BE RESPONSIBLE FOR THE ACCURACY OR COMPLETENESS OF ELECTRONIC COPIES OF THIS PLAN SHEET.

C:\caddlib\pw\west_c3d\dms57683\SB-02-IB001-02-new.dwg 1/26/22 13:40

REVISION DATES (DESIGN STAGE ONLY)

Sheet Version 3.0

ADDENDUM 5

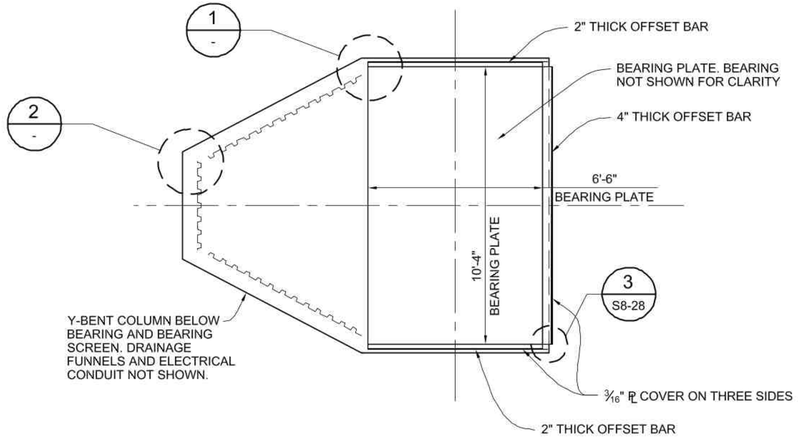

BEARING SCREEN AND ARTICULATED COVER LAYOUT

SCALE: 3/8"=1'-0"

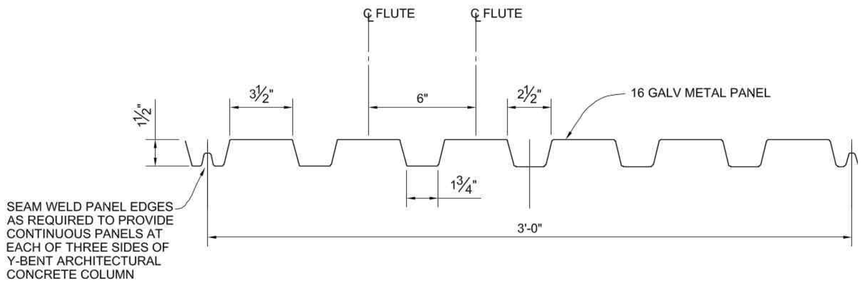

METAL SCREEN SECTION

SCALE: 3"=1'-0"

NOTES:

1. SEE DRAWING NO. S8-26 FOR NOTES.

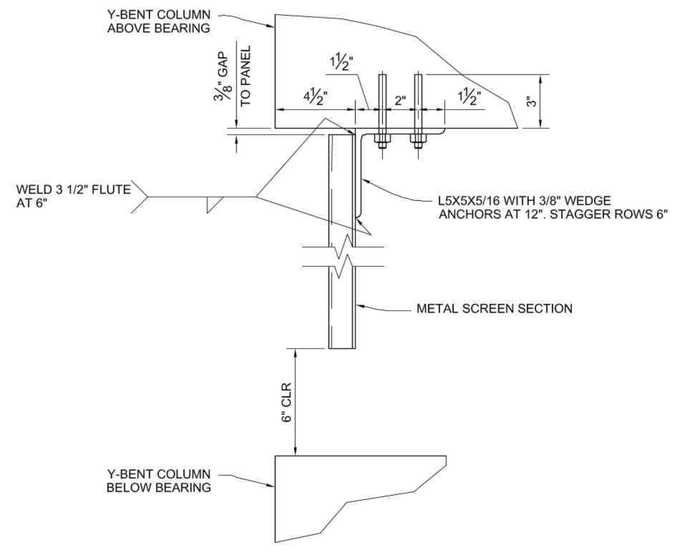

BEARING SCREEN CONNECTION TO Y-BENT COLUMN

SCALE: 3"=1'-0"

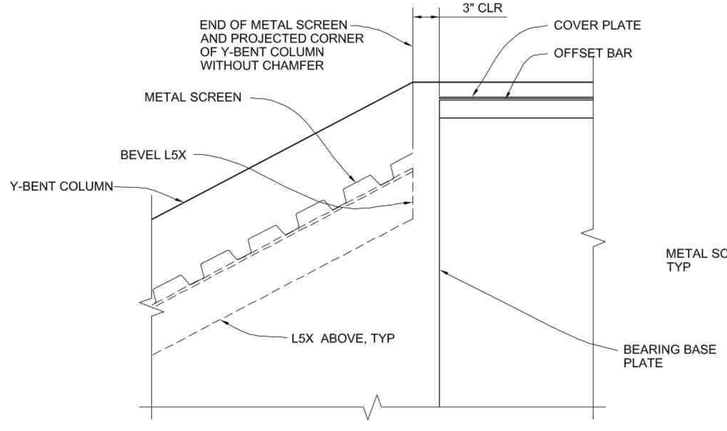

DETAIL 1

SCALE: 1 1/2"=1'-0"

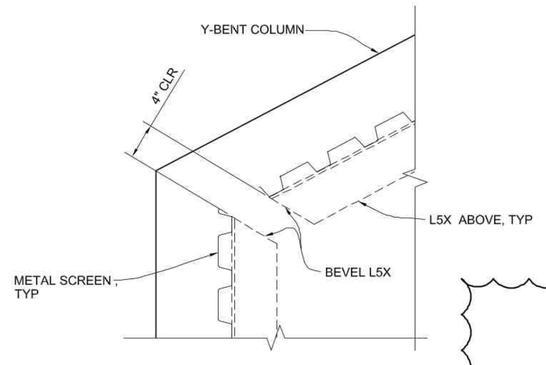

DETAIL 2

SCALE: 1 1/2"=1'-0"

THE CITY OF LOS ANGELES OR ITS OFFICERS OR AGENTS SHALL NOT BE RESPONSIBLE FOR THE ACCURACY OR COMPLETENESS OF ELECTRONIC COPIES OF THIS PLAN SHEET.

C:\caddlib\pw\west_c3d\dms57683\S8-02-IBD01-02-new.dwg 1/26/22 13:42

REVISION DATES (DESIGN STAGE ONLY)

Sheet Version 3.0

BUREAU OF ENGINEERING

ENGINEERING
CITY OF LOS ANGELES

NO.	REVISIONS:	DATE	BY:
1.	ISOLATION BEARING SCREEN PCO 154	1/28/22	MHJ

STRUCTURE NO.
53C-2329

INDEX NO.

THIS PLAN WAS ELECTRONICALLY SIGNED AND STAMPED

REGISTERED PROFESSIONAL ENGINEER MICHAEL H. JONES No. S3033 STATE OF CALIFORNIA

CITY OF LOS ANGELES DEPARTMENT OF PUBLIC WORKS

GARY LEE MOORE, P.E. CITY ENGINEER

		DESIGN GROUP	DATE
ENGINEER:	MICHAEL H. JONES	LIC. NO. S3033	1/29/2016
DESIGNED BY:	MICHAEL H. JONES		1/29/2016
DRAWN BY:	LI ZHANG		1/29/2016
CHECKED BY:	RUI LU		1/29/2016
APPROVED BY:	MICHAEL H. JONES		1/29/2016

VERTICAL CONTROL: BM 12-04070, 1929 (NGVD 29) - 1985 ADJUSTMENT
HORIZONTAL CONTROL: GPS; PID AE 1704, EPOCH 1991.35

SHEET TITLE: ISOLATION BEARING SCREEN DETAILS NO. 2

PROJECT: SIXTH STREET VIADUCT REPLACEMENT

ADDRESS: SIXTH STREET VIADUCT (WHITTIER BLVD) LOS ANGELES, CA

HNTB
HNTB Corporation
601 W. 5TH STREET SUITE 1000
LOS ANGELES, CALIFORNIA 90071
TEL (213) 403-1000 FAX (213) 403-1001

WORK ORDER NO.
E700224F

DRAWING NO.
S8-27

SHEET 421 OF 562 SHEETS

T.O. 5 - Change Order Serial Sketch No. 154r1 - Page 2 of 3

ADDENDUM 5

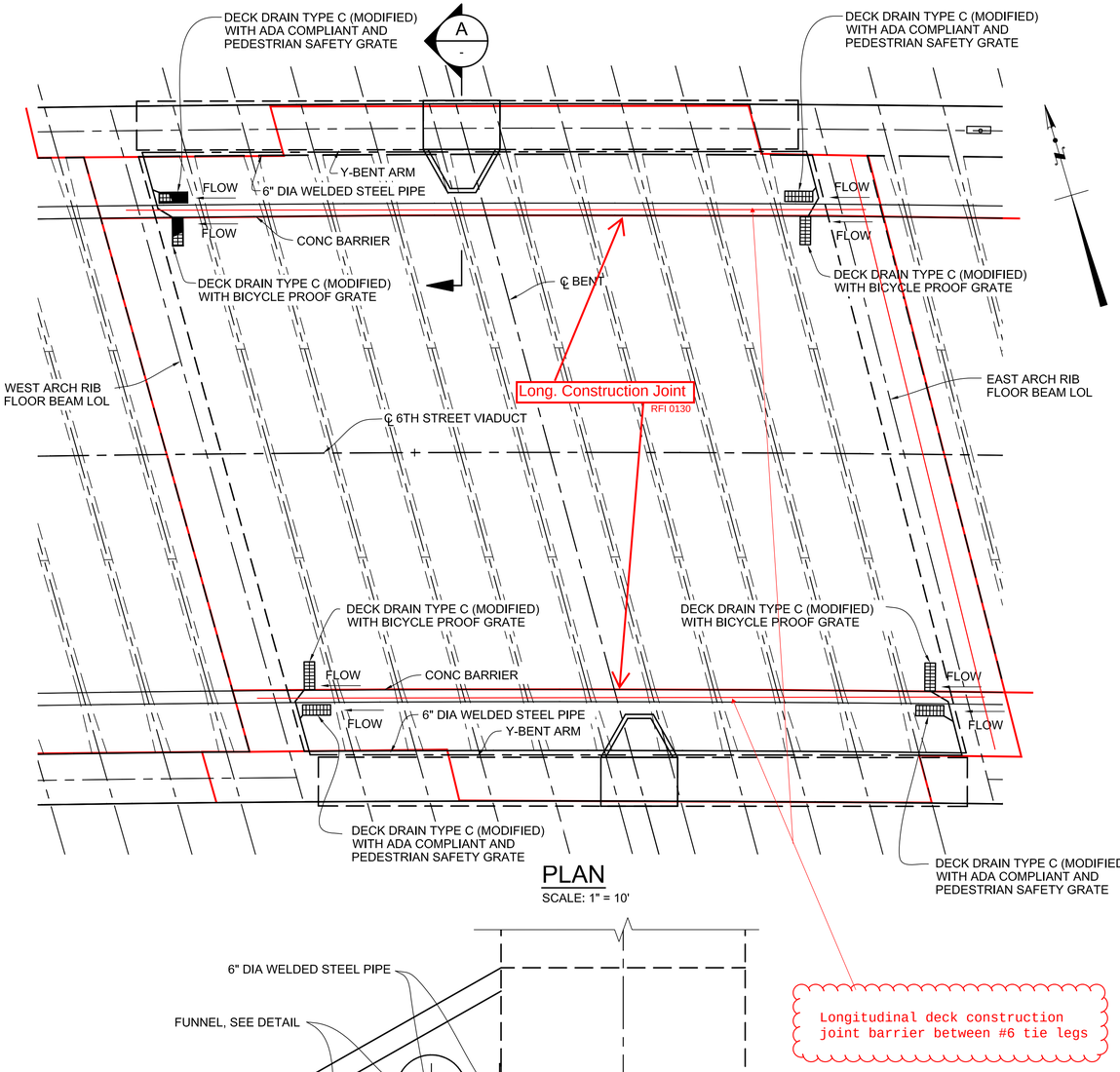

PLAN
SCALE: 1" = 10'

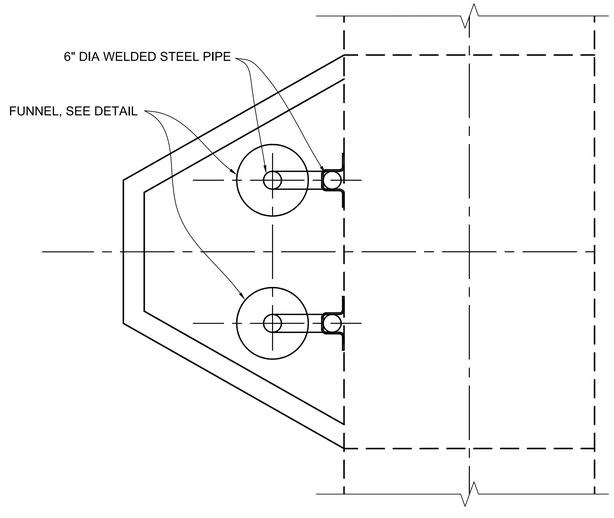

SECTION
SCALE: 1/2"=1'-0"
B
-

Longitudinal deck construction joint barrier between #6 tie legs

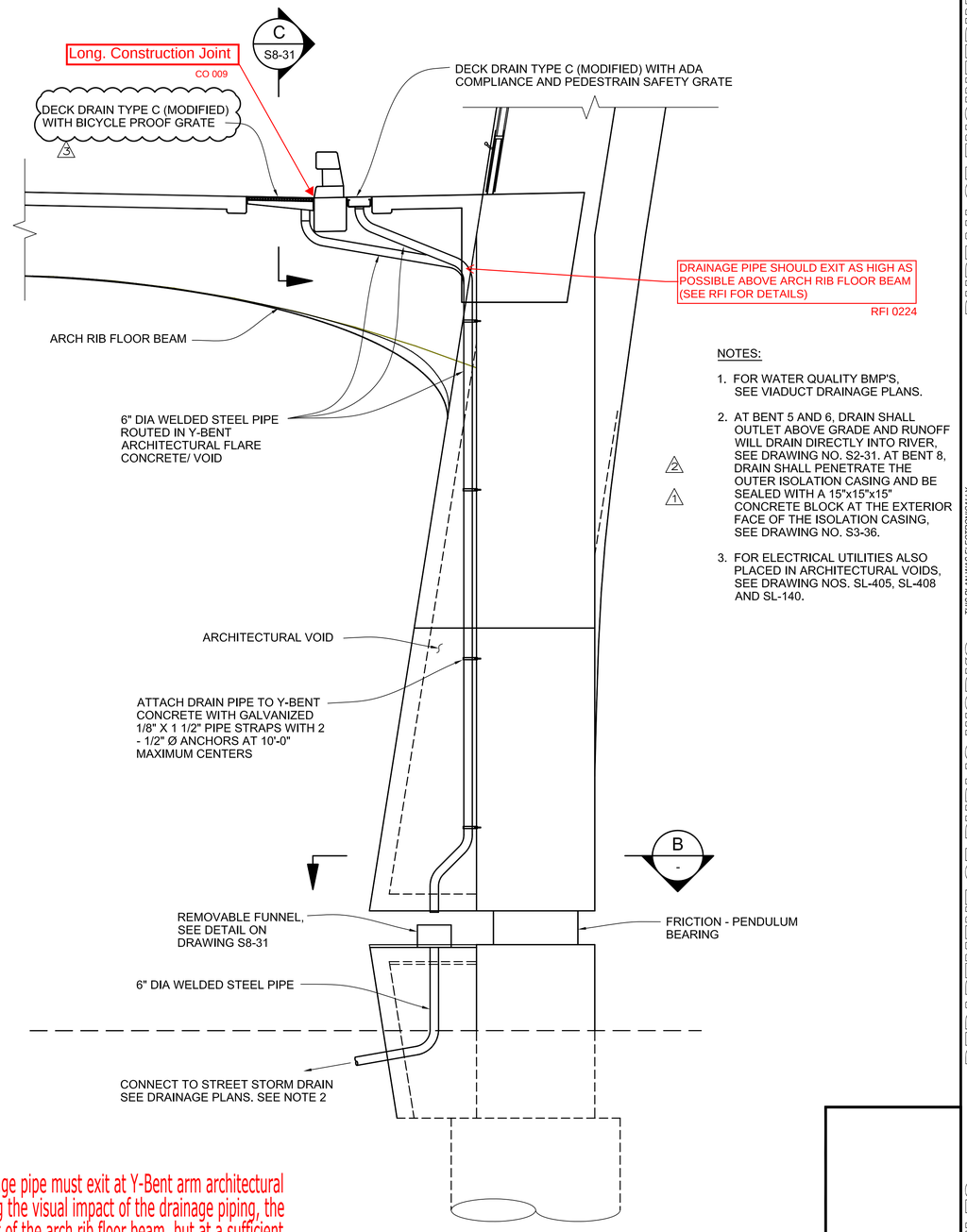

NOTES:

1. FOR WATER QUALITY BMP'S, SEE VIADUCT DRAINAGE PLANS.
2. AT BENT 5 AND 6, DRAIN SHALL OUTLET ABOVE GRADE AND RUNOFF WILL DRAIN DIRECTLY INTO RIVER, SEE DRAWING NO. S2-31. AT BENT 8, DRAIN SHALL PENETRATE THE OUTER ISOLATION CASING AND BE SEALED WITH A 15"x15"x15" CONCRETE BLOCK AT THE EXTERIOR FACE OF THE ISOLATION CASING, SEE DRAWING NO. S3-36.
3. FOR ELECTRICAL UTILITIES ALSO PLACED IN ARCHITECTURAL VOIDS, SEE DRAWING NOS. SL-405, SL-408 AND SL-140.

SECTION
SCALE: 1/4"=1'-0"
A
-

RFI:224
There is no required specific elevation that the drainage pipe must exit at Y-Bent arm architectural concrete. To optimize bridge aesthetics by minimizing the visual impact of the drainage piping, the piping should exit as high as possible above the soffit of the arch rib floor beam, but at a sufficient depth to avoid interference with structural concrete and to permit routing the pipe to the deck drains as shown on Contract Drawings S8-30 and S8-31. All piping must conform to Standard Plan B7-6 and all other applicable Contract requirements.

T.O. 5 - Change Order Serial Sketch No. 24 - Page 1 of 4

THE CITY OF LOS ANGELES OR ITS OFFICERS OR AGENTS SHALL NOT BE RESPONSIBLE FOR THE ACCURACY OR COMPLETENESS OF ELECTRONIC COPIES OF THIS PLAN SHEET.

C:\caddlib\pw\pwwestcoast\zhang\dms57683\S8-30-D001-02.dwg 4/21/17 15:43

Sheet Version 3.0

REVISION DATES (DESIGN STAGE ONLY)

HNTB
HNTB Corporation
601 W. 5TH STREET SUITE 1000
LOS ANGELES, CALIFORNIA 90071
TEL (213) 403-1000 FAX (213) 403-1001

CITY OF LOS ANGELES DEPARTMENT OF PUBLIC WORKS BUREAU OF ENGINEERING

ENGINEERING
CITY OF LOS ANGELES

NO.	REVISIONS:	DATE	BY:
1	CHANGE ORDER NO. 1 - CORRECTED REFERENCE	09/15/16	MHJ
2	RFI - 0049 REVISION	01/18/17	MHJ
3	RFI - 0022 TOS	04/18/17	MHJ

STRUCTURE NO. 53C-2329

INDEX NO.

THIS PLAN WAS ELECTRONICALLY SIGNED AND STAMPED

REGISTERED PROFESSIONAL ENGINEER MICHAEL H. JONES No. S3033 CIVIL STATE OF CALIFORNIA

GARY LEE MOORE, P.E. CITY ENGINEER

		DATE:
ENGINEER:	MICHAEL H. JONES	1/29/2016
DESIGNED BY:	MICHAEL H. JONES	1/29/2016
DRAWN BY:	LI ZHANG	1/29/2016
CHECKED BY:	CHARLES REDFIELD	1/29/2016
APPROVED BY:	MICHAEL H. JONES	1/29/2016

LIC. NO. S3033
DESIGN GROUP

VERTICAL CONTROL: BM 12-04070, 1929 (NGVD 29) - 1985 ADJUSTMENT
HORIZONTAL CONTROL: GPS; PID AE 1704, EPOCH 1991.35

SHEET TITLE: ARCH SPAN DECK DRAINAGE DETAILS NO. 1

PROJECT: SIXTH STREET VIADUCT REPLACEMENT

ADDRESS: SIXTH STREET VIADUCT (WHITTIER BLVD) LOS ANGELES, CA

WORK ORDER NO. E700224F

DRAWING NO. S8-30

SHEET 420 OF 560 SHEETS

ADDENDUM 5

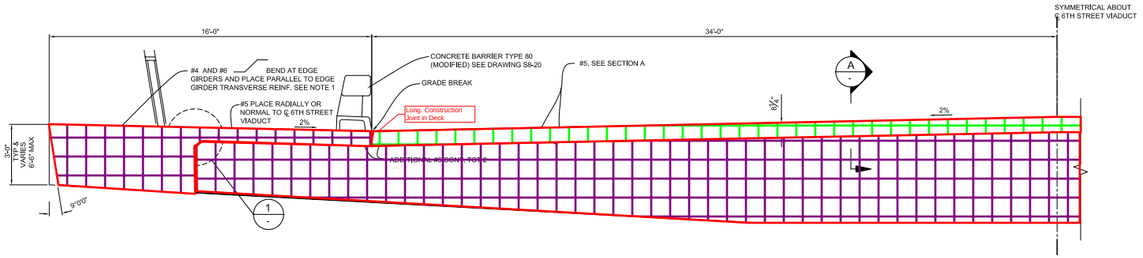

TYPICAL DECK REINF SECTION

SCALE: 1/2" = 1'-0"

Arch Span Placement

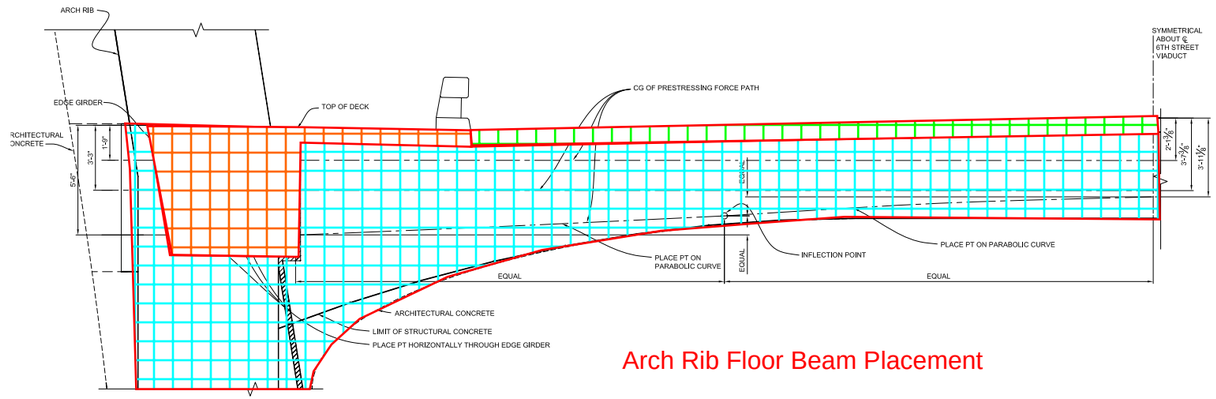

Arch Rib Floor Beam Placement

ARCH RIB FLOOR BEAM POST TENSIONING LAYOUT

SCALE: 1/2"=1'-0"

Transverse deck construction joint +/- 1ft from center of ARFB to avoid reinforcement.

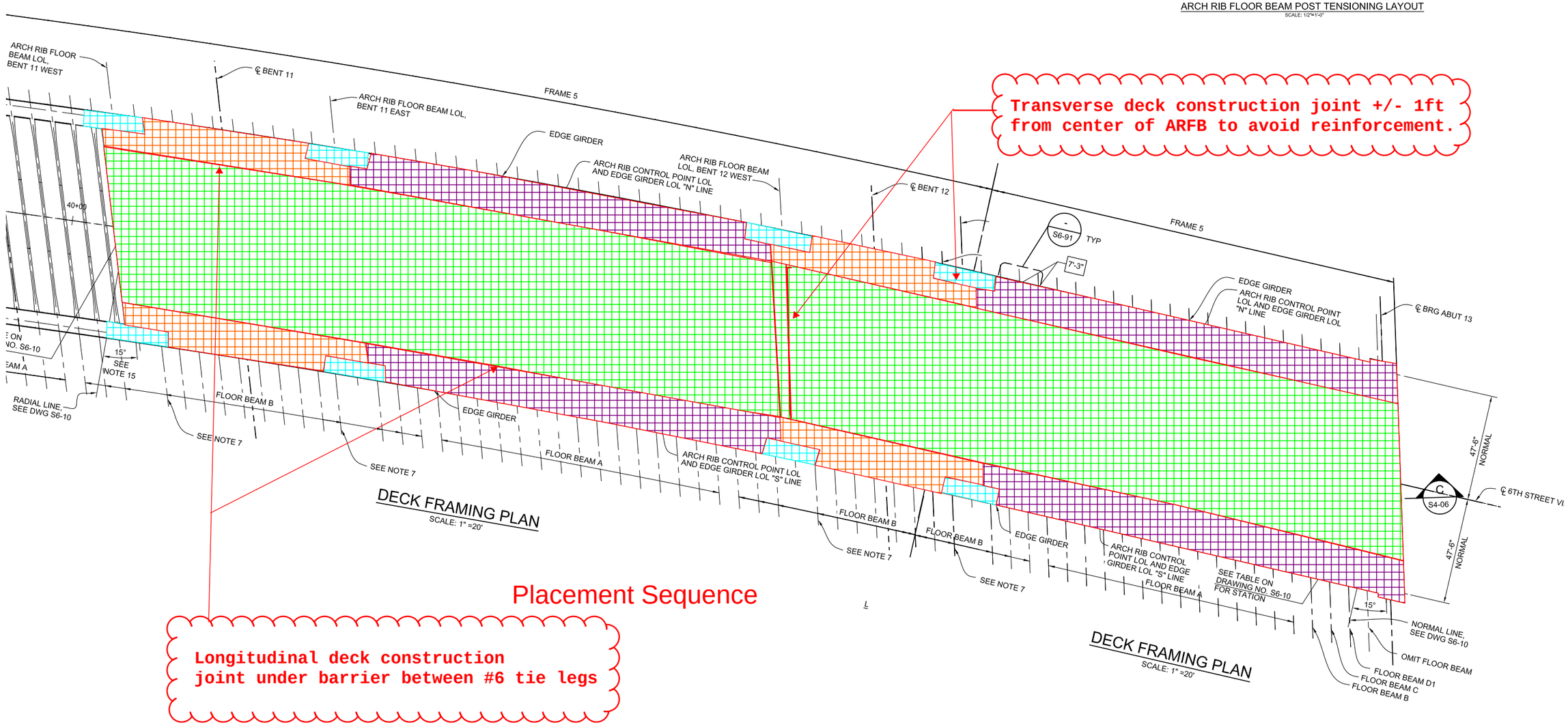

DECK FRAMING PLAN

SCALE: 1" =20'

DECK FRAMING PLAN

SCALE: 1" =20'

Placement Sequence

Longitudinal deck construction joint under barrier between #6 tie legs

RFI 0130

ADDENDUM 5

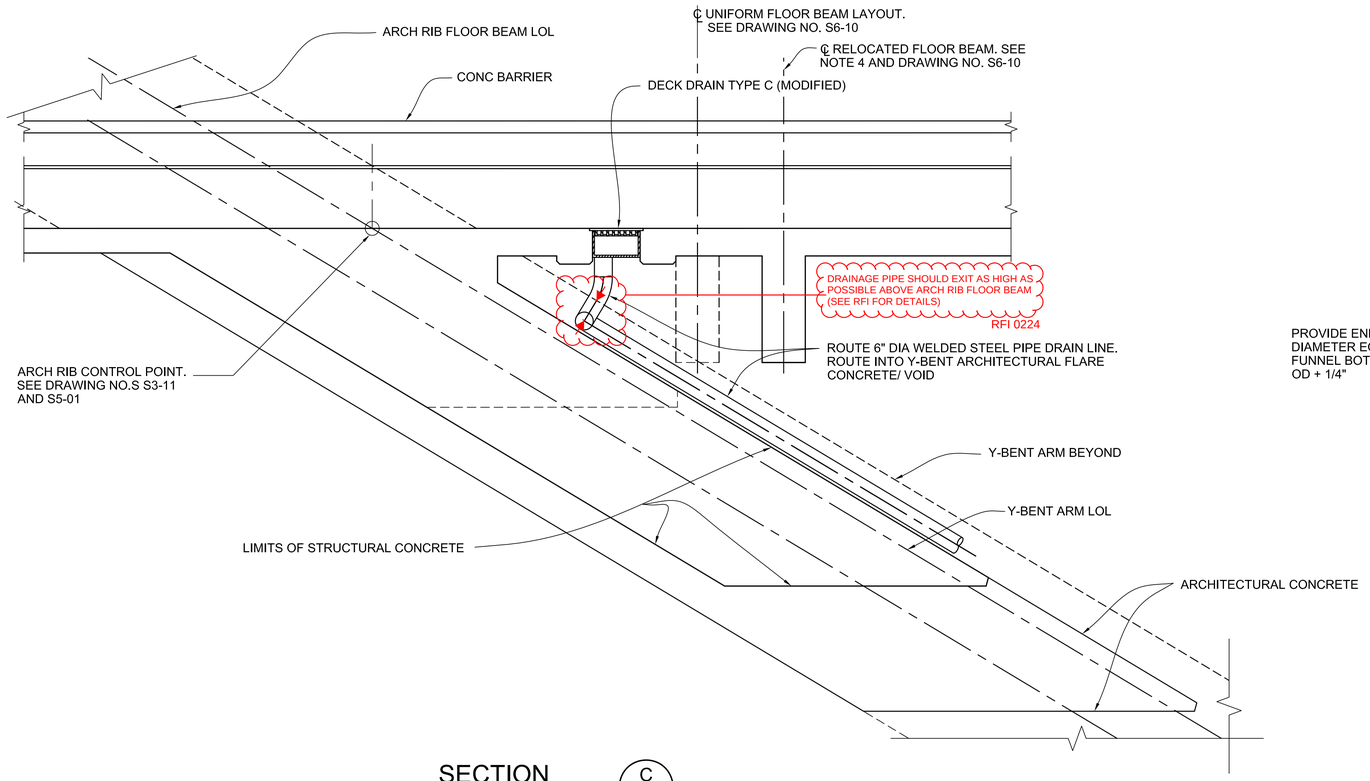

SECTION

SCALE: 1/2"=1'-0"

C
S8-30

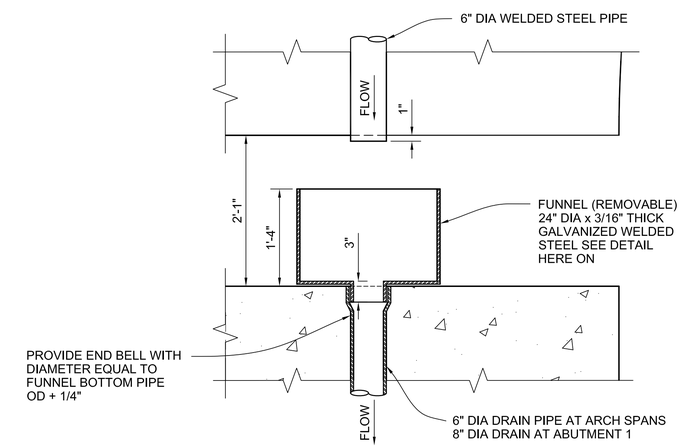

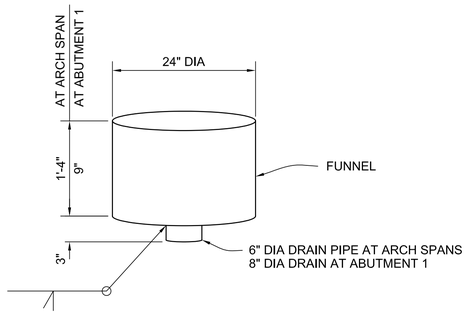

FUNNEL DETAIL

SCALE: 1" = 1'

RFI: 224

There is no required specific elevation that the drainage pipe must exit at Y-Bent arm architectural concrete. To optimize bridge aesthetics by minimizing the visual impact of the drainage piping, the piping should exit as high as possible above the soffit of the arch rib floor beam, but at a sufficient depth to avoid interference with structural concrete and to permit routing the pipe to the deck drains as shown on Contract Drawings S8-30 and S8-31. All piping must conform to Standard Plan B7-6 and all other applicable Contract requirements.

As-Built the actual field installed elevations & distances.

THE CITY OF LOS ANGELES OR ITS OFFICERS OR AGENTS SHALL NOT BE RESPONSIBLE FOR THE ACCURACY OR COMPLETENESS OF ELECTRONIC COPIES OF THIS PLAN SHEET.

REVISION DATES (DESIGN STAGE ONLY)

C:\caddlib\pw\pwwestcoast\zhang\dms57683\S8-30-D001-02.dwg 6/28/16 10:36

Sheet Version 3.0

BUREAU OF ENGINEERING

ENGINEERING
CITY OF LOS ANGELES

NO.	REVISIONS:	DATE:	BY:

STRUCTURE NO. 53C-2329

INDEX NO. P-38113

THIS PLAN WAS ELECTRONICALLY SIGNED AND STAMPED.

REGISTERED PROFESSIONAL ENGINEER
MICHAEL H. JONES
No. S3033
CIVIL
STATE OF CALIFORNIA

CITY OF LOS ANGELES DEPARTMENT OF PUBLIC WORKS

GARY LEE MOORE, P.E. CITY ENGINEER

		DATE:
ENGINEER:	MICHAEL H. JONES	1/29/2016
DESIGNED BY:	MICHAEL H. JONES	1/29/2016
DRAWN BY:	LI ZHANG	1/29/2016
CHECKED BY:	CHARLES REDFIELD	1/29/2016
APPROVED BY:	MICHAEL H. JONES	1/29/2016

LIC. NO. S3033 DESIGN GROUP

VERTICAL CONTROL: BM 12-04070,1928 (NGVD 29) - 1985 ADJUSTMENT
HORIZONTAL CONTROL: GPS; PID AE 1704, EPOCH 1991.35

SHEET TITLE: ARCH SPAN DECK DRAINAGE DETAILS NO. 2

PROJECT: SIXTH STREET VIADUCT REPLACEMENT

ADDRESS: SIXTH STREET VIADUCT (WHITTIER BLVD) LOS ANGELES, CA

HNTB
HNTB Corporation
601 W. 5TH STREET SUITE 1000
LOS ANGELES, CALIFORNIA 90071
TEL (213) 403-1000 FAX (213) 403-1001

BUREAU OF ENGINEERING OFFICIAL RECORD

WORK ORDER NO. E700224F

DRAWING NO. S8-31

SHEET 421 OF 560 SHEETS

ADDENDUM 5

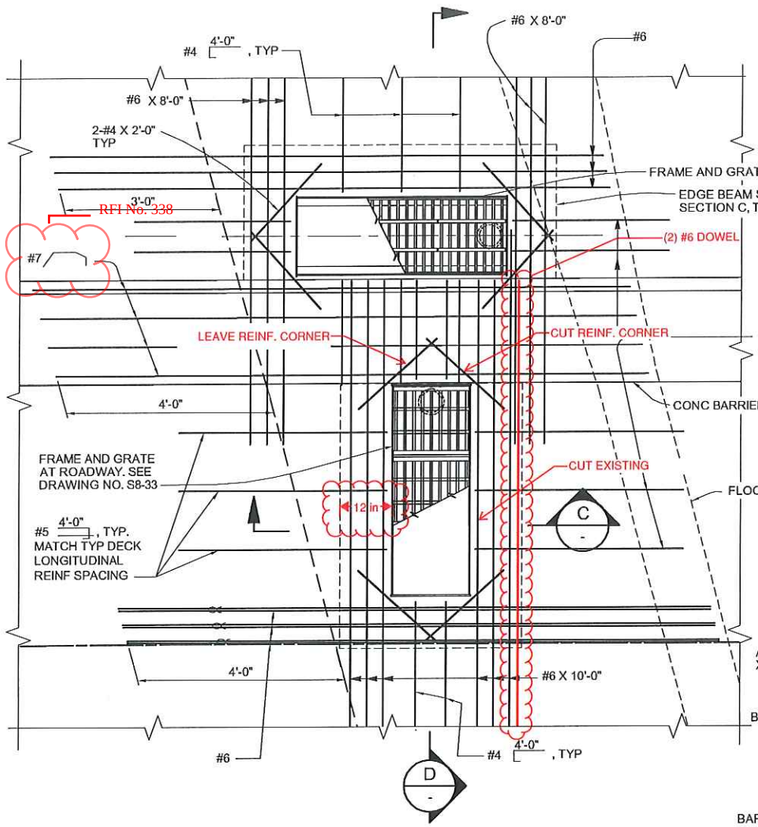

PLAN

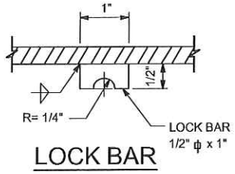

LOCK BAR

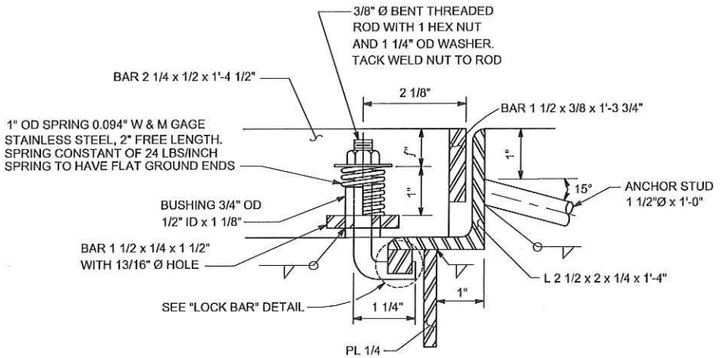

DETAIL 1
NO SCALE

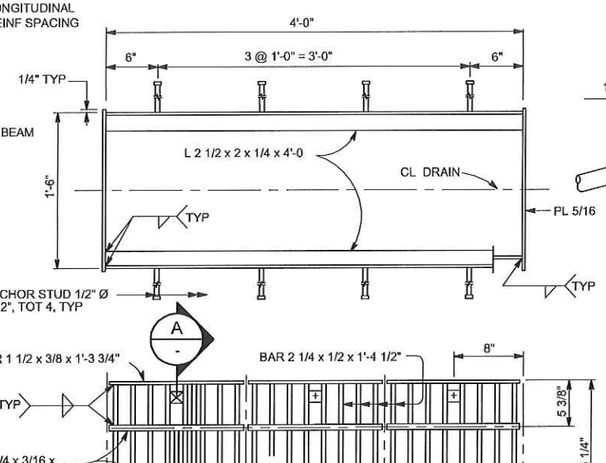

PLAN - WALKWAY FRAME & GRATE

NOTE:
GRATING CONSISTS OF 3 IDENTICAL UNITS EXCEPT FOR BAFFLE PLATE. BAFFLE PLATE IS REQUIRED ONLY FOR THE GRATE OVER THE 6" Ø PIPE

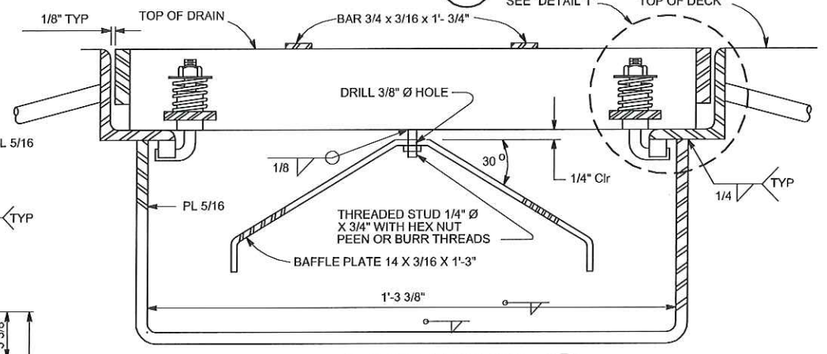

FRAME & GRATE SECTION
NO SCALE

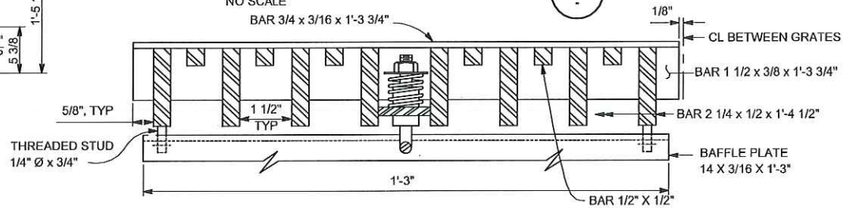

SECTION B
NO SCALE

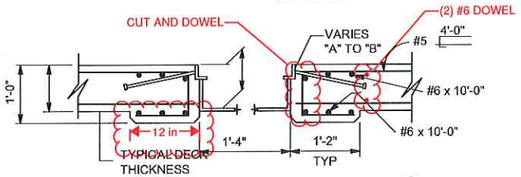

SECTION C

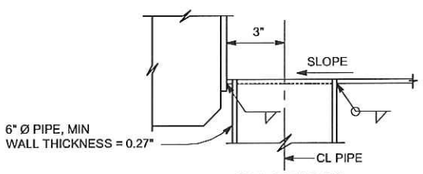

PIPE SECTION

DECK DRAIN		
TYPE	"A"	"B"
C	9"	5"
C1	24"	20"

NOTE:
GALVANIZE DECK DRAIN ASSEMBLY AFTER FABRICATION. REINFORCEMENT SHOWN AT DRAINS IS TO BE PLACED IN ADDITION TO TYPICAL SLAB REINFORCEMENT. TYPICAL SLAB REINFORCEMENT NOT SHOWN

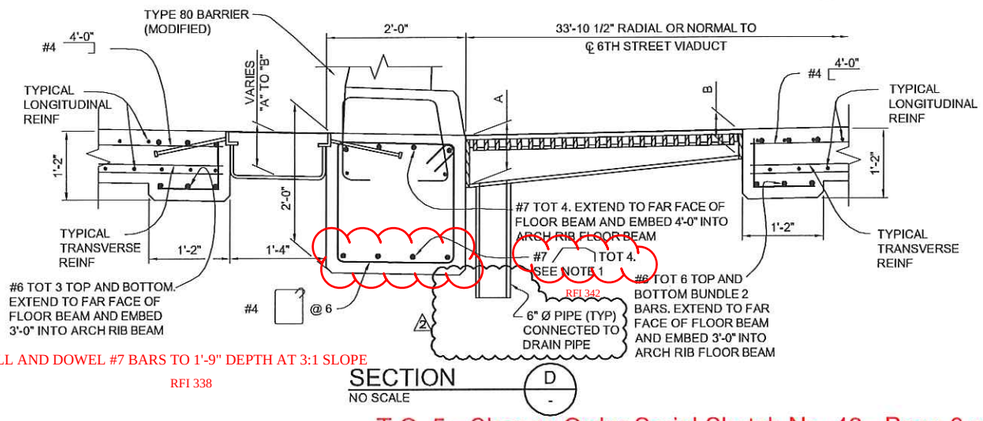

SECTION D
NO SCALE

NOTES:

1. ENDS OF #7 BARS AT BEAM BETWEEN DECK DRAINS SHALL EXTEND TO FAR FACE OF FLOOR BEAM AND TERMINATE WITH A 90° HOOK. EXTEND OPPOSITE END 4'-0" INTO ARCH RIB FLOOR BEAM. BEND FLOOR BEAM EMBEDDED PORTION UP OR DOWN TO AVOID INTERFERENCE WITH POST TENSIONING DUCTS.

DRILL AND DOWEL #7 BARS TO 1'-9" DEPTH AT 3:1 SLOPE
RFI 338

T.O. 5 - Change Order Serial Sketch No. 42 - Page 9 of 11

HNTB
HNTB Corporation
601 W. 5TH STREET SUITE 1000
LOS ANGELES, CALIFORNIA 90071
TEL (213) 403-1000 FAX (213) 403-1001

CITY OF LOS ANGELES
DEPARTMENT OF PUBLIC WORKS
BUREAU OF ENGINEERING

VERTICAL CONTROL: BM 12-24(NTS) 1929 (NGVD 29) - 1965 ADJUSTMENT
HORIZONTAL CONTROL: GPS - FBO AE 1704, EPOCH 1991.35

NO	REVISIONS:	DATE:	BY:
1	RFI - 0322 TOS	04/18/17	MHJ
2	GENERAL BIM UPDATES	09/01/17	MHJ

INDEX NO.

STRUCTURE NO. 53C-2329

PCO 24
ECO 42

GARY LEE MOORE, P.E.
CITY ENGINEER
DESIGN GROUP
LIC. NO. 53033

		DATE:
ENGINEER:	MICHAEL H. JONES	1/29/2016
DESIGNED BY:	MICHAEL H. JONES	1/29/2016
DRAWN BY:	LI ZHANG	1/29/2016
CHECKED BY:	CHARLES REDFIELD	1/29/2016
APPROVED BY:	MICHAEL H. JONES	1/29/2016

REGISTERED PROFESSIONAL ENGINEER MICHAEL H. JONES No. 53033 CIVIL STATE OF CALIFORNIA

THIS PLAN WAS ELECTRONICALLY SIGNED AND STAMPED

SHEET TITLE: ARCH SPAN DECK DRAINAGE DETAILS NO. 3

PROJECT: SIXTH STREET VIADUCT REPLACEMENT

ADDRESS: SIXTH STREET VIADUCT (WHITTIER BLVD) LOS ANGELES, CA

WORK ORDER NO. E700224F

DRAWING NO. S8-32

SHEET OF 560 SHEETS

REVISION DATES (DESIGN STAGE ONLY)

THE CITY OF LOS ANGELES ON ITS OFFICERS OR AGENTS SHALL NOT BE RESPONSIBLE FOR THE ACCURACY OR COMPLETENESS OF ELECTRONIC COPIES OF THIS PLAN SHEET.

C:\caddlib\pw\pwwestcoast\lzhang\dms57683\S8-30-0001-02.dwg 9/11/17 12:03

Sheet Version 3.0

ADDENDUM 5

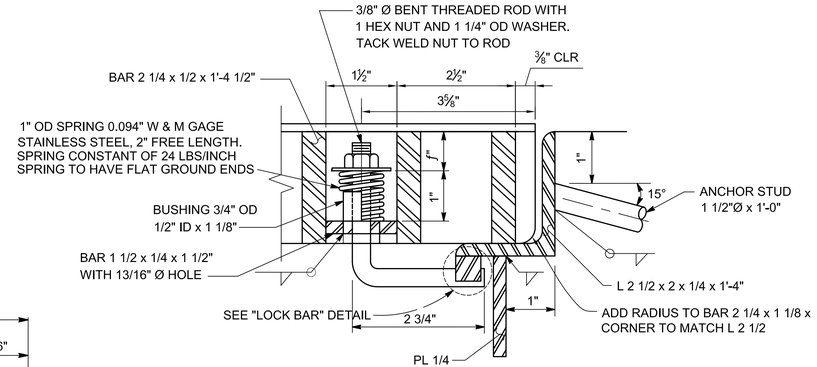

DETAIL 1
NO SCALE

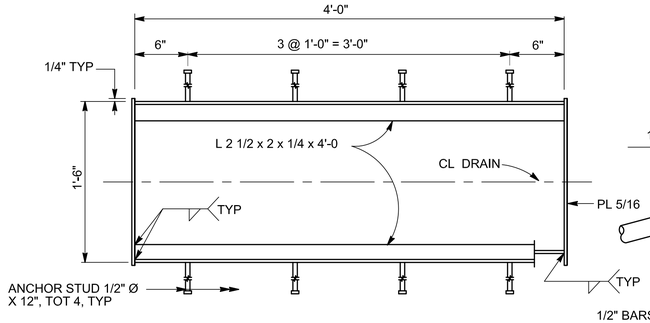

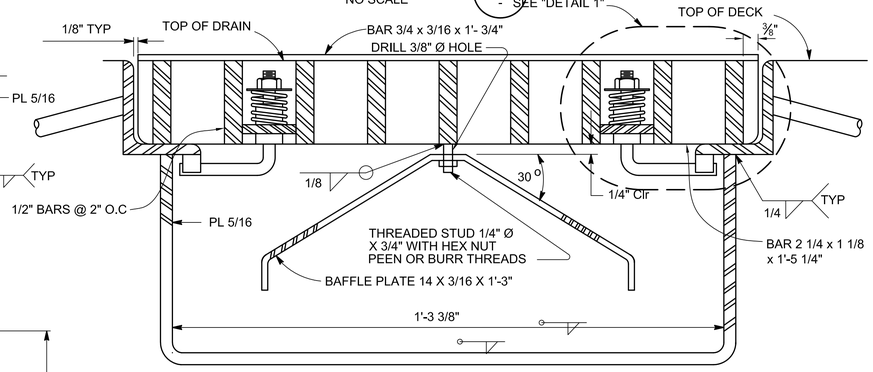

FRAME & GRATE SECTION
NO SCALE

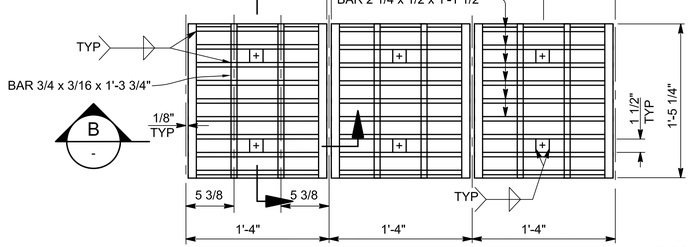

PLAN - ROADWAY FRAME & GRATE

NOTE:
GRATING CONSISTS OF 3 IDENTICAL UNITS EXCEPT FOR BAFFLE PLATE. BAFFLE PLATE IS REQUIRED ONLY FOR THE GRATE OVER THE 6" Ø PIPE

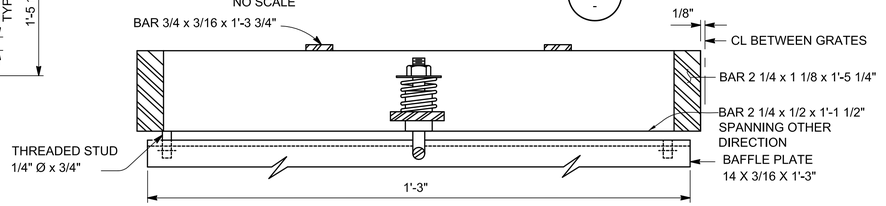

SECTION
NO SCALE

THE CITY OF LOS ANGELES OR ITS OFFICERS OR AGENTS SHALL NOT BE RESPONSIBLE FOR THE ACCURACY OR COMPLETENESS OF ELECTRONIC COPIES OF THIS PLAN SHEET.

C:\caddlib\pw\pwwestcoast\zhang\dms57683\S8-30-DD01-02.dwg 6/28/16 10:36

REVISION DATES (DESIGN STAGE ONLY)

Sheet Version 3.0

BUREAU OF ENGINEERING
ENGINEERING
CITY OF LOS ANGELES

NO.	REVISIONS:	DATE:	BY:

STRUCTURE NO. 53C-2329

INDEX NO. P-38113

THIS PLAN WAS ELECTRONICALLY SIGNED AND STAMPED

REGISTERED PROFESSIONAL ENGINEER
MICHAEL H. JONES
No. S3033
CIVIL
STATE OF CALIFORNIA

CITY OF LOS ANGELES DEPARTMENT OF PUBLIC WORKS BUREAU OF ENGINEERING

GARY LEE MOORE, P.E.	CITY ENGINEER
DESIGN GROUP	DATE:
ENGINEER: MICHAEL H. JONES	LIC. NO. S3033 1/29/2016
DESIGNED BY: MICHAEL H. JONES	1/29/2016
DRAWN BY: LI ZHANG	1/29/2016
CHECKED BY: CHARLES REDFIELD	1/29/2016
APPROVED BY: MICHAEL H. JONES	1/29/2016

VERTICAL CONTROL: BM 12-04070, 1929 (NGVD 29) - 1985 ADJUSTMENT
HORIZONTAL CONTROL: GPS; PID AE 1704, EPOCH 1991.35

SHEET TITLE: ARCH SPAN DECK DRAINAGE DETAILS NO. 4

PROJECT: SIXTH STREET VIADUCT REPLACEMENT

ADDRESS: SIXTH STREET VIADUCT (WHITTIER BLVD) LOS ANGELES, CA

BUREAU OF ENGINEERING
OFFICIAL RECORD

HNTB
HNTB Corporation
601 W. 5TH STREET SUITE 1000
LOS ANGELES, CALIFORNIA 90071
TEL (213) 403-1000 FAX (213) 403-1001

WORK ORDER NO. E700224F

DRAWING NO. S8-33

SHEET 423 OF 560 SHEETS

ADDENDUM 5

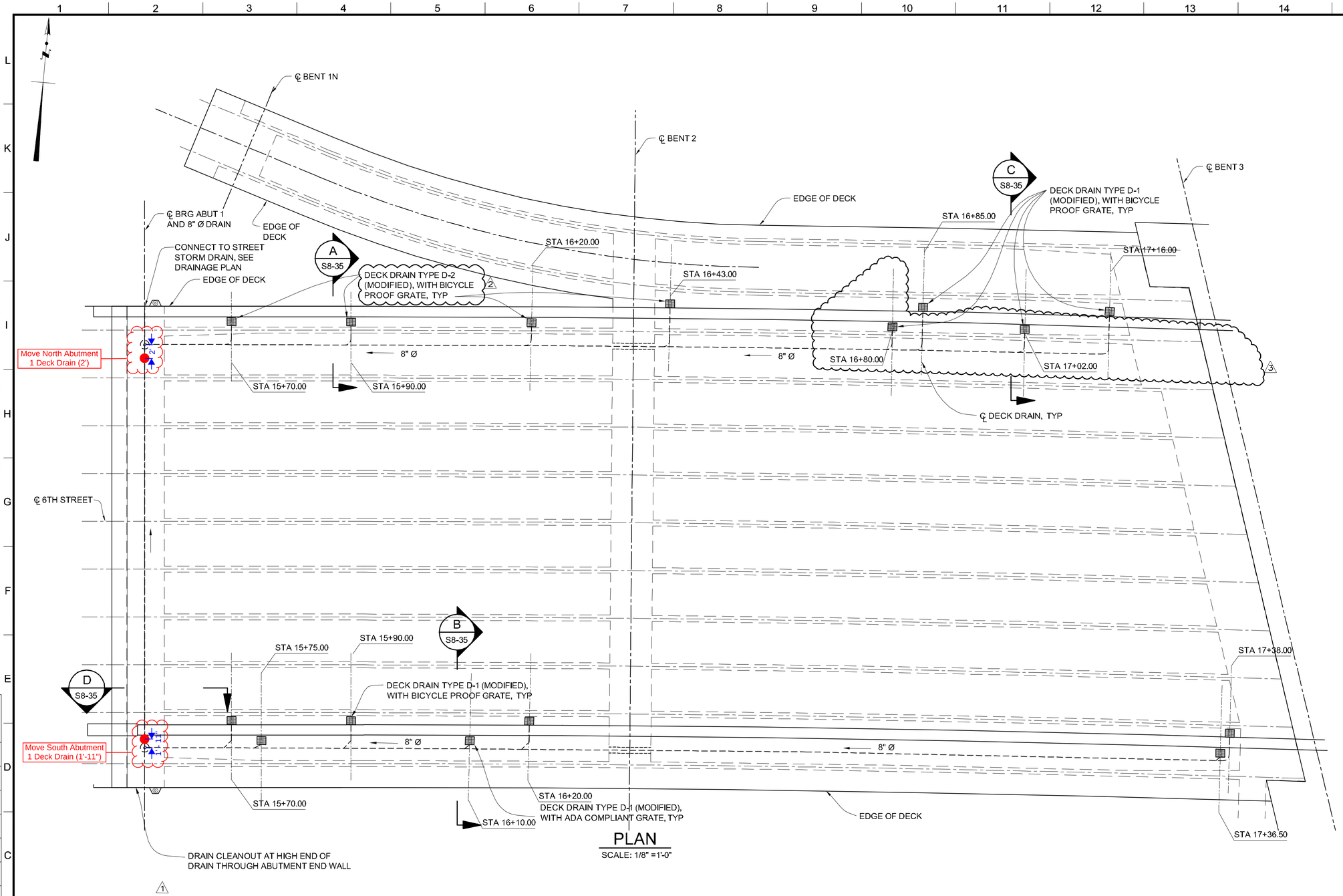

PLAN

SCALE: 1/8" =1'-0"

T.O. 5 - Change Order Serial Sketch No. 42 - Page 10 of 11

THE CITY OF LOS ANGELES OR ITS OFFICERS OR AGENTS SHALL NOT BE RESPONSIBLE FOR THE ACCURACY OR COMPLETENESS OF ELECTRONIC COPIES OF THIS PLAN SHEET.

C:\caddlib\pw\pwwestcoast\lzhang\dms57683\S8-32-D003.dwg 9/08/17 14:33

REVISION DATES (DESIGN STAGE ONLY)

Sheet Version 3.0

BUREAU OF ENGINEERING

ENGINEERING CITY OF LOS ANGELES

NO.	REVISIONS:	DATE:	BY:
1	RFI 0008 DRAINAGE	02/13/17	MHJ
2	RFI - 0022 TO5	04/18/17	MHJ
3	GENERAL BIM UPDATES	09/01/17	MHJ

STRUCTURE NO. 53C-2329

INDEX NO.

THIS PLAN WAS ELECTRONICALLY SIGNED AND STAMPED.

REGISTERED PROFESSIONAL ENGINEER MICHAEL H. JONES No. S3033 EXP. 06-31-16 STATE OF CALIFORNIA

DEPARTMENT OF PUBLIC WORKS

GARY LEE MOORE, P.E. CITY ENGINEER

	DESIGN GROUP	DATE:
ENGINEER:	MICHAEL H. JONES LIC. NO. S3033	1/29/2016
DESIGNED BY:	MICHAEL H. JONES	1/29/2016
DRAWN BY:	LI ZHANG	1/29/2016
CHECKED BY:	CHARLES REDFIELD	1/29/2016
APPROVED BY:	MICHAEL H. JONES	1/29/2016

VERTICAL CONTROL: BM 12-04070, 1929 (NGVD 29) - 1985 ADJUSTMENT

HORIZONTAL CONTROL: GPS; PID AE 1704, EPOCH 1991.35

SHEET TITLE: GIRDER SPANS DECK DRAINAGE DETAILS NO. 1

PROJECT: SIXTH STREET VIADUCT REPLACEMENT

ADDRESS: SIXTH STREET VIADUCT (WHITTIER BLVD) LOS ANGELES, CA

HNTB

HNTB Corporation
601 W. 5TH STREET SUITE 1000
LOS ANGELES, CALIFORNIA 90071
TEL (213) 403-1000 FAX (213) 403-1001

WORK ORDER NO. E700224F

DRAWING NO. S8-34

SHEET OF 560 SHEETS

CITY OF LOS ANGELES

ADDENDUM 5

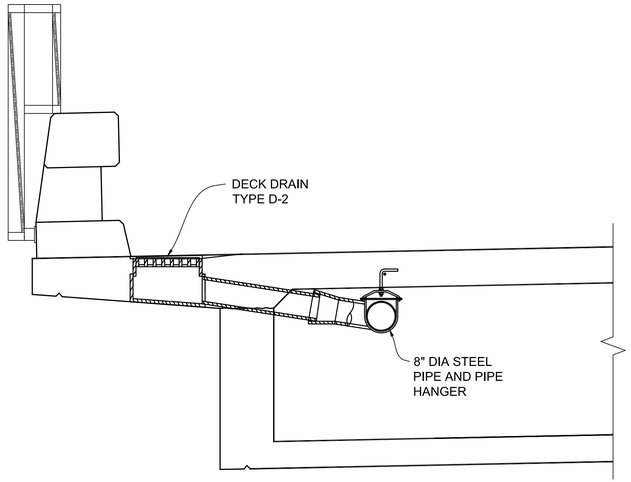

SECTION A
SCALE: 3/4"=1'-0"
S8-34

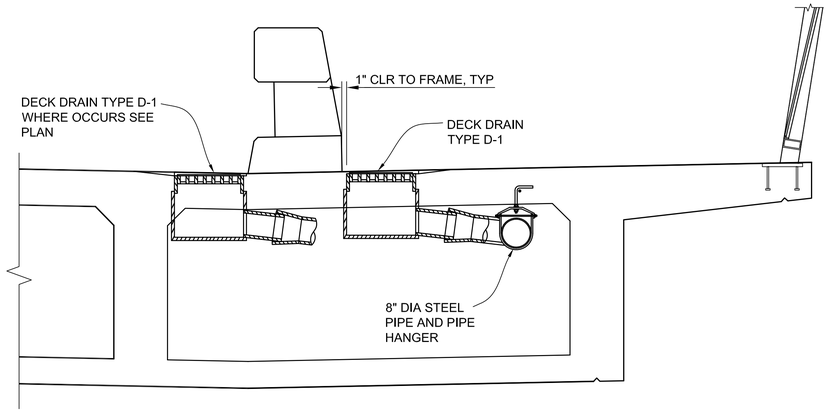

SECTION B
SCALE: 3/4"=1'-0"
S8-34

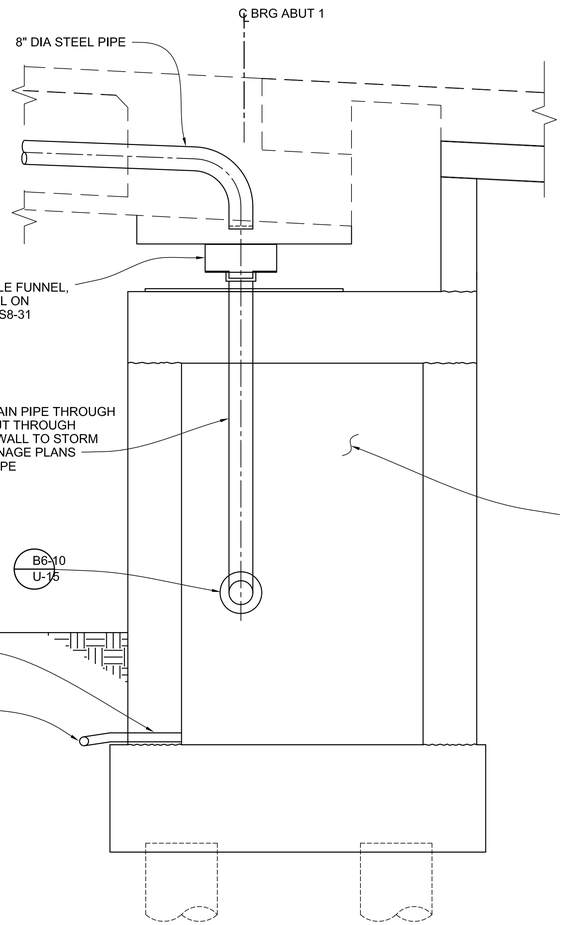

SECTION D
SCALE: 1/2"=1'-0"
S8-34

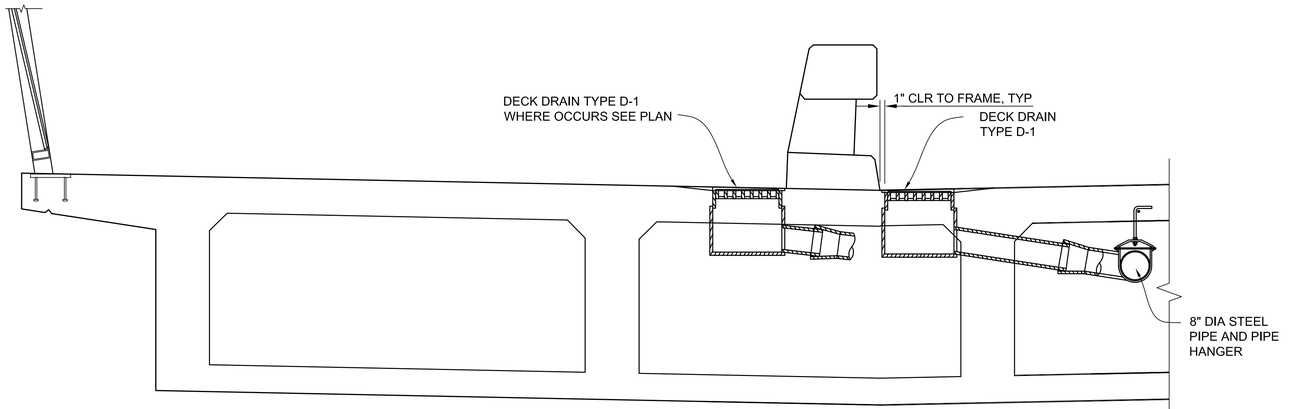

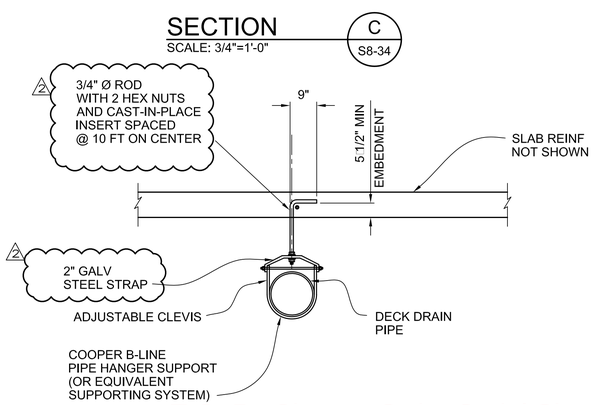

DRAINAGE PIPE SUPPORT DETAIL
NO SCALE

T.O. 5 - Change Order Serial Sketch No. 24 - Page 4 of 4

THE CITY OF LOS ANGELES OR ITS OFFICERS OR AGENTS SHALL NOT BE RESPONSIBLE FOR THE ACCURACY OR COMPLETENESS OF ELECTRONIC COPIES OF THIS PLAN SHEET.

C:\caddfiles\pw\pwwestcoast\zhang\dms57683\S8-33-D004.dwg 4/21/17 15:38

REVISION DATES (DESIGN STAGE ONLY)

Sheet Version 3.0

BUREAU OF ENGINEERING
ENGINEERING
CITY OF LOS ANGELES

NO.	REVISIONS:	DATE:	BY:
1	RFI 0008 DRAINAGE	02/13/17	MHJ
2	RFI - 0022 TOS	04/18/17	MHJ

STRUCTURE NO.
53C-2329

INDEX NO.

THIS PLAN WAS ELECTRONICALLY SIGNED AND STAMPED

REGISTERED PROFESSIONAL ENGINEER
MICHAEL H. JONES
No. S3033
CIVIL
STATE OF CALIFORNIA

CITY OF LOS ANGELES DEPARTMENT OF PUBLIC WORKS

GARY LEE MOORE, P.E. CITY ENGINEER

		DATE:
DESIGN GROUP		
ENGINEER:	MICHAEL H. JONES	1/29/2016
LIC. NO.	S3033	1/29/2016
DESIGNED BY:	MICHAEL H. JONES	1/29/2016
DRAWN BY:	LI ZHANG	1/29/2016
CHECKED BY:	CHARLES REDFIELD	1/29/2016
APPROVED BY:	MICHAEL H. JONES	1/29/2016

VERTICAL CONTROL: BM 12-04070, 1929 (NGVD 29) - 1985 ADJUSTMENT
HORIZONTAL CONTROL: GPS; PID AE 1704, EPOCH 1991.35

SHEET TITLE: GIRDER SPANS DECK DRAINAGE DETAILS NO. 2

PROJECT: SIXTH STREET VIADUCT REPLACEMENT

ADDRESS: SIXTH STREET VIADUCT (WHITTIER BLVD) LOS ANGELES, CA

HNTB
HNTB Corporation
601 W. 5TH STREET SUITE 1000
LOS ANGELES, CALIFORNIA 90071
TEL (213) 403-1000 FAX (213) 403-1001

WORK ORDER NO.
E700224F

DRAWING NO.
S8-35

SHEET 426 OF 560 SHEETS

ADDENDUM 5

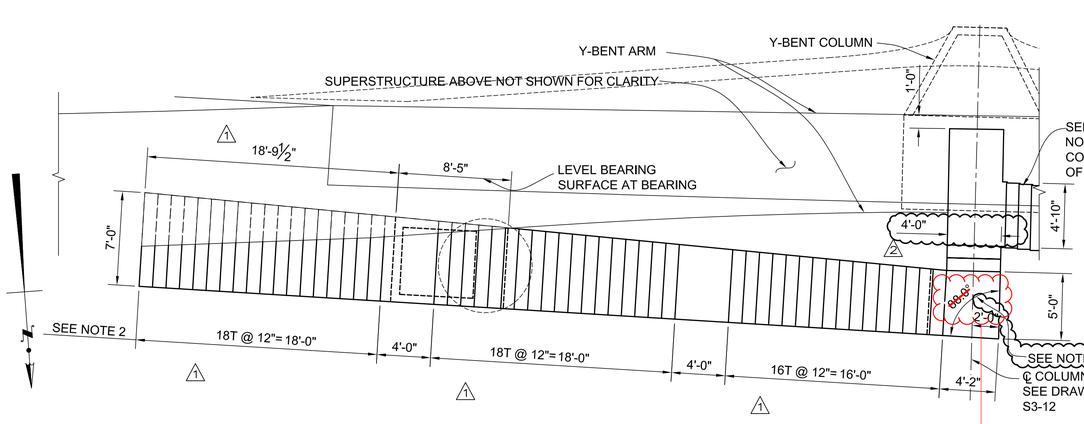

BENT 9 NORTH STAIR PLAN

SCALE: 3/16" =1'-0"

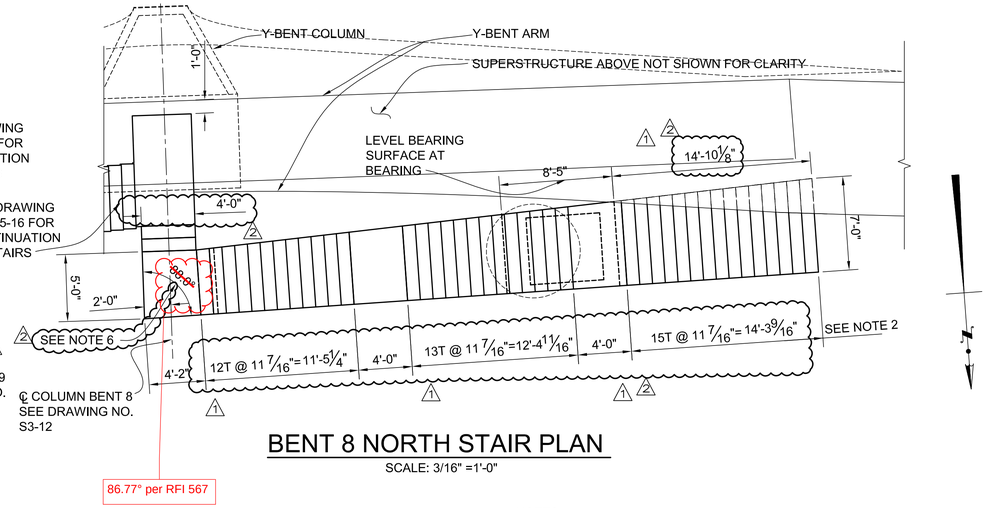

BENT 8 NORTH STAIR PLAN

SCALE: 3/16" =1'-0"

NOTES:

1. FOR RAILING DETAILS, SEE ARCHITECTURAL DRAWINGS.
2. STAIR TREADS ARE PERPENDICULAR TO THE EXTERIOR STAIR FACE.
3. ALL STAIR TREADS AND LANDINGS SHALL BE SLOPED TO DRAIN. SEE DRAWING NOS. S8-54 AND S8-55 FOR DETAILS. PROVIDE SLIP-RESISTANT STAIR NOSING, SEE DRAWING NOS. A-404 AND A-405.
4. ALL STAIR TREADS AND LANDINGS SHALL BE FINISHED WITH A ~~NONSLIP ABRASIVE FINISH.~~ Course Broom Finish
5. PRIOR TO PLACING NEW CONCRETE AT EXISTING CONSTRUCTION JOINT INTERFACE SURFACES, THE SURFACE SHALL BE PREPARED BY REMOVING ALL LAITTANCE AND INTENTIONALLY ROUGHENING THE CONCRETE SURFACE TO AN AMPLITUDE OF ¼".
6. ADJUST ANGLE AS REQUIRED TO ALIGN CENTER OF STAIR WIDTH DIRECTLY ABOVE THE CENTROID OF THE ISOLATION BEARING AS-BUILT LOCATION.

Per RFI 608

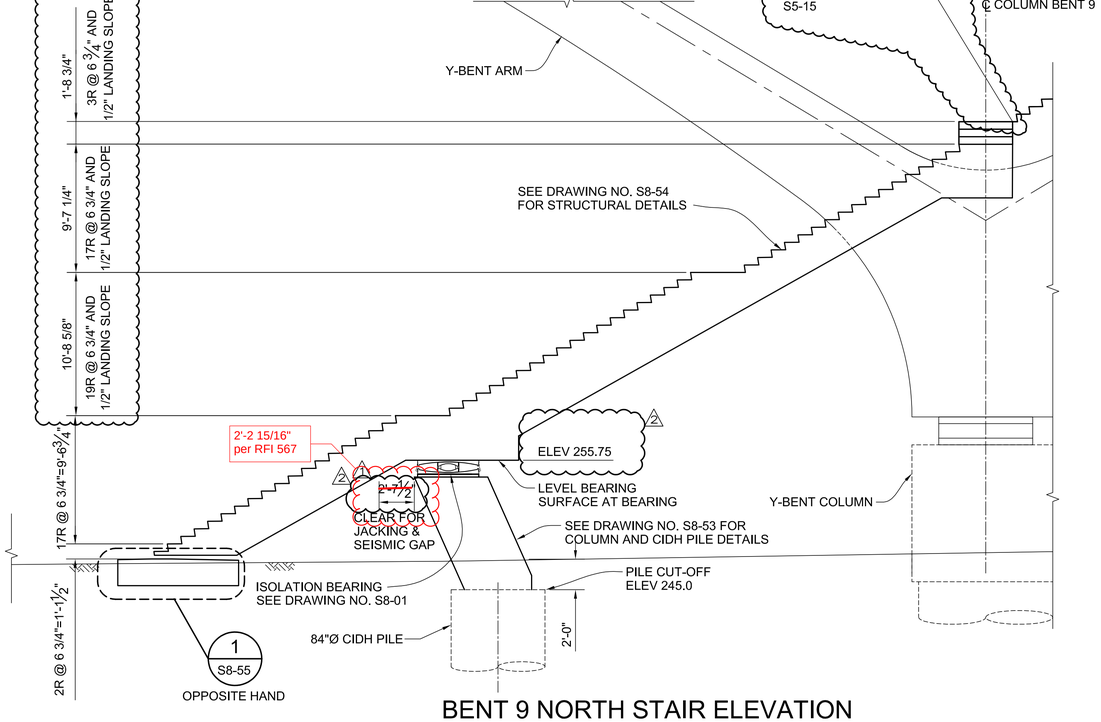

BENT 9 NORTH STAIR ELEVATION

SCALE: 3/16" =1'-0"

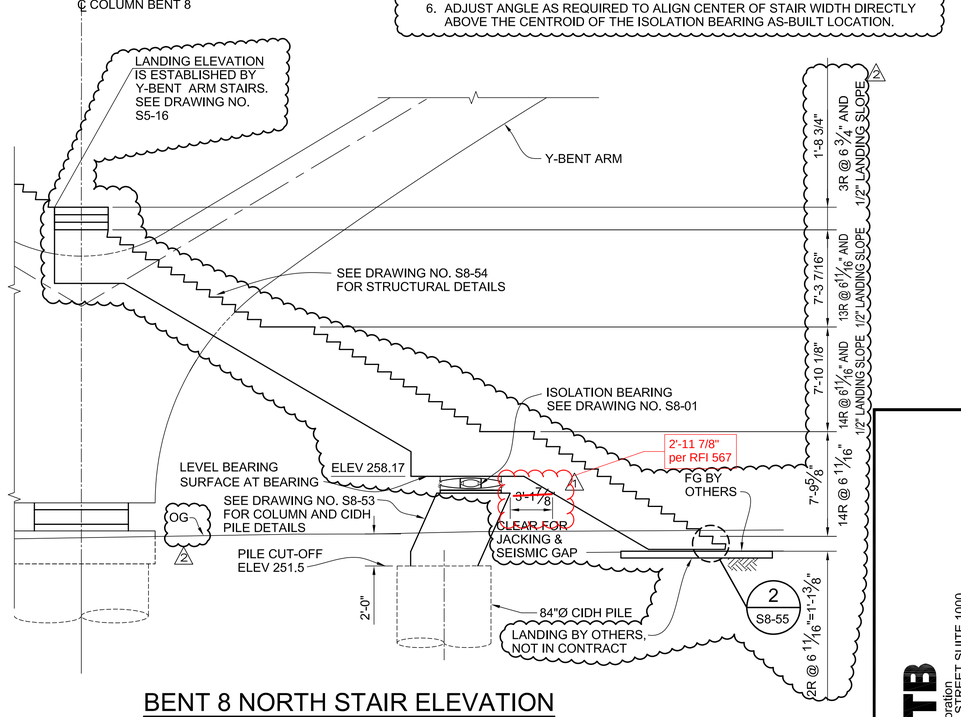

BENT 8 NORTH STAIR ELEVATION

SCALE: 3/16" =1'-0"

T.O. 5 - Change Order Serial Sketch No. 153r3 - Page 11 of 15

HNTB
HNTB Corporation
601 W. 5TH STREET SUITE 1000
LOS ANGELES, CALIFORNIA 90071
TEL (213) 403-1000 FAX (213) 403-1001

CITY OF LOS ANGELES DEPARTMENT OF PUBLIC WORKS BUREAU OF ENGINEERING

ENGINEERING CITY OF LOS ANGELES

NO.	REVISIONS:	DATE:	BY:
1.	STAIR MODIFICATIONS CO 120 ECO 153	06/05/20 12/03/21	MHJ MHJ
2.	PARC STAIR ELEVATION REVISION		

STRUCTURE NO. 53C-2329

INDEX NO.

THIS PLAN WAS ELECTRONICALLY SIGNED AND STAMPED

REGISTERED PROFESSIONAL ENGINEER MICHAEL H. JONES No. S3033 CIVIL STATE OF CALIFORNIA

GARY LEE MOORE, P.E. CITY ENGINEER

DESIGN GROUP		DATE:
ENGINEER:	MICHAEL H. JONES LIC. NO. S3033	1/29/2016
DESIGNED BY:	HAO LUO	1/29/2016
DRAWN BY:	LYUBOV KINGSBURY	1/29/2016
CHECKED BY:	CHARLES REDFIELD	1/29/2016
APPROVED BY:	MICHAEL H. JONES	1/29/2016

VERTICAL CONTROL: BM 12-04070, 1929 (NGVD 29) - 1985 ADJUSTMENT
HORIZONTAL CONTROL: GPS; PID AE 1704, EPOCH 1991.35

SHEET TITLE: STAIR LAYOUT NO. 1

PROJECT: SIXTH STREET VIADUCT REPLACEMENT

ADDRESS: SIXTH STREET VIADUCT (WHITTIER BLVD) LOS ANGELES, CA

WORK ORDER NO. E700224F

DRAWING NO. S8-50

SHEET 30 OF 562 SHEETS

THE CITY OF LOS ANGELES OR ITS OFFICERS OR AGENTS SHALL NOT BE RESPONSIBLE FOR THE ACCURACY OR COMPLETENESS OF ELECTRONIC COPIES OF THIS PLAN SHEET.

REVISION DATES (DESIGN STAGE ONLY)

C:\caddlib\pw\west_c3d\dms57683\S8-50-AR5.dwg 2/15/22 11:13

Sheet Version 3.0

ADDENDUM 5

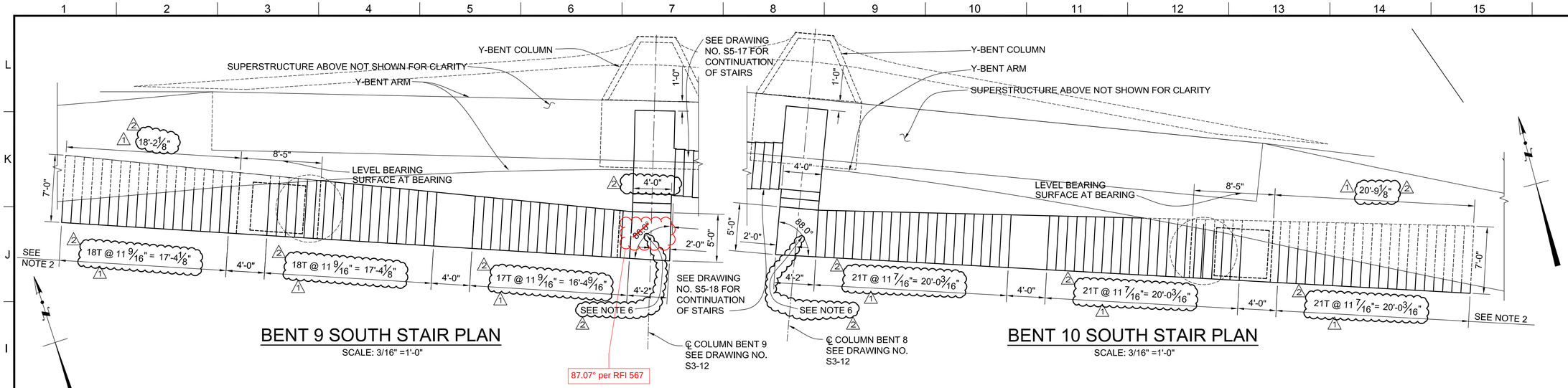

BENT 9 SOUTH STAIR PLAN

SCALE: 3/16" =1'-0"

BENT 10 SOUTH STAIR PLAN

SCALE: 3/16" =1'-0"

NOTES:

1. FOR DRAWING NO. S8-50 FOR NOTES.

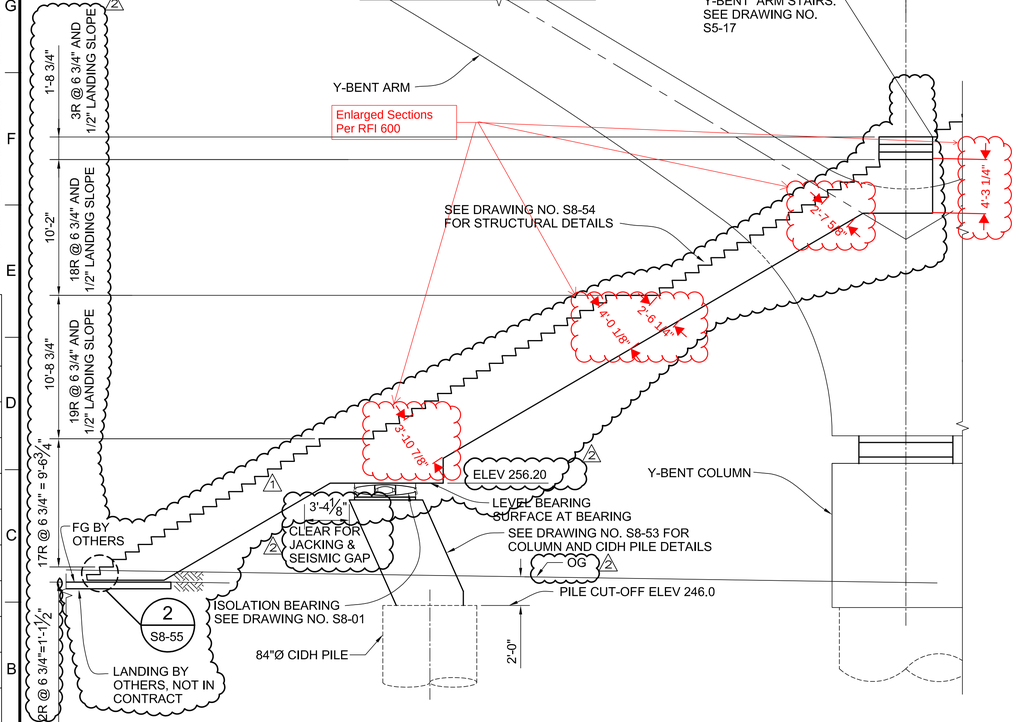

BENT 9 SOUTH STAIR ELEVATION

SCALE: 3/16" =1'-0"

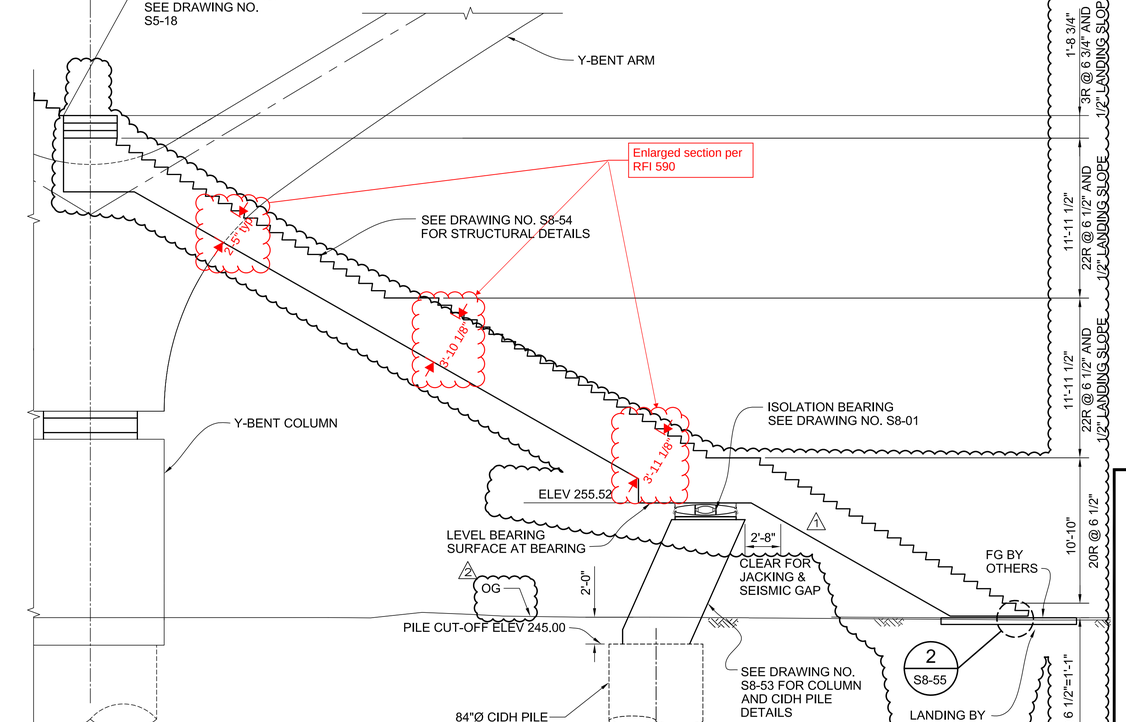

BENT 10 SOUTH STAIR ELEVATION

SCALE: 3/16" =1'-0"

T.O. 5 - Change Order Serial Sketch No. 153r3 - Page 12 of 15

HNTB
HNTB Corporation
601 W. 5TH STREET SUITE 1000
LOS ANGELES, CALIFORNIA 90071
TEL (213) 403-1000 FAX (213) 403-1001

CITY OF LOS ANGELES DEPARTMENT OF PUBLIC WORKS
BUREAU OF ENGINEERING

ENGINEERING
CITY OF LOS ANGELES

NO.	REVISIONS:	DATE	BY:
1.	STAIR MODIFICATIONS CO 120	08/05/20	MHJ
2.	PARC STAIR ELEVATION REVISION ECO 153	12/03/21	MHJ

STRUCTURE NO. 53C-2329

INDEX NO.

THIS PLAN WAS ELECTRONICALLY SIGNED AND STAMPED

REGISTERED PROFESSIONAL ENGINEER MICHAEL H. JONES No. S3033 CIVIL STATE OF CALIFORNIA

CITY ENGINEER
GARY LEE MOORE, P.E.

		DATE:
DESIGN GROUP		
ENGINEER:	MICHAEL H. JONES LIC. NO. S3033	1/29/2016
DESIGNED BY:	HAO LUO	1/29/2016
DRAWN BY:	LYUBOV KINGSBURY	1/29/2016
CHECKED BY:	CHARLES REDFIELD	1/29/2016
APPROVED BY:	MICHAEL H. JONES	1/29/2016

VERTICAL CONTROL: BM 12-04070, 1929 (NGVD 29) - 1985 ADJUSTMENT
HORIZONTAL CONTROL: GPS; PID AE 1704, EPOCH 1991.35

SHEET TITLE: STAIR LAYOUT NO. 2

PROJECT: SIXTH STREET VIADUCT REPLACEMENT

ADDRESS: SIXTH STREET VIADUCT (WHITTIER BLVD) LOS ANGELES, CA

WORK ORDER NO. E700224F

DRAWING NO. S8-51

SHEET 30 OF 562 SHEETS

REVISION DATES (DESIGN STAGE ONLY)

THE CITY OF LOS ANGELES OR ITS OFFICERS OR AGENTS SHALL NOT BE RESPONSIBLE FOR THE ACCURACY OR COMPLETENESS OF ELECTRONIC COPIES OF THIS PLAN SHEET.

C:\caddlib\pw\west_c3d\dms57683\S8-50-ARS.dwg 2/15/22 11:12

Sheet Version 3.0

ADDENDUM 5

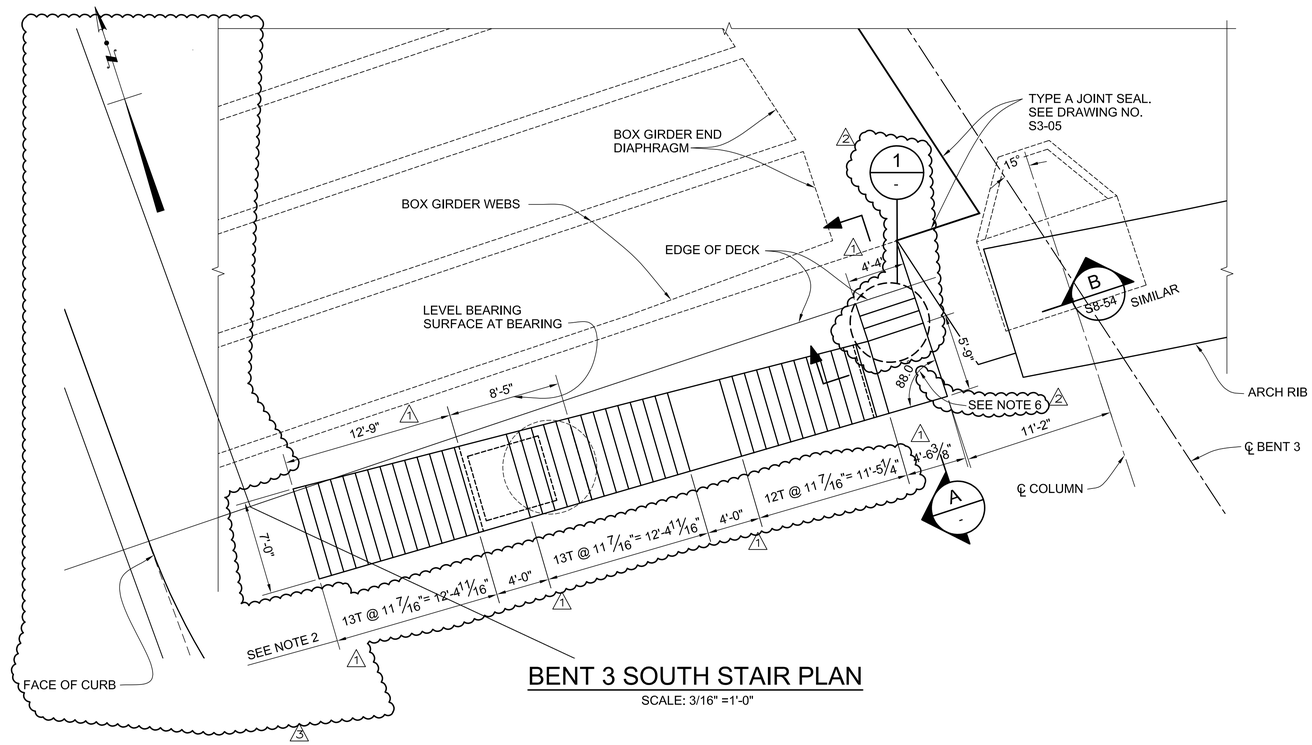

BENT 3 SOUTH STAIR PLAN

SCALE: 3/16" =1'-0"

NOTES:

1. FOR DRAWING NO. S8-50 FOR NOTES.

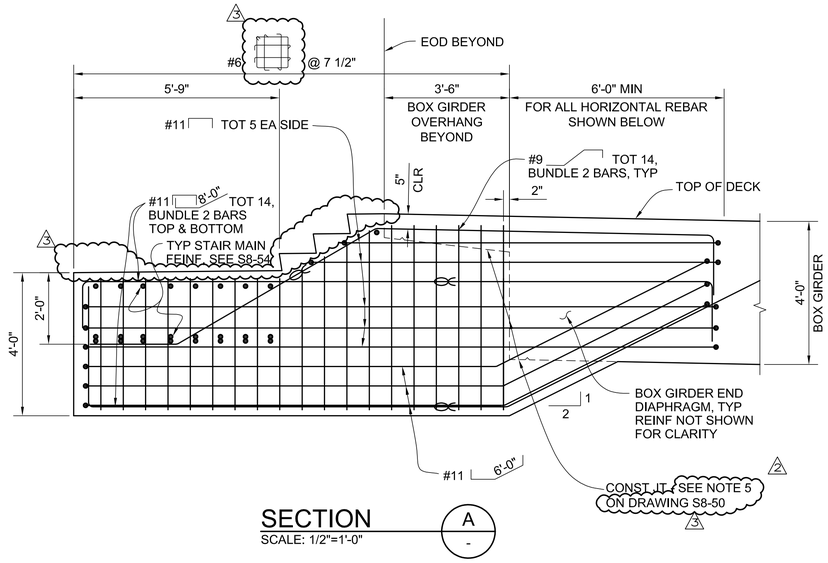

SECTION A

SCALE: 1/2"=1'-0"

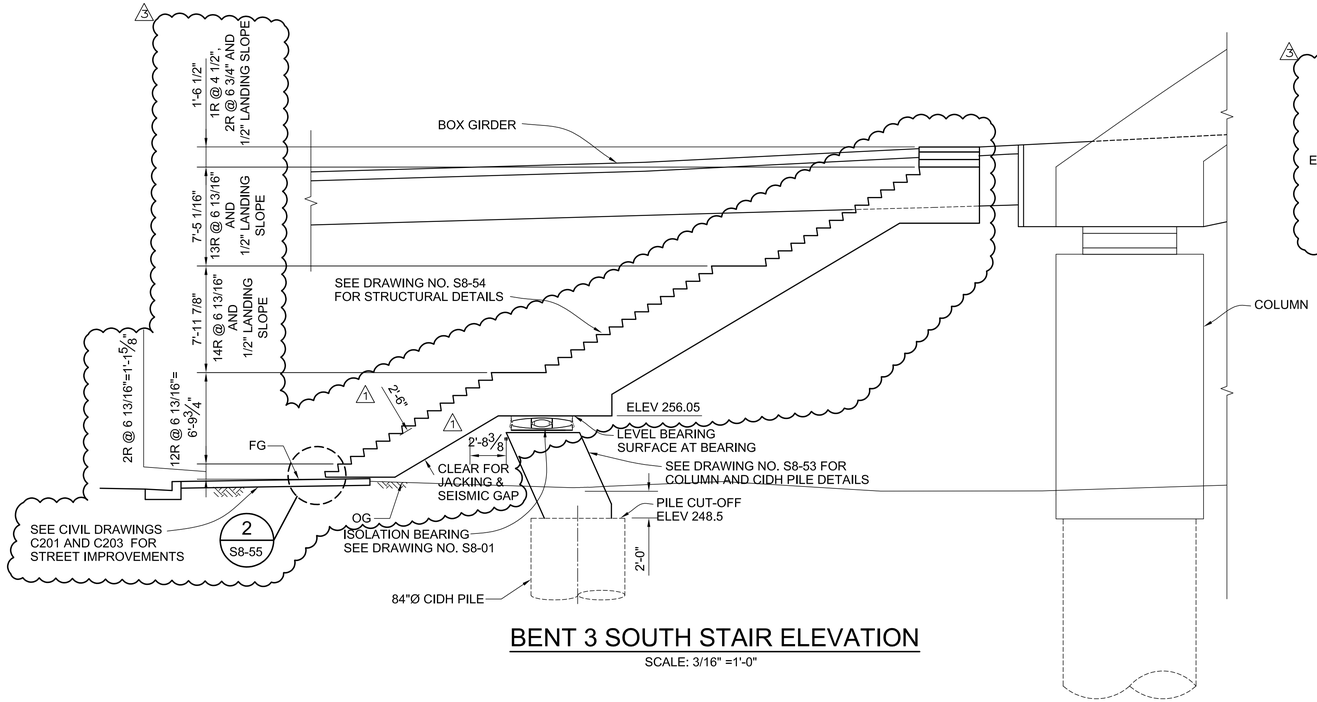

BENT 3 SOUTH STAIR ELEVATION

SCALE: 3/16" =1'-0"

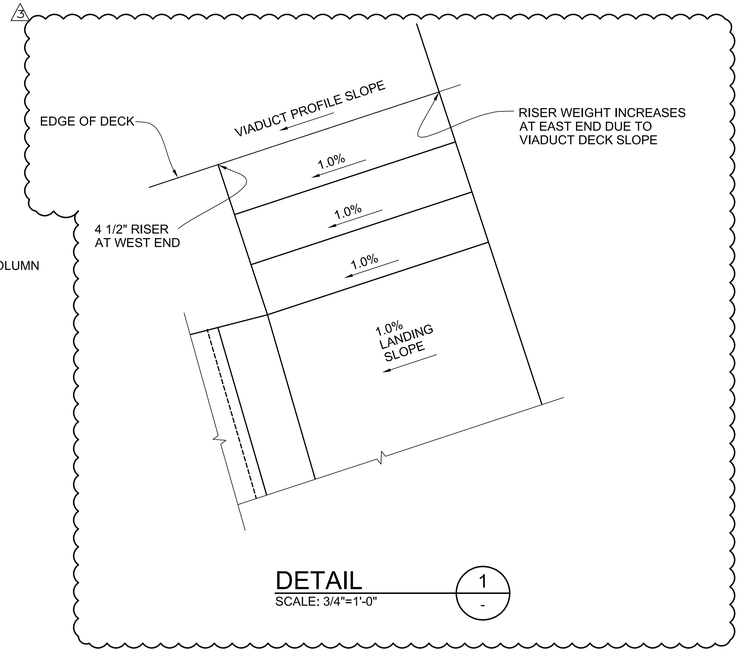

DETAIL 1

SCALE: 3/4"=1'-0"

T.O. 5 - Change Order Serial Sketch No. 153r3 - Page 13 of 15

THE CITY OF LOS ANGELES OR ITS OFFICERS OR AGENTS SHALL NOT BE RESPONSIBLE FOR THE ACCURACY OR COMPLETENESS OF ELECTRONIC COPIES OF THIS PLAN SHEET.

C:\cadd\lb\pw\west_c3d\dms57683\S8-50-ARS.dwg 12/17/21 10:51

REVISION DATES (DESIGN STAGE ONLY)

Sheet Version 3.0

BUREAU OF ENGINEERING

ENGINEERING CITY OF LOS ANGELES

NO.	REVISIONS:	DATE:	BY:
1.	STAIR MODIFICATIONS CO 120	09/05/20	MHJ
2.	RFI 0517 - SPAN 2 CONSTRUCTION JOINTS CO 148	10/15/21	MHJ
3.	PARC STAIR ELEVATION REVISION ECO 153	12/03/21	MHJ

STRUCTURE NO. 53C-2329

INDEX NO.

THIS PLAN WAS ELECTRONICALLY SIGNED AND STAMPED

REGISTERED PROFESSIONAL ENGINEER MICHAEL H. JONES No. S3033 CIVIL STATE OF CALIFORNIA

CITY OF LOS ANGELES DEPARTMENT OF PUBLIC WORKS

CITY ENGINEER: GARY LEE MOORE, P.E.

		DATE:
ENGINEER:	MICHAEL H. JONES	1/29/2016
DESIGN GROUP	LIC. NO. S3033	1/29/2016
DESIGNED BY:	HAO LUO	1/29/2016
DRAWN BY:	LYUBOV KINGSBURY	1/29/2016
CHECKED BY:	CHARLES REDFIELD	1/29/2016
APPROVED BY:	MICHAEL H. JONES	1/29/2016

VERTICAL CONTROL: BM 12-04070 1929 (NGVD 29) - 1985 ADJUSTMENT

HORIZONTAL CONTROL: GPS; PID AE 1704; EPOCH 1991.35

SHEET TITLE: STAIR LAYOUT NO. 3

PROJECT: SIXTH STREET VIADUCT REPLACEMENT

ADDRESS: SIXTH STREET VIADUCT (WHITTIER BLVD) LOS ANGELES, CA

HNTB
HNTB Corporation
601 W. 5TH STREET SUITE 1000
LOS ANGELES, CALIFORNIA 90071
TEL (213) 403-1000 FAX (213) 403-1001

WORK ORDER NO. E700224F

DRAWING NO. S8-52

SHEET 30 OF 562 SHEETS

ADDENDUM 5

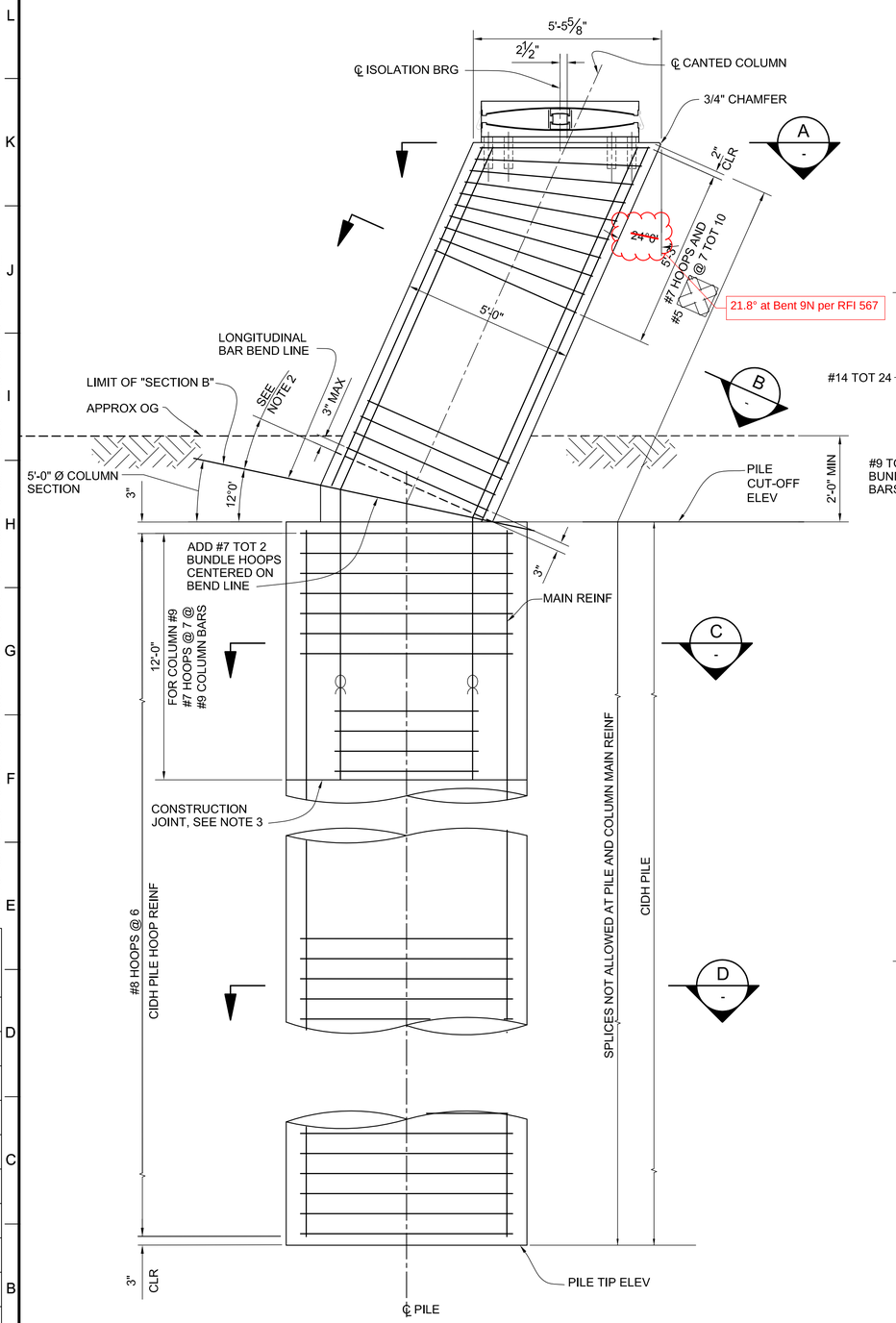

CANTED COLUMN AND CIDH CONCRETE PILE ELEVATION

SCALE: 1/2" =1'-0"

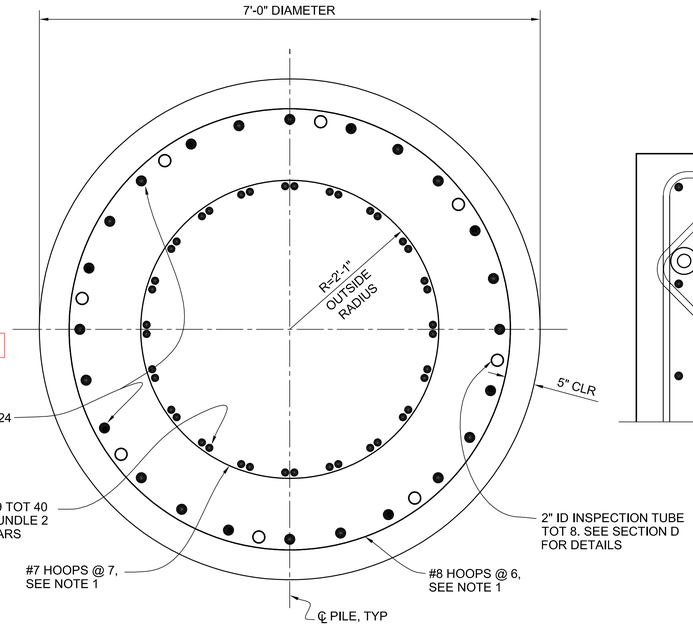

SECTION

SCALE: 1"=1'-0"

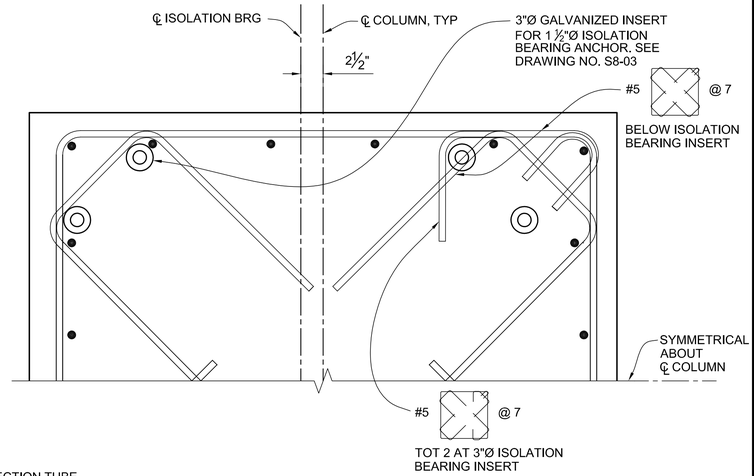

SECTION

SCALE: 1 1/2"=1'-0"

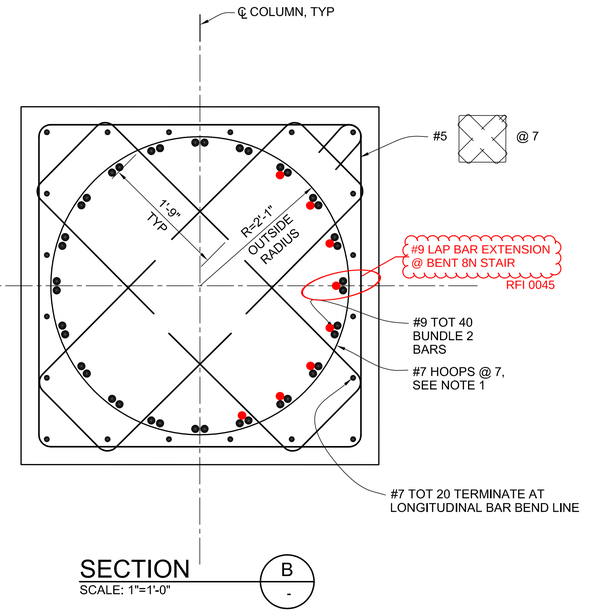

SECTION

SCALE: 1"=1'-0"

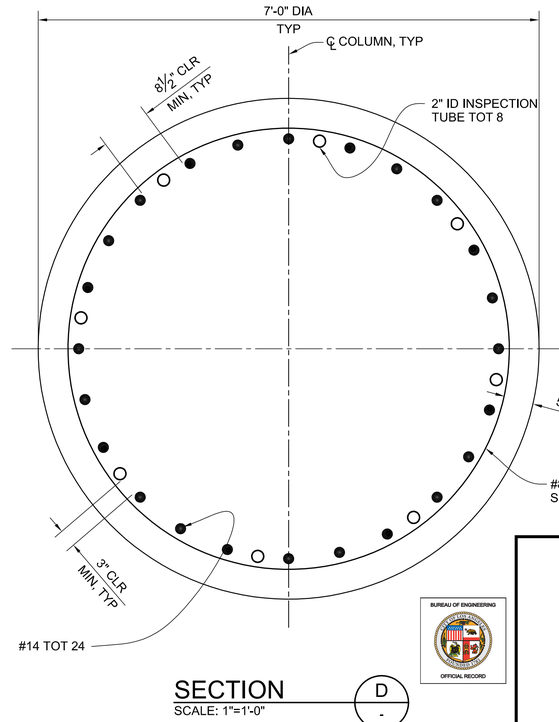

SECTION

SCALE: 1"=1'-0"

LEGEND:

BUNDLE BARS

NOTES:

1. ALL HOOPS ARE ULTIMATE BUTT SPLICED CONTINUOUS.
2. THE COLUMN CANT ANGLE SHOWN SHALL BE IN A PLANE THAT IS PARALLEL TO THE EXTERIOR FACE OF THE STAIRS.
3. AT THE CONSTRUCTION JOINT AT THE BOTTOM OF COLUMN LONGITUDINAL REINFORCEMENT, PRIOR TO CONTINUING CONCRETE PLACEMENT THE EXISTING CONCRETE SURFACE SHALL BE PREPARED BY REMOVING ALL LAITANCE AND INTENTIONALLY ROUGHENING THE SURFACE TO AN AMPLITUDE OF ¼".

HNTB
HNTB Corporation
601 W. 5TH STREET SUITE 1000
LOS ANGELES, CALIFORNIA 90071
TEL (213) 403-1000 FAX (213) 403-1001

BUREAU OF ENGINEERING

OFFICIAL RECORD

THE CITY OF LOS ANGELES OR ITS OFFICERS OR AGENTS SHALL NOT BE RESPONSIBLE FOR THE ACCURACY OR COMPLETENESS OF ELECTRONIC COPIES OF THIS PLAN SHEET.

REVISION DATES: (DESIGN STAGE ONLY)

C:\coddlib\pw\pwwestcoast\zhang\dms57683\S3-25-PD01-04.dwg 6/27/16 16:47

Sheet Version 3.0

BUREAU OF ENGINEERING

ENGINEERING
CITY OF LOS ANGELES

NO.	REVISIONS:	DATE	BY:

STRUCTURE NO. 53C-2329

INDEX NO. P-38113

REGISTERED PROFESSIONAL ENGINEER MICHAEL H. JONES No. S3033 CIVIL STATE OF CALIFORNIA

THIS PLAN WAS ELECTRONICALLY SIGNED AND STAMPED.

CITY OF LOS ANGELES DEPARTMENT OF PUBLIC WORKS

GARY LEE MOORE, P.E. CITY ENGINEER

		DATE:
DESIGN GROUP		
ENGINEER:	MICHAEL H. JONES	1/29/2016
LIC. NO.	S3033	1/29/2016
DESIGNED BY:	HAO LUO	1/29/2016
DRAWN BY:	LI ZHANG	
CHECKED BY:	CHARLES REDFIELD	1/29/2016
APPROVED BY:	MICHAEL H. JONES	1/29/2016

VERTICAL CONTROL: BM 12-04070 1929 (NGVD 29) - 1985 ADJUSTMENT

HORIZONTAL CONTROL: GPS; PID AE 1704, EPOCH 1991.35

SHEET TITLE: STAIR SUBSTRUCTURE

PROJECT: SIXTH STREET VIADUCT REPLACEMENT

ADDRESS: SIXTH STREET VIADUCT (WHITTIER BLVD) LOS ANGELES, CA

WORK ORDER NO. E700224F

DRAWING NO. S8-53

SHEET 429 OF 560 SHEETS

ADDENDUM 5

Stair 9S Additional Note (per RFI 604):
Due to sloping soffit, when the cover exceeds 3 1/2", add #5 U-bars with a 20" vertical (normal to soffit) legs at 7" centers to lap with the typical #7 closed ties. Place with 2" cover at the soffit. Above these bars, add #5 @ 8" longitudinal bars. When the #5 U-bars terminate, extend the longitudinal bars an additional 24".

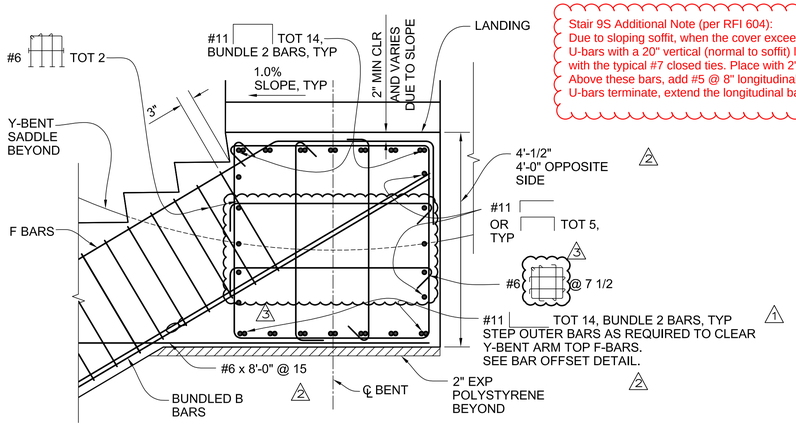

SECTION B
SCALE: 3/4"=1'-0"
S8-54

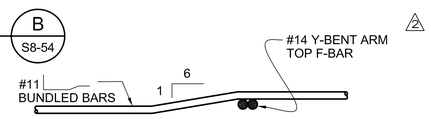

BAR OFFSET DETAIL
NO SCALE

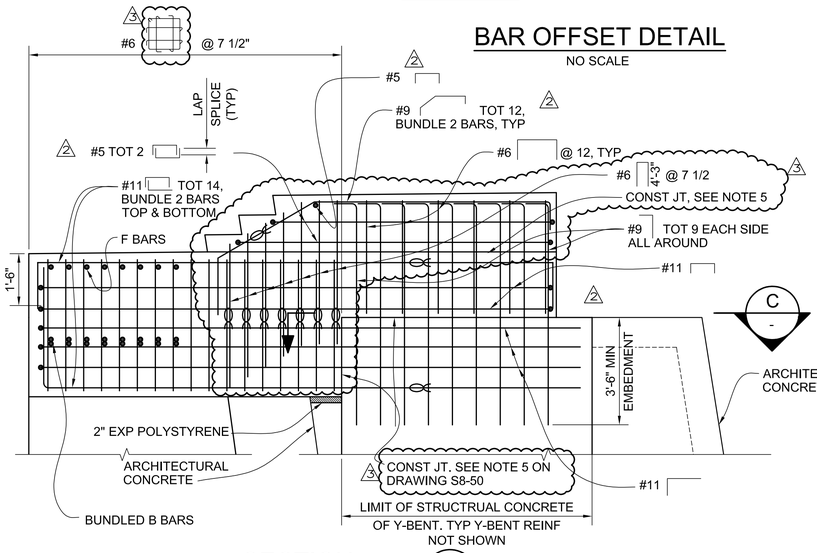

SECTION A
SCALE: 1/2"=1'-0"
S8-54

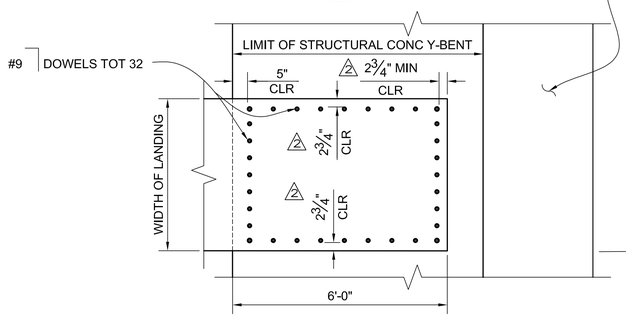

SECTION C
SCALE: 1/2"=1'-0"

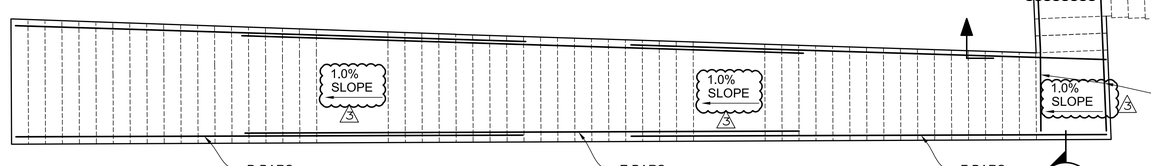

TOP LONGITUDINAL REINFORCEMENT
SCALE: 1/4" =1'-0"

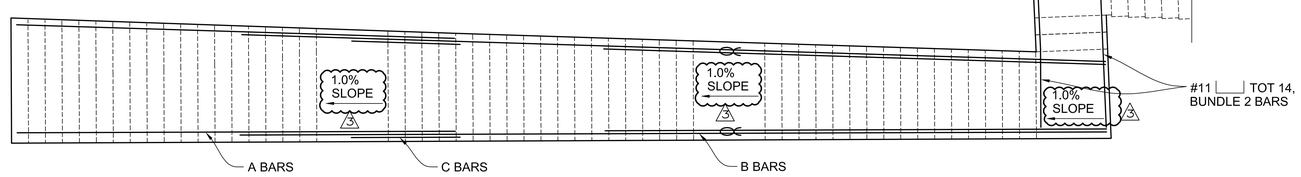

BOTTOM LONGITUDINAL REINFORCEMENT
SCALE: 1/4" =1'-0"

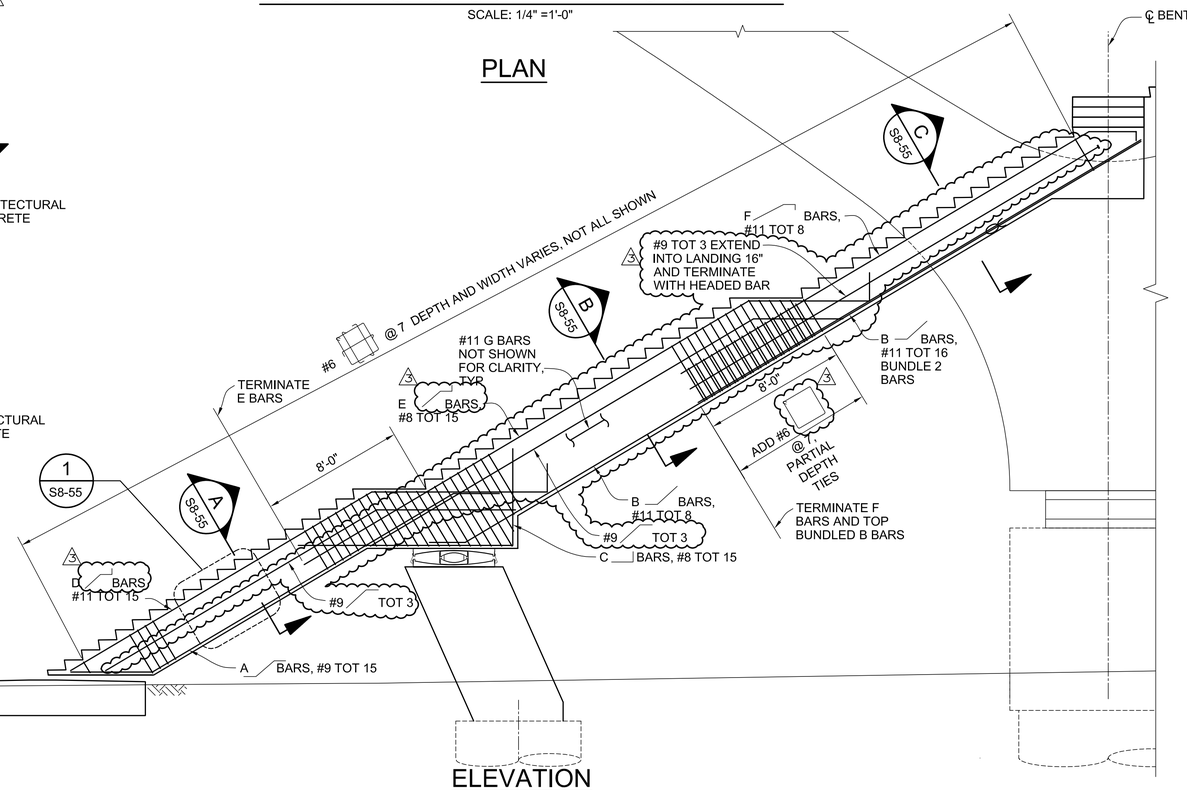

NOTES:

1. SOUTH STAIR AT BENT 9 SHOWN, OTHER STAIRS SIMILAR.
2. REINF ARE ONLY SHOWN SCHEMATICALLY IN PLAN AND ELEVATION, NOT ALL REINF SHOWN FOR CLARITY

LEGEND:

- BUNDLE BAR
- HEADED REBAR AT TIE OR CROSS TIE

ELEVATION
TYPICAL STAIR REINFORCEMENT
SCALE: 1/4" =1'-0"

T.O. 5 - Change Order Serial Sketch No. 153r3 - Page 14 of 15

HNTB
HNTB Corporation
601 W. 5TH STREET SUITE 1000
LOS ANGELES, CALIFORNIA 90071
TEL (213) 403-1000 FAX (213) 403-1001

CITY OF LOS ANGELES DEPARTMENT OF PUBLIC WORKS
BUREAU OF ENGINEERING

ENGINEERING
CITY OF LOS ANGELES

NO.	REVISIONS:	DATE:	BY:
1.	GENERAL BIM UPDATES	09/01/17	MHJ
2.	BENT 10 BIM	01/05/18	MHJ
3.	P-ARC STAIR ELEVATION REVISION	12/20/21	MHJ

STRUCTURE NO.
53C-2329

INDEX NO.

CO 42
CO 50
ECO 153

THIS PLAN WAS ELECTRONICALLY SIGNED AND STAMPED

REGISTERED PROFESSIONAL ENGINEER MICHAEL H. JONES No. S3033 CIVIL STATE OF CALIFORNIA

GARY LEE MOORE, P.E. CITY ENGINEER

		DESIGN GROUP	DATE:
ENGINEER:	MICHAEL H. JONES	LIC. NO. S3033	1/29/2016
DESIGNED BY:	HAO LUO		1/29/2016
DRAWN BY:	LYUBOV KINGSBURY		1/29/2016
CHECKED BY:	CHARLES REDFIELD		1/29/2016
APPROVED BY:	MICHAEL H. JONES		1/29/2016

VERTICAL CONTROL: BM 12-04070, 1929 (NGVD 29) - 1985 ADJUSTMENT
HORIZONTAL CONTROL: GPS; PID AE 1704, EPOCH 1991.35

SHEET TITLE: STAIR REINFORCEMENT LAYOUT
PROJECT: SIXTH STREET VIADUCT REPLACEMENT
ADDRESS: SIXTH STREET VIADUCT (WHITTIER BLVD) LOS ANGELES, CA

WORK ORDER NO.
E700224F

DRAWING NO.
S8-54

SHEET 430 OF 562 SHEETS

THE CITY OF LOS ANGELES OR ITS OFFICERS OR AGENTS SHALL NOT BE RESPONSIBLE FOR THE ACCURACY OR COMPLETENESS OF ELECTRONIC COPIES OF THIS PLAN SHEET.

REVISION DATES (DESIGN STAGE ONLY)

C:\caddlib\pw\west_c3d\dms57683\S8-51-AR5.dwg 12/17/21 10:51

Sheet Version 3.0

NOTES:

1. ALL STEEL, ANCHOR STUDS AND BOLTS SHOWN ON THIS DRAWING SHALL BE GALVANIZED.

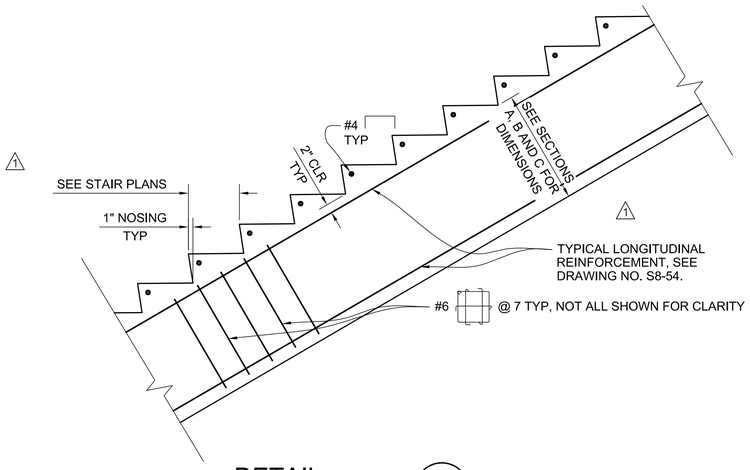

DETAIL 1 / S8-54
SCALE: 3/4"=1'-0"

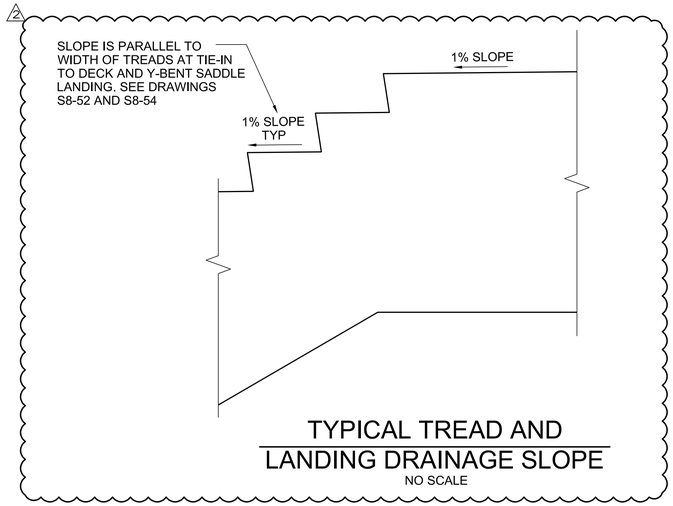

TYPICAL TREAD AND LANDING DRAINAGE SLOPE
NO SCALE

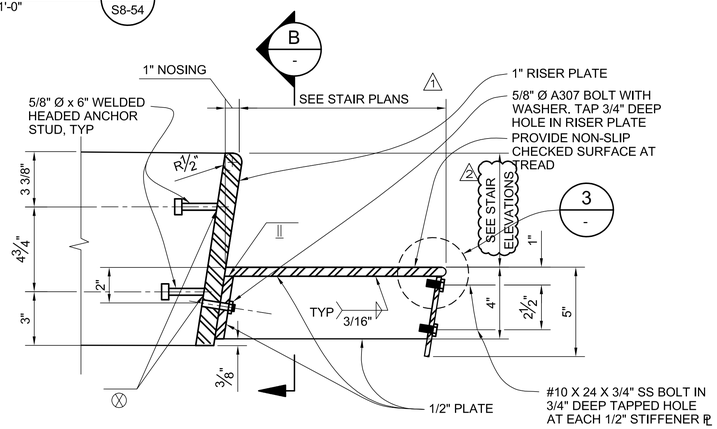

DETAIL 2 / -
SCALE: 3"=1'-0"

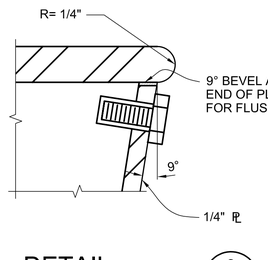

DETAIL 3 / -
SCALE: 12"=1'-0"

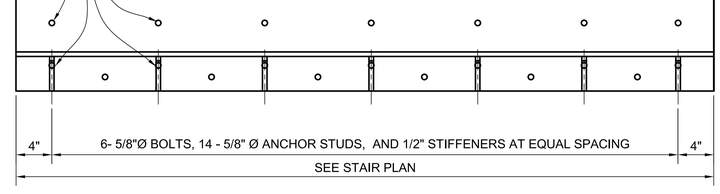

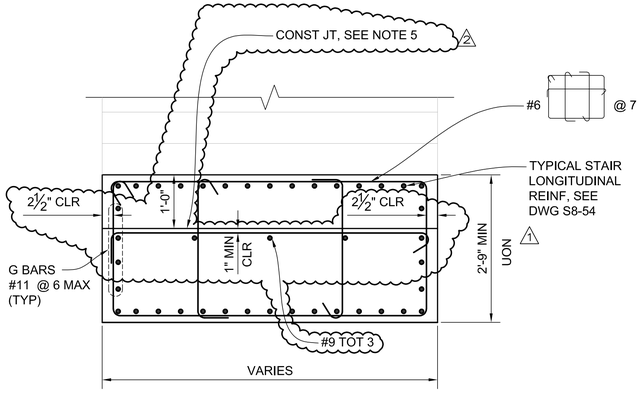

SECTION A / S8-54
SCALE: 3/4"=1'-0"

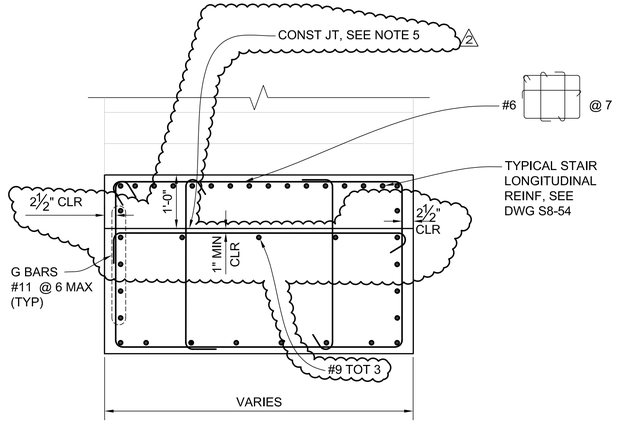

SECTION B / -
SCALE: 3/4"=1'-0"

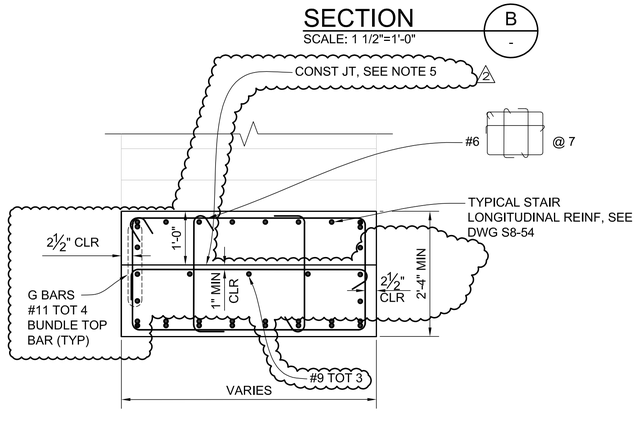

SECTION C / S8-54
SCALE: 3/4"=1'-0"

T.O. 5 - Change Order Serial Sketch No. 153r3 - Page 15 of 15

HNTB
HNTB Corporation
601 W. 5TH STREET SUITE 1000
LOS ANGELES, CALIFORNIA 90071
TEL (213) 403-1000 FAX (213) 403-1001

CITY OF LOS ANGELES DEPARTMENT OF PUBLIC WORKS
BUREAU OF ENGINEERING
ENGINEERING
CITY OF LOS ANGELES

NO.	REVISIONS:	DATE	BY:
1.	STAIR MODIFICATIONS CO 120	09/05/20	MHJ
2.	PARC STAIR ELEVATION REVISION ECO 153	12/03/21	MHJ

STRUCTURE NO. 53C-2329

INDEX NO.

THIS PLAN WAS ELECTRONICALLY SIGNED AND STAMPED

REGISTERED PROFESSIONAL ENGINEER MICHAEL H. JONES No. 53033 CIVIL STATE OF CALIFORNIA

ENGINEER	GARY LEE MOORE, P.E.	CITY ENGINEER	DATE:
			1/29/2016
ENGINEER:	MICHAEL H. JONES	LIC. NO. 53033	1/29/2016
DESIGNED BY:	HAO LUO	DESIGN GROUP	1/29/2016
DRAWN BY:	LY'UBOV KINGSBURY		1/29/2016
CHECKED BY:	CHARLES REDFIELD		1/29/2016
APPROVED BY:	MICHAEL H. JONES		1/29/2016

VERTICAL CONTROL: BM 12-04070, 1929 (NGVD 29) – 1985 ADJUSTMENT
HORIZONTAL CONTROL: GPS; PID AE 1704, EPOCH 1991.35

SHEET TITLE: STAIR DETAILS

PROJECT: SIXTH STREET VIADUCT REPLACEMENT

ADDRESS: SIXTH STREET VIADUCT (WHITTIER BLVD) LOS ANGELES, CA

WORK ORDER NO. E700224F

DRAWING NO. S8-55

SHEET 30 OF 562 SHEETS

REVISION DATES (DESIGN STAGE ONLY)

C:\caddlib\pw\west_c3d\dms57683\S8-51-ARS.dwg 12/17/21 10:51

Sheet Version 3.0

THE CITY OF LOS ANGELES OR ITS OFFICERS OR AGENTS SHALL NOT BE RESPONSIBLE FOR THE ACCURACY OR COMPLETENESS OF ELECTRONIC COPIES OF THIS PLAN SHEET.

ADDENDUM 5

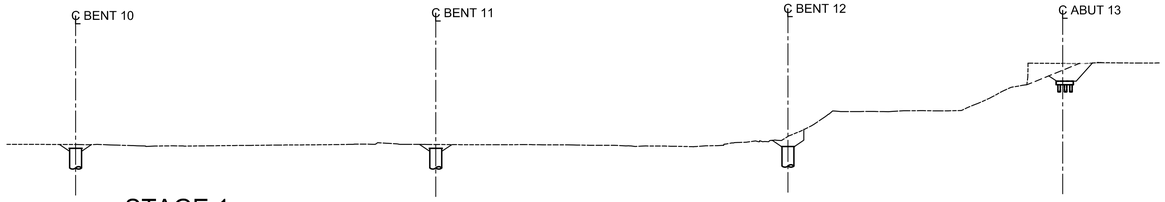

STAGE 1

1. CONSTRUCT CIDH PILES AT ALL BENTS FOR THE FIRST FRAME SEGMENT OF THE CONTINUOUS VIADUCT (SEE NOTE 1).
2. EXCAVATE FOR PILE CAP AND CONSTRUCT CIDH PILES AT ABUTMENT.

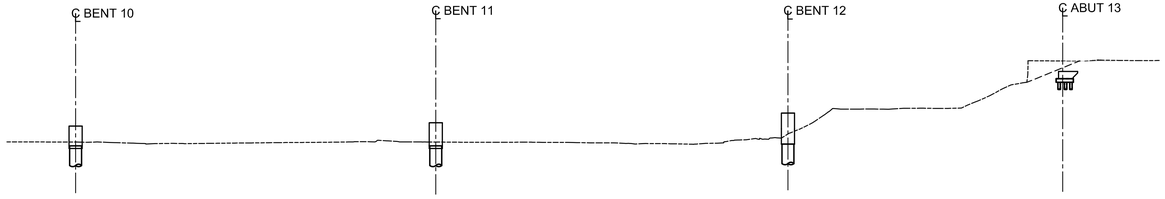

STAGE 2

1. CONSTRUCT COLUMN SEGMENT BELOW ISOLATION BEARINGS.
2. AT ABUTMENT, CONSTRUCT PILE CAP AND STEM WALL BELOW ISOLATION BEARINGS.

STAGE 3

1. SET ISOLATION BEARINGS ON COLUMNS AND ABUTMENT. SET BEARINGS TO ACCOMMODATE ANTICIPATED FRAME SHORTENING. SEE GEOMETRIC CONTROL NOTE 4.

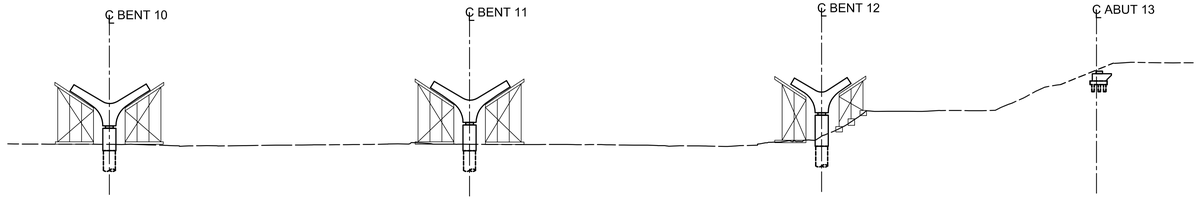

STAGE 4

1. CONSTRUCT FALSEWORK SUPPORT FOR Y-BENT FROM BEARING TO UPPER CONSTRUCTION JOINT.
2. INSTALL ISOLATION BEARING LOCK-UP DEVICE. SEE TABLE ON DRAWING NO. S9-09 FOR REQUIRED LATERAL CAPACITY. LOCK-UP DEVICE SHALL NOT BE REMOVED UNTIL THE END OF STAGE 10.
3. CONSTRUCT Y-BENT FROM TOP OF BEARING TO UPPER CONSTRUCTION JOINT.

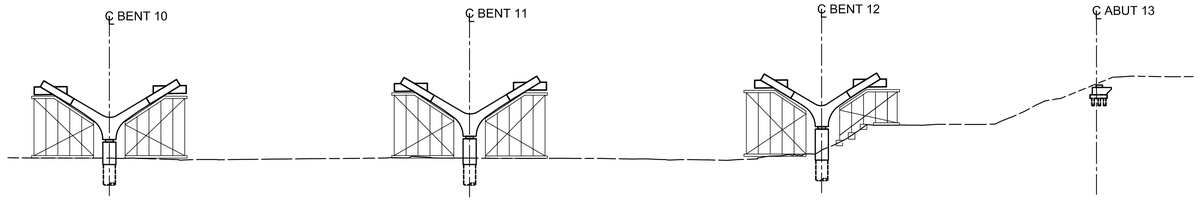

STAGE 5

1. ERECT FALSEWORK FOR KNUCKLE JOINT REGION AND ARCH RIB FLOOR BEAM. INCLUDE 5' OF EDGE GIRDER FROM EACH SIDE OF THE ARCH RIB.
2. CONSTRUCT UPPER PORTIONS OF Y-BENT ARMS, KNUCKLE JOINT REGION AND ARCH RIB FLOOR BEAM.
3. PARTIALLY POST-TENSION ARCH RIB FLOOR BEAMS AND THEN REMOVE ARCH RIB FLOOR BEAM FALSEWORK. KNUCKLE JOINT REGION FALSEWORK TO REMAIN IN PLACE.

ERECTION SEQUENCE GENERAL NOTES:

1. THE COMPLETED VIADUCT WILL BE A CONTINUOUS STRUCTURE BETWEEN ABUTMENTS, BUT WILL BE CONSTRUCTED IN DISCRETE FRAME SEGMENTS.
2. THE MAXIMUM LENGTH OF ANY DISCRETE SEGMENT SHALL INCLUDE NOT MORE THAN 3 ARCH SPANS.
3. CONSTRUCTION STAGING OF ARCH SPANS IS SHOWN FOR THE FRAME SEGMENT FROM BENT 10 TO ABUTMENT 13, BUT IS SIMILAR FOR OTHER DISCRETE FRAME SEGMENTS. FRAME SEGMENT PHASING IS SHOWN ON S9-07.
4. STAGES 4 THROUGH 10 ARE INTENDED SPECIFICALLY FOR ARCH SPANS. CONVENTIONAL ERECTION STAGING SHALL BE USE FOR BOX GIRDER SPANS 1 AND 2.
5. FOR CLARIFICATION OF CONSTRUCTION JOINT LOCATIONS AND CONSTRUCTION JOINT SEQUENCE DELINEATION, SEE DRAWING NO. S9-08.
6. KNUCKLE JOINT REGION REFERS TO THE COMBINED JOINT REGION OF THE Y-BENT ARM, EDGE GIRDER, AND ARCH RIB FLOOR BEAM.
7. THE CONTRACTOR'S FALSEWORK DESIGN SHALL ACCOMMODATE STRUCTURAL SHORTENING OF THE VIADUCT FRAMES AND ANY RESISTANCE OF THE FALSEWORK SHALL BE INCLUDED IN THE CONTRACTOR'S GEOMETRIC CONTROL PLAN AND ERECTION MANUAL.
8. ADDENDUM NO. 1 CONSTRUCTION SEQUENCE CHANGES WERE PROVIDED BY THE CONTRACTOR'S PHASE 1 GEOMETRIC CONTROL MANUAL AND LOCK-UP DEVICE SUBMITTALS.

CONTRACTOR RESPONSIBILITIES AND GEOMETRIC CONTROL NOTES:

1. THE ERECTION SEQUENCE SHOWN WAS PROVIDED BY THE CONTRACTOR DURING DESIGN DEVELOPMENT AND MAY BE AMENDED OR CHANGED BY THE CONTRACTOR. THE SEQUENCE SHOWN IS NOT THE COMPLETE STEP BY STEP PROCEDURE REQUIRED TO CONSTRUCT THE VIADUCT. THE CONTRACTOR SHALL DETERMINE THE COMPLETE ERECTION SEQUENCE, REQUIRED EQUIPMENT AND TEMPORARY SUPPORTS.
2. THE CONTRACTOR SHALL PREPARE AN ERECTION MANUAL THAT SHALL PROVIDE A DETAILED ERECTION SEQUENCE INCLUDING CALCULATIONS AND DETAILED DRAWINGS. THE ERECTION MANUAL SHALL BE SUBMITTED FOR REVIEW. ALL CALCULATIONS AND DRAWINGS SHALL BE SEALED BY A CALIFORNIA LICENSED PROFESSIONAL ENGINEER.
3. THE ERECTION MANUAL SHALL PROVIDE FULL GEOMETRY CONTROL FOR THE ENTIRE VIADUCT AND PROVIDE COMPLETED CAMBER VALUES SO THAT THE FINAL VIADUCT GEOMETRY SHOWN ON DRAWINGS IS ACHIEVED AT AN AGE OF 10 YEARS AFTER COMPLETION OF CONSTRUCTION. FOR ADDITIONAL INFORMATION CONCERNING GEOMETRY CONTROL, SEE DRAWING NOS. S5-23, S6-10 AND S7-01.
4. ISOLATION BEARING SHALL BE SET TO ACCOMMODATE ANTICIPATED FRAME SHORTENING. FOR AN ESTIMATE OF THE REQUIRED BEARING INITIAL OFFSET, SEE DRAWING S8-03. ACTUAL BEARING OFFSETS SHALL BE DETERMINE BY THE CONTRACTOR'S ERECTION MANUAL.

THE CITY OF LOS ANGELES OR ITS OFFICERS OR AGENTS SHALL NOT BE RESPONSIBLE FOR THE ACCURACY OR COMPLETENESS OF ELECTRONIC COPIES OF THIS PLAN SHEET.

C:\caddlib\pw\pwwestcoast\llyalkobusch\dms57683\S9-06-SG01-03.dwg 9/27/16 08:17

REVISION DATES (DESIGN STAGE ONLY)

Sheet Version 3.0

HNTB
HNTB Corporation
601 W. 5TH STREET SUITE 1000
LOS ANGELES, CALIFORNIA 90071
TEL (213) 403-1000 FAX (213) 403-1001

CITY OF LOS ANGELES DEPARTMENT OF PUBLIC WORKS BUREAU OF ENGINEERING

ENGINEERING — CITY OF LOS ANGELES

NO.	REVISIONS:	DATE	BY:
1	ADDENDUM NO. 1	09/23/16	MHJ

STRUCTURE NO. 53C-2329

INDEX NO.

THIS PLAN WAS ELECTRONICALLY SIGNED AND STAMPED.

REGISTERED PROFESSIONAL ENGINEER — MICHAEL H. JONES — No. S3033 — CIVIL — STATE OF CALIFORNIA

GARY LEE MOORE, P.E. — CITY ENGINEER

		DATE:
ENGINEER:	MICHAEL H. JONES	1/29/2016
DESIGNED BY:	MICHAEL H. JONES	1/29/2016
DRAWN BY:	LI ZHANG	1/29/2016
CHECKED BY:	CHARLES REDFIELD	1/29/2016
APPROVED BY:	MICHAEL H. JONES	1/29/2016

LIC. NO. S3033 — DESIGN GROUP

VERTICAL CONTROL: BM 12-04070,1929 (NGVD 29) - 1985 ADJUSTMENT
HORIZONTAL CONTROL: GPS; PID AE 1704, EPOCH 1991.35

SHEET TITLE: STAGED CONSTRUCTION NO. 1

PROJECT: SIXTH STREET VIADUCT REPLACEMENT

ADDRESS: SIXTH STREET VIADUCT (WHITTIER BLVD) LOS ANGELES, CA

WORK ORDER NO. E700224F

DRAWING NO. S9-05

SHEET 24 OF SHEETS

ADDENDUM 5

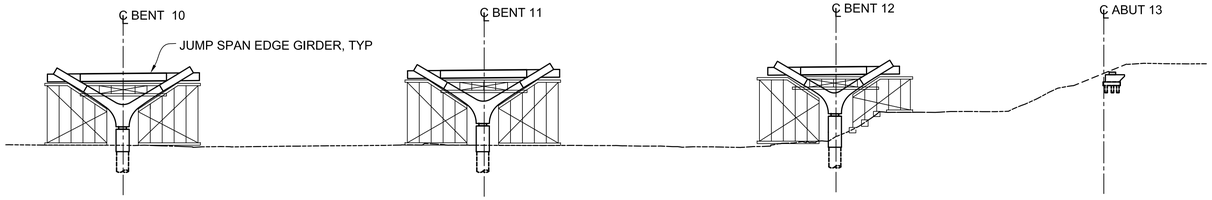

ERECTION SEQUENCE GENERAL NOTES:

1. THE REMOVAL OF ISOLATION BEARING LOCK-UP DEVICES (LUD) OR THEIR CONVERSION TO SHEAR KEYS BEGGING DURING STAGE 7 OCCURS AFTER FRAME CONTINUITY IS ACHIEVED BY PLACING ARCH SPAN AND JUMP SPAN EDGE GIRDERS. FOR THE SEQUENCE OF LUD REMOVAL OR CONVERSION, REFER TO THE CONTRACTOR'S LUD SUBMITTAL.

STAGE 6

1. CONSTRUCT FALSEWORK FOR JUMP SPAN EDGE GIRDERS AND FLOOR BEAMS.
2. CONSTRUCT JUMP SPAN EDGE GIRDERS, AND FLOOR BEAMS, AND DECK SLAB.
3. STRESS JUMP SPAN "J" POST TENSIONING TENDONS.

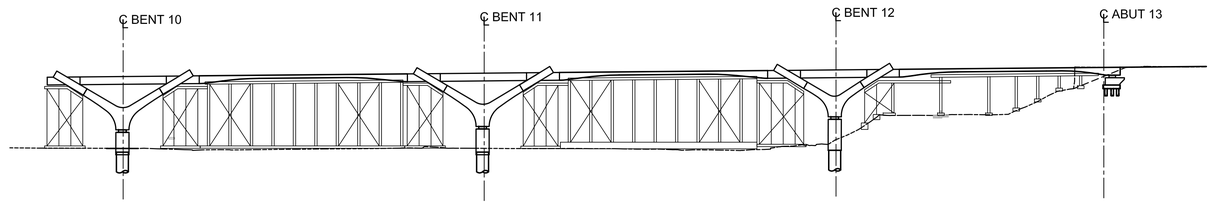

STAGE 7

1. CONSTRUCT FALSEWORK FOR ARCH SPAN EDGE GIRDERS, FLOOR BEAMS, AND DECK SLAB.
2. CONSTRUCT ARCH SPAN EDGE GIRDERS, FLOOR BEAMS AND DECK SLAB WITH LOWER HANGER BRACKET ANCHOR BOLTS IN PLACE.
3. STRESS TRANSVERSE POST-TENSIONING IN FLOOR BEAMS AND ARCH RIB FLOOR BEAMS. RESHORE FLOOR BEAMS AND ARCH RIB FLOOR BEAMS AS REQUIRED.
4. REMOVE FALSEWORK AT JUMP SPANS. (1)

THE CITY OF LOS ANGELES OR ITS OFFICERS OR AGENTS SHALL NOT BE RESPONSIBLE FOR THE ACCURACY OR COMPLETENESS OF ELECTRONIC COPIES OF THIS PLAN SHEET.

C:\caddlib\pw\pwwestcoast\zhang\dms57683\S9-06-SG01-03.dwg 9/27/16 10:44

REVISION DATES (DESIGN STAGE ONLY)

Sheet Version 3.0

HNTB
HNTB Corporation
601 W. 5TH STREET SUITE 1000
LOS ANGELES, CALIFORNIA 90071
TEL (213) 403-1000 FAX (213) 403-1001

CITY OF LOS ANGELES DEPARTMENT OF PUBLIC WORKS BUREAU OF ENGINEERING

ENGINEERING CITY OF LOS ANGELES

NO.	REVISIONS:	DATE:	BY:
1	ADDENDUM NO. 1	08/23/16	MHJ

STRUCTURE NO. 53C-2329

INDEX NO.

THIS PLAN WAS ELECTRONICALLY SIGNED AND STAMPED

REGISTERED PROFESSIONAL ENGINEER MICHAEL H. JONES No. S3033 CIVIL STATE OF CALIFORNIA

GARY LEE MOORE, P.E.	CITY ENGINEER	DATE:
ENGINEER:	MICHAEL H. JONES	LIC. NO. S3033 1/29/2016
DESIGNED BY:	MICHAEL H. JONES	1/29/2016
DRAWN BY:	LI ZHANG	1/29/2016
CHECKED BY:	CHARLES REDFIELD	1/29/2016
APPROVED BY:	MICHAEL H. JONES	1/29/2016

DESIGN GROUP

VERTICAL CONTROL:	BM 12-04070, 1929 (NGVD 29) - 1985 ADJUSTMENT
HORIZONTAL CONTROL:	GPS; PID AE 1704, EPOCH 1991.35

SHEET TITLE: STAGED CONSTRUCTION NO. 2

PROJECT: SIXTH STREET VIADUCT REPLACEMENT

ADDRESS: SIXTH STREET VIADUCT (WHITTIER BLVD) LOS ANGELES, CA

WORK ORDER NO. E700224F

DRAWING NO. S9-06

SHEET 25 OF SHEETS

ADDENDUM 5

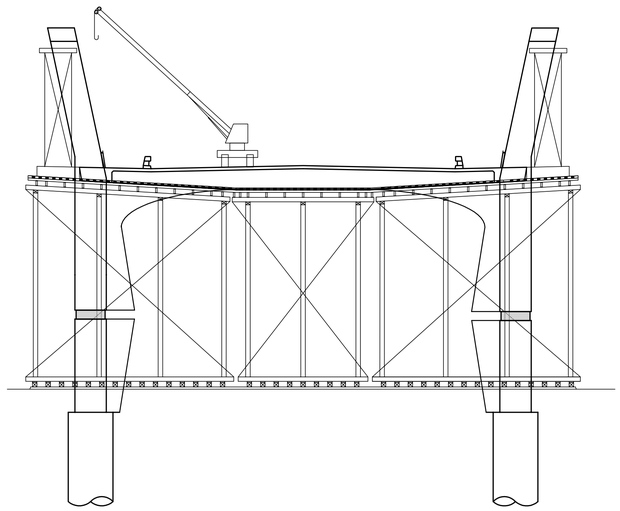

STAGE 8

1. WITH CRANE PLACED ON FALSEWORK SUPPORTED DECK, CONSTRUCT FALSEWORK FOR ARCH RIBS.
2. CONSTRUCT ARCH RIBS WITH UPPER HANGER BRACKET ANCHOR BOLTS IN PLACE.

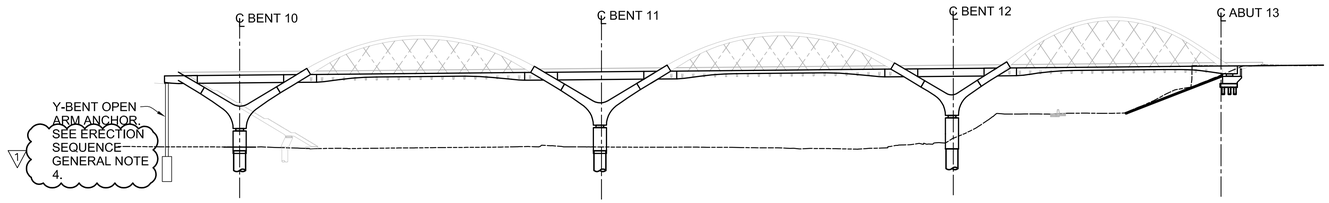

STAGE 9

1. INSTALL UPPER AND LOWER HANGER BRACKETS.
2. STRESS BRACKET ANCHOR BOLTS PER STRESSING SEQUENCE SHOWN ON DRAWING NO. S5-72.

STAGE 10

1. PLACE CONCRETE IN FLOOR BEAM STRESSING POCKETS.
2. STRESS LONGITUDINAL POST-TENSIONING "U" AND "L" TENDONS IN EDGE GIRDERS.
3. INSTALL HANGERS. STRESS HANGER PER APPROVED ERECTION MANUAL AND GEOMETRIC CONTROL PLAN.
4. INSTALL Y-BENT OPEN ARM ANCHOR. SEE TABLE ON DRAWING NO. S9-09 FOR REQUIRED ANCHOR AXIAL STIFFNESS AND TENSION CAPACITY. SEE ERECTION SEQUENCE GENERAL NOTE 4. 1
5. REMOVE ALL FALSEWORK PER APPROVED FALSEWORK REMOVAL PLAN.
6. REMOVE ISOLATION BEARING LOCK-UP DEVICE INSTALLED IN SEQUENCE STAGE 4 PER APPROVED LOCK-UP DEVICE REMOVAL PLAN. SEE ERECTION SEQUENCE GENERAL NOTE 1 ON DRAWING NO. S9-06. 1
7. PLACE ABUTMENT BACKWALL AND WINGWALLS AT ABUTMENT.
8. REPEAT STAGES 1 THROUGH 10 FOR OTHER FRAME SEGMENTS.

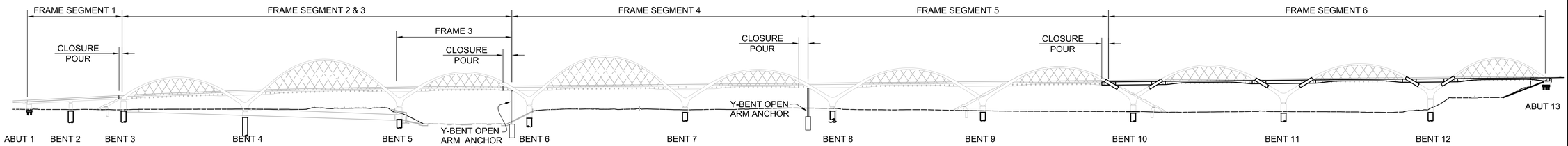

STAGE 11 (SEE NOTE 1)

1. CONSTRUCT CONCRETE BARRIERS
2. CONSTRUCT STEEL RAILING
3. CONSTRUCT EXPANSION JOINTS
4. CONSTRUCT STRUCTURE APPROACH SLABS

VIADUCT FRAME SEGMENT PHASING

SEE ERECTION SEQUENCE GENERAL NOTE 3. 1

ERECTION SEQUENCE GENERAL NOTES :

1. Y-BENT OPEN ARM ANCHORS ARE REMOVED ONCE STAGE 10 OF THE ADJOINING FRAME IS COMPLETED.
2. FOR DECK POST-TENSIONING SEQUENCE, SEE NOTE 12 ON DRAWING NO. S6-11.
3. FRAME SEGMENTS ARE PHASED SEQUENTIALLY BEGINNING WITH FRAME SEGMENT 6. BETWEEN BENT 3 AND ABUTMENT 13 POST TENSIONING COUPLERS ARE REQUIRED AT EDGE GIRDER CLOSURE POURS TO PROVIDE CONTINUOUS POST-TENSIONING.
4. THE CONTRACTOR'S PHASE 1 GEOMETRIC CONTROL MANUAL ELIMINATES Y-BENT OPEN ARM ANCHORS BY LEAVING FALSEWORK IN THE ARCH SPAN ADJACENT TO THE CLOSURE POUR OF A COMPLETED FRAME SEGMENT UNTIL EDGE GIRDER POST-TENSIONING OF THE ADJACENT WESTERLY FRAME IS COMPLETED. IT IS THE CONTRACTOR'S RESPONSIBILITY TO VERIFY THE ADEQUACY OF THE ALTERNATE SUPPORT SCHEME, DETERMINE CONSTRUCTION SEQUENCE CONSEQUENCES AND VERIFY THE ADEQUACY OF ALL VIADUCT COMPONENTS IF LOADING CONDITIONS ARE ALTERED. 1

HNTB
HNTB Corporation
601 W. 5TH STREET SUITE 1000
LOS ANGELES, CALIFORNIA 90071
TEL (213) 403-1000 FAX (213) 403-1001

CITY OF LOS ANGELES DEPARTMENT OF PUBLIC WORKS BUREAU OF ENGINEERING

ENGINEERING CITY OF LOS ANGELES

NO.	REVISIONS:	DATE:	BY:
1	ADDENDUM NO. 1	08/23/16	MHJ

STRUCTURE NO. 53C-2329

INDEX NO.

REGISTERED PROFESSIONAL ENGINEER MICHAEL H. JONES No. S3033 CIVIL STATE OF CALIFORNIA

THIS PLAN WAS ELECTRONICALLY SIGNED AND STAMPED.

GARY LEE MOORE, P.E.	CITY ENGINEER	DATE: 1/29/2016
	LIC. NO. S3033	1/29/2016
ENGINEER:	MICHAEL H. JONES	1/29/2016
DESIGNED BY:	MICHAEL H. JONES	1/29/2016
DRAWN BY:	LI ZHANG	1/29/2016
CHECKED BY:	CHARLES REDFIELD	1/29/2016
APPROVED BY:	MICHAEL H. JONES	1/29/2016

VERTICAL CONTROL: BM 12-04070,1929 (NGVD 29) - 1985 ADJUSTMENT
HORIZONTAL CONTROL: GPS; PID AE 1704, EPOCH 1991.35

SHEET TITLE: STAGED CONSTRUCTION NO. 3

PROJECT: SIXTH STREET VIADUCT REPLACEMENT

ADDRESS: SIXTH STREET VIADUCT (WHITTIER BLVD) LOS ANGELES, CA

WORK ORDER NO. E700224F

DRAWING NO. S9-07

SHEET 26 OF SHEETS

REVISION DATES (DESIGN STAGE ONLY)

THE CITY OF LOS ANGELES OR ITS OFFICERS OR AGENTS SHALL NOT BE RESPONSIBLE FOR THE ACCURACY OR COMPLETENESS OF ELECTRONIC COPIES OF THIS PLAN SHEET.

C:\caddlib\pw\pwwestcoast\zhong\dms57683\S9-06-S601-03.dwg 9/27/16 10:21

Sheet Version 3.0

ADDENDUM 5

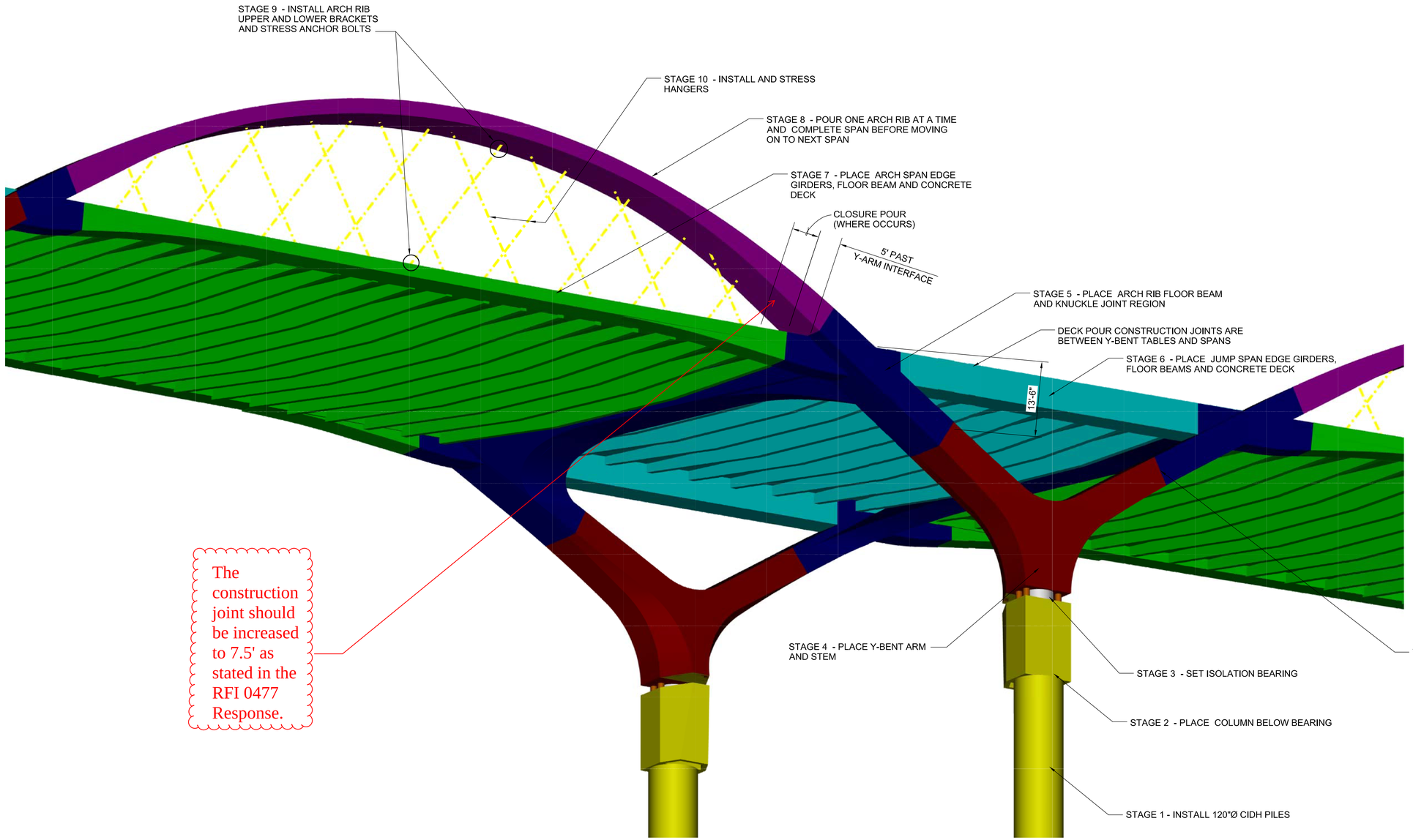

The construction joint should be increased to 7.5' as stated in the RFI 0477 Response.

CONSTRUCTION JOINT AND STAGED CONSTRUCTION DELINEATION

NO SCALE

THE CITY OF LOS ANGELES OR ITS OFFICERS OR AGENTS SHALL NOT BE RESPONSIBLE FOR THE ACCURACY OR COMPLETENESS OF ELECTRONIC COPIES OF THIS PLAN SHEET.

C:\coddlib\pw\pwwestcoast\ljyalobusch\dms576831\S9-06-SG01-03.dwg 6/27/16 16:16

REVISION DATES: (DESIGN STAGE ONLY)

Sheet Version 3.0

BUREAU OF ENGINEERING

ENGINEERING
CITY OF LOS ANGELES

NO.	REVISIONS:	DATE	BY:

STRUCTURE NO. 53C-2329

INDEX NO. P-38113

REGISTERED PROFESSIONAL ENGINEER MICHAEL H. JONES No. S3033 CIVIL STATE OF CALIFORNIA

* THIS PLAN WAS ELECTRONICALLY SIGNED AND STAMPED.

CITY OF LOS ANGELES DEPARTMENT OF PUBLIC WORKS

GARY LEE MOORE, P.E. CITY ENGINEER

DESIGN GROUP	LIC. NO. S3033	DATE:
ENGINEER:	MICHAEL H. JONES	1/29/2016
DESIGNED BY:	MICHAEL H. JONES	1/29/2016
DRAWN BY:	LI ZHANG	1/29/2016
CHECKED BY:	CHARLES REDFIELD	1/29/2016
APPROVED BY:	MICHAEL H. JONES	1/29/2016

VERTICAL CONTROL: BM 12-04070.1928 (NGVD 29) - 1985 ADJUSTMENT
HORIZONTAL CONTROL: GPS; PID AE 1704, EPOCH 1991.35

SHEET TITLE: STAGED CONSTRUCTION NO. 4

PROJECT: SIXTH STREET VIADUCT REPLACEMENT

ADDRESS: SIXTH STREET VIADUCT (WHITTIER BLVD) LOS ANGELES, CA

BUREAU OF ENGINEERING OFFICIAL RECORD

HNTB
HNTB Corporation
601 W. 5TH STREET SUITE 1000
LOS ANGELES, CALIFORNIA 90071
TEL (213) 403-1000 FAX (213) 403-1001

WORK ORDER NO. E700224F

DRAWING NO. S9-08

SHEET 435 OF 560 SHEETS

ADDENDUM 5

ISOLATION BEARING LOCK-UP DEVICE CAPACITY				
BENT NO.	LATERAL CAPACITY PER BEARING *			
	LONGITUDINAL		TRANSVERSE	
	SHEAR (KIPS)	MOMENT (KIP-FT)	SHEAR (KIPS)	MOMENT (KIP-FT)
4	358	1479	149	950
5	448	4832	140	1994
6	702	5425	118	1958
7	460	3112	112	1186
8	986	6069	160	1239
9	441	2949	110	1091
10	815	6649	172	1692
11	465	4132	152	1162
12	173	2070	95	1396

* LOCK-UP DEVICE SHALL PREVENT BOTH TRANSLATION AND ROTATION BETWEEN THE TOP AND BOTTOM OF THE ISOLATION BEARING.

(SHEAR VALUE IGNORES FRICTION & LATERAL RESTRAINT FROM FALSEWORK)

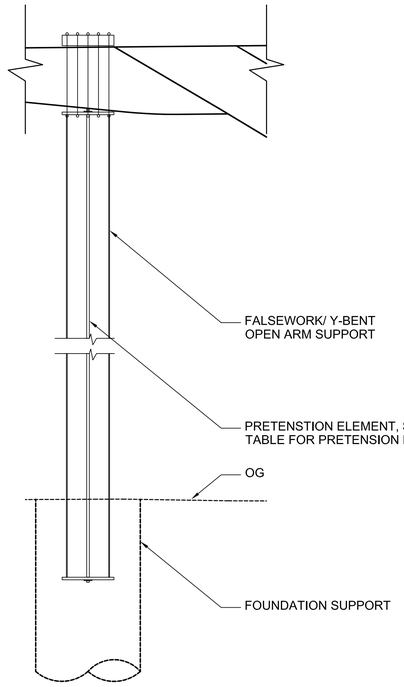

CONCEPTUAL Y-BENT ARM ANCHOR
NO SCALE

Y-BENT OPEN ARM ANCHOR CONSTRUCTION SEQUENCE:

1. INSTALL FALSEWORK, Y-BENT OPEN ARM SUPPORT AND FOUNDATION SUPPORT.
2. PRETENSION OPEN ARM SUPPORT. SEE TABLE FOR REQUIRED PRETENSION FORCE. THE FALSEWORK Y-BENT OPEN ARM SUPPORT SHALL BE PRECOMPRESSED WITH THE PRETENSION FORCE SO THAT THERE IS NO VERTICAL MOVEMENT OF THE OPEN Y-BENT ARM WHEN ARCH AND JUMP SPAN FALSEWORK IS REMOVED.

Y-BENT OPEN ARM ANCHOR	
BENT NO.	PRETENSION FORCE PER ARM (KIPS)
6	2700 K
8	3000 K
10	2900 K

THE CITY OF LOS ANGELES OR ITS OFFICERS OR AGENTS SHALL NOT BE RESPONSIBLE FOR THE ACCURACY OR COMPLETENESS OF ELECTRONIC COPIES OF THIS PLAN SHEET.

C:\caddlib\pw\pwwestcoast\llyalkobusch\dms57683\S9-06-SG01-03.dwg 6/27/16 16:17

REVISION DATES (DESIGN STAGE ONLY)

Sheet Version 3.0

CITY OF LOS ANGELES DEPARTMENT OF PUBLIC WORKS BUREAU OF ENGINEERING

ENGINEERING CITY OF LOS ANGELES

STRUCTURE NO. 53C-2329

INDEX NO. P-38113

NO.	REVISIONS:	DATE	BY:

THIS PLAN WAS ELECTRONICALLY SIGNED AND STAMPED.

REGISTERED PROFESSIONAL ENGINEER MICHAEL H. JONES No. S3033 CIVIL STATE OF CALIFORNIA

GARY LEE MOORE, P.E. CITY ENGINEER

ENGINEER:	MICHAEL H. JONES	DESIGN GROUP	LIC. NO. S3033 DATE: 1/29/2016
DESIGNED BY:	MICHAEL H. JONES		1/29/2016
DRAWN BY:	LI ZHANG		1/29/2016
CHECKED BY:	CHARLES REDFIELD		1/29/2016
APPROVED BY:	MICHAEL H. JONES		1/29/2016

VERTICAL CONTROL: BM 12-04070,1929 (NGVD 29) - 1985 ADJUSTMENT
HORIZONTAL CONTROL: GPS; PID AE 1704, EPOCH 1991.35

SHEET TITLE: STAGED CONSTRUCTION NO. 5

PROJECT: SIXTH STREET VIADUCT REPLACEMENT

ADDRESS: SIXTH STREET VIADUCT (WHITTIER BLVD) LOS ANGELES, CA

BUREAU OF ENGINEERING OFFICIAL RECORD

HNTB
HNTB Corporation
601 W. 5TH STREET SUITE 1000
LOS ANGELES, CALIFORNIA 90071
TEL (213) 403-1000 FAX (213) 403-1001

WORK ORDER NO. E700224F

DRAWING NO. S9-09

SHEET 436 OF 560 SHEETS

ADDENDUM 5

BENCHMARK

	BM	ELEVATION IN FT	DESCRIPTION OF LOCATION
1.	12-0070	207.26	CUT SPIKE 7FT S OF S CURB 7TH ST 0.0FT W OF W END OF HANDRAIL TO BRIDGE 25FT E OF SANTA FE AVE.
2.	11-0209	1106	WIRE SPIKE IN W CURB CHICAGO ST 5 FT N OF N P.L. WHITTIER BLVD N END CB

THE VERTICAL DATUM IS BASED UPON THE CITY OF LOS ANGELES PRECISE BENCH BOOK, NATIONAL GEODETIC VERTICAL DATUM OF 1929 (NGVD 29) 19[illegible]5 ADJUSTMENT IN FEET.

BASIS OF BEARING

BASIS OF BEARING S77° 38' 27" E; COORDINATES BEARINGS AND DISTANCES ARE BASED ON ICM COORDINATES SHOWN ON NAVIGATE LA HOLDING THE COORDINATE (N[illegible]6[illegible]7.06, E[illegible]91165.61) AT THE INTERSECTION OF 6TH ST. AND MATEO ST. FOR POSITION AND HOLDING THE COORDINATE (N[illegible]5[illegible]7.6, E[illegible]95[illegible]11) AT INTERSECTION OF BOYLE AVE. AND WHITTIER BLVD. FOR DIRECTION OR BEARING.

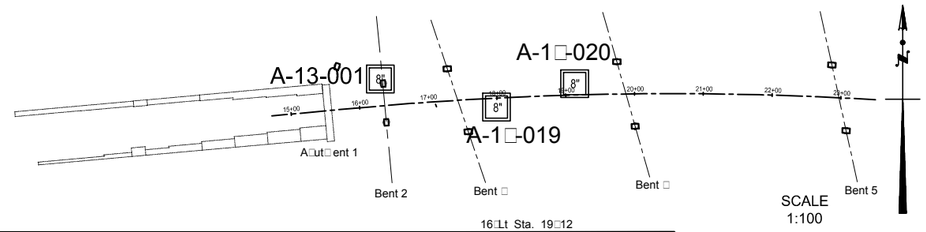

NOTES

1. THE LOTB SHEET WAS PREPARED IN ACCORDANCE WITH CALTRANS SOIL AND ROC[illegible] LOGGING, CLASSIFICATION, AND PRESENTATION MANUAL [illegible]UNE 2010[illegible]

Earth Mechanics, Inc.
Geotechnical and Earthquake Engineering
178000 Newhope Street, Suite B
Fountain Valley, California 92708
Phone: 714-751-3826
Fax: 714-751-3928

REGISTERED PROFESSIONAL ENGINEER ROBERT LAW No. C055784 EXP. 12-31-15 CIVIL STATE OF CALIFORNIA

[illegible]0[illegible]Lt Sta. 16[illegible]1
C[illegible]L SI[illegible]TH STREET

16[illegible]Lt Sta. 19[illegible]12
C[illegible]L SI[illegible]TH STREET

1[illegible]Rt Sta. 17+9[illegible]
C[illegible]L SI[illegible]TH STREET

A-1[illegible]-001

EL. 250.6 ft

ASPHALT
SILTY SAND [illegible]SM[illegible]oli[illegible]e [illegible]ro[illegible]n[illegible]oist.
Loose[illegible]fe[illegible] GRAVEL[illegible]ostl[illegible]ediu[illegible] to fine SAND[illegible]so[illegible]e nonplasti[illegible] fines.
Poorl[illegible]graded SAND [illegible]ith SILT and GRAVEL [illegible]SP-SM[illegible]dense[illegible]oli[illegible]e [illegible]ro[illegible]n[illegible]oist[illegible]so[illegible]e GRAVEL, [illegible]ostl[illegible]oarse to fine SAND[illegible]fe[illegible] nonplasti[illegible]fines.
Poorl[illegible]graded SAND [illegible]ith SILT [illegible]SP-SM[illegible]er[illegible]dense[illegible]ro[illegible]n[illegible]fe[illegible] GRAVEL[illegible]oarse to [illegible]ediu[illegible] SAND[illegible]fe[illegible] fines.
Oli[illegible]e [illegible]ro[illegible]n[illegible]oist[illegible]9[illegible] [illegible]ediu[illegible] to fine SAND[illegible]7[illegible] nonplasti[illegible]fines.
Rig Chattering.
Poorl[illegible]graded GRAVEL [illegible]ith SAND [illegible]GP[illegible]er[illegible]dense[illegible]oli[illegible]e [illegible]ro[illegible]n[illegible] [illegible]oist[illegible]ostl[illegible]GRAVEL[illegible]so[illegible]e [illegible]ediu[illegible] to fine SAND[illegible] tra[illegible]e nonplasti[illegible]fines[illegible]Rig Chattering, Gra[illegible]els and Co[illegible]les.
Poorl[illegible]graded GRAVEL [illegible]ith SILT and SAND [illegible]GP-GM[illegible]er[illegible]dense[illegible] oli[illegible]e [illegible]ro[illegible]n[illegible] [illegible]oist[illegible]ostl[illegible]GRAVEL[illegible]so[illegible]e [illegible]ediu[illegible] to fine SAND[illegible]fe[illegible] nonplasti[illegible]fines[illegible]Rig Chattering - Hard Drilling.
[illegible]ro[illegible]n[illegible]so[illegible]e [illegible]oarse to [illegible]ediu[illegible] SAND
Oli[illegible]e gra[illegible]Rig Chattering, Gra[illegible]ell[illegible]
Rig Chattering, Gra[illegible]ell[illegible]
SILTY SAND [illegible]SM[illegible]er[illegible]dense[illegible]gra[illegible]el[illegible] [illegible]oist[illegible]ostl[illegible]fine SAND[illegible]so[illegible]e nonplasti[illegible]fines.
[illegible]6[illegible] fine SAND[illegible]1[illegible] nonplasti[illegible]fines.
70[illegible], SAND, [illegible]0[illegible], fines, Strong odor [illegible]TPH[illegible]
SANDY SILT [illegible]ML[illegible]hard[illegible]gra[illegible]el[illegible] [illegible]oist[illegible]5[illegible] SAND[illegible]65[illegible] fines.
SILTY SAND [illegible]SM[illegible]er[illegible]dense[illegible]gra[illegible]el[illegible] [illegible]oist[illegible]ostl[illegible]fine SAND[illegible]so[illegible]e [illegible]ediu[illegible] to fine SAND[illegible]little nonplasti[illegible]fines[illegible]Strong odor [illegible]TPH[illegible]
Well-graded SAND [illegible]ith GRAVEL [illegible]SW[illegible]er[illegible]dense[illegible]gra[illegible]el[illegible] [illegible]oist[illegible]ostl[illegible]oarse to fine SAND[illegible]tra[illegible]e nonplasti[illegible]fines[illegible] Strong odor [illegible]TPH[illegible]
Lean CLAY [illegible]CL[illegible]hard[illegible]gra[illegible]el[illegible] [illegible]oist[illegible]fe[illegible] fine SAND[illegible]ostl[illegible]lo[illegible] plasti[illegible]ti[illegible] fines.
SILT [illegible]ML[illegible]hard[illegible]gra[illegible]el[illegible] [illegible]oist[illegible]fe[illegible] fine SAND[illegible]ostl[illegible]lo[illegible] plasti[illegible]ti[illegible] fines, tra[illegible]e shell frag[illegible]ents.
Lean CLAY [illegible]CL[illegible]hard[illegible]gra[illegible]el[illegible] [illegible]oist[illegible]fe[illegible] fine SAND[illegible]ostl[illegible]lo[illegible] plasti[illegible]ti[illegible] fines[illegible]So[illegible]e [illegible]inor organi[illegible]aterial.

Ter[illegible]inated at EL. 99.[illegible]
0[illegible]-21-1[illegible]
Ha[illegible]er Effi[illegible]en[illegible]Ratio [illegible]ERi[illegible] [illegible]2

A-1[illegible]-019

EL. 2[illegible]6.[illegible] ft

ASPHALT[illegible]2.5"[illegible]CONCRETE [illegible]12"[illegible]
SILTY SAND [illegible]SM[illegible]oli[illegible]e [illegible]ro[illegible]n[illegible]oist[illegible]ostl[illegible]ediu[illegible] to fine SAND[illegible]so[illegible]e nonplasti[illegible]fines.
Poorl[illegible]graded SAND [illegible]SP[illegible]ediu[illegible] dense[illegible]ello[illegible]ish [illegible]ro[illegible]n[illegible]oist[illegible]ostl[illegible]oarse to fine SAND[illegible]tra[illegible]e nonplasti[illegible]fines.
Dense.
Poorl[illegible]graded SAND, [illegible]ith SILT, SP-SM[illegible]er[illegible]dense[illegible]ello[illegible]ish [illegible]ro[illegible]n[illegible] [illegible]oist, fe[illegible] su[illegible]angular to su[illegible]rounded GRAVEL[illegible] [illegible]ostl[illegible]ediu[illegible] to fine SAND[illegible]fe[illegible] nonplasti[illegible]fines.
Well-graded SAND [illegible]ith GRAVEL [illegible]SW[illegible]er[illegible]dense[illegible]ello[illegible]ish [illegible]ro[illegible]n[illegible] [illegible]oist[illegible] little [illegible]oarse to fine su[illegible]angular to su[illegible]rounded GRAVEL[illegible] [illegible]ostl[illegible]oarse to [illegible]ediu[illegible] SAND[illegible]tra[illegible]e nonplasti[illegible]fines.
Poorl[illegible]graded SAND [illegible]ith SILT and GRAVEL [illegible]SP-SM[illegible]dense[illegible]ello[illegible]ish [illegible]ro[illegible]n[illegible] [illegible]oist[illegible]17[illegible] GRAVEL[illegible]77[illegible] [illegible]ediu[illegible] to fine SAND[illegible]6[illegible] nonplasti[illegible]fines.
Poorl[illegible]graded SAND [illegible]ith SILT [illegible]SP-SM[illegible]er[illegible]dense[illegible]ello[illegible]ish [illegible]ro[illegible]n[illegible] [illegible]oist tra[illegible]e GRAVEL[illegible] [illegible]ostl[illegible] [illegible]ediu[illegible] to fine SAND[illegible]fe[illegible] nonplasti[illegible]fines.
Poorl[illegible]graded SAND [illegible]ith SILT and GRAVEL [illegible]SP-SM[illegible]er[illegible]dense[illegible]ello[illegible]ish [illegible]ro[illegible]n[illegible] [illegible]oist[illegible]29[illegible] GRAVEL[illegible]6[illegible] SAND[illegible] fines.
Poorl[illegible]graded GRAVEL [illegible]GP[illegible]er[illegible]dense[illegible]No re[illegible]o[illegible]er[illegible], GRAVEL la[illegible]er.
SANDY SILT [illegible]ML[illegible]hard[illegible]luish gra[illegible] [illegible]oist[illegible]5[illegible] GRAVEL[illegible]6[illegible] fine SAND[illegible]59[illegible] nonplasti[illegible]fines.
SILTY SAND [illegible]SM[illegible]er[illegible]dense[illegible]luish gra[illegible] [illegible]oist[illegible] [illegible]ediu[illegible] to fine SAND[illegible]17[illegible] nonplasti[illegible]fines.
SANDY SILT [illegible]ML[illegible]hard[illegible]luish gra[illegible] [illegible]oist[illegible]0[illegible] [illegible]ediu[illegible] to fine SAND[illegible]70[illegible] nonplasti[illegible]fines.
Odor at a[illegible]out 65 ft.
Poorl[illegible]graded SAND [illegible]ith SILT [illegible]SP-SM[illegible]er[illegible]dense[illegible]gra[illegible] [illegible]oist[illegible] [illegible]ostl[illegible] [illegible]ediu[illegible] to fine SAND[illegible]fe[illegible] nonplasti[illegible]fines[illegible]Odor.
Odor.
GRAVEL la[illegible]er at a[illegible]out [illegible]7 ft.
Coarse SAND.
Lean CLAY [illegible]CL[illegible]hard[illegible]gra[illegible] [illegible]oist to [illegible]et[illegible]fe[illegible] fine SAND[illegible]ostl[illegible]lo[illegible] to [illegible]ediu[illegible] plasti[illegible]ti[illegible] fines.

Ter[illegible]inated at EL. 1[illegible]9[illegible]
0[illegible]-22-1[illegible]
Ha[illegible]er Effi[illegible]en[illegible]Ratio [illegible]ERi[illegible] [illegible]2

A-1[illegible]-020

EL. 251.[illegible] ft

ASPHALT
SILTY SAND [illegible]ith GRAVEL [illegible]SM[illegible]ro[illegible]n.
Loose[illegible]oist[illegible]27[illegible] su[illegible]angular to su[illegible]rounded GRAVEL[illegible]59[illegible] [illegible]ediu[illegible] to fine SAND[illegible]1[illegible] nonplasti[illegible]fines.
Poorl[illegible]graded SAND [illegible]ith SILT and GRAVEL [illegible]SP-SM[illegible]dense[illegible]ro[illegible]n[illegible] [illegible]oist[illegible]little [illegible]oarse to fine su[illegible]angular to su[illegible]rounded GRAVEL[illegible] [illegible]ostl[illegible]oarse to [illegible]ediu[illegible] SAND[illegible]fe[illegible] nonplasti[illegible]fines.
Well-graded SAND [illegible]SW[illegible]er[illegible]dense[illegible]ro[illegible]n[illegible] [illegible]oist[illegible]1[illegible] [illegible]oarse to fine su[illegible]angular to su[illegible]rounded GRAVEL[illegible] [illegible]oarse to fine SAND[illegible] nonplasti[illegible]fines.
Poorl[illegible]graded SAND [illegible]ith SILT and GRAVEL [illegible]SP-SM[illegible]er[illegible]dense[illegible] [illegible]ro[illegible]n[illegible] [illegible]oist[illegible]little [illegible]oarse to fine su[illegible]angular to su[illegible]rounded GRAVEL[illegible] [illegible]ostl[illegible]oarse to fine SAND[illegible]fe[illegible] nonplasti[illegible]fines.
Poorl[illegible]graded GRAVEL [illegible]ith SILT and SAND [illegible]GP-GM[illegible]er[illegible]dense[illegible] [illegible]ro[illegible]n[illegible] [illegible]oist[illegible] [illegible]ostl[illegible]oarse to fine su[illegible]angular GRAVEL[illegible]so[illegible]e [illegible]oarse to fine SAND[illegible]fe[illegible] nonplasti[illegible]fines[illegible]Rig [illegible]hattering, gra[illegible]ell[illegible], [illegible]o[illegible], hard drilling.
Poorl[illegible]graded SAND [illegible]ith GRAVEL [illegible]SP[illegible]er[illegible]dense[illegible]gra[illegible]el[illegible] [illegible]ro[illegible]n[illegible] dr[illegible]so[illegible]e [illegible]oarse to fine su[illegible]angular to su[illegible]rounded GRAVEL[illegible] [illegible]ostl[illegible] [illegible]ediu[illegible] SAND[illegible]fe[illegible] nonplasti[illegible]fines[illegible]Hard drilling, [illegible]o[illegible], rig [illegible]hattering. Most[illegible]oarse SAND[illegible]Rig [illegible]hattering, COBBLES. [illegible]" COBBLES in [illegible]uttings.
Poorl[illegible]graded GRAVEL, GP[illegible]er, dense, dr[illegible] No re[illegible]o[illegible]er[illegible], [illegible]er, hard drilling 6" COBBLES.
SANDY SILT [illegible]ML[illegible]
Mediu[illegible] dense[illegible]hard[illegible]gra[illegible] [illegible]oist[illegible]5[illegible] fine SAND[illegible]65[illegible] lo[illegible] plasti[illegible]ti[illegible] fines.
Poorl[illegible]graded SAND [illegible]ith SILT [illegible]SP-SM[illegible]er[illegible]dense[illegible]gra[illegible] [illegible]oist[illegible] [illegible]ostl[illegible] [illegible]ediu[illegible] to fine SAND[illegible]fe[illegible] nonplasti[illegible]fines.
Wet.
SILT [illegible]ith SAND [illegible]ML[illegible]hard[illegible]gra[illegible] [illegible]oist[illegible]2[illegible] fine SAND[illegible]77[illegible] lo[illegible] plasti[illegible]ti[illegible] fines.
Rig [illegible]hattering [illegible]79 to [illegible]0 ft, gra[illegible]ell[illegible]
Well-graded SAND [illegible]ith SILT [illegible]SW-SM[illegible]er[illegible]dense[illegible]gra[illegible]el[illegible] fe[illegible] rounded GRAVEL[illegible] [illegible]ostl[illegible] [illegible]oarse to fine SAND[illegible]fe[illegible] nonplasti[illegible]fines[illegible]Odor.
Hea[illegible]ing sand, so[illegible]e [illegible]hattering.
Poorl[illegible]graded SAND, [illegible]ith SILT and GRAVEL, SP-SM[illegible]er[illegible]dense[illegible] gra[illegible] [illegible]oist[illegible]2[illegible] [illegible]oarse to fine GRAVEL[illegible]70[illegible] [illegible]oarse to fine SAND[illegible] 6[illegible] nonplasti[illegible]fines[illegible]Gra[illegible]ell[illegible], rig [illegible]hattering, hard drilling.
Ver[illegible]dense[illegible]No re[illegible]o[illegible]er[illegible], gra[illegible]ell[illegible], hard drilling, rig [illegible]hattering.
SILT [illegible]ML[illegible]
Hard[illegible]gra[illegible] [illegible]oist[illegible]tra[illegible]e fine SAND[illegible]ostl[illegible]lo[illegible] to [illegible]ediu[illegible] plasti[illegible]ti[illegible] fines[illegible]PP[illegible].5 tsf.

Ter[illegible]inated at EL. 1[illegible]0.[illegible]
09-2[illegible]-1[illegible]
Ha[illegible]er Effi[illegible]en[illegible]Ratio [illegible]ERi[illegible] [illegible]

ELEVATION ft[illegible]

[illegible] SI[illegible]TH STREET

0+00 5+00 10+00 15+00 20+00 25+00 30+00 35+00 40+00 45+00 50+00 55+00 60+00 65+00 70+00

PROFILE

VERTICAL 1 INCH [illegible]10 FEET
HORI[illegible]ONTAL 1 INCH [illegible]250 FEET

HNTB
HNTB Corporation
601 W. 5TH STREET SUITE 1000
LOS ANGELES, CALIFORNIA 90071
TEL (213) 403-1000 FAX (213) 403-1001

CITY OF LOS ANGELES DEPARTMENT OF PUBLIC WORKS BUREAU OF ENGINEERING

LA DPW ENGINEERING Serving the People's Engineering Needs

GARY LEE MOORE, P.E. CITY ENGINEER

DESIGN GROUP

ENGINEER: LIC. NO.
DESIGNED BY:
DRAWN BY:
CHECKED BY:
APPROVED BY:

DATE: BY
REVISIONS:
NO.

STRUCTURE NO. 51C-2129

INDEX NO. P-38113

VERTICAL CONTROL:
HORIZONTAL CONTROL:

SHEET TITLE: LOG OF TEST BORING SHEET 1 OF 20

PROJECT: SIXTH STREET VIADUCT REPLACEMENT PROJECT

ADDRESS: 6TH STREET VIADUCT (WHITTIER BLVD.) LOS ANGELES, CA.

WORK ORDER NO. E70022[illegible]F

DRAWING NO. S9-51

SHEET [illegible]7 OF 560 SHEETS

C:\D-Drive\13-102 HNTB 6th Street Viaduct Replacement\LOTB\Copied From Server 151130\LOTBS\6th LOTB 01_rev6.dwg 11/30/15 17:23

THE CITY OF LOS ANGELES OR ITS OFFICERS OR AGENTS SHALL NOT BE RESPONSIBLE FOR THE ACCURACY OR COMPLETENESS OF ELECTRONIC COPIES OF THIS PLAN SHEET.

THIS PLAN WAS ELECTRONICALLY SIGNED AND STAMPED.

REVISION DATES DESIGN STAGE ONLY[illegible]

Sheet Version 3.0

ADDENDUM 5

Earth Mechanics, Inc.
Geotechnical and Earthquake Engineering
178000 Newhope Street, Suite B
Fountain Valley, California 92708
Phone: 714-751-3826
Fax: 714-751-3928

REGISTERED PROFESSIONAL ENGINEER ROBERT LAW No. C055784 EXP. 12-31-15 CIVIL STATE OF CALIFORNIA

NOTES

1. THE LOTB SHEET WAS PREPARED IN ACCORDANCE WITH CALTRANS SOIL AND ROC□ LOGGING, CLASSIFICATION, AND PRESENTATION MANUAL □UNE 2010□

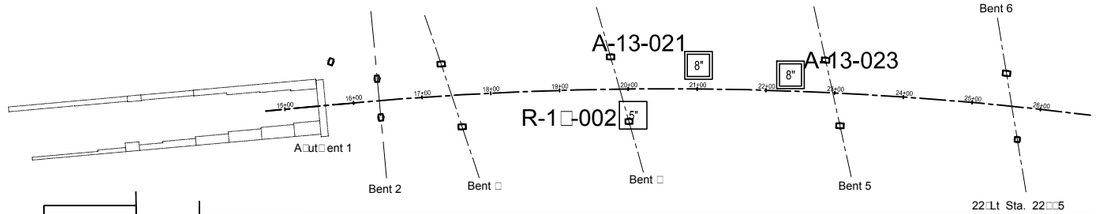

SCALE 1:100

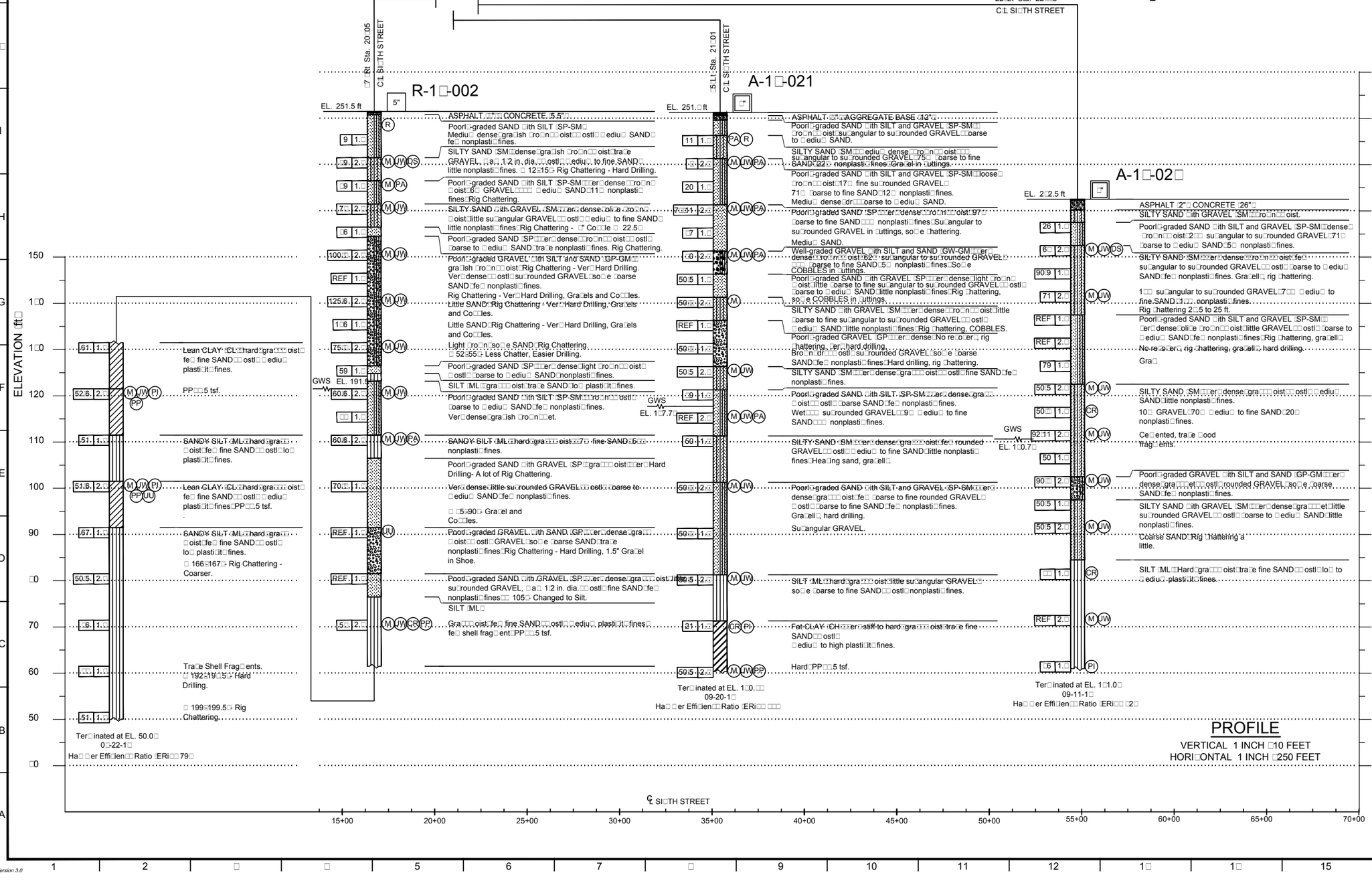

PROFILE

VERTICAL 1 INCH □10 FEET
HORI□ONTAL 1 INCH □250 FEET

HNTB
HNTB Corporation
601 W. 5TH STREET SUITE 1000
LOS ANGELES, CALIFORNIA 90071
TEL (213) 403-1000 FAX (213) 403-1001

CITY OF LOS ANGELES
DEPARTMENT OF PUBLIC WORKS
BUREAU OF ENGINEERING

CITY ENGINEER: GARY LEE MOORE, P.E.
DATE:
VERTICAL CONTROL:
HORIZONTAL CONTROL:
LIC. NO.
ENGINEER:
DESIGN GROUP
DESIGNED BY:
DRAWN BY:
CHECKED BY:
APPROVED BY:
REVISIONS: NO. DATE BY
STRUCTURE NO. 5□C-2□29
INDEX NO. P-38113

SHEET TITLE: LOG OF TEST BORING SHEET 2 OF 20
PROJECT: SIXTH STREET VIADUCT REPLACEMENT PROJECT
ADDRESS: 6TH STREET VIADUCT (WHITTIER BLVD.) LOS ANGELES, CA.

WORK ORDER NO. E70022□F
DRAWING NO. S9-52
SHEET □□ OF 560 SHEETS

THIS PLAN WAS ELECTRONICALLY SIGNED AND STAMPED.

THE CITY OF LOS ANGELES OR ITS OFFICERS OR AGENTS SHALL NOT BE RESPONSIBLE FOR THE ACCURACY OR COMPLETENESS OF ELECTRONIC COPIES OF THIS PLAN SHEET.

DESIGN DATES: DESIGN STAGE ONLY:

C:\D-Drive\13-102 HNTB 6th Street Viaduct Replacement\LOTB\Copied From Server 151130\LOTBS\6th LOTB 02_rev6.dwg 12/01/15 08:29

Sheet Version 3.0

ADDENDUM 5

Earth Mechanics, Inc.
Geotechnical and Earthquake Engineering
178000 Newhope Street, Suite B
Fountain Valley, California 92708
Phone: 714-751-3826
Fax: 714-751-3928

REGISTERED PROFESSIONAL ENGINEER ROBERT LOW No. C055784 EXP. 12-31-15 STATE OF CALIFORNIA

NOTES

1. THE LOTB SHEET WAS PREPARED IN ACCORDANCE WITH CALTRANS SOIL AND ROC□ LOGGING, CLASSIFICATION, AND PRESENTATION MANUAL □UNE 2010□

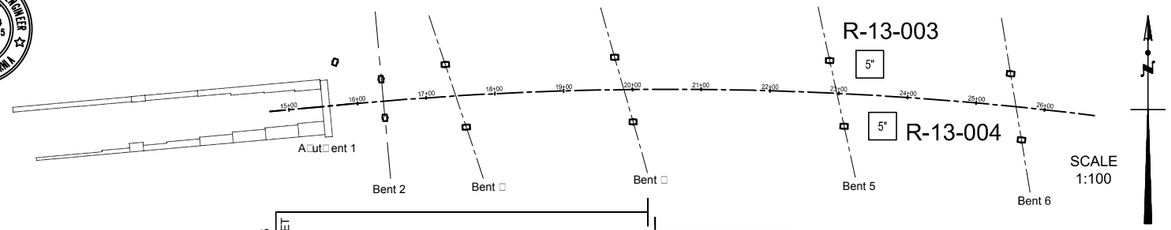

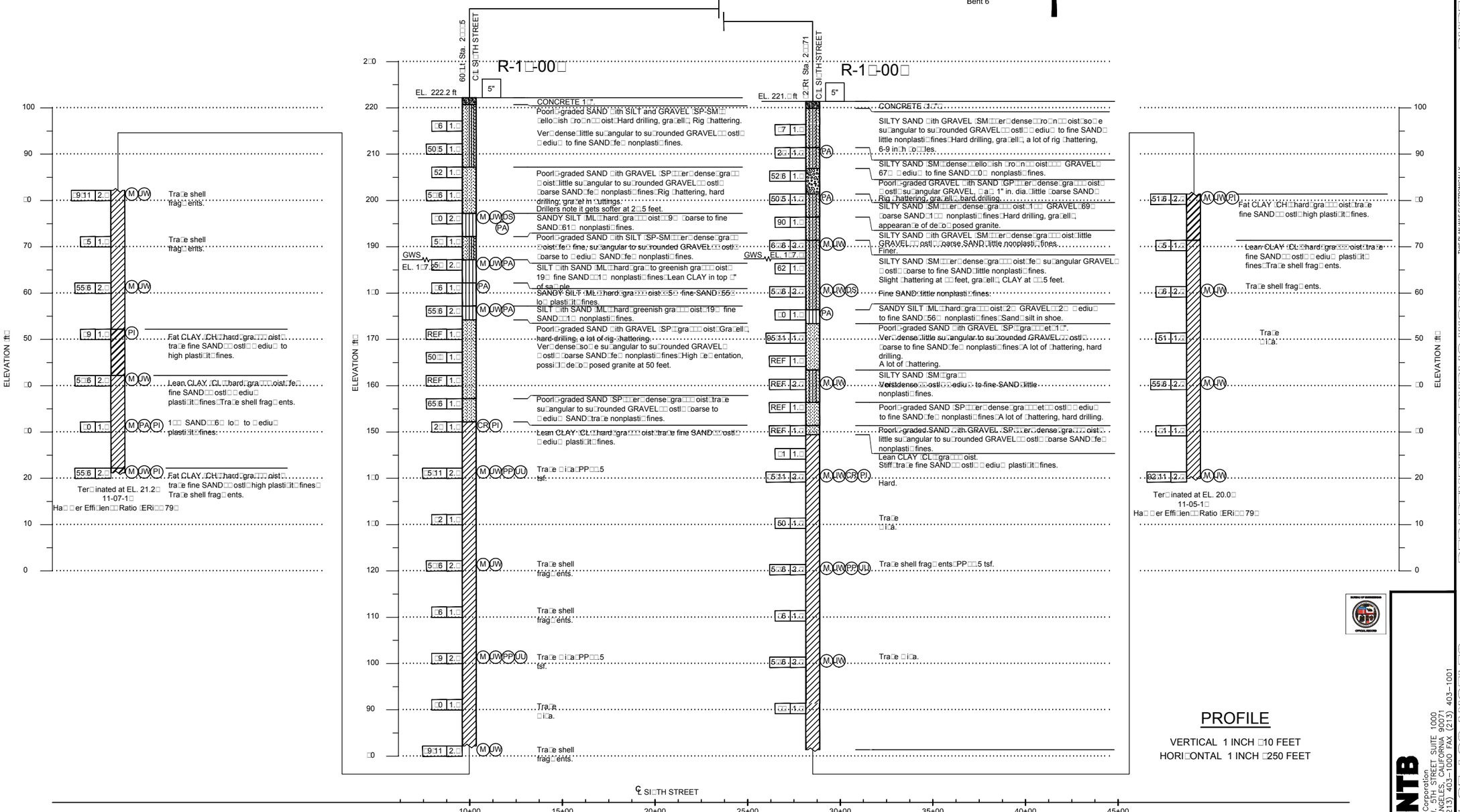

PROFILE

VERTICAL 1 INCH □10 FEET
HORI□ONTAL 1 INCH □250 FEET

HNTB
HNTB Corporation
601 W. 5TH STREET SUITE 1000
LOS ANGELES, CALIFORNIA 90071
TEL (213) 403-1000 FAX (213) 403-1001

DEPARTMENT OF PUBLIC WORKS
CITY OF LOS ANGELES

BUREAU OF ENGINEERING
LA DPW ENGINEERING Serving the People of Los Angeles by Building the Future

NO.	REVISIONS:	DATE	BY

STRUCTURE NO. 5□C-2□29

INDEX NO. P-38113

DESIGN GROUP
ENGINEER: GARY LEE MOORE, P.E. CITY ENGINEER DATE:
LIC. NO.
DESIGNED BY:
DRAWN BY:
CHECKED BY:
APPROVED BY:

VERTICAL CONTROL:
HORIZONTAL CONTROL:

SHEET TITLE: LOG OF TEST BORING SHEET 3 OF 20
PROJECT: SIXTH STREET VIADUCT REPLACEMENT PROJECT
ADDRESS: 6TH STREET VIADUCT (WHITTIER BLVD.) LOS ANGELES, CA.

WORK ORDER NO. E70022□F
DRAWING NO. S9-53
SHEET □9 OF 560 SHEETS

THE CITY OF LOS ANGELES OR ITS OFFICERS OR AGENTS SHALL NOT BE RESPONSIBLE FOR THE ACCURACY OR COMPLETENESS OF ELECTRONIC COPIES OF THIS PLAN SHEET.

THIS PLAN WAS ELECTRONICALLY SIGNED AND STAMPED.

C:\D-Drive\13-102 HNTB 6th Street Viaduct Replacement\LOTB\Copied From Server 151130\LOTBS\6th LOTB 03_rev6.dwg 12/01/15 08:54

REVISION DATES DESIGN STAGE ONLY:

Sheet Version 3.0

ADDENDUM 5

Earth Mechanics, Inc.
Geotechnical and Earthquake Engineering
178000 Newhope Street, Suite B
Fountain Valley, California 92708
Phone: 714-751-3826
Fax: 714-751-3928

REGISTERED PROFESSIONAL ENGINEER ROBERT LAW No. C055784 EXP. 12-31-15 CIVIL STATE OF CALIFORNIA

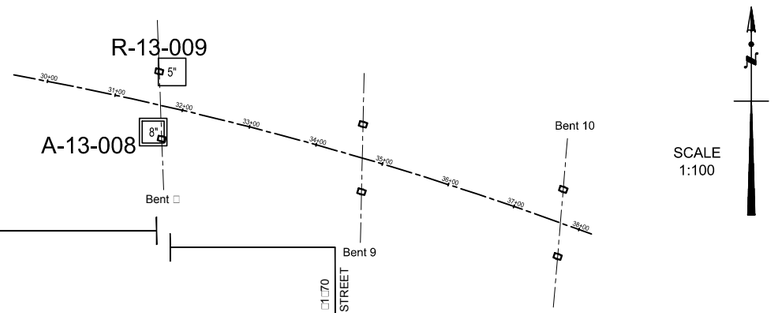

NOTES

1. THE LOTB SHEET WAS PREPARED IN ACCORDANCE WITH CALTRANS SOIL AND ROCK LOGGING, CLASSIFICATION, AND PRESENTATION MANUAL JUNE 2010

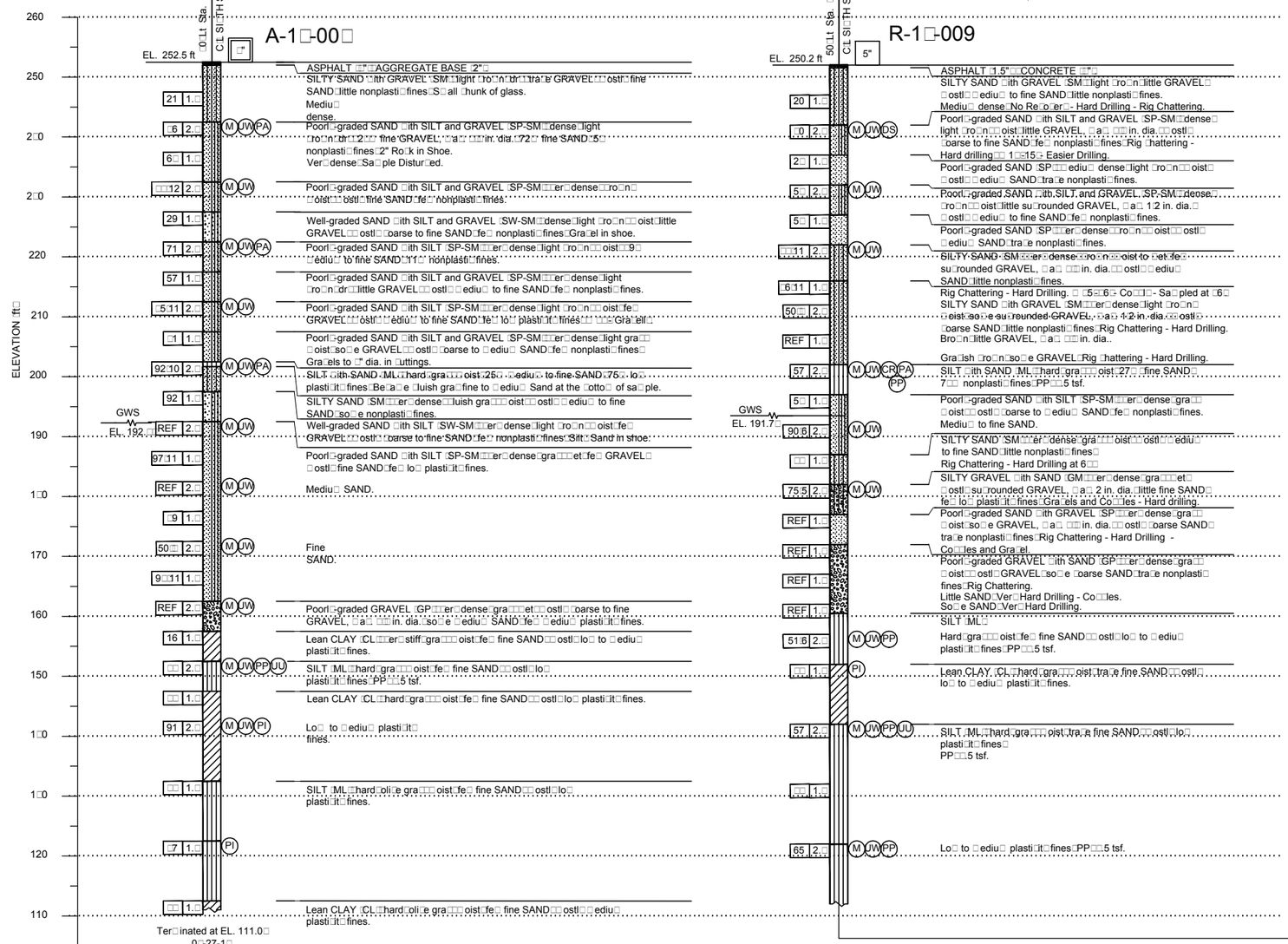

PROFILE

VERTICAL 1 INCH 10 FEET
HORIZONTAL 1 INCH 250 FEET

HNTB
HNTB Corporation
601 W. 5TH STREET SUITE 1000
LOS ANGELES, CALIFORNIA 90071
TEL (213) 403-1000 FAX (213) 403-1001

CITY OF LOS ANGELES
DEPARTMENT OF PUBLIC WORKS
BUREAU OF ENGINEERING

LA DPW ENGINEERING Serving the People's Engineering Needs

GARY LEE MOORE, P.E. CITY ENGINEER
DESIGN GROUP
ENGINEER:
DESIGNED BY:
DRAWN BY:
CHECKED BY:
APPROVED BY:
DATE:
UIC. NO.

NO.	REVISIONS:	DATE	BY

STRUCTURE NO. 53C-2129

INDEX NO. P-38113

THIS PLAN WAS ELECTRONICALLY SIGNED AND STAMPED.

VERTICAL CONTROL:
HORIZONTAL CONTROL:

SHEET TITLE: LOG OF TEST BORING SHEET 4 OF 20
PROJECT: SIXTH STREET VIADUCT REPLACEMENT PROJECT
ADDRESS: 6TH STREET VIADUCT (WHITTIER BLVD.) LOS ANGELES, CA.

WORK ORDER NO. E70022F

DRAWING NO. S9-54

SHEET 10 OF 560 SHEETS

THE CITY OF LOS ANGELES OR ITS OFFICERS OR AGENTS SHALL NOT BE RESPONSIBLE FOR THE ACCURACY OR COMPLETENESS OF ELECTRONIC COPIES OF THIS PLAN SHEET.

C:\D-Drive\13-102 HNTB 6th Street Viaduct Replacement\LOTB\Copied From Server 151130\LOTBS\6th LOTB 04_rev5.dwg 12/01/15 09:00

REVISION DATES DESIGN STAGE ONLY:

Sheet Version 3.0

ADDENDUM 5

Earth Mechanics, Inc.
Geotechnical and Earthquake Engineering
178000 Newhope Street, Suite B
Fountain Valley, California 92708
Phone: 714-751-3826
Fax: 714-751-3928

REGISTERED PROFESSIONAL ENGINEER ROBERT LAW No. C055784 EXP. 12-31-15 CIVIL STATE OF CALIFORNIA

NOTES

1. THE LOTB SHEET WAS PREPARED IN ACCORDANCE WITH CALTRANS SOIL AND ROC□ LOGGING, CLASSIFICATION, AND PRESENTATION MANUAL □UNE 2010□

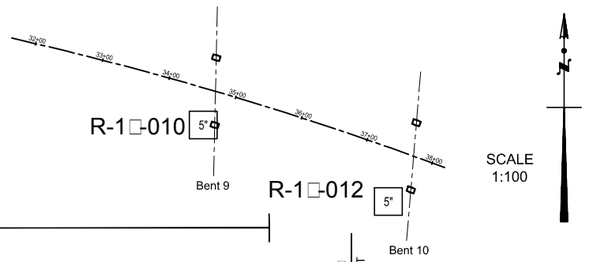

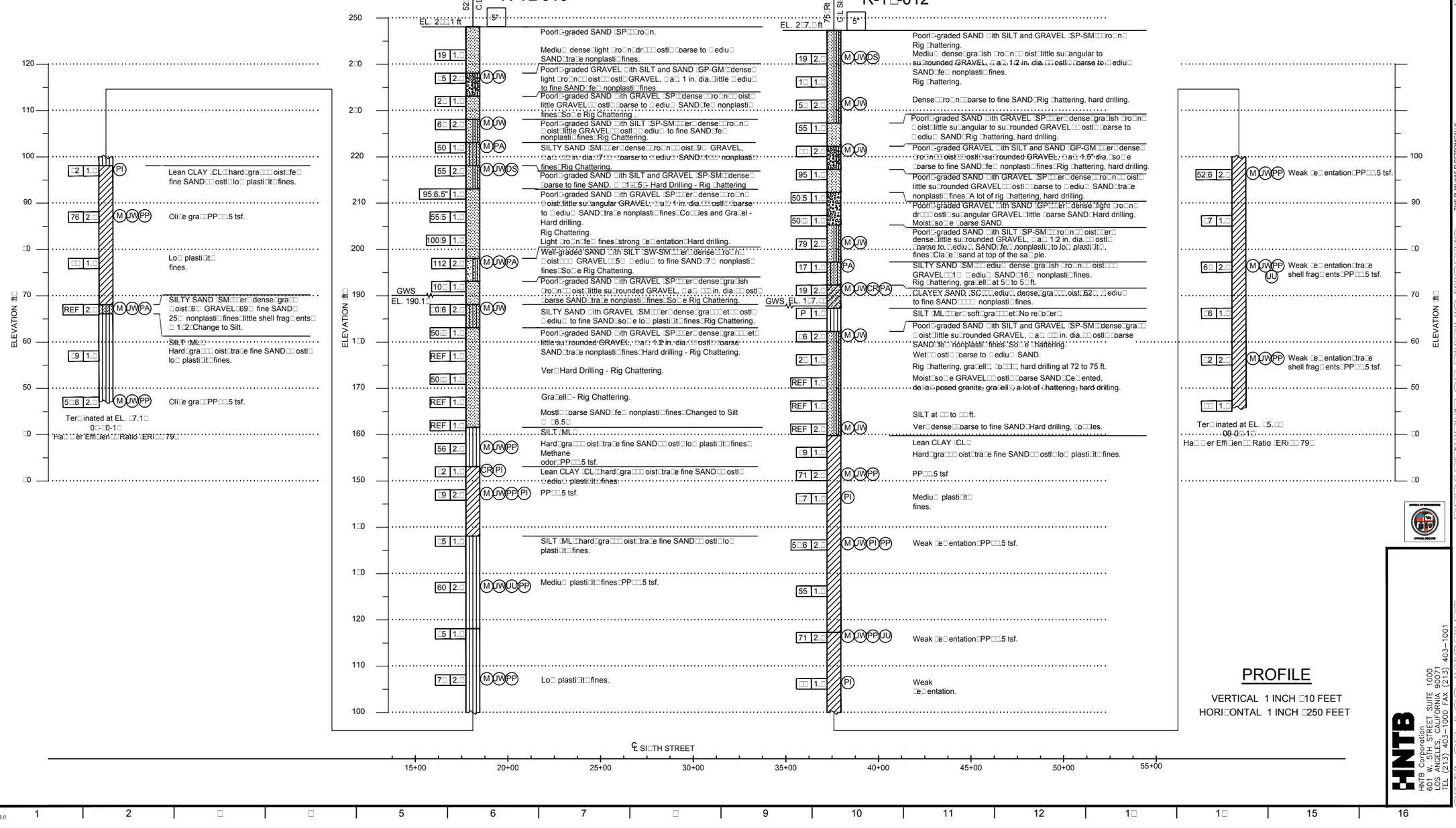

PROFILE

VERTICAL 1 INCH □10 FEET
HORI□ONTAL 1 INCH □250 FEET

HNTB
HNTB Corporation
601 W. 5TH STREET SUITE 1000
LOS ANGELES, CALIFORNIA 90071
TEL (213) 403-1000 FAX (213) 403-1001

CITY OF LOS ANGELES DEPARTMENT OF PUBLIC WORKS BUREAU OF ENGINEERING

CITY ENGINEER: GARY LEE MOORE, P.E. DATE:
ENGINEER: DESIGN GROUP LIC. NO.
DESIGNED BY:
DRAWN BY:
CHECKED BY:
APPROVED BY:

VERTICAL CONTROL:
HORIZONTAL CONTROL:

SHEET TITLE: LOG OF TEST BORING SHEET 5 OF 20
PROJECT: SIXTH STREET VIADUCT REPLACEMENT PROJECT
ADDRESS: 6TH STREET VIADUCT (WHITTIER BLVD.) LOS ANGELES, CA.

WORK ORDER NO. E70022□F
DRAWING NO. S9-55
SHEET □□1 OF 560 SHEETS

STRUCTURE NO. 5□C-2□29
INDEX NO. P-38113

NO.	REVISIONS:	DATE	BY

LA DPW ENGINEERING Serving the People's Engineering Needs

THIS PLAN WAS ELECTRONICALLY SIGNED AND STAMPED.

DESIGN DATES: DESIGN STAGE ONLY:

Sheet Version 3.0

C:\D-Drive\13-102 HNTB 6th Street Viaduct Replacement\LOTB\Copied From Server 151130\LOTBS\6th LOTB 05_rev5.dwg 12/01/15 09:08

THE CITY OF LOS ANGELES OR ITS OFFICERS OR AGENTS SHALL NOT BE RESPONSIBLE FOR THE ACCURACY OR COMPLETENESS OF ELECTRONIC COPIES OF THIS PLAN SHEET.

ADDENDUM 5

Earth Mechanics, Inc.
Geotechnical and Earthquake Engineering
178000 Newhope Street, Suite B
Fountain Valley, California 92708
Phone: 714-751-3826
Fax: 714-751-3928

REGISTERED PROFESSIONAL ENGINEER ROBERT LAW No. C055784 EXP. 12-31-15 CIVIL STATE OF CALIFORNIA

NOTES

1. THE LOTB SHEET WAS PREPARED IN ACCORDANCE WITH CALTRANS SOIL AND ROC□ LOGGING, CLASSIFICATION, AND PRESENTATION MANUAL □UNE 2010□

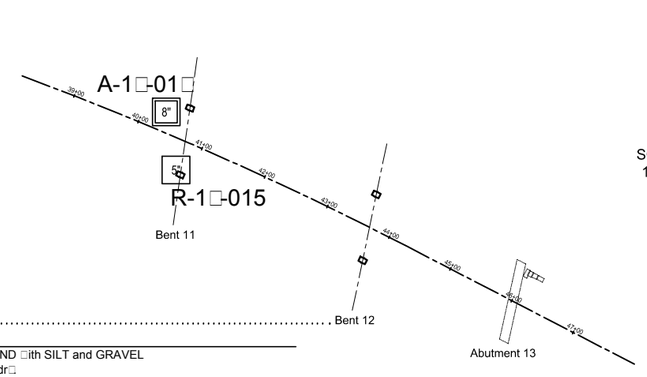

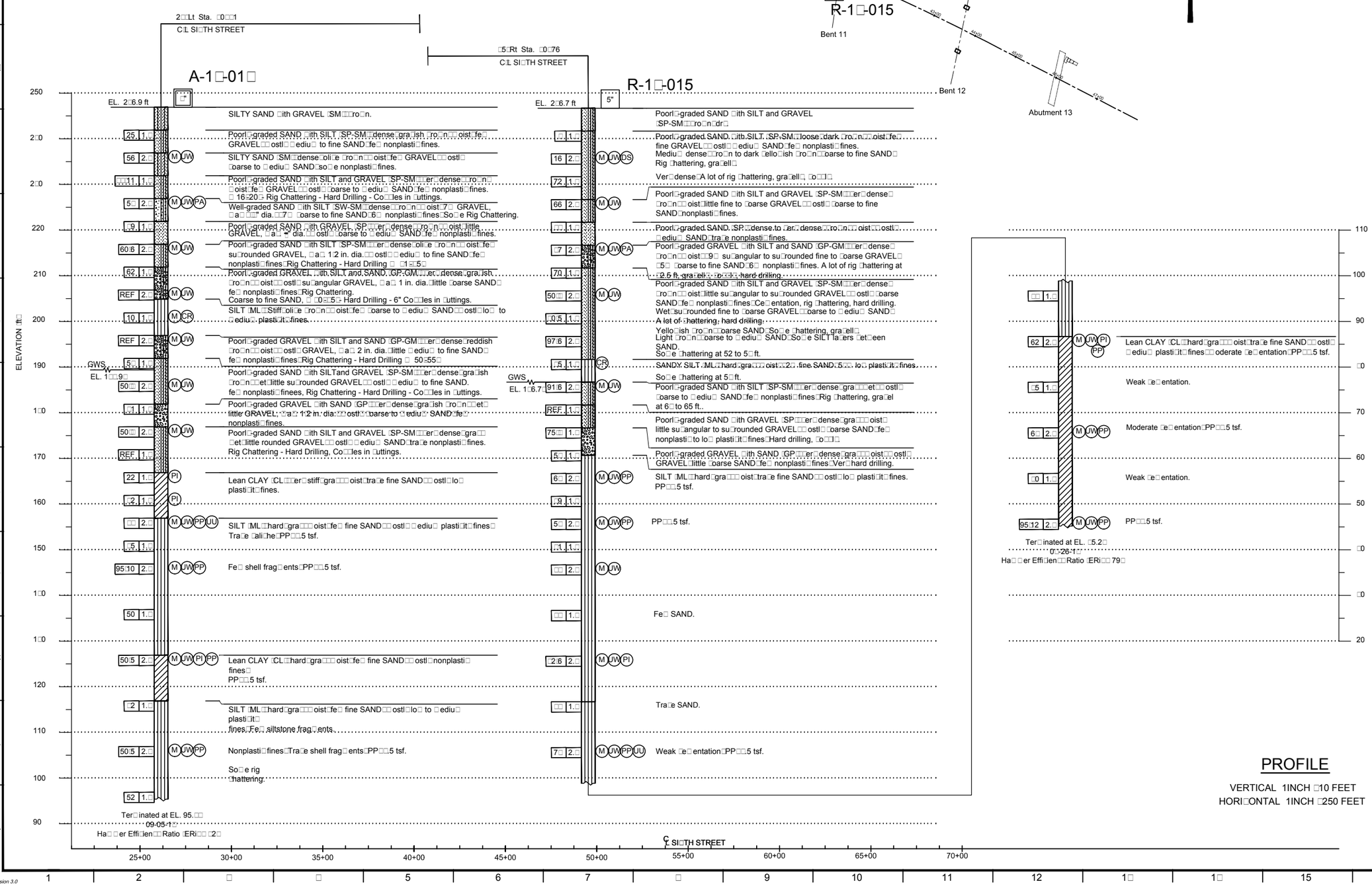

PROFILE

VERTICAL 1INCH □10 FEET
HORI□ONTAL 1INCH □250 FEET

HNTB
HNTB Corporation
601 W. 5TH STREET SUITE 1000
LOS ANGELES, CALIFORNIA 90071
TEL (213) 403-1000 FAX (213) 403-1001

CITY OF LOS ANGELES
DEPARTMENT OF PUBLIC WORKS
BUREAU OF ENGINEERING

LA DPW ENGINEERING Serving the People's Engineering Needs

GARY LEE MOORE, P.E. CITY ENGINEER

DESIGN GROUP	ENGINEER:	DESIGNED BY:	DRAWN BY:	CHECKED BY:	APPROVED BY:
	LIC. NO.				
	DATE:				

NO.	REVISIONS:	DATE	BY

INDEX NO. P-38113

STRUCTURE NO. 5□C-2□29

VERTICAL CONTROL:
HORIZONTAL CONTROL:

SHEET TITLE: LOG OF TEST BORING SHEET 6 OF 20

PROJECT: SIXTH STREET VIADUCT REPLACEMENT PROJECT

ADDRESS: 6TH STREET VIADUCT (WHITTIER BLVD.) LOS ANGELES, CA.

WORK ORDER NO. E70022□F

DRAWING NO. S9-56

SHEET □2 OF 560 SHEETS

REVISION DATES
DESIGN STAGE CONTROL:

THE CITY OF LOS ANGELES OR ITS OFFICERS OR AGENTS SHALL NOT BE RESPONSIBLE FOR THE ACCURACY OR COMPLETENESS OF ELECTRONIC COPIES OF THIS PLAN SHEET.

THIS PLAN WAS ELECTRONICALLY SIGNED AND STAMPED.

C:\D-Drive\13-102 HNTB 6th Street Viaduct Replacement\LOTB\Copied From Server 151130\LOTBS\6th LOTB 06_rev5.dwg 12/01/15 09:13

Sheet Version 3.0

ADDENDUM 5

Earth Mechanics, Inc.
Geotechnical and Earthquake Engineering

178000 Newhope Street, Suite B
Fountain Valley, California 92708
Phone: 714-751-3826
Fax: 714-751-3928

REGISTERED PROFESSIONAL ENGINEER
ROBERT LAW
No. C055784
EXP. 12-31-15
CIVIL
STATE OF CALIFORNIA

NOTES

1. THE LOTB SHEET WAS PREPARED IN ACCORDANCE WITH CALTRANS SOIL AND ROC□ LOGGING, CLASSIFICATION, AND PRESENTATION MANUAL □UNE 2010□

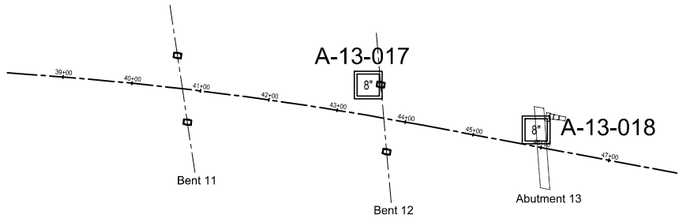

PROFILE
VERTICAL 1 INCH □10 FEET
HORI□ONTAL 1 INCH □250 FEET

HNTB
HNTB Corporation
601 W. 5TH STREET SUITE 1000
LOS ANGELES, CALIFORNIA 90071
TEL (213) 403-1000 FAX (213) 403-1001

CITY OF LOS ANGELES
DEPARTMENT OF PUBLIC WORKS
BUREAU OF ENGINEERING
LA DPW ENGINEERING Serving the People • Delivering the Future
THIS PLAN WAS ELECTRONICALLY SIGNED AND STAMPED.

GARY LEE MOORE, P.E. CITY ENGINEER
DESIGN GROUP
ENGINEER:
LIC. NO.
DESIGNED BY:
DRAWN BY:
CHECKED BY:
APPROVED BY:
DATE:
BY:
REVISIONS:
NO.

STRUCTURE NO. 5□C-2□29
INDEX NO. P-38113

SHEET TITLE: LOG OF TEST BORING SHEET 7 OF 20
PROJECT: SIXTH STREET VIADUCT REPLACEMENT PROJECT
ADDRESS: 6TH STREET VIADUCT (WHITTIER BLVD.) LOS ANGELES, CA.

VERTICAL CONTROL:
HORIZONTAL CONTROL:

WORK ORDER NO. E700220F
DRAWING NO. S9-57
SHEET □□□ OF 560 SHEETS

REVISION DATES
DESIGN STAGE ONLY□

C:\D-Drive\13-102 HNTB 6th Street Viaduct Replacement\LOTB\Copied From Server 151130\LOTBS\6th LOTB 07_rev5.dwg 12/01/15 09:15

THE CITY OF LOS ANGELES OR ITS OFFICERS OR AGENTS SHALL NOT BE RESPONSIBLE FOR THE ACCURACY OR COMPLETENESS OF ELECTRONIC COPIES OF THIS PLAN SHEET.

Sheet Version 3.0

ADDENDUM 5

BENCHMARKS

	BM	ELEVATION IN FT	DESCRIPTION OF LOCATION
1.	12-0□070	2□7.26	CUT SPI□E 7FT S OF S CURB 7TH ST□0.□FT W OF W END OF HANDRAIL TO BRIDGE 25FT E OF SANTA FE AVE.
2.	11-02□□9	□1□□6	WIRE SP□ IN W CURB CHICAGO ST□5 FT N OF N P.L. WHITTIER BLVD□N END CB

THE VERTICAL DATUM IS BASED UPON THE CITY OF LOS ANGELES PRECISE BENCH BOO□, NATIONAL GEODETIC VERTICAL DATUM OF 1929 □NGVD 29□- 19□5 AD□USTMENT IN FEET.

BASIS OF BEARING

BASIS OF BEARING S77° 38' 27" E: COORDINATES BEARINGS AND DISTANCES ARE BASED ON ICM COORDINATES SHOWN ON NAVIGATE LA HOLDING THE COORDINATE □N□1□□6□□7.06, E□6□91165.61□AT THE INTERSECTION OF 6TH ST. AND MATEO ST. FOR POSITION AND HOLDING THE COORDINATE □N□1□□5□7□6□, E□6□95□□□11□AT INTERSECTION OF BOYLE AVE. AND WHITTIER BLVD. FOR DIRECTION OR BEARING.

NOTES

1. THE LOTB SHEET WAS PREPARED IN ACCORDANCE WITH CALTRANS SOIL AND ROC□ LOGGING, CLASSIFICATION, AND PRESENTATION MANUAL □UNE 2010□

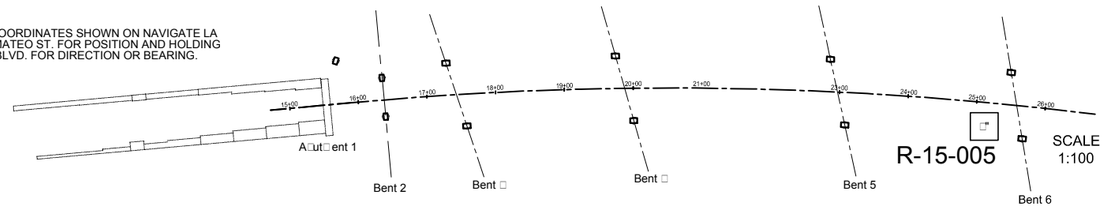

Earth Mechanics, Inc.
Geotechnical and Earthquake Engineering
178000 Newhope Street, Suite B
Fountain Valley, California 92708
Phone: 714-751-3826
Fax: 714-751-3928

REGISTERED PROFESSIONAL ENGINEER ROBERT LAW No. C055784 EXP. 12-31-15 CIVIL STATE OF CALIFORNIA

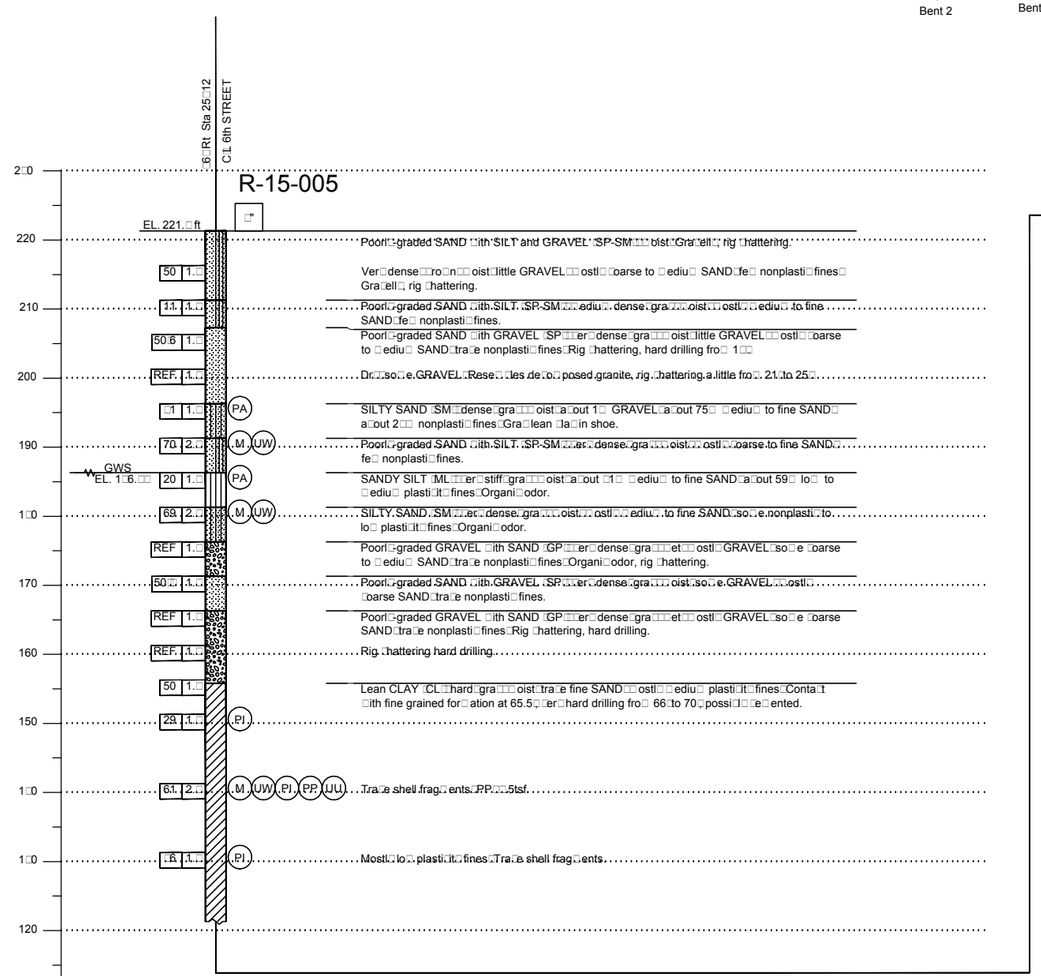

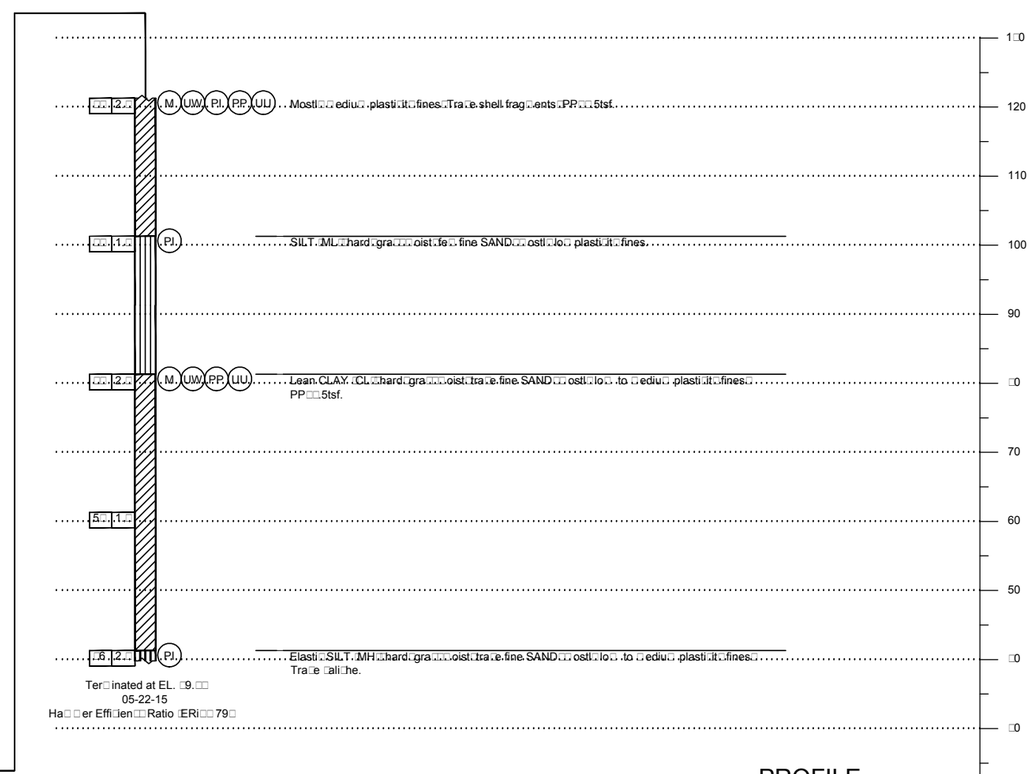

PROFILE

VERTICAL 1 INCH □10 FEET
HORI□ONTAL 1 INCH □50 FEET

HNTB
HNTB Corporation
601 W. 5TH STREET SUITE 1000
LOS ANGELES, CALIFORNIA 90071
TEL (213) 403-1000 FAX (213) 403-1001

BUREAU OF ENGINEERING
DEPARTMENT OF PUBLIC WORKS
CITY OF LOS ANGELES

LA DPW ENGINEERING Serving the People's Engineering Needs

NO.	REVISIONS:	DATE	BY

STRUCTURE NO. 5□C-2□29

INDEX NO. P-38113

THIS PLAN WAS ELECTRONICALLY SIGNED AND STAMPED.

GARY LEE MOORE, P.E. CITY ENGINEER
DESIGN GROUP
LIC. NO.
ENGINEER:
DESIGNED BY:
DRAWN BY:
CHECKED BY:
APPROVED BY:
DATE:

VERTICAL CONTROL:
HORIZONTAL CONTROL:

SHEET TITLE: LOG OF TEST BORING SHEET 8 OF 20

PROJECT: SIXTH STREET VIADUCT REPLACEMENT PROJECT

ADDRESS: 6TH STREET VIADUCT (WHITTIER BLVD.) LOS ANGELES, CA.

WORK ORDER NO. E70022□F

DRAWING NO. S9-58

SHEET □□□ OF 560 SHEETS

PROVISION DATES
DESIGN STAGE ONLY□

C:\D-Drive\13-102 HNTB 6th Street Viaduct Replacement\LOTB\Copied From Server 151130\LOTBS\6th LOTB 08_rev1.dwg 12/01/15 09:21

THE CITY OF LOS ANGELES OR ITS OFFICERS OR AGENTS SHALL NOT BE RESPONSIBLE FOR THE ACCURACY OR COMPLETENESS OF ELECTRONIC COPIES OF THIS PLAN SHEET.

Sheet Version 3.0

ADDENDUM 5

Earth Mechanics, Inc.
Geotechnical and Earthquake Engineering

178000 Newhope Street, Suite B
Fountain Valley, California 92708
Phone: 714-751-3826
Fax: 714-751-3928

REGISTERED PROFESSIONAL ENGINEER
ROBERT LAW
No. C055784
EXP. 12-31-15
CIVIL
STATE OF CALIFORNIA

NOTES

1. THE LOTB SHEET WAS PREPARED IN ACCORDANCE WITH CALTRANS SOIL AND ROC□ LOGGING, CLASSIFICATION, AND PRESENTATION MANUAL □UNE 2010□

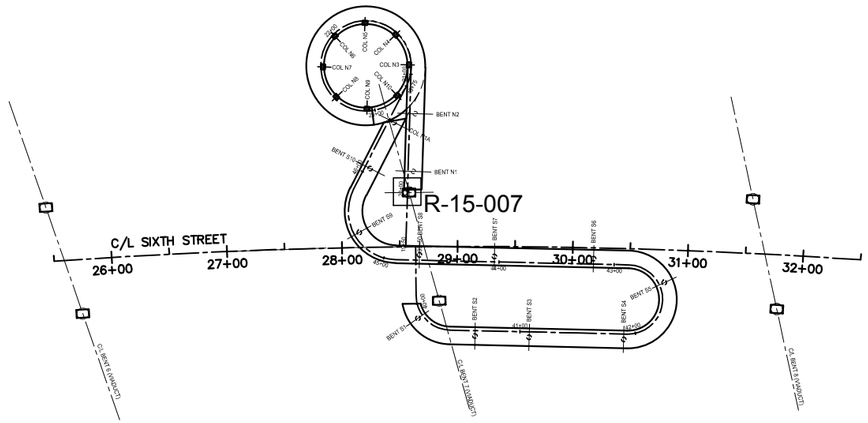

SCALE
1:60

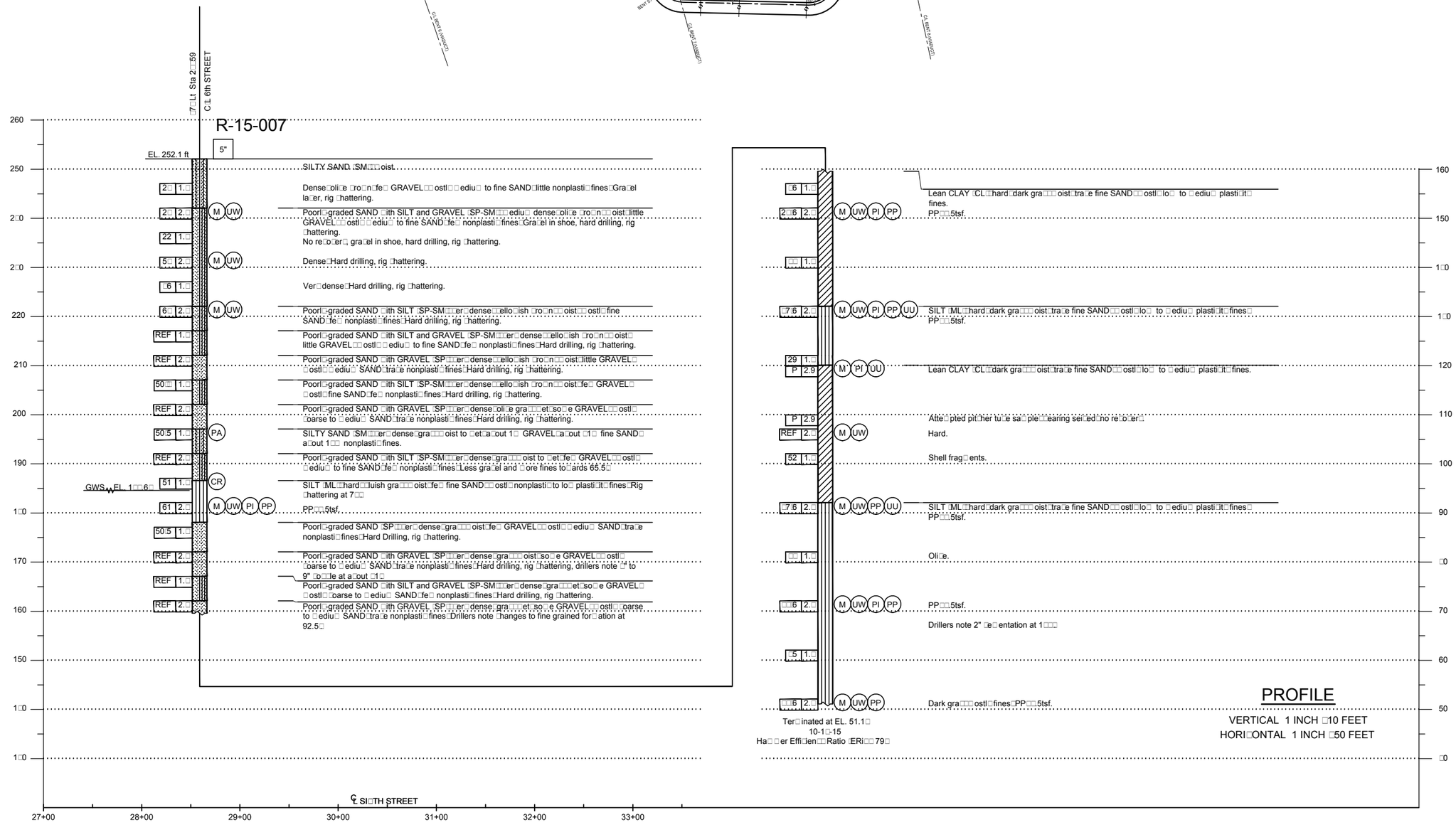

HNTB
HNTB Corporation
601 W. 5TH STREET SUITE 1000
LOS ANGELES, CALIFORNIA 90071
TEL (213) 403-1000 FAX (213) 403-1001

BUREAU OF ENGINEERING
LA DPW ENGINEERING Serving the People's Engineering Needs

NO.	REVISIONS:	DATE	BY

STRUCTURE NO. 5□C-2□29

INDEX NO. P-38113

THIS PLAN WAS ELECTRONICALLY SIGNED AND STAMPED.

CITY OF LOS ANGELES DEPARTMENT OF PUBLIC WORKS

GARY LEE MOORE, P.E. CITY ENGINEER
DESIGN GROUP
ENGINEER:
DESIGNED BY:
DRAWN BY:
CHECKED BY:
APPROVED BY:
DATE:
LIC. NO.

VERTICAL CONTROL:
HORIZONTAL CONTROL:

SHEET TITLE: LOG OF TEST BORING SHEET 9 OF 20

PROJECT: SIXTH STREET VIADUCT REPLACEMENT PROJECT

ADDRESS: 6TH STREET VIADUCT (WHITTIER BLVD.) LOS ANGELES, CA.

WORK ORDER NO. E70022□F

DRAWING NO. S9-59

SHEET □5 OF 560 SHEETS

REVISION DATES
DESIGN STAGE ONLY□

THE CITY OF LOS ANGELES OR ITS OFFICERS OR AGENTS SHALL NOT BE RESPONSIBLE FOR THE ACCURACY OR COMPLETENESS OF ELECTRONIC COPIES OF THIS PLAN SHEET.

C:\D--Drive\13--102 HNTB 6th Street Viaduct Replacement\LOTB\Copied From Server 151130\LOTBS\6th LOTB 09_rev1.dwg 12/01/15 09:24

Sheet Version 3.0

ADDENDUM 5

Earth Mechanics, Inc.
Geotechnical and Earthquake Engineering

178000 Newhope Street, Suite B
Fountain Valley, California 92708
Phone: 714-751-3826
Fax: 714-751-3928

REGISTERED PROFESSIONAL ENGINEER — ROBERT LAW — No. C055784, EXP. 12-31-15 — CIVIL — STATE OF CALIFORNIA

NOTES

1. THE LOTB SHEET WAS PREPARED IN ACCORDANCE WITH CALTRANS SOIL AND ROC□ LOGGING, CLASSIFICATION, AND PRESENTATION MANUAL □UNE 2010□

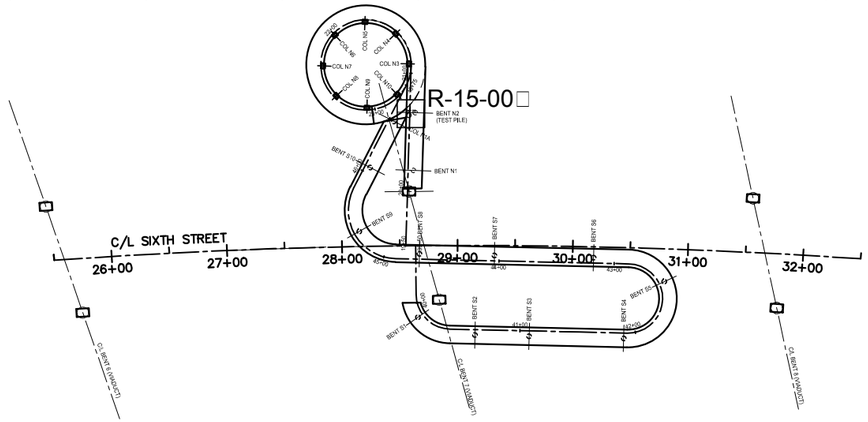

SCALE 1:60

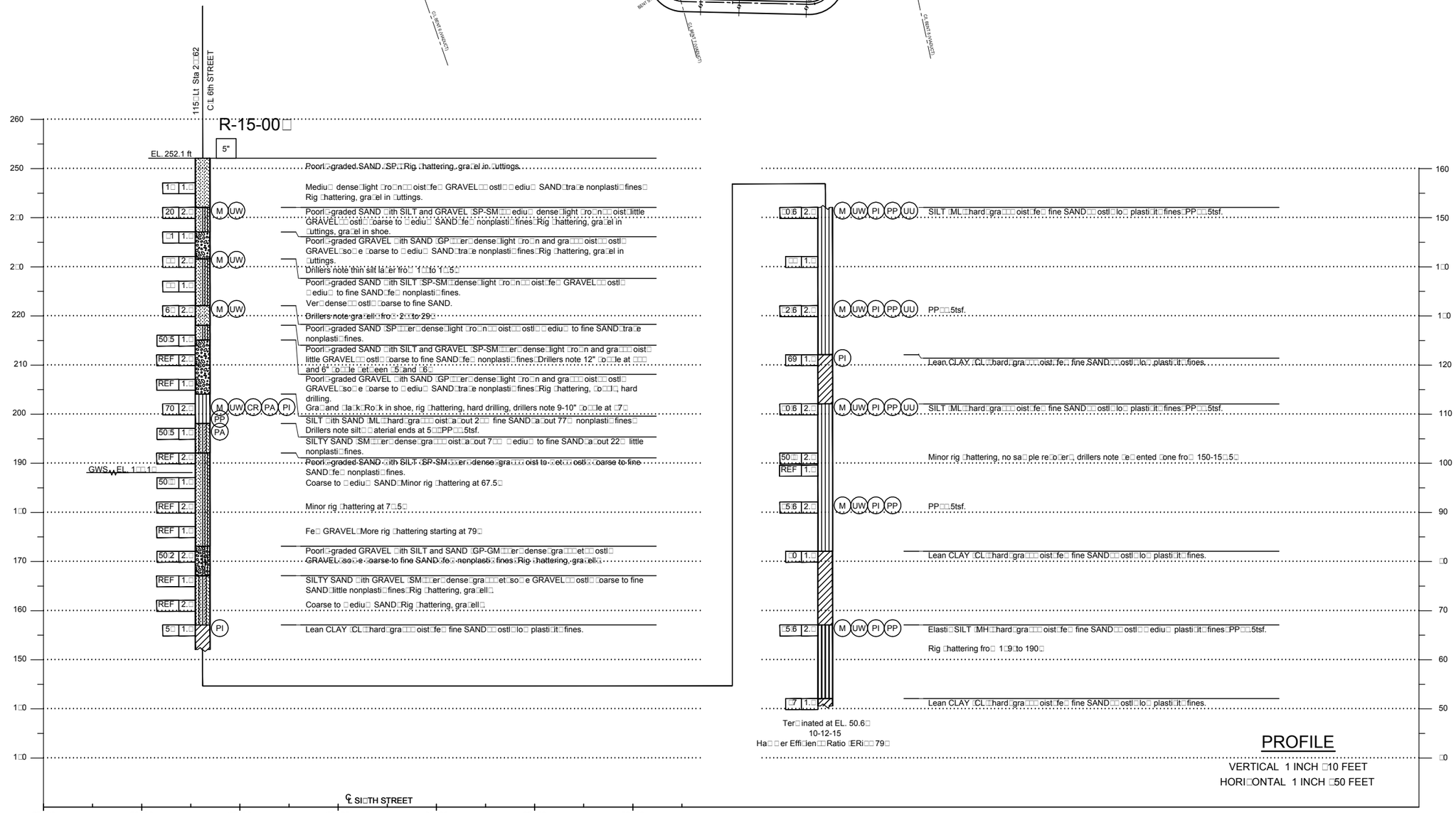

HNTB
HNTB Corporation
601 W. 5TH STREET SUITE 1000
LOS ANGELES, CALIFORNIA 90071
TEL (213) 403-1000 FAX (213) 403-1001

CITY OF LOS ANGELES DEPARTMENT OF PUBLIC WORKS
BUREAU OF ENGINEERING

LA DPW ENGINEERING — Serving the People of Los Angeles Since the Fires

GARY LEE MOORE, P.E. — CITY ENGINEER
DESIGN GROUP
ENGINEER: LIC. NO.
DESIGNED BY:
DRAWN BY:
CHECKED BY:
APPROVED BY:
DATE:

NO.	REVISIONS:	DATE	BY

INDEX NO. P-38113
STRUCTURE NO. 5□C-2□29

THIS PLAN WAS ELECTRONICALLY SIGNED AND STAMPED.

VERTICAL CONTROL:
HORIZONTAL CONTROL:

SHEET TITLE: LOG OF TEST BORING SHEET 10 OF 20

PROJECT: SIXTH STREET VIADUCT REPLACEMENT PROJECT

ADDRESS: 6TH STREET VIADUCT (WHITTIER BLVD.) LOS ANGELES, CA.

WORK ORDER NO. E70022□F

DRAWING NO. S9-60

SHEET □6 OF 560 SHEETS

REVISION DATES DESIGN STAGE ONLY□

THE CITY OF LOS ANGELES OR ITS OFFICERS OR AGENTS SHALL NOT BE RESPONSIBLE FOR THE ACCURACY OR COMPLETENESS OF ELECTRONIC COPIES OF THIS PLAN SHEET.

C:\D-Drive\13-102 HNTB 6th Street Viaduct Replacement\LOTB\Copied From Server 151130\LOTBS\6th LOTB 10_rev1.dwg 12/01/15 09:27

Sheet Version 3.0

ADDENDUM 5

Earth Mechanics, Inc.
Geotechnical and Earthquake Engineering

17660 Newhope Street, Suite E
Fountain Valley, California 92708
Phone: 714-751-3826
Fax: 714-751-3928

REGISTERED PROFESSIONAL ENGINEER
Mine Kapusuz
No. GE2564
EXP. 12-31-08
GEOTECHNICAL
STATE OF CALIFORNIA

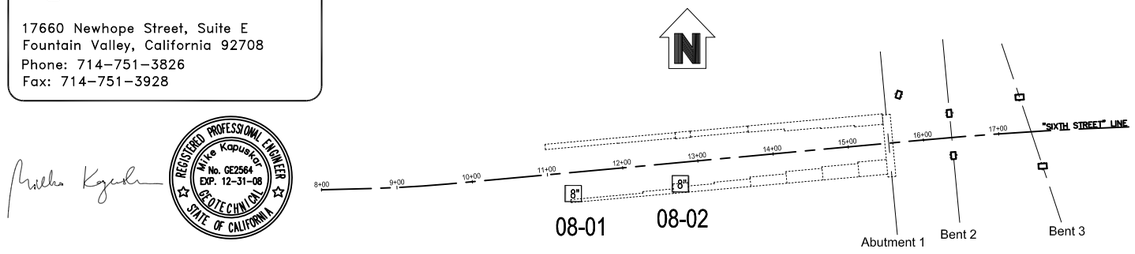

SCALE
1"=100'

BENCHMARKS

	BM#	ELEVATION IN FT	DESCRIPTION OF LOCATION
1.	12-04070	247.26	CUT SPIKE 7FT S OF S CURB 7TH ST; 0.8FT W OF W END OF HANDRAIL TO BRIDGE 25FT E OF SANTA FE AVE.
2.	11-02339	318.86	WIRE SPK IN W CURB CHICAGO ST; 5 FT N OF N P.L. WHITTIER BLVD; N END CB

THE VERTICAL DATUM IS BASED UPON THE CITY OF LOS ANGELES PRECISE BENCH BOOK, NATIONAL GEODETIC VERTICAL DATUM OF 1929 (NGVD 29) - 1985 ADJUSTMENT IN FEET.

BASIS OF BEARING

BASIS OF BEARING S77° 38' 27" E: COORDINATES BEARINGS AND DISTANCES ARE BASED ON ICM COORDINATES SHOWN ON NAVIGATE LA HOLDING THE COORDINATE (N=1836387.06, E=6491165.61) AT THE INTERSECTION OF 6TH ST. AND MATEO ST. FOR POSITION AND HOLDING THE COORDINATE (N=1835473.68, E=6495334.11) AT INTERSECTION OF BOYLE AVE. AND WHITTIER BLVD. FOR DIRECTION OR BEARING.

NOTES

1. SAMPLER SIZE OF 1.4" INDICATES A STANDARD SAMPLER WITH INSIDE DIAMETER (ID) OF 1.4" AND OUTSIDE DIAMETER (OD) OF2".
2. SAMPLER SIZE OF 2.4" INDICATES A SPLIT-BARREL CALIFORNIA MODIFIED DRIVE SAMPLER WITH ID OF 2.4" AND OD OF 3-1/4".
3. SAMPLER SIZE OF 2.8" INDICATES A PITCHER TUBE PUSH SAMPLER WITH ID OF 2.875" AND OD OF 3.0".
4. BOREHOLE SIZE OF 8" INDICATES A HOLLOW-STEM AUGER BORING. AN AUTOMATIC-TRIP HAMMER SYSTEM CONSISTING OF A 140-LB HAMMER WITH 30" DROP WAS USED TO ADVANCE THE SAMPLERS.
5. BOREHOLE SIZE OF 4-7/8" INDICATES A ROTARY WASH BORING. A ROPE-AND-PULLEY SYSTEM CONSISTING OF A 140-LB HAMMER WITH 30" DROP WAS USED TO ADVANCE THE SAMPLERS.

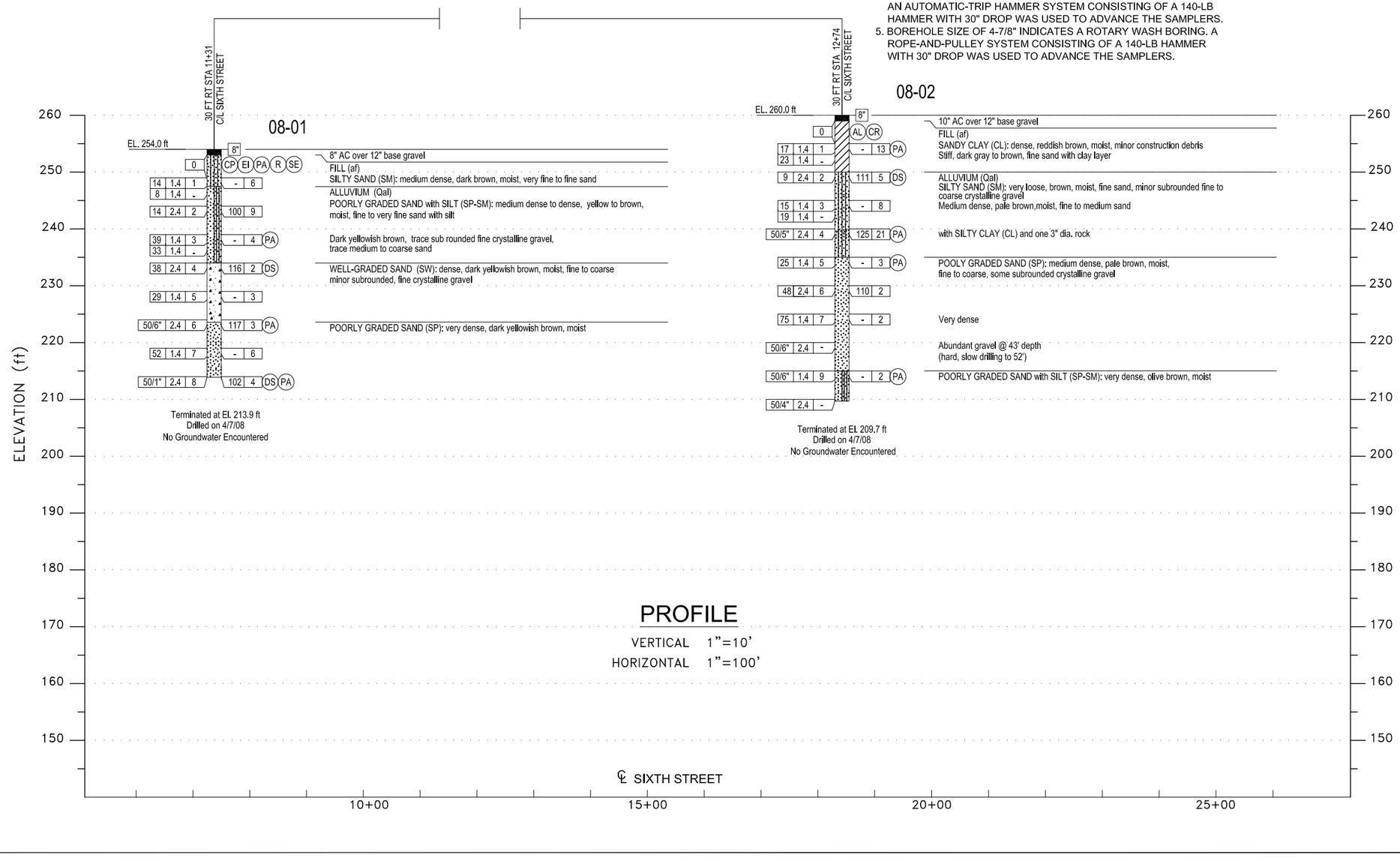

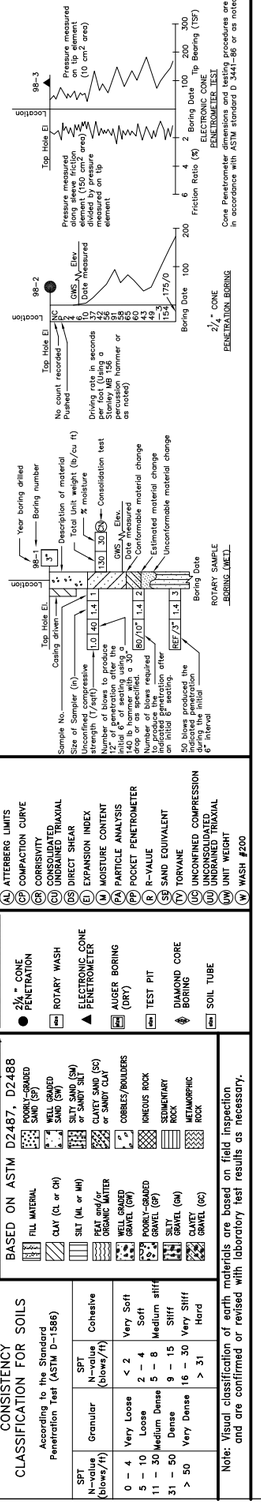

TEST DESIGNATIONS

- (AL) ATTERBERG LIMITS
- (CP) COMPACTION CURVE
- (CR) CORRISIVITY
- (CU) CONSOLIDATED UNDRAINED TRIAXIAL
- (DS) DIRECT SHEAR
- (EI) EXPANSION INDEX
- (M) MOISTURE CONTENT
- (PA) PARTICLE ANALYSIS
- (PP) POCKET PENETROMETER
- (R) R-VALUE
- (SE) SAND EQUIVALENT
- (TV) TORVANE
- (UC) UNCONFINED COMPRESSION
- (UU) UNCONSOLIDATED UNDRAINED TRIAXIAL
- (W) UNIT WEIGHT
- (W) WASH #200

TYPE OF BORINGS

- 2½" CONE PENETRATION
- RW ROTARY WASH
- ELECTRONIC CONE PENETROMETER
- AB AUGER BORING (DRY)
- TP TEST PIT
- DC DIAMOND CORE BORING
- ST SOIL TUBE

LEGEND OF EARTH MATERIALS (USCS) BASED ON ASTM D2487, D2488

FILL MATERIAL
- POORLY-GRADED SAND (SP)
- WELL-GRADED SAND (SW)
- SILTY SAND (SM) or SANDY SILT
- CLAYEY SAND (SC) or SANDY CLAY
- COBBLES/BOULDERS

CLAY (CL or CH)
- POORLY-GRADED GRAVEL (GP)
- SILTY GRAVEL (GM)
- CLAYEY GRAVEL (GC)

SILT (ML or MH)
- IGNEOUS ROCK
- SEDIMENTARY ROCK
- METAMORPHIC ROCK

PEAT and/or ORGANIC MATTER

CONSISTENCY CLASSIFICATION FOR SOILS
According to the Standard Penetration Test (ASTM D-1586)

SPT N-value (blows/ft)	Granular	SPT N-value (blows/ft)	Cohesive
0 - 4	Very Loose	< 2	Very Soft
5 - 10	Loose	2 - 4	Soft
11 - 30	Medium Dense	5 - 8	Medium stiff
31 - 50	Dense	9 - 15	Stiff
> 50	Very Dense	16 - 30	Very Stiff
		> 31	Hard

Note: Visual classification of earth materials are based on field inspection and are confirmed or revised with laboratory test results as necessary.

BUREAU OF ENGINEERING
GARY L. MOORE, P.E. CITY ENGINEER • BRADLEY M. SMITH DEPUTY CITY ENGINEER

THE CITY OF LOS ANGELES OR ITS OFFICERS OR AGENTS SHALL NOT BE RESPONSIBLE FOR THE ACCURACY OR COMPLETENESS OF ELECTRONIC COPIES OF THIS PLAN SHEET.

SIGNED AND STAMPED.

STRUCTURAL ENGINEERING DIVISION
JOHN KOO, S.E. DIVISION ENGINEER • 250 EAST FIRST STREET, SUITE 700 TEL: (213) 847-5822

ENGINEERING
L.A. CITY
Exp. 6-30-08
For Hit. Furnace

NO.	REVISIONS:	DATE:	BY:

INDEX NO. P-38113

PROGRAM MANAGER PHIL RICHARDSON, P.E.
DESIGN GROUP

	DATE:
DESIGNED: A.ZAND	6/20/08
DRAWN: K.THANT	6/21/08
CHECKED: N.KAPUSUKAR	8/12/08
PROJECT MANAGER:	LIC. NO. GE2564 EXPDATE
PROJECT ENGINEER:	LIC. NO. CE EXPDATE
RESPONSIBLE IN CHARGE: ENGINEER	LIC. NO. CE EXPDATE

STRUCTURE NO. 53C-2329

WORK ORDER NO. E70022□F

DRAWING NO. S9-61

SHEET □7 OF 560 SHEETS

SHEET TITLE: LOG OF TEST BORINGS SHEET 11 OF 20

PROJECT: SIXTH STREET VIADUCT OVER LOS ANGELES RIVER AND U.S HIGHWAY 101

ADDRESS: LOS ANGELES

ADDENDUM 5

Earth Mechanics, Inc.
Geotechnical and Earthquake Engineering

17660 Newhope Street, Suite E
Fountain Valley, California 92708
Phone: 714-751-3826
Fax: 714-751-3928

REGISTERED PROFESSIONAL ENGINEER
Mirle Kapusov
No. GE2564
EXP. 12-31-08
GEOTECHNICAL
STATE OF CALIFORNIA

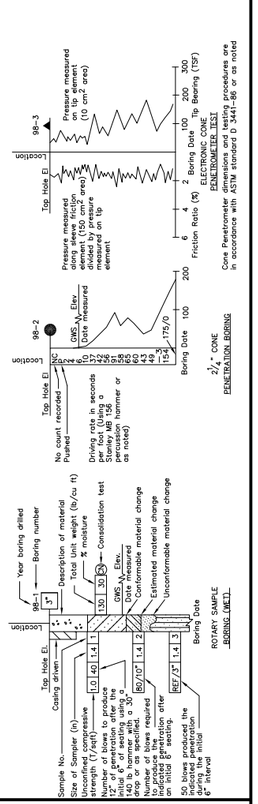

TEST DESIGNATIONS

(AT)	ATTERBERG LIMITS
(CP)	COMPACTION CURVE
(CR)	CORROSIVITY
(CU)	CONSOLIDATED UNDRAINED TRIAXIAL
(DS)	DIRECT SHEAR
(EI)	EXPANSION INDEX
(M)	MOISTURE CONTENT
(PA)	PARTICLE ANALYSIS
(PE)	POCKET PENETROMETER
(R)	R-VALUE
(SE)	SAND EQUIVALENT
(TV)	TORVANE
(UC)	UNCONFINED COMPRESSION
(UU)	UNCONSOLIDATED UNDRAINED TRIAXIAL
(γ)	UNIT WEIGHT
(W)	WASH #200

TYPE OF BORINGS

●	2½" CONE PENETRATION
RW	ROTARY WASH
▲	ELECTRONIC CONE PENETROMETER
AB	AUGER BORING (DRY)
TP	TEST PIT
DB	DIAMOND CORE BORING
ST	SOIL TUBE

LEGEND OF EARTH MATERIALS (USCS) BASED ON ASTM D2487, D2488

FILL MATERIAL
CLAY (CL or CH)
SILT (ML or MH)
PEAT and/or ORGANIC MATTER
WELL-GRADED GRAVEL (GW)
POORLY-GRADED GRAVEL (GP)
SILTY GRAVEL (GM)
CLAYEY GRAVEL (GC)
POORLY-GRADED SAND (SP)
WELL-GRADED SAND (SW)
SILTY SAND (SM) or SANDY SILT
CLAYEY SAND (SC) or SANDY CLAY
COBBLES/BOULDERS
IGNEOUS ROCK
SEDIMENTARY ROCK
METAMORPHIC ROCK

CONSISTENCY CLASSIFICATION FOR SOILS
According to the Standard Penetration Test (ASTM D-1586)

SPT N-value (blows/ft)	Granular	SPT N-value (blows/ft)	Cohesive
0 – 4	Very Loose	< 2	Very Soft
5 – 10	Loose	2 – 4	Soft
11 – 30	Medium Dense	5 – 8	Medium stiff
31 – 50	Dense	9 – 15	Stiff
> 50	Very Dense	16 – 30	Very Stiff
		> 31	Hard

Note: Visual classification of earth materials are based on field inspection and are confirmed or revised with laboratory test results as necessary.

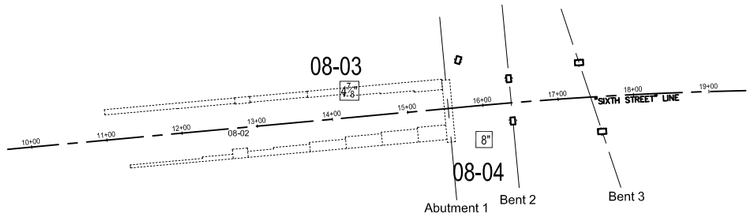

SCALE
1"=100'

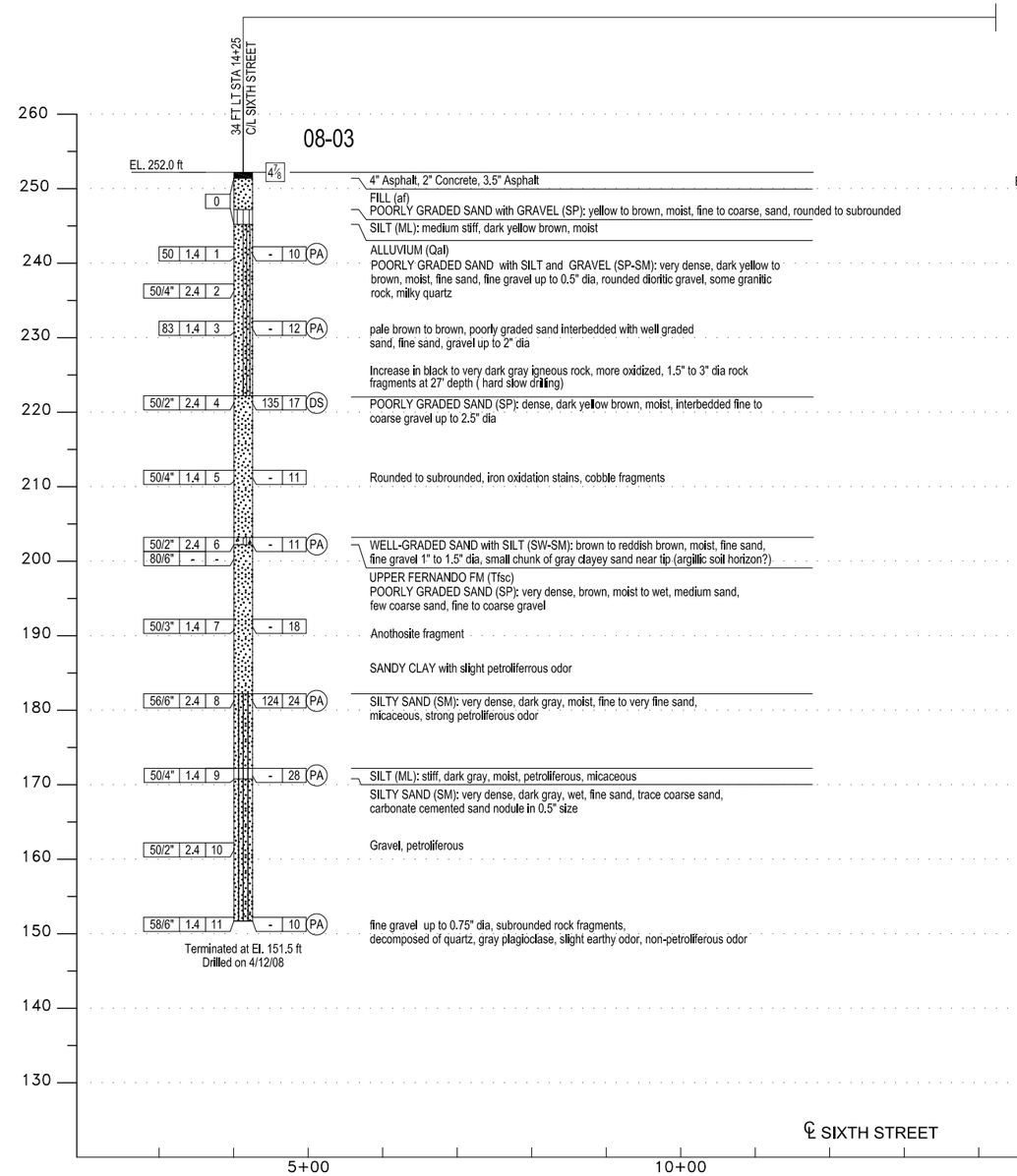

PROFILE
VERTICAL 1"=10'
HORIZONTAL 1"=100'

THE CITY OF LOS ANGELES OR ITS OFFICERS OR AGENTS SHALL NOT BE RESPONSIBLE FOR THE ACCURACY OR COMPLETENESS OF ELECTRONIC COPIES OF THIS PLAN SHEET.

BUREAU OF ENGINEERING
GARY L. MOORE, P.E. CITY ENGINEER • BRADLEY M. SMITH DEPUTY CITY ENGINEER

STRUCTURAL ENGINEERING DIVISION
JOHN KOO, S.E. DIVISION ENGINEER • 250 EAST FIRST STREET, SUITE 700 TEL: (213) 847-5822

ENGINEERING
PHIL RICHARDSON, P.E. DESIGN GROUP

NO.	REVISIONS:	DATE:	BY:

INDEX NO. P-38113

	DATE:
DESIGNED: A.ZAND	6/20/08
DRAWN: K.THAINT	6/21/08
CHECKED: R.KAPUSKAR	08/15/08
PROJECT MANAGER	LIC. NO. GE2564 EXPDATE
RESPONSIBLE CHARGE: ENGINEER	LIC. NO. CE EXPDATE
	LIC. NO. CE EXPDATE

STRUCTURE NO. 53C-2329

WORK ORDER NO.
E70022□F

DRAWING NO.
S9-62

SHEET □□□ OF 560 SHEETS

SHEET TITLE:
LOG OF TEST BORINGS
SHEET 12 OF 20

PROJECT:
SIXTH STREET VIADUCT OVER LOS ANGELES RIVER AND U.S HIGHWAY 101

ADDRESS:
LOS ANGELES

ADDENDUM 5

Earth Mechanics, Inc.
Geotechnical and Earthquake Engineering

17660 Newhope Street, Suite E
Fountain Valley, California 92708
Phone: 714-751-3826
Fax: 714-751-3928

REGISTERED PROFESSIONAL ENGINEER
Mirle Kapusar
No. GE2564
EXP. 12-31-08
GEOTECHNICAL
STATE OF CALIFORNIA

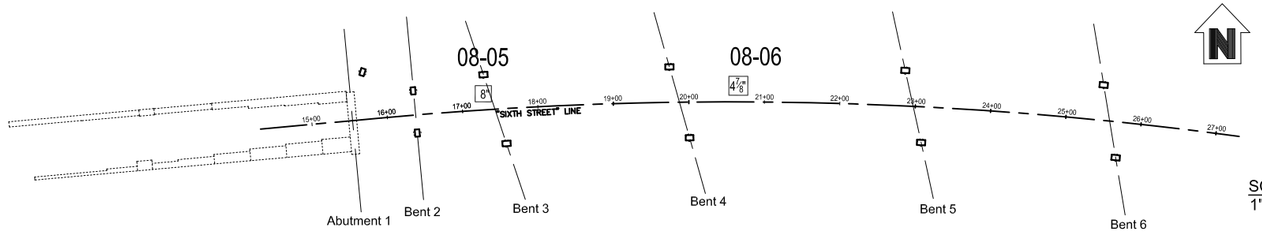

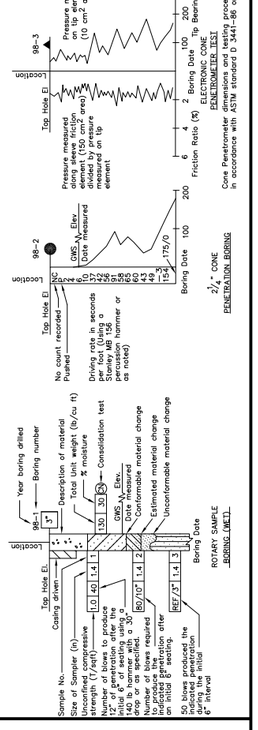

TEST DESIGNATIONS

(AL)	ATTERBERG LIMITS
(CP)	COMPACTION CURVE
(CR)	CORROSIVITY
(CU)	CONSOLIDATED UNDRAINED TRIAXIAL
(DS)	DIRECT SHEAR
(EI)	EXPANSION INDEX
(M)	MOISTURE CONTENT
(PA)	PARTICLE ANALYSIS
(PP)	POCKET PENETROMETER
(R)	R-VALUE
(SE)	SAND EQUIVALENT
(TV)	TORVANE
(UC)	UNCONFINED COMPRESSION
(UU)	UNCONSOLIDATED UNDRAINED TRIAXIAL
(W)	UNIT WEIGHT
(W)	WASH #200

TYPE OF BORINGS

- 2½" CONE PENETRATION
- ROTARY WASH
- ELECTRONIC CONE PENETROMETER
- AUGER BORING (DRY)
- TEST PIT
- DIAMOND CORE BORING
- SOIL TUBE

LEGEND OF EARTH MATERIALS (USCS) BASED ON ASTM D2487, D2488

- FILL MATERIAL
- POORLY-GRADED SAND (SP)
- SILTY SAND (SM)
- CLAY (CL or CH)
- SILTY SAND (SM) or SANDY SILT
- SILT (ML or MH)
- CLAYEY SAND (SC) or SANDY CLAY
- PEAT and/or ORGANIC MATTER
- COBBLES/BOULDERS
- WELL-GRADED GRAVEL (GW)
- IGNEOUS ROCK
- POORLY-GRADED GRAVEL (GP)
- SEDIMENTARY ROCK
- SILTY GRAVEL (GM)
- METAMORPHIC ROCK
- CLAYEY GRAVEL (GC)

CONSISTENCY CLASSIFICATION FOR SOILS

According to the Standard Penetration Test (ASTM D-1586)

SPT N-value (blows/ft)	Granular	SPT N-value (blows/ft)	Cohesive
0 – 4	Very Loose	< 2	Very Soft
5 – 10	Loose	2 – 4	Soft
11 – 30	Medium Dense	5 – 8	Medium stiff
31 – 50	Dense	9 – 15	Stiff
> 50	Very Dense	16 – 30	Very Stiff
		> 31	Hard

Note: Visual classification of earth materials are based on field inspection and are confirmed or revised with laboratory test results as necessary.

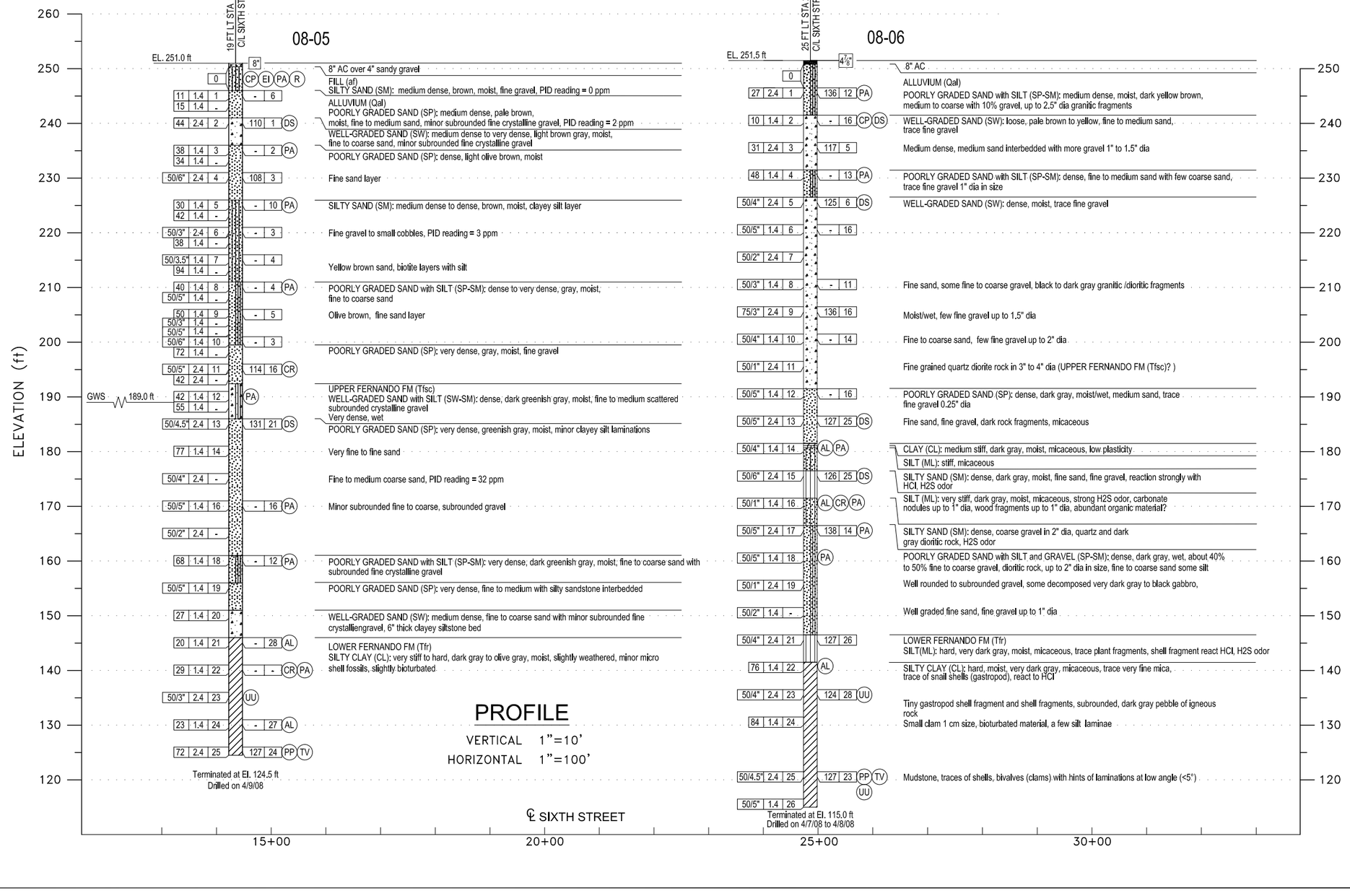

THE CITY OF LOS ANGELES OR ITS OFFICERS OR AGENTS SHALL NOT BE RESPONSIBLE FOR THE ACCURACY OR COMPLETENESS OF ELECTRONIC COPIES OF THIS PLAN SHEET.

BUREAU OF ENGINEERING	GARY L. MOORE, P.E.	CITY ENGINEER
	BRADLEY M. SMITH	DEPUTY CITY ENGINEER
	PHIL RICHARDSON, P.E.	PROGRAM MANAGER

DESIGN GROUP

DESIGNED:	A.ZAND
DRAWN:	K.THANT
CHECKED:	M.KAPUSKAR
PROJECT MANAGER:	
RESPONSIBLE CHARGE:	ENGINEER

	DATE:	BY:	
1	6/20/08		
2	6/21/08		
LIC. NO. GE2564	08/15/08	EXDATE	
LIC. NO. CE	EXDATE		
LIC. NO. CE	RVDATE		

STRUCTURE NO. 53C-2329

INDEX NO. P-38113

STRUCTURAL ENGINEERING DIVISION
JOHN KOO, S.E. DIVISION ENGINEER • 250 EAST FIRST STREET, SUITE 700 TEL: (213) 847-5822

REVISIONS:

LOG OF TEST BORINGS
SHEET 13 OF 20

PROJECT: SIXTH STREET VIADUCT OVER LOS ANGELES RIVER AND U.S HIGHWAY 101

ADDRESS: LOS ANGELES

WORK ORDER NO. E70022□F

DRAWING NO. S9-63

SHEET □9 OF 560 SHEETS

ADDENDUM 5

Earth Mechanics, Inc.
Geotechnical and Earthquake Engineering

17660 Newhope Street, Suite E
Fountain Valley, California 92708
Phone: 714-751-3826
Fax: 714-751-3928

REGISTERED PROFESSIONAL ENGINEER
Myrle Kapusnik
No. GE2564
EXP. 12-31-08
GEOTECHNICAL
STATE OF CALIFORNIA

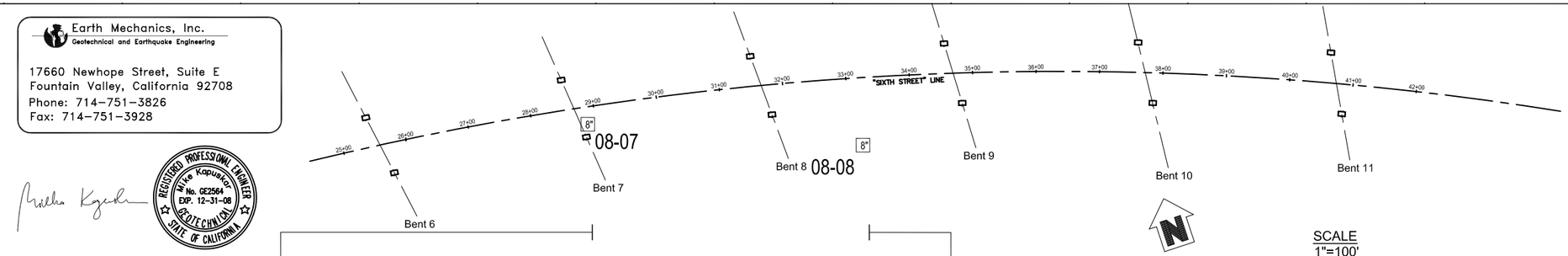

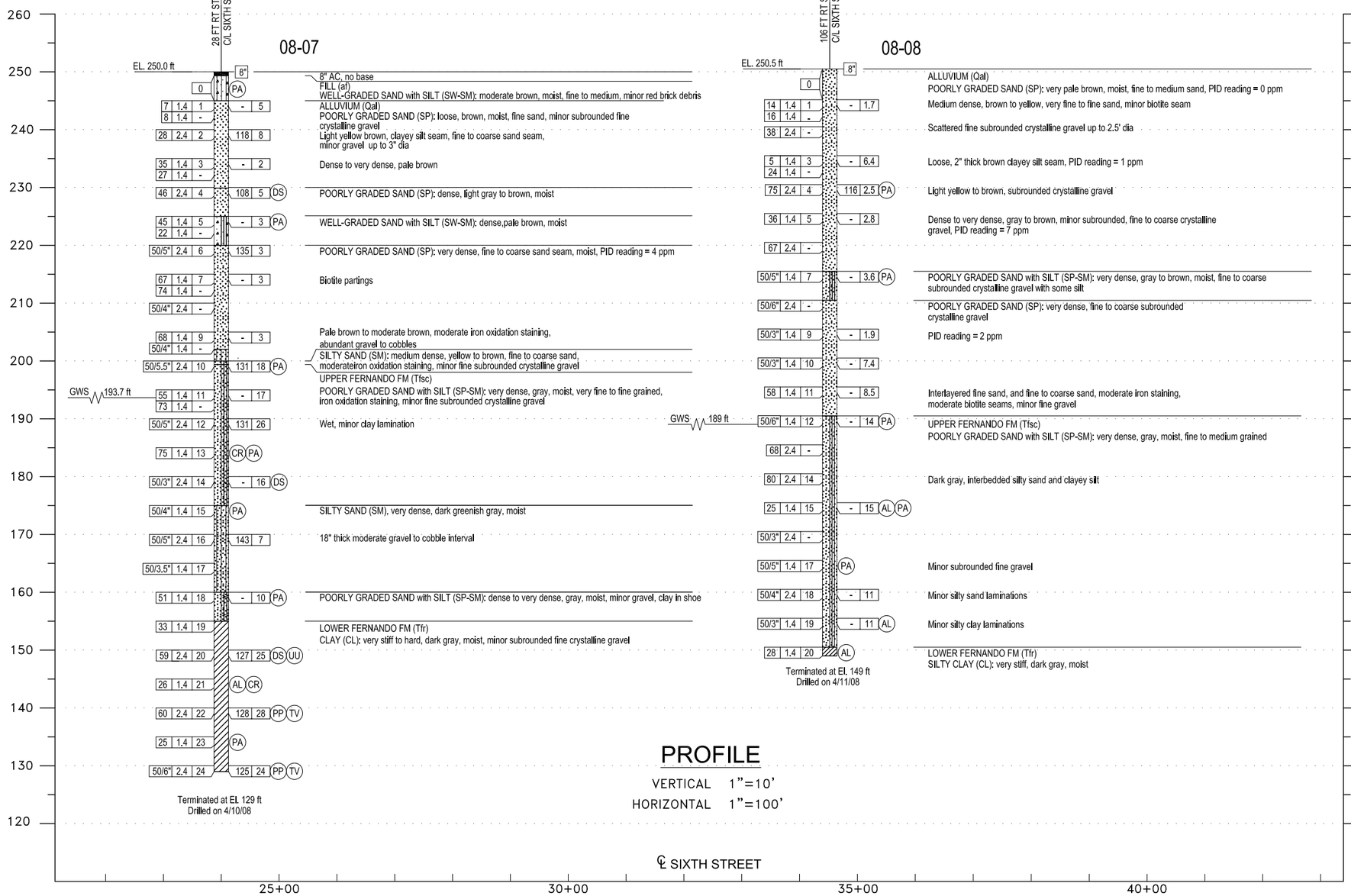

PROFILE

VERTICAL 1"=10'
HORIZONTAL 1"=100'

CONSISTENCY CLASSIFICATION FOR SOILS

According to the Standard Penetration Test (ASTM D-1586)

SPT N-value (blows/ft)	Granular	SPT N-value (blows/ft)	Cohesive
0 - 4	Very Loose	< 2	Very Soft
5 - 10	Loose	2 - 4	Soft
11 - 30	Medium Dense	5 - 8	Medium stiff
31 - 50	Dense	9 - 15	Stiff
> 50	Very Dense	16 - 30	Very Stiff
		> 31	Hard

LEGEND OF EARTH MATERIALS (USCS) BASED ON ASTM D2487, D2488

FILL MATERIAL
POORLY-GRADED SAND (SP)
SILTY SAND (SM)
CLAYEY SAND (SC)
SILTY SAND (SM) or SANDY SILT
CLAYEY SAND (SC) or SANDY CLAY
COBBLES/BOULDERS
IGNEOUS ROCK
CLAY (CL or CH)
SILT (ML or MH)
PEAT and/or ORGANIC MATTER
WELL-GRADED GRAVEL (GW)
POORLY-GRADED GRAVEL (GP)
SILTY GRAVEL (GM)
CLAYEY GRAVEL (GC)
SEDIMENTARY ROCK
METAMORPHIC ROCK

Note: Visual classification of earth materials are based on field inspection and are confirmed or revised with laboratory test results as necessary.

TYPE OF BORINGS

- 2½" CONE PENETRATION
- ROTARY WASH
- ELECTRONIC CONE PENETROMETER
- AUGER BORING (DRY)
- TEST PIT
- DIAMOND CORE BORING
- SOIL TUBE

TEST DESIGNATIONS

(A) ATTERBERG LIMITS
(CF) COMPACTION CURVE
(CR) CORROSIVITY
(CU) CONSOLIDATED UNDRAINED TRIAXIAL
(DS) DIRECT SHEAR
(E) EXPANSION INDEX
(M) MOISTURE CONTENT
(PA) PARTICLE ANALYSIS
(PP) POCKET PENETROMETER
(R) R-VALUE
(SE) SAND EQUIVALENT
(TV) TORVANE
(UC) UNCONFINED COMPRESSION
(UU) UNCONSOLIDATED UNDRAINED TRIAXIAL
(UW) UNIT WEIGHT
(W) WASH #200

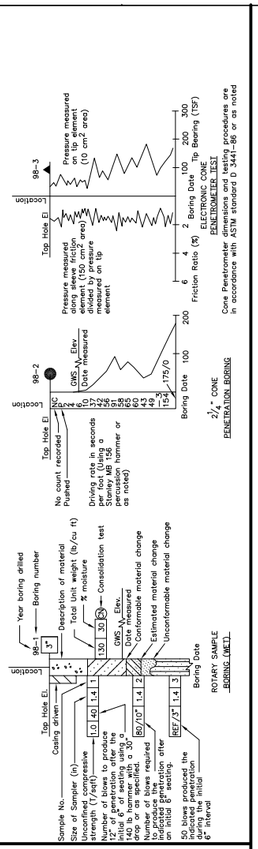

BUREAU OF ENGINEERING
GARY L. MOORE, P.E. CITY ENGINEER
THE CITY OF LOS ANGELES OR ITS OFFICERS OR AGENTS SHALL NOT BE RESPONSIBLE FOR THE ACCURACY OR COMPLETENESS OF ELECTRONIC COPIES OF THIS PLAN SHEET.
BRADLEY M. SMITH DEPUTY CITY ENGINEER
PROGRAM MANAGER
PHIL RICHARDSON, P.E. DESIGN GROUP

	DATE:	LIC. NO. GE2564 EXPIRATION DATE
DESIGNED: A.ZAND	6/20/08	
DRAWN: K.THANT	6/21/08	
CHECKED: M.KAPUSNIK	08/12/08	
PROJECT MANAGER	EXPDATE	LIC. NO. CE
ENGINEER IN CHARGE	EXPDATE	LIC. NO. CE

STRUCTURE NO. 53C-2329

INDEX NO. P-38113

NO.	REVISIONS:	DATE:	BY:

STRUCTURAL ENGINEERING DIVISION
JOHN KOO, S.E. DIVISION ENGINEER • 250 EAST FIRST STREET, SUITE 700 TEL: (213) 847-5822

LOG OF TEST BORINGS
SHEET 14 OF 20

PROJECT: SIXTH STREET VIADUCT OVER LOS ANGELES RIVER AND U.S HIGHWAY 101

ADDRESS: LOS ANGELES

WORK ORDER NO. E70022□F

DRAWING NO. S9-64

SHEET □50 OF 560 SHEETS

ADDENDUM 5

Earth Mechanics, Inc.
Geotechnical and Earthquake Engineering

17660 Newhope Street, Suite E
Fountain Valley, California 92708
Phone: 714-751-3826
Fax: 714-751-3928

REGISTERED PROFESSIONAL ENGINEER
Matthew Kapusta
No. GE2564
EXP. 12-31-08
GEOTECHNICAL
STATE OF CALIFORNIA

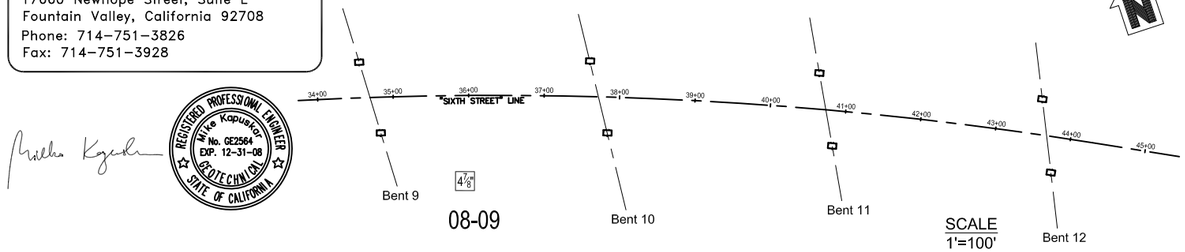

08-09

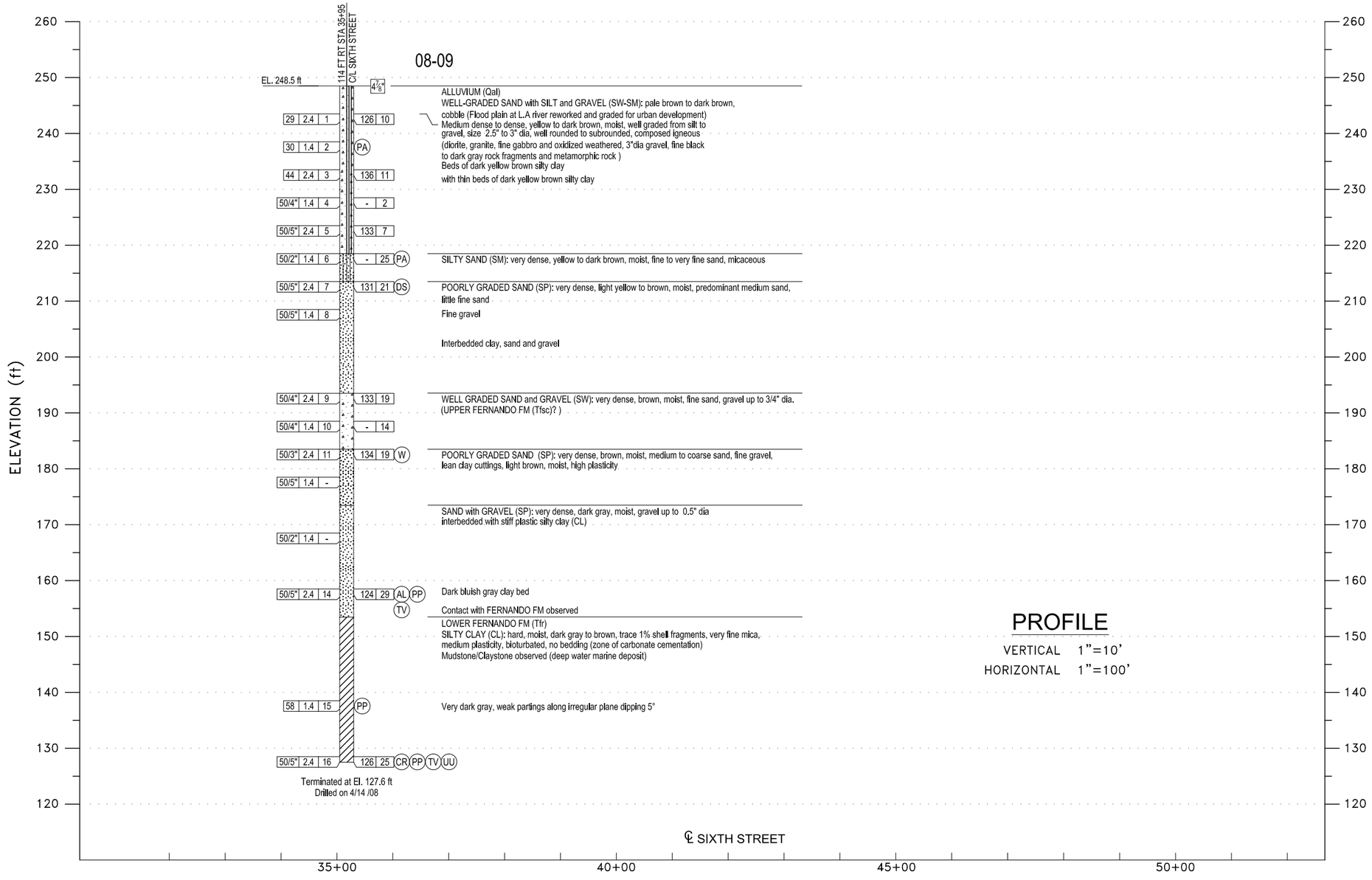

PROFILE

VERTICAL 1"=10'
HORIZONTAL 1"=100'

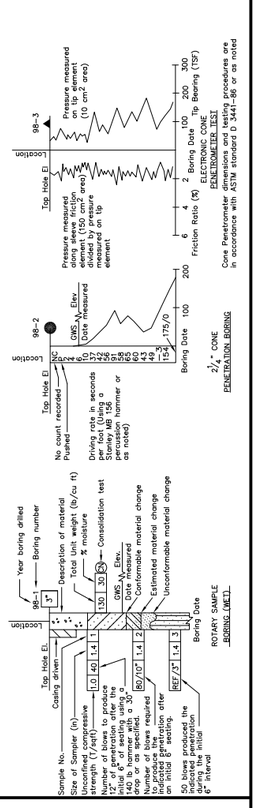

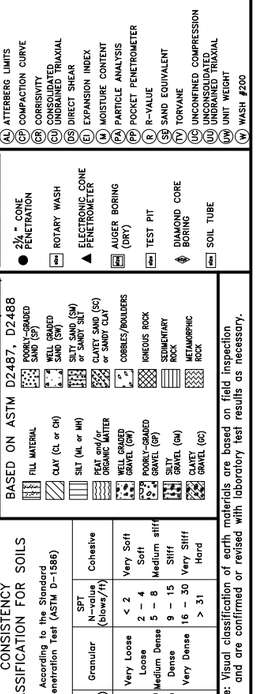

BUREAU OF ENGINEERING
GARY L. MOORE, P.E. CITY ENGINEER • BRADLEY M. SMITH DEPUTY CITY ENGINEER •
STRUCTURAL ENGINEERING DIVISION
JOHN KOO, S.E. DIVISION ENGINEER • 250 EAST FIRST STREET, SUITE 700 TEL: (213) 847-5822
PHIL RICHARDSON, P.E. PROGRAM MANAGER •

THE CITY OF LOS ANGELES OR ITS OFFICERS OR AGENTS SHALL NOT BE RESPONSIBLE FOR THE ACCURACY OR COMPLETENESS OF ELECTRONIC COPIES OF THIS PLAN SHEET.
THIS PLAN IS ELECTRONICALLY SIGNED AND STAMPED.

NO.	REVISIONS:	DATE:	BY:

INDEX NO. P-38113

DESIGNED: A.ZAND
DRAWN: K.THANT
CHECKED: M.KAPUSTA
PROJECT MANAGER:
PROJECT ENGINEER: ENGINEER IN RESPONSIBLE CHARGE:

DESIGN GROUP	DATE:	LIC. NO.
	6/20/08	
	6/21/08	
	08/12/08	GE2564
	CX/DATE	CE
	CX/DATE	CE
	CX/DATE	CE

STRUCTURE NO. 53C-2329

SHEET TITLE: LOG OF TEST BORINGS SHEET 15 OF 20

PROJECT: SIXTH STREET VIADUCT OVER LOS ANGELES RIVER AND U.S HIGHWAY 101

ADDRESS: LOS ANGELES

WORK ORDER NO. E70022□F

DRAWING NO. S9-65

SHEET □51 OF 560 SHEETS

ADDENDUM 5

Earth Mechanics, Inc.
Geotechnical and Earthquake Engineering

17660 Newhope Street, Suite E
Fountain Valley, California 92708
Phone: 714-751-3826
Fax: 714-751-3928

REGISTERED PROFESSIONAL ENGINEER
Matthew Kapusta
No. GE2564
EXP. 12-31-08
GEOTECHNICAL
STATE OF CALIFORNIA

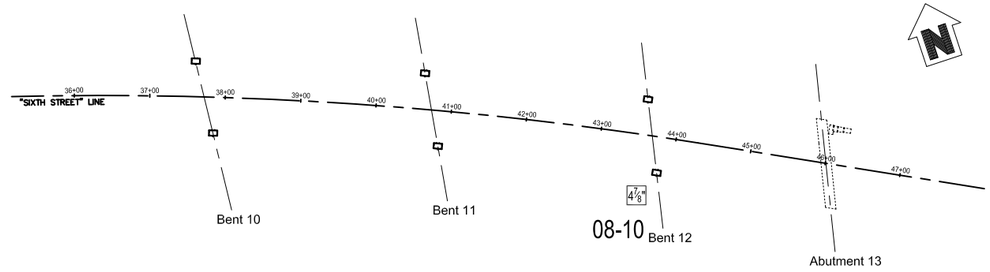

SCALE
1'=100'

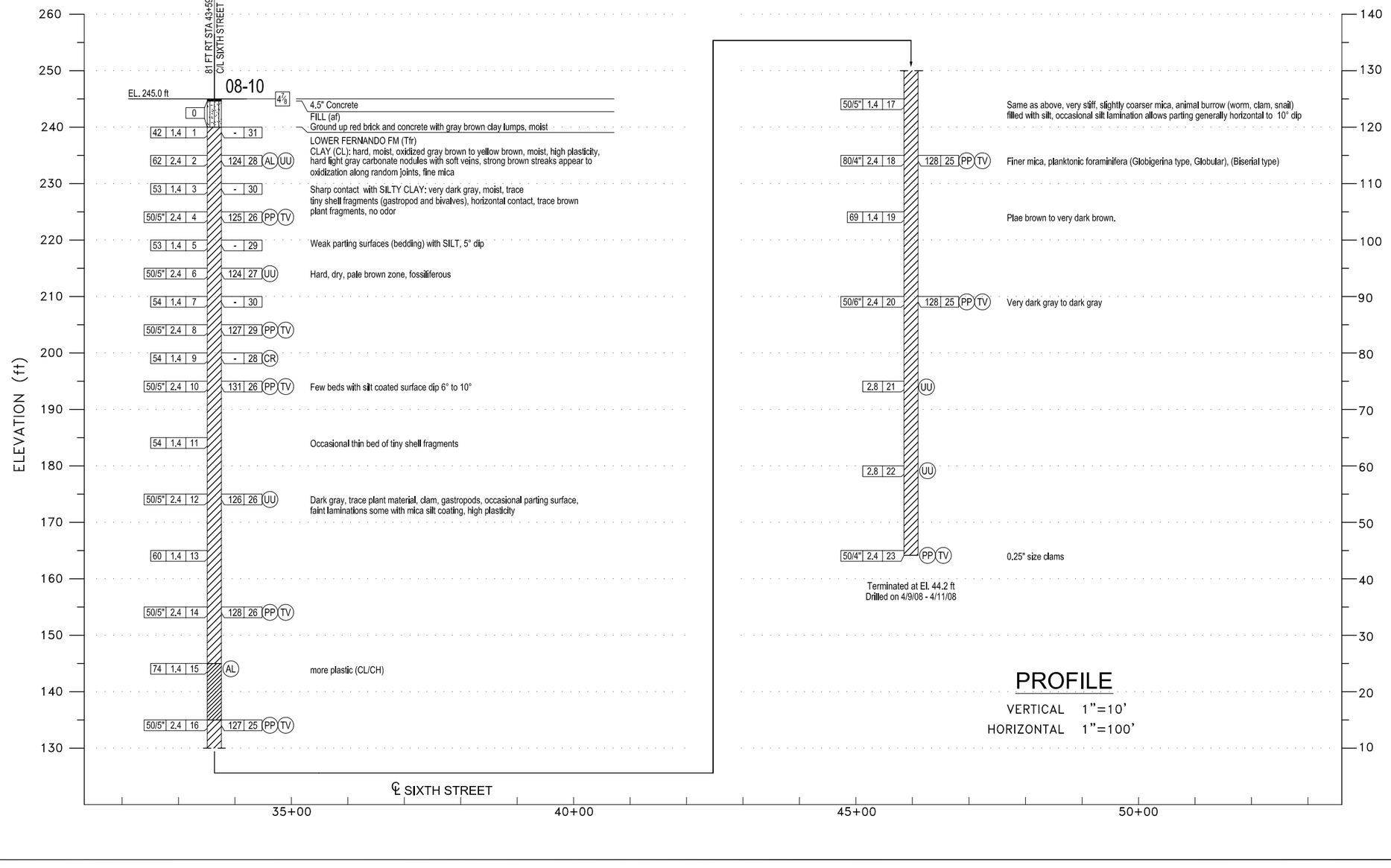

PROFILE

VERTICAL 1"=10'
HORIZONTAL 1"=100'

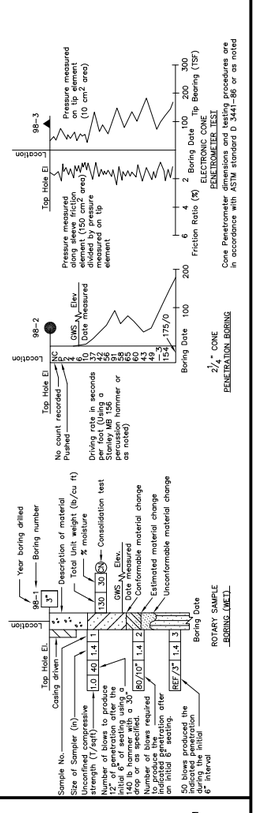

TYPE OF BORINGS

- 2½" CONE PENETRATION
- ROTARY WASH
- ELECTRONIC CONE PENETROMETER
- AUGER BORING (DRY)
- TEST PIT
- DIAMOND CORE BORING
- SOIL TUBE

TEST DESIGNATIONS

- (AL) ATTERBERG LIMITS
- (CP) COMPACTION CURVE
- (CR) CORRISIVITY
- (CU) CONSOLIDATED UNDRAINED TRIAXIAL
- (DS) DIRECT SHEAR
- (E) EXPANSION INDEX
- (M) MOISTURE CONTENT
- (PA) PARTICLE ANALYSIS
- (PP) POCKET PENETROMETER
- (R) R-VALUE
- (SE) SAND EQUIVALENT
- (TV) TORVANE
- (UC) UNCONFINED COMPRESSION
- (UU) UNCONSOLIDATED UNDRAINED TRIAXIAL
- (UW) UNIT WEIGHT
- (W) WASH #200

LEGEND OF EARTH MATERIALS (USCS) BASED ON ASTM D2487, D2488

FILL MATERIAL
CLAY (CL or CH)
SILT (ML or MH)
PEAT and/or ORGANIC MATTER
WELL GRADED SAND (SW)
POORLY-GRADED SAND (SP)
SILTY SAND (SM) or SANDY SILT
CLAYEY SAND (SC) or SANDY CLAY
COBBLES/BOULDERS
POORLY-GRADED GRAVEL (GP)
SILTY GRAVEL (GM)
CLAYEY GRAVEL (GC)
IGNEOUS ROCK
SEDIMENTARY ROCK
METAMORPHIC ROCK

CONSISTENCY CLASSIFICATION FOR SOILS

According to the Standard Penetration Test (ASTM D-1586)

SPT N-value (blows/ft)	Granular	SPT N-value (blows/ft)	Cohesive
0 – 4	Very Loose	< 2	Very Soft
5 – 10	Loose	2 – 4	Soft
11 – 30	Medium Dense	5 – 8	Medium stiff
31 – 50	Dense	9 – 15	Stiff
> 50	Very Dense	16 – 30	Very Stiff
		> 31	Hard

Note: Visual classification of earth materials are based on field inspection and are confirmed or revised with laboratory test results as necessary.

BUREAU OF ENGINEERING
GARY L. MOORE, P.E. CITY ENGINEER • BRADLEY M. SMITH DEPUTY CITY ENGINEER •
THE CITY OF LOS ANGELES OR ITS OFFICERS OR AGENTS SHALL NOT BE RESPONSIBLE FOR THE ACCURACY OR COMPLETENESS OF ELECTRONIC COPIES OF THIS PLAN SHEET.

SHEET TITLE: LOG OF TEST BORINGS SHEET 16 OF 20

PROJECT: SIXTH STREET VIADUCT OVER LOS ANGELES RIVER AND U.S HIGHWAY 101

ADDRESS: LOS ANGELES

WORK ORDER NO. E70022□F

DRAWING NO. S9-66

SHEET □52 OF 560 SHEETS

STRUCTURAL ENGINEERING DIVISION
ENGINEERING
LA DPW
Excellence Delivered With Pride
For the Future
250 EAST FIRST STREET, SUITE 700 TEL: (213) 847-5822

DIVISION ENGINEER • JOHN KOO, S.E.

NO.	REVISIONS:	DATE:	BY:

INDEX NO. P-38113

PROGRAM MANAGER • PHIL RICHARDSON, P.E.

DESIGN GROUP	DATE:
DESIGNED: A.ZAND	6/20/08
DRAWN: K.THANT	6/21/08
CHECKED: M.KAPUSKAR	LIC. NO. GE2564 08/12/08
PROJECT MANAGER:	LIC. NO. CE EXDATE
RESPONSIBLE IN CHARGE: ENGINEER	LIC. NO. CE EXDATE

STRUCTURE NO. 53C-2329

ADDENDUM 5

Earth Mechanics, Inc.
Geotechnical and Earthquake Engineering

17660 Newhope Street, Suite E
Fountain Valley, California 92708
Phone: 714-751-3826
Fax: 714-751-3928

REGISTERED PROFESSIONAL ENGINEER
Mirle Kapusar
No. GE2564
EXP. 12-31-08
GEOTECHNICAL
STATE OF CALIFORNIA

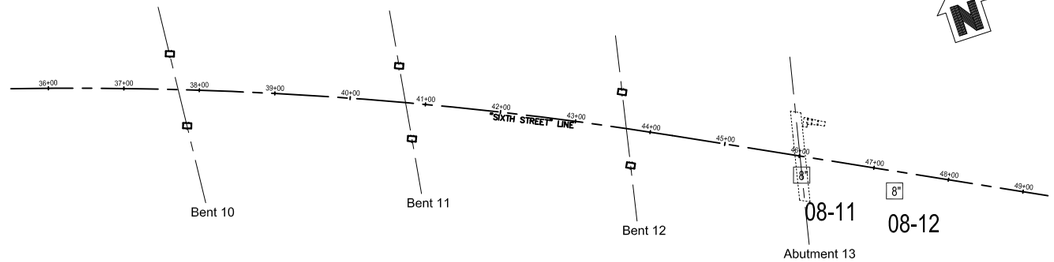

SCALE
1"=100'

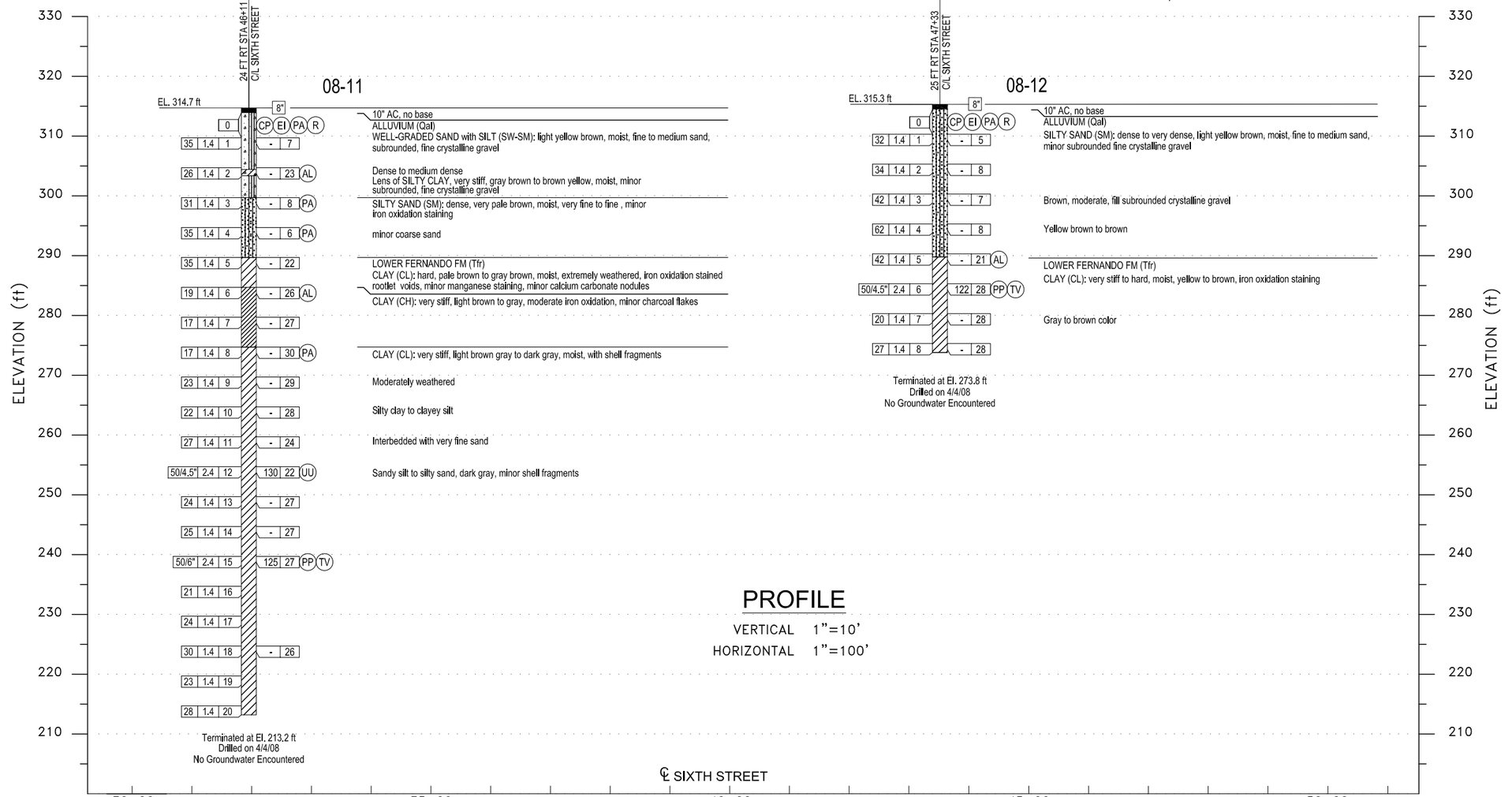

PROFILE

VERTICAL 1"=10'
HORIZONTAL 1"=100'

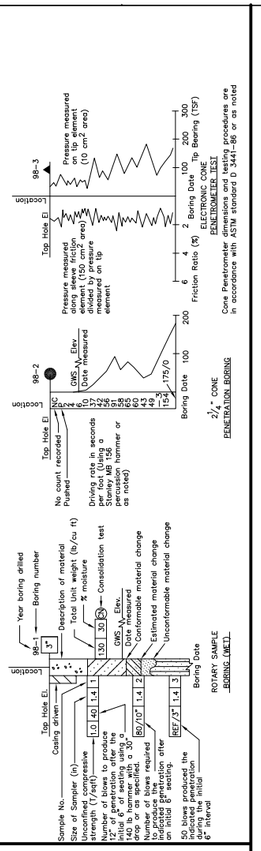

TYPE OF BORINGS

- 2½" CONE PENETRATION
- ROTARY WASH
- ELECTRONIC CONE PENETROMETER
- AUGER BORING (DRY)
- TEST PIT
- DIAMOND CORE BORING
- SOIL TUBE

TEST DESIGNATIONS

- (AL) ATTERBERG LIMITS
- (CP) COMPACTION CURVE
- (CR) CORRISIVITY
- (CU) CONSOLIDATED UNDRAINED TRIAXIAL
- (DS) DIRECT SHEAR
- (E) EXPANSION INDEX
- (M) MOISTURE CONTENT
- (PA) PARTICLE ANALYSIS
- (PP) POCKET PENETROMETER
- (R) R-VALUE
- (SE) SAND EQUIVALENT
- (TV) TORVANE
- (UC) UNCONFINED COMPRESSION
- (UU) UNCONSOLIDATED UNDRAINED TRIAXIAL
- (UW) UNIT WEIGHT
- (W) WASH #200

LEGEND OF EARTH MATERIALS (USCS) BASED ON ASTM D2487, D2488

- TILL MATERIAL
- POORLY-GRADED SAND (SP)
- SILTY SAND (SM)
- CLAY (CL or CH)
- SILT (ML or MH)
- CLAYEY SAND (SC) or SANDY CLAY
- PEAT and/or ORGANIC MATTER
- COBBLES/BOULDERS
- IGNEOUS ROCK
- WELL GRADED GRAVEL (GW)
- POORLY-GRADED GRAVEL (GP)
- SILTY GRAVEL (GM)
- CLAYEY GRAVEL (GC)
- SEDIMENTARY ROCK
- METAMORPHIC ROCK

CONSISTENCY CLASSIFICATION FOR SOILS

According to the Standard Penetration Test (ASTM D-1586)

SPT N-value (blows/ft)	Granular	SPT N-value (blows/ft)	Cohesive
0 - 4	Very Loose	< 2	Very Soft
5 - 10	Loose	2 - 4	Soft
11 - 30	Medium Dense	5 - 8	Medium stiff
31 - 50	Dense	9 - 15	Stiff
> 50	Very Dense	16 - 30	Very Stiff
		> 31	Hard

Note: Visual classification of earth materials are based on field inspection and are confirmed or revised with laboratory test results as necessary.

BUREAU OF ENGINEERING
GARY L. MOORE, P.E. CITY ENGINEER • BRADLEY M. SMITH DEPUTY CITY ENGINEER •
THE CITY OF LOS ANGELES OR ITS OFFICERS OR AGENTS SHALL NOT BE RESPONSIBLE FOR THE ACCURACY OR COMPLETENESS OF ELECTRONIC COPIES OF THIS PLAN SHEET.
STRUCTURAL ENGINEERING DIVISION
JOHN KOO, S.E. DIVISION ENGINEER • 250 EAST FIRST STREET, SUITE 700 TEL: (213) 847-5822
PHIL RICHARDSON, P.E. DESIGN GROUP

NO.	REVISIONS:	DATE:	BY:

DESIGNED: A.ZAND
DRAWN: K.THANT
CHECKED: MAPPUSWAR
PROJECT MANAGER:
ENGINEER IN RESPONSIBLE CHARGE: ENGINEER

	DATE:	LIC. NO.
PROGRAM MANAGER	6/20/08	
	6/21/08	
	08/12/08	GE2564
	X'DATE	LIC. NO. CE
	X'DATE	LIC. NO. CE

INDEX NO. P-38113

STRUCTURE NO. 53C-2329

SHEET TITLE: LOG OF TEST BORINGS
SHEET 17 OF 20

PROJECT: SIXTH STREET VIADUCT OVER LOS ANGELES RIVER AND U.S HIGHWAY 101

ADDRESS: LOS ANGELES

WORK ORDER NO. E70022□F

DRAWING NO. S9-67

SHEET □5□ OF 560 SHEETS

ADDENDUM 5

Earth Mechanics, Inc.
Geotechnical and Earthquake Engineering

17660 Newhope Street, Suite E
Fountain Valley, California 92708
Phone: 714-751-3826
Fax: 714-751-3928

PROFILE

VERTICAL 1"=10'
HORIZONTAL 1"=25'

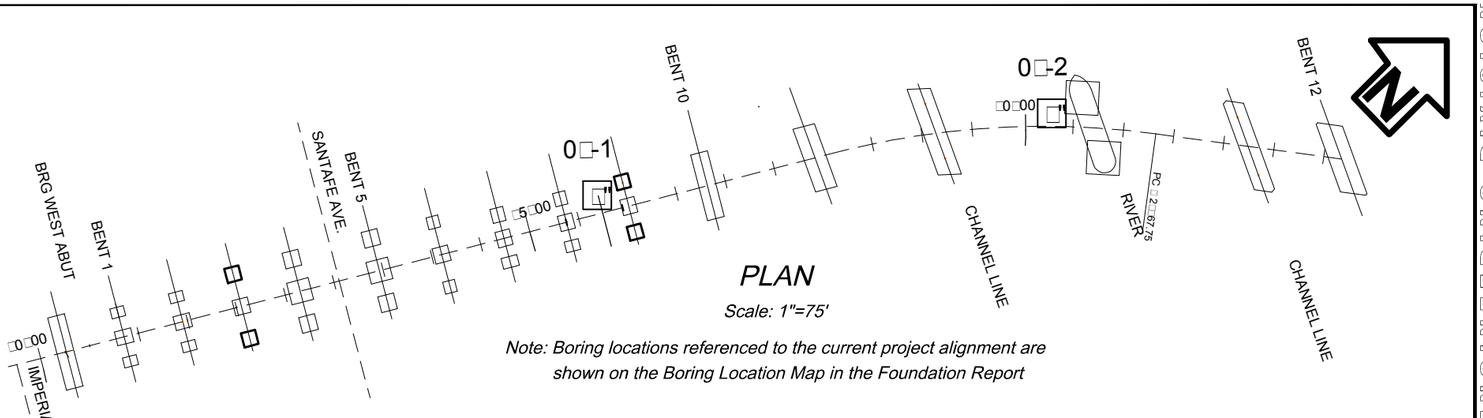

PLAN

Scale: 1"=75'

Note: Boring locations referenced to the current project alignment are shown on the Boring Location Map in the Foundation Report

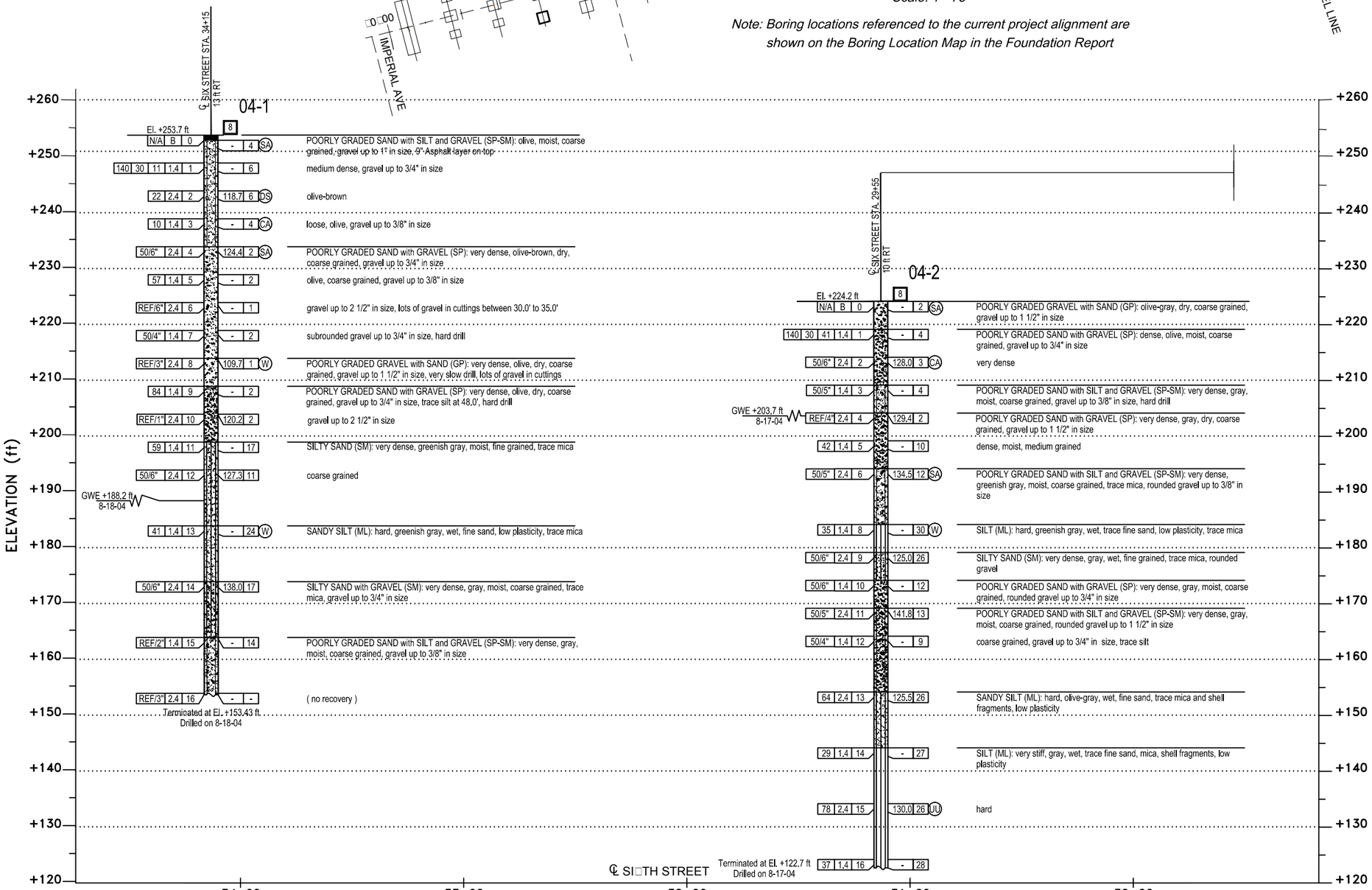

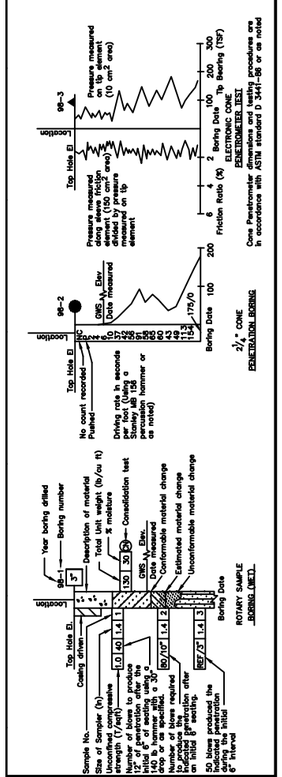

TEST DESIGNATIONS

- (AL) ATTERBERG LIMITS
- (CA) CHEMICAL ANALYSIS
- (CN) CONSOLIDATION
- (CU) CONSOLIDATED UNDRAINED TRIAXIAL
- (DS) DIRECT SHEAR
- (MD) MAX. DRY DENSITY
- (PP) POCKET PENETROMETER
- (SA) SIEVE ANALYSIS
- (TV) TORVANE
- (UC) UNCONFINED COMPRESSION
- (UU) UNCONSOLIDATED UNDRAINED TRIAXIAL
- (W) WASH #200

TYPE OF BORINGS

- ● 2½" CONE PENETRATION
- ROTARY WASH
- ELECTRONIC CONE PENETROMETER
- AUGER BORING (DRY)
- TEST PIT
- DIAMOND CORE BORING
- SOIL TUBE

LEGEND OF EARTH MATERIALS (USCS) BASED ON ASTM D2487, D2488

- FILL MATERIAL
- CLAY (CL or CH)
- SILT (ML or MH)
- PEAT and/or ORGANIC MATTER
- WELL-GRADED GRAVEL (GW)
- POORLY-GRADED GRAVEL (GP)
- SILTY GRAVEL (GM)
- CLAYEY GRAVEL (GC)
- WELL-GRADED SAND (SW) or SILTY SAND (SM)
- CLAYEY SAND (SC) or SANDY CLAY
- COBBLES/BOULDERS
- IGNEOUS ROCK
- SEDIMENTARY ROCK
- METAMORPHIC ROCK

Note: Visual classification of earth materials are based on field inspection and are confirmed or revised with laboratory test results as necessary.

CONSISTENCY CLASSIFICATION FOR SOILS

According to the Standard Penetration Test (ASTM D-1586)

SPT N-value (blows/ft)	Granular	SPT N-value (blows/ft)	Cohesive
0 – 4	Very Loose	< 2	Very Soft
5 – 10	Loose	2 – 4	Soft
11 – 30	Medium Dense	5 – 8	Firm
31 – 50	Dense	9 – 15	Stiff
> 50	Very Dense	16 – 30	Very Stiff
		> 31	Hard

BUREAU OF ENGINEERING ○ THE CITY OF LOS ANGELES OR ITS OFFICERS OR AGENTS SHALL NOT BE RESPONSIBLE FOR THE ACCURACY OR COMPLETENESS OF ELECTRONIC COPIES OF THIS PLAN SHEET.
GARY L. MOORE, P.E. ● CITY ENGINEER ● BRADLEY M. SMITH ● PROGRAM MANAGER ● JOHN KOO, S.E. ● DIVISION ENGINEER ● PHIL RICHARDSON, P.E. ● DEPUTY CITY ENGINEER ● DESIGN GROUP
DESIGNED: DESIGNENGINEER
DRAWN: DRAFTINGTECH
CHECKED: CHECKED
PROJECT MANAGER
ENGINEER IN CHARGE
REVISIONS: NO. DATE BY
DATE: BY:
DESIGN ENGINEER ● 250 EAST FIRST STREET, SUITE 700 TEL: (213) 847-5822
STRUCTURAL ENGINEERING DIVISION
LA DPW ENGINEERING

SHEET TITLE: LOG OF TEST BORINGS
SHEET 18 OF 20

PROJECT: SIXTH STREET VIADUCT OVER LOS ANGELES RIVER
SEISMIC RETROFIT STRATEGY

ADDRESS:

INDEX NO. P-38113

STRUCTURE NO. 53C-2329

WORK ORDER NO. E70022□F

DRAWING NO. S9-6□

SHEET □5□ OF 560 SHEETS

ADDENDUM 5

Earth Mechanics, Inc.
Geotechnical and Earthquake Engineering

17660 Newhope Street, Suite E
Fountain Valley, California 92708
Phone: 714-751-3826
Fax: 714-751-3928

PROFILE

VERTICAL 1"=10'
HORIZONTAL 1"=25'

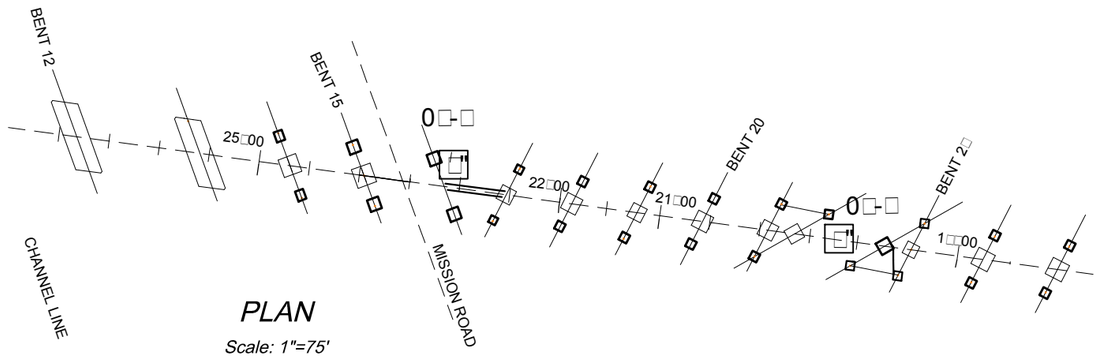

PLAN

Scale: 1"=75'

Note: Boring locations referenced to the current project alignment are shown on the Boring Location Map in the Foundation Report

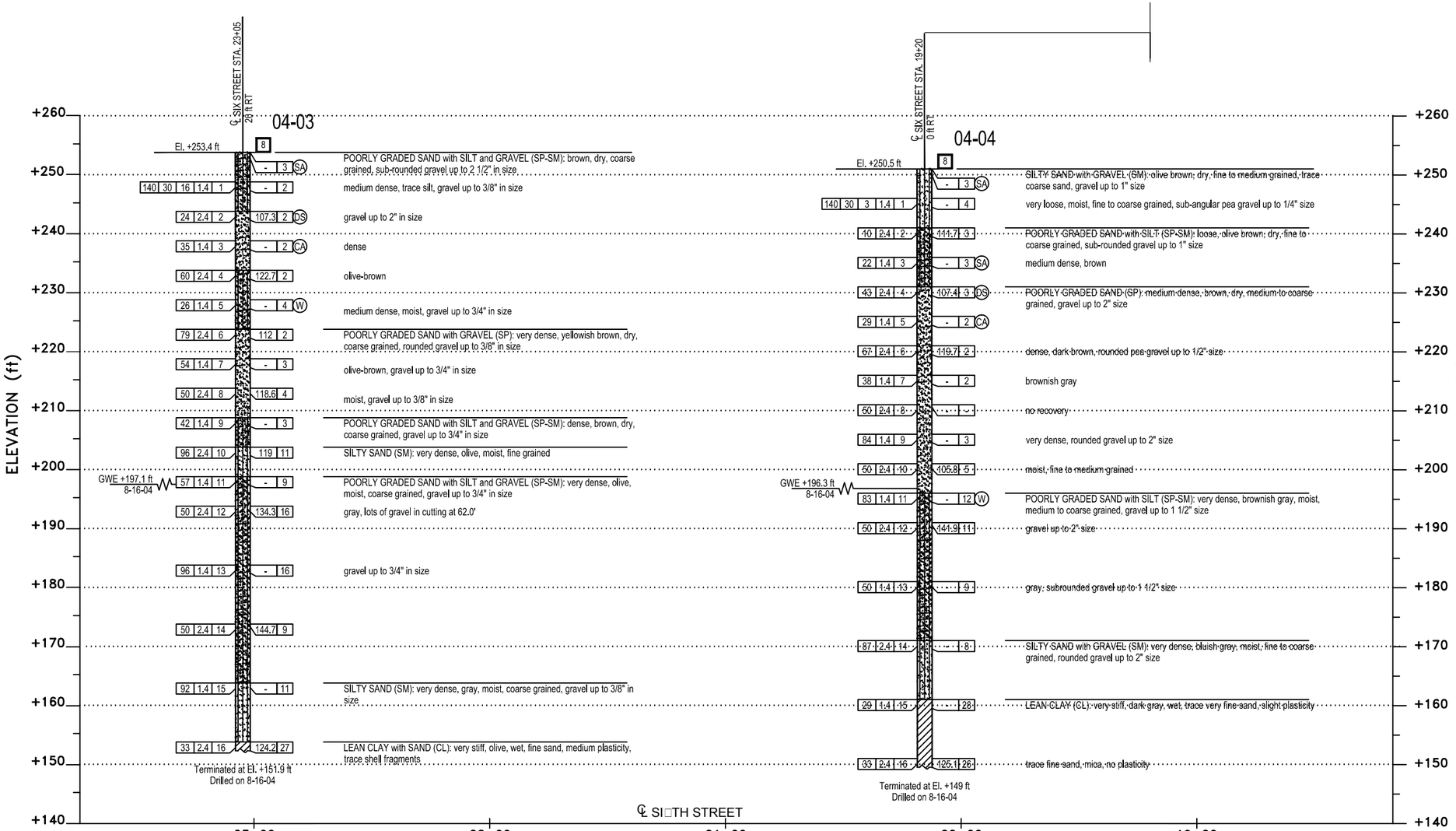

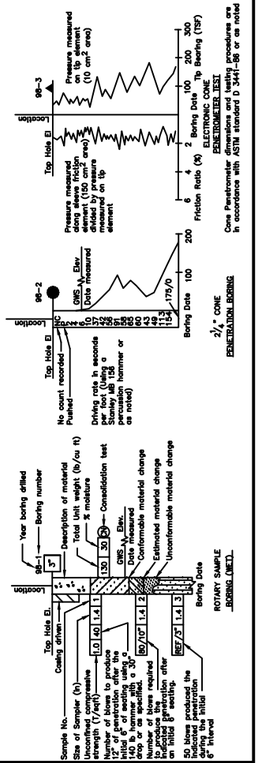

TEST DESIGNATIONS

(AL) ATTERBERG LIMITS
(CA) CHEMICAL ANALYSES
(CN) CONSOLIDATION
(CU) CONSOLIDATED, UNDRAINED TRIAXIAL
(DS) DIRECT SHEAR
(MD) MAX. DRY DENSITY
(PE) POCKET PENETROMETER
(SA) SIEVE ANALYSIS
(TV) TORVANE
(UC) UNCONFINED COMPRESSION
(UU) UNCONSOLIDATED, UNDRAINED TRIAXIAL
(W) WASH #200

TYPE OF BORINGS

- ● ½" CONE PENETRATION
- ROTARY WASH
- ELECTRONIC CONE PENETROMETER
- AUGER BORING (DRY)
- TEST PIT
- DIAMOND CORE BORING
- SOIL TUBE

LEGEND OF EARTH MATERIALS (USCS) BASED ON ASTM D2487, D2488

FILL MATERIAL
CLAY (CL or CH)
SILT (ML or MH)
PEAT and/or ORGANIC WATER
POORLY-GRADED SAND (SP)
WELL-GRADED SAND (SW)
SILTY SAND (SM) or SLIGHTLY SILTY SAND
CLAYEY SAND (SC) or SANDY CLAY
COBBLES/BOULDERS
WELL-GRADED GRAVEL (GW)
POORLY-GRADED GRAVEL (GP)
SILTY GRAVEL (GM)
CLAYEY GRAVEL (GC)
IGNEOUS ROCK
SEDIMENTARY ROCK
METAMORPHIC ROCK

Note: Visual classification of earth materials are based on field inspection and are confirmed or revised with laboratory test results as necessary.

CONSISTENCY CLASSIFICATION FOR SOILS

According to the Standard Penetration Test (ASTM D-1586)

SPT N-value (blows/ft)	Granular	SPT N-value (blows/ft)	Cohesive
0 – 4	Very Loose	< 2	Very Soft
5 – 10	Loose	2 – 4	Soft
11 – 30	Medium Dense	5 – 8	Firm
31 – 50	Dense	9 – 15	Stiff
> 50	Very Dense	16 – 30	Very Stiff
		> 31	Hard

BUREAU OF ENGINEERING
CITY ENGINEER ● GARY L. MOORE, P.E.
THE CITY OF LOS ANGELES OR ITS OFFICERS OR AGENTS SHALL NOT BE RESPONSIBLE FOR THE ACCURACY OR COMPLETENESS OF ELECTRONIC COPIES OF THIS PLAN SHEET.
STRUCTURAL ENGINEERING DIVISION
DEPUTY CITY ENGINEER ● BRADLEY M. SMITH
PROGRAM MANAGER ● JOHN KOO, S.E.
DESIGN GROUP ● 200 EAST FIRST STREET, SUITE 700 TEL: (213) 847-5822
DESIGNED: DESIGNENGINEER ● PHIL RICHARDSON, P.E.
DRAWN: DRAFTINGTECH
CHECKED: CHECKED
PROJECT MANAGER: PMANAGER
ENGINEER IN CHARGE: ENGINEER

NO.	REVISIONS:	DATE:	BY:

	DATE:	LIC. NO. CE
DESIGNED	DDATE	
DRAWN	DDATE	
CHECKED	CKDATE	
PROJECT MANAGER	CKDATE	
ENGINEER IN CHARGE	PJDATE	

SHEET TITLE: LOG OF TEST BORINGS SHEET 19 OF 20

PROJECT: SIXTH STREET VIADUCT OVER LOS ANGELES RIVER SEISMIC RETROFIT STRATEGY

ADDRESS:

INDEX NO. P-38113

STRUCTURE NO. 53C-2329

WORK ORDER NO. E70022□F

DRAWING NO. S9-69

SHEET □55 OF 560 SHEETS

ADDENDUM 5

Earth Mechanics, Inc.
Geotechnical and Earthquake Engineering

17660 Newhope Street, Suite E
Fountain Valley, California 92708
Phone: 714-751-3826
Fax: 714-751-3928

PROFILE

VERTICAL 1"=10'
HORIZONTAL 1"=25'



PLAN

Scale: 1"=75'

Note: Boring locations referenced to the current project alignment are shown on the Boring Location Map in the Foundation Report

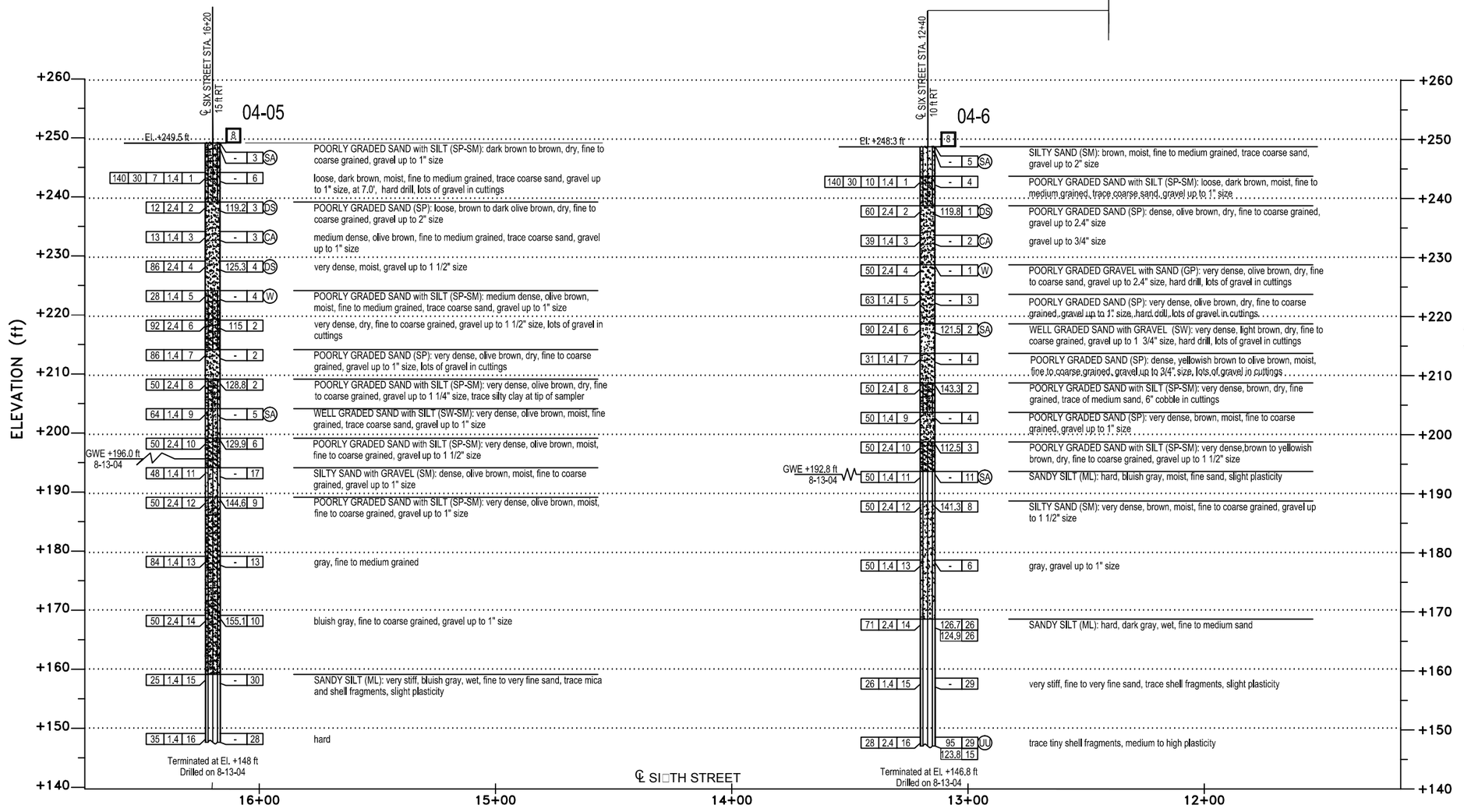

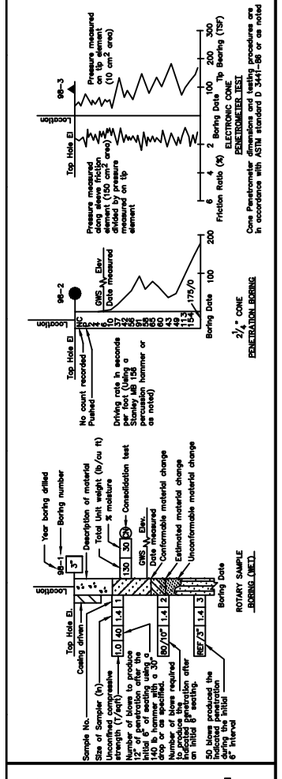

TEST DESIGNATIONS

- (AL) ATTERBERG LIMITS
- (CA) CHEMICAL ANALYSIS
- (CN) CONSOLIDATION
- (CU) CONSOLIDATED UNDRAINED TRIAXIAL
- (DS) DIRECT SHEAR
- (MD) MAX. DRY DENSITY
- (PE) POCKET PENETROMETER
- (SA) SIEVE ANALYSIS
- (TV) TORVANE
- (UC) UNCONFINED COMPRESSION
- (UU) UNCONSOLIDATED UNDRAINED TRIAXIAL
- (W) WASH #200

TYPE OF BORINGS

- 2½" CONE PENETRATION
- ROTARY WASH
- ELECTRONIC CONE PENETROMETER
- AUGER BORING (DRY)
- TEST PIT
- DIAMOND CORE BORING
- SOIL TUBE

LEGEND OF EARTH MATERIALS (USCS) BASED ON ASTM D2487, D2488

- FILL MATERIAL
- CLAY (CL or CH)
- SILT (ML or MH)
- PEAT and/or ORGANIC MATTER
- WELL-GRADED GRAVEL (GW)
- POORLY-GRADED GRAVEL (GP)
- SILTY GRAVEL (GM)
- CLAYEY GRAVEL (GC)
- WELL-GRADED SAND (SW)
- POORLY-GRADED SAND (SP)
- SILTY SAND (SM)
- CLAYEY SAND (SC) or SANDY CLAY
- COBBLES/BOULDERS
- IGNEOUS ROCK
- SEDIMENTARY ROCK
- METAMORPHIC ROCK

Note: Visual classification of earth materials are based on field inspection and are confirmed or revised with laboratory test results as necessary.

CONSISTENCY CLASSIFICATION FOR SOILS

According to the Standard Penetration Test (ASTM D-1586)

SPT N-value (blows/ft)	Granular	SPT N-value (blows/ft)	Cohesive
0 – 4	Very Loose	< 2	Very Soft
5 – 10	Loose	2 – 4	Soft
11 – 30	Medium Dense	5 – 8	Firm
31 – 50	Dense	9 – 15	Stiff
> 50	Very Dense	16 – 30	Very Stiff
		> 31	Hard

BUREAU OF ENGINEERING
GARY L. MOORE, P.E. ○ CITY ENGINEER ●
STRUCTURAL ENGINEERING DIVISION
BRADLEY M. SMITH ○ PROGRAM MANAGER ●
200 E. AVENUE 26, SUITE 300, LOS ANGELES, CA 90031-2600 TEL: (323) 342-3232

THE CITY OF LOS ANGELES OR ITS OFFICERS OR AGENTS SHALL NOT BE RESPONSIBLE FOR THE ACCURACY OR COMPLETENESS OF ELECTRONIC COPIES OF THIS PLAN SHEET.

DEPUTY CITY ENGINEER ● PHIL RICHARDSON, P.E.

DESIGN GROUP

	DATE:	BY:
DESIGNED: DESIGNENGINEER	DDATE	
DRAWN: DRAFTINGTECH	DDATE	
CHECKED: CHECKED	CKDATE	
PROJECT MANAGER: MANAGER	CKDATE	
ENGINEER IN CHARGE: ENGINEER	CKDATE	
REVISED BY:	RVDATE	

LIC. NO. CE

NO.	REVISIONS:	DATE:	BY:

JOHN KOO, S.E. ● DIVISION ENGINEER ● 200 EAST FIRST STREET, SUITE 700 TEL: (213) 847-5822

INDEX NO. P-38113

SHEET TITLE: LOG OF TEST BORINGS SHEET 20 OF 20

PROJECT: SIXTH STREET VIADUCT OVER LOS ANGELES RIVER SEISMIC RETROFIT STRATEGY

ADDRESS:

STRUCTURE NO. 53C-2329

WORK ORDER NO. E70022□F

DRAWING NO. S9-70

SHEET □56 OF 560 SHEETS

ADDENDUM 5

6/9/2020 11:39:25 PM

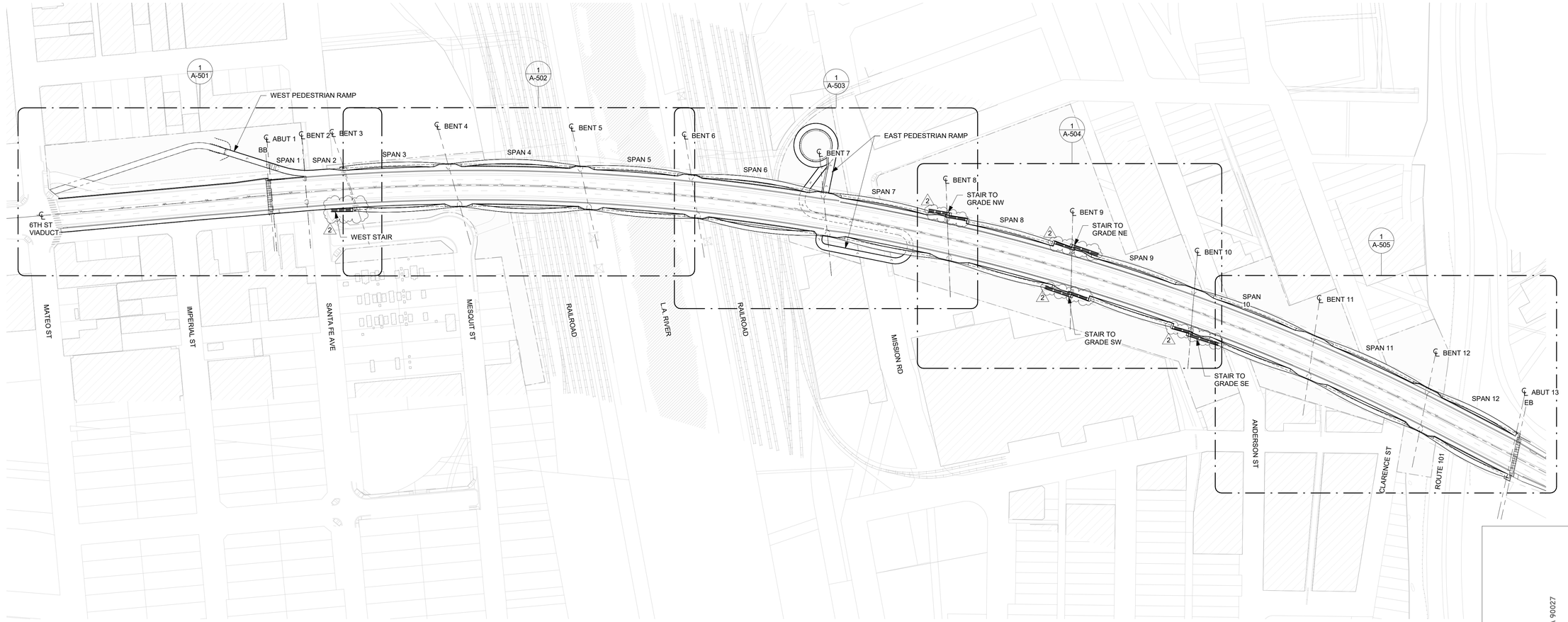

1 SITE PLAN - VIADUCT LEVEL
1" = 120'-0"

0 60' 120' 240"

T.O. 5 - Change Order Serial Sketch No. 120-R1 - 6 of 19

BUREAU OF ENGINEERING

ENGINEERING
CITY OF LOS ANGELES

NO.	REVISIONS:	DATE	BY:
1	HELICAL RAMP PILE REARRANGEMENT	4/21/17	ES
2	STAIR MODIFICATIONS	6/5/20	DR

STRUCTURE NO.
53C-2329

INDEX NO.

LICENSED ARCHITECT
DENNIS RUAN
C-37868
10/31/21
RENEWAL DATE
STATE OF CALIFORNIA

CITY OF LOS ANGELES DEPARTMENT OF PUBLIC WORKS

GARY LEE MOORE, P.E.
CITY ENGINEER

SURVEY DIVISION

ENGINEER:
DESIGNED BY:
DRAWN BY:
CHECKED BY:
APPROVED BY:

MICHAEL MALTZAN ARCHITECTURE, INC.
2801 Hyperion Avenue, Studio 107 / Los Angeles, CA 90027
T (323) 913-3098 F (323) 913-5932

HNTB
HNTB Corporation
601 W. 5TH STREET SUITE 1000
LOS ANGELES, CALIFORNIA 90071
TEL (213) 403-1000 FAX (213) 403-1001

VERTICAL CONTROL:
HORIZONTAL CONTROL:

SHEET TITLE: SITE PLAN - VIADUCT LEVEL

PROJECT: SIXTH STREET VIADUCT REPLACEMENT

ADDRESS: SIXTH STREET VIADUCT (WHITTIER BLVD) LOS ANGELES, CA

WORK ORDER NO.
E700224F

DRAWING NO.
A-S01

REVISION DATES
(DESIGN STAGE ONLY)

Sheet Version 2.01

ADDENDUM 5

6/9/2020 11:36:41 PM

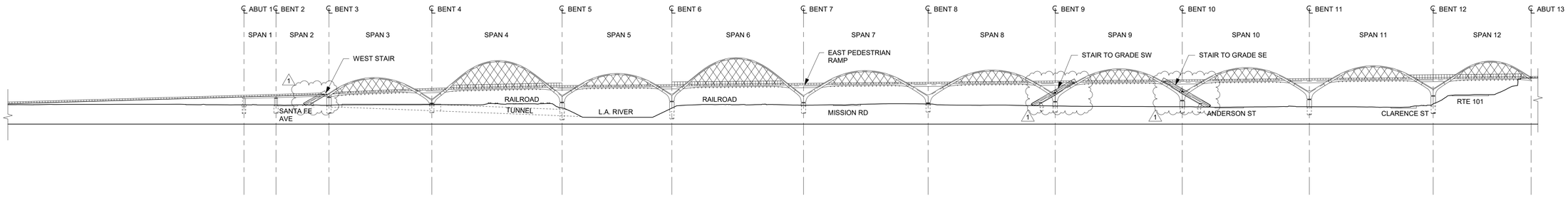

1 OVERALL ELEVATION - ARCHITECTURAL (SOUTH)
1" = 120'-0"
0 60' 120' 240'

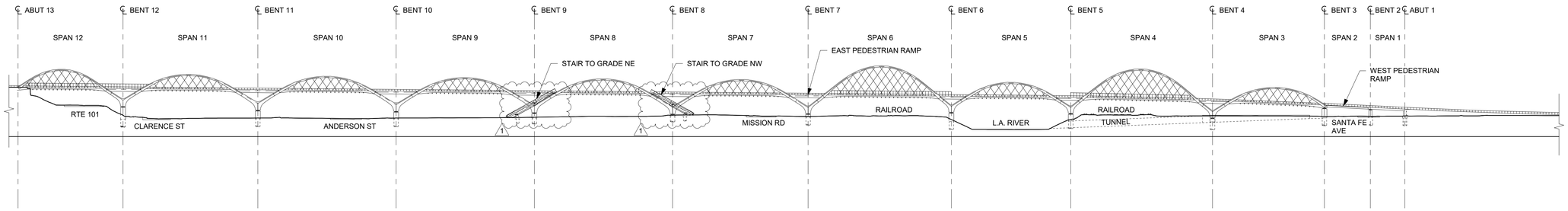

2 OVERALL ELEVATION - ARCHITECTURAL (NORTH)
1" = 120'-0"
0 60' 120' 240'

T.O. 5 - Change Order Serial Sketch No. 120-R1 - 7 of 19

BUREAU OF ENGINEERING
ENGINEERING
CITY OF LOS ANGELES

NO.	REVISIONS:	DATE	BY:
1	STAIR MODIFICATIONS	6/5/20	DR

STRUCTURE NO. 53C-2329

INDEX NO.

LICENSED ARCHITECT
DENNIS RUAN
C-37868
10/31/21
RENEWAL DATE
STATE OF CALIFORNIA

CITY OF LOS ANGELES DEPARTMENT OF PUBLIC WORKS

CITY ENGINEER:
DATE:
SURVEY DIVISION
GARY LEE MOORE P.E.
ENGINEER:
DESIGNED BY:
DRAWN BY:
CHECKED BY:
APPROVED BY:

VERTICAL CONTROL:
HORIZONTAL CONTROL:

SHEET TITLE: OVERALL ELEVATIONS

PROJECT: SIXTH STREET VIADUCT REPLACEMENT

ADDRESS: SIXTH STREET VIADUCT (WHITTIER BLVD) LOS ANGELES, CA

MICHAEL MALTZAN ARCHITECTURE, INC.
2801 Hyperion Avenue, Studio 107 / Los Angeles, CA 90027
T (323) 913-3098 F (323) 913-5932

HNTB
HNTB Corporation
601 W. 5TH STREET SUITE 1000
LOS ANGELES, CALIFORNIA 90071
TEL (213) 403-1000 FAX (213) 403-1001

WORK ORDER NO. E700224F

DRAWING NO. A-201

REVISION DATES (DESIGN STAGE ONLY)

Sheet Version 2.01

ADDENDUM 5

7/1/2016 5:14:00 PM

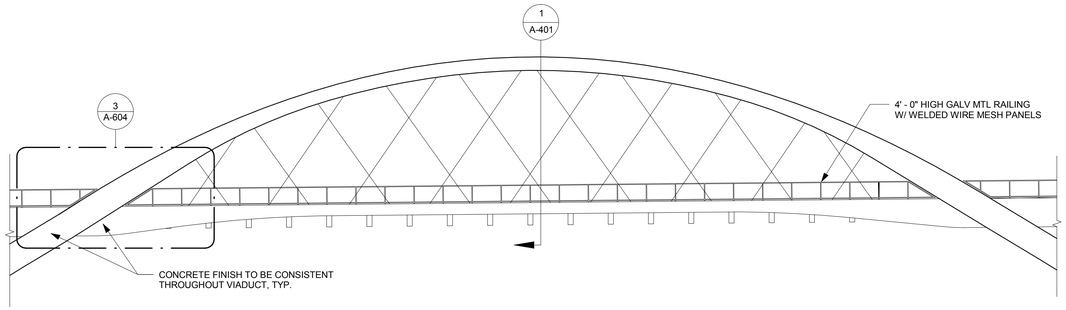

1 ENLARGED ELEVATION - TYPICAL ARCH
1/16" = 1'-0"
0 8' 16' 32'

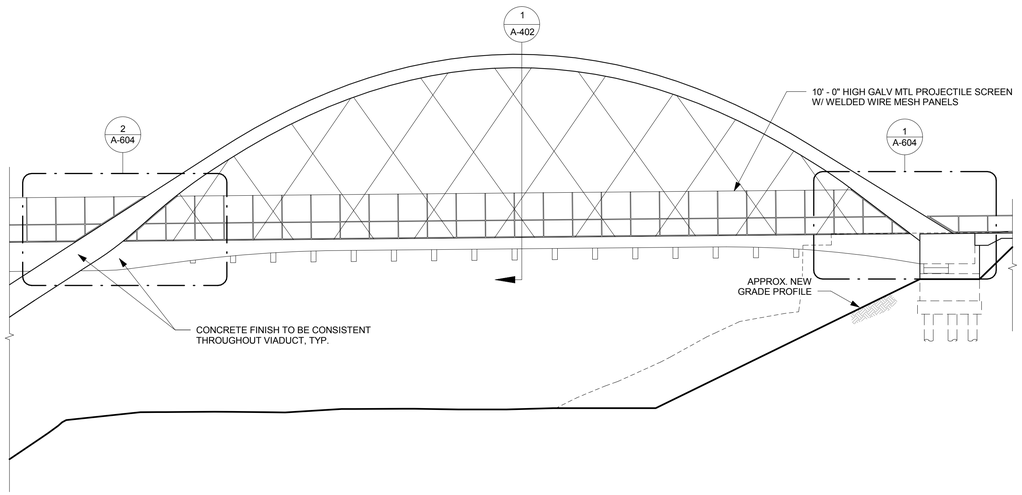

2 ENLARGED ELEVATION - 101 FWY ARCH
1/16" = 1'-0"
0 8' 16' 32'

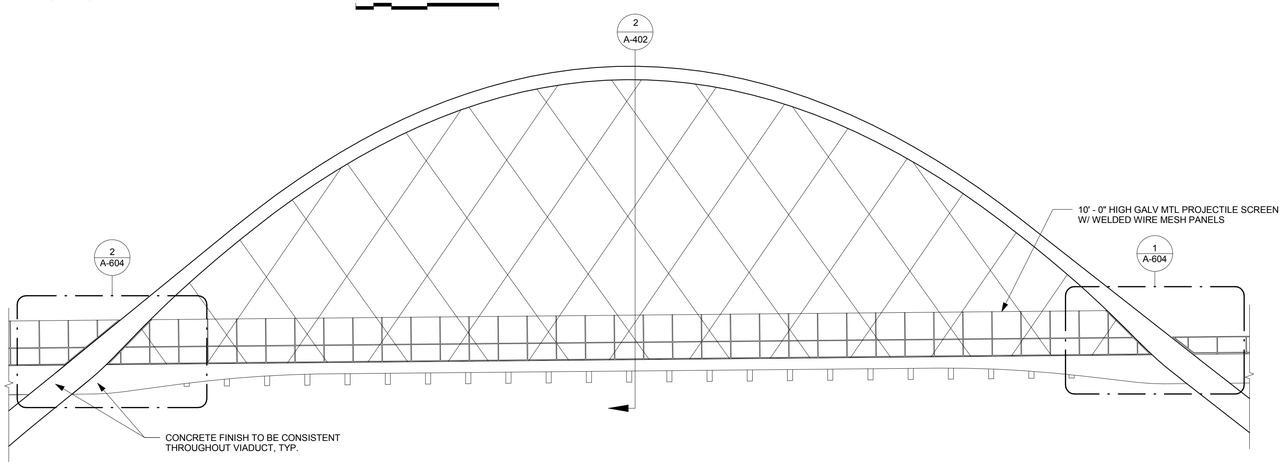

3 ENLARGED ELEVATION - RAILROAD ARCH
1/16" = 1'-0"
0 8' 16' 32'

REVISION DATES (DESIGN STAGE ONLY)

Sheet Version 2.01

ENGINEERING
CITY OF LOS ANGELES

BUREAU OF ENGINEERING

NO.	REVISIONS	DATE	BY:

STRUCTURE NO.
53C-2329

INDEX NO.
P-38113

LICENSED ARCHITECT
JENNIFER LOHR MacISAAC
C-22480
07-31-2017
RENEWAL DATE
STATE OF CALIFORNIA

CITY OF LOS ANGELES DEPARTMENT OF PUBLIC WORKS

VERTICAL CONTROL:
HORIZONTAL CONTROL:

SHEET TITLE: ENLARGED ELEVATION - TYPICAL ARCHES

PROJECT: SIXTH STREET VIADUCT REPLACEMENT

ADDRESS: SIXTH STREET VIADUCT (WHITTIER BLVD)
LOS ANGELES, CA

ENGINEER:	GARY LEE MOORE, P.E.
	SURVEY DIVISION
DESIGNED BY:	
DRAWN BY:	
CHECKED BY:	
APPROVED BY:	CITY ENGINEER
	DATE:

MICHAEL MALTZAN ARCHITECTURE, INC.
2801 Hyperion Avenue, Studio 107 / Los Angeles, CA 90027
T (323) 913-3098 F (323) 913-5932

HNTB
HNTB Corporation
601 W. 5TH STREET SUITE 1000
LOS ANGELES, CALIFORNIA 90071
TEL (213) 403-1000 FAX (213) 403-1001

BUREAU OF ENGINEERING
OFFICIAL RECORD

WORK ORDER NO.
E700224F

DRAWING NO.
A-310

SHEET 517 OF 560 SHEETS

ADDENDUM 5

7/1/2016 5:15:31 PM

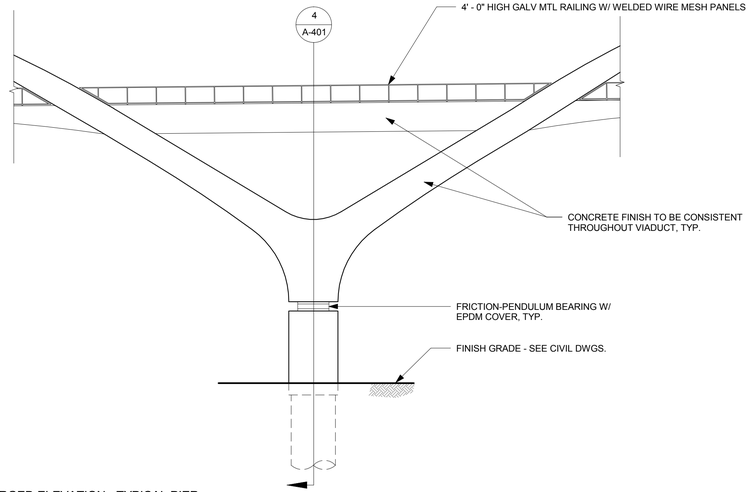

1 ENLARGED ELEVATION - TYPICAL PIER (EXTERIOR)
1/16" = 1'-0"

0 8' 16' 32'

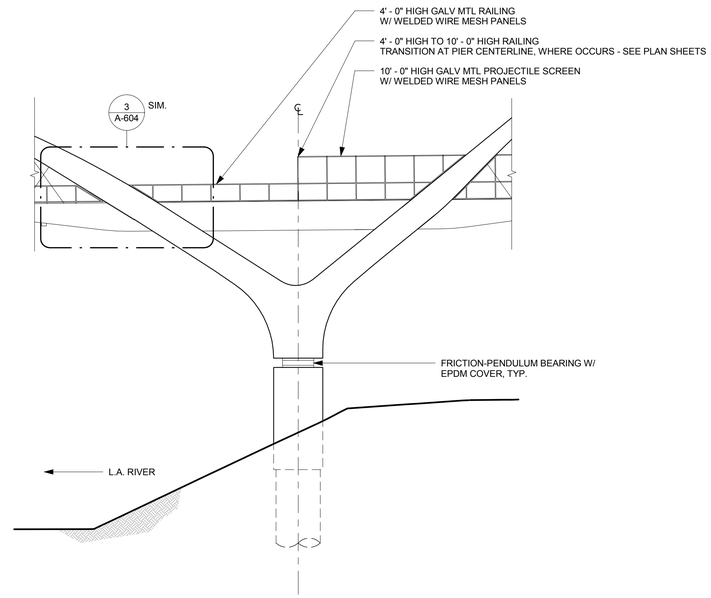

3 ENLARGED ELEVATION - PIER @ PROJECTILE SCREEN
1/16" = 1'-0"

0 8' 16' 32'

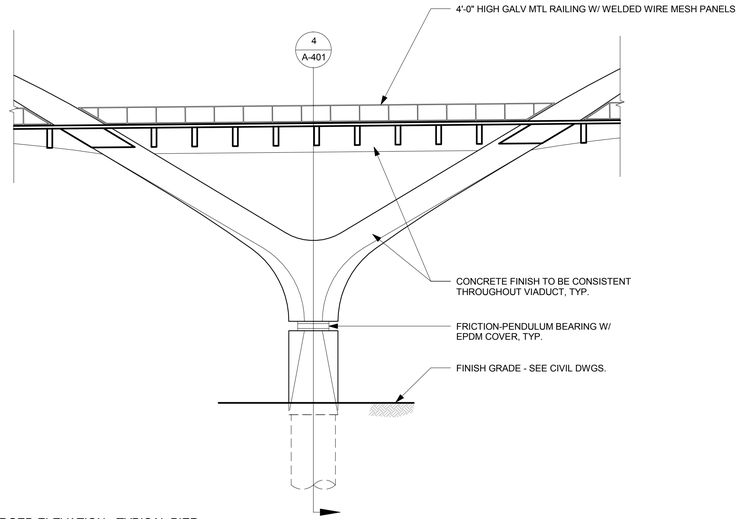

2 ENLARGED ELEVATION - TYPICAL PIER (INTERIOR)
1/16" = 1'-0"

0 8' 16' 32'

REVISION DATES (DESIGN STAGE ONLY)

Sheet Version 2.01

BUREAU OF ENGINEERING

ENGINEERING
CITY OF LOS ANGELES

NO. REVISIONS: DATE: BY:

STRUCTURE NO. 53C-2329

INDEX NO. P-38113

LICENSED ARCHITECT
JENNIFER LOHR MacISAAC
C-22480
07-31-2017
RENEWAL DATE
STATE OF CALIFORNIA

CITY OF LOS ANGELES DEPARTMENT OF PUBLIC WORKS

CITY ENGINEER: DATE:
GARY LEE MOORE, P.E.
SURVEY DIVISION

ENGINEER:
DESIGNED BY:
DRAWN BY:
CHECKED BY:
APPROVED BY:

MICHAEL MALTZAN ARCHITECTURE, INC.
2801 Hyperion Avenue, Studio 107 / Los Angeles, CA 90027
T (323) 913-3098 F (323) 913-5932

HNTB
HNTB Corporation
601 W. 5TH STREET SUITE 1000
LOS ANGELES, CALIFORNIA 90071
TEL (213) 403-1000 FAX (213) 403-1001

BUREAU OF ENGINEERING
OFFICIAL RECORD

VERTICAL CONTROL:
HORIZONTAL CONTROL:

SHEET TITLE: ENLARGED ELEVATION - TYPICAL PIER

PROJECT: SIXTH STREET VIADUCT REPLACEMENT

ADDRESS: SIXTH STREET VIADUCT (WHITTIER BLVD) LOS ANGELES, CA

WORK ORDER NO. E700224F

DRAWING NO. A-311

SHEET 518 OF 560 SHEETS

ADDENDUM 5

1/25/2022 5:42:08 PM

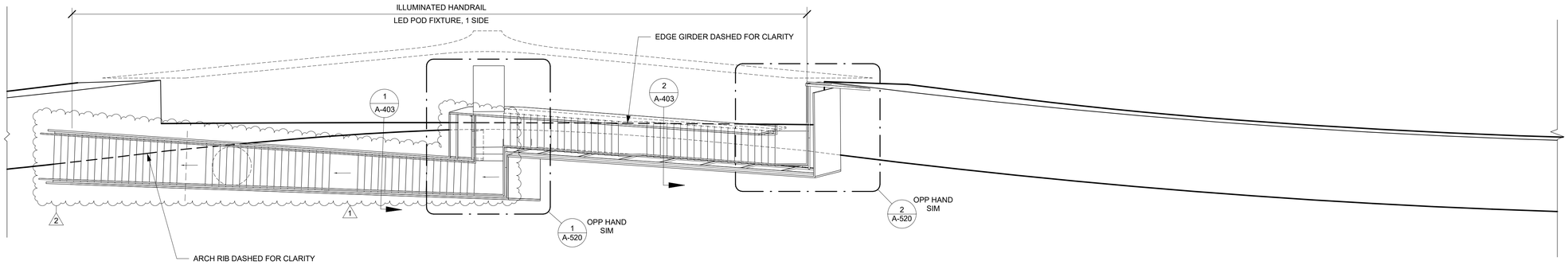

ENLARGED PLAN - SOUTH STAIR
(2) (WEST)
1/8" = 1'-0"
0 4' 8' 16'

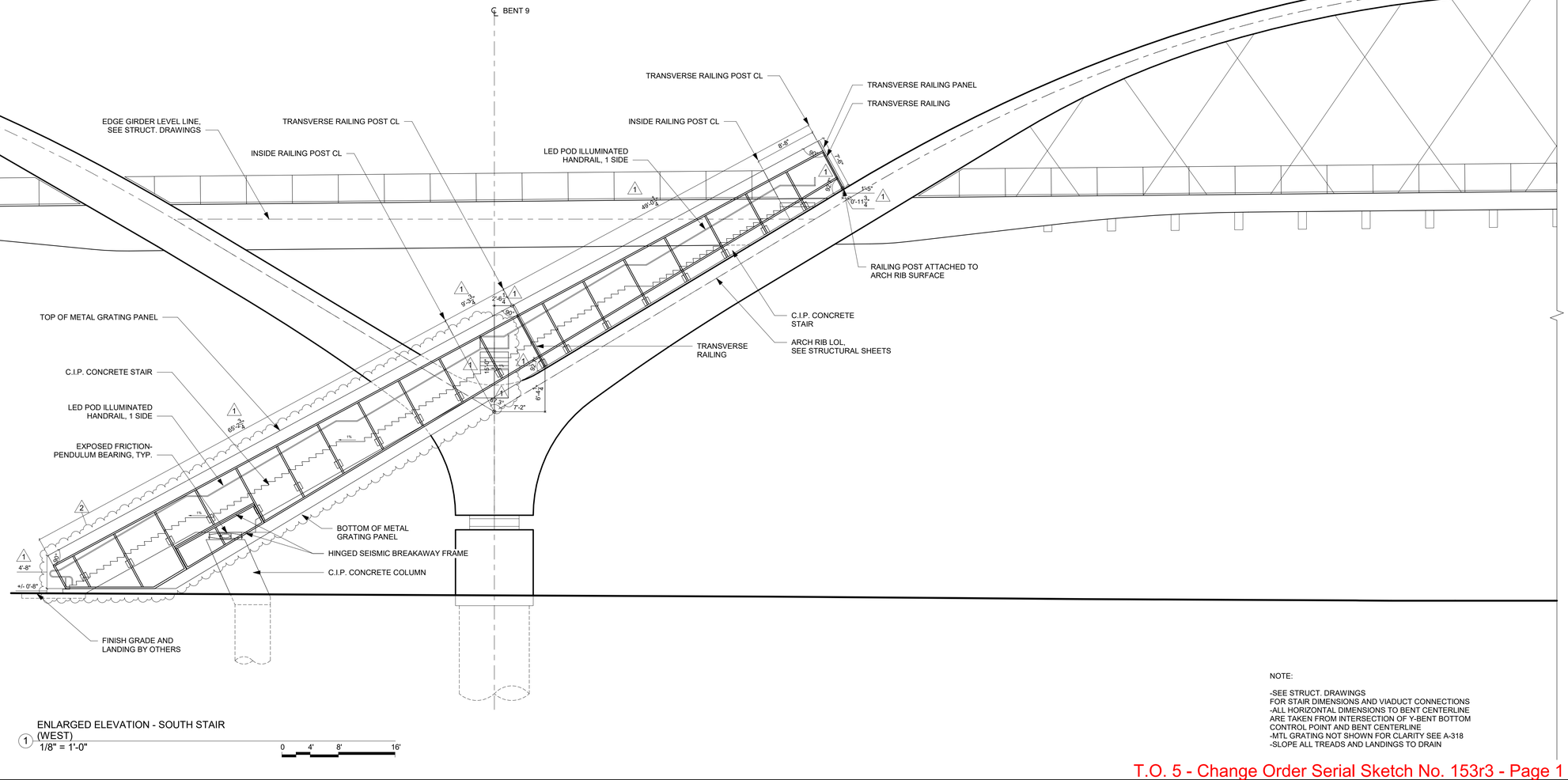

ENLARGED ELEVATION - SOUTH STAIR
(1) (WEST)
1/8" = 1'-0"
0 4' 8' 16'

NOTE:

-SEE STRUCT. DRAWINGS
FOR STAIR DIMENSIONS AND VIADUCT CONNECTIONS
-ALL HORIZONTAL DIMENSIONS TO BENT CENTERLINE
ARE TAKEN FROM INTERSECTION OF Y-BENT BOTTOM
CONTROL POINT AND BENT CENTERLINE
-MTL GRATING NOT SHOWN FOR CLARITY SEE A-318
-SLOPE ALL TREADS AND LANDINGS TO DRAIN

T.O. 5 - Change Order Serial Sketch No. 153r3 - Page 1 of 15

John Trautmann's stamp applies to Revision 2 - PARC STAIR ELEVATION REVISION (DATED 12/03/21) only.

LICENSED ARCHITECT
JOHN PHILIP TRAUTMANN
C-21914
08/31/2023
RENEWAL DATE
STATE OF CALIFORNIA

LICENSED ARCHITECT
JENNIFER LOHR MacISAAC
C-22480
07-31-2017
RENEWAL DATE
STATE OF CALIFORNIA

BUREAU OF ENGINEERING

ENGINEERING
CITY OF LOS ANGELES

NO.	REVISIONS	DATE	BY:
1	STAIR MODIFICATIONS	CO 120 6/5/20	DR
2	PARC STAIR ELEVATION REVISION	CO 153 12/3/21	MT

STRUCTURE NO.
53C-2329

INDEX NO.

CITY OF LOS ANGELES DEPARTMENT OF PUBLIC WORKS

CITY ENGINEER:
DATE:

SURVEY DIVISION

GARY LEE MOORE, P.E.

ENGINEER:
DESIGNED BY:
DRAWN BY:
CHECKED BY:
APPROVED BY:

MICHAEL MALTZAN ARCHITECTURE, INC.
2801 Hyperion Avenue, Studio 107 / Los Angeles, CA 90027
T (323) 913-3098 F (323) 913-5932

HNTB
HNTB Corporation
601 W. 5TH STREET, SUITE 1000
LOS ANGELES, CALIFORNIA 90071
TEL (213) 403-1000 FAX (213) 403-1001

VERTICAL CONTROL:
HORIZONTAL CONTROL:

SHEET TITLE: PARTIAL PLAN / ELEVATION - SOUTH STAIR

PROJECT: SIXTH STREET VIADUCT REPLACEMENT

ADDRESS: SIXTH STREET VIADUCT (WHITTIER BLVD) LOS ANGELES, CA

WORK ORDER NO.
E700224F

DRAWING NO.
A-312

REVISION DATES (DESIGN STAGE ONLY)

Sheet Version 2.01

ADDENDUM 5

1/25/2022 5:42:08 PM

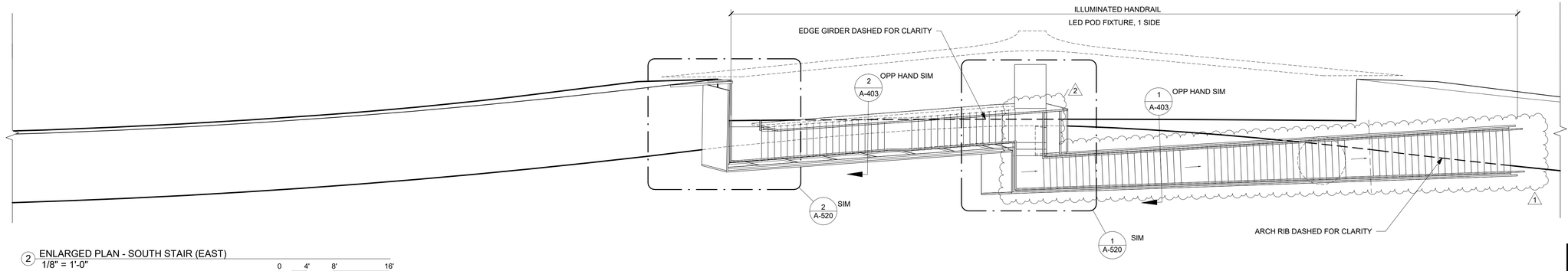

2 ENLARGED PLAN - SOUTH STAIR (EAST)
1/8" = 1'-0"
0 4' 8' 16'

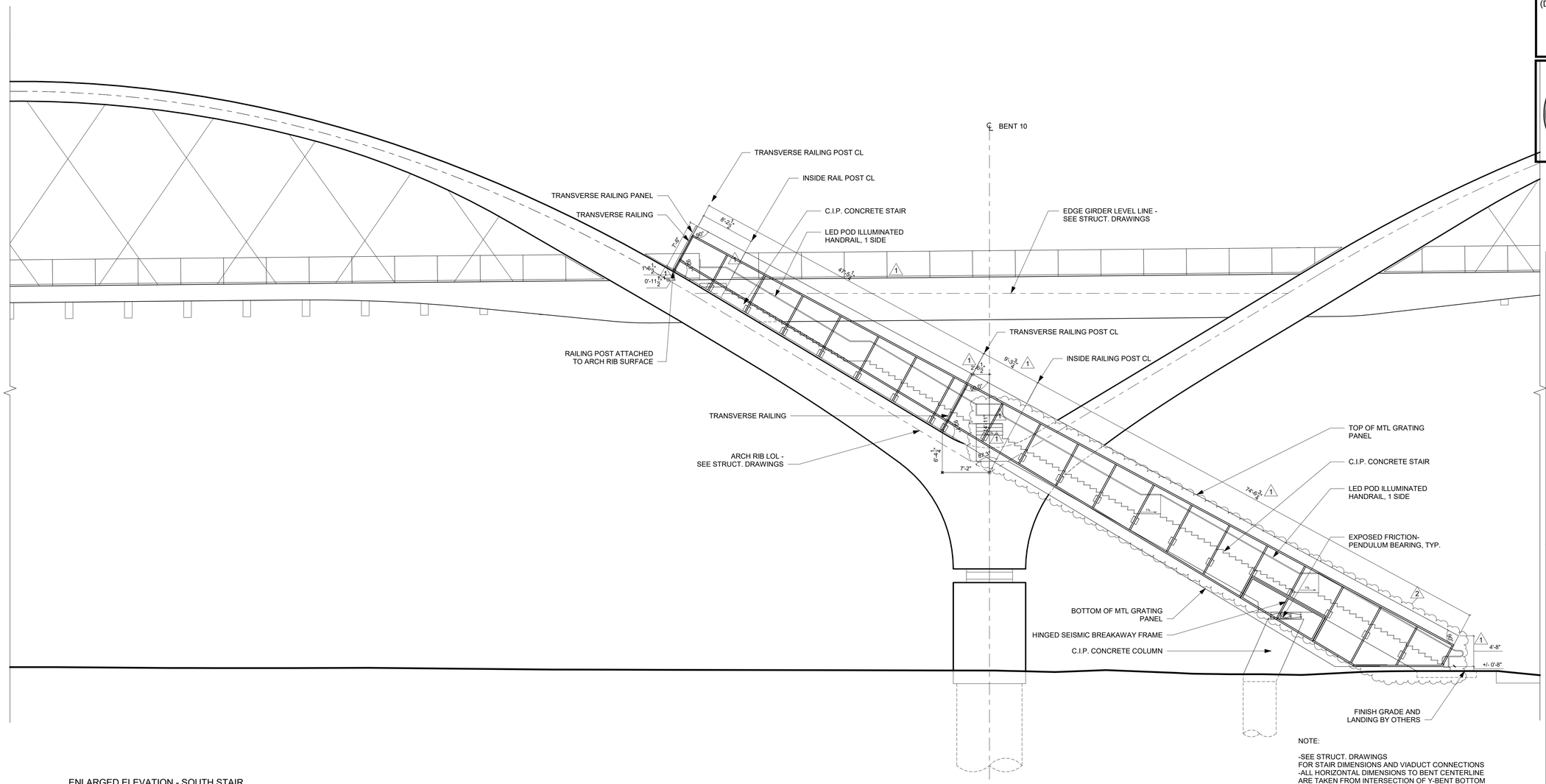

1 ENLARGED ELEVATION - SOUTH STAIR (EAST)
1/8" = 1'-0"
0 4' 8' 16'

NOTE:

-SEE STRUCT. DRAWINGS FOR STAIR DIMENSIONS AND VIADUCT CONNECTIONS
-ALL HORIZONTAL DIMENSIONS TO BENT CENTERLINE ARE TAKEN FROM INTERSECTION OF Y-BENT BOTTOM CONTROL POINT AND BENT CENTERLINE
-MTL GRATING NOT SHOWN FOR CLARITY SEE A-318
-SLOPE ALL TREADS AND LANDINGS TO DRAIN

John Trautmann's stamp applies to Revision 2 - PARC STAIR ELEVATION REVISION (DATED 12/03/21) only.

LICENSED ARCHITECT
JOHN PHILIP TRAUTMANN
C-21914
08/31/2023
RENEWAL DATE
STATE OF CALIFORNIA

LICENSED ARCHITECT
JENNIFER LOHR MacISAAC
C-22480
07-31-2017
RENEWAL DATE
STATE OF CALIFORNIA

BUREAU OF ENGINEERING

ENGINEERING
CITY OF LOS ANGELES

NO.	REVISIONS:	DATE	BY:
1	STAIR MODIFICATIONS	CO 120 6/5/20	DR
2	PARC STAIR ELEVATION REVISION	CO 153 12/3/21	MT

STRUCTURE NO.
53C-2329

INDEX NO.

MICHAEL MALTZAN ARCHITECTURE, INC.
2801 Hyperion Avenue, Studio 107 / Los Angeles, CA 90027
T (323) 913-3098 F (323) 913-5932

HNTB
HNTB Corporation
601 W. 5TH STREET SUITE 1000
LOS ANGELES, CALIFORNIA 90071
TEL (213) 403-1000 FAX (213) 403-1001

CITY OF LOS ANGELES DEPARTMENT OF PUBLIC WORKS

GARY LEE MOORE, P.E. CITY ENGINEER
SURVEY DIVISION

ENGINEER:
DESIGNED BY:
DRAWN BY:
CHECKED BY:
APPROVED BY:

VERTICAL CONTROL:
HORIZONTAL CONTROL:

SHEET TITLE: PARTIAL PLAN / ELEVATION - SOUTH STAIR

PROJECT: SIXTH STREET VIADUCT REPLACEMENT

ADDRESS: SIXTH STREET VIADUCT (WHITTIER BLVD) LOS ANGELES, CA

WORK ORDER NO.
E700224F

DRAWING NO.
A-313

REVISION DATES
DESIGN STAGE ONLY)

Sheet Version 2.01

1/25/2022 5:42:08 PM

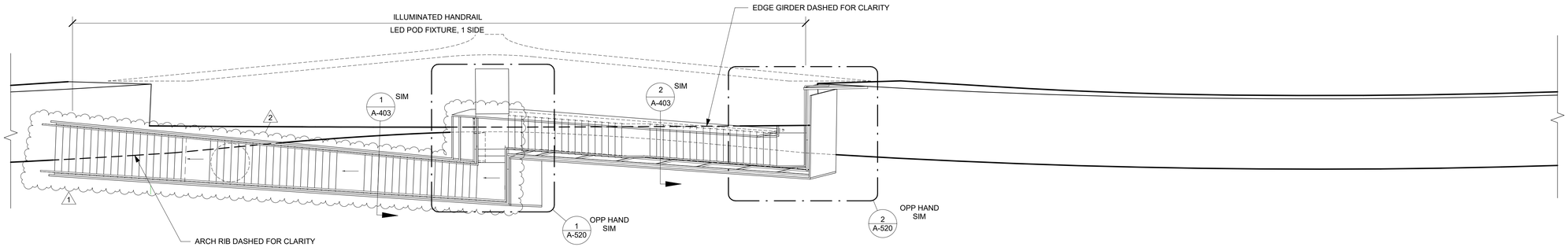

2 ENLARGED PLAN - NORTH STAIR (EAST)
1/8" = 1'-0"
0 4' 8' 16'

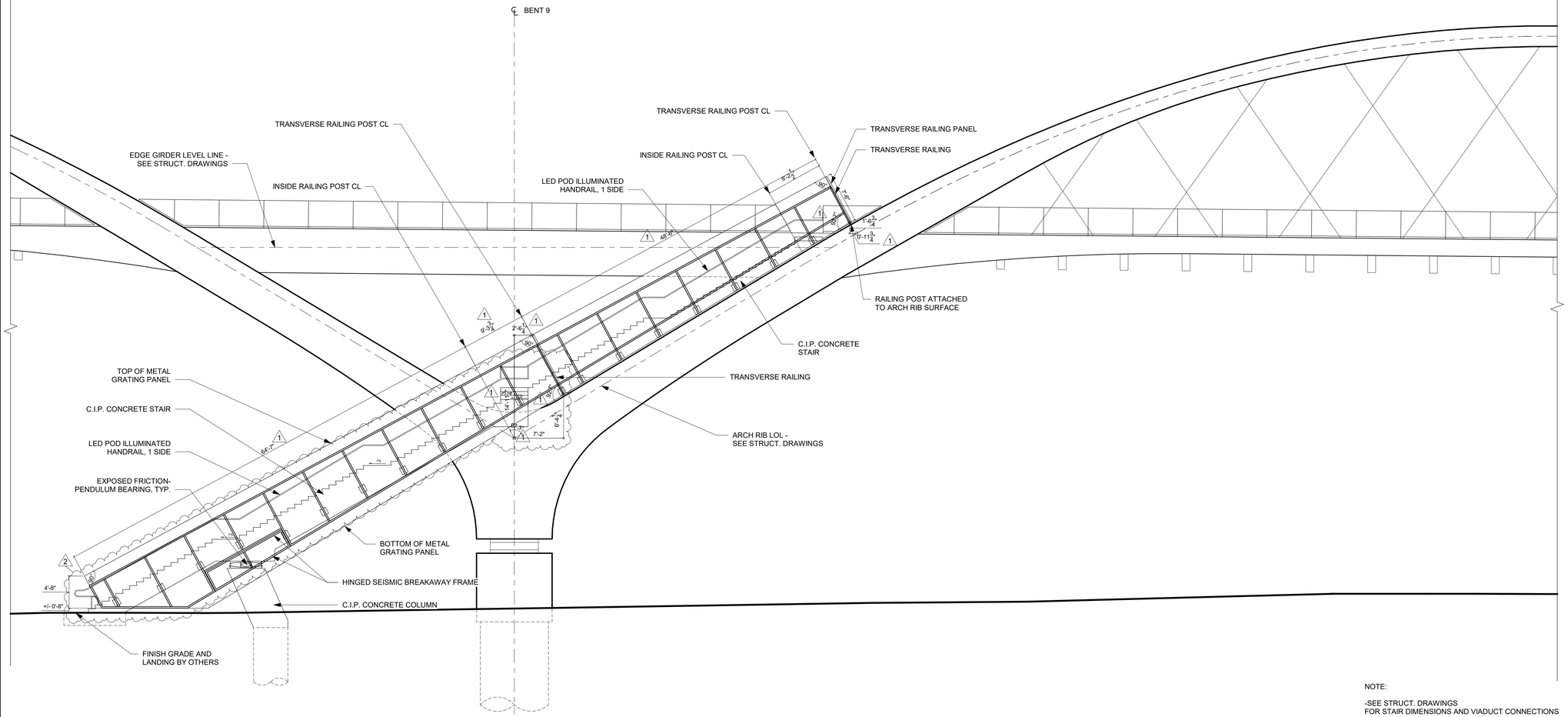

1 ENLARGED ELEVATION - NORTH STAIR (EAST)
1/8" = 1'-0"
0 4' 8' 16'

NOTE:

-SEE STRUCT. DRAWINGS FOR STAIR DIMENSIONS AND VIADUCT CONNECTIONS
-ALL HORIZONTAL DIMENSIONS TO BENT CENTERLINE ARE TAKEN FROM INTERSECTION OF Y-BENT BOTTOM CONTROL POINT AND BENT CENTERLINE
-MTL GRATING NOT SHOWN FOR CLARITY SEE A-318
-SLOPE ALL TREADS AND LANDINGS TO DRAIN

John Trautmann's stamp applies to Revision 2 - PARC STAIR ELEVATION REVISION (DATED 12/03/21) only.

LICENSED ARCHITECT
JOHN PHILIP TRAUTMANN
C-21914
08/31/2023
RENEWAL DATE
STATE OF CALIFORNIA

LICENSED ARCHITECT
JENNIFER LOHR MacISAAC
C-22480
07-31-2017
RENEWAL DATE
STATE OF CALIFORNIA

BUREAU OF ENGINEERING

ENGINEERING
CITY OF LOS ANGELES

NO.	REVISIONS	DATE	BY:
1	STAIR MODIFICATIONS	CO 120 6/5/20	DR
2	PARC STAIR ELEVATION REVISION	CO 153 12/3/21	MT

STRUCTURE NO.
53C-2329

INDEX NO.

CITY OF LOS ANGELES DEPARTMENT OF PUBLIC WORKS

CITY ENGINEER:	
DATE:	. .
SURVEY DIVISION	
ENGINEER:	
DESIGNED BY:	
DRAWN BY:	
CHECKED BY:	
APPROVED BY:	

GARY LEE MOORE, P.E.

VERTICAL CONTROL:
HORIZONTAL CONTROL:

SHEET TITLE: PARTIAL PLAN / ELEVATION - NORTH STAIR

PROJECT: SIXTH STREET VIADUCT REPLACEMENT

ADDRESS: SIXTH STREET VIADUCT (WHITTIER BLVD) LOS ANGELES, CA

MICHAEL MALTZAN ARCHITECTURE, INC.
2801 Hyperion Avenue, Studio 107 / Los Angeles, CA 90027
T (323) 913-3098 F (323) 913-5932

HNTB
HNTB Corporation
601 W. 5TH STREET SUITE 1000
LOS ANGELES, CALIFORNIA 90071
TEL (213) 403-1000 FAX (213) 403-1001

WORK ORDER NO.
E700224F

DRAWING NO.
A-314

REVISION DATES (DESIGN STAGE ONLY)

Sheet Version 2.01

1/25/2022 5:42:08 PM

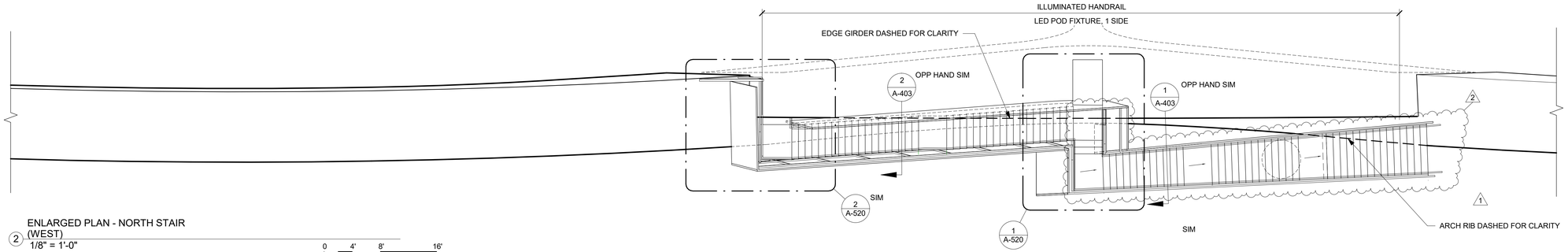

ENLARGED PLAN - NORTH STAIR
(2) (WEST)
1/8" = 1'-0"

0 4' 8' 16'

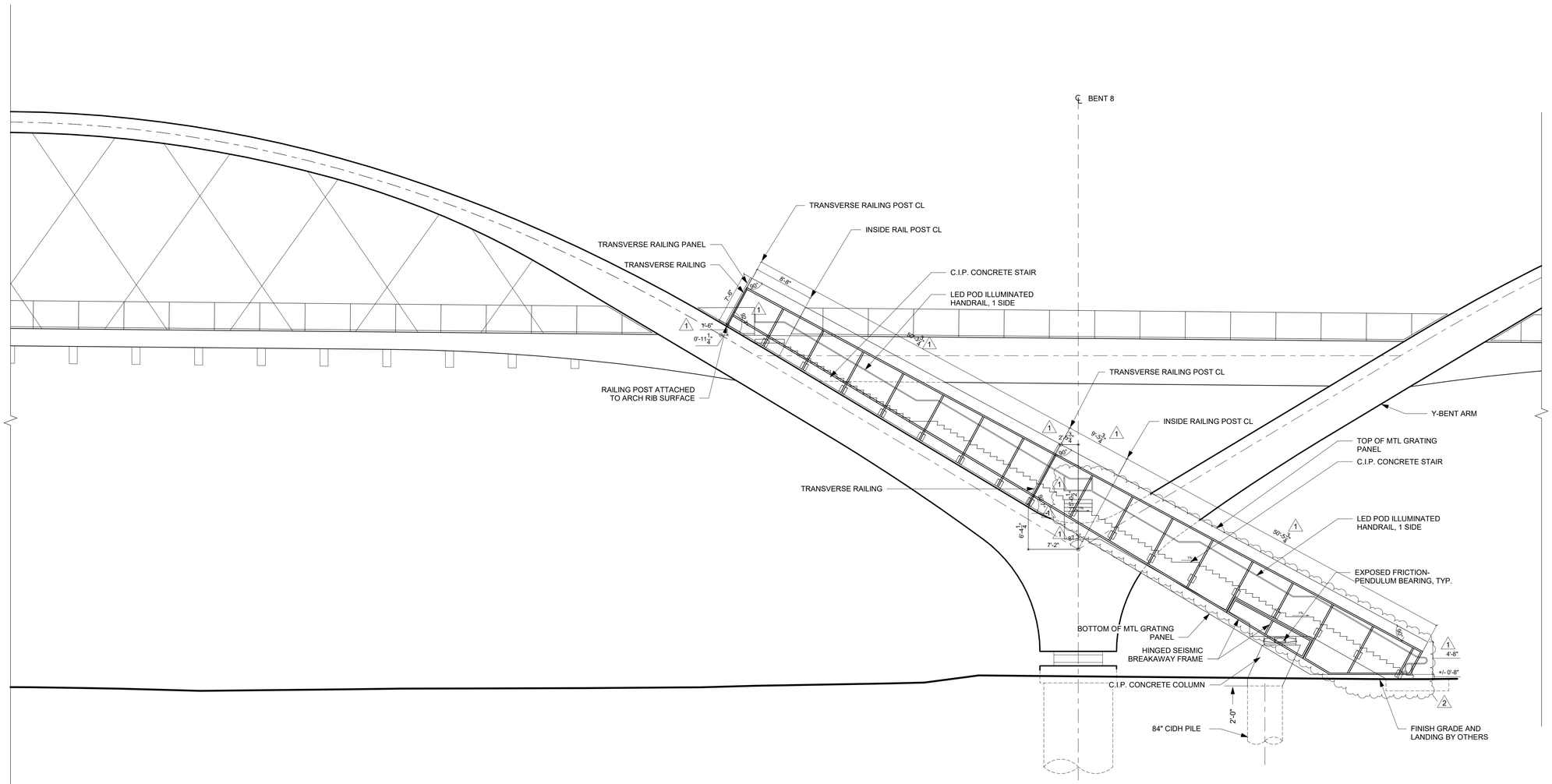

ENLARGED ELEVATION - NORTH STAIR
(1) (WEST)
1/8" = 1'-0"

0 4' 8' 16'

NOTE:

-SEE STRUCT. DRAWINGS FOR STAIR DIMENSIONS AND VIADUCT CONNECTIONS
-ALL HORIZONTAL DIMENSIONS TO BENT CENTERLINE ARE TAKEN FROM INTERSECTION OF Y-BENT BOTTOM CONTROL POINT AND BENT CENTERLINE
-MTL GRATING NOT SHOWN FOR CLARITY SEE A-318
-SLOPE ALL TREADS AND LANDINGS TO DRAIN

John Trautmann's stamp applies to Revision 2 - PARC STAIR ELEVATION REVISION (DATED 12/03/21) only.

LICENSED ARCHITECT
JOHN PHILIP TRAUTMANN
C-21914
08/31/2023
RENEWAL DATE
STATE OF CALIFORNIA

LICENSED ARCHITECT
JENNIFER LOHR MacISAAC
C-22480
07-31-2017
RENEWAL DATE
STATE OF CALIFORNIA

BUREAU OF ENGINEERING

ENGINEERING
CITY OF LOS ANGELES

NO.	REVISIONS	DATE	BY:
1	STAIR MODIFICATIONS	6/5/20	DR
2	PARC STAIR ELEVATION REVISION	12/3/21	MT

CO 120
CO 153

STRUCTURE NO.
53C-2329

INDEX NO.

MICHAEL MALTZAN ARCHITECTURE, INC.
2801 Hyperion Avenue, Studio 107 / Los Angeles, CA 90027
T (323) 913-3098 F (323) 913-5932

HNTB
HNTB Corporation
601 W. 5TH STREET SUITE 1000
LOS ANGELES, CALIFORNIA 90071
TEL (213) 403-1000 FAX (213) 403-1001

CITY OF LOS ANGELES DEPARTMENT OF PUBLIC WORKS

GARY LEE MOORE P.E. CITY ENGINEER
SURVEY DIVISION DATE

ENGINEER:
DESIGNED BY:
DRAWN BY:
CHECKED BY:
APPROVED BY:

VERTICAL CONTROL:
HORIZONTAL CONTROL:

SHEET TITLE: PARTIAL PLAN / ELEVATION - NORTH STAIR

PROJECT: SIXTH STREET VIADUCT REPLACEMENT

ADDRESS: SIXTH STREET VIADUCT (WHITTIER BLVD) LOS ANGELES, CA

WORK ORDER NO.
E700224F

DRAWING NO.
A-315

REVISION DATES (DESIGN STAGE ONLY)

Sheet Version 2.01

1/25/2022 5:42:09 PM

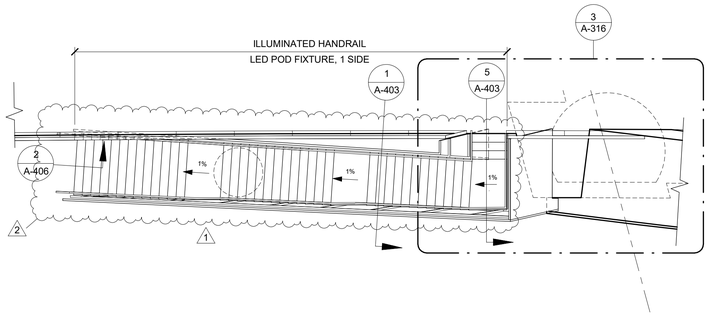

2 ENLARGED PLAN - WEST STAIR
1/8" = 1'-0"
0 4' 8' 16'

1 ENLARGED ELEVATION - WEST STAIR
1/8" = 1'-0"
0 4' 8' 16'

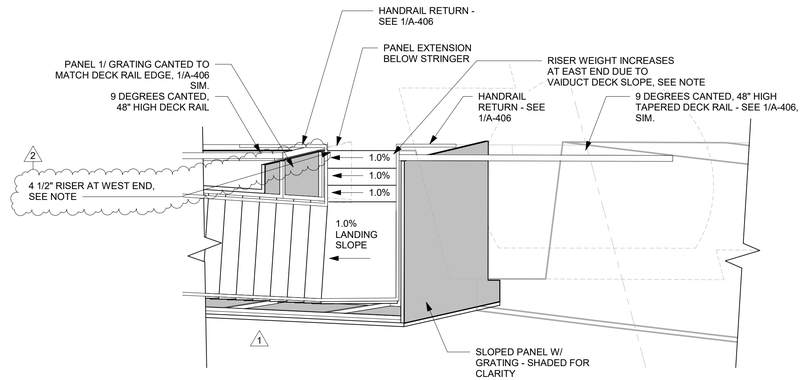

3 ENLARGED PARTIAL PLAN - WEST STAIR LANDING AT DECK
1/4" = 1'-0"
0 2' 4' 8'

NOTE:

-SEE STRUCT. DRAWINGS FOR STAIR DIMENSIONS AND VIADUCT CONNECTIONS
-ALL HORIZONTAL DIMENSIONS TO BENT CENTERLINE ARE TAKEN FROM INTERSECTION OF Y-BENT BOTTOM CONTROL POINT AND BENT CENTERLINE
-MTL GRATING NOT SHOWN FOR CLARITY SEE A-318
-SLOPE ALL TREADS AND LANDINGS TO DRAIN
-AT LOCATIONS ALONG ADJACENT WALKWAYS / PLATFORM,TOP RISER VARIOUS TO ALLOW FOR SLOPE OF PLATFORM. MIN. HEIGHT SHALL NOT BE GREATER THAN 7" PER CBC 1011.5.4.1

John Trautmann's stamp applies to Revision 2 - PARC STAIR ELEVATION REVISION (DATED 12/03/21) only.

LICENSED ARCHITECT
JOHN PHILIP TRAUTMANN
C-21914
08/31/2023
RENEWAL DATE
STATE OF CALIFORNIA

LICENSED ARCHITECT
JENNIFER LOHR MacISAAC
C-22480
07-31-2017
RENEWAL DATE
STATE OF CALIFORNIA

BUREAU OF ENGINEERING

ENGINEERING
CITY OF LOS ANGELES

NO. REVISIONS: DATE BY:
1 STAIR MODIFICATIONS CO 120 6/5/20 DR
2 PARC STAIR ELEVATION REVISION CO 153 12/3/21 MT

STRUCTURE NO. 53C-2329

INDEX NO.

CITY OF LOS ANGELES DEPARTMENT OF PUBLIC WORKS

GARY LEE MOORE P.E. CITY ENGINEER
SURVEY DIVISION
ENGINEER: DATE
DESIGNED BY:
DRAWN BY:
CHECKED BY:
APPROVED BY:

MICHAEL MALTZAN ARCHITECTURE, INC.
2801 Hyperion Avenue, Studio 107 / Los Angeles, CA 90027
T (323) 913-3098 F (323) 913-5932

HNTB
HNTB Corporation
601 W. 5TH STREET, SUITE 1000
LOS ANGELES, CALIFORNIA 90071
TEL (213) 403-1000 FAX (213) 403-1001

VERTICAL CONTROL:
HORIZONTAL CONTROL:

SHEET TITLE: ENLARGED PLAN / ELEVATION - WEST STAIR

PROJECT: SIXTH STREET VIADUCT REPLACEMENT

ADDRESS: SIXTH STREET VIADUCT (WHITTIER BLVD) LOS ANGELES, CA

WORK ORDER NO. E700224F

DRAWING NO. A-316

REVISION DATES (DESIGN STAGE ONLY)

Sheet Version 2.01

ADDENDUM 5

12/17/2021 10:23:30 AM

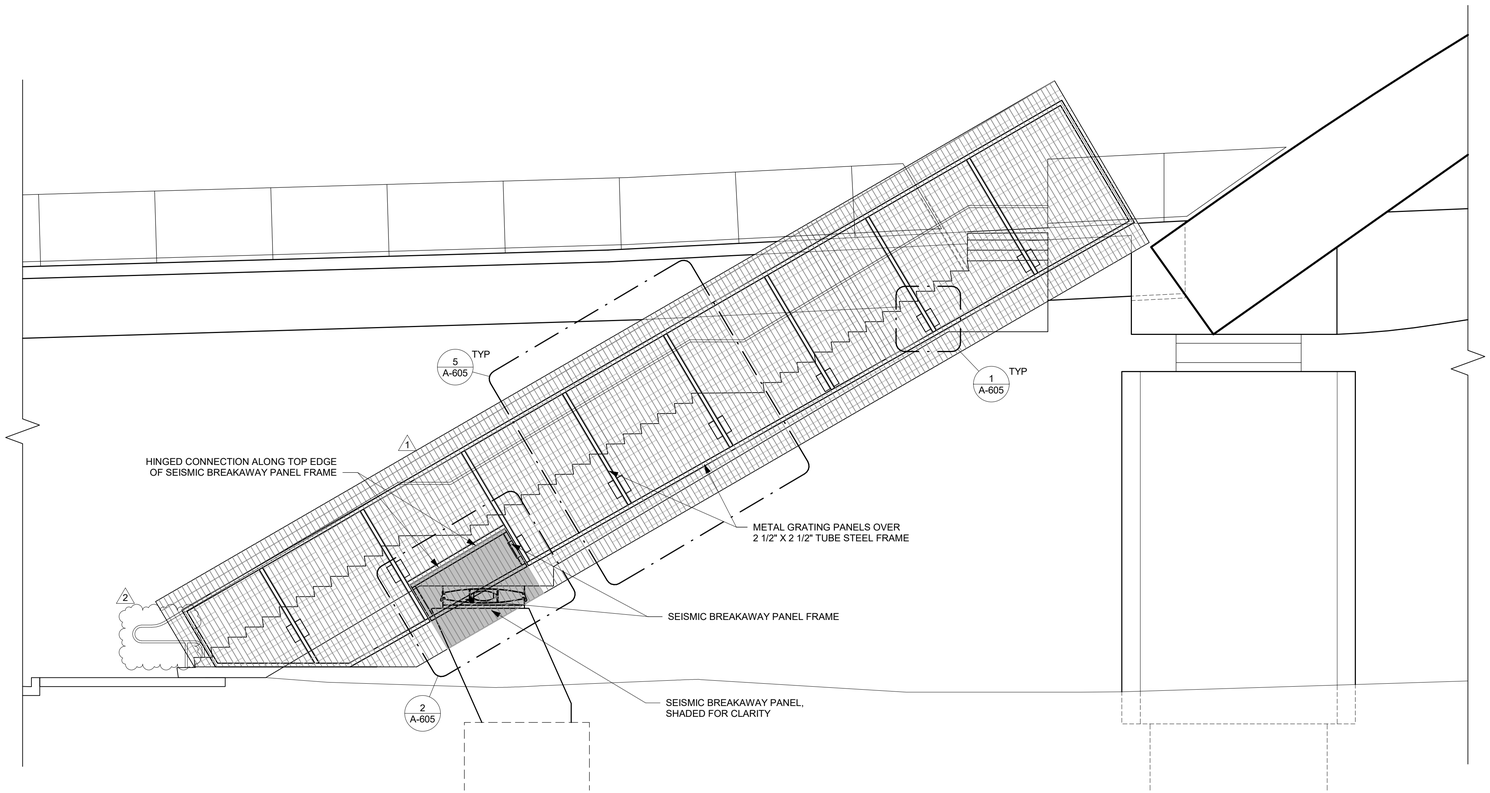

1 ENLARGED ELEVATION - WEST STAIR RAILING
1/4" = 1'-0"

0 2' 4' 8'

BUREAU OF ENGINEERING

ENGINEERING
CITY OF LOS ANGELES

NO.	REVISIONS	DATE	BY:
1	STAIR MODIFICATIONS CO 120	6/5/20	DR
2	PARC STAIR ELEVATION REVISION ECO 153	12/3/21	MT

STRUCTURE NO.
53C-2329

INDEX NO.

LICENSED ARCHITECT
JOHN PHILIP TRAUTMANN
C-21914
08-31-2023
RENEWAL DATE
STATE OF CALIFORNIA

LICENSED ARCHITECT
JENNIFER LOHR MacISAAC
C-22480
07-31-2017
RENEWAL DATE
STATE OF CALIFORNIA

LICENSED ARCHITECT
CERTIFIES REVISON
DATED 12/3/21 - PARC STAIR
ELEVATION REVISION ONLY

CITY OF LOS ANGELES DEPARTMENT OF PUBLIC WORKS

GARY LEE MOORE P.E.
CITY ENGINEER

	DATE
SURVEY DIVISION	
ENGINEER:	
DESIGNED BY:	
DRAWN BY:	
CHECKED BY:	
APPROVED BY:	

VERTICAL CONTROL:
HORIZONTAL CONTROL:

SHEET TITLE: ENLARGED ELEVATION - WEST STAIR RAILING

PROJECT: SIXTH STREET VIADUCT REPLACEMENT

ADDRESS: SIXTH STREET VIADUCT (WHITTIER BLVD) LOS ANGELES, CA

MICHAEL MALTZAN ARCHITECTURE, INC.
2801 Hyperion Avenue, Studio 107 / Los Angeles, CA 90027
T (323) 913-3098 F (323) 913-5932

HNTB
HNTB Corporation
601 W. 5TH STREET SUITE 1000
LOS ANGELES, CALIFORNIA 90071
TEL (213) 403-1000 FAX (213) 403-1001

WORK ORDER NO.
E700224F

DRAWING NO.
A-317

REVISION DATES (DESIGN STAGE ONLY)

Sheet Version 2.01

ADDENDUM 5

6/10/2020 4:30:48 PM

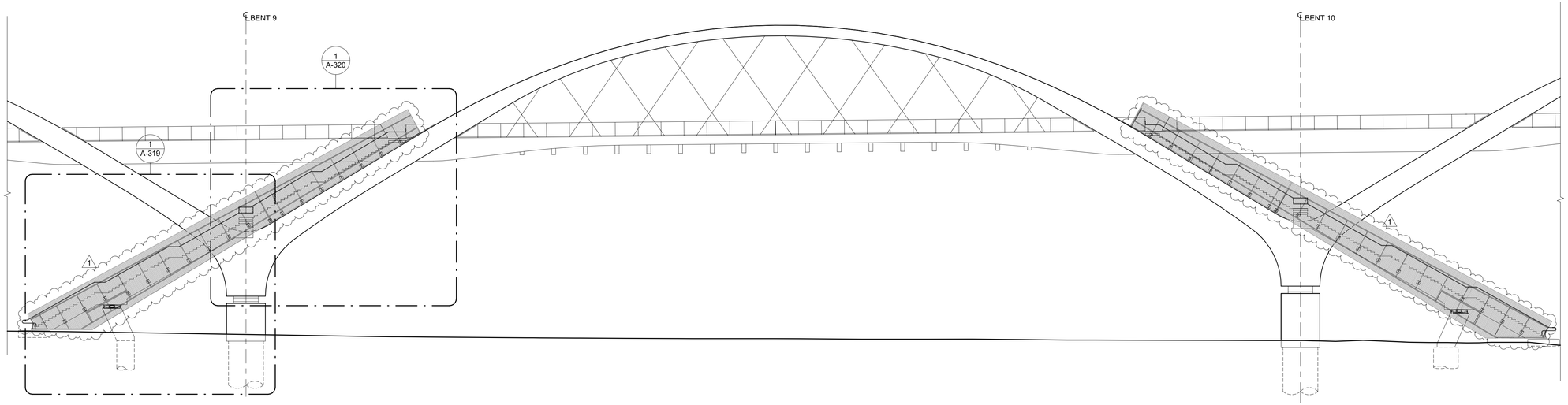

2 ENLARGED ELEVATION - OVERALL
SOUTH STAIR RAILING
1/16" = 1'-0"

0 8' 16' 32'

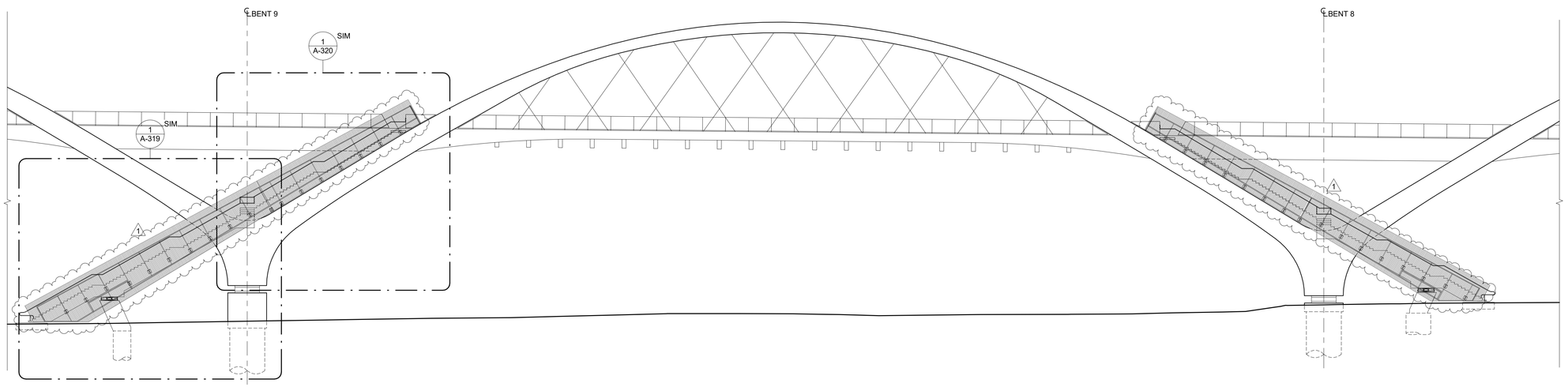

1 ENLARGED ELEVATION - OVERALL
NORTH STAIR RAILING
1/16" = 1'-0"

0 8' 16' 32'

NOTE:
-STAIR RISE VARIES BETWEEN ABOVE DECK RUNS & BELOW DECK RUNS, SEE STRUCT SHEETS FOR TREAD & RISER DIMENSIONS

T.O. 5 - Change Order Serial Sketch No. 120-R1 - 14 of 19

REVISION DATES (DESIGN STAGE ONLY)

Sheet Version 2.01

BUREAU OF ENGINEERING

ENGINEERING
CITY OF LOS ANGELES

NO.	REVISIONS:	DATE	BY:
1.	STAIR MODIFICATIONS	6/5/20	DR

STRUCTURE NO.
53C-2329

INDEX NO.

LICENSED ARCHITECT
DENNIS RUAN
C-37868
10/31/21
RENEWAL DATE
STATE OF CALIFORNIA

CITY OF LOS ANGELES DEPARTMENT OF PUBLIC WORKS

GARY LEE MOORE, P.E. CITY ENGINEER
SURVEY DIVISION DATE

ENGINEER:
DESIGNED BY:
DRAWN BY:
CHECKED BY:
APPROVED BY:

MICHAEL MALTZAN ARCHITECTURE, INC.
2801 Hyperion Avenue, Studio 107 / Los Angeles, CA 90027
T (323) 913-3098 F (323) 913-5932

HNTB
HNTB Corporation
601 W. 5TH STREET, SUITE 1000
LOS ANGELES, CALIFORNIA 90071
TEL (213) 403-1000 FAX (213) 403-1001

VERTICAL CONTROL:
HORIZONTAL CONTROL:

SHEET TITLE: ENLARGED OVERALL ELEVATIONS - STAIR RAILINGS

PROJECT: SIXTH STREET VIADUCT REPLACEMENT

ADDRESS: SIXTH STREET VIADUCT (WHITTIER BLVD) LOS ANGELES, CA

WORK ORDER NO.
E700224F

DRAWING NO.
A-318

ADDENDUM 5

6/10/2020 4:29:25 PM

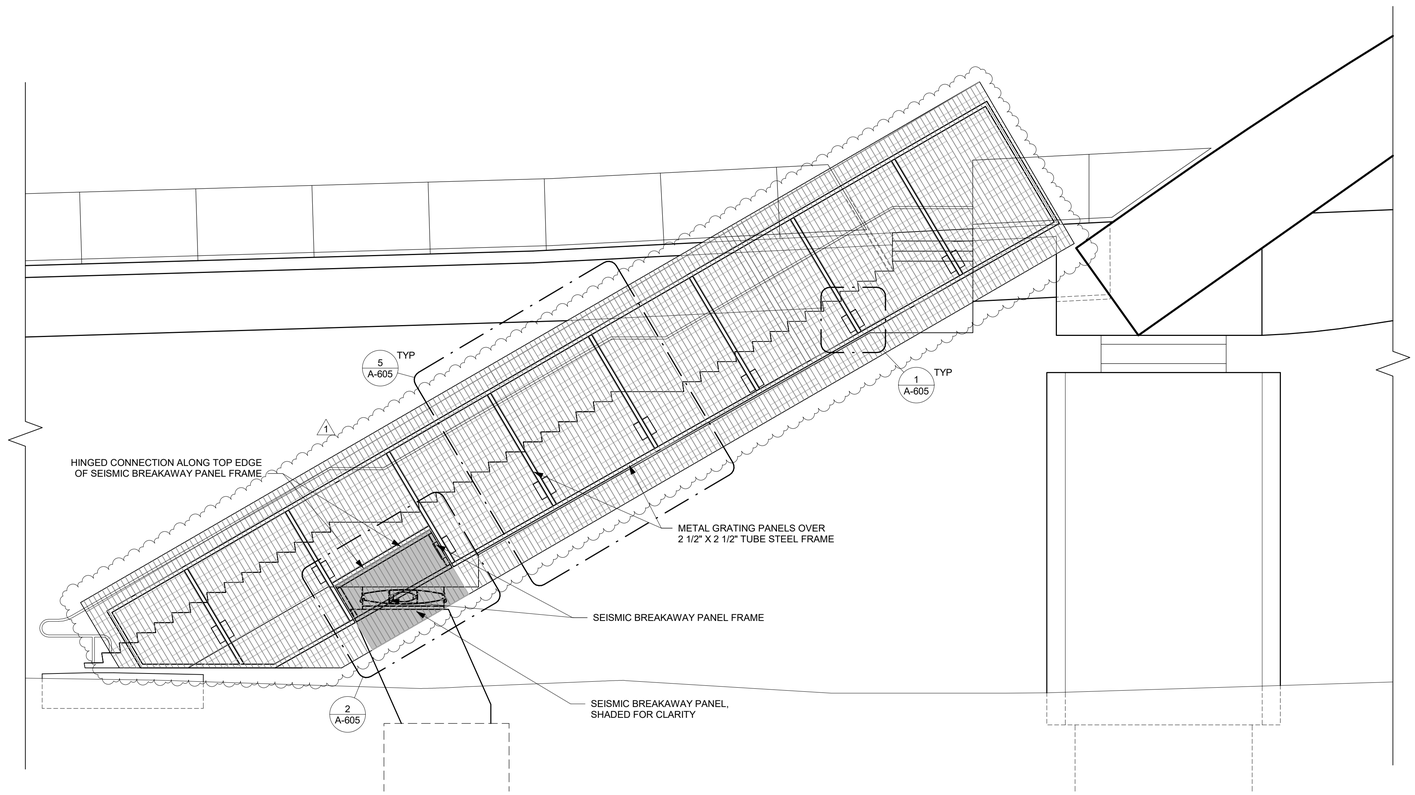

1 ENLARGED ELEVATION - WEST STAIR RAILING
1/4" = 1'-0"

0 2' 4' 8'

T.O. 5 - Change Order Serial Sketch No. 120-R1 - 13 of 19

REVISION DATES (DESIGN STAGE ONLY)

Sheet Version 2.01

CITY OF LOS ANGELES DEPARTMENT OF PUBLIC WORKS
BUREAU OF ENGINEERING

ENGINEERING
CITY OF LOS ANGELES

NO.	REVISIONS:	DATE	BY:
1.	STAIR MODIFICATIONS	6/5/20	DR

STRUCTURE NO.
53C-2329

INDEX NO.

LICENSED ARCHITECT
DENNIS RUAN
C-37868
10/31/21
RENEWAL DATE
STATE OF CALIFORNIA

GARY LEE MOORE P.E.
CITY ENGINEER
SURVEY DIVISION

ENGINEER:	
DESIGNED BY:	
DRAWN BY:	
CHECKED BY:	
APPROVED BY:	

VERTICAL CONTROL:
HORIZONTAL CONTROL:

SHEET TITLE: ENLARGED ELEVATION - WEST STAIR RAILING

PROJECT: SIXTH STREET VIADUCT REPLACEMENT

ADDRESS: SIXTH STREET VIADUCT (WHITTIER BLVD) LOS ANGELES, CA

MICHAEL MALTZAN ARCHITECTURE, INC.
2801 Hyperion Avenue, Studio 107 / Los Angeles, CA 90027
T (323) 913-3098 F (323) 913-5932

HNTB
HNTB Corporation
601 W. 5TH STREET SUITE 1000
LOS ANGELES, CALIFORNIA 90071
TEL (213) 403-1000 FAX (213) 403-1001

WORK ORDER NO.
E700224F

DRAWING NO.
A-317

ADDENDUM 5

7/1/2016 5:19:53 PM

1 ENLARGED ELEVATION - TYPICAL STAIR RAILING (Y-ARM)
1/4" = 1'-0"

0 2' 4' 8'

REVISION DATES (DESIGN STAGE ONLY)

Sheet Version 2.01

BUREAU OF ENGINEERING

ENGINEERING
CITY OF LOS ANGELES

NO. REVISIONS: DATE: BY:

STRUCTURE NO. 53C-2329

INDEX NO. P-38113

LICENSED ARCHITECT
JENNIFER LOHR MacISAAC
C-22480
07-31-2017
RENEWAL DATE
STATE OF CALIFORNIA

DEPARTMENT OF PUBLIC WORKS
CITY OF LOS ANGELES

GARY LEE MOORE, P.E.
CITY ENGINEER

ENGINEER:
SURVEY DIVISION
DESIGNED BY:
DRAWN BY:
CHECKED BY:
APPROVED BY:
DATE:

MICHAEL MALTZAN ARCHITECTURE, INC.
2801 Hyperion Avenue, Studio 107 / Los Angeles, CA 90027
T (323) 913-3098 F (323) 913-5932

HNTB
HNTB Corporation
601 W. 5TH STREET SUITE 1000
LOS ANGELES, CALIFORNIA 90071
TEL (213) 403-1000 FAX (213) 403-1001

VERTICAL CONTROL:
HORIZONTAL CONTROL:

SHEET TITLE: ENLARGED PARTIAL ELEVATIONS - TYPICAL STAIR RAILINGS

PROJECT: SIXTH STREET VIADUCT REPLACEMENT

ADDRESS: SIXTH STREET VIADUCT (WHITTIER BLVD) LOS ANGELES, CA

BUREAU OF ENGINEERING
OFFICIAL RECORD

WORK ORDER NO.
E700224F

DRAWING NO.
A-320

SHEET 527 OF 560 SHEETS

ADDENDUM 5

7/1/2016 5:20:29 PM

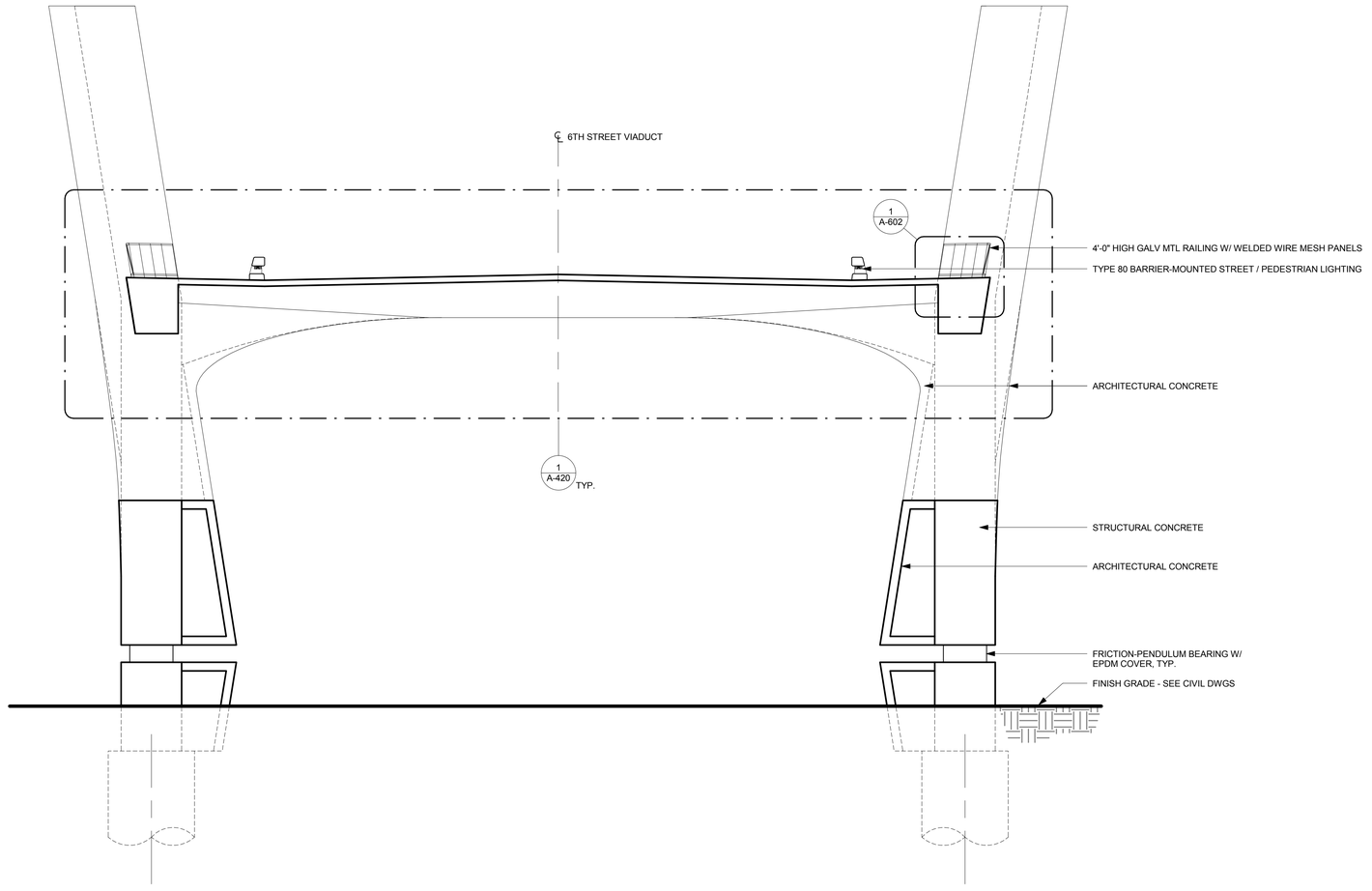

4 ENLARGED SECTION - TYPICAL BENT
1/8" = 1'-0"
0 4' 8' 16'

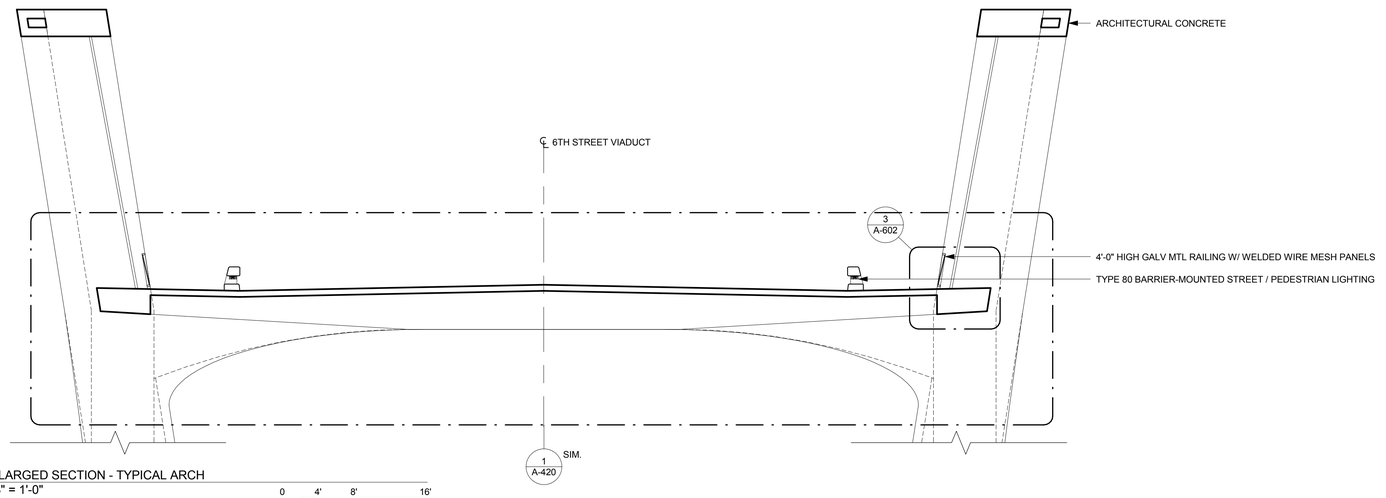

1 ENLARGED SECTION - TYPICAL ARCH
1/8" = 1'-0"
0 4' 8' 16'

REVISION DATES (DESIGN STAGE ONLY)

Sheet Version 2.01

MICHAEL MALTZAN ARCHITECTURE, INC.
2801 Hyperion Avenue, Studio 107 / Los Angeles, CA 90027
T (323) 913-3098 F (323) 913-5932

HNTB
HNTB Corporation
601 W. 5TH STREET SUITE 1000
LOS ANGELES, CALIFORNIA 90071
TEL (213) 403-1000 FAX (213) 403-1001

BUREAU OF ENGINEERING
OFFICIAL RECORD

CITY OF LOS ANGELES DEPARTMENT OF PUBLIC WORKS

VERTICAL CONTROL:
HORIZONTAL CONTROL:

SHEET TITLE: ENLARGED SECTION - TYPICAL BENT AND ARCH SPAN

PROJECT: SIXTH STREET VIADUCT REPLACEMENT

ADDRESS: SIXTH STREET VIADUCT (WHITTIER BLVD)
LOS ANGELES, CA

ENGINEER: GARY LEE MOORE, P.E. — CITY ENGINEER — DATE:
DESIGNED BY: — SURVEY DIVISION
DRAWN BY:
CHECKED BY:
APPROVED BY:

BUREAU OF ENGINEERING
NO. REVISIONS: DATE: BY:

STRUCTURE NO. 53C-2329

INDEX NO. P-38113

LICENSED ARCHITECT
JENNIFER LOHR MacISAAC
C-22480
07-31-2017
RENEWAL DATE
STATE OF CALIFORNIA

ENGINEERING
CITY OF LOS ANGELES

WORK ORDER NO. E700224F

DRAWING NO. A-401

SHEET 528 OF 560 SHEETS

ADDENDUM 5

7/1/2016 5:22:14 PM

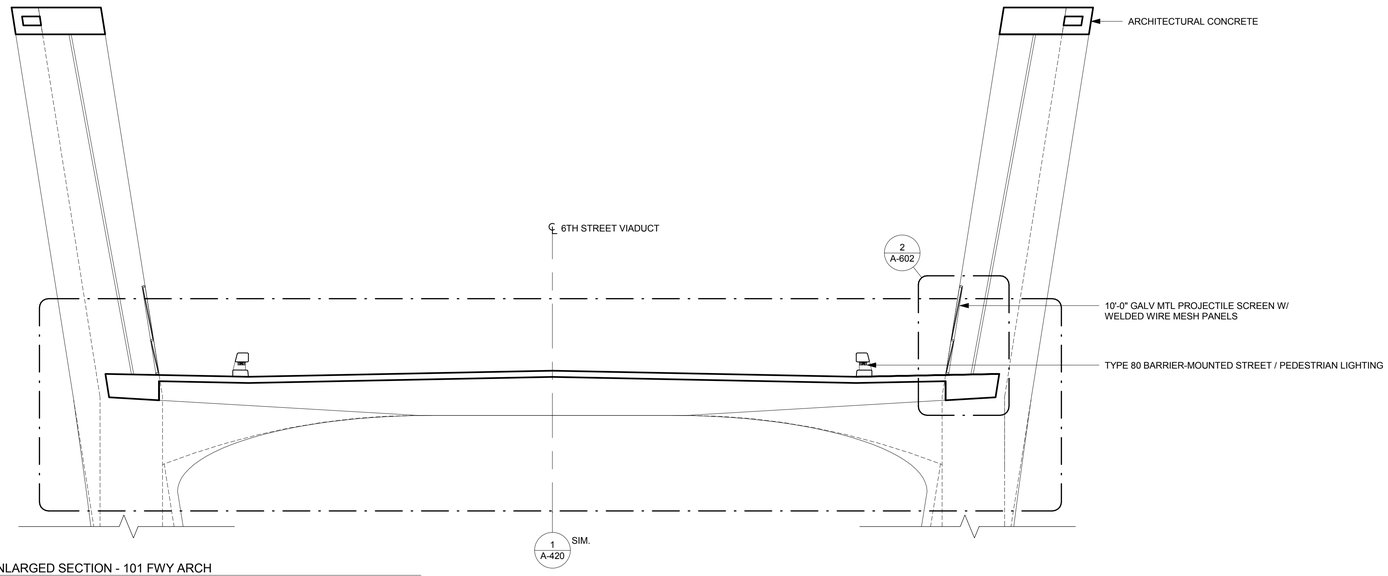

1 ENLARGED SECTION - 101 FWY ARCH
1/8" = 1'-0"

0 4' 8' 16'

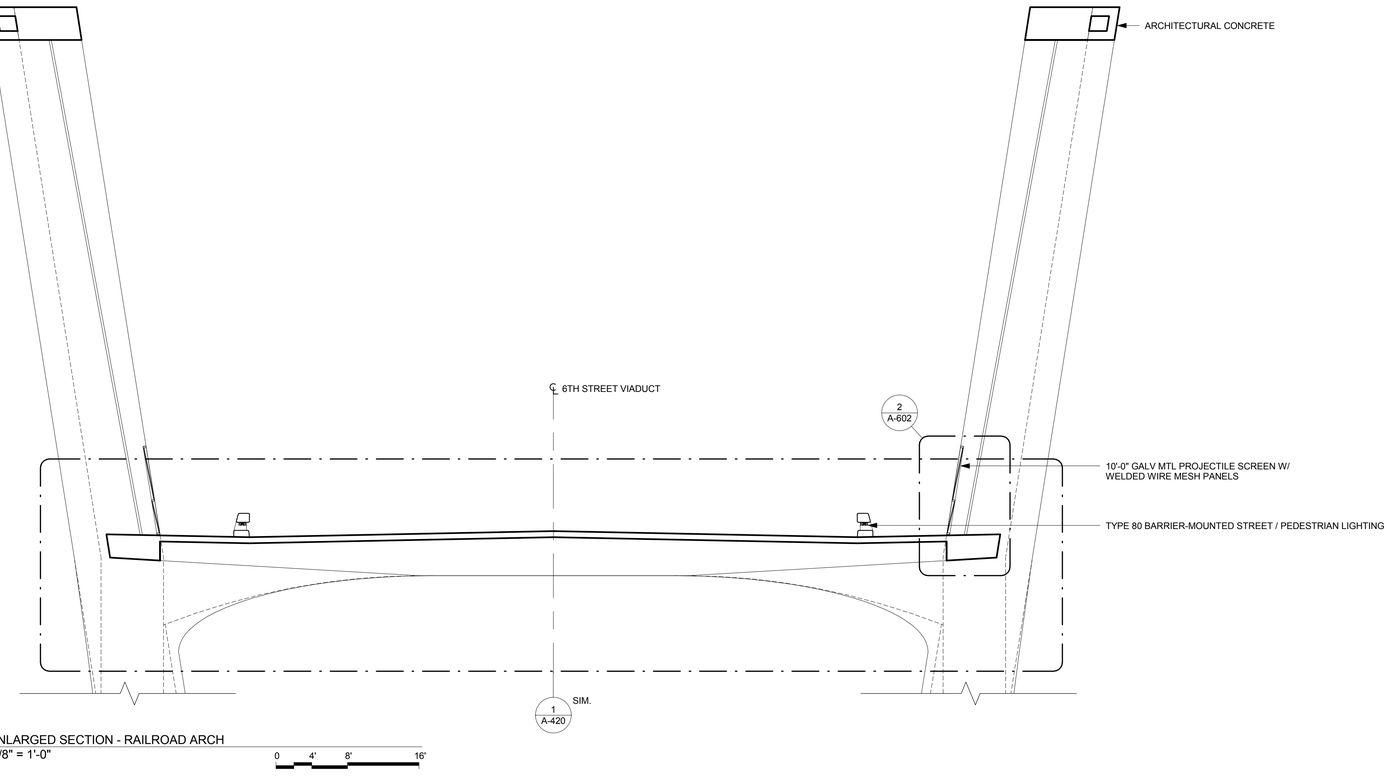

2 ENLARGED SECTION - RAILROAD ARCH
1/8" = 1'-0"

0 4' 8' 16'

REVISION DATES (DESIGN STAGE ONLY)

Sheet Version 2.01

CITY OF LOS ANGELES DEPARTMENT OF PUBLIC WORKS
BUREAU OF ENGINEERING

ENGINEERING
CITY OF LOS ANGELES

NO. REVISIONS | DATE | BY:

STRUCTURE NO. 53C-2329

INDEX NO. P-38113

LICENSED ARCHITECT
JENNIFER LOHR MacISAAC
C-22480
07-31-2017
RENEWAL DATE
STATE OF CALIFORNIA

CITY ENGINEER: DATE:

GARY LEE MOORE, P.E.
SURVEY DIVISION

ENGINEER:
DESIGNED BY:
DRAWN BY:
CHECKED BY:
APPROVED BY:

MICHAEL MALTZAN ARCHITECTURE, INC.
2801 Hyperion Avenue, Studio 107 / Los Angeles, CA 90027
T (323) 913-3098 F (323) 913-5932

HNTB
HNTB Corporation
601 W. 5TH STREET SUITE 1000
LOS ANGELES, CALIFORNIA 90071
TEL (213) 403-1000 FAX (213) 403-1001

BUREAU OF ENGINEERING
OFFICIAL RECORD

VERTICAL CONTROL:
HORIZONTAL CONTROL:

SHEET TITLE: ENLARGED SECTIONS - RAILROAD AND 101 FWY ARCH SPAN

PROJECT: SIXTH STREET VIADUCT REPLACEMENT

ADDRESS: SIXTH STREET VIADUCT (WHITTIER BLVD) LOS ANGELES, CA

WORK ORDER NO. E700224F

DRAWING NO. A-402

SHEET 529 OF 560 SHEETS

12/17/2021 10:23:30 AM

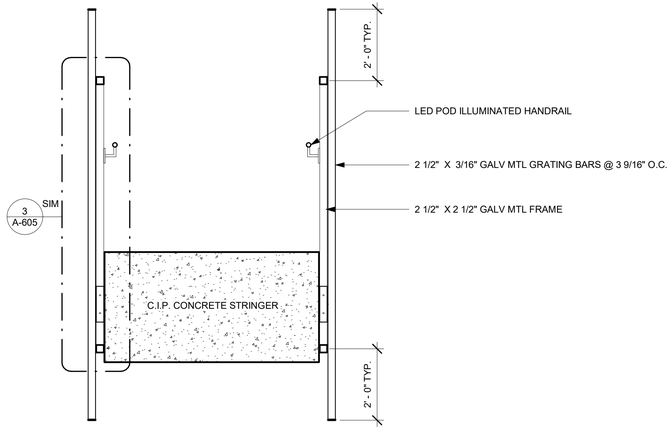

ENLARGED SECTION - STAIR (SECTION @ TREAD)
1 1/2" = 1'-0"

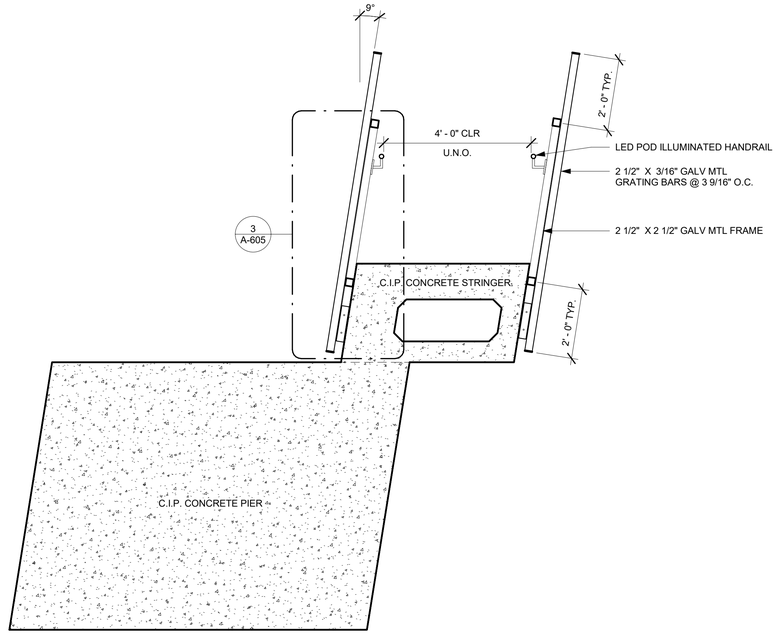

ENLARGED SECTION - STAIR (SECTION @ Y-ARM TREAD)
2 1/2" = 1'-0"



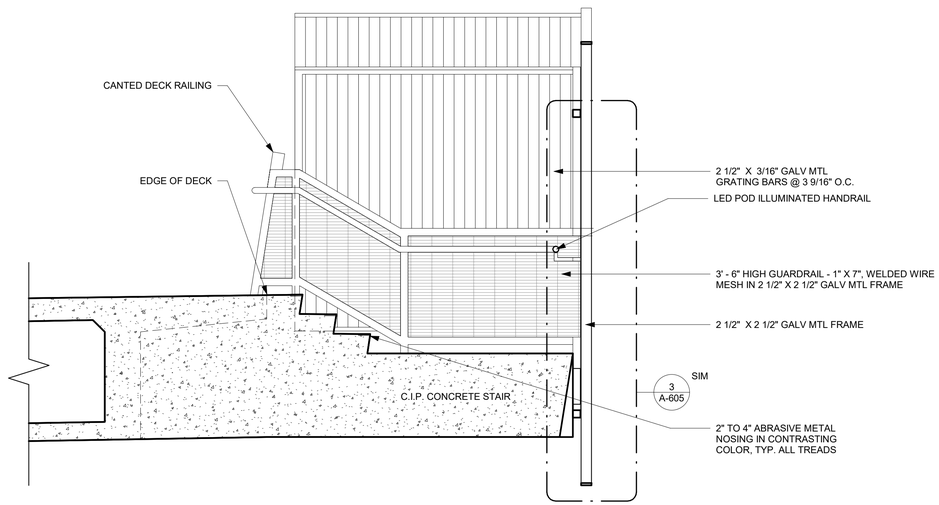

ENLARGED SECTION - WEST STAIR (SECTION @ DECK LANDING)
5 1/2" = 1'-0"

LICENSED ARCHITECT
CERTIFIES REVISON
DATED 12/3/21 - PARC STAIR
ELEVATION REVISION ONLY

MICHAEL MALTZAN ARCHITECTURE, INC.
2801 Hyperion Avenue, Studio 107 / Los Angeles, CA 90027
T (323) 913-3098 F (323) 913-5932

HNTB
HNTB Corporation
601 W. 5TH STREET SUITE 1000
LOS ANGELES, CALIFORNIA 90071
TEL (213) 403-1000 FAX (213) 403-1001

CITY OF LOS ANGELES DEPARTMENT OF PUBLIC WORKS
BUREAU OF ENGINEERING

GARY LEE MOORE P.E. CITY ENGINEER
SURVEY DIVISION

NO.	REVISIONS	DATE	BY:
1	PARC STAIR ELEVATION REVISION	12/3/21	MT

ECO 153

STRUCTURE NO. 53C-2329

INDEX NO.

ENGINEERING
CITY OF LOS ANGELES

JOHN PHILIP TRAUTMANN C-21914 08-31-2023 RENEWAL DATE
LICENSED ARCHITECT STATE OF CALIFORNIA

JENNIFER LOHR MacISAAC C-22480 07-31-2017 RENEWAL DATE
LICENSED ARCHITECT STATE OF CALIFORNIA

ENGINEER:
DESIGNED BY:
DRAWN BY:
CHECKED BY:
APPROVED BY:

VERTICAL CONTROL:
HORIZONTAL CONTROL:

SHEET TITLE: ENLARGED PARTIAL SECTIONS - STAIRS

PROJECT: SIXTH STREET VIADUCT REPLACEMENT

ADDRESS: SIXTH STREET VIADUCT (WHITTIER BLVD) LOS ANGELES, CA

WORK ORDER NO. E700224F

DRAWING NO. A-403

REVISION DATES (DESIGN STAGE ONLY)

Sheet Version 2.01

ADDENDUM 5

7/1/2016 5:12:40 PM

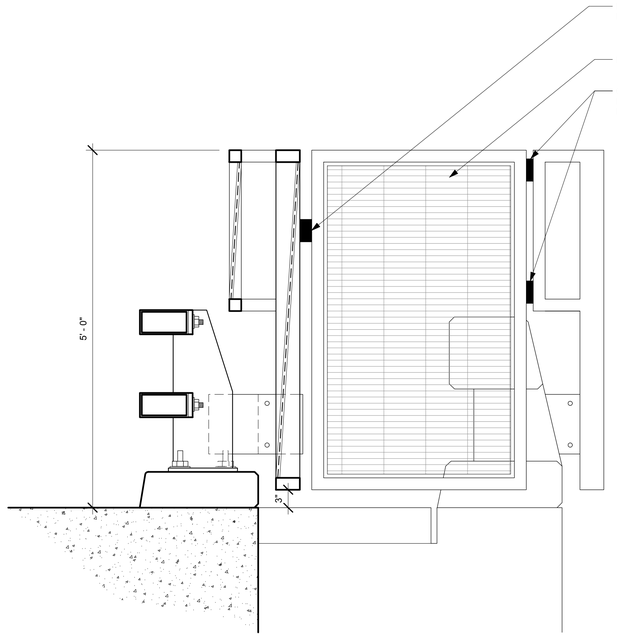

BICYCLE RAILING DETAIL @ EXP. JOINT (ST-10)
4 1" = 1'-0"

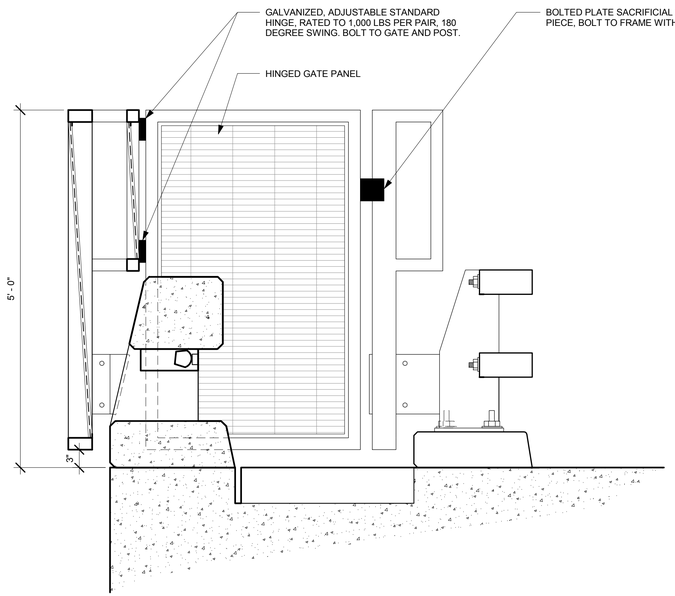

BICYCLE RAILING DETAIL @ EXP. JOINT (TYPE 80)
3 1" = 1'-0"

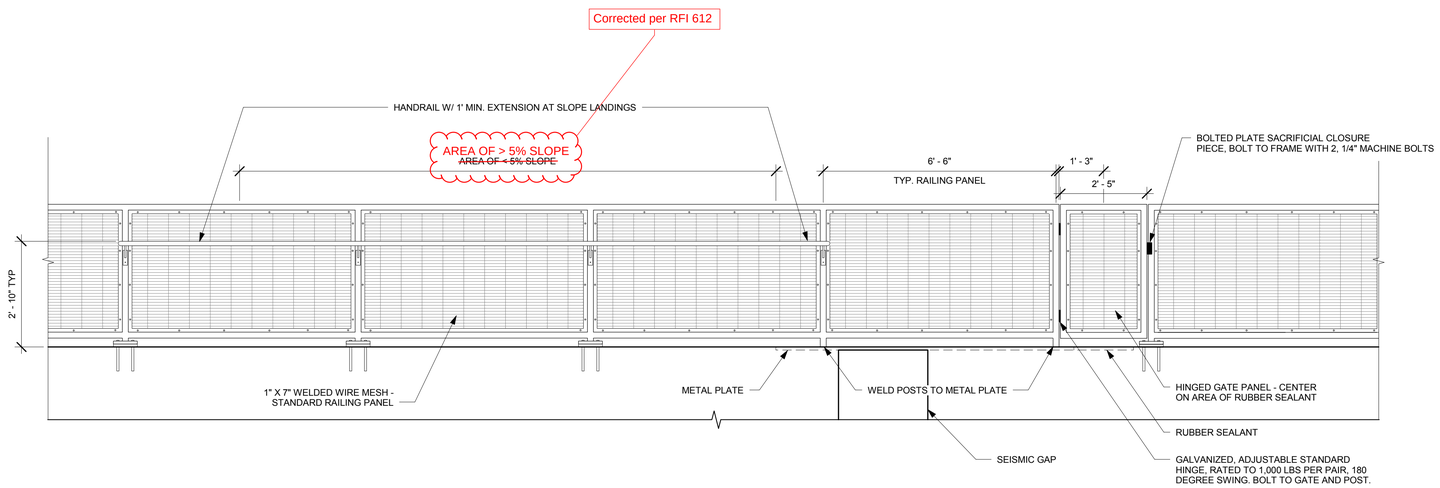

ENLARGED ELEVATION - WEST APPROACH RAILING
1 1/2" = 1'-0"

REVISION DATES (DESIGN STAGE ONLY)

Sheet Version 2.01

BUREAU OF ENGINEERING

ENGINEERING
CITY OF LOS ANGELES

NO. REVISIONS | BY: | DATE

STRUCTURE NO. 53C-2329

INDEX NO. P-38113

LICENSED ARCHITECT
JENNIFER LOHR MacISAAC
C-22480
07-31-2017
RENEWAL DATE
STATE OF CALIFORNIA

CITY OF LOS ANGELES DEPARTMENT OF PUBLIC WORKS

GARY LEE MOORE, P.E. CITY ENGINEER
SURVEY DIVISION

ENGINEER: | DATE:
DESIGNED BY:
DRAWN BY:
CHECKED BY:
APPROVED BY:

MICHAEL MALTZAN ARCHITECTURE, INC.
2801 Hyperion Avenue, Studio 107 / Los Angeles, CA 90027
T (323) 913-3098 F (323) 913-5932

HNTB
HNTB Corporation
601 W. 5TH STREET, SUITE 1000
LOS ANGELES, CALIFORNIA 90071
TEL (213) 403-1000 FAX (213) 403-1001

VERTICAL CONTROL:
HORIZONTAL CONTROL:

SHEET TITLE: DETAILS - BARRIER-MOUNTED RAILINGS

PROJECT: SIXTH STREET VIADUCT REPLACEMENT

ADDRESS: SIXTH STREET VIADUCT (WHITTIER BLVD) LOS ANGELES, CA

BUREAU OF ENGINEERING
OFFICIAL RECORD

WORK ORDER NO. E700224F

DRAWING NO. A-609

SHEET 560 OF 560 SHEETS

ADDENDUM 5

7/1/2016 4:09:52 PM

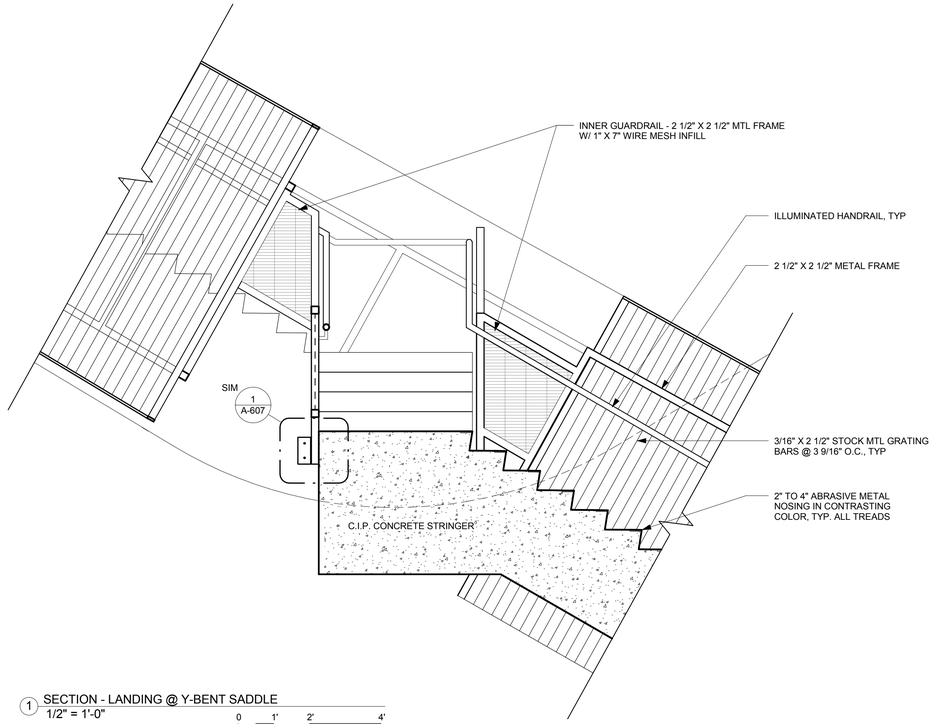

1 SECTION - LANDING @ Y-BENT SADDLE
1/2" = 1'-0"
0 1' 2' 4'

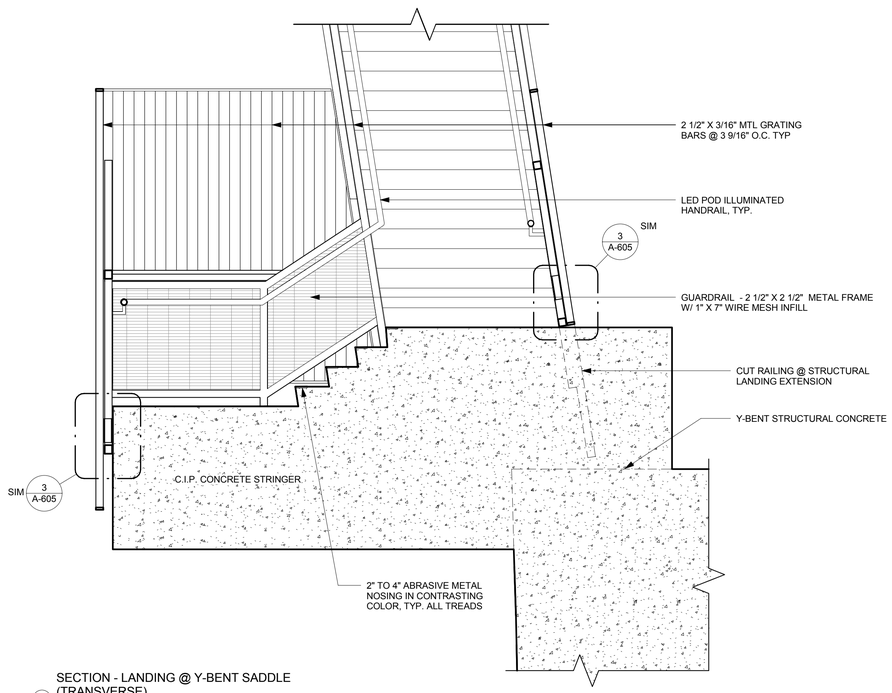

2 SECTION - LANDING @ Y-BENT SADDLE
(TRANSVERSE)
1/2" = 1'-0"
0 1' 2' 4'

REVISION DATES
(DESIGN STAGE ONLY)

Sheet Version 2.01

BUREAU OF ENGINEERING

ENGINEERING
CITY OF LOS ANGELES

NO. REVISIONS | DATE | BY:

STRUCTURE NO.
53C-2329

INDEX NO.
P-38113

LICENSED ARCHITECT
JENNIFER LOHR MacISAAC
C-22480
07-31-2017
RENEWAL DATE
STATE OF CALIFORNIA

CITY OF LOS ANGELES DEPARTMENT OF PUBLIC WORKS

GARY LEE MOORE, P.E.
CITY ENGINEER
DATE:

SURVEY DIVISION
ENGINEER:
DESIGNED BY:
DRAWN BY:
CHECKED BY:
APPROVED BY:

MICHAEL
MALTZAN
ARCHITECTURE, INC.
2801 Hyperion Avenue, Studio 107 / Los Angeles, CA 90027
T (323) 913-3098 F (323) 913-5932

HNTB
HNTB Corporation
601 W. 5TH STREET SUITE 1000
LOS ANGELES, CALIFORNIA 90071
TEL (213) 403-1000 FAX (213) 403-1001

BUREAU OF ENGINEERING
OFFICIAL RECORD

VERTICAL CONTROL:
HORIZONTAL CONTROL:

SHEET TITLE: ENLARGED PARTIAL SECTIONS - STAIRS

PROJECT: SIXTH STREET VIADUCT REPLACEMENT

ADDRESS: SIXTH STREET VIADUCT (WHITTIER BLVD)
LOS ANGELES, CA

WORK ORDER NO.
E700224F

DRAWING NO.
A-404

SHEET 531 OF 560 SHEETS

ADDENDUM 5

7/1/2016 5:23:16 PM

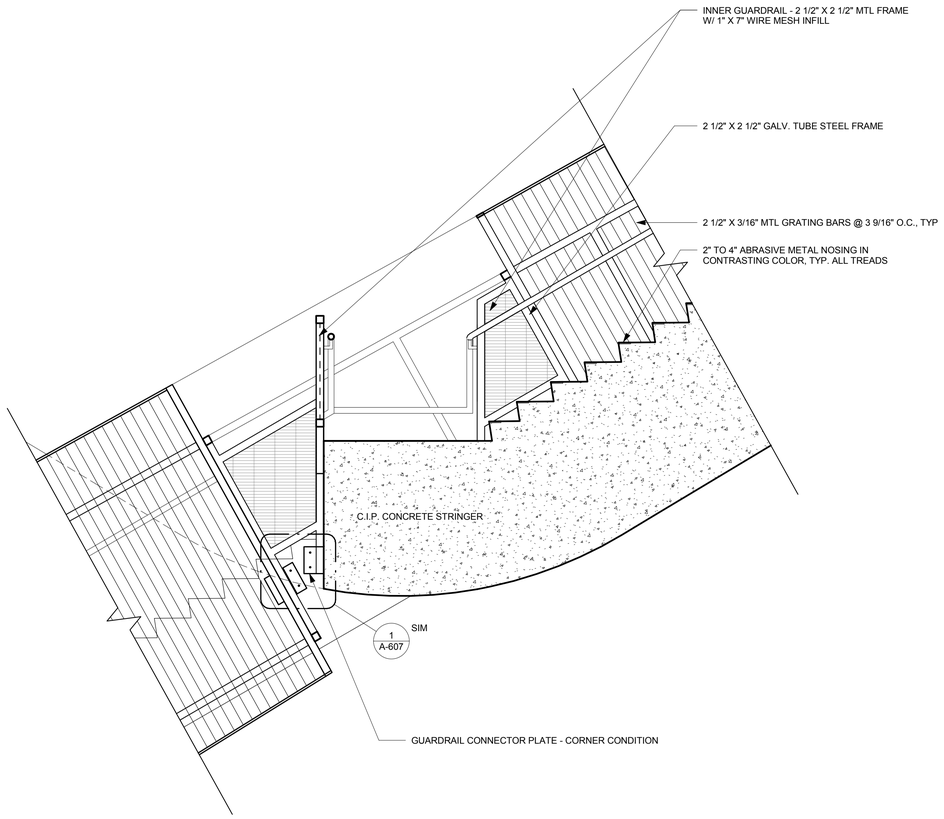

1 ENLARGED SECTION - LANDING @ Y-BENT SADDLE (INTERIOR)
1/2" = 1'-0"

0 1' 2' 4'

REVISION DATES (DESIGN STAGE ONLY)

Sheet Version 2.01

BUREAU OF ENGINEERING

ENGINEERING
CITY OF LOS ANGELES

NO. REVISIONS | DATE | BY:

STRUCTURE NO. 53C-2329

INDEX NO. P-38113

LICENSED ARCHITECT
JENNIFER LOHR MacISAAC
C-22480
07-31-2017
RENEWAL DATE
STATE OF CALIFORNIA

CITY OF LOS ANGELES DEPARTMENT OF PUBLIC WORKS

VERTICAL CONTROL:
HORIZONTAL CONTROL:

SHEET TITLE: ENLARGED PARTIAL SECTIONS - STAIRS

PROJECT: SIXTH STREET VIADUCT REPLACEMENT

ADDRESS: SIXTH STREET VIADUCT (WHITTIER BLVD)
LOS ANGELES, CA

GARY LEE MOORE, P.E.
SURVEY DIVISION

ENGINEER:
DESIGNED BY:
DRAWN BY:
CHECKED BY:
APPROVED BY:
CITY ENGINEER
DATE:

MICHAEL MALTZAN ARCHITECTURE, INC.
2801 Hyperion Avenue, Studio 107 / Los Angeles, CA 90027
T (323) 913-3098 F (323) 913-5932

HNTB
HNTB Corporation
601 W. 5TH STREET SUITE 1000
LOS ANGELES, CALIFORNIA 90071
TEL (213) 403-1000 FAX (213) 403-1001

BUREAU OF ENGINEERING
OFFICIAL RECORD

WORK ORDER NO.
E700224F

DRAWING NO.
A-405

SHEET 532 OF 560 SHEETS

ADDENDUM 5

6/10/2020 4:10:30 PM

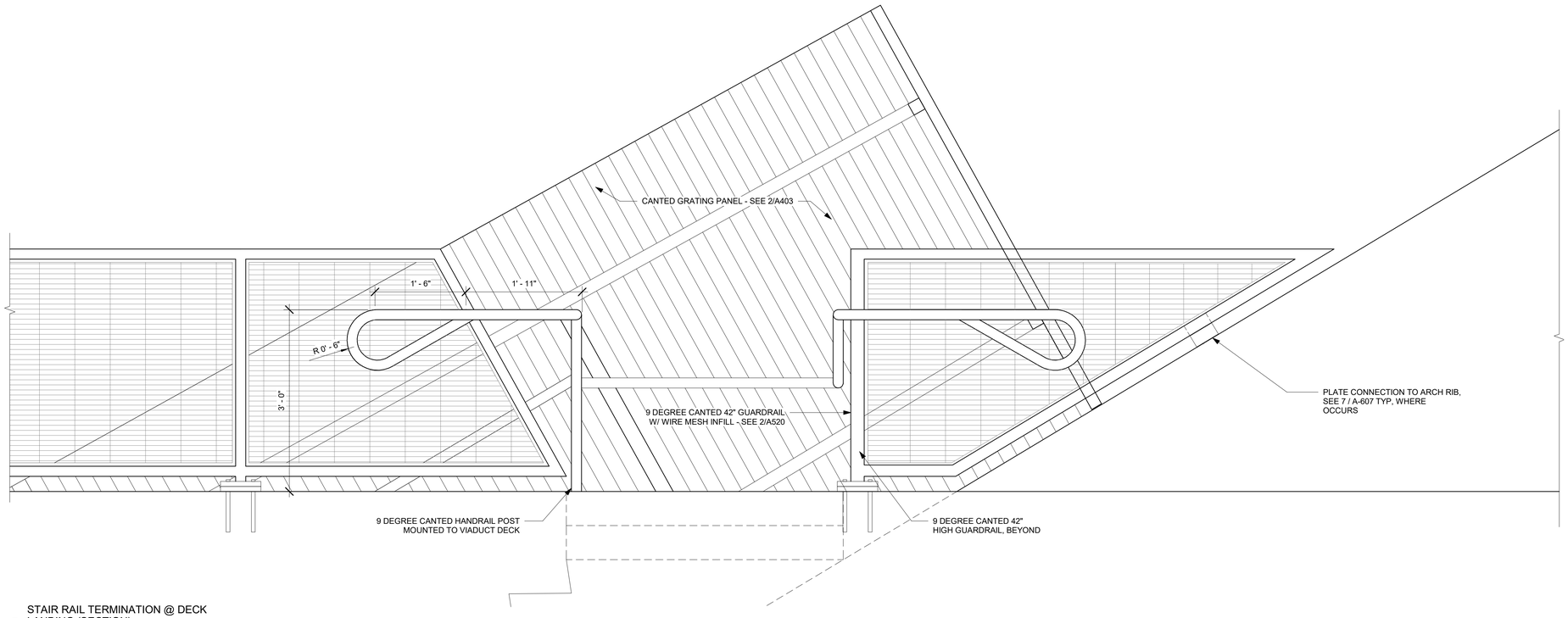

1 STAIR RAIL TERMINATION @ DECK LANDING (SECTION)
1" = 1'-0"

0 6" 1' 2'

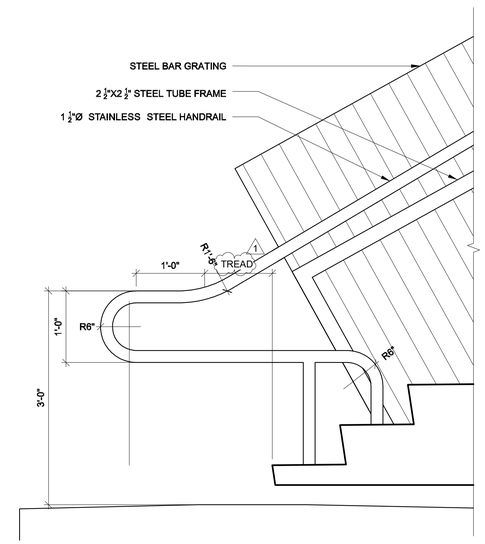

2 STAIR RAIL TERMINATION @ GRADE LANDING (SECTION)
1" = 1'-0"

0 6" 1' 2'

T.O. 5 - Change Order Serial Sketch No. 120-R1 - 16 of 19

REVISION DATES (DESIGN STAGE ONLY)

Sheet Version 2.01

CITY OF LOS ANGELES DEPARTMENT OF PUBLIC WORKS

BUREAU OF ENGINEERING

ENGINEERING CITY OF LOS ANGELES

NO.	REVISIONS:	DATE	BY:
1.	STAIR MODIFICATIONS	6/5/20	DR

STRUCTURE NO. 53C-2329

INDEX NO.

LICENSED ARCHITECT
DENNIS RUAN
C-37868
10/31/21
RENEWAL DATE
STATE OF CALIFORNIA

CITY ENGINEER:
DATE:

SURVEY DIVISION
GARY LEE MOORE, P.E.
ENGINEER:
DESIGNED BY:
DRAWN BY:
CHECKED BY:
APPROVED BY:

VERTICAL CONTROL:
HORIZONTAL CONTROL:

SHEET TITLE: ENLARGED PARTIAL SECTIONS - STAIRS

PROJECT: SIXTH STREET VIADUCT REPLACEMENT

ADDRESS: SIXTH STREET VIADUCT (WHITTIER BLVD) LOS ANGELES, CA

WORK ORDER NO. E700224F

DRAWING NO. A-406

MICHAEL MALTZAN ARCHITECTURE, INC.
2801 Hyperion Avenue, Studio 107 / Los Angeles, CA 90027
T (323) 913-3098 F (323) 913-5932

HNTB
HNTB Corporation
601 W. 5TH STREET SUITE 1000
LOS ANGELES, CALIFORNIA 90071
TEL (213) 403-1000 FAX (213) 403-1001

7/1/2016 5:06:48 PM

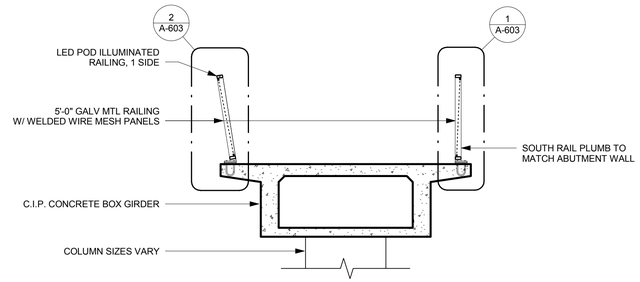

1 ENLARGED SECTION - WEST
PEDESTRIAN RAMP (TYPICAL SPAN)
1/4" = 1'-0"

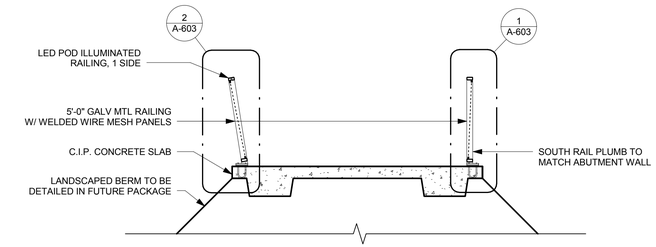

2 ENLARGED SECTION - WEST
PEDESTRIAN RAMP (ON-GRADE)
1/4" = 1'-0"

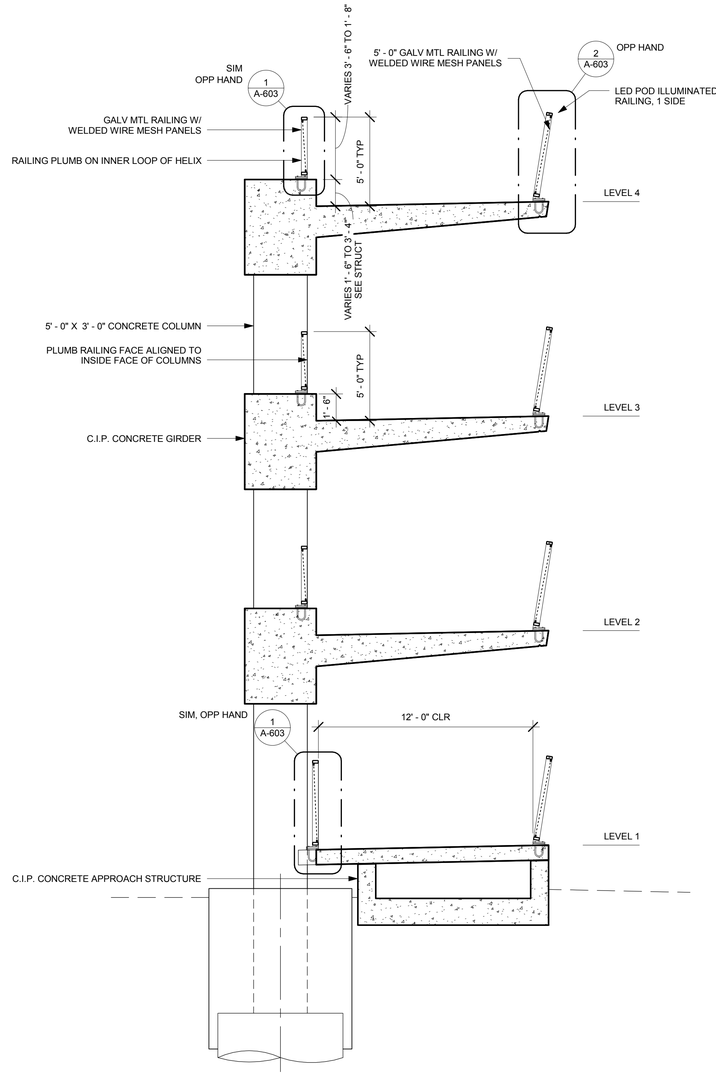

3 ENLARGED SECTION - EAST
PEDESTRIAN RAMP (HELIX)
1/4" = 1'-0"

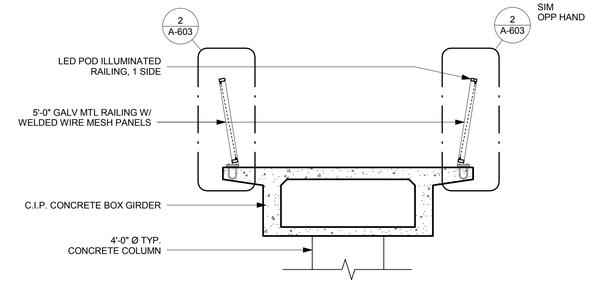

4 ENLARGED SECTION - EAST
PEDESTRIAN RAMP (SOUTH TANGENT)
1/4" = 1'-0"

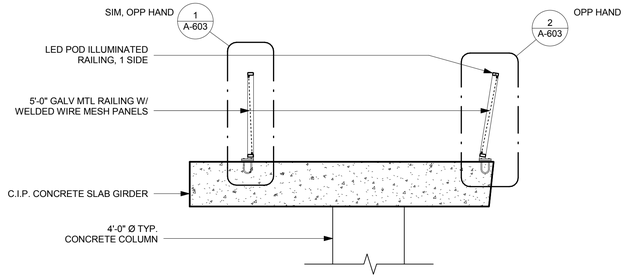

5 ENLARGED SECTION - EAST
PEDESTRIAN RAMP (NORTH TANGENT)
1/4" = 1'-0"

REVISION DATES
(DESIGN STAGE ONLY)

Sheet Version 2.01

CITY OF LOS ANGELES DEPARTMENT OF PUBLIC WORKS
BUREAU OF ENGINEERING

ENGINEERING
CITY OF LOS ANGELES

NO. REVISIONS | BY: | DATE

STRUCTURE NO.
53C-2329

INDEX NO.
P-38113

LICENSED ARCHITECT
JENNIFER LOHR MacISAAC
C-22480
07-31-2017
RENEWAL DATE
STATE OF CALIFORNIA

CITY ENGINEER: | DATE:
SURVEY DIVISION
GARY LEE MOORE, P.E.
ENGINEER:
DESIGNED BY:
DRAWN BY:
CHECKED BY:
APPROVED BY:

MICHAEL MALTZAN ARCHITECTURE, INC.
2801 Hyperion Avenue, Studio 107 / Los Angeles, CA 90027
T (323) 913-9098 F (323) 913-5932

HNTB
HNTB Corporation
601 W. 5TH STREET, SUITE 1000
LOS ANGELES, CALIFORNIA 90071
TEL (213) 403-1000 FAX (213) 403-1001

VERTICAL CONTROL:
HORIZONTAL CONTROL:

SHEET TITLE: ENLARGED PARTIAL SECTIONS - PEDESTRIAN RAMPS

PROJECT: SIXTH STREET VIADUCT REPLACEMENT

ADDRESS: SIXTH STREET VIADUCT (WHITTIER BLVD)
LOS ANGELES, CA

BUREAU OF ENGINEERING
OFFICIAL RECORD

WORK ORDER NO.
E700224F

DRAWING NO.
A-410

SHEET 534 OF 560 SHEETS

ADDENDUM 5

7/1/2016 5:23:16 PM

WORK POINT	X	Z
WP1	0'-0"	0'-0"
WP2A	-15'-0"	0'-0"
WP3A	-19'-0"	0'-1 3/8"
WP4A	-23'-0"	0'-5 3/8"
WP5A	-27'-0"	0'-11 7/8"
WP6A	-31'-0"	1'-8 7/8"
WP7A	-35'-0"	2'-8 5/8"
WP8A	-37'-0"	3'-4"
WP9A	-38'-6"	3'-10 3/4"
WP10A	-40'-0"	4'-8 1/8"
WP11A	-41'-0"	5'-6 7/8"
WP12A	-41'-6"	6'-3"
WP13A	-41'-9 3/4"	6'-10 3/8"
WP14A	-41'-11 1/2"	7'-6 1/2"
WP15A	**-41'-11"**	8'-6"
WP16A	-43'-7 1/4"	8'-6"

WORK POINT	X	Z
WP1	0'-0"	0'-0"
WP2	15'-0"	0'-0"
WP3	19'-0"	0'-1 3/8"
WP4	23'-0"	0'-5 3/8"
WP5	27'-0"	0'-11 7/8"
WP6	31'-0"	1'-8 7/8"
WP7	35'-0"	2'-8 5/8"
WP8	37'-0"	3'-4"
WP9	38'-6"	3'-10 3/4"
WP10	40'-0"	4'-8 1/8"
WP11	41'-0"	5'-6 7/8"
WP12	41'-6"	6'-3"
WP13	**41'-9 3/4"**	6'-10 3/8"
WP14	**41'-11 1/2"**	7'-6 1/2"
WP15	**41'-11"**	8'-6"
WP16	43'-7 1/4"	8'-6"

RFI 0196

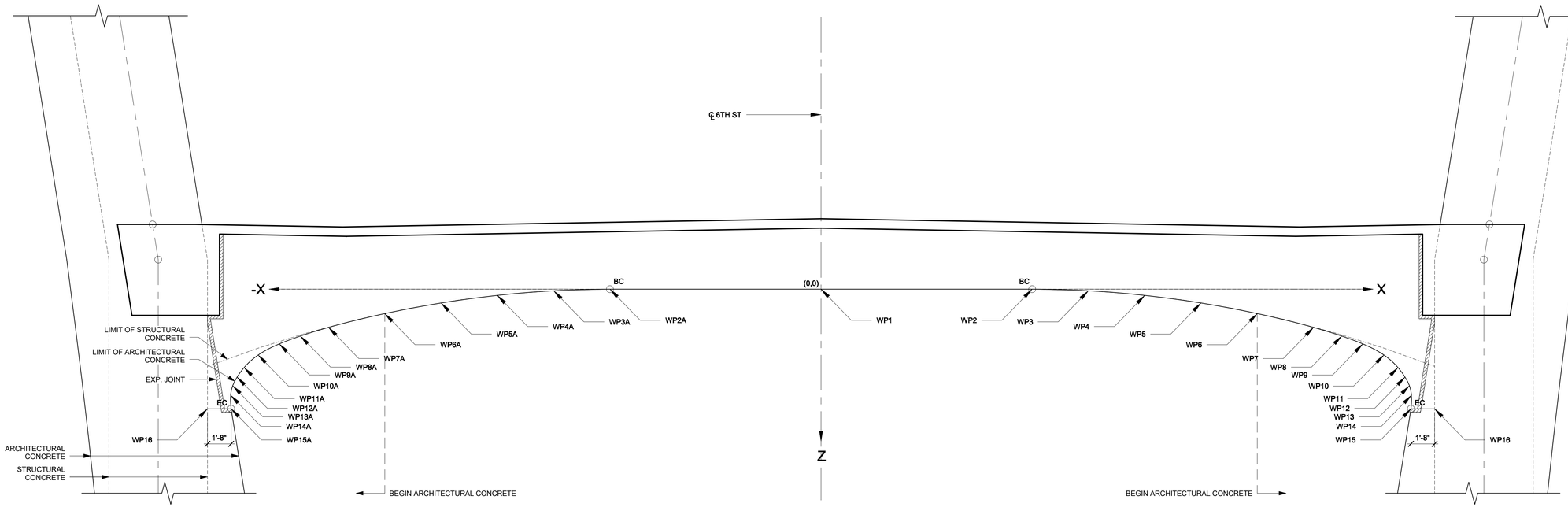

ENLARGED ELEVATION - ARCH RIB FLOOR BEAM CURVE GEOMETRY (TYPICAL)

1 1/4" = 1'-0"

0 2' 4' 8'

BUREAU OF ENGINEERING

ENGINEERING CITY OF LOS ANGELES

NO. REVISIONS | DATE | BY:

STRUCTURE NO. 53C-2329

INDEX NO. P-38113

LICENSED ARCHITECT
JENNIFER LOHR MacISAAC
C-22480
07-31-2017
RENEWAL DATE
STATE OF CALIFORNIA

CITY OF LOS ANGELES DEPARTMENT OF PUBLIC WORKS

GARY LEE MOORE, P.E. CITY ENGINEER
SURVEY DIVISION DATE:

ENGINEER:
DESIGNED BY:
DRAWN BY:
CHECKED BY:
APPROVED BY:

MICHAEL MALTZAN ARCHITECTURE, INC.
2801 Hyperion Avenue, Studio 107 / Los Angeles, CA 90027
T (323) 913-3098 F (323) 913-5932

HNTB

HNTB Corporation
601 W. 5TH STREET, SUITE 1000
LOS ANGELES, CALIFORNIA 90071
TEL (213) 403-1000 FAX (213) 403-1001

VERTICAL CONTROL:
HORIZONTAL CONTROL:

SHEET TITLE: ENLARGED PARTIAL SECTIONS - ARCH RIB FLOOR BEAM GEOMETRY

PROJECT: SIXTH STREET VIADUCT REPLACEMENT

ADDRESS: SIXTH STREET VIADUCT (WHITTIER BLVD) LOS ANGELES, CA

BUREAU OF ENGINEERING OFFICIAL RECORD

WORK ORDER NO. E700224F

DRAWING NO. A-420

SHEET 535 OF 560 SHEETS

REVISION DATES (DESIGN STAGE ONLY)

Sheet Version 2.01

ADDENDUM 5

7/1/2016 5:27:42 PM

WORK POINT	X	Y
WP1	0'-0"	0'-0"
WP2A	-15'-0"	4'-5 1/4"
WP3A	-19'-0"	5'- 8 1/2"
WP4A	-23'-0"	7'-3 1/8"
WP5A	-27'-0"	9'-1"
WP6A	-31'-0"	11'-3 1/4"
WP7A	-35'-0"	14'-0 5/8"
WP8A	-37'-0"	15'-9 3/4"
WP9A	-38'-6"	17'-5 1/8"
WP10A	-40'-0"	19'-5 7/8"
WP11A	-41'-0"	21'-5 1/8"
WP12A	-41'-6"	22'-10 5/8"
WP13A	-41'-9 3/4"	24'-6 1/2"
WP14A	-41'-11 1/2"	25'-7 3/8"
WP15A	-41'-11"	26'-11 1/8"
WP16A	-43'-7 1/4"	26'-11 1/8"

WORK POINT	X	Y
WP1	0'-0"	0'-0"
WP2	15'-0"	4'-5 1/8"
WP3	19'-0"	5'-5 7/8"
WP4	23'-0"	6'-3 1/8"
WP5	27'-0"	6'-8 3/4"
WP6	31'-0"	6'-9 5/8"
WP7	35'-0"	6'-3 7/8"
WP8	37'-0"	5'-9"
WP9	38'-6"	5'-0 7/8"
WP10	40'-0"	4'-0"
WP11	41'-0"	2'-10"
WP12	41'-6"	1'-10 5/8"
WP13	41'-9 3/4"	9 1/8"
WP14	41'-11 1/2"	-5 5/8"
WP15	41'-11"	-1'-4 5/8"
WP16	43'-7 1/4"	-1'-4 5/8"

RFI 0196

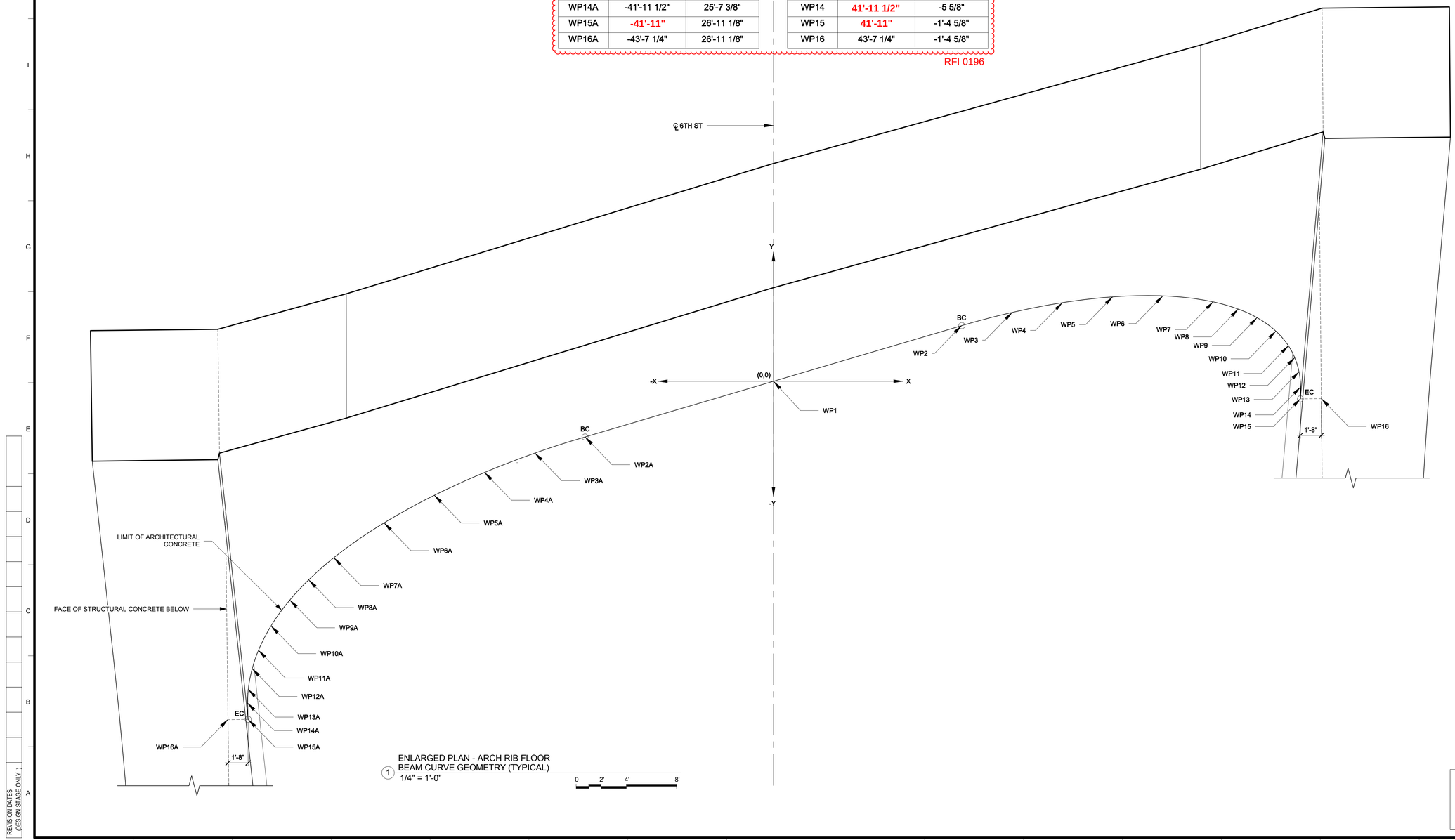

1 ENLARGED PLAN - ARCH RIB FLOOR BEAM CURVE GEOMETRY (TYPICAL)
1/4" = 1'-0"

0 2' 4' 8'

BUREAU OF ENGINEERING
OFFICIAL RECORD

REVISION DATES (DESIGN STAGE ONLY)

Sheet Version 2.01

BUREAU OF ENGINEERING

ENGINEERING
CITY OF LOS ANGELES

NO. REVISIONS: BY: DATE:

STRUCTURE NO. 53C-2329

INDEX NO. P-38113

LICENSED ARCHITECT
JENNIFER LOHR MacISAAC
C-22480
07-31-2017
RENEWAL DATE
STATE OF CALIFORNIA

BUREAU OF PUBLIC WORKS
CITY OF LOS ANGELES
DEPARTMENT OF ENGINEERING

GARY LEE MOORE, P.E.
CITY ENGINEER
DATE:
SURVEY DIVISION

ENGINEER:
DESIGNED BY:
DRAWN BY:
CHECKED BY:
APPROVED BY:

MICHAEL MALTZAN ARCHITECTURE, INC.
2801 Hyperion Avenue, Studio 107 / Los Angeles, CA 90027
T (323) 913-3098 F (323) 913-5932

HNTB
HNTB Corporation
601 W. 5TH STREET, SUITE 1000
LOS ANGELES, CALIFORNIA 90071
TEL (213) 403-1000 FAX (213) 403-1001

VERTICAL CONTROL:
HORIZONTAL CONTROL:

SHEET TITLE: ENLARGED PARTIAL SECTIONS - ARCH RIB FLOOR BEAM GEOMETRY (PLAN)

PROJECT: SIXTH STREET VIADUCT REPLACEMENT

ADDRESS: SIXTH STREET VIADUCT (WHITTIER BLVD) LOS ANGELES, CA

WORK ORDER NO. E700224F

DRAWING NO. A-421

SHEET 536 OF 560 SHEETS

ADDENDUM 5

6/10/2020 12:15:58 AM

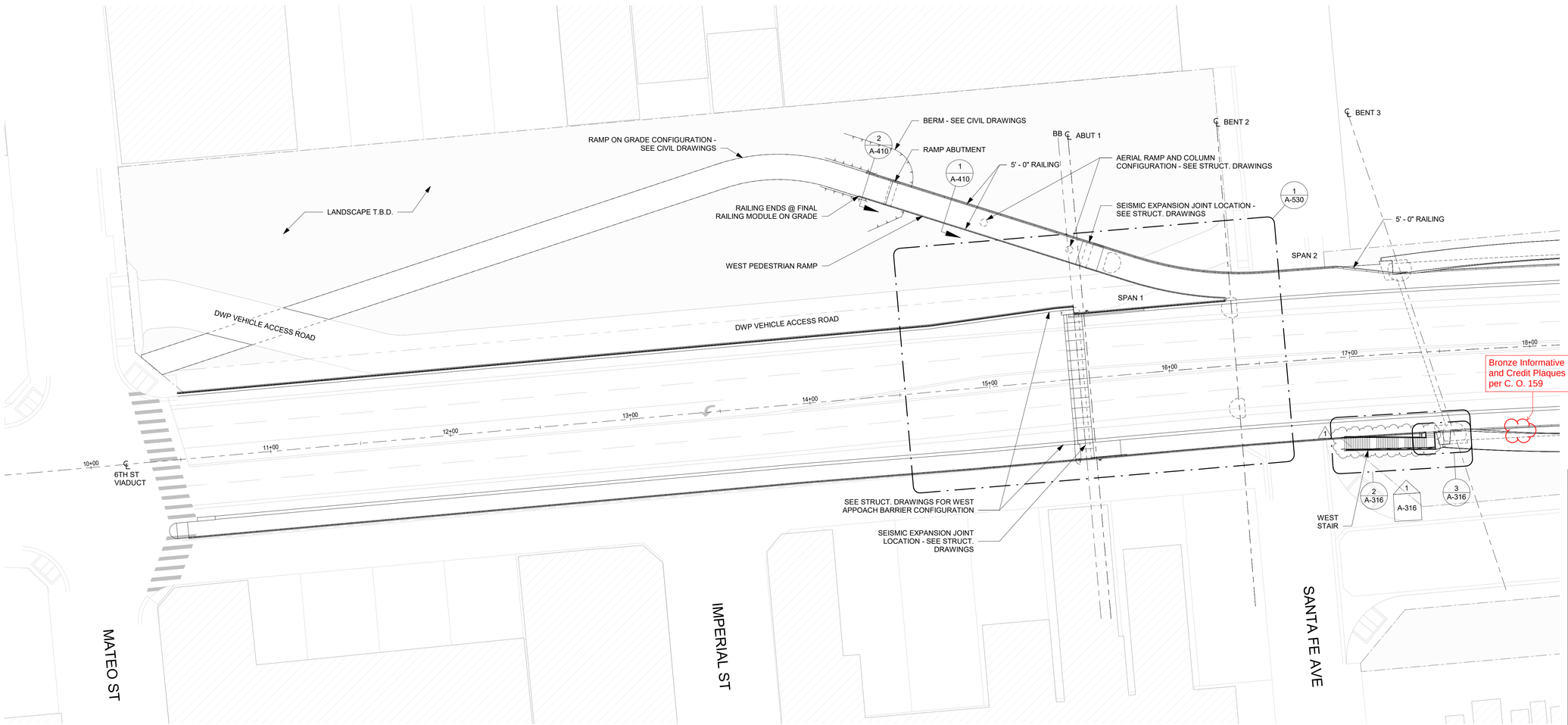

1 ENLARGED PLAN - WEST APPROACH
1" = 30'-0"

0 15' 30' 60'

T.O. 5 - Change Order Serial Sketch No. 120-R1 - 17 of 19

REVISION DATES (DESIGN STAGE ONLY)

Sheet Version 2.01

BUREAU OF ENGINEERING

ENGINEERING
CITY OF LOS ANGELES

NO.	REVISIONS	DATE	BY:
1	STAIR MODIFICATIONS	6/5/20	DR

STRUCTURE NO. 53C-2329

INDEX NO.

LICENSED ARCHITECT
DENNIS RUAN
C-37868
10/31/21
RENEWAL DATE
STATE OF CALIFORNIA

CITY OF LOS ANGELES DEPARTMENT OF PUBLIC WORKS

CITY ENGINEER: DATE

GARY LEE MOORE, P.E.
SURVEY DIVISION

ENGINEER:
DESIGNED BY:
DRAWN BY:
CHECKED BY:
APPROVED BY:

MICHAEL MALTZAN ARCHITECTURE, INC.
2801 Hyperion Avenue, Studio 107 / Los Angeles, CA 90027
T (323) 913-3098 F (323) 913-5932

HNTB
HNTB Corporation
601 W. 5TH STREET, SUITE 1000
LOS ANGELES, CALIFORNIA 90071
TEL (213) 403-1000 FAX (213) 403-1001

VERTICAL CONTROL:
HORIZONTAL CONTROL:

SHEET TITLE: ENLARGED PLAN - VIADUCT WEST APPROACH

PROJECT: SIXTH STREET VIADUCT REPLACEMENT

ADDRESS: SIXTH STREET VIADUCT (WHITTIER BLVD) LOS ANGELES, CA

WORK ORDER NO. E700224F

DRAWING NO. A-501

ADDENDUM 5

7/1/2016 5:35:44 PM

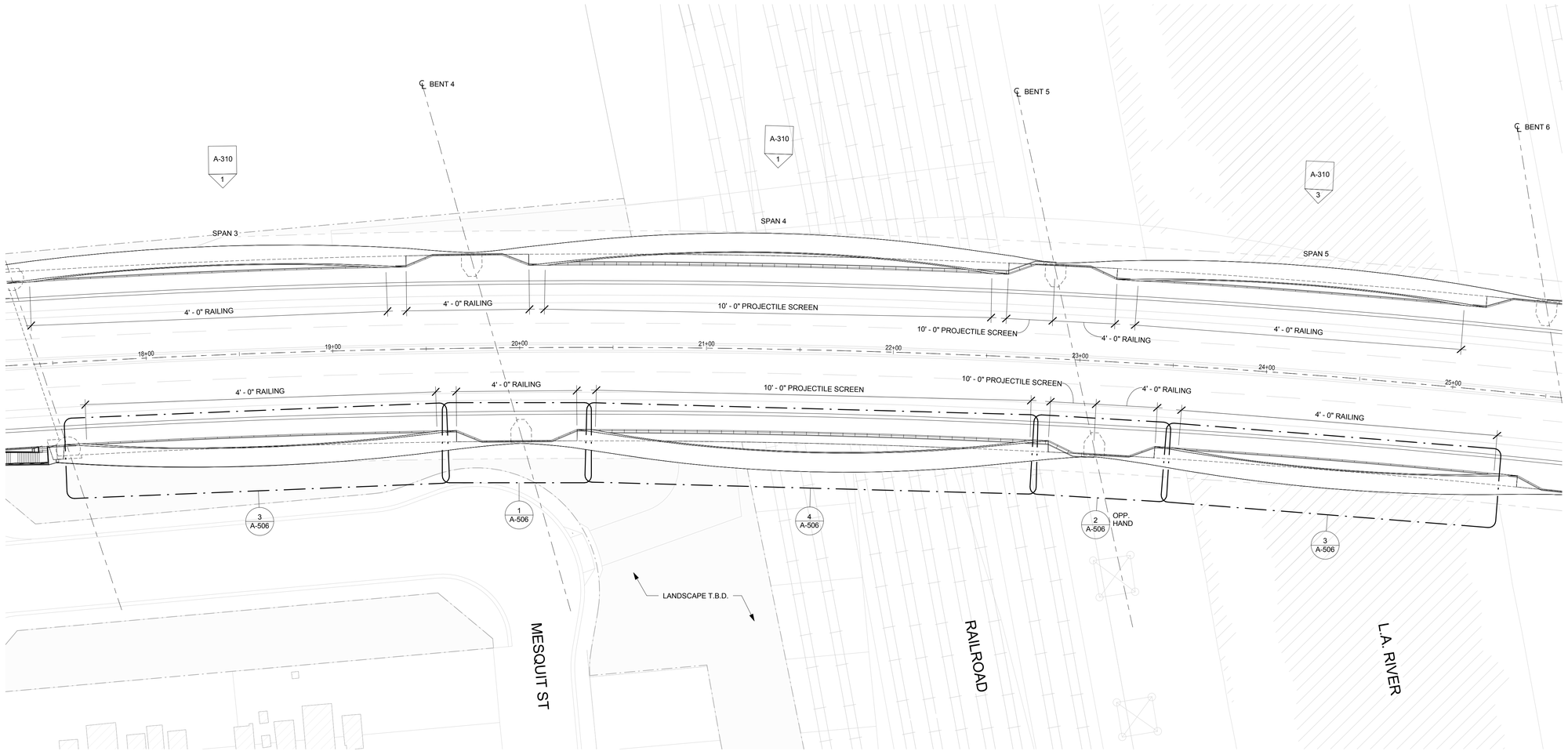

1 ENLARGED PLAN - SPAN 3-5
1" = 30'-0"

0 15' 30' 60'

REVISION DATES (DESIGN STAGE ONLY)

Sheet Version 2.01

BUREAU OF ENGINEERING

ENGINEERING
CITY OF LOS ANGELES

NO. REVISIONS | DATE | BY:

STRUCTURE NO. 53C-2329

INDEX NO. P-38113

LICENSED ARCHITECT
JENNIFER LOHR MacISAAC
C-22480
07-31-2017
RENEWAL DATE
STATE OF CALIFORNIA

CITY OF LOS ANGELES DEPARTMENT OF PUBLIC WORKS

CITY ENGINEER: DATE:
SURVEY DIVISION
GARY LEE MOORE, P.E.
ENGINEER:
DESIGNED BY:
DRAWN BY:
CHECKED BY:
APPROVED BY:

MICHAEL MALTZAN ARCHITECTURE, INC.
2801 Hyperion Avenue, Studio 107 / Los Angeles, CA 90027
T (323) 913-3098 F (323) 913-5932

HNTB
HNTB Corporation
601 W. 5TH STREET SUITE 1000
LOS ANGELES, CALIFORNIA 90071
TEL (213) 403-1000 FAX (213) 403-1001

VERTICAL CONTROL:
HORIZONTAL CONTROL:

SHEET TITLE: ENLARGED PLAN - VIADUCT SPANS 3-5

PROJECT: SIXTH STREET VIADUCT REPLACEMENT

ADDRESS: SIXTH STREET VIADUCT (WHITTIER BLVD) LOS ANGELES, CA

BUREAU OF ENGINEERING
OFFICIAL RECORD

WORK ORDER NO. E700224F

DRAWING NO. A-502

SHEET 538 OF 560 SHEETS

ADDENDUM 5

4/20/2017 6:09:15 PM

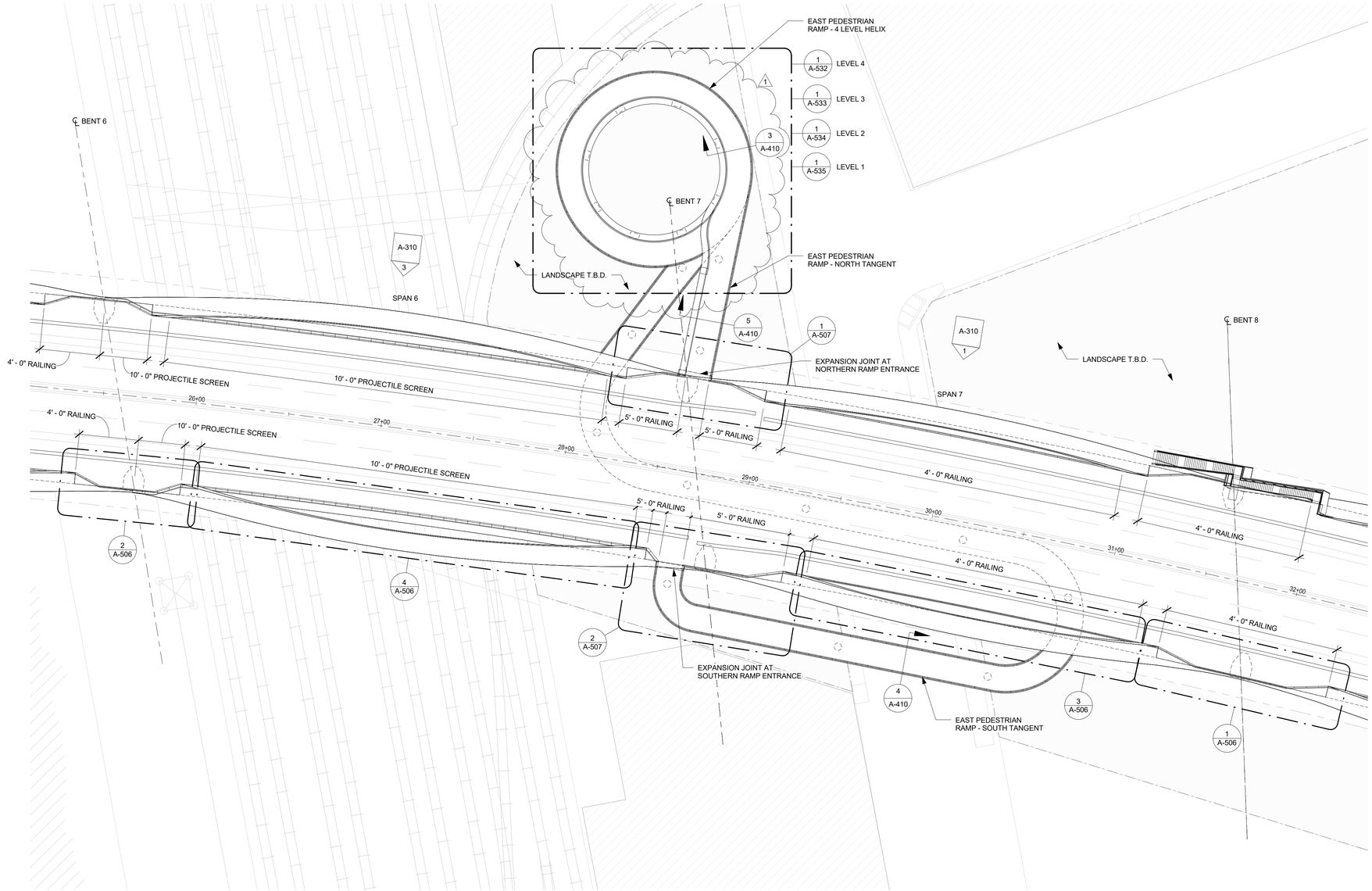

1 ENLARGED PLAN - SPAN 6-7
1" = 30'-0"
0 15' 30' 60'

T.O. 5 - Change Order Serial Sketch No. 21 - page 2 of 7

REVISION DATES (DESIGN STAGE ONLY)

Sheet Version 2.01

BUREAU OF ENGINEERING

NO.	REVISIONS:	DATE	BY:
1	HELICAL RAMP PILE REARRANGEMENT	4/21/17	ES

ENGINEERING
CITY OF LOS ANGELES

STRUCTURE NO. 53C-2329

INDEX NO.

CITY OF LOS ANGELES DEPARTMENT OF PUBLIC WORKS

CITY ENGINEER: GARY LEE MOORE, P.E.
DATE:
SURVEY DIVISION
ENGINEER:
DESIGNED BY:
DRAWN BY:
CHECKED BY:
APPROVED BY:

MICHAEL MALTZAN ARCHITECTURE, INC.
2801 Hyperion Avenue, Studio 107 / Los Angeles, CA 90027
T (323) 913-3098 F (323) 913-5932

HNTB
HNTB Corporation
601 W. 5TH STREET SUITE 1000
LOS ANGELES, CALIFORNIA 90071
TEL (213) 403-1000 FAX (213) 403-1001

VERTICAL CONTROL:
HORIZONTAL CONTROL:

SHEET TITLE: ENLARGED PLAN - VIADUCT SPANS 6-7

PROJECT: SIXTH STREET VIADUCT REPLACEMENT

ADDRESS: SIXTH STREET VIADUCT (WHITTIER BLVD) LOS ANGELES, CA

WORK ORDER NO. E700224F

DRAWING NO. A-503

ADDENDUM 5

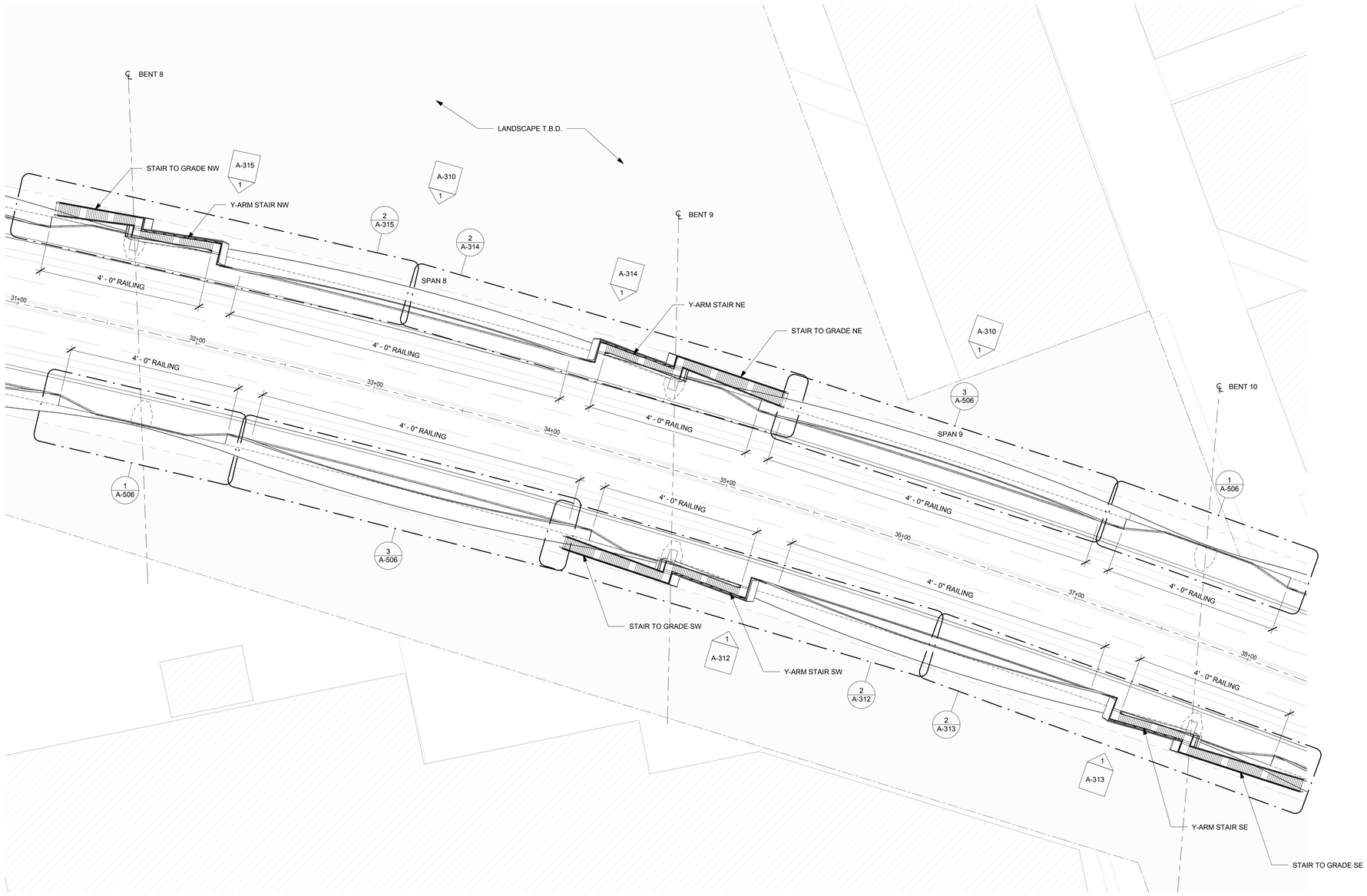

1 ENLARGED PLAN - SPAN 8-9
1" = 30'-0"

0 15' 30' 60'

BUREAU OF ENGINEERING
OFFICIAL RECORD

MICHAEL MALTZAN ARCHITECTURE, INC.
2801 Hyperion Avenue, Studio 107 / Los Angeles, CA 90027
T (323) 913-3098 F (323) 913-5932

HNTB
HNTB Corporation
601 W. 5TH STREET SUITE 1000
LOS ANGELES, CALIFORNIA 90071
TEL (213) 403-1000 FAX (213) 403-1001

CITY OF LOS ANGELES DEPARTMENT OF PUBLIC WORKS

BUREAU OF ENGINEERING

ENGINEERING
CITY OF LOS ANGELES

NO. REVISIONS: DATE BY:

STRUCTURE NO. 53C-2329

INDEX NO. P-38113

LICENSED ARCHITECT
JENNIFER LOHR MacISAAC
C-22480
07-31-2017
RENEWAL DATE
STATE OF CALIFORNIA

GARY LEE MOORE, P.E.
SURVEY DIVISION
CITY ENGINEER:
DATE:

ENGINEER:
DESIGNED BY:
DRAWN BY:
CHECKED BY:
APPROVED BY:

VERTICAL CONTROL:
HORIZONTAL CONTROL:

SHEET TITLE: ENLARGED PLAN - VIADUCT SPANS 8-9

PROJECT: SIXTH STREET VIADUCT REPLACEMENT

ADDRESS: SIXTH STREET VIADUCT (WHITTIER BLVD) LOS ANGELES, CA

WORK ORDER NO. E700224F

DRAWING NO. A-504

SHEET 540 OF 560 SHEETS

REVISION DATES (DESIGN STAGE ONLY)

7/1/2016 5:36:34 PM

Sheet Version 2.01

ADDENDUM 5

71/2016 5:37:00 PM

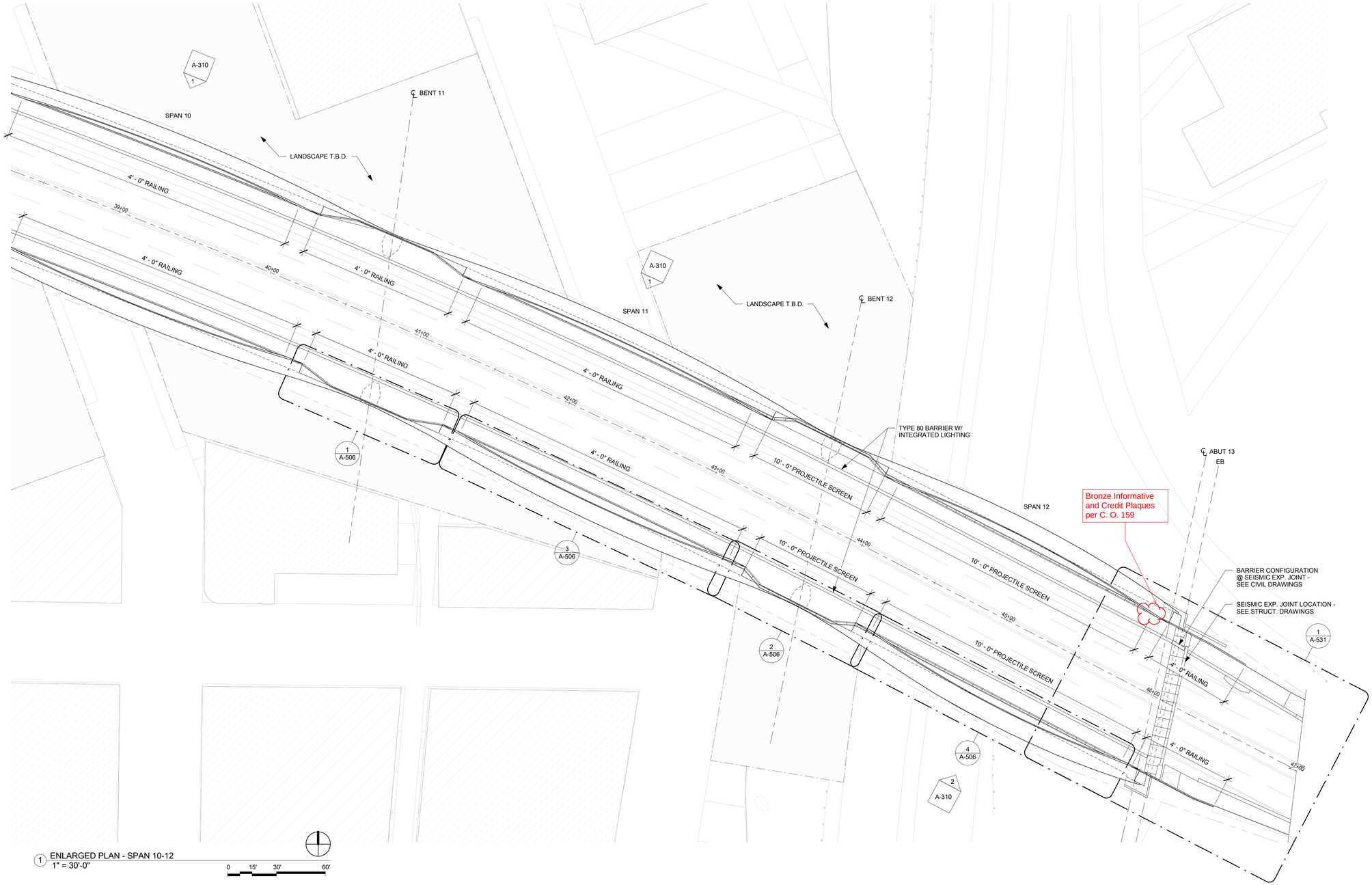

1 ENLARGED PLAN - SPAN 10-12
1" = 30'-0"

0 15' 30' 60'

REVISION DATES
(DESIGN STAGE ONLY)

BUREAU OF ENGINEERING

ENGINEERING
CITY OF LOS ANGELES

STRUCTURE NO.
53C-2329

INDEX NO. P-38113

NO. REVISIONS | DATE | BY:

LICENSED ARCHITECT
JENNIFER LOHR MacISAAC
C-22480
07-31-2017
RENEWAL DATE
STATE OF CALIFORNIA

CITY OF LOS ANGELES DEPARTMENT OF PUBLIC WORKS

GARY LEE MOORE, P.E.
CITY ENGINEER

SURVEY DIVISION
ENGINEER:
DESIGNED BY:
DRAWN BY:
CHECKED BY:
APPROVED BY:
DATE:

MICHAEL MALTZAN ARCHITECTURE, INC.
2801 Hyperion Avenue, Studio 107 / Los Angeles, CA 90027
T (323) 913-3098 F (323) 913-5932

HNTB
HNTB Corporation
601 W. 5TH STREET SUITE 1000
LOS ANGELES, CALIFORNIA 90071
TEL (213) 403-1000 FAX (213) 403-1001

VERTICAL CONTROL:
HORIZONTAL CONTROL:

SHEET TITLE: ENLARGED PLAN - VIADUCT SPANS 10-12

PROJECT: SIXTH STREET VIADUCT REPLACEMENT

ADDRESS: SIXTH STREET VIADUCT (WHITTIER BLVD)
LOS ANGELES, CA

BUREAU OF ENGINEERING
OFFICIAL RECORD

WORK ORDER NO.
E700224F

DRAWING NO.
A-505

SHEET 541 OF 560 SHEETS

Sheet Version 2.01

ADDENDUM 5

6/28/2019 11:08:27 AM

Blockout railing embed both sides. Install custom embed at later date. RFI 292 & 300

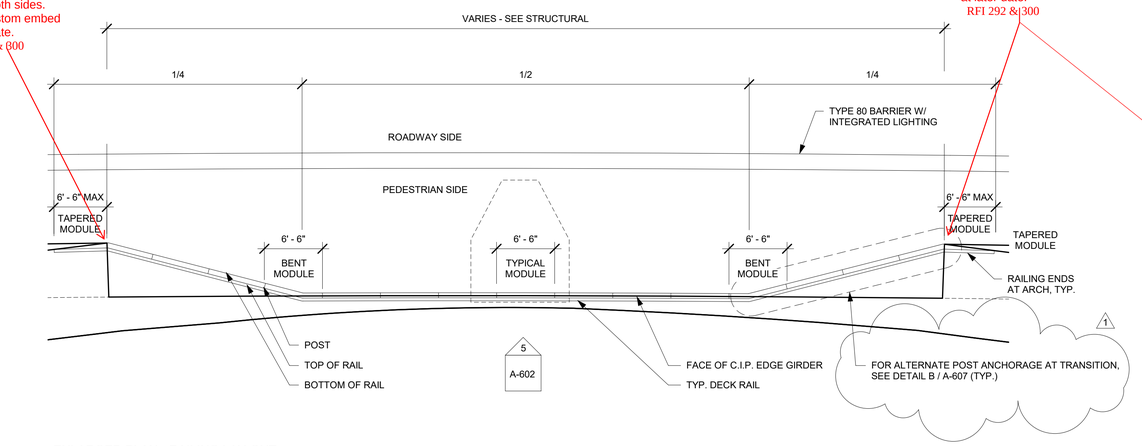

ENLARGED PLAN - RAILING LAY-OUT
(1) (TYP JUMP SPAN)
1/8" = 1'-0"
0 4' 8' 16'

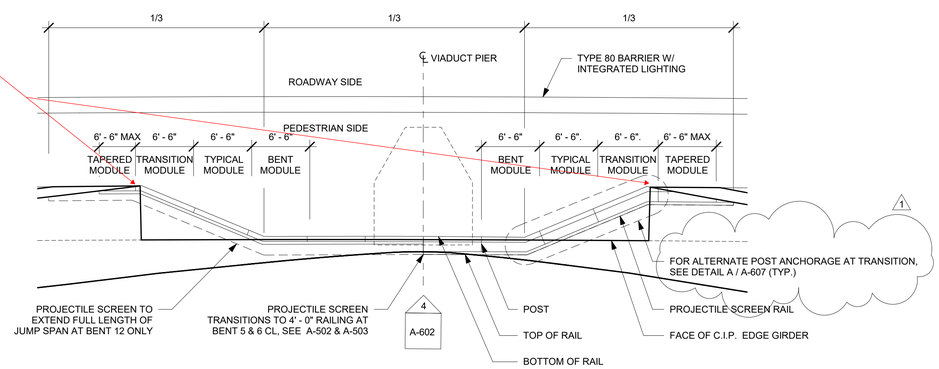

ENLARGED PLAN - RAILING LAY-OUT
(2) (JUMP SPAN @ PROJECTILE SCREEN)
1/8" = 1'-0"
0 4' 8' 16'

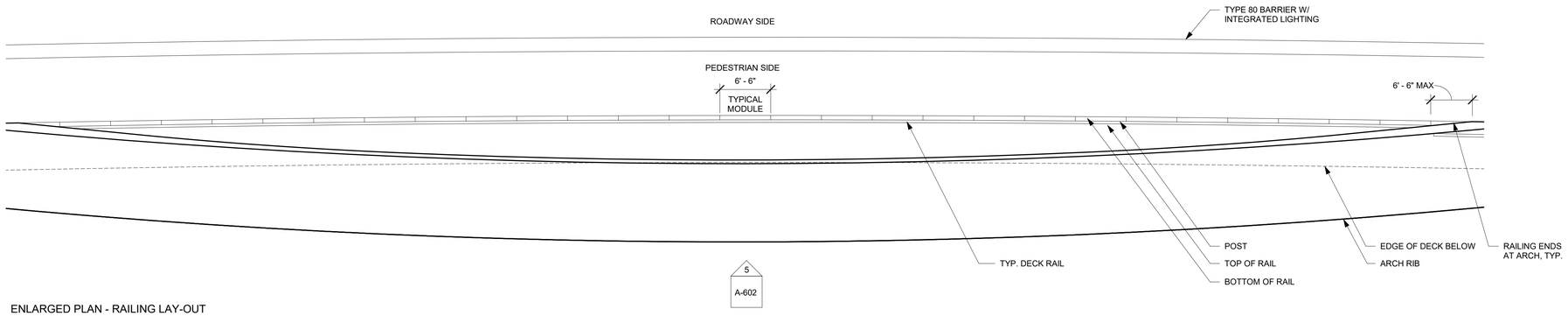

ENLARGED PLAN - RAILING LAY-OUT
(3) (TYP ARCH SPAN)
1/8" = 1'-0"
0 4' 8' 16'

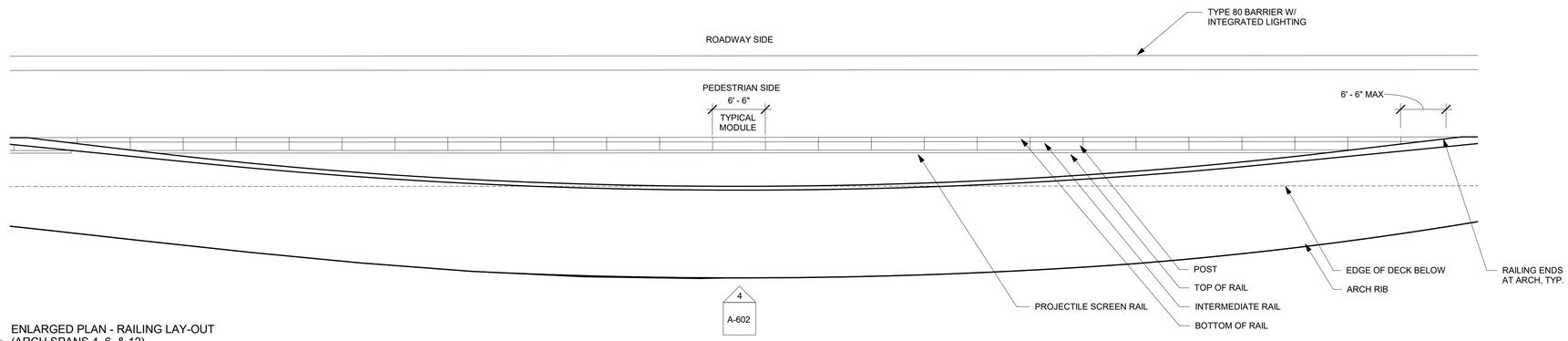

ENLARGED PLAN - RAILING LAY-OUT
(4) (ARCH SPANS 4, 6, & 12)
1/8" = 1'-0"
0 4' 8' 16'

Time & Materials Change Order Serial Sketch No. 112 - Page 3 of 4

REVISION DATES (DESIGN STAGE ONLY)

Sheet Version 2.01

CITY OF LOS ANGELES DEPARTMENT OF PUBLIC WORKS
BUREAU OF ENGINEERING
ENGINEERING CITY OF LOS ANGELES

NO. REVISIONS: DATE BY:
1 BARRIER AND RAILING UPDATE 6/28/19 ES

STRUCTURE NO. 53C-2329

INDEX NO.

LICENSED ARCHITECT
GREGORY P. BAKER
C-16884
10-31-2019
RENEWAL DATE
STATE OF CALIFORNIA

GARY LEE MOORE, P.E.
CITY ENGINEER
SURVEY DIVISION

ENGINEER:
DESIGNED BY:
DRAWN BY:
CHECKED BY:
APPROVED BY:

MICHAEL MALTZAN ARCHITECTURE, INC.
2801 Hyperion Avenue, Studio 107 / Los Angeles, CA 90027
T (323) 913-3098 F (323) 913-5932

HNTB
HNTB Corporation
601 W. 5TH STREET, SUITE 1000
LOS ANGELES, CALIFORNIA 90071
TEL (213) 403-1000 FAX (213) 403-1001

VERTICAL CONTROL:
HORIZONTAL CONTROL:

SHEET TITLE: ENLARGED PLAN - TYPICAL RAILING LAY-OUT

PROJECT: SIXTH STREET VIADUCT REPLACEMENT

ADDRESS: SIXTH STREET VIADUCT (WHITTIER BLVD) LOS ANGELES, CA

WORK ORDER NO. E700224F

DRAWING NO. A-506

ADDENDUM 5

7/1/2016 5:37:48 PM

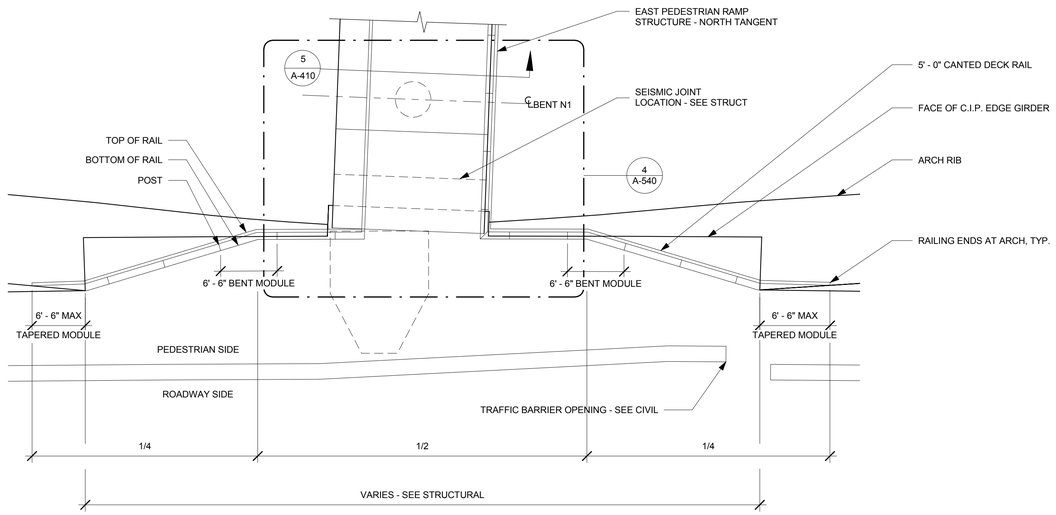

1 ENLARGED PLAN - EAST PEDESTRIAN RAMP NORTH JUMP SPAN
1/8" = 1'-0"
0 4' 8' 16'

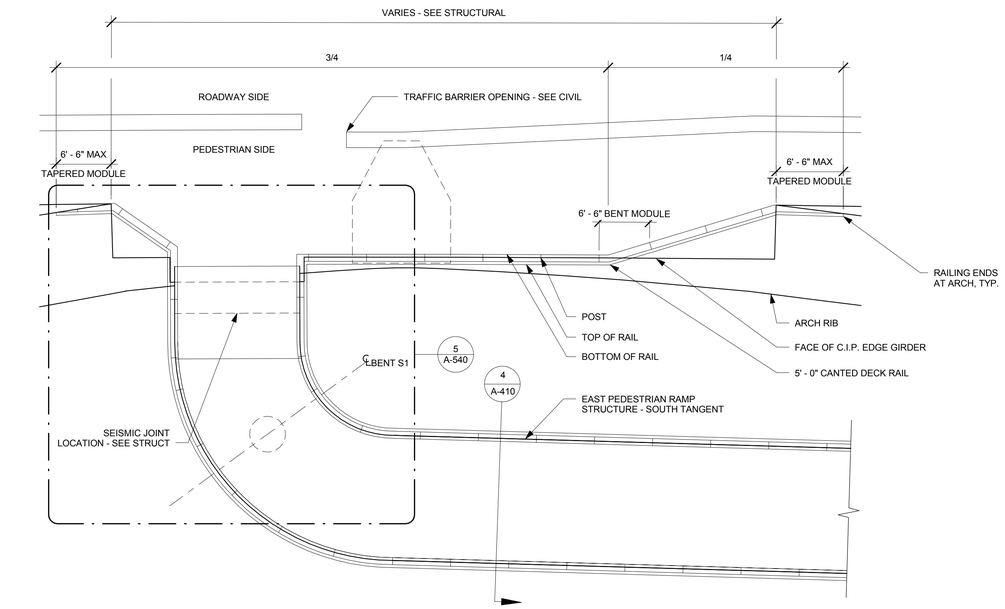

2 ENLARGED PLAN - EAST PEDESTRIAN RAMP SOUTH JUMP SPAN
1/8" = 1'-0"
0 4' 8' 16'

REVISION DATES (DESIGN STAGE ONLY)

Sheet Version 2.01

BUREAU OF ENGINEERING
CITY OF LOS ANGELES
ENGINEERING

NO. REVISIONS | DATE | BY:

STRUCTURE NO. 53C-2329

INDEX NO. P-38113

LICENSED ARCHITECT
JENNIFER LOHR MacISAAC
C-22480
07-31-2017
RENEWAL DATE
STATE OF CALIFORNIA

DEPARTMENT OF PUBLIC WORKS
CITY OF LOS ANGELES

CITY ENGINEER:
DATE:
SURVEY DIVISION
GARY LEE MOORE, P.E.
ENGINEER:
DESIGNED BY:
DRAWN BY:
CHECKED BY:
APPROVED BY:

VERTICAL CONTROL:
HORIZONTAL CONTROL:

SHEET TITLE: ENLARGED PLAN - RAILING LAY-OUT @ EAST RAMP JUMP SPANS

PROJECT: SIXTH STREET VIADUCT REPLACEMENT

ADDRESS: SIXTH STREET VIADUCT (WHITTIER BLVD) LOS ANGELES, CA

WORK ORDER NO. E700224F

DRAWING NO. A-507

SHEET 543 OF 560 SHEETS

MICHAEL MALTZAN ARCHITECTURE, INC.
2801 Hyperion Avenue, Studio 107 / Los Angeles, CA 90027
T (323) 913-3098 F (323) 913-5932

HNTB
HNTB Corporation
601 W. 5TH STREET SUITE 1000
LOS ANGELES, CALIFORNIA 90071
TEL (213) 403-1000 FAX (213) 403-1001

BUREAU OF ENGINEERING
OFFICIAL RECORD

ADDENDUM 5

7/1/2016 5:38:14 PM

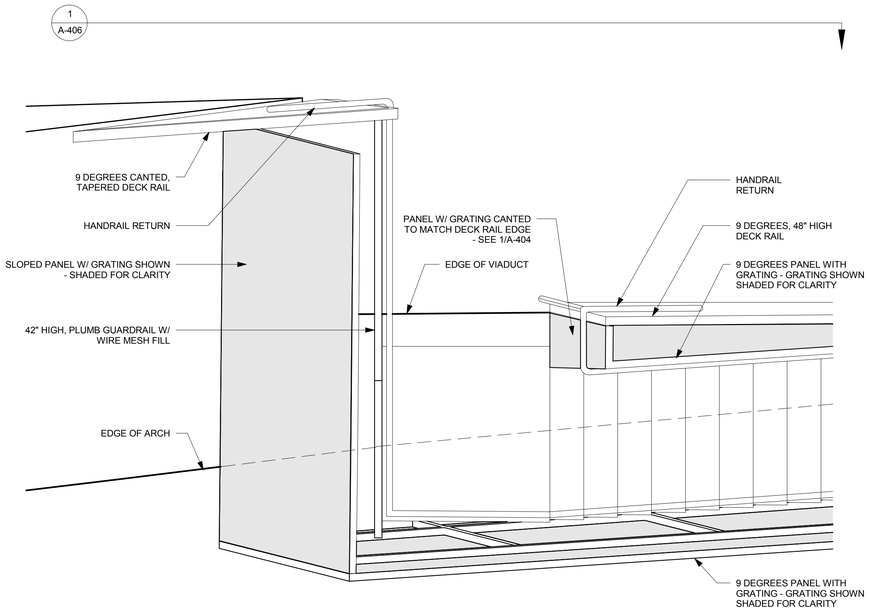

ENLARGED PARTIAL PLAN - STAIR LANDING @ DECK
1/2" = 1'-0"

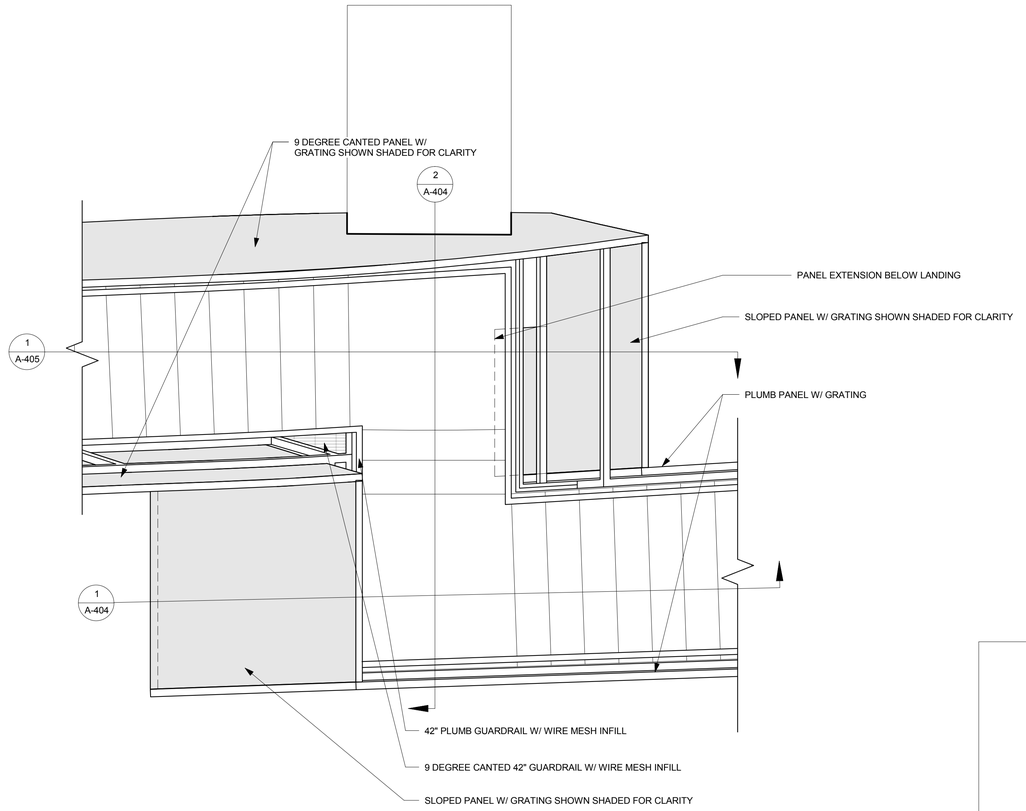

STAIR LANDING @ Y-BENT SADDLE
1/2" = 1'-0"

REVISION DATES (DESIGN STAGE ONLY)

Sheet Version 2.01

BUREAU OF ENGINEERING

ENGINEERING
CITY OF LOS ANGELES

NO. REVISIONS | DATE | BY:

STRUCTURE NO. 53C-2329

INDEX NO. P-38113

LICENSED ARCHITECT
JENNIFER LOHR MacISAAC
C-22480
07-31-2017
RENEWAL DATE
STATE OF CALIFORNIA

CITY OF LOS ANGELES DEPARTMENT OF PUBLIC WORKS

GARY LEE MOORE P.E. CITY ENGINEER
SURVEY DIVISION DATE:

ENGINEER:
DESIGNED BY:
DRAWN BY:
CHECKED BY:
APPROVED BY:

VERTICAL CONTROL:
HORIZONTAL CONTROL:

SHEET TITLE: ENLARGED PARTIAL PLANS - STAIRS

PROJECT: SIXTH STREET VIADUCT REPLACEMENT

ADDRESS: SIXTH STREET VIADUCT (WHITTIER BLVD)
LOS ANGELES, CA

WORK ORDER NO.
E700224F

DRAWING NO.
A-520

SHEET 544 OF 560 SHEETS

MICHAEL MALTZAN ARCHITECTURE, INC.
2801 Hyperion Avenue, Studio 107 / Los Angeles, CA 90027
T (323) 913-3098 F (323) 913-5932

HNTB
HNTB Corporation
601 W. 5TH STREET SUITE 1000
LOS ANGELES, CALIFORNIA 90071
TEL (213) 403-1000 FAX (213) 403-1001

BUREAU OF ENGINEERING
OFFICIAL RECORD

ADDENDUM 5

7/1/2016 5:38:39 PM

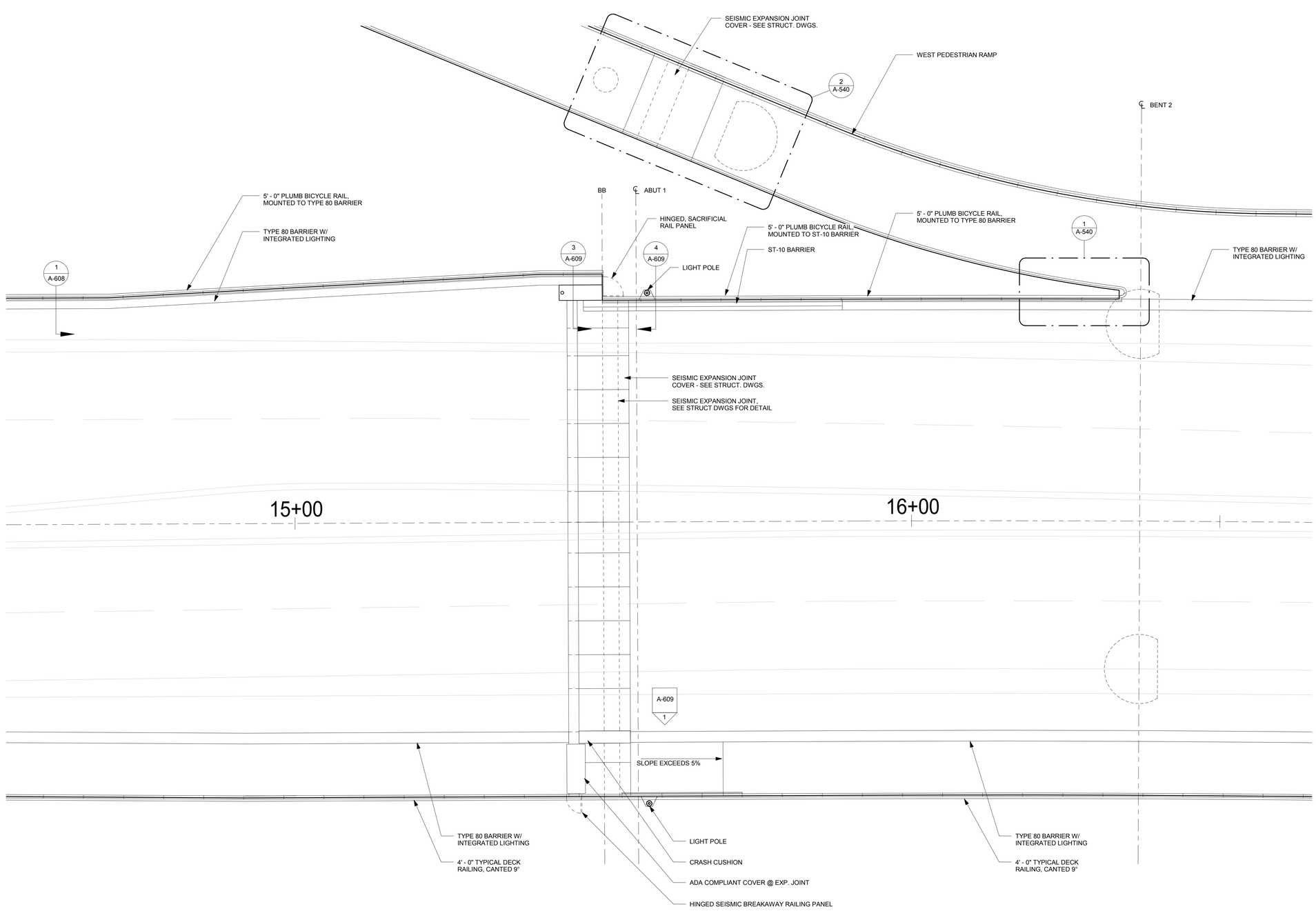

ENLARGED PLAN - SEISMIC EXP. JOINT / WEST PEDESTRIAN RAMP @ WEST APPROACH

1 1/8" = 1'-0"

0 4' 8' 16'

REVISION DATES (DESIGN STAGE ONLY)

BUREAU OF ENGINEERING
OFFICIAL RECORD

MICHAEL MALTZAN ARCHITECTURE, INC.
2801 Hyperion Avenue, Studio 107 / Los Angeles, CA 90027
T (323) 913-3098 F (323) 913-5932

HNTB
HNTB Corporation
601 W. 5TH STREET, SUITE 1000
LOS ANGELES, CALIFORNIA 90071
TEL (213) 403-1000 FAX (213) 403-1001

BUREAU OF ENGINEERING

ENGINEERING
CITY OF LOS ANGELES

NO. REVISIONS | DATE | BY:

STRUCTURE NO. 53C-2329

INDEX NO. P-38113

LICENSED ARCHITECT
JENNIFER LOHR MacISAAC
C-22480
07-31-2017
RENEWAL DATE
STATE OF CALIFORNIA

CITY OF LOS ANGELES DEPARTMENT OF PUBLIC WORKS

GARY LEE MOORE, P.E.
CITY ENGINEER

SURVEY DIVISION
ENGINEER:
DESIGNED BY:
DRAWN BY:
CHECKED BY:
APPROVED BY:
DATE:

VERTICAL CONTROL:
HORIZONTAL CONTROL:

SHEET TITLE: ENLARGED PLAN - WEST APROACH

PROJECT: SIXTH STREET VIADUCT REPLACEMENT

ADDRESS: SIXTH STREET VIADUCT (WHITTIER BLVD) LOS ANGELES, CA

WORK ORDER NO. E700224F

DRAWING NO. A-530

SHEET 545 OF 560 SHEETS

Sheet Version 2.01

ADDENDUM 5

71/2016 5:38:56 PM

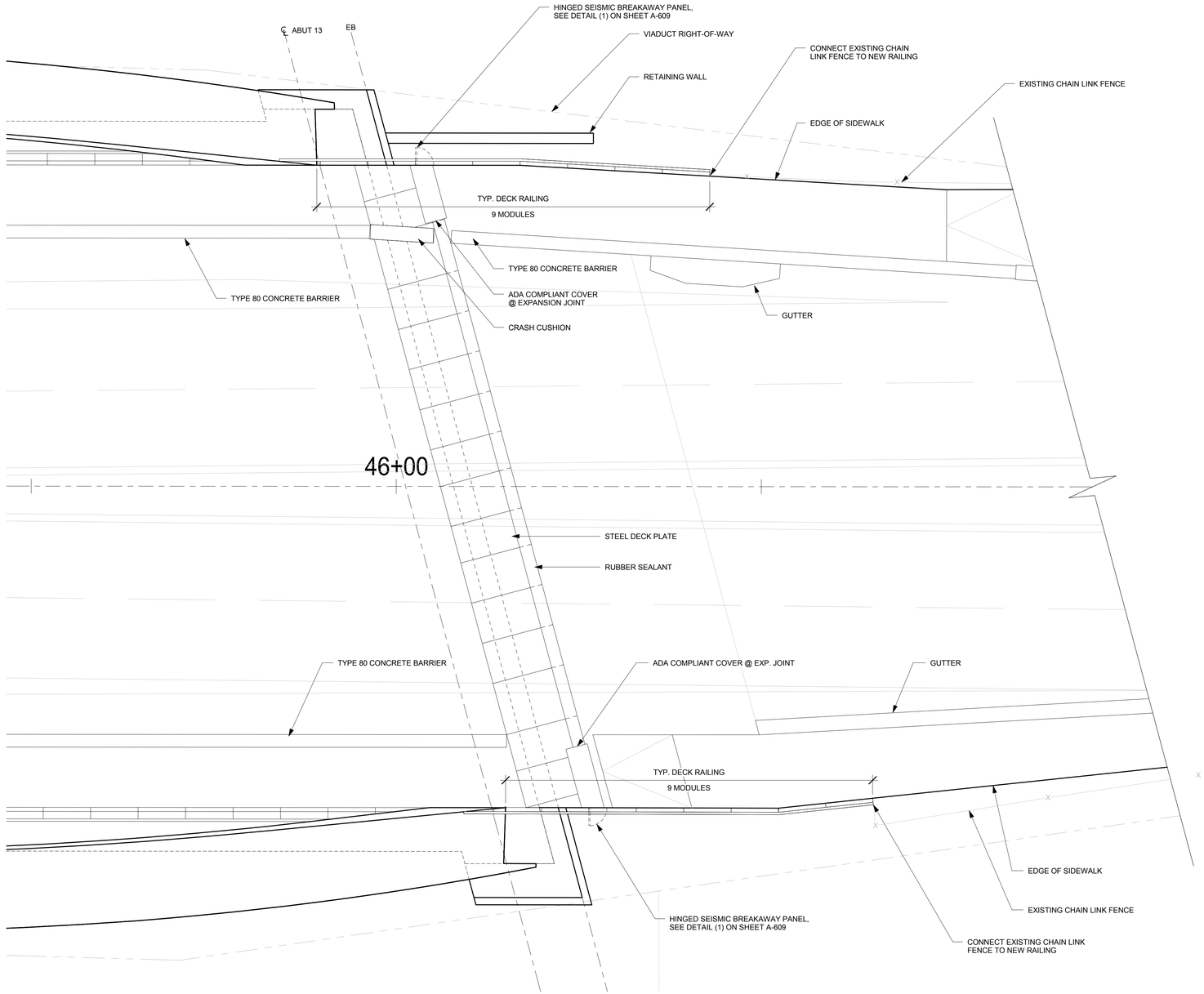

1 ENLARGED PLAN - EAST APPROACH
1/8" = 1'-0"

REVISION DATES (DESIGN STAGE ONLY)

CITY OF LOS ANGELES DEPARTMENT OF PUBLIC WORKS

BUREAU OF ENGINEERING

ENGINEERING CITY OF LOS ANGELES

NO. REVISIONS | DATE | BY:

STRUCTURE NO. 53C-2329

INDEX NO. P-38113

LICENSED ARCHITECT
JENNIFER LOHR MacISAAC
C-22480
07-31-2017
RENEWAL DATE
STATE OF CALIFORNIA

CITY ENGINEER: GARY LEE MOORE P.E.
DATE:
SURVEY DIVISION
ENGINEER:
DESIGNED BY:
DRAWN BY:
CHECKED BY:
APPROVED BY:

MICHAEL MALTZAN ARCHITECTURE, INC.
2801 Hyperion Avenue, Studio 107 / Los Angeles, CA 90027
T (323) 913-3098 F (323) 913-5932

HNTB
HNTB Corporation
601 W. 5TH STREET SUITE 1000
LOS ANGELES, CALIFORNIA 90071
TEL (213) 403-1000 FAX (213) 403-1001

BUREAU OF ENGINEERING OFFICIAL RECORD

VERTICAL CONTROL:
HORIZONTAL CONTROL:

SHEET TITLE: ENLARGED PLAN - EAST APPROACH

PROJECT: SIXTH STREET VIADUCT REPLACEMENT

ADDRESS: SIXTH STREET VIADUCT (WHITTIER BLVD) LOS ANGELES, CA

WORK ORDER NO. E700224F

DRAWING NO. A-531

SHEET 546 OF 560 SHEETS

Sheet Version 2.01

ADDENDUM 5

4/21/2017 4:12:33 PM

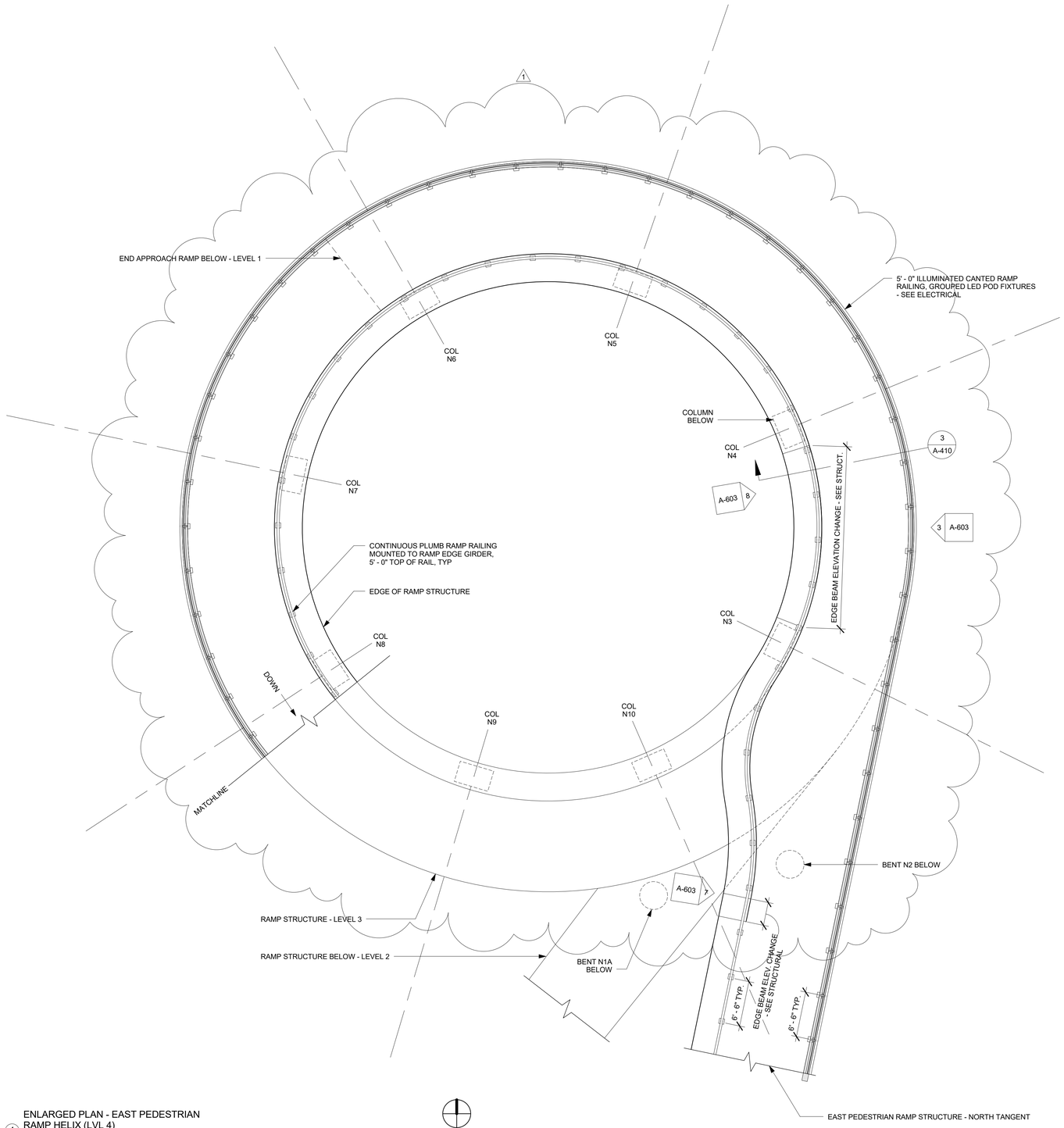

1 ENLARGED PLAN - EAST PEDESTRIAN RAMP HELIX (LVL 4)
1/8" = 1'-0"

0 4' 8' 16'

T.O. 5 - Change Order Serial Sketch No. 21 - page 3 of 7

REVISION DATES (DESIGN STAGE ONLY.)

Sheet Version 2.01

CITY OF LOS ANGELES DEPARTMENT OF PUBLIC WORKS
BUREAU OF ENGINEERING

ENGINEERING
CITY OF LOS ANGELES

NO.	REVISIONS:	DATE	BY:
1	HELICAL RAMP PILE REARRANGEMENT	4/21/17	ES

STRUCTURE NO. 53C-2329

INDEX NO.

GARY LEE MOORE, P.E. CITY ENGINEER
SURVEY DIVISION
ENGINEER:
DESIGNED BY:
DRAWN BY:
CHECKED BY:
APPROVED BY:
DATE:

VERTICAL CONTROL:
HORIZONTAL CONTROL:

SHEET TITLE: ENLARGED PLAN - EAST RAMP HELIX LVL 4

PROJECT: SIXTH STREET VIADUCT REPLACEMENT

ADDRESS: SIXTH STREET VIADUCT (WHITTIER BLVD) LOS ANGELES, CA

WORK ORDER NO. E700224F

DRAWING NO. A-532

MICHAEL MALTZAN ARCHITECTURE, INC.
2801 Hyperion Avenue, Studio 107 / Los Angeles, CA 90027
T (323) 913-3098 F (323) 913-5932

HNTB
HNTB Corporation
601 W. 5TH STREET SUITE 1000
LOS ANGELES, CALIFORNIA 90071
TEL (213) 403-1000 FAX (213) 403-1001

ADDENDUM 5

4/21/2017 4:12:54 PM

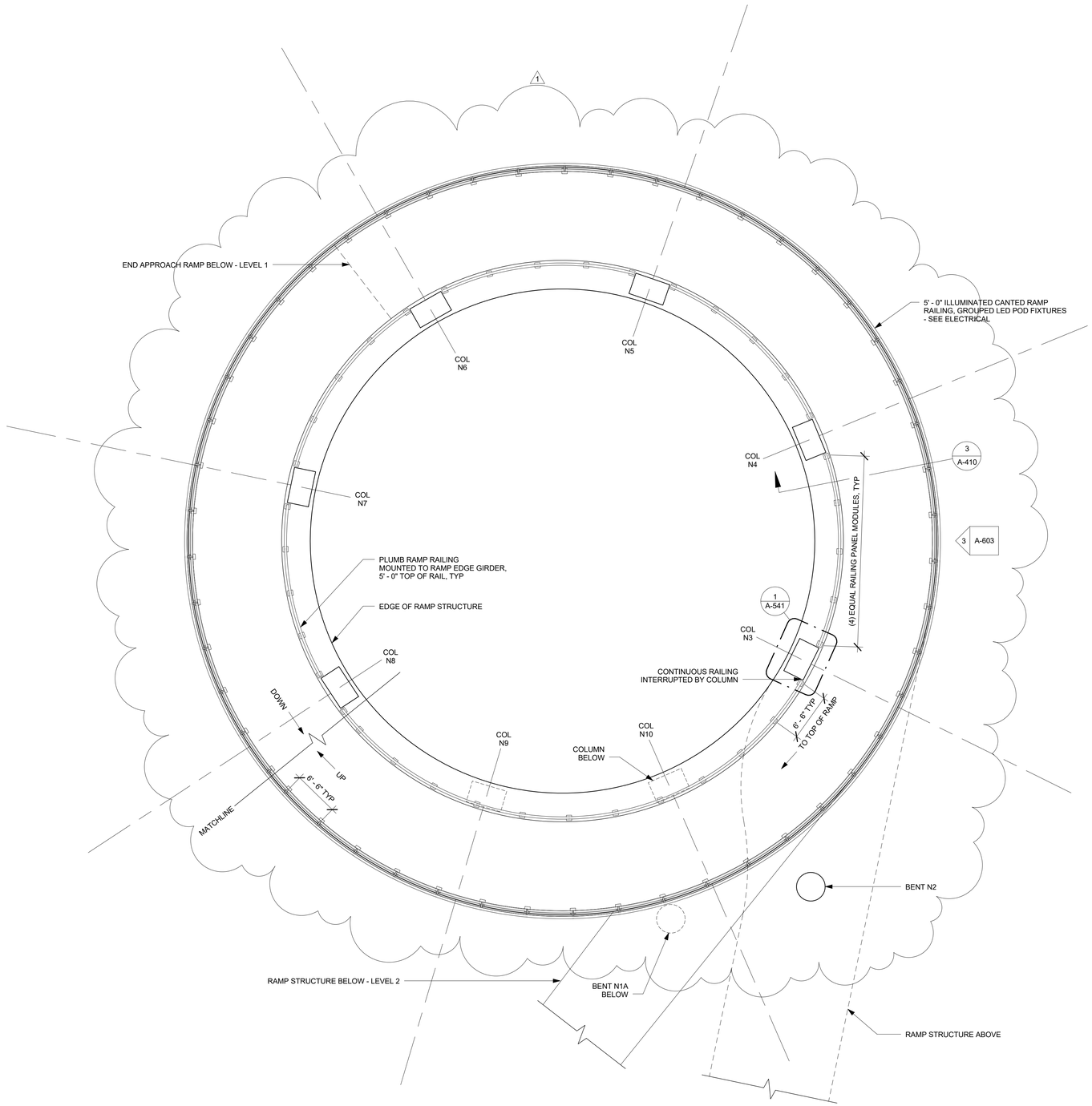

1 ENLARGED PLAN - EAST PEDESTRIAN RAMP HELIX (LVL 3)
1/8" = 1'-0"

0 4' 8' 16'

T.O. 5 - Change Order Serial Sketch No. 21 - page 4 of 7

REVISION DATES (DESIGN STAGE ONLY)

Sheet Version 2.01

BUREAU OF ENGINEERING

NO.	REVISIONS:	DATE	BY:
1	HELICAL RAMP PILE REARRANGEMENT	4/21/17	ES

ENGINEERING
CITY OF LOS ANGELES

STRUCTURE NO.
53C-2329

INDEX NO.

CITY OF LOS ANGELES DEPARTMENT OF PUBLIC WORKS

CITY ENGINEER:
DATE:
SURVEY DIVISION
VERTICAL CONTROL:
HORIZONTAL CONTROL:

GARY LEE MOORE, P.E.
ENGINEER:
DESIGNED BY:
DRAWN BY:
CHECKED BY:
APPROVED BY:

MICHAEL MALTZAN ARCHITECTURE, INC.
2801 Hyperion Avenue, Studio 107 / Los Angeles, CA 90027
T (323) 913-3098 F (323) 913-5932

HNTB
HNTB Corporation
601 W. 5TH STREET SUITE 1000
LOS ANGELES, CALIFORNIA 90071
TEL (213) 403-1000 FAX (213) 403-1001

SHEET TITLE: ENLARGED PLAN - EAST RAMP HELIX LVL 3

PROJECT: SIXTH STREET VIADUCT REPLACEMENT

ADDRESS: SIXTH STREET VIADUCT (WHITTIER BLVD) LOS ANGELES, CA

WORK ORDER NO.
E700224F

DRAWING NO.
A-533

ADDENDUM 5

4/21/2017 4:13:08 PM

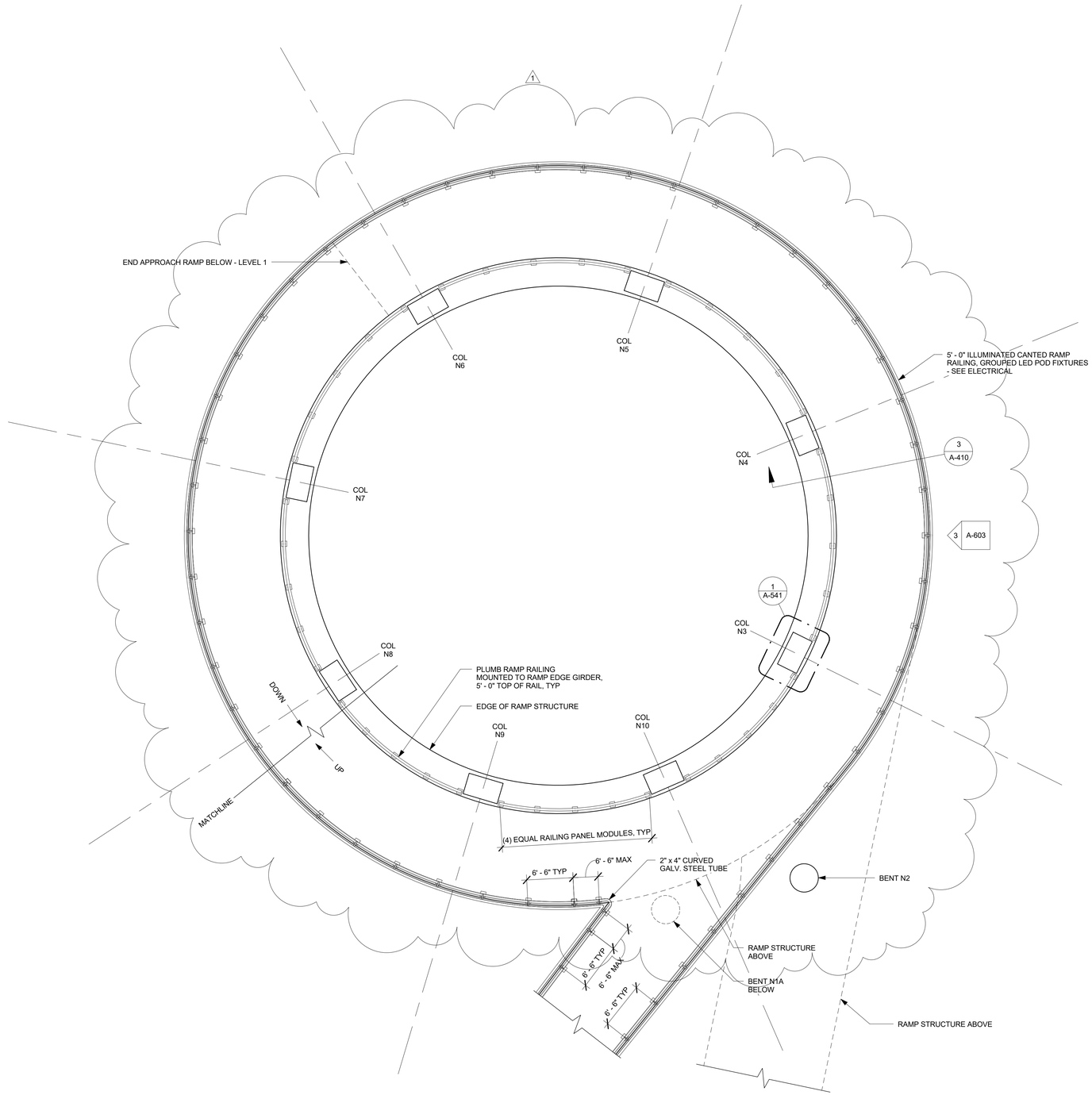

1 ENLARGED PLAN - EAST PEDESTRIAN RAMP HELIX (LVL 2)
1/8" = 1'-0"

0 4' 8' 16'

T.O. 5 - Change Order Serial Sketch No. 21 - page 5 of 7

REVISION DATES (DESIGN STAGE ONLY)

Sheet Version 2.01

BUREAU OF ENGINEERING

NO.	REVISIONS:	DATE	BY:
1	HELICAL RAMP PILE REARRANGEMENT	4/21/17	ES

ENGINEERING
CITY OF LOS ANGELES

STRUCTURE NO.
53C-2329

INDEX NO.

CITY OF LOS ANGELES DEPARTMENT OF PUBLIC WORKS

VERTICAL CONTROL:
HORIZONTAL CONTROL:

CITY ENGINEER:
DATE:

GARY LEE MOORE, P.E.
SURVEY DIVISION

ENGINEER:
DESIGNED BY:
DRAWN BY:
CHECKED BY:
APPROVED BY:

SHEET TITLE: ENLARGED PLAN - EAST RAMP HELIX LVL 2

PROJECT: SIXTH STREET VIADUCT REPLACEMENT

ADDRESS: SIXTH STREET VIADUCT (WHITTIER BLVD) LOS ANGELES, CA

WORK ORDER NO.
E700224F

DRAWING NO.
A-534

MICHAEL MALTZAN ARCHITECTURE, INC.
2801 Hyperion Avenue, Studio 107 / Los Angeles, CA 90027
T (323) 913-3098 F (323) 913-5932

HNTB
HNTB Corporation
601 W. 5TH STREET SUITE 1000
LOS ANGELES, CALIFORNIA 90071
TEL (213) 403-1000 FAX (213) 403-1001

ADDENDUM 5

4/21/2017 4:13:24 PM

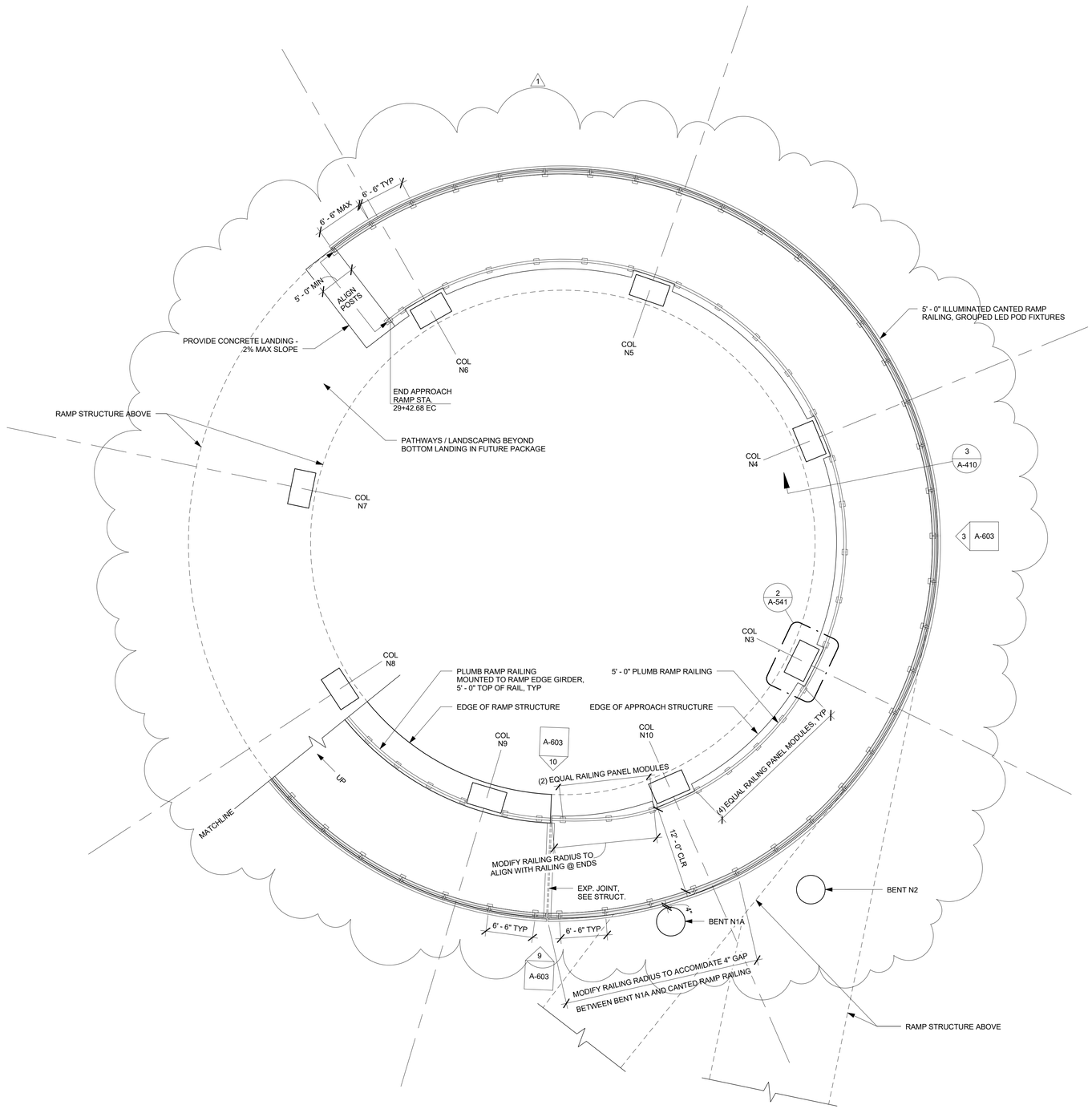

1 ENLARGED PLAN - EAST PEDESTRIAN RAMP HELIX (LVL 1)
1/8" = 1'-0"

0 4' 8' 16'

T.O. 5 - Change Order Serial Sketch No. 21 - page 6 of 7

REVISION DATES (DESIGN STAGE ONLY)

Sheet Version 2.01

CITY OF LOS ANGELES DEPARTMENT OF PUBLIC WORKS
BUREAU OF ENGINEERING

ENGINEERING
CITY OF LOS ANGELES

NO. REVISIONS: DATE BY:
1 HELICAL RAMP PILE REARRANGEMENT 4/21/17 ES

STRUCTURE NO. 53C-2329

INDEX NO.

VERTICAL CONTROL:
HORIZONTAL CONTROL:

SHEET TITLE: ENLARGED PLAN - EAST RAMP HELIX LVL 1

PROJECT: SIXTH STREET VIADUCT REPLACEMENT

ADDRESS: SIXTH STREET VIADUCT (WHITTIER BLVD) LOS ANGELES, CA

CITY ENGINEER: GARY LEE MOORE, P.E.
SURVEY DIVISION
ENGINEER:
DESIGNED BY:
DRAWN BY:
CHECKED BY:
APPROVED BY:
DATE:

MICHAEL MALTZAN ARCHITECTURE, INC.
2801 Hyperion Avenue, Studio 107 / Los Angeles, CA 90027
T (323) 913-3098 F (323) 913-5932

HNTB
HNTB Corporation
601 W. 5TH STREET, SUITE 1000
LOS ANGELES, CALIFORNIA 90071
TEL (213) 403-1000 FAX (213) 403-1001

WORK ORDER NO. E700224F

DRAWING NO. A-535

7/1/2016 5:42:59 PM

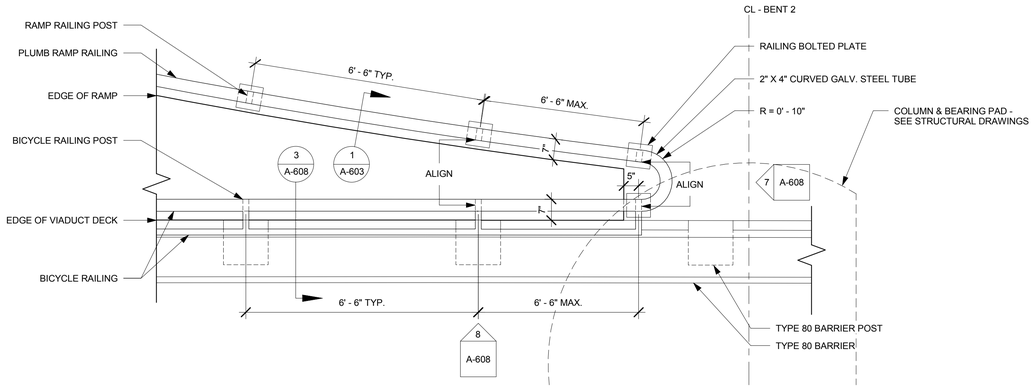

BICYCLE RAILING DETAIL - TYPE 80 (ENLARGED PLAN @ END CONDITION)
1 1/2" = 1'-0"

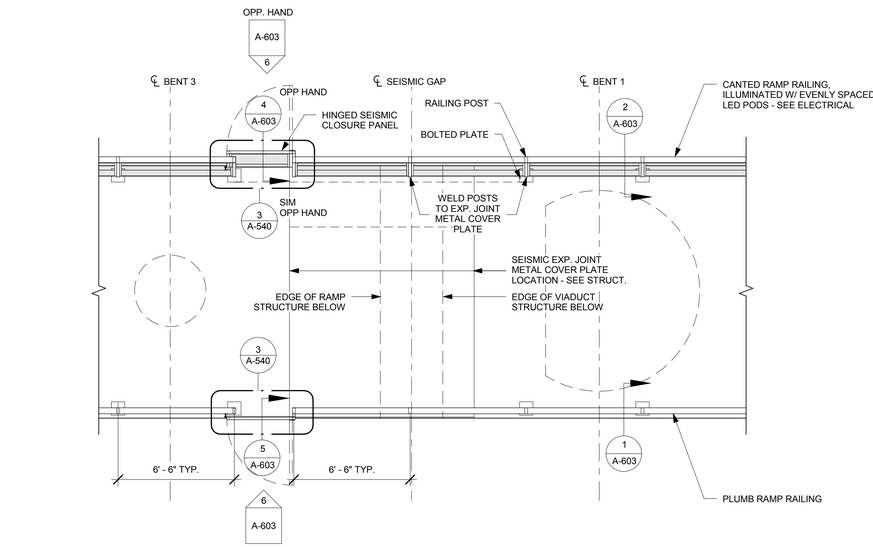

WEST PEDESTRIAN RAMP RAILING DETAIL (ENLARGED PLAN @ SEISMIC GAP)
2 1/4" = 1'-0"

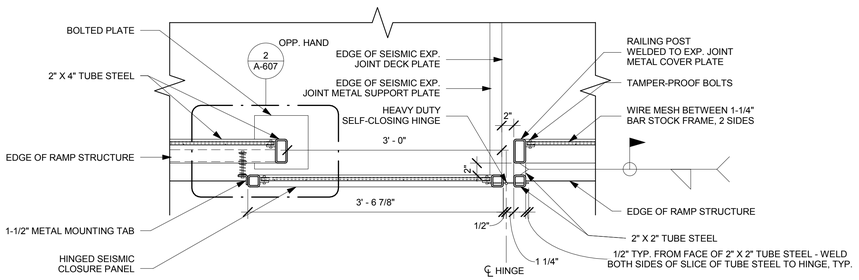

PEDESTRIAN RAMP RAILING DETAIL (PLAN DETAIL @ SEISMIC GAP)
3 1" = 1'-0"

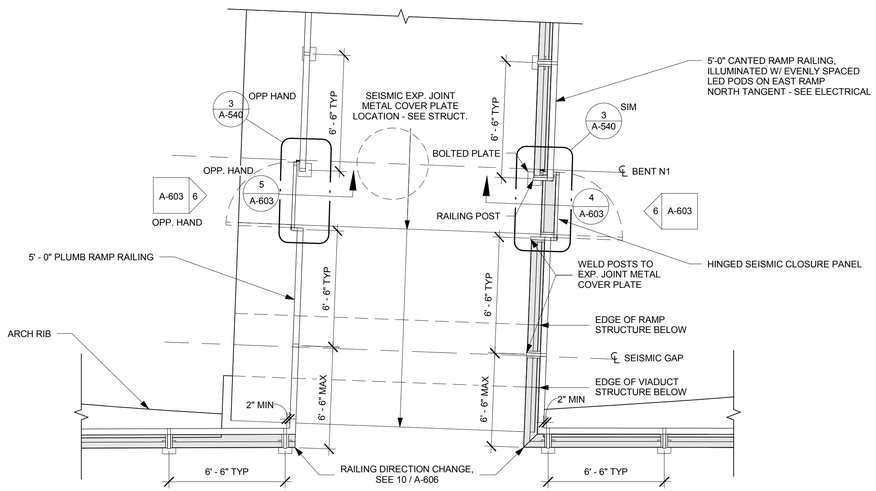

EAST PEDESTRIAN RAMP RAILING DETAIL (ENLARGED PLAN @ NORTH SEISMIC GAP)
4 1/4" = 1'-0"

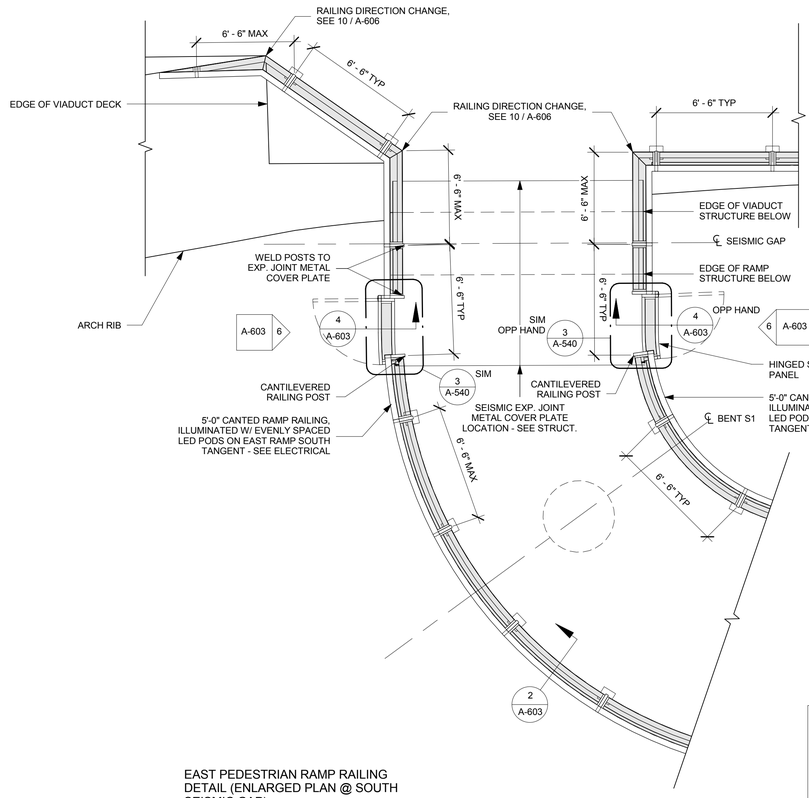

EAST PEDESTRIAN RAMP RAILING DETAIL (ENLARGED PLAN @ SOUTH SEISMIC GAP)
5 1/4" = 1'-0"

NOTE:

EXPECTED VIADUCT MOVEMENT @ RAMP SEISMIC GAP

SERVICE MOVEMENT:
MAX. EXPANSION = 4-1/4"
MAX. CONTRACTION = 10-1/4"
MAX. TRANSVERSE (EITHER DIRECTION) = 1-1/4"

SEISMIC MOVEMENT:
MAX. (ANY DIRECTION) = 36"

BUREAU OF ENGINEERING
OFFICIAL RECORD

REVISION DATES (DESIGN STAGE ONLY)

MICHAEL MALTZAN ARCHITECTURE, INC.
2801 Hyperion Avenue, Studio 107 / Los Angeles, CA 90027
T (323) 913-3098 F (323) 913-5932

HNTB
HNTB Corporation
601 W. 5TH STREET SUITE 1000
LOS ANGELES, CALIFORNIA 90071
TEL (213) 403-1000 FAX (213) 403-1001

CITY OF LOS ANGELES DEPARTMENT OF PUBLIC WORKS
BUREAU OF ENGINEERING

ENGINEERING
CITY OF LOS ANGELES

NO.	REVISIONS	DATE	BY:

STRUCTURE NO. 53C-2329

INDEX NO. P-38113

LICENSED ARCHITECT
JENNIFER LOHR MacISAAC
C-22480
07-31-2017
RENEWAL DATE
STATE OF CALIFORNIA

ENGINEER:	GARY LEE MOORE, P.E.
	SURVEY DIVISION
DESIGNED BY:	
DRAWN BY:	
CHECKED BY:	
APPROVED BY:	
CITY ENGINEER:	
DATE:	

VERTICAL CONTROL:
HORIZONTAL CONTROL:

SHEET TITLE: ENLARGED PARTIAL PLANS - PEDESTRIAN RAMPS

PROJECT: SIXTH STREET VIADUCT REPLACEMENT

ADDRESS: SIXTH STREET VIADUCT (WHITTIER BLVD) LOS ANGELES, CA

WORK ORDER NO. E700224F

DRAWING NO. A-540

SHEET 551 OF 560 SHEETS

Sheet Version 2.01

ADDENDUM 5

7/1/2016 7:34:05 PM

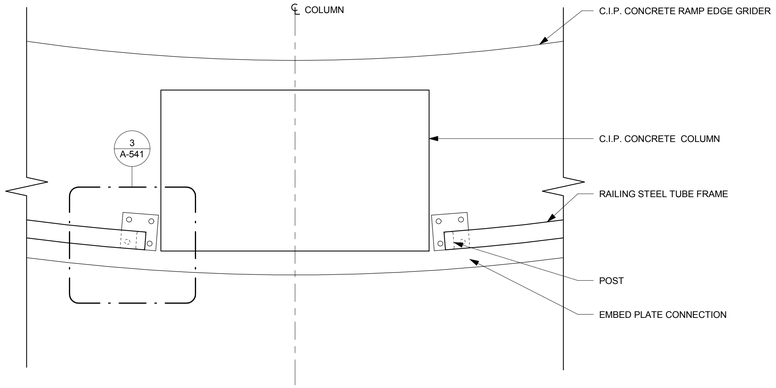

DETAILS - EAST PEDESTRIAN RAMP
RAILING (PLAN DETAIL @ EDGE GIRDER COLUMN)
1 3/4" = 1'-0"

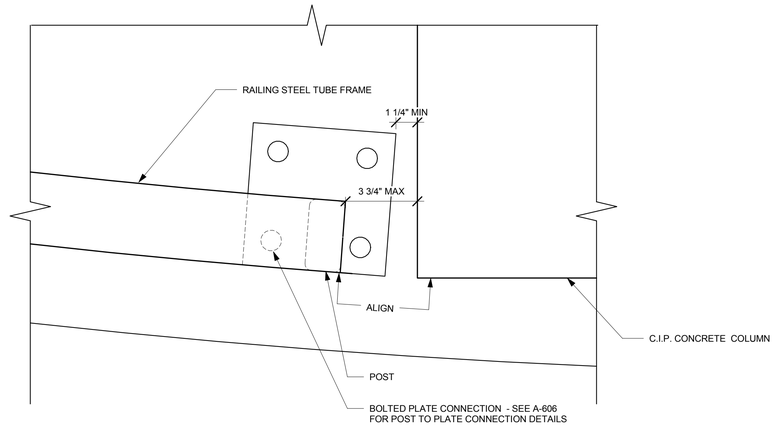

DETAILS - EAST REDESTRIAN RAMP
RAILING (PLAN DETAIL @ EDGE GIRDER COLUMN, EMBED PLATE)
3 3" = 1'-0"

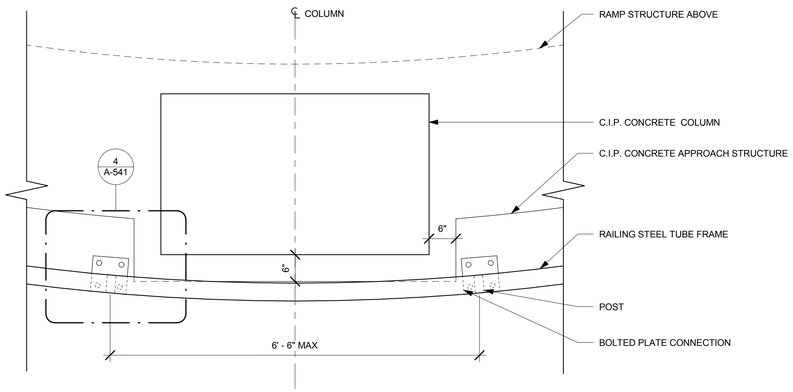

DETAILS - EAST PEDESTRIAN RAMP
RAILING (PLAN DETAIL @ APPROACH STRUCTURE COLUMN)
2 3/4" = 1'-0"

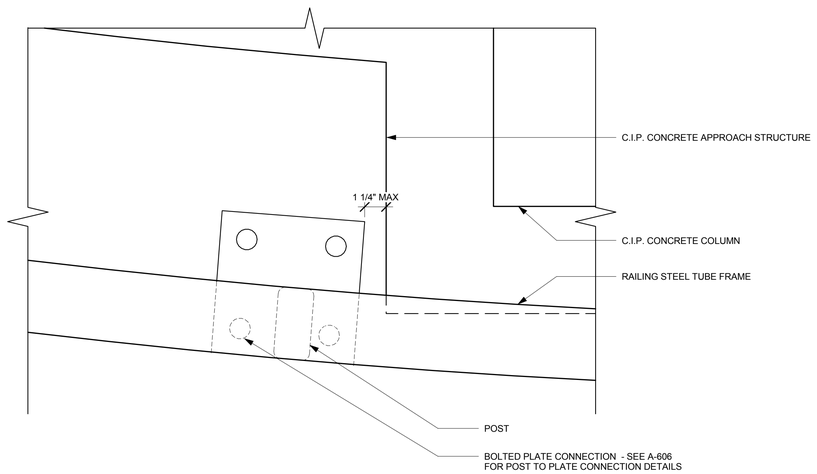

DETAILS - EAST PEDESTRIAN RAMP
RAILING (PLAN DETAIL @ APRROACH STRUCTURE COLUMN, EMBED PLATE)
4 3" = 1'-0"

REVISION DATES
(DESIGN STAGE ONLY)

Sheet Version 2.01

BUREAU OF ENGINEERING
OFFICIAL RECORD

HNTB
HNTB Corporation
601 W. 5TH STREET SUITE 1000
LOS ANGELES, CALIFORNIA 90071
TEL (213) 403-1000 FAX (213) 403-1001

MICHAEL MALTZAN ARCHITECTURE, INC.
2801 Hyperion Avenue, Studio 107 / Los Angeles, CA 90027
T (323) 913-3098 F (323) 913-5932

BUREAU OF ENGINEERING

NO. REVISIONS | DATE | BY:

STRUCTURE NO. 53C-2329

INDEX NO. P-38113

ENGINEERING
CITY OF LOS ANGELES

LICENSED ARCHITECT
JENNIFER LOHR MacISAAC
C-22480
07-31-2017
RENEWAL DATE
STATE OF CALIFORNIA

CITY OF LOS ANGELES DEPARTMENT OF PUBLIC WORKS

VERTICAL CONTROL:
HORIZONTAL CONTROL:

SHEET TITLE: ENLARGED PARTIAL PLANS - PEDESTRIAN RAMPS

PROJECT: SIXTH STREET VIADUCT REPLACEMENT

ADDRESS: SIXTH STREET VIADUCT (WHITTIER BLVD) LOS ANGELES, CA

GARY LEE MOORE, P.E. CITY ENGINEER
SURVEY DIVISION
ENGINEER: DATE:
DESIGNED BY:
DRAWN BY:
CHECKED BY:
APPROVED BY:

WORK ORDER NO. E700224F

DRAWING NO. A-541

SHEET 552 OF 560 SHEETS

ADDENDUM 5

7/1/2016 4:14:58 PM

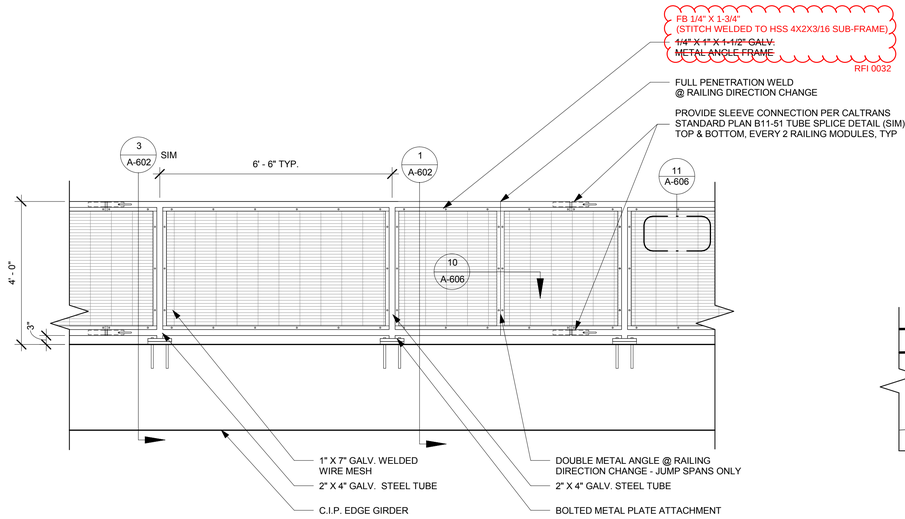

5 DETAILS - DECK RAILINGS / TYPICAL (ELEVATION)
1/2" = 1'-0"

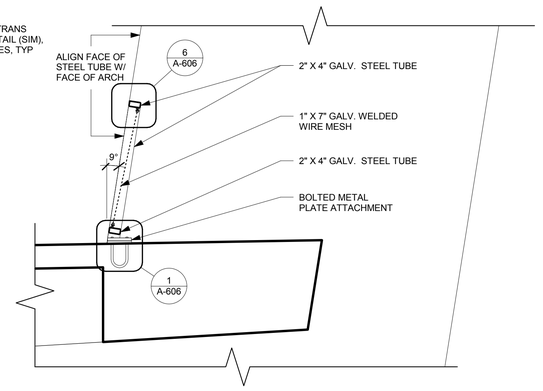

3 DETAILS - DECK RAILINGS / TYPICAL (SECTION @ ARCH SPAN)
1/2" = 1'-0"

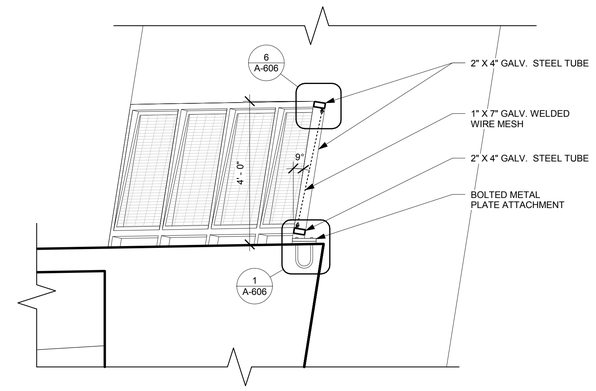

1 DETAILS - DECK RAILINGS / TYPICAL (SECTION @ JUMP SPAN)
1/2" = 1'-0"

4 DETAILS - DECK RAILINGS / PROJECTILE SCREEN (ELEVATION) - SPANS 4, 6, & 12
1/2" = 1'-0"

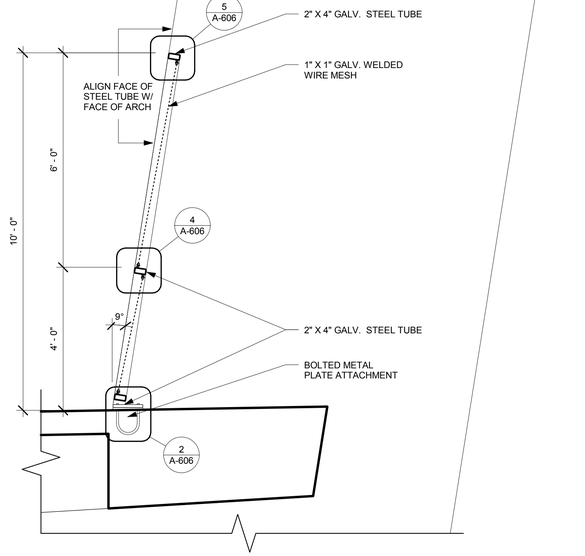

2 DETAILS - DECK RAILINGS / PROJECTILE SCREEN (SECTION) - SPANS 4, 6, & 12
1/2" = 1'-0"

REVISION DATES (DESIGN STAGE ONLY)

Sheet Version 2.01

BUREAU OF ENGINEERING
OFFICIAL RECORD

MICHAEL MALTZAN ARCHITECTURE, INC.
2801 Hyperion Avenue, Studio 107 / Los Angeles, CA 90027
T (323) 913-3098 F (323) 913-5932

HNTB
HNTB Corporation
601 W. 5TH STREET, SUITE 1000
LOS ANGELES, CALIFORNIA 90071
TEL (213) 403-1000 FAX (213) 403-1001

BUREAU OF ENGINEERING

ENGINEERING
CITY OF LOS ANGELES

NO. REVISIONS | DATE | BY:

STRUCTURE NO. 53C-2329

INDEX NO. P-38113

LICENSED ARCHITECT
JENNIFER LOHR MacISAAC
C-22480
07-31-2017
RENEWAL DATE
STATE OF CALIFORNIA

CITY OF LOS ANGELES DEPARTMENT OF PUBLIC WORKS

GARY LEE MOORE, P.E.
CITY ENGINEER

SURVEY DIVISION
DATE

ENGINEER:
DESIGNED BY:
DRAWN BY:
CHECKED BY:
APPROVED BY:

VERTICAL CONTROL:
HORIZONTAL CONTROL:

SHEET TITLE: DETAILS - RAILINGS

PROJECT: SIXTH STREET VIADUCT REPLACEMENT

ADDRESS: SIXTH STREET VIADUCT (WHITTIER BLVD)
LOS ANGELES, CA

WORK ORDER NO.
E700224F

DRAWING NO.
A-602

SHEET 553 OF 560 SHEETS

4/20/2017 6:23:39 PM

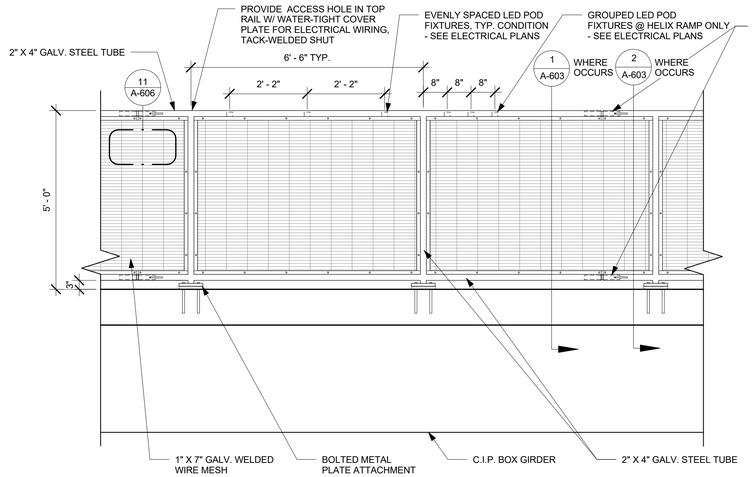

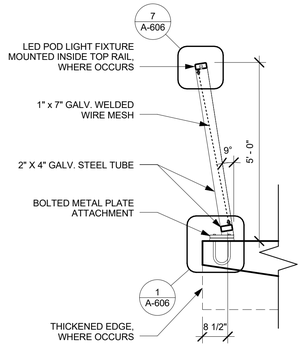

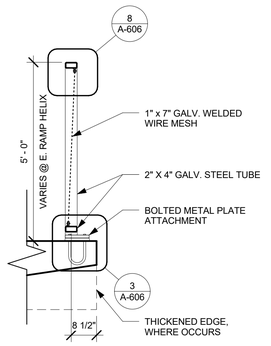

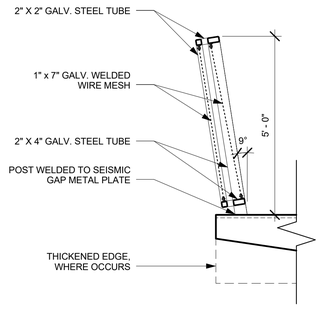

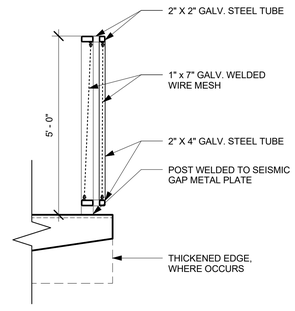

DETAILS - PEDESTRIAN RAMP RAILINGS / CANTED RAIL (SECTION)
2 1/2" = 1'-0" 0 1' 2' 4'

DETAILS - PEDESTRIAN RAMP RAILINGS / PLUMB RAIL (SECTION)
1 1/2" = 1'-0" 0 1' 2' 4'

DETAILS - PEDESTRIAN RAMP RAILINGS / CANTED (SECTION @ SEISMIC GAP CLOSURE PANEL)
4 1/2" = 1'-0" 0 1' 2' 4'

DETAILS - PEDESTRIAN RAMP RAILINGS / PLUMB (SECTION @ SEISMIC GAP CLOSURE PANEL)
5 1/2" = 1'-0" 0 1' 2' 4'

DETAILS - TYPICAL PEDESTRIAN RAMP RAILING (ELEVATION)
3 1/2" = 1'-0" 0 1' 2' 4'

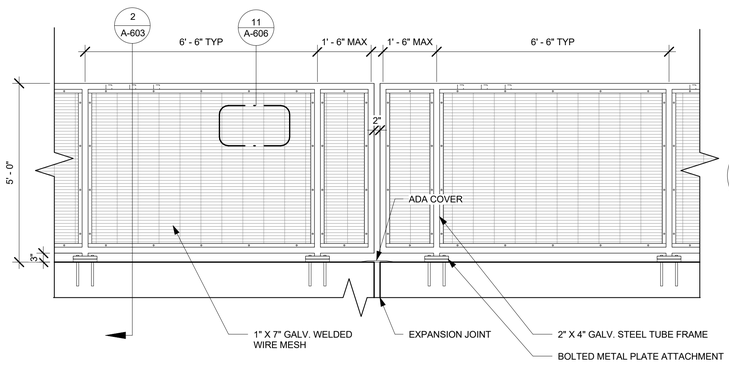

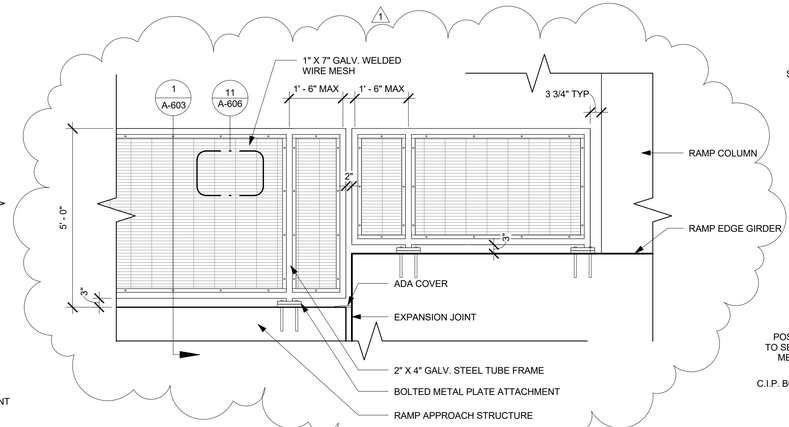

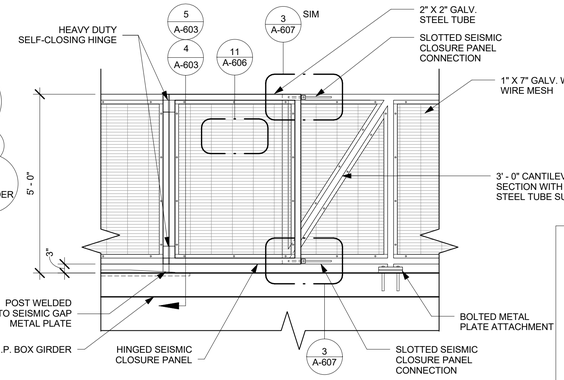

DETAILS - EAST PEDESTRIAN RAMP RAILING (SOUTH ELEVATION @ HELIX SEISMIC GAP)
9 1/2" = 1'-0" 0 1' 2' 4'

DETAILS - EAST PEDESTRIAN RAMP RAILING (NORTH ELEVATION @ HELIX SEISMIC GAP)
10 1/2" = 1'-0" 0 1' 2' 4'

DETAILS - PEDESTRIAN RAMP RAILING DETAILS (ELEVATION @ SEISMIC GAP)
6 1/2" = 1'-0" 0 1' 2' 4'

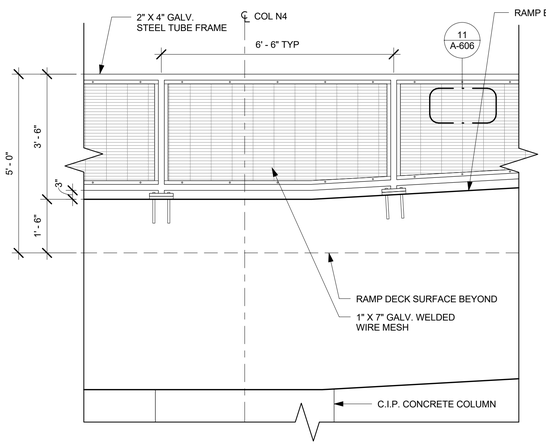

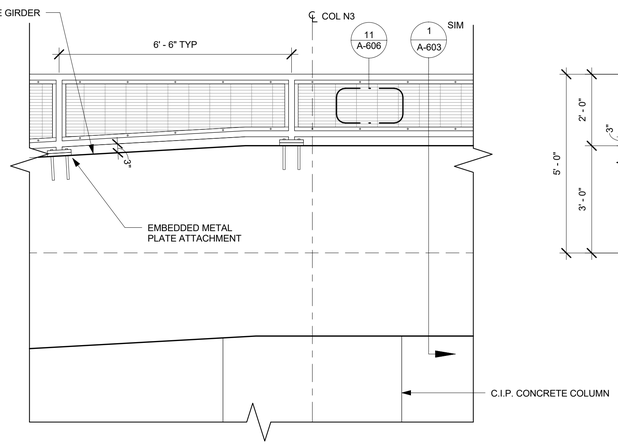

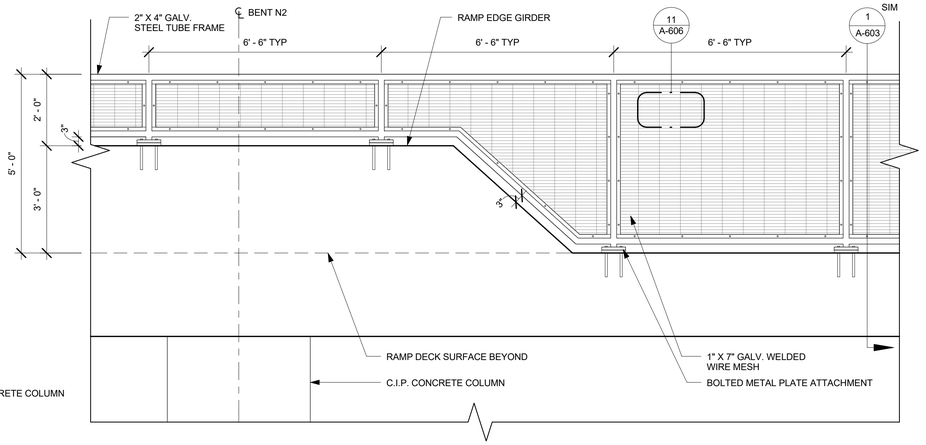

DETAILS - EAST PEDESTRIAN RAMP RAILING (ELEVATION @ EDGE GIRDER ELEVATION CHANGE, COL N3 - N4)
8 1/2" = 1'-0" 0 1' 2' 4'

DETAILS - EAST PEDESTRIAN RAMP RAILING (ELEVATION @ EDGE GIRDER ELEVATION CHANGE, BENT N2)
7 1/2" = 1'-0" 0 1' 2' 4'

T.O. 5 - Change Order Serial Sketch No. 21 - page 7 of 7

REVISION DATES (DESIGN STAGE ONLY)

Sheet Version 2.01

CITY OF LOS ANGELES DEPARTMENT OF PUBLIC WORKS
BUREAU OF ENGINEERING
CITY ENGINEER:
DATE:
SURVEY DIVISION
ENGINEER: GARY LEE MOORE, P.E.
DESIGNED BY:
DRAWN BY:
CHECKED BY:
APPROVED BY:
NO. REVISIONS: DATE BY:
1 HELICAL RAMP PILE REARRANGEMENT 4/21/17 ES
STRUCTURE NO. 53C-2329
INDEX NO.
VERTICAL CONTROL:
HORIZONTAL CONTROL:
SHEET TITLE: DETAILS - RAILINGS
PROJECT: SIXTH STREET VIADUCT REPLACEMENT
ADDRESS: SIXTH STREET VIADUCT (WHITTIER BLVD) LOS ANGELES, CA
WORK ORDER NO. E700224F
DRAWING NO. A-603

MICHAEL MALTZAN ARCHITECTURE, INC.
2801 Hyperion Avenue, Studio 107 / Los Angeles, CA 90027
T (323) 913-3098 F (323) 913-5932
HNTB
HNTB Corporation
601 W. 5TH STREET SUITE 1000
LOS ANGELES, CALIFORNIA 90071
TEL (213) 403-1000 FAX (213) 403-1001

ADDENDUM 5

7/1/2016 4:34:03 PM

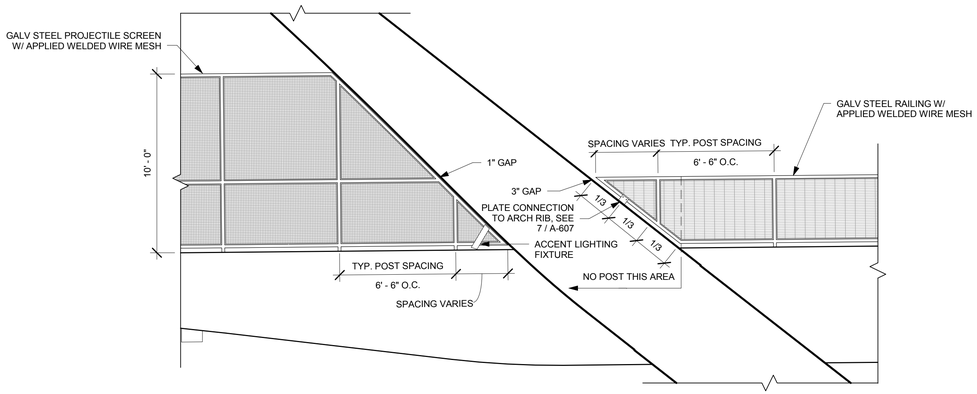

1 DETAILS - DECK RAILING / PROJECTILE SCREEN @ ARCH (ELEVATION)
1/4" = 1'-0"

0 2' 4' 8'

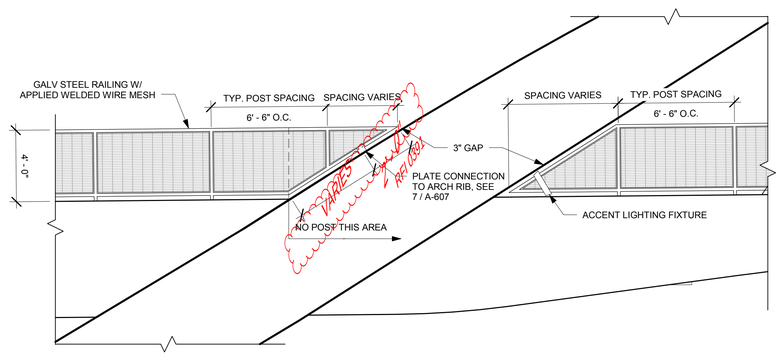

3 DETAILS - DECK RAILING @ ARCH (ELEVATION)
1/4" = 1'-0"

0 2' 4' 8'

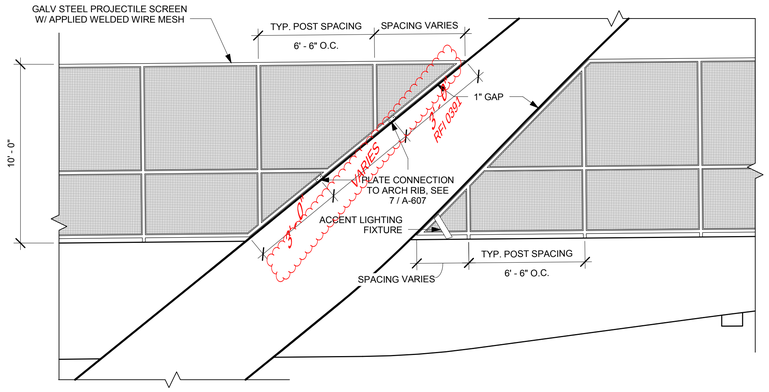

2 DETAILS - PROJECTILE SCREEN @ ARCH (ELEVATION)
1/4" = 1'-0"

0 2' 4' 8'

BUREAU OF ENGINEERING
OFFICIAL RECORD

BUREAU OF ENGINEERING
ENGINEERING
CITY OF LOS ANGELES

STRUCTURE NO. 53C-2329

INDEX NO. P-38113

NO. REVISIONS | DATE | BY:

LICENSED ARCHITECT
JENNIFER LOHR MacISAAC
C-22480
07-31-2017
RENEWAL DATE
STATE OF CALIFORNIA

CITY OF LOS ANGELES DEPARTMENT OF PUBLIC WORKS

GARY LEE MOORE, P.E. CITY ENGINEER
SURVEY DIVISION
ENGINEER: DATE:
DESIGNED BY:
DRAWN BY:
CHECKED BY:
APPROVED BY:

MICHAEL MALTZAN ARCHITECTURE, INC.
2801 Hyperion Avenue, Studio 107 / Los Angeles, CA 90027
T (323) 913-3098 F (323) 913-5932

HNTB
HNTB Corporation
601 W. 5TH STREET SUITE 1000
LOS ANGELES, CALIFORNIA 90071
TEL (213) 403-1000 FAX (213) 403-1001

VERTICAL CONTROL:
HORIZONTAL CONTROL:

SHEET TITLE: DETAILS - RAILINGS

PROJECT: SIXTH STREET VIADUCT REPLACEMENT

ADDRESS: SIXTH STREET VIADUCT (WHITTIER BLVD)
LOS ANGELES, CA

WORK ORDER NO. E700224F

DRAWING NO. A-604

SHEET 555 OF 560 SHEETS

REVISION DATES (DESIGN STAGE ONLY)

Sheet Version 2.01

ADDENDUM 5

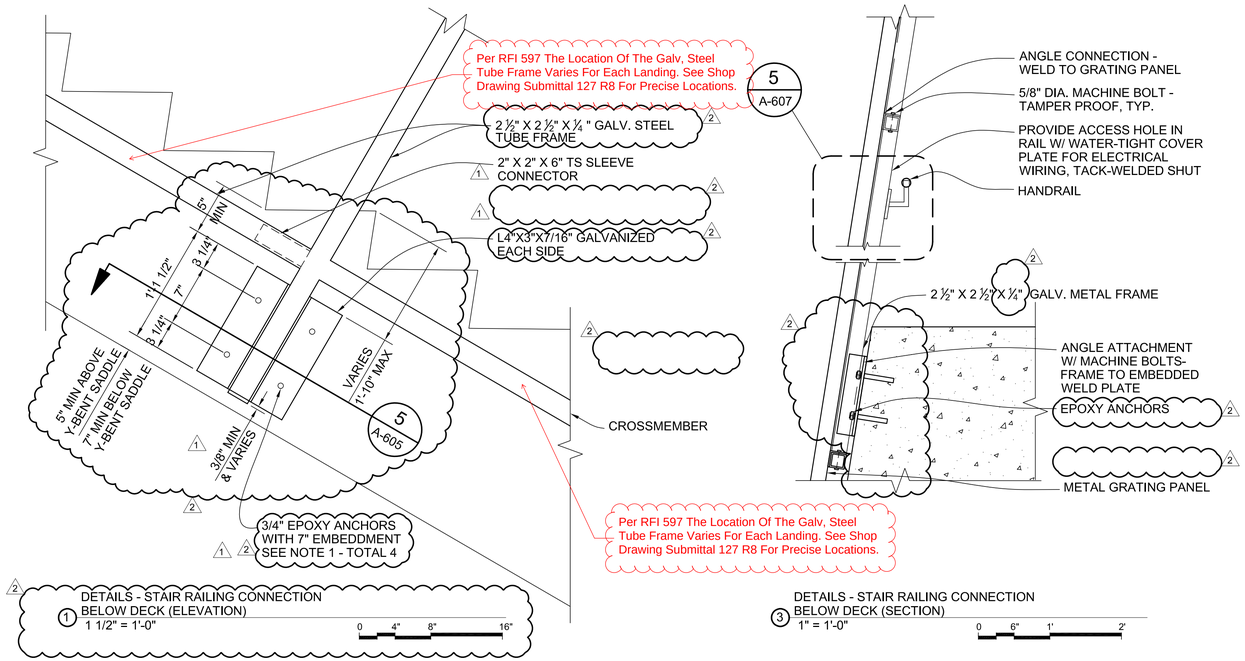

1 DETAILS - STAIR RAILING CONNECTION BELOW DECK (ELEVATION)
1 1/2" = 1'-0"

3 DETAILS - STAIR RAILING CONNECTION BELOW DECK (SECTION)
1" = 1'-0"

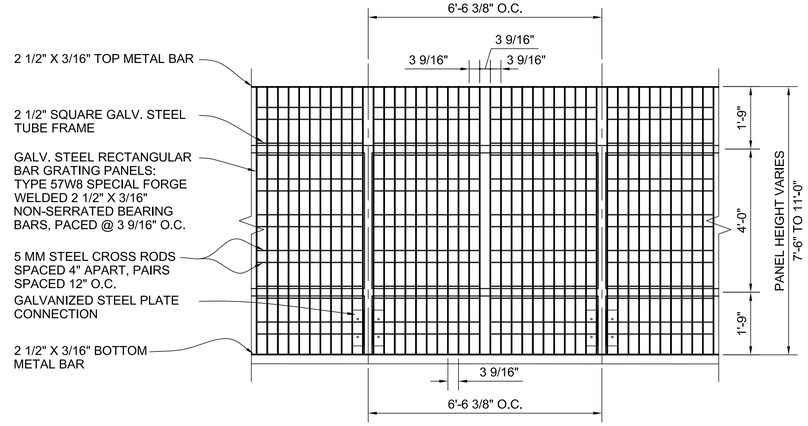

5 DETAILS - STAIR RAILING / TYPICAL POST & PANEL SPACING (BELOW DECK)
1/2" = 1'-0"

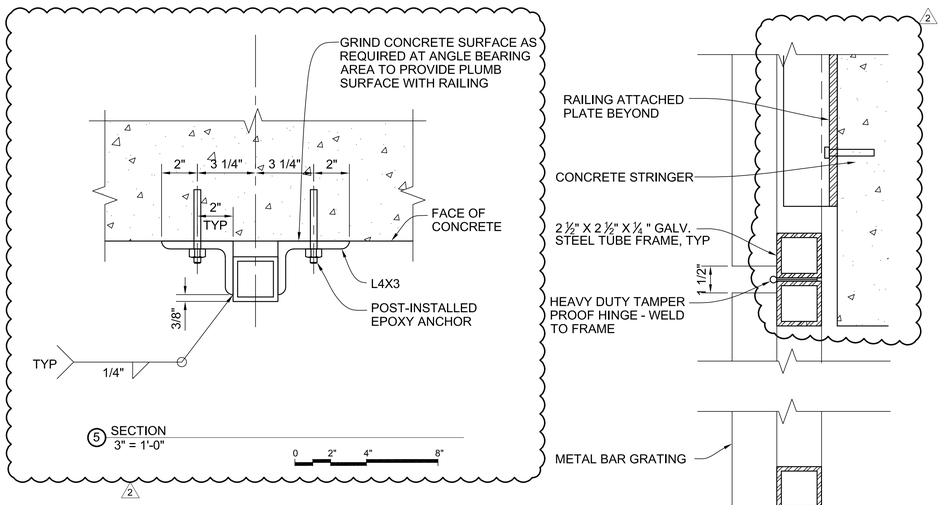

5 SECTION
3" = 1'-0"

NOTES:

1. POST-INSTALLED EPOXY ANCHORS SHALL HAVE THE FOLLOWING MINIMUM PROPERTIES:
   a. ANCHOR CATEGORY 1 PER ACI 355.2
   b. A MINIMUM CHARACTERISTIC BOND STRESS OF 2325 PSI IN UNCRACKED CONCRETE AND 1320 PSI IN CRACKED CONCRETE FOR CONCRETE WITH A 28-DAY COMPRESSION STRENGTH OF 4000 PSI.

MINIMUM RESISTANCE FACTORS:
CONCRETE BREAKOUT, TENSION ϕ = 0.65
CONCRETE BREAKOUT, SHEAR ϕ = 0.70
BOND STRENGTH ϕ = 0.65

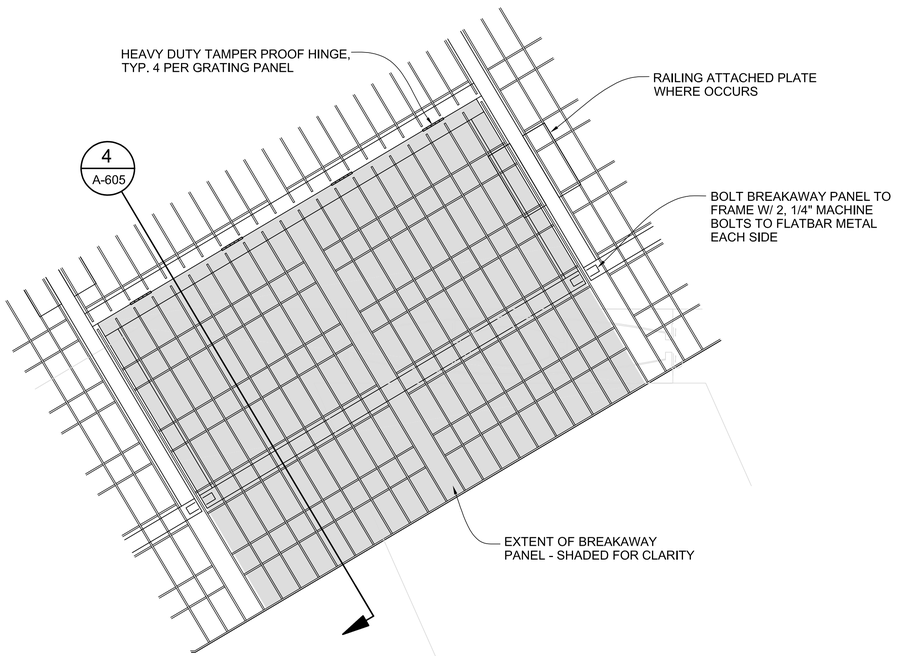

4 DETAILS - STAIR RAILING / BREAKAWAY PANEL (SECTION)
3" = 1'-0"

2 DETAILS - STAIR RAILING / HINGED SEISMIC PANEL (ELEVATION)
1" = 1'-0"

REGISTERED PROFESSIONAL ENGINEER — MICHAEL H. JONES — No. S3033 — STRUCTURAL — STATE OF CALIFORNIA

MICHAEL H. JONES' STAMP APPLIES TO POST-INSTALLED ANCHORS REVISION 2 (DATED 2/05/22) ONLY

LICENSED ARCHITECT — JOHN PHILIP TRAUTMANN — C 31914 — 06/31/2023 RENEWAL DATE — STATE OF CALIFORNIA

JOHN TRAUTMANN'S STAMP APPLIES TO REVISION 1 PARC STAIR ELEVATION REVISION (DATED 12/02/21) ONLY

LICENSED ARCHITECT — JENNIFER LOHR MacISAAC — C-22480 — 07-31-2017 RENEWAL DATE — STATE OF CALIFORNIA

BUREAU OF ENGINEERING

1	PARC STAIR ELEVATION REVISION	ECO 153	12/3/21 MT
2	POST - INSTALLED ANCHORS	ECO 153	2/5/22 MHJ

STRUCTURE NO. 53C-2329

INDEX NO.

ENGINEERING — CITY OF LOS ANGELES

CITY OF LOS ANGELES DEPARTMENT OF PUBLIC WORKS

CITY ENGINEER: DATE

SURVEY DIVISION

GARY LEE MOORE, P.E.

ENGINEER:
DESIGNED BY:
DRAWN BY:
CHECKED BY:
APPROVED BY:

VERTICAL CONTROL:
HORIZONTAL CONTROL:

SHEET TITLE: DETAIL - RAILINGS

PROJECT: SIXTH STREET VIADUCT REPLACEMENT

ADDRESS: SIXTH STREET VIADUCT (WHITTIER BLVD), LOS ANGELES, CA

MICHAEL MALTZAN ARCHITECTURE, INC.
2801 Hyperion Avenue, Studio 107 / Los Angeles, CA 90027
T (323) 913-3098 F (323) 913-5932

HNTB
HNTB Corporation
601 W. 5TH STREET SUITE 1000
LOS ANGELES, CALIFORNIA 90071
TEL (213) 403-1000 FAX (213) 403-1001

WORK ORDER NO. E700224F

DRAWING NO. A-605

REVISION DATES (DESIGN STAGE ONLY)

T.O. 5 - Change Order Serial Sketch No. 153r3 - Page 8 of 15

Sheet Version 2.01

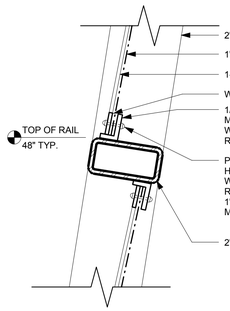

4 PROJECTILE SCREEN INTERMEDIATE RAIL DETAIL
3" = 1'-0"

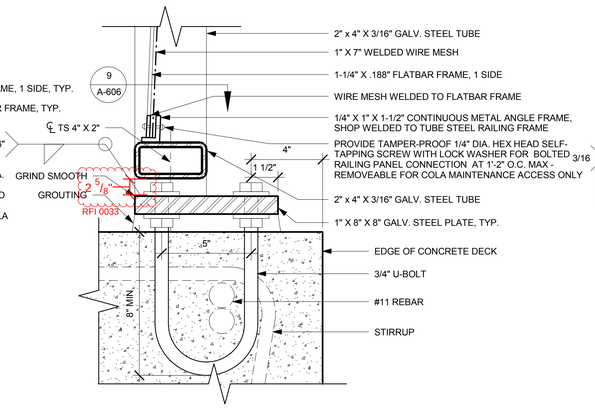

3 PEDESTRIAN RAMP RAILING BASE DETAIL (PLUMB)
3" = 1'-0"

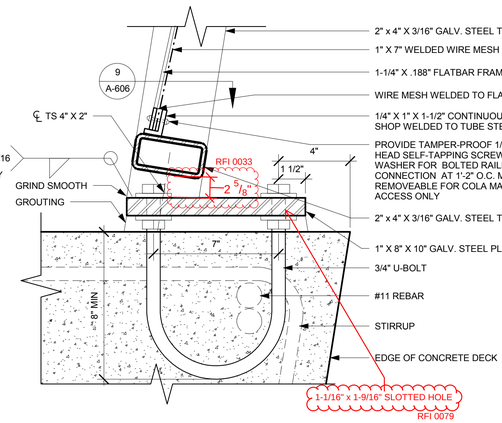

2 PROJECTILE SCREEN BASE DETAIL
3" = 1'-0"

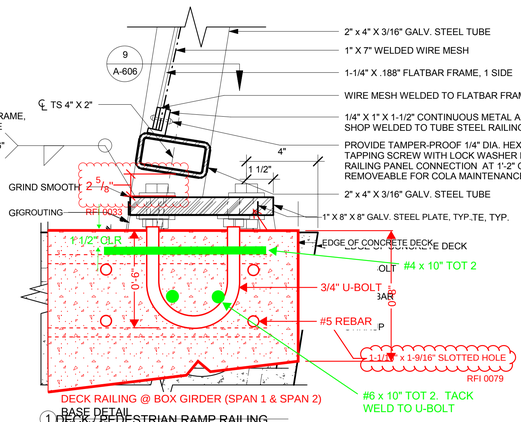

1 DECK / PEDESTRIAN RAMP RAILING BASE DETAIL
3" = 1'-0"

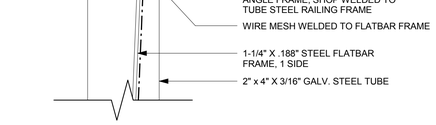

8 PEDESTRIAN RAMP RAILING TOP DETAIL (PLUMB)
3" = 1'-0"

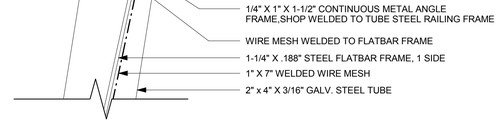

7 PEDESTRIAN RAMP RAILING TOP DETAIL (WITH LED POD LIGHT FIXTURE)
3" = 1'-0"

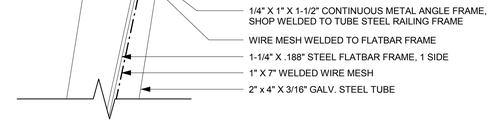

6 DECK / PEDESTRIAN RAMP RAILING TOP DETAIL
3" = 1'-0"

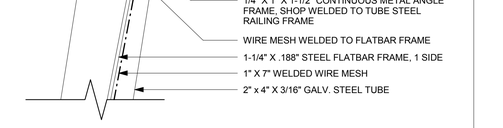

5 PROJECTILE SCREEN TOP DETAIL
3" = 1'-0"

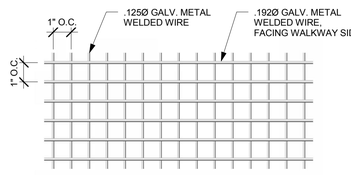

12 1" X 1" WELDED WIRE MESH @ PROJECTILE SCREEN
3" = 1'-0"

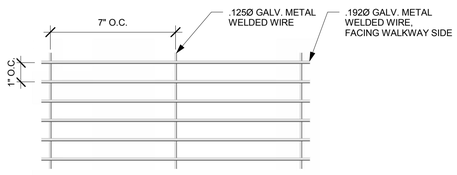

11 1" X 7" WELDED WIRE MESH @ DECK AND PEDESTRIAN RAMP RAILINGS
3" = 1'-0"

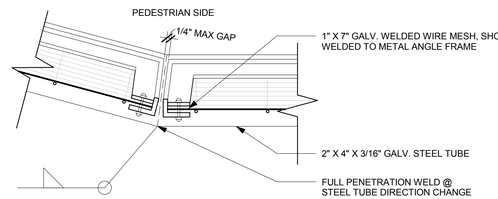

10 SECTION DETAIL @ RAILING DIRECTION CHANGE
3" = 1'-0"

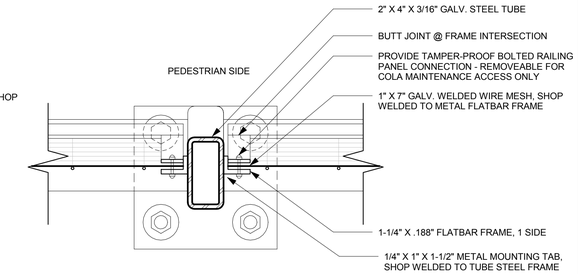

9 TYP. RAILING SECTION DETAIL
3" = 1'-0"

GENERAL NOTES:

1. FOR POST ANCHORAGE DETAILS NOT SHOWN, SEE CALTRANS XS SHEET CHAIN LINK RAILING TYPE 7L DETAILS NO. 1, TYPICAL POST DETAIL.
2. METAL BRIDE RAILING MUST CONFORM TO CALTRANS STANDARD SPECIFICATION SECTION 83-1.02G.
3. FIELD WELDING OF METAL RAILING AFTER THE INSTALLATION OF POST-TENSIONING IN THE VIADUCT WILL ONLY BE PERMITTED IF PRECAUTIONS ARE TAKEN TO PREVENT ANY STAY CURRENT FROM REACHING THE POST-TENSIONING DUCTS. NO WELDING WILL BE PERMITTED UNTIL ALL POST-TENSIONING DUCTS ARE FULLY GROUTED. IF FIELD WELDING OF RAILING IS PROPOSED, YOU MUST SUBMIT A WELDING PROCEDURE SHOWING HOW ALL WELDING ELECTRIC CIRCUITS WILL BE GROUNDED TO ENSURE STAY CURRENTS HAVE NO POTENTIAL TO REACH THE HIGH STRENGTH STRAND CONTAINED WITHIN POST-TENSIONING DUCTS. NO FIELD WELDING OF RAILING SHALL BE PERMITTED UNTIL THE PROCEDURE IS SUBMITTED AND THE ENGINEER AUTHORIZES USE OF THE PROPOSED PROCEDURES.

BUREAU OF ENGINEERING
OFFICIAL RECORD

BUREAU OF ENGINEERING
ENGINEERING
CITY OF LOS ANGELES

NO. REVISIONS | DATE | BY:

STRUCTURE NO. 53C-2329

INDEX NO. P-38113

LICENSED ARCHITECT
JENNIFER LOHR MacISAAC
C-22480
07-31-2017
RENEWAL DATE
STATE OF CALIFORNIA

CITY OF LOS ANGELES | DEPARTMENT OF PUBLIC WORKS | BUREAU OF ENGINEERING

CITY ENGINEER: | DATE:
GARY LEE MOORE, P.E.
SURVEY DIVISION

ENGINEER:
DESIGNED BY:
DRAWN BY:
CHECKED BY:
APPROVED BY:

MICHAEL MALTZAN ARCHITECTURE, INC.
2801 Hyperion Avenue, Studio 107 / Los Angeles, CA 90027
T (323) 913-3098 F (323) 913-5932

HNTB
HNTB Corporation
601 W. 5TH STREET, SUITE 1000
LOS ANGELES, CALIFORNIA 90071
TEL (213) 403-1000 FAX (213) 403-1001

VERTICAL CONTROL:
HORIZONTAL CONTROL:

SHEET TITLE: DETAILS - RAILINGS

PROJECT: SIXTH STREET VIADUCT REPLACEMENT

ADDRESS: SIXTH STREET VIADUCT (WHITTIER BLVD) LOS ANGELES, CA

WORK ORDER NO. E700224F

DRAWING NO. A-606

SHEET 557 OF 560 SHEETS

REVISION DATES (DESIGN STAGE ONLY)

7/1/2016 7:15:33 PM

Sheet Version 2.01

6/28/2019 11:12:38 AM

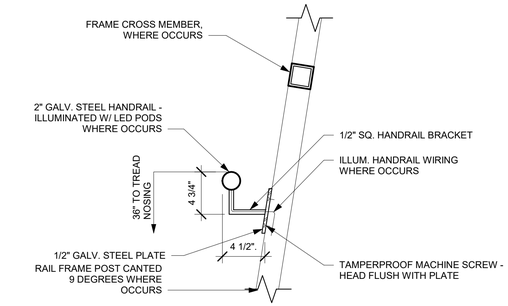

5 DETAILS - HANDRAIL (SECTION)
1 1/2" = 1'-0"

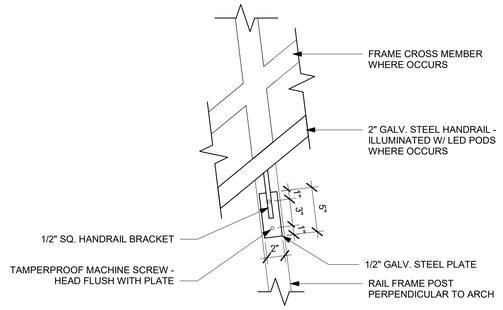

4 DETAILS - HANDRAIL (ELEVATION)
1 1/2" = 1'-0"

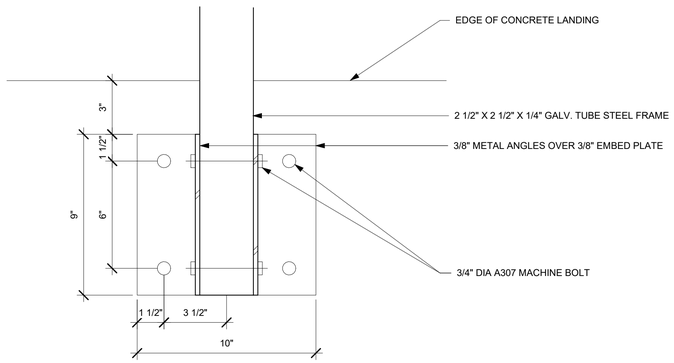

DETAILS - GUARDRAIL ATTACHMENT PLATE (ELEVATION)
1 3" = 1'-0"

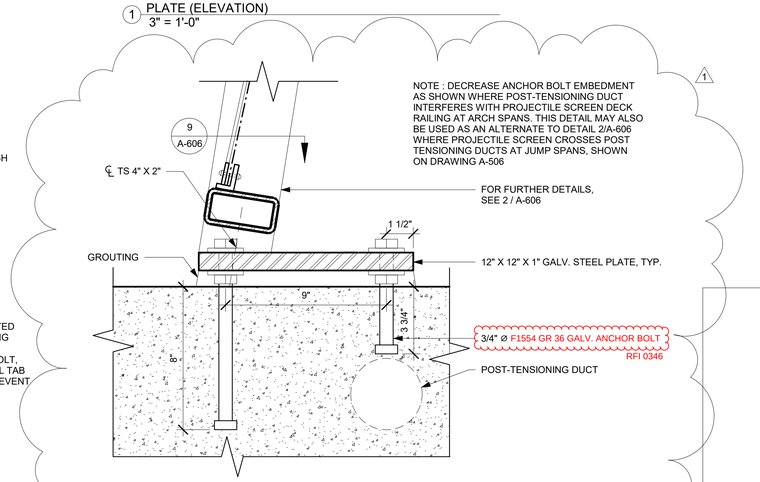

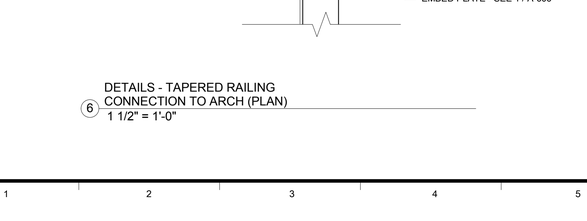

2 DETAILS - PEDESTRIAN RAMP RAILING SEISMIC GAP CONNECTION (PLAN)
3" = 1'-0"

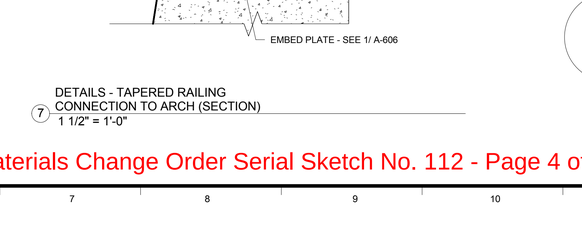

3 DETAILS - PEDESTRIAN RAMP RAILING SEISMIC GAP CONNECTION (ELEVATION - UPPER ATTACHMENT SIMILAR)
3" = 1'-0"

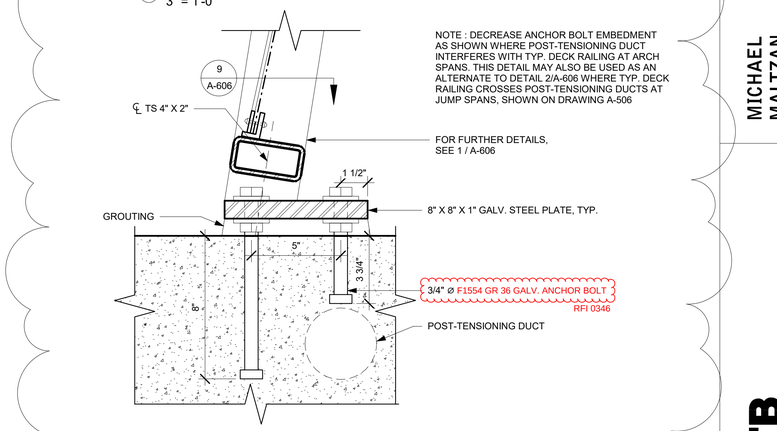

A PROJECTILE SCREEN BASE DETAIL (ALT.)
3" = 1'-0"

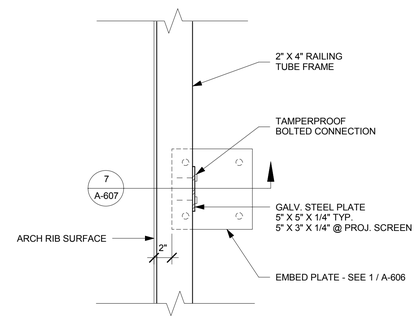

6 DETAILS - TAPERED RAILING CONNECTION TO ARCH (PLAN)
1 1/2" = 1'-0"

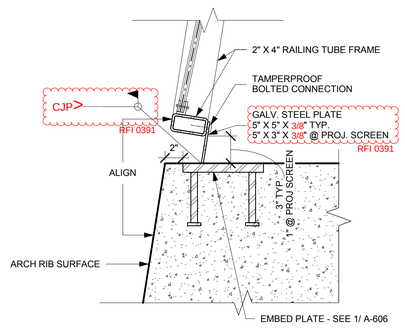

7 DETAILS - TAPERED RAILING CONNECTION TO ARCH (SECTION)
1 1/2" = 1'-0"

B DECK RAILING BASE DETAIL (ALT.)
3" = 1'-0"

Time & Materials Change Order Serial Sketch No. 112 - Page 4 of 4

MICHAEL MALTZAN ARCHITECTURE, INC.
2801 Hyperion Avenue, Studio 107 / Los Angeles, CA 90027
T (323) 913-3098 F (323) 913-5932

HNTB
HNTB Corporation
601 W. 5TH STREET SUITE 1000
LOS ANGELES, CALIFORNIA 90071
TEL (213) 403-1000 FAX (213) 403-1001

BUREAU OF ENGINEERING
ENGINEERING
CITY OF LOS ANGELES

NO.	REVISIONS:	DATE	BY:
1	BARRIER AND RAILING UPDATE	6/28/19	ES

STRUCTURE NO. 53C-2329

INDEX NO.

LICENSED ARCHITECT
GREGORY P. BAKER
C-16884
10-31-2019
RENEWAL DATE
STATE OF CALIFORNIA

CITY OF LOS ANGELES DEPARTMENT OF PUBLIC WORKS

CITY ENGINEER:
DATE:

SURVEY DIVISION

ENGINEER: GARY LEE MOORE P.E.
DESIGNED BY:
DRAWN BY:
CHECKED BY:
APPROVED BY:

VERTICAL CONTROL:
HORIZONTAL CONTROL:

SHEET TITLE: DETAILS - RAILINGS

PROJECT: SIXTH STREET VIADUCT REPLACEMENT

ADDRESS: SIXTH STREET VIADUCT (WHITTIER BLVD) LOS ANGELES, CA

WORK ORDER NO. E700224F

DRAWING NO. A-607

REVISION DATES (DESIGN STAGE ONLY)

Sheet Version 2.01

ADDENDUM 5

7/1/2016 5:44:22 PM

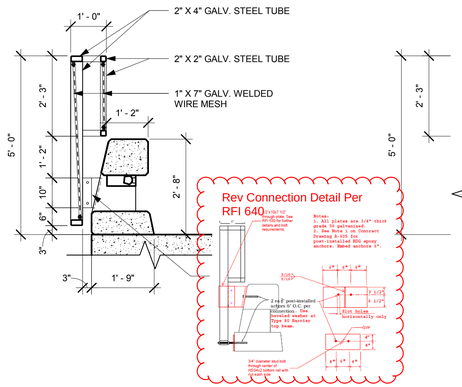

3 BICYCLE RAILING DETAIL - TYPE 80 (SECTION)
1/2" = 1'-0"

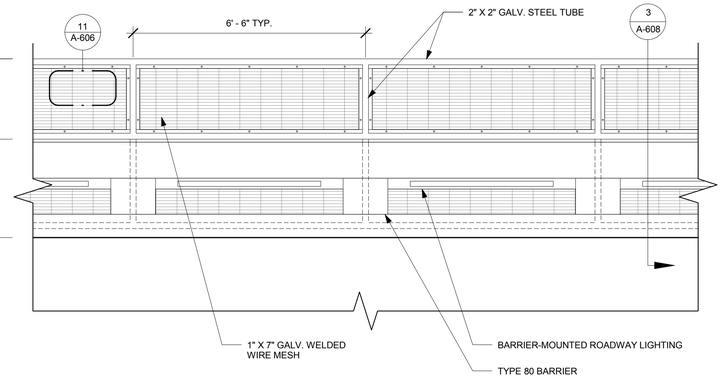

2 BICYCLE RAILING DETAIL - TYPE 80 (ELEVATION FRONT)
1/2" = 1'-0"

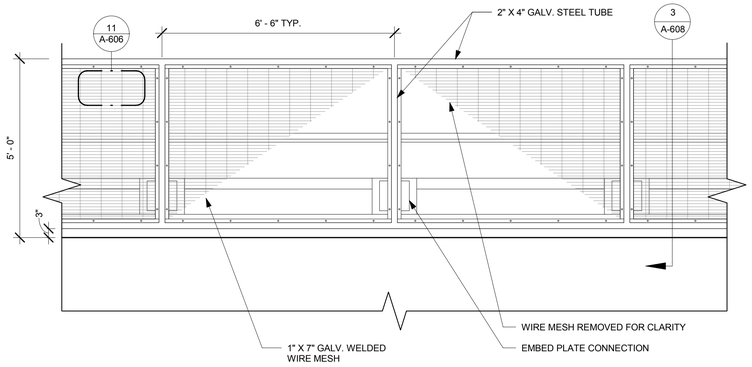

1 BICYCLE RAILING DETAIL - TYPE 80 (ELEVATION BACK)
1/2" = 1'-0"

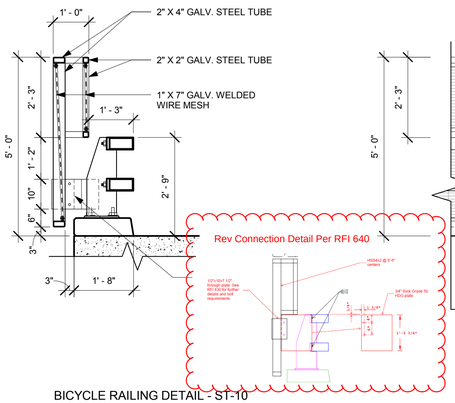

6 BICYCLE RAILING DETAIL - ST-10 (SECTION)
1/2" = 1'-0"

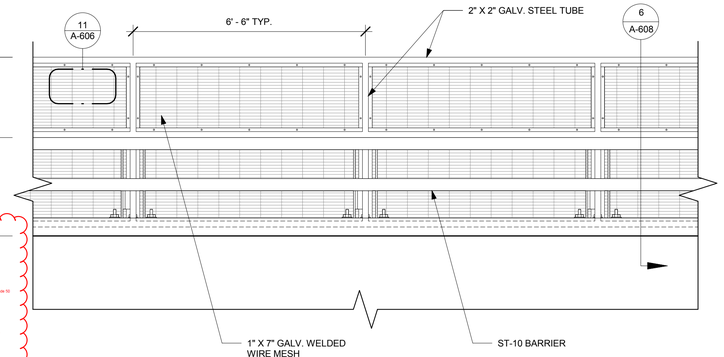

5 BICYCLE RAILING DETAIL - ST-10 (ELEVATION FRONT)
1/2" = 1'-0"

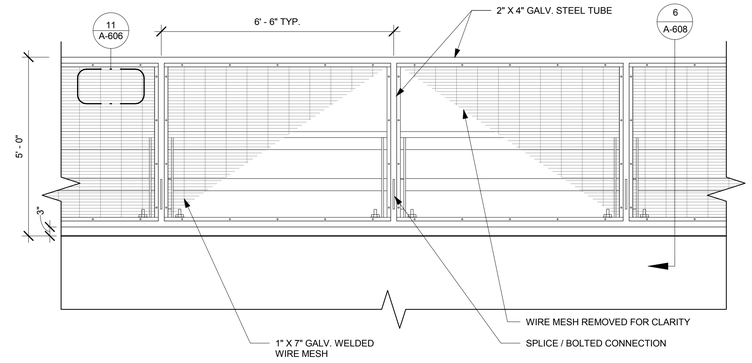

4 BICYCLE RAILING DETAIL - ST-10 (ELEVATION BACK)
1/2" = 1'-0"

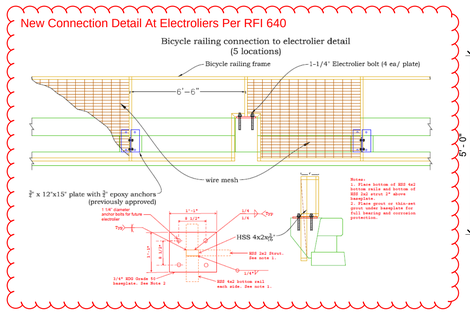

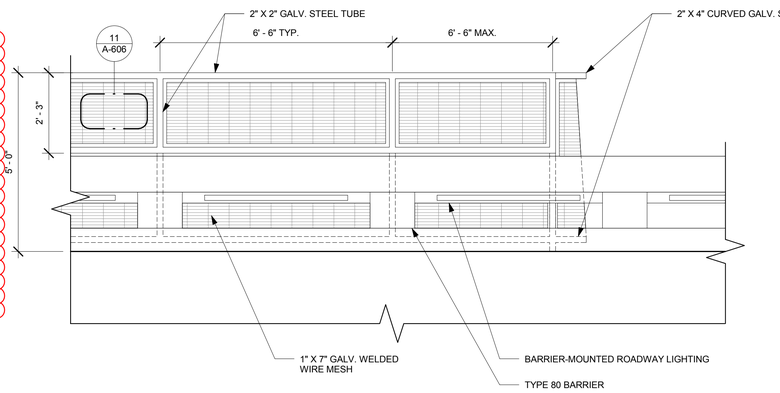

8 BICYCLE RAILING DETAIL - TYPE 80 (ELEVATION FRONT @ END CONDITION)
1/2" = 1'-0"

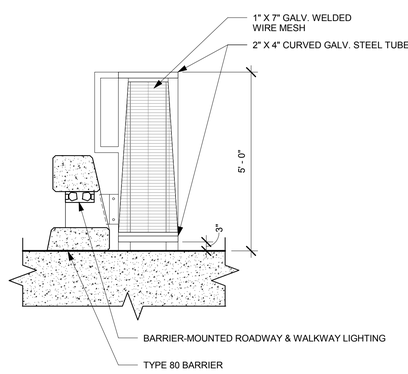

7 BICYCLE RAILING DETAIL - TYPE 80 (ELEVATION SIDE @ END CONDITION)
1/2" = 1'-0"

BUREAU OF ENGINEERING
OFFICIAL RECORD

REVISION DATES (DESIGN STAGE ONLY)

Sheet Version 2.01

BUREAU OF ENGINEERING
CITY OF LOS ANGELES
ENGINEERING
NO. REVISIONS | DATE | BY:
STRUCTURE NO. 53C-2329
INDEX NO. P-38113

LICENSED ARCHITECT
JENNIFER LOHR MacISAAC
C-22480
07-31-2017
RENEWAL DATE
STATE OF CALIFORNIA

DEPARTMENT OF PUBLIC WORKS
CITY OF LOS ANGELES
CITY ENGINEER:
SURVEY DIVISION
GARY LEE MOORE, P.E.
DATE:
ENGINEER:
DESIGNED BY:
DRAWN BY:
CHECKED BY:
APPROVED BY:

MICHAEL MALTZAN ARCHITECTURE, INC.
2801 Hyperion Avenue, Studio 107 / Los Angeles, CA 90027
T (323) 913-3098 F (323) 913-5932

HNTB
HNTB Corporation
601 W. 5TH STREET, SUITE 1000
LOS ANGELES, CALIFORNIA 90071
TEL (213) 403-1000 FAX (213) 403-1001

VERTICAL CONTROL:
HORIZONTAL CONTROL:
SHEET TITLE: DETAILS - BARRIER-MOUNTED RAILINGS
PROJECT: SIXTH STREET VIADUCT REPLACEMENT
ADDRESS: SIXTH STREET VIADUCT (WHITTIER BLVD) LOS ANGELES, CA

WORK ORDER NO. E700224F
DRAWING NO. A-608
SHEET 559 OF 560 SHEETS

ERIC GARCETTI
MAYOR

CITY OF LOS ANGELES
CALIFORNIA

Addendum No. 6

September 26, 2022

ENGINEERING
CITY OF LOS ANGELES

TED ALLEN, PE
CITY ENGINEER

Sixth Street Viaduct – Park, Arts, and River Connectivity (PARC) Improvements; Department of Cultural Affairs LA Hands Art Piece Foundations; and CBD Sewer Rehab Unit 11A – 6th Street Siphon to Santa Fe Avenue
W.O. E700235F & SZC14224

Bidders are required to acknowledge receipt of this addendum in the space provided on page 1-4 of the Bid Proposal. This addendum consists of this one-page transmittal.

Bidders are hereby notified of the following changes:

I. MODIFICATIONS TO BID PROPOSAL:

1. Bidders are advised that a **new** Pre-Bid Meeting has been scheduled.

Pre-Bid Meeting: October 4, 2022 at 1:00 p.m. via Google Meet. Join by Phone: (US) +1 978-484-2377, PIN: 547 133 118# or Video Link: meet.google.com/uzy-fbdn-vre

Bidders who attended an earlier Pre-Bid Meeting for this project are not required to attend the Pre-Bid Meeting scheduled for October 4, 2022.

II. QUESTIONS FROM BIDDERS (Q) AND ANSWERS FROM CITY (A):

(Q1) Can you confirm that lighting fixture type “XF4A” is a 10’ pole with (6) 40w flood lights?

(A1) The XF4A pole height, wattage, and quantity can be confirmed on drawing number E-407 of the project plans.

Sincerely,

Gregg Vandergriff, P.E.
Division Engineer
Project Award and Control Division
Bureau of Engineering

CITY OF LOS ANGELES

CALIFORNIA

Addendum No. 7

October 3, 2022

ERIC GARCETTI
MAYOR

ENGINEERING
CITY OF LOS ANGELES

TED ALLEN, PE
CITY ENGINEER

Sixth Street Viaduct – Park, Arts, and River Connectivity (PARC) Improvements; Department of Cultural Affairs LA Hands Art Piece Foundations; and CBD Sewer Rehab Unit 11A – 6th Street Siphon to Santa Fe Avenue
W.O. E700235F & SZC14224

Bidders are required to acknowledge receipt of this addendum in the space provided on page 1-4 of the Bid Proposal. This addendum consists of this three-page transmittal and 5 attachments totaling 9 pages.

Bidders are hereby notified of the following changes:

I. MODIFICATIONS TO BID PROPOSAL:

1. **Replace** the **Required Insurance and Minimum Limits** in **Part IV** of the Bid Proposal with **attached revised Required Insurance and Minimum Limits** (1 Page).

2. **Add** the following language under Part IV of the Table of Contents:

   "Executive Directive 35: Equitable Access to Contracting Opportunities… 1 Page"

3. **Add** the attached Executive Directive 35 document to Part IV of the Bid Proposal (1 page).

II. MODIFICATIONS TO PLANS:

1. **Replace** Plan sheet CU503 with the **attached revised plan sheet CU503** (1 page).

2. **Replace** Plan sheet SD101 with the **attached revised plan sheet SD101** (1 page).

III. MODIFICATIONS TO SPECIFICATIONS:

1. **Add** the following section in the **Specifications: Sixth Street Viaduct – Park, Arts, and River Connectivity (PARC) Improvements Attachment No. 10 Arts Plaza As-Built Site Survey**. This is the as-built survey of the Arts Plaza and Sixth Street tunnel opening. The bidder shall use Attachment No. 10 as the basis of the as-built condition for earthwork quantities in the Arts Plaza. (2 Pages).

IV. QUESTIONS BIDDERS (Q) AND ANSWERS FROM CITY (A):

(Q1) Please provide videos and condition assessment reports for the existing 36" Sewer to be rehabilitated.

(A1) The sewer inspection CCTVs are available on a YouTube channel named "The LA BAVN Bid Videos" see link below:

LA BAVN Bid Videos - YouTube

(Q2) On page 31 of the general conditions, it notes that Builder's Risk is required for the project, but when you look at the Required Insurance and Minimum Limits statement in the Bid Proposal document, it does not have the builder's risk box checked. Does the project require builder's risk or not?

(A2) Builder's Risk is required.

(Q3) Section 01721 Mobilization in the Master General Requirements: are two (2) field offices required…one for the Inspector and one for the Engineer? Does only the Engineer's field office require the computer equipment noted in 1.1.B.2b?

(A3) Yes, two (2) trailers are required, one each for the Inspector and the Engineer. Computer equipment listed is for the Engineer only.

(Q4) Section 02824 Fog Misting System of the Technical Specifications: will you provide contact information and website for the proprietary Fog Misting System. Searching the one manufacturer listed in 2.1.B.1a "Fog Misting System" results in many different manufacturers, none of which are named "Fog Misting System."

(A4) The Fog Misting System is a delegated design that is to meet the performance requirement as described in the Technical Specification section 02824. This is not tied to a single manufacturer. Different manufacturers can develop a misting system to meet the specification requirements.

V. MISCELLANEOUS:

1. The sewer inspection CCTVs are available on a YouTube channel named "The LA BAVN Bid Videos" see link below:

LA BAVN Bid Videos - YouTube

Sixth Street Viaduct – Park, Arts, and River Connectivity (PARC) Improvements; Department of Cultural Affairs LA Hands Art Piece Foundations; and CBD Sewer Rehab Unit 11A – 6th Street Siphon to Santa Fe Avenue
W.O. E700235F & SZC14224

Sincerely,

Gregg Vandergriff, P.E.
Division Engineer
Project Award and Control Division
Bureau of Engineering

Form Gen. 146 (Rev. 9/06)

ADDENDUM 7

Required Insurance and Minimum Limits

Name: _____ Date: 10/03/2022

Agreement/Reference: Sixth Street Park, Arts and River Connectivity Improvements (PARC) W.O. E700235D; LA Hands Art Sculpture Foundations W.O. No. E700235F; CBD Unit 11A- 6th St Siphon to Santa Fe Ave W.O. No. SZC14224

Evidence of coverages checked below, with the specified minimum limits, must be submitted and approved prior to occupancy/start of operations. Amounts shown are Combined Single Limits ("CSLs"). For Automobile Liability, split limits may be substituted for a CSL if the total per occurrence equals or exceeds the CSL amount.

Limits

✔ **Workers' Compensation - Workers' Compensation (WC) and Employer's Liability (EL)**

WC ***Statutory***

EL **$1,000,000**

☑ Waiver of Subrogation in favor of City ☐ Longshore & Harbor Workers ☐ Jones Act

✔ **General Liability** ($5 Million Aggregate) City of Los Angeles must be named as an additional insured party. **$2,000,000**

☑ Products/Completed Operations ☐ Sexual Misconduct _____

☐ Fire Legal Liability _____

☐ _____

✔ **Automobile Liability** (for any and all vehicles used for this contract, other than commuting to/from work) **$1,000,000**

✔ **Professional Liability** (Errors and Omissions) **$1,000,000**

Discovery Period 12 Months After Completion of Work or Date of Termination

✔ **Property Insurance** (to cover replacement cost of building - as determined by insurance company) _____

☐ All Risk Coverage ☐ Boiler and Machinery

☐ Flood _____ ☑ Builder's Risk

☐ Earthquake _____ ☐ _____

✔ **Pollution Liability** **$1,000,000**

☑ Contractor's Pollution Liability

✔ **Surety Bonds -** Performance and Payment (Labor and Materials) Bonds 100% of the contract price

____ **Crime Insurance** _____

Other: *Professional Liability Insurance is required for Contractor or any Sub-Contractor performing Professional Design/Engineering type work as part of the project.

Executive Directive 35: Equitable Access to Contracting Opportunities

Respondents are advised, pursuant to Executive Directive 35, if a bidder is selected and awarded a contract, and if the contractor is a for-profit company or corporation, the contractor shall, within 30 days of the effective date of the contract and on an annual basis thereafter (i.e., within 30 days of the anniversary of the effective date of the contract), report the following information to City via the Regional Alliance Marketplace for Procurement (“RAMP”) or via another method specified by City: contractor’s and any subcontractor’s annual revenue, number of employees, location, industry, race/ethnicity and gender of majority owner ("contractor/subcontractor Information"). On an annual basis, the contractor shall further request that any subcontractor input or update its business profile, including the contractor/subcontractor information, on RAMP or via another method prescribed by City.

ADDENDUM 7

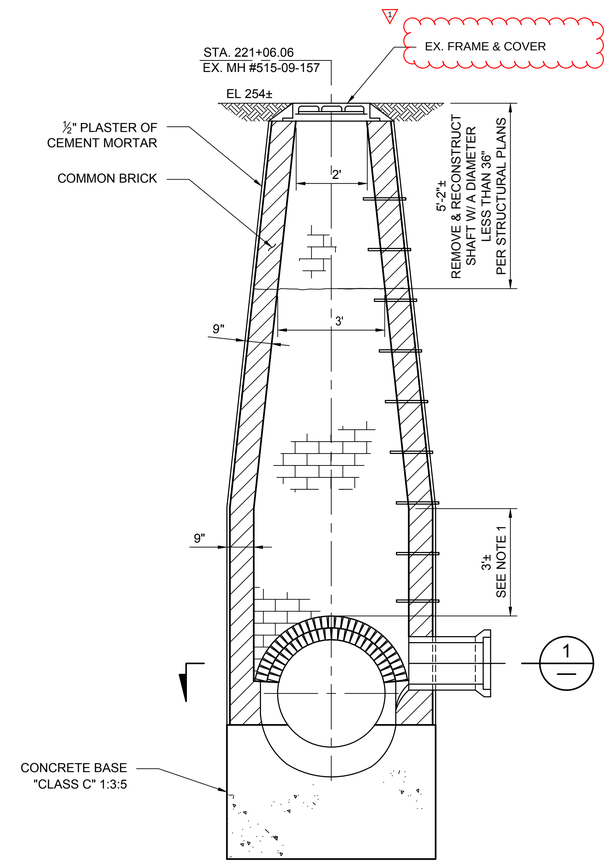

2 - SECTION
SCALE: 1/2"=1'-0"

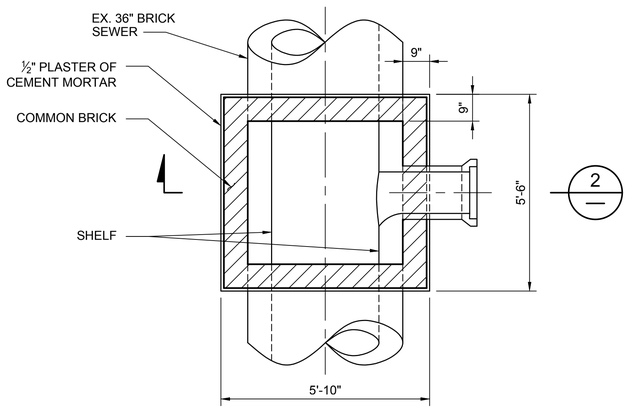

NOTE :

1. TRANSITION FROM SQUARE TO ROUND IN 3 FEET BEGINS AT THE TOP OF THE HIGH ARCH. SEE AS-BUILT PLAN B-11221 FOR MORE INFORMATION.

1 - SECTION
SCALE: 1/2"=1'-0"

A1	EX. MH (515-09-157) DETAIL @ STA. 221+06.06
SCALE: 1/2" = 1'	

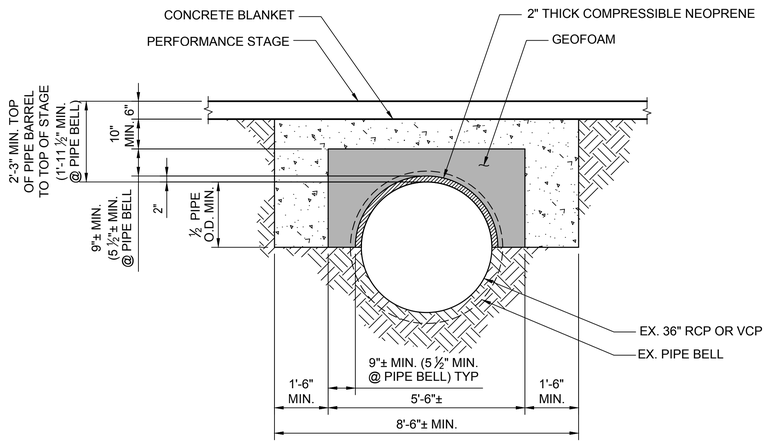

H6	CONCRETE BLANKET DETAIL
SCALE: 1/2" = 1'	CU101

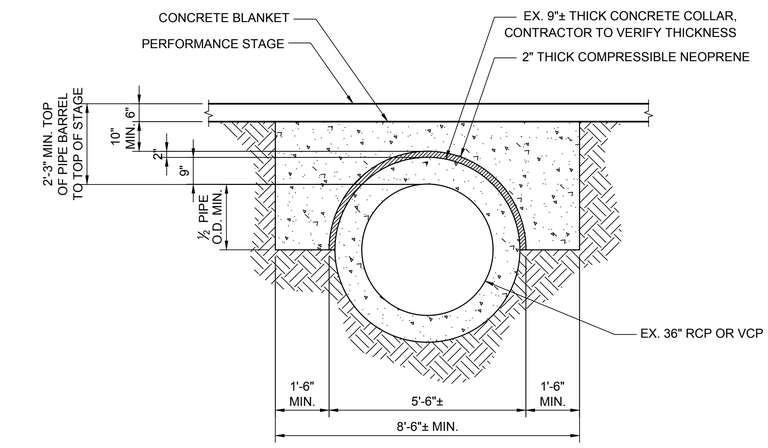

D6	CONCRETE BLANKET AT CONCRETE COLLAR
SCALE: 1/2" = 1'	CU101

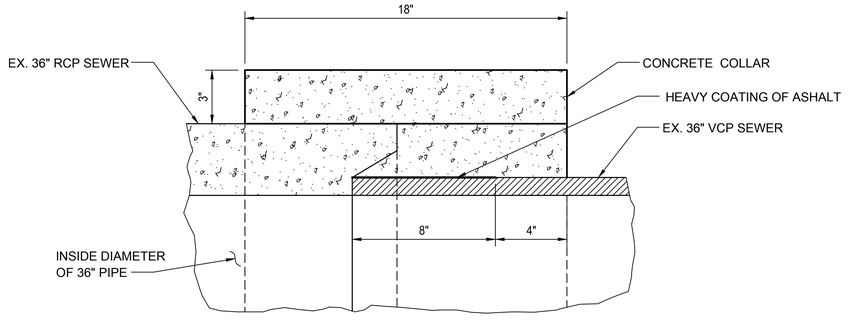

NOTE:

REFERENCE PARC PLAN SHEET NUMBER 221, DRAWING S-402A.

A6	EXPANSION JOINT CONNECTION DETAIL
SCALE: NTS	CU101

BUREAU OF ENGINEERING
OFFICIAL RECORD

ENGINEERING
CITY OF LOS ANGELES
WCED
WESTERN CONSTRUCTION ESTIMATING DATABASE

REGISTERED PROFESSIONAL ENGINEER W. C. N. No. 64329 STATE OF CALIFORNIA CIVIL

THIS PLAN WAS ELECTRONICALLY SIGNED AND STAMPED

BUREAU OF ENGINEERING

VERTICAL CONTROL: NGVD 1929, 1985 ADJ
HORIZONTAL CONTROL: FB 41323 P. 22, 28

SHEET TITLE: EX. MAINTENANCE HOLE, EXPANSION JOINT CONNECTION, AND CONCRETE BLANKET DETAILS

PROJECT: CBD SEWER REHAB UNIT 11A - 6th ST SIPHON TO SANTA FE AVE

ADDRESS: 6TH ST SIPHON TO SANTA FE AVE
LOS ANGELES

DEPARTMENT OF PUBLIC WORKS

NO	REVISIONS:	DATE:	BY:
7	ADDENDUM NO. 7		

CITY ENGINEER:

		DATE:
DESIGN GROUP		
ENGINEER:	JIN WEN, P.E.	06/2022
DESIGNED BY:	APEKSHYA BAJRACHARYA	06/2022
DRAWN BY:	JOHN BAELLY	06/2022
CHECKED BY:	JIN WEN, P.E.	06/2022
APPROVED BY:	EDWARD ARRINGTON, P.E., S.E.	06/2022

CITY OF LOS ANGELES
GARY LEE MOORE, P.E., ENV SP

CIP NO. 1042

SHEET TYPE AS-BID

INDEX NO. D-35602

WORK ORDER NO. SZC14224

SHEET NAME CU503
SHEET 11 OF - SHEETS

THE CITY OF LOS ANGELES OR ITS OFFICERS OR AGENTS SHALL NOT BE RESPONSIBLE FOR THE ACCURACY OR COMPLETENESS OF ELECTRONIC COPIES OF THIS PLAN SHEET.

REVISION DATES (DESIGN STAGE ONLY)

Sheet Version 4.0

FILE PATH: Q:\CAD DATA\SZCXXXXX\CBD UNIT 11A\1_DESIGN\03_CIVIL\ASBID\1042_C_SH_CU503.DWG PLOT DATE: 6/9/2022 8:08 PM SAVED: 5/31/2022 2:11 PM SAVED BY:87630

ADDENDUM 7

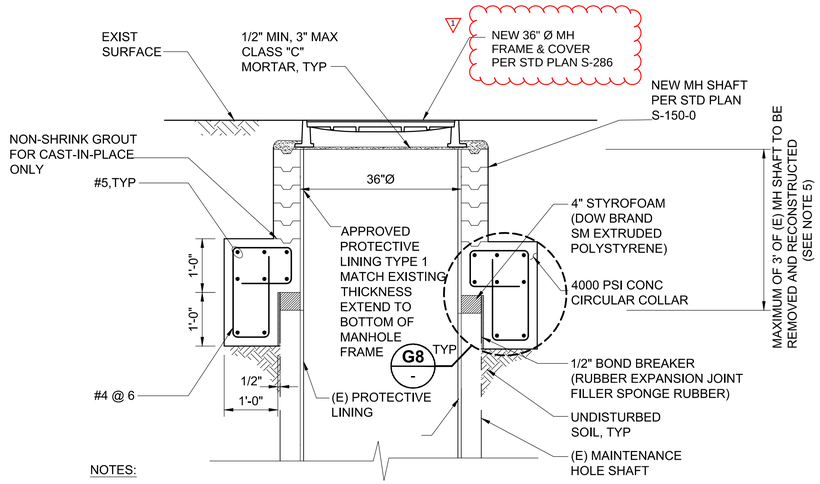

NOTES:

1. RECONSTRUCTION OF MH SHALL BE CONSTRUCTED PER STD PLAN S-150-0 UNLESS NOTED OTHERWISE.
2. REFERENCE PLAN D20879 FOR EXIST. MH.
3. REMOVE UPPER 3' OF EXIST. MH FIELD VERIFY DEMOLITION LIMITS.
4. SEE CIVIL PLANS FOR STATIONS AND NORTHINGS.
5. CONTRACTOR TO SAWCUT AND REMOVE EXISTING MANWAY SECTION MINIMIZING DAMAGE TO REMAINING PORTION OF SHAFT. ANY DAMAGE TO THE MANWAY SHAFT AS A RESULT OF ANY CONSTRUCTION ACTIVITIES SHALL RESULT IN THE REPLACEMENT OF AT LEAST 1/3 OF THE SHAFT TO THE SOLE SATISFACTION OF THE CITY OF LOS ANGELES, DEPARTMENT OF PUBLIC WORKS, BUREAU OF ENGINEERING, WASTEWATER CONVEYANCE ENGINEERING DIVISION, AT NO ADDITIONAL COST.

G1 PARTIAL SHAFT RECONSTRUCTION @ MH 515-09-108

SCALE: 3/4" = 1'-0"

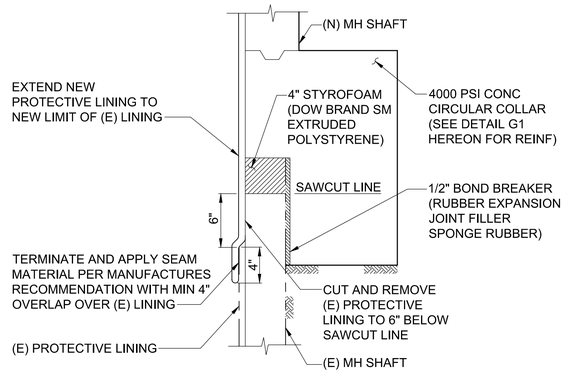

G8 DETAIL - GRADE BEAM TO MH CONNECTION

SCALE: 1 1/2" = 1'-0"

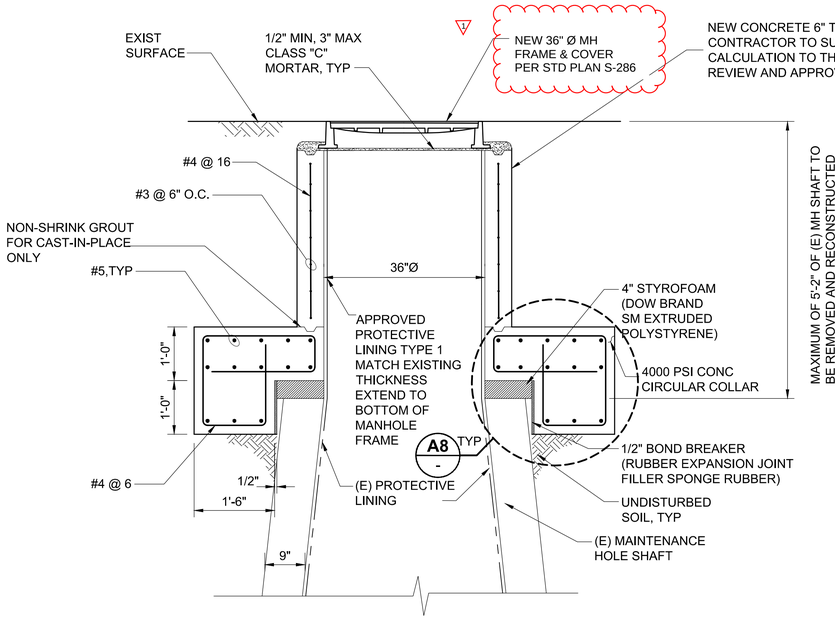

NOTES:

1. RECONSTRUCTION OF MH SHALL BE CONSTRUCTED PER STD PLAN S-150-0 UNLESS NOTED OTHERWISE.
2. REFERENCE PLAN D20879 FOR EXIST. MH.
3. REMOVE UPPER 5'-2" OF EXIST. MH FIELD VERIFY DEMOLITION LIMITS.
4. SEE CIVIL PLANS FOR STATIONS AND NORTHINGS.
5. CONTRACTOR TO SAWCUT AND REMOVE EXISTING MANWAY SECTION MINIMIZING DAMAGE TO REMAINING PORTION OF SHAFT. ANY DAMAGE TO THE MANWAY SHAFT AS A RESULT OF ANY CONSTRUCTION ACTIVITIES SHALL RESULT IN THE REPLACEMENT OF AT LEAST 1/3 OF THE SHAFT TO THE SOLE SATISFACTION OF THE CITY OF LOS ANGELES, DEPARTMENT OF PUBLIC WORKS, BUREAU OF ENGINEERING, WASTEWATER CONVEYANCE ENGINEERING DIVISION, AT NO ADDITIONAL COST.

A1 PARTIAL SHAFT RECONSTRUCTION @ MH 515-09-157

SCALE: 3/4" = 1'-0"

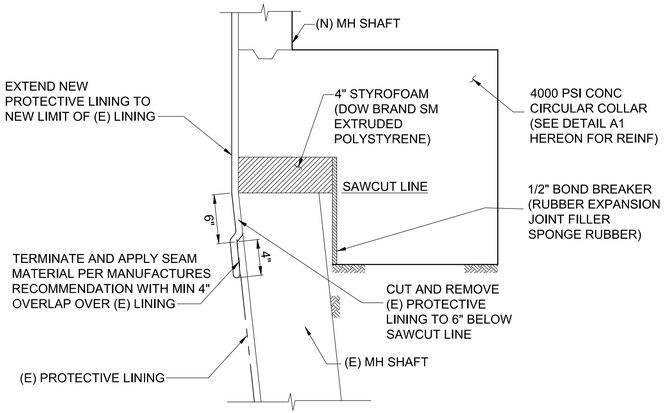

A8 DETAIL - GRADE BEAM TO MH CONNECTION

SCALE: 1 1/2" = 1'-0"

BUREAU OF ENGINEERING OFFICIAL RECORD

ENGINEERING
CITY OF LOS ANGELES
SED

THIS PLAN WAS ELECTRONICALLY SIGNED AND STAMPED

REGISTERED PROFESSIONAL ENGINEER ROSHANAK VARJAVAND NO. 80058 STATE OF CALIFORNIA

BUREAU OF ENGINEERING

VERTICAL CONTROL:
HORIZONTAL CONTROL:

SHEET TITLE: DETAILS

PROJECT: CBD SEWER REHAB UNIT 11A - 6TH STREET SIPHON TO SANTA FE AVENUE

ADDRESS: 6TH STREET SIPHON TO SANTA FE AVENUE LOS ANGELES, CA

DEPARTMENT OF PUBLIC WORKS

NO.	REVISIONS:	BY:	DATE:
7	ADDENDUM NO. 7		

CIP NO.

INDEX NO. D-35602

CITY OF LOS ANGELES
GARY LEE MOORE, P.E., ENV SP
CITY ENGINEER

DESIGN GROUP		DATE:
ENGINEER:	ROSHANAK VARJAVAND, PHD, P.E.	02/25/22
DESIGNED BY:	ROSHANAK VARJAVAND, PHD, PE	02/25/22
DRAWN BY:	JOHN TRIANTAFYLLOS, EIT	02/25/22
CHECKED BY:	SHIRISH MISTRY, SE; MANAN BHALJA, SE	02/25/22
APPROVED BY:	SHAILESH "SUNNY" PATEL, SE	02/25/22

WORK ORDER NO. SZC14224

SHEET NAME SD101

SHEET 17 OF SHEETS

THE CITY OF LOS ANGELES OR ITS OFFICERS OR AGENTS SHALL NOT BE RESPONSIBLE FOR THE ACCURACY OR COMPLETENESS OF ELECTRONIC COPIES OF THIS PLAN SHEET.

REVISION DATES (DESIGN STAGE ONLY)

Sheet Version 4.0

FILE PATH: Q:\WW\A_PROJECTS\B_WW PROJECT_FILES\ACTIVE\SZC14224 - CBD REHAB UNIT 11A – 6TH ST TO SANTA FE AVE\B_DESIGN\DRAWINGS\STRUCTURAL\90% DRAWINGS\SD101.DWG PLOT DATE: 2/17/2022 3:09 PM SAVED: 2/17/2022 3:09 PM SAVED BY:375369

BUREAU OF ENGINEERING

SIXTH STREET PARK, ARTS AND RIVER CONNECTIVITY IMPROVEMENTS (PARC) WORK ORDER NO. E700235D

ATTACHMENT NO. 10
ARTS PLAZA AS-BUILT SITE SURVEY

BID SUBMITTAL
JULY 2022

City of Los Angeles
California

Department of Public Works
Bureau of Engineering

ADDENDUM 7

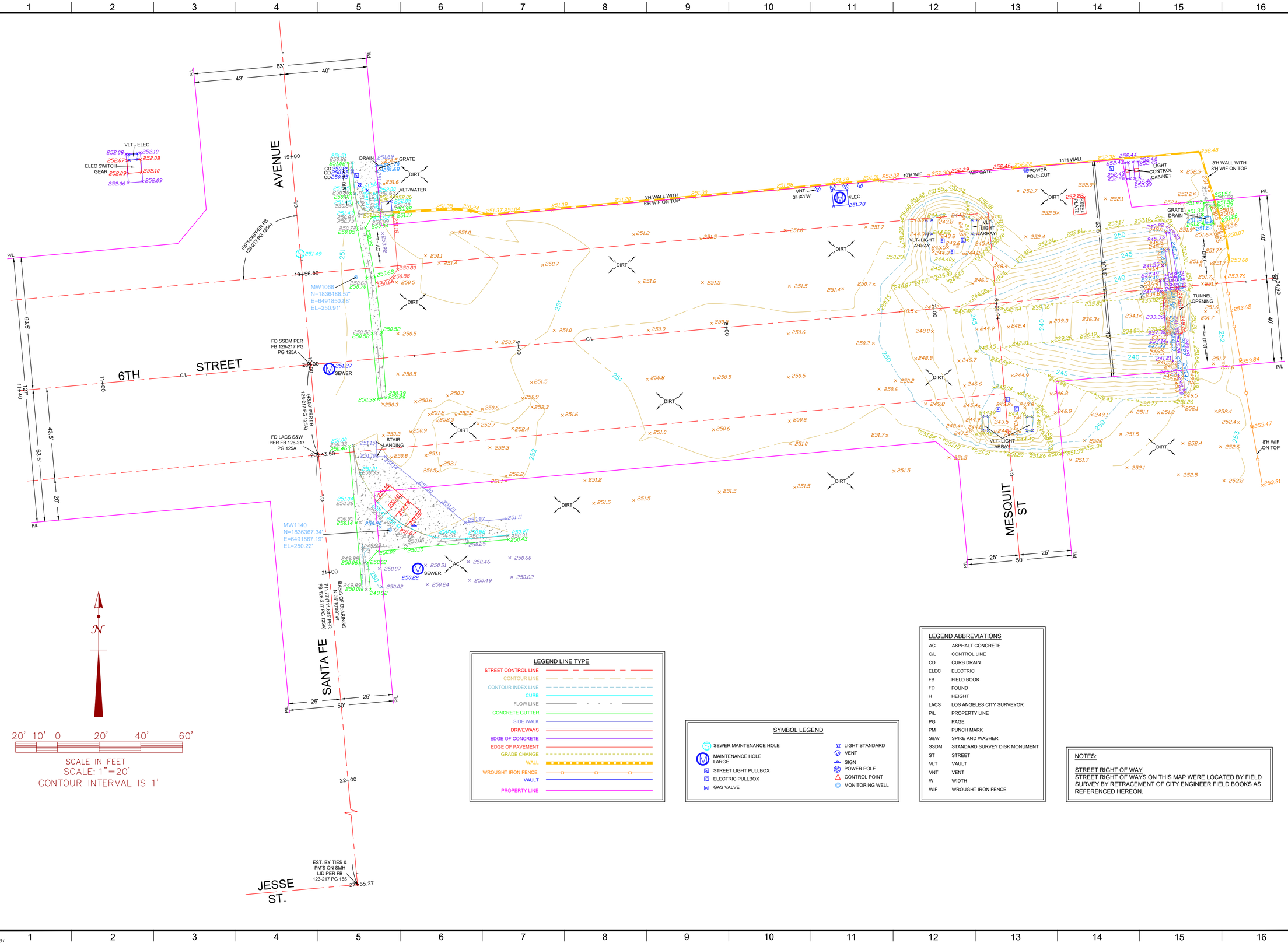

LEGEND LINE TYPE

- STREET CONTROL LINE
- CONTOUR LINE
- CONTOUR INDEX LINE
- CURB
- FLOW LINE
- CONCRETE GUTTER
- SIDE WALK
- DRIVEWAYS
- EDGE OF CONCRETE
- EDGE OF PAVEMENT
- GRADE CHANGE
- WALL
- WROUGHT IRON FENCE
- VAULT
- PROPERTY LINE

SYMBOL LEGEND

- SEWER MAINTENANCE HOLE
- MAINTENANCE HOLE LARGE
- STREET LIGHT PULLBOX
- ELECTRIC PULLBOX
- GAS VALVE
- LIGHT STANDARD
- VENT
- SIGN
- POWER POLE
- CONTROL POINT
- MONITORING WELL

LEGEND ABBREVIATIONS

AC	ASPHALT CONCRETE
C/L	CONTROL LINE
CD	CURB DRAIN
ELEC	ELECTRIC
FB	FIELD BOOK
FD	FOUND
H	HEIGHT
LACS	LOS ANGELES CITY SURVEYOR
P/L	PROPERTY LINE
PG	PAGE
PM	PUNCH MARK
S&W	SPIKE AND WASHER
SSDM	STANDARD SURVEY DISK MONUMENT
ST	STREET
VLT	VAULT
VNT	VENT
W	WIDTH
WIF	WROUGHT IRON FENCE

NOTES:

STREET RIGHT OF WAY
STREET RIGHT OF WAYS ON THIS MAP WERE LOCATED BY FIELD SURVEY BY RETRACEMENT OF CITY ENGINEER FIELD BOOKS AS REFERENCED HEREON.

THE CITY OF LOS ANGELES OR ITS OFFICERS OR AGENTS SHALL NOT BE RESPONSIBLE FOR THE ACCURACY OR COMPLETENESS OF ELECTRONIC COPIES OF THIS PLAN SHEET.

REVISION DATES (DESIGN STAGE ONLY)

Sheet Version 2.01

CITY OF LOS ANGELES DEPARTMENT OF PUBLIC WORKS

BUREAU OF ENGINEERING

ENGINEERING
CITY OF LOS ANGELES

NO.	REVISIONS:	DATE:	BY:

SURVEY NO. 99251

INDEX NO.

GARY LEE MOORE, P.E.
SURVEY DIVISION

		CITY ENGINEER	DATE:
SURVEYOR:	ERIC RAMOS	P.L.S:	09/12/22
FIELD SURVEYOR:	PETE MIERA		09/20/22
DRAWN BY:	ELISE N. HERNANDEZ		9/21/22
CHECKED BY:	PETE MIERA		
APPROVED BY:			

VERTICAL CONTROL: FB 41216 PG 490-491 BM#12-04070 NGVD29 ADJ2000
HORIZONTAL CONTROL: FB 41216 PG 490-491

SHEET TITLE: SITE SURVEY

PROJECT: 6TH STREET VIADUCT REPLACEMENT PROJECT

ADDRESS: 1381 E 5TH ST-MATEO TO 1375 E 6TH ST

WORK ORDER NO. E700224F

DRAWING NO. 1

SHEET 1 OF 1 SHEETS

ERIC GARCETTI
MAYOR

CITY OF LOS ANGELES
CALIFORNIA

Addendum No. 8

October 6, 2022

ENGINEERING
CITY OF LOS ANGELES

TED ALLEN, PE
CITY ENGINEER

Sixth Street Viaduct – Park, Arts, and River Connectivity (PARC) Improvements; Department of Cultural Affairs LA Hands Art Piece Foundations; and CBD Sewer Rehab Unit 11A – 6th Street Siphon to Santa Fe Avenue
W.O. E700235F & SZC14224

Bidders are required to acknowledge receipt of this addendum in the space provided on page 1-4 of the Bid Proposal. This addendum consists of this two-page transmittal and 4 attachments totaling 11 pages.

Bidders are hereby notified of the following changes:

I. QUESTIONS BIDDERS (Q) AND ANSWERS FROM CITY (A):

(Q1) Is the Pre-bid optional. Addendum no. 1 says it is.

(A1) For clarification, there is the pre-bid job walk and the pre-bid meeting. Addendum No. 1 modified the pre-bid job walk to be optional. For the pre-bid meeting, please refer to the Bid Proposal Part III Section D Indicator 2.

(Q2) Today's 2nd pre-bid meeting is being held on 10/04/22, but the date to complete the BIP Outreach closes on 10/05/22 and the City's system won't allow any submissions past this date. What do we do?

(**A2) The City is making a determination of what can be modified in the bid documents in order to reopen the BIP Outreach window.**

(Q3) Does the City have a list of prime contractors who will be submitting a bid?

(A3) Other than the Plan Holder's List on the Bureau of Engineering website, the City does not know which prime contractor will be submitting a bid.

II. MISCELLANEOUS:

1. Sign in sheet for the 2nd Pre-Bid Teleconference Meeting on 10/04/2022 at 1:00pm via Google Meet due to the Pandemic (1 page).
2. 2nd Pre-Bid Meeting Agenda (1 page).
3. 2nd Pre-Bid Meeting Minutes (2 pages).
4. Bond Assistance Program Power Point Presentation (5 pages).

Sixth Street Viaduct – Park, Arts, and River Connectivity (PARC) Improvements; Department of Cultural Affairs LA Hands Art Piece Foundations; and CBD Sewer Rehab Unit 11A – 6th Street Siphon to Santa Fe Avenue
W.O. E700235F & SZC14224

Sincerely,

Gregg Vandergriff, P.E.
Division Engineer
Project Award and Control Division
Bureau of Engineering

ADDENDUM 8

(2nd) PRE-BID MEETING SIGN-IN SHEET

Project Title: . Sixth Street Viaduct PARC / LA Hands / CBD 11A W.O. No. E700235F , SZC14224

Location. TELECONFERENCE MEETING DUE TO COVID19 Date. 10/04/2022 **Time .** 1:00 p.m.

Note: By signing this attendance roster, the signee agrees to disseminate all information presented in-meeting, including but not limited to the project's Business Inclusion Program (BIP) or Disadvantaged Business Enterprise (DBE) requirements as they relate to the project, to all interested persons within their organization.

NAME	ORGANIZATION	PHONE	EMAIL	SIGNATURE
Gary Lam	Bureau of Engineering	(213)923-4932	Gary.lam@lacity.org	
Lisa Adams	Bureau of Contract Administration	(213) 847-2635	Lisa.adams@lacity.org	
Jacqueline Basuel	Bureau of Contract Adminstration	(213) 847-2661	Jacqueline.basuel@lacity.org	
Elizabeth Juarez	Merriwether & Williams	(213) 223-8574	ejuarez@imwis.com	
Chad Benton	Brightview Landscape	(818) 612-8001	Chad.benton@brightview.com	
Thanh Ta	Marina Landscape Inc	(714) 939-6600	estimator@marinaco.com	
Lauren Lustyan	Environmental Construction Inc.	(818) 449-8920	llustyan@environcon.com	
Joseph Haygood	LA Engineering Inc.	(626) 454-5222	joseph@laeng.net	
XXXXXXXXXXXXXXXXXXXXXXXXXX	XXXXXXXXXXXXXXXXXXXXXXXXXXXX	XXXXXXXXXXXXXXXXXX	XXXXXXXXXXXXXXXXXXXXXXXXXXXX	XXXXXXXXXXXXXXXXXX
XXXXXXXXXXXXXXXXXXXXXXXXXX	XXXXXXXXXXXXXXXXXXXXXXXXXXXX	XXXXXXXXXXXXXXXXXX	XXXXXXXXXXXXXXXXXXXXXXXXXXXX	XXXXXXXXXXXXXXXXXX
XXXXXXXXXXXXXXXXXXXXXXXXXX	XXXXXXXXXXXXXXXXXXXXXXXXXXXX	XXXXXXXXXXXXXXXXXX	XXXXXXXXXXXXXXXXXXXXXXXXXXXX	XXXXXXXXXXXXXXXXXX
XXXXXXXXXXXXXXXXXXXXXXXXXX	XXXXXXXXXXXXXXXXXXXXXXXXXXXX	XXXXXXXXXXXXXXXXXX	XXXXXXXXXXXXXXXXXXXXXXXXXXXX	XXXXXXXXXXXXXXXXXX
XXXXXXXXXXXXXXXXXXXXXXXXXX	XXXXXXXXXXXXXXXXXXXXXXXXXXXX	XXXXXXXXXXXXXXXXXX	XXXXXXXXXXXXXXXXXXXXXXXXXXXX	XXXXXXXXXXXXXXXXXX
XXXXXXXXXXXXXXXXXXXXXXXXXX	XXXXXXXXXXXXXXXXXXXXXXXXXXXX	XXXXXXXXXXXXXXXXXX	XXXXXXXXXXXXXXXXXXXXXXXXXXXX	XXXXXXXXXXXXXXXXXX
XXXXXXXXXXXXXXXXXXXXXXXXXX	XXXXXXXXXXXXXXXXXXXXXXXXXXXX	XXXXXXXXXXXXXXXXXX	XXXXXXXXXXXXXXXXXXXXXXXXXXXX	XXXXXXXXXXXXXXXXXX
XXXXXXXXXXXXXXXXXXXXXXXXXX	XXXXXXXXXXXXXXXXXXXXXXXXXXXX	XXXXXXXXXXXXXXXXXX	XXXXXXXXXXXXXXXXXXXXXXXXXXXX	XXXXXXXXXXXXXXXXXX
XXXXXXXXXXXXXXXXXXXXXXXXXX	XXXXXXXXXXXXXXXXXXXXXXXXXXXX	XXXXXXXXXXXXXXXXXX	XXXXXXXXXXXXXXXXXXXXXXXXXXXX	XXXXXXXXXXXXXXXXXX
XXXXXXXXXXXXXXXXXXXXXXXXXX	XXXXXXXXXXXXXXXXXXXXXXXXXXXX	XXXXXXXXXXXXXXXXXX	XXXXXXXXXXXXXXXXXXXXXXXXXXXX	XXXXXXXXXXXXXXXXXX
XXXXXXXXXXXXXXXXXXXXXXXXXX	XXXXXXXXXXXXXXXXXXXXXXXXXXXX	XXXXXXXXXXXXXXXXXX	XXXXXXXXXXXXXXXXXXXXXXXXXXXX	XXXXXXXXXXXXXXXXXX
XXXXXXXXXXXXXXXXXXXXXXXXXX	XXXXXXXXXXXXXXXXXXXXXXXXXXXX	XXXXXXXXXXXXXXXXXX	XXXXXXXXXXXXXXXXXXXXXXXXXXXX	XXXXXXXXXXXXXXXXXX

ADDENDUM 8

ENGINEERING
CITY OF LOS ANGELES

Agenda

Sixth Street Viaduct – Park, Arts, and River Connectivity (PARC) Improvements;
Department of Cultural Affairs LA Hands Art Piece Foundations;
and CBD Sewer Rehab Unit 11A – 6th Street Siphon to Santa Fe Avenue
(W.O. E700235F and SZC14224)

2nd Virtual Pre-Bid Meeting
10/04/2022 at 1pm
Google Meet
Meeting ID
meet.google.com/uzy-fbdn-vre

Phone Numbers
(US)+1 978-484-2377
PIN: 547 133 118#

I. Introduction
- -Meeting Attendance
- -Welcoming Remarks

II. General Project Overview

III. Bureau of Contract Administration
- -Business Inclusion Program (BIP)
- -Project Labor Agreement (PLA)

IV. Contractor Development Technical Assistance and Bonding Program
- -Merriwether & Williams

V. Questions

ADDENDUM 8
ENGINEERING
CITY OF LOS ANGELES

Meeting Minutes

Sixth Street Viaduct – Park, Arts, and River Connectivity (PARC) Improvements (E700235F);Department of Cultural Affairs LA Hands Art Piece Foundations; and CBD Sewer Rehab Unit 11A – 6th Street Siphon to Santa Fe Avenue (SZC14224)

2nd Pre-Bid Meeting
10/04/2022 at 1pm
Google Meet
Meeting ID
meet.google.com/uzy-fbdn-vre

Phone Numbers
(US)+1 978-484-2377
PIN: 547 133 118#

I. Introduction

The BOE project manager introduced City staff and informed participants to provide their information in order to record attendance.

II. General Project Overview

A description of the three projects was provided, including City Engineer's estimate, liquidated damages, project duration, and interim milestone.

The Sixth Street Viaduct PARC project will develop a new 12-acre park underneath and adjacent to the Sixth Street Viaduct from Mateo Street on the west to the US101 freeway to the east. The park features walking/jogging paths, dog parks, restroom buildings, Rec & Park staff building, cafe building, performance arts plaza, adult fitness equipment, synthetic soccer field, multi-purpose fields, basketball court, children's mister area, picnicking/grilling areas, general landscaping and irrigation, fencing, lighting, and tunnel improvements.

The Dept. of Cultural Affairs LA Hands Art Piece Foundations project will construct the two foundations to support the commissioned artist's art work.

Rehabilitate approximately 477 linear feet of existing 36-inch circular sewers in the Central Business District by ultra violet cured-in-place pipe (UV CIPP). The alignment of the reach begins at the 6th Street Siphon outlet structure continuing west on 6th Street towards Santa Fe Avenue, then south on Santa Fe Avenue. Rehabilitate 6th Street Siphon outlet structure and existing maintenance holes.

City Engineer's Estimate: $36,979,003.00
Duration: 730 calendar days
Liquidated Damages: $5,000 per day
Interim Milestone: 555 calendar days.
Interim Milestone Liquidated Damages: $12,000 per day

Refer to the General Requirements Section 01112 for detailed information regarding the interim milestone.

Additionally, bidders were advised to pay attention to the sequence of work to have the soil remediation completed first, followed by the installation of the storm drain to collect the run off from the Viaduct. Again, this is described in the General Requirement Section 01112.

III. Bureau of Contract Administration

A. Business Inclusion Program

Lisa Adams from the Bureau of Contract Administration (BCA) described the Business Inclusion Program (BIP) and explained the steps to fulfill the BIP obligations. Questions can be sent to bca.biphelp@lacity.org

B. Project Labor Agreement

Jacqueline Basuel from BCA discussed the Project Labor Agreement (PLA) that will be implemented for this project and provided information on how it will evaluate labor compliance. Questions can be sent to ocps.help@lacity.org

IV. Contractor Development Technical Assistance and Bonding Assistance

Elizabeth Juarez from Merriwether & Williams presented the various resources it has available to assist contractors for technical development and bonding assistance. Questions can be addressed to Elizabeth at ejuarez@imwis.com.

V. Questions

The meeting was opened for questions.

Question: Does the City have a list of prime contractors who will be submitting a bid?

Response: Other than the Plan Holder's List on the Bureau of Engineering website, the City does not know which prime contractor will be submitting a bid.

Question: Is the Pre-bid optional. Addendum no. 1 says it is.

Response: For clarification, there is the pre-bid job walk and the pre-bid meeting. Addendum No. 1 modified the pre-bid job walk to be optional.

For the pre-bid meeting, please refer to the Bid Proposal Part III Section D Indicator 2.

Question: Today's 2nd pre-bid meeting is being held on 10/04/22, but the date to complete the BIP Outreach closes on 10/05/22 and the City's system won't allow any submissions past this date. What do we do?

Response: The Project Manager will look into this.
Post Meeting follow up response: The City is making a determination of what can be modified in the bid documents in order to reopen the BIP Outreach window.

The project manager informed the group to submit technical questions as Requests for Information (RFI) which will be addressed via an addendum. Send questions to gary.lam@lacity.org.

Meeting Adjourned

ADDENDUM 8

Los Angeles Regional Contractor Development and Bonding Program (CDABP)

Sixth Street Viaduct– Park Arts & River Connectivity (PARC); LA Hands Art Piece Foundations; & CBD Sewer Rehab Unit 11A

2nd Pre-Bid Meeting



October 04, 2022

Merriwether & Williams
INSURANCE SERVICES

. . . Of Like Minds

CITY OF LOS ANGELES FOUNDED 1781

ADDENDUM 8

Contractor Development Program Services

PROGRAM PURPOSE

To reduce the barriers of access to public construction contract opportunities and help build small local and diverse contractor capacity.

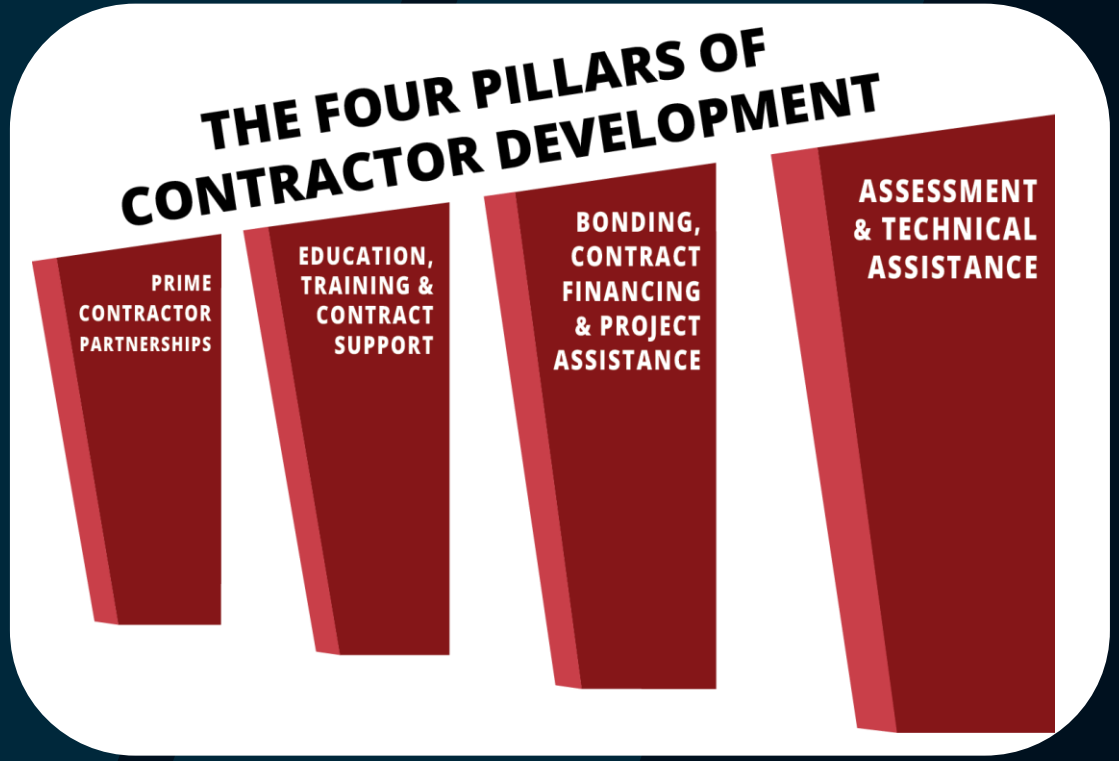

Merriwether & Williams
INSURANCE SERVICES
. . . Of Like Minds

ADDENDUM 8

Contractor Development Program Services

- Obtaining or Increasing Bonding Capacity
- Access to CITY collateral support for bid, performance and payment bonds for qualified contractors
- Contractor Development, Capacity Building and Technical Services
- Contract Based Financing Program - Contract Financing Assistance Program (CFAP)
- Dedicated Account Manager (Business Development)
- Accounting Cost Subsidy
  - $3,200 for CPA Prepared Financial Statements
- Weekly Bid Opportunities, Projects, and Events Email Alerts

Merriwether & Williams
INSURANCE SERVICES
. . . Of Like Minds

ADDENDUM 8

Contractor Development Technical Assistance

- ❑ Assessment & Work Plan
- ❑ Contractor Profile
- ❑ Certifications
- ❑ Bid Document Review
- ❑ Contract Completion Support
- ❑ Monthly Trainings/Workshops & Coaching
- ❑ Construction Training Academy
  - ❑ Bidding & Estimating
  - ❑ Contract Award Management
- ❑ Prime Partnership

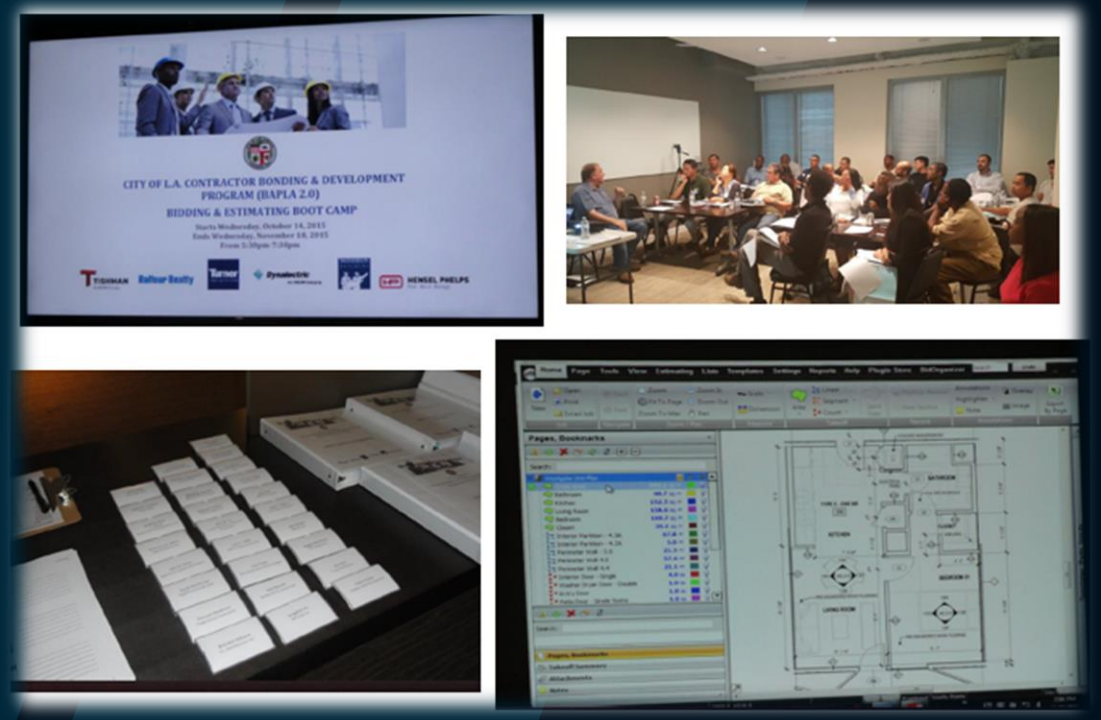

Merriwether & Williams INSURANCE SERVICES

. . . Of Like Minds

ADDENDUM 8

City of Los Angeles Contractor Development and Bonding Program

For More Information On the Program, Please Contact

Merriwether & Williams Insurance Services

L.A. Regional Contractor Development and Bonding Program

Elizabeth Juarez, Construction Account Manager

Tel. (213) 223-8575 | ejuarez@imwis.com

Merriwether & Williams
INSURANCE SERVICES
. . . Of Like Minds

SCHEDULE OF WORK AND PRICES

City of Los Angeles - Department of Public Works - Bureau of Engineering

Sixth Street Viaduct – Park, Arts, and River Connectivity (PARC) Improvements; Department of Cultural Affairs LA Hands Art Piece Foundations; and CBD Sewer Rehab Unit 11A – 6th Street Siphon to Santa Fe Avenue

W.O. E700235F, SZC14224

ITEM	DESCRIPTION	UNIT	QTY.	UNIT PRICE	ITEM TOTAL
	Sixth Street Viaduct – Park, Arts, and River Connectivity (PARC) ImprovementsW.O. E700235F				
1	General Mobilization	LS			
2	**ALLOWANCE for Electrical and Water Service Fees**				**$225,000**
3	**ALLOWANCE for Engineer's and Inspector's Field Office Supplies**				**$14,172**
4	**ALLOWANCE for Differing Site Conditions**				**$600,000**
5	**ALLOWANCE for Permits**				**$175,000**
6	**ALLOWANCE for Opportunity to Partner**				**$30,000**
7	**ALLOWANCE for City Inspection**				**$115,000**
8	**ALLOWANCE for Sewer Bypass**				**$50,000**
9	**ALLOWANCE for Additional Potholing**				**$30,000**
10	**ALLOWANCE for Archaeological Monitoring**				**$50,000**
11	**ALLOWANCE for Street Damage Restoration Fee**				**$25,000**
12	**ALLOWANCE for Urban Forest**				**$140,000**
13	**ALLOWANCE for Additional Perimeter Fencing and Gates**				**$2,000,000**
14	West Park Improvements	LS			
15	Arts Plaza and Los Angeles River Tunnel Improvements	LS			
16	East Park Improvements	LS			
17	Roadway Improvements	LS			
18	Security Camera Infrastructure	LS			
19	Remedial Action Plan Permitting and Regulatory Compliance	LS			
20	Remedial Action Plan Preliminary Activities	LS			
21	Remedial Action Plan Engineering Oversight	LS			
22	Remedial Action Plan Soil Excavation	CY	16150		
23	Remedial Action Plan RCRA-Hazardous Waste Soil Removal	TON	8910		
24	Remedial Action Plan Non-RCRA-Hazardous Waste Soil Removal	TON	14924		
25	Remedial Action Plan Non-Hazardous Waste Soil Removal	TON	149		
26	Remedial Action Plan Soil Vapor Extraction Pilot Test in AOC 8	LS			

SCHEDULE OF WORK AND PRICES

City of Los Angeles - Department of Public Works - Bureau of Engineering

Sixth Street Viaduct – Park, Arts, and River Connectivity (PARC) Improvements; Department of Cultural Affairs LA Hands Art Piece Foundations; and CBD Sewer Rehab Unit 11A – 6th Street Siphon to Santa Fe Avenue

W.O. E700235F, SZC14224

ITEM	DESCRIPTION	UNIT	QTY.	UNIT PRICE	ITEM TOTAL
27	Remedial Action Plan Soil Vapor Extraction in AOC 7	LS			
28	Remedial Action Plan Waste Stabilization Analysis	LS			
29	Methane Testing	LS			
	SUBTOTAL (BID ITEMS 1-29)				
	Department of Cultural Affairs LA Hands Art Piece Foundations W.O. NO. E700235F				
30	Art Piece Foundation and Pedestal	LS			
31	**ALLOWANCE for Art Piece Accent Lighting per GRs 01112 & 01212**				**$10,000**
	SUBTOTAL (BID ITEMS 30-31)				
	CBD Sewer Rehab Unit 11A – 6th Street Siphon to Santa Fe Avenue W.O. SZC14224				
32	General Mobilization	LS			
33	**Allowance for Payment for Permits per GRs 01212 & 01292**				**$10,000**
34	**Allowance for Differing Site Conditions per GRs 01212 & 01253**				**$40,000**
35	**Allowance for Community Impact Mitigation**				**$50,000**
36	Temporary Sewer Bypass	LS			
37	Worksite Traffic Control	LS			
38	Pre and Post CCTV of existing host pipe	LF	932		
39	Sewer Cleaning & Debris Removal	LF	466		
40	Storing, hauling and disposal of debris - Non hazardous / Contaminated	TON	28		
41	Storing, hauling and disposal of debris - Incremental Cost (hazardous / Contaminated)	TON	28		
42	Rehabilitate Existing 36" Circular Sewer by CIPP	LF	466		
43	Construct & Backfill Pit #1, and remove and replace 36" VCP	LS			
44	Partially Remove and Reconstruct and Rehabilitate (Type I Liner) Existing Maintenance Hole (51509157)	LS			
45	Partially Remove and Reconstruct and Rehabilitate (Type I liner) Existing Chamber (51509108)	LS			
46	Rehabilitate Exisitng Siphon Outlet Structure (51509151) by Type 1 Liner	LS			
47	Reconnect existing Lateral sewer (CN 51509149)	LS			
48	Grind One (1) Protruding 8" Lateral sewer at CN 51509149 and Two Protruding House Connections near stations 223+97 and 223+98	LS			

SCHEDULE OF WORK AND PRICES

City of Los Angeles - Department of Public Works - Bureau of Engineering

Sixth Street Viaduct – Park, Arts, and River Connectivity (PARC) Improvements; Department of Cultural Affairs LA Hands Art Piece Foundations; and CBD Sewer Rehab Unit 11A – 6th Street Siphon to Santa Fe Avenue

W.O. E700235F, SZC14224

ITEM	DESCRIPTION	UNIT	QTY.	UNIT PRICE	ITEM TOTAL
	SUBTOTAL (BID ITEMS 32-48)				
	TOTAL BID AMOUNT:				

Unit abbreviation: EA=Each, BIN=Bin, GAL=Gallon, LF=Linear Foot, LS=Lump Sum, MOS=Months, TON=Ton.

NOTES

A. MOBILIZATION: If the successful bidder shows an amount in excess of $1,353,538 for Mobilization **(Bid Item No. 1)**, amount in excess of $40,000 for Mobilization **(Bid Item No. 32)**, the bidder will be paid $1,353,538 **(Bid Item No. 1)** and $40,000 **(Bid Item No. 32)** per Specification Section 01292 of the General Requirements. The difference between the Contractor's bid amount for **Bid Item No. 1 and $1,353,538** and **Bid Item No. 32 and $40,000** will be paid after the Statement of Completion has been issued.

B. FIXED COST ITEMS: Bid Item Nos. **2-13, 31, and 33-35** are considered Fixed Cost Items at the time of bid. The pre-printed dollar amounts in figures listed in the SCHEDULE OF WORK AND PRICES shall not be changed or deleted.

C. SPECIALTY ITEMS: Bid Items Nos. **6, 8, 10, 13, 18, 21, 23, 26-29, 31, and 35-48** are designated as "Specialty Items."

SCHEDULE OF WORK AND PRICES

City of Los Angeles - Department of Public Works - Bureau of Engineering

Sixth Street Viaduct – Park, Arts, and River Connectivity (PARC) Improvements; Department of Cultural Affairs LA Hands Art Piece Foundations; and CBD Sewer Rehab Unit 11A – 6th Street Siphon to Santa Fe Avenue

W.O. E700235F, SZC14224

ITEM	DESCRIPTION	UNIT	QTY.	UNIT PRICE	ITEM TOTAL
	Sixth Street Viaduct – Park, Arts, and River Connectivity (PARC) ImprovementsW.O. E700235F				
1	General Mobilization	LS			
2	**ALLOWANCE for Electrical and Water Service Fees**				**$225,000**
3	**ALLOWANCE for Engineer's and Inspector's Field Office Supplies**				**$14,172**
4	**ALLOWANCE for Differing Site Conditions**				**$600,000**
5	**ALLOWANCE for Permits**				**$175,000**
6	**ALLOWANCE for Opportunity to Partner**				**$30,000**
7	**ALLOWANCE for City Inspection**				**$115,000**
8	**ALLOWANCE for Sewer Bypass**				**$50,000**
9	**ALLOWANCE for Additional Potholing**				**$30,000**
10	**ALLOWANCE for Archaeological Monitoring**				**$50,000**
11	**ALLOWANCE for Street Damage Restoration Fee**				**$25,000**
12	**ALLOWANCE for Urban Forest**				**$140,000**
13	**ALLOWANCE for Additional Perimeter Fencing and Gates**				**$2,000,000**
14	West Park Improvements	LS			
15	Arts Plaza and Los Angeles River Tunnel Improvements	LS			
16	East Park Improvements	LS			
17	Roadway Improvements	LS			
18	Security Camera Infrastructure	LS			
19	Remedial Action Plan Permitting and Regulatory Compliance	LS			
20	Remedial Action Plan Preliminary Activities	LS			
21	Remedial Action Plan Engineering Oversight	LS			
22	Remedial Action Plan Soil Excavation	CY	16150		
23	Remedial Action Plan RCRA-Hazardous Waste Soil Removal	TON	8910		
24	Remedial Action Plan Non-RCRA-Hazardous Waste Soil Removal	TON	14924		
25	Remedial Action Plan Non-Hazardous Waste Soil Removal	TON	149		
26	Remedial Action Plan Soil Vapor Extraction Pilot Test in AOC 8	LS			

SCHEDULE OF WORK AND PRICES

City of Los Angeles - Department of Public Works - Bureau of Engineering

Sixth Street Viaduct – Park, Arts, and River Connectivity (PARC) Improvements; Department of Cultural Affairs LA Hands Art Piece Foundations; and CBD Sewer Rehab Unit 11A – 6th Street Siphon to Santa Fe Avenue

W.O. E700235F, SZC14224

ITEM	DESCRIPTION	UNIT	QTY.	UNIT PRICE	ITEM TOTAL
27	Remedial Action Plan Soil Vapor Extraction in AOC 7	LS			
28	Remedial Action Plan Waste Stabilization Analysis	LS			
29	Methane Testing	LS			
	SUBTOTAL (BID ITEMS 1-29)				
	Department of Cultural Affairs LA Hands Art Piece Foundations W.O. NO. E700235F				
30	Art Piece Foundation and Pedestal	LS			
31	**ALLOWANCE for Art Piece Accent Lighting per GRs 01112 & 01212**				**$10,000**
	SUBTOTAL (BID ITEMS 30-31)				
	CBD Sewer Rehab Unit 11A – 6th Street Siphon to Santa Fe Avenue W.O. SZC14224				
32	General Mobilization	LS			
33	**Allowance for Payment for Permits per GRs 01212 & 01292**				**$10,000**
34	**Allowance for Differing Site Conditions per GRs 01212 & 01253**				**$40,000**
35	**Allowance for Community Impact Mitigation**				**$50,000**
36	Temporary Sewer Bypass	LS			
37	Worksite Traffic Control	LS			
38	Pre and Post CCTV of existing host pipe	LF	932		
39	Sewer Cleaning & Debris Removal	LF	466		
40	Storing, hauling and disposal of debris - Non hazardous / Contaminated	TON	28		
41	Storing, hauling and disposal of debris - Incremental Cost (hazardous / Contaminated)	TON	28		
42	Rehabilitate Existing 36" Circular Sewer by CIPP	LF	466		
43	Construct & Backfill Pit #1, and remove and replace 36" VCP	LS			
44	Partially Remove and Reconstruct and Rehabilitate (Type I Liner) Existing Maintenance Hole (51509157)	LS			
45	Partially Remove and Reconstruct and Rehabilitate (Type I liner) Existing Chamber (51509108)	LS			
46	Rehabilitate Exisitng Siphon Outlet Structure (51509151) by Type 1 Liner	LS			
47	Reconnect existing Lateral sewer (CN 51509149)	LS			
48	Grind One (1) Protruding 8" Lateral sewer at CN 51509149 and Two Protruding House Connections near stations 223+97 and 223+98	LS			

SCHEDULE OF WORK AND PRICES

City of Los Angeles - Department of Public Works - Bureau of Engineering

Sixth Street Viaduct – Park, Arts, and River Connectivity (PARC) Improvements; Department of Cultural Affairs LA Hands Art Piece Foundations; and CBD Sewer Rehab Unit 11A – 6th Street Siphon to Santa Fe Avenue

W.O. E700235F, SZC14224

ITEM	DESCRIPTION	UNIT	QTY.	UNIT PRICE	ITEM TOTAL
	SUBTOTAL (BID ITEMS 32-48)				
	TOTAL BID AMOUNT:				

Unit abbreviation: EA=Each, BIN=Bin, GAL=Gallon, LF=Linear Foot, LS=Lump Sum, MOS=Months, TON=Ton.

NOTES

A. MOBILIZATION: If the successful bidder shows an amount in excess of $1,353,538 for Mobilization **(Bid Item No. 1)**, amount in excess of $40,000 for Mobilization **(Bid Item No. 32)**, the bidder will be paid $1,353,538 **(Bid Item No. 1)** and $40,000 **(Bid Item No. 32)** per Specification Section 01292 of the General Requirements. The difference between the Contractor's bid amount for **Bid Item No. 1 and $1,353,538** and **Bid Item No. 32 and $40,000** will be paid after the Statement of Completion has been issued.

B. FIXED COST ITEMS: Bid Item Nos. **2-13, 31, and 33-35** are considered Fixed Cost Items at the time of bid. The pre-printed dollar amounts in figures listed in the SCHEDULE OF WORK AND PRICES shall not be changed or deleted.

C. SPECIALTY ITEMS: Bid Items Nos. **6, 8, 10, 13, 18, 21, 23, 26-29, 31, and 35-48** are designated as "Specialty Items."

ADDENDUM 9

DEPARTMENT OF CULTURAL AFFAIRS
LA HANDS ART PIECE FOUNDATIONS

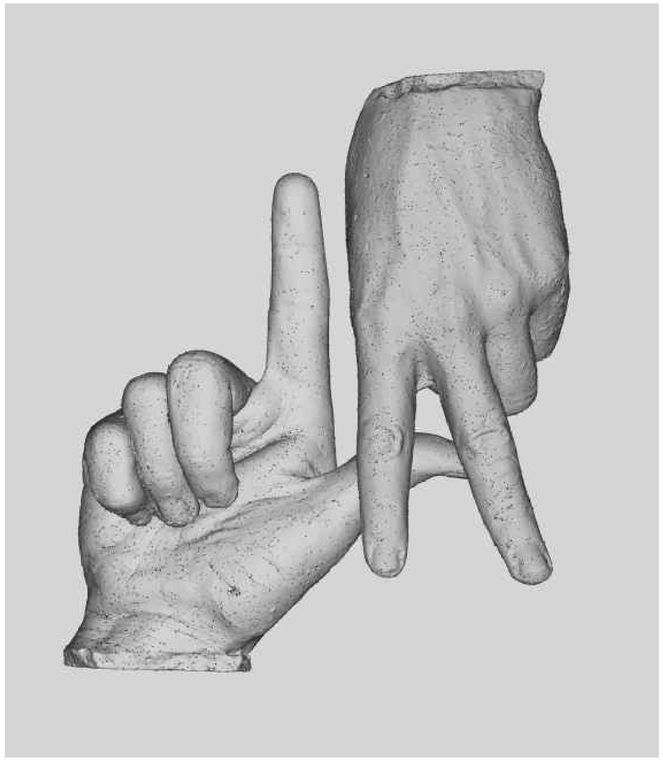

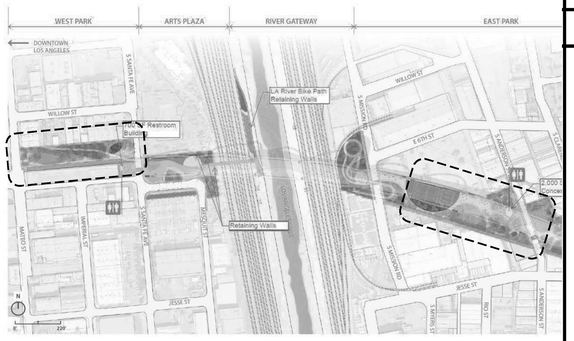

VICINITY PLAN

NOT TO SCALE

DEPARTMENT OF CULTURAL AFFAIRS
DANIELLE BRAZELL, DIRECTOR

PROJECT TEAM

PRO□E□□ MANAGEMEN□□
S□□□□ S□REE□ V□AD□□□ D□V□S□ON
SHAY DOONG, P.E.
ACTING PROGRAM MANAGER

GARY LAM, P.E.
PROJECT MANAGER

□ONS□L□AN□□
R□□□
SELINDA MARTINEZ, P.E.
GROUP MANAGER

□□D AND A□ ARD□
PRO□E□□ A□ ARD AND □ON□ROL D□V□S□ON
GREGG VANDERGRIFF P.E.
DIVISION MANAGER

RAY SISON, P.E.
ASSISTANT DIVISION MANAGER

□ONS□R□□□ON MANAGEMEN□□
□ONS□R□□□ON MANAGEMEN□ D□V□S□ON
RICHARD LOUIE, P.E.
DIVISION ENGINEER

NATALIE MOORE, P.E.
CONSTRUCTION MANAGER

□NSPE□□ON□
□□REA□ O□ □ON□RA□□ ADM□N□S□RA□□ON
JOHN REAMER
DIRECTOR (INSPECTOR OF PUBLIC WORKS)

REGISTERED PROFESSIONAL ENGINEER
SONIA A. MARTINEZ
No. 82038
Exp. 3831-24
CIVIL
STATE OF CALIFORNIA

PLANS PREPARED BY:
R□□□
1329A HOPKINS STREET
BERKELEY, CALIFORNIA
94702
PHONE: (415) 967-2525

REVISION DATES (DESIGN STAGE ONLY)

Sheet Version 4.0

THE CITY OF LOS ANGELES OR ITS OFFICERS OR AGENTS SHALL NOT BE RESPONSIBLE FOR THE ACCURACY OR COMPLETENESS OF ELECTRONIC COPIES OF THIS PLAN SHEET.

ENGINEERING
CITY OF LOS ANGELES

REGISTERED PROFESSIONAL ENGINEER
TED S. ALLEN
No. C-65339
CIVIL
STATE OF CALIFORNIA

THIS PLAN WAS ELECTRONICALLY SIGNED AND STAMPED

BUREAU OF ENGINEERING

VERTICAL CONTROL:
HORIZONTAL CONTROL:
SHEET TITLE: COVERSHEET
PROJECT: DEPARTMENT OF CULTURAL AFFAIRS LA HANDS ART PIECE FOUNDATIONS
ADDRESS: SIXTH STREET OVER THE LOS ANGELES RIVER

BUREAU OF ENGINEERING
OFFICIAL RECORD

DEPARTMENT OF PUBLIC WORKS

NO.	REVISIONS:	DATE:	BY:

CIP NO.

SHEET TYPE

INDEX NO.
MF-300502

CITY OF LOS ANGELES

CITY ENGINEER
TED ALLEN, P.E.

10/3/2022
DATE

DEPUTY CITY ENGINEER/PROGRAM MANAGER

10/3/22
DATE

CITY ENGINEER

WORK ORDER NO.
E700235D

SHEET NAME
S1
SHEET 1 OF 3 SHEETS

G:\.SHORTCUT-TARGETS-BY-ID\0B0EAJRRQVUIZDXBYRFPMVMVCY2S\PROJECTS\2022\2211 - LA HANDS\S1.DWG 9/28/2022 12:20 PM

ADDENDUM 9

PROJECT DESCRIPTION

THE PROJECT IS AN ART INSTALLATION THAT IS PART OF THE 6TH STREET VIADUCT. THE ARTWORK CONSISTS OF TWO 20-FT TALL CAST BRONZE STEEL SCULPTURES WITH INTERNAL STAINLESS STEEL STRUCTURES. THE STEEL STRUCTURES ARE SUPPORTED ON CONCRETE SPREAD FOOTINGS. THE SCOPE OF WORK SHOWN IN THIS DOCUMENT REPRESENTS COMPLIANCE WITH THE 2019 CALIFORNIA BUILDING CODE.

PROJECT INFORMATION

PROJECT ADDRESS: EAST 6TH STREET VIADUCT
LOS ANGELES, CA 90013

PROJECT DIRECTORY

ARTIST
GLENN KAINO STUDIO
3221 NORTH SAN FERNANDO ROAD, UNIT D
LOS ANGELES, CA 90065
443.386.3285

STRUCTURAL ENGINEER:
SELINDA MARTINEZ, PE
RBHU
1329A HOPKINS STREET
BERKELEY, CA 94702
415.967.2525

DRAWING INDEX

S1 GENERAL NOTES
S2 FOUNDATION DETAILS

VICINITY MAP

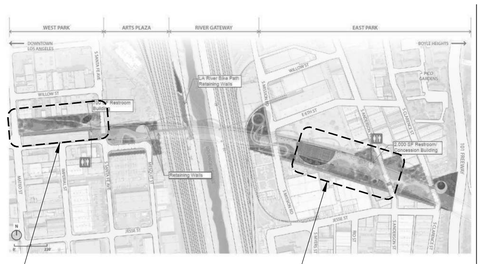

WEST PARK MAP

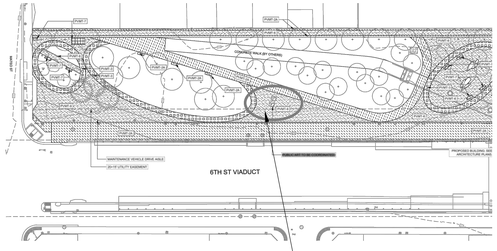

EAST PARK MAP

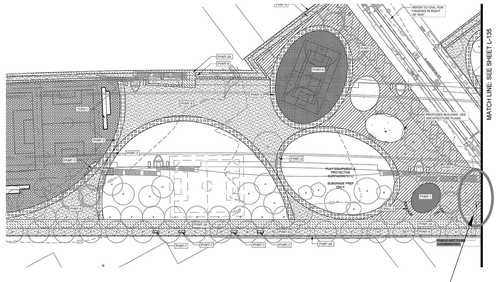

GENERAL NOTES

1. ALL WORK AND MATERIALS SHALL CONFORM TO THE REQUIREMENTS OF THE 2019 CALIFORNIA BUILDING CODE (REFERRED TO HEREINAFTER AS CBC) AND 2019 LOS ANGELES BUILDING CODE AMENDMENTS.
2. ALL DETAILS, SECTIONS AND NOTES SHOWN ON THE DRAWINGS ARE INTENDED TO BE TYPICAL AND SHALL APPLY TO SIMILAR SITUATIONS ELSEWHERE, UNLESS NOTED OTHERWISE. NOTES AND DETAILS ON THE DRAWINGS TAKE PRECEDENCE OVER THE GENERAL NOTES AND TYPICAL DETAILS.
3. ALL OMISSIONS AND CONFLICTS BETWEEN VARIOUS ELEMENTS OF THE WORKING DRAWINGS AND/OR ARCHITECTURAL SPECIFICATIONS (WHERE APPLICABLE) SHALL BE BROUGHT TO THE ATTENTION OF THE STRUCTURAL ENGINEER BEFORE PROCEEDING WITH ANY OF THE WORK INVOLVED.
4. AT ALL TIMES THE CONTRACTOR SHALL BE SOLELY AND COMPLETELY RESPONSIBLE FOR THE CONDITIONS OF THE JOB SITE INCLUDING SAFETY OF THE PERSONS AND PROPERTY, AND FOR ALL NECESSARY INDEPENDENT ENGINEERING REVIEWS OF THESE CONDITIONS. THE ARCHITECT'S OR ENGINEER'S JOB SITE REVIEW IS NOT INTENDED TO INCLUDE REVIEW OF THE ADEQUACY OF THE CONTRACTOR'S SAFETY MEASURES.
5. DURING AND AFTER CONSTRUCTION, BUILDER AND/OR OWNER SHALL KEEP LOADS ON STRUCTURE WITHIN THE LIMITS OF DESIGN LOADS.
6. IN NO CASE SHALL WORKING DIMENSIONS BE SCALED FROM PLANS, SECTIONS OR DETAILS ON THE STRUCTURAL DRAWINGS.
7. SHOP DRAWINGS SHALL BE SUBMITTED TO THE STRUCTURAL ENGINEER PRIOR TO FABRICATION WITH SUFFICIENT TIME FOR REVIEW OF DESIGN INTENT (A MINIMUM OF 10 WORKING DAYS) FOR THE FOLLOWING ITEMS:
   a. STRUCTURAL STEEL
   b. REINFORCING STEEL
8. NO OPENINGS, CHASES, NOTCHES, ETC. SHALL BE PLACED IN COLUMNS, JOISTS, BEAMS, BEARING WALLS, AND SHEAR WALLS UNLESS SPECIFICALLY NOTED ON THESE DRAWINGS. THE CONTRACTOR SHALL NOTIFY THE STRUCTURAL ENGINEER WHEN DRAWINGS BY OTHERS SHOW SUCH OPENINGS.
9. CONTRACTOR SHALL COORDINATE ALL STRUCTURAL FRAMING WITH MECHANICAL, PLUMBING AND ELECTRICAL INFRASTRUCTURE, INCLUDING, BUT NOT LIMITED TO, RECESSED AND SEMI-RECESSED LIGHTING, MECHANICAL DUCTS AND PIPING, FIRE SPRINKLER PIPE AND HEADS AND PLUMBING DRAINS, WASTE AND SUPPLY LINES.
10. ALL ASTM DESIGNATIONS SHALL BE AS AMENDED TO DATE UNLESS NOTED OTHERWISE.

DESIGN CRITERIA

1. DEAD LOADS:
   a. CAST BRONZE SCULPTURE SELF WEIGHT = 10,315 LB MAXIMUM
2. SEISMIC DESIGN PARAMETERS:

a.	IMPORTANCE FACTOR	I = 1.0
b.	RISK CATEGORY	II
c.	SITE CLASS	D
d.	MAPPED SHORT PERIOD ACCELERATION	S_s = 1.930
e.	SITE COEFFICIENT	F_a = 1.0
f.	DESIGN SHORT PERIOD ACCELERATION	S_{DS} = 1.287
g.	MAPPED ONE SECOND ACCELERATION	S_1 = 0.688
h.	SITE COEFFICIENT	F_v = 1.7
i.	DESIGN ONE SECOND ACCELERATION	S_{D1} = 0.780
j.	SEISMIC DESIGN CATEGORY	D

DESIGN BASE SHEAR: V = Cs*W AT STRENGTH LEVEL
(W = EFFECTIVE SEISMIC WEIGHT)

k.	AMUSEMENT STRUCTURE	
	SEISMIC RESPONSE COEFFICIENT	C_s = 0.643
	RESPONSE MODIFICATION FACTOR	R = 2

4. WIND DESIGN PARAMETERS:

a.	BASIC WIND SPEED	95 MPH
b.	RISK CATEGORY	II
c.	EXPOSURE CATEGORY	B
d.	WIND PRESSURES	16.0 PSF

5. FOUNDATION DESIGN PARAMETERS (SPREAD FOOTING PARAMETERS)

•	ALLOWABLE SOIL PRESSURE:	
	DEAD LOADS:	3,200 PSF
	DEAD PLUS LIVE LOADS:	3,200 PSF
	DEAD PLUS LIVE PLUS SEISMIC:	4,267 PSF
•	COEFFICIENT OF FRICTION	0.36
•	PASSIVE PRESSURE	350 PCF

FOUNDATION

1. FOUNDATION DESIGN IS BASED ON THE GEOTECHNICAL REPORT BY TETRA TECH DATED AUGUST 3, 2021. A COPY OF THIS REPORT MAY BE OBTAINED FROM THE ARCHITECT'S OFFICE.
2. INSTALLATION OF THE FOUNDATIONS WITH RESPECT TO THE DEPTH BELOW FINISHED OR NATURAL GRADE SHALL BE AT A MINIMUM ACCORDING TO THE FOUNDATION DETAILS ON THESE PLANS. FIELD DISCOVERED CONDITIONS MAY NECESSITATE DEEPER FOUNDATIONS.
3. EXCEPT WHERE OTHERWISE SHOWN, EXCAVATIONS SHALL BE MADE AS NEAR AS POSSIBLE TO THE NEAT LINES REQUIRED BY THE SIZE AND SHAPE OF THE STRUCTURE.
4. ALL EXCAVATIONS, FORMS AND REINFORCING ARE TO BE INSPECTED BY GEOTECHNICAL ENGINEER PRIOR TO PLACING CONCRETE.
5. ALL WATER, SOIL, AND OTHER DEBRIS SHALL BE REMOVED FROM FOUNDATION EXCAVATIONS PRIOR TO PLACING OF CONCRETE.
6. ALL BACKFILL WITH ENGINEERED FILLS SHALL BE COMPACTED TO 95% RELATIVE DENSITY.

CONCRETE

1. ALL CONCRETE CONSTRUCTION SHALL BE PER CBC CHAPTER 19 AND IN ACCORDANCE WITH ACI 318-11, SPECIFICATIONS FOR STRUCTURAL CONCRETE.
2. ALL CONCRETE SHALL HAVE A MAXIMUM WATER-CEMENT RATIO OF 0.48 FOR FOUNDATIONS AND ALL STRUCTURAL ELEMENTS, 4"±1" SLUMP, AND SHALL OBTAIN A 28 DAY MINIMUM COMPRESSIVE STRENGTH OF 4,000 PSI.
3. ALL CONCRETE SHALL BE NORMAL WEIGHT CONCRETE, WEIGHING LESS THAN 150 PCF, UNLESS OTHERWISE NOTED.
4. CEMENT SHALL CONFORM TO ASTM C150, TYPE II (OR ENGINEERED MAXIMUM DESIGN TO STRENGTH).
5. HARD ROCK AGGREGATES SHALL CONFORM TO ASTM C33. MAXIMUM NORMAL SIZE OF AGGREGATE SHALL NOT EXCEED 1 1/2 INCHES FOR FOUNDATION CONCRETE AND 1 INCH FOR STRUCTURAL CONCRETE ABOVE THE FOUNDATION. SEE ALSO THE REQUIREMENTS IN ACI STANDARD SPECIFICATIONS. MAXIMUM NORMAL SIZE SHALL ALSO BE SELECTED SUCH THAT WORKABILITY AND PLACEABILITY OF CONCRETE ARE FACILITATED.
6. ALL ALTERNATE CONCRETE MIX DESIGN AND TEST STRENGTHS SHALL BE SUBMITTED TO THE STRUCTURAL ENGINEER FOR APPROVAL PRIOR TO CONSTRUCTION.
7. MAXIMUM VERTICAL DROP OF CONCRETE SHALL BE NO MORE THAN 2'-0" FROM END OF PLACEMENT DEVICE TO PLACEMENT SURFACE.
8. CONCRETE COVER AT REINFORCING SHALL BE AS FOLLOWS:

a.	CAST AGAINST AND PERMANENTLY EXPOSED TO EARTH:	3" CLEAR
b.	EXPOSED TO EARTH OR WEATHER BUT CAST AGAINST FORMS	2" CLEAR
c.	BARS PARALLEL TO COLD JOINTS	2" CLEAR

9. ALL REINFORCING STEEL, DOWELS, ANCHOR BOLTS, PIPE SLEEVES AND OTHER INSERTS SHALL BE SECURED IN POSITION PRIOR TO PLACING OF CONCRETE. WET SETTING WILL NOT BE ALLOWED.
10. THE SURFACE OF ALL CONSTRUCTION JOINTS SHALL BE CLEANED AND ROUGHENED BY REMOVING THE ENTIRE SURFACE AND EXPOSING CLEAN AGGREGATE SOLIDLY EMBEDDED IN MORTAR MIX.
11. EPOXY SET ANCHORS SHALL BE INSTALLED IN CONCRETE THAT HAS A MINIMUM AGE OF 21 DAYS PER ACI D5.5.2.

REINFORCING BAR

1. REINFORCING STEEL SHALL BE DEFORMED BARS PER ASTM A615 WITH BAR MARKS LEGIBLY ROLLED INTO THE SURFACE INDICATION SIZE, TYPE OF STEEL, AND YIELD STRENGTH DESIGNATION:
   a. #3 BARS AND SMALLER — GRADE 40 OR GRADE 60
   b. #4 BARS AND LARGER — GRADE 60
   c. ALL BARS TO BE WELDED — GRADE A706
2. REINFORCING SHALL HAVE A MINIMUM LAP IN CONFORMANCE WITH DETAILS AND SPECIFICATIONS SHOWN ON THESE DRAWINGS. STAGGER SPLICES WHENEVER POSSIBLE. VERTICAL WALL REINFORCING BARS SHALL EITHER EXTEND INTO FOOTINGS OR LAP SPLICED WITH FOOTING DOWELS OF THE SAME SIZE BARS.
3. BENDING OF REINFORCING SHALL BE IN CONFORMANCE WITH DETAILS AND SPECIFICATIONS SHOWN ON THESE DRAWINGS. FIELD BENDING OF BARS THAT ARE IN PLACE IS NOT PERMITTED UNLESS APPROVED BY THE STRUCTURAL ENGINEER.
4. ALL BARS SHALL BE FREE OF LOOSE AND FLAKY RUST AND SCALE, GREASE, OR OTHER MATERIALS WHICH MIGHT AFFECT OR IMPAIR BOND.

STRUCTURAL STEEL

1. CARBON STEEL MATERIALS SHALL CONFORM TO THE FOLLOWING:

W SHAPES	ASTM A992 (Fy=50ksi)
HSS SHAPES	ASTM A500, GRADE B
OTHER SHAPES AND PLATES	ASTM A36
ELECTRODES	ASTM E70XX
BASE PLATES	ASTM A36
ANCHOR BOLTS	ASTM F1554, Fy=36 ksi
MACHINE BOLTS	ASTM A307
HIGH STRENGTH BOLTS	ASTM F3125
WELDED STUDS	ASTM A108
THREADED RODS	ASTM A193, GRADE B7

2. STAINLESS STEEL MATERIALS SHALL CONFORM TO THE FOLLOWING:

HSS SHAPES	ASTM A276 SS 304
OTHER SHAPES AND PLATES	ASTM A276 SS 304
ELECTRODES	AWS E308L-XX
BASE PLATES	ASTM A276 SS 304
ANCHOR BOLTS	ASTM F593, SS 304

3. ALL STRUCTURAL STEEL SHALL CONFORM TO AISC SPECIFICATIONS FOR THE DESIGN, FABRICATION, AND ERECTION OF STRUCTURAL STEEL FOR BUILDINGS. BOLT HOLES SHALL BE 1/16" OVERSIZED, EXCEPT AT BASE PLATES WHERE THEY CAN BE 5/16" OVERSIZED, WITH WELDED WASHERS.
4. ALL SHOP AND FIELD WELDING SHALL BE INSPECTED BY AN APPROVED TESTING LABORATORY. SPECIAL INSPECTION REQUIREMENTS OF CHAPTER 17, 2018 IBC, APPLY TO ALL WELDING.
5. ALL WELDING TO CONFORM TO THE REQUIREMENTS OF THE LATEST AWS D1.1 STRUCTURAL WELDING CODE AND SHALL BE PERFORMED BY CERTIFIED WELDERS.
6. ALL WELDS NOT SPECIFIED SHALL BE CONTINUOUS FILLET WELDS, USING NOT LESS THAN THE MINIMUM SIZES BASED ON THICKNESS OF THICKER PART JOINED PER AISC/AWS, AND IN NO CASE LESS THAN 1/4" UNLESS NOTED OTHERWISE.
7. WHERE WELDS ARE DESIGNATED AS DEMAND CRITICAL, THEY SHALL BE MADE WITH A FILLER METAL CAPABLE OF PROVIDING A MINIMUM CHARPY V-NOTCH (CVN) TOUGHNESS OF 20 FT-LB AT -20°F AS DETERMINED BY THE APPROPRIATE AWS CLASSIFICATION TEST METHOD OR MANUFACTURER CERTIFICATION.
8. THE CONTRACTOR SHALL BE RESPONSIBLE FOR THE CONTROL OF ALL ERECTION PROCEDURES AND SEQUENCES ESPECIALLY WITH RELATION TO TEMPERATURE DIFFERENTIALS, ERECTION TOLERANCES, AND WITH RESPECT TO STRUCTURAL STEEL FRAMING INTO REINFORCED CONCRETE WALLS.
9. THE STRUCTURAL STEEL CONNECTIONS CONSIST OF THE FOLLOWING:
   a. ALL MAJOR STRUCTURAL STEEL CONNECTIONS ARE DETAILED ON THE DRAWINGS. THE DETAILS INDICATE THE REQUIRED MINIMUM PLATE THICKNESSES, ANGLES, WELDS, BOLTS AND GENERAL CONNECTION CONFIGURATION. THE FINAL DIMENSIONAL CONFIGURATION INCLUDING ADJUSTMENTS FOR CAMBER SHALL BE DETERMINED BY THE FABRICATOR ON SHOP DRAWINGS.
   b. ANY PROPOSED REVISIONS OR MODIFICATIONS TO THE CONNECTIONS AS SHOWN ON THE DRAWINGS SHALL BE FULLY ENGINEERED BY THE FABRICATOR. SHOP DRAWINGS AND CALCULATIONS PREPARED AND STAMPED BY A PROFESSIONAL ENGINEER LICENSED IN THE STATE OF MARYLAND SHALL BE SUBMITTED FOR REVIEW. THE CAPACITY OF CONNECTIONS SHALL NOT BE REDUCED FROM THAT PROVIDED BY THE DETAIL AS SHOWN WHERE NOT SHOWN OR INFERRED FROM DRAWINGS, THE CONNECTION SHALL BE CAPABLE OF NOT LESS THAN 120% OF THE MEMBER CAPACITY IN TENSION. ANY PROPOSED REVISIONS SHALL BE AT NO ADDITIONAL COST TO THE OWNER.
10. ALL CARBON STEEL EXPOSED TO "WEATHER" SHALL BE HOT-DIPPED GALVANIZED INCLUDING BUT NOT LIMITED TO WF BEAMS AND FASTENERS. AFTER WELDING, "WELDING SLAG" MUST BE REMOVED AND ZINC-RICH PAINT MUST BE APPLIED TO WELD AND ADJACENT AREAS WHERE COATING HAS BEEN DAMAGED. ZINC-RICH PAINT MUST BE APPLIED TO A THICKNESS EQUIVALENT TO HOT-DIPPED GALVANIZED COATING.

STRUCTURAL OBSERVATIONS

1. THE FOLLOWING ITEMS SHALL HAVE PERIODIC STRUCTURAL OBSERVATION BY THE STRUCTURAL ENGINEER OF RECORD PER CBC SECTION 1704.5:
   a. REINFORCING STEEL PRIOR TO POURING CONCRETE
   b. ANCHOR BOLTS AND HOLD DOWNS ANCHORS PRIOR TO POURING CONCRETE
   c. STRUCTURAL STEEL CONSTRUCTION PRIOR TO COVER
   d. STRUCTURAL FRAMING AND CONNECTER PRIOR TO COVER
2. THE CONTRACTOR SHALL NOTIFY THE STRUCTURAL ENGINEER A MINIMUM OF 48 HOURS (EXCLUDING WEEKEND DAYS) PRIOR TO THE TIME OF A REQUIRED STRUCTURAL OBSERVATION.
3. OBSERVATION VISITS TO THE JOB SITE BY THE ENGINEER'S FIELD REPRESENTATIVE SHALL BE CONSTRUED AS NEITHER INSPECTION NOR APPROVAL OF CONSTRUCTION.

SPECIAL INSPECTIONS

1. THE FOLLOWING CONTINUOUS OR PERIODIC SPECIAL INSPECTIONS, AS REQUIRED BY CBC CHAPTER 17, SHALL BE PERFORMED BY THE OWNER'S TESTING AND INSPECTION AGENCY:
   a. CONCRETE. DURING THE TAKING OF TEST SPECIMENS AND PLACING OF REINFORCED CONCRETE.
   b. REINFORCING STEEL. DURING PLACING OF REINFORCING STEEL FOR CONFORMANCE TO THE APPROVED PLANS PRIOR TO THE CLOSING OF FORMS OR THE DELIVERY OF CONCRETE TO THE JOBSITE.
   c. STRUCTURAL WELDING. DURING THE WELDING OF ANY MEMBER OR CONNECTION IN THE SHOP OR FIELD, INCLUDING NON-DESTRUCTIVE TESTING OF SPECIAL MOMENT-RESISTING AND ECCENTRICALLY BRACED STEEL FRAMES. PERIODIC INSPECTIONS PERMITTED ONLY AS NOTED IN CONTRACT DOCUMENTS. DURING THE WELDING OF REINFORCING STEEL.
   d. GRADING, EXCAVATIONS AND FILLING. DURING EARTH-WORK EXCAVATIONS, GRADING AND FILLING OPERATIONS.
   e. STEEL CONSTRUCTION AND WELDING.
   f. EPOXY CONNECTED HOLDOWNS TO EXISTING CONCRETE.

EPOXY ANCHORING:

1. EPOXY OR RESIN ADHESIVE SHALL BE ON OF THE FOLLOWING:
   - HILTI HIT-RE 500 V3 ADHESIVE (ICC-ES-ESR-3814)
   - HILTI HIT-HY 200 ADHESIVE (ICC-ES-ESR-3187)
   - SIMPSON SET-3G ADHESIVE (ICC-ES-ESR-4057)
   - SIMPSON SET-XP ADHESIVE (ICC-ES-ESR-2508)
   - EQUIVALENT ALTERNATES WILL BE CONSIDERED UPON REQUEST AND SUBMISSION OF SPECIFICATIONS AND ICBO EVALUATION REPORT.
2. EPOXY ADHESIVE WILL BE USED IN ALL LOCATIONS WHERE EITHER THREADED STEEL ROD OR REBAR IS BEING EMBEDDED INTO EXISTING CONCRETE OR MASONRY AS TENSION AND/OR SHEAR ELEMENTS.
3. CONTRACTOR SHALL MIX AND INSTALL RESIN AND HARDENER PER MANUFACTURER'S SPECIFICATION.
4. HOLES SHALL BE DRILLED WITH ROTARY DRILL. DRILL BIT DIAMETER SHALL BE ⅛" LARGER THAN BOLT/REBAR DIAMETER OR PER THE MANUFACTURERS SPECIFICATION. EXISTING REINFORCEMENT SHALL NOT BE CUT OR DAMAGED UNLESS PERMITTED IN WRITING BY THE ENGINEER. IMMEDIATELY BEFORE APPLYING ADHESIVE, HOLES SHALL BE REAMED WITH A CIRCULAR WIRE BRUSH ATTACHED TO A DRILL MOTOR (MINIMUM OF 4 CYCLES) AND THEN BLOWN OUT WITH OIL-FREE COMPRESSED AIR FOR A MINIMUM OF 4 SECONDS. COMPRESSED AIR NOZZLE MUST REACH THE BOTTOM OF THE HOLE.
5. CONTINUOUS OR PERIODIC SPECIAL INSPECTION IS REQUIRED FOR THREADED STEEL ROD EPOXY SET IN EXISTING CONCRETE OR MASONRY.
   a. CONTINUOUS SPECIAL INSPECTION SHALL BE THE FULL TIME OBSERVATION OF WORK BY AN APPROVED SPECIAL INSPECTOR WHO IS PRESENT IN THE AREA WHERE THE WORK IS BEING PERFORMED. INSPECTOR SHALL OBSERVE WORK IS IN CONFORMANCE TO THE APPROVE DRAWINGS AND NOTIFY ENGINEER OF ANY EXCEPTIONS
   b. PERIODIC INSPECTION SHALL BE AS FOLLOWS:
      - 5% OF TENSION BOLTS OR A MINIMUM OF 2 ANCHORS SHALL BE TESTED USING THE DIRECT TENSION LOAD METHOD:
      - TENSION RODS SHALL BE SUBJECT TO DIRECT TENSION LOAD AS SHOWN FOR FIVE MINUTES (10 PERCENT DEVIATION). THE DISTANCE BETWEEN THE ANCHOR AND THE TEST APPARATUS SUPPORT SHALL NOT BE LESS THAN 75 PERCENT OF THE EMBEDMENT OF THE ANCHOR BOLT.
      - 20% OF ANCHOR BOLTS TORQUE TEST

TESTING LOAD, U.O.N.		
THREADED ROD DIAMETER	DIRECT TENSION LOAD	TORQUE TEST LOAD
1/2" ø	–	20 FT-LB
5/8" ø	7,000 LBS	30 FT-LB
3/4" ø	8,500 LBS	45 FT-LB
7/8" ø	10,000 LBS	60 FT-LB
1" ø	18,000 LBS	80 FT-LB

ABBREVIATIONS ON DRAWINGS:

A.B.	ANCHOR BOLT	LVL	MICROLAM
BLKG	BLOCKING	HORIZ.	HORIZONTAL
BM	BEAM	H.D.G.	HOT DIPPED GALVINIZED
CL	CENTERLINE	(N)	NEW
COL.	COLUMN	o/	OVER
COLL.	COLLECTOR	O.C. OR o.c.	ON CENTER
CONC.	CONCRETE	O.H.	OPPOSITE HAND
CONN.	CONNECTION	PSL	PARALAM
DIA OR ø	DIAMETER	S.A.D.	SEE ARCHITECTURAL DRAWINGS
D.S.	DRAG STRUT	S.W.	SHEAR WALL
(E) or EXIST.	EXISTING	SIM.	SIMILAR
EL.	ELEVATION	THD. ROD	THREADED ROD
E.F.	EACH FACE	T&B	TOP & BOTTOM
E.N.	EDGE NAIL	TYP.	TYPICAL
E.S.	EACH SIDE	U.O.N.	UNLESS OTHERWISE NOTED
E.W.	EACH WAY	VERT.	VERTICAL
FTG.	FOOTING	V.I.F.	VERIFY IN FIELD
GLM	GLU-LAM	w/	WITH

BUREAU OF ENGINEERING
OFFICIAL RECORD

PLANS PREPARED BY:
RBHU
1329A HOPKINS STREET
BERKELY, CALIFORNIA
94702
PHONE: (415) 967-2525

ENGINEERING
CITY OF LOS ANGELES

PROFESSIONAL ENGINEER — SELINDA A. MARTINEZ — No. 82038 — Exp. 3-31-24 — CIVIL — STATE OF CALIFORNIA

THIS PLAN WAS ELECTRONICALLY SIGNED AND STAMPED

BUREAU OF ENGINEERING
CITY OF LOS ANGELES DEPARTMENT OF PUBLIC WORKS

VERTICAL CONTROL:
HORIZONTAL CONTROL:
SHEET TITLE: GENERAL NOTES
PROJECT: DEPARTMENT OF CULTURAL AFFAIRS LA HANDS ART PIECE FOUNDATIONS
ADDRESS: SIXTH STREET OVER THE LOS ANGELES RIVER

NO	REVISIONS	DATE	BY
		YY/MM/DD	
		YY/MM/DD	
		YY/MM/DD	
		YY/MM/DD	

CIP NO.

INDEX NO. MF-300502

CITY ENGINEER
TED ALLEN, P.E.
DATE: YY/MM/DD

DESIGN GROUP
ENGINEER: SM
ARCHITECT:
DESIGNED BY: CC — YY/MM/DD
DRAWN BY: CC — YY/MM/DD
CHECKED BY: ER — YY/MM/DD
APPROVED BY: SM — YY/MM/DD

WORK ORDER
E700235D

SHEET NAME
S2
SHEET 2 OF 3 SHEETS

REVISION DATES (DESIGN STAGE ONLY)

THE CITY OF LOS ANGELES OR ITS OFFICERS OR AGENTS SHALL NOT BE RESPONSIBLE FOR THE ACCURACY OR COMPLETENESS OF ELECTRONIC COPIES OF THIS PLAN SHEET.

ADDENDUM 9

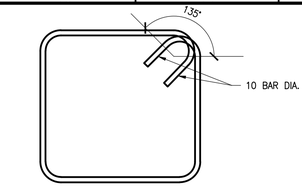

TYPICAL STIRRUP (CLOSED–TIE)

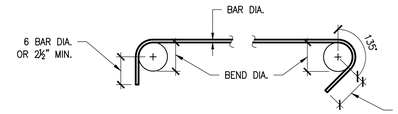

90° HOOK 135° HOOK

NOTE:
1. MINIMUM BEND DIAMETER FOR STIRRUPS AND TIES IS 4d FOR #5 BARS & SMALLER AND 6d FOR #6 THRU #8 BARS.
2. STIRRUPS CALLED OUT ON THE DRAWINGS MAY NEED TO BE INSTALLED IN PIECES TO ACCOMMODATE FIELD AND EXISTING CONDITIONS. WHERE THIS NEEDS TO OCCUR EACH PIECE NEEDS TO HAVE HOOKED ENDS AS SHOWN IN THIS DETAIL.
3. ON DRAWINGS, WHERE A STIRRUP CORNER SHOWS DOUBLE HOOKS, IT MEANS THAT HOOKS LAP AT CORNER. THIS THEREFORE IDENTIFIES THE PIECES OF THE STIRRUP

3 STIRRUP & TIE BENDS

SCALE: N.T.S.

LAP SPLICE (Ld) SCHEDULE (INCHES)
CLASS B

SIZE	LOCATION	CONCRETE COMPRESSIVE STRENGTH (PSI)				
		2,500	3,000	4,000	5,000	6,000
#4	HORIZ. TOP BAR	41	38	33	29	27
	ALL OTHER BARS	32	29	25	23	21
#5	HORIZ. TOP BAR	51	47	41	36	33
	ALL OTHER BARS	39	36	31	28	26
#6	HORIZ. TOP BAR	61	56	49	44	40
	ALL OTHER BARS	47	43	37	34	31
#7	HORIZ. TOP BAR	89	81	71	63	58
	ALL OTHER BARS	69	63	54	49	45
#8	HORIZ. TOP BAR	102	93	81	72	66
	ALL OTHER BARS	78	72	62	56	51
#9	HORIZ. TOP BAR	115	105	91	81	74
	ALL OTHER BARS	88	81	70	63	57
#10	HORIZ. TOP BAR	129	118	102	92	84
	ALL OTHER BARS	100	91	79	71	64
#11	HORIZ. TOP BAR	143	131	114	102	93
	ALL OTHER BARS	110	101	87	78	71

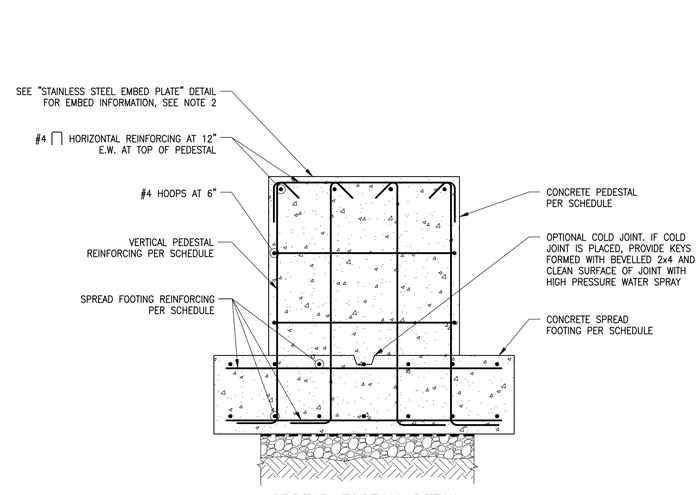

SPREAD FOOTING DETAIL

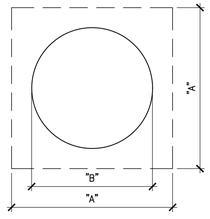

SPREAD FOOTING PLAN

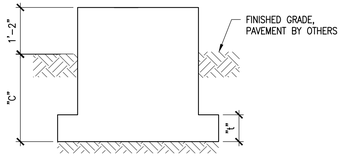

SPREAD FOOTING ELEVATION

NOTES:
1. SUBGRADE SHALL BE PREPARED IN ACCORDANCE WITH GEOTECHNICAL REPORT.
2. POST–INSTALLED STAINLESS STEEL ANCHORS ARE PENDING FINAL SCULPTURE DESIGN.
3. TOP OF SPREAD FOOTINGS HAVE BEEN COORDINATED WITH THE PAVEMENT THICKNESSES PER TETRA TECH TO PROVIDE AN 8" PAVEMENT SYSTEM THICKNESS AT THE WEST PARK LOCATION AND A 16" PAVEMENT THICKNESS AT THE EAST PARK LOCATION.

SPREAD FOOTING SCHEDULE

LOCATION	DIMENSION "A"	DIMENSION "B"	DIMENSION "C"	THICKNESS "t"	SPREAD FOOTING REINFORCING	PEDESTAL REINFORCING
WEST PARK	12'–0"	11'–0"	3'–6"	2'–10"	BOTTOM: (25) #6 BARS EACH WAY TOP: (13) #6 BARS EACH WAY	#4 VERTICAL BARS AT 12" EACH WAY
EAST PARK	16'–0"	11'–0"	2'–4"	1'–0"	BOTTOM: (17) #6 BARS EACH WAY TOP: (9) #6 BARS EACH WAY	#4 VERTICAL BARS AT 12" EACH WAY

4 SPREAD FOOTING DETAILS AND SCHEDULE

SCALE: N.T.S.

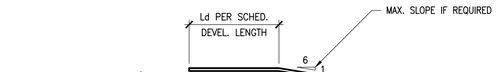

B: LAP SPLICE

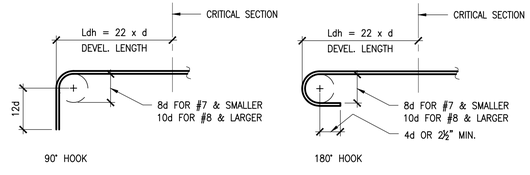

A: STANDARD HOOK

NOTES:
1. d = REBAR DIAMETER.
2. LAP SPLICE LENGTHS ARE BASED ON 60 KSI REBAR YIELD STRENGTH AND NORMAL CONCRETE WEIGHT.
3. TOP BAR IS A HORIZONTAL BAR (OTHER THAN IN WALLS) PLACED WITH MORE THAN 12" OF FRESH CONCRETE CAST BELOW BARS.
4. LAP SPLICE LENGTHS ARE BASED ON MINIMUM CLEAR COVER GREATER THAN ONE BAR DIAMETER AND MINIMUM CLEAR SPACING GREATER THAN TWO BAR DIAMETERS.
5. IF EITHER REQUIREMENT IN NOTE 4 IS NOT SATISFIED, INCREASE LAP SPLICE LENGTH BY 50%.

1 REBAR DEVELOPMENT LENGTHS

SCALE: N.T.S.

THE CITY OF LOS ANGELES OR ITS OFFICERS OR AGENTS SHALL NOT BE RESPONSIBLE FOR THE ACCURACY OR COMPLETENESS OF ELECTRONIC COPIES OF THIS PLAN SHEET.

REVISION DATES (DESIGN STAGE ONLY)

THIS PLAN WAS ELECTRONICALLY SIGNED AND STAMPED

ENGINEERING
CITY OF LOS ANGELES

REGISTERED PROFESSIONAL ENGINEER
SAN TADA A. MARTINEZ
No. 82038
Exp. 3-31-24
CIVIL
STATE OF CALIFORNIA

BUREAU OF ENGINEERING

VERTICAL CONTROL:
HORIZONTAL CONTROL:

SHEET TITLE: FOUNDATION DETAILS

PROJECT: DEPARTMENT OF CULTURAL AFFAIRS LA HANDS ART PIECE FOUNDATIONS

ADDRESS: SIXTH STREET OVER THE LOS ANGELES RIVER

NO	REVISIONS	DATE	BY
		YY/MM/DD	
		YY/MM/DD	
		YY/MM/DD	
		YY/MM/DD	

CIP NO.

INDEX NO. MF-300502

CITY OF LOS ANGELES DEPARTMENT OF PUBLIC WORKS BUREAU OF ENGINEERING

CITY ENGINEER		DATE
TED ALLEN, P.E.	DESIGN GROUP	YY/MM/DD
ENGINEER:	SM	YY/MM/DD
ARCHITECT:		YY/MM/DD
DESIGNED BY:	CC	YY/MM/DD
DRAWN BY:	CC	YY/MM/DD
CHECKED BY:	ER	YY/MM/DD
APPROVED BY:	SM	YY/MM/DD

OFFICIAL RECORD

WORK ORDER
E700235D

SHEET NAME
S3
SHEET 3 OF 3 SHEETS

PLANS PREPARED BY:
Rbhu
R□□□
1329A HOPKINS STREET
BERKELY, CALIFORNIA
94702
PHONE: (415) 967-2525

SHEET VERSION 4.0.1 FILE PATH: G:\.SHORTCUT-TARGETS-BY-ID\0B0EAJRRQVUIZDXBYRFPMVMCY2S\PROJECTS\2022\2211 - LA HANDS\S1.DWG PLOT DATE: 9/28/2022 12:26 PM SAVED: 9/28/2022 10:33 AM SAVED BY:DANIEL

SECTION 01280
MEASUREMENT AND PAYMENT

PART 1 - GENERAL

1.01 PAYMENT

A. Upon Contract award, the accepted Schedule of Work and Prices shall become the Payment Schedule. Payment for Work under the Contract shall be made at the unit prices listed in the Payment Schedule. For lump sum bid items, payment shall be made in accordance with Section 01298.

B. Payment for the measured quantities of Work performed shall be considered full compensation for all of the CONTRACTOR's costs associated with the performance of the Work. These costs comprise direct labor, materials, tools, equipment, transportation, supplies, incidentals, and subcontract Work; and indirect costs such as field and home office overhead, consulting and design services, establishment, operation and removal of general plant, taxes, insurance, permits, bond, profit, and contingencies for the performance of all Work specified.

C. The costs for conforming to the requirements for measuring quantities shall be considered included in the fixed, unit, or lump-sum prices paid for the quantities being measured, and no additional compensation will be made therefore.

D. Except for items subject to the Variation in Quantities clause, the unit prices listed in the Payment Schedule shall be applicable for calculating the amount payable under each item of the Schedule. Estimated quantities indicated in the Payment Schedule are for bidding purposes only. Payment will be determined by actual measured quantities of the Work installed/performed as verified by the INSPECTOR.

E. Work specified or shown on the drawings for which the Payment Schedule does not provide a separate lump sum or unit price is considered incidental and is not separately paid. The cost for such Work is compensated in the prices bid for other Work items and no additional compensation shall be allowed.

1.02 MEASUREMENT OF QUANTITIES

A. Measure quantities in accordance with standard industry practice and as specified herein. The CITY will verify measurements. Measure quantities to the nearest whole number of units. Round down fractional units less than one-half; round up fractional units one-half or greater.

1. Measure sewer debris volumes by weight as described herein.

2. Measure areas in two mutually perpendicular axes in the plane of the surface being measured.

3. Measure linear quantities along the longitudinal centerline of the item, except as otherwise specified.

B. Measurement of a lump sum item shall be for the entire item, unit of Work, structure, or combination thereof, as listed or indicated in the Payment Schedule, except as otherwise

specified. Progress payments for lump sum items in the Payment Schedule shall be made in accordance with Section 01298.

C. Determine quantities of Work performed for payment purposes and submit them to the INSPECTOR for approval. Assist the INSPECTOR in the taking of measurements by providing equipment, workers, and survey crews as required to verify quantities in accordance with the provisions for measurement specified herein.

1.03 REJECTED, EXCESS, AND WASTED MATERIALS

A. The following shall not be measured for payment:

1. Quantities of material wasted or otherwise disposed.

2. Rejected loads of material, including material rejected after it has been placed for failure to comply with specified requirements.

3. Material remaining on the transporting vehicle or in the pipeline.

4. Muck material not removed from designated location.

5. Material placed outside specified or indicated lines or limits.

6. Material not incorporated into the Work.

7. Material remaining on hand after completion of the Work.

B. No payment will be made for loading, hauling, and disposing of rejected material.

1.04 PAYMENT SCHEDULE

A. **BID ITEM 1: General Mobilization** (Lump Sum)

1. The amount payable under this item is fixed at the bid price and shall be no more than 5 percent of the Contract amount. This bid price for costs of work in advance of construction operations. This Bid Item is not included and attributable directly to any other specific Bid Items. For progress payments, the amount payable under this item shall be determined in accordance with Section 01292.

2. The Work shall include:

a. The movement of personnel, equipment, supplies and incidentals to the project sites.

b. Temporary laydown area and obtaining all permits and clearance requirements to secure and utilize the laydown area

c. The establishment of field offices, parking, utilities and other facilities at the Work Area Sites for the CITY and the CONTRACTOR, as specified in Section 01721.

d. Work, such as engineering designs and submittals, must be performed and expended in advance of actual construction. This Work shall include any additional investigations of the condition of the NOS that the CONTRACTOR deems

necessary to conduct the Work in compliance with applicable safety and other regulatory requirements.

e. Applying for permits (if applicable) and coordinating work with other agencies such as USACE, LADOT, AQMD, LADBS, LADWP, SCG and other utility companies and public agencies.

f. Work, such as handling homeless encampment within and/or adjacent to work site (if applicable) & community outreach regarding disruption to the Los Angeles River Bike Path and Recreational Parks (if applicable) at pit locations and bypass locations must be performed and resolved during mobilization. This work shall be, but is not limited to, installation 12 feet chain link and gates per S-691 around the pit(s) and/or at field office locations.

CONTRACTOR shall coordinate with Public Affair Office (PAO) of BOS for any related issues mentioned above:

Tonya Durrell
(213) 978-0333 (office)
(213) 798-6085 (cell)
Tonya.durrell@lacity.org

In addition, contact LA – Homeless Services Authority at (213) 225-6581 to handle any homeless issues

CONTRACTOR shall comply with all instructions and requirements of the PAO and the Mayor's office regarding homeless encampment issues. In addition, the CONTRACTOR shall comply with all instructions and requirements by the PAO, LADOT, LA County, and Mayor's office regarding any construction/bypass activities. All the costs related and associated with these issues shall be included in the Bid Item 1 "Mobilization".

1

B. **BID ITEMS 2 through 13: Allowance Items**

1. Allowance items have been established in the Bid Schedule to compensate the CONTRACTOR for the cost of performing such items as the CITY may require for the construction of the Work, but for which it is impracticable to ascertain the scope prior to bid. If the total cost compensable under each allowance item differs from the amount set forth in the SCHEDULE OF WORK AND PRICES, the Contract Price shall be adjusted by a Change Order for the difference between the total actual costs and the allowance amount as an additional amount due the CONTRACTOR or a credit to the CITY, as appropriate.

2. Reimbursement for all allowance items shall be as determined by GR-Section 01212.

3. The allowance items are as follows:

a. **Bid Item 2: Allowance for Electrical and Water Service Fees**

Reimbursement for CONTRACTOR's expenses for electrical and water service fees without compensation for any mark-ups. The CONTRACTOR shall include in the Bid the amount stipulated under ALLOWANCE FOR ELECTRICAL AND WATER

SERVICE FEES in the SCHEDULE OF WORK AND PRICES in the Bid Proposal as an allowance for the costs of all required electrical and water service fees.

Costs shall be limited to the actual fees paid to the agencies and will be reimbursed based on original receipts only. No overhead, profit, or mark-ups shall be added to the cost of the fees. The CONTRACTOR shall deliver to the ENGINEER with each service the original receipt. After all services have been obtained and delivered, the actual costs of all service fees shall be reviewed by the CONTRACTOR and the ENGINEER.

b. **Bid Item 3: Allowance for Engineer's and Inspector's Field Office Supplies**

Reimbursement for CONTRACTOR's expenses for furnishing, installing, and maintaining field office facilities for CITY construction management staff beyond specified requirements in the Section 01721 of these GENERAL REQUIREMENTS. As determined by Section 01212 of these GENERAL REQUIREMENTS.

c. **Bid Item 4: Allowance for Differing Site Conditions**

This allowance will compensate the CONTRACTOR the additional expenses and measures taken to address and to mitigate Differing Site Condition(s) as defined and approved by the CITY per conditions set forth in Section 01253 of the specification in addition to abandoning and/or relocation of site utilities encountered during construction but not shown on the current project plans as directed by the CITY or the ENGINEER.

This allowance will compensate CONTRACTOR in the event of an omission of an existing utility in the contract, or if an existing utility needs to be relocated due to its location in the field differing significantly from that shown in the contract drawings, and in the opinion of the ENGINEER that the utility relocation is necessary to avoid impacting the Work. If actual utilities are within 2 feet off location shown on the drawings (centerline to centerline), there will be no compensation provided under this bid item. This allowance shall not compensate the CONTRACTOR to relocate existing utilities shown on the contract drawings proposed or specified for relocation by others.

d. **Bid Item 5: Allowance for Permits**

Reimbursement for CONTRACTOR's expenses for permits fees without compensation for any mark-ups. The CONTRACTOR shall include in the Bid the amount stipulated under PERMITS in the SCHEDULE OF WORK AND PRICES in the Bid Proposal as an allowance for the costs of all required permits.

Costs shall be limited to the actual fees paid to the agencies and will be reimbursed based on original receipts only. No overhead, profit, or mark-ups shall be added to the cost of the permits. The CONTRACTOR shall deliver to the ENGINEER with each permit the original receipt. After all permits have been obtained and delivered, the actual costs of all permits shall be reviewed by the CONTRACTOR and the ENGINEER.

e. **Bid Item 6: Allowance for Opportunity to Partner**

Reimbursement of 100 percent of the expenses for partnering, as determined by Section 01353 of these GENERAL REQUIREMENTS. There shall be no mark-ups for overhead or profit.

f. **Bid Item 7: Allowance for City Inspection**

Reimbursement for the CONTRACTOR's expenses associated with payment of City inspection and travel costs as described in Section 01453. There shall be no mark-ups for overhead or profit.

g. **Bid Item 8: Allowance for Sewer Bypass**

This allowance item is for the design and installation of any bypasses (NOS, local sewers and HCs) deemed necessary by the CONTRACTOR and LOS ANGELES SANITATION AND ENVIRONMENT (LASAN) to complete all the work. The temporary bypass shall encroach within City's public right of way. This item shall include all work including labor, materials, equipment and any incidentals to design, implement, and maintain bypass operation without any interruptions of construction activities. For further details, refer to Section 01563 and the contract drawings. Refer to section 01212 for overhead and profit markups.

h. **Bid Item 9: Allowance for Additional Potholing**

This bid item allows compensation for exploratory excavations by potholing to verify or to discover the actual locations and size of existing underground utilities or improvements that were not shown on the plans. This allowance shall only be used to reimburse the CONTRACTOR for potholing utilities not shown on the plans. For further details refer to section 01732.

i. **Bid Item 10: Allowance for Archaeological Monitoring**

Reimbursement for archaeological monitoring and consultation. There shall be no mark-ups for overhead or profit. For further details refer to section 01562.

j. **Bid Item 11: Allowance for Street Damage Restoration Fee**

Reimbursement for street damage restoration fees. There shall be no mark-ups for overhead or profit. For further details refer to section 02710.

k. **Bid Item 12: Allowance for Urban Forest**

This allowance will compensate the contractor for the installation of additional landscaping improvements in the project area south of the Arts Plaza in lieu of the construction of the decomposed granite as shown in the contract drawings. This allowance shall include furnishing all labor, materials, tools, equipment, and incidentals to install up to (21) 24" box trees, (65) 5-gallon shrubs, (550) 1-gallon shrubs, (20) landscape boulders, 7,780 square feet of 4" deep mulch, and 7,780 square feet of Soil-2A with Soil-2B at tree locations. This allowance shall also include the installation of a non-drip irrigation system for the 7,780 square foot planting area, the installation of a separate power service from LADWP, the construction of 280 linear feet of 8' tall CMU screen walls including foundations, and performing all earthwork activities in the area including the removal of excess soils.

1

l. **Bid Item 13: Allowance for Additional Perimeter Fencing and Gates**

This allowance will compensate the contractor for additional perimeter fencing, gates and hardware that is needed to enclose the park perimeter to the public right-of-way and neighboring parcels. This allowance shall include furnishing all labor, materials, tools, equipment, and incidentals.

1

C. Bid Item 14: West Park Improvements

Bid item shall include furnishing all labor, materials, tools, equipment, and incidentals for the completion of all work within the West Park limits between Mateo Street and Santa Fe Avenue. Work shall include, but not be limited to, demolition; relocations; reconstructions; adjustments to grade; clearing and grubbing; erosion and sediment control; SWPPP preparation and implementation; earthwork including all import, export, excavation, overexcavation, shoring, trenching, subgrade preparation, backfill, and compaction; hardscape improvements; planting improvements and plant establishment; irrigation improvements; site furnishing improvements; signage improvements; soil improvements; potable water system improvements; sanitary sewer system improvements; storm drain system improvements; electrical improvements; west restroom building construction; and west café building construction.

Payment for all West Park Improvements shall be at the contract bid lump sum (LS) price. No additional compensation will be allowed.

1

D. Bid Item 15: Arts Plaza and Los Angeles River Tunnel Improvements

Bid item shall include furnishing all labor, materials, tools, equipment, and incidentals for the completion of all work within the Arts Plaza limits between Santa Fe Avenue and the Los Angeles River. This item shall also include the improvements to the project area located south of the Arts Plaza. Work shall include, but not be limited to, demolition; relocations; reconstructions; adjustments to grade; clearing and grubbing; erosion and sediment control; SWPPP preparation and implementation; earthwork including all import, export, excavation, overexcavation, shoring, trenching, subgrade preparation, backfill, and compaction; hardscape improvements; terracing construction; retaining wall construction; tunnel reconstruction; tunnel rehabilitation including resurfacing and painting improvements; planting improvements and plant establishment; irrigation improvements; site furnishing improvements; signage improvements; Los Angeles River flood warning system design and installation; soil improvements; potable water system improvements; sanitary sewer system improvements; storm drain system improvements; and electrical improvements.

Payment for all Arts Plaza and Los Angeles River Tunnel Improvements shall be at the contract bid lump sum (LS) price. No additional compensation will be allowed.

1

E. Bid Item 16: East Park Improvements

Bid item shall include furnishing all labor, materials, tools, equipment, and incidentals for the completion of all work within the East Park limits between the Los Angeles River and the U.S. 101 Highway, as well as the planting and irrigation improvements between the U.S. 101 Highway and the northbound on-ramp. Work shall include, but not be limited to, demolition; relocations; reconstructions; adjustments to grade; clearing and grubbing; erosion and sediment control; SWPPP preparation and implementation; earthwork including all import, export, excavation, overexcavation, shoring, trenching, subgrade preparation, backfill, and compaction; hardscape improvements; synthetic turf improvements; terracing construction; retaining curb construction; Viaduct historic arch improvements; Viaduct historic lighting improvements; planting improvements and plant establishment; irrigation improvements; site furnishing improvements; signing and striping improvements; soil improvements; potable water system improvements; sanitary sewer system improvements; storm drain system improvements; electrical improvements; and the east buildings construction.

Payment for all East Park Improvements shall be at the contract bid lump sum (LS) price. No additional compensation will be allowed.

1 **F. Bid Item 17: Roadway Improvements**

Bid item shall include furnishing all labor, materials, tools, equipment, and incidentals for the completion of all roadway improvements along Mateo Street, Santa Fe Avenue, Mission Road, Anderson Street, and Clarence Street. Work shall include, but not be limited to, demolition; relocations; reconstructions; adjustments to grade; clearing and grubbing; erosion and sediment control; SWPPP preparation and implementation; earthwork including all import, export, excavation, overexcavation, shoring, trenching, subgrade preparation, backfill, and compaction; hardscape improvements; site furnishings improvements; utility connections; signing and striping improvements; storm drain system improvements; and electrical improvements;.

Payment for all Roadway Improvements shall be at the contract bid lump sum (LS) price. No additional compensation will be allowed.

1 **G. Bid Item 18: Security Camera Infrastructure**

Bid item shall include furnishing all labor, materials, tools, equipment, and incidentals for the trenching and installation of approximately 5,000 linear feet of 4” diameter electrical conduit with pull strings and up to thirty-five 24”x36”x24” junction boxes. This infrastructure shall be used for the future installation of CCTV system. Junction boxes shall be concrete, traffic rated, and equipped with a locking cover. Work shall include, but not be limited to, trenching, conduit and pull tape installation, reinforced concrete bedding, backfill, compaction, and junction box installation.

Payment for all Security Camera Infrastructure work shall be at the contract bid lump sum (LS) price. No additional compensation will be allowed.

1 **H. Bid Item 19: Remedial Action Plan Permitting and Regulatory Compliance**

Bid item shall include furnishing all labor, materials, tools, equipment, and incidentals for the completion of all work for permitting and regulatory compliance as described in the Remedial Action Plan included as Attachment No. 2 of the Project Specifications. Work shall include, but not be limited to, preparing all required plans and submittals, notifying all regulatory agencies, obtaining all permitting and regulatory approvals, and paying all fees. CONTRACTOR must possess a current Class A General Contractor’s license with a HAZ Certification.

Payment for all Remedial Action Plan Permitting and Regulatory Compliance work shall be at the contract bid lump sum (LS) price. No additional compensation will be allowed.

1 **I. Bid Item 20: Remedial Action Plan Preliminary Activities**

Bid item shall include furnishing all labor, materials, tools, equipment, and incidentals for the completion of all preliminary activity work as described in the Remedial Action Plan included as Attachment No. 2 of the Project Specifications. Work shall include, but not be limited to, the performance of all site inspections, screenings, and site preparations.

Payment for all Remedial Action Plan Preliminary Activities work shall be at the contract bid lump sum (LS) price. No additional compensation will be allowed.

1

J. Bid Item 21: Remedial Action Plan Engineering Oversight

Bid item shall include furnishing all labor, materials, tools, equipment, and incidentals for the completion of all engineering oversight work as described in the Remedial Action Plan included as Attachment No. 2 of the Project Specifications. Work shall include, but not be limited to, all field monitoring, sampling, analytical testing, documentation preparation, and reporting.

Payment for all Remedial Action Plan Engineering Oversight work shall be at the contract bid lump sum (LS) price. No additional compensation will be allowed.

1

K. Bid Item 22: Remedial Action Plan Soil Excavation

Bid item shall include furnishing all labor, materials, tools, equipment, and incidentals for removing, shoring as needed, and temporarily stockpiling waste soils in accordance with the Remedial Action Plan included as Attachment No. 2 of the Project Specifications. Quantities shall be based upon “cut” yardage quantities. Any swell of the “cut” material shall not be added to the “cut” quantities and shall be considered included within the unit price for each “cut” cubic yard of in place material.

Payment for all Remedial Action Plan Soil Excavation work shall be at the contract unit price bid per Cubic Yard. No additional compensation will be allowed.

1

L. Bid Item 23: Remedial Action Plan RCRA-Hazardous Waste Soil Removal

Bid item shall include furnishing all labor, materials, tools, equipment, and incidentals for loading, transporting, and disposing of RCRA hazardous waste soil at a Class I landfill in accordance with the Remedial Action Plan included as Attachment No. 2 of the Project Specifications.

Payment for all Remedial Action Plan RCRA-Hazardous Waste Soil Removal work shall be at the contract unit price bid per Ton. No additional compensation will be allowed.

1

M. Bid Item 24: Remedial Action Plan Non-RCRA-Hazardous Waste Soil Removal

Bid item shall include furnishing all labor, materials, tools, equipment, and incidentals for loading, transporting, and disposing of non-RCRA hazardous waste soil at a Class II landfill in accordance with the Remedial Action Plan included as Attachment No. 2 of the Project Specifications.

Payment for all Remedial Action Plan Non-RCRA-Hazardous Waste Soil Removal work shall be at the contract unit price bid per Ton. No additional compensation will be allowed.

1

N. Bid Item 25: Remedial Action Plan Non-Hazardous Waste Soil Removal

Bid item shall include furnishing all labor, materials, tools, equipment, and incidentals for loading, transporting, and disposing of non-hazardous waste soil in accordance with the Remedial Action Plan included as Attachment No. 2 of the Project Specifications.

Payment for all Remedial Action Plan Non-Hazardous Waste Soil Removal work shall be at the contract unit price bid per Ton. No additional compensation will be allowed.

1

O. Bid Item 26: Remedial Action Plan Soil Vapor Extraction Pilot Test in AOC 8

Bid item shall include furnishing all labor, materials, tools, equipment, and incidentals for the completion of all work for the Soil Vapor Extraction Pilot Test in AOC 8 as described in the Remedial Action Plan included as Attachment No. 2 of the Project Specifications. Work shall include, but not be limited to, all well installations, temporary piping installations, equipment rentals, monitoring, sampling, testing, and reporting.

Payment for all Remedial Action Plan Soil Vapor Extraction Pilot Test in AOC 8 work shall be at the contract bid lump sum (LS) price. No additional compensation will be allowed.

1

P. Bid Item 27: Remedial Action Plan Soil Vapor Extraction in AOC 7

Bid item shall include furnishing all labor, materials, tools, equipment, and incidentals for the completion of all work for the Soil Vapor Extraction in AOC 7 as described in the Remedial Action Plan included as Attachment No. 2 of the Project Specifications. Work shall include, but not be limited to, all well installations, conveyance piping installations, equipment rentals, obtaining power from LADWP, monitoring, sampling, testing, reporting, and performance of the 12-month operations and monitoring period.

Payment for all Remedial Action Plan Soil Vapor Extraction in AOC 7 work shall be at the contract bid lump sum (LS) price. No additional compensation will be allowed.

1

Q. Bid Item 28: Remedial Action Plan Waste Stabilization Analysis

Bid item shall include furnishing all labor, materials, tools, equipment, and incidentals for the completion of the waste stabilization analysis as described in the Remedial Action Plan included as Attachment No. 2 of the Project Specifications.

Payment for the Remedial Action Plan Waste Stabilization Analysis shall be at the contract bid lump sum (LS) price. No additional compensation will be allowed.

1

R. Bid Item 29: Methane Testing

Bid item shall include furnishing all labor, materials, tools, equipment, and incidentals for the completion of methane testing to determine the methane gas concentrations and methane gas pressures at the proposed locations of the West Park restroom building and café building in accordance with the Division 71 Methane Seepage Regulations and the LADBS Site Testing Standards for Methane (Information Bulletin Document No. P/BC 2020-101).

Payment for all Methane Testing work shall be at the contract bid lump sum (LS) price. No additional compensation will be allowed.

(END OF SECTION)

SECTION 01212
FIXED CASH ALLOWANCE ITEMS

1.1 THE REQUIREMENT

A. A fixed cash allowance has been allocated to each of the following items of the Bid Breakdown (see Bid Proposal). Requirements for each Fixed Cash Allowance Item are specified in the GENERAL REQUIREMENTS (GR) section referenced below. Overhead and Profit, at the rates listed below, shall be added to the actual invoiced amount.

Bid Item No.	Description	Overhead and Profit
1	31. Allowance to furnish all labor, tools, equipment, and materials for the installation of accent lighting for the two (2) art pieces (by ARTIST) (GR Section 01112)	Per Sec. 01254

B. If these items are not executed, or are only partially executed, or the allowance for any item is not expended or partially expended, then a deductive Change Order shall be issued for the amount that is not expended. If, however, these items are over expended (with ENGINEER'S prior approval), then an appropriate Change Order shall be executed in accordance with the provisions of the GENERAL REQUIREMENTS Section 01254 –- CHANGE ORDERS, except for Overhead and Profit wherein the above listed rates shall apply.

(END OF SECTION)

SECTION 01280
MEASUREMENT AND PAYMENT

PART 1 - GENERAL

1.01 PAYMENT

A. Upon Contract award, the accepted Schedule of Work and Prices shall become the Payment Schedule. Payment for Work under the Contract shall be made at the unit prices listed in the Payment Schedule. For lump sum bid items, payment shall be made in accordance with Section 01298.

B. Payment for the measured quantities of Work performed shall be considered full compensation for all of the CONTRACTOR's costs associated with the performance of the Work. These costs comprise direct labor, materials, tools, equipment, transportation, supplies, incidentals, and subcontract Work; and indirect costs such as field and home office overhead, consulting and design services, establishment, operation and removal of general plant, taxes, insurance, permits, bond, profit, and contingencies for the performance of all Work specified.

C. The costs for conforming to the requirements for measuring quantities shall be considered included in the fixed, unit, or lump-sum prices paid for the quantities being measured, and no additional compensation will be made therefore.

D. Except for items subject to the Variation in Quantities clause, the unit prices listed in the Payment Schedule shall be applicable for calculating the amount payable under each item of the Schedule. Estimated quantities indicated in the Payment Schedule are for bidding purposes only. Payment will be determined by actual measured quantities of the Work installed/performed as verified by the INSPECTOR.

E. Work specified or shown on the drawings for which the Payment Schedule does not provide a separate lump sum or unit price is considered incidental and is not separately paid. The cost for such Work is compensated in the prices bid for other Work items and no additional compensation shall be allowed.

1.02 MEASUREMENT OF QUANTITIES

A. Measure quantities in accordance with standard industry practice and as specified herein. The CITY will verify measurements. Measure quantities to the nearest whole number of units. Round down fractional units less than one-half; round up fractional units one-half or greater.

1. Measure sewer debris volumes by weight as described herein.

2. Measure areas in two mutually perpendicular axes in the plane of the surface being measured.

3. Measure linear quantities along the longitudinal centerline of the item, except as otherwise specified.

B. Measurement of a lump sum item shall be for the entire item, unit of Work, structure, or combination thereof, as listed or indicated in the Payment Schedule, except as otherwise

specified. Progress payments for lump sum items in the Payment Schedule shall be made in accordance with Section 01298.

C. Determine quantities of Work performed for payment purposes and submit them to the INSPECTOR for approval. Assist the INSPECTOR in the taking of measurements by providing equipment, workers, and survey crews as required to verify quantities in accordance with the provisions for measurement specified herein.

1.03 REJECTED, EXCESS, AND WASTED MATERIALS

A. The following shall not be measured for payment:

1. Quantities of material wasted or otherwise disposed.

2. Rejected loads of material, including material rejected after it has been placed for failure to comply with specified requirements.

3. Material remaining on the transporting vehicle or in the pipeline.

4. Muck material not removed from designated location.

5. Material placed outside specified or indicated lines or limits.

6. Material not incorporated into the Work.

7. Material remaining on hand after completion of the Work.

B. No payment will be made for loading, hauling, and disposing of rejected material.

1.04 PAYMENT SCHEDULE FOR LA HANDS ART SCULPTURE FOUNDATIONS

1

A. **BID ITEM 30: Art Piece Foundation and Pedestal** (Lump Sum)

1. This lump sum bid item compensates the CONTRACTOR for the necessary labor, tools, equipment and materials for the construction of two (2) foundations and pedestals. Installation of the ARTWORK is by other (refer to Sections 01112 and 01120 for more information).

1

B. **BID ITEM 31: Allowance Items**

1. Allowance items have been established in the Bid Schedule to compensate the CONTRACTOR for the cost of performing such items as the CITY may require for the construction of the Work, but for which it is impracticable to ascertain the scope prior to bid. If the total cost compensable under each allowance item differs from the amount set forth in the SCHEDULE OF WORK AND PRICES, the Contract Price shall be adjusted by a Change Order for the difference between the total actual costs and the allowance amount as an additional amount due the CONTRACTOR or a credit to the CITY, as appropriate.

2. Reimbursement for all allowance items shall be as determined by Section 01212.

3. The allowance items are as follows:

a. **Bid Item 31: Allowance for Art Piece Accent Lighting**

This allowance shall be used to compensate the CONTRACTOR for the necessary labor, tools, equipment and materials for the installation of electrical conduit, wiring, and accent lighting fixture(s) for each art piece. For further details refer to section 01112.

(END OF SECTION)

SECTION 01212
FIXED CASH ALLOWANCE ITEMS

1.1 THE REQUIREMENT

A. A fixed cash allowance has been allocated to each of the following items of the Bid Breakdown (see Bid Proposal). Requirements for each Fixed Cash Allowance Item are specified in the GENERAL REQUIREMENTS (GR) section referenced below. Overhead and Profit, at the rates listed below, shall be added to the actual invoiced amount.

Bid Item No.	Description	Overhead and Profit
33.	**Allowance for Payment for Permits**	**0%**
34.	**Allowance for Differing Site Conditions**	**Per Sec. 01254**
35.	**Allowance for Community Impact Mitigation**	**5%**

1

B. If these items are not executed, or are only partially executed, or the allowance for any item is not expended or partially expended, then a deductive Change Order shall be issued for the amount that is not expended. If, however, these items are over expended (with ENGINEER'S prior approval), then an appropriate Change Order shall be executed in accordance with the provisions of the GENERAL REQUIREMENTS Section 01254 –- CHANGE ORDERS, except for Overhead and Profit wherein the above listed rates shall apply.

C. The ENGINEER'S AND INSPECTOR'S field office supply allowance is to be used at the ENGINEER'S and/or INSPECTOR'S discretion to purchase office supplies and/or office equipment, perform repairs to field offices or equipment owned or leased by the City, pay field office utility bills, purchase reference documents, etc. The items covered by this allowance are in addition to those required to be furnished by the CONTRACTOR under GR Section 01721-Mobilization. The CONTRACTOR shall be reimbursed the actual invoice amount plus the markup allowed by Section A, above.

(END OF SECTION)

SECTION 01280
MEASUREMENT AND PAYMENT

PART 1 - GENERAL

1.01 PAYMENT

A. Upon Contract award, the accepted Schedule of Work and Prices shall become the Payment Schedule. Payment for Work under the Contract shall be made at the unit prices listed in the Payment Schedule. For lump sum bid items, payment shall be made in accordance with Section 01298.

B. Payment for the measured quantities of Work performed shall be considered full compensation for all of the CONTRACTOR's costs associated with the performance of the Work. These costs comprise direct labor, materials, tools, equipment, transportation, supplies, incidentals, and subcontract Work; and indirect costs such as field and home office overhead, consulting and design services, establishment, operation and removal of general plant, taxes, insurance, permits, bond, profit, and contingencies for the performance of all Work specified.

C. The costs for conforming to the requirements for measuring quantities shall be considered included in the fixed, unit, or lump-sum prices paid for the quantities being measured, and no additional compensation will be made therefore.

D. Except for items subject to the Variation in Quantities clause, the unit prices listed in the Payment Schedule shall be applicable for calculating the amount payable under each item of the Schedule. Estimated quantities indicated in the Payment Schedule are for bidding purposes only. Payment will be determined by actual measured quantities of the Work installed/performed as verified by the INSPECTOR.

E. Work specified or shown on the drawings for which the Payment Schedule does not provide a separate lump sum or unit price is considered incidental and is not separately paid. The cost for such Work is compensated in the prices bid for other Work items and no additional compensation shall be allowed.

1.02 MEASUREMENT OF QUANTITIES

A. Measure quantities in accordance with standard industry practice and as specified herein. The CITY will verify measurements. Measure quantities to the nearest whole number of units. Round down fractional units less than one-half; round up fractional units one-half or greater.

1. Measure sewer debris volumes by weight as described herein.

2. Measure areas in two mutually perpendicular axes in the plane of the surface being measured.

3. Measure linear quantities along the longitudinal centerline of the item, except as otherwise specified.

B. Measurement of a lump sum item shall be for the entire item, unit of Work, structure, or combination thereof, as listed or indicated in the Payment Schedule, except as otherwise specified. Progress payments for lump sum items in the Payment Schedule shall be made in accordance with Section 01298.

C. Determine quantities of Work performed for payment purposes and submit them to the INSPECTOR for approval. Assist the INSPECTOR in the taking of measurements by providing equipment, workers, and survey crews as required to verify quantities in accordance with the provisions for measurement specified herein.

1.03 REJECTED, EXCESS, AND WASTED MATERIALS

A. The following shall not be measured for payment:

1. Quantities of material wasted or otherwise disposed.

2. Rejected loads of material, including material rejected after it has been placed for failure to comply with specified requirements.

3. Material remaining on the transporting vehicle or in the pipeline.

4. Muck material not removed from designated location.

5. Material placed outside specified or indicated lines or limits.

6. Material not incorporated into the Work.

7. Material remaining on hand after completion of the Work.

B. No payment will be made for loading, hauling, and disposing of rejected material.

1.04 PAYMENT SCHEDULE FOR CBD REHAB UNIT 11A

1 A. **BID ITEM 32: General Mobilization** (Lump Sum)

1. The amount payable under this item is fixed at the bid price and shall be no more than 5 percent of the Contract amount. This bid price for costs of work in advance of construction operations. This Bid Item is not included and attributable directly to any other specific Bid Items. For progress payments, the amount payable under this item shall be determined in accordance with Section 01292.

2. The Work shall include:

a. The movement of personnel, equipment, supplies and incidentals to the project sites.

b. Temporary laydown area and obtaining all permits and clearance requirements to secure and utilize the laydown area

c. The establishment of field offices, parking, utilities and other facilities at the Work Area Sites for the CITY and the CONTRACTOR, as specified in Section 01721.

d. Work, such as engineering designs and submittals, must be performed and expended in advance of actual construction. This Work shall include any additional investigations of the condition of the NOS that the CONTRACTOR deems necessary to conduct the Work in compliance with applicable safety and other regulatory requirements.

e. Applying for permits (if applicable) and coordinating work with other agencies such as USACE, LADOT, AQMD, LADBS, LADWP, SCG and other utility companies and public agencies.

f. Work, such as handling homeless encampment within and/or adjacent to work site (if applicable) & community outreach regarding disruption to the Los Angeles River Bike Path and Recreational Parks (if applicable) at pit locations and bypass locations must be performed and resolved during mobilization. This work shall be, but is not limited to, installation 12 feet chain link and gates per S-691 around the pit(s) and/or at field office locations.

CONTRACTOR shall coordinate with Community Outreach Team (COT) of BOS for any related issues mentioned above:

Tonya Durrell
(213) 978-0333 (office)
(213) 798-6085 (cell)
Tonya.durrell@lacity.org

In addition, contact LA – Homeless Services Authority at (213) 225-6581 to handle any homeless issues

1 CONTRACTOR shall comply with all instructions and requirements of the COT and the Mayor's office regarding homeless encampment issues. In addition, the CONTRACTOR shall comply with all instructions and requirements by the PAO, LADOT, LA County, and Mayor's office regarding any construction/bypass activities. All the costs related and associated with these issues shall be included in the Bid Item 32 "Mobilization".

1 B. **BID ITEMS 33 through 35: Allowance Items**

1. Allowance items have been established in the Bid Schedule to compensate the CONTRACTOR for the cost of performing such items as the CITY may require for the construction of the Work, but for which it is impracticable to ascertain the scope prior to bid. If the total cost compensable under each allowance item differs from the amount set forth in the SCHEDULE OF WORK AND PRICES, the Contract Price shall be adjusted by a Change Order for the difference between the total actual costs and the allowance amount as an additional amount due the CONTRACTOR or a credit to the CITY, as appropriate.

2. Reimbursement for all allowance items shall be as determined by GR-Section 01212.

3. The allowance items are as follows:

1

a. **Bid Item 33: Allowance for Permits**

Reimbursement for CONTRACTOR's expenses for permits fees without compensation for any mark-ups. The CONTRACTOR shall include in the Bid the amount stipulated under PERMITS in the SCHEDULE OF WORK AND PRICES in the Bid Proposal as an allowance for the costs of all required permits.

Costs shall be limited to the actual fees paid to the agencies and will be reimbursed based on original receipts only. No overhead, profit, or mark-ups shall be added to the cost of the permits. The CONTRACTOR shall deliver to the ENGINEER with each permit the original receipt. After all permits have been obtained and delivered, the actual costs of all permits shall be reviewed by the CONTRACTOR and the ENGINEER.

1

b. **Bid Item 34: Allowance for Differing Site Conditions**

This allowance will compensate the CONTRACTOR the additional expenses and measures taken to address and to mitigate Differing Site Condition(s) as defined and approved by the CITY per conditions set forth in Section 01253 of the specification in addition to abandoning and/or relocation of site utilities encountered during construction but not shown on the current project plans as directed by the CITY or the ENGINEER.

This allowance will compensate CONTRACTOR in the event of an omission of an existing utility in the contract, or if an existing utility needs to be relocated due to its location in the field differing significantly from that shown in the contract drawings, and in the opinion of the ENGINEER that the utility relocation is necessary to avoid impacting the Work. If actual utilities are within 2 feet off location shown on the drawings (centerline to centerline), there will be no compensation provided under this bid item. This allowance shall not compensate the CONTRACTOR to relocate existing utilities shown on the contract drawings proposed or specified for relocation by others.

1

c. **Bid Item 35: Allowance for Community Impacts Mitigation**

This allowance bid item shall be used solely to reimburse any/all CONTRACTOR's costs associated with performance of extra work related to community relations at the direction of the ENGINEER.

Reimbursement shall be determined by Section 01254 of the General Requirements

(1) Compensation for noise, vibration and other mitigation measures beyond the requirements indicated and specified in Sections 01561 and 01562 of these GENERAL REQUIREMENTS.

This allowance shall not compensate CONTRACTOR for costs associated with applying for or complying with requirements established because of any CONTRACTOR request for nighttime work hours beyond the allowable working hours. This allowance shall not compensate CONTRACTOR for any means or methods or required change to its means or methods to comply with Sections 01561 and 01562 of the GENERAL REQUIREMENTS.

(2) Construction Mitigation Fund: As part of CITY's Public Outreach Program, a Construction Mitigation Fund has been established which can include, but is not limited to, the following types of mitigation efforts by the CONTRACTOR to assist nearby residents or businesses, as approved by the City of Los Angeles Department of Public Works Public Affairs Office staff:

a. Purchasing car washing certificates, house cleaning/window washing certificates for residents near construction to mitigate for dust from the project site.

b. Coordinating with local businesses and property owners to allow access to their businesses/properties during construction

c. Producing and posting signs or banners for nearby businesses to inform customers that they are open during construction or to direct customers to an alternate access point.

d. Producing and placing an advertisement in the local newspaper to announce that the businesses near the construction are open during construction and/or to announce that the construction has finished, and the businesses are open.

1 C. **BID ITEM 36: Temporary Sewer Bypass**

This bid item is for the design and installation of any and all bypasses (CBD, local sewers and HCs) deemed necessary by the CONTRACTOR to complete all the work. The temporary bypass shall encroach within City's public right of way. The Lump Sum bid price shall include all work including labor, materials, equipment and any incidentals to implement and maintain bypass operation without any interruptions of construction activities.

Submittal(s) on bypass plan(s) shall be required for each setup throughout the project to the City Engineer, for approval.

Further, the scope shall include but not limited to planning implementing, potholing, excavation, trenching, temporary connections, disconnections, laying bypass pipes, maintaining the bypass operation and restoration of all services after the bypass operation is completed.

The cost shall also include but not limited to any special measures like installing stop logs, constructing dams inside the NOS to block or divert flows for accomplishing lining operation during slip-lining and/or during man-entry, or during open trench operation, installing maintenance holes, chimneys or reconnecting the lateral sewers/house connections.

Developing and negotiating any temporary easement with private property/business owner(s) and any public agencies such as USACE, LA County, LADOT, Caltrans for routing the bypass pipeline and facilities, temporary storing the pipes, bulkhead before reinstallation shall be included in this bid item. Any permit process time delay may not be used as a basis for delay of work claim. The contractor is advised that USACE permit will take approximately 12 to 15 months for approval and no claim for delay will be given if the contractor chooses the LA River bike path route for the temporary bypass.

For any excavation work, bid item cost includes compliance with T-CAP and T-CUT requirements per Standard Plan S-477.

1 D. **Bid Item 37 – Worksite Traffic Control**

This lump sum price shall compensate the CONTRACTOR for the cost of designing, furnishing, implementing, monitoring and removing traffic signs and control details for the construction of all the WORK described herein of for the convenience of the CONTRACTOR. The CONTRACTOR shall include the cost for developing the traffic control details in their bid item for only those candidate work areas required for their work and other locations to facilitate their construction means and methods.

Traffic Control shall include preparation of Worksite Traffic Control Plan, submitting plan for review, and obtaining approval from appropriate agencies.

1 E. **Bid Item 38 – Pre and Post CCTV of existing host pipe**

The CONTRACTOR shall be compensated per lineal feet for the following:

a. Furnishing all data and associated report as outlined in section 500 under "Television Inspection", and the associated Brown Book.

b. All CCTV shall be submitted in a high-definition color digital format with a resolution no less than 720 per line. Data shall be given to Project Engineer in 2 (two) solid state external hard drives.

1 F. **Bid Item 39 – Sewer Cleaning and Debris Removal**

The CONTRACTOR shall be compensated per lineal feet for the following:

a. Labor, materials, equipment, and incidentals for cleaning and removing all debris out of the sewer per section 500 of the SSPWC and the associated Brown Book.

b. Refer to the technical specification Section 02955 "Restoration of Underground Pipe", for further details on cleaning process to bring the interior condition of the host pipe to an acceptable condition for installing liners. Refer to technical specification Section 02590 "Cleaning of Brick/Clay Tiled Liner Host Pipe".

c. The price bid per linear foot (LF) shall compensate the CONTRACTOR for the cost of performing all work associated with the sewer cleaning, including removal and disposal of falling tiles and bricks. The CONTRACTOR shall exercise with care not to collapse the sewer.

d. For progress payments, the amount payable under this item shall be determined in accordance with the liner foot (LF) of sewer cleaned.

1 G. **Bid Item 40 – Storing, hauling, and disposal of Debris – Non-Hazardous/Contaminated**

The price per dry-ton shall include all work including labor, materials, equipment and incidentals for removing, hauling, stockpiling, testing, handling, treating and disposal of all debris removed from the sewer by following all applicable local & state laws and regulations and per section 500 of the SSPWC. All costs associated with the collection and testing of samples shall also be included in the bid price. Laboratory tests must have determined and classified this quantity as contaminated but non-Hazardous. Debris with levels of TRPH (crude oil, waste oil and

diesel) great than 100 ppm is gasoline greater than 10 ppm, or benzene, toluene, ethylbenzene, and xylenes (BTEX) greater than 1/50/50/50 ppm respectively will be considered contaminated.

The weight shall be per weigh-master certificates/tickets at the disposal site or per weight measured and recorded in presence of the Inspector(s) prior to disposal but not before draining excess water for at least 24 hours.

1 H. **Bid Item 41 – Storing, hauling, and disposal of Debris – Hazardous/Contaminated (Incremental Cost)**

The price per dry-ton shall include all additional work and costs, beyond those covered in Bid Item 40, for removal and disposal of material that is identified as hazardous during testing. The price shall include all additional labor, materials equipment, and incidentals for removing, hauling, stockpiling, testing handling, treating and disposal of hazardous debris removed from the sewer. All costs associated with the collection and testing of samples, beyond those required to satisfy Bid Item 40, shall be included in the price. Laboratory tests must have determined and classified this quantity as HAZARDOUS to qualify for payment under Bid Item 41.

The weight shall be per weigh-master certificates/tickets at the disposal site or per weight measured and recorded in presence of the Inspector(s) prior to disposal but not before draining excess water for at least 24 hours

Payment to the CONTRACTOR for debris quantities classified as HAZARDOUS shall be made from both unit prices from bid items 40 and 41. The total quantities listed for the bid items 40 and 41 [see Schedule of work & prices] refer to the same volume of debris to be removed from this project.

1 ~~I.~~ **Bid Item 42 – Rehabilitate Existing 36" Circular Sewer by Cured-in-Place Pipe**

The price bid per linear foot (LF) shall compensate the CONTRACTOR for the installation of the liner per technical specification, including all labor and material, and all other related works.

For progress payments, the amount payable under this item shall be determined in accordance with the liner foot (LF) installed.

1 J. **Bid Items 43 – Construct and Backfill Pit #1, and remove and replace 36" VCP**

The lump sum price shall include all costs associated with construction, removal and relocation of existing city utilities and improvements such as sewers, storm drains, abandoned pipes, maintenance holes, street light conduits and appurtenances, groundwater dewatering system (if applicable), maintenance and restoration of the area to original condition per plan in connection with rehabilitating the pipe. Further, providing/maintaining construction access but not limited to, excavation of the pit including demolition, support, protection, waterproofing, shoring, fencing, k-rails, traffic control, daily steel plating to cover the pit during non-working hours, all utility/utility pole(s) support and protection (including overhead utilities), tree trimming (if applicable), covering, sealing concrete blanketing the liner pipe within the pit, backfilling the pit, pit worksite security, removing the shoring and lagging and restoring all existing street improvements including reconstruction of access ramps, curb and gutter, driveway, alley apron, and sidewalk that is affected by the construction activities to City standards. Liner pipe installed

through pits shall be paid separately by the linear foot as part of the liner pipe cost. (See Bid Item for Sewer rehab). The CONTRACTOR shall not close/block entrances to any businesses.

For any excavation work, bid item cost includes compliance with T-CAP and T-CUT requirements per Standard Plan S-477.

The unit bid price for Access Pit #1 includes all costs addressed above.

The CONTRACTOR will not be compensated for any eliminated access pits during construction or if any access pit work is not done per defined work scope.

All construction work must be performed within the public right of way and/or within established easement limits. If additional construction space is required, the CONTRACTOR shall be responsible for developing and negotiating any temporary construction easement with private property/Business owner(s) with no additional cost to the city.

1

K. **Bid Items 44 – Partially Remove and Reconstruct and rehabilitate (type I liner) existing Maintenance Hole (51509157)**

This lump sum price shall compensate the CONTRACTOR for the cost of all labor, materials, equipment, and incidentals to partially remove and reconstruct the maintenance hole shaft.

The work shall include all activities associated with the removal and reconstruction of the maintenance hole shaft per details indicated on plans. These activities include, but are not limited to, development of surface accesses, excavation, shoring, removal of existing maintenance hole frame and cover, brickwork, reconstruction of maintenance hole shaft, designing the shaft above the grade beam, installation of approved protective lining Type 1, and installation of new frame and cover per standard plan S-283-3.

For any excavation work, bid item cost includes compliance with T-CAP and T-CUT requirements per Standard Plan S-477.

1

L. **Bid Items 45 – Partially Remove and Reconstruct and rehabilitate (Type I liner) existing chamber (55109108)**

This lump price shall compensate the CONTRACTOR for the cost of all labor, materials, equipment, and incidentals to partially remove and reconstruct the maintenance hole shaft.

The work shall include all activities associated with the removal and reconstruction of the maintenance hole shaft per details indicated on plans. These activities include, but are not limited to, development of surface accesses, excavation, shoring, removal of existing maintenance hole frame and cover, brickwork, reconstruction of maintenance hole shaft per the contract documents, installation of new frame and cover per standard plan S-283-3, and installation of approved protective lining Type 1.

For any excavation work, bid item cost includes compliance with T-CAP and T-CUT requirements per Standard Plan S-477.

1

M. **Bid Items 46 – Rehabilitate Existing Siphon Outlet Structure (51509151) by Type I Liner**

This lump sum price shall compensate the CONTRACTOR for all the costs including all labor, materials, equipment, and incidentals to rehabilitate the existing siphon outlet structure with Type 1 liner per the contract documents.

1 N. **Bid Items 47 – Reconnect Existing Lateral Sewers (Connectivity Node 51509149)**

This lump sum price shall compensate the CONTRACTOR for all the costs including all labor, materials, equipment, and incidentals to reconnect existing later sewer along the alignment.

1 O. **Bid Items 48 – Grind one (1) protruding 8" lateral sewer at connectivity node 51509149 and two (2) protruding house connections near stations 223+97 and 223+ 98**

This lump sum price shall compensate the CONTRACTOR for all the costs including all labor, materials, equipment, and incidentals to grind protruding lateral sewer and house connections along the alignment.

(END OF SECTION)

ERIC GARCETTI
MAYOR

CITY OF LOS ANGELES
CALIFORNIA

Addendum No. 10
November 2, 2022

ENGINEERING
CITY OF LOS ANGELES
TED ALLEN, PE
CITY ENGINEER

Sixth Street Viaduct – Park, Arts, and River Connectivity (PARC) Improvements; Department of Cultural Affairs LA Hands Art Piece Foundations; and CBD Sewer Rehab Unit 11A – 6th Street Siphon to Santa Fe Avenue
W.O. E700235F & SZC14224

Bidders are required to acknowledge receipt of this addendum in the space provided on page 1-4 of the Bid Proposal. This addendum consists of this four-page transmittal and 6 attachments totaling 90 pages.

Bidders are hereby notified of the following changes:

I. MODIFICATIONS TO PLANS:

1. **Add Plan sheet drawing no. C-607A** to the Sixth Street Viaduct – Park, Arts, and River Connectivity Improvements Plan Drawings (1 page).

2. **Replace** Plan sheet drawing nos. C-400, C-401, C-403, C-403A, C-406, C-407, C-411, and C-607 with the **attached revised plan sheets C-400, C-401, C-403, C-403A, C-406, C-407, C-411, and C-607** in Sixth Street Viaduct – Park, Arts, and River Connectivity Improvements Plan Drawings (8 pages).

II. MODIFICATIONS TO SPECIFICATIONS:

1. **Add** the following to the Master General Requirements: **Master General Requirements Table of Contents** (2 pages).

2. **Add** the following to the Sixth Street Viaduct – Park, Arts, and River Connectivity Improvements Technical Specifications: **Sixth Street Viaduct – Park, Arts, and River Connectivity Improvements Technical Specifications Table of Contents** (5 pages).

3. **Add** the following section in the Sixth Street Viaduct – Park, Arts, and River Connectivity Improvements Technical Specifications: **Section 111136 Electric Vehicle Charging Equipment – Level 2** (9 pages).

4. **Replace** the following section in the Sixth Street Viaduct – Park, Arts, and River Connectivity Improvements Technical Specifications: **Section 02225 Lead Based Pain Removal** (14 pages).

5. **Add** the following section in the **Specifications: Sixth Street Viaduct – Park, Arts, and River Connectivity (PARC) Improvements Attachment No. 11 Sixth Street Viaduct Lead Sampling Report** (47 pages).

III. QUESTIONS BIDDERS (Q) AND ANSWERS FROM CITY (A):

(Q1) There is no Table of Contents for the Technical Specifications (file 1C-1 PARC TS). Please provide these, we need this to make sure the specs are complete.

(A1) The Table of Contents is included in Addendum No. 10.

(Q2) Please clarify who the manufacturer is regarding Security Screens & Frame for the buildings?

(A2) Perforated aluminum frame security shutters to be fabricated per drawings; frame/panel material, perforation pattern, size, and open area are as represented in drawing elevations 2/AE5-04 and corresponding details. There is no specific manufacturer.

(Q3) Who is furnishing and installing the 2 each EV chargers shown on plan sheet E-106? If the contractor is to furnish and install the EV chargers, please provide specifications & foundation details.

(A3) The EV chargers for the project will be furnished and installed by the project Contractor. Technical Specification Section 111136 is included in Addendum No. 10.

(Q4) Spec Section 02225 – Lead Based Paint Removal paragraph 1.5. Insurance Requirements (For Lead-Based Paint Removal) states “Bidder shall furnish within ten days after notification of pending award, properly completed City Special Endorsement forms or binders of insurance with coverage as set forth in the attached Insurance Requirements sheet. Failure to comply will render the bid nonresponsive and no award will be made to the firm.” Please confirm that these limits and provisions need to be added by General Contractor or if the Subcontractor performing the work outlined in this specification section needs to have this. Also confirm City will be providing 10 day notice of award as this is not standard practice.

(A4) A revised Master General Requirements Specification Section 02225 Lead Based Paint Removal has been included in Addendum No. 10 to address the issues raised in the question.

(Q5) Spec section 02225 – Lead Based Paint Removal paragraph 1.2.A.1 states "A Hazardous Material Survey Report not been prepared for the arch piece. It is expressly understood that the City will not be responsible for interpretations or conclusions drawn by the Bidder/Contractor as to the nature of or full extent of the existing lead-based paint". As this is a competitive Lump Sum Bid, we are requesting City to provide report for proper bidding or allocate an Allowance Order for this task.

(A5) Attachment No. 11 Sixth Street Viaduct Lead Sampling Report is included in Addendum No. 10.

(Q6) GR 01280 – Measurement and payment paragraph 1.04.A Bid Item 1: General Mobilization (lump sum) 2.f. states "Work, such as handling homeless encampment within and/or adjacent to work site (if applicable) & community outreach regarding disruption to the Los Angeles River Bike Path and Recreational Parks (if applicable) at pit locations and bypass locations must be performed and resolved during mobilization." In order to provide a competitive bid, we need to have a quantity (or maximum quantity) of encampments to be able determine GC efforts and associated costs for this task. We believe that limiting the efforts to the mobilization cost needs to be revised. Please provide a quantity and modify the SOV/measurements and payments to have a separate line item for this task.

(A6) Encampments outside of the project site in the public right-of-way will be managed by the City. The Contractor shall follow the project site security requirements to prevent non-authorized access as described in the Master General Requirements Section 01140 Contractor's Use of the Premises and 01721 Mobilization.

(Q7) Permits by GC: we are requesting a schedule of permits with estimated costs or for the City to consider providing reimbursable allowance order for permits due the magnitude or the project and the number of permits required by the GC to obtain and pay for.

(A7) An allowance for permits is included in Bid Item No. 5 of the Bid Proposal's Schedule of Work and Prices.

Sixth Street Viaduct – Park, Arts, and River Connectivity (PARC) Improvements; Department of Cultural Affairs LA Hands Art Piece Foundations; and CBD Sewer Rehab Unit 11A – 6th Street Siphon to Santa Fe Avenue
W.O. E700235F & SZC14224

Sincerely,

_____
Gregg Vandergriff, P.E.
Division Engineer
Project Award and Control Division
Bureau of Engineering

ADDENDUM 10

WEST PLANTER	SF = 8576	PERIM.=	444
SKU	DESCRIPTION	UNIT	QTY
ECS1346L	EPIC CHAMBER LG 46 INCH	EA	520
MA02000S	EPIC GROMMET	EA	190
MARA1510	AIR RECHARGE UNIT FOR EPIC	EA	1
MA12V2XC	EPIC VAULT DOUBLE	EA	6
TG635TAH0	6 INCH SDR-35 TEE	EA	1
TG63590EL	6 INCH SDR-35 90° ELBOW	EA	2
TG635CAP0	6 INCH SDR-35 CAP	EA	3
TG2DWVVT0	2" DWV VENT TEE	EA	140
TG2DWVVEL	2" DWV VENT ELBOW	EA	35
FG6SDR35	6 INCH SDR-35 HEADER	LF	332
FG2ABS10	2 INCH ABS CONNECTOR	LF	1535
FS0106PF	PIPE FLASHING (1"-6"ø)	EA	2
URPGRVBY	EPIC GRAVEL	TON	60.2
URPWCONS	EPIC SAND	TON	652.7

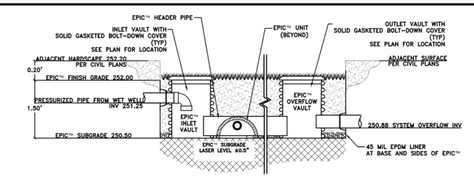

ALL DIMENSIONS ARE APPROXIMATE. CONTRACTOR TO VERIFY AND NOTIFY EPIC TWS AND PROJECT ENGINEER OF SIGNIFICANT DIFFERENCES.

NOTES

1. EPIC™ INLET VAULT
2. EPIC™ CONVEYANCE
3. EPIC™ CONVEYANCE CONNECTOR PIPE
4. EPIC™ OUTLET / OVERFLOW VAULT
5. EPIC™ HEADER PIPE
6. EPIC™ CLEANOUT/ ACCESS VAULT
7. TREE OPENINGS
8. VERTICAL PENETRATIONS THROUGH SYSTEM (LIGHT POLES, ETC.) SEE ARCH./CIVIL PLANS

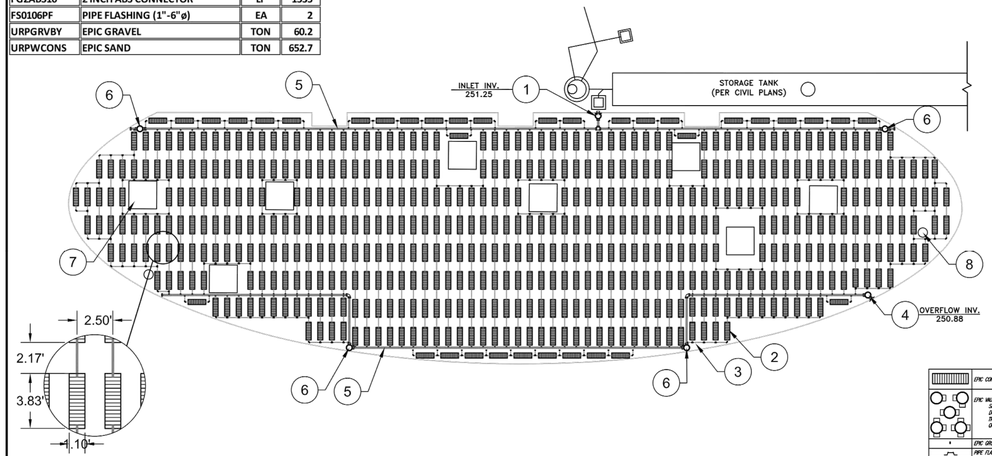

PLANTER DIMENSIONS SHOWN ARE INSIDE CLEAR DIMENSIONS, EXCLUDING WALL THICKNESS **NOT TO SCALE**

EPIC™ SYSTEM
WEST PLANTER
EAST SIXTH STREET
LOS ANGELES, CA 90013

DATE: 10-31-2022
DRAWN BY: VA
CHECKED BY: MG
EPIC™ ID: 221032
SHEET 3 OF 4

REGION 9
CA, NV, AZ, HI
LID INC.
818.855.2868
EPICTWS.COM

NOTES:
1. FOR THE PURPOSES OF CLARITY IN THE DRAWINGS, THE EPIC SYSTEM BY EPIC TOTAL WATER SOLUTIONS LLC HAS BEEN SHOWN. ALTERNATIVE SYSTEMS MAY BE APPROVED BY THE ENGINEER PROVIDED THE SYSTEMS PROVIDE EQUIVALENT PERFORMANCE AND MEET ALL OF THE REQUIREMENTS OF THE CONTRACT DOCUMENTS.
2. CONTRACTOR RESPONSIBLE FOR OBTAINING COUNTY OF LOS ANGELES DEPARTMENT OF PUBLIC HEALTH PERMIT FOR FINAL SYSTEM. SEE NOTES ON DETAIL 1, SHEET C-607 FOR ADDITIONAL INFORMATION.

1 SUBSURFACE NON-PRESSURIZED IRRIGATION SYSTEM WEST PARK LAYOUT

NTS REFERENCE SHEET C-403

EAST PLANTER	SF = 19724	PERIM.=	606
SKU	DESCRIPTION	UNIT	QTY
ECS1346L	EPIC CHAMBER LG 46 INCH	EA	1196
MA02000S	EPIC GROMMET	EA	304
MARA1510	AIR RECHARGE UNIT FOR EPIC	EA	1
MA12V2XC	EPIC VAULT DOUBLE	EA	6
MA12V3XC	EPIC VAULT TRIPLE	EA	1
TG635TAH0	6 INCH SDR-35 TEE	EA	2
TG635CAP0	6 INCH SDR-35 CAP	EA	5
TG2DWVVT0	2" DWV VENT TEE	EA	218
TG2DWVDST	2" DWV DOUBLE TEE	EA	7
TG2DWVVEL	2" DWV VENT ELBOW	EA	56
FG6SDR35	6 INCH SDR-35 HEADER	LF	465
FG2ABS10	2 INCH ABS CONNECTOR	LF	2980
FS0106PF	PIPE FLASHING (1"-6"ø)	EA	2
URPGRVBY	EPIC GRAVEL	TON	138.5
URPWCONS	EPIC SAND	TON	1501.2

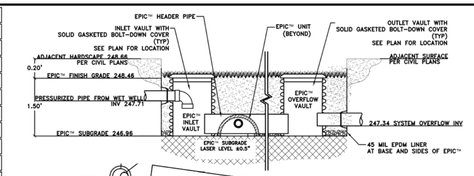

ALL DIMENSIONS ARE APPROXIMATE. CONTRACTOR TO VERIFY AND NOTIFY EPIC TWS AND PROJECT ENGINEER OF SIGNIFICANT DIFFERENCES.

NOTES

1. EPIC™ INLET VAULT
2. EPIC™ CONVEYANCE
3. EPIC™ CONVEYANCE CONNECTOR PIPE
4. EPIC™ OUTLET / OVERFLOW VAULT
5. EPIC™ HEADER PIPE
6. EPIC™ CLEANOUT/ ACCESS VAULT
7. TREE OPENINGS
8. VERTICAL PENETRATIONS THROUGH SYSTEM (LIGHT POLES, ETC.) SEE ARCH./CIVIL PLANS

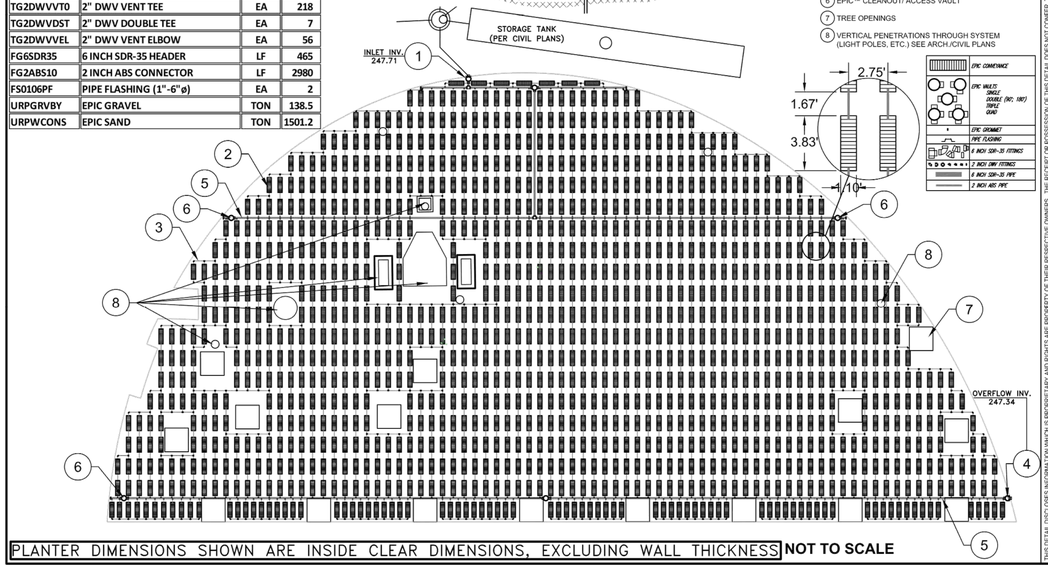

PLANTER DIMENSIONS SHOWN ARE INSIDE CLEAR DIMENSIONS, EXCLUDING WALL THICKNESS **NOT TO SCALE**

EPIC™ SYSTEM
EAST PLANTER
EAST SIXTH STREET
LOS ANGELES, CA 90013

DATE: 10-31-2022
DRAWN BY: VA
CHECKED BY: MG
EPIC™ ID: 221032
SHEET 4 OF 4

REGION 9
CA, NV, AZ, HI
LID INC.
818.855.2868
EPICTWS.COM

NOTES:
1. FOR THE PURPOSES OF CLARITY IN THE DRAWINGS, THE EPIC SYSTEM BY EPIC TOTAL WATER SOLUTIONS LLC HAS BEEN SHOWN. ALTERNATIVE SYSTEMS MAY BE APPROVED BY THE ENGINEER PROVIDED THE SYSTEMS PROVIDE EQUIVALENT PERFORMANCE AND MEET ALL OF THE REQUIREMENTS OF THE CONTRACT DOCUMENTS.
2. CONTRACTOR RESPONSIBLE FOR OBTAINING COUNTY OF LOS ANGELES DEPARTMENT OF PUBLIC HEALTH PERMIT FOR FINAL SYSTEM. SEE NOTES ON DETAIL 1, SHEET C-607 FOR ADDITIONAL INFORMATION.

2 SUBSURFACE NON-PRESSURIZED IRRIGATION SYSTEM EAST PARK LAYOUT

NTS REFERENCE SHEET C-411

BUREAU OF ENGINEERING
ENGINEERING
CITY OF LOS ANGELES

NO	REVISIONS:	DATE	BY:
7	BID ADDENDUM NO. 10	11/1/22	JS

BUILDING NO.

INDEX NO.

REGISTERED PROFESSIONAL ENGINEER JUSTIN T. SMITH No. 85736 EXP: 9-30-24 CIVIL STATE OF CALIFORNIA

"THIS PLAN WAS ELECTRONICALLY SIGNED AND SEALED"

CITY OF LOS ANGELES DEPARTMENT OF PUBLIC WORKS

GARY LEE MOORE, P.E., ENV SP CITY ENGINEER DATE:

ENGINEER:	JUSTIN SMITH	LIC. NO.	C-85736
DESIGNED BY:	JUSTIN SMITH	DESIGN GROUP	11/01/22
DRAWN BY:	ROBERT AGNEW		
CHECKED BY:	NATE SCHREINER		
APPROVED BY:	JASON L. FUSSEL		

SHEET TITLE: CIVIL DETAILS SHEET 8A

PROJECT: SIXTH STREET PARK, ARTS AND RIVER CONNECTIVITY IMPROVEMENTS (PARC)

ADDRESS: SIXTH STREET OVER THE LOS ANGELES RIVER

VERT. CONTROL: BM 12-0470, 1929 (NGVD29) - 1985 ADJUSTMENT
HORIZ. CONTROL: GPS; FIID AE 1704, EPOCH 1991.35

PLANS PREPARED BY:
TETRA TECH, INC.
707 WILSHIRE BLVD, 23RD FLR.
LOS ANGELES, CA 90017
PHONE: (213) 239-8866

WORK ORDER NO. E700235D
FILE NO. –
DRAWING NO. C-607A
SHEET OF SHEETS

11/2/2022 11:52:10 AM - O:\PROJECTS\IRVINE\2004\0\200-2004\3-17001\CAD\SHEETFILES\C-607B DETAILS.DWG - SMITH, JUSTIN

THE CITY OF LOS ANGELES OR ITS OFFICERS OR AGENTS SHALL NOT BE RESPONSIBLE FOR THE ACCURACY OR COMPLETENESS OF ELECTRONIC COPIES OF THIS PLAN SHEET.

REVISION DATES (DESIGN STAGE ONLY)

Sheet Version 3.0

ADDENDUM 10

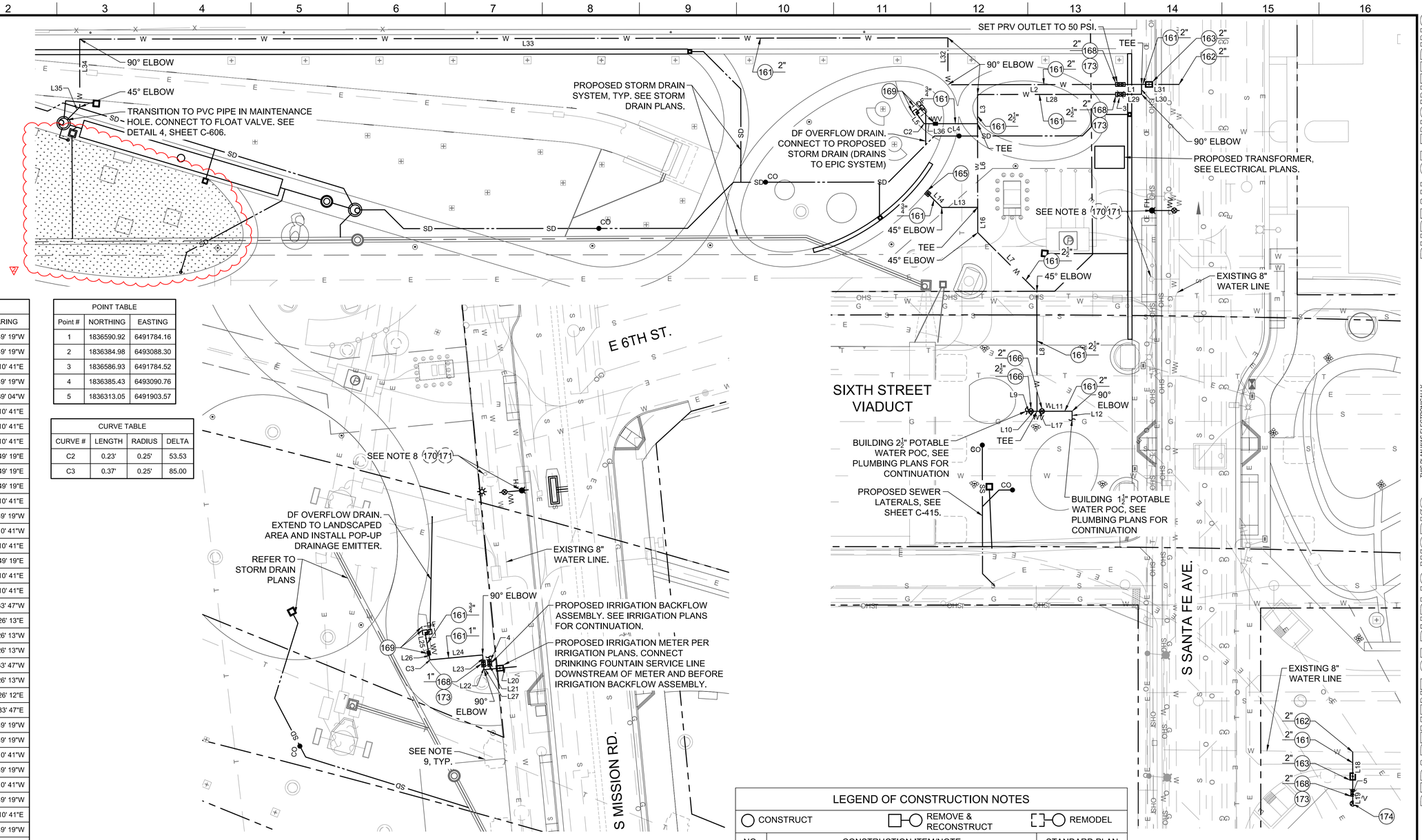

LINE TABLE		
LINE #	LENGTH	BEARING
L1	8.60'	S84° 49' 19"W
L2	69.90'	S84° 49' 19"W
L3	11.81'	S05° 10' 41"E
L4	17.11'	S84° 49' 19"W
L5	5.60'	N41° 39' 04"W
L6	33.96'	S05° 10' 41"E
L7	33.83'	S50° 10' 41"E
L8	48.56'	S05° 10' 41"E
L9	1.90'	N84° 49' 19"E
L10	2.50'	N84° 49' 19"E
L11	12.23'	N84° 49' 19"E
L12	3.42'	S05° 10' 41"E
L13	14.57'	S84° 49' 19"W
L14	8.00'	N50° 10' 41"W
L16	10.25'	S05° 10' 41"E
L17	2.00'	N84° 49' 19"E
L18	16.65'	S05° 10' 41"E
L19	4.31'	S05° 10' 41"E
L20	10.66'	S79° 33' 47"W
L21	2.50'	S10° 26' 13"E
L22	2.50'	N10° 26' 13"W
L23	3.50'	N10° 26' 13"W
L24	21.22'	S79° 33' 47"W
L25	8.48'	N15° 26' 13"W
L26	2.58'	S15° 26' 12"E
L27	2.50'	N79° 33' 47"E
L28	57.90'	S84° 49' 19"W
L29	8.60'	S84° 49' 19"W
L30	4.00'	N05° 10' 41"W
L31	15.20'	S84° 49' 19"W
L32	19.00'	N05° 10' 41"W
L33	352.05'	S84° 49' 19"W
L34	27.57'	S05° 10' 41"E
L35	7.26'	S39° 49' 19"W
L36	4.46'	N84° 49' 19"E

POINT TABLE		
Point #	NORTHING	EASTING
1	1836590.92	6491784.16
2	1836384.98	6493088.30
3	1836586.93	6491784.52
4	1836385.43	6493090.76
5	1836313.05	6491903.57

CURVE TABLE			
CURVE #	LENGTH	RADIUS	DELTA
C2	0.23'	0.25'	53.53
C3	0.37'	0.25'	85.00

LEGEND:

- PROPERTY / BOUNDARY LINE
- EASEMENT BOUNDARY LINE
- EXISTING SANITARY SEWER
- EXISTING WATER LINE
- EXISTING STORM DRAIN
- EXISTING GAS LINE
- EXISTING UNDERGROUND/OVERHEAD TELECOMMUNICATIONS LINE
- EXISTING OIL LINE
- EXISTING OVERHEAD ELECTRICAL
- EXISTING UNDERGROUND ELECTRICAL
- PROPOSED WATER LINE
- PROPOSED SANITARY SEWER LINE
- PROPOSED STORM DRAIN MAIN LINE (Ø ≥ 18")
- PROPOSED STORM DRAIN LATERAL (Ø ≤ 18")
- PROPOSED SUBSURFACE NON-PRESSURIZED IRRIGATION SYSTEM (SEE STORM DRAIN PLANS)

NOTES:

1. EXISTING UTILITIES ARE SHOWN FOR REFERENCE ONLY. ACTUAL LOCATIONS MAY VARY. CONTRACTOR TO VERIFY THE LOCATIONS AND ELEVATIONS OF EXISTING UTILITIES IN THE FIELD.
2. CONTRACTOR SHALL COORDINATE THE INSTALLATION OF ALL SERVICE TAPS AND WATER METERS WITH LADWP. CONTRACTOR SHALL BE RESPONSIBLE FOR THE PAYMENT OF ALL FEES.
3. THRUST BLOCKS SHALL BE CONSTRUCTED AT ALL VERTICAL AND HORIZONTAL FITTINGS AND ANGLES FOR PIPES WITHOUT RESTRAINED JOINTS PER DETAIL 5, SHEET C-604.
4. POTABLE WATER LINES SHALL BE LOCATED 1' MINIMUM (OD TO OD) ABOVE ALL CROSSING SANITARY SEWER AND STORM DRAIN LINES. 10' MINIMUM (OD TO OD) HORIZONTAL CLEARANCE SHALL BE MAINTAINED BETWEEN PARALLEL SANITARY SEWER AND POTABLE WATER LINES. 4' MINIMUM (OD TO OD) HORIZONTAL CLEARANCE SHALL BE MAINTAINED BETWEEN PARALLEL STORM DRAIN AND POTABLE WATER LINES.
5. REFER TO STORM DRAINAGE SHEETS FOR PROPOSED STORM DRAINAGE SYSTEMS.
6. REFER TO SANITARY SEWER SHEETS FOR PROPOSED SEWER LATERALS.
7. PROPOSED ELECTRICAL CONDUIT NOT SHOWN FOR CLARITY. REFER TO ELECTRICAL PLANS. CONTRACTOR RESPONSIBLE FOR ALL COORDINATION TO AVOID CONFLICTS WITH THE PROPOSED POTABLE WATER SYSTEMS.
8. EXISTING FIRE HYDRANTS TO BE RELOCATED BY LADWP. CONTRACTOR RESPONSIBLE FOR ALL COORDINATION AND PAYMENT OF ANY REQUIRED FEES.
9. VIADUCT CONTRACTOR REMOVED PORTIONS OF THE OLD VIADUCT REINFORCED CONCRETE FOUNDATIONS TO A DEPTH OF A FEW FEET BELOW THE EXISTING GROUND SURFACE. PARC CONTRACTOR SHALL BE RESPONSIBLE FOR VERIFYING EXISTING CONDITIONS AND REMOVING ANY ADDITIONAL PORTIONS OF THE FOUNDATIONS THAT CONFLICT WITH THE PROPOSED PARC IMPROVEMENTS.

LEGEND OF CONSTRUCTION NOTES

○ CONSTRUCT ▭—○ REMOVE & RECONSTRUCT ┆—○ REMODEL

NO.	CONSTRUCTION ITEM/NOTE	STANDARD PLAN
161	TYPE K HARD COPPER WATER LINE	DTL 1, SHT C-604
162	SERVICE TAP WITH CORP STOP AND SERVICE SADDLE	LADWP STD
163	DOMESTIC WATER METER AND BOX	LADWP STD
164	HOT TAP EXISTING WATER LINE	LADWP STD
165	IN-GROUND HOSE BOX	DTL 3, SHT C-604
166	WATER SHUT-OFF VALVE	DTL 4, SHT C-604
168	DOMESTIC REDUCED PRESSURE BACKFLOW ASSEMBLY (≤2"Ø)	DTL 7, SHT C-604
169	DRINKING FOUNTAIN, VALVE, DRAINAGE SUMP & OVERFLOW	DTL 3, SHT C-605
170	GATE VALVE	LADWP STD
171	FIRE HYDRANT	LADWP STD
173	BACKFLOW ENCLOSURE	DTL 8, SHT C-604
174	POTABLE QUICK COUPLER VALVE	DTL 4, SHT C-611



PLANS PREPARED BY:
TETRA TECH, INC.
707 WILSHIRE BLVD. 23RD FLR.
LOS ANGELES, CA 90017
PHONE: (213) 239-8866

BUREAU OF ENGINEERING
ENGINEERING
CITY OF LOS ANGELES

NO.	REVISIONS:	DATE	BY:
1	BID ADDENDUM NO. 10	11/1/22	JS

BUILDING NO.

INDEX NO.

THIS PLAN WAS ELECTRONICALLY SIGNED AND STAMPED

REGISTERED PROFESSIONAL ENGINEER TIMOTHY J. SMITH No. 85736 EXP: 9-30-24 CIVIL STATE OF CALIFORNIA

CITY OF LOS ANGELES DEPARTMENT OF PUBLIC WORKS

GARY LEE MOORE, P.E., ENV SP — CITY ENGINEER

ENGINEER:	JUSTIN SMITH	DESIGN GROUP	
DESIGNED BY:	JUSTIN SMITH	LIC NO. C-85736	DATE: 11/01/22
DRAWN BY:	MARK CARLOS		
CHECKED BY:	NATE SCHREINER		
APPROVED BY:	JASON L. FUSSEL		

SHEET TITLE: DOMESTIC WATER PLAN SHEET 1

PROJECT: SIXTH STREET PARK, ARTS AND RIVER CONNECTIVITY IMPROVEMENTS (PARC)

ADDRESS: SIXTH STREET OVER THE LOS ANGELES RIVER

VERT. CONTROL: BM 12-04070, 1929 (NGVD29) - 1985 ADJUSTMENT
HORIZ. CONTROL: GPS; PID AE 1704, EPOCH 1991.35

WORK ORDER NO. E700235D
FILE NO. --
DRAWING NO. C-400
SHEET 41 OF SHEETS

11/2/2022 10:29:58 AM - O:\PROJECTS\RIVINE\20043\200-20043-17001\CAD\SHEETFILES\C-400_DOMESTIC WATER PLAN - TT.DWG - SMITH, JUSTIN

REVISION DATES (DESIGN STAGE ONLY)

THE CITY OF LOS ANGELES OR ITS OFFICERS OR AGENTS SHALL NOT BE RESPONSIBLE FOR THE ACCURACY OR COMPLETENESS OF ELECTRONIC COPIES OF THIS PLAN SHEET.

Sheet Version 3.0

ADDENDUM 10

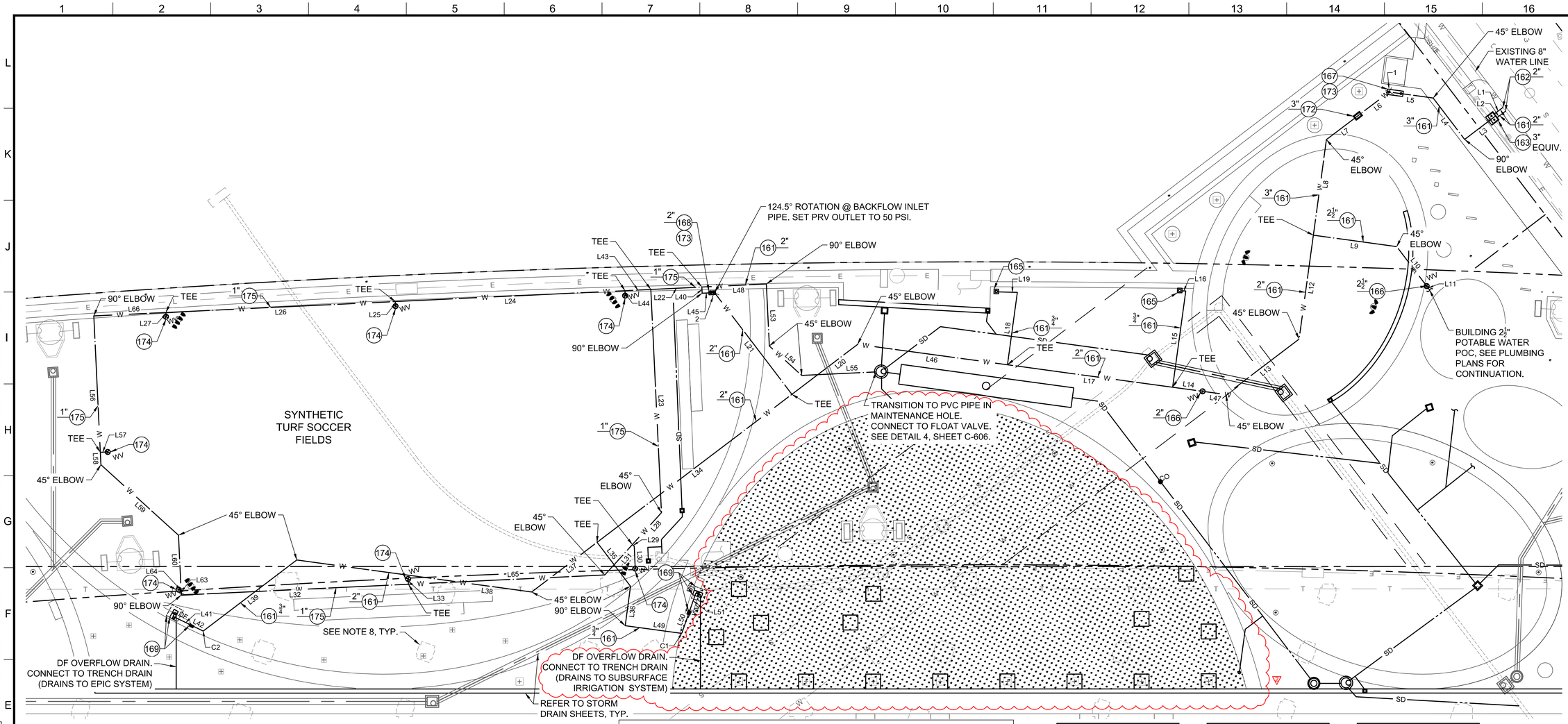

LEGEND:

- PROPERTY / BOUNDARY LINE
- EASEMENT BOUNDARY LINE
- S — EXISTING SANITARY SEWER
- W — EXISTING WATER LINE
- EXISTING STORM DRAIN
- G — EXISTING GAS LINE
- T — EXISTING UNDERGROUND/OVERHEAD TELECOMMUNICATIONS LINE
- O — EXISTING OIL LINE
- OHS — EXISTING OVERHEAD ELECTRICAL
- E — EXISTING UNDERGROUND ELECTRICAL
- W — PROPOSED WATER LINE
- SS — PROPOSED SANITARY SEWER LINE
- PROPOSED STORM DRAIN MAIN LINE (Ø ≥ 18")
- SD — PROPOSED STORM DRAIN LATERAL (Ø ≤ 18")
- PROPOSED SUBSURFACE NON-PRESSURIZED IRRIGATION SYSTEM (SEE STORM DRAIN PLANS)

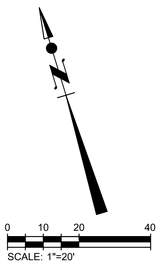

LEGEND OF CONSTRUCTION NOTES

◯ CONSTRUCT

NO.	CONSTRUCTION ITEM/NOTE	STANDARD PLAN
161	TYPE K HARD COPPER WATER LINE	DTL 1, SHT C-604
162	SERVICE TAP WITH CORP STOP AND SERVICE SADDLE	LADWP STD
163	DOMESTIC WATER METER AND BOX	LADWP STD
165	IN-GROUND HOSE BOX	DTL 3, SHT C-604
166	WATER SHUT-OFF VALVE	DTL 4, SHT C-604
167	DOMESTIC REDUCED PRESSURE BACKFLOW ASSEMBLY (3"Ø)	DTL 6, SHT C-604
168	DOMESTIC REDUCED PRESSURE BACKFLOW ASSEMBLY (≤2"Ø)	DTL 7, SHT C-604
169	DRINKING FOUNTAIN, VALVE, DRAINAGE SUMP & OVERFLOW	DTL 3, SHT C-605
172	PRESSURE REDUCING VALVE	DTL 2, SHT C-604
173	BACKFLOW ENCLOSURE	DTL 8, SHT C-604
174	POTABLE QUICK COUPLER VALVE	DTL 4, SHT C-611
175	SCH 40 PVC WATER LINE	DTL 1, SHT C-604

NOTES:

1. EXISTING UTILITIES ARE SHOWN FOR REFERENCE ONLY. ACTUAL LOCATIONS MAY VARY. CONTRACTOR TO VERIFY THE LOCATIONS AND ELEVATIONS OF EXISTING UTILITIES IN THE FIELD.
2. CONTRACTOR SHALL COORDINATE THE INSTALLATION OF ALL SERVICE TAPS AND WATER METERS WITH LADWP. CONTRACTOR SHALL BE RESPONSIBLE FOR THE PAYMENT OF ALL FEES.
3. THRUST BLOCKS SHALL BE CONSTRUCTED AT ALL VERTICAL AND HORIZONTAL FITTINGS AND ANGLES FOR PIPES WITHOUT RESTRAINED JOINTS PER DETAIL 5, SHEET C-604.
4. POTABLE WATER LINES SHALL BE LOCATED 1' MINIMUM (OD TO OD) ABOVE ALL CROSSING SANITARY SEWER AND STORM DRAIN LINES. 10' MINIMUM (OD TO OD) HORIZONTAL CLEARANCE SHALL BE MAINTAINED BETWEEN PARALLEL SANITARY SEWER AND POTABLE WATER LINES. 4' MINIMUM (OD TO OD) HORIZONTAL CLEARANCE SHALL BE MAINTAINED BETWEEN PARALLEL STORM DRAIN AND POTABLE WATER LINES.
5. REFER TO STORM DRAINAGE SHEETS FOR PROPOSED STORM DRAINAGE SYSTEMS.
6. REFER TO SANITARY SEWER SHEETS FOR PROPOSED SEWER LATERALS.
7. PROPOSED ELECTRICAL CONDUIT NOT SHOWN FOR CLARITY. REFER TO ELECTRICAL PLANS. CONTRACTOR RESPONSIBLE FOR ALL COORDINATION TO AVOID CONFLICTS WITH THE PROPOSED POTABLE WATER SYSTEMS.
8. VIADUCT CONTRACTOR REMOVED PORTIONS OF THE OLD VIADUCT REINFORCED CONCRETE FOUNDATIONS TO A DEPTH OF A FEW FEET BELOW THE EXISTING GROUND SURFACE. PARC CONTRACTOR SHALL BE RESPONSIBLE FOR VERIFYING EXISTING CONDITIONS AND REMOVING ANY ADDITIONAL PORTIONS OF THE FOUNDATIONS THAT CONFLICT WITH THE PROPOSED PARC IMPROVEMENTS.

LINE TABLE		
LINE #	LENGTH	BEARING
L1	4.23'	S69° 51' 27"W
L2	4.23'	S69° 51' 27"W
L3	15.77'	S69° 51' 27"W
L4	20.93'	N20° 08' 33"W
L5	17.87'	N65° 06' 27"W
L6	15.86'	S69° 53' 33"W
L7	15.86'	S69° 53' 33"W
L8	38.85'	S24° 53' 33"W
L9	33.87'	S65° 06' 27"E
L10	19.96'	S20° 06' 27"E
L11	2.00'	S20° 06' 27"E
L12	42.24'	S24° 53' 33"W
L13	36.90'	S69° 51' 27"W
L14	12.17'	N65° 08' 33"W
L15	39.12'	N24° 51' 27"E
L16	2.00'	N72° 00' 46"W
L17	67.08'	N65° 08' 33"W
L18	29.43'	N24° 51' 27"E
L19	8.04'	N71° 41' 30"W
L20	33.25'	S69° 51' 27"W
L21	51.44'	N20° 08' 33"W
L22	20.55'	N75° 37' 39"W
L23	90.00'	S14° 22' 21"W
L24	92.51'	N75° 37' 39"W

LINE TABLE		
LINE #	LENGTH	BEARING
L25	1.86'	S14° 27' 25"W
L26	92.49'	N75° 37' 39"W
L27	1.71'	S14° 22' 21"W
L28	17.39'	N59° 22' 21"E
L29	0.99'	S30° 37' 39"E
L30	9.00'	S14° 22' 21"W
L31	16.52'	S59° 22' 21"W
L32	91.48'	N75° 37' 39"W
L33	2.12'	S14° 22' 21"W
L34	98.49'	S69° 51' 27"W
L35	22.26'	S20° 08' 33"E
L36	16.00'	N24° 51' 27"E
L37	33.07'	S69° 51' 27"W
L38	95.41'	N65° 08' 33"W
L39	47.15'	S69° 51' 27"W
L40	2.50'	S14° 22' 21"W
L41	8.36'	S46° 52' 41"E
L42	5.01'	S46° 52' 40"E
L43	10.44'	N75° 37' 39"W
L44	2.00'	S14° 22' 21"W
L45	5.00'	S75° 37' 39"E
L46	60.86'	N65° 08' 33"W
L47	9.56'	N65° 08' 33"W
L48	26.00'	N75° 37' 39"W

LINE TABLE		
LINE #	LENGTH	BEARING
L49	22.80'	S65° 08' 33"E
L50	8.58'	N36° 13' 15"E
L51	8.33'	N36° 13' 15"E
L53	25.00'	S14° 22' 21"W
L54	17.65'	S30° 37' 39"E
L55	30.00'	S75° 37' 39"E
L56	55.00'	N14° 22' 21"E
L57	3.00'	S75° 37' 39"E
L58	5.00'	N14° 22' 21"E
L59	42.21'	N30° 37' 39"W
L60	21.87'	N14° 22' 21"E
L63	2.26'	S14° 22' 21"W
L64	1.00'	N75° 37' 39"W
L65	79.14'	S75° 37' 39"E
L66	29.01'	S75° 37' 39"E

POINT TABLE		
POINT #	NORTHING	EASTING
1	1836321.42	6493861.65
2	1836324.03	6493578.36

CURVE TABLE			
CURVE #	LENGTH	RADIUS	DELTA
C1	0.34'	0.25'	78.64
C2	0.28'	0.25'	63.26

PLANS PREPARED BY:
TETRA TECH, INC.
707 WILSHIRE BLVD, 23RD FLR.
LOS ANGELES, CA 90017
PHONE: (213) 239-8866

THE CITY OF LOS ANGELES OR ITS OFFICERS OR AGENTS SHALL NOT BE RESPONSIBLE FOR THE ACCURACY OR COMPLETENESS OF ELECTRONIC COPIES OF THIS PLAN SHEET.

REVISION DATES (DESIGN STAGE ONLY)

CITY OF LOS ANGELES DEPARTMENT OF PUBLIC WORKS
BUREAU OF ENGINEERING
ENGINEERING
CITY OF LOS ANGELES
GARY LEE MOORE, P.E., ENV SP — CITY ENGINEER
DESIGN GROUP
ENGINEER: JUSTIN SMITH
DESIGNED BY: JUSTIN SMITH
DRAWN BY: MARK CARLOS
CHECKED BY: NATE SCHREINER
APPROVED BY: JASON L. FUSSEL
LIC. NO. C-85736 — DATE: 11/01/22
NO. | REVISIONS: | DATE | BY:
1 | BID ADDENDUM NO. 10 | 11/10/22 | JS
BUILDING NO.
INDEX NO.
THIS PLAN WAS ELECTRONICALLY SIGNED AND STAMPED
PROFESSIONAL ENGINEER — JUSTIN L. SMITH — No. 85736 — EXP: 3-30-24 — CIVIL — STATE OF CALIFORNIA
VERT. CONTROL: BM 12-04070, 1929 (NGVD29) - 1985 ADJUSTMENT
HORIZ. CONTROL: GPS, PID AE 1704, EPOCH 1991.35
SHEET TITLE: DOMESTIC WATER PLAN SHEET 2
PROJECT: SIXTH STREET PARK, ARTS AND RIVER CONNECTIVITY IMPROVEMENTS (PARC)
ADDRESS: SIXTH STREET OVER THE LOS ANGELES RIVER
WORK ORDER NO. E700235D
FILE NO. --
DRAWING NO. C-401
SHEET 41 OF SHEETS
11/2/2022 10:42:42 AM - O:\PROJECTS\IRVINE\20043\20-20043-17001\CAD\SHEETFILES\C-401_DOMESTIC WATER PLAN - TT.DWG - SMITH, JUSTIN

Sheet Version 3.0

ADDENDUM 10

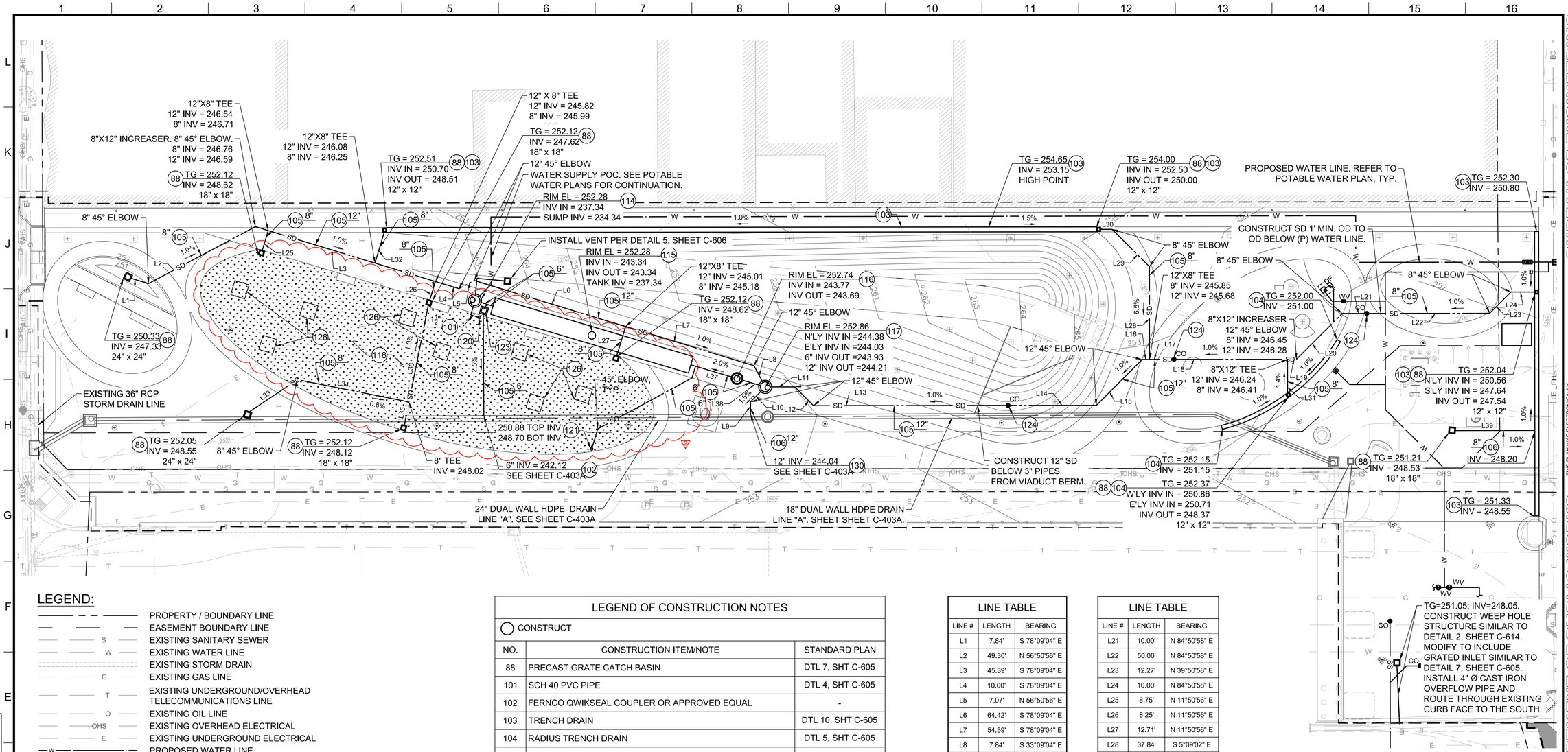

LEGEND:

- PROPERTY / BOUNDARY LINE
- EASEMENT BOUNDARY LINE
- EXISTING SANITARY SEWER
- EXISTING WATER LINE
- EXISTING STORM DRAIN
- EXISTING GAS LINE
- EXISTING UNDERGROUND/OVERHEAD TELECOMMUNICATIONS LINE
- EXISTING OIL LINE
- EXISTING OVERHEAD ELECTRICAL
- EXISTING UNDERGROUND ELECTRICAL
- PROPOSED WATER LINE
- PROPOSED SANITARY SEWER LINE
- PROPOSED STORM DRAIN MAIN LINE (Ø ≥ 18")
- PROPOSED STORM DRAIN LATERAL (Ø ≤ 18")
- PROPOSED SUBSURFACE NON-PRESSURIZED IRRIGATION SYSTEM

NOTE:

1. NO DUMPING STENCIL SHALL BE PLACED ON TOP OF INLET OR TOP OF CURB AT ALL INLETS PER DETAIL 9, SHEET C-605.
2. CONTRACTOR TO FIELD VERIFY LOCATIONS AND INVERTS OF ALL EXISTING UTILITIES AND PROPOSED CONNECTIONS TO EXISTING STORM DRAIN FACILITIES BEFORE STARTING STORM DRAIN CONSTRUCTION. CONTRACTOR TO NOTIFY THE CITY OF ANY DISCREPANCIES.
3. PROPOSED ELECTRICAL CONDUIT NOT SHOWN FOR CLARITY. REFER TO ELECTRICAL PLANS. CONTRACTOR RESPONSIBLE FOR ALL COORDINATION TO AVOID CONFLICTS WITH PROPOSED STORM DRAIN SYSTEM..

LEGEND OF CONSTRUCTION NOTES

◯ CONSTRUCT

NO.	CONSTRUCTION ITEM/NOTE	STANDARD PLAN
88	PRECAST GRATE CATCH BASIN	DTL 7, SHT C-605
101	SCH 40 PVC PIPE	DTL 4, SHT C-605
102	FERNCO QWIKSEAL COUPLER OR APPROVED EQUAL	-
103	TRENCH DRAIN	DTL 10, SHT C-605
104	RADIUS TRENCH DRAIN	DTL 5, SHT C-605
105	SDR-35 PVC PIPE	DTL 4, SHT C-605
106	DUAL WALL HDPE PIPE	DTL 4, SHT C-605
114	WET WELL AND PUMP	DTL 4, SHT C-606
115	STORMWATER STORAGE TANK	DTL 4, SHT C-606
116	HYDRODYNAMIC SEPARATOR, TYPE 1	DTL 1, SHT C-606
117	DIVERSION MAINTENANCE HOLE	DTL 3, SHT C-606
118	WEST SUBSURFACE NON-PRESSURIZED IRRIGATION SYSTEM	DTL 1 & 2, SHT C-607 DTL 1, SHT C-607A
120	SUBSURFACE NON-PRESSURIZED IRRIGATION SYSTEM INLET	DTL 2, SHT C-607
121	SUBSURFACE NON-PRESSURIZED IRRIGATION SYSTEM OUTLET	DTL 1, SHT C-607A
123	PRECAST CONCRETE JUNCTION STRUCTURE W/ COVER	DTL 8, SHT C-605
124	STORM DRAIN CLEANOUT	DTL 6, SHT C-605
126	SUBSURFACE NON-PRESSURIZED IRRIGATION AT TREES	DTL 3, SHT C-607
130	FABRICATED 24"X12" DUAL WALL HDPE SADDLE TEE	DTL 5, SHT C-606

LINE TABLE

LINE #	LENGTH	BEARING
L1	7.84'	S 78°09'04" E
L2	49.30'	N 56°50'56" E
L3	45.39'	S 78°09'04" E
L4	10.00'	S 78°09'04" E
L5	7.07'	N 56°50'56" E
L6	64.42'	S 78°09'04" E
L7	54.59'	S 78°09'04" E
L8	7.84'	S 33°09'04" E
L9	5.00'	N 5°24'27" W
L10	6.54'	N 39°35'33" E
L11	10.00'	N 84°50'58" E
L12	10.79'	S 50°09'02" E
L13	77.80'	N 84°50'58" E
L14	37.32'	N 84°50'58" E
L15	26.42'	N 39°50'58" E
L16	13.00'	N 84°50'58" E
L17	13.00'	N 84°50'58" E
L18	46.18'	N 84°50'58" E
L19	3.64'	N 84°50'58" E
L20	26.41'	N 39°50'58" E

LINE TABLE

LINE #	LENGTH	BEARING
L21	10.00'	N 84°50'58" E
L22	50.00'	N 84°50'58" E
L23	12.27'	N 39°50'58" E
L24	10.00'	N 84°50'58" E
L25	8.75'	N 11°50'56" E
L26	8.25'	N 11°50'56" E
L27	12.71'	N 11°50'56" E
L28	37.84'	S 5°09'02" E
L29	21.47'	S 50°09'02" E
L30	5.00'	N 84°50'58" E
L31	14.07'	S 5°09'02" E
L32	13.55'	N 11°50'56" E
L33	24.00'	N 51°11'32" E
L34	46.35'	S 83°48'28" E
L35	10.00'	N 6°11'32" E
L36	40.55'	N 6°11'32" E
L37	17.64'	N 78°32'45" W
L38	8.00'	N 78°32'45" W
L39	32.71'	N 84°49'19" E

SCALE: 1"=20'

TETRA TECH, INC.
707 WILSHIRE BLVD, 23RD FLR.
LOS ANGELES, CA 90017
PHONE: (213) 239-8866
PLANS PREPARED BY:

CITY OF LOS ANGELES DEPARTMENT OF PUBLIC WORKS BUREAU OF ENGINEERING

VERT. CONTROL: BM 12-04070, 1929 (NGVD29) - 1985 ADJUSTMENT
HORIZ. CONTROL: GPS; PID AE 1704, EPOCH 1991.35

SHEET TITLE: STORM DRAIN PLAN SHEET 1

PROJECT: SIXTH STREET PARK, ARTS AND RIVER CONNECTIVITY IMPROVEMENTS (PARC)

ADDRESS: SIXTH STREET OVER THE LOS ANGELES RIVER

WORK ORDER NO. E700235D
FILE NO. --
DRAWING NO. C-403
SHEET 44 OF SHEETS

CITY ENGINEER: GARY LEE MOORE, P.E., ENV SP
DATE: 11/01/22
LIC NO. C-85736

DESIGN GROUP
ENGINEER: JUSTIN SMITH
DESIGNED BY: JUSTIN SMITH
DRAWN BY: TYLER PARRA
CHECKED BY: NATE SCHREINER
APPROVED BY: JASON L. FUSSEL

ENGINEERING
CITY OF LOS ANGELES

NO.	REVISIONS:	DATE	BY:
1	BID ADDENDUM NO. 10	11/1/22	JS

BUILDING NO.

INDEX NO.

PROFESSIONAL ENGINEER ★ JUSTIN T. SMITH ★ No. 85736 EXP: 3-30-24 CIVIL STATE OF CALIFORNIA

THIS PLAN WAS ELECTRONICALLY SIGNED AND STAMPED

11/2/2022 10:47:04 AM - O:\PROJECTS\RVINE\20043\200-20043-17001\CAD\SHEETFILES\C-403_STORM DRAIN PLAN - TT.DWG - SMITH, JUSTIN

THE CITY OF LOS ANGELES OR ITS OFFICERS OR AGENTS SHALL NOT BE RESPONSIBLE FOR THE ACCURACY OR COMPLETENESS OF ELECTRONIC COPIES OF THIS PLAN SHEET.

REVISION DATES (DESIGN STAGE ONLY)

Sheet Version 3.0

ADDENDUM 10

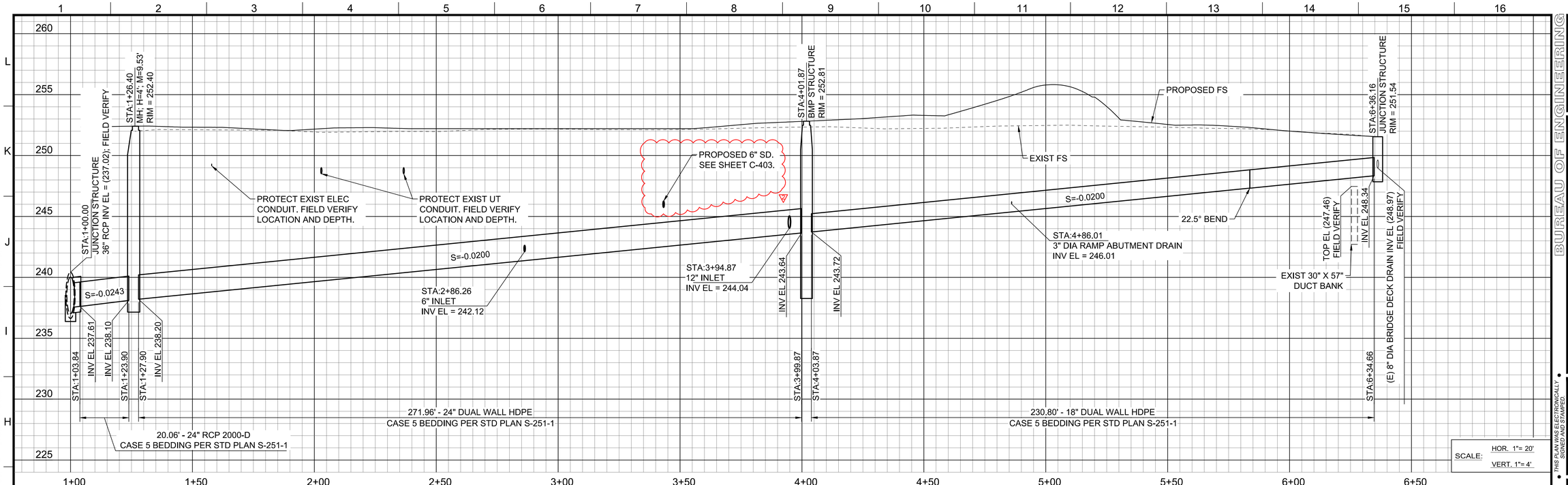

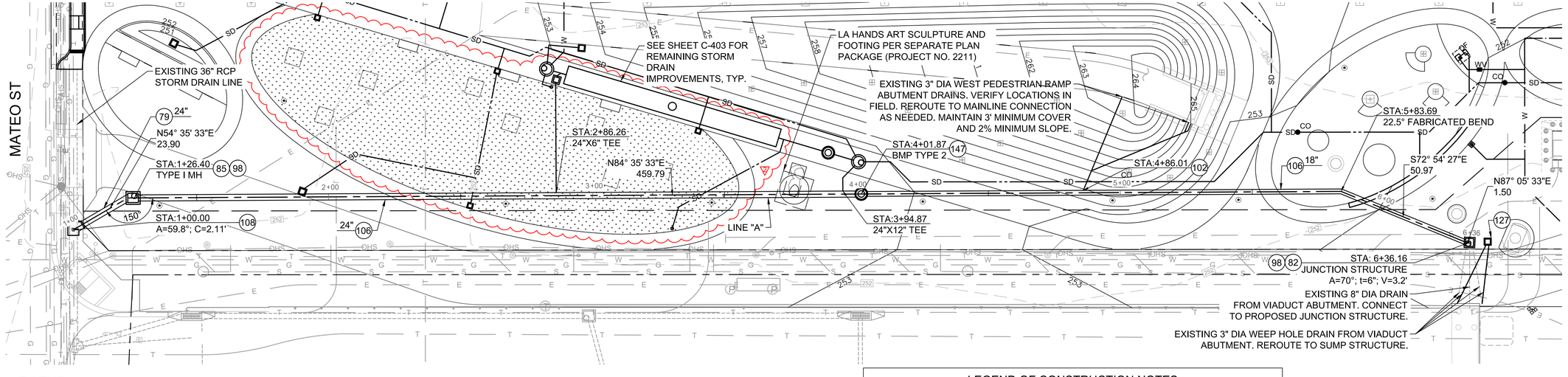

LEGEND:

- PROPERTY / BOUNDARY LINE
- EASEMENT BOUNDARY LINE
- S — EXISTING SANITARY SEWER
- W — EXISTING WATER LINE
- EXISTING STORM DRAIN
- G — EXISTING GAS LINE
- T — EXISTING UNDERGROUND/OVERHEAD TELECOMMUNICATIONS LINE
- O — EXISTING OIL LINE
- OHS — EXISTING OVERHEAD ELECTRICAL
- E — EXISTING UNDERGROUND ELECTRICAL
- W — PROPOSED WATER LINE
- ss — PROPOSED SANITARY SEWER LINE
- PROPOSED STORM DRAIN MAIN LINE
- PROPOSED SUBSURFACE NON-PRESSURIZED IRRIGATION SYSTEM

NOTE:

1. NO DUMPING STENCIL SHALL BE PLACED ON TOP OF INLET OR TOP OF CURB AT ALL INLETS PER DETAIL 9, SHEET C-605.
2. CONTRACTOR TO FIELD VERIFY LOCATIONS AND INVERTS OF ALL EXISTING UTILITIES AND PROPOSED CONNECTIONS TO EXISTING STORM DRAIN FACILITIES BEFORE STARTING STORM DRAIN CONSTRUCTION. CONTRACTOR TO NOTIFY THE CITY OF ANY DISCREPANCIES.
3. PROPOSED ELECTRICAL CONDUIT NOT SHOWN FOR CLARITY. REFER TO ELECTRICAL PLANS. CONTRACTOR RESPONSIBLE FOR ALL COORDINATION TO AVOID CONFLICTS WITH PROPOSED STORM DRAIN SYSTEM.
4. LENGTHS SHOWN IN THE BEARING AND DISTANCE PLAN VIEW LABELS REPRESENT ALIGNMENT SEGMENT LENGTHS. REFER TO PROFILES FOR HORIZONTAL PIPE SEGMENT LENGTHS BETWEEN STRUCTURES.

LEGEND OF CONSTRUCTION NOTES

◯ CONSTRUCT

NO.	CONSTRUCTION ITEM/NOTE	STANDARD PLAN
79	REINFORCED CONCRETE PIPE (RCP)	S-241-0, S-251-1
82	JUNCTION STRUCTURE (J.S.)	S-300-1
85	STORM DRAIN MAINTENANCE HOLE	S-381-0
98	MONOLITHIC CONNECTION	SPPWC 308-3
102	FERNCO QWIKSEAL COUPLER OR APPROVED EQUAL	-
106	DUAL WALL HDPE PIPE	S-251-1
108	JUNCTION STRUCTURE	SPPWC 331-3
127	WEEP DRAIN DRAINAGE SUMP STRUCTURE	DTL 2, SHT C-614
147	HYDRODYNAMIC SEPARATOR, TYPE 2	DTL 1, SHT C-14

0 10 20 40
SCALE: 1"=20'

THE CITY OF LOS ANGELES OR ITS OFFICERS OR AGENTS SHALL NOT BE RESPONSIBLE FOR THE ACCURACY OR COMPLETENESS OF ELECTRONIC COPIES OF THIS PLAN SHEET.

REVISION DATES (DESIGN STAGE ONLY)

Sheet Version 3.0

PLANS PREPARED BY:
TETRA TECH, INC.
707 WILSHIRE BLVD, 23RD FLR.
LOS ANGELES, CA 90017
PHONE: (213) 239-8866

CITY OF LOS ANGELES DEPARTMENT OF PUBLIC WORKS
BUREAU OF ENGINEERING

VERT. CONTROL: BM 12-04070, 1929 (NGVD29) - 1985 ADJUSTMENT
HORIZ. CONTROL: GPS; PID AE 1704, EPOCH 1991.35

SHEET TITLE: STORM DRAIN PLAN & PROFILE SHEET 2

PROJECT: SIXTH STREET PARK, ARTS AND RIVER CONNECTIVITY IMPROVEMENTS (PARC)

ADDRESS: SIXTH STREET OVER THE LOS ANGELES RIVER

ENGINEER: GARY LEE MOORE, P.E., ENV SP — CITY ENGINEER — DATE: 11/01/22
LIC. NO. C-85736
DESIGN GROUP
DESIGNED BY: JUSTIN SMITH
DRAWN BY: JUSTIN SMITH
CHECKED BY: AARON YONKER
APPROVED BY: JASON L. FUSSEL

NO.	REVISIONS:	BY:	DATE
1	BID ADDENDUM NO. 10	JS	11/1/22

BUILDING NO.

INDEX NO.

THIS PLAN WAS ELECTRONICALLY SIGNED AND STAMPED

PROFESSIONAL ENGINEER — REGISTERED — JUSTIN T. SMITH — No. 85736 EXP: 9-30-24 — CIVIL — STATE OF CALIFORNIA

WORK ORDER NO. E700235D
FILE NO. --
DRAWING NO. C-403A
SHEET 45 OF SHEETS

11/2/2022 11:54:50 AM - O:\PROJECTS\IRVINE\20043\20-20043-17001\CAD\SHEETFILES\C-403A_STORM DRAIN PLAN AND PROFILE - TT.DWG - SMITH, JUSTIN

ADDENDUM 10

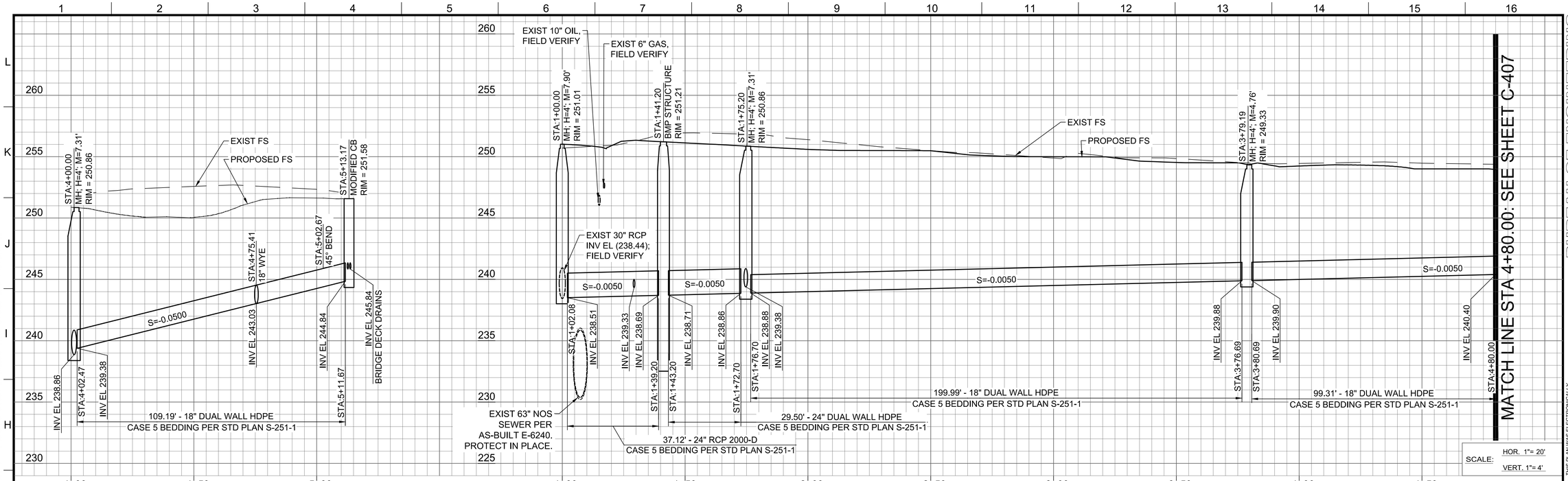

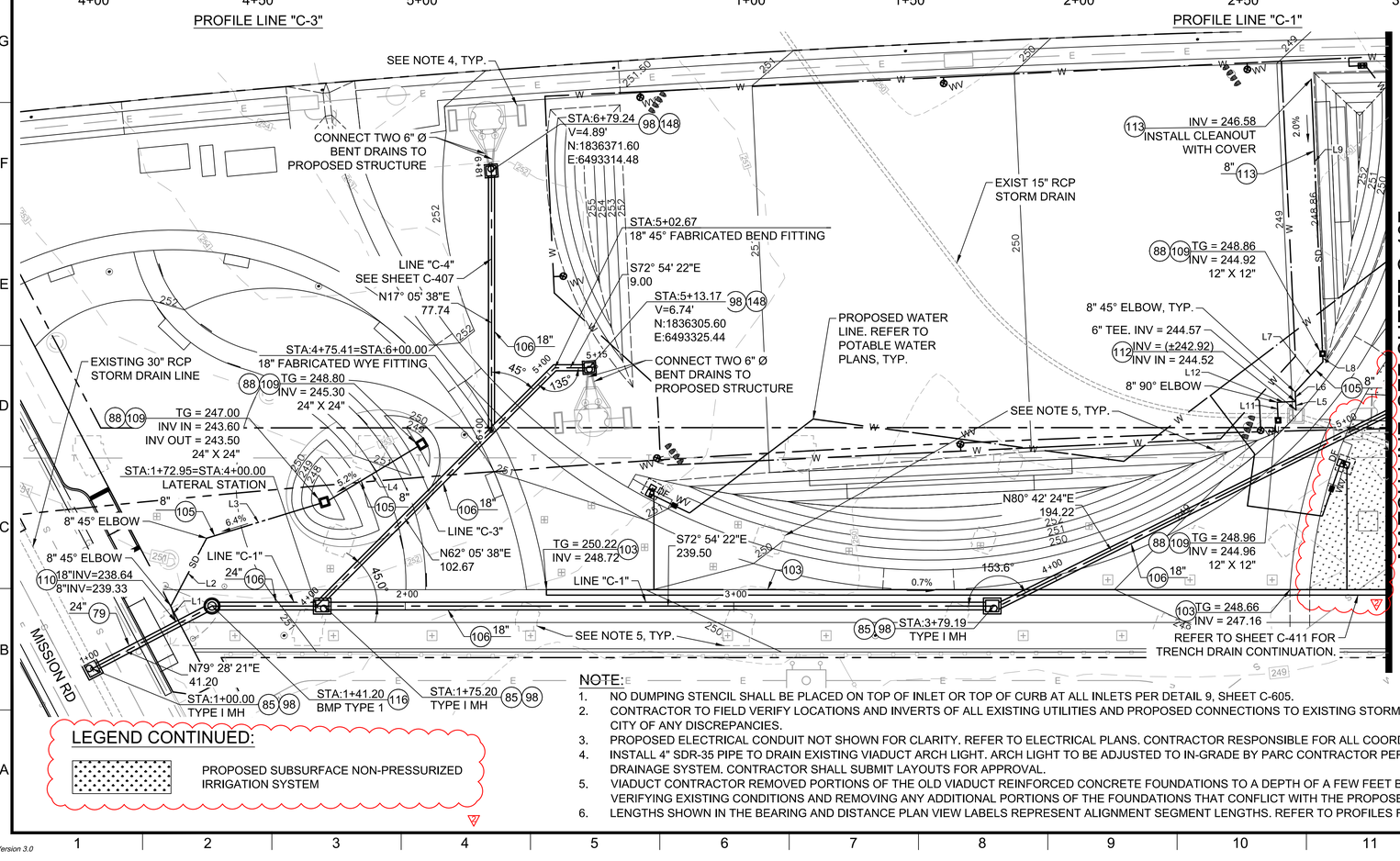

LEGEND:

- PROPERTY / BOUNDARY LINE
- EASEMENT BOUNDARY LINE
- S — EXISTING SANITARY SEWER
- W — EXISTING WATER LINE
- EXISTING STORM DRAIN
- G — EXISTING GAS LINE
- T — EXISTING UNDERGROUND/OVERHEAD TELECOMMUNICATIONS LINE
- O — EXISTING OIL LINE
- OHS — EXISTING OVERHEAD ELECTRICAL
- E — EXISTING UNDERGROUND ELECTRICAL
- W — PROPOSED WATER LINE
- SS — PROPOSED SANITARY SEWER LINE
- PROPOSED STORM DRAIN MAIN LINE (Ø ≥ 18")
- SD — PROPOSED STORM DRAIN LATERAL (Ø ≤ 18")
- PROPOSED TREE. SEE LANDSCAPE PLANS.

LINE TABLE

LINE #	LENGTH	BEARING
L1	5.00'	N 0°00'00" W
L2	23.29'	N 45°00'00" E
L3	36.50'	N 90°00'00" E
L4	32.49'	N 75°52'45" E
L5	2.61'	N 14°10'06" E
L6	2.90'	N 14°43'03" E
L7	12.46'	N 59°43'03" E
L8	2.00'	N 14°43'03" E
L9	83.17'	N 14°43'45" E
L11	5.00'	N 14°43'03" E
L12	5.59'	S 75°16'57" E

LEGEND OF CONSTRUCTION NOTES

CONSTRUCT

NO.	CONSTRUCTION ITEM/NOTE	STANDARD PLAN
79	REINFORCED CONCRETE PIPE (RCP)	S-241-0, S-251-1
85	STORM DRAIN MAINTENANCE HOLE	S-381-0
88	PRECAST GRATE CATCH BASIN	DTL 7, SHT C-605
98	MONOLITHIC CONNECTION	SPPWC 308-3
103	TRENCH DRAIN	DTL 10, SHT C-605
105	SDR-35 PVC PIPE	DTL 4, SHT C-605
106	DUAL WALL HDPE PIPE	S-251-1
109	CATCH BASIN FILTRATION INSERT	DTL 7, SHT C-605
110	JUNCTION STRUCTURE	SPPWC 332-2
112	PIPE CONNECTION TO STRUCTURE	SPPWC 335-2
113	PERFORATED DUAL WALL HDPE PIPE AND DRAINAGE TRENCH	DTL 1, SHT C-601
116	HYDRODYNAMIC SEPARATOR, TYPE 1	DTL 1, SHT C-606
148	MODIFIED PRECAST CONCRETE CATCH BASIN (NO INLET)	S-361-0

LEGEND CONTINUED:

PROPOSED SUBSURFACE NON-PRESSURIZED IRRIGATION SYSTEM

NOTE:

1. NO DUMPING STENCIL SHALL BE PLACED ON TOP OF INLET OR TOP OF CURB AT ALL INLETS PER DETAIL 9, SHEET C-605.
2. CONTRACTOR TO FIELD VERIFY LOCATIONS AND INVERTS OF ALL EXISTING UTILITIES AND PROPOSED CONNECTIONS TO EXISTING STORM DRAIN FACILITIES BEFORE STARTING STORM DRAIN CONSTRUCTION. CONTRACTOR TO NOTIFY THE CITY OF ANY DISCREPANCIES.
3. PROPOSED ELECTRICAL CONDUIT NOT SHOWN FOR CLARITY. REFER TO ELECTRICAL PLANS. CONTRACTOR RESPONSIBLE FOR ALL COORDINATION TO AVOID CONFLICTS WITH PROPOSED STORM DRAIN SYSTEM.
4. INSTALL 4" SDR-35 PIPE TO DRAIN EXISTING VIADUCT ARCH LIGHT. ARCH LIGHT TO BE ADJUSTED TO IN-GRADE BY PARC CONTRACTOR PER DETAIL 8, SHEET C-600. PIPING TO BE FIELD ROUTED AND CONNECTED TO THE PROPOSED BENT DRAINAGE SYSTEM. CONTRACTOR SHALL SUBMIT LAYOUTS FOR APPROVAL.
5. VIADUCT CONTRACTOR REMOVED PORTIONS OF THE OLD VIADUCT REINFORCED CONCRETE FOUNDATIONS TO A DEPTH OF A FEW FEET BELOW THE EXISTING GROUND SURFACE. PARC CONTRACTOR SHALL BE RESPONSIBLE FOR VERIFYING EXISTING CONDITIONS AND REMOVING ANY ADDITIONAL PORTIONS OF THE FOUNDATIONS THAT CONFLICT WITH THE PROPOSED PARC IMPROVEMENTS.
6. LENGTHS SHOWN IN THE BEARING AND DISTANCE PLAN VIEW LABELS REPRESENT ALIGNMENT SEGMENT LENGTHS. REFER TO PROFILES FOR HORIZONTAL PIPE SEGMENT LENGTHS BETWEEN STRUCTURES.

SCALE: HOR. 1"= 20' VERT. 1"= 4'

SCALE: 1" = 20'

THE CITY OF LOS ANGELES OR ITS OFFICERS OR AGENTS SHALL NOT BE RESPONSIBLE FOR THE ACCURACY OR COMPLETENESS OF ELECTRONIC COPIES OF THIS PLAN SHEET.

REVISION DATES (DESIGN STAGE ONLY)

Sheet Version 3.0

BUREAU OF ENGINEERING

ENGINEERING
CITY OF LOS ANGELES

NO.	REVISIONS:	DATE:	BY:
1	BID ADDENDUM NO. 10	11/1/22	JS

BUILDING NO.

INDEX NO.

THIS PLAN WAS ELECTRONICALLY SIGNED AND STAMPED

PROFESSIONAL ENGINEER ★ REGISTERED ★ JUSTIN T. SMITH No. 85736 EXP: 9-30-24 CIVIL STATE OF CALIFORNIA

BUREAU OF PUBLIC WORKS

CITY OF LOS ANGELES DEPARTMENT OF PUBLIC WORKS

GARY LEE MOORE, P.E., ENV SP
CITY ENGINEER
DATE: 11/01/22
LIC. NO. C-85736

DESIGN GROUP	
ENGINEER:	JUSTIN SMITH
DESIGNED BY:	JUSTIN SMITH
DRAWN BY:	TYLER PARRA
CHECKED BY:	NATE SCHREINER
APPROVED BY:	JASON L. FUSSEL

VERT. CONTROL: BM 12-04070, 1929 (NGVD29) - 1985 ADJUSTMENT
HORIZ. CONTROL: GPS, PID AE 1704, EPOCH 1991.35

SHEET TITLE: STORM DRAIN PLAN & PROFILE SHEET 5

PROJECT: SIXTH STREET PARK, ARTS AND RIVER CONNECTIVITY IMPROVEMENTS (PARC)

ADDRESS: SIXTH STREET OVER THE LOS ANGELES RIVER

PLANS PREPARED BY:
TETRA TECH, INC.
707 WILSHIRE BLVD, 23RD FLR.
LOS ANGELES, CA 90017
PHONE: (213) 239-8866

WORK ORDER NO. E700235D
FILE NO. --
DRAWING NO. C-406
SHEET 48 OF SHEETS

11/2/2022 11:57:44 AM - O:\PROJECTS\IRVINE\20043\20-20043-17001\CAD\SHEETFILES\C-406_STORM DRAIN PLAN AND PROFILE - TT.DWG - SMITH, JUSTIN

ADDENDUM 10

MATCH LINE STA 4+80.00. SEE SHEET C-406

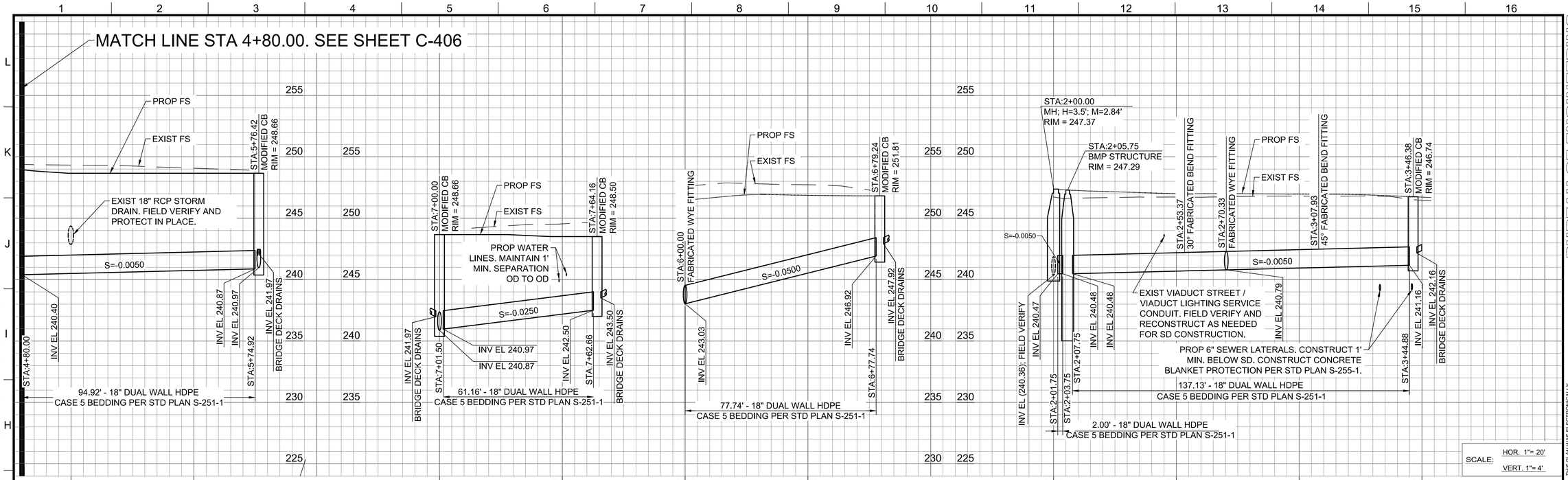

PROFILE LINE "C-1" CONTINUED | PROFILE LINE "C-2" | PROFILE LINE "C-4" | PROFILE LINE "D-1"

SCALE: HOR. 1"= 20'
VERT. 1"= 4'

NOTES:

1. NO DUMPING STENCIL SHALL BE PLACED ON TOP OF INLET OR TOP OF CURB AT ALL INLETS PER DETAIL 9, SHEET C-605.
2. CONTRACTOR TO FIELD VERIFY LOCATIONS AND INVERTS OF ALL EXISTING UTILITIES AND PROPOSED CONNECTIONS TO EXISTING STORM DRAIN FACILITIES BEFORE STARTING STORM DRAIN CONSTRUCTION. CONTRACTOR TO NOTIFY THE CITY OF ANY DISCREPANCIES.
3. PROPOSED ELECTRICAL CONDUIT NOT SHOWN FOR CLARITY. REFER TO ELECTRICAL PLANS. CONTRACTOR RESPONSIBLE FOR ALL COORDINATION TO AVOID CONFLICTS WITH PROPOSED STORM DRAIN SYSTEM.

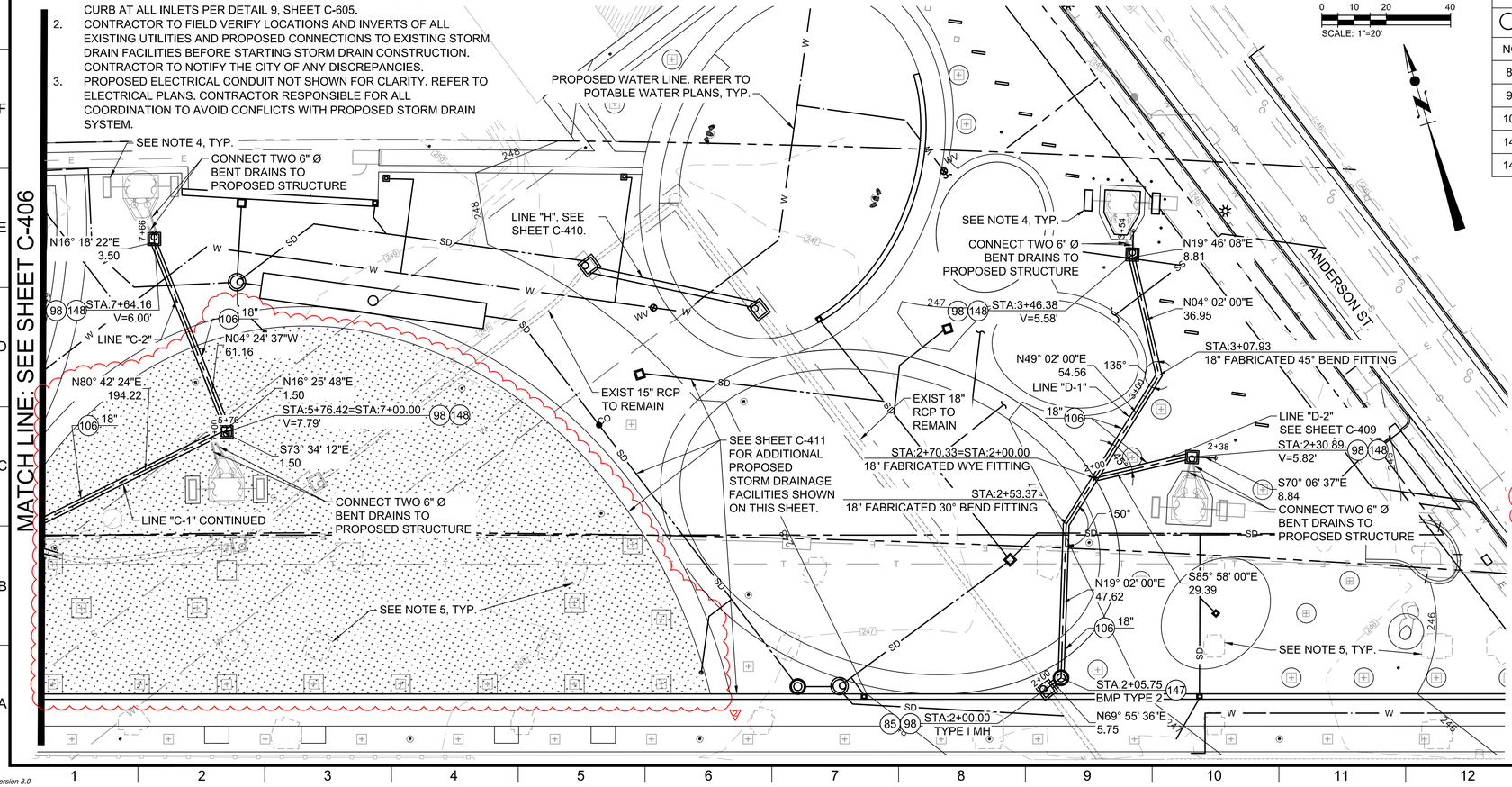

LEGEND OF CONSTRUCTION NOTES

○ CONSTRUCT

NO.	CONSTRUCTION ITEM/NOTE	STANDARD PLAN
85	STORM DRAIN MAINTENANCE HOLE	S-381-0
98	MONOLITHIC CONNECTION	SPPWC 308-3
106	DUAL WALL HDPE PIPE	S-251-1
147	HYDRODYNAMIC SEPARATOR, TYPE 2	DTL 1, SHT C-14
148	MODIFIED PRECAST CONCRETE CATCH BASIN (NO INLET)	S-361-0

LEGEND:

- PROPERTY / BOUNDARY LINE
- EASEMENT BOUNDARY LINE
- S — EXISTING SANITARY SEWER
- W — EXISTING WATER LINE
- EXISTING STORM DRAIN
- G — EXISTING GAS LINE
- T — EXISTING UNDERGROUND/OVERHEAD TELECOMMUNICATIONS LINE
- O — EXISTING OIL LINE
- OHS — EXISTING OVERHEAD ELECTRICAL
- E — EXISTING UNDERGROUND ELECTRICAL
- W — PROPOSED WATER LINE
- SS — PROPOSED SANITARY SEWER LINE
- PROPOSED STORM DRAIN MAIN LINE (Ø ≥ 18")
- SD — PROPOSED STORM DRAIN LATERAL (Ø ≤ 18")
- PROPOSED TREE. SEE LANDSCAPE PLANS.
- PROPOSED SUBSURFACE NON-PRESSURIZED IRRIGATION SYSTEM

NOTES (CONTINUED):

4. INSTALL 4" SDR-35 PIPE TO DRAIN EXISTING VIADUCT ARCH LIGHT. ARCH LIGHT TO BE ADJUSTED TO IN-GRADE BY PARC CONTRACTOR PER DETAIL 8, SHEET C-600. PIPING TO BE FIELD ROUTED AND CONNECTED TO THE PROPOSED BENT DRAINAGE SYSTEM. CONTRACTOR SHALL SUBMIT LAYOUTS FOR APPROVAL.
5. VIADUCT CONTRACTOR REMOVED PORTIONS OF THE OLD VIADUCT REINFORCED CONCRETE FOUNDATIONS TO A DEPTH OF A FEW FEET BELOW THE EXISTING GROUND SURFACE. PARC CONTRACTOR SHALL BE RESPONSIBLE FOR VERIFYING EXISTING CONDITIONS AND REMOVING ANY ADDITIONAL PORTIONS OF THE FOUNDATIONS THAT CONFLICT WITH THE PROPOSED PARC IMPROVEMENTS.
6. LENGTHS SHOWN IN THE BEARING AND DISTANCE PLAN VIEW LABELS REPRESENT ALIGNMENT SEGMENT LENGTHS. REFER TO PROFILES FOR HORIZONTAL PIPE SEGMENT LENGTHS BETWEEN STRUCTURES.

PLANS PREPARED BY:
TETRA TECH, INC.
707 WILSHIRE BLVD. 23RD FLR.
LOS ANGELES, CA 90017
PHONE: (213) 239-8866

THIS PLAN WAS ELECTRONICALLY SIGNED AND STAMPED

PROFESSIONAL ENGINEER ★ REGISTERED ★ JUSTIN T. SMITH ★ No. 85736 EXP: 9-30-24 ★ CIVIL ★ STATE OF CALIFORNIA

ENGINEERING
CITY OF LOS ANGELES
BUREAU OF ENGINEERING

NO.	REVISIONS:	DATE:	BY:
1	BID ADDENDUM NO. 10	11/1/22	JS

BUILDING NO.

INDEX NO.

CITY OF LOS ANGELES DEPARTMENT OF PUBLIC WORKS

GARY LEE MOORE, P.E., ENV SP — CITY ENGINEER

ENGINEER:	JUSTIN SMITH	LIC. NO. C-85736	DATE: 11/01/22
DESIGNED BY:	JUSTIN SMITH		
DRAWN BY:	TYLER PARRA		
CHECKED BY:	NATE SCHREINER		
APPROVED BY:	JASON L. FUSSEL		

DESIGN GROUP

SHEET TITLE: STORM DRAIN PLAN & PROFILE SHEET 6

PROJECT: SIXTH STREET PARK, ARTS AND RIVER CONNECTIVITY IMPROVEMENTS (PARC)

ADDRESS: SIXTH STREET OVER THE LOS ANGELES RIVER

VERT. CONTROL: BM 12-04070, 1929 (NGVD29) - 1985 ADJUSTMENT
HORIZ. CONTROL: GPS; PID AE 1704, EPOCH 1991.35

WORK ORDER NO. E700235D

FILE NO. --

DRAWING NO. C-407

SHEET 49 OF SHEETS

REVISION DATES (DESIGN STAGE ONLY)

THE CITY OF LOS ANGELES OR ITS OFFICERS OR AGENTS SHALL NOT BE RESPONSIBLE FOR THE ACCURACY OR COMPLETENESS OF ELECTRONIC COPIES OF THIS PLAN SHEET.

11/2/2022 12:01:45 PM - O:\PROJECTS\IRVINE\20043\200-20043-17001\CAD\SHEETFILES\C-407_STORM DRAIN PLAN AND PROFILE - TT.DWG - SMITH, JUSTIN

Sheet Version 3.0

ADDENDUM 10

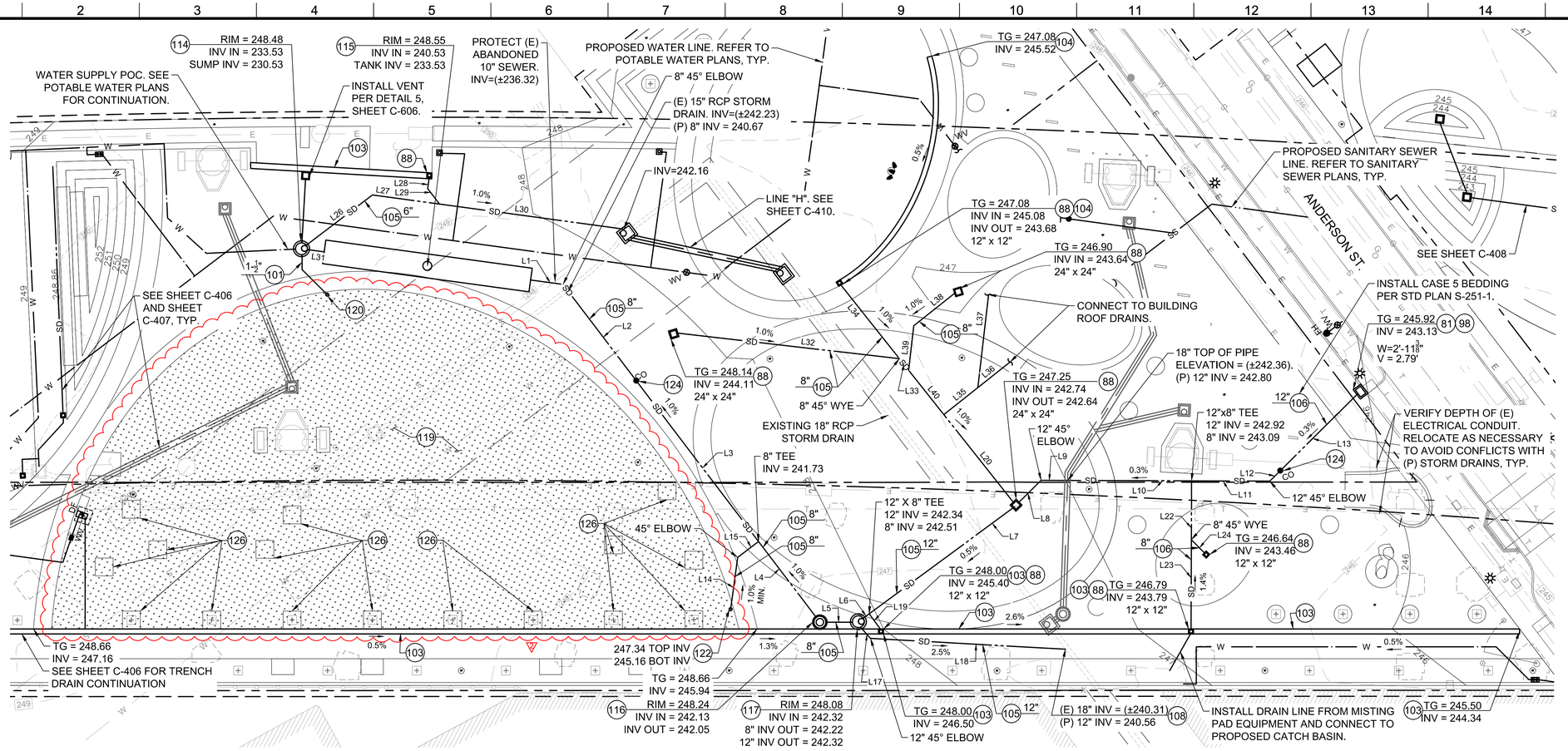

LEGEND:

- PROPERTY / BOUNDARY LINE
- EASEMENT BOUNDARY LINE
- S — EXISTING SANITARY SEWER
- W — EXISTING WATER LINE
- EXISTING STORM DRAIN
- G — EXISTING GAS LINE
- T — EXISTING UNDERGROUND/OVERHEAD TELECOMMUNICATIONS LINE
- O — EXISTING OIL LINE
- OHS — EXISTING OVERHEAD ELECTRICAL
- E — EXISTING UNDERGROUND ELECTRICAL
- W — PROPOSED WATER LINE
- SS — PROPOSED SANITARY SEWER LINE
- PROPOSED STORM DRAIN MAIN LINE (Ø ≥ 18")
- SD — PROPOSED STORM DRAIN LATERAL (Ø ≤ 18")
- PROPOSED SUBSURFACE NON-PRESSURIZED IRRIGATION SYSTEM

NOTE:

1. NO DUMPING STENCIL SHALL BE PLACED ON TOP OF INLET OR TOP OF CURB AT ALL INLETS PER DETAIL 9, SHEET C-605.
2. CONTRACTOR TO FIELD VERIFY LOCATIONS AND INVERTS OF ALL EXISTING UTILITIES AND PROPOSED CONNECTIONS TO EXISTING STORM DRAIN FACILITIES BEFORE STARTING STORM DRAIN CONSTRUCTION. CONTRACTOR TO NOTIFY THE CITY OF ANY DISCREPANCIES.
3. PROPOSED ELECTRICAL CONDUIT NOT SHOWN FOR CLARITY. REFER TO ELECTRICAL PLANS. CONTRACTOR RESPONSIBLE FOR ALL COORDINATION TO AVOID CONFLICTS WITH PROPOSED STORM DRAIN SYSTEM..

LEGEND OF CONSTRUCTION NOTES

◯ CONSTRUCT

NO.	CONSTRUCTION ITEM/NOTE	STANDARD PLAN
81	CURBSIDE GRATING BASIN (CGB)	SPPWC 303-3
88	PRECAST GRATE CATCH BASIN	DTL 7, SHT C-605
101	SCH 40 PVC PIPE	DTL 4, SHT C-605
103	TRENCH DRAIN	DTL 10, SHT C-605
104	RADIUS TRENCH DRAIN	DTL 5, SHT C-605
105	SDR-35 PVC PIPE	DTL 4, SHT C-605
106	DUAL WALL HDPE PIPE	DTL 4, SHT C-605
108	JUNCTION STRUCTURE	SPPWC 331-3
110	JUNCTION STRUCTURE	SPPWC 332-2
114	WET WELL AND PUMP	DTL 4, SHT C-606
115	STORMWATER STORAGE TANK	DTL 4, SHT C-606
116	HYDRODYNAMIC SEPARATOR, TYPE 1	DTL 1, SHT C-606
117	DIVERSION MAINTENANCE HOLE	DTL 3, SHT C-606
119	EAST SUBSURFACE NON-PRESSURIZED IRRIGATION SYSTEM	DTL 1 & 2, SHT C-607 DTL 2, SHT C-607A
120	SUBSURFACE NON-PRESSURIZED IRRIGATION SYSTEM INLET	DTL 2, SHT C-607
122	SUBSURFACE NON-PRESSURIZED IRRIGATION SYSTEM OUTLET	DTL 2, SHT C-607A
123	PRECAST CONCRETE JUNCTION STRUCTURE W/ COVER	DTL 8, SHT C-605
124	STORM DRAIN CLEANOUT	DTL 6, SHT C-605
126	SUBSURFACE NON-PRESSURIZED IRRIGATION AT TREES	DTL 3, SHT C-607

LINE TABLE

LINE #	LENGTH	BEARING
L1	11.00'	S 65°08'33" E
L2	40.65'	N 20°08'33" W
L3	67.91'	N 20°08'33" W
L4	32.09'	N 20°08'33" W
L5	8.95'	N 72°54'22" W
L6	2.48'	S 70°43'40" W
L7	60.42'	S 70°43'40" W
L8	10.83'	S 62°17'24" W
L9	8.00'	N 72°42'36" W
L10	67.03'	N 72°42'36" W
L11	67.03'	N 72°42'36" W
L12	5.00'	S 62°17'24" W
L13	36.76'	S 62°17'24" W
L14	17.58'	N 24°51'27" E
L15	8.82'	N 69°51'27" E
L17	5.00'	N 24°42'42" W
L18	65.62'	N 69°42'42" W
L19	6.74'	N 19°16'20" W
L20	37.95'	S 21°20'07" E
L22	19.79'	S 17°17'24" W

LINE TABLE

LINE #	LENGTH	BEARING
L23	29.99'	S 17°17'24" W
L24	6.55'	S 27°42'36" E
L26	27.93'	N 69°51'27" E
L27	22.69'	S 65°08'33" E
L28	4.00'	N 24°51'27" E
L29	6.51'	N 20°08'33" W
L30	62.59'	S 65°08'33" E
L31	5.67'	N 65°08'33" W
L32	75.38'	S 66°20'07" E
L33	93.89'	S 21°20'07" E
L34	31.94'	N 21°20'07" W
L35	14.62'	N 68°39'53" E
L36	13.87'	N 68°39'53" E
L37	31.43'	N 23°39'53" E
L38	17.88'	N 68°39'53" E
L39	15.10'	N 23°39'53" E
L40	19.00'	S 21°20'07" E

SCALE: 1"=20'

PLANS PREPARED BY:
TETRA TECH, INC.
707 WILSHIRE BLVD, 23RD FLR.
LOS ANGELES, CA 90017
PHONE: (213) 239-8866

BUREAU OF ENGINEERING
ENGINEERING
CITY OF LOS ANGELES

NO.	REVISIONS:	DATE	BY:
1	BID ADDENDUM NO. 10	11/1/22	JS

BUILDING NO.

INDEX NO.

THIS PLAN WAS ELECTRONICALLY SIGNED AND STAMPED

JUSTIN T. SMITH — No. 85736 — EXP: 9-30-24 — CIVIL — STATE OF CALIFORNIA

CITY OF LOS ANGELES DEPARTMENT OF PUBLIC WORKS

GARY LEE MOORE, P.E., ENV SP — CITY ENGINEER — DATE: 11/01/22 — LIC NO. C-85736

DESIGN GROUP	
ENGINEER:	JUSTIN SMITH
DESIGNED BY:	JUSTIN SMITH
DRAWN BY:	TYLER PARRA
CHECKED BY:	NATE SCHREINER
APPROVED BY:	JASON L. FUSSEL

VERT. CONTROL: BM 12-04070, 1929 (NGVD29) - 1985 ADJUSTMENT
HORIZ. CONTROL: GPS; PID AE 1704, EPOCH 1991.35

SHEET TITLE: STORM DRAIN PLAN SHEET 10

PROJECT: SIXTH STREET PARK, ARTS AND RIVER CONNECTIVITY IMPROVEMENTS (PARC)

ADDRESS: SIXTH STREET OVER THE LOS ANGELES RIVER

WORK ORDER NO. E700235D
FILE NO. --
DRAWING NO. C-411
SHEET 53 OF SHEETS

11/2/2022 10:50:33 AM - O:\PROJECTS\IRVINE\20043\20200-20043-17001\CAD\SHEETFILES\C-411_STORM DRAIN PLAN DWG - SMITH, JUSTIN

REVISION DATES (DESIGN STAGE ONLY)

THE CITY OF LOS ANGELES OR ITS OFFICERS OR AGENTS SHALL NOT BE RESPONSIBLE FOR THE ACCURACY OR COMPLETENESS OF ELECTRONIC COPIES OF THIS PLAN SHEET.

Sheet Version 3.0

ADDENDUM 10

1. SUBGRADE REQUIREMENTS
1.1. EPIC™ SUBGRADE MUST BE LASER LEVEL.
1.2. NATIVE SOIL INSTALLATIONS: SUBGRADE TO BE COMPACTED, MIN. 90% STD. PROCTOR DENSITY.
1.3. ADJACENT STRUCTURES/BUILDINGS/WALLS: DESIGN ENGINEER TO VERIFY WITH APPROPRIATE CONSULTANTS PLACING OF EPIC™ PLANTED AREAS NEAR OTHER STRUCTURES (INCLUDING FREESTANDING FENCES AND WALLS). UNLIKE COMPACTED SOIL, EPIC™ DOES NOT PROVIDE ANY LATERAL STRUCTURAL SUPPORT.

2. SYSTEM STANDARDS
2.1. EPIC™ GRAVEL LAYER MUST BE EXACTLY 2 INCHES IN DEPTH.
2.2. EPIC™ SAND LAYER MUST BE EXACTLY 16 INCHES IN DEPTH.
2.3. PASSIVE SYSTEM: ALL INCOMING AND OVERFLOW PIPES SHALL BE SIZED BY OTHERS ACCORDING TO APPLICABLE CODES AND REGULATIONS AND IN A MANNER SUCH AS IT SHALL NOT TAKE INTO ACCOUNT ANY VOLUMES RETAINED BY THE EPIC™ SYSTEM.
2.4. AUXILIARY STORAGE: AUXILIARY STORAGE IS ANY EPIC™-APPROVED STORAGE WHICH LOCATED OUTSIDE OF THE EPIC™ SYSTEM.
2.4.1. PUMP FOR EPIC™ AUXILIARY STORAGE: SHALL BE DESIGNED BY ENGINEER OF RECORD AND IT IS NOT PROVIDED BY EPIC™.
2.4.2. LADPH ENVIRONMENTAL HEALTH SERVICES CROSS CONNECTION PROGRAM: SYSTEMS WITH AUXILIARY STORAGE REQUIRE COMPLIANCE WITH REQUIREMENTS WHICH ARE BEYOND THE SCOPE OF THE EPIC™ LAYOUT DESIGN AND MUST BE PROCESSED FOR APPROVAL WITH THE APPROPRIATE AGENCIES AS REQUIRED BY APPLICABLE CODES.
2.4.3. LANDSCAPING:
2.4.3.1. UNDER NORMAL OPERATING CONDITIONS, THE TOP 2" OF EPIC™ PROFILE WILL REMAIN DRY.
2.4.3.2. LANDSCAPE ARCHITECT TO DETERMINE APPROPRIATE NUTRIENT ADDITIVES AND FERTILIZERS BASED ON THE PROPOSED PLANTING.
2.4.3.3. AUTOMATED FERTIGATION IS AN ACCEPTABLE METHOD FOR DELIVERY OF NUTRIENTS.
2.4.3.4. NO SOIL OF ANY KIND SHALL BE PLACED ON TOP OR MIXED INTO THE EPIC™ PROFILE.
2.4.4. IRRIGATION:
2.4.4.1. EPIC™ IS DESIGNED TO FUNCTION AS A HIGH-EFFICIENCY, SUBSURFACE, NON-PRESSURIZED IRRIGATION SYSTEM.
2.4.4.2. EPIC™ IRRIGATION DESIGN AND CONNECTIONS MUST FOLLOW THE STANDARD SPECIFICATIONS SHOWN AND COMPLY WITH LADPH ENVIRONMENTAL HEALTH SERVICES CROSS CONNECTION PROGRAM REQUIREMENTS (SEE SECTION 3 HEREIN)

3. LADPH ENVIRONMENTAL HEALTH CROSS CONNECTION PROGRAM
3.1. EPIC™ SYSTEM COMPLIES WITH TIER II OUTDOOR CATEGORY IN *"GUIDELINES FOR HARVESTING RAINWATER, STORMWATER, & URBAN RUNOFF FOR OUTDOOR NON-POTABLE USES" (2015 CPC: CHP. 16, SEC. 1602.9.4)*
3.2. ALL CAPTURE & USE BMP DESIGN AND INSTALLATION MUST COMPLY WITH THE REQUIREMENTS HEREIN. PLANS AND APPLICABLE FEES MUST BE SUBMITTED TO THE PROGRAM FOR OBTAINING A SITE NUMBER AND/OR REVIEW:
COUNTY OF LOS ANGELES DEPARTMENT OF PUBLIC HEALTH
ENVIRONMENTAL HEALTH - CROSS CONNECTION PROGRAM
5050 COMMERCE DRIVE, BALDWIN PARK CA 91706
(888) 700-9995
3.3. EPIC™ IRRIGATION SYSTEM SUPPLIED FROM THE DOMESTIC WATER SHALL BE PROTECTED WITH AN APPROVED AND DEDICATED BACKFLOW PREVENTION ASSEMBLY, I.E. PRESSURE VACUUM BREAKER (PVB) OR REDUCED PRESSURE PRINCIPLE BACKFLOW PREVENTION DEVICE (RP). THE RESULTING IRRIGATION CAN BE USED AS THE MAKE-UP WATER SUPPLY FOR EPIC™ AS LONG AS THEY DISCHARGE WITHIN THE EPIC™ PROFILE AS SHOWN ON THE LAYOUTS. DIRECT CONNECTION TO ANY EPIC™ STORAGE (INTEGRATED OR AUXILIARY) IS NOT ALLOWED UNDER ANY CIRCUMSTANCES. (*2019 CPC: CHP. 6, SEC. 603.5.6*)
3.4. ALL WATER CONVEYANCE PIPES AND VALVES SHALL BE IDENTIFIED WITH CONTINUOUS PIPELINE IDENTIFICATION TAPE (TAGS FOR VALVES) WITH DIRECTION OF NORMAL FLOW, ATTACHED TO THE PIPE AND SECURED EVERY 5 FEET. PIPE LABELING SHALL BEGIN AT THE APPROVED BACKFLOW PREVENTER DEVICE AND CONTINUE UNINTERRUPTED UNTIL THE FINAL DISCHARGE POINT OR, FOR POTABLE WATER, UNTIL IT ENTERS THE BUILDING. TAPE SHALL READ AS FOLLOWS:

TOTAL WATER SOLUTIONS

DESIGN ENGINEER IS RESPONSIBLE FOR VERIFYING ALL OTHER PERTINENT INFORMATION AND ENSURING SYSTEM DESIGN IS NOT ALTERED BEYOND THE ABOVE MANUFACTURER DESIGN PARAMETERS WHICH WILL RENDER THE SYSTEM NON-FUNCTIONAL AND IT MAY NOT PERFORM AS INTENDED.

FOR EPIC™ MAKE-UP IRRIGATION WATER FROM A PROTECTED POTABLE SOURCE: "NON-POTABLE IRRIGATION WATER - DO NOT DRINK" ON YELLOW TAPE WITH BLACK UPPERCASE LETTERS; VALVES - "NON-POTABLE IRRIGATION WATER - DO NOT DRINK" YELLOW WITH BLACK UPPERCASE LETTERS.
FOR EPIC™ AUXILIARY STORAGE: CONVEYANCE PIPELINES FROM PUMP - "CAUTION UNSAFE CISTERN WATER - SUBSURFACE IRRIGATION ONLY" ON PURPLE TAPE WITH BLACK UPPERCASE LETTERS; VALVES - "CAUTION UNSAFE CISTERN WATER - SUBSURFACE IRRIGATION ONLY" PURPLE WITH BLACK LETTERS.
ALL OTHER POTABLE WATER SYSTEM: PIPELINES - "POTABLE WATER" ON BLUE OR GREEN TAPE WITH WHITE UPPERCASE LETTERS; VALVES - "POTABLE WATER" ON BLUE OR GREEN WITH WHITE LETTERS. (*2019 CPC: CHP. 6, SEC 601.3 AND 601.3.2; CHP. 16, SEC. 1602.9.1*)

3.5. OVERFLOW FROM EPIC™ SYSTEM AND EPIC™ SYSTEM WITH STORAGE MUST OCCUR WITHIN THE EPIC™ PROFILE AT THE ELEVATION PRESCRIBED BY EPIC™ MANUFACTURER STANDARDS.
3.6. INSPECTION: ALL WATER CONVEYANCE PIPING SHALL BE INSPECTED BY A REPRESENTATIVE OF THE PROGRAM FOR CONFIRMATION OF PROPER IDENTIFICATION AND SEPARATION REQUIREMENTS.
3.7. FINAL APPROVAL: PRIOR TO FINAL CONSTRUCTION APPROVAL, A CROSS-CONNECTION, PRESSURE AND SEPARATION TEST SHALL BE PERFORMED TO ENSURE SEPARATION BETWEEN ALL WATER SYSTEMS ON SITE. THE EPIC™ MAKE-UP IRRIGATION SYSTEM MUST BE AT 100% FUNCTIONALITY TO SHOW COMPLIANCE.
3.8. RESPONSIBLE PARTY
3.8.1. OWNER AND/OR THEIR REPRESENTATIVES SHALL DISTRIBUTE THIS INFORMATION AND/OR THE PROGRAM CONDITIONAL APPROVAL LETTER TO THE PROJECT CONTRACTORS/EPIC™ ™ SYSTEM INSTALLERS.
3.8.2. AN ON-SITE WATER SUPERVISOR SHALL BE DESIGNATED AND SHALL BE RESPONSIBLE FOR INSTALLATION, OPERATION, AND MAINTENANCE OF THE EPIC™ SYSTEM AND POTABLE WATER SYSTEMS. THE WATER SUPERVISOR SHALL ALSO PREVENT POTENTIAL HAZARDS, IMPLEMENT THESE GUIDELINES AND COORDINATE FUTURE INSPECTIONS WITH THE CROSS-CONNECTION CONTROL PROGRAM OF BOTH THE MUNICIPAL WATER PURVEYOR AND THE LADPH-EH CROSS-CONNECTION PROGRAM.
3.9. OPERATION & MAINTENANCE
THE EPIC™ OPERATION & MAINTENANCE MANUAL PROVIDED BY THE MANUFACTURER SHALL BE SUPPLIED TO THE BUILDING OWNER AND SHALL REMAIN WITH THE BUILDING THROUGHOUT THE LIFE CYCLE OF THE STRUCTURE AND SYSTEM. UPON CHANGE OF OWNERSHIP THE NEW OWNER SHALL BE NOTIFIED THE PROPERTY CONTAINS AN EPIC™ SYSTEM AND PROVIDED WITH THE MANUAL. THE EPIC™ OPERATION & MAINTENANCE MANUAL SHALL BE PROVIDED AT THE TIME OF FINAL INSPECTION. (*2019 CPC: CHP. 6, SEC. 1601.5*)

4. INSTALLATION NOTES
4.1. GENERAL:
4.1.1. ALL EPIC™ INSTALLATIONS SHALL BE PERFORMED BY LICENSED CONTRACTORS AND WITH ON-SITE TECHNICAL SUPPORT PROVIDED BY CERTIFIED MANUFACTURER'S REPRESENTATIVE.
4.1.2. INSTALLATION TECHNICAL SUPPORT SHALL NOT BE DEEMED AS ASSUMPTION OF ANY LIABILITY BY THE MANUFACTURER, REGIONAL REPRESENTATIVE OR THEIR EMPLOYEES, AGENTS AND REPRESENTATIVES.
4.1.3. SUPPORT IS PROVIDED TO INSTALLATION CONTRACTOR AS A GUIDANCE TO ENSURE PROPER INSTALLATION AND, ULTIMATELY, PROPER FUNCTION OF THE SYSTEM. ANY ALTERATIONS, ADDITIONS, SUBTRACTIONS OR OTHER DEVIATIONS FROM THE ORIGINAL APPROVED PLANS FOR THE EPIC™ SYSTEM SHALL BE REVIEWED AND APPROVED BY THE PROJECT DESIGN ENGINEER.
4.1.4. MANUFACTURER REPRESENTATIVE, RESERVES THE RIGHT TO STOP INSTALLATION WORK UNTIL THE DESIGN ENGINEER HAS REVIEWED AND APPROVED PROPOSED CHANGES. ANY WORK THAT IS PERFORMED DURING SUCH STOPPAGE, MAY BE INADEQUATE, INCORRECT AND MAY HAVE TO BE REDONE.
4.2. CONSTRUCTION:
4.2.1. NATIVE SOIL INSTALLATIONS: SUBGRADE TO BE COMPACTED, MIN. 90% STD. PROCTOR DENSITY.
4.2.2. INVERTS FOR INCOMING PIPES, AREA CONNECTOR PIPES AND OVERFLOW PIPES MUST BE MET AS PRECISELY AS POSSIBLE. IF THE SUBGRADE ELEVATIONS ARE NOT EXACTLY MET PER PLAN, THE INVERTS MUST BE ADJUSTED ACCORDINGLY. ADJUSTMENT AND VERIFICATION OF THE INVERTS MUST BE DONE BY THE PROJECT DESIGN ENGINEER. FAILURE TO ADJUST THE INVERTS MAY RESULT IN IMPROPER SYSTEM FUNCTION.
4.2.3. PLACEMENT OF THE EPIC™ UNITS MUST FOLLOW THE DESIGN PLANS. ANY FIELD ADJUSTMENTS MUST BE REVIEWED AND APPROVED BY MANUFACTURER REPRESENTATIVE.
4.2.4. PRIOR TO PLACING ANY AGGREGATE AND SAND, EPIC™ UNITS MUST BE WEIGHTED DOWN WITH SAND BAGS AT EACH END. THE SAND FOR THE SAND BAGS MUST BE THE EPIC™-SPECIFIC SAND TO PREVENT ANY NON-APPROVED MEDIA GETTING MIXED IN WITH THE WASHED EPIC™ SAND.
4.2.5. THE 2" GRAVEL LAYER CANNOT EXCEED 2", MUST BE NO LESS THAN 1" AND MUST COVER THE EPIC™ UNIT OPENINGS COMPLETELY TO PREVENT SAND FROM ENTERING EPIC™.
4.2.6. THE SAND LAYER MUST BE PLACED AT A DEPTH AS SHOWN ON THE DESIGN PLANS. ANY DEPTH DIFFERENCE MUST BE APPROVED BY MANUFACTURER REPRESENTATIVE.
4.2.7. CONTRACTOR MUST ENSURE THAT ALL EPIC™ AGGREGATE AND SAND MEDIA IS PROTECTED FROM CONTAMINATION AFTER IT IS DELIVERED ON SITE. IF NECESSARY, PLASTIC TARPS MAY BE USED AS PROTECTION FROM DIRT AND OTHER DEBRIS. FAILURE TO KEEP AGGREGATE AND SAND MEDIA CLEAN AND FREE OF CONTAMINANTS AND TRASH MAY RESULT IN IMPROPER SYSTEM FUNCTION.
4.3. LANDSCAPE INSTALLATION:
4.3.1. FERTILIZER AND/OR NUTRIENT MIX MUST BE ADDED AND MIXED INTO THE TOP OF THE EPIC™ PROFILE AND PROPAGATED WITH TOP WATERING PRIOR TO PLANTING. TYPE OF FERTILIZER AND/OR NUTRIENT MIX SHALL BE PER LANDSCAPE ARCHITECT SPECIFICATIONS.
4.3.2. PRIOR TO PLANTING ANY PLANTS, EPIC™ SYSTEM MUST BE FULLY CHARGED. WATER MUST BE APPLIED TO REACH MAXIMUM OPERATING CAPACITY WITHOUT CAUSING OVERFLOW TO OCCUR (APPROXIMATELY 3.5" WATER LEVEL WITHIN SYSTEM PROFILE). WATER MUST BE APPLIED AT A SLOW RATE OVER A 24 HOUR PERIOD TO ALLOW FOR CAPILLARY ACTION TO DISTRIBUTE IT EVENLY. SYSTEM IS CONSIDERED CHARGED WHEN MOISTURE IS PRESENT AT ABOUT 1-2" BELOW THE SURFACE OF EPIC™.
4.3.3. DURING THE PLANTING ESTABLISHMENT PERIOD, SYSTEM SHOULD NOT BE ALLOWED TO DRY OUT COMPLETELY. TOP WATERING BY HAND OR USING TEMPORARY DRIP IRRIGATION SHALL BE UTILIZED TO KEEP SAND PROFILE MOIST TO FACILITATE PROPER ROOT GROWTH.

SHEET INDEX

SHEET No.	DESCRIPTION
1	TITLE SHEET / SYSTEM SPECIFICATIONS
2	KEY MAP, CALCULATIONS & STANDARD DETAILS
3 - 4	PLANTER LAYOUTS

SIXTH ST. VIADUCT PARC
EAST SIXTH ST. LOS ANGELES, CA 90013

PROJECT DESIGN ENGINEER:
TETRA TECH, INC.
TEL: 213-239-8866
707 WILSHIRE BLVD., 23RD FLR.
LOS ANGELES, CA 90017

TOTAL WATER SOLUTIONS
REGION 9
CA, NV, AZ, HI
LID INC.
818.855.2868
EPICTWS.COM

REV	DATE	BY	DESCRIPTION

EPIC™ SYSTEM
TITLE SHEET/SYSTEM SPECIFICATIONS
EAST SIXTH STREET
LOS ANGELES, CA 90013

DATE: 10-31-2022
DRAWN BY: VA
CHECKED BY: MG
EPIC™ ID: 221032
SHEET 1 OF 4

THIS DETAIL DISCLOSES INFORMATION WHICH IS PROPRIETARY AND RIGHTS ARE PROPERTY OF THEIR RESPECTIVE OWNERS. THE RECEIPT OR POSSESSION OF THIS DETAIL DOES NOT CONVEY, TRANSFER, OR LICENSE THE USE OF THE DESIGN OR TECHNICAL INFORMATION HEREIN, REPRODUCTION OR IMPLEMENTATION OF THE DESIGN OR TECHNICAL INFORMATION HEREIN WITHOUT THE EXPRESS WRITTEN CONSENT OF EPIC™ SYSTEMS LLC AND AFFILIATES IS PROHIBITED. USE OF ANY OF THE DESIGN INFORMATION CONTAINED HEREIN, IN WHOLE OR IN PART, IS AT USER'S SOLE RISK AND USER AGREES TO INDEMNIFY AND HOLD EPIC™ SYSTEMS LLC AND AFFILIATES HARMLESS FROM ANY AND ALL LIABILITIES, DAMAGES, LOSSES AND CLAIMS ARISING OUT OF OR RESULTING FROM USE OF THE DESIGN INFORMATION. THE SITE DESIGN ENGINEER OF RECORD IS SOLELY RESPONSIBLE FOR THE SITE DESIGN AND ULTIMATE RESPONSIBILITY OF THE SITE DESIGN ENGINEER TO ENSURE THAT THE PRODUCTS DEPICTED AND ALL ASSOCIATED DETAILS MEET ALL APPLICABLE LAWS, REGULATIONS, AND PROJECT REQUIREMENTS.

1 SUBSURFACE NON-PRESSURIZED IRRIGATION SYSTEM SPECIFICATIONS
NTS REFERENCE SHEET C-403 & C-411

NOTES:
1. FOR THE PURPOSES OF CLARITY IN THE DRAWINGS, THE EPIC SYSTEM BY EPIC TOTAL WATER SOLUTIONS LLC HAS BEEN SHOWN. ALTERNATIVE SYSTEMS MAY BE APPROVED BY THE ENGINEER PROVIDED THE SYSTEMS PROVIDE EQUIVALENT PERFORMANCE AND MEET ALL OF THE REQUIREMENTS OF THE CONTRACT DOCUMENTS.
2. CONTRACTOR RESPONSIBLE FOR OBTAINING COUNTY OF LOS ANGELES DEPARTMENT OF PUBLIC HEALTH PERMIT FOR FINAL SYSTEM. SEE NOTES ON DETAIL 1, SHEET C-607 FOR ADDITIONAL INFORMATION.

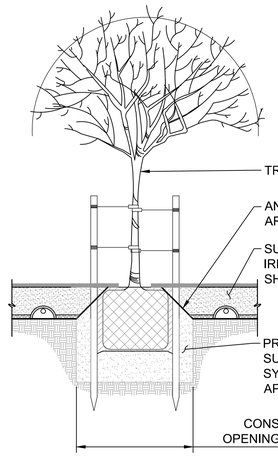

3 SUBSURFACE NON-PRESSUREIZED IRRIGATION SYSTEM AT TREE LOCATIONS
NTS REFERENCE SHEET C-403 & C-411

PROJECT ID 221032
DATE 10/27/2022
PROJECT NAME SIXTH ST. VIADUCT PARC
PREPARED BY VA
PROJECT ADDRESS EAST SIXTH ST. LOS ANGELES, CA 90013
DESIGN CONSULTANT TETRA TECH, INC. | 85th Percentile | 1.00

TRIBUTARY AREA			HYBRID RETENTION & BIOFILTRATION		UNIT QTY	CAPTURE & USE WITH OR WITHOUT INTEGRATED STORAGE		
							SYSTEM CAPACITY & DEPTH	
EPIC™ AREA ID	EPIC™ AREA **Ae** (SF)	**Vm** (CF)	EPIC™ RETENTION VOLUME **Vret** (CF)	ETv 7-MONTH (CF)	MIN EPIC™ LARGE UNITS (1 LG = 4 SM)	**CAPTURE & USE** ETv / Vm	TOTAL SYSTEM RETENTION CAPACITY **Vd** (CF)	SYSTEM OVERALL PROFILE (MIN) **Ds** (FT)
WEST	8576	3034	2908	25224	520	○ 8.31	2908	1.75
EAST	19724	4685	6682	58012	1196	○ 12.38	6682	1.75
TOTALS	**28300**	**7720**	**9590**		**1716**		**9590**	



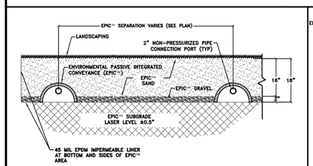

EPIC™ SYSTEM STANDARD PROFILE (TYP) ① NTS

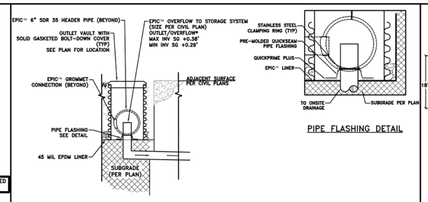

EPIC™ OVERFLOW / SYSTEM OUTLET STANDARDS DETAIL ② NTS

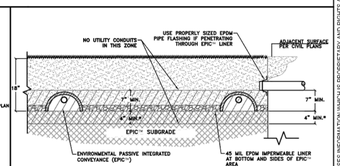

CONDUITS THROUGH EPIC™ SYSTEM (TYP) ③ NTS

NOTES:
1. FOR THE PURPOSES OF CLARITY IN THE DRAWINGS, THE EPIC SYSTEM BY EPIC TOTAL WATER SOLUTIONS LLC HAS BEEN SHOWN. ALTERNATIVE SYSTEMS MAY BE APPROVED BY THE ENGINEER PROVIDED THE SYSTEMS PROVIDE EQUIVALENT PERFORMANCE AND MEET ALL OF THE REQUIREMENTS OF THE CONTRACT DOCUMENTS.
2. CONTRACTOR RESPONSIBLE FOR OBTAINING COUNTY OF LOS ANGELES DEPARTMENT OF PUBLIC HEALTH PERMIT FOR FINAL SYSTEM. SEE NOTES ON DETAIL 1, SHEET C-607 FOR ADDITIONAL INFORMATION.

TOTAL WATER SOLUTIONS
REGION 9
CA, NV, AZ, HI
LID INC.
818.855.2868
EPICTWS.COM

REV	DATE	BY	DESCRIPTION

EPIC™ SYSTEM
KEY MAP & CALCULATIONS & TYPICAL DETAILS
EAST SIXTH STREET
LOS ANGELES, CA 90013

DATE: 10-31-2022
DRAWN BY: VA
CHECKED BY: MG
EPIC™ ID: 221032
SHEET 2 OF 4

THIS DETAIL DISCLOSES INFORMATION WHICH IS PROPRIETARY AND RIGHTS ARE PROPERTY OF THEIR RESPECTIVE OWNERS. THE RECEIPT OR POSSESSION OF THIS DETAIL DOES NOT CONVEY, TRANSFER, OR LICENSE THE USE OF THE DESIGN OR TECHNICAL INFORMATION HEREIN, REPRODUCTION OR IMPLEMENTATION OF THE DESIGN OR TECHNICAL INFORMATION HEREIN WITHOUT THE EXPRESS WRITTEN CONSENT OF EPIC™ SYSTEMS LLC AND AFFILIATES IS PROHIBITED. USE OF ANY OF THE DESIGN INFORMATION CONTAINED HEREIN, IN WHOLE OR IN PART, IS AT USER'S SOLE RISK AND USER AGREES TO INDEMNIFY AND HOLD EPIC™ SYSTEMS LLC AND AFFILIATES HARMLESS FROM ANY AND ALL LIABILITIES, DAMAGES, LOSSES AND CLAIMS ARISING OUT OF OR RESULTING FROM USE OF THE DESIGN INFORMATION. THE SITE DESIGN ENGINEER OF RECORD IS SOLELY RESPONSIBLE FOR THE SITE DESIGN AND ULTIMATE RESPONSIBILITY OF THE SITE DESIGN ENGINEER TO ENSURE THAT THE PRODUCTS DEPICTED AND ALL ASSOCIATED DETAILS MEET ALL APPLICABLE LAWS, REGULATIONS, AND PROJECT REQUIREMENTS.

2 SUBSURFACE NON-PRESSURIZED IRRIGATION SYSTEM TYPICAL DETALS AND SIZING
NTS REFERENCE SHEET C-403 & C-411

BUREAU OF ENGINEERING
ENGINEERING
CITY OF LOS ANGELES

NO.	REVISIONS:	DATE	BY:
1	BID ADDENDUM NO. 10	11/1/22	JS

BUILDING NO.
INDEX NO.

"THIS PLAN WAS ELECTRONICALLY SIGNED AND STAMPED"
JUSTIN T. SMITH
No. 85736
EXP: 9-30-24
CIVIL
STATE OF CALIFORNIA
REGISTERED PROFESSIONAL ENGINEER

CITY OF LOS ANGELES DEPARTMENT OF PUBLIC WORKS
CITY ENGINEER: GARY LEE MOORE, P.E., ENV SP
DESIGN GROUP
ENGINEER: JUSTIN SMITH LIC. NO. C-85736 DATE: 11/01/22
DESIGNED BY: JUSTIN SMITH
DRAWN BY: DAVID LOPEZ
CHECKED BY: NATE SCHREINER
APPROVED BY: JASON L. FUSSEL

VERT. CONTROL: BM 12-04070, 1929 (NGVD29) - 1985 ADJUSTMENT
HORIZ. CONTROL: GPS; FHD AE 1704, EPOCH 1991.35

SHEET TITLE: CIVIL DETAILS SHEET 8
PROJECT: SIXTH STREET PARK, ARTS AND RIVER CONNECTIVITY IMPROVEMENTS (PARC)
ADDRESS: SIXTH STREET OVER THE LOS ANGELES RIVER

PLANS PREPARED BY:
TETRA TECH, INC.
707 WILSHIRE BLVD, 23RD FLR.
LOS ANGELES, CA 90017
PHONE: (213) 239-8866

WORK ORDER NO. E700235D
FILE NO. --
DRAWING NO. C-607
SHEET 72 OF SHEETS

11/2/2022 11:46:50 AM - O:\PROJECTS\IRVINE\20043\200-20043-17001\CAD\SHEETFILES\C-607_DETAILS - TIT.DWG - SMITH, JUSTIN

THE CITY OF LOS ANGELES OR ITS OFFICERS OR AGENTS SHALL NOT BE RESPONSIBLE FOR THE ACCURACY OR COMPLETENESS OF ELECTRONIC COPIES OF THIS PLAN SHEET.

REVISION DATES (DESIGN STAGE ONLY)

Sheet Version 3.0

TABLE OF CONTENTS
DIVISION 01 – GENERAL REQUIREMENTS

01100 SUMMARY

01111 ABBREVIATIONS AND REFERENCE STANDARDS
01112 DESCRIPTION OF WORK
01113 DIVISIONS OF TECHNICAL SECTIONS OF PROJECT MANUAL
01114 ISSUANCE OF DRAWINGS AND THE PROJECT MANUAL
01115 MANDATORY PROVISIONS
01116 ELECTRONIC DOCUMENT CONTROL
01120 INTERFACE / COORDINATION REQUIREMENTS
01140 CONTRACTOR'S USE OF THE PREMISES
01150 STORAGE OF MATERIALS AND EQUIPMENT

01200 PRICE AND PAYMENT PROCEDURES

01212 FIXED CASH ALLOWANCE ITEMS
01230 ALTERNATIVES
01251 CHANGE ORDER REQUESTS
01253 DIFFERING SITE CONDITION
01254 CHANGE ORDERS
01255 PRICE REDUCTION FOR DEFECTIVE COST OR PRICING DATA
01270 MEASUREMENT OF QUANTITIES FOR UNIT PRICE WORK
01280 MEASUREMENT AND PAYMENT
01291 NOTICE TO WITHHOLD AND/OR STOP NOTICE
01292 PAYMENTS
01298 SCHEDULE OF VALUES / CONTRACT PRICE BREAKDOWN

01300 ADMINISTRATIVE REQUIREMENTS

01311 PRECONSTRUCTION SAFETY CONFERENCE
01312 PROJECT MEETINGS
01313 WORK BY CITY OR OTHERS
01321 CONTRACTOR'S CONSTRUCTION SCHEDULE AND REPORTS
01322 CONSTRUCTION PROGRESS PHOTOGRAPHY
01323 CONSTRUCTION STATUS REPORTS
01330 SHOP DRAWINGS / SUBMITTALS
01350 AUDIT AND ACCESS TO RECORDS
01351 ESCROW BID DOCUMENTS
01353 OPPORTUNITY TO PARTNER

01400 QUALITY REQUIREMENTS

01410 REGULATORY REQUIREMENTS
01411 CONFINED SPACE ENTRY
01420 UNITS OF MEASURE
01421 SYMBOLS
01430 MANUFACTURER'S FIELD SERVICE
01452 INSPECTION OF THE WORK
01453 SAMPLING, TESTING AND FABRICATION INSPECTION
01454 WEIGHING AND METERING EQUIPMENT
01455 CALIBRATION OF TESTING EQUIPMENT

01500 TEMPORARY FACILITIES AND CONTROLS

01561 ENVIRONMENTAL CONTROL
01562 ENVIRONMENTAL MITIGATION
01563 POLLUTION CONTROL -SEWAGE SPILL PREVENTION AND RESPONSE REQUIREMENTS
01571 STORMWATER POLLUTION CONTROL MEASURES FOR CONSTRUCTION ACTIVITIES
01572 CONSTRUCTION AND DEMOLITION WASTE MANAGEMENT
01581 PROJECT SIGNS

01600 PRODUCT REQUIREMENTS

01601 BUY CLEAN CALIFORNIA ACT
01611 GUARANTY / WARRANTY
01630 SUBSTITUTIONS AND "OR EQUAL" SUBMITTAL

01700 EXECUTION REQUIREMENTS

01711 SITE INVESTIGATION
01712 SUBSURFACE DATA
01721 MOBILIZATION
01722 SURVEYING
01723 RIGHT OF WAY
01731 CUTTING AND PATCHING
01732 ADDITIONAL POTHOLING
01740 REMOVAL, CLEANUP, AND DEMOBILIZATION
01770 PROJECT CLOSEOUT
01783 PROJECT RECORD DOCUMENTS

TECHNICAL SPECIFICATIONS

DIVISION 02 – SITE WORK

02205 HISTORIC RESTORATION PROCEDURES
02210 CLEARING, GRUBBING AND STRIPPING
02220 SITE DEMOLITION
02225 LEAD BASED PAINT REMOVAL
02240 SHEETING, SHORING AND BRACING SYSTEMS
02310 EARTHWORK
02330 SOIL STABILIZATION
02501 MAINTENANCE AND SUPPORT OF UTILITIES
02510 WATER DISTRIBUTION
02515 WATER PIPELINE TESTING AND DISINFECTION
02525 SANITARY SEWER SYSTEM TESTING
02540 SITE SANITARY SEWER UTILITIES
02545 STORM DRAIN SYSTEM
02710 YARD WORK AND STREET WORK
02720 UNIT PAVING
02730 CRUSHED STONE SURFACING
02795 ALL-WEATHER TURF AND SUB-BASE DRAINAGE
02810 IRRIGATION SYSTEM
02821 CHAIN LINK FENCING AND GATES
02822 DECORATIVE METAL FENCES AND GATES
02823 STAINLESS STEEL RAILINGS
02824 FOG MISTER SYSTEM
02870 SITE FURNISHINGS
02871 STONE BOULDERS
02900 LANDSCAPING

DIVISION 03 – CONCRETE

03100 CONCRETE FORMWORK
03200 REINFORCEMENT STEEL
03250 CONCRETE ACCESSORIES
03290 JOINTS IN CONCRETE
03300 CAST-IN-PLACE CONCRETE
03302 UNDER SLAB VAPOR BARRIOR/RETARDER
03314 SURFACE CLEANING AND PREPARATION
03315 GROUT
03370 CONCRETE CURING
03400 PRECAST CONCRETE
03740 CONCRETE REPAIR

DIVISION 04 – MASONRY

04210 BRICK MASONRY
04230 REINFORCED HOLLOW UNIT MASONRY

DIVISION 05 – METALS

05035 ANODIC FINISH COATINGS
05120 STRUCTURAL STEEL
05300 METAL DECK
05400 COLD-FORMED METAL FRAMING (METAL STUD)
05500 METAL FABRICATIONS
05510 METAL STAIRS
05520 HANDRAILS AND RAILINGS
05530 FABRICATED GRATING
05700 PREFORMED METAL PANELS

DIVISION 06 – WOOD AND PLASTICS

06100 ROUGH CARPENTRY
06400 CUSTOM CASEWORK

DIVISION 07 – THERMAL AND MOISTURE PROTECTION

07110 MEMBRANE WATERPROOFING
07182 FLOORING/PAVING SEALER TREATMENT
07211 BUILDING INSULATION
07290 WATERPROOFING
07500 MEMBRANE ROOFING
07552 BUILT UP ROOFING
07600 FLASHING AND SHEET METAL
07830 ROOF HATCHES
07900 JOINT SEALANTS
07920 CAULKING AND SEALANTS

DIVISION 08 – DOORS AND WINDOWS

08110 METAL DOORS AND FRAMES
08305 ACCESS PANELS
08331 STEEL ROLLING DOORS
08416 ALUMINUM ENTRANCES AND STOREFRONTS
08520 ALUMINIMUM WINDOWS
08710 FINISH HARDWARE
08800 GLASS AND GLAZING

DIVISION 09 – FINISHES

09200 LATH AND PLASTER
09260 GYPSUM BOARD SYSTEMS
09900 PAINTING

DIVISION 10 – SPECIALTIES

10411 IDENTIFYING DEVICES
10443 DISABLED ACCESSIBILITY PARKING SIGNAGE
10520 FIRE PROTECTION SPECIALTIES
10800 TOILET ROOM ACCESSORIES

DIVISION 11 – EQUIPMENT

111136 ELECTRIC VEHICLE CHARGING EQUIPMENT – LEVEL 2

DIVISION 15 – MECHANICAL

15015 BUILDING VALVES, GENERAL
15020 NOISE, VIBRATION AND SEISMIC CONTROL
15050 BASIC MECHANICAL MATERIALS AND METHODS
15060 PLUMBING FIXTURES
15070 PLUMBING EQUIPMENT
15080 PLUMBING PUMPS
15120 HEATING EQUIPMENT
15130 AIR CONDITIONING AND AIR HANDLING EQUIPMENT
15160 FANS
15170 AIR TRANSMISSION AND AIR HANDLING EQUIPMENT
15210 METAL DUCTWORK
15240 TEMPERATURE CONTROL SYSTEMS
15260 TESTING, ADJUSTING AND BALANCING
15400 PLUMBING, GENERAL
15410 BUILDING PLUMBING PIPING
15510 BUILDING MECHANICAL INSULATION
15610 PIPING, GENERAL
15640 PVC PIPE, FITTINGS, AND VALVES
15690 COPPER TUBING AND BRASS PIPE, FITTINGS, AND VALVES

DIVISION 16 – ELECTRICAL

16020	MUNICIPAL FACILITIES GENERAL ELECTRICAL REQUIREMENTS
16110	RACEWAYS
16150	CONDUCTORS, 600 VOLTS AND BELOW
16170	CABINETS AND ENCLOSURES
16180	WIRING DEVICES
16190	ELECTRICAL IDENTIFICATION
16210	SWITCHES, DISCONNECT AND SAFETY
16250	ELECTRICAL SERVICE AND DISTRIBUTION
16270	SERVICE AND DISTRIBUTION SWITCHBOARDS
16290	MUNICIPAL FACILITIES GROUNDING SYSTEMS
16320	TRANSFORMERS
16330	PANELBOARDS
16360	MUNICIPAL FACILITIES LIGHTING
16430	LIFE SAFETY FIRE ALARM SYSTEMS
16440	SECURITY SYSTEMS
165010	ARCHITECTURAL LIGHTING FIXTURES, LAMPS, AND BALLASTS
16550	CONTACTORS, RELAYS, AND TIME SWITCHES
16560	MUNICIPAL FACILITIES ELECTRICAL SYSTEMS COMMISSIONING
16570	MUNICIPAL FACILITIES ELECTRICAL TESTING REQUIREMENTS

ATTACHMENTS

ATTACHMENT 1	SOIL INVESTIGATIONS
ATTACHMENT 2	SOIL REMEDIATION
ATTACHMENT 3	SIXTH STREET VIADUCT SOIL REMEDIATION
ATTACHMENT 4	PRODUCT DATA AND CUT SHEETS
ATTACHMENT 5	PROP K AND PROP 68 SIGNAGE
ATTACHMENT 6	VIADUCT EROSION AND SEDIMENT CONTROL PLANS
ATTACHMENT 7	CITY STANDARD PLANS
ATTACHMENT 8	HISTORIC LIGHT POLE AS-BUILT PLANS
ATTACHMENT 9	SIXTH STREET VIADUCT AS-BUILT PLANS
ATTACHMENT 10	SIXTH STREET VIADUCT AS-BUILT SURVEY
ATTACHMENT 11	SIXTH STREET VIADUCT LEAD SAMPLING REPORT

SECTION 111136
ELECTRIC VEHICLE CHARGING EQUIPMENT - LEVEL 2

PART 1 - GENERAL

1.1 RELATED DOCUMENTS

A. Drawings and general provisions of the Contract, including General and Supplementary Conditions and Division 01 Specification Sections, apply to this Section.

1.2 SUMMARY

A. Section includes EV charging equipment that provides Level 2 EV charging.

1.3 DEFINITIONS

A. EV: Electric vehicle.

B. EV Cable: The off-board cable containing the conductor(s) to connect the EV power controller to the EV that provides both power and communications during energy transfer.

C. EV Capable: Parking spaces that include nearby termination of raceway (conduit) to a power source with sufficient electrical panel capacity designed for simultaneous charging of electric vehicles in all planned EV parking spaces. Electrical wiring need not be pulled through raceway (conduit) until charging station is installed.

D. EV Charger or EV Charging Equipment: See "EVSE".

E. EV Connector: A conductive device that, when electrically coupled to an EV inlet, establishes an electrical connection to the EV for the purpose of power transfer and information exchange. This device is part of the EV coupler.

F. EV Coupler: A mating EV inlet and connector set.

G. EV Inlet: The device in the vehicle into which the EV connector is inserted, and a conductive connection is made for the transfer of power and communication. This device is part of the EV coupler.

H. EV Make Ready: Parking spaces that include nearby termination of raceway (conduit) and electrical wiring pulled to a power source with sufficient electrical panel capacity for simultaneous charging of electric vehicles in all EV parking spaces.

I. EVSE: Electric Vehicle Supply Equipment. It includes the EV charging equipment and conductors, including the ungrounded, grounded, and equipment grounding conductors and EV cables, attachment plugs, and all other fittings, devices, power outlets, or apparatus installed specifically for transferring energy between the premise wiring and the EV.

1.4 ACTION SUBMITTALS

A. Product Data: For each type of product.

1. Include construction details, material descriptions, dimensions of individual components and profiles, and finishes for EV charging equipment.
2. Include rated capacities, operating characteristics, electrical characteristics, and furnished specialties and accessories.

B. Shop Drawings: For EV charging equipment.

1. Include plans, elevations, sections, mounting, and footing details.
2. Include details of equipment assemblies. Indicate dimensions, weights, loads, required clearances, method of field assembly, components, and location and size of each field connection.
3. Detail fabrication and assembly of mounting assemblies for EV charging equipment.
4. Include diagrams for power, signal, and control wiring.
5. Include verification of wireless communications service at each location of EV charging equipment.

C. Structural Calculations: Contractor shall submit structural calculations, signed and stamped by a Registered Civil or Structural Engineer in the State of California, for the design and sizing of the EV charging station anchorage and concrete footing.

1.5 INFORMATIONAL SUBMITTALS

A. Coordination Drawings: Area plans and details, drawn to scale, on which the following items are shown and coordinated with each other, using input from installers of the items involved:

1. Structural members to which equipment will be attached.
2. Electrical service.
3. Communications service.
4. Items penetrating finished floor.

B. Seismic Qualification Certificates: For EV charging station, accessories, and components, from manufacturer.

1. Basis for Certification: Indicate whether withstand certification is based on actual test of assembled components or on calculation.
2. Dimensioned Outline Drawings of Equipment Unit: Identify center of gravity and locate and describe mounting and anchorage provisions.
3. Detailed description of equipment anchorage devices on which the certification is based and their installation requirements.

C. Field quality-control reports.

D. Sample Warranty: For manufacturer's warranty.

1.6 CLOSEOUT SUBMITTALS

A. Operation and Maintenance Data: For EV charging equipment to include in operation and maintenance manuals.

B. Software and Firmware Operational Documentation:

1. Online training and help documentation.
2. Station activation sticker.

1.7 QUALITY ASSURANCE

A. Installer Qualifications: An authorized representative who is trained and approved by manufacturer.

B. Electrical Components, Devices, and Accessories: Listed and labeled as defined in NFPA 70, by a qualified testing agency, and marked for intended location and use.

C. Comply with UL 2231-1. UL 2231-2, UL 2594, and NEC Article 625.

D. Comply with SAE J1772.

E. Comply with FCC Part 15 Class A.

1.8 FIELD CONDITIONS

A. Wireless Survey: Complete wireless survey to determine if wireless provider signals meet or exceed manufacturer's recommended minimum values.

B. Rate equipment for continuous operation under the following conditions unless otherwise indicated:

1. Ambient Temperature: Not exceeding minus 22 to plus 122 deg F (minus 30 to plus 50 deg C).
2. Altitude: Not exceeding 6600 feet (2000 m).

C. Rate Equipment for non-operation under the following conditions:

1. Ambient Temperature: Not exceeding minus 40 to plus 140 deg F (minus 40 to plus 60 deg C).
2. Altitude: Not exceeding 6600 feet (2000 m).

D. Interruption of Existing Electric Service: Do not interrupt electric service to facilities occupied by Owner or others unless permitted under the following conditions and then only after arranging to provide temporary electric service according to requirements indicated:

1. Notify Owner no fewer than two days in advance of proposed interruption of electric service.
2. Do not proceed with interruption of electric service without Owner's written permission.

1.9 WARRANTY

A. Manufacturer's Warranty: Manufacturer and Installer agree to repair or replace components of EV charging units that fail(s) in materials or workmanship within specified warranty period.

1. Standard Warranty Period: One year from date of Substantial Completion.
2. Extended Warranty Period: Two years from date of Substantial Completion.

PART 2 - PRODUCTS

2.1 MANUFACTURERS

A. Basis-of-Design Product: Provide ChargePoint CT4000 family of electric vehicle charging stations for commercial applications or approved equal.

B. Source Limitations: Obtain EV charging equipment from single manufacturer.

2.2 EV CHARGING EQUIPMENT DESCRIPTION

A. Electrical Components, Devices, and Accessories: Listed and labeled as defined in NFPA 70, by a qualified testing agency, and marked for intended location and use.

B. Comply with NFPA 70.

C. ADA compliant.

D. Metering: +/- 2 percent from 2 percent to full scale of output (30 A).

E. EV Charging Equipment Mounting: Bollard and footing mount.

F. Enclosures:

1. Rated for environmental conditions at installed location.

a. Indoor Locations: NEMA 250, Type 3R.
b. Outdoor Locations: NEMA 250, Type 3R.
c. Aluminum and UV-resistant plastic.
d. Paint and Anodized.
e. Charging components protected by security screws.
f. Charging connectors in locking holsters.
g. Meter, modem, and CPU, tamper resistant.

G. EV Cable and Connectors:

1. SAE J1772 connector.
2. One connector with locking holster.
3. 23-foot cable with cable management system.

H. Status Indicators:

1. LEDs to indicate power, vehicle charging, charging complete, system status, faults, and service, as well as authorization.

I. Display Screen:

1. VGA-resolution, daylight-viewable LCD screen with UV protection. Daylight readable and fingerprint resistant.
2. Displays power, charging, charging complete, remote control, system status, faults, payment and pricing details, and service.

J. Networking:

1. WAN Communications: Cellular GSM/GPRS and CDMA.
2. LAN Communications : 2.4 GHz Wi-Fi 802.11b/g/n.
3. Capable of remote configuration, diagnostics and reporting.
4. Capable of remote software updates (future proof).

K. Payment System:

1. RFID (ISO 15693, ISO 14443), NFC, Contactless credit card reader.
2. PCI (Payment Card Industry) compliant.
3. Capable of remote control and authorization including mobile phone application or toll free phone number.

L. Charging Network: Compatible with the ChargePoint or approved equal manufacturer EV charging network.

1. Multiple units shall independently connect to charging network.
2. Multiple units shall have one unit designated as a master unit that is configured as a gateway unit between the EV charging equipment and the charging network.
3. Individual units shall be capable of indicating station status and availability providing or connecting user to customer support and remote control.

2.3 PERFORMANCE REQUIREMENTS

A. Thermal Movements: Allow for thermal movements from ambient and surface temperature changes.

B. Surge Withstand: 6 kV at 3000 A.

C. Integral GFCI.

D. Auto-GFCI fault retry.

E. Input Power:

1. 40 A, 208/240-V ac, 60 Hz, single phase per charger.

F.EV Charging Levels:

1. Single vehicle: AC Level 2 at up to 7.2 kW (CT4000) per vehicle.

2.4 GENERAL FINISH REQUIREMENTS

A. Protect mechanical finishes on exposed surfaces from damage by applying a strippable, temporary protective covering before shipping.

B. Appearance of Finished Work: Noticeable variations in same piece are not acceptable. Variations in appearance of adjoining components are acceptable if they are within the range of approved Samples and are assembled or installed to minimize contrast.

PART 3 - EXECUTION

3.1 EXAMINATION

A. Examine areas and conditions, with Installer present, for compliance with requirements for installation tolerances and other conditions affecting performance of the Work.

B. Examine roughing-in for EV charging equipment electrical conduit to verify actual locations of conduit connections before equipment installation.

C. Examine walls, floors, and pavement for suitable conditions where EV charging equipment will be installed.

D. Proceed with installation only after unsatisfactory conditions have been corrected.

3.2 INSTALLATION

A. Comply with NECA 1 and NECA 413.

B. Concrete Base Mounting:

1. Install EV charging equipment on 24-inch minimum nominal-diameter and 24-inch deep minimum concrete base. Contractor shall be responsible for determining final sizing and configuration. Comply with requirements for concrete base specified in Section 033000 "Cast-in-Place Concrete".

a. Place and secure anchorage devices. Use setting drawings, templates, diagrams, instructions, and directions furnished with items to be embedded.
b. Install anchor bolts to elevations required for proper attachment to supported equipment.
c. Secure EV charging equipment to concrete base according to manufacturer's written instructions.

C. Wall Mounting: (NOT APPLICABLE)

D. Bollard Mounting:

1. Allow a minimum of 24 inches (600 mm) of clearance around EV charging equipment.
2. EV charging equipment receptacles or holders shall be not less than 24 inches (600 mm) and not more than 4 feet (1.2 m) above finished grade.
3. Mount EV charging equipment plumb and rigid without distortion of enclosure.
4. Secure EV charging equipment according to manufacturer's written instructions.

E. Wiring Method: Install cables in raceways and cable trays. Conceal raceway and cables except in unfinished spaces. Comply with the requirements of the Divisions 16 specifications.

F. Wiring Method: Conceal conductors and cables in accessible ceilings, walls, and floors where possible.

G. Wiring within Enclosures: Bundle, lace, and train conductors to terminal points with no excess and without exceeding manufacturer's limitations on bending radii. Install lacing bars and distribution spools.

H. Circuit Breakers: Comply with the requirements of the Divisions 16 specifications.

I. Secure covers to enclosure.

3.3 CONNECTIONS

A. Connect wiring according to Section 16150 "Conductors, 600 Volts and Below."

B. Comply with grounding requirements in Section 16290 "Municipal Facilities Grounding Systems."

C. Comply with requirements for installation of conduit in Section 16110 "Raceways." Drawings indicate general arrangement of conduit, fittings, and specialties.

D. Tighten electrical connectors and terminals according to manufacturer's published torque-tightening values. If manufacturer's torque values are not indicated, use those specified in UL 486A-486B.

3.4 IDENTIFICATION

A. Identify system components, wiring, cabling, and terminals. Comply with requirements for identification specified in Section 16190 "Electrical Identification."

3.5 FIELD QUALITY CONTROL

A. Manufacturer's Field Service: Engage a factory-authorized service representative to test and inspect components, assemblies, and equipment installations, including connections.

B. Perform tests and inspections with the assistance of a factory-authorized service representative.

C. Tests and Inspections:

1. For each unit of EV charging equipment, perform the following tests and inspections:

    a. Unit self-test.
    b. Operation test with load bank.
    c. Operation test with EV.
    d. Network communications test.

D. EV charging equipment will be considered defective if it does not pass tests and inspections.

E. Prepare test and inspection reports.

3.6 STARTUP SERVICE

A. Engage a factory-authorized service representative to perform startup service.

1. Complete installation and startup checks according to manufacturer's written instructions.

3.7 ONGOING MANAGEMENT SERVICES

A. Engage a station manufacturer that offers a service to manage the administration and policies of the electric vehicle charging stations on an ongoing basis.

3.8 SOFTWARE SERVICE AGREEMENT

A. Technical Support: Beginning at Substantial Completion, service agreement shall include software support for the duration of an active ChargePoint Network Service Plan or approved manufacturer equal.

B. Upgrade Service: At Substantial Completion, remotely update software to latest version. Install and program software upgrades that become available while an active ChargePoint Network Service Plan or an approved manufacturer equal is maintained. Upgrading software shall include operating system and new or revised licenses for using software.

3.9 DEMONSTRATION

A. Utilize ChargePoint Station Management Services and ChargePoint Assure Services (or an approved manufacturer's equal service), or Train Owner's maintenance personnel to adjust, operate, and maintain EV charging equipment.

END OF SECTION 111136

SECTION 02225
LEAD BASED PAINT REMOVAL

PART 1 -- GENERAL

1.1 THE REQUIREMENT

A. The Lead-Based Paint (LBP) Abatement Contractor (hereinafter referred to as "Contractor") is responsible for and shall furnish all labor, material, equipment, and services necessary or required for the removal of the LBP and LBP-containing surfaces from the salvaged Historic Sixth Street Viaduct Steel Arch Piece, prior to the "Site Renovation" operations specified in another section.

B. Work under this Section shall include initial cleanup, critical barriers and work area(s) preparation, removal of LBP, removal of and LBP-containing surface, final cleanup, and disposal of LBP. With LBP detected on mostly all surfaces of the arch piece, the Contractor shall remove all painted surfaces. The painted surfaces shall include interior and exterior faces of the arch.

C. Contractor shall provide all coordination, equipment, material, medical surveillance, biological monitoring and site monitoring necessary to protect his personnel and area occupants while performing the work.

D. Contractor shall furnish all labor, material, equipment and services necessary or required for the removal of the polychlorinated biphenyl (PCB) containing material.

1.2 RELATED WORK SPECIFIED ELSEWHERE

A. Section 09900 Painting.

1.2 WORK REQUIRED

A. **<u>General</u>:** Removal of LBP and LBP-containing surfaces from the existing steel arch, prior to or during Site Renovation, as specified herein and in another Section.

2

1. A Hazardous Material Survey Report was prepared for the Sixth Street Viaduct Project. The report has been included as Attachment No. 11 of the Project Specifications. The information/measurements are approximate and for the Bidder's/Contractor's information only. It is expressly understood that the City will not be responsible for interpretations or conclusions drawn by the Bidder/Contractor as to the nature of or full extent of the existing lead-based paint

2. The Contractor shall remove and dispose of all LBP and LBP-containing surfaces, including areas where access is restricted.

3. The Contractor shall determine the route and method of moving the LBP-containing surfaces and debris and include in the detailed plan submitted for City Engineer's approval

B. Nature of the Work:

1. General: The work required by this Section includes handling, removing, cleanup, transporting, and off-site disposing of removed LBP-containing surfaces and debris. The Contractor shall provide all equipment, material, personnel monitoring; necessary to protect his personnel or area occupants (general public), from contact with airborne LBP-containing debris. The Contractor shall perform this work in accordance with the methods and procedures prescribed by this section and in compliance with all applicable rules and regulations described below, but not necessary limited to:

Code of Federal Regulations (CFR)

a.	29 CFR 1910.134	Respiratory Protection
b.	29 CFR 1910.145	Specifications for Accident Prevention Signs and Tags
c.	29 CFR 1926.62	Lead Exposure in Construction
d.	40 CFR 260	Hazardous Waste Management System: General
e.	40 CFR 261	Identification and Listing of Hazardous Waste
f.	40 CFR 262	Standards Applicable to Generator of Hazardous Waste
g.	40 CFR 263	Standards Applicable to Transporter of Hazardous Waste
h.	40 CFR 264	Standards for Owners and Operators of Hazardous Waste Treatment, Storage and Disposal Facilities
i.	40 CFR 265	Interim Status Standards for Owners and Operators of Hazardous Waste Treatment, Storage and Disposal Facilities
j.	40 CFR 268	Land Disposal Restrictions
k.	49 CFR 178 & 179	United States Department of Transportation
l.	49 CFR 172 & 173	United States Department of Transportation

California Code of Regulations (CCR)

a.	Title 8, 1532.2	Construction Safety Orders – Lead
b.	Title 8, 5216	General Industry Safety Orders – Lead
c.	Title 8, 5194	Hazard Communications
d.	Title 13	Dept. of Calif. Highway Patrol Regulations

e. Title 22 — Hazardous Waste Handling

American National Standards Institute (ANSI) Publications

a. ANSI Z9.2 — 1979 Fundamental Governing the Design and Operation of Local Exhaust Systems

b. ANSI Z88.2 — 1980 Practice for Respiratory Protection

c. ANSI Z86.1 — 1973 Commodity Specifications for Air

Underwriters' Laboratory Inc. (UL) Publication

a. UL 586 — 1990 High Efficiency Particulate Air (HEPA) Filter Units

Any other federal, state, county, and City regulations, codes, and ordinances that are applicable.

2. Controlled Work Area(s): The controlled work area(s) will be the entire specified work area where the LBP containing material shall be removed. The specified work area will be vacated.

3. Title to Construction Debris: Materials and debris resulting from LBP removal work, unless otherwise indicated shall become the property of the Contractor. The LBP shall be disposed of properly, as specified in Section 3.

4. Protection of Existing Work to Remain: The LBP and LBP-containing surfaces removal work shall not damage or contaminate adjacent areas or other ongoing construction work. Areas that are damaged or contaminated by the Contractor shall be restored to original condition by the Contractor.

5. City's Representatives: The City's representatives shall be the responsible party for the required work. The City's representatives shall include, but not be limited to the Project Manager and Construction Manager; the Abatement Consultant for the project, City's Industrial Hygienist and Consultant Architect.

C. **Pre-Bid Meeting (Job-Walk Through)**: A pre-bid meeting and job walk-through will be held for the bidders at times and places directed by the City's representatives and noted in the Bid Documents. The Contract Drawings and Project Manual will be available for reference at this meeting. In addition, the City's representatives will be available to answer all questions by the bidders, submitted in writing.

1.3 QUALITY ASSURANCE

A. **Contractor's Qualifications:** The Contractor or Subcontractor performing the work of this Section shall submit information demonstrating that they posses the following qualifications:

1. A minimum of 10 years specializing in the safe removal of LBP and LBP-containing surfaces, with evidence of having successfully completed projects with requirements similar to this one.

2. Contractor or Subcontractor shall be duly licensed by the State of California with the provisions of Chapter 9, Division 3, Business and Professions Code, as

amended.

3. The Contractor shall carry insurance in accordance with the City's requirements.

4. The Contractor shall be registered with the Carcinogen Control Unit, California Occupational Safety and Health Administration (OSHA).

5. The Contractor shall present proof of personnel's training, in regards to LBP abatement work.

6. The Contractor shall present standard operating procedures and employee protection plans with specific reference to their OSHA medical, exposure monitoring and respirator training programs.

7. The Contractor shall present references on previous jobs and work projects, on demand.

8. The Contractor shall present documentation on three successful completions of lead-based paint removal projects within the last 2 years.

B. <u>Air Monitoring and Inspection Firm to be Provided by the Contractor</u> :

1. Qualifications:

   a. The Air Monitoring and Inspection Firm shall be completely independent of, and in no way affiliated with the Contractor. The duties of the Air Monitoring and Inspection Firm will be described in Section 3.

   b. The Air Monitoring and Inspection Firm to be provided by the Contractor shall present at least three references.

2. Entry to the Site: Air Monitoring and Inspection Firm and City's representatives shall have the right of entry to the work areas, at any time, for purposes of inspection and monitoring.

   a. The Contractor shall provide the appropriate protective clothing for inspection and monitoring and to City's representatives.

3. Interpretation: Matters concerning interpretation of standards will be submitted to all City representatives and to appropriate administrative agency for resolution, as necessary. Where requirements of these specifications and referenced documents differ, the more stringent requirements shall apply.

4. Protective Measures: The Air Monitoring and Inspection Firm and the City's representatives reserve the right to require additional protective measures at any time during the course of the LBP and LBP-containing surfaces removal work, to protect workers, City Employees and other users.

1.4 SUBMITTALS

A. Submittals shall meet the requirements set forth in Section 01330 – Shop Drawings/Submittals.

B. **<u>LBP and LBP-Containing Surfaces Removal Plan</u>:**

1. Prior to the start of LBP and LBP-containing surfaces removal work, the Contractor shall submit a detailed plan of work procedures to be used in removal and disposal of materials containing LBP to the City for reviews. Contractor shall incorporate all comments and corrections prior to submitting to Federal and State governing authorities having jurisdiction for approval. The plan shall be approved by governing authorities prior to start of work. The plan shall include the location and layout of decontamination areas; the sequencing of LBP and LBP-containing surfaces removals; the interface of trades involved in the performance of work; work schedule including work shift time, number of employees, date of start and completion including dates of preparation work, removal, and final clearance dates; methods to be used to assure the safety of workers, City employees, and the public; type of wetting agent or encapsulate; disposal plan including location of approved disposal site; and a detailed description of the methods to be employed to control pollution and an emergency evacuation plan. Expand upon the use of portable HEPA-filtered ventilation system, method of removal to prohibit visible emissions in work area, and packaging of removed asbestos debris. Submit evidence of approvals to the City's representatives prior to start of work.

C. 1. Training**:** The Contractor shall submit certificates, signed by each employee, stating that employee has received training in proper handling of materials that contain LBP understands health implications and risks involved, including illnesses possible from exposure to airborne lead particles; and understands the use and limits of respiratory equipment to be used; and understands results of monitoring of airborne quantities of lead-based paint as related to health and respiratory equipment.

2. All employees must have baseline and post abatement blood lead level screenings results provided to City for review.

D. **<u>Local Exhaust Equipment (Differential Pressure Air Machines)</u>:** The Contractor shall submit evidence of conforming to ANSI Z9.2 "Fundamentals Governing the Design and Operation of Local Exhaust Systems" for equipment required to contain HEPA filters in differential pressure air machines for personnel monitoring and site air monitoring.

E. **<u>Permits and Notifications</u>:** The Contractor shall secure the necessary permits in conjunction with LBP and LBP-containing surfaces removal, hauling, and disposition and provide timely notification of such actions as may be required by Federal, State, Regional, City and County of Los Angeles Governments.

1. Notify Regional Office of United States Environmental Protection Agency (USEPA) and South Coast Air Quality Management District (SCAQMD) and provide copies of notification to City's Representative and State Environment Regulatory Agency at least 10 working days prior to start of work.

2. Notify the nearest district office of CAL/OSHA, Division of Occupational Safety and Health, at least 3 working days prior to start of work.

3. Notify the air monitoring and inspection firm at least 3 working days prior to start of work.

4. Satisfactory proof to the City that required notifications and/or remediation plans, have been filed and permits have been obtained and are in full force and

effective throughout course of work of this Section.

F. **Project Log Book**: The Contractor shall maintain a project log book, which will be kept up-to-date and available at the job-site. Upon completion of the work, a copy shall be submitted to the Air Monitoring and Inspection Firm for approval. After approval, two copies shall be submitted to the City's representatives. The Project Log Book will contain and conform to the following:

1. Documentation of all Notices and Submittals.

2. Permits.

3. Medical Records - Proof of Personnel's Medical Physicals.

4. Emergency Notification Data.

5. Sign-in log book, shall be filled out daily:

- Name of person visiting the controlled work area;
- Time entered/exited the controlled work area;
- Affiliation and purpose;
- Description of activity performed;
- Description of daily work performed;
- Any damages to the structure or furnishings;
- Any loss of air pressure differential;
- Any accidents (including minor accidents);
- Results of any air samples collected by the Contractor;
- Signature of Project Superintendent and date;

G. **Landfill:** The Contractor shall submit written evidence that the disposal facility is approved for lead disposal by EPA and State or Local Regulatory Agencies, when the LBP waste is characterized as hazardous waste. All disposal or recycling facilities used in this Project shall be located within the State of California.

H. **Monitoring Results:** The Contractor shall submit monitoring results to the City's representatives and the Air Monitoring and Inspection Firm within 3 working days. Complete airborne lead concentration analysis and notify the City's representatives.

I. **Air Pressure Differential Recordings:** The Contractor shall submit air pressure differential recordings for each work to Air Monitoring and Inspection Firm for review, and then submit to the City's representatives within 48 hours from end of each work day. Notify the City's representatives immediately of any variance in pressure differential which could cause exposure of adjacent areas to fiber concentrations in excess of acceptable time-weighted average (TWA).

J. **Hazardous Manifest**: The Contractor shall maintain a log of all manifests (hazardous and non-hazardous). The Contractor shall submit to City Engineer duplicate copies of all logs and generator's copy of the manifest to City Engineer for process. Upon receipt of the completed manifest from the Treatment, Storage or Disposal (TSD) facility where the waste has been sent, the City will make progress payment for the completed abatement work in accordance with Section 3, regardless the LBP waste characterized as hazardous or non-hazardous waste.

1.5 INSURANCE REQUIREMENTS (FOR LEAD-BASED PAINT REMOVAL)

2

~~**A.** Bidder shall furnish within ten days after notification of pending award, properly completed City Special Endorsement forms or binders of insurance with coverage as set forth in the attached Insurance Requirements sheet. Failure to comply will render the bid non-responsive and no award will be made to the firm.~~

B. Lead-Based Paint Abatement Contractor must provide a certified copy of a General Liability Insurance Policy or other evidence acceptable to the City Attorney showing that the Contractor is insured for work in the Lead-Based Paint, removal and/or encapsulation field. The actual policy declaration must contain wording that the coverage is for a Lead-Based Paint Abatement Contractor and must include coverage for completed operations.

C. Because of the severely limited availability of Lead-Based Paint Abatement Liability insurance, we are modifying the requirements to allow compliance by any of the following alternatives:

Type of Policy	Coverage	Limits/Aggregate
Comp. General Liability- Occurrence basis	Products/Completed operations	$1,000,000 $2,000,000
1986 Comp. General Liability- Occurrence basis	Products/Completed operations	$1,000,000/ $2,000,000
1986 Comp. General Liability- Claims-made basis	Products/Completed operations	$1,000,000/ $2,000,000
Owners and Contractors Protective Liability	Lead-Based Paint [PCB] Removal (City as Named Insured)	$1,000,000
Project Specific General Liability	Products/Completed operations	$1,000,000

D. If the contractor has a claims-made basis policy and changes insurance carriers, it is critical that there be no gap in coverage and that a retroactive policy be provided.

1. The foregoing applies only to the Lead-Based Paint Removal insurance requirements. All other insurance requirements remain unchanged.

E. Refer to Section 00316 - INDEMNIFICATION and Section 00317 - INSURANCE, GENERAL CONDITIONS, for additional information.

PART TWO - PRODUCTS

2.1 EQUIPMENT

A. **Respirators:** The Contractor shall use respirators from those approved by the National Institute of Occupational Safety and Health, Department of Health and Human Services.

1. Powered Air Purifying Respirators (PAPR) shall be the minimum level of respiratory protection employed during work area(s) removal of LBP LBP-containing surfaces and cleanup.

B. **Protective Clothing:** The Contractor shall provide personnel exposed to airborne lead

particles with disposable protective whole-body clothing, including head coverings and foot covering. Make sleeves secured at wrists and make foot coverings secured at ankles. Provide disposable plastic of rubber gloves to protect hands and face shields, vented goggles, or other appropriate protective equipment.

C. **Decontamination Enclosure Facilities:** The Contractor shall provide a decontamination enclosure facility for personnel required to wear whole-body protective clothing and work in the controlled work area. These facilities, and their use, shall comply with the requirements of 29 CFR 1926.62 and CCR Title 8, 1532.1 CCR Title 22.

1. The decontamination enclosure systems shall be constructed, affixed, and connected in such a manner as not to compromise the airtightness of the containment.

2. Build suitable wood or metal stud frame; or use an existing room or enclosure approved by the City's representatives and Air Monitoring and Inspection Firm. Portable, pre-fabricated units may be used if approved by the City's representatives and Air Monitoring and Inspection Firm. Approval will be based upon, but not limited to, the construction, floor plan, dimensions, materials, sizes, thicknesses, plumbing, electrical outlets, etc.

3. In all cases, access between contaminated and uncontaminated rooms or areas shall be through a decontamination enclosure system. In all cases, access between any two rooms within the decontamination enclosure shall be through an air lock with two curtained doorways.

4. Worker and Visitor Decontamination Enclosure: Construct a workers and visitor's decontamination enclosure adjoining the work area(s) consisting of three totally enclosed chambers, an equipment room, a shower room and a clean room.

   a. The equipment room shall be connected to the work area(s) and contain an air lock leading to the shower room. In addition, the equipment room shall contain a marked receptacle for the discarding of contaminated clothing prior to entering the shower room.

   b. The shower room shall be connected to the equipment room and the clean room by an air lock. An additional pan shall be placed below the stall of sufficient size to contain 5 cubic feet of water. The shower(s) shall be equipped with hot and cold or warm water. If necessary, Contractor shall provide portable hot water heater to supply hot water. The shower(s) shall have sufficient soap, shampoo, and disposable towels at all times.

   c. The shower room shall not leak, and the water shall be appropriately filtered and/or properly disposed of.

   d. The clean room shall be connected to the shower room by one air lock, with a curtained doorway leading to any other non-contaminated space within the Worker Decontamination Enclosure.

   e. It shall be large enough to provide storage for the workers street clothes, towels, or any other non-contaminated items.

5. Equipment Decontamination Enclosure: Construct an equipment decontamination enclosure consisting of two totally enclosed chambers, a

washroom and a holding area

a. The washroom constituting an air lock shall be connected to the holding area by a curtained doorway.

b. The holding area will be connected to any uncontaminated area by a curtained.

c. These spaces shall be for the cleaning and decontamination of bagged wastes. In addition, this is preferred ingress and egress point for equipment. All equipment will be thoroughly decontaminated before leaving the decontamination enclosure facility.

d. Water in this enclosure shall be collected, filtered, and/or properly disposed.

e. The decontamination enclosure facilities shall be maintained to ensure that the barriers, air locks, and plastic linings are effectively sealed and taped.

f. Repairs shall be undertaken immediately upon discovery of a defect.

g. Visually inspect and thoroughly clean the decontamination enclosure system at the beginning and end of each workday.

6. In all cases, project site (interior and exterior) shall be protected from any contamination. No Lead-Based paint, construction or cleaning water shall be directed toward on-site soil, paving or flooring opening, drain system, and etc. No airborne duct shall be caused or directed to adjacent property.

D. **Air Pressure Differential to be Provided by Contractor:** Each controlled work area(s) shall be maintained at a minimum air pressure differential of 0.02" W.G. to adjacent areas by means of differential pressure air machines equipped with HEPA filtration. The Contractor will provide a sufficient number of differential pressure air machines to exchange the air within the controlled work area(s) every 15 minutes. The air pressure differential shall be referenced to ambient pressure within the clean room of the decontamination enclosure facilities to the controlled work area.

F. **Differential Pressure Air Machine**: The Contractor shall verify the efficiency of each differential pressure air machine and the efficiency rating shall be used in the calculations of air exchange within the controlled work area. The differential pressure air machine shall be equipped with three stages of filters, a HEPA-filtered and two pre-filters.

1. Differential pressure air machines will remain in use until a final clearance has been attained. No removal activities will be allowed without proper air pressure differential.

2.2 CAUTION SIGNS AND LABELS

A. **General:** Provide signs at approaches to LBP and LBP-containing surface removal controlled work areas. Locate signs at such distance that personnel may read sign and take necessary protective steps required before entering the controlled work area. Signs shall be bilingual, English and Spanish.

1. Signs and labels shall conform with the requirements of 29 CFR 1926.62, 40 CFR 260, CCR Title 8, 1532.1 and Title 22.

2.3 MATERIALS

A. **Encapsulant:** EPA-approved asbestos encapsulant, tinted with contrasting color to plastic sheeting surfaces, and suitable to be sprayed-applied by airless sprayer, BWE 5000 or equivalent.

B. **Plastic Sheeting:** Fire-retardant, 6-mil polyurethane plastic used to cover the critical barriers; the controlled work area(s), ceiling and floor; and decontamination enclosure facilities.

C. **Runners:** Paper, of sufficient width and length to protect floors of the building entrances to work area(s).

D. **Spray Adhesive**: 3M spray adhesive.

E. **Tape:** Duct tape.

PART THREE - EXECUTION

3.1 GENERAL

A. The painted surfaces anticipated for the LBP removal and LBP-containing surfaces removal shall include interior and exterior faces of the arch piece.

3.2 PREPARATION PROCEDURES OF THE CONTROLLED WORK AREA (S)

A. **General Preparation:** To the controlled work area(s) for the removal of LBP and LBP-containing surfaces

1. Prior to commencing any preparation of the controlled work area(s), the Contractor shall post all required documents, warning signs, and erect any physical barriers in order to secure the work area(s). The previously described project log book shall be kept updated and available for review at all times.
2. The Contractor is responsible for the work area(s) security upon establishing, preparing, and maintaining the controlled work area(s). The responsibility of security extends 24 hours per day. The Contractor may be required to retain a security service. NOTE: Only authorized visitors will be allowed on the work site.
3. The Contractor shall disconnect and lock out existing electric power to the work area(s). Provide temporary electric power and lighting and ensure safe installation of temporary power sources and equipment per applicable electrical code requirements.
4. The Contractor shall erect a sealed containment structure for the work area.
5. Unless otherwise specified, the Contractor shall install differential air pressure machines. The number of the machines required for the controlled work area(s) shall be calculated using the following:
    a. Cubic feet per minute (cfm) flow rate of the machine at a 75 percent efficiency.
    b. Cubic feet (cf) volume of the controlled work area(s) including the above ceiling space.

c. Four air changes per hour.

6. The Contractor shall exhaust the differential pressure air machines to the exterior of the containment structure.

8. Moveable and loose items located in the work area(s) shall be cleaned using HEPA-filtered vacuum equipment and/or wet cleaning methods as appropriate or shall be removed from the work area(s).

B. **Additional Preparation**: To the controlled work area(s) for the removal of LBP from surfaces and other renovation work over existing LBP.

1. The Contractor shall contain the LBP-containing surface inside a controlled work area by either building containment around the LBP-containing surface or building containment and relocating the surface inside it. The containment shall have the walls, ceilings and floors covered with plastic sheeting. All joints and seams of the plastic sheeting shall be overlapped a minimum of 12 inches, glued, and taped together and to existing walls in a manner to prevent and prohibit water and air movement through the covered areas.

2. All project site (interior and exterior) shall be protected from any contamination in accordance with Subsection 2.1 (c)6.

3. The Contractor shall install the required differential air pressure machine, as previously described, inside the controlled work area(s).

4. If water is used to remove the LBP from surfaces, the Contractor shall construct a water capturing device. The water shall be collected, filtered and/or properly disposed.

5. The Contractor shall establish emergency fire exits in compliance with applicable fire codes/regulations. The emergency fire exits shall not be used for entering or exiting the work area, except in case of emergency. The Contractor shall post the necessary abatement warning signs in each of the fire stairwells for two floors below and one floor above the controlled work area(s), or as required by applicable fire codes/regulations. All exits shall be marked in bold red lettering "Emergency Exit."

6. The Contractor shall install their communication equipment. Equipment should be operating properly and maintained as such during removal and cleanup operations.

3.3 REMOVAL PROCEDURES OF LBP FROM SURFACES

A. Prior to beginning the removal and other renovation work activities, the Air Monitoring and Inspection Firm shall conduct a visual walk-through inspection of the controlled work area, as specified in Subsection 3.8.

B. The Contractor shall use LBP removal procedures, which prevents airborne dust and debris, approved by the City Engineer. The Contractor may elect to use chemical strippers, HEPA-filtered vacuum blasting or sanding, and/or heat blower guns with the approval of the City Engineer.

C. The removed LBP chips, flakes, dust, and debris must be evaluated and characterized as

to lead content and concentration, as per CCR Title 22, Chapter 11, Article 3. The LBP chips, flakes, dust and debris must be collected and placed into 55-gallon, heavy duty type "17H" open head, non-leaking, polyurethane-lined steel drums, as per 49 CFR 173, 178, and 179.

3.4 CLEANUP OF CONTROLLED WORK AREA (S) AND DISPOSAL PROCEDURES OF LBP WASTE

A. **Housekeeping:** Upon removal of LBP and LBP-containing surfaces or other renovation work, the following cleanup procedures, unless otherwise specified in detailed plans, shall commence:

1. Once the LBP chips, flakes, dust, and debris have been collected and placed into the specified steel drums, the Contractor shall HEPA-filtered vacuum and wet wipe all surfaces inside the controlled work area(s).

2. Request visual clearance inspection by Air Monitoring and Inspection Firm. Criteria for visual clearance inspection shall include:

   a. Completion of removal of LBP and LBP-containing surfaces.
   b. Adequate cleanup of the controlled work area.

B. **Hauling and Disposal:** All applicable Federal, State, and Local requirements shall be complied with.

1. The Contractor shall contact the City to obtain all technical information needed to complete all notification, permit and manifest before securing permit to proceeding with any work.

2. The Air Monitoring and Inspection Firm shall verify the number of steel drums and the City's representatives will sign the manifest prior to hauling and disposal of the LBP hazardous or nonhazardous waste. No progress or final payment will be made until all completed manifests have been received and approved by the City.

3. All dump receipts, trip tickets, or other documentation of disposal shall be delivered to the City's representative.

4. All shipping will be in accordance with Title 49, CFR Part 172, 173, 178 and 179.

5. All respiratory requirements specified herein shall be complied with.

3.5 SITE AIR MONITORING AND INSPECTIONS

A. **General:** Air monitoring and inspections shall be performed by the Air Monitoring and Inspection Firm in the controlled work areas as described below:

1. All air samples shall be of sufficient volume to establish a detection limit of micrograms of lead per cubic meter of air (ug/m^3) and provided by the Contractor.

B. **Prior to Removal Procedures of the LBP and LBP-Containing Surfaces and Other Renovation Work:** Air monitoring and inspections shall be performed throughout the course of the controlled work area(s) preparation, to verify that all specifications are met, and to ensure that the preparation activities do not release airborne lead particles. The

inspection shall determine if all appropriate procedures, methods, measures and engineering controls have been addressed. The inspection will address:

1. Observation of the work area.

2. Observation of barriers, air locks, curtained doorways and emergency exits.

3. Observation of the decontamination enclosure system.

4. Observation of differential pressure air machines and presence of sufficient air pressure differential.

5. Observation of respirator equipment.

6. Observation to verify that all notices and warnings are posted.

7. Observations to verify the Contractor's workers have proper submittals and the project log book is up-to-date.

8. Any deficient or omissions in the controlled work area(s) preparation procedures noted by routine inspections or the City's representative shall be promptly addressed by the Contractor.

9. Any debris resulting from preparation procedures will be effectively cleaned up by the Contractor immediately.

C. **Final Inspections of the Controlled Work Area(s):** At the conclusion of the controlled work area(s) cleanup, a final inspection shall be performed to verify the removal and cleanup of LBP and LBP-containing surfaces have been completed and that no LBP chips, flakes, dust, or debris is present in the controlled work area.

D. **Clearance Air Monitoring of the Controlled Work Area(s):** After final inspection has been successfully completed, clearance air sampling shall be performed by the Contractor:

1. The clearance air sampling will be conducted using aggressive air sampling techniques, such as leaf blowers, fans, or other air agitation devices.

2. The clearance air sampling will be conducted to analyze the airborne lead particle inside the controlled work area(s). Air sampling clearance results shall indicate airborne lead particle concentrations are equal to or below 3 ug/m^3.

3. Additional cleaning tasks and air clearance sampling shall be provided by the Contractor at no additional cost to the City, as needed to meet the above criterion.

4. Upon receipt of satisfactory clearance of air sampling results, isolation measures may be removed, and the controlled work area(s) released for other construction trades.

3.6 MEASUREMENTS AND PAYMENTS:

A. All work included herein shall be part of the Contract lump sum bid price and be paid for in accordance with Section 01292 – PARTIAL PAYMENT of GENERAL

REQUIREMENTS of the Project Manual.

(END OF SECTION)

BUREAU OF ENGINEERING

SIXTH STREET VIADUCT - PARK, ARTS AND RIVER CONNECTIVITY (PARC) IMPROVEMENTS
WORK ORDER NO. E700235F

ATTACHMENT NO. 11
SIXTH STREET VIADUCT LEAD SAMPLING REPORT

BID SUBMITTAL
NOVEMBER 2022

City of Los Angeles
California

Department of Public Works
Bureau of Engineering

Aurora
INDUSTRIAL HYGIENE

August 26, 2015

Ed Morelan, PG, CEG
Senior Engineering Geologist
Rincon Consultants, Inc.
180 North Ashwood Avenue
Ventura, CA 93003

Re: Asbestos and Lead Sampling: 6th Street Viaduct Bridge

Dear Mr. Morelan,

This report documents the findings, recommendations, and conclusions from the sampling conducted by Robert Rinck, a California Department of Public Health Certified Inspector/Risk Assessor (#4868) and a California Certified Asbestos Consultant (#03-3374), Glenn Gutierrez, a California Certified Site Surveillance Technician (#06-3391) and a California Department of Public Health (CDPH) Certified Lead Inspector/Risk Assessor (#20133) and Robert Pitzer, a California Department of Public Health Certified Inspector/Risk Assessor (#16091) and a California Certified Site Surveillance Technician (#07-4235) at the 6th Street Viaduct Bridge in Los Angeles, California. The purpose of the survey was to review previous asbestos and lead surveys of the bridge and to provide confirmation sampling of known materials and sampling of materials that may have been overlooked. The reports reviewed for this report include the following:

- Bulk Asbestos and Lead-Based Paint Survey prepared by SCA Environmental, Inc., project L-9393 dated April 2009.
- Asbestos and Lead report prepared by TRC, project 228333 dated October 2009
- Metals Analysis report, City of Los Angeles, Work Order no. E700224L

Additional sampling by Aurora was conducted on March 9, 2015, July 28, 2015, August 7, 2015, and August 11, 2015.

EXECUTIVE SUMMARY

The following materials were found to be Asbestos Containing Materials (ACM - 1% or greater):

Material	Location	Result	Amount
Cementitious grout, black	Lower sidewalks adjacent to bridge	3-6% Chrysotile	775 linear feet (approximately 1" wide)
	West side column bases		840 linear feet at 24 columns bases (approximately 1" wide)

The following materials were found to be Asbestos Containing Construction Materials (ACCM – less than 1% but greater than 0.1%):

Material	Location	Result (point count)	Amount
Expansion joint material, black	Bridge expansion joint at Santa Fe (below deck)	0.16% Chrysotile	<100 SF
Sealant tar, black	Bridge wall at river north bank	0.2% Chrysotile	5 LF
Sealant tar, black	Bridge expansion joint and column #8 N side	0.3% Chrysotile	15 LF

Lead-based paint (5000 ppm or greater) was detected on the following components:

Component	Color	Substrate	Condition	Location
Structure steel	Gray/beige	Metal	Fair	Arches, structural steel
Striping	Yellow	Asphalt	Fair	Below bridge
Light post access hatches	Gray	Metal	Poor	Bridge light posts

Lead-containing paint (defined as less than 5000 ppm but greater than 600 ppm) was detected on the following components:

Component	Color	Substrate	Condition	Location
Striping	Yellow	Asphalt	Fair	Roadway
Light post bases	Beige	Concrete	Poor	Bridge
Light post	N/A	N/A	N/A	Eastside (Anderson)
Light post	N/A	N/A	N/A	Westside (Anderson)
Light post	N/A	N/A	N/A	Westside (Mission)
Bridge Structure	Beige	Concrete	Poor	Above RR tracks
Bridge Structure	N/A	N/A	N/A	Westside on-ramp

INVESTIGATION

Asbestos

Aurora collected ten (10) bulk samples on March 9, 2015. These samples were analyzed by Polarized Light Microscopy (PLM) for Asbestos via EPA Method 600/R-93/116 "Method for Determination of Asbestos in Bulk Building Materials" by EMS Laboratories. EMS is an EPA accredited laboratory located at 117 West Bellevue Drive in Pasadena, California.

Aurora collected thirteen (13) bulk samples of expansion joint material on July 28, 2015 and two (2) samples of black, grout-like material on August 7, 2015. These samples were analyzed by Polarized Light

Microscopy (PLM) for Asbestos via EPA Method 600/R-93/116 "Method for Determination of Asbestos in Bulk Building Materials". Samples collected on July 28, 2015 were analyzed by EMLabP&K. EMLabP&K is an EPA accredited laboratory located at 1010 North Central Avenue in Glendale, California. The two samples collected on August 7, 2015 and the two samples collected on August 11, 2015 were analyzed by LA Testing. LA Testing is an EPA accredited laboratory located at 520 Mission Street in South Pasadena, California

Samples approximately 1 cubic centimeter (cc) in size were obtained using appropriate sampling equipment. The sampling area was misted with water to minimize the potential for the release of airborne fibers. Collected samples were placed in sealed plastic bags, labeled and transported under chain of custody to the laboratories.

Lead

Aurora collected ten (10) paint chip samples on March 9, 2015 and nine (9) paint chip samples on July 28, 2015. These samples were analyzed for lead content by Atomic Absorption Spectrophotometry by EMS Laboratories. The collected samples were assigned a unique sample identification number, placed in a sealed container, labeled, and transported under chain of custody to EMS. The sample was reported by weight of lead/weight of sample (mg/kg). A laboratory result of 5000 ppm (0.5%) was considered positive for lead based paint, in accordance with Chapter 7 (revised, 1997) of the Housing and Urban Development Guidelines for Lead Based Paint Inspection.

SAMPLING DATA

Table 1: Aurora - Asbestos Sampling from July 28, 2015, August 7, 2015, and August 11, 2015. (Expansion joints are numbered beginning at the west end of the bridge)

Sample #	Material	Location	Result
EJ001	Black expansion joint material with yellow foam	Expansion joint #1	None Detected
EJ002	Black expansion joint material with yellow foam	Expansion joint #2	None Detected
EJ003	Black expansion joint material with yellow foam	Expansion joint #3	None Detected
EJ004	Black expansion joint material	Expansion joint #4	None Detected
EJ007	Black expansion joint material	Expansion joint #7	None Detected
EJSW07	Layered expansion material	Sidewalk at joint #7	None Detected
EJ008	Black expansion joint material	Expansion joint #8	None Detected
EJ009	Black expansion joint material	Expansion joint #9	None Detected
EJ010	Black expansion joint material	Expansion joint #10	None Detected
EJ011	Black expansion joint material	Expansion joint #11	None Detected
EJ014	Black expansion joint material	Expansion joint #14	None Detected
0807-BULK01	Expansion joint, felt-like	Under bridge, E of Santa Fe	None Detected
0807-BULK02	Expansion joint, asphalt-like	Under bridge, E of Santa Fe	None Detected
81101	Black, grout-like material	Lower sidewalks adjacent to the bridge	**3% Chrysotile**
81102	Black, grout-like material		**6% Chrysotile**

Table 2: Combined Asbestos Data from Previous Reports

Material	Location	Sample #	Source	Result	Amount
Asphalt (5" deep)	Roadway E end, S	26	TRC 12/16/2014	None Detected	N/A
Asphalt (5" deep)	Roadway; middle over river	27	TRC 12/16/2014	None Detected	N/A
Asphalt (5" deep)	Roadway W end	28	TRC 12/16/2014	None Detected	N/A
Caulking (white/yellow) and mastic, black	Sidewalk block seams	MISC-021-01	SCA 4/16/2009	None Detected	N/A
Caulking (white/yellow) and mastic, black		MISC-021-02	SCA 4/16/2009	None Detected	N/A
Caulking (white/yellow) and mastic, black		MISC-021-03	SCA 4/16/2009	None Detected	N/A
Caulking/epoxy, yellow	N/A	MISC-01-01	SCA 4/16/2009	None Detected	N/A
Caulking/epoxy, yellow		MISC-01-02	SCA 4/16/2009	None Detected	N/A
Caulking/epoxy, yellow		MISC-01-03	SCA 4/16/2009	None Detected	N/A
Cementitious grout, black	Sidewalk, bridge, guardrail seams (not located)	GROUT-016-01	SCA 4/16/2009	1-2% Chrysotile	775 linear feet at sidewalks, 840 linear feet at west side column bases
Cementitious grout, black		GROUT-016-02	SCA 4/16/2009	1-2% Chrysotile	
Cementitious grout, black		GROUT-016-03	SCA 4/16/2009	1-2% Chrysotile	
Concrete	Bridge wall; W end/N side	1	TRC 12/16/2014	None Detected	N/A
Concrete	Decorative guard wall west end	2	TRC 12/16/2014	None Detected	N/A
Concrete	Column base w/lamp, W end	3	TRC 12/16/2014	None Detected	N/A
Concrete	Thin column #3, W end	7	TRC 12/16/2014	None Detected	N/A
Concrete	Curb S center	8	TRC 12/16/2014	None Detected	N/A
Concrete	Curb center patch	9	TRC 12/16/2014	None Detected	N/A
Concrete	Bridge over RR	N/A	TRC 12/16/2014	None Detected	N/A
Concrete	Large column E end, S side	23	TRC 12/16/2014	None Detected	N/A
Concrete	6th column E end, S side	29	TRC 12/16/2014	None Detected	N/A
Concrete	Column, S side middle	30	TRC 12/16/2014	None Detected	N/A
Concrete	Curb at W end, N side	31	TRC 12/16/2014	None Detected	N/A

Material	Location	Sample #	Source	Result	Amount
Concrete	Framing	CONCR-023-01	SCA 4/16/2009	None Detected	Throughout
Concrete		CONCR-023-02	SCA 4/16/2009	None Detected	
Concrete		CONCR-023-03	SCA 4/16/2009	None Detected	
Concrete texture	Bridge bottom at 101FW (E end)	24	TRC 12/16/2014	None Detected	N/A
Concrete texture		25	TRC 12/16/2014	None Detected	N/A
Expansion joint material, black	Sidewalk expansion joints	13	TRC 12/16/2014	None Detected	N/A
Expansion joint material, black		14	TRC 12/16/2014	None Detected	N/A
Expansion joint material, black		15	TRC 12/16/2014	None Detected	N/A
Expansion joint material, black	Bridge expansion joints (below deck)	EXPAN-02-01	SCA 4/16/2009	<1%/0.16% Chrysotile	<100 SF
Expansion joint material, black		EXPAN-02-02	SCA 4/16/2009	<1% Chrysotile	
Expansion joint material, black		EXPAN-02-03	SCA 4/16/2009	<1% Chrysotile	
Expansion joint material, black	Expansion joint material on bridge deck	EXPAN-017-01	SCA 4/16/2009	None Detected	N/A
Expansion joint material, black		EXPAN-017-02	SCA 4/16/2009	None Detected	
Expansion joint material, black		EXPAN-017-03	SCA 4/16/2009	None Detected	
Expansion joint material, black	Sidewalk expansion joints	26127-06	Aurora	None Detected	N/A
Expansion joint material, black	Roadway expansion joints	26127-07	Aurora	None Detected	N/A
Expansion joint material, black	Bridge wall expansion joint	26127-10	Aurora	None Detected	Throughout
Exterior dash coat (trowel-applied)	Throughout bridge structure	DASH-014-01	SCA 4/16/2009	None Detected	Throughout
Exterior dash coat (trowel-applied)		DASH-014-02	SCA 4/16/2009	None Detected	
Exterior dash coat (trowel-applied)		DASH-014-03	SCA 4/16/2009	None Detected	
Exterior dash coat (trowel-applied)		DASH-014-04	SCA 4/16/2009	None Detected	
Exterior dash coat (trowel-applied)		DASH-014-05	SCA 4/16/2009	None Detected	
Exterior dash coat (trowel-applied)		DASH-014-06	SCA 4/16/2009	None Detected	
Exterior dash coat (trowel-applied)		DASH-014-07	SCA 4/16/2009	None Detected	
Felt pads, brown	Sidewalk expansion joints	MISC-019-01	SCA 4/16/2009	None Detected	N/A

Material	Location	Sample #	Source	Result	Amount
Felt pads, brown		MISC-019-02	SCA 4/16/2009	None Detected	
Felt pads, brown		MISC-019-03	SCA 4/16/2009	None Detected	
Felt pads, brown	Sidewalk block seams	26127-02	Aurora	None Detected	N/A
Felt/fibrous barrier pad	Bridge roadway; beneath asphalt	MISC-029-01	SCA 4/16/2009	None Detected	N/A
Felt/fibrous barrier pad		MISC-029-02	SCA 4/16/2009	None Detected	
Felt/fibrous barrier pad		MISC-029-03	SCA 4/16/2009	None Detected	
Foam expansion	Roadway expansion joints	10	TRC 12/16/2014	None Detected	N/A
Foam expansion		11	TRC 12/16/2014	None Detected	N/A
Foam expansion		12	TRC 12/16/2014	None Detected	N/A
Foam expansion	Roadway expansion joints	26127-01	Aurora	None Detected	Throughout
Grout material, gray	Behind steel plates at expansion joints under the bridge structure	GROUT-04-01	SCA 4/16/2009	None Detected	N/A
Grout material, gray		GROUT-04-02	SCA 4/16/2009	None Detected	
Grout material, gray		GROUT-04-03	SCA 4/16/2009	None Detected	
Mastic, black	E approach structure; pipe penetration	PIPEMAS-024-01	SCA 4/16/2009	None Detected	N/A
Patching material, black	N sidewalk near steel arches	PATCH-028-01	SCA 4/16/2009	None Detected	N/A
Patching material, black		PATCH-028-02	SCA 4/16/2009	None Detected	
Patching material, black		PATCH-028-03	SCA 4/16/2009	None Detected	
Putty, gray	Exterior pipe penetrations	PUTTY-015-01	SCA 4/16/2009	None Detected	N/A
Putty, gray		PUTTY-015-02	SCA 4/16/2009	None Detected	
Putty, gray		PUTTY-015-03	SCA 4/16/2009	None Detected	
Putty, white/beige	Light pole electrical boxes on bridge	PUTTY-018-01	SCA 4/16/2009	None Detected	N/A (<0.1%)
Putty, white/beige		PUTTY-018-02	SCA 4/16/2009	None Detected	
Putty, white/beige		PUTTY-018-03	SCA 4/16/2009	None Detected	
Rubber gasket	Behind steel expansion joint plates under bridge structure	GASKET-NNN	SCA 4/16/2009	None Detected	N/A
Sealant tar, black	Bridge wall at river north bank	17	TRC 12/16/2014	0.2% Chrysotile	5 LF

Material	Location	Sample #	Source	Result	Amount
Sealant tar, black	Bridge expansion joint and column #8 N side	18	TRC 12/16/2014	0.3% Chrysotile	15 LF
Sealant tar, black	Lamp post access, center W/N side	19	TRC 12/16/2014	None Detected	N/A
Sealant tar, black		20	TRC 12/16/2014	None Detected	N/A
Sealant tar, black	Hatches of bridge structure boxes	MISC-022-01	SCA 4/16/2009	None Detected	N/A
Sealant tar, black		MISC-022-02	SCA 4/16/2009	None Detected	
Sealant tar, black		MISC-022-03	SCA 4/16/2009	None Detected	
Sealant tar, black	Sidewalk	MASTIC-027-01	SCA 4/16/2009	None Detected	N/A
Sealant tar, black	Sidewalk	26127-03	Aurora	None Detected	N/A
Sealant tar, black	Column base/sidewalk	26127-04	Aurora	None Detected	N/A
Sealant tar, black	Between bridge arches and sidewalks	26127-08	Aurora	None Detected	N/A
Sealant, pink	Electrical conduit	4	TRC 12/16/2014	None Detected	N/A
Sealant, pink	Access hatch on column w/lamp	5	TRC 12/16/2014	None Detected	N/A
Sealant, pink	Access hatch on column w/lamp	6	TRC 12/16/2014	None Detected	N/A
Sealant, pink	Sidewalk near SW portion of W steel arch structure	PUTTY-020-01	SCA 4/16/2009	None Detected	N/A
Sealant, pink		PUTTY-020-02	SCA 4/16/2009	None Detected	
Sealant, pink		PUTTY-020-03	SCA 4/16/2009	None Detected	
Wire insulation, black (large)	Bridge light post access	26127-05	Aurora	None Detected	Throughout
Wire insulation, black (small)	Electrical box in bridge sidewalk	26127-09	Aurora	None Detected	Throughout

Table 3: Aurora - Lead Sampling from March 24, 2015

Sample #	Component	Location	Substrate	Color	Condition	Result
SW-01	Bridge	Southwest face above RR tracks	Concrete	Beige	Poor	830
SW-02	Bridge	Southwest face above RR tracks	Concrete	Beige	Poor	460
SW-03	Handrail	Southwest above RR tracks	Concrete	Beige	Poor	860
SE-01	Bridge	Southeast face above RR tracks	Concrete	Beige	Poor	690
SE-02	Bridge	Southeast face above RR tracks	Concrete	Beige	Poor	260

Sample #	Component	Location	Substrate	Color	Condition	Result
NE-01	Bridge	Northeast face above RR tracks	Concrete	Beige	Poor	790
NE-02	Bridge	Northeast face above RR tracks	Concrete	Beige	Poor	770
NW-01	Bridge	Northwest face above RR tracks	Concrete	Beige	Poor	380
NW-02	Bridge	Northwest face above RR tracks	Concrete	Beige	Poor	820

Table 4: Combined Lead Data from Previous Reports

Component	Color	Substrate	Cond.	Location	Sample #	Source	Result (ppm)
Wall	Silver	Concrete	Fair	E approach structure	SI-17-01	SCA 4/16/2009	320
Wall	N/A	N/A	N/A	Westside approach	14-0197-19A	City of LA	187
Wall	N/A	N/A	N/A	Westside outer gateway wall	14-0197-21A	City of LA	22.8
Wall	N/A	N/A	N/A	Eastside approach	14-0197-03A	City of LA	120
Structure steel	Gray/beige	Metal	Fair	Arches, structural steel	GY-16-01	SCA 4/16/2009	190000
Structure steel	Gray/beige	Metal	N/A	Eastside steel arch 1A	14-0197-06A	City of LA	95700
Structure steel	Gray/beige	Metal	N/A	Eastside steel arch 1B	14-0197-07A	City of LA	119
Structure steel	Gray/beige	Metal	N/A	Eastside steel arch 2A	14-0197-08A	City of LA	48.3
Structure steel	Gray/beige	Metal	N/A	Eastside steel arch 2B	14-0197-09A	City of LA	3450
Structure steel	Gray/beige	Metal	N/A	Westside steel arch 2B	14-0197-14A	City of LA	3640
Structure steel	Gray/beige	Metal	N/A	Westside steel arch 2A	14-0197-15A	City of LA	2080
Structure steel	Gray/beige	Metal	N/A	Westside steel arch 1B	14-0197-16A	City of LA	298
Structure steel	Gray/beige	Metal	N/A	Westside steel arch 2B	14-0197-17A	City of LA	1860
Striping	Yellow	Asphalt	Intact	Roadway	26127-Pb06	Aurora	3200
Striping	Red	Concrete	Fair	Roadway curb	26127-Pb07	Aurora	150
Striping	White	Asphalt	Intact	Roadway	26127-Pb08	Aurora	<42
Striping	Yellow	Asphalt	Fair	Roadway	YW-01-01	SCA 4/16/2009	2500
Striping	Yellow	Asphalt	Fair	Below bridge	YW-02-01	SCA 4/16/2009	32000
Striping	White	Asphalt	Fair	Roadway	WH-14-01	SCA 4/16/2009	<41
River gateway	N/A	N/A	N/A	South end	14-0197-22A	City of LA	120

Component	Color	Substrate	Cond.	Location	Sample #	Source	Result (ppm)
River gateway	N/A	N/A	N/A	North end	14-0197-23A	City of LA	20
Light post bolts	Beige	Metal	Fair	Bridge light posts	BG-15-01	SCA 4/16/2009	<74
Light post base	Beige	Concrete	Poor	E side, mid.	26127-Pb01	Aurora	2500
Light post base	Beige	Concrete	Fair	N end	26127-Pb02	Aurora	770
Light post access hatch	Gray	Metal	Poor	Bridge light posts	GY-19-01	SCA 4/16/2009	100000
Light post (Mesquit)	N/A	N/A	N/A	Eastside	14-0197-05A	City of LA	66.8
Light post	N/A	N/A	N/A	Eastside (Anderson)	14-0197-11A	City of LA	2640
Light post	N/A	N/A	N/A	Westside (Anderson)	14-0197-12A	City of LA	1830
Light post	N/A	N/A	N/A	Westside (Mission)	14-0197-13A	City of LA	2140
Guard rails	Beige	Wood	Fair	Bridge structure (wood)	BG-18-01	SCA 4/16/2009	<45
Column 2	N/A	N/A	N/A	Beside BBS service yard	14-0197-02A	City of LA	135
Column 1	N/A	N/A	N/A	Frontage Rd. on Santa Fe	14-0197-01A	City of LA	72
Column	Gray	Concrete	Intact	River access road under bridge	26127-Pb10	Aurora	120
Column	N/A	N/A	N/A	Westside @ Santa Fe	14-0197-20A	City of LA	14.9
Bridge Structure	Beige	Concrete	Poor	Above RR tracks, E side	26127-Pb04	Aurora	1100
Bridge Structure	Beige	Concrete	Poor	W side on-ramp	26127-Pb09	Aurora	70
Bridge Structure	Beige	Concrete	Poor	Column in Maint. Yard below bridge	26075-08	Aurora	220
Bridge Structure	Beige	Concrete	Poor	Bridge exterior	BG-03-01	SCA 4/16/2009	100
Bridge Structure	N/A	N/A	N/A	Eastside near Mission Rd.	14-0197-10A	City of LA	527
Bridge Structure	N/A	N/A	N/A	Eastside on-ramp	14-0197-04A	City of LA	387
Bridge Structure	N/A	N/A	N/A	Westside on-ramp	14-0197-20A	City of LA	668
Bridge handrail	Beige	Concrete	Poor	W side, mid.	26127-Pb03	Aurora	370
Bridge handrail	Beige	Concrete	Poor	W side, S	26127-Pb05	Aurora	600

DISCUSSION AND RECOMMENDATIONS

Cementitious Grout

The asbestos survey prepared by SCA Environmental, Inc., project L-9393 dated April 2009 reported a "Cementitious grout, black" material located between the concrete handrails and sidewalks of the bridge. The north and south handrails were inspected for the length of the bridge. Three areas of concrete were removed from the handrail to reveal the seam between the handrail and the sidewalk. **Grout material was not found in our inspection at the concrete handrails on the bridge.**

Asbestos was detected in a black, grout-like material that is located at the ground level sidewalks adjacent to the bridge and the bridge walls and at the bases of the west side columns (24). This material is approximately a half-inch thick. Approximately 425 linear feet was observed at Mesquit Street and 350 linear feet was observed at East 6th Street. 840 linear feet were observed at the twenty-four columns located on the west side of the river.

Expansion Joints

Thirty-one (31) samples of material described as "expansion joint" materials were sampled. The result of three samples collected by SCA and identified as expansion joint material collected from the underside of the bridge above Santa Fe were less than 1% but above 0.1% asbestos content. There is less than 100 square feet of expansion joint material at this location. **Asbestos was not detected on any other samples of expansion joint – including two samples collected from the underside of the bridge by Aurora Industrial Hygiene at the same location as the SCA. We recommend that the expansion joint material be treated as negative for asbestos.**

Five (5) square feet of ACCM black sealant tar at the bridge wall at the river north bank and fifteen (15) square feet of ACCM black sealant tar at the column #8 north side collected by TRC were also identified in their report. **It is likely this material is a patch and should be considered a separate homogeneous area.**

Asbestos Regulatory Information

Listed below are a summary of regulations that apply if the asbestos containing materials are removed. It is not meant to be conclusive. The contractor is responsible for ensuring that they are in compliance with all local, state and federal requirements regarding asbestos containing materials:

1. A property owner has the responsibility for ensuring that asbestos containing material is maintained in good condition. Custodial or maintenance staff must be trained regarding proper handling of the material as part of an ongoing operations and maintenance operation. CalOSHA 8 CCR 1529, California Health and Safety Code Section 25915, and Proposition 65.
2. If more than 100 square feet of materials that contain greater than 0.1% asbestos will be removed, the materials must be removed by a registered asbestos abatement contractor and transferred to a waste facility that will accept asbestos waste. CalOSHA 8 CCR 1529.

3. ACM that is classified by OSHA as other/miscellaneous materials are present. Removal of these materials is considered a Class II activity according to CalOSHA regulations. Work practices and engineering controls for Class II work are specified in CalOSHA 8 CCR 1529.
4. Notifications and abatement practices must follow the South Coast Air Quality Management District (SCAQMD). Rule 1403.

Lead

Lead based paint was detected on the structural steel of the bridge, including the arches and support structure, the yellow striping below the bridge, and on the light post access hatches. This material is in fair to poor condition. Lead containing paint at greater than 600 ppm but less than 5000 ppm was detected on the light post bases, roadway striping and on the concrete bridge above the railroad tracks. This paint is in poor condition.

We recommend that all lead paint be stabilized and any lead waste be tested and disposed of as described below:

Lead Regulatory Information

Lead-safe work practices (such as using plastic tarps to catch paint chips and debris) are required regardless of the size of the project or the amount of lead present. The damaged paint should be cleaned from the substrate and this waste tested as described below: Title 17, CA Code of Regulations, Section 36050.

Handling/Disposal

A composite sample should be analyzed for Total Threshold Limit Concentration (TTLC) by USEPA reference method SW846. If the concentration of lead is greater than 1000 mg/kg the sample must be disposed of by a landfill which can handle such wastes. If the concentration is less than 50 mg/kg the sample may be disposed of as construction debris, if it is to remain in California. If the result falls between 50 mg/kg and 1000 mg/kg, the sample must be further analyzed by the Waste Extraction Test (WET) for Soluble Threshold Limit Concentration (STLC) as described in 22 CCR 66261.24a. If this concentration exceeds 5 mg/liter the sample must be handled and disposed of as hazardous waste.

Outside of California

All lead-containing paint which may be disposed of outside the State of California must be tested for Toxicity Characteristic Leaching Procedure (TCLP) regardless of whether it is essentially intact. The sample may be a composite of the paint and the substrate if the paint is intact. Any material with results exceeding 5 mg/l must be treated as hazardous waste.

Hazard communication training and exposure assessments are required for employees who may be exposed to lead. 8 CCR 1532.1.

Limitations

This report is based solely upon the condition of the property on the dates of the inspection. Aurora has performed this work, made the findings, and proposed the recommendations described in this report in accordance with generally accepted industrial hygiene practices in effect at the time the work was performed. This report is limited to accessible materials that could be sampled with discretion and with minimum damage to the property. No warranties, express or implied, are made by Aurora as to the use of any information disclosed in this report.

I hope that this information is helpful. Site diagrams, photos, and inspector certifications are attached.

Sincerely,

AURORA INDUSTRIAL HYGIENE, Inc.



Robert Rinck, CDPH #4868, CAC #03-3374

Site Diagrams



Expansion joint sample locations – west side

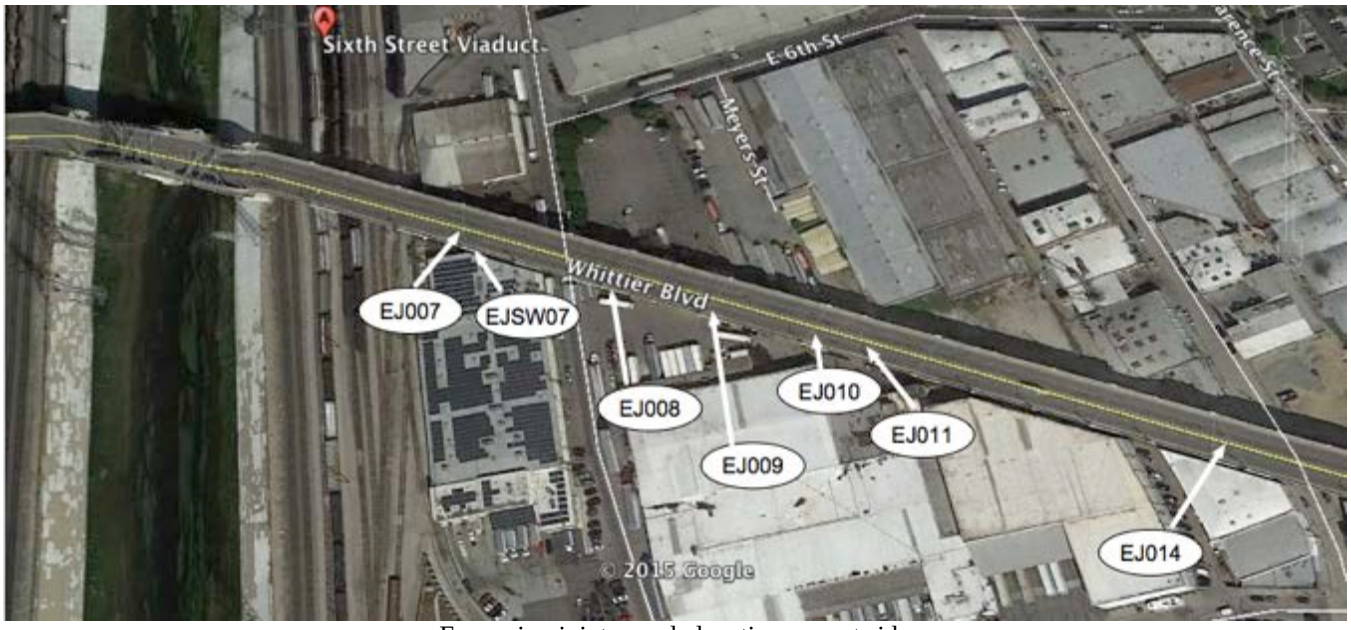

Expansion joint sample locations – east side

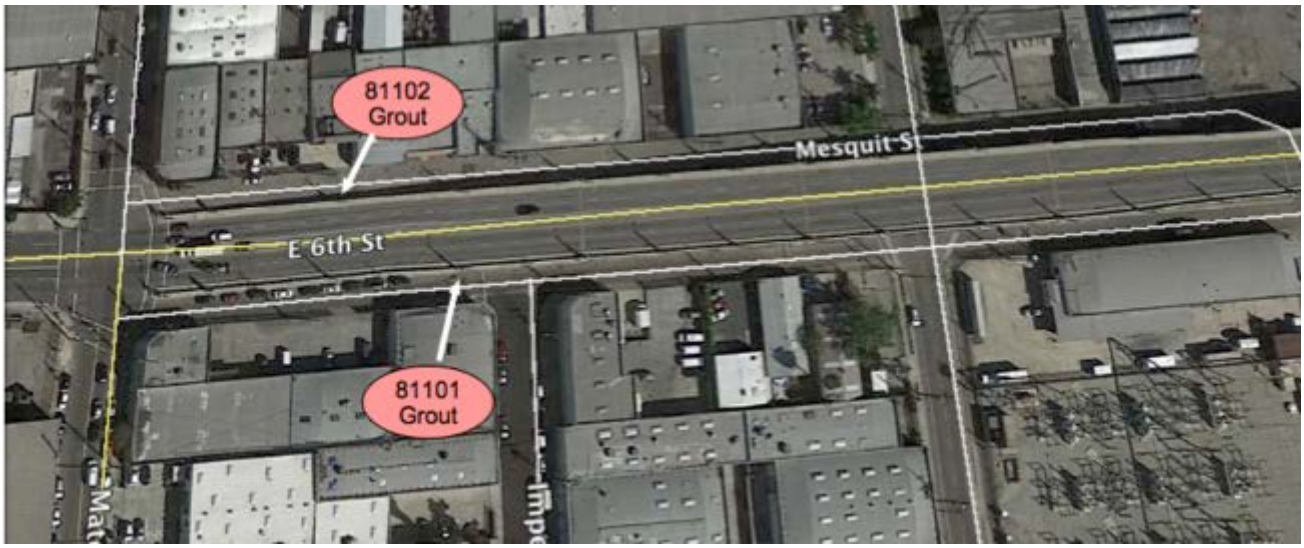

Asbestos containing grout at lower sidewalks and bridge walls

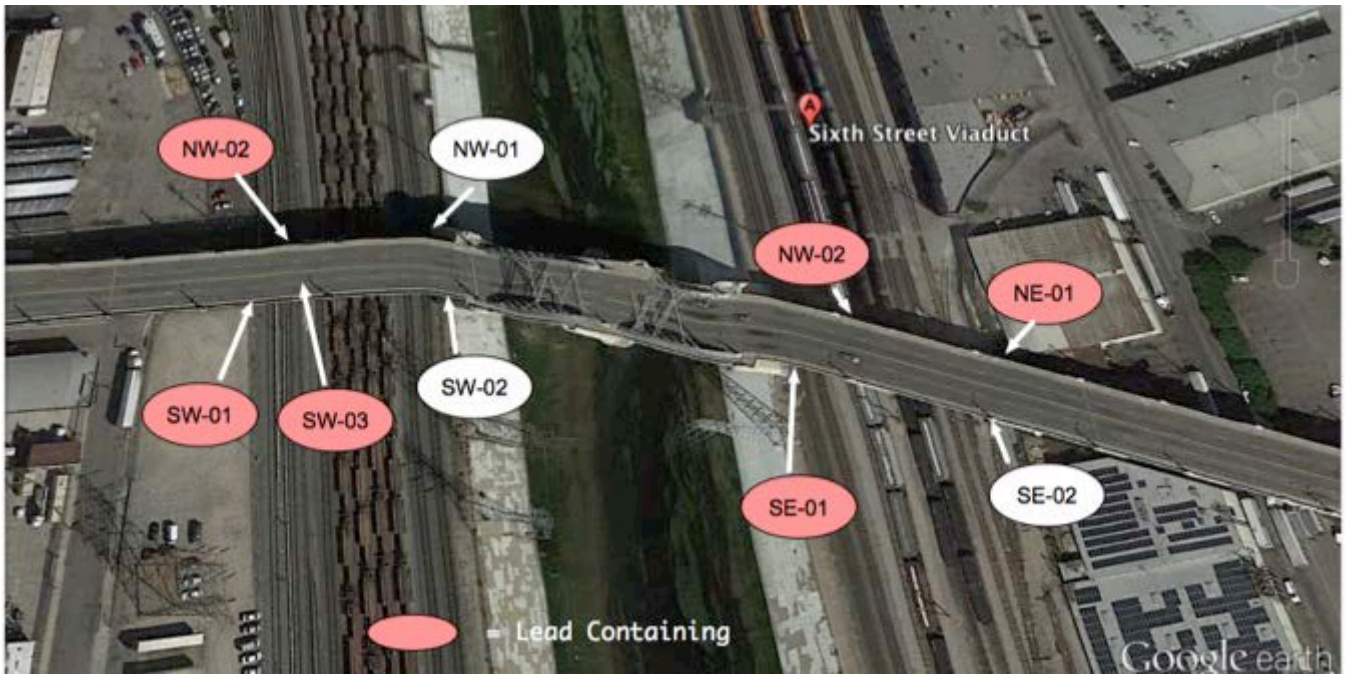

Lead sample locations

ADDENDUM 10

Looking South:

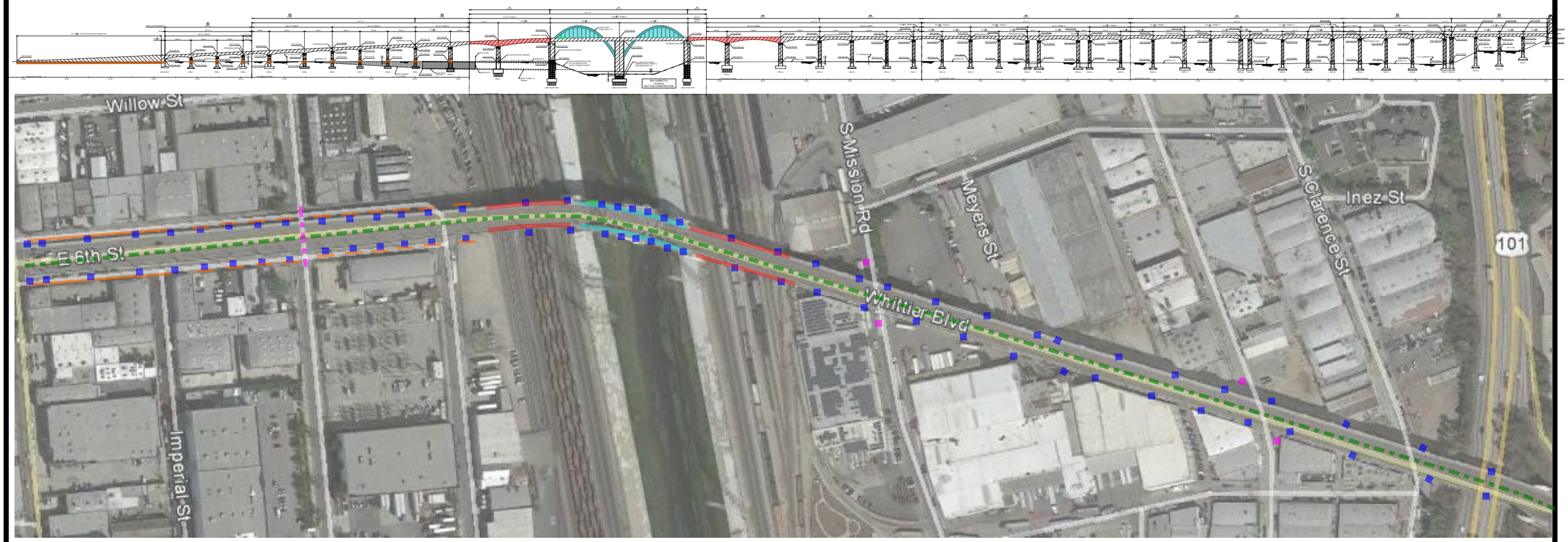

Looking North:

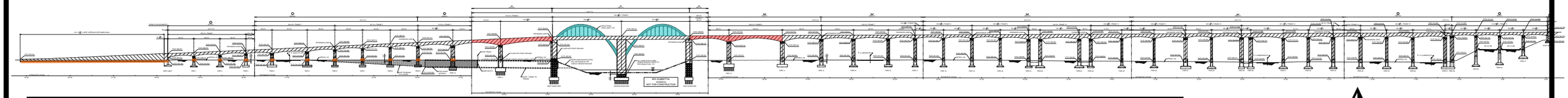

Legend:

- Asbestos Containing Material (ACM) Cementious Grout, Black
- Asbestos Containing Construction Material (ACCM) Sealant Tar, Black
- Lead-Based Paint Steel Arches, Grey/Beige
- Lead-Containing Paint Concrete Substrate, Beige
- Lead-Based Paint - Access Hatches & Lead-Containing Paint - Light Post Bases
- Lead-Containing Paint Roadway Striping on Viaduct, Yellow
- Lead-Based Paint Roadway Striping Under Viaduct, Yellow
- Lead-Containing Paint Light Posts on Mission and Anderson

N

REV.	DATE	DESCRIPTION
	12/14/2015	

SKANSKA Stacy and Witbeck
A Joint Venture 1995 AGUA MANSA RD. RIVERSIDE CA 92509

6TH STREET VIADUCT REPLACEMENT PROJECT
Viaduct Demolition Asbestos and Lead Map

DRAWN	DATE	SCALE	SHEET
RLT	8/20/15	NTS	1 OF 1

Site Photos



Lead Paint on bridge above railroad tracks



Asbestos containing grout location



Expansion joint



Sidewalk expansion joint



Sidewalk expansion joint



Cutout location



Cutout



Cutout



LCP on light post bases



LBP on light post hatches



Roadway striping

Laboratory Report

Sample Info

Date of Analysis:	3/13/2015
Lab ID:	164978
Client:	Aurora Industrial Hygiene
Date Received:	3/9/2015
Project Number:	26127, 6th Street Bridge
Analyte:	LEAD
Matrix:	PAINT CHIP
Method:	EPA 3050M/7000B
Comments:	

Reporting Limit (mg):	0.007
Method blank (mg):	<0.007

Sample Results

Sample Name	*Bulk Weight (g)*	*LEAD Weight (mg)*	*LEAD Concentration (ppm)*
26127-Pb01	**0.1613**	**0.40**	**2500**
26127-Pb02	**0.1620**	**0.12**	**770**
26127-Pb03	**0.1544**	**0.057**	**370**
26127-Pb04	**0.1556**	**0.17**	**1100**
26127-Pb05	**0.1598**	**0.095**	**600**
26127-Pb06	**0.1622**	**0.51**	**3200**
26127-Pb07	**0.1665**	**0.025**	**150**
26127-Pb08	**0.1660**	**< 0.007**	**< 42**
26127-Pb09	**0.1582**	**0.011**	**70**
26127-Pb10	**0.1606**	**0.019**	**120**

Chemist:

EMS LABORATORIES INC 117 W Bellevue Drive / Pasadena CA 91105-2548 / 626-568-4065

ADDENDUM 10

SUBMITTAL FORM/*Laboratory Services*

164978

PAGE 1 OF 1

TURNAROUND TIME: STD [X] 48 HR. [ ] 24 HR. [ ]
<8 HR. [ ] WKND [ ] OTHER: [ ]

- RELINQUISHED BY Robert Pitzer
- TIME / DATE 3/9/15
- CLIENT Aurora I.H.
- DATE OF SHIPMENT
- CARRIER
- ADDRESS 1132 Mission St. Ste: B South Pasadena, CA 91030
- CLIENT P.O. NO.
- CLIENT JOB/PROJECT ID NO(S). 26127 6TH Street Bridge
- TELEPHONE 626 403 4104
- CONTACT Grace Rinck
- PACKAGE SHIPPED FROM

- RESULTS REQUESTED VIA VERBAL [ ] FAX [ ] E-MAIL [X] E-MAIL RRinck@AuroraIH.com
(NOTE: Complete written reports will follow all analyses in addition to any prior transmitted verbal, fax or e-mail results) FAX NO.

- DATE/TIME OF SAMPLE COLLECTION 3/9/15
- SAMPLE PRESERVATIVES N/A HOLDING TIMES N/A
- NO. OF SAMPLES SENT 10 SAMPLER'S NAME [signature] SIGNATURE / PRINTED Robert Pitzer
- TYPE: [ ] WATER [ ] WASTE WATER [ ] SOIL [ ] FILTER [ ] SORBENT TUBE [ ] IMPINGER [ ] OTHER

(FOR EMS ONLY)

EMS Sample No.	CLIENT SAMPLE NO.	DESCRIPTION/LOCATION/ANALYSIS		VOLUME TIME WEIGHT
164978-1	26127 ~~2627~~ -Pb01	Beige Light Post Base	Pb	
	-Pb02	↓ ↓ ↓		
	-Pb03	Hand Rail		
	-Pb04	Bridge		
	-Pb05	Hand Rail		
	-Pb06	Road Stripe		
	-Pb07	Curb Stripe		
	-Pb08	Road Stripe		
	-Pb09	Bridge		
10	-Pb10	Column		

15 lines

(SF 6/07)

FOR EMS ONLY

- Laboratory No. 164978
- Received By Amerem
- Time 1420
- Date of Package Delivery 03.09.15
- Shipping Bill Retained: YES [ ] NONE [✓]
- Condition of Package on Receipt OK
- Condition of Custody Seal NE
(NOTE: If the package has sustained substantial damage or the custody seal is broken, stop and contact the project manager and the shipper.)
- No. of Samples 10
- Chain-of-Custody Signature [signature]
- Date of Acceptance into Sample Bank 03.09.15
- Misc. Info.
- Disposition of Samples

12/14/2015

EMS LABORATORIES INC.
117 W. Bellevue Drive, Pasadena, CA 91105-2548 626-568-4065

National Institute of Standards and Technology (NIST) NVLAP Lab Code 101218-0
California Department of Health Services Environmental Testing Laboratory ELAP 1119
County Sanitation Districts of Los Angeles County ID No. 10120
AIHA Laboratory Accreditation Programs, LLC 101634

CUSTOMER:	Aurora IH	PAGE #:	1 of 2
	1132 Mission Street, Ste. B	REPORT #:	0164977
	South Pasadena CA 91030	PROJECT:	PLM ANALYSIS
CONTACT:	Grace Rinck	DATE COLLECTED:	03/09/2015
REFERENCE:	26127	COLLECTED BY:	
METHOD:	EPA 600/R-93/116	DATE RECEIVED:	03/09/2015
		ANALYSIS DATE:	03/12/2015

BULK SAMPLE ANALYSIS FOR ASBESTOS CONTENT BY POLARIZED LIGHT MICROSCOPY

Laboratory ID - Sample No.	Sample Location Description	Layer No. Layer %	Asbestos Type	(%)	Non-Asbestos Components	(%)
0164977-001						
26127-01	Black, Homogeneous, Tar Like, melt, non-friable Note: 23°C, 1.550	LAYER 1 100%	None Detected		Synthetic Fiber Non-Fibrous Material	<1% 100%
0164977-002						
26127-02	Black, Homogeneous, Resinous, melt, non-friable Note: 23°C, 1.550	LAYER 1 100%	None Detected		Cellulose Fiber Non-Fibrous Material	10% 90%
0164977-003						
26127-03	Black/Beige, Non-homogeneous, Resinous/Paint, melt/ash, non-friable Note: 23°C, 1.550	LAYER 1 100%	None Detected		Cellulose Fiber Non-Fibrous Material	10% 90%
0164977-004						
26127-04	Gray/Black, Non-homogeneous, Paint/Resinous, ash/melt, non-friable Note: 23°C, 1.550	LAYER 1 100%	None Detected		Cellulose Fiber Non-Fibrous Material	15% 85%
0164977-005						
26127-05	Gray/Silver/Beige/Black, Non-homogeneous, Soft/Metalic/Fibrous/Tar Like, melt/tease, non-friable Note: 23°C, 1.550	LAYER 1 100%	None Detected		Cellulose Fiber Non-Fibrous Material	8% 92%
0164977-006						
26127-06	Gray/Brown, Non-homogeneous, Fibrous/Granular, tease/crush, non-friable Note: 23°C, 1.550	LAYER 1 100%	None Detected		Cellulose Fiber Non-Fibrous Material	8% 92%

CUSTOMER:	Aurora IH	PAGE #:	2 of 2
	1132 Mission Street, Ste. B	REPORT #:	0164977
	South Pasadena CA 91030	PROJECT:	PLM ANALYSIS

BULK SAMPLE ANALYSIS FOR ASBESTOS CONTENT BY POLARIZED LIGHT MICROSCOPY

Laboratory ID - Sample No.	Sample Location Description	Layer No. Layer %	Asbestos Type	(%)	Non-Asbestos Components	(%)
0164977-007						
26127-07	Black/Gray, Non-homogeneous, Hard/Fibrous, crush/tease, non-friable Note: 23°C, 1.550	LAYER 1 100%	None Detected		Cellulose Fiber Synthetic Fiber Non-Fibrous Material	5% 5% 90%
0164977-008						
26127-08	Black/White, Non-homogeneous, Hard/Paint, crush, non-friable Note: 23°C, 1.550	LAYER 1 100%	None Detected		Non-Fibrous Material	100%
0164977-009						
26127-09	Gray/Black, Non-homogeneous, Fibrous/Tar Like, tease/melt, non-friable Note: 24°c, 1.550	LAYER 1 100%	None Detected		Cellulose Fiber Non-Fibrous Material	30% 70%
0164977-010						
26127-10	Gray/Black, Non-homogeneous, Paint/Tar Like, ash/melt, non-friable Note: 24°C, 1.550	LAYER 1 100%	None Detected		Cellulose Fiber Non-Fibrous Material	8% 92%

Analyst - MEGHAN SWEENEY **Approved Signatory** Laboratory Director

The EPA method is a semi-quantitative procedure. The detection limit is between 0.1-1% by area and dependent upon the size of the asbestos fibers, the means of sampling and the matrix of the sampled material. The test results reported are for the sample(s) delivered to us and may not represent the entire material from which the sample was taken. The EPA recommends three samples or more be taken from a "homogeneous sampling area" before friable material is considered non-asbestos-containing. Negative floor tile samples may contain significant amounts (>1%) of very thin fibers which cannot be detected by PLM. Confirmation by TEM is recommended by the EPA (Federal Register Vol.59, No.146). Asbestos fibers bound in a non-friable organic matrix may not be detected by PLM. Alternative preparation methods are recommended. This report, from a NIST-accredited laboratory through NVLAP, must not be used by the client to claim product endorsement by NVLAP or any agencyof the U.S. government. This report shall not be reproduced, except in full, without the written approval of EMS Laboratories, Inc. Samples were received in good condition unless otherwise noted.

NVLAP®
NVLAP Lab Code: 101218-0

ADDENDUM 10

SUBMITTAL FORM/*Laboratory Services*

164977

PAGE 1 OF 1

TURNAROUND TIME: STD [X] 48 HR. [ ] 24 HR. [ ]
<8 HR. [ ] WKND [ ] OTHER: [ ]

- RELINQUISHED BY Robert Pitcen
- TIME / DATE 3/9/15
- CLIENT Aurora I.H.
- ADDRESS 1132 Mission St. Ste. B South Pasadena, CA 91030
- TELEPHONE 626 403 4104
- CONTACT Grace Rinck
- DATE OF SHIPMENT
- CARRIER
- CLIENT P.O. NO.
- CLIENT JOB/PROJECT ID NO(S). 26127 6th Street Bridge
- PACKAGE SHIPPED FROM
- RESULTS REQUESTED VIA VERBAL [ ] FAX [ ] E-MAIL [X] E-MAIL RRinck@AURORAIH.com
(NOTE: Complete written reports will follow all analyses, in addition to any prior transmitted verbal, fax or e-mail results) FAX NO.
- DATE/TIME OF SAMPLE COLLECTION 3/9/15
- SAMPLE PRESERVATIVES N/A HOLDING TIMES N/A
- NO. OF SAMPLES SENT 10 SAMPLER'S NAME [signature] SIGNATURE / Robert Pitcen PRINTED
- TYPE: [ ] WATER [ ] WASTE WATER [ ] SOIL [ ] FILTER [ ] SORBENT TUBE [ ] IMPINGER [ ] OTHER

(FOR EMS ONLY) EMS Sample No.	CLIENT SAMPLE NO.	DESCRIPTION/LOCATION/ANALYSIS		VOLUME TIME WEIGHT (IF APPLICABLE)
164977-1	26127 -01	EXPANSION JOINT	ASB	BULK
	-02	MOISTURE BARRIER		
	-03	TAR-LIKE @ S.W. 1ST		
	-04	SEALANT BLACK		
	-05	WIRE INSULATION BLACK		
	-06	EXPANSION TAR BLACK		
	-07	EXPANSION TAR BLK/GRAY		
	-08	SEALANT		
	-09	WIRE-CLOTH-BLACK		
10	-10	EXPANSION TAR		

15 lines

(SF 6/07)

FOR EMS ONLY

- Laboratory No. 164977 ~~164496~~
- Received By Amene M.
- Time 1428
- Date of Package Delivery 03.09.15
- Shipping Bill Retained: YES [ ] NONE [✓]
- Condition of Package on Receipt OK
- Condition of Custody Seal None
(NOTE: If the package has sustained substantial damage or the custody seal is broken, stop and contact the project manager and the shipper.)
- No. of Samples 10
- Chain-of-Custody Signature MS
- Date of Acceptance into Sample Bank 03.09.15
- Misc. Info.
- Disposition of Samples RS

12/14/2015

ADDENDUM 10

LA Testing
520 Mission Street, South Pasadena, CA 91030
Phone/Fax: (323) 254-9960 / (323) 254-9982
http://www.LATesting.com pasadenalab@latesting.com

LA Testing Order: 321517010
CustomerID: ARIH26
CustomerPO:
ProjectID:

Attn: **Grace Rinck**
Aurora Industrial Hygiene
1132 Mission Street
Suite B
South Pasadena, CA 91030

Phone: (626) 403-4104
Fax:
Received: 08/11/15 2:00 PM
Analysis Date: 8/11/2015
Collected: 8/11/2015

Test Report: Asbestos Analysis of Bulk Materials via EPA 600/R-93/116 Method using Polarized Light Microscopy

Sample	Description	Appearance	Non-Asbestos % Fibrous	Non-Asbestos % Non-Fibrous	Asbestos % Type
81101-Grout *321517010-0001*	Sidewalk Grout	Gray/Beige Non-Fibrous Heterogeneous		100% Non-fibrous (other)	**None Detected**
81101-Mastic *321517010-0001A*	Sidewalk Grout	Black Fibrous Homogeneous	10% Cellulose	87% Non-fibrous (other)	**3% Chrysotile**
81102-Grout *321517010-0002*	Sidewalk Grout	Gray Non-Fibrous Homogeneous		100% Non-fibrous (other)	**None Detected**
81102-Mastic *321517010-0002A*	Sidewalk Grout	Black Non-Fibrous Homogeneous	5% Cellulose	89% Non-fibrous (other)	**6% Chrysotile**

Analyst(s)

Olivia Santiago (2)
Rosa Mendoza (2)

Jerry Drapala Ph.D, Laboratory Manager
or other approved signatory

EMSL maintains liability limited to cost of analysis. This report relates only to the samples reported and may not be reproduced, except in full, without written approval by EMSL. EMSL bears no responsibility for sample collection activities or analytical method limitations. Interpretation and use of test results are the responsibility of the client. This report must not be used by the client to claim product certification, approval, or endorsement by NVLAP, NIST or any agency of the federal government. Non-friable organically bound materials present a problem matrix and therefore EMSL recommends gravimetric reduction prior to analysis. Samples received in good condition unless otherwise noted. Estimated accuracy, precision and uncertainty data available upon request. Unless requested by the client, building materials manufactured with multiple layers (i.e. linoleum, wallboard, etc.) are reported as a single sample. Reporting limit is 1%

Samples analyzed by LA Testing South Pasadena, CA NVLAP Lab Code 200232-0, CA ELAP 2283

Initial report from 08/11/2015 15:13:07
~~12/14/2015~~

THIS IS THE LAST PAGE OF THE REPORT.

OrderID: 321517010

ADDENDUM 10

Asbestos Chain of Custody

LA Testing Order Number (Lab Use Only):

321517010-

LA TESTING
520 MISSION STREET
S. PASADENA, CA 91030
PHONE: (323) 254-9960
FAX: (323) 254-9982

Company: AURORA	LA Testing-Bill to: ☐ Same ☐ Different If Bill to is Different note instructions in Comments** *Third Party Billing requires written authorization from third party*
Street: 1132 MISSION ST.	
City: SOUTH PASADENA State/Province:	Zip/Postal Code: Country:
Report To (Name): GRACE RINCK	Fax #:
Telephone #: 213 445-9836	Email Address: RRINCK@AURORAIH.COM
Project Name/Number:	
Please Provide Results: ☐ Fax ☒ Email	Purchase Order: U.S. State Samples Taken:

Turnaround Time (TAT) Options* – Please Check

☒ 3 Hour ☐ 6 Hour ☐ 24 Hour ☐ 48 Hour ☐ 72 Hour ☐ 96 Hour ☐ 1 Week ☐ 2 Week

*For TEM Air 3 hours through 6 hours, please call ahead to schedule.*There is a premium charge for 3 Hour TEM AHERA or EPA Level II TAT. You will be asked to sign an authorization form for this service. Analysis completed in accordance with LA Testing's Terms and Conditions located in the Analytical Price Guide.

PCM - Air
- ☐ NIOSH 7400
- ☐ w/ OSHA 8hr. TWA

PLM - Bulk (reporting limit)
- ☒ PLM EPA 600/R-93/116 (<1%)
- ☐ PLM EPA NOB (<1%)

Point Count
- ☐ 400 (<0.25%) ☐ 1000 (<0.1%)

Point Count w/Gravimetric
- ☐ 400 (<0.25%) ☐ 1000 (<0.1%)
- ☐ NYS 198.1 (friable in NY)
- ☐ NYS 198.6 NOB (non-friable-NY)
- ☐ NIOSH 9002 (<1%)

TEM – Air ☐ 4-4.5hr TAT (AHERA only)
- ☐ AHERA 40 CFR, Part 763
- ☐ NIOSH 7402
- ☐ EPA Level II
- ☐ ISO 10312

TEM - Bulk
- ☐ TEM EPA NOB
- ☐ NYS NOB 198.4 (non-friable-NY)
- ☐ Chatfield SOP
- ☐ TEM Mass Analysis-EPA 600 sec. 2.5

TEM – Water: EPA 100.2
- Fibers >10µm ☐ Waste ☐ Drinking
- All Fiber Sizes ☐ Waste ☐ Drinking

TEM- Dust
- ☐ Microvac - ASTM D 5755
- ☐ Wipe - ASTM D6480
- ☐ Carpet Sonication (EPA 600/J-93/167)

Soil/Rock/Vermiculite
- ☐ PLM CARB 435 - A (0.25% sensitivity)
- ☐ PLM CARB 435 - B (0.1% sensitivity)
- ☐ TEM CARB 435 - B (0.1% sensitivity)
- ☐ TEM CARB 435 - C (0.01% sensitivity)
- ☐ EPA Protocol (Semi-Quantitative)
- ☐ EPA Protocol (Quantitative)

Other:
- ☐

☐ **Check For Positive Stop – Clearly Identify Homogenous Group**

Samplers Name: Samplers Signature:

Sample #	Sample Description	Volume/Area (Air) HA # (Bulk)	Date/Time Sampled
81101	SIDEWALK GROUT		8-11-15
81102	" "		"

Client Sample # (s): - Total # of Samples:

Relinquished (Client): Date: 8-11-15 Time: 1400

Received (Lab): Date: 8-11-15 Time: 2pm

Comments/Special Instructions:

OrderID: 321517010

ADDENDUM 10

Asbestos Chain of Custody

LA Testing Order Number (Lab Use Only):

321517010-

LA TESTING
520 MISSION STREET
S. PASADENA, CA 91030
PHONE: (323) 254-9960
FAX: (323) 254-9982

Company: AURORA	LA Testing-Bill to: ☐ Same ☐ Different If Bill to is Different note instructions in Comments** *Third Party Billing requires written authorization from third party*
Street: 1132 MISSION ST.	
City: SOUTH PASADENA State/Province:	Zip/Postal Code: Country:
Report To (Name): GRACE RINCK	Fax #:
Telephone #: 213 445-9836	Email Address: RRINCK@AURORAIH.COM
Project Name/Number:	
Please Provide Results: ☐ Fax ☒ Email	Purchase Order: U.S. State Samples Taken:

Turnaround Time (TAT) Options* – Please Check

☒ 3 Hour ☐ 6 Hour ☐ 24 Hour ☐ 48 Hour ☐ 72 Hour ☐ 96 Hour ☐ 1 Week ☐ 2 Week

*For TEM Air 3 hours through 6 hours, please call ahead to schedule.*There is a premium charge for 3 Hour TEM AHERA or EPA Level II TAT. You will be asked to sign an authorization form for this service. Analysis completed in accordance with LA Testing's Terms and Conditions located in the Analytical Price Guide.

PCM - Air
- ☐ NIOSH 7400
- ☐ w/ OSHA 8hr. TWA

PLM - Bulk (reporting limit)
- ☒ PLM EPA 600/R-93/116 (<1%)
- ☐ PLM EPA NOB (<1%)

Point Count
- ☐ 400 (<0.25%) ☐ 1000 (<0.1%)

Point Count w/Gravimetric
- ☐ 400 (<0.25%) ☐ 1000 (<0.1%)
- ☐ NYS 198.1 (friable in NY)
- ☐ NYS 198.6 NOB (non-friable-NY)
- ☐ NIOSH 9002 (<1%)

TEM – Air ☐ 4-4.5hr TAT (AHERA only)
- ☐ AHERA 40 CFR, Part 763
- ☐ NIOSH 7402
- ☐ EPA Level II
- ☐ ISO 10312

TEM - Bulk
- ☐ TEM EPA NOB
- ☐ NYS NOB 198.4 (non-friable-NY)
- ☐ Chatfield SOP
- ☐ TEM Mass Analysis-EPA 600 sec. 2.5

TEM – Water: EPA 100.2
- Fibers >10µm ☐ Waste ☐ Drinking
- All Fiber Sizes ☐ Waste ☐ Drinking

TEM- Dust
- ☐ Microvac - ASTM D 5755
- ☐ Wipe - ASTM D6480
- ☐ Carpet Sonication (EPA 600/J-93/167)

Soil/Rock/Vermiculite
- ☐ PLM CARB 435 - A (0.25% sensitivity)
- ☐ PLM CARB 435 - B (0.1% sensitivity)
- ☐ TEM CARB 435 - B (0.1% sensitivity)
- ☐ TEM CARB 435 - C (0.01% sensitivity)
- ☐ EPA Protocol (Semi-Quantitative)
- ☐ EPA Protocol (Quantitative)

Other:
- ☐

☐ **Check For Positive Stop – Clearly Identify Homogenous Group**

Samplers Name: Samplers Signature:

Sample #	Sample Description	Volume/Area (Air) HA # (Bulk)	Date/Time Sampled
81101	SIDEWALK GROUT		8-11-15
81102	" "		"

Client Sample # (s): - Total # of Samples:

Relinquished (Client): Date: 8-11-15 Time: 1400

Received (Lab): Date: 8-11-15 Time: 2pm

Comments/Special Instructions:

ADDENDUM 10

LA Testing
520 Mission Street, South Pasadena, CA 91030
Phone/Fax: (323) 254-9960 / (323) 254-9982
http://www.LATesting.com pasadenalab@latesting.com

LA Testing Order: 321516806
CustomerID: ARIH26
CustomerPO:
ProjectID:

Attn: **robert pitzer**
Aurora Industrial Hygiene
1132 Mission Street
Suite B
South Pasadena, CA 91030

Phone: (626) 403-4104
Fax:
Received: 08/07/15 3:30 PM
Analysis Date: 8/8/2015
Collected:

Project: **RINCON 6TH STREET BRIDGE**

Test Report: Asbestos Analysis of Bulk Materials via EPA 600/R-93/116 Method using Polarized Light Microscopy

			Non-Asbestos				Asbestos
Sample	**Description**	**Appearance**	**% Fibrous**		**% Non-Fibrous**		**% Type**
0807-BULK 01 *321516806-0001*	EXPANSION JOINT, FELT LIKE	Black Fibrous Homogeneous	60%	Cellulose	40%	Non-fibrous (other)	**None Detected**
0807-BULK 02 *321516806-0002*	EXPANSION JOINT, ASPHALT LIKE	Black Fibrous Homogeneous	20%	Cellulose	80%	Non-fibrous (other)	**None Detected**

Analyst(s)

Olivia Santiago (2)

Jerry Drapala Ph.D, Laboratory Manager
or other approved signatory

EMSL maintains liability limited to cost of analysis. This report relates only to the samples reported and may not be reproduced, except in full, without written approval by EMSL. EMSL bears no responsibility for sample collection activities or analytical method limitations. Interpretation and use of test results are the responsibility of the client. This report must not be used by the client to claim product certification, approval, or endorsement by NVLAP, NIST or any agency of the federal government. Non-friable organically bound materials present a problem matrix and therefore EMSL recommends gravimetric reduction prior to analysis. Samples received in good condition unless otherwise noted. Estimated accuracy, precision and uncertainty data available upon request. Unless requested by the client, building materials manufactured with multiple layers (i.e. linoleum, wallboard, etc.) are reported as a single sample. Reporting limit is 1%

Samples analyzed by LA Testing South Pasadena, CA NVLAP Lab Code 200232-0, CA ELAP 2283

Initial report from 08/08/2015 10:02:29
~~12/14/2015~~

THIS IS THE LAST PAGE OF THE REPORT.

ADDENDUM 10

CHAIN OF CUSTODY

www.EMLabPK.com

EMLab P&K
A TestAmerica Company

New Jersey: 3000 Lincoln Drive East, Suite A, Marlton, NJ 08053 * (866) 871-1984
Phoenix, AZ: 1501 West Knudsen drive, Phoenix, AZ 85027 * (800) 651-4802
San Bruno, CA: 1150 Bayhill Drive, #100, San Bruno, CA 94066 * (866) 888-6653

Weather	Fog	Rain	Snow	Wind	Clear
Level: None	☐	☐	☐	☐	☐
Light	☐	☐	☐	☐	
Moderate	☐	☐	☐	☐	
Heavy	☐	☐	☐	☐	

REQU (Use) 001400090

CONTACT INFORMATION

Company:	AURORA	Address:	
Contact:	BOB RINCK	Special Instructions:	
Phone:	213 445-9836		

PROJECT INFORMATION

Project ID:	6TH STREET BRIDGE		
Project Description:			
Project Zip Code:		Sampling Date & Time:	7/28/15
PO Number:		Sampled By:	R. RINCK

TURN AROUND TIME CODES (TAT)

STD – Standard (DEFAULT)
ND – Next Business Day
SD – Same Business Day Rush
WH – Weekend / Holiday

Rushes received after 2 pm or on weekends, will be considered received the next business day. Please alert us in advance of weekend analysis needs.

Sample ID	Description	Sample Type (Below)	TAT (Above)	Total Volume / Area (as applicable)	Notes (Time of day, Temp, RH, etc.)
EJ001	EXPANSION JOINT FOAM	B	STD		
EJ002	" " MATERIAL W/FOAM				NO STD
EJ003	" " "				
EJ004	EXPANSION JOINT MAT.				ON POSITIVE
EJ007	" " "				
EJSW07	" " " SIDEWALK				
EJ 006	" " MAT.				
EJ009	" " "				
EJ010	" " "				
EJ011	" " "				
EJ014	" " "				

| Non-Culturable | | | |

EMLab P&K
A TestAmerica Company

Report for:

Ms. Grace Rinck, Mr. Robert Rinck
Aurora Industrial Hygiene, Inc.
1132 Mission St
Suite B
South Pasadena, CA 91030

Regarding: Project: 6th Street Bridge
EML ID: 1400090

Approved by:



Approved Signatory
Roshanak Kalantari

Dates of Analysis:
Asbestos PLM: 07-30-2015

Service SOPs: Asbestos PLM (EPA Methods 600/R-93/116 & 600/M4-82-020, SOP EM-AS-S-1267)

All samples were received in acceptable condition unless noted in the Report Comments portion in the body of the report. The results relate only to the items tested. The results include an inherent uncertainty of measurement associated with estimating percentages by polarized light microscopy. Measurement uncertainty data for sample results with >1% asbestos concentration can be provided when requested.

EMLab P&K ("the Company") shall have no liability to the client or the client's customer with respect to decisions or recommendations made, actions taken or courses of conduct implemented by either the client or the client's customer as a result of or based upon the Test Results. In no event shall the Company be liable to the client with respect to the Test Results except for the Company's own willful misconduct or gross negligence nor shall the Company be liable for incidental or consequential damages or lost profits or revenues to the fullest extent such liability may be disclaimed by law, even if the Company has been advised of the possibility of such damages, lost profits or lost revenues. In no event shall the Company's liability with respect to the Test Results exceed the amount paid to the Company by the client therefor.

EMLab P&K
1010 N Central Avenue, Suite 390, Glendale, CA 91202
(866) 465-6653 Fax (858) 569-5806 www.emlab.com

Client: Aurora Industrial Hygiene, Inc.
C/O: Ms. Grace Rinck, Mr. Robert Rinck
Re: 6th Street Bridge

Date of Sampling: 07-28-2015
Date of Receipt: 07-29-2015
Date of Report: 07-31-2015

ASBESTOS PLM REPORT: EPA-600/M4-82-020 & EPA METHOD 600/R-93-116

Total Samples Submitted:	11
Total Samples Analyzed:	11
Total Samples with Layer Asbestos Content > 1%:	0

Location: EJ001, Expansion joint foam

Lab ID-Version‡: 6441325-1

Sample Layers	Asbestos Content
Black/Yellow Expansion Joint Foam	ND
Composite Non-Asbestos Content:	2% Glass Fibers
Sample Composite Homogeneity:	Good

Location: EJ002, Expansion material w/foam

Lab ID-Version‡: 6441326-1

Sample Layers	Asbestos Content
Black Expansion Joint	ND
Black/Yellow Foam	ND
Composite Non-Asbestos Content:	5% Cellulose 2% Glass Fibers
Sample Composite Homogeneity:	Good

Location: EJ003, Expansion material w/foam

Lab ID-Version‡: 6441327-1

Sample Layers	Asbestos Content
Black Expansion Joint	ND
Black/Yellow Foam	ND
Composite Non-Asbestos Content:	5% Cellulose 2% Glass Fibers
Sample Composite Homogeneity:	Good

Location: EJ004, Expansion joint mat.

Lab ID-Version‡: 6441328-1

Sample Layers	Asbestos Content
Black Expansion Joint	ND
Composite Non-Asbestos Content:	8% Cellulose
Sample Composite Homogeneity:	Good

The test report shall not be reproduced except in full, without written approval of the laboratory. The report must not be used by the client to claim product certification, approval, or endorsement by NVLAP, NIST, or any agency of the federal government. EMLab P&K reserves the right to dispose of all samples after a period of thirty (30) days, according to all state and federal guidelines, unless otherwise specified.

Inhomogeneous samples are separated into homogeneous subsamples and analyzed individually. ND means no fibers were detected. When detected, the minimum detection and reporting limit is less than 1% unless point counting is performed. Floor tile samples may contain large amounts of interference material and it is recommended that the sample be analyzed by gravimetric point count analysis to lower the detection limit and to aid in asbestos identification.
‡ A "Version" indicated by -"x" after the Lab ID# with a value greater than 1 indicates a sample with amended data. The revision number is reflected by the value of "x".

EMLab P&K
1010 N Central Avenue, Suite 390, Glendale, CA 91202
(866) 465-6653 Fax (858) 569-5806 www.emlab.com

Client: Aurora Industrial Hygiene, Inc.
C/O: Ms. Grace Rinck, Mr. Robert Rinck
Re: 6th Street Bridge

Date of Sampling: 07-28-2015
Date of Receipt: 07-29-2015
Date of Report: 07-31-2015

ASBESTOS PLM REPORT: EPA-600/M4-82-020 & EPA METHOD 600/R-93-116

Location: EJ007, Expansion joint mat. Lab ID-Version‡: 6441329-1

Sample Layers	Asbestos Content
Black Expansion Joint	ND
Composite Non-Asbestos Content:	10% Cellulose
Sample Composite Homogeneity:	Good

Location: EJSW07, Expansion joint mat. side walk Lab ID-Version‡: 6441330-1

Sample Layers	Asbestos Content
Black Expansion Joint	ND
Composite Non-Asbestos Content:	10% Cellulose
Sample Composite Homogeneity:	Good

Location: EJ008, Expansion joint mat. Lab ID-Version‡: 6441331-1

Sample Layers	Asbestos Content
Black Expansion Joint	ND
Composite Non-Asbestos Content:	8% Cellulose
Sample Composite Homogeneity:	Good

Location: EJ009, Expansion joint mat. Lab ID-Version‡: 6441332-1

Sample Layers	Asbestos Content
Black Expansion Joint	ND
Composite Non-Asbestos Content:	8% Cellulose
Sample Composite Homogeneity:	Good

The test report shall not be reproduced except in full, without written approval of the laboratory. The report must not be used by the client to claim product certification, approval, or endorsement by NVLAP, NIST, or any agency of the federal government. EMLab P&K reserves the right to dispose of all samples after a period of thirty (30) days, according to all state and federal guidelines, unless otherwise specified.

Inhomogeneous samples are separated into homogeneous subsamples and analyzed individually. ND means no fibers were detected. When detected, the minimum detection and reporting limit is less than 1% unless point counting is performed. Floor tile samples may contain large amounts of interference material and it is recommended that the sample be analyzed by gravimetric point count analysis to lower the detection limit and to aid in asbestos identification.
‡ A "Version" indicated by -"x" after the Lab ID# with a value greater than 1 indicates a sample with amended data. The revision number is reflected by the value of "x".

EMLab P&K
1010 N Central Avenue, Suite 390, Glendale, CA 91202
(866) 465-6653 Fax (858) 569-5806 www.emlab.com

Client: Aurora Industrial Hygiene, Inc.
C/O: Ms. Grace Rinck, Mr. Robert Rinck
Re: 6th Street Bridge

Date of Sampling: 07-28-2015
Date of Receipt: 07-29-2015
Date of Report: 07-31-2015

ASBESTOS PLM REPORT: EPA-600/M4-82-020 & EPA METHOD 600/R-93-116

Location: EJ010, Expansion joint mat. Lab ID-Version‡: 6441333-1

Sample Layers	Asbestos Content
Black Expansion Joint	ND
Composite Non-Asbestos Content:	8% Cellulose
Sample Composite Homogeneity:	Good

Location: EJ011, Expansion joint mat. Lab ID-Version‡: 6441334-1

Sample Layers	Asbestos Content
Black Expansion Joint	ND
Composite Non-Asbestos Content:	8% Cellulose
Sample Composite Homogeneity:	Good

Location: EJ014, Expansion joint mat. Lab ID-Version‡: 6441335-1

Sample Layers	Asbestos Content
Black Expansion Joint	ND
Composite Non-Asbestos Content:	8% Cellulose
Sample Composite Homogeneity:	Good

The test report shall not be reproduced except in full, without written approval of the laboratory. The report must not be used by the client to claim product certification, approval, or endorsement by NVLAP, NIST, or any agency of the federal government. EMLab P&K reserves the right to dispose of all samples after a period of thirty (30) days, according to all state and federal guidelines, unless otherwise specified.

Inhomogeneous samples are separated into homogeneous subsamples and analyzed individually. ND means no fibers were detected. When detected, the minimum detection and reporting limit is less than 1% unless point counting is performed. Floor tile samples may contain large amounts of interference material and it is recommended that the sample be analyzed by gravimetric point count analysis to lower the detection limit and to aid in asbestos identification.
‡ A "Version" indicated by -"x" after the Lab ID# with a value greater than 1 indicates a sample with amended data. The revision number is reflected by the value of "x".

Laboratory Report

Sample Info

Date of Analysis:	7/31/2015
Lab ID:	166787
Client:	Aurora Industrial Hygiene
Date Received:	7/29/2015
Project Number:	6th Street Bridge
Analyte:	LEAD
Matrix:	PAINT CHIP
Method:	EPA3050M/7000B
Comments:	

Reporting Limit (mg):	0.007
Method blank (mg):	<0.007

Sample Results

Sample Name	*Bulk Weight (g)*	*LEAD Weight (mg)*	*LEAD Concentration (ppm)*
SW01	**0.1589**	**0.13**	**830**
SW02	**0.1682**	**0.078**	**460**
SW03	**0.1504**	**0.13**	**860**
SE01	**0.1536**	**0.11**	**690**
SE02	**0.1637**	**0.042**	**260**
NE01	**0.1604**	**0.13**	**790**
NE02	**0.1592**	**0.12**	**770**
NW01	**0.1629**	**0.063**	**380**
NW02	**0.1579**	**0.13**	**820**

Chemist:

EMS LABORATORIES INC 117 W Bellevue Drive / Pasadena CA 91105-2548 / 626-568-4065

1606787

ADDENDUM 10

TURNAROUND TIME: STD [X] 48 HR. [ ] 24 HR. [ ]
<8 HR. [ ] WKND [ ] OTHER:

RELINQUISHED BY [signature]
TIME / DATE 7/29/15

CLIENT AURORA
ADDRESS
DATE OF SHIPMENT CARRIER HAND
CLIENT P.O. NO.
CLIENT JOB/PROJECT ID NO(S). 6TH STREET BRIDGE
TELEPHONE 213 445-9836
CONTACT BOB RINCK
PACKAGE SHIPPED FROM

RESULTS REQUESTED VIA VERBAL [ ] FAX [ ] E-MAIL [X]
E-MAIL
(NOTE: Complete written reports will follow all analyses, in addition to any prior transmitted verbal, fax or e-mail results)
FAX NO.

DATE/TIME OF SAMPLE COLLECTION 7/29/15
SAMPLE PRESERVATIVES
HOLDING TIMES
NO. OF SAMPLES SENT 9
SAMPLER'S NAME [signature] (SIGNATURE) R. RINCK (PRINTED)
TYPE: [ ] WATER [ ] WASTE WATER [ ] SOIL [ ] FILTER [ ] SORBENT TUBE [ ] IMPINGER [ ] OTHER

(FOR EMS ONLY) EMS Sample No.	CLIENT SAMPLE NO.	DESCRIPTION/LOCATION/ANALYSIS	VOLUME TIME WEIGHT (IF APPLICABLE)
1606787-1	SW 01	BRIDGE PAINT	LEAD
	02		
	03		
	SE 01		
	02		
	NE 01		
	02		
9	NW 01		
	02		

15 lines

(SF 6/07)

FOR EMS ONLY

1606787
Laboratory No.
Received By Amenem Time 1058
Date of Package Delivery 07.29.15
Shipping Bill Retained: YES [ ] NONE [X]
Condition of Package on Receipt OK
Condition of Custody Seal NONE
(NOTE: If the package has sustained substantial damage or the custody seal is broken, stop and contact the project manager and the shipper.)
No. of Samples 9
Chain-of-Custody Signature [signature]
Date of Acceptance into Sample Bank 07.29.15
Misc. Info.
Disposition of Samples

12/14/2015

ADDENDUM 10

Looking South:

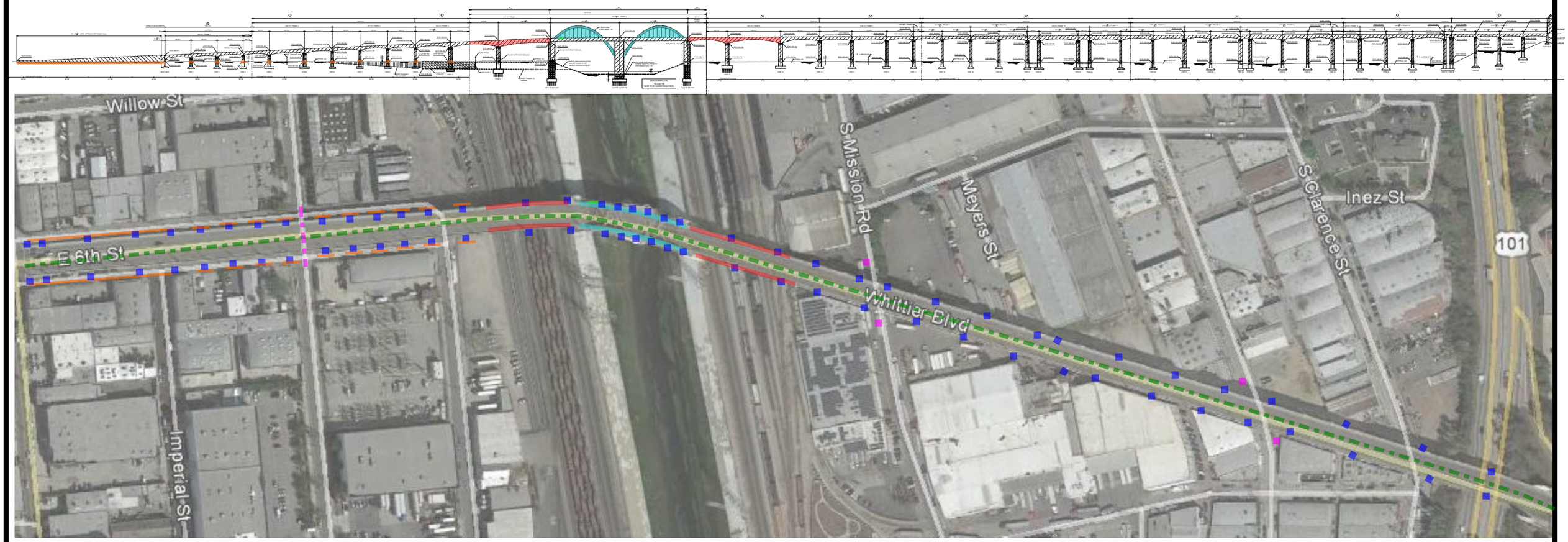

Looking North:

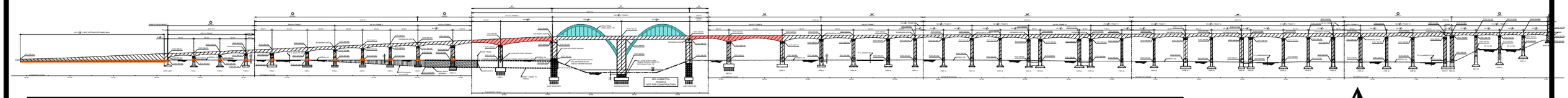

Legend:

- Asbestos Containing Material (ACM) Cementious Grout, Black
- Asbestos Containing Construction Material (ACCM) Sealant Tar, Black
- Lead-Based Paint Steel Arches, Grey/Beige
- Lead-Containing Paint Concrete Substrate, Beige
- Lead-Based Paint - Access Hatches & Lead-Containing Paint - Light Post Bases
- Lead-Containing Paint Roadway Striping on Viaduct, Yellow
- Lead-Based Paint Roadway Striping Under Viaduct, Yellow
- Lead-Containing Paint Light Posts on Mission and Anderson

N

REV.	DATE	DESCRIPTION
	12/14/2015	

SKANSKA Stacy and Witbeck
A Joint Venture 1995 AGUA MANSA RD. RIVERSIDE CA 92509

6TH STREET VIADUCT REPLACEMENT PROJECT
Viaduct Demolition Asbestos and Lead Map

DRAWN	DATE	SCALE	SHEET
RLT	8/20/15	NTS	1 OF 1

ADDENDUM 10

Looking South:

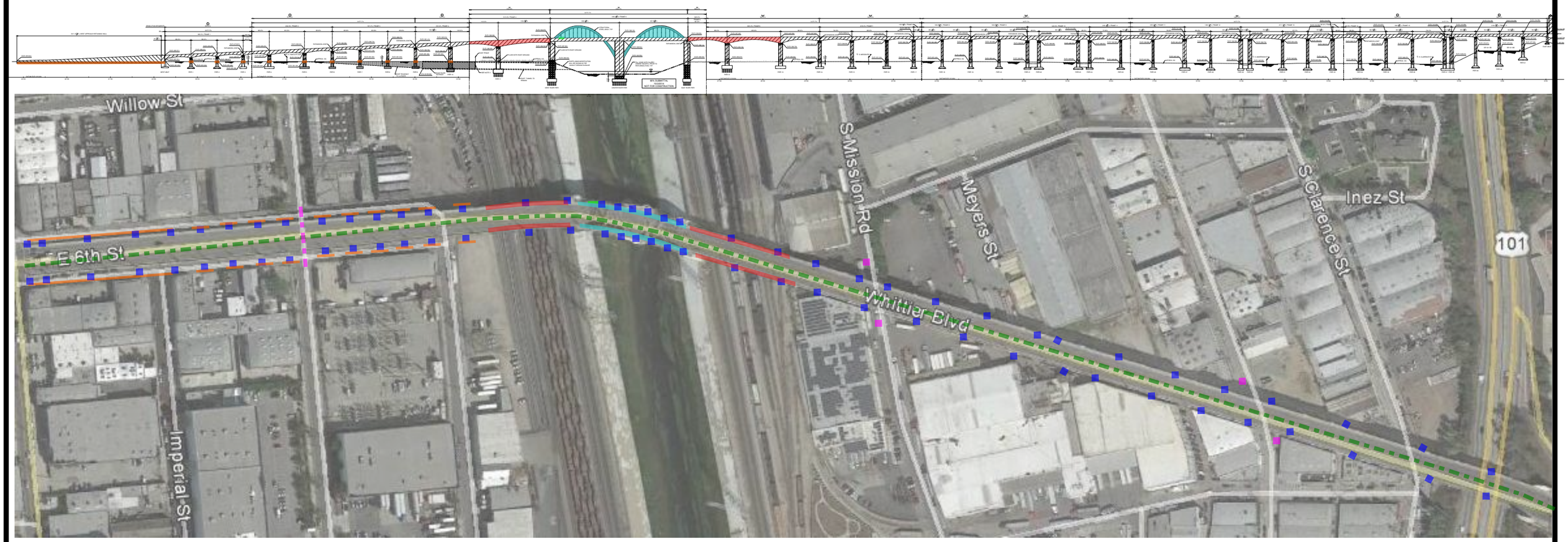

Looking North:

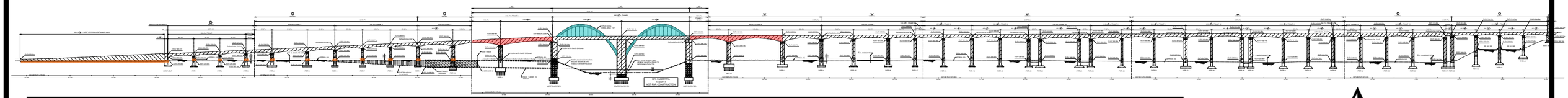

Legend:

- Asbestos Containing Material (ACM) Cementious Grout, Black
- Asbestos Containing Construction Material (ACCM) Sealant Tar, Black
- Lead-Based Paint Steel Arches, Grey/Beige
- Lead-Containing Paint Concrete Substrate, Beige
- Lead-Based Paint - Access Hatches & Lead-Containing Paint - Light Post Bases
- Lead-Containing Paint Roadway Striping on Viaduct, Yellow
- Lead-Based Paint Roadway Striping Under Viaduct, Yellow
- Lead-Containing Paint Light Posts on Mission and Anderson

N

REV.	DATE	DESCRIPTION
	12/14/2015	

SKANSKA Stacy and Witbeck
A Joint Venture 1995 AGUA MANSA RD. RIVERSIDE CA 92509

6TH STREET VIADUCT REPLACEMENT PROJECT
Viaduct Demolition Asbestos and Lead Map

DRAWN	DATE	SCALE	SHEET
RLT	8/20/15	NTS	1 OF 1

Summary Result of Lead Paint Testing by the City of Los Angeles

---------- Forwarded message ----------
From: **Thomas, Kurt** <Kurt.Thomas@skanska.com>
Date: Mon, Apr 7, 2014 at 7:32 AM
Subject: RE: Pb results
To: Ibrahim Hafeez <ibrahim.hafeez@lacity.org>
Cc: "Damore, Lawrence" <Lawrence.Damore@skanska.com>

Here are our environmental consultants comments on the results and pictures I sent to him.

I sounds like the peeling paint on the structure should be abated.

Kurt,

We reviewed the lead sample data from the Sixth Street bridge and have the following observations and recommendations:

1. The sample results were compared to TTLC limits, which is not a value used to determine if

remediation is required. TTLC comparison is used for the disposal of the waste.

2. Lead exposures to workers during demolition are regulated by Cal/OSHA, which has certain regulatory requirements for identifying and controlling potential lead exposures. Currently applicable regulations for the construction industry have been adopted by Cal/OSHA (8 CCR 1532.1) from the Federal OSHA regulations. The current OSHA 8-hour Permissible Exposure Level (PEL) for lead is 50 µg/m3. The PEL is specifically for worker exposure to airborne lead. During demolition, crushed painted concrete and dust from the lead paint and material will become airborne, and worker exposure to lead cannot exceed 50 µg/m3 over an 8-hour period. While CalOSHA standards do not apply to community exposure, effective dust control measures typically minimize exposure to both workers and community. Water spray is used during demolition to eliminate dust.
3. Current EPA and Cal/EPA regulations do not require Lead Based Paint to be removed prior to renovations, unless loose and peeling. Provided that the paints are securely adhered to the substrates (i.e., non-flaking or non-peeling), disposal of the debris may be handled in California as non-hazardous and non-RCRA waste, pending characterization of the waste. The removed paint chips will need to be analyzed for waste disposal. Removed loose and peeling LBP or other wastes exceeding the Total Threshold Level Concentration (TTLC) of 1,000 ppm (mg/kg) or exceed the Soluble Threshold Level Concentration (STLC) of 5 mg/liter, are required to be disposed of as non-RCRA hazardous waste (Any TTLC results over 50 mg/kg will require analysis by STLC and any level over 100 mg/kg will require analysis by TCLP). However, if the leachable lead contents of the wastes exceed the Toxicity Characteristic Leaching Procedure (TCLP) of 5 mg/liter, the wastes must be disposed of as RCRA hazardous waste.
4. The California Department of Public Health (CDPH) regulation 17 CCR Sections 35001 through 36100 requires all demolition, stabilization or scraping for repainting of paints defined as “lead-based paints” to be completed by Certified Lead Workers and Supervisors.
5. The lead sampling report looks to be sufficient to contract the lead abatement.
6. Based on the lead paint sample results, it is recommended that the lampposts and railings be abated of peeling lead paint. Removed paint chips shall be collected in containers and disposed separately. A painted encapsulating layer should be applied to stabilize the remaining lead painted areas. The encapsulating layer reduces dust generation from the paint during demo. Demolition could proceed after with substantial dust control measures and monitoring.
7. The steel components must be abated of lead paint in areas were hot-work or grinding will take place.

Call to discuss further if you would like.

Take care,

Kurt

Kurt A. Kroner

Kroner Environmental Services, Inc.

10801 National Boulevard, Suite 415

12/14/2015

CITY OF LOS ANGELES
Department of General Services
Standards Testing Laboratory
Metals Analysis Report

Project Name: Bureau of Engineering
Location/Address: Sixth St. Viaduct Replacement Project

Sample Type: Soil
Work Order No.: E700224L

Laboratory I.D.		Method Blank	14-0197-01A	14-0197-02A	14-0197-03A	14-0197-04A	14-0197-05A	14-0197-06A	TTLC					
Sample Description			Column 1, frontage Rd. on Sta. Fe	Column 2, beside BSS service yard	Eastside approach wall	Eastside on-ramp	Eastside light post (Mesquit)	Eastside Steel Arch 1A						
Analytes	**RL**								**Units**	**Date Sampled**	**Date Analyzed**	**Method**	**Analyst**	**Title 22 Limits**
Antimony	10.0													**500**
Arsenic	10.0													**500**
Barium	2.00													**10000**
Beryllium	1.33													**75.0**
Cadmium	1.33													**100**
Chromium(Total)	2.00													**2500**
Chromium (VI)	0.400													**500**
Cobalt	1.33													**8000**
Copper	2.00													**2500**
Lead	6.67	ND	72.0	135	120	387	66.8	**95700**	mg/Kg	02/12/14	03/13/14	EPA 6010B	MC	**1000**
Mercury	0.033													**20.0**
Molybdenum	2.00													**3500**
Nickel	2.00													**2000**
Selenium	10.0													**100**
Silver	1.33													**500**
Thallium	10.0													**700**
Vanadium	2.00													**2400**
Zinc	2.67													**5000**

RL - Reporting Limit **ND** - less than the Reporting Limit **N/A** - Not AnalyzedApplicable
Results in **BOLD** exceeded the Title 22 limits
The WET extraction for STLC is only performed on those metals where the TTLC result is above the laboratory's STLC screening level

ADDENDUM 10

12/14/2015

CITY OF LOS ANGELES
Department of General Services
Standards Testing Laboratory
Metals Analysis Report

Project Name: Bureau of Engineering
Location/Address: Sixth St. Viaduct Replacement Project

Sample Type: Soil
Work Order No.: E700224L

Laboratory I.D.		Method Blank	14-0197-07A	14-0197-08A	14-0197-09A	14-0197-10A	14-0197-11A	14-0197-12A	TTLC					
Sample Description			Eastside Steel Arch 1B	Eastside Steel Arch 2A	Eastside Steel Arch 2B	Eastside near Mission Rd.	Eastside light post (Anderson)	Westside light post (Anderson)						
Analytes	RL								Units	Date Sampled	Date Analyzed	Method	Analyst	Title 22 Limits
Antimony	10.0													500
Arsenic	10.0													500
Barium	2.00													10000
Beryllium	1.33													75.0
Cadmium	1.33													100
Chromium(Total)	2.00													2500
Chromium (VI)	0.400													500
Cobalt	1.33													8000
Copper	2.00													2500
Lead	6.67	ND	119	48.3	**3450**	527	**2640**	**1830**	mg/Kg	02/12/14	03/14/14	EPA 6010B	MC	1000
Mercury	0.033													20.0
Molybdenum	2.00													3500
Nickel	2.00													2000
Selenium	10.0													100
Silver	1.33													500
Thallium	10.0													700
Vanadium	2.00													2400
Zinc	2.67													5000

RL - Reporting Limit **ND** - less than the Reporting Limit **N/A** - Not AnalyzedApplicable
Results in **BOLD** exceeded the Title 22 limits
The WET extraction for STLC is only performed on those metals where the TTLC result is above the laboratory's STLC screening level

ADDENDUM 10

12/14/2015

CITY OF LOS ANGELES
Department of General Services
Standards Testing Laboratory
Metals Analysis Report

Project Name: Bureau of Engineering
Location/Address: Sixth St. Viaduct Replacement Project

Sample Type: Soil
Work Order No.: E700224L

Laboratory I.D.		Method Blank	14-0197-13A	14-0197-14A	14-0197-15A	14-0197-16A	14-0197-17A	14-0197-18A	TTLC					
Sample Description			Westside light post (Mission)	Westside Steel Arch 2B	Westside Steel Arch 2A	Westside Steel Arch 1B	Westside Steel Arch 1A	Westside on-ramp						
Analytes	RL								Units	Date Sampled	Date Analyzed	Method	Analyst	Title 22 Limits
Antimony	10.0													500
Arsenic	10.0													500
Barium	2.00													10000
Beryllium	1.33													75.0
Cadmium	1.33													100
Chromium(Total)	2.00													2500
Chromium (VI)	0.400													500
Cobalt	1.33													8000
Copper	2.00													2500
Lead	6.67	ND	**2140**	**3640**	**2080**	298	**1860**	668	mg/Kg	02/12/14	03/14/14	EPA 6010B	MC	1000
Mercury	0.033													20.0
Molybdenum	2.00													3500
Nickel	2.00													2000
Selenium	10.0													100
Silver	1.33													500
Thallium	10.0													700
Vanadium	2.00													2400
Zinc	2.67													5000

RL - Reporting Limit **ND** - less than the Reporting Limit **N/A** - Not AnalyzedApplicable
Results in **BOLD** exceeded the Title 22 limits
The WET extraction for STLC is only performed on those metals where the TTLC result is above the laboratory's STLC screening level

ADDENDUM 10

12/14/2015

CITY OF LOS ANGELES
Department of General Services
Standards Testing Laboratory
Metals Analysis Report

Project Name: Bureau of Engineering
Location/Address: Sixth St. Viaduct Replacement Project

Sample Type: Soil
Work Order No.: E700224L

Laboratory I.D.		Method Blank	14-0197-19A	14-0197-20A	14-0197-21A	14-0197-22A	14-0197-23A		TTLC					
Sample Description			Westside approach wall	Westside column @ Sta. Fe	Westside outer gateway wall	River gateway, south end	River gateway, north end							
Analytes	**RL**								**Units**	**Date Sampled**	**Date Analyzed**	**Method**	**Analyst**	**Title 22 Limits**
Antimony	10.0													500
Arsenic	10.0													500
Barium	2.00													10000
Beryllium	1.33													75.0
Cadmium	1.33													100
Chromium(Total)	2.00													2500
Chromium (VI)	0.400													500
Cobalt	1.33													8000
Copper	2.00													2500
Lead	6.67	ND	187	14.9	22.8	120	20.0		mg/Kg	02/12/14	03/14/14	EPA 6010B	MC	1000
Mercury	0.033													20.0
Molybdenum	2.00													3500
Nickel	2.00													2000
Selenium	10.0													100
Silver	1.33													500
Thallium	10.0													700
Vanadium	2.00													2400
Zinc	2.67													5000

RL - Reporting Limit **ND** - less than the Reporting Limit **N/A** - Not AnalyzedApplicable
Results in **BOLD** exceeded the Title 22 limits
The WET extraction for STLC is only performed on those metals where the TTLC result is above the laboratory's STLC screening level

ADDENDUM 10

PUBLIC WORKS & GANG REDUCTION

MOTION

The Sixth Street Viaduct Replacement Project (Project) is a $482 million dollar replacement of the old Sixth Street Viaduct (Viaduct), with a new iconic 3,500 linear foot viaduct over the Los Angeles River. In order to construct the new Project, the City acquired properties adjacent to and beneath the old Viaduct for the construction of a new structure in keeping with State and Federal Highway standards.

Upon the completion of the new Viaduct, the Department of Public Works will retain access underneath and adjacent to the Viaduct for inspection and maintenance of the Viaduct. The Department of Recreation and Parks (RAP) has also agreed to be the City agency designated with the operation and maintenance responsibilities, for park purposes, of the land acquired by the City for the Project. To effectuate this shared use, the Bureau of Engineering must be authorized and directed to complete a non-financial transfer of jurisdiction of those properties acquired for Project purposes to the ownership and control of RAP. Such actions to include the execution of all necessary documents to effectuate the transfer of the acquired properties.

I THEREFORE MOVE that the Bureau of Engineering, the Department of Recreation and Parks, and the Department of General Services be instructed, with the assistance and cooperation of the City Attorney and City Administrative Officer, to undertake all actions necessary to effectuate a non-financial transfer of jurisdiction of those properties acquired by Department of Public Works, Bureau of Engineering, for the Sixth Street Viaduct Replacement Project, including all appropriate survey data, creation of the correct legal description, preparation and review of related title documents, and acquiring other necessary approvals.

PRESENTED BY: _____
JOSE HUIZAR
Councilmember, 14th District

SECONDED: _____

ORIGINAL

APR 0 2 2019

BOARD OF PUBLIC WORKS MEMBERS

AURA GARCIA
PRESIDENT

M. TERESA VILLEGAS
VICE PRESIDENT

DR. MICHAEL R. DAVIS
PRESIDENT PRO TEMPORE

JESSICA M. CALOZA
COMMISSIONER

VAHID KHORSAND
COMMISSIONER

DR. FERNANDO CAMPOS
EXECUTIVE OFFICER

CITY OF LOS ANGELES

CALIFORNIA

ERIC GARCETTI
MAYOR

DEPARTMENT OF PUBLIC WORKS

BUREAU OF ENGINEERING

GARY LEE MOORE, PE, ENV SP
CITY ENGINEER

1149 S. BROADWAY, SUITE 700
LOS ANGELES, CA 90015-2213

http://eng.lacity.org

March 16, 2022

Honorable John Lee
Chairperson Arts, Parks, Health, Education, and Neighborhoods Committee
Los Angeles City Council

c/o Eric Villanueva
Office of the City Clerk
City Hall, Room 395

COUNCIL FILE NO. 14-1510-S11 SIXTH STREET VIADUCT REPLACEMENT PROJECT / NON-FINANCIAL TRANSFER

Dear Councilmember Lee and Honorable Members:

On May 31, 2019, the City Council authorized the Bureau of Engineering (BOE), the Department of Recreation and Parks, and the Department of General Services, with assistance and cooperation of the City Attorney and City Administrative Officer to undertake the necessary actions to effectuate a non-financial transfer of jurisdiction of those properties acquired by the BOE for the Sixth Street Viaduct Replacement Project. This report follows up on the previous report to delineate the areas of responsibility and to provide details of the actions that must occur in order to clearly assign the operations and maintenance responsibilities.

SUMMARY

The Sixth Street Viaduct Replacement Project is a $588 million bridge replacement project between the neighborhoods of Boyle Heights and the Arts District in Council District 14. The old viaduct, which was demolished beginning in 2016, was determined to have a condition called Alkali-Silica Reaction (ASR), leaving it extremely vulnerable to structural failure in a major earthquake. In order to rectify this, the City is constructing a new 3,500 linear foot viaduct in place of the old structure.

In accordance with Council File No. 14-1510-S11, the City Council authorized City departments to undertake the necessary actions to effectuate a non-financial transfer of jurisdiction of those properties acquired by the BOE for the Sixth Street Viaduct Replacement Project to allow the Department of Recreation and Parks to operate and maintain the open space below the viaduct.

It is noted that within the open space is the existing Sixth Street tunnel, which is located within the public right-of-way and provides access to the Los Angeles River (LA River). The City has ownership of the tunnel, with maintenance performed by StreetsLA. The tunnel is used by the US Army Corps of Engineers (USACE) and Los Angeles County Flood Control District (LACFCD) to maintain their flood control facilities. Prior to the new Viaduct construction, USACE and LACFCD were provided unrestricted vehicular access to the LA River. This will continue to be the case once the landscaping and open spaces are developed. While USACE and LACFCD have access through the tunnel, there was no previous record of an access easement. If required, an access easement will be prepared and recorded.

The recommendations below provide the necessary steps to effectuate the non-financial transfer of jurisdiction as directed by the previous City Council action, and implement actions necessary to allow for operations and maintenance of the open space property beneath the viaduct:

RECOMMENDATION

Therefore, the departments recommend that the City Council, subject to the approval of the Mayor:

1. REQUEST that the Department of Recreation and Parks be the designated entity to operate and maintain the public right-of-way areas depicted in Exhibit (A) as a landscaped and open space area.

2. REQUEST the City Attorney to prepare and present an ordinance that would transfer jurisdiction and control of the property depicted in Exhibit (A) from the Department of Public Works to the Department of Recreation and Parks.

3. REQUEST the Department of Recreation and Parks consider, approve, and accept the area in Exhibit (A) for use as public open space.

4. DESIGNATE the Board of Recreation & Parks Commissioners as the sole entity responsible for issuing any permits for use of the areas shown in Exhibit (A)

5. REQUEST the Department of Recreation and Parks to establish any necessary funds and/or accounts to receive any revenues generated from the operation of the land in Exhibit (A) and to expend funds related to operation, maintenance, landscaping and improvements of the land in Exhibit (A)

6. REQUEST that the Department of Recreation and Parks determine that funds or revenues generated from the use of the land in Exhibit (A) shall solely be used for the operations, maintenance, programming, and improvements of the land in Exhibit (A)

7. INSTRUCT the Department of Public Works to retain control and jurisdiction of the public right-of-way and serve as the designated City entity to inspect and maintain

the viaduct, in accordance with applicable maintenance agreements with the California Department of Transportation, along with all associated structures including, but not limited to tunnel and access ways, bicycle ramps, stairs, sanitary sewers, storm drains, and lighting as depicted in Exhibit (B). Storm drains that serve the park shall be maintained by the Department of Recreation and Parks as depicted in Exhibit (B).

8. AUTHORIZE the Department of Public Works, Office of Community Beautification, to issue Right-of-Entry permits to city graffiti contractors to remove graffiti and other items from the bridge and all associated structures, including, but not limited to, the bicycle ramps, stairs, and lighting as depicted in Exhibit (B).

9. INSTRUCT the Bureau of Engineering, in coordination with the Department of Recreation and Parks, to conduct all necessary surveys, execute all land dedications, and perform other actions as necessary to establish the legal description of all easements, maintenance boundaries, right of way maps or other documentation needed to effectuate this action.

Department staff hereby submits the attached report for consideration by the Council.

Sincerely,

MICHAEL A. SHULL
General Manager, Department of Recreation & Parks

BARBARA ROMERO
Director and General Manager, LA Sanitation & Environment

GARY LEE MOORE, PE, ENV SP
City Engineer

Attachment:
Exhibit (A): Sixth Street PARC – Recreation & Parks Maintenance Map
Exhibit (B): Sixth Street Viaduct - Department of Public Works Maintenance Map

PUBLIC WORKS COMMITTEE REPORT relative to a non-financial transfer of jurisdiction of properties for the Sixth Street Viaduct Replacement Project.

Recommendations for Council action, SUBJECT TO THE APPROVAL OF THE MAYOR:

1. REQUEST that the Department of Recreation and Parks (RAP) be the designated entity to operate and maintain the public right-of-way areas depicted in Exhibit A of the RAP, Bureau of Sanitation (BOS), and Bureau of Engineering (BOE) joint report dated March 16, 2022, attached to the Council file, as a landscaped and open space area.

2. REQUEST the City Attorney to prepare and present an ordinance that would transfer jurisdiction and control of the property depicted in Exhibit A of said report from the Department of Public Works (DPW) to the RAP.

3. REQUEST the RAP to consider, approve, and accept the area in Exhibit A of said report for use as public open space.

4. DESIGNATE the Board of Recreation and Parks Commissioners as the sole entity responsible for issuing any permits for use of the areas shown in Exhibit A of said report.

5. REQUEST the RAP to establish any necessary funds and/or accounts to receive any revenues generated from the operation of the land in Exhibit A or said report and to expend funds related to operation, maintenance, landscaping and improvements of the land in Exhibit A of said report.

6. REQUEST that the RAP determine that funds or revenues generated from the use of the land in Exhibit A of said report shall solely be used for the operations, maintenance, programming, and improvements of the land in Exhibit A of said report.

7. INSTRUCT the DPW to retain control and jurisdiction of the public right-of-way and serve as the designated City entity to inspect and maintain the viaduct, in accordance with applicable maintenance agreements with the California Department of Transportation, along with all associated structures including, but not limited to tunnel and access ways, bicycle ramps, stairs, sanitary sewers, storm drains, and lighting as depicted in Exhibit B of said report. Storm drains that serve the park shall be maintained by the RAP as depicted in Exhibit B of said report.

8. AUTHORIZE the DPW, Office of Community Beautification, to issue Right-of-Entry permits to City graffiti contractors to remove graffiti and other items from the bridge and all associated structures, including, but not limited to, the bicycle ramps, stairs, and lighting as depicted in Exhibit B of said report.

9. INSTRUCT the BOE, in coordination with the RAP, to conduct all necessary surveys, execute all land dedications, and perform other actions as necessary to establish the legal description of all easements, maintenance boundaries, right of way maps or other documentation needed to effectuate this action.

10. INSTRUCT the RAP to issue a master Right of Entry agreement to the BOS for maintenance of City storm drains and sewers.

Fiscal Impact Statement: None submitted by the RAP, BOS, nor BOE. Neither the City Administrative Officer nor the Chief Legislative Analyst has completed a financial analysis of this report.

Community Impact Statement: None submitted

SUMMARY

At the meeting held on April 13, 2022, your Public Works Committee considered a RAP, BOS, and BOE joint report relative to a non-financial transfer of jurisdiction of properties for the Sixth Street Viaduct Replacement Project.

After an opportunity for public comment, the Committee moved to approve the recommendations as amended in said report, as detailed above. This matter is now forwarded to the Council for its consideration.

Respectfully Submitted,

PUBLIC WORKS COMMITTEE

MEMBER	VOTE
BLUMENFIELD	YES
LEE	YES
DE LEÓN	YES
O'FARRELL	YES
KORETZ	ABSENT

ME 4/13/22

-NOT OFFICIAL UNTIL COUNCIL ACTS-

HOLLY L. WOLCOTT
CITY CLERK

PETTY F. SANTOS
EXECUTIVE OFFICER

City of Los Angeles
CALIFORNIA



ERIC GARCETTI
MAYOR

OFFICE OF THE
CITY CLERK

Council and Public Services Division
200 N. SPRING STREET, ROOM 395
LOS ANGELES, CA 90012
GENERAL INFORMATION - (213) 978-1133
FAX: (213)978-1040

PATRICE Y. LATTIMORE
DIVISION MANAGER
CLERK.LACITY.ORG

OFFICIAL ACTION OF THE LOS ANGELES CITY COUNCIL

Council File No.: 14-1510-S11

Council Meeting Date: April 29, 2022

Agenda Item No.: 35

Agenda Description: PUBLIC WORKS COMMITTEE REPORT relative to a non-financial transfer of jurisdiction of properties for the Sixth Street Viaduct Replacement Project.

Council Action: PUBLIC WORKS COMMITTEE REPORT - ADOPTED

Council Vote:

YES	Blumenfield	ABSENT	Bonin	YES	Buscaino
YES	Cedillo	ABSENT	de León	ABSENT	Harris-Dawson
YES	Koretz	ABSENT	Krekorian	YES	Lee
YES	Martinez	YES	O'Farrell	ABSENT	Price
YES	Raman	YES	Rodriguez	YES	Wesson, Jr.

HOLLY L. WOLCOTT
CITY CLERK

Pursuant to Charter/Los Angeles Administrative Code Section(s): 341

FILE SENT TO MAYOR	05/04/2022
LAST DAY FOR MAYOR TO ACT	05/16/2022

APPROVED

5/12/2022

DATE SIGNED

Adopted Report(s)Title
Report from Public Works Committee_4-20-22

Sixth Street Park, Arts, River & Connectivity Project (PARC) Project

SCH #2017041045

DRAFT ENVIRONMENTAL IMPACT REPORT



May 2021

PREPARED FOR:

City of Los Angeles, Department of Public Works
Bureau of Engineering, Environmental Management Group
1149 S. Broadway, Suite 600, Los Angeles CA 90015
Contact: Dr. Jan Green Rebstock, Environmental Supervisor II
213-485-5761, Jan.Green.Rebstock@lacity.org

WITH ASSISTANCE FROM:

GPA Consulting

ENGINEERING
CITY OF LOS ANGELES

This page intentionally left blank.

Executive Summary

Introduction and Background

This Draft Environmental Impact Report (EIR) evaluates the Sixth Street Park, Arts, River & Connectivity Improvements (PARC) Project (proposed Project) in the City of Los Angeles pursuant to the requirements of the California Environmental Quality Act (CEQA, Public Resources Code sections 21000 et. seq.) and the CEQA Guidelines. The City of Los Angeles (City), on behalf of the Department of Public Works, Bureau of Engineering (LABOE), is the Lead Agency under CEQA.

The proposed Project includes the creation of public recreational space on approximately 13 acres underneath and adjacent to the Sixth Street Viaduct (Viaduct), also known as the "Sixth Street Bridge." The Viaduct was recently demolished as part of the Sixth Street Viaduct Seismic Improvement (Replacement) Project, referred to in this EIR as the "Viaduct Replacement Project." Construction of the new Viaduct is anticipated to be substantially complete in 2022. As part of the Viaduct Replacement Project, the City acquired the land underneath and adjacent to the Sixth Street Viaduct. Rather than keep this land vacant, the City is proposing to transform this land into a public recreational space, while still providing required access for inspection and maintenance of the viaduct.

This Executive Summary provides an overview of the proposed Project and its environmental effects in accordance with Section 15123 of the CEQA Guidelines. As described in **Table ES-3**, at the end of this Executive Summary, all impacts would be reduced to less than significant impacts with adherence to standard regulatory and permit requirements or implementation of mitigation measures and identified project design features.

Project Location and Setting

The Project Area spans from Mateo Street in Downtown Los Angeles' (LA) Arts District, over the LA River, to United States Highway 101 (U.S. 101) in Boyle Heights between Fourth Street and Seventh Street. The Project Area is within a fully developed, mixed-use urban setting adjacent to the LA River. Land uses along the north and south sides of the Viaduct are predominately industrial and commercial. The Viaduct crosses over several railroad tracks on both sides of the LA River.

The majority of the Project Area is currently being used as a construction and staging site for the Viaduct Replacement Project. An existing pedestrian and maintenance tunnel, which is owned by the City, is located under the Viaduct on the west side of the LA River. This tunnel provides access to the LA River from Santa Fe Avenue. This segment of the LA River is contained within a concrete flood control channel.

Proposed Project Summary

The City is proposing to create approximately 13 acres of public recreational space underneath and adjacent to the Sixth Street Viaduct. The proposed Project would be divided into two phases. The following elements would be constructed as part of Phase I of the proposed Project. Elements that would be subject to available funding are identified with an asterisk (*).

- **General Park Elements:** Elements that would be constructed throughout the Sixth Street PARC would include constructing or installing typical park site furnishings, pedestrian and bicycle paths, interpretive exhibits, utility connections and irrigation, crosswalks, and stormwater infrastructure improvements.
- **East Park:** The proposed East Park, located in the Boyle Heights Community Plan area, would include amenities such as a concessions area, public restrooms, office and storage space for operations and maintenance staff, sports courts and fields, two flexible play and performance lawns,* adult fitness circuit,* splash pad with outdoor shower,* picnic and grilling areas,* on-street parking, landscaped seating areas and rain gardens, small and large dog play areas,* children's play area,* and skate park elements. A public art piece could also potentially be installed in East Park.
- **West Park:** The proposed West Park, located in the Central City North Community Plan area, would include amenities such as a flexible play and performance lawn, small and large dog play areas, an adult fitness circuit, a café building,* public restroom, landscaped areas and a rain garden, and a public art piece.
- **Arts Plaza and River Gateway:** The proposed Arts Plaza, located in the Central City North Community Plan area, would include amenities such as performance and public gathering areas and space for future mobility hub elements, bike parking, and bikeshare. The proposed River Gateway would include rehabilitating an existing pedestrian/vehicular tunnel that provides access to the LA River channel.

Phase II would include installing reinforced concrete planted terraces on the east and west banks of the LA River channel. The proposed Project generally includes components noted in the Los Angeles River Revitalization Master Plan (City of Los Angeles, 2007).

Project Objectives

The proposed Project has the following objectives:

- Serve the open space and recreational needs of surrounding communities;
- Connect and improve neighborhoods;
- Incorporate sustainable design consistent with the City's plans and goals;
- Encourage active modes of transportation and public transit;
- Promote beneficial stormwater treatment and/or capture; and
- Provide safe pedestrian and bicycle access to the LA River.

Project Schedule

Construction would be divided into two phases. Phase I, which includes construction of the West Park, Arts Plaza, and East Park elements, is anticipated to begin September 2022 and finish by 2024. Phase II, which would include the construction of the LA River portion, including reinforced concrete planted terraces, would be constructed independently of Phase I. The timing of Phase II construction, which may occur concurrently with or after Phase I construction, is dependent on available funding and approval by

the United States Army Corps of Engineers. For purposes of this environmental review, Phase I and II construction activities may overlap. Currently, Phase I is expected to run from 2022-2024, and Phase II is expected to begin in 2025 or later.

Construction would be coordinated with the Sixth Street Viaduct Replacement Project to the greatest extent feasible to ensure that Viaduct work would not be interrupted and to prevent potential conflicts. Construction of the Viaduct is expected to be completed by mid-2022.

Required Approvals

Table ES-1 lists the anticipated permits and approvals required for the proposed Project.

Table ES-1: Required Permits, Approvals, and Permission

Responsible Agency	Anticipated Permits, Approvals, and Related Issues
Federal	
United States Army Corps of Engineers	Clean Water Act (CWA) Section 404 Permit Section 14 of the Rivers and Harbors Act (Section 408) Permit, includes National Environmental Policy Act (NEPA) approval
Federal Railroad Administration	Any applicable permits
Federal Transit Administration	Any applicable permits
State	
Department of Toxic Substances Control	Any applicable permits
California Department of Fish & Wildlife	Section 1602 Streambed Alteration Agreement
California State Historic Preservation Office	National Historic Preservation Act Section 106 consultation and agreement document to resolve any potential adverse effects to historic resources
Regional	
Regional Water Quality Control Board	CWA Section 401 Water Quality Certification CWA Section 402 National Pollutant Discharge Elimination System (NPDES) Permit
Los Angeles County Metropolitan Transit Authority	Any applicable permits Coordination related to public transit, bikeways, and adjacent facilities
Los Angeles County Public Health Department	Review plans for children's splash pad
Los Angeles County Fire Department	Review and advise on site remediation plans
South Coast Air Quality Management District	Any applicable permits

Responsible Agency	Anticipated Permits, Approvals, and Related Issues
Local	
City of Los Angeles Department of Recreation and Parks	Responsible for operation and maintenance of portions of the park
City of Los Angeles Department of City Planning	Potential changes to land use designations or zoning, as well as street designations Any applicable permits
City of Los Angeles Department of Water and Power	Any applicable permits, coordination, and approval
City of Los Angeles Bureau of Sanitation	Low Impact Development Compliance, system design coordination, system design approval, and maintenance of a portion of stormwater infrastructure (if applicable)
City of Los Angeles Fire Department	Any applicable permits Coordination related to emergency access
City of Los Angeles Department of Transportation	Non-CEQA Transportation Assessment Guidelines Consistency Review Traffic management plans
City of Los Angeles Bureau of Street Lighting	Street lighting design and approval
City of Los Angeles Board of Public Works	Recommendations regarding Project approval and Environmental Impact Report (EIR) certification
Los Angeles City Council	Project approval and certification of EIR
City of Los Angeles Department of Building and Safety	Any applicable permits
City of Los Angeles Cultural Affairs Department	Any applicable permits and coordination related to public art
All railroad agencies owning and operating railroad tracks along both sides of the LA River	Railroad Maintenance Agreement for work within railroad right-of-way

Comments Received on the Notice of Preparation

In accordance with Section 15082 of the CEQA Guidelines, LABOE prepared a Notice of Preparation/Initial Study (NOP/IS) for the proposed Project on April 13, 2017. The NOP was circulated for 30 days. The comment period ended on May 15, 2017.

The NOP/IS was circulated to members of the public, local and state agencies, organizations, and interested parties to solicit comments on the proposed Project. The NOP/IS was available on the LABOE website and at local public facilities. A newspaper advertisement, informing the public of the availability of the NOP/IS, was printed in English in *DTLA News* and in Spanish in *La Opinión*. Comment letters were

received from agencies, tribes, interested organizations, and the public. In addition, scoping meetings were held on May 3, 2017 (English), and on May 11, 2017 (Spanish).

Public comments submitted during the scoping period expressed concerns regarding the following issues, which are discussed in more detail in the following section:

- Air Quality
- Cultural Resources
- Hazards and Hazardous Materials
- Hydrology and Water Quality
- Land Use and Planning
- Noise and Vibration
- Population and Housing
- Public Services
- Transportation and Traffic
- Utilities and Service Systems

The public comment letters are included in **Appendix A** (Notice of Preparation/Initial Study) of this EIR.

Issues Raised

Table ES-2, includes a summary of comments received and issues raised during the public scoping period in response to the NOP/IS. This table includes issues identified and discussed in comment letters and orally at public meetings and identifies the section of the Draft EIR where the issues are addressed, as applicable.

Issues to Be Resolved

Issues to be resolved by the City, include the following:

- Determine whether the EIR adequately describes the environmental impacts of the proposed Project;
- Determine whether the recommended mitigation measures should be adopted or modified;
- Determine whether additional mitigation measures need to be applied to the proposed Project; and
- Consider the information contained in the administrative record, created during the environmental review process, and determine whether to approve the proposed Project.

Summary of Environmental Impacts

Impacts Determined to Require No Further Consideration in This EIR

The Initial Study determined that the proposed Project would have no impact or less than significant impacts on mineral resources and agriculture and forestry resources. Therefore, these resources are not analyzed in this Draft EIR.

Impacts Determined to Be Less than Significant

The City determined that the proposed Project with implementation of best management practices or mitigation would have a less than significant impact on the following resources:

- Aesthetics
- Air Quality
- Biological Resources
- Cultural Resources and Tribal Cultural Resources
- Energy
- Geology and Soils
- Greenhouse Gas Emissions
- Hazards and Hazardous Materials
- Hydrology and Water Quality
- Land Use and Planning
- Noise and Vibration
- Population and Housing
- Public Services
- Recreation
- Transportation and Traffic
  Utilities and Service Systems

These impacts are evaluated in detail in Chapter 3 of this Draft EIR and are summarized in **Table ES-3** at the end of this Executive Summary.

Table ES-2: Summary of Comments Received during the Public Scoping Period

Commenter	Agency/ Interested Party	Date of Correspondence	Type of Correspondence	Summary of Issues	Section of EIR Where Issue Is Addressed
State Agencies					
Dianna Watson, IGR/CEQA Branch Chief	California Department of Transportation	May 10, 2017	Letter	Per Senate Bill 743, the agency expressed that Vehicle Miles Traveled (VMT) should be used as the primary metric for identifying transportation impacts. The agency requested that the development should consider multi-modal and complete streets transportation elements. The agency also provided a list of elements to include in the traffic study.	Transportation and Traffic
Juli Propes, Unit Chief	California Department of Toxic Substances Control	May 22, 2017	Letter	The agency provided direction regarding the discussion of hazardous wastes and substances and plans for managing hazards in the draft EIR, as well as procedures for handling environmental remediation and contaminated substances.	Hazards and Hazardous Materials
Gayle Totton, Associate Governmental Program Analyst	Native American Heritage Commission	April 18, 2017	Letter	The agency recommended that the City consult with all California Native American tribes affiliated with the Project Area.	Cultural Resources
Regional Agencies					
Lijin Sun, Program Supervisor	South Coast Air Quality Management District	May 5, 2017	Letter, Email	The agency provided information regarding analysis, mitigation measures, alternatives, permits, and data sources related to air quality impacts.	Air Quality

Commenter	Agency/ Interested Party	Date of Correspondence	Type of Correspondence	Summary of Issues	Section of EIR Where Issue Is Addressed
Local Agencies					
Ali Poosti, Division Manager	City of Los Angeles Bureau of Sanitation	May 1, 2017	Letter	The agency wanted to be notified of additional Project description details as they relate to sewer capacity availability. In addition, the agency communicated their role in ensuring implementation of the Municipal Stormwater Permit requirements, including post-construction mitigation requirements, Green Street elements, construction requirements, groundwater dewatering reuse options, and solid resource requirements.	Hydrology and Water Quality Utilities and Service Systems
Paul J. Davis, Environmental Supervisor	City of Los Angeles Department of Recreation and Parks	May 24, 2017	Email	The department expressed concerns regarding the exposure of sensitive receptors to pollution and noise. The department requested that through streets and pedestrian safety be discussed. The department also provided clarification on materials used for synthetic sports fields.	Air Quality Hazards and Hazardous Materials Transportation and Traffic
Edgar Mercado, P.E. Charles C. Holloway, Manager of Environmental Planning and Assessment	City of Los Angeles Department of Water and Power (LADWP)	May 12, 2017	Email	Water – The agency expressed that they will follow up with additional comments and provided water system contacts. Power – The agency listed the potential conflicts the Project may have on LADWP power system facilities within the Project Area.	Utilities and Service Systems
Armando D'Angelo	Los Angeles County Flood Control District	March 15, 2018	Email	The agency requested that LADWP Transmission Right of Way (TLRW) should be acknowledged	Utilities and Service Systems

Commenter	Agency/ Interested Party	Date of Correspondence	Type of Correspondence	Summary of Issues	Section of EIR Where Issue Is Addressed
	River Cooperation Committee			and that LADWP be included as a Responsible Agency.	
Therese W. McMillan, Chief Planning Officer	Los Angeles County Metropolitan Transportation Agency	May 22, 2017	Letter	The agency expressed the desire to ensure that the Project be designed to accommodate existing transportation facilities and the transportation investments that are currently under development. The agency would also like to explore opportunities for a Metro station in the Project vicinity that would serve the park and surrounding areas. In addition, the agency requested that the City consider potential impacts of the Project on existing rail facilities, with special attention to ROW impacts. The agency provided the Adjacent Construction Design Manual for guidelines on constructing a project near Metro facilities.	Transportation and Traffic
Native American Groups					
Andrew Salas, Chairman	Gabrieleño Band of Mission Indians-Kizh Nation	April 18, 2017	Letter	The tribe submitted a request for consultation pursuant to Assembly Bill 52.	Cultural Resources
Other Interested Parties/Public					
Wade Smith	Amtrak	May 15, 2017	Email	Concerns regarding public safety and security were expressed. The agency suggested that protective measures to minimize future fatalities of trespassers on rail tracks should be considered. The agency also expressed that existing and future rail activities may produce lights, noise, and diesel engine exhaust, and a sufficient buffer area should be considered.	Air Quality Land Use and Planning Public Services Noise and Vibration

Commenter	Agency/ Interested Party	Date of Correspondence	Type of Correspondence	Summary of Issues	Section of EIR Where Issue Is Addressed
Miguel Vargas, Executive Director	Arts District Los Angeles Business Improvement District	May 17, 2017	Email	The organization expressed a variety of concerns regarding future transit opportunities, existing utilities, bike and facility rental opportunities, facility maintenance and management, security, homelessness, incorporation of the LA River Revitalization Master Plan, and mechanical and electrical requirements for Project operations.	Land Use and Planning Population and Housing Transportation and Traffic Public Services Utilities and Service Systems
Joe Diaz	Boyle Heights Technology Youth Center	May 3, 2017	Oral Comment	The commenter expressed support for the proposed Project and suggested that community meetings should also be held in different locations throughout the Project Area to receive more community input.	N/A
Joanne Danganan	Central City Association	May 3, 2017	Oral Comment	The commenter expressed support for the proposed Project and the inclusion of a Metro Station to the LA Arts District to increase business and walkability in the area.	Transportation and Traffic
Jessica Lall, President and CEO	Central City Association of Los Angeles	May 22, 2017	Letter	The organization expressed a desire to integrate a potential Sixth Street Metro Station into the park design to address growth in the surrounding area and attract visitors to the park.	Transportation and Traffic
Marissa Christiansen, Executive Director	Friends of the LA River	May 18, 2017	Letter	The organization encouraged that the draft EIR discuss the Project's impact on the LA River, as well as evaluate the Project's potential effect on and consistency with the LA River Revitalization Master Plan. The agency also expressed a strong desire for the inclusion of terraced banks and a	Hydrology and Water Quality Land Use and Planning

Commenter	Agency/ Interested Party	Date of Correspondence	Type of Correspondence	Summary of Issues	Section of EIR Where Issue Is Addressed
				public access tunnel to the LA River to provide safe pedestrian and bicycle access.	
Margarita Amador	Hollenbeck Community – Police Advisory Board	May 3, 2017	Oral Comment	The commenter expressed concerns regarding pedestrian access, street lighting, public transit, park maintenance, safety and security, potential filming at the proposed Project Site, and irrigation.	Transportation and Traffic Public Services Hydrology and Water Quality
Raul Diaz	Homeboy Industries	May 3, 2017	Oral Comment	The commenter expressed concerns regarding the protection of soil and inspection prior to construction; traffic concerns surrounding the Project Area; pedestrian safety concerns; suggestions for an industrial building on Anderson Street, adjacent to the proposed Project Site; and suggestions for historic landmarks in the proposed Project Site.	Geology and Soils Transportation and Traffic Public Services Cultural Resources
Melissa Uribe	Innercity Struggle	May 3, 2017	Comment Card	The commenter expressed concerns regarding gentrification, population growth, and displacement, calling attention to the preservation of existing Rent Stabilization Ordinance, affordable housing, and small businesses on the east side of the LA River.	Population and Housing
Edwin Amorado	Keep LA Green	May 3, 2017	Oral Comment	The commenter expressed support for the proposed Project. The commenter also expressed interest in including a boxing gym at the proposed Project Site, parking reduction to increase walkability, and 24-hour lighting to deter crime in the area.	Transportation and Traffic Public Services

Commenter	Agency/ Interested Party	Date of Correspondence	Type of Correspondence	Summary of Issues	Section of EIR Where Issue Is Addressed
Mitra Khayyam	Public	April 19, 2017	Email	The commenter expressed support for the project and called attention to paving of the Seventh Street Bridge.	N/A
Chloe Ginnegar	Public	May 3, 2017	Comment Card	The commenter expressed concerns regarding housing development, gentrification, and rent prices on the east side of the LA River.	Population and Housing
Daría Nuñez	Public	May 3, 2017	Oral Comment	The commenter expressed support for the project; concern for pollution during construction of the project; and suggested that there should be more community meeting in different locations, project documents in Spanish, facilities for children and seniors, services in the evening for the youth, and an aquatic park.	Air Quality
Samuel Gonzales	Public	May 3, 2017	Oral Comment	The commenter expressed concern regarding health issues in the community due to air pollution, chemical contamination from the existing railroad tracks, and hazardous material disposal. The commenter also expressed interest in artistic and cultural representation in the proposed Project Site.	Air Quality Hazards and Hazardous Materials Cultural Resources
Lori Atwater	Public	May 21, 2017	Email, Oral Comment	The commenter expressed concerns regarding the effects of development and construction on homeless populations and advised that homeless populations are described as part of the existing populations. The commenter also advised that the project incorporate recommendations from	Population and Housing

Commenter	Agency/ Interested Party	Date of Correspondence	Type of Correspondence	Summary of Issues	Section of EIR Where Issue Is Addressed
				local and statewide legislation regarding homelessness.	
Russell Brown	Regional Connector Community Leadership Council	May 3, 2017	Oral Comment	The commenter expressed that there should be multiple transit stations included as part of the project on First, Second, and Sixth Street; as well as the inclusion of multimodal forms of transportation.	Transportation and Traffic
Ana Hernández	Resident Advisory Committee Pico Gardens	May 3, 2017	Oral Comment	The commenter expressed concerns regarding the increase of pollution in the community of Boyle Heights and resident displacement; suggested that project documents should be translated into Spanish; and requested that community meetings be held within the affected community, and that representative organizations such as Proyecto Pastoral and Union de Vecinos be invited to increase community participation.	Air Quality Population and Housing
Delmira Gonzalez	Resident Advisory Committee Pico Gardens	May 3, 2017	Oral Comment	The commenter expressed concerns regarding traffic in the Project Area, synthetic turf being used for the sports fields, and increases in noise and air pollution. The commenter also suggested that the proposed Project should include a skate park, an aquatic park, and an entertainment area for children.	Transportation and Traffic Noise and Vibration Air Quality
Ofelia Platon	Union de Vecinos	May 3, 2017	Oral Comment	The commenter expressed concerns regarding the increase of pollution in Boyle Heights from the construction and operation of the Viaduct, water contamination, and safety and security for the proposed Project. The commenter also	Air Quality Hydrology and Water Quality Public Services

Commenter	Agency/ Interested Party	Date of Correspondence	Type of Correspondence	Summary of Issues	Section of EIR Where Issue Is Addressed
				suggested that housing for homeless people should be constructed instead of a park.	Population and Housing
Madeline E. Roebke, Senior General Counsel	Union Pacific Railroad	May 15, 2017	Email	The stakeholder expressed concerns related to traffic, trespassing, noise and vibration, and storm water drainage.	Hydrology and Water Quality Land Use and Planning Noise and Vibration Transportation and Traffic

N/A = Not Applicable

Significant Unavoidable Impacts

With implementation of mitigation measures, the proposed Project would not result in significant unavoidable impacts.

Cumulative Impacts

With implementation of mitigation measures, the proposed Project's contribution to cumulative impacts would be less than significant.

Significant Irreversible Environmental Changes that Would Be Caused by the Proposed Project Should It Be Implemented

Implementation of the proposed Project would commit nonrenewable (e.g., petroleum) or slowly renewable (e.g., timber) resources during Project construction and operation. In order to construct the proposed Project, machinery, equipment, materials (e.g., lumber, sand, gravel) and workers would be required, representing an irreversible commitment of some of these resources. Similarly, during operation, some of these resources (e.g., energy, electricity) would again be needed, representing a long-term commitment and permanent investment. The consumption and use of some of these resources would limit their availability for future generations. In addition, construction of the proposed Project would also irreversibly change existing views to and from the Project Area. However, the proposed Project would serve the open space and recreational needs of the surrounding communities, connect and improve neighborhoods, incorporate sustainable design elements, encourage active modes of transportation and public transit, and promote beneficial stormwater treatment and/or capture. In addition, the proposed Project would provide safe pedestrian and bicycle access in the vicinity of the LA River, which could accommodate potential future connections to other planned pedestrian and bicycle paths. Therefore, the City determined that irreversible changes are acceptable in light of the proposed Project's overall benefits.

Growth-Inducing Impacts

One of the primary objectives of the proposed Project is to serve the open space and recreational needs of surrounding communities. By providing open space, connecting neighborhoods, providing access in the vicinity of the LA River, and promoting beneficial stormwater treatment and/or capture, active modes of transportation (i.e., walking and biking), and other sustainable design features, the proposed Project would be consistent with the City's plans and goals. Because the proposed Project would not provide residences or substantial employment opportunities, the proposed Project is not intended to facilitate population or employment growth. Rather, the proposed Project would address existing deficiencies by providing a park with recreational opportunities to communities that demonstrate high need for these facilities. Therefore, the proposed Project is not considered growth inducing.

Alternatives and the Environmentally Superior Alternative

Section 15126.6(a) of the CEQA Guidelines requires that an EIR "describe a range of reasonable alternatives to the project, or to the location of the project, which would feasibly attain most of the basic

objectives of the project but would avoid or substantially lessen any of the significant effects of the project." In addition, Section 15126.6(e) requires that an EIR evaluate a "no project" alternative. The City and its design team conducted meetings to develop design options for the proposed park (see Chapter 4 for additional information). The following two build alternatives were developed and evaluated in addition to the proposed Project and the No Project Alternative:

- Alternative 1 – Nature Focused Alternative
- Alternative 2 – Sports Focused Alternative

CEQA Guidelines require the identification of the environmentally superior alternatives. The No Project Alternative would be the environmentally preferred alternative. Section 15126.6(e)(2) of the CEQA Guidelines state, "If the environmentally superior alternative is the no project alternative, the EIR shall also identify an environmentally superior alternative among the other alternatives." Based on the analysis in Chapter 4 of this EIR, Alternative 1 was determined to be the Environmentally Superior Alternative. This analysis focused on impacts identified as significant and unavoidable.

Summary of Impacts and Mitigation Measures

Table ES-3 includes a summary of impacts by environmental resource area, the significance determination before mitigation, proposed mitigation measures (if any), and any remaining impacts after mitigation is applied. Best management practices that would be adopted as part of the project are identified in **Table ES-4**.

Table ES-3: Summary of Environmental Impacts and Mitigation Measures

Environmental Impact	Significance Before Mitigation	Mitigation Measures	Significance After Mitigation
Aesthetics			
I(a). Scenic Vistas There are no officially designated scenic vistas, resources, or highways that are within the Project Area or visible from the Project Area. The Downtown LA skyline is visible from the Project Area and could be considered a valued landscape. Construction equipment would introduce new vertical elements in the Project Area, but they would not obstruct views of the Downtown LA skyline. The proposed Project would introduce vertical elements (i.e., large vegetation, trees, a 30-foot tall public art piece, and general site and sports field lighting). These vertical elements would not obstruct the view of the Downtown LA Skyline. Therefore, the proposed Project would not affect scenic vistas.	Less than Significant	No mitigation measures are required.	Less than Significant
I(c). Scenic Quality The Project Area is in an urbanized area. Los Angeles zoning code and regulations would not prohibit any of the proposed construction activities or the operational land use. The proposed Project design would be consistent with the design guidelines established for the River Improvement Overlay district. Therefore, the proposed Project would not conflict with applicable zoning and other regulations governing scenic quality.	Less than Significant	No mitigation measures are required.	Less than Significant
I(d). Light and Glare Perimeter lighting may be required on the construction site for security purposes during nighttime. If nighttime	Less than Significant	No mitigation measures are required.	Less than Significant

Environmental Impact	Significance Before Mitigation	Mitigation Measures	Significance After Mitigation
lighting at the construction site is required, lighting would be directed downward, on-site, and away from surrounding land uses. The proposed Project would comply with the provisions in the City's Municipal Code. Proposed Project operations would introduce new sources of light to the Project Area to increase public safety and visibility at night. The sports fields and performance areas would feature switchable and dimmable lights when the facilities are not in use; lighting for recreational activities would be limited to the proposed operating hours; and lighting would be directed away from surrounding land uses. Therefore, the proposed Project would not result in adverse impacts related to light, glare, or nighttime illumination.			
Air Quality			
III(a). Conflict with or obstruct implementation of the applicable air quality plan Short-term construction is projected to result in increased nitrogen oxide (NO_x) emissions that would exceed the South Coast Air Quality Management District's (SCAQMD) recommended significance threshold. Emissions generated during construction could potentially conflict with or obstruct air quality planning efforts. Operation of the proposed Project would not result in overall increases in emissions of ozone-precursor pollutants (volatile organic compounds [VOC] and NO_x) or particulate matter (PM) that would exceed SCAQMD's recommended significance thresholds When evaluated on an annual basis, considering the number of events	Potentially Significant (Construction) Less than Significant (Operation)	Implement **MM-AQ-1: Newer/Tier 4 Engines in Haul Trucks and Construction Equipment** • Include in all construction contracts the requirement to use 2007 and newer diesel haul trucks (e.g., material delivery trucks and soil import/export). • Include in all construction contracts the requirement that all off-road diesel-fueled construction equipment greater than 50 horsepower shall meet Tier 4 off-road emission standards. In addition, if not already supplied with a factory-equipped diesel particulate filter, all construction equipment shall be outfitted with Best Available Control Technology (BACT) devices	Less than Significant (Construction and Operation)

Environmental Impact	Significance Before Mitigation	Mitigation Measures	Significance After Mitigation
anticipated to occur, the proposed Project would result in an overall emissions reduction when compared to the existing industrial uses that were removed.		certified by CARB. Any emissions control device used by the contractor shall achieve emissions reductions that are no less than what could be achieved by a Level 3 diesel emissions control strategy for a similarly sized engine as defined by CARB regulations. To the extent locally available, construction equipment shall incorporate emissions savings technology such as hybrid drives. In the event that any equipment required under this mitigation measure is not available, provide documentation as information becomes available. A copy of each unit's certified tier specification, BACT documentation, and CARB or SCAQMD operating permit at the time of mobilization of each applicable unit of equipment shall be provided. • Maintain construction equipment by conducting regular tune-ups according to the manufacturers' recommendations. • To the extent possible, the import and export of onsite materials shall be scheduled to minimize empty return trips. Implement **MM-AQ-2: Construction Equipment Requirements** • All on- and off-road diesel-fueled equipment shall not idle for more than 5 minutes when not in use. The idling of diesel-fueled equipment and haul trucks within 1,000 feet of nearby residential land uses shall be prohibited. Signs shall be posted in the designated queuing areas	

Environmental Impact	Significance Before Mitigation	Mitigation Measures	Significance After Mitigation
		and or job sites to remind drivers and operators of the 5-minute-idling limit. • Staging and queuing areas shall be located at the furthest distance possible from nearby residential land uses; • Use alternatively fueled (e.g., compressed natural gas, liquefied natural gas, propane), gasoline-fueled, or electrified construction equipment in place of diesel-fueled equipment to the extent locally available. The following additional measures are recommended to help ensure consistency with SCAQMD rules and regulations, including (but not limited to) Rule 403 for the control of fugitive dust. Implement **MM-AQ-3: Fugitive Dust Controls** • All active portions of the construction site shall be watered twice daily to prevent excessive amounts of dust. • Non-toxic soil stabilizers shall be applied to all inactive construction areas (previously graded areas inactive for 20 days or more, assuming no rain) according to manufacturers' specifications. • All excavating and grading operations shall be suspended when wind gusts (as instantaneous gust) exceed 25 miles per hour. • On-site off-road equipment and on-road vehicles used on-site shall be limited to 15 miles per hour.	

Environmental Impact	Significance Before Mitigation	Mitigation Measures	Significance After Mitigation
		• All on-site roads shall be paved as soon as feasible, watered twice daily, or chemically stabilized. • Visible dust beyond the property line which emanates from the project shall be prevented to the maximum extent feasible. • All material transported off-site shall be either sufficiently watered or securely covered to prevent excessive amounts of dust prior to departing the job site. • Track-out devices shall be used at all construction site access points. • All delivery truck tires shall be watered down and/or scraped down prior to departing the job site. • Streets shall be swept at the end of the day if visible soil material is carried onto adjacent paved public roads and use of SCAQMD Rule 1186 and 1186.1 certified street sweepers or roadway. • Replace ground cover in disturbed areas as quickly as possible. • All trucks that are to haul excavated or graded material on-site shall comply with State Vehicle Code Section 23114 (Spilling Loads on Highways), with special attention to Sections 23114(b)(F), (e)(4) as amended, regarding the prevention of such material spilling onto public streets and roads.	

Environmental Impact	Significance Before Mitigation	Mitigation Measures	Significance After Mitigation
		• Conduct continuous, direct-reading, near real-time ambient monitoring of PM10. Install appropriate signage and notify the SCAQMD in accordance with Rule 1466, Control of Particulate Emissions from Soils with Toxic Air Contaminants, prior to conducting any earth-moving activities on any site meeting the applicability of the rule.	
III(b). Cumulatively considerable net increase of criteria pollutants. Construction-generated emissions of NOx would exceed SCAQMD's significance threshold of 100 pounds per day. Construction of the proposed Project could result in a cumulatively considerable net increase of ozone-precursor pollutants for which the region is designated non-attainment, particularly if other projects in the general vicinity of the project site are under construction during the same construction period. Operational emissions associated with the proposed Project would not exceed SCAQMD's recommended significance thresholds.	Potentially Significant (Construction) Less than Significant (Operation)	Implement **MM-AQ-1** through **MM-AQ-3** described above.	Less than Significant (Construction and Operation)
III(c). Expose sensitive receptors to substantial pollutant concentrations. *Localized Pollutant Concentrations from Onsite Sources* Construction-generated and operational emissions would not exceed SCAQMD localized significance thresholds (LSTs). *Asbestos*	Less than Significant	No mitigation measures are required.	Less than Significant

Environmental Impact	Significance Before Mitigation	Mitigation Measures	Significance After Mitigation
The Project Site is not located in an area of naturally occurring asbestos. In addition, construction and operation of the proposed Project would not involve the demolition of structures having asbestos containing materials. *Diesel-Exhaust Particulate Matter (DPM)* Proposed construction activities would involve the use of diesel-fueled equipment. Because the use of off-road heavy-duty diesel equipment would be temporary and episodic occurring over a relatively large area, and DPM has highly dispersive properties, project construction would not expose sensitive receptors to substantial emissions of DPM in excess of applicable thresholds. *Mobile-Source Carbon Monoxide* Operation of the proposed Project would not result in a degradation of LOS at primarily affected intersections that are projected to operate at unacceptable levels of service. Therefore, impacts related to the project's contribution to localized CO concentrations would be less than significant.			
III(d). Other emissions including those leading to odors Proposed construction activities would emit exhaust fumes, which may be considered objectionable by some people. In addition, pavement and architectural coatings would also emit temporary odors. Construction-generated emissions would occur intermittently and would dissipate rapidly within increasing distance from the source. As a result, short-term construction activities would not expose a substantial number of people to frequent odorous emissions.	Less than Significant	No mitigation measures are required.	Less than Significant

Environmental Impact	Significance Before Mitigation	Mitigation Measures	Significance After Mitigation
No major sources of odors have been identified in the Project Area. In addition, operation of the proposed Project would not include the installation of any major sources of odors.			
Biological Resources			
IV(a). Candidate, Sensitive, or Special-Status Species *Special-Status Plants* Special-status plants species are not expected to be in the Project Area. *Special-Status Wildlife* Removal of habitat and increased noise, vibration, light, carbon dioxide, and human activity during proposed construction activities could impact special-status wildlife. BMPs would be implemented to reduce construction-related impacts. Increased lighting, noise, human activity, and regular maintenance of vegetated areas during operation of the proposed Project could result in minor impacts on special-status wildlife; however, because there is already a high level of human activity, lighting, and noise in the Project Area, the proposed Project would not be expected to deter wildlife from using existing habitat. Proposed natural and artificial substrates would potentially create additional nesting and roosting habitat for special-status birds and bats.	Less than Significant	No mitigation measures are required.	Less than Significant
IV(b). State or Federally Protected Wetlands The proposed Project would include changes to the LA River concrete lining and banks outside of the ordinary	Less than Significant	No mitigation measures are required.	Less than Significant

Environmental Impact	Significance Before Mitigation	Mitigation Measures	Significance After Mitigation
high-water mark of the LA River. A Waste Discharge Requirements (WDR) from the RWQCB and California Fish and Game Code Section 1602 Streambed Alteration Agreement would be required for temporary activities and fill. In addition, BMPs would be implemented to avoid impacts. There are no wetlands in the Project Area; therefore, there would be no operational impacts on wetlands.			
Cultural Resources			
V(a). Historical Resources Four historical resources were identified within the Project Area: Fourth Street Viaduct, Seventh Street Viaduct, the Los Angeles River, and the Downtown Los Angeles Industrial Historic District. The historic associations, design elements, and character defining features that convey the significance of the four historical resources in the Project Area would not be affected by the activities associated with the construction or operation of the proposed Project.	Less than Significant	No mitigation measures are required.	Less than Significant
V(b). Archaeological Resources There are no unique archaeological resources that would be affected by the Project as presently proposed. The Project Site is characterized by a moderate potential for buried archaeological deposits. Proposed construction activities have the potential to disturb deeply buried and intact prehistoric and historic archaeological resources. Archaeological monitoring would be conducted in certain portions of the Project Site. In the unlikely event that previously undisturbed archaeological resources are	Less than Significant (Construction) No Impact (Operation)	No mitigation measures are required.	Less than Significant (Construction) No Impact (Operation)

Environmental Impact	Significance Before Mitigation	Mitigation Measures	Significance After Mitigation
encountered during construction, all work in the vicinity would be halted until a qualified archaeologist can visit the site of discovery and assess the significance of the resource. Operation of the proposed Project would not involve any ground-disturbing activities. Therefore, there would be no potential to disturb, damage, or degrade an archaeological resource or its setting.			
V(c). Human Remains No human remains are known to exist in the Project Site, and the location does not encompass any formal cemeteries. However, the Project Area is sensitive for prehistoric Native American remains. In the unlikely event of an accidental discovery of any human remains, the City would comply with the process outlined in Health and Safety Code § 7050.5, § 15064.5(e) of the CEQA Guidelines, and PRC § 5097.98. Operation of the proposed Project would not involve any ground-disturbing activities. Therefore, no operational impacts on human remains would occur.	Less than Significant (Construction) No Impact (Operation)	No mitigation measures are required.	Less than Significant (Construction) No Impact (Operation)
XVIII. Tribal Cultural Resources The Project Area is sensitive for prehistoric Native American remains. A Native American monitor would be present to observe ground-disturbing activities. A tribal cultural resources sensitivity training would also be held for the construction contractor prior to construction activities. The City will continue working with the tribe in accordance with the requirements of Assembly Bill 52.	Less than Significant (Construction) No Impact (Operation)	No mitigation measures are required.	Less than Significant (Construction) No Impact (Operation)

Environmental Impact	Significance Before Mitigation	Mitigation Measures	Significance After Mitigation
Operation of the proposed Project would not involve ground disturbing activities; therefore, operation of the proposed Project would not disturb prehistoric Native American remains nor cause an adverse change in the significance of a site, feature, place, cultural landscape, sacred place, or object with cultural value to a California Native American Tribe.			
Energy			
VI(a). Consumption of Energy Resources Proposed Project construction would require fuel consumption for haul trips, equipment use, and worker commute trips, which would represent a negligible increase in regional energy consumption. Best management practices related to air quality and greenhouse gas emissions would be implemented, which would contribute to reductions in energy consumption. Therefore, construction would not result in a potentially significant environmental impact due to wasteful, inefficient, or unnecessary consumption of energy resources. Operation of the proposed Project would result in an overall net reduction of long-term energy use when compared to the existing industrial land use. The proposed Project would conform with State and City Green Building Codes and would include design features that would reduce energy use, water use, and waste generation. Therefore, proposed Project operation would not result in a potentially significant environmental	Less than Significant	Implementation of air quality mitigation measures **MM-AQ-1** and **MM-AQ-2** would reduce impacts related to construction-related energy use. No further mitigation measures are required.	Less than Significant

Environmental Impact	Significance Before Mitigation	Mitigation Measures	Significance After Mitigation
impact due to wasteful, inefficient, or unnecessary consumption of energy resources.			
VI(b). State or Local Plans The proposed Project would include construction BMPs and operational design features that would improve energy efficiency. These energy-saving features would be consistent with the goals outlined in state and local energy plans. Therefore, the project would not conflict with or obstruct a state or local plan for renewable energy or energy efficiency.	Less than Significant	Implementation of air quality mitigation measure **MM-AQ-1** would reduce impacts related to construction-related energy use. No further mitigation measures are required.	Less than Significant
Geology and Soils			
VII(b). Soil Erosion or Loss of Topsoil. Soil excavation would be required during construction of the proposed Project. Standard BMPs would be implemented to ensure that substantial erosion or the loss of topsoil would not occur. Construction activities would comply with applicable permits and the City's Municipal Code. During operation of the proposed Project, the topography would be relatively flat, and open spaces would be landscaped or hardscaped. Therefore, substantial soil erosion and loss of topsoil are not anticipated.	Less than Significant	No mitigation measures are required.	Less than Significant
VII(c). Expansive Soils. The Project Area is underlain with gravels, sands, and cobbles, which tend to have a low potential for expansive soils. The Project Area is also underlain with fill material, which could expand when saturated. However, the proposed Project would follow standard engineering	Less than Significant	No mitigation measures are required.	Less than Significant

Environmental Impact	Significance Before Mitigation	Mitigation Measures	Significance After Mitigation
practices and recommendations identified in the *Geotechnical Site Investigation* (Hushmand Associates, Inc., 2018) to reduce the potential for hazards during construction and operation.			
VII(f). Paleontological Resources There are no significant paleontological resources that would be affected by the construction of the Project. If an unanticipated fossil discovery is made during Project construction, the City would comply with the Society of Vertebrate Paleontology (SVP) (2010) guidelines. Operation of the proposed Project would not involve any ground-disturbing activities. Therefore, there would be no potential to disturb, damage, or degrade a paleontological resource or its setting.	Less than Significant (Construction) Not Significant (Operation)	No mitigation measures are required.	Less than Significant (Construction) Not Significant (Operation)
Greenhouse Gas Emissions			
VIII(a). Generation of Greenhouse Gas Emissions Proposed construction activities would result in short-term annual GHG emissions. Proposed construction activities include various measures that would reduce short-term emissions from off-road equipment. The proposed Project would incorporate water-saving landscape irrigation features, energy-efficient lighting, and use of low-flow water fixtures per current California building code requirements. In comparison to business-as-usual conditions (without GHG-reduction measures) the proposed Project would result in GHG reductions.	Less than Significant	No mitigation measures are required.	Less than Significant
VIII(b). Conflict with Applicable Plan, Policy, or Regulation	Less than Significant	No mitigation measures are required.	Less than Significant

Environmental Impact	Significance Before Mitigation	Mitigation Measures	Significance After Mitigation
Construction of the proposed Project includes various measures that would reduce short-term GHG emissions from off-road equipment. Therefore, proposed construction activities would not conflict with any applicable plans, policies, or regulations pertaining to reducing GHG emissions. The proposed Project would result in an overall net reduction of long-term operational GHG emissions in comparison to the existing industrial uses that were removed. Therefore, operation of the proposed Project would not conflict with any applicable plans, policies, or regulations pertaining to reducing GHG emissions.			
Hazards and Hazardous Materials			
IX(a). Routine transport, use, or disposal of hazardous materials Project construction would require the removal of contaminated soils and the use of construction materials that could be hazardous, which would potentially create a significant hazard to the public or the environment. The transport, use, and disposal of these materials would be conducted in compliance with applicable federal, state, and local laws pertaining to the safe handling, transport, and disposal of hazardous materials. The proposed Project may require the use of hazardous materials during operation, such as paint, pesticides, and fertilizers. Hazardous materials would be properly handled, contained, transported, and disposed of in compliance with applicable laws and regulations.	Potentially Significant	Implement **MM-HAZ-1. Remediation Category 1A** The City shall be required to implement the following measures in areas where Resource Conservation and Recovery Act (RCRA) Level Heavy Metals, polychlorinated biphenyls (PCB), or total petroleum hydrocarbon diesel range organics (TPH DRO) will be excavated and disposed of at Class 1 Hazardous Waste Landfills: • Soils will be excavated as needed up to a maximum depth of 4.5 feet below ground surface (bgs), consistent with the limits designated on **Figures 3.8-3a** and **3.8-3b**, Areas of Concern with Contamination. • The transport and disposal of RCRA hazardous waste will be accompanied with a Hazardous Waste Manifest (i.e., documentation	Less than Significant

Environmental Impact	Significance Before Mitigation	Mitigation Measures	Significance After Mitigation
Therefore, operation of the project would not create a significant hazard to the public or the environment. There are potential health risks to construction workers and park users, primarily due to total petroleum hydrocarbons and lead in the soil. The Project Site would be remediated to standards acceptable by the Los Angeles County Fire Department (LACoFD) and other regulatory agencies as required. Under these standards, the concentrations of contaminants of concern would not pose health risks to construction workers or the public.		accompanying the transport, treatment, storage and disposal of hazardous waste) completed by a licensed transporter. A site-specific CalEPA Hazardous Waste Generator Identification Number will be obtained for each RCRA hazardous waste. Additional sampling and testing will likely be required by the facility accepting the soil for disposal. • For excavations deeper than 4 feet, shoring or other approved means will be required to maintain stability of the excavation walls. • During excavation activities, dust and runoff controls will be implemented to prevent windborne or surface waterborne migration of the soil from the Project Site. The soils will be directly loaded into the transport trucks, which will require tarps to prevent spillage or windblown loss of soil during transport. These controls will be verified and monitored by an independent third party. • A site-specific Health and Safety Plan (HASP) will be prepared and implemented during all proposed construction activities, including full time perimeter sampling and testing of particulates and dust from the Project Site. • All onsite workers and supervisors will complete a 40-hour Occupational Safety and Health Administration (OSHA) Hazardous Waste Operations and Emergency Response (HAZWOPER) training course and be equipped	

Environmental Impact	Significance Before Mitigation	Mitigation Measures	Significance After Mitigation
		with the appropriate personal protective equipment. • Excavated areas will be backfilled with certified clean soil. Implement **MM-HAZ-2. Remediation Category 2A** The City shall be required to implement the following measures in areas where soils contaminated with Heavy Metals and/or TPH DRO that are classified as non-RCRA hazardous waste will be excavated. These contaminated soils shall be disposed at Class 2 Landfills: • Soils will be excavated as needed up to a maximum depth of 6 feet bgs, consistent with the limits designated on **Figures 3.8-3a** and **3.8-3b**, Areas of Concern with Contamination. • The transport and disposal of non-RCRA hazardous waste will be accompanied with a Hazardous Waste Manifest completed by a licensed transporter. A CalEPA Non-RCRA Hazardous Waste Generator Identification Number will be obtained. Additional sampling and testing will likely be required by the facility accepting the soil for disposal. • For excavations deeper than four feet, shoring or other approved means shall be required to maintain stability of the excavation walls. • During excavation activities, dust and runoff controls will be implemented to prevent windborne or surface waterborne migration of	

Environmental Impact	Significance Before Mitigation	Mitigation Measures	Significance After Mitigation
		the soil from the Project Site. The soils will be directly loaded into the transport trucks, which will require tarps to prevent spillage or windblown loss of soil during transport. These controls will be verified and monitored by an independent third party. • A site-specific HASP will be prepared and implemented during all proposed construction activities, including full time perimeter sampling and testing of particulates and dust from the Project Site. • All onsite workers and supervisors will complete a 40-hour OSHA HAZWOPER training course and be equipped with the appropriate personal protective equipment. • Excavated areas will be backfilled with certified clean soil. Implement **Remediation Category 2B:** In addition to the measures above, the following measures shall be implemented in areas where VOCs were observed in soil gases: • Emission controls will be used to clear the area of emitting VOCs (i.e., spraying water or applying foam agents to all exposed soil surfaces and/or using large, spark-free fans). Full-time monitoring will be required to verify that the emission controls are effective in preventing the VOCs from impacting workers or the public. Monitoring will comply with SCAQMD Rule 1166.	

Environmental Impact	Significance Before Mitigation	Mitigation Measures	Significance After Mitigation
		• A detailed HASP will be prepared and implemented during the excavation and transport of contaminated soils. • The excavation, transport, and disposal of contaminated soils will require permitting and approval by the CUPA, CalEPA/DTSC, and SCAQMD. A detailed Work Plan/Remedial Action Plan will be prepared and submitted to these agencies for review and approval. Under Rule 1166, a Mitigation Management Plan for potential VOC emissions during excavation will be submitted to SCAQMD and subject to SCAQMD approval. A site-specific CalEPA Hazardous Waste Generator Identification Number will be obtained and manifests completed by the licensed transporter. • A soil vapor extraction (SVE) system will be designed and installed to remove and treat VOCs in the soil gases. If Health Risk Assessments indicate the need, a vertical barrier/line will be installed around the perimeter of the area to prevent soil gases with VOCs from migrating back into the area. Gases migrating from below the clean backfill or deeper depths will be extracted through the SVE slotted wells and treated by the SVE treatment system. Treatment for VOCs typically involves carbon filtration unless hydrogen sulfide is detected in the gas stream. Operating and maintenance procedures for the SVE system and permit applications will be	

Environmental Impact	Significance Before Mitigation	Mitigation Measures	Significance After Mitigation
		prepared and approved by the oversight agency and SCAQMD. • If the City determines it is necessary, a "Pilot Study" will be designed and implemented to evaluate the sustainable flow rate and concentration of VOCs in the soil gas stream and to determine the size of the final SVE system components. • Design of the SVE system, preparation of a Design Report and Work Plan/Remedial Action Plan (including HASP) will be submitted to and subject to approval by the CUPA and LACoFD Site Mitigation Unit. • The SVE will be implemented and monitored. This may require several months to over a year. • The City shall provide documentation to the CUPA, LACoFD Site Mitigation Unit, and SCAQMD when the SVE has reached the specified clean-up goals. • Excavated areas will be backfilled with certified clean soil. Implement **MM-HAZ-3. Remediation Category 3** The City shall be required to implement one of the following three options in areas where no heavy metals were observed, but VOCs were observed in soil gas: • Option 1: This alternative will involve the same measures as described under Category 2b above. Contaminated soils will be removed to a depth of	

Environmental Impact	Significance Before Mitigation	Mitigation Measures	Significance After Mitigation
		up to 15 feet or more and shoring of the excavation walls will be necessary. A liner will be installed on the bottom of the excavation area to prevent contaminated soil gas from re-entering the backfill soils. Gas migration from the side walls will be mitigated by either installation of a vertical liner placed on the side walls of the excavation or SVE wells installed vertically outside the limits of the excavation after backfilling is done. The backfill soil will be certified clean fill and placement will need to meet the geotechnical specifications of the proposed Project design. During the process, the site will require strict emissions controls and monitoring. • Option 2: This alternative, the SVE treatment method, utilizes extraction and monitoring wells (In Situ Method) or excavation and encapsulation of impacted soils in above ground piles with horizontal slotted piping (On Site Method), a vacuum pump or pumps, and carbon filtration units to extract and remove VOCs from the soil gas. The process requires several steps as follows: 1. Design and implementation of a "Pilot Study" to evaluate the sustainable flow rate and concentration of VOCs in the soil gas stream and to size the final SVE system components.	

Environmental Impact	Significance Before Mitigation	Mitigation Measures	Significance After Mitigation
		2. Design of the SVE system, preparation of a Design Report and Work Plan/Remedial Action Plan (including HASP) for submittal to and approval by the CUPA and CalEPA/DTSC. 3. Solicitation of bids for construction and implementation of the remediation. 4. Implementation and monitoring of the SVE. This may require several months to over a year. 5. Reporting to the agencies with documentation that the SVE has reached the specified clean up goals. • Option 3: This alternative will mitigate the impact of the VOCs and/or methane and hydrogen sulfide by precluding soil gases migration from the subsurface soil and intrusion into structures or other facilities and surface emissions. Depending on the type of soil gases and pressure in the soil gas, the systems can include several of the following components: o Shallow excavation (three to four feet below ground surface [bgs]) to allow installation of the mitigation components (some of the soil will be used to backfill trenches) o Gravel layers and slotted piping for gas collection o Liner installation above the slotted piping and extending side wide	

Environmental Impact	Significance Before Mitigation	Mitigation Measures	Significance After Mitigation
		○ Vacuum pumps for gas extraction or air injection blowers ○ Filtration systems to remove VOCs and/or hydrogen sulfide from the gas stream ○ Geomembrane barriers placed beneath concrete slabs and/or foundations or fill areas ○ Installation of automated and/or manual monitoring systems Implement **MM-HAZ-4. Remediation Category 4** The City shall be required to implement the following measure in areas within Caltrans ROW where soil contains ADL: • In accordance with the Caltrans/DTSC ADL Agreement, soils above a depth of approximately 2.9 feet bgs will require one foot of clean soil cover to remain on site per the Caltrans/DTSC ADL Agreement. Implement **MM-HAZ-5. Soil Gas Sampling** Additional soil gas sampling and testing is recommended for completion in PARC Areas 1A, 5, 6, 7, and 8. The additional sampling could potentially eliminate or reduce the need for soil gas remediation. Ambient air and soil gas samples shall be tested for VOCs. If soil gas samples in PARC Area 6 yield ILCR values below the *de minimis* risk target or within the risk management range, no further mitigation and/or remedial actions will be required. If ILCR values are above the *de minimis* risk target, additional remedial	

Environmental Impact	Significance Before Mitigation	Mitigation Measures	Significance After Mitigation
		actions will be taken to lower values to within the risk management range, such as applying SVE to a maximum depth of 15 to 20 feet bgs.	
IX(d). Located on a hazardous materials site There are no Hazardous Waste and Substances Sites in the Project Area that are included on the Cortese List (Government Code Section 65962.5). However, areas in the Project Site are underlain with contaminated soils, which would potentially create a significant hazard to the public or the environment. The Project Site would be remediated to standards acceptable by LACoFD and other regulatory agencies as required. Under these standards, the concentrations of contaminants of concern would not pose health risks to construction workers or the public.	Potentially Significant	Implement **MM-HAZ-1** through **MM-HAZ-5** described above. Implement **MM-HAZ-6. Methane Mitigation and Testing** Methane mitigation applies to PARC Area 1A, which is located within the Methane Zone, and portions of PARC Area 7, where soil gases were detected and impervious surfaces are to be constructed adjacent to existing buildings. Any buildings (except naturally vented) to be constructed in Area 1A shall have methane mitigation systems meeting Level II requirements involving membrane and passive venter per Table 71, unless additional testing indicates no subsurface gas pressure and lower methane concentrations. In addition, paved areas that are over 5,000 square feet in area and within 15 feet of the exterior wall of a commercial, industrial, institutional building, shall be vented in accordance with the Methane Mitigation Standards, design Level II, unless additional testing indicates no subsurface gas pressure and lower methane concentrations. Additional testing for methane concentrations and subsurface pressure shall be completed in accordance with the Division 71 Methane Seepage Regulations testing requirements should any buildings or paved areas over 5,000 square feet be proposed in PARC	Less than Significant

Environmental Impact	Significance Before Mitigation	Mitigation Measures	Significance After Mitigation
		Area 1A and in PARC Area 7 where methane was detected.	
Hydrology and Water Quality			
X(b). Groundwater supplies and groundwater recharge Groundwater is not anticipated to be encountered during excavation activities for the proposed Project. If groundwater is encountered, the contractor would develop a dewatering plan, and a Dewatering Permit with the Los Angeles RWQCB would also be required. The proposed Project would result in the net addition of 1.4 acres of impervious surfaces; however, the increase would not substantially deplete groundwater supplies or interfere with groundwater recharge such that the proposed Project may impede sustainable groundwater management of the basin.	Less than Significant	No mitigation measures are required.	Less than Significant
X(c)(i). Substantial erosion or siltation Grading, excavation, and trenching during construction would result in temporary changes to the drainage pattern of the Project Site. These construction activities would result in erosion and sediment transport, which could increase pollutants in stormwater runoff and receiving waters. To minimize erosion and siltation, the Project Site would be graded to divert water into existing drainages and catch basins. The proposed Project would comply with the provisions of the NPDES MS4 Permit and implement a stormwater pollution prevention plan (SWPPP), which would include BMPs to control erosion and siltation. The proposed Project would comply with all	Less than Significant	No mitigation measures are required.	Less than Significant

Environmental Impact	Significance Before Mitigation	Mitigation Measures	Significance After Mitigation
applicable federal, state, and local requirements to reduce the potential for erosion and siltation onsite and offsite. Post-construction stormwater management measures would be installed to control pollutants and runoff generated during operation of the proposed Project. Runoff from the Project Site would be captured by proposed stormwater drainage systems, routed to low impact development (LID) BMPs, and discharged to the existing stormwater drainage facilities adjacent to the site. In addition, the Project Site would include hardscaped and landscaped areas to provide soil stability and further minimize erosion. With incorporation of these stormwater management measures, the proposed Project is not expected to result in substantial erosion or siltation onsite or offsite.			
X(c)(ii). Flooding on- or off-site The proposed Project would result in the net addition of 1.4 acres of impervious surfaces. Therefore, the rate and amount of surface runoff from the Project Site is expected to marginally increase. However, the Project Site would be graded to prevent flooding onsite or offsite. In addition, the proposed Project would implement the minimum construction BMPs included in the MS4 permit to further minimize the potential for flooding. If dewatering is required or if work is performed during the rainy season, the project would comply with comply with all applicable federal, state, and local requirements. Because the proposed Project would increase the impervious surface area of the Project Site, it could increase the potential for flooding onsite or offsite during	Less than Significant (Construction) Potentially Significant (Operation)	Implement **MM-HYDRO-1: Public Safety Plan** Prior to Final Plan approval, the City, in coordination with USACE, shall publish a Public Safety Plan in order to reduce the potential for safety impacts related to flooding. The Public Safety Plan shall include an evacuation plan and protocols for protecting pedestrians and potential homeless populations (e.g., vehicular deterrents such as bollards and safety warning devices) in the LA River Access Tunnel during flood conditions.	Less than Significant

Environmental Impact	Significance Before Mitigation	Mitigation Measures	Significance After Mitigation
operation. However, the proposed Project would include the installation of storm drainage systems to convey runoff to the existing systems. The existing main line systems had sufficient capacity to convey runoff from the Project Site when it was fully developed with nearly 100 percent impervious surface cover (prior to the construction of the Viaduct Replacement Project). Therefore, the potential for flooding onsite or offsite would be reduced.			
X(c)(iii). Create or contribute runoff water The proposed Project would result in the net addition of 1.4 acres of impervious surfaces. Therefore, runoff from the Project Site is expected to increase over the course of construction and during operation. However, the proposed Project would include the installation of storm drainage systems to convey runoff to the existing systems. The existing main line systems had sufficient capacity to convey runoff from the Project Site when it was fully developed with nearly 100 percent impervious surface cover (prior to the construction of the Viaduct Replacement Project). Therefore, the proposed Project would not contribute runoff water that would exceed the capacity of existing stormwater drainage systems or provide substantial additional sources of polluted runoff.	Less than Significant	No mitigation measures are required.	Less than Significant
X(c)(iv). Impede or redirect flood flows Though the majority of construction staging would be confined to areas outside of the LA River, construction activities for the proposed concrete terracing would occur within the 100-year flood hazard area. To minimize	Less than Significant	No mitigation measures are required.	Less than Significant

Environmental Impact	Significance Before Mitigation	Mitigation Measures	Significance After Mitigation
impacts related to flooding, work within the LA River would be performed during the dry season and a water diversion plan would be developed if work is performed during the rainy season. The proposed Project would place structures that would impede or redirect flood flows within a 100-year flood hazard area. However, the proposed terracing is not anticipated to impact flooding within the LA River because of the reduced water surface elevation from the removal of the existing Sixth Street Viaduct as part of the Viaduct Replacement Project.			
X(e). Water quality control plan or sustainable groundwater management plan Proposed construction activities would comply with all applicable federal, state, and local requirements. Therefore, the proposed Project would not conflict with or obstruct implementation of a water quality control plan or sustainable groundwater management plan.	Less than significant	No mitigation measures are required.	Less than significant
WQ-3. G.1 Surface Water Hydrology Because proposed construction activities within the LA River would be performed during the dry season, impacts related to flooding during the projected 50-year developed storm event would be minimized. If work is performed during the rainy season (October through April), a water diversion plan would be developed to reduce the potential for flooding that would harm people or damage properties and sensitive biological resources. The proposed Project would result in a relatively small addition of impervious surfaces (1.4 acres), which would	Less than Significant (Construction) Potentially Significant (Operation)	Implement **MM-HYDRO-1: Public Safety Plan** Prior to Final Plan approval, the City, in coordination with USACE, shall publish a Public Safety Plan in order to reduce the potential for safety impacts related to flooding. The Public Safety Plan shall include an evacuation plan and protocols for protecting pedestrians and potential homeless populations (e.g., vehicular deterrents such as bollards and safety warning devices) in the LA River Access Tunnel during flood conditions.	Less than Significant

Environmental Impact	Significance Before Mitigation	Mitigation Measures	Significance After Mitigation
not substantially reduce or increase the amount of surface water in the LA River. The proposed Project could marginally increase flood levels during the 50-year design storm event. However, as discussed above, the proposed terracing is not anticipated to impact flooding within the LA River due to the removal of the existing Sixth Street Viaduct. The proposed Project would include safety measures to prevent the public from entering the LA River during a storm event. In addition, the City will develop a public safety plan to further minimize impacts related to flooding.			
WQ-7. G.4 Groundwater Quality The handling, storage, and disposal of contaminated soils would comply with all applicable federal, state, and local requirements. The Project Site would be remediated to standards acceptable by LACoFD and other regulatory agencies as required, thereby reducing the area affected by contaminants. Proposed construction activities would not worsen the existing contamination. In addition, proposed construction activities would comply with all applicable federal, state, and local requirements to reduce the potential for the release of contaminants into groundwater and to ensure that pollutants from construction would not substantially degrade water quality. The proposed Project would implement BMPs to prevent, control, and reduce stormwater pollutants. Therefore, the proposed Project would not contaminate sources of drinking water.	Less than Significant	No mitigation measures are required.	Less than Significant

Environmental Impact	Significance Before Mitigation	Mitigation Measures	Significance After Mitigation
The proposed Project may require the use of hazardous materials during operation. The handling, storage, and disposal of hazardous materials would comply with all applicable federal, state, and local requirements to reduce the potential for the release of contaminants into groundwater. In addition, the proposed Project would implement LID BMPs to prevent, control, and reduce stormwater pollutants. Therefore, the proposed Project would not contaminate groundwater.			
Land Use and Planning			
XI(b). Conflict with applicable land use plan, policy, or regulation The proposed Project is consistent with the the land use plans, policies, and regulations in the area. Proposed construction activities would not result in zoning or land use changes, or a revision to any of the adopted plans or policies at the local and regional levels. All anticipated permits and approvals would be obtained prior to proposed construction activities and any necessary land use entitlements would be secured prior to the start of construction activities. Proposed construction activities would be conducted in compliance with the City's development requirements, State building standards, and all applicable construction and building permits. The proposed Project is considered a “Park or Playground (Open outdoor space), operated by government agency” land use, which would be permitted in the portions of the Project Area zoned M1, M2, M3, and OS, and would require approval from the City within areas zoned PF. In addition, the proposed Project would conform to the	Less than Significant	No mitigation measures are required.	Less than Significant

Environmental Impact	Significance Before Mitigation	Mitigation Measures	Significance After Mitigation
development regulations for the River Improvement Overlay District. LABOE would continue to work with the Los Angeles Department of City Planning to ensure that the proposed Project is consistent with future zoning changes.			
Noise and Vibration			
XIII(a). Ambient noise levels Project construction would not result in a significant increase in daytime ambient noise levels at the nearest noise-sensitive land uses. In addition, proposed construction activities would not be anticipated to result in a substantial increase in traffic noise levels along area roadways that would adversely impact noise-sensitive land uses. However, noise levels from individual pieces of equipment could potentially exceed the allowable noise level stated in the Los Angeles Municipal Code (LAMC). Construction activities would be limited to between the hours outlined in the LAMC, but would be permissible outside of these hours upon approval by the engineer. Implementation of the proposed Project would not result in a significant increase in traffic noise levels under either existing or future cumulative conditions because of the removed industrial land uses. In addition, operational noise levels at the nearest residential land uses would not exceed the "normally acceptable" noise level of 65 dBA CNEL.	Potentially Significant (Construction) Less than Significant (Operation)	Implement **MM-NOISE-1: Construction-Noise Management Plan** A construction-noise management plan (CNMP) shall be prepared for the proposed Project. The CNMP shall, at a minimum, include the following measures: • Construction activities shall be restricted outside the hours of 7:00 a.m. to 9:00 p.m. Monday through Friday, and between the hours of 8:00 a.m. to 6:00 p.m. on Saturdays. While the intention is not to conduct work on Sundays, occasional Sunday work may be required to ensure the proposed Project schedule is met. If it is determined that Sunday work is necessary, the proper permits will need to be obtained through the Police Commission. Construction activities shall be prohibited on federal holidays. • Construction equipment shall be properly maintained and equipped with mufflers. • Equipment shall be turned off when not in use for an excess of five minutes, except for equipment that requires idling to maintain performance.	Less than Significant (Construction and Operation)

Environmental Impact	Significance Before Mitigation	Mitigation Measures	Significance After Mitigation
		• A public liaison shall be appointed for project construction and shall be responsible for addressing public concerns about construction activities, including excessive noise. As needed, the liaison shall determine the cause of the concern (e.g., starting too early, bad muffler) and implement measures to address the concern. The liaison will work directly with the construction contractor to ensure implementation of the noise control plan. • The liaison will work directly with the construction contractor to ensure implementation of the noise control plan. • The public shall be notified in advance of the location and dates of construction hours and activities. • Where necessary, temporary sound barriers shall be installed. • Signage and notification on where to report construction-generated noise shall be posted on-site and around the construction area, as well as on the Bureau of Engineering website. • Staging and queuing areas shall be located at the furthest distance possible from nearby residential land uses, as well as any other noise-sensitive land uses identified in the Project Area at the time of construction (e.g., transient lodging, schools, libraries, churches, hospitals, and nursing homes).	

Environmental Impact	Significance Before Mitigation	Mitigation Measures	Significance After Mitigation
		• Limit noise/vibration intensive activities occurring within ten feet of existing structures and occupied land uses. Where possible and to the extent locally available, select low-noise/vibration generating equipment when activities occur within ten feet of adjacent existing structures.	
XIII(b). Excessive groundborne vibration or groundborne noise levels During proposed construction activities, on-road heavy-duty trucks would not generate substantial increases in groundborne vibration that would exceed commonly applied criteria for structural damage or annoyance. Proposed Project operations would not include the use of machinery or equipment that would contribute to excessive groundborne noise or vibration levels.	Less than Significant	No mitigation measures are required.	Less than Significant
Population and Housing			
XIV(a). Induce substantial population growth The proposed Project would not construct new homes or businesses in the Project Area or result in the extension of roads or other infrastructure to undeveloped areas. Construction activities would be temporary and would be limited to the construction site in a heavily developed industrial and commercial area. Operation of the proposed Project may include one or more office/community/concession building(s); however, there are limited business sites available within the Project Site. Because the areas in the vicinity of the Project Area are already highly developed, the proposed Project would not result in the extension of roads or	Less Than Significant	No mitigation measures are required.	Less Than Significant

Environmental Impact	Significance Before Mitigation	Mitigation Measures	Significance After Mitigation
infrastructure to undeveloped areas. Therefore, the proposed Project would not result in population growth in the Project Area.			
Public Services			
XV(a). Physical impacts associated with the new or physically altered governmental facilities: *Fire Protection* Construction site hazards could increase the risk of personal injury and fires. In addition, lane and road closures could affect fire protection services. However, proposed construction activities would comply with health and safety requirements and building and fire code standards. The nearest Los Angeles Fire Department (LAFD) responders would be notified to coordinate emergency response routing during construction. Emergency vehicles would continue to have the right-of-way, and emergency vehicle response would not be substantially affected. Construction of additional facilities is not expected to be required to maintain acceptable service ratios, response times, or other performance objectives for fire protection. The proposed Project would incorporate LAFD recommendations and comply with applicable standards and permits, including Fire Code requirements regarding fire department access, response distances, and fire-flow. Therefore, operation of the proposed Project is not expected to result in the need for the expansion of or construction of new fire protection facilities. *Police Protection*	Less than Significant (Construction) Potentially Significant (Operation)	There are no mitigation measures for Public Services. The mitigation measures identified in the Transportation section below address impacts associated with traffic concerns during operation of the proposed Project.	Less than Significant (Construction and Operation)

Environmental Impact	Significance Before Mitigation	Mitigation Measures	Significance After Mitigation
Lane or road closures and the movement of construction equipment on local roads could affect police protection services during proposed construction activities. However, the nearest Los Angeles Police Department (LAPD) station would be notified to coordinate emergency response routing during construction. Law enforcement vehicles would continue to have the right-of-way, and police response would not be substantially affected. Construction of additional facilities is not expected to be required to maintain acceptable service ratios, response times, or other performance objectives for police protection. Operation of the proposed Project could increase the demand for LAPD services. Project plans were reviewed by the LAPD, and the proposed Project would be required to incorporate LAPD recommendations in the final design. Police protection services in the park would be covered by the existing park ranger system and LAPD, as mandated in the existing memorandum of understanding between LAPD and RAP. Large events would require approval from the LAPD, and any additional permits or requirements. The proposed Project is not expected to result in the need for the expansion of or construction of new police protection facilities. *Parks* Construction and operation of the proposed Project would not result in population growth or substantial employment growth that would increase the demand for existing parks or other recreational facilities in the Project Area. Rather, the proposed Project would provide			

Environmental Impact	Significance Before Mitigation	Mitigation Measures	Significance After Mitigation
additional recreation and park services that may alleviate the demand for other existing parks and recreational facilities in the surrounding communities.			
Recreation			
XVI(a). Physical deterioration of neighborhood and regional parks or other recreational facilities The proposed Project does not include the construction of housing and construction workers would commute to the job site on a daily basis. Therefore, temporary construction of the proposed Project would not result in population growth that would increase the number of visitors to existing parks or other recreational facilities. The proposed Project would not result in population growth or substantial employment growth that would increase the demand for existing parks or other recreational facilities in the Project Area. In addition, the proposed Project would provide additional recreation and park services that may alleviate the demand for other existing parks and recreational facilities in the vicinity of the Project Area. Therefore, the deterioration of existing facilities is not anticipated to occur or be accelerated.	Less than Significant	No mitigation measures are required.	Less than Significant
REC-2. Recreational facilities that might gave an adverse physical effect on the environment The Project Area is currently a construction site located in a highly developed urban environment. Therefore, the proposed Project would not result in the destruction of the natural environment or alteration of landforms that would have physical impacts on the environment. Rather, the proposed Project would improve the natural	Less than Significant	No mitigation measures are required.	Less than Significant

Environmental Impact	Significance Before Mitigation	Mitigation Measures	Significance After Mitigation
environment by providing more open space and remediating hazardous soils to standards acceptable by LACoFD and other regulatory agencies as required.			
REC-3. Demand for recreation and park services anticipated at the time of project buildout The proposed Project would not result in population growth or substantial employment growth that would increase the demand for existing parks or other recreational facilities in the Project Area. In addition, the proposed Project would provide additional recreation and park services that may alleviate the demand for other existing parks and recreational facilities in the vicinity of the Project Area.	N/A (Construction) Less than Significant (Operation)	No mitigation measures are required.	N/A (Construction) Less than Significant (Operation)
Transportation/Traffic			
T-1. Conflict with a program, plan, ordinance or policy addressing the circulation system, including transit, roadway, bicycle and pedestrian facilities Construction-generated traffic would be dispersed over multiple roadways, present for the short-term, and scheduled with increased frequency during off-peak hours. Public transportation facilities would not be affected, and temporary detours would be provided for any affected pedestrian and bicycle facilities. Therefore, construction activities would not conflict with adopted policies, plans, or programs supporting alternative transportation. Operation of the proposed Project would provide facilities that would encourage active modes of transportation (i.e., bike/pedestrian ramps and stairs, bike racks, and space	Less than Significant	No mitigation measures are required.	Less than Significant

Environmental Impact	Significance Before Mitigation	Mitigation Measures	Significance After Mitigation
for future bike parking and bikeshare). In addition, the proposed Project would not exceed the capacity of the existing circulation system during a typical day. Site-specific traffic control plans would be developed during large special events.			
T-2.1. For a land use project, would the project conflict or be inconsistent with CEQA Guidelines section 15064.3, subdivision (b)(1)? Would the project cause substantial vehicle miles traveled?	Less than significant	No mitigation measures are required.	Less than significant
T-3. Substantially increase hazards due to a geometric design feature or incompatible use	Less than significant	No mitigation measures are required.	Less than significant
T-4. Conflict with an applicable congestion management program, including, but not limited to, level-of-service standards and travel demand measures or other standards established by the county congestion management agency for designated roads or highways Construction activities would generate up to approximately 80 trips per day, which may result in temporary impacts to the circulation system. The construction traffic impacts associated with the proposed Project would be limited to the construction period, and dispersed over multiple roadways, and distributed throughout the day. Access would be maintained through detour routes and no impacts would occur to bus services. On-street parking would be temporarily affected; however, other street parking in the surrounding area would continue to remain available. Therefore, proposed construction activities would not conflict with an applicable congestion management program.	Less than Significant (Construction) Potentially Significant (Operation)	Implement **MM-TRANS-1: Mobility Hub** The City shall reserve space for a mobility hub at the proposed Project Site, including additional amenities for bicyclists, drivers, and transit users, to encourage event attendees to use alternative modes of transportation. Implement **MM-TRANS-2: Bicycle Facilities** The City shall reserve space for a Bike Share hub at the proposed Project Site to allow Bike Share participants to dock bicycles and scooters. Implement **MM-TRANS-3: Rideshare Zones** The City shall create permanent rideshare pick-up and drop-off zones for the East Park and West Park. Rideshare pick-up/drop-off zones could be located on South Santa Fe Street adjacent to the proposed West Park and South Mission Road adjacent to the proposed East Park. The pick-up/drop-off zones shall	Less than Significant

Environmental Impact	Significance Before Mitigation	Mitigation Measures	Significance After Mitigation
Operation of the proposed Project would result in less trips than the existing land use; therefore, operational activities would not exceed the capacity of the existing circulation system. Large special events, which would occur infrequently, would increase the number of trips generated, which could result in impacts on the existing circulation system. However, large event permittees would be required to develop site-specific traffic control plans. Proposed and existing parking spaces would not meet the anticipated parking demand during operation of the proposed Project. In addition, large events, which would occur infrequently, could result in impacts on parking.		be clearly marked, and wayfinding signage shall be installed throughout the proposed Project Site. Implement **MM-TRANS-4: Public Transportation** The City shall reserve space at the proposed Project Site to ensure access through the Arts Plaza or adjacent sidewalk to a future Sixth Street Metro Station.	
Utilities and Service Systems			
XIX(a). Significant environmental effects from construction of new or expanded water, wastewater treatment or storm water drainage, electric power, natural gas, or telecommunications facilities. The Project Area does not include sensitive biological resources or properties located within special flood hazard areas subject to inundation. The proposed construction site would not be accessible to the public. A water diversion plan or flood evacuation plan would be developed if construction activities are performed during the rainy season. Wastewater generated during proposed construction activities would be collected, screened, and discharged in accordance with the SWPPP and any remaining waste	Less than Significant (Construction) Potentially Significant (Operation)	Implement **MM-HYDRO-1** described under Hydrology and Water Quality above.	Less than Significant

Environmental Impact	Significance Before Mitigation	Mitigation Measures	Significance After Mitigation
would be disposed of in accordance with applicable water and solid waste disposal regulations. The proposed Project includes the construction of new stormwater drainage systems to capture and route runoff from the Project Site to LID BMPs. Proposed stormwater drainage systems and BMPs would comply with all applicable permits, design standards, and regulations to reduce significant impacts. The proposed Project would require construction of new utility connections, relocations and undergrounding of utilities, and other utility improvements. The City would coordinate with service providers to ensure that there are no disruptions in utility services. Though operation of the proposed Project would result in additional water consumption and wastewater generation, the construction of new water or wastewater treatment facilities or the expansion of existing facilities is not anticipated. The irrigation system would be designed to receive recycled water. LID and structural treatment BMPs would be installed to treat captured rainfall and runoff for pollutants of concern. A public safety plan would be developed to reduce the potential to harm people during operation of the proposed Project. Therefore, the proposed Project is not anticipated to cause flooding during the projected 50-year developed storm event that would have the potential to harm people or damage property or sensitive biological resources.			

Environmental Impact	Significance Before Mitigation	Mitigation Measures	Significance After Mitigation
XIX(b). Sufficient water supplies There are sufficient water supplies available to serve the water required for proposed construction activities and new or expanded entitlements would not be required. The proposed Project would implement design features to reduce the consumption of water resources. Operation of the proposed Project would require approximately 20.16 acre-feet of water per year, which is approximately .004 percent of existing LADWP water usage. In addition, the irrigation system for the proposed Project would accommodate recycled water. The proposed Project is not expected to require expanded entitlements.	Less than Significant	No mitigation measures are required.	Less than Significant

Table ES-4: Best Management Practices

Environmental Resource	Best Management Practices
Aesthetics	**BMP-AES-1: Construction Lighting** If nighttime lighting at the construction site is required, lighting shall be directed downward, on-site, and away from surrounding land uses. **BMP-AES-2: Construction Staging and Construction Staging Area** Construction staging shall be coordinated with the construction of the Viaduct Replacement Project; therefore, additional use or acquisition of public space for equipment and vehicles will not be required. The construction area shall be fenced to obscure views of construction activities, materials, and staged equipment. **BMP-AES-3: Operational Lighting** Outdoor lighting for recreational activities shall be limited to the proposed operating hours. **BMP-AES-4: Regulatory Requirements for Lighting** • Proposed Project illumination shall comply with the provisions in the City's Municipal Code, including LAMC Chapter 1, Article 2, Sec. 12.21A5(k); LAMC Chapter 1, Article 7, Sec. 17.08C; and LAMC Chapter 9, Article 3, Section 93.0117. • The new walkway lighting shall be compliant with all regulations set forth by the City's Bureau of Street Lighting Design Standards and Guidelines to ensure that the area receives lighting that meets national illumination standards for vehicular and pedestrian traffic, does not emit light pollution, and produces little glare. • Lighting for sports fields and courts shall operate in compliance with Los Angeles City Recreation and Parks (RAP) illuminance level standards for outdoor sports and recreational facilities. • Lighting for security shall be illuminated in accordance with the Illuminating Engineering Society (IES) standards, IES RP-33-14 *Lighting for Exterior Environments* and IES G-1-03 *Security Lighting for People, Property and Public Spaces*, as updated by IES G-1-16 *Guide for Security Lighting for People, Property and Critical Infrastructure*.

Air Quality	**BMP-AQ-1: SCAQMD Rules and Regulations** The contractor shall implement measures to ensure that all construction activities are consistent with SCAQMD rules and regulations. **BMP-AQ-2: Construction Worker Incentives** The City shall offer ride-share and transit incentives for construction workers to reduce emissions associated with motor vehicle use. **BMP-AQ-3: Construction Equipment Maintenance** The contractor shall maintain construction equipment by conducting regular tune-ups according to the manufacturers' recommendations.
Biological Resources	**BMP-BIO-1: Pre-Construction Wildlife Surveys** Pre-construction wildlife surveys shall be completed by a qualified biologist no more than 48 hours prior to clearing, grubbing, or other construction activities to determine the presence/absence of wildlife species, including special-status species, within 100 feet of the construction area. Special attention will be focused on any existing burrowing, roosting, and nesting habitat within the Project Area. Surveys shall be repeated if construction activities are suspended for five days or more. If any wildlife species are identified, appropriate BMPs shall be developed and implemented to reduce potential impacts on these species, in consultation with regulatory agencies where appropriate. **BMP-BIO-2: Trash and Construction Debris Removal** All trash and construction debris shall be removed from the LA River construction areas on a daily basis. All water quality BMP materials shall be properly maintained during project construction, and removed upon completion of construction activities. After completion of proposed construction activities, all construction equipment and materials shall be removed from the Project Area, and the Project Area shall be returned to pre-project conditions. **BMP-BIO-3: Work Area Limitations** No work for the proposed Project shall be conducted on the Fourth Street Bridge or Seventh Street Bridge structures. **BMP-BIO-4: Nesting Bird Survey** If vegetation trimming or clearing is conducted during the nesting season (typically February 15 through September 15), nesting bird surveys shall be completed by a qualified biologist within 300 feet of potential bird-nesting areas and 500 feet of potential

	raptor-nesting areas no more than 48 hours prior to trimming/removal activities to determine if nesting birds are within the affected vegetation. Surveys shall be repeated if trimming or removal activities are suspended for five days or more. **BMP-BIO-5: Nesting Bird Buffer** If nesting birds protected under the MBTA and California Fish and Game Code Sections are found in the Project Area, appropriate buffer consisting of orange flagging/fencing or similar (typically up to 300 feet for songbirds and 500 feet for raptors shall be installed and maintained until nesting activity has ended, as determined in coordination with the project biologist and regulatory agencies, as appropriate, to ensure that nesting birds and active nests are not harmed. **BMP-BIO-6: Hazardous Material BMPs** Appropriate hazardous material BMPs shall be implemented to reduce the potential for chemical spills or contaminant releases into the LA River, including any non-stormwater discharge. **BMP-BIO-7: Equipment Maintenance** All equipment refueling and maintenance shall be conducted in the staging area. In addition, vehicles and equipment shall be checked daily for fluid and fuel leaks, and drip pans shall be placed under all equipment that is parked and not in operation. **BMP-BIO-8: Regulatory Permits** The City shall consult with the appropriate responsible resource agency (e.g., CDFW and RWQCB) to determine permanent and temporary impact areas. Prior to undertaking ground-disturbing activities within or immediately adjacent to any aquatic resource areas, the City and/or their consultant shall obtain a CWA Section 401 Water Quality Certification, and California Fish and Game Code Section 1602 Streambed Alteration Agreement. **BMP-BIO-9: Pre-Construction Bat Surveys** At least 30 days prior to construction, alterations to the LA River Access Tunnel shall be surveyed by a qualified biologist to assess the presence of bats or potential bat-roosting cavities. If bats or bat-roosting cavities are identified, then during the non-breeding and active season (typically October), bats shall be safely evicted, to the extent feasible, under the direction of a qualified biologist. Once it has been determined that all roosting bats have been safely evicted from roosting cavities, exclusionary devices shall be installed and maintained where appropriate to prevent bats from roosting in these cavities prior to construction. **BMP-BIO-10: Monitoring During LA River Access Tunnel Alteration** In the event that all bats are not able to be excluded from affected roosting habitat, a qualified biologist shall monitor LA River Access Tunnel alterations. If bats are disturbed, work shall be safely suspended until all bats leave the vicinity on their own, or alternative measures can be identified under the direction of a qualified biologist. Work shall resume only once the bats have left the site and/or approval to resume work is given by a qualified biologist.

	BMP-BIO-11: Bat Monitoring In the event that all bats are not able to be excluded from affected roosting habitat, a qualified biologist shall monitor structure alteration activities. If bats are disturbed, work shall be safely suspended until all bats leave the vicinity of the LA River Access Tunnel on their own, or alternative measures shall be identified under the direction of a qualified biologist. Work shall resume only once the bats have left the site and/or approval to resume work is given by a qualified biologist. Surveys and exclusion measures are expected to prevent maternal colonies from becoming established in structures to be removed or altered. In the event that a maternal colony of bats is found, no work shall be conducted within 100 feet of the maternal roosting site until the maternal season is over or the bats have left the site, or as otherwise directed by a qualified biologist. The site shall be designated as a sensitive area and protected as such until the bats have left the site. No activities shall be authorized adjacent to the roosting site. Combustion equipment, such as generators, pumps, and vehicles, shall not be parked or operated under or adjacent to the roosting site. Construction personnel shall not be authorized to enter areas beneath the colony, especially during the evening exodus.
Cultural Resources	**BMP-CUL-1: Archaeological Monitoring During Excavation** A qualified archaeological monitor shall conduct archaeological monitoring in the West Park and East Park for excavations at depths greater than 5 feet. Monitoring efforts may be reduced or eliminated for those portions of the Project Area shown to have been recently disturbed by construction activities associated with the Sixth Street Viaduct Project. **BMP-CUL-2: Tribal Cultural Resources Sensitivity Training** The City shall invite a qualified tribal representative from the Gabrieleño Band of Mission Indians to a pre-construction meeting to provide a training session to the construction contractor regarding potential tribal resources that could be encountered during construction activities and procedures to follow should a tribal resource be encountered. **BMP-CUL-3: Tribal Cultural Resources Monitoring During Excavation** The City shall retain and compensate for the services of a Tribal monitor who is both approved by the Gabrieleño Band of Mission Indians-Kizh Nation Tribal Government and is listed under the NAHC's Tribal Contact list for the Project Area. The Tribal monitor shall only be present on-site during the construction phases that involve ground-disturbing activities in the proposed Arts Plaza. Monitoring efforts may further be reduced or eliminated for those portions of the in the proposed Arts Plaza that (1) are underlain with artificial fill of known origin, (2) require superficial scraping of land at depths less than five feet, or (3) are demonstrated to have been recently disturbed by construction activities associated with the Sixth Street Viaduct Project. The on-site monitoring shall cease when the grading and excavation activities in the proposed Arts Plaza are completed, or when the Tribal representatives and monitor have indicated that the site has a low potential for impacting tribal cultural resources. **BMP-CUL-4: Unanticipated Discovery of Archaeological and Tribal Cultural Resources** In the event that potentially significant buried archaeological materials are encountered within the Project Area, all work in the vicinity must stop until the archaeological and Tribal monitor can visit the site and assess the significance of the resource. If the

	resources are Native American in origin, the Gabrieleño Band of Mission Indians-Kizh Nation shall coordinate with the City regarding treatment and curation of these resources. Work may continue on other parts of the Project Area while evaluation and, if necessary, mitigation takes place (CEQA Guidelines Section 15064.5 [f]). **BMP-CUL-5: Unanticipated Discovery of Human Remains** Health and Safety Code Section 7050.5, Section 15064.5(e) of the CEQA Guidelines, and PRC Section 5097.98 mandate the process to be followed in the unlikely event of an unanticipated discovery of human remains in a location other than a dedicated cemetery. The Los Angeles County Coroner must be notified within 24 hours of the discovery of potentially human remains. The Coroner must then determine within two working days of being notified if the remains are subject to his or her authority. If the Coroner recognizes the human remains (including bone fragments and funerary objects) to be Native American, he or she must contact the NAHC by phone within 24 hours. The NAHC then designates a Most Likely Descendant (MLD) with respect to the human remains within 48 hours of notification. The MLD will then have the opportunity to recommend to the Project proponent means for treating or disposing of, with appropriate dignity, the human remains and associated grave goods within 24 hours of notification.
Geology and Soils	**BMP-GEO-1: Erosion Control** The contractor shall implement standard BMPs, such as the use of fiber rolls and silt fencing, to reduce the amount of dust and dirt from leaving the construction area. **BMP-GEO-2: Geotechnical Site Investigation Recommendations** The Geotechnical Site Investigation report for the proposed Project includes recommendations to ensure that the Project Area is suitable for construction, and to ensure that appropriate measures are taken to reduce impacts during earthwork, excavation, utility trenching, backfilling, and other construction activities (Hushmand Associates, Inc., 2018). Backfill soils shall be moisture-conditioned and recompacted to meet ASTM International standards to counteract the potential adverse effects of soil expansiveness. If import soils are used, the import soil shall not exhibit an Expansion Index greater than 20 or contain more than 35 percent fines (i.e., fine-grained soils), and shall be screened by the geotechnical engineer to meet ASTM International standards. **BMP-PAL-1: Paleontological Sensitivity Training** Prior to the start of construction, all field personnel shall be briefed regarding the types of fossils that could be found and the procedures to follow should paleontological resources be encountered. Specifically, the training shall provide a description of the fossil resources that may be encountered, outline steps to follow when a fossil discovery is made, and provide contact information for a qualified paleontologist. The training shall be developed by a qualified paleontologist and provided as hand-outs or a PowerPoint Presentation that may be presented concurrently with other pre-construction training.

	BMP-PAL-2: Unanticipated Paleontological Resource Discoveries In the event that an unanticipated fossil discovery is made during construction, a qualified professional paleontologist shall be retained to examine the find and to determine whether further paleontological resource mitigation is warranted in accordance with SVP (2010) guidelines.
Greenhouse Gas Emissions	**BMP-GHG-1: Off-Road Equipment Construction Requirements** Idling shall be limited for vehicles and off-road equipment. Off-road equipment shall meet Tier 4 emission standards and newer. Efficient on-road haul trucks shall be used, where practicable.
Hazards and Hazardous Materials	**BMP-HAZ-1: Coordination with Regulatory Agencies** The City shall coordinate with Metro, U.S. EPA, and DTSC during construction activities to minimize health risks to the public or the environment associated with ongoing cleanup actions within the Project Area. **BMP-HAZ-2: Compliance with SCAQMD Rules and Regulations** The contractor shall implement measures to ensure that all construction activities are consistent with SCAQMD rules and regulations, including Rule 1166 - Volatile Organic Compound Emissions from Decontamination of Soil and Rule 1466 - Control of Particulate Emissions from Soils with Toxic Air Contaminants.
Hydrology and Water Quality	The following structure source control BMPs, based on the City's LID handbook, would be implemented during construction and/or operation of the proposed Project, as applicable: **BMP-HYDRO-1: Construction Drainage Design** The proposed Project shall incorporate drainage designs that direct stormwater runoff or irrigation runoff away from structures or the top of the slopes. No stormwater will be allowed to discharge over the top of a cut or fill slope. **BMP-HYDRO-2: Off-Site Sediment Transport** All entrances and exits to the construction site shall be stabilized to reduce transport of sediment off-site. Any sediment or other materials tracked off-site shall be removed within a reasonable time. **BMP-HYDRO-3: Storm Drain Message and Signage** Existing and proposed storm drain catch basins within the vicinity of the Project Site shall be marked and maintained. **BMP-HYDRO-4: Outdoor Material Storage Area Design** Proposed outdoor storage areas shall be organized and maintained to prevent stored materials from being permitted to runoff with stormwater. The outdoor storage of toxic and hazardous materials is not permitted. **BMP-HYDRO-5: Outdoor Trash Storage Area Design**

	Proposed outdoor trash storage enclosures shall be organized and maintained to prevent the transportation of trash and debris in stormwater. Bins and dumpsters shall remain covered. **BMP-HYDRO-6: Employee Training** Operations and maintenance employees shall be trained and made aware of the source controls, LID BMPs, educational materials, and maintenance requirements for the proposed Project at first hire and yearly thereafter. **BMP-HYDRO-7: Common Area Landscape Management** A landscape maintenance program shall be established in order to optimize water efficiency, limit pollutant introduction from fertilizers and pesticides, manage landscape waste, and prevent soil erosion. **BMP-HYDRO-8: Common Area Litter Control** A waste management program shall be implemented to inspect the Project Site for litter and pick up any litter as necessary on a regular basis. **BMP-HYDRO-9: Common Area Catch Basin Inspection** Catch basins shall be inspected and maintained, at a minimum, yearly and prior to the rainy season. **BMP-HYDRO-10: Street Sweeping Parking Lots** The angled parking spaces along Anderson Street shall be vacuum swept, at a minimum, yearly and prior to the rainy season. **BMP-HYDRO-11: BMP Maintenance** Proposed structural source controls, non-structural source controls, and LID BMPs shall be maintained as outlined in the Operations and Maintenance Plan that will be developed for the proposed Project. **BMP-HYDRO-12: Structural and LID BMPs** • Runoff from the Project Site and tributary Viaduct areas shall be captured by proposed stormwater drainage systems, routed to a variety of structural and LID BMPs and discharged to the existing stormwater drainage facilities adjacent to the site. In addition, the Project Site shall include a combination of paved surfaces and landscaped areas to provide soil stability and further minimize erosion. • The remaining localized rainfall falling on the portion of the Project Site outside of the Viaduct's footprint shall be treated through a combination of incidental infiltration during sheet flow along pervious land areas, incidental infiltration within localized vegetated basins, and below-grade capture and use systems below some of the proposed lawn areas in areas with a larger impervious area footprint. The incidental infiltration or capture and use of the stormwater will remove pollutants of concern. Larger storm events will be captured and conveyed through proposed local storm drainage systems to new connections to the existing storm drainage system. • Structural BMPs (i.e., proprietary vaults with media-filled cartridges) shall be installed to treat runoff for pollutants of concern identified in the City's LID Manual, including sediments, oil and grease, metals, organic materials, and nutrients.

	Runoff shall also be treated through lined vegetated biofiltration basins and below-grade capture and use systems, where the runoff will be filtered through the vegetation and soil media to remove pollutants of concern before discharging through a perforated underdrain. **BMP-HYDRO-13: Regulatory Requirements for Water Quality** • To comply with the provisions of the NPDES MS4 Permit, the proposed Project shall implement a SWPPP that includes construction site BMPs to control erosion and sedimentation. BMPs include silt fencing, fiber rolls, sandbag barriers, drainage inlet protections, and berms at the top of all grade slopes. The SWPPP shall also include post-construction stormwater management measures to control pollutants in stormwater discharges during operation of the proposed Project. • If groundwater is encountered, the contractor shall develop a dewatering plan, and a Dewatering Permit with the Los Angeles RWQCB will also be required. Should dewatering be required, the proposed Project shall comply with the General Waste Discharge Requirements for Discharges of Groundwater from Construction and Project Dewatering to Surface Waters in Coastal Watersheds of Los Angeles and Ventura Counties. • Proposed construction activities shall comply with all applicable federal, state, and local requirements to reduce the potential for the release of hazardous waste and other contaminants into groundwater. In addition, construction activities will be subject to the provisions of the CWA and Porter-Cologne Act; and other federal, state, and local requirements to ensure that stormwater pollutants resulting from construction will not substantially degrade water quality. • A water diversion plan is not anticipated for the proposed Project because Phase II construction activities shall be performed during the dry season (April 15 through October 15). However, if work in a flowing stream is unavoidable, a water diversion plan shall be required, and the entire stream flow shall be diverted around the work area by a barrier, temporary culvert, new channel, or other means approved by the CDFW. Should water diversion be necessary, a 401/404 permit will also be required. • An emergency evacuation plan shall be prepared for Phase II construction within the LA River. If measurable rain with 25 percent or greater probability is predicted within 72 hours during project-related activities, all activities within the LA River shall cease and protective measures to prevent siltation/erosion shall be implemented/maintained. With the implementation of BMPs, alterations to drainage patterns during construction in the LA River channel will not result in substantial erosion or siltation onsite or offsite. • A Notice of Intent (NOI) for stormwater discharges associated with construction activities may also be required under the NPDES General Permit. • Stormwater BMPs shall follow the latest California Stormwater Quality Association's Stormwater Best Management Practices Handbook. All entrances and exits to a construction site will be stabilized to reduce transport of sediment off-site. Any sediment or other materials tracked off-site will be removed within a reasonable time.

	• Any non-stormwater discharge shall be controlled and properly disposed of through the sanitary sewer system or transported to an approved processing facility to prevent the contamination of site soils and groundwater. • The handling, storage, and disposal of contaminants shall comply with all applicable federal, state, and local requirements. The Project Site shall be remediated to standards acceptable to LACoFD and other regulatory agencies as required, thereby reducing the area affected by contaminants.
Land Use and Planning	**BMP-LAND-1: Coordination with Los Angeles Department of City Planning** The City BOE shall continue to work with the Los Angeles Department of City Planning to ensure that the proposed Project is consistent with future zoning changes. **BMP-LAND-2: Coordination with Viaduct Replacement Project** Any necessary land use entitlements shall be secured prior to the start of construction activities, and shall be coordinated with construction of the Viaduct Replacement Project. **BMP-LAND-3: Construction Area** Construction equipment, materials storage, and construction activities shall be contained within the limits of construction, and construction areas shall be fenced.
Noise	**BMP-NOISE-1: Construction Equipment Requirements** Construction equipment shall be properly maintained and equipped with mufflers.
Transportation/Traffic	**BMP-TRANS-1: Temporary Detour Routes** During proposed construction activities, temporary detours will be provided for any affected pedestrian and bicycle facilities. **BMP-TRANS-2: Construction Staging Plan** A construction staging plan shall be developed to reduce impacts related to noise, dust, traffic, and other health hazards. In addition, construction site BMPs (e.g., fencing, signs, and detours) shall be implemented to minimize hazards and prevent safety issues on the roadways and sidewalks surrounding the construction site. **BMP-TRANS-3: Construction Traffic** Construction-related trips shall be scheduled with increased frequency during off-peak hours to minimize impacts to commuters. **BMP-TRANS-4: Access to Parcels** If access to any existing parcels is removed during proposed construction activities, temporary access shall be provided, and/or new points of access shall be constructed.

	BMP-TRANS-5: Site-Specific Traffic Control and Transit Plan for Large Events Large event permittees shall develop a site-specific traffic control plan to provide information on parking and circulation and highlight transit options for event attendees to minimize congestion and vehicle miles traveled. Traffic control strategies for events will include inbound/outbound flex lanes and sheriff controlled intersections. Traffic control plans will also identify nearby public parking facilities and identify passenger pick-up/drop-off locations. Permittees will be required to consider the cumulative traffic impacts of their event in relation to other events in the Project Area. The traffic control plans will also identify emergency services egress and access.
Utilities and Service Systems	**BMP-USS-1. Wastewater Treatment** Any wastewater produced as a result of proposed construction activities, such as water containing diesel and oil, paint, solvents, cleaners, and other chemicals, as well as construction debris and dirt, shall be collected in settlement tanks and screened. The clean water shall be discharged, and the remaining sludge shall be disposed of in accordance with water and solid waste disposal regulations, including the CWA, the Porter-Cologne Water Quality Control Act, and the RCRA. **BMP-USS-2. Temporary Stormwater Drainage Measures** Temporary stormwater drainage measures to prevent polluted runoff in the construction site shall include, but not be limited to, the installation of earth dikes, drainage swales, and ditches, silt fences, desilting basins, and stormwater drain inlet protection. **BMP-USS-3. Coordination with Service Providers** The location of underground utilities shall be confirmed prior to proposed construction activities by contacting the Underground Service Alert of Southern California (DigAlert). If necessary, the City shall work in close coordination with utility providers to develop a relocation plan to minimize possible impacts and disruption to service utilities. **BPM-USS-4. Reduced Consumption of Water Resources** Design features to reduce the consumption of water resources shall be implemented, such as low-flow water fixtures and water efficient irrigation design and practices. In addition, drought-tolerant landscaping shall be planted to further reduce water consumption.

This page intentionally left blank.

Table of Contents

Executive Summary ES-1
Introduction and Background ES-1
Project Location and Setting ES-1
Proposed Project Summary ES-1
Comments Received on the Notice of Preparation ES-4
Summary of Environmental Impacts ES-5
Alternatives and the Environmentally Superior Alternative ES-15
Summary of Impacts and Mitigation Measures ES-16
Chapter 1. Introduction 1-1
1.1 Background and Project Overview 1-1
1.2 Purpose and Intended Use of this EIR 1-1
1.3 Scope and Content of the Draft EIR 1-4
1.4 Responsible and Trustee Agencies and Project Approvals 1-7
1.5 Organization of the Draft EIR 1-8
1.6 Related Projects 1-8
1.7 Key Principles 1-9
1.8 Review of the Draft EIR 1-18
Chapter 2. Project Description 2-1
2.1 Introduction 2-1
2.2 Project Location and Environmental Setting 2-1
2.3 Land Use Designation and Zoning 2-4
2.4 Project Objectives 2-4
2.5 Proposed Project Elements 2-5
2.6 Real Estate Acquisitions 2-16
2.7 Project Schedule 2-16
2.8 Project Design Changes 2-17
2.9 Relationship to Other Projects 2-17
2.10 Responsible Agencies and Project Approvals 2-17
Chapter 3. Environmental Impact Analysis 3.1-1
3.1 Aesthetics 3.1-1
3.2 Air Quality 3.2-1

3.3 Biological Resources 3.3-1
3.4 Cultural Resources 3.4-1
3.5 Energy 3.5-1
3.6 Geology and Soils 3.6-1
3.7 Greenhouse Gas Emissions 3.7-1
3.8 Hazards and Hazrdous Materials 3.8-1
3.9 Hydrology and Water Quality 3.9-1
3.10 Land Use and Planning 3.10-1
3.11 Noise and Vibration 3.11-1
3.12 Population and Housing 3.12-1
3.13 Public Services 3.13-1
3.14 Recreation 3.14-1
3.15 Transportation and Traffic 3.15-1
3.16 Utilities and Service Systems 3.16-1
3.17 Mandatory Findings 3.17-1
Chapter 4. Comparison of Alternatives 4-1
4.1 Introduction 4-1
4.2 CEQA Alternatives 4-1
4.3 Alternatives Considered but Rejected as Infeasible 4-3
4.4 Evaluation of CEQA Alternatives 4-4
4.5 Comparison of CEQA Alternatives 4-11
4.6 Environmentally Superior Alternative 4-17
Chapter 5. Other Environmental Considerations 5-1
5.1 Effects Found Not to be Significant 5-1
5.2 Significant Irreversible Environmental Changes that Would Be Caused by the Proposed Project Should It Be Implemented 5-2
5.3 Growth-Inducing Impacts 5-3
5.4 Direct Population-Generating Uses 5-3
5.5 Growth Accomodation 5-3
5.6 Expansion of Public Services or Utilities 5-4
Chapter 6. List of Preparers 6-1
Chapter 7. References 7-1
Chapter 8. Acronyms and Abbreviations 8-1

LIST OF FIGURES

Figure 1-1: EIR Process Overview 1-3
Figure 1-2: Development Projects 1-16
Figure 2-1: Regional Location 2-2
Figure 2-2: Project Area 2-3
Figure 2-3: Project Site 2-8
Figure 2-4: Proposed Site Plan 2-10
Figure 2-5: River Channel Design Concept 2-13
Figure 2-6: River Channel Site Plan 2-14
Figure 2-7: East Park Site Plan 2-20
Figure 2-8: East Park Soccer Fields 2-21
Figure 2-9: East Park- Children's Play Area & Plaza 2-22
Figure 2-10: East Park-Dog Park 2-23
Figure 2-11: West Park Site Plan 2-24
Figure 2-12: West Park- Aerial 2-25
Figure 2-13: West Park- View from Mateo Street 2-26
Figure 2-14: West Park-Sloped Walk from Viaduct 2-27
Figure 2-15: Arts Plaza Site Plan 2-28
Figure 2-16: Arts Plaza- Aerial 2-29
Figure 2-17: Arts Plaza- View of Performance Stage (Non-Event) 2-30
Figure 2-18: Arts Plaza- View of Performance Stage (Event) 2-31
Figure 2-19: Arts Plaza -View from Upper Walkway (Non Event) 2-32
Figure 2-20:View from Upper Walkway (Event) 2-33
Figure 3.1-1: Key Observation Points 3.1-11
Figure 3.1-2: KOP 1 (View East from Mateo Street) 3.1-12
Figure 3.1-3: KOP 2 (View East from Santa Fe Avenue) 3.1-12
Figure 3.1-4: KOP 3 (View West from Mission Road) 3.1-13
Figure 3.1-5: KOP 4 (View West from Anderson Street) 3.1-13
Figure 3.1-6: KOP 5 (View West from Clarence Street) 3.1-14
Figure 3.1-7: KOP 5 Towards U.S. Freeway (View East from Clarence Street) 3.1-14
Figure 3.1-8: KOP 1 (West Park – View West from Sloped Walkway) 3.1-22
Figure 3.1-9: KOP 1 (West Park – View East from Mateo Street) 3.1-22

Figure 3.1-10: KOP 2 (Art Plaza – View East from Berm) 3.1-23
Figure 3.1-11: KOP 2 (Arts Plaza – View West from Upper Walkway) 3.1-23
Figure 3.1-12: KOP 3 (East Park –View West towards East Ramp) 3.1-24
Figure 3.1-13: KOP 3 (East Park – View West towards Soccer Fields) 3.1-24
Figure 3.1-14: KOP 4 (East Park – View East towards Children's Play and Plaza) 3.1-25
Figure 3.1-15: KOP 5 (East Park – View East towards Dog Park) 3.1-25
Figure 3.2-1: Potential Estimated Regional Cancer Risks from the Union Pacific Los Angeles Transportation Center Railyard 3.2-17
Figure 3.2-2: Potential Estimated Regional Cancer Risks from the Four Commerce Railyards 3.2-18
Figure 3.2-3: Central Los Angeles MATES IV Simulated Air Toxic Cancer Risk (2012-2013) 3.2-20
Figure 3.6-1:Seismic Hazards 3.6-7
Figure 3.7-1: California GHG Emissions Inventory by Scoping Plan Sector 3.7-12
Figure 3.7-2: California Black Carbon Emissions Inventory (Year 2013) 3.7-12
Figure 3.7-3: Annual Operational GHG Emissions Source Contribution (Year 2021) 3.7-19
Figure 3.7-4: Annual Operational GHG Emissions Source Contribution (Year 2030) 3.7-19
Figure 3.8-1a: Soil Boring Locations (West Park) 3.8-7
Figure 3.8-1b: Soil Boring Locations (East Park) 3.8-8
Figure 3.8-2a: Methane and Methane Buffer Zones (West Park) 3.8-9
Figure 3.8-2b: Methane and Methane Buffer Zones (East Park) 3.8-10
Figure 3.8-3a: Areas of Concern with Contamination 3.8-11
Figure 3.8-3b: Areas of Concern with Contamination 3.8-12
Figure 3.9-1: Local Stormwater Drain Systems 3.9-13
Figure 3.9-2: Topography 3.9-14
Figure 3.9-3: Floodplain 3.9-18
Figure 3.10-1: Community Plan Areas 3.10-6
Figure 3.10-2: Land Use 3.10-8
Figure 3.10-3: Zoning 3.10-9
Figure 3.11-1: Common Noise Levels 3.11-2
Figure 3.11-2: Nearby Land Uses and Noise Monitoring Locations 3.11-12
Figure 3.12-1: Block Groups 3.12-5
Figure 3.13-1: Emergency Services 3.13-8

Figure 3.14-1: Parks and Recreation Centers 3.14-6
Figure 3.15-1: Transportation Facilities 3.15-9
Figure 3.15-2: Traffic Study Intersections 3.15-14
Figure 3.15-3: Public Parking Facilities 3.15-21
Figure 3.16-1a: Low Impact Development Exhibit (West) 3.16-9
Figure 3.16-1b: Low Impact Development Exhibit (East) 3.16-10

LIST OF TABLES

Table ES-1: Required Permits, Approvals, and Permissions ES-3
Table ES-2: Summary of Comments Received during the Public Scoping Period ES-7
Table ES-3: Summary of Environmental Impacts and Mitigation Measures ES-17
Table ES-4: Best Management Practices ES-57
Table 1-1: Current and Future Development Projects 1-10
Table 2-1:Proposed Programming Activites and assigned Traffic Generators 2-6
Table 2-2: Responsible Agencies 2-18
Table 3.2-1: Summary of Ambient Air Quality Standards and Attainment Designations 3.2-2
Table 3.2-2: Summary of Ambient Air Quality Monitoring Data 3.2-15
Table 3.2-3: SCAQMD-Recommended CEQA Significance Thresholds 3.2-23
Table 3.2-4: Construction Emissions without Mitigation 3.2-25
Table 3.2-5: Construction Emissions with Mitigation 3.2-26
Table 3.2-6: On-Site Construction Emissions 3.2-28
Table 3.2-7: Maximum Daily Operational Emissions without Mitigation 3.2-30
Table 3.2-8:Annual Operational Emissions 3.2-31
Table 3.2-9: Cumulative On-Site Construction Emissions 3.2-36
Table 3.5-1: LADWP Energy Sources (Calendar Year 2016) 3.5-5
Table 3.5-2: 2017 LADWP Electricity Consumption 3.5-5
Table 3.5-3: Existing Energy Use in the Project Area 3.5-6
Table 3.5-4: Estimated Construction Period Fuel Use 3.5-8
Table 3.5-5: Estimated Operational Energy Use 3.5-9
Table 3.7-1: Global Warming Potential for Greenhouse Gases 3.7-11
Table 3.7-2: Short-Term Construction-Generated GHG Emissions 3.7-16
Table 3.7-3: Summary of Annual Operational GHG Emissions 3.7-18
Table 3.8-1: Phase II ESA Findings 3.8-16
Table 3.8-2: Sensitive Receptors 3.8-20
Table 3.8-3: Remediation Recommendations 3.8-26
Table 3.8-4: Summary of HHR Findings for Construction Worker Receptor 3.8-28
Table 3.8-5: Summary of HHRA Findings for Residential Receptor 3.8-32
Table 3.9-1: TMDLs for Los Angeles River Reach 2 (Carson to Figueroa Street) 3.9-9

Table 3.9-2: Beneficial Uses for Los Angeles River Reach 2 (Carson to Figueroa Street) 3.9-9
Table 3.9-3: Water Quality Objectives Provided in the Water Quality Control Plan for the LARWQCB Basin Plan 3.9-9
Table 3.9-4: Existing Impervious Surfaces 3.9-12
Table 3.9-5: Existing 24-Hour Design Storm Events 3.9-13
Table 3.9-6: Beneficial Uses for the Central Subbasin 3.9-15
Table 3.9-7: Regional Objectives for Ground Waters in the LARWQCB Basin Plan 3.9-16
Table 3.9-8: Net Impervious Surface Area 3.9-22
Table 3.9-9: 24-Hour Design Storm Event Results 3.9-29
Table 3.10-1: Summary of Land Uses within the Project Area 3.10-7
Table 3.10-2: Consistency with Applicable Plans and Goals, Objectives, & Policies 3.10-10
Table 3.11-1: Common Acoustical Descriptors 3.11-5
Table 3.11-2: City of Los Angeles Land Use Noise Compatibility Guidelines 3.11-9
Table 3.11-3: Summary of Groundborne Vibration Levels and Potential Effects 3.11-10
Table 3.11-4: Summary of Measured Ambient Noise Levels 3.11-13
Table 3.11-5: Existing Roadway Traffic Noise Levels & Contour Distances 3.11-13
Table 3.11-6: Existing Railroad Operations and Noise Levels 3.11-15
Table 3.11-7: Typical Construction Equipment Noise 3.11-18
Table 3.11-8: Construction Noise Levels at Nearby Noise-Sensitive Land Uses 3.11-19
Table 3.11-9: Representative Construction Equipment Vibration Levels 3.11-20
Table 3.11-10: Predicted Traffic Noise Levels – Existing Conditions 3.11-24
Table 3.11-11: Predicted Traffic Noise Levels – Future Cumulative Conditions 3.11-25
Table 3.11-12: Predicted Operational Noise Levels for Onsite Uses 3.11-26
Table 3.12-1: Census Tracts and Block Groups 3.12-4
Table 3.12-2: Projected Population and Household Growth 3.12-7
Table 3.12-3: Racial and Ethnic Characteristics 3.12-9
Table 3.12-4: Age Distribution 3.12-13
Table 3.12-5: Households with Income below the Poverty Level in the Past 12 Months 3.12-14
Table 3.12-6: Homeless Counts in the Project Area Census Tracts 3.12-16
Table 3.12-7: Homeless Resources and Facilities 3.12-16
Table 3.12-8: Public Concerns 3.12-20

Table 3.13-1: Police Stations 3.13-6
Table 3.13-2: Fire Stations 3.13-7
Table 3.14-1: Parks and Recreation Facilities 3.14-4
Table 3.14-2: Parks and Recreation Needs Assessment 3.14-5
Table 3.15-1: Major Roadways 3.15-5
Table 3.15-2: Citywide Street Classifications 3.15-8
Table 3.15-3: Train Routes 3.15-11
Table 3.15-4: Bike Facilities 3.15-12
Table 3.15-5: Study Area Intersections 3.15-12
Table 3.15-6: Intersection LOS Definitions 3.15-15
Table 3.15-7: Existing (2018) Conditions for Study Intersections 3.15-16
Table 3.15-8: Public Parking Facilities 3.15-17
Table 3.15-9: City Significant Impact Criteria 3.15-32
Table 3.15-10: Existing (2018) With Project Conditions for Study Intersections 3.15-33
Table 3.15-11: Existing (2018) With Project Conditions for Study Intersections 3.15-35
Table 3.15-12: Weekday Parking Demand 3.15-38
Table 3.15-13: Weekend Parking Demand 3.15-39
Table 3.15-14: Cumulative (2023) With Project Conditions for Study Intersections 3.15-43
Table 3.15-15: Cumulative (2023) With Project Event Conditions for Study Intersection 3.15-45
Table 3.16-1: Annual Estimated Water Usage 3.16-12
Table 3.17-1: Summary of Mitigation Measures and Best Management Practices 3.17-5
Table 4-1: Summary of CEQA Analysis by Alternative 4-12
Table 4-2: Comparison of Alternatives to the Proposed Project 4-15
Table 4-3: Comparison of Alternatives to Existing Condition 4-16

APPENDICES

Appendix A-1 Notice of Preparation

Appendix A-2 Initial Study

Appendix A-3 NOP Comments

Appendix B-0 List of Technical Studies

Appendix B-1 Air Quality and Greenhouse Gas Impact Assessment

Appendix B-2 Energy Use Calculations

Appendix B-3 Noise Impact Assessment

Appendix B-4 Archaeological Assessment

Appendix B-5 Paleontological Resource Assessment

Appendix B-6 Biological Resources Report

Appendix B-7 Community Impact Assessment

Appendix B-8 Historical Resources Evaluation Report

Appendix B-9 Visual Impact Assessment

Appendix B-10a Environmental Site Investigations

Appendix B-10b Human Health Risk Assessment

Appendix B-11 Geotechnical Site Investigation

Appendix B-12 Parking Demand Analysis

Appendix B-13 Traffic Impact Analysis

Appendix B-14 Conceptual Low Impact Development Report

Appendix B-15 Preliminary Hydrology and Hydraulics Report

Appendix C Tribal Cultural Resources Documents (Confidential)

Appendix D Public Hearing Transcripts

Appendix E Mitigation Monitoring and Reporting Program

This page intentionally left blank.

Chapter 1
Introduction

This Draft Environmental Impact Report (EIR) evaluates the Sixth Street Park, Arts, River & Connectivity Improvements (PARC) Project (proposed Project) in the City of Los Angeles pursuant to the requirements of the California Environmental Quality Act (CEQA, Public Resources Code sections 21000 et. seq.) and the CEQA Guidelines. The City of Los Angeles (City) Department of Public Works, Bureau of Engineering (LABOE) is the Lead Agency under CEQA.

This chapter presents the following background information for the proposed Project:

- The authority of the City to prepare this Draft EIR,
- The purpose of the environmental review process,
- The scope and content of the Draft EIR,
- Public outreach efforts during the CEQA process,
- Key principles guiding the preparation of this Draft EIR, and
- Related projects considered when analyzing the potential for cumulative environmental impacts.

1.1 Background and Project Overview

The proposed Project would be located in the City between Mateo Street and United States Highway 101 (U.S. 101), underneath and adjacent to the Sixth Street Viaduct (Viaduct). The Viaduct connects the Arts District on the west side of the Los Angeles River (LA River) with Boyle Heights on the east side of the LA River. The City is currently replacing the Viaduct, which is anticipated to be substantially completed in 2022 (Viaduct Replacement Project). The proposed Project would be located on approximately 13 acres owned by the City in Council District 14, at the boundary of the City of Los Angeles' Central City North and Boyle Heights Community Plan areas.

Features of the proposed Project include, but are not limited to, a café, concession area, public restrooms on each side of the LA River, performance and public gathering areas, flexible play areas and lawns, adult fitness equipment, dog play areas, landscaped areas, public art, sports fields and courts, children's play areas and splash pad, picnic and grilling areas, parking spaces, skate park elements, bicycle and pedestrian paths, stormwater infrastructure improvements, and rain gardens. In addition, the proposed Project could include the installation of reinforced concrete planted terraces on the west and east banks of the LA River. The proposed Project would generally include components noted in the *Los Angeles River Revitalization Master Plan* (City of Los Angeles, 2007). Chapter 2, Project Description, provides a more detailed description of the proposed Project.

1.2 Purpose and Intended Use of this EIR

The purpose of this Draft EIR is to inform decision-makers and the general public of the potential environmental impacts that could result from the proposed Project. Under the CEQA Guidelines, an EIR

is the most comprehensive form of environmental documentation. It provides the information needed to assess the environmental consequences of a proposed project, to the extent feasible. EIRs are intended to provide an objective, factually supported, full-disclosure analysis of the environmental consequences associated with a proposed project that has the potential to result in significant, adverse environmental impacts. An EIR is one of the various decision-making tools used by a lead agency to consider the merits and disadvantages of a project that is subject to its discretionary authority.

The City of Los Angeles is the CEQA lead agency for the proposed Project. The Draft EIR was prepared by and under the direction of the LABOE, which is responsible for recommending approval and implementing the proposed Project. The LABOE is responsible for obtaining the required environmental and planning permits and approvals as well as designing and constructing the proposed Project. In addition, the Los Angeles City Council must approve and certify the EIR.

CEQA requires the decision-making body to balance, as applicable, the economic, legal, social, technological, or other benefits of the project against the unavoidable environmental risks when determining whether to approve the project. If the benefits of a project outweigh the unavoidable significant environmental impacts of the project, the significant environmental impacts may be considered acceptable. A lead agency is required to prepare a Statement of Overriding Considerations (SOC) when the lead agency approves a project that would result in significant, unavoidable impacts. The SOC contains the specific reasons that support the agency's decision, based on the Final EIR and/or other information in the administrative record. The SOC must be supported by substantial evidence in the record, including findings. In addition, pursuant to Section 21081.6 of CEQA, when approving a project, public agencies must also adopt a mitigation monitoring plan or program for changes that were incorporated into the project or made a condition of project approval to mitigate or avoid significant environmental impacts.

As described in Sections 15121(a) and 15362 of the CEQA Guidelines, an EIR is an informational document that informs public agency decision-makers and the public of the significant environmental effects of a project, identifies possible ways to minimize the significant effects, and describes reasonable alternatives to the project. The purpose of this Draft EIR, therefore, is to focus the discussion on those potential effects of the proposed Project on the environment that the lead agency has determined may be significant. In addition, feasible mitigation measures are recommended, when applicable, to reduce or avoid significant environmental impacts.

As shown in **Figure 1-1**, EIR Process Overview, an EIR is prepared in three key stages. The CEQA process is initiated when the lead agency identifies a proposed project. The lead agency then normally prepares an Initial Study (IS) to identify the preliminary environmental impacts of a proposed project. If the IS determines that a project could have significant, unavoidable environmental impacts, the lead agency must prepare an EIR. A Notice of Preparation (NOP) is prepared to notify public agencies and the general public that the lead agency is initiating the preparation of an EIR. The NOP/IS are circulated for a 30-day review and comment period. During this review period, the lead agency requests comments from agencies, interested parties, stakeholders, and the general public on the scope and content of the environmental information to be included in the Draft EIR.

Figure 1-1: EIR Process Overview

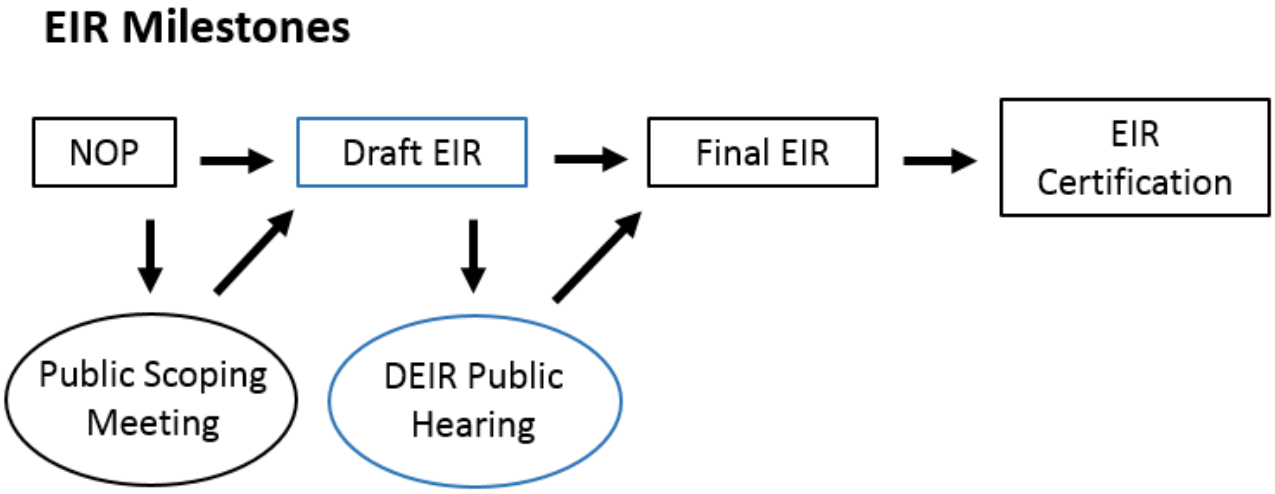

After the close of the 30-day review and comment period, the lead agency continues the preparation of the Draft EIR and associated technical studies (if any). Once the Draft EIR is complete, a Notice of Availability (NOA) is prepared to inform agencies and the general public of the document and the locations where the document can be reviewed. The Draft EIR and NOA are circulated for a 45-day review and comment period, unless the State Clearinghouse approves a shorter period, to provide agencies and the general public an opportunity to review and comment on the adequacy of the analysis and the findings regarding potential environmental impacts of the proposed project. This Draft EIR is being circulated for 60 days.

After the close of the review and comment period, responses to all comments received on the Draft EIR are prepared. The lead agency also prepares a Final EIR, which incorporates the Draft EIR or a revision to the Draft EIR, Draft EIR comments and a list of commenters, and responses to comments. In addition, the lead agency must prepare the following items:

- Findings of fact for each significant effect identified;
- The SOC, if there are significant impacts that cannot be mitigated; and
- A mitigation monitoring and reporting program to ensure that all proposed mitigation measures are implemented.

The Board of Public Works will consider the Final EIR and make a recommendation to the Los Angeles City Council, as the governing body of the City of Los Angeles, regarding certification of the Final EIR and project approval. The City Council may certify and approve the Final EIR or may choose to not approve the project. Recommending bodies (LABOE) and the final decision-makers (City Council) would use the Final EIR to weigh the benefits of the project against its environmental impacts.

During the environmental review and project approval process, people and/or agencies may address the Board of Public Works and City Council regarding the proposed project. Public notification of agenda items for the Board of Public Works would be available online at the following website:

https://www.lacity.org/your-government/departments-commissions/boards-and-commissions/board-public-works-meetings

City Council agenda items are also posted 72 hours prior to a public meeting. The City Council agenda can be obtained by visiting the City Council at the following address:

City Hall
200 North Spring Street
John Ferraro Council Chamber, Room 340
Los Angeles, CA 90012

Agendas can also be accessed via the internet at the link provided above.

Within 5 days of project approval, the LABOE will file a Notice of Determination (NOD) with the County Clerk. The NOD will be posted by the County Clerk within 24 hours of receipt. This begins a 30-day statute of limitations on legal challenges to the CEQA approval by the lead agency. The ability to challenge the approval in court may be limited to those persons who objected to the approval of the proposed project and issues that were presented to the lead agency in writing during the public review and comment periods regarding the EIR.

1.3 Scope and Content of the Draft EIR

In accordance with the requirements of CEQA, the City prepared a NOP/IS, dated April 13, 2017, which identified topics requiring further analysis in the Draft EIR. The IS concluded that the proposed Project would result in less than significant or no impacts related to agriculture and forestry resources and mineral resources. In addition, no impacts related to wildfire are anticipated. Therefore, no further analysis of these resources would be required in the Draft EIR. The focus of this Draft EIR has been limited to the following environmental impact areas:

- Aesthetics
- Air Quality
- Biological Resources
- Cultural Resources and Tribal Cultural Resources
- Energy
- Geology and Soils
- Greenhouse Gas Emissions
- Hazards and Hazardous Materials
- Hydrology and Water Quality
- Land Use and Planning
- Noise and Vibration
- Population and Housing
- Public Services
- Recreation
- Transportation and Traffic
- Utilities and Service Systems

1.3.1 Notice of Preparation/Initial Study

As described above, the LABOE prepared a NOP/IS for the proposed Project, dated April 13, 2017, in accordance with Section 15082 of the CEQA Guidelines. The NOP was circulated for 30 days, with the public review period occurring from April 13, 2017, to May 22, 2017.

A notice, informing the public of the availability of the NOP/IS, was printed in English in *DTLA News* and in Spanish in *La Opinión*. The notice was also circulated to members of the public, local and state agencies,

organizations, and interested parties to solicit comments on the proposed Project. Concerns that were expressed in response to the NOP/IS include, but are not limited to:

- Handling hazardous waste and contaminated substances;
- Exposing sensitive receptors to pollutants, lights, noise, and vibration;
- Taking existing and potential transportation facilities into account;
- Considering public safety and security around railroad tracks and the LA River;
- Describing mechanical, electrical, sewer capacity, and stormwater drainage requirements;
- Consulting with Native American Tribes; and
- Discussing potential impacts related to right of way, traffic, population growth, displacement, and homeless populations.

These concerns were addressed during the preparation of this Draft EIR. For a full summary of comments received on the proposed Project, see **Table ES-2**. The NOP/IS and received comments are included in **Appendix A** of this Draft EIR.

The NOP/IS was available at the LABOE website, http://eng.lacity.org/sixthstreet_parks_arts, as well as at the following public facilities during the public review period:

- Central Library, 630 West Fifth Street, Los Angeles, CA 90071
- Little Tokyo Library, 203 South Los Angeles Street, Los Angeles, CA 90012
- Robert Louis Stevenson Library, 803 Spence Street, Los Angeles, CA 90023
- Benjamin Franklin Library, 2200 East First Street, Los Angeles, CA 90033
- BH Technology Center, 1600 East Fourth Street, Los Angeles, CA 90033
- Boyle Heights City Hall, 2130 East First Street Suite 241, Los Angeles, CA 90033

Comment letters regarding the NOP/IS were received from the public, as well as the following organizations, agencies, and interested parties:

- Amtrak
- Arts District Los Angeles Business Improvement District
- California Department of Toxic Substances Control (DTSC)
- California Department of Transportation (Caltrans)
- Central City Association of Los Angeles
- City of Los Angeles Department of Recreation and Parks (RAP)
- City of Los Angeles Department of Water and Power
- City of Los Angeles Sanitation
- Friends of the LA River

- Latham & Watkins LLP
- Los Angeles County Metropolitan Transportation Authority (Metro)
- Native American Heritage Commission
- Gabrieleño Band of Mission Indians-Kizh Nation
- South Coast Air Quality Management District (SCAQMD)
- Union Pacific Railroad (UPRR)

1.3.2 Public Outreach Efforts

Planning efforts to engage local communities and stakeholders in the proposed Project began in January 2017, and included the following:

- **Site tours**: Guided community site tours of the Project Area were conducted on January 7, 2017, with community leaders.
- **Small focus group meetings**: Small focus group meetings were held with community leaders and youth on January 10, 2017; January 12, 2017; and March 8, 2017, to discuss potential park features and uses.
- **Large community meetings**: Community meetings were held on February 7, 2017, at the PUENTE Learning Center, and on February 8, 2017, at the Southern California Institute of Architecture (Sci-Arc). The community meetings had a combined attendance of more than 300 people to discuss potential park features and uses, and the evolving park design process. A survey was distributed at the community meetings and made available on the LABOE website to allow the public to vote on their preferred park features. Over 1,000 survey responses were received. On March 28 and 30, 2017, additional community meetings were held at Sci-Arc and the PUENTE Learning Center, respectively, to present three conceptual approaches for the park, which incorporated public feedback from the surveys. Additional community meetings were held (in English and Spanish) on September 19, 2017, at the Aliso Pico Recreation Center, and on September 20, 2017, at Sci-Arc. At the meetings, attendees voted on the preferred conceptual design for the park.
- **Public Scoping Meetings**: A public scoping meeting was held on May 3, 2017, at the PUENTE Learning Center in Boyle Heights. The purpose of the meeting was to seek input from agencies, organizations, and the public on potentially affected resources, environmental issues to be considered, and the lead agency's planned approach to the analysis in the Draft EIR. A bilingual (English and Spanish) public scoping meeting was held on May 11, 2017, at the Aliso Pico Gymnasium in Los Angeles, in response to public feedback. The bilingual meeting discussed the same topics and provided the same resources as the May 3, 2017, meeting. During the public scoping meetings, the public expressed concerns regarding gentrification, rent prices, housing development, population growth, and the displacement of existing populations and the homeless. **Appendix A** includes comments that were received during the public scoping meetings. Per the requirements of CEQA, a public meeting will be held following completion of the Draft EIR.
- **Small group meetings**: Additional small group meetings, focus groups, and presentations to community stakeholders groups have also occurred.

- **Community survey**: At the community meetings, surveys were conducted to better understand the potential park user needs and obtain public input on desired park uses and amenities. Surveys were also available to public and other interested parties at http://www.sixthstreetviaduct.org/. Over 1,000 people responded and a summary of the results was posted at the website above.

The project design team will continue to engage the community throughout the design process. Updates on upcoming meetings can be found at http://www.sixthstreetviaduct.org.

1.4 Responsible and Trustee Agencies and Project Approvals

Under CEQA, a responsible agency is a public agency, other than the lead agency, that has responsibility to carry out or approve a project (Public Resources Code [PRC] Section 21069). A trustee agency is a state agency that has jurisdiction by law over natural resources that are held in trust for the people of the State of California (PRC Section 21070).

The following agencies and organizations may be required to provide project approvals and/or permits (see also **Table 2-2**, Responsible Agencies in Chapter 2, Project Description, of this Draft EIR):

- Amtrak
- Burlington Northern Santa Fe
- California Department of Fish & Wildlife
- California Department of Toxic Substances Control
- California State Historic Preservation Office
- City of Los Angeles Board of Public Works
- City of Los Angeles Bureau of Street Lighting
- City of Los Angeles City Council
- City of Los Angeles Department of Building and Safety
- City of Los Angeles Department of City Planning
- City of Los Angeles Department of Cultural Affairs
- City of Los Angeles Department of Recreation and Parks
- City of Los Angeles Department of Transportation
- City of Los Angeles Department of Water and Power
- City of Los Angeles Fire Department
- City of Los Angeles Sanitation
- Federal Railroad Administration
- Federal Transit Administration
- Los Angeles County Fire Department

- Los Angeles County Metropolitan Transportation Authority
- Los Angeles Regional Water Quality Control Board
- South Coast Air Quality Management District
- Southern California Regional Rail Authority
- United States Army Corps of Engineers
- Union Pacific Railroad

1.5 Organization of the Draft EIR

This Draft EIR conforms to the content requirements stated in Sections 15120 through 15132 of the CEQA Guidelines. A list of the document's chapters, including a brief description of their content, is provided here to assist the reader in locating information.

Executive Summary: The Executive Summary provides a brief description of the proposed Project, including a summary of the impact analysis and recommended mitigation measures.

Chapter 1. Introduction: This chapter provides general background information regarding project development. In addition, this chapter describes the purpose of CEQA and this Draft EIR, as well as the Draft EIR scoping process, the availability of documents, and the Draft EIR review process.

Chapter 2. Project Description: This chapter presents a statement of the proposed Project's objectives, a description of the location and setting of the proposed Project, a detailed description of the proposed Project's physical characteristics, and related information on phasing and implementation.

Chapter 3. Environmental Impact Analysis: This chapter analyzes the potential impacts that could occur as a result of construction or implementation of the proposed Project. The impact discussion is organized by issues that have the potential to result in significant impacts.

Chapter 4. Comparison of Alternatives: This chapter includes a discussion of the proposed alternatives and compares the impacts associated with each alternative.

Chapter 5. Other Environmental Considerations: This chapter evaluates impacts related to growth-inducing effects and cumulative growth. Impacts found not to be significant and unavoidable adverse impacts are also summarized.

Chapter 6. Preparers, Contributors, and Oversight: This chapter lists the persons who prepared this Draft EIR, as well as the persons who were consulted to obtain the information that was used in the preparation of this Draft EIR.

Chapter 7. References: This chapter lists the sources of information that were referenced for the analyses contained within this Draft EIR.

1.6 Related Projects

The proposed Project would be located underneath and adjacent to the Viaduct. The Viaduct connects the Arts District on the west side of the LA River with Boyle Heights on the east side of the LA River. The

City is currently replacing the Viaduct, which is anticipated to be substantially completed in 2022 (Viaduct Replacement Project).

Other federally funded projects in proximity to the proposed Project have components which include intersection improvements for bicycles and pedestrians, landscaping features, and bicycle lanes in the proposed Project Area. Three separate but related projects that are associated with the proposed Project include Active Transportation Program (ATP) projects that are federally funded but administered through the Los Angeles County Metropolitan Transportation Authority (Metro). ATP-1: Sixth Street Viaduct Replacement Project Bicycle and Pedestrian Facilities (currently in design), ATP-2: Boyle Heights Pedestrian Linkages (currently in design), and ATP-3: Downtown LA Arts District Pedestrian and Cyclist Safety Project (currently in design) include improvements to the safety and accessibility of bicycle and/or pedestrian facilities in the vicinity of the proposed Project. In addition, City of Los Angeles Sanitation is proposing a parking lot with approximately 30 to 40 spaces at the intersection of Jesse Street and Mission Road.

Other development projects within a half-mile buffer of the Project Area are included in **Table 1-1**(see **Figure 1-2**, Development Projects)**.**

1.7 Key Principles

1.7.1 Forecasting

In this Draft EIR, LABOE has made its best effort to predict and evaluate the reasonably foreseeable direct, indirect, and cumulative environmental impacts of the proposed Project and alternatives. CEQA does not require LABOE to engage in speculation about impacts that are not reasonably foreseeable (CEQA Guidelines Sections 15144, 15145). In these instances, CEQA does not require a worst-case analysis.

1.7.2 Reliance on Environmental Thresholds and Substantial Evidence

The identification of environmental impacts as significant or less than significant is an important function of an EIR. Impacts determined to be less than significant only need to be acknowledged as such; however, an EIR must identify mitigation measures for any impact identified as significant. In this Draft EIR, the LABOE based its conclusions about the significance of environmental impacts on identifiable thresholds, specifically those from the Appendix G of the CEQA Guidelines and has supported these conclusions with substantial scientific evidence. In addition, the document includes screening and significance criteria provided in the *L.A. CEQA Thresholds Guide* to assist in determining the significance of environmental impacts on the thresholds identified in Appendix G of the CEQA Guidelines (City of Los Angeles, 2006). The thresholds of significance analyzed in this Draft EIR reflect only those that were not previously eliminated in the IS (see **Appendix A** of this Draft EIR). Therefore, only the remaining thresholds from CEQA Appendix G and the *L.A. CEQA Thresholds Guide* that were not addressed in the IS are evaluated.

Table 1-1: Current and Future Development Projects

Location	Project Name	Address	Proposed/Developed Use
Recently Developed			
RD-1	Garey Building	905 East Second Street	5 story building with 320 residential units, commercial, and retail space
RD-2	Hauser & Wirth	901 East Third Street	Art gallery, bookstore, and restaurant
RD-3	Lee & Associates	330 South Alameda Street	Creative office space
RD-4	One Santa Fe	300 South Santa Fe Avenue	6 story building with residential units, commercial, retail, and restaurant space
RD-5	Fourth & Traction	963 East Fourth Street	Creative office and retail space with a parking structure
RD-6	A+D Architecture and Design Museum	900 East Fourth Street	Architecture and Design Museum
RD-7	Edward Hotel Apartments	713 East Fifth Street	47 Single Room Occupancy apartment units
RD-8	Arts District Park	501 South Hewitt Street	Park
RD-9	Barker Block Lofts	530 South Hewitt Street	Residential units
RD-10	La Kretz Innovation Campus	525 South Hewitt Street	Offices, conference rooms, labs, workshop, training center, and event space
RD-11	Institute of Contemporary Art	1717 East Seventh Street	Exhibition space, retail, and a café
RD-12	Amp Lofts	695 South Santa Fe Avenue	180 live/work units and retail space
RD-13	Ford Factory Building	777 South Santa Fe Avenue	Adaptive reuse of building into a creative office campus

RD-14	Art House Lofts	1200 South Santa Fe Avenue	Adaptive reuse of building into live/work units with retail space
RD-15	Metro Location 64 Maintenance of Way (MOW) Building	590 South Santa Fe Avenue	Facility to repair and maintain track vehicles to maintain the Red and Purple Line tracks and other systems
RD-16	Soho Warehouse	1000 South Santa Fe Avenue	Market, health club, and restaurant
RD-17	Rolling Greens	1005 South Mateo Street	Industrial space for nursery and retail store
Under Construction			
UC-1	Five Arts District Buildings	950 East Third Street	Multiple 5 and 6 story buildings with 471 residential units, commercial space, and amenities
UC-2	Metro Arts District Rail Yard	320 South Santa Fe Avenue	Upgrades to rail yard
UC-3	Restaurant	500 South Mateo Street	High-turnover restaurant
UC-4	At Mateo	555 Mateo Street	Retail, office, and parking space
UC-5	Sixth Street Viaduct	East Sixth Street	Replacement of 3,500-foot-long viaduct
UC-6	Hillcrest Mixed-Use	1745 East Seventh Street	57 apartment units and 6,000 square feet of retail space
UC-7	Mixed-Use Development (Carmel Partners)	520 South Mateo Street	600 live/work units, office space, retail space, and cultural space
UC-8	Office Mixed-Use Complex	640 South Santa Fe Avenue	Office, retail, and restaurant space
Proposed/Planned			
P-1	2nd and Vignes	929 East Second Street	Retail, event space, bar/lounge, offices, private health club, and private movie theater

P-2	Little Tokyo Galleria Redevelopment	333 South Alameda Street	Live/work units, commercial space, and parking
P-3	4th & Hewitt	401 South Hewitt Street	Residential-retail complex with office and retail space
P-4	Alameda and 4th Lofts	360 South Alameda Street	328 apartment units and office, retail, and restaurant space
P-5	Mixed-Use Development (4th & Hewitt)	940 East Fourth Street	93 live/work units and commercial space
P-6	Boutique Hotel/4th & Alameda	400 South Alameda Street	Hotel with retail space
P-7	Office Building	405 South Hewitt Street	11 story building with commercial space and new office space
P-8	Hollenbeck Park Lake Rehabilitation	415 South St Louis Street	Water quality improvements, polluted runoff diversion and treatment, flow diversion and recycled water replenishment, visual park improvements, and development of erosion control methods
P-9	Arts District Center	1101 East Fifth Street	129 live/work units, 113 hotel rooms, and retail space
P-10	Arts District Center (Mixed-Use)	1129 East Fifth Street	Retail, restaurant, hotel room units, apartment units, art school, and art gallery
P-11	ATP Cycle 2/Boyle Heights Pedestrian Linkages	Clarence Street and Anderson Street	Pedestrian infrastructure improvements, including new sidewalk, sidewalk repairs, and installation of pedestrian lighting, continental crosswalks, and curb ramps to improve connectivity
P-12	Mixed-Use/5th & Seaton	1100 East Fifth Street	Live/work units, and restaurant and retail space
P-13	Palmetto Colyton	527 Colyton Street	13 story building with 310 live-work units, retail use, and art production space
P-14	Office	540 South Santa Fe Avenue	Office space
P-15	Charter School	443 South Soto Street	Elementary school with student enrollment of 625

P-16	6th at Central	930 East Sixth Street	236 apartment units and retail space
P-17	ATP Cycle 3/Downton Los Angeles Arts District Pedestrian and Cyclist Safety Project	Area bounded by Second Street, Seventh Street, Alameda Street, and the LA River	Provide pedestrian and cyclist safety, access, and connectivity improvements, including cycle tracks/bike lanes/bike routes; new/widened sidewalks with curb extensions; high visibility and raised crosswalks; traffic controlled intersections; shade trees; pedestrian lighting; wayfinding signage; and alley conversion into a Shared Street connecting to the new Sixth Street Viaduct Arts Plaza
P-18	Roosevelt High School Comprehensive Modernization Project	544 S Mathews Street	Upgrading, renovating, modernizing, and reconfiguring the Roosevelt High School campus to include new classrooms, gymnasium, lunch shelter, and auditorium
P-19	6AM	1211 Wholesale Street	7 story building with residential units, hotel rooms, offices, retail, cultural, and school use
P-20	Density Bonus	733 Boyle Avenue	Up to 10 density bonus units
P-21	641	641 South Imperial Street	140 live/work units, retail, art production, and creative office space.
P-22	LA Sanitation Parking Lot	Intersection of Jesse Street and Mission Road	14,500 square-foot parking lot with approximately 30 to 40 parking spaces
P-23	Mission and Jesse Roundabout	Intersection of Jesse Street and Mission Road	Reconfiguration of the intersection of Mission Road, Jesse Street, and Myers Street
P-24	Mixed-Use Development (Camden USA)	1525 East Industrial Street	7 story building with 344 live/work units and commercial space
P-25	Active Transportation Program (ATP) Cycle 1/Bicycle and Pedestrian Facilities Connection	Along Mission Street and Myers Street between the Sixth Street Viaduct and Seventh Street	Active transportation elements consisting of sidewalk and bike lane improvements, concrete American with Disabilities Act (ADA) ramps at intersections, continental striping, and lighting.

P-26	AvalonBay Communities	668 South Alameda Street	475 live/work units and retail space
P-27	Mixed-Use/Industrial & Mateo	676 South Mateo Street	Live/work units and restaurant space
P-28	670 Mesquit	670 Mesquit Street	Office space, residential units, 2 hotels, and retail
P-29	Mixed-Use/7th & Mesquit	2051 East Seventh Street	320 apartment units and restaurant and retail space
P-30	Elm Tree Investments	1800 East Seventh Street	7 story complex with 125 live/work units, retail space, artist production space, green space, and parking
P-31	Mixed-Use/7th Street	2030 East Seventh Street	Office and retail space
P-32	Boutique Hotel/7th & Santa Fe	710 South Santa Fe Avenue	Remodel a vacant fire house into a 10 room hotel with restaurant and retail space
P-33	Mixed-Use/Violet & Mateo	826 South Mateo Street	90 live/work units and retail and restaurant space
P-34	Mixed-Use Development (Violet St)	2143 East Violet Street	13 story building with 509 live/work units and commercial space (Omni Group)
P-35	The Fig Project	2130 East Violet Avenue	Office, retail and restaurant space
P-36	Mixed-Use Development (Tishman Speyer)	2159 East Bay Street	8 story building with offices, retail, and parking spaces
P-37	Mixed-Use Campus	2110 Bay Street	99 apartment units including 11 affordable housing units, and office and retail space
P-38	Mixed-Use/Bay & Mateo	1024 Mateo Street	Apartment units, office, restaurant, retail, and light industrial space
P-39	Los Angeles River Bike Path Gap Closure Project	Along LA River from Elysian valley through Downtown Los Angeles to the City of Vernon	Planned extension of existing segments of the 32-mile greenway proposed in the Los Angeles River Revitalization Master Plan

P-40	Los Angeles (Union Station) to Anaheim (Anaheim Regional Transportation Intermodal Center [ARTIC]) Project Section of the California High-Speed Rail (HSR) System	Located at the ARTIC near Angels Stadium and the Honda Center.	HSR system from the city of Los Angeles to Anaheim

Source: (Kimley-Horn and Associates, Inc., 2019; City of Los Angeles, 2017; City of Los Angeles, 2019)

Figure 1-2: Development Projects

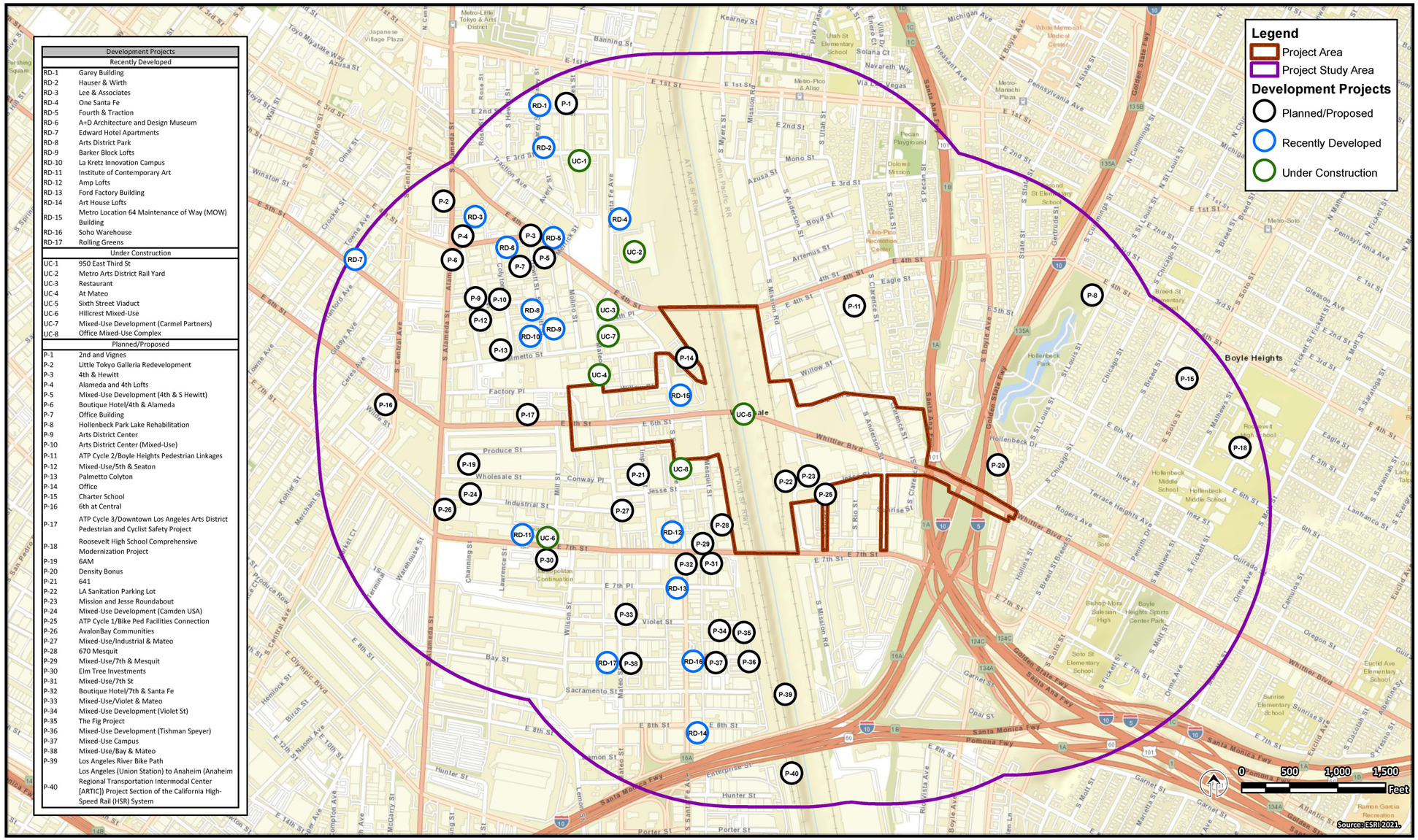

ENGINEERING
CITY OF LOS ANGELES

FIGURE 1-2: DEVELOPMENT PROJECTS
Sixth Street PARC Project

This page intentionally left blank.

1.7.3 Disagreement among Experts

During the public review of this Draft EIR, evidence that might raise disagreements may be presented. Such disagreements will be noted and will be considered by the decision-makers during the public hearing process. In accordance with the provisions of the CEQA Guidelines, known controversies concerning the environmental impacts of the proposed Project have been identified in the Draft EIR. The Draft EIR has included sufficient information to allow the public and decision-makers to make an informed judgment about the environmental consequences of the proposed Project.

1.8 Review of the Draft EIR

This Draft EIR will be circulated for review and comments from the public and other interested parties, agencies, and organizations for 60 days. Due to the global pandemic, a virtual public meeting in English and Spanish will be held on **July 14, 2021 at 6:30 PM** on Zoom. In-person accommodation, at a location in or near Boyle Heights, will also be made available for anyone requiring access to a screen or internet connection. Details about the in-person location will be available closer to the meeting date. A notice regarding the public review period and how to access the public meeting will be posted on the BOE project website: https://eng.lacity.org/about-us/divisions/environmental-management/projects/sixth-street-park-arts-river-connectivity-improvements-parc, and published in the *DTLA News* in English and *La Opinion* in Spanish. Project stakeholders will also receive mail and email notification.

During the public comment period, all comments or questions about the Draft EIR should be addressed to:

Dr. Jan Green Rebstock, Environmental Supervisor II
Department of Public Works
Bureau of Engineering, Environmental Management Group
1149 South Broadway, Suite 600, Mail Stop 939
Los Angeles, CA 90015
Email: Jan.Green.Rebstock@lacity.org

Following public review of the Draft EIR, a Final EIR will be prepared in response to comments received during the public review period. The LABOE does not have an obligation to respond to comment letters received after the close of the public comment period (Public Resources Code Section 21091(d)(1) and Public Resources Code Section 21092.5(c)). The Board of Public Works will consider the proposed Project and make recommendations to the Los Angeles City Council, the governing body of the City of Los Angeles, regarding certification of the Final EIR and project approval. The City Council may certify and approve the Final EIR or may choose not to approve the proposed Project.

The Final EIR will be available for public review at least 10 days prior to its certification (State CEQA Guidelines Section 15088(b)). All responses to comments submitted on the EIR by public agencies will be provided to those agencies at least 10 days prior to final action on the project. The City Council will make findings regarding the extent and nature of the impacts, as depicted in the Final EIR.

During the environmental review and project approval process, people and/or agencies may address the Board of Public Works and City Council regarding the proposed Project. Public notification of agenda items for the Board of Public Works would be available online at the following website:

https://www.lacity.org/your-government/departments-commissions/boards-and-commissions/board-public-works-meetings

City Council agenda items are also posted 72 hours prior to a public meeting. The City Council agenda can be obtained by visiting the City Council at the following address:

City Hall
200 North Spring Street
John Ferraro Council Chamber, Room 340
Los Angeles, CA 90012

Agendas can also be accessed via the internet at the link provided above.

Within 5 days of project approval, the LABOE will file a NOD with the State Clearinghouse and County Clerk. The NOD will be posted by the County Clerk within 24 hours of receipt. This begins the 30-day statute of limitations on legal challenges to CEQA approval by the lead agency. The ability to challenge the approval in court may be limited to those persons who objected to approval of the proposed Project and issues that were presented to the lead agency in writing during the public review and comment periods for the EIR.

Chapter 2
Project Description

2.1 Introduction

The Sixth Street Viaduct Division of the City of Los Angeles (City) Department of Public Works, Bureau of Engineering (BOE), is proposing the construction of the Sixth Street Park, Arts, River & Connectivity Improvements (PARC) Project (proposed Project). The Sixth Street PARC Project includes the creation of public recreational space on approximately 13 acres, in areas underneath and adjacent to the upcoming Sixth Street Viaduct (Viaduct) in the City of Los Angeles (Project Site). The City is the Lead Agency for the proposed Project under the California Environmental Quality Act (CEQA).

2.2 Project Location and Environmental Setting

The proposed Project would be located under and adjacent to the Sixth Street Viaduct between Mateo Street to the west and the United States Highway 101 (U.S. 101) to the east, in the City of Los Angeles (Project Area) (see **Figure 2-1**, Regional Location and **Figure 2-2**, Project Area). The Project Area, which includes the potential area of direct and indirect impacts resulting from the proposed Project, spans from the Downtown Los Angeles Arts District on the west side of the Los Angeles River ("River" or "LA River") to the neighborhood of Boyle Heights on the east side of the LA River.

The Sixth Street Viaduct was a vital connection between Downtown Los Angeles and Boyle Heights. The majority of the Project Area is currently a construction site for the Sixth Street Viaduct Replacement Project ("Viaduct Replacement Project"), which began in 2016. As such, the Project Area primarily consists of fencing around an area of exposed soil with staged construction equipment and materials.

The Project Area is located in Council District 14 at the boundary of the City of Los Angeles' Central City North and Boyle Heights Community Plan areas. Land uses along the north and south sides of the Viaduct are predominately industrial and commercial. The nearest residence borders the northeastern edge of the Project Area at the intersection of South Clarence Street and Inez Street, and the eastern edge of the Project Area at the intersection of Boyle Avenue and Whittier Boulevard.

Railroad corridors are adjacent to the east and west banks of the LA River within the Project Area. The Los Angeles County Metropolitan Transportation Authority (Metro), Southern California Regional Rail Authority (SCRRA), Burlington Northern Santa Fe (BNSF), Amtrak, and Union Pacific Railroad (UPRR) own and/or operate railroad corridors within the Project Area. The Los Angeles Department of Water and Power's (LADWP) Transmission Right of Way (TLRW) is also located along the east and west banks of the River.

The segment of the LA River within the Project Area is a trapezoidal concrete-lined channel, which serves as a flood control channel that receives stormwater runoff from the surrounding watershed. The River discharges to an estuary south of the project area in Queensway Bay, in the Long Beach Harbor. An existing tunnel (LA River Access Tunnel) is located under the railroad tracks west of the River. LADWP

Figure 2-1: Regional Location



ENGINEERING
CITY OF LOS ANGELES

FIGURE 2-1. REGIONAL LOCATION
Sixth Street PARC Project

Figure 2-2: Project Area

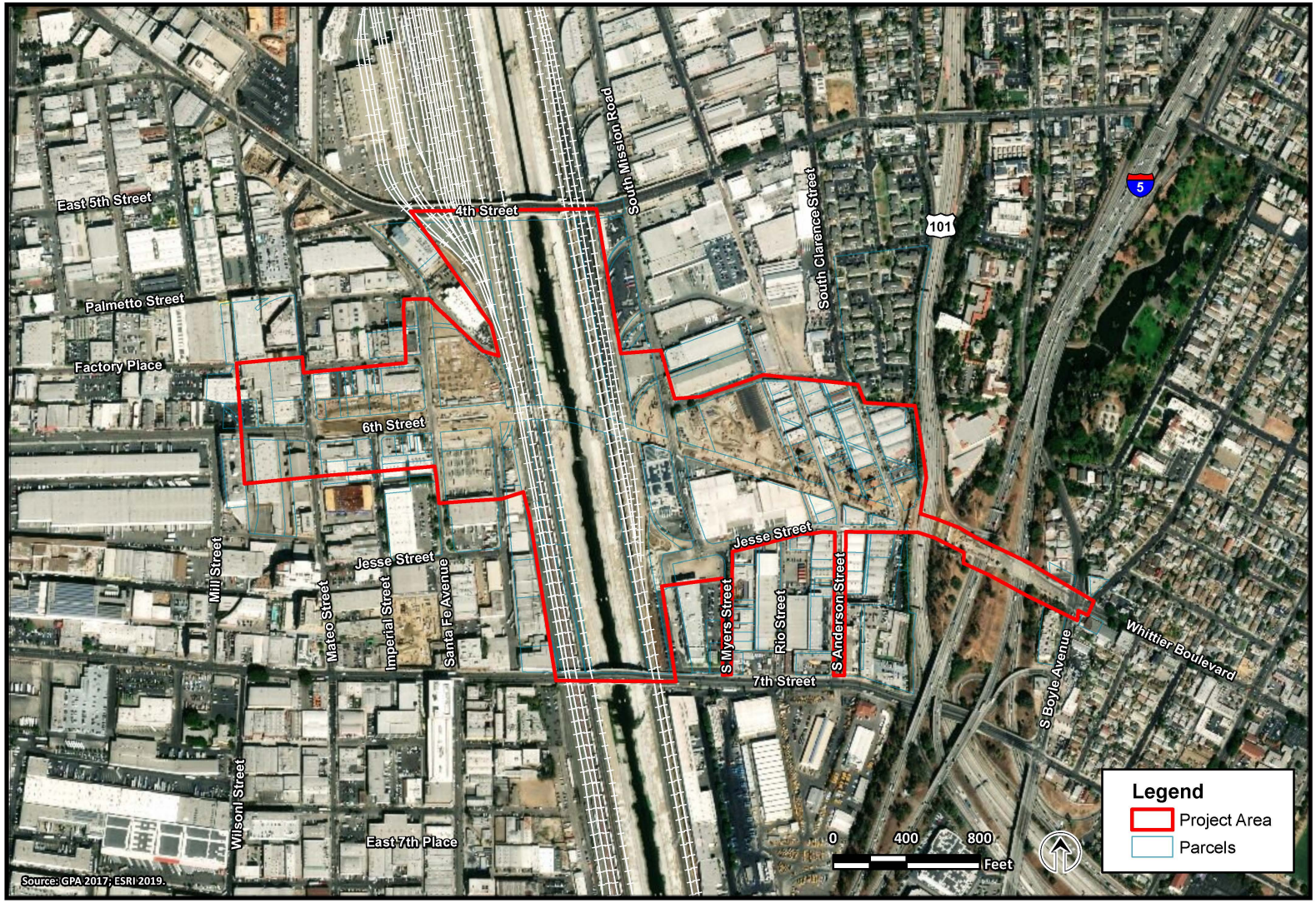

ENGINEERING
CITY OF LOS ANGELES

FIGURE 2-2. PROJECT AREA
Sixth Street PARC Project

TLRW used this tunnel to access the River from Santa Fe Avenue. The City of Los Angeles owns and operates this tunnel.

2.3 Land Use Designation and Zoning

The Project Area is within the Central City North and Boyle Heights Community Plan areas, which were last updated in 2000 and 1998, respectively (City of Los Angeles, 2000; City of Los Angeles, 1998). Both Community Plans are currently undergoing an update. The Project Area includes the following land use designations under the City of Los Angeles Planning and Zoning Code: Limited Industrial (zoned M1), Light Industrial (zoned M2), Heavy Industrial (zoned M3), Open Space (zoned OS) within the River channel, and Public Facilities (zoned PF).

2.4 Project Objectives

The proposed Project has the following objectives:

- Serve the open space and recreational needs of surrounding communities;
- Connect and improve neighborhoods;
- Incorporate sustainable design consistent with the City's plans and goals;
- Encourage active modes of transportation and public transit;
- Promote beneficial stormwater treatment and/or capture; and
- Provide safe pedestrian and bicycle access to the LA River.

The proposed Project would be designed to conform to the *Los Angeles River Revitalization Master Plan* (City of Los Angeles, 2007), the City of Los Angeles' *Mobility Plan 2035* (City of Los Angeles, 2016), the *One Water LA 2040 Plan* (City of Los Angeles, 2018), and other local and adopted plans as applicable. Consistent with the project objectives, the proposed Project would endeavor to adhere to the following guidelines and design goals:

- Active and passive recreation that serves the needs of the community, particularly Boyle Heights and the Arts District.
- Connections to improvements within the neighborhoods in proximity to the Sixth Street Viaduct open spaces.
- Advanced design in keeping with the City's sustainability, low impact development (LID), green building, and Envision goals, which would include sensitivity to supporting all modes of traversing under the Viaduct.
- Promotion of multi-modal active transportation components, including linking to existing and future bicycle and pedestrian facilities.
- Environmentally friendly design that promotes beneficial stormwater treatment and/or capture throughout the site.

The most extensive project scope and associated impacts are being presented in this EIR; however, the City would only construct project elements that are within available funding at the time of construction bidding.

2.5 Proposed Project Elements

The proposed Project would create public recreational space on approximately 13 acres in areas underneath and adjacent to the Viaduct. Approximately 5.8 acres of the PARC would be directly under the Viaduct. The proposed Project is divided into the following sections: (1) West Park, which is located in the Central City North Community Plan; (2) Arts Plaza and River Gateway, which is located in the Central City North Community Plan and along the west and east banks of the LA River channel; and (3) East Park, which is located in the Boyle Heights Community Plan (see **Figure 2-3**, Project Site).

The City's Department of Recreation and Parks or some other entity will be responsible for programming activities for the proposed Project. **Table 2-1** provides the proposed programming activities and assumed traffic generators for the proposed Project. **Figure 2-4**, Proposed Site Plan, shows the overall site plan. Detailed site plans and renderings for the proposed park sections are included at the end of Chapter 2 (see **Figure 2-7** through **Figure 2-20**). Construction would be divided into two phases. Phase I would consist of constructing the General Park Elements as well as East Park, West Park, Arts Plaza and River Gateway. Phase II could consist of installing reinforced concrete planted terraces along the banks of the LA River. The proposed Project elements that are denoted with an asterisk (*) have been selected as bid alternates and are subject to available funding.

2.5.1 Phase I

Construction within Phase I may be phased from East to West as space becomes available below the Viaduct. The following elements would be constructed as part of Phase I of the proposed Project:

General Park Elements

- Typical park site furnishings and amenities, which would include benches, tables, bike racks, bicycle rentals, kiosks, drinking fountains, safety bollards, lighting and signage, fencing, gates, trash receptacles/enclosures, and equipment and maintenance storage unit(s);
- Pedestrian paths, bicycle paths and connections, and internal park roadways and service roads;
- Park lighting;
- Minor relocations of existing street lighting along Santa Fe Avenue, Mission Road, and Anderson Street within the Project Area;
- Pedestrian street lighting on Santa Fe Avenue, Anderson Street, and South Clarence Street;
- Public art sculptures (up to 30 feet high, 24 feet wide, by 11 feet long) and associated interpretive exhibits;
- Utility connections (electrical and plumbing);

- Utility relocations and undergrounding in some areas may be required; Other miscellaneous utility improvements such as installation of WiFi, security cameras, and hookups for food trucks, temporary performance equipment (sound and lighting), and water;
- Site soil would be remediated to standards acceptable by the Los Angeles County Fire Department and other regulatory agencies as required prior to proposed Project construction. Some soil remediation activities may also be required during construction;
- Irrigation systems and open space;
- Demolition of existing urban infrastructure, such as pavement and roadways;
- Landscaping would be consistent with the City's River Improvement Overlay (RIO) Ordinance (Ordinance Number 183145), which requires that 75 percent of any project's newly landscaped area be planted with any combination of native trees, plants and shrubs, species defined as WatershedWise (i.e., climate adapted and non-invasive plants), or species listed in the Los Angeles River Master Plan Landscaping Guidelines and Plant Palette;
- Connectivity improvements, which may include, but are not limited to, a pedestrian activated crosswalk signal on Santa Fe Avenue, a speed table at the continental crosswalk on Santa Fe Avenue, and speed tables with solar-powered rectangular rapid flashing beacons at South Clarence Street, Mission Road, and South Anderson Street;
- Retaining wall(s), which would be between approximately 2- and 17-feet high; and
- Stormwater infrastructure improvements, which would include proposed stormwater drainage systems that would capture runoff from the proposed Project Site and tributary Viaduct areas, route stormwater to structural and LID best management practices (BMP) (e.g., proprietary vaults with media-filled cartridges, catch basin filter inserts, incidental infiltration during sheet flow and within localized vegetated basins, and below-grade capture and use systems), and discharge to existing stormwater drainage facilities that drain to the LA River.

Table 2-1: Proposed Programming Activities and Assumed Traffic Generators

Event Type	Location	Approximate Event Capacity	Estimated Annual Frequency	Approximate Event Duration (hours)	Time of day/week
Concerts, performances	Arts Plaza - stage area	1,000	24 events: (2) 1000-persons (10) 200-persons (12) 50-persons	3	Evenings; Weekends
Concerts, Performances, Events, Festivals	East Park - flex play and performance lawns (2)	2,000 (1,000 each area)	26 events: (4) 500-persons (20) 100-persons (2) 1000-persons	6	Evenings; Weekends
Soccer games	East Park - soccer fields	100 (50 each field)	104 (twice a week)	2.5	Evenings; Weekends
Soccer practices	East Park – soccer fields	50 (25 each field)	104 (twice a week)	1.0	Evenings; Weekends
Soccer Tournaments	East Park – Sports courts, Lawns, and Flex Court	(2-day Tournaments) Under 10 Division = 510/day Under 8 Division = 510/day 2,040 total	1-2 times per year	All day (9:00 a.m. – 8:00 p.m.)	All Day
Volleyball, futsal games	East Park - flex court	25	104	2	Evenings; Weekends
Basketball games	East Park - flex court	25	104	2	Evenings; Weekends
Café and outdoor plaza	Arts Plaza	50	Intermittent	11 a.m. – 7 p.m.	7 days/ week
Concessions	East Park	25	Intermittent	Intermittent	Evenings; Weekends
Farmers Market	Various	150	52	4 (8 a.m. – 12 p.m.)	Mornings; Weekends
Large Events	East Park – Various Locations	3,300 (flex lawn 1 – 1,300 flex lawn 2 – 1,500 basketball court – 500)	1-2 times per year (1) 5,000-person event/year	All day (11:00 a.m. – 10:00 p.m.)	All Day

Figure 2-3: Project Site

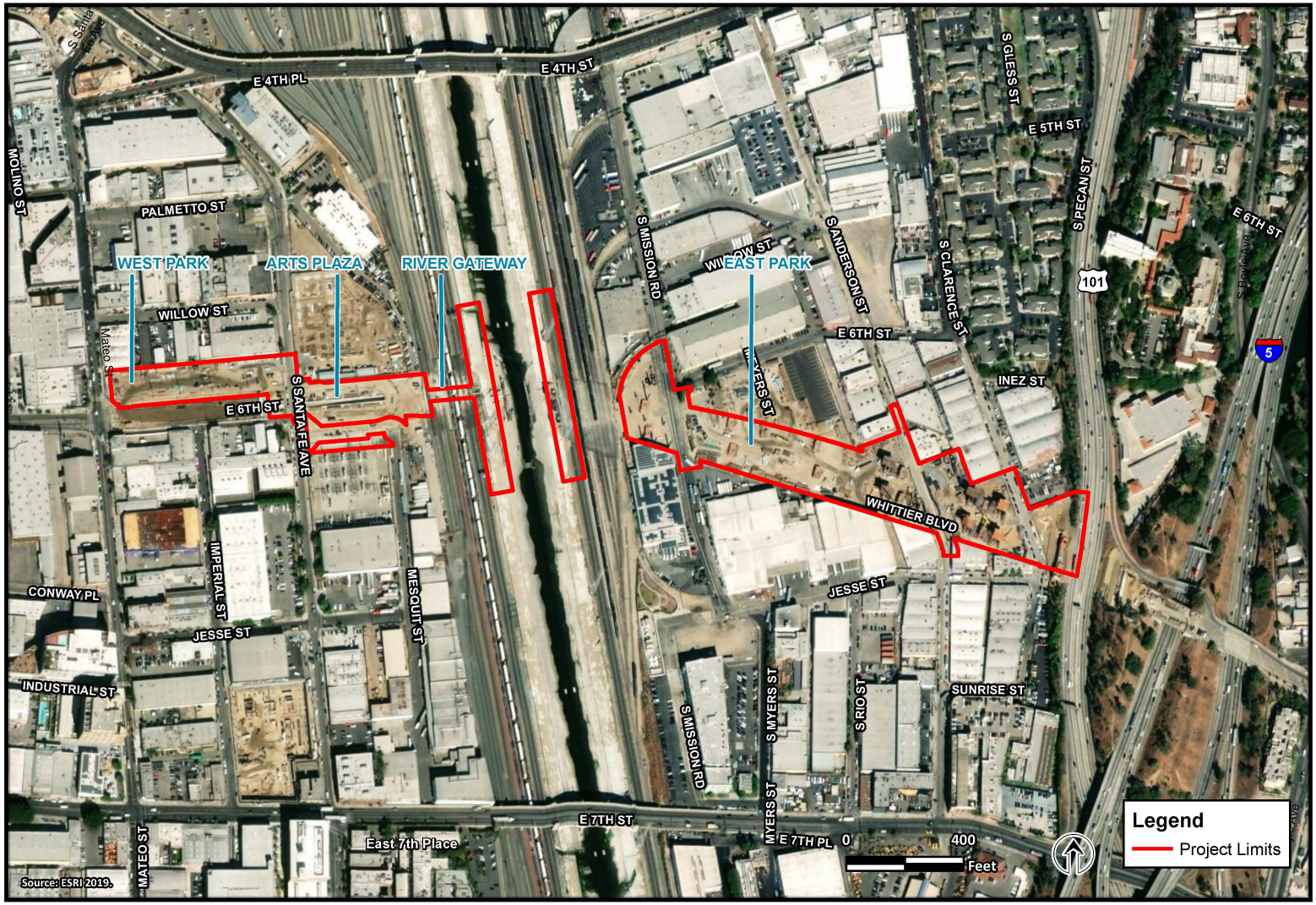

ENGINEERING
CITY OF LOS ANGELES

FIGURE 2-3. PROJECT SITE
Sixth Street PARC Project

This page intentionally left blank.

Figure 2-4: Proposed Site Plan

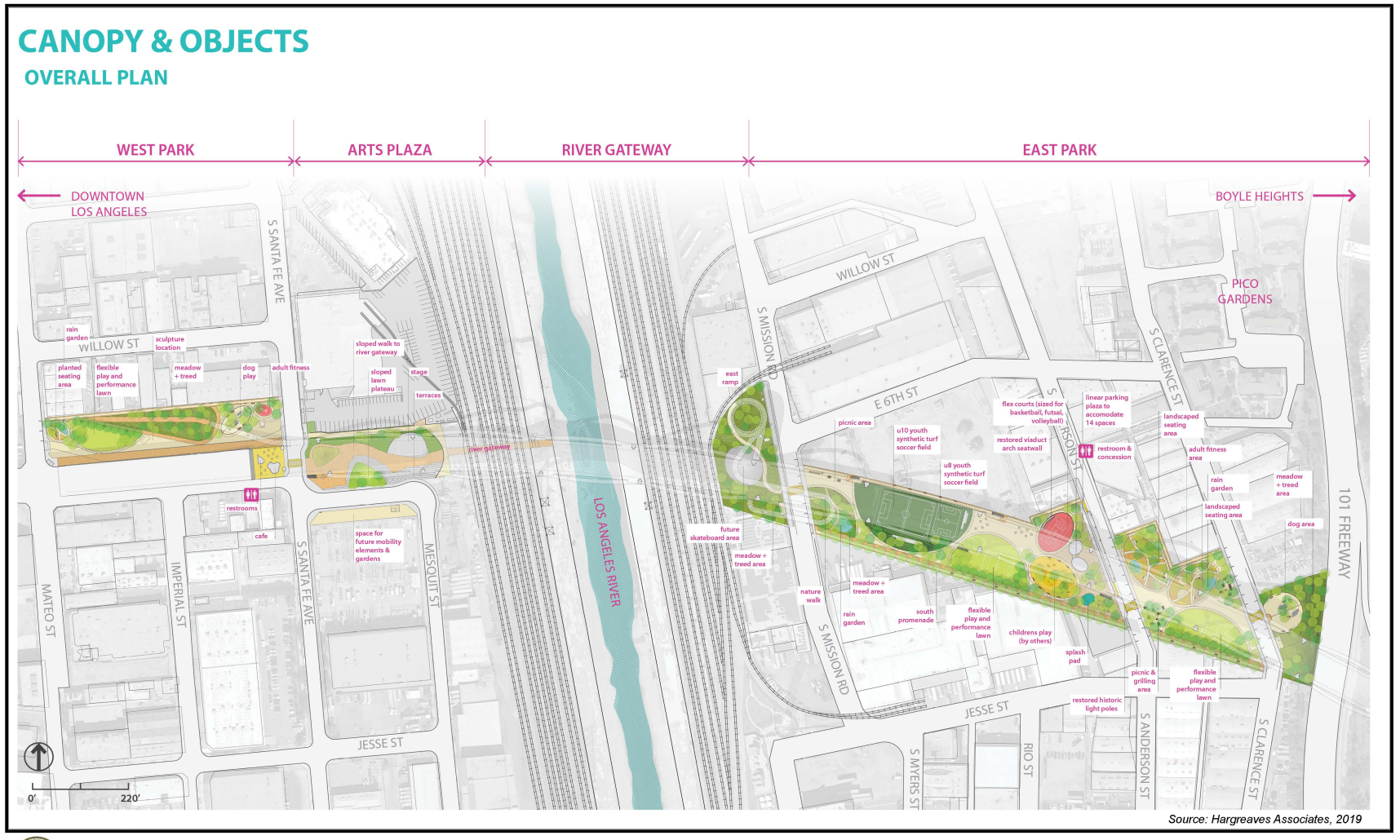

Source: Hargreaves Associates, 2019

ENGINEERING
CITY OF LOS ANGELES

FIGURE 2-4. PROPOSED SITE PLAN
Sixth Street PARC Project

This page intentionally left blank.

East Park

- East Building with approximately 332-square-foot concession area, 252-square-foot public restrooms, and 635-square-foot office space and 571-square-foot storage space for City of Los Angeles Department of Recreation and Parks (RAP);
- Two synthetic turf soccer fields with field lighting, one for youth Under-8 players, and one for youth Under-10 players;
- Two flexible play and performance lawns with combined capacity to hold events up to approximately 2,800 people*;
- Adult-sized flexible sports court for basketball, futsal, and volleyball*;
- Salvaged bridge light poles and salvaged arch as barrier/seat wall*;
- Nature walk, meadow and adult fitness circuit*;
- Splash pad with outdoor shower*;
- Designated picnic and grilling areas*;
- Landscaped seating areas and rain gardens*;
- Small dog and large dog play areas*;
- On-street angled parking with 14 dedicated spaces on-site (approximately 9 of which would be used by RAP staff);
- Children's play area*; and
- Skate park elements.

West Park/Arts Plaza and River Gateway

- One approximately 620-square-foot café building with outdoor plaza seating*;
- One approximately 162-square-foot building with public restrooms;
- Arts Plaza performance area(s), public gathering/assembly areas with capacity up to approximately 1,000 people;
- One flexible play and performance lawn;
- Adult fitness equipment;
- Small dog and large dog play areas;
- Landscaped seating area;
- Rain garden;
- Reconstruction and rehabilitation of existing pedestrian/vehicular LA River Access Tunnel entrance to the River (widening the tunnel opening; resurfacing the tunnel entryway, pavement, and tunnel floor; painting; and lighting improvements). Installation of safety features, including removable

bollards or a gate to restrict vehicle access to the tunnel and warning devices to deter pedestrian access during flood events;

- Space for future electric vehicle charging station and City of Los Angeles Department of Transportation (LADOT) mobility hub elements;
- Space for secure bike parking and space for Metro bikeshare; and
- Space for future landscaped areas.

2.5.2 Phase II

Phase II would include the installation of reinforced concrete planted terraces on up to approximately 20,000 square feet of the west and east banks of the LA River channel (see **Figure 2-5**, River Channel Design Concept and **Figure 2-6**, River Channel Site Plan). Terracing would be up to approximately 10 feet wide and located as high as possible on the west and east LA Riverbanks, above the estimated Ordinary High Water Mark. The terraces would be anchored into the existing slope liner and would not require excavation into the LA River channel. All landscaping would consist of species included in the Los Angeles River Master Plan Landscaping Guidelines and Plant Palette, consistent with the City's RIO Ordinance (Ordinance Number 183145). Existing access to the LA River would be maintained.

Figure 2-5: River Channel Design Concept

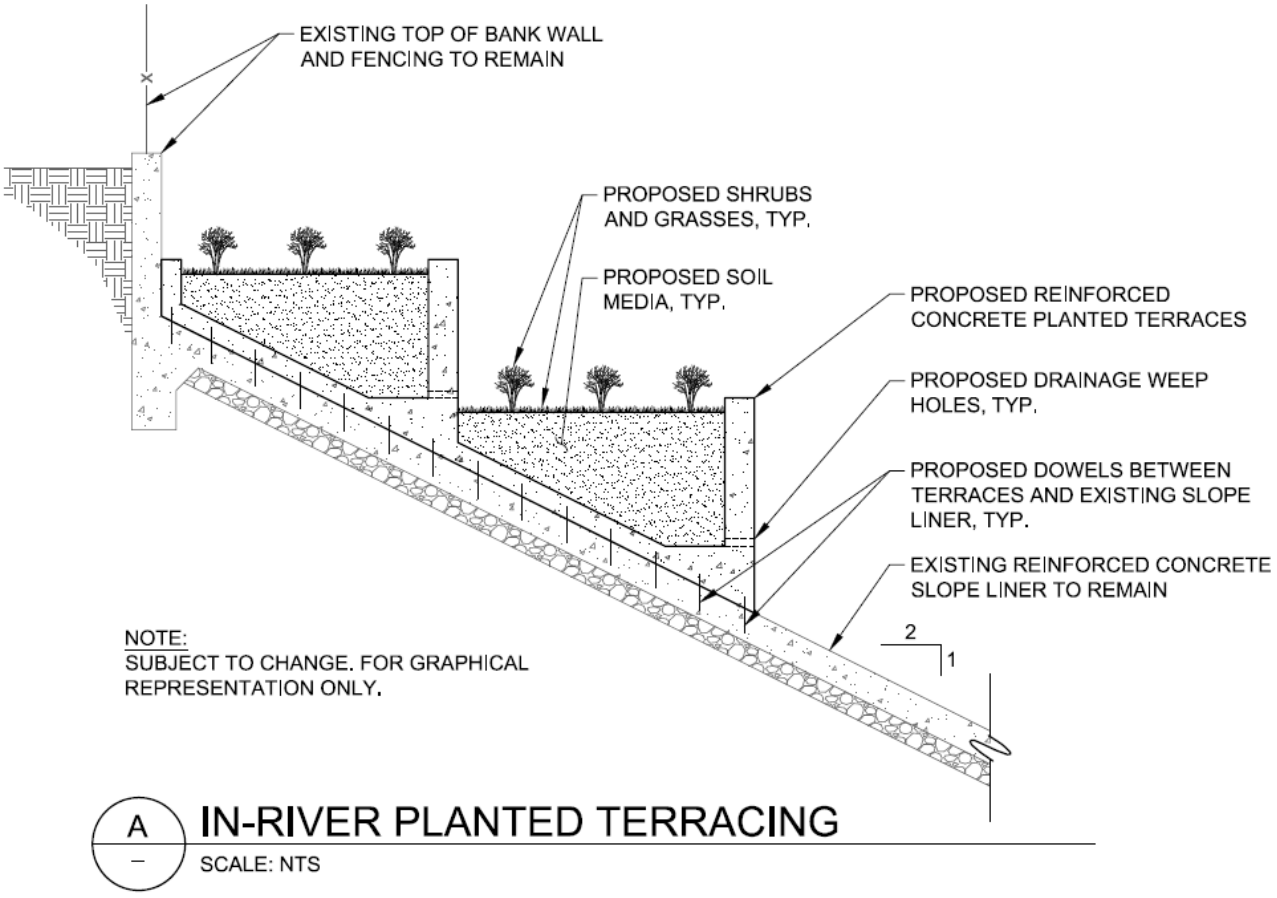

Figure 2-6: River Channel Site Plan

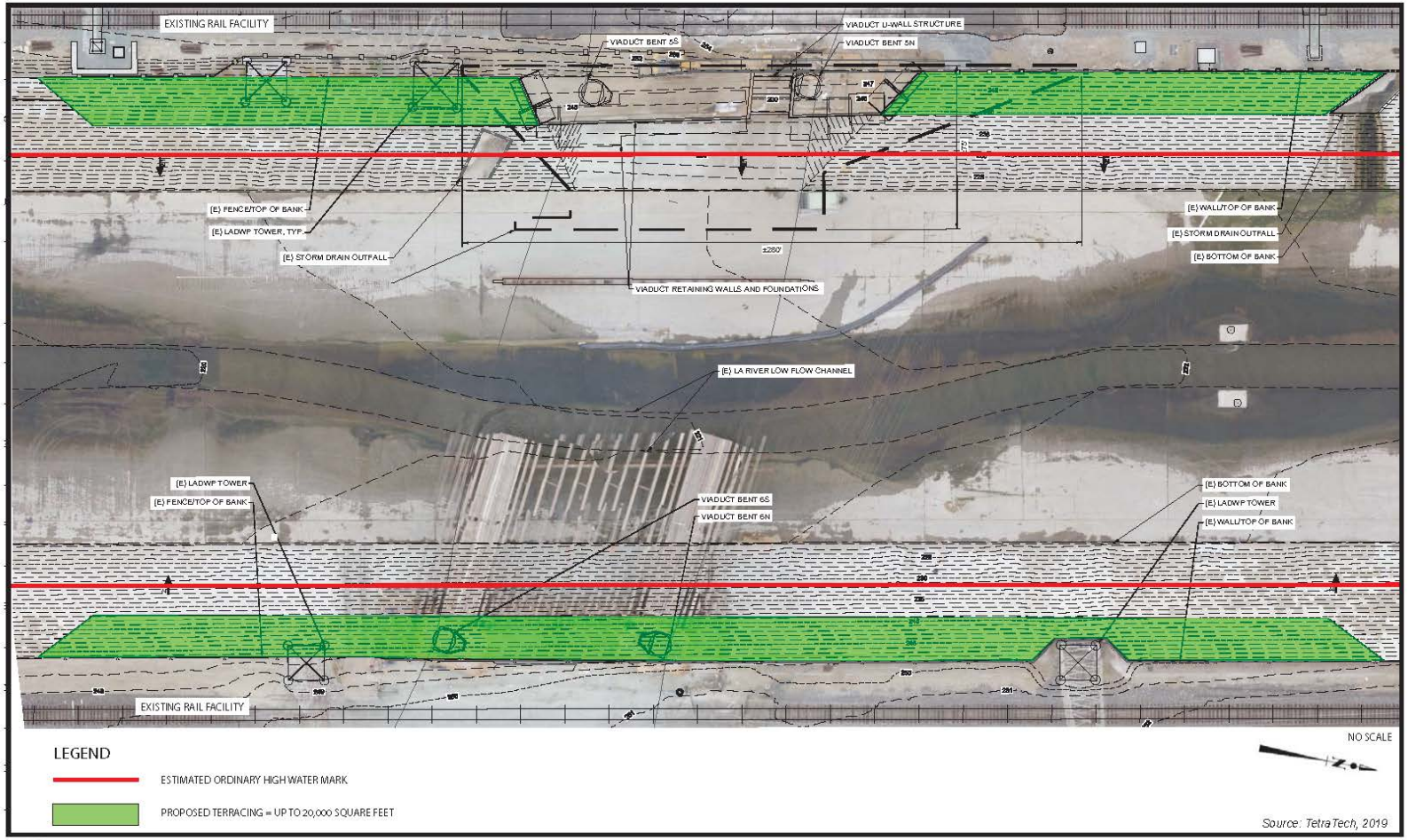

ENGINEERING
CITY OF LOS ANGELES

FIGURE 2-6. RIVER CHANNEL SITE PLAN
Sixth Street PARC Project

This page intentionally left blank.

2.5.3 Impervious Surface Areas

The proposed Project would remove approximately 2.1 acres of impervious surfaces, which includes any remaining asphalt or concrete pavement within the Project Site and the removal of existing roadway pavement and sidewalk for the street improvements. The proposed Project would result in a net increase of impervious surfaces due to the construction of hardscaping, sports courts, buildings, playgrounds, and other public amenities. When including the impervious surface area from the upcoming Viaduct overhead, the net increase in impervious surfaces as a result of the proposed Project would be approximately 1.4 acres. With implementation of the proposed Project, the Project Site would consist of approximately 8.9 acres (71%) of impervious surfaces (including the Viaduct overhead) and up to approximately 4.1 acres (29%) of pervious surfaces.

2.5.4 PARC Operations & Lighting

The proposed operation hours of the PARC would be between 5:00 a.m. and 10:30 p.m. in accordance with Los Angeles Municipal Code Section 63.44. Recreational lighting would largely be limited to the proposed operation hours and would be consistent with the City's Municipal Code and RIO Ordinance (Ordinance Number 183145). There would be higher light levels around the sports fields to help transition from the brighter fields to the typical paths. Lighting for security would be installed throughout the PARC to protect people and property, and illuminated in accordance with the Illuminating Engineering Society (IES) standards, *IES RP-33-14 Lighting for Exterior Environments* and IES G-1-03 *Security Lighting for People, Property and Public Spaces*, as updated by IES G-1-16 *Guide for Security Lighting for People, Property and Critical Infrastructure*. Luminaires with shielded optics would be used, and the PARC would be designed to infill lighting in areas where architectural and bridge elements could impede the flow of light.

2.6 Real Estate Acquisitions

No right-of-way (ROW) or temporary construction easements (TCE) would be required and no displacements or relocations would result from the proposed Project. However, a temporary "Permit to Enter" may be required from property owners at the boundaries of the Project Site that border adjacent private properties. In these areas, the contractor may need to enter private properties in order to complete construction work within the Project Site.

2.7 Project Schedule

The proposed Project would include two construction phases. Construction of Phase I would begin at or near the completion of the Viaduct Replacement Project. The Viaduct construction is expected to be completed by mid-2022 but is subject to change. The duration of construction for Phase I is expected to last approximately two years. Assuming Phase I construction starts in September 2022, construction is anticipated to be completed in 2024.

Phase II elements would be constructed independently of Phase I elements. The duration of Phase II is assumed to be 6 months. Phase II construction is anticipated to begin in 2025 or later but may proceed concurrently with Phase I. The timing of construction depends on a number of variables, such as

availability of funding for design and construction, as well as review and approval of LA River modifications from the United States Army Corps of Engineers (USACE). For purposes of this environmental review, Phase I and II construction activities are assumed to overlap.

2.8 Project Design Changes

The City prepared a Notice of Preparation/Initial Study (NOP/IS) for the proposed Project, dated April 13, 2017. Several proposed Project elements that were presented in the NOP/IS are no longer being considered because they have since been determined to be infeasible or cost prohibitive due to budgetary constraints, which include the following:

- Construction of a bikeway within the LA River channel bank adjacent to the proposed Arts Plaza, extending from Fourth Street to Seventh Street, with connections to the bridge structures. Metro is currently studying construction of a proposed bikeway in this area as part of the separate Los Angeles River Project. More details can be found here: https://www.metro.net/projects/lariverpath/
- Colored concrete pavement to delineate limits of all park areas.
- Stormwater capture and reuse.

In addition, work in the LA River channel would now occur at a separate phase (Phase II) from the remainder of the proposed West Park, Arts Plaza, and East Park (Phase I). This is due to the additional approvals and permits that would be needed for these activities.

2.9 Relationship to Other Projects

The proposed Project is located underneath and adjacent to the Viaduct Replacement Project. The City has completed the design to replace the Viaduct, and the Viaduct was demolished in 2016. Construction of the new Viaduct has begun, and it is anticipated to be substantially complete in 2022.

Other federally funded projects in proximity to the proposed Project have components which include intersection improvements for bicycles and pedestrians, landscaping features, and bicycle lanes in the proposed Project Area. Three separate projects that are associated with the proposed Project include Active Transportation Program (ATP) projects that are federally funded but administered through Metro. ATP-1: Sixth Street Viaduct Replacement Project Bicycle and Pedestrian Facilities (currently in design), ATP-2: Boyle Heights Pedestrian Linkages (currently in design), and ATP-3: Downtown LA Arts District Pedestrian and Cyclist Safety Project (currently in design) include improvements to the safety and accessibility of bicycle and pedestrian facilities in the vicinity of the proposed Project.

Other development projects in proximity to the Project Area are included in **Table 1-1** in Chapter 1 (see **Figure 1-2**, Development Projects)**.**

2.10 Responsible Agencies and Project Approvals

Table 2-2 includes a list of responsible agencies that were contacted regarding the proposed Project. Other public agencies in proximity to the Project Area were also contacted.

Table 2-2: Responsible Agencies

Responsible Agency	Anticipated Permits, Approvals, and Related Issues
Federal	
United States Army Corps of Engineers	Rivers and Harbors Act Section 408 Permit, includes National Environmental Quality Act (NEPA) approval Clean Water Act (CWA) Section 404 Permit
Federal Railroad Administration	Any applicable permits
Federal Transit Administration	Any applicable permits
State	
Department of Toxic Substances Control	Any applicable permits
California Department of Fish & Wildlife	Section 1602 Streambed Alteration Agreement
California State Historic Preservation Office	Section 106 consultation
Regional	
Regional Water Quality Control Board	CWA Section 401 Water Quality Certification National Pollutant Discharge Elimination System (NPDES) Permit
LA County Metropolitan Transportation Authority	Any applicable permits, coordination related to public transit and bikeways, and adjacent facilities
LA County Fire Department	Review and advise on site remediation plans
South Coast Air Quality Management District	Any applicable permits
Local	
City of Los Angeles Recreation and Parks Department	Responsible for operation and maintenance of portions of the park
City of Los Angeles Planning Department	Potential changes to land use designations or zoning, as well as street designations Any applicable permits
City of Los Angeles Department of Water and Power	Any applicable permits, coordination, and approval
LA Sanitation	LID Compliance, system design coordination (if applicable), system design approval (if applicable), and maintenance of a portion of stormwater infrastructure (if applicable)
City of Los Angeles Fire Department	Any applicable permits, coordination related to emergency access
City of Los Angeles Department of Transportation	Non-CEQA Transportation Assessment Guidelines Consistency Review

	Traffic management plans
City of Los Angeles Bureau of Street Lighting	Street lighting design and approval
City of Los Angeles Board of Public Works	Recommendations regarding Project approval and Environmental Impact Report (EIR) certification
Los Angeles City Council	Project approval and certification of EIR
City of Los Angeles Department of Building and Safety	Any applicable permits
City of Los Angeles Cultural Affairs Department	Any applicable permits and coordination related to public art
All railroad agencies owning and operating railroad tracks along both sides of the River	Railroad Maintenance Agreement for work within railroad ROW

Figure 2-7: East Park Site Plan

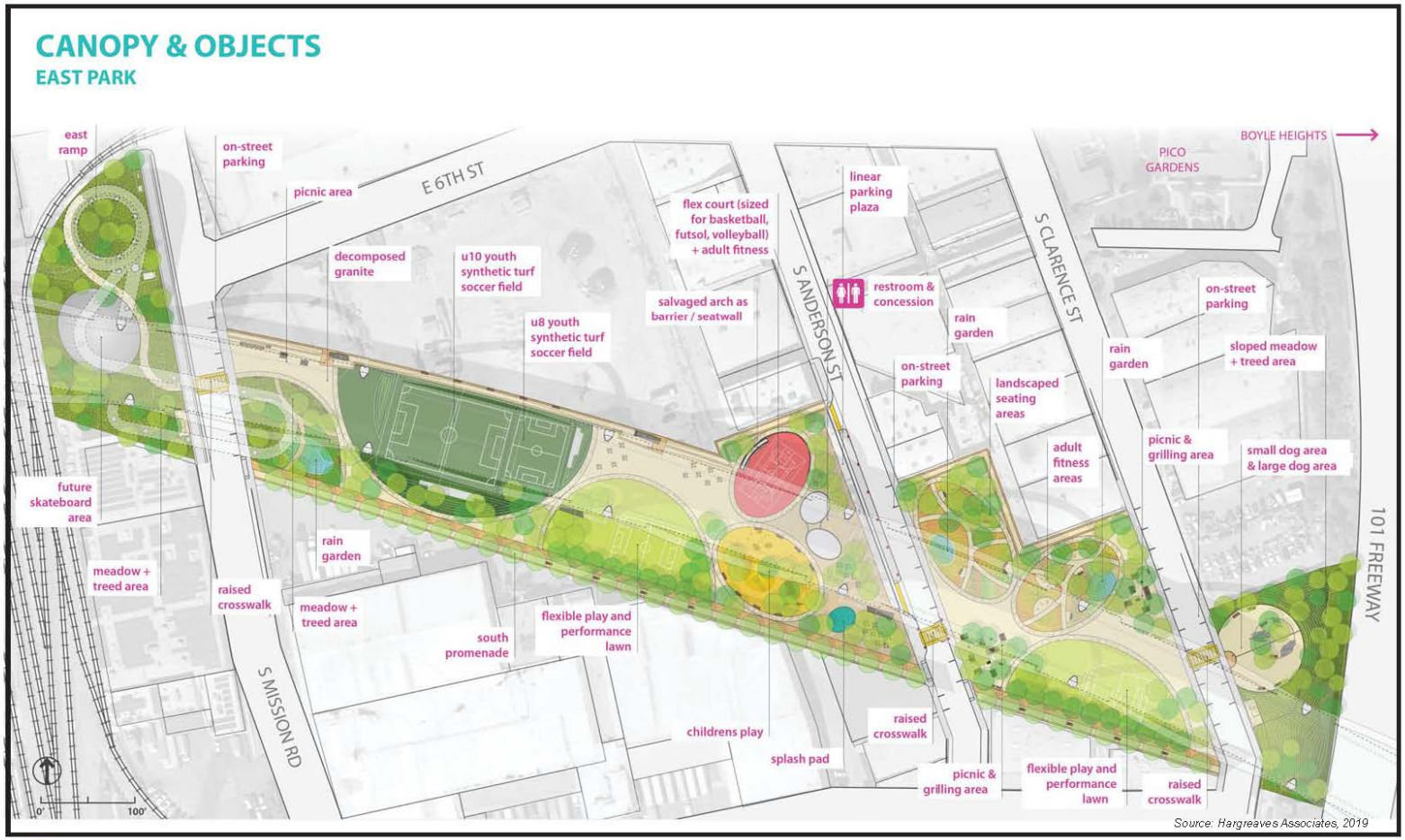

ENGINEERING
CITY OF LOS ANGELES

FIGURE 2-7. EAST PARK SITE PLAN
Sixth Street PARC Project

Figure 2-8: East Park – Soccer Fields

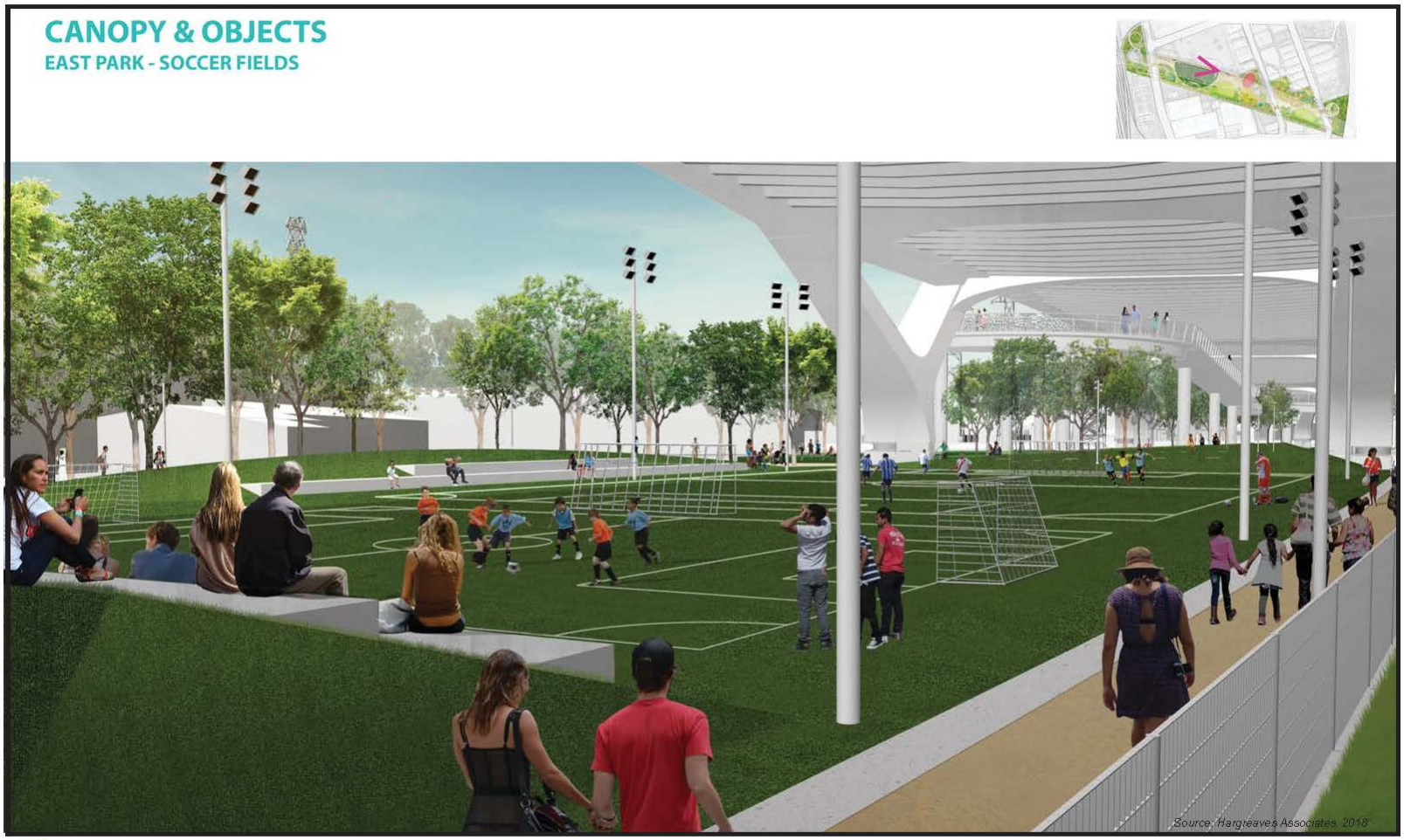

ENGINEERING
CITY OF LOS ANGELES

FIGURE 2-8. EAST PARK - SOCCER FIELDS
Sixth Street PARC Project

Figure 2-9: East Park – Children's Play Area & Plaza



ENGINEERING
CITY OF LOS ANGELES

FIGURE 2-9. EAST PARK - CHILDREN'S PLAY AREA & PLAZA
Sixth Street PARC Project

Figure 2-10: East Park – Dog Park



FIGURE 2-10. EAST PARK - DOG PARK
Sixth Street PARC Project

Figure 2-11: West Park Site Plan

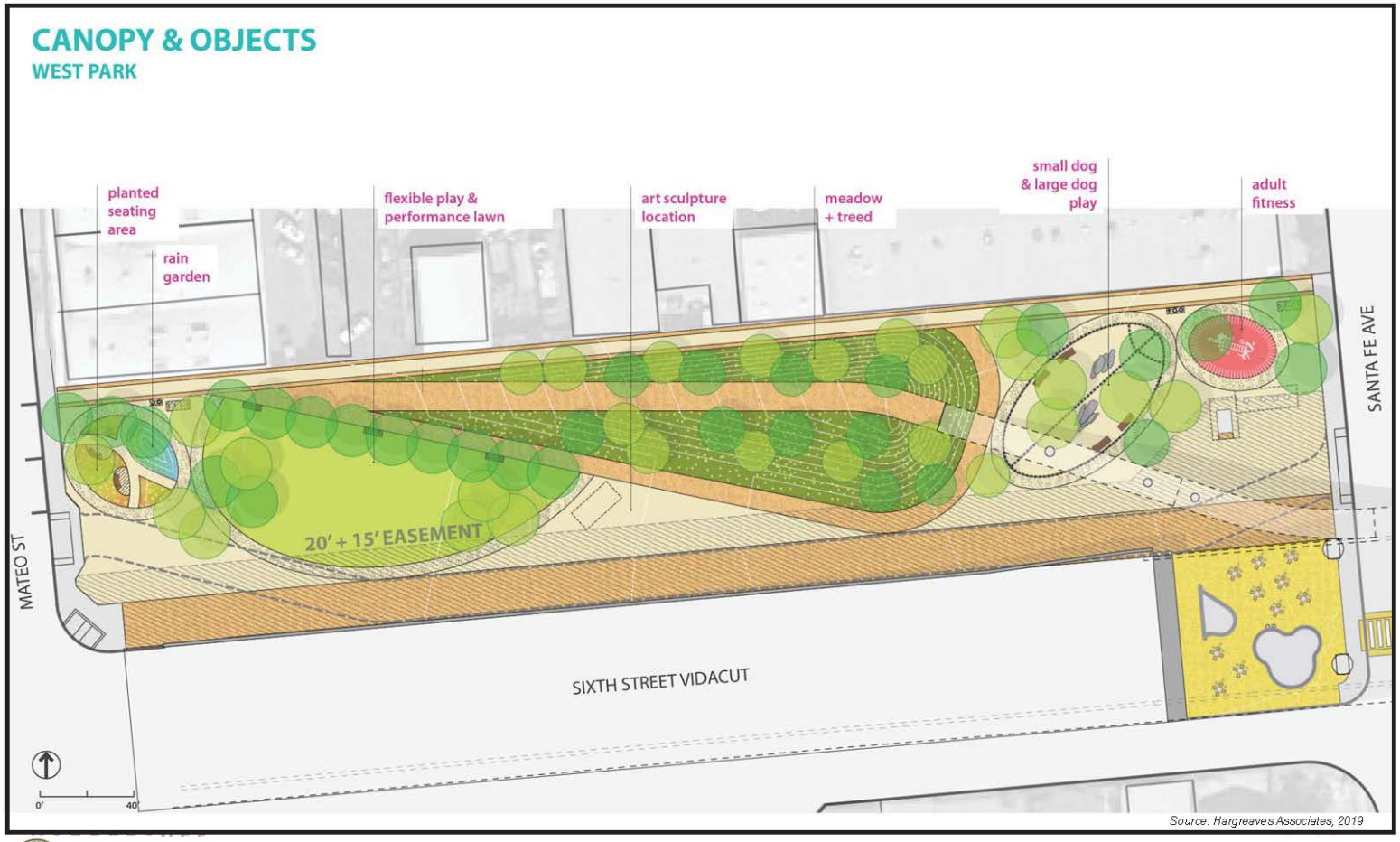

ENGINEERING
CITY OF LOS ANGELES

FIGURE 2-11. WEST PARK SITE PLAN
Sixth Street PARC Project

Figure 2-12: West Park – Aerial

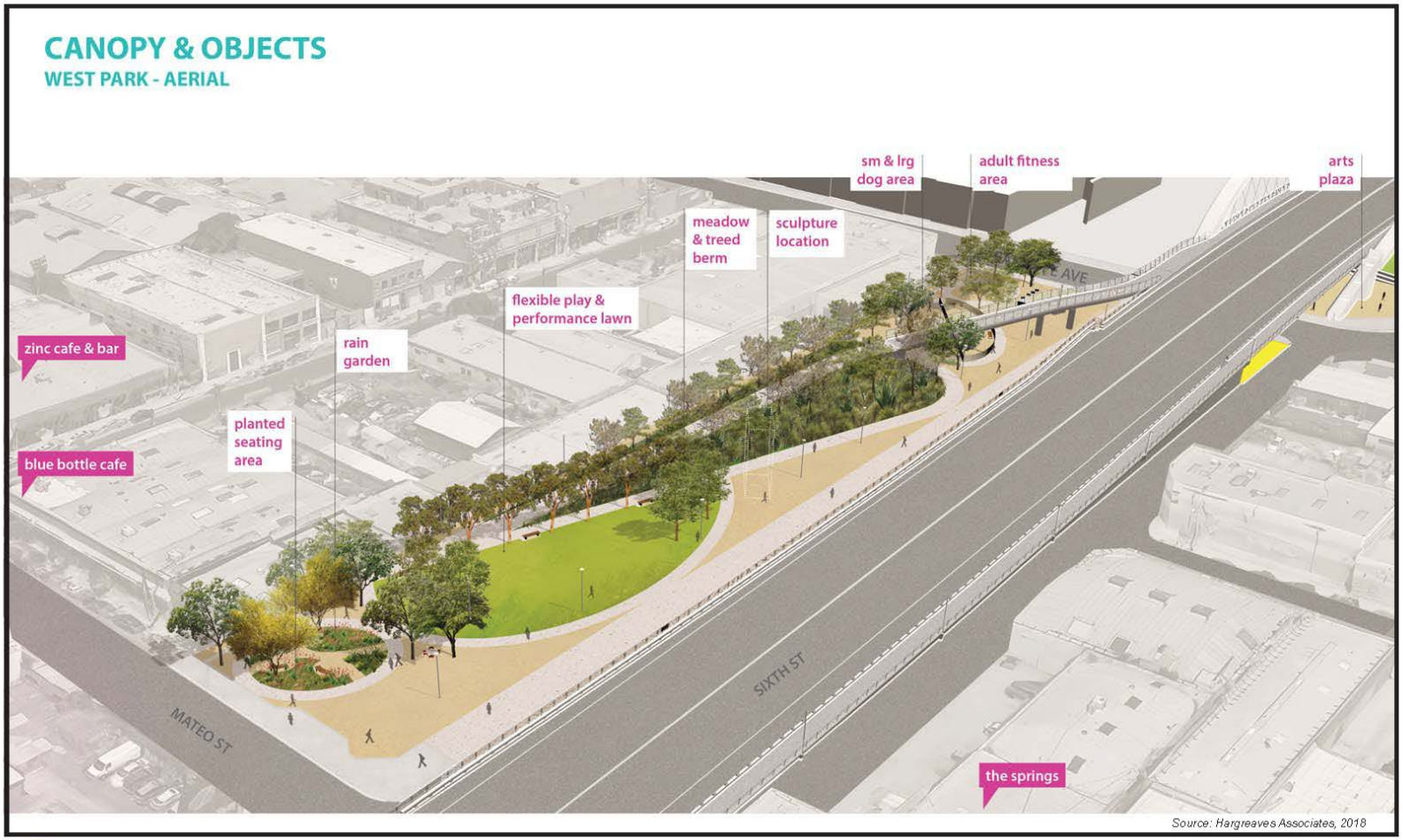

ENGINEERING
CITY OF LOS ANGELES

FIGURE 2-12. WEST PARK - AERIAL
Sixth Street PARC Project

Figure 2-13: West Park – View from Mateo Street



ENGINEERING
CITY OF LOS ANGELES

FIGURE 2-13. WEST PARK - VIEW FROM MATEO STREET
Sixth Street PARC Project

Figure 2-14: West Park – Sloped Walk from Viaduct



FIGURE 2-14. WEST PARK - SLOPED WALK FROM VIADUCT
Sixth Street PARC Project

Figure 2-15: Arts Plaza Site Plan

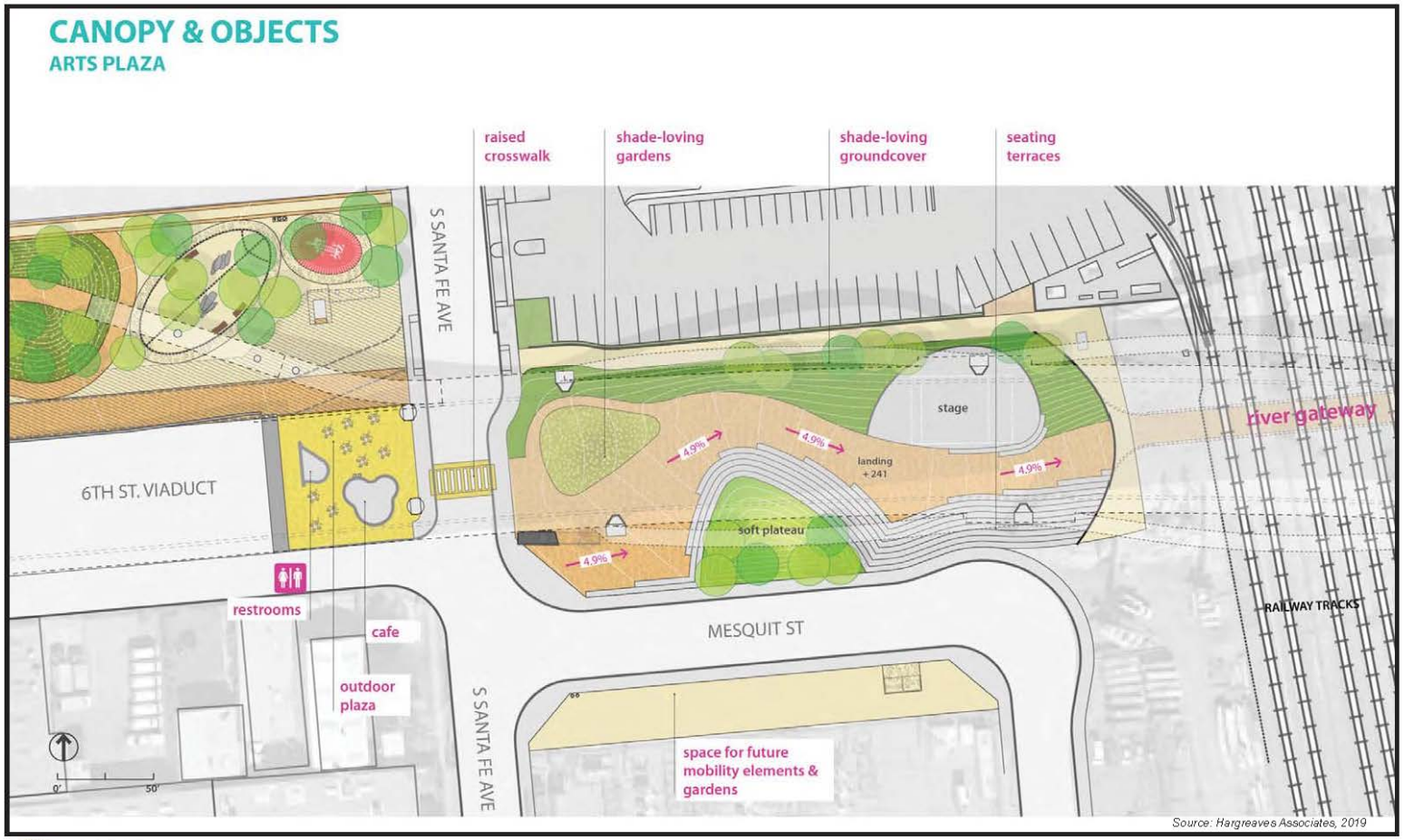

ENGINEERING
CITY OF LOS ANGELES

FIGURE 2-15. ARTS PLAZA SITE PLAN
Sixth Street PARC Project

Figure 2-16: Arts Plaza – Aerial

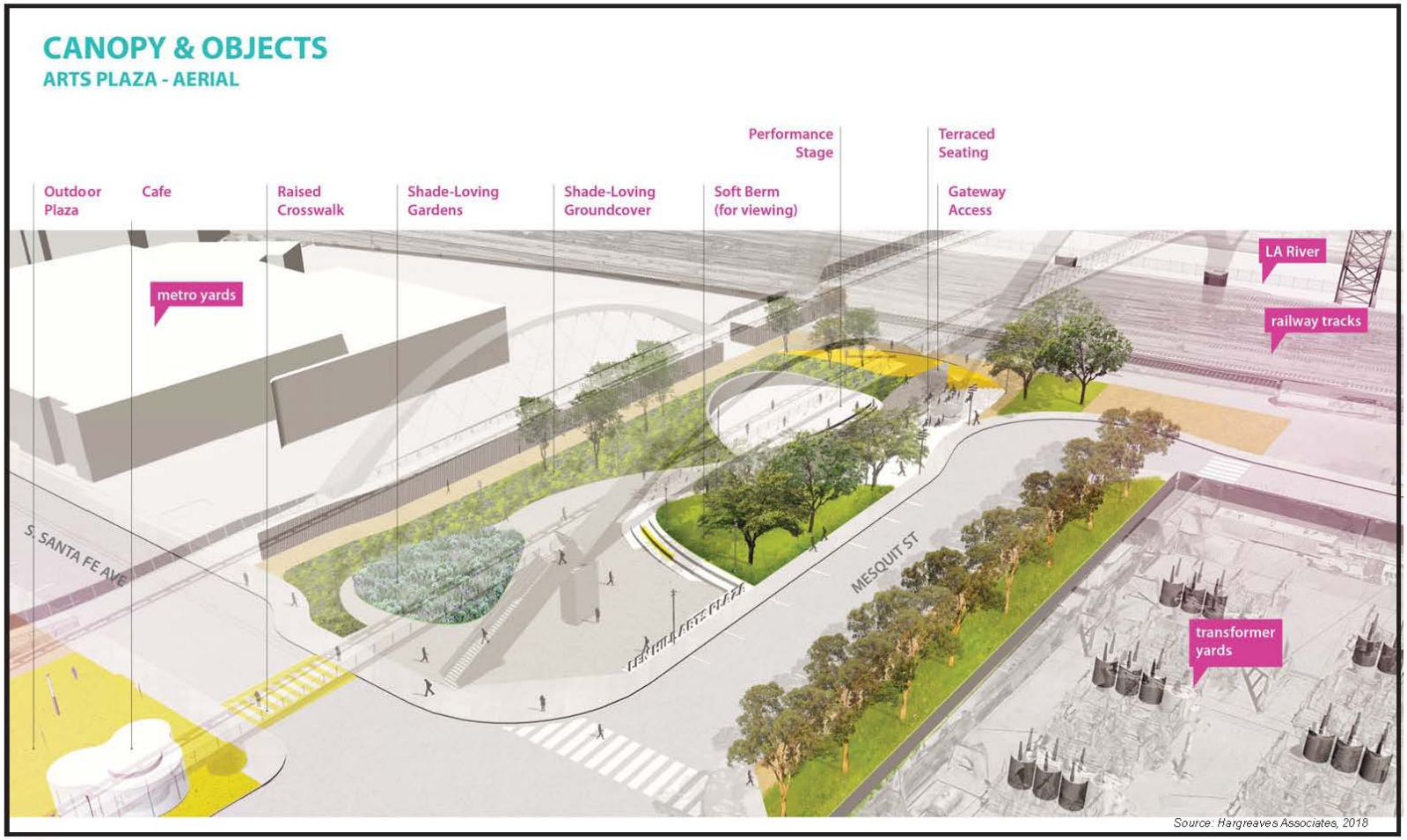

ENGINEERING
CITY OF LOS ANGELES

FIGURE 2-16. ARTS PLAZA - AERIAL
Sixth Street PARC Project

Figure 2-17: Arts Plaza – View of Performance Stage (Non-Event)



ENGINEERING
CITY OF LOS ANGELES

FIGURE 2-17. ARTS PLAZA - VIEW OF PERFORMANCE STAGE (NON-EVENT)
Sixth Street PARC Project

Figure 2-18: Arts Plaza – View of Performance Stage (Event)



FIGURE 2-18. ARTS PLAZA - VIEW OF PERFORMANCE STAGE (EVENT)
Sixth Street PARC Project

Figure 2-19: Arts Plaza – View from Upper Walkway (Non-Event)



ENGINEERING
CITY OF LOS ANGELES

FIGURE 2-19. ARTS PLAZA - VIEW FROM UPPER WALKWAY (NON-EVENT)
Sixth Street PARC Project

Figure 2-20: View from Upper Walkway (Event)



ENGINEERING
CITY OF LOS ANGELES

FIGURE 2-20. ARTS PLAZA - VIEW FROM UPPER WALKWAY (EVENT)
Sixth Street PARC Project

Chapter 3
Environmental Impact Analysis

3.1 Aesthetics

This section describes the affected environment and regulatory setting for Aesthetics related to the Project Area and surrounding area. In addition, this section describes the potential impacts related to Aesthetics that would result from the implementation of the proposed Project. As noted in the analysis below, impacts associated with Aesthetics during construction or operation of the proposed Project would be less than significant and no mitigation measures are required.

The information in this section is based on the Visual Impact Assessment (VIA) prepared for the proposed Project (GPA Consulting, 2019), located in Appendix B.

3.1.1 Introduction

3.1.1.1 Defining Quality and Character of Visual Resources

Visual Character

Visual character is described by the topography, land use, form, color, line, texture, and natural resources depicted in the view. Assessment of visual character is intended to be descriptive rather than evaluative. Visual character is based on defined attributes, such as physical traits; pattern character traits; and the dominance, scale, and diversity or continuity of visual elements.

Visual Quality

Visual quality describes the aesthetics of a view. Determining visual quality can be subjective because it is partly based on the viewer's idea of what constitutes a quality setting. To provide a more objective framework, this assessment combines the evaluative criteria (i.e., vividness, intactness, and unity) and qualitative rankings (i.e., low, medium, and high) presented in the Federal Highway Administration's (FHWA) *Visual Impact Assessment for Highway Projects*, along with the *L.A. CEQA Thresholds Guide* criteria. Though FHWA's guidelines are the accepted standard for evaluating the visual effects associated with highway and railroad projects, the guidelines also apply to a wide range of non-transportation projects.

The three criteria for evaluating visual quality include:

- **Vividness:** The visual power or memorability of landscape components as they combine in distinctive visual patterns.
- **Intactness:** The visual integrity of the natural and human-built landscape and its freedom from encroaching elements. Intactness can occur in well-kept urban and rural landscapes, as well as in natural settings.
- **Unity:** The visual coherence and compositional harmony of the landscape considered as a whole. It frequently attests to the careful design of individual human-made components in the landscape.

Views of high quality often have topographic relief, a variety of vegetation, rich colors, impressive scenery, and unique natural and/or built features. The FHWA evaluates visual quality based on an average of the ranking scales for vividness, intactness, and unity.

Viewer Response

Viewer response includes viewer exposure and viewer sensitivity. The assessment of these elements predicts how the public might react to visual changes brought about by a development project.

Viewer exposure measures the number of viewers exposed to the resource change, type of viewer activity, duration of their view, speed at which the viewer moves, and position of the viewer. In areas with high viewer exposure, early consideration of design, art, and architecture become more important. Depending on distance or intervening structures, viewers may experience varying degrees of visibility to and from a project.

Viewer sensitivity includes the viewer's concern for scenic quality and the viewer's response to changes in the visual resources that make up the view. Viewer sensitivity varies based on local values and goals. The perception of visual quality and the sensitivity of viewers to changes in visual quality varies based on the viewer's familiarity with the view, their sense of ownership of the view, and the nature of the viewer's activity while receiving the view. For example, residential viewers typically have a high sensitivity to visual quality and changes in visual quality because of their familiarity with the view over a period of time, investment in the area (e.g., homeowners or long-time residents), and sense of ownership of the view. In contrast, commuting motorists that travel for the purposes of getting from one place to another for work or errands would have an average level of sensitivity. However, motorists traveling for pleasure would be more sensitive to their surroundings. The level of sensitivity changes depending on the degree of familiarity the viewer has with the visual setting and the viewer's concern for scenic quality.

Key Views

Because analyzing all of the potential views of the proposed Project would be infeasible, key viewpoints were selected at five locations within the Project Area to represent the visual effects of the proposed Project. These key views also represent the primary viewer groups that could be affected by the proposed Project. For the purposes of this analysis, a view is considered a key view if at least one of the following circumstances applies:

- Visual resources are present, regardless of the quality of the view. The sensitivity of the affected viewer group is medium or high, and the duration of the view is long-term.
- The quality of the view is medium or high, regardless of whether visual resources are present. The sensitivity of the viewer group is medium or high, and the duration of the view is long-term.
- The view is distinct, clear, and unobstructed from the street to adjacent businesses, and is viewed regularly by a large number of commuters. In this case, the viewer sensitivity is medium, and the view is long-term.

For the purposes of this EIR, key observation points (KOPs) are the key views that are most representative of the visual character and quality of the Project Area. The five KOPs in the Project Area,

which were determined in the VIA prepared for the proposed Project, are described in more detail in Section 3.1.3.1.

3.1.2 Regulatory Setting

3.1.2.1 City of Los Angeles Municipal Code

The City of Los Angeles Municipal Code (LAMC) includes regulations pertaining to aesthetics and visual quality. The following Municipal Code sections provide standards for the design, location, and arrangement of visual resources within a project area, including zoning and land uses, landscaping, street lighting systems, etc.

LAMC Chapter 1, Article 2, Section 12.04.05 – Open Space (OS) Zone

Open Space Zoning provides regulations for publicly owned land in order to implement the City's adopted General Plan, including the Open Space, Conservation and Public Recreation Elements. Implementation of the General Plan serves to protect and preserve natural resources and natural features of the environment; provide outdoor recreation opportunities and advance the public health and welfare; enhance environmental quality; encourage the management of public lands in a manner which protects environmental characteristics; and encourage the maintenance of open space uses on all publicly owned park and recreation land.

LAMC Chapter 1, Article 2, Section 12.42E2

All planting shall be coordinated with all signs and lighting on a project site, both upon installation of the planting and upon the planting reaching its maximum designed size. All shall be designed such that one will not interfere with the other, nor require excessive maintenance.

LAMC Chapter 1, Article 2, Sec. 12.21A5(k)

All lights used to illuminate a parking area shall be designed, located and arranged so as to reflect the light away from any streets and any adjacent premises.

LAMC Chapter 1, Article 3, Section 13.17A – River Improvement Overlay District

The purpose of a River Improvement Overlay (RIO) District is to:

- Support the goals of the Los Angeles River Revitalization Master Plan
- Contribute to the environmental and ecological health of the City's watersheds
- Establish a positive interface between river adjacent property and river parks and/or greenways
- Promote pedestrian, bicycle and other multi-modal connection between the river and its surrounding neighborhoods
- Provide an aesthetically pleasing environment for pedestrians and bicyclists accessing the river area
- Provide safe, convenient access to and circulation along the river
- Promote the river identity of river adjacent communities

LAMC Chapter 1, Article 3, Section 13.17F – River Improvement Overlay District

A Project shall conform to all of the following RIO district development regulations:

- Landscaping
    - Landscaping shall conform to the following regulations: 75 percent of any Project's newly landscaped area shall be planted with any combination of the following: native trees, plants and shrubs, or species defined as WatershedWise, or species listed in the Los Angeles County River Master Plan Landscaping Guidelines and Plant Palettes.
- Screening/Fencing
    - Electrical transformers, mechanical equipment, water meters and other equipment shall be screened from public view. The screening may be opaque or perforated, provided that not more than 50 percent of the face is open. The screen shall be at least 6 inches taller than the equipment and not more than 2 feet taller than the equipment.
- With the exception of single-family homes, all projects facing a street that cross the river or terminate at the river or a river frontage road shall have all fences within the front or side yards visible from said street consistent with the fence designs identified in the Los Angeles County River Master Plan Landscape Guidelines Exterior Site Lighting.
    - All site and building mounted lighting shall be designed such that it produces a maximum initial luminance value no greater than 0.20 horizontal and vertical foot candles at the site boundary, and no greater than 0.01 horizontal foot candles 15 feet beyond the site. No more than 5.0 percent of the total initial designed lumens shall be emitted at an angle of 90 degrees or higher from nadir (i.e., straight down).
    - All low-pressure sodium, high pressure sodium, metal halide, fluorescent, quartz, incandescent greater than 60 watts, mercury vapor, and halogen fixtures shall be fully shielded.
- Projects located partially or wholly within the Inner Core shall also conform to the following regulations
    - Landscape Buffer. All Projects shall provide a 10-foot landscape buffer as measured from the Project's property line adjacent to the river except where a roadway is located within that 10 feet. New building structures or parking shall not be permitted within the 10-foot landscape buffer.
    - Fence. All fences located within 10 feet of the river corridor or a river frontage road street or any adjacent street shall be consistent with the fence designs identified in the Los Angeles County River Master Plan Landscape Guidelines. With the exception of single-family homes, all Projects shall be required to maintain a visual connection between the river corridor and/or frontage road and the abutting property.
    - Fence Height. All fences located less than 10 feet from the river shall be no higher than 6 feet in height. All fences located at the 10-foot landscape buffer setback line shall not exceed 10 feet in height.

- Gates. All gates or fences located within 10 feet of the river or a river frontage road shall be consistent with the gate designs identified in the Los Angeles County River Master Plan Landscape Guidelines. The gate height shall be consistent with the adjacent fence height and the gate shall be designed so as not to encroach into either the river, street or public right-of-way when opened.
- River Access. With the exception of single-family homes, all river adjacent projects that partially or wholly abut the river shall have Americans with Disabilities Act compliant access gates from their property to the river. The gates shall also be accessible for bicycle entry. Access may be controlled and limited to residents, employees and/or visitors of the project.
- Riverfront Door. All projects located either adjacent to the river corridor or frontage road shall include a riverfront door visible to, and accessible from, the river corridor or frontage road.

LAMC Chapter 1, Article 7, Sec. 17.08C

Plans for street lighting system shall be submitted to and approved by the Bureau of Street Lighting.

LAMC Chapter 9, Article 3, Section 93.0117

No person shall construct, establish, create, or maintain any stationary exterior light source that may cause the following locations to be either illuminated by more than two foot-candles (21.5 lx) of lighting intensity or receive direct glare from the light source. Direct glare, as used in this subsection is a glare resulting from high luminance or insufficiently shielded light sources that is in the field of view.

- Any ground surface intended for use but not limited to recreation, barbecue, or lawn areas on any other property containing a residential unit or units

3.1.2.2 City of Los Angeles General Plan

As required by the State of California, the City's General Plan addresses goals, policies, and standards related to land use, circulation, housing, conservation, open space, noise, and safety (City of Los Angeles, 2017). To address goals that meet the unique needs of the City, the General Plan also includes elements related to health and wellness, air quality, historic preservation and cultural resources, and public facilities and services. Several of the General Plan elements are currently being updated. The General Plan elements that pertain to Aesthetics are described in more detail in the following sections.

Open Space Element

The Open Space Element of the City's General Plan provides information to guide decision makers and interested citizens regarding the identification, preservation, conservation, and acquisition of open space in the City (Los Angeles Department of City Planning, 1973). The Element aims to ensure that the City has sufficient open space to meet its recreational, environmental, health, and safety needs. In addition, the Element aims to conserve and preserve the City's environmental resources, as well as provide open spaces that contribute to the City's identity, form, and visual framework. Specific policies pertaining to Aesthetics include (a) consideration of aesthetics in grading plans, and (b) the establishment of scenic corridors. The following Open Space goals, objectives, and policies pertaining to aesthetics are applicable to the proposed Project:

Goals:

- Provide an open space system which provides identity, form, and a visual framework to the City.

Objectives:

- Identify the need and methods of providing for open space in proposed centers and impacted areas of the City. Impacted areas are generally characterized by factors including low incomes, high incidence of crime, and low educational achievement.

Policies:

- The amount of earth moved in grading operations within desirable open space areas should be limited and closely controlled. Aesthetic consideration should be incorporated into the City's approval of grading plans in these areas.
- Scenic corridors should be established where designated. Each corridor should be specifically "tailored" to the needs of the area and the scenic values to be preserved. Specific studies including implementing ordinances should be prepared for each scenic corridor.

Central City North Community Plan

The Central City North Community Plan summarizes the most significant land use issues and opportunities that the community faces (City of Los Angeles, 2000). Among these issues, the Community Plan includes goals, objectives, and policies related to provide park facilities and open space for the purposes of serving the recreational, environmental, and health needs of the community, as well as protecting environmental and aesthetic resources. The Central City North Community Plan is being updated, but the update is not anticipated to be complete before the public comment period for the Draft EIR Specific policies pertaining to Aesthetics within the Community Plan include: (a) ensuring that parks are adequately illuminated for safe use at night, and (b) providing a visual balance between open space and urban development within the Community Plan area. The following aesthetics-related planning goals, objectives, and policies are presented in the community plan:

<u>Recreation and Parks Facilities</u>

Goals:

- 4: Adequate recreation and park facilities which meet the needs of the residents in the Plan Area.

Objectives:

- 4-1: Conserve, maintain and better utilize existing recreation and park facilities which promote the recreational needs of the community.

Policies:

- 4-1.1: Preserve the existing recreational facilities and park space.

Open Space

Goals:

- 5: A community with sufficient open space in balance with development to serve the recreational, environmental and health needs of the community and to protect environmental and aesthetic resources.

Objectives:

- 5-1: Preserve existing open space resources and where possible develop new open space.
- 5-2: Ensure the accessibility, security and safety of parks by their users, particularly families with children and senior citizens.

Policies:

- 5-1.1: Encourage the retention of passive and visual open space which provides a balance to the urban development of the Plan Area.
- 5-2.1: Ensure that parks are adequately illuminated for safe use at night where appropriate.

Boyle Heights Community Plan

The Boyle Heights Community Plan sets forth goals, objectives, policies, and implementation programs that pertain to Boyle Heights. The Boyle Heights Community Plan is being updated, but the update is not anticipated to be complete before the public comment period for the Draft EIR. The following aesthetics-related planning goals, objectives, and policies are presented in the community plan (City of Los Angeles, 1998):

Objectives:

- Provide adequate recreation and park facilities which meet the needs of the residents in the community.
- Conserve, maintain, and better utilize existing recreation and park facilities which promote the recreational experience.

Policies:

- Preserve and improve the existing recreation and park facilities and park space.

The Boyle Heights Community Plan is currently being updated, with a Draft Boyle Heights Community Plan released in 2017.

3.1.2.3 Los Angeles River Revitalization Master Plan

The Los Angeles River Revitalization Master Plan (LARRMP) includes plans to construct a continuous river greenway, providing habitat restoration, open spaces, and pedestrian and bicycle paths along the Los Angeles River (City of Los Angeles, 2007). The Plan includes a 32-mile long and 1-mile wide planning area, with goals that include, but are not limited to, establishing guidelines for land use and development around the LA River; enhancing and improving communities adjacent to the river; improving public access to the river; and providing recreation and open space. The LARRMP includes requirements for landscaped areas, guidelines for improvements to the visibility of the LA River, and guidelines for

introducing art. The following goals and recommendations within the LARRMP are applicable to the visual quality and character of the Sixth Street PARC Project:

Goal 1: Create a continuous river greenway

- Establish a River Buffer area within, and adjacent to, the Los Angeles River that meets riparian or upland habitat requirements.
- Extend open space, bike paths, and multi-use trails into the tributaries.

Goal 2: Connect neighborhoods to the river

- Provide green arterial connections to the Los Angeles River. Where suitable, landscaped areas should be designed to meet upland habitat requirements.
- Create safe, non-motorized routes between the Los Angeles River and cultural institutions, parks, civic institutions, transit-oriented development, schools, transit hubs, and commercial and employment centers within one mile of the Los Angeles River.
- Increase direct pedestrian and visual access to the Los Angeles River.

Goal 3: Extend open space and water quality features into neighborhoods

- Increase open space throughout the Los Angeles River Corridor. Where suitable, landscaped areas should be designed to meet upland habitat requirements.
- Provide a diverse system of interconnected parks, recreational fields, and outdoor classrooms.
- Incorporate best management practices in streetscapes and all public landscapes.

Goal 4: Enhance river identity

- Identify physical opportunities to improve the visibility of the Los Angeles River Corridor.
- Identify opportunities to improve public perception of the Los Angeles River Corridor.
- Encourage local and diverse character within the Los Angeles River Corridor.

Goal 5: Incorporate public art along the river

- Identify physical opportunities to introduce art along the Los Angeles River.
- Create a River arts program that reflects and celebrates the history of the Los Angeles River and the diverse cultures of its surrounding neighborhoods.

3.1.2.4 Bureau of Street Lighting Design Standards and Guidelines

The Bureau of Street Lighting *Design Standards and Guidelines* manual provides standards for engineers with regards to designing street lighting systems (Bureau of Street Lighting, 2007). The manual provides approval requirements; illumination standards for various areas, roadways, and pedestrian walkways; design considerations; and equipment selection standards.

3.1.2.5 LA River Design Guidebook

The *LA River Design Guidebook* provides design recommendations that complement the Los Angeles River Revitalization Master Plan and the design guidelines associated with the RIO district (City of Los Angeles, 2016). The Guidebook is intended for use by the communities of Boyle Heights, Arts District, Lincoln Heights, and Chinatown East, and incorporates the input of residents, stakeholders, and representatives from these communities. The *LA River Design Guidebook* provides recommendations for improving and unifying the aesthetic quality of the LA River and surrounding communities.

3.1.2.6 Los Angeles County: LA River Master Plan

The *Los Angeles County LA River Master Plan* was originally published in 1996 to provide for the optimization and enhancement of aesthetic, recreational, flood control, and environmental values by creating a community resource, enriching the quality of life for residents, and recognizing the river's primary purpose for flood control (Los Angeles County Department of Public Works, 1996). The plan encompasses all 51-miles of the river, in addition to the Tujunga Wash, which is 9 miles long. The river touches 13 cities and 9 Los Angeles City Council Districts, all of which are addressed in the Master Plan document. The LA River Master Plan goals aim to:

- Ensure flood control and public safety needs are met.
- Improve the appearance of the river and the pride of local communities in it.
- Promote the river as an economic asset to the surrounding communities.
- Preserve, enhance, and restore environmental resources in and along the river.
- Consider stormwater management alternatives.
- Ensure public involvement and coordinate Master Plan development and implementation among jurisdictions.
- Provide a safe environment and a variety of recreational opportunities along the river.
- Ensure safe access to and compatibility between the river and other activity centers.

The LA River Master Plan is currently undergoing a comprehensive update that covers all 51 miles of the river. The update will not be complete prior to this project's Draft EIR being made available to the public.

3.1.3 Environmental Setting

The visual setting for the proposed Project is defined below in terms of (a) key views; (b) existing visual character and quality; (c) scenic resources, scenic vistas, and other visual resources.

3.1.3.1 Key Views

The Project Area includes three segments: West Park, Arts Plaza and River Gateway, and East Park. All Key Observation Points (KOP) have been assessed from the viewpoint of each segment. A KOP identifies key views that document the visual character and quality of the proposed Project in highly representative ways. The analysis identified five such specific views that would be altered to some degree by the

proposed Project. The following KOPs were chosen to represent the clearest display of visual effects of the Project Area at representative locations within its setting (See **Figure 3.1-1,** KOPs):

- KOP 1: Mateo Street and East Sixth Street (West Park) (See **Figure 3.1-2**, KOP 1 [View East from Mateo Street])
- KOP 2: Santa Fe Avenue and Mesquit Street (Arts Plaza and River Gateway) (See **Figure 3.1-3**, KOP 2 [View East from Santa Fe Avenue])
- KOP 3: East Sixth Street and South Mission Road (East Park) (See **Figure 3.1-4**, KOP 3 [View West from Mission Road])
- KOP 4: Anderson Street, between Sixth Street and Jesse Street (East Park) (See **Figure 3.1-5**, KOP 4 [View West from Anderson Street])
- KOP 5: Clarence Street, between Sixth Street and Jesse Street (East Park) (See **Figure 3.1-6**, KOP 5 [View West from Clarence Street] and **Figure 3.1-7**, KOP 5 Towards U.S. 101 Freeway [View East from Clarence Street])

3.1.3.2 Existing Visual Character and Quality

For all five KOPs, the existing visual character is the current construction site for the Viaduct Replacement Project, which is located in a heavily industrialized area of low visual quality, and low vividness and unity.

Figure 3.1-1: KOPs

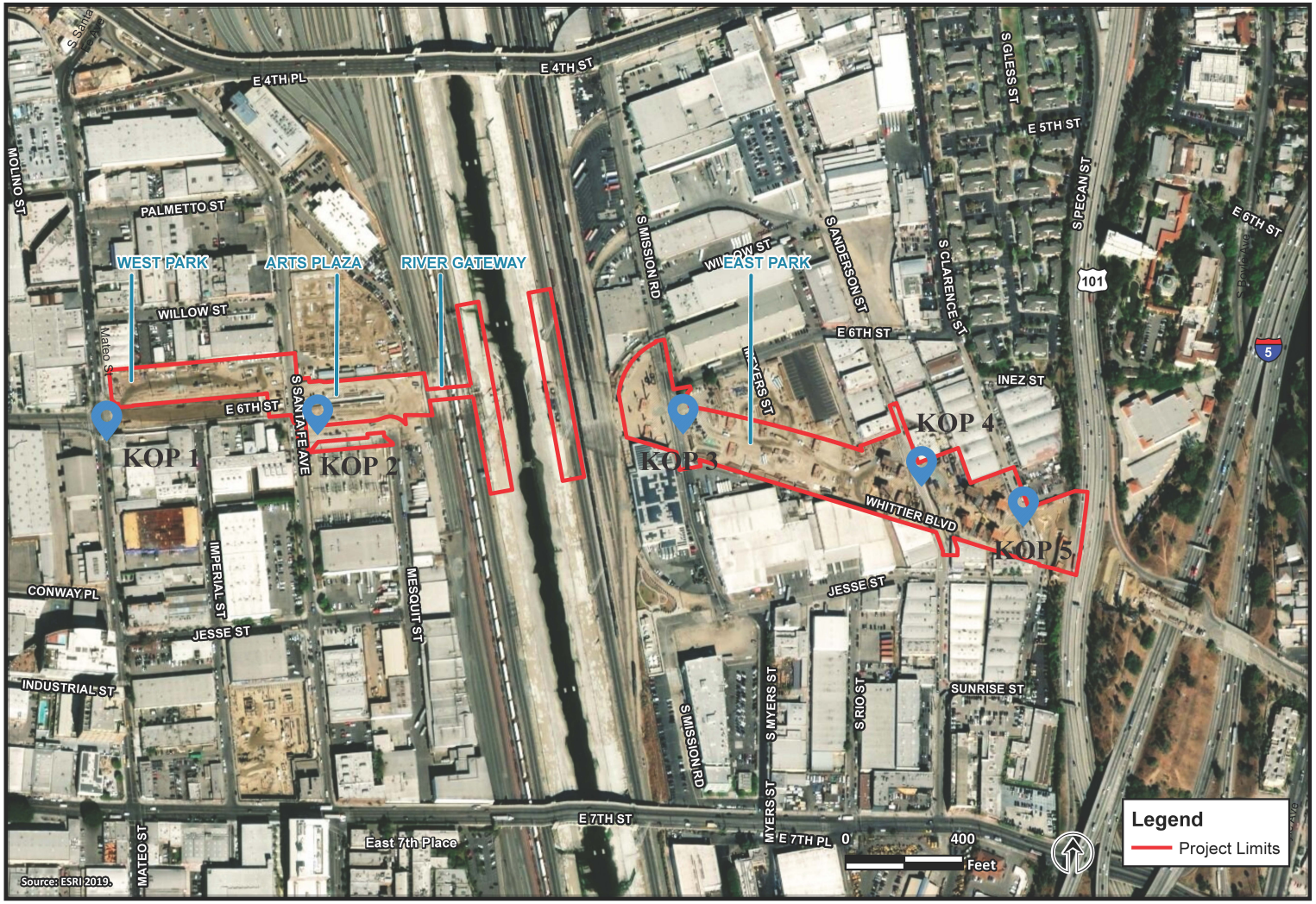

ENGINEERING
CITY OF LOS ANGELES

FIGURE 3.1-1. KEY OBSERVATION POINTS
Sixth Street PARC Project

Figure 3.1-2: KOP 1 (View East from Mateo Street)



Source: (GPA Consulting, 2019)

Figure 3.1-3: KOP 2 (View East from Santa Fe Avenue)

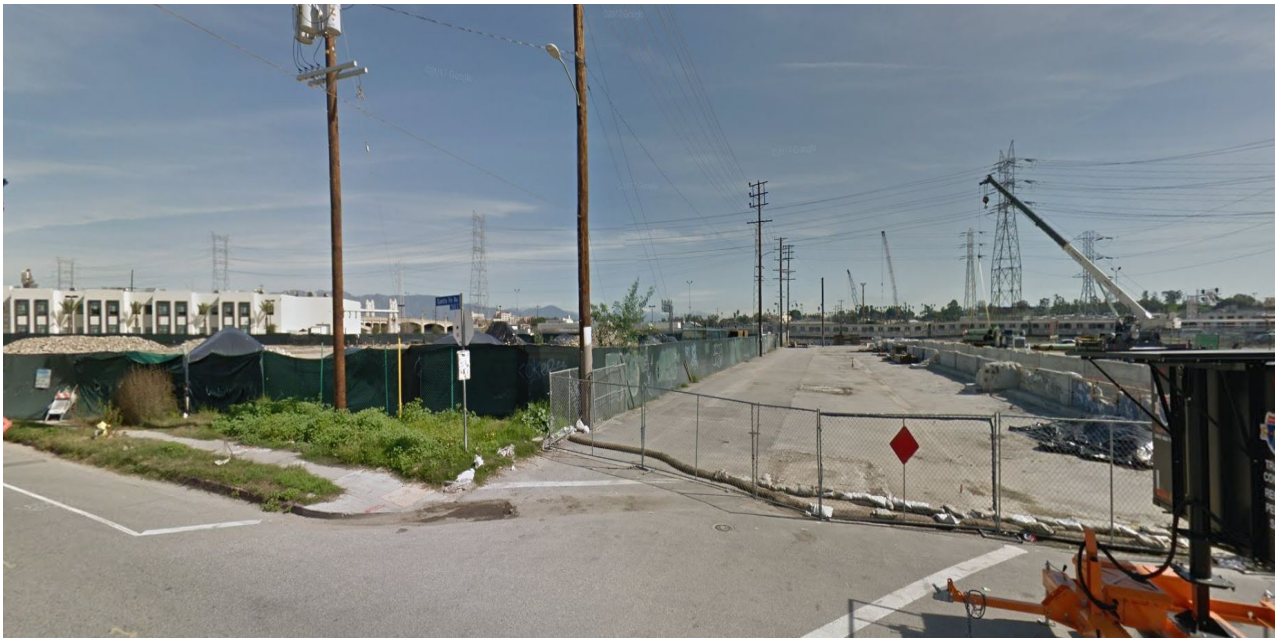

Source: (GPA Consulting, 2019)

Figure 3.1-4: KOP 3 (View West from Mission Road)



Source: (GPA Consulting, 2019)

Figure 3.1-5: KOP 4 (View West from Anderson Street)



Source: (GPA Consulting, 2019)

Figure 3.1-6: KOP 5 (View West from Clarence Street)



Source: (GPA Consulting, 2019)

Figure 3.1-7: KOP 5 Towards U.S. 101 Freeway (View East from Clarence Street)



Source: (GPA Consulting, 2019)

West Park

KOP 1: Mateo Street and Sixth Street Bridge

KOP 1 is located at the intersection of Mateo Street and East Sixth Street (at the western extent of the former Viaduct). This industrialized area was the location of the former Viaduct, which was demolished in 2016, and was also occupied by multiple warehouses and commercial storage facilities that were acquired as part of the Viaduct Replacement Project. The existing view from KOP 1 to the east is the construction site for the Viaduct Replacement Project, which includes fencing around an area of bare ground with staged construction equipment and materials (See **Figure 3.1-2**). KOP 1 includes views of neighboring industrial and commercial buildings to the west, north, and south, including stores, warehouses, and a gym.

Arts Plaza and River Gateway

KOP 2: Santa Fe Avenue and Mesquit Street

KOP 2 is located at the intersection of Santa Fe Avenue and Mesquit Street. This industrialized area was the location of the former Viaduct and was also occupied by multiple warehouses and commercial storage facilities that were acquired as part of the Viaduct Replacement Project. The existing view from KOP 2 includes the construction site for the Viaduct Replacement Project to the west and east, which includes fencing around an area of bare ground with staged construction equipment and materials (See **Figure 3.1-3**). To the northeast, a fenced construction site for a Los Angeles County Metropolitan Transportation Authority (Metro) maintenance facility is visible. KOP 2 also includes views of neighboring industrial and commercial buildings to north and south, including a gallery and warehouses. To the southeast, the Los Angeles Department of Water and Power River Switching Station, including power lines and transformers, is visible. There are several railway tracks further east, but their visibility is limited from KOP 2.

East Park

KOP 3: Sixth Street and South Mission Road

KOP 3 is located at the intersection of East Sixth Street and South Mission Road. This area was previously occupied by commercial warehouses and truck yards, as well as an empty space underneath the former Viaduct, which surrounding businesses used to park their vehicles. The existing view from KOP 3 consists of a construction site for the Viaduct Replacement Project to the west, east, and south, which includes fencing around an area of bare ground with staged construction equipment and materials (See **Figure 3.1-4**). Visible vertical elements include power poles and the support structures for the Viaduct Replacement Project. KOP 3 also features views of neighboring industrial and commercial buildings to the north and south, including several warehouses and commercial storage facilities. There are several railway tracks further west, but their visibility is limited from KOP 3.

KOP 4: Anderson Street, between Sixth Street and Jesse Street

KOP 4 is located at Anderson Street between East Sixth Street and Jesse Street. This area was previously occupied by commercial warehouses, industrial facilities, and on-street parking, as well as an empty space underneath the former Viaduct that was used by the surrounding businesses to park their personal vehicles. The existing view from KOP 4 includes the construction site for the Viaduct Replacement

Project, which includes fencing around an area of bare ground with staged construction equipment and materials (See **Figure 3.1-5**). KOP 4 also includes views of neighboring industrial and commercial buildings to the north and south, including several warehouses and commercial storage facilities. The Downtown LA skyline is visible to the west. A berm vegetated with shrubs, grasses, and palm trees adjacent to U.S. 101 is visible to the east.

KOP 5: Clarence Street, between Sixth Street and Jesse Street

KOP 5 is located at Clarence Street between East Sixth Street and Jesse Street (at the eastern extent of the former Viaduct). This area was previously occupied by commercial warehouses, industrial facilities, and on-street parking, as well as an empty space underneath the former Viaduct that was used by the surrounding businesses to park their personal vehicles. The existing view from KOP 5 includes the construction site for the Viaduct Replacement Project to the west and east, which includes fencing around an area of bare ground with staged construction equipment and materials (See **Figure 3.1-6** and **Figure 3.1-7**). KOP 5 also includes views of neighboring industrial and commercial structures to the north and south, including several various warehouses and commercial storage facilities. A berm vegetated with shrubs, grasses, and palm trees adjacent to U.S. 101 is visible to the east.

3.1.3.3 Scenic Resources, Scenic Vistas, and Other Visual Resources

There are no officially designated scenic vistas, resources, or highways that are within the Project Area or visible from the Project Area. Looking west, views of the Downtown LA skyline are visible from several of the KOPs within the Project Area. The Downtown LA skyline could be considered a valued landscape by residents, pedestrians, bicyclists, and motorists of the Central City North and Boyle Heights neighborhoods. The skyline consists of numerous buildings and skyscrapers of visual prominence, including the U.S. Bank Tower, the Wilshire Grand Center, the Wells Fargo Tower, the Aon Center, and the Gas Company Tower, and other structures in Downtown Los Angeles. No officially designated scenic resources, vistas, or corridors have been identified in the Project Area, or are visible from the Project Area.

3.1.4 Environmental Impact Analysis

3.1.4.1 Methodology

Screening criteria pertaining to aesthetics, existing features in the visual setting, effects on scenic resources, and obstruction of views from the *L.A. CEQA Thresholds Guide* (City of Los Angeles, 2006) and State CEQA Statute (Public Resources Code 21000-21189) and Guidelines (California Code of Regulations, Title 14, Division 6, Chapter 3, Sections 15000-15387) provide the key analytical framework for this section, and guide the process for the proposed Project. This is augmented by the methodology developed by the Federal Highway Administration (FHWA), which has become the industry standard for performing visual impact assessments for local, non-highway related projects. The FHWA methodology calls for analysis of a project's viewshed (i.e., those areas that can be easily seen within a project's setting), using the criteria vividness, intactness, and visual unity captured in key views to assess the level of visual quality present, both before and after a project is implemented. A viewshed comprises all of the surface areas visible from an observer's viewpoint. The viewshed also accounts for the locations of viewers likely to be affected by visual changes brought about by the proposed Project. Within the evaluative framework,

changes to the quality and character of visual resources in the viewshed are assessed with respect to viewer response, as discussed in the following sections.

3.1.4.2 Screening Analysis

Several impacts and corresponding thresholds of significance in the following section were eliminated from further analysis in this EIR. Topics were eliminated if the IS for the proposed Project concluded there would be "No Impact," or if impacts were identified to be "Less Than Significant… and will not be discussed further in the EIR." Therefore, only the topics described in the section below were determined to require further analysis in this EIR. A copy of the Initial Study, which contains the eliminated topics, is provided in **Appendix A**.

3.1.4.3 Thresholds of Significance

According to Appendix G of the CEQA Guidelines and the *L.A. CEQA Thresholds Guide*, the proposed Project would have a significant impact on Aesthetics if it would:

I(a) Have a substantial adverse effect on a scenic vista.

I(c) Substantially degrade the existing visual character or quality of public views of the site and its surroundings. (Public views are those that are experienced from a publicly accessible vantage point). If the project is in an urbanized area, conflicts with applicable zoning and other regulations governing scenic quality.

I(d) Create a new source of substantial light or glare which would adversely affect day or nighttime views in the area.

A.4 Nighttime Illumination. The determination of significance shall be made on a case-by-case basis, considering the following factors:

- The change in ambient illumination levels as a result of project sources; and
- The extent to which project lighting would spill off the project site and affect adjacent light sensitive areas.

3.1.4.4 Construction Impacts

I(a): Have a substantial adverse effect on a scenic vista.

There are no officially designated scenic vistas, resources, or highways that are within the Project Area or visible from the Project Area. However, the Downtown LA skyline could be considered a valued viewshed by residents, pedestrians, bicyclists, and motorists of the Central City North and Boyle Heights neighborhoods.

Construction equipment (e.g., grading excavators, scrapers, dozers, tractors, loaders, backhoes, forklifts, and portable generators) would be temporarily present in the Project Area for a period extending up to approximately two years for Phase I and six months for Phase II. Construction activities would be short-term and would not have permanent effects on the Downtown LA skyline. In addition, construction equipment would not introduce new vertical elements because construction equipment is already present in the Project Area as part of the existing construction site for the Viaduct Replacement Project.

Therefore, views to the Downtown LA skyline would not change substantially when compared to existing conditions. Impacts would be less than significant and no mitigation is required.

I(c): Substantially degrade the existing visual character or quality of public views of the site and its surroundings. (Public views are those that are experienced from a publicly accessible vantage point). If the project is in an urbanized area, conflict with applicable zoning and other regulations governing scenic quality.

The Project Area is in an urbanized area that includes the following land use designations: Limited Industrial (zoned M1), Light Industrial (zoned M2), Heavy Industrial (zoned M3), Open Space (zoned OS) within the LA River, and Public Facilities (zoned PF). In addition, the entire Project Area west of U.S. 101 is zoned RIO. Los Angeles zoning code and regulations would not prohibit any of the proposed construction activities. Staging during construction of the proposed Project would be coordinated with the construction of the Viaduct Replacement Project; therefore, the proposed Project would not require the additional use or acquisition of public space for equipment and vehicles.

Short-term construction impacts to the existing scenic quality of the Project Site and its surrounding area would be temporary in nature and all construction equipment and machinery would be removed upon completion of the project. The construction area would be fenced to obscure views of construction activities, materials, and staged equipment. In addition, the Project Area currently contains equipment and machinery that are being used for the construction of the Viaduct Replacement Project. Therefore, construction of the proposed Project would not result in substantial visual changes that would conflict with applicable zoning and other regulations governing scenic quality. Impacts would be less than significant, and no mitigation is required.

Construction of the proposed Project would require the use of construction vehicles that would include cranes and drill rig trucks, among other vehicles and equipment, that may exceed 60 feet in height above ground elevation. However, shading from construction vehicles would be temporary due to the constant mobility of the vehicles throughout the Project Site. Therefore, construction equipment and vehicles related to the proposed Project would not result in a significant impact on shading in the project area, during the construction of the proposed Project. Impacts would be less than significant, and no mitigation is required.

I(d): Create a new source of substantial light or glare which would adversely affect day or nighttime views in the area.

The proposed Project is in an urban area with many sources of ambient illumination, including light emitted from commercial and industrial properties and lampposts lining the streets surrounding the construction site, as well as from the headlights of vehicles traveling through the Project Area. The nearest sensitive receptors are residences near the intersection of South Clarence Street and Inez Street, located approximately 0.6 miles north of the nearest construction activities. The areas directly surrounding the proposed park are primarily vacant or occupied by industrial or commercial properties that would not be sensitive to spillover light. Therefore, impacts would be less than significant, and no mitigation is required.

Construction of the proposed Project would not create a substantial source of light or glare that would adversely affect daytime views in the area; however, nighttime views may be affected. During

construction of the proposed Project, perimeter lighting may be required on the construction site for security and safety purposes during nighttime. If nighttime lighting at the construction site is required, lighting would be directed downward, on-site, and away from surrounding land uses. Spillover light would be minimized to the greatest extent feasible so that it would not interfere with functions of adjacent properties including vision, sleep, privacy, and general enjoyment of the natural nighttime condition. Because the proposed Project would comply with the provisions in the City's Municipal Code, including; LAMC Chapter 1, Article 2, Sec. 12.21A5(k); LAMC Chapter 1, Article 7, Sec. 17.08C; and LAMC Chapter 9, Article 3, Section 93.0117, it is not expected to result in new sources of substantial light or glare.

3.1.4.5 Operational Impacts

I(a): Have a substantial adverse effect on a scenic vista.

There are no officially designated scenic vistas, resources, or highways that are within the Project Area or visible from the Project Area. However, the Downtown LA skyline could be considered a valued viewshed by residents, pedestrians, bicyclists, and motorists of the Central City North and Boyle Heights neighborhoods.

The proposed Project would not introduce vertical elements tall enough to obstruct views of the Downtown Los Angeles skyline. Approximately 5.8 acres of the 13-acres PARC would be under the Viaduct. The proposed Project would include design components that would occur primarily at ground level or underneath the Viaduct, including the addition of pedestrian walking trails, bike paths, sports fields and courts, performance lawns and stages, public seating areas, open grass areas and landscaping, and pet play areas. The addition of vertical structures, such as large vegetation, trees, public art pieces, and general site and sports field lighting would also be included; however, none of the proposed elements would have the potential to block any scenic vistas. The art pieces would be located within the West Park and potentially East Park and would be up to 30 feet tall. The art pieces would not be directly under the Viaduct and could therefore cause shade within the boundaries of the parks. However, the shade would be limited to the immediate vicinity of the art pieces and would not affect adjacent properties. In addition, the art pieces would not be tall enough to block views of the DTLA skyline, which would still be visible from other viewpoints. The skyline would continue to be visible to all motorists, residents, visitors, and pedestrians. Therefore, impacts would be less than significant, and no mitigation is required.

I(c): Substantially degrade the existing visual character or quality of public views of the site and its surroundings. (Public views are those that are experienced from a publicly accessible vantage point). If the project is in an urbanized area, conflict with applicable zoning and other regulations governing scenic quality.

As discussed in Section 3.1.4.4, the Project Area is in an urbanized area that includes the following land use designations: Limited Industrial (zoned M1), Light Industrial (zoned M2), Heavy Industrial (zoned M3), Open Space (zoned OS) within the LA River, and Public Facilities (zoned PF). In addition, the entire Project Area west of U.S. 101 is zoned RIO. Once the necessary approvals are obtained, the proposed Project would be consistent with the zoning code and regulations governing the Project Area (see Section 3.10, Land Use and Planning, for additional information). The City's Bureau of Engineering (BOE) would work with the Los Angeles Department of City Planning to ensure that the proposed Project is consistent with any future zoning changes within the Project Area. The proposed Project was designed to be

consistent with the design guidelines established for the RIO District, which include the Los Angeles River Revitalization Master Plan and LA River Design Guidebook. In addition, lighting would be consistent with the regulations outlined in the LAMC and the Bureau of Street Lighting Design Standards.

The proposed Project would substantially improve the scenic quality of the Project Site with the addition of the West Park, Arts Plaza and River Gateway, and East Park in the neighborhoods of Central City North and Boyle Heights. **Figure 3.1-8** through **Figure 3.1-15** (see pages 3.1-21 through 3.1-24) demonstrate simulated operational views from KOPs within the Project Area.

Key components of the proposed Project would include sports fields, open grass areas, multipurpose sports courts, pedestrian and bicycle paths, performance stages, pet play areas, art pieces and associated interpretive exhibits. These proposed Project elements would result in a substantial aesthetic improvement from the existing construction site.

The proposed Project would increase the number of trees and provide new vegetation in the form of gardens, meadows, and lawns. The proposed Project would also include reinforced concrete planted terraces on the west and east banks of the LA River. These new elements would provide shade throughout the Project Site and would add a greater variation in natural texture, color, and landscape to the area, thereby improving the scenic quality of the area. Landscaping would be consistent with the design guidelines established for the RIO District.

When facing west, views of the Downtown Los Angeles skyline would continue to be visible from the Project Area. The proposed Project, with its series of natural landscaping, open space, and social and recreational areas, would be more vivid in appearance than the existing construction site and the industrialized portions of Central City North and Boyle Heights within the Project Area. The effects on the visual intactness and unity of the view would generally be positive and are expected to improve the scenic quality of the area.

Residents, pedestrians, local business employees, and commuters within and in proximity to the Project Area would have clear views of the new park and would most likely notice changes to the visual environment caused by the proposed Project from all of the KOPs. However, awareness of the changed area would diminish over time as the new facility becomes a familiar component within the overall viewshed. Therefore, the scenic quality of the Project Area is expected to improve as a result of the proposed Project. As such, the proposed Project would not conflict with applicable zoning and other regulations governing scenic quality. Therefore, impacts would be less than significant, and no mitigation is required.

Additionally, the proposed Project would not include any light-blocking structures that would exceed 60 feet in height above the ground elevation. Therefore, structures to the proposed Project would not result in a significant impact on shading in the project area, during operation of the proposed Project. Impacts would be less than significant, and no mitigation is required.

I(d): Create a new source of substantial light or glare which would adversely affect day or nighttime views in the area.

The proposed Project is in an urban area with many sources of ambient illumination, including light emitted from commercial and industrial properties and lampposts lining the streets surrounding the construction site, as well as from the headlights of vehicles traveling through the Project Area. Because

the proposed Project is in an industrial area, there are few receptors in the Project Area, such as residences, that would be sensitive to spillover light. The nearest sensitive receptors are residences near the intersection of South Clarence Street and Inez Street, located approximately 0.6 mile north of the nearest lighting features. The areas directly surrounding the proposed park are primarily vacant or occupied by industrial or commercial properties that would not be sensitive to spillover light.

The proposed Project would introduce new lighting along the sidewalks, playgrounds, performance stages, and sports areas to increase public safety and visibility. Areas within the proposed Project Site that demonstrate a high need for nighttime lighting include the LA River Access Tunnel, restrooms, and the sports fields and performance areas.

Lighting for security would be installed throughout the Project Site to protect people and property and illuminated in accordance with the Illuminating Engineering Society (IES) standards, *IES RP-33-14 Lighting for Exterior Environments* and IES G-1-03 *Security Lighting for People, Property and Public Spaces*, as updated by IES G-1-16 *Guide for Security Lighting for People, Property and Critical Infrastructure*. Luminaires with shielded optics would be used, and the proposed Project would be designed to infill lighting in areas where architectural and bridge elements could impede the flow of light. Security lighting would not adversely affect daytime or nighttime views in the area.

The sports fields and performance areas would feature switchable and dimmable lights to reduce lighting when these facilities are not in use. Lighting would be directed on-site, and spillover light would be minimized to the greatest extent feasible so that it would not interfere with functions of adjacent properties including vision, sleep, privacy, and general enjoyment of the natural nighttime condition. Light levels would be gradually reduced when moving away from the high illuminance sports fields. In addition, the use of outdoor lighting for recreational activities would be limited to the proposed operating hours, between 5:00 a.m. and 10:30 p.m. in accordance with LAMC Sec. 63.44. In addition, the proposed Project would not include surfaces that would produce glare. Therefore, the proposed Project would not create new sources of substantial light or glare that would adversely affect daytime or nighttime views in the area.

The new walkway lighting would be compliant with all regulations set forth by the City's Bureau of Street Lighting *Design Standards and Guidelines* to ensure that the area receives lighting that meets national illumination standards for vehicular and pedestrian traffic, does not emit light pollution, and produces little glare (Bureau of Street Lighting, 2007). In addition, the lighting for the proposed sports fields and courts would operate in compliance with Los Angeles City Recreation and Parks (RAP) illuminance level standards for outdoor sports and recreational facilities. RAP illuminance level standards are measured in horizontal foot candles, which refer to the amount of light being received on a horizontal surface. Los Angeles City RAP standards for the proposed Project would include illumination levels of 30-foot candles average over the entire area of basketball courts and 30-foot candles average over soccer fields. With adherence to the City's *Design Standards and Guidelines*, the City's RAP illuminance standard levels, and the provisions in the City's Municipal Code, including LAMC Chapter 1, Article 2, Sec. 12.21A5(k); LAMC Chapter 1, Article 7, Sec. 17.08C; and LAMC Chapter 9, Article 3, Section 93.0117, the proposed Project would not result in substantial light or glare effects. Therefore, impacts would be less than significant, and no mitigation is required.

Figure 3.1-8: KOP 1 (West Park – View West from Sloped Walkway)



Source: (Hargreaves Associates, 2019)

Figure 3.1-9: KOP 1 (West Park – View East from Mateo Street)



Source: (Hargreaves Associates, 2019)

Figure 3.1-10: KOP 2 (Art Plaza – View East from Berm)



Source: (Hargreaves Associates, 2019)

Figure 3.1-11: KOP 2 (Arts Plaza – View West from Upper Walkway)



Source: (Hargreaves Associates, 2019)

Figure 3.1-12: KOP 3 (East Park –View West towards East Ramp)



Source: (Hargreaves Associates, 2019)

Figure 3.1-13: KOP 3 (East Park – View West towards Soccer Fields)



Source: (Hargreaves Associates, 2019)

Figure 3.1-14: KOP 4 (East Park – View East towards Children's Play and Plaza)



Source: (Hargreaves Associates, 2019)

Figure 3.1-15: KOP 5 (East Park – View East towards Dog Park)



Source: (Hargreaves Associates, 2019)

3.1.5 Best Management Practices

BMP-AES-1: Construction Lighting

If nighttime lighting at the construction site is required, lighting shall be directed downward, on-site, and away from surrounding land uses.

BMP-AES-2: Construction Staging and Construction Staging Area

Construction staging shall be coordinated with the construction of the Viaduct Replacement Project; therefore, additional use or acquisition of public space for equipment and vehicles will not be required. The construction area shall be fenced to obscure views of construction activities, materials, and staged equipment.

BMP-AES-3: Operational Lighting

Outdoor lighting for recreational activities shall be limited to the proposed operating hours.

BMP-AES-4: Regulatory Requirements for Lighting

- Proposed Project illumination shall comply with the provisions in the City's Municipal Code, including LAMC Chapter 1, Article 2, Sec. 12.21A5(k); LAMC Chapter 1, Article 7, Sec. 17.08C; and LAMC Chapter 9, Article 3, Section 93.0117.
- The new walkway lighting shall be compliant with all regulations set forth by the City's Bureau of Street Lighting Design Standards and Guidelines to ensure that the area receives lighting that meets national illumination standards for vehicular and pedestrian traffic, does not emit light pollution, and produces little glare.
- Lighting for sports fields and courts shall operate in compliance with Los Angeles City Recreation and Parks (RAP) illuminance level standards for outdoor sports and recreational facilities.
- Lighting for security shall be illuminated in accordance with the Illuminating Engineering Society (IES) standards, IES RP-33-14 *Lighting for Exterior Environments* and IES G-1-03 *Security Lighting for People, Property and Public Spaces*, as updated by IES G-1-16 *Guide for Security Lighting for People, Property and Critical Infrastructure*.

3.1.6 Mitigation Measures

Impacts related to Aesthetics would be less than significant; therefore, no mitigation measures are required.

3.1.7 Significant Unavoidable Adverse Impacts

There are no significant unavoidable adverse impacts on Aesthetics resulting from construction and operation of the proposed Project.

3.1.8 Cumulative Impacts

The cumulative study area for Aesthetics impacts includes the locations that have clear sightlines to the proposed Project. Of the projects included in **Table 1-1**, the only projects with clear sightlines to the

proposed Project are the Viaduct Replacement Project, 670 Mesquite Project, and Metro Arts District Rail Yard. The proposed Project is designed to complement the aesthetics of the Viaduct Replacement Project. The 670 Mesquite Project design approach is intended to complement the industrial character of the Arts District. The proposed building materials would include concrete, steel, and glass, reflecting materials prevalent in the neighborhood. The Metro Art District Rail Yard would involve the construction of a new Metro line that would include visual changes consistent with the existing setting and surrounding environment. All development projects would be evaluated on whether they are consistent with the City's design guidelines, policies, and development standards. Therefore, these projects are not expected to adversely affect visual character and quality or result in effects that are potentially cumulatively significant.

The proposed Project would be designed in compliance with the City's design guidelines, policies, and development standards and would result in less than significant impacts related to Aesthetics. Therefore, the proposed Project is not expected to contribute to significant cumulative impacts related to Aesthetics.

3.2 Air Quality

This section describes the affected environment and regulatory setting for Air Quality related to the Project Area. In addition, this section describes the potential impacts related to Air Quality that would result from the implementation of the proposed Project. As noted in the analysis below, impacts associated with Air Quality during construction and operation of the proposed Project would be less than significant with the incorporation of mitigation measures.

The information in this section is based on the *Air Quality and Greenhouse Gas Impact Assessment* (AMBIENT Air Quality & Noise Consulting, 2019) prepared for the proposed Project. Air quality and greenhouse gas emissions were generated for an opening year of 2021 (AMBIENT Air Quality & Noise Consulting, 2019). Due to project delays, it is now anticipated that the park will open in 2024. There is not anticipated to be a substantial difference in projected emissions from 2021 to 2024 and emissions in 2024 may be slightly lower due to continual improvement in vehicle and equipment emission standards.

3.2.1 Regulatory Setting

A review of the various federal, state, regional, and local government regulatory requirements was conducted to identify regulations that relate to Air Quality. This section summarizes the various regulatory requirements that are relevant to the proposed Project.

3.2.1.1 Applicable Regulations

Federal

U.S. Environmental Protection Agency

At the federal level, the U.S. Environmental Protection Agency (U.S. EPA) oversees the implementation of national air quality programs by state, local, and tribal governments (U.S. Environmental Protection Agency, 2018c). The U.S. EPA's air quality mandates are drawn primarily from the Federal Clean Air Act (FCAA), which was signed into law in 1970. Congress substantially amended the FCAA in 1977 and again in 1990.

Federal Clean Air Act

For the protection of public health and welfare, the FCAA requires that the U.S. EPA establish National Ambient Air Quality Standards (NAAQS) for various pollutants and set deadlines for their attainment. These pollutants are referred to as "criteria" pollutants because the U.S. EPA publishes criteria documents to justify the choice of standards. These standards define the maximum amount of an air pollutant that can be present in ambient air. An ambient air quality standard is generally specified as a concentration averaged over a specific time period, such as one hour, eight hours, 24 hours, or one year. The different averaging times and concentrations are meant to protect against different exposure effects. Standards established for the protection of human health are referred to as primary standards; whereas, standards established for the prevention of environmental and property damage are called secondary standards. The FCAA allows states to adopt additional or more health-protective standards.

Two types of NAAQS have been established: (1) primary standards that protect public health, and (2) secondary standards that protect public welfare from non-health-related adverse effects, such as

visibility restrictions. NAAQS were established for the following criteria pollutants: lead (Pb), ozone (O_3), particulate matter (PM_{10}), carbon monoxide (CO), nitrogen dioxide (NO_2), and sulfur dioxide (SO_2), which are summarized in **Table 3.2-1**.

Table 3.2-1: Summary of Ambient Air Quality Standards and Attainment Designations

Pollutant	Averaging Time	CAAQS		NAAQS	
		Concentration	Attainment Status	Primary	Attainment Status
Ozone (O_3)	1-hour	0.09 ppm	Non-Attainment	–	Non-Attainment (Extreme)
	8-hour	0.070 ppm		0.070 ppm	
Particulate Matter (PM_{10})	AAM	20 µg/m^3	Non-Attainment	–	Attainment/ Maintenance
	24-hour	50 µg/m^3		150 µg/m^3	
Fine Particulate Matter ($PM_{2.5}$)	AAM	12 µg/m^3	Non-Attainment	12 µg/m^3	Non-Attainment (Serious)
	24-hour	No Standard		35 µg/m^3	
Carbon Monoxide (CO)	1-hour	20 ppm	Attainment	35 ppm	Attainment/ Maintenance
	8-hour	9 ppm		9 ppm	
Nitrogen Dioxide (NO_2)	AAM	0.030 ppm	Attainment	0.053 ppm	Unclassified/ Attainment
	1-hour	0.18 ppm		0.100 ppb[b]	
Sulfur Dioxide (SO_2)	AAM	–	Attainment	0.03 ppm	Unclassified/ Attainment
	24-hour	0.04 ppm		0.14 ppm	
	3-hour	–		--	
	1-hour	0.25 ppm		75 ppb	
Lead (Pb)	30-day Average	1.5 µg/m^3	Attainment	–	Non-Attainment (Partial)
	Calendar Quarter	–		1.5 µg/m^3	
	Rolling 3-Month Average	–		0.15 µg/m^3	
Sulfates	24-hour	25 µg/m^3	Attainment	No Federal Standards	

Pollutant	Averaging Time	CAAQS		NAAQS	
		Concentration	Attainment Status	Primary	Attainment Status
Hydrogen Sulfide	1-hour	0.03 ppm (42 µg/m^3)	Unclassified	No Federal Standards	
Vinyl Chloride	24-hour	0.01 ppm (26 µg/m3)	Attainment	No Federal Standards	
Visibility-Reducing Particle Matter	8-hour	Extinction coefficient: 0.23/kilometer-visibility of 10 miles or more (0.07-30 miles or more for Lake Tahoe) due to particles when the relative humidity is less than 70%.	Unclassified	No Federal Standards	

CAAQS = California Ambient Air Quality Standards; NAAQS = National Ambient Air Quality Standards; AAM = annual arithmetic mean; ppm = parts per million; ppb = parts per billion; µg/m^3 = microgram per cubic meter
Source: (South Coast Air Quality Management District, 2016)

The FCAA also requires each state to prepare an air quality control plan referred to as a State Implementation Plan (SIP). The FCAA Amendments of 1990 added requirements for states with non-attainment areas to revise their SIPs to incorporate additional control measures to reduce air pollution. The SIP is periodically modified to reflect the latest emissions inventories, planning documents, and rules and regulations of the air basins as reported by their jurisdictional agencies. The U.S. EPA must review all SIPs to determine whether they conform to the mandates of the FCAA and the amendments thereof and to determine whether implementing them will achieve air quality goals. If the U.S. EPA determines a SIP to be inadequate, a Federal Implementation Plan that imposes additional control measures may be prepared for the non-attainment area. Failure to submit an approvable SIP or to implement the plan within the mandated time frame may cause sanctions to be applied to transportation funding and stationary air pollution sources in the air basin.

Toxic Substances Control Act

The Toxic Substances Control Act (TSCA) first authorized the U.S. EPA to regulate asbestos in schools and Public and Commercial buildings under Title II of the law, which is also known as the Asbestos Hazard Emergency Response Act (AHERA). AHERA requires Local Education Agencies to inspect their schools for asbestos-containing materials (ACM) and to prepare management plans to reduce the asbestos

hazard. The TSCA also established a program for the training and accreditation of individuals performing certain types of asbestos work.

National Emission Standards for Hazardous Air Pollutants

Pursuant to the FCAA, the U.S. EPA established the National Emission Standards for Hazardous Air Pollutants (NESHAP). NESHAP are technology-based source-specific regulations that limit allowable emissions of hazardous air pollutants and include asbestos-containing building material. NESHAPs pertain to the inspection, notification, handling, and disposal of asbestos-containing building material associated with the demolition and renovation of structures.

State

California Air Resources Board

The California Air Resources Board (CARB) is the agency responsible for coordination and oversight of State and local air pollution control programs in California and for implementing the California Clean Air Act (CCAA) of 1988. Other CARB duties include monitoring air quality (in conjunction with air monitoring networks maintained by air pollution control districts and air quality management districts); establishing the California Ambient Air Quality Standards (CAAQS), which in many cases are more stringent than the NAAQS; and setting emissions standards for new motor vehicles. The CAAQS are summarized in **Table 3.2-1**. The emission standards established for motor vehicles differ depending on various factors including the model year, and the type of vehicle, fuel and engine used.

California Clean Air Act

The CCAA requires that all air districts in the State endeavor to achieve and maintain CAAQS for O_3, CO, SO_2, and NO_2 by the earliest practical date. The CCAA specifies that districts focus particular attention on reducing the emissions from transportation and area-wide emission sources, and the act provides districts with authority to regulate indirect sources. Each district plan is required to either (1) achieve a five percent annual reduction, averaged over consecutive 3-year periods, in district-wide emissions of each non-attainment pollutant or its precursors, or (2) to provide for implementation of all feasible measures to reduce emissions. Any planning effort for air quality attainment would thus need to consider both State and Federal planning requirements.

Assembly Bills 1807 & 2588 – Toxic Air Contaminants

Within California, Toxic Air Contaminants (TAC) are regulated primarily through AB 1807 (Tanner Air Toxics Act) and AB 2588 (Air Toxics Hot Spots Information and Assessment Act of 1987). The Tanner Air Toxics Act sets forth a formal procedure for CARB to designate substances as TACs. This includes research, public participation, and scientific peer review before CARB designates a substance as a TAC. Existing sources of TACs that are subject to the Air Toxics Hot Spots Information and Assessment Act are required to: (1) prepare a toxic emissions inventory; (2) prepare a risk assessment if emissions are significant; (3) notify the public of significant risk levels; and (4) prepare and implement risk reduction measures.

In-Use Off-Road Diesel Vehicle Regulation

On July 26, 2007, the CARB adopted the *In-Use Off-Road Diesel Fueled Fleets Regulation* to reduce diesel-exhaust particulate matter (DPM) and oxides of nitrogen (NO_x) emissions from in-use (existing) off-road

heavy-duty diesel vehicles in California (California Air Resources Board, 2019a). The regulation applies to self-propelled diesel-fueled vehicles that cannot be registered and licensed to drive on-road, as well as two-engine vehicles that drive on road, with the limited exception of two-engine sweepers. Examples include loaders, crawler tractors, skid steers, backhoes, forklifts, airport ground support equipment, water well drilling rigs, and two-engine cranes. Such vehicles are used in construction, mining, and industrial operations. The regulation does not apply to stationary equipment or portable equipment such as generators. The off-road vehicle regulation establishes emissions performance requirements, establishes reporting, disclosure, and labeling requirements for off-road vehicles, and limits unnecessary idling (California Air Resources Board, 2016).

Regional

South Coast Air Quality Management District

Because Southern California has one of the worst air quality problems in the Nation, the South Coast Air Quality Management District (SCAQMD) was created by the 1977 Lewis Air Quality Management Act (South Coast Air Quality Management District, 2005). Four county air pollution control agencies were merged into one regional district to better address the issue of improving air quality in Southern California (South Coast Air Quality Management District, 2005). Under the Lewis-Presley Air Quality Management Act, which revised the Lewis Air Quality Management Act, the SCAQMD is the agency principally responsible for comprehensive air pollution control in the South Coast Air Basin (SCAB). SCAB includes portions of Los Angeles, Riverside, and San Bernardino counties and all of Orange County. Specifically, the SCAQMD is responsible for monitoring air quality and planning, implementing, and enforcing programs designed to attain and maintain State and Federal ambient air quality standards in the SCAQMD. Programs developed include air quality rules and regulations that regulate stationary source emissions, including area and point sources and certain mobile source emissions. The SCAQMD is also responsible for establishing permitting requirements and issuing permits for stationary sources and ensuring that new, modified, or relocated stationary sources do not create net emissions increases. The SCAQMD enforces air quality rules and regulations through a variety of means, including inspections, educational and training programs, and fines.

Specific SCAQMD rules applicable to the construction of the proposed Project may include, but are not limited to:

- *Rule 401 – Visible Emissions*: A person shall not discharge into the atmosphere from any single source of emission whatsoever any air contaminant for a period or periods aggregating more than three minutes in any one hour which is as dark or darker in shade as that designated No. 1 on the Ringelmann Chart, as published by the United States Bureau of Mines.
- *Rule 402 – Nuisance*: A person shall not discharge from any source whatsoever such quantities of air contaminants or other material which cause injury, detriment, nuisance, or annoyance to any considerable number of persons or to the public, or which endanger the comfort, repose, health, or safety of any such persons or the public, or which cause, or have a natural tendency to cause injury or damage to business or property. The provisions of this rule do not apply to odors emanating from agricultural operations necessary for the growing of crops or the raising of fowl or animals.

- *Rule 403 – Fugitive Dust*: This rule is intended to reduce the amount of particulate matter entrained in the ambient air as a result of anthropogenic (man-made) fugitive dust sources by requiring actions to prevent, reduce, or mitigate fugitive dust emissions. Rule 403 applies to any activity or man-made condition capable of generating fugitive dust.
- *Rule 1113 – Architectural Coatings*: No person shall apply or solicit the application of any architectural coating within the SCAQMD, with a volatile organic compound (VOC) content in excess of the values specified in a table incorporated in the Rule.
- *Rule 1166 – Volatile Organic Compound Emissions from Decontamination of Soil*. The rule sets requirements to control the emission of VOCs during the excavating, grading, handling, and/or treating of VOC-contaminated soil. Prior to these activities, an approved mitigation plan must be obtained from SCAQMD.
- *Rule 1466 – Control of Particulate Emissions from Soils with Toxic Air Contaminants*. This rule requires notification, monitoring, and record keeping for earth-moving activities of soil with applicable toxic air contaminant(s) of greater than 50 cubic yards at a site that has been designated and notified by the following: (A) U.S. EPA as a Superfund National Priorities List site; (B) DTSC as a Brownfield or Cleanup Program site; (C) the State Water Resources Control Board or RWQCB as a Site Cleanup Program site; (D) a county, local, or state regulatory agency as a Hazardous Material Release site, as defined in California Health and Safety Code Section 25260; or (E) the Executive Officer pursuant to subdivision (i).

The SCAQMD is also the lead agency in charge of developing the Air Quality Management Plan (AQMP), with input from the Southern California Association of Governments (SCAG) and CARB. The AQMP is a comprehensive plan that includes control strategies for stationary and area sources, as well as for on-road and off-road mobile sources. SCAG has the primary responsibility for providing future growth projections and the development and implementation of transportation control measures. CARB, in coordination with federal agencies, provides the control element for mobile sources.

Southern California Association of Governments

SCAG is the regional planning agency for Los Angeles, Orange, Ventura, Riverside, San Bernardino, and Imperial Counties and serves as a forum for regional issues relating to transportation, the economy, community development, and the environment. Under federal law, SCAG is designated as a Metropolitan Planning Organization (MPO) and under State law as a Regional Transportation Planning Agency and a Council of Governments.

On September 3, 2020, SCAG adopted Connect SoCal: The 2020-2045 RTP/SCS (Southern California Association of Governments, 2020). The RTP is a long-range transportation plan that provides a vision for regional transportation investments over a period of 20 years or more. The SCS demonstrates the integration of land use, transportation strategies, and transportation investments within the Plan. SCAG is also responsible under the FCAA for determining federal air quality conformity of projects, plans, and programs within the SCAQMD.

The 2020-2045 RTP/SCS would also help to reduce vehicle delay and vehicle miles traveled (VMT) within the region. On a per capita basis, vehicle delay would be reduced by roughly 26 percent and heavy-duty truck delay on highways 24 percent. VMT per capita would be reduced by five percent and vehicle hours

traveled (VHT) would be reduced by approximately nine percent per capita (Southern California Association of Governments, 2020).

Air Quality Management Plan

The 2016 AQMP was adopted by the SCAQMD Governing Board on March 3, 2017 (South Coast Air Quality Management District, 2017). The 2016 AQMP seeks to achieve multiple goals in partnership with other entities to promote reductions of criteria air pollutants, greenhouse gases, and toxic air contaminants. The AQMP also promotes increased efficiencies in energy use, transportation, and goods movement. The 2016 AQMP also includes transportation control measures developed by SCAG from the 2016-2040 RTP/SCS. The 2016 AQMP includes the integrated strategies and measures necessary to demonstrate attainment of the 1-hr and 8-hr ozone NAAQS as well as the latest 24-hr and annual $PM_{2.5}$ standards.

Local

City of Los Angeles General Plan

The City has adopted the Air Quality Element of the General Plan to aid in attaining State and Federal ambient air quality standards at the earliest feasible date, while still maintaining economic growth and improving quality of life (City of Los Angeles, 1992). The Air Quality Element establishes the following goals that are intended to improve air quality throughout the City:

- Good air quality and mobility in an environment of continued population growth and healthy economic structure;
- Less reliance on single-occupant vehicles with fewer commute and non-work trips;
- Efficient management of transportation facilities and system infrastructure using cost- effective system management and innovative demand-management techniques;
- Minimal impact of existing land use patterns and future land use development on air quality by addressing the relationship between land use, transportation, and air quality;
- Energy efficiency through land use and transportation planning, the use of renewable resources and less-polluting fuels, and the implementation of conservation measures including passive methods such as site orientation and tree planting; and
- Citizen awareness of the linkages between personal behavior and air pollution, and participation in efforts to reduce air pollution.

3.2.1.2 Regulatory Attainment Designations

Under the CCAA, the CARB is required to designate areas of the State as attainment, nonattainment-transitional, nonattainment, or unclassified with respect to applicable standards. An "attainment" designation for an area signifies that pollutant concentrations did not violate the applicable standard in that area. A "nonattainment" designation indicates that a pollutant concentration violated the applicable standard at least once, excluding those occasions when a violation was caused by an exceptional event, as defined in the criteria. Depending on the frequency and severity of pollutants exceeding applicable standards, the nonattainment designation can be further classified as serious nonattainment, severe nonattainment, or extreme nonattainment, with extreme nonattainment being the most severe of the

classifications. An "unclassified" designation signifies that the data does not support either an attainment or nonattainment designation. The CCAA divides districts into moderate, serious, and severe air pollution categories, with increasingly stringent control requirements mandated for each category. In accordance with the FCAA, areas are designated attainment, nonattainment, or maintenance.

The U.S. EPA designates areas for ozone, CO, and NO_2 as "does not meet the primary standards," "cannot be classified," or "better than national standards." For SO_2, areas are designated as "does not meet the primary standards," "does not meet the secondary standards," "cannot be classified," or "better than national standards." However, the CARB terminology of attainment, nonattainment, and unclassified is more frequently used. The U.S. EPA uses the same sub-categories for nonattainment status: serious, severe, and extreme, as well as moderate and marginal. In 1991, U.S. EPA assigned new nonattainment designations to areas that had previously been classified as Group I, II, or III for PM_{10} based on the likelihood that they would violate national PM_{10} standards. All other areas are designated "unclassified."

The state and national attainment status designations for the SCAB are summarized in **Table 3.2-1**. The SCAB is currently designated as a nonattainment area with respect to the State ozone, PM_{10}, and $PM_{2.5}$ standards, as well as the national 8-hour ozone and $PM_{2.5}$ standards. In addition, based on monitoring data obtained near a lead acid battery reclamation facility, Los Angeles County is currently designated nonattainment for the Federal lead standard (South Coast Air Quality Management District, 2012). With the exception of Los Angeles County, the remainder of the SCAB is designated attainment for the lead standards. The SCAB is designated attainment or unclassified for the remaining State and Federal standards.

3.2.1.3 Relevant Air Pollutants

Criteria Air Pollutants

The following provides a summary discussion of the criteria air pollutants of primary concern:

Ozone (O_3)

O_3 is a reactive gas consisting of three atoms of oxygen. In the troposphere, it is a product of the photochemical process involving the sun's energy. It is a secondary pollutant that is formed when NO_x and VOCs, also referred to as reactive organic gases (ROG) react in the presence of sunlight. O_3 is a major component of smog. In the stratosphere, O_3 exists naturally and shields Earth from harmful incoming ultraviolet radiation.

High concentrations of ground level O_3 can adversely affect the human respiratory system and aggravate lung diseases (U.S. Environmental Protection Agency, 2018b). O_3 can also have negative impacts on ecosystems, including the loss of species diversity, changes to habitat quality, and changes to water and nutrient cycles (U.S. Environmental Protection Agency, 2017a).

Reactive Organic Gas

ROG is a reactive chemical gas, composed of hydrocarbon compounds that may contribute to the formation of smog by their involvement in atmospheric chemical reactions. No separate health standards exist for ROG as a group. Because some compounds that make up ROG are also toxic, like the carcinogen benzene, they are often evaluated as part of a toxic risk assessment. Total Organic Gases (TOGs) includes

all of the ROGs, in addition to low reactivity organic compounds like methane and acetone. ROGs and VOC are subsets of TOG.

VOCs are hydrocarbon compounds that exist in the ambient air. VOCs contribute to the formation of smog and may also have short- and long-term adverse health effects (U.S. Environmental Protection Agency, 2017d; U.S. Environmental Protection Agency, 2017e). VOC emissions are a major precursor to the formation of ozone. VOCs may also be odorous. VOCs are found in gasoline, alcohol, and in some paints.

Oxides of Nitrogen

NO_x are a family of gaseous nitrogen compounds and is a precursor to the formation of ozone and particulate matter. The major component of NO_x, NO_2, is a reddish-brown gas that is toxic at high concentrations. NO_x results primarily from the combustion of fossil fuels under high temperature and pressure. On-road and off-road motor vehicles and fuel combustion are the major sources of this air pollutant.

Particulate Matter

Particulate Matter (PM), also known as particle pollution, is a complex mixture of extremely small particles and liquid droplets. Particle pollution is made up of a number of components, including acids (such as nitrates and sulfates), organic chemicals, metals, and soil or dust particles. The size of particles is causally linked to the potential for causing health problems. U.S. EPA is concerned about particles that are 10 micrometers in diameter or smaller because those are the particles that generally pass through the throat and nose and enter the lungs. Once inhaled, these particles can affect the heart and lungs and cause serious health effects (U.S. Environmental Protection Agency, 2018a). U.S. EPA groups particle pollution into three categories based on their size and where they are deposited:

- "Inhalable coarse particles ($PM_{2.5}$ - PM_{10})," such as those found near roadways and dusty industries, are between 2.5 and 10 micrometers in diameter. $PM_{2.5}$ - PM_{10} is deposited in the thoracic region of the lungs.
- "Fine particles ($PM_{2.5}$)," such as those found in smoke and haze, are 2.5 micrometers in diameter and smaller. These particles can be directly emitted from sources such as forest fires, or they can form when gases emitted from power plants, industries and automobiles react in the air. They penetrate deeply into the thoracic and alveolar regions of the lungs.
- "Ultrafine particles (UFP)," are very small particles less than 0.1 micrometers in diameter largely resulting from the combustion of fossils fuels, meat, wood, and other hydrocarbons. While UFP mass is a small portion of $PM_{2.5}$, its high surface area, deep lung penetration, and transfer into the bloodstream can result in disproportionate health impacts relative to their mass. (U.S. Environmental Protection Agency, 2017c)

PM_{10}, $PM_{2.5}$, and UFP include primary pollutants (emitted directly to the atmosphere) as well as secondary pollutants (formed in the atmosphere by chemical reactions among precursors). Generally speaking, $PM_{2.5}$ and UFP are emitted by combustion sources like vehicles, power generation, industrial processes, and wood burning, while PM_{10} sources include these same sources plus roads and farming activities. Fugitive windblown dust and other area sources also represent a source of airborne dust.

Numerous scientific studies have linked both long- and short-term particle pollution exposures to a variety of health problems. Long-term exposures, such as those experienced by people living for many years in areas with high particle levels, have been associated with problems such as reduced lung function and the development of chronic bronchitis, and even premature death. Short-term exposures to particles (hours or days) can aggravate lung disease, causing asthma attacks and also acute (short-term) bronchitis, and may also increase susceptibility to respiratory infections. In people with heart disease, short-term exposures have been linked to heart attacks and arrhythmias. Healthy children and adults have not been reported to suffer serious effects from short term exposures, although they may experience temporary minor irritation when particle levels are elevated. (U.S. Environmental Protection Agency, 2017b)

Carbon Monoxide

Carbon monoxide (CO) is an odorless, colorless gas that is highly toxic. It is formed by the incomplete combustion of fuels and is emitted directly into the air (unlike O_3). The main source of CO is on-road motor vehicles. Other CO sources include other mobile sources, miscellaneous processes, and fuel combustion from stationary sources. Because of the local nature of CO problems, CARB and U.S. EPA designate urban areas as CO nonattainment areas instead of the entire basin as with ozone and PM_{10}. Motor vehicles are by far the largest source of CO emissions. Emissions from motor vehicles have been declining since the mid-1970s, despite increases in vehicle miles traveled, with the introduction of new automotive emission controls and fleet turnover (California Air Resources Board, 2005b).

Sulfur Dioxide

Sulfur dioxide (SO_2), the most common sulfur oxide (SO_x), is a colorless, irritating gas with a "rotten egg" smell formed primarily by the combustion of sulfur-containing fossil fuels. Like airborne NO_x, suspended SO_x particles contribute to poor visibility. These SO_x particles can also combine with other pollutants to form $PM_{2.5}$. The prevalence of low-sulfur fuel use has minimized problems from this pollutant.

Lead

Lead (Pb) is a metal that is a natural constituent of air, water, and the biosphere. Lead is neither created nor destroyed in the environment, so it essentially persists forever. The health effects of lead poisoning include loss of appetite, weakness, and miscarriage (Centers for Disease Control and Prevention, 2018). Lead can also cause lesions of the neuromuscular system, circulatory system, brain, and gastrointestinal tract. Gasoline-powered automobile engines were a major source of airborne lead through the use of leaded fuels. The use of leaded fuel has been mostly phased out, with the result that ambient concentrations of lead have dropped dramatically (U.S. Environmental Protection Agency, 2013).

Hydrogen Sulfide

Hydrogen Sulfide (H_2S) is associated with geothermal activity, oil and gas production, refining, sewage treatment plants, and confined animal feeding operations. Hydrogen sulfide is extremely hazardous in high concentrations; especially in enclosed spaces (800 parts per million [ppm] can cause death) (Centers for Disease Control and Prevention, 2014). The Occupational Safety and Health Administration (OSHA) regulates workplace exposure to H_2S.

Other Pollutants

The State of California has established air quality standards for some pollutants not addressed by Federal standards. The CARB has established State standards for hydrogen sulfide, sulfates, vinyl chloride, and visibility reducing particles. The following section summarizes these pollutants and provides a description of the pollutants' physical properties, health and other effects, sources, and the extent of the problems.

Sulfates

Sulfates (SO_4^{2-}) are the fully oxidized ionic form of sulfur. Sulfates occur in combination with metal and/or hydrogen ions. In California, emissions of sulfur compounds occur primarily from the combustion of petroleum-derived fuels (e.g., gasoline and diesel fuel) that contain sulfur. This sulfur is oxidized to SO_2 during the combustion process and subsequently converted to sulfate compounds in the atmosphere. The conversion of SO_2 to sulfates takes place comparatively rapidly and completely in urban areas of California due to regional meteorological features.

The CARB sulfates standard is designed to prevent aggravation of respiratory symptoms. Effects of sulfate exposure at levels above the standard include a decrease in ventilator function, aggravation of asthmatic symptoms, and an increased risk of cardio-pulmonary disease. Sulfates are particularly effective in degrading visibility, and, due to the fact that they are usually acidic, can harm ecosystems and damage materials and property.

Visibility Reducing Particles

Visibility reducing particles are a mixture of suspended particulate matter consisting of dry solid fragments, solid cores with liquid coatings, and small droplets of liquid. The standard is intended to limit the frequency and severity of visibility impairment due to regional haze and is equivalent to a 10-mile nominal visual range.

Vinyl Chloride

Vinyl Chloride (C_2H_3Cl or VCM) is a colorless gas that does not occur naturally. It is formed when other substances such as trichloroethane, trichloroethylene, and tetrachloroethylene are broken down. Vinyl chloride is used to make polyvinyl chloride which is used to make a variety of plastic products, including pipes, wire and cable coatings, and packaging materials.

Odors

Odors are generally regarded as an annoyance rather than a health hazard. However, manifestations of a person's reaction to foul odors can range from the psychological (i.e. irritation, anger, or anxiety) to the physiological, including circulatory and respiratory effects, nausea, vomiting, and headache.

The ability to detect odors varies considerably among the population and overall is quite subjective. Some individuals have the ability to smell very minute quantities of specific substances; others may not have the same sensitivity but may have sensitivities to odors of other substances. In addition, people may have different reactions to the same odor and in fact an odor that is offensive to one person may be perfectly acceptable to another (e.g., fast food restaurant). It is important to also note that an unfamiliar odor is more easily detected and is more likely to cause complaints than a familiar one. This is because

of the phenomenon known as odor fatigue, in which a person can become desensitized to almost any odor and recognition, only occurs with an alteration in the intensity.

Quality and intensity are two properties present in any odor. The quality of an odor indicates the nature of the smell experience. For instance, if a person describes an odor as flowery or sweet, then the person is describing the quality of the odor. Intensity refers to the strength of the odor. For example, a person may use the word strong to describe the intensity of an odor. Odor intensity depends on the odorant concentration in the air. When an odorous sample is progressively diluted, the odorant concentration decreases. As this occurs, the odor intensity weakens and eventually becomes so low that the detection or recognition of the odor is quite difficult. At some point during dilution, the concentration of the odorant reaches a detection threshold. An odorant concentration below the detection threshold means that the concentration in the air is not detectable by the average human.

Toxic Air Contaminants

TACs are air pollutants that may cause or contribute to an increase in mortality or serious illness, or which may pose a hazard to human health. TACs are usually present in minute quantities in the ambient air, but due to their high toxicity, they may pose a threat to public health even at very low concentrations. Because there is no threshold level below which adverse health impacts are not expected to occur, TACs differ from criteria pollutants for which acceptable levels of exposure can be determined and for which state and federal governments have set ambient air quality standards. TACs, therefore, are not considered "criteria pollutants" under either the FCAA or the CCAA and are thus not subject to NAAQS or CAAQS. Instead, the U.S. EPA and CARB regulate Hazardous Air Pollutants (HAPs) and TACs, respectively, through statutes and regulations that generally require the use of the maximum or best available control technology to limit emissions. In conjunction with District rules, these Federal and State statutes and regulations establish the regulatory framework for TACs. At the national levels, the U.S. EPA has established NESHAPs in accordance with the requirements of the FCAA and subsequent amendments. These are technology-based source-specific regulations that limit allowable emissions of HAPs.

Within California, TACs are regulated primarily through the Tanner Air Toxics Act (AB 1807) and the Air Toxics Hot Spots Information and Assessment Act of 1987 (AB 2588). The Tanner Act sets forth a formal procedure for CARB to designate substances as TACs. This includes research, public participation, and scientific peer review before CARB designates a substance as a TAC. Existing sources of TACs that are subject to the Air Toxics Hot Spots Information and Assessment Act are required to: (1) prepare a toxic emissions inventory; (2) prepare a risk assessment if emissions are significant; (3) notify the public of significant risk levels; and (4) prepare and implement risk reduction measures.

At the state level, the CARB has authority for the regulation of emissions from motor vehicles, fuels, and consumer products. DPM was identified by the CARB as a TAC in 1998 and is the primary TAC of concern for mobile sources. Of all controlled TACs, emissions of DPM are estimated to be responsible for about 70 percent of the total ambient TAC risk. Health risks associated with DPM are primarily associated with potential cancer risks (California Air Resources Board, 2019b). The CARB has made the reduction of the public's exposure to DPM one of its highest priorities, with an aggressive plan to require cleaner diesel fuel and cleaner diesel engines and vehicles (California Air Resources Board, 2005a).

At the local level, air districts have the authority over stationary or industrial sources. All projects that require air quality permits from the SCAQMD are evaluated for TAC emissions. The SCAQMD limits

emissions and public exposure to TACs through a number of programs. The SCAQMD prioritizes TAC-emitting stationary sources, based on the quantity and toxicity of the TAC emissions and the proximity of the facilities to sensitive receptors. The SCAQMD requires a comprehensive health risk assessment for facilities that are classified in the significant-risk category, pursuant to AB 2588.

3.2.2 Environmental Setting

3.2.2.1 Geography

The City of Los Angeles is located in the SCAB (or Basin). The SCAB consists of an approximate 6,600-square mile area bound by the Pacific Ocean to the west and the San Gabriel, San Bernardino, and San Jacinto Mountains to the north and east. The Basin includes all of Orange County and the non-desert portions of Los Angeles, Riverside, and San Bernardino Counties, in addition to the San Gorgonio Pass area of Riverside County. The Basin's terrain and geographical location (i.e., a coastal plain with connecting broad valleys and low hills) cause its distinctive climate.

3.2.2.2 Climate

The regional climate significantly influences the air quality in the Basin. Temperature, wind, humidity, precipitation and even the amount of sunshine influence the quality of the air. Within the SCAB, annual average temperatures, in degrees Fahrenheit (° F), generally range from the low to mid 60's. January is the coldest month throughout the Basin, with average minimum temperatures of 47° F in downtown Los Angeles and 36° F in San Bernardino. All portions of the Basin have recorded maximum temperatures above 100° F. The annual average relative humidity within SCAB generally ranges from 71 percent along the coast to 59 percent inland. More than 90 percent of the Basin's rainfall occurs between the months of November and April. Monthly and yearly rainfall totals are extremely variable within the SCAB. On average, annual rainfall varies from approximately nine inches in Riverside to 14 inches in downtown Los Angeles. The importance of wind to air pollution is considerable. The direction and speed of the wind determines the horizontal dispersion and transport of air pollutants. During the late autumn to early spring rainy season, the Basin is subjected to wind flows associated with traveling storms moving through the region from the northwest. (South Coast Air Quality Management District, 1980)

In the City of Los Angeles, average temperatures generally range from the upper 40's during winter months to the low 80's during the summer months. The warmest month of the year is August, with an average maximum temperature of 83° F; while the coldest month of the year is January, with an average minimum temperature of 48° F. The annual average precipitation in Los Angeles is 14.8 inches. The highest rainfall generally occurs between the months of November and April. (Western Regional Climate Center, 2018)

3.2.2.3 Temperature Inversions

Under normal meteorological conditions, the temperature of the atmosphere decreases with increased altitude. However, when the temperature of the atmosphere increases with altitude, the phenomenon is termed an inversion. These inversions can restrict the vertical mixing of air and pollutants, which can contribute to increased ground-level pollutant concentrations. (South Coast Air Quality Management District, 1980)

In the SCAB, two distinct temperature inversion types commonly occur. The first type of inversion typically occurs during the warmer summer months when high-pressure descending (subsiding) air is undercut by a shallow layer of cool marine air. The boundary between these two layers of air is a persistent marine subsidence/inversion. The second inversion type primarily occurs in the winter, when nights are longer and onshore airflow is weakest. This inversion occurs in conjunction with the nighttime drainage of cool air off the surrounding mountains followed by the seaward drift of this pool of cool air. In general, inversions in the Basin are lower before sunrise than during the daylight hours. As the day progresses, the mixing height normally increases as the warming of the ground heats the surface air layer. The breakup of inversion layers frequently occurs during mid- to late-afternoon on hot summer days. Winter inversions usually break up by mid-morning. (South Coast Air Quality Management District, 1980)

3.2.2.4 Ambient Air Quality and Local Health Risk

Criteria Air Pollutants

Air pollutant concentrations are measured at several monitoring stations in the SCAB. The Los Angeles-North Main Street monitoring station is the closest representative monitoring station with sufficient data to meet U.S. EPA and/or CARB criteria for quality assurance. The Los Angeles-North Main Street monitoring station monitors ambient concentrations of O_3, PM_{10}, $PM_{2.5}$, and NO_2. Ambient monitoring data were obtained for the last three years of available measurement data (i.e., 2014 through 2016) and are summarized in **Table 3.2-2**. As depicted, the State and Federal $PM_{2.5}$, as well as the State O_3 and PM_{10} standards were exceeded on numerous occasions during the past three years. State and Federal standards for NO_2 have not been exceeded during the last three years of available data.

Toxic Air Contaminants

As noted above, the Los Angeles region currently does not meet the State or Federal air quality standards for fine particulate matter ($PM_{2.5}$). In the Los Angeles area, mobile sources are a primary contributor to ambient PM concentrations, including DPM, which poses the most significant health risk. Major sources of DPM in the general vicinity of the Project Site (i.e., project footprint) include railroad operations at nearby railyards, including the Union Pacific Los Angeles Transportation Center (UP LATC) Railyard and the four Commerce Railyards, as well as heavy-duty vehicles on area freeways, including U.S. Route 101 (U.S. 101), Interstate 10 (I-10), and Interstate 5 (I-5).

UP LATC Railyard

The UP LATC Railyard is located at 750 Lamar Street in Los Angeles, California, roughly 1.2 miles north of the Project Site. Activities at the UP LATC Railyard include receiving inbound trains, switching cars, loading and unloading intermodal trains, storing in containers and chassis, building and departing outbound trains, and repairing freight cars and intermodal containers/chassis. The UP LATC Railyard emission sources include, but are not limited to, locomotives, cargo handling equipment, on-road diesel-fueled trucks, other vehicles and off-road equipment, and transport refrigeration units and refrigerated railcars (reefer cars). The facility operates 24 hours a day, 365 days a year.

Table 3.2-2: Summary of Ambient Air Quality Monitoring Data

Pollutant	Monitoring Year		
	2014	2015	2016
Ozone (O_3)			
Maximum concentration (1-hour/8-hour average)	0.113/0.004	0.104/0.074	0.103/0.078
Number of days state/national 1-hour standard exceeded	3/0	2/0	2/0
Number of days state/national 8-hour standard exceeded	7/6	6/6	4/4
Nitrogen Dioxide (NO_2)			
Maximum concentration (1-hour average)	82.1	79.1	64.7
Annual average	22	22	20
Number of days state/national standard exceeded	0/0	0/0	0/0
Suspended Particulate Matter ($PM_{2.5}$)			
Maximum concentration (national/state)	59.9/65.0	56.4/70.3	44.3/49.4
Annual Average (national/state)	NA/ NA	12.3/12.5	11.7/12.0
Number of days national standard exceeded (measured/calculated)	6/NA	7/8.4	2/2.1
Suspended Particulate Matter (PM_{10})			
Maximum concentration (national/state)	66.0/86.8	73.0/88.5	64.0/74.6
Annual Average (national/state)	30.6/30.2	27.1/27.0	25.8/NA
Number of days state standard exceeded (measured/calculated)	38/18.7	30/13.8	21/NA
Number of days national standard exceeded (measured/calculated)	0/0	0/0	0/0

ppm = parts per million by volume, µg/m3 = micrograms per cubic meter, NA=Not Available
1. Based on ambient concentrations obtained from the Los Angeles-North Main Street Monitoring Station.
2. Measured days are those days that an actual measurement was greater than the standard. Calculated days are estimated days that a measurement would have exceeded the standard had measurements been collected every day.
Source: (South Coast Air Quality Management District, 2016)

In 2007, the CARB conducted a health risk assessment to evaluate the impacts associated with toxic air contaminants emitted in and around UP LATC (California Air Resources Board, 2007a). Predicted carcinogenic risk isopleths for the UP LATC are depicted in **Figure 3.2-1,** Potential Estimated Regional Cancer Risks from the Union Pacific Los Angeles Transportation Center Railyard. The potential carcinogenic risk levels associated with the estimated DPM emissions at the UP LATC Railyard are displayed by isopleths, based on the 80th percentile breathing rate and 70-year exposure duration for residents. As shown in **Figure 3.2-1**, the Project Site is located between the predicted 10 and 25 in a million risk carcinogenic risk isopleth of the UP LATC Railyard.

Four Commerce Railyards

The four Commerce railyards are located approximately 2.0 miles south of the Project Site. The four Commerce railyards are operated by both UP Railroad and BNSF Railway (BNSF). These railyards are described below:

- The *UP Commerce Railyard* supports intermodal activities. It includes classification tracks, a gate complex for inbound and outbound intermodal truck traffic, intermodal loading and unloading tracks, a locomotive service track, a locomotive maintenance shop, a freight car repair shop, an on-site wastewater treatment plant, and various buildings and facilities supporting railroad and contractor operations.
- The *BNSF Hobart Railyard* is the largest intermodal railyard in the United States. It supports intermodal and classification activities with locomotive switching, locomotive line haul, cargo handling equipment, track maintenance equipment, portable engines, on-road fleet vehicles, on-road container trucks, transportation refrigeration units, and permitted stationary source activities. An adjacent mainline runs south of the Hobart railyard and supports freight trains and commuter lines for both Metrolink and Amtrak.
- The *BNSF Sheila Mechanical Railyard* is mainly a maintenance and repair shop serving mostly the BNSF Hobart Railyard. It consists of a locomotive fueling platform, diesel engine repair facility (operated by General Electric), railcar repair building, storage areas, equipment service areas, and an administration building. The main railway line runs south and west of the classification yard and includes freight and commuter (Amtrak and Metrolink) operations along the same lines.
- The *BNSF Commerce Eastern Railyard* is primarily a small intermodal facility with a focus on local domestic containers. It lies diagonally opposite and across from the BNSF Sheila Mechanical Railyard. The BNSF Commerce Eastern Railyard supports intermodal and a small amount of classification activities with very few trains loaded each day.

In 2007, the CARB conducted a health risk assessment to evaluate the health impacts associated with toxic air contaminants emitted in and around the four Commerce railyards (California Air Resources Board, 2007b). The predicted combined carcinogenic risk isopleths for the four Commerce railyards are depicted in **Figure 3.2-2,** Potential Estimated Regional Cancer Risks from the Four Commerce Railyards. As shown, the Project Site is located between the predicted 25 and 50 in a million carcinogenic risk isopleth of the four Commerce railyards.

Figure 3.2-1: Potential Estimated Regional Cancer Risks from the Union Pacific Los Angeles Transportation Center Railyard

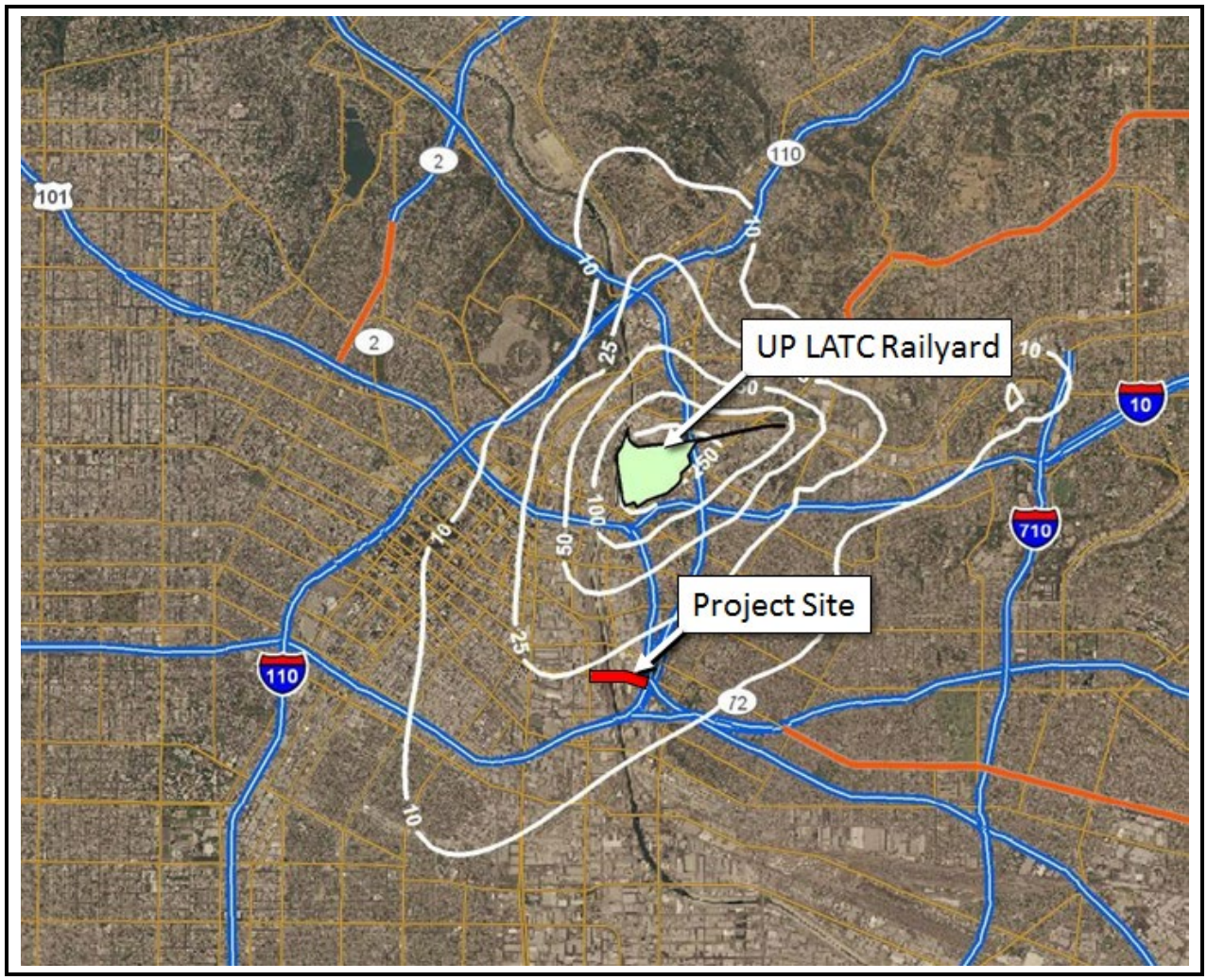

Carcinogenic risk isopleths and corresponding risk values are depicted in white.
Not to scale. Locations are approximate.
Source: (California Air Resources Board, 2007a)

Figure 3.2-2: Potential Estimated Regional Cancer Risks from the Four Commerce Railyards

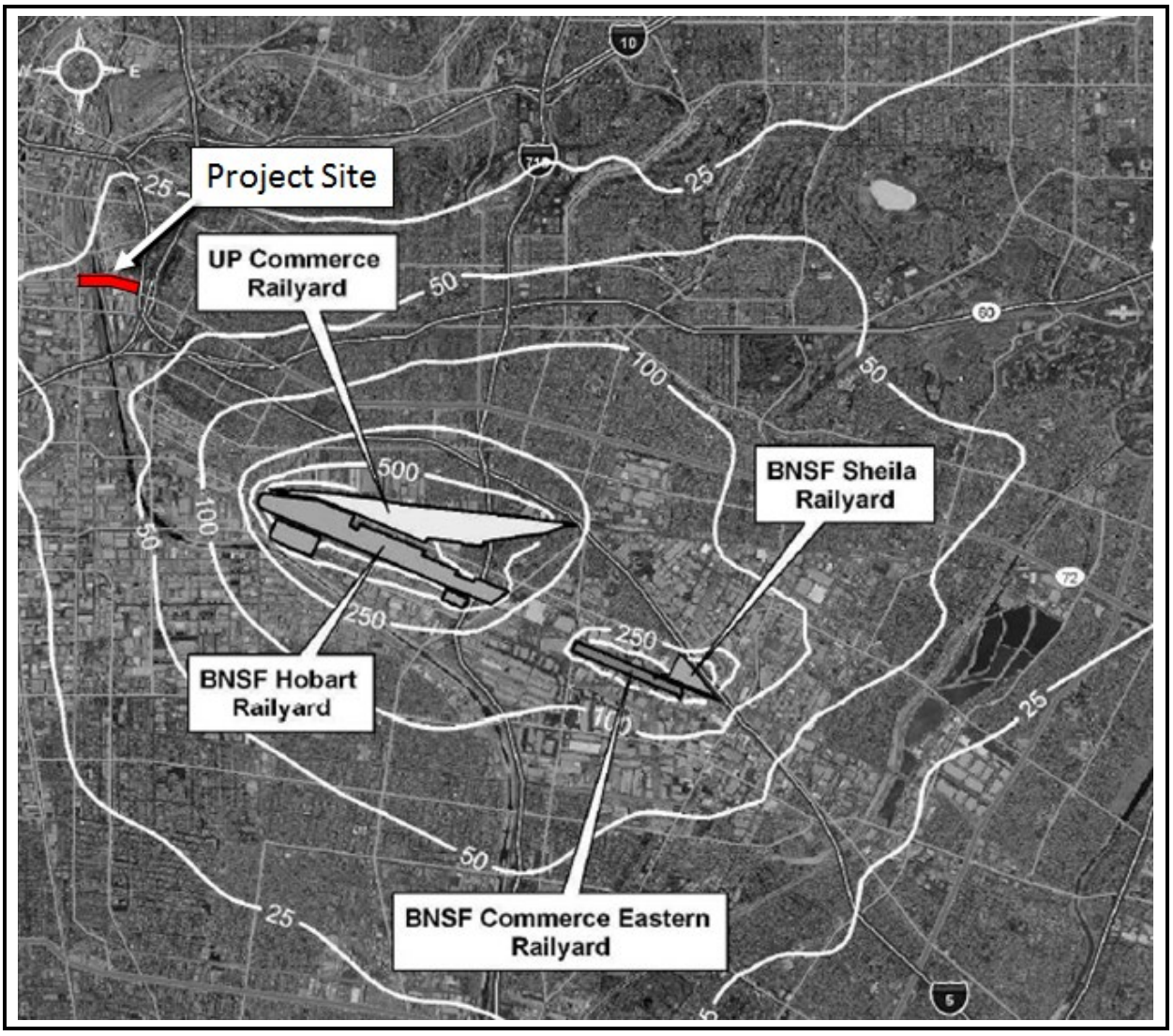

Carcinogenic risk isopleths and corresponding risk values are depicted in white.
Not to scale. Locations are approximate.
Source: (California Air Resources Board, 2007b)

Multiple Air Toxics Exposure Study IV Study

In May 2015, the SCAQMD released the Multiple Air Toxics Exposure Study IV (MATES IV) (South Coast Air Quality Management District, 2015). The study is a follow up to previous studies conducted by the SCAQMD for the purposes of evaluating air toxics exposure in the SCAB. The toxic emissions inventory in MATES IV includes point sources, area sources, on-road mobile sources, and off-road mobile sources. The study measured 37 substances, including PM_{10}, $PM_{2.5}$, several organic compounds (i.e., formaldehyde, benzene, toluene, PAHs), heavy metals (i.e., manganese, copper, lead, and nickel), and other compounds. Two additional substances, black carbon and ultrafine particles, were also included in the study.

Based on the exposure levels from the 10 monitoring sites used in the study, the average cancer risk from air toxics in the SCAB is 65 percent lower than the estimated risk identified in the previous MATES III time period (2004-2006). This risk refers to the expected number of additional cancers in a population of one million individuals if they were exposed to these levels over a 70-year lifetime. About 90 percent of the risk is attributed to emissions associated with mobile sources, with the remainder attributed to toxins emitted from stationary sources. The results indicate that DPM is the major contributor to air toxics risk, accounting on average for about 68 percent of the total estimated air toxics risk. This compares to about 84 percent in MATES III. Although the estimated carcinogenic risks have declined compared to the MATES III period, areas near the ports and near transportation corridors continue to show the highest air toxics risk. None of the annual averages of pollutants measured were above the chronic reference exposure levels for non-cancer health effects.

Predicted carcinogenic risks for the Los Angeles region, utilizing the most current Office of Environmental Health Hazard Assessment (OEHHA)-recommended methodologies, are depicted in **Figure 3.2-3,** Central Los Angeles MATES IV Simulated Air Toxic Cancer Risk (2012-2013). As shown, risks are generally higher in the central Los Angeles area due to the convergence of various major transportation corridors, as well as contributions from railyards, railroads, and stationary source operations. Based on current OEHHA-recommended methodologies, predicted carcinogenic risks in the central Los Angeles area are generally greater than 1,200 per million.

3.2.2.5 Sensitive Receptors

One of the most important reasons for air quality standards is the protection of those members of the population who are most sensitive to the adverse health effects of air pollution, termed "sensitive receptors." The term “sensitive receptors” refers to specific population groups, as well as the land uses where individuals would reside for long periods. Commonly identified sensitive population groups are children, the elderly, the acutely ill, and the chronically ill. Commonly identified sensitive land uses would include facilities that house or attract children, the elderly, people with illnesses, or others who are especially sensitive to the effects of air pollutants. Residential dwellings, schools, parks, playgrounds, childcare centers, convalescent homes, and hospitals are examples of sensitive land uses.

Existing land uses located to the north, south, and west of the Project Site consist predominantly of a mix of industrial and commercial uses. The nearest sensitive land uses in the vicinity of the proposed East Park are residential uses, located approximately 350 feet to the north of the Project Site, along South Clarence Street. The nearest sensitive land use in the vicinity of the proposed West Park is a residential development referred to as the “Brick Lofts,” which is located approximately 700 feet south of the Project

Figure 3.2-3: Central Los Angeles MATES IV Simulated Air Toxic Cancer Risk (2012-2013)

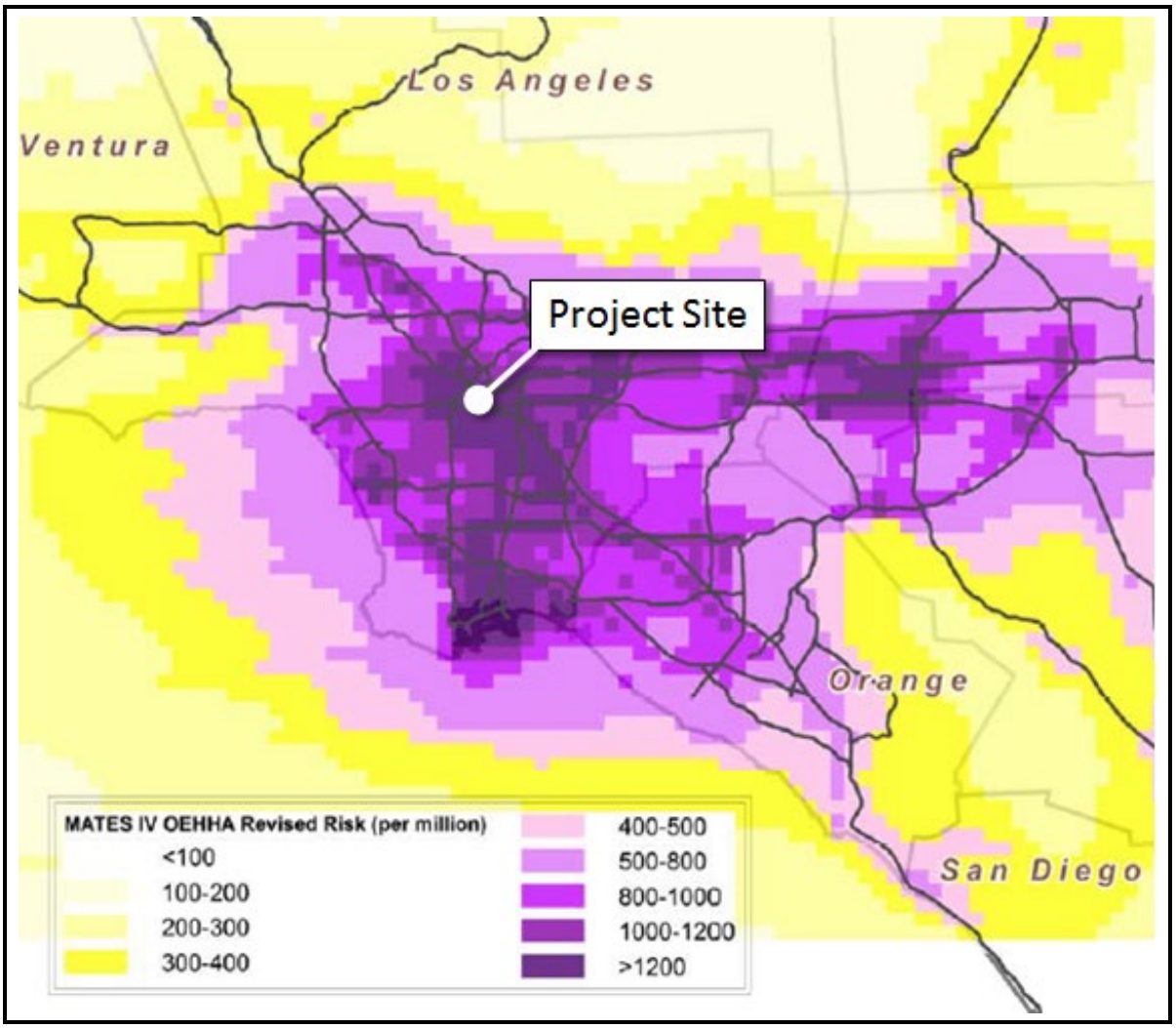

Based on the updated OEHHA methodology.
Not to scale. Locations are approximate.
Source: (South Coast Air Quality Management District, 2015)

Site, near the intersection of Mateo Street and Jesse Street. Additional residential land uses are located approximately 700 feet east of the proposed East Park, across U.S. 101.

3.2.2.6 Odors

No major sources of odors have been identified in the project area.

3.2.2.7 Naturally Occurring Asbestos

Naturally occurring asbestos (NOA) areas are identified based on the type of rock found in the area. Asbestos-containing rocks found in California are ultramafic rocks, including serpentine rocks. Asbestos has been designated a toxic air contaminant by the CARB. According to the California Geological Survey, the Project Site is not located in an area of NOA (California Geological Survey, 2011).

3.2.3 Environmental Impact Analysis

3.2.3.1 Methodology

Construction Emissions

Short-term emissions associated with construction activities are largely dependent on the type of development proposed, area of ground disturbance, amount of material to be imported and exported, equipment required, and construction schedules. Construction emissions of criteria air pollutants were calculated using the California Emissions Estimator Model (CalEEMod), version 2016.3.2 computer program. Modeling was conducted for the proposed Project based on estimated material to be imported and exported, off-road equipment usage, and construction schedules provided by the project engineers. Other construction modeling assumptions, including mobile-source emission factors and usage rates, were based on default parameters contained in the model for Los Angeles County. Emissions modeling assumptions and output files are provided in the *Air Quality and Greenhouse Gas Impact Assessment* (AMBIENT Air Quality & Noise Consulting, 2019) prepared for the proposed Project.

Increased exposure of sensitive land uses to localized pollutant concentrations were assessed in accordance with the methodology promulgated by SCAQMD in its Localized Significance Threshold (LST) Methodology for CEQA Evaluations (South Coast Air Quality Management District, 2008). Based on the estimated equipment usage and information provided by the project engineers, construction of the proposed Project would result in an estimated temporary disturbance of approximately 1.5 to 2 acres, or more, per day, during excavation and grading of the site. As previously noted, the nearest existing sensitive land uses include residential dwellings located approximately 350 feet (107 meters) north of the construction site. In accordance with SCAQMD's LST methodology, emissions of PM_{10} and $PM_{2.5}$ were evaluated based on a calculated area of disturbance of two acres/day and the distance to the nearest sensitive land uses (100 meters). Emissions of NO_x and CO were evaluated for nearby areas of potential short-term public exposure assuming this same potential area of disturbance and a distance of 25 meters. Emissions modeling assumptions and output files are provided in the *Air Quality and Greenhouse Gas Impact Assessment* (AMBIENT Air Quality & Noise Consulting, 2019) prepared for the proposed Project.

Operational Emissions

Long-term operational emissions of criteria air pollutants were calculated using the CalEEMod, version 2016.3.2, computer program. Modeling was conducted based on the estimated building square footage to be constructed and vehicle trip-generation rates identified in the *Traffic Impact Analysis* prepared for the proposed Project (Kimley-Horn and Associates, Inc., 2019a). Project and site enhancements that would contribute to reductions in mobile-source emissions were also accounted for in the analysis, based on methodologies contained in the California Air Pollution Control Officers Association's Quantifying Greenhouse Gas Mitigation Measures and the default emission reductions identified in CalEEMod. These measures included reductions associated with providing increased diversity (**LUT-3**), transit accessibility within 0.5 miles of the project site (**LUT-5**), and improvements to the existing pedestrian network (**SDT-1**). Increased exposure of sensitive land uses to localized pollutant concentrations were qualitatively assessed. Emissions modeling files are provided in the *Air Quality and Greenhouse Gas Impact Assessment* (AMBIENT Air Quality & Noise Consulting, 2019) prepared for the proposed Project.

Operational emissions associated with the existing industrial uses that were removed were also quantified based on the trip-generation rates identified in the traffic analysis prepared for this project and default energy usage, water usage, and waste-generation rates identified in CalEEMod. Project-generated emissions were compared to estimated emissions associated with the removed industrial uses for the determination of net changes in operational emissions. It is important to note that the analysis does not account for potential emissions from the onsite area or stationary sources that may have been associated with the operation of the existing industrial uses. As a result, net changes in operational emissions are conservatively estimated.

3.2.3.2 Screening Analysis

Several impacts and corresponding thresholds of significance in the following section were eliminated from further analysis in this EIR. Topics were eliminated if the IS for the proposed Project concluded there would be "No Impact," or if impacts were identified to be "Less Than Significant… and will not be discussed further in the EIR." Therefore, only the topics described in the section below were determined to require further analysis in this EIR. A copy of the Initial Study, which contains the eliminated topics, is provided in **Appendix A**.

3.2.3.3 Thresholds of Significance

According to Appendix G of the CEQA Guidelines and the *L.A. CEQA Thresholds Guide*, the proposed Project would have a significant impact on Air Quality if it would:

III(a) Conflict with or obstruct implementation of the applicable air quality plan.

B.3 Toxic Air Contaminants
The determination of significance shall be made on a case-by-case basis, considering the following factors:

- The regulatory framework for the toxic material(s) and process (es) involved;
- The proximity of the toxic air contaminants to sensitive receptors;
- The quantity, volume and toxicity of the contaminants expected to be emitted;

- The likelihood and potential level of exposure; and
- The degree to which project design will reduce the risk of exposure.

Regional Air Quality Impacts

Regional significance thresholds recommended by SCAQMD are summarized in **Table 3.2-3**.

Table 3.2-3: SCAQMD-Recommended CEQA Significance Thresholds

Pollutant	Construction Emissions (pounds/day)	Operational Emissions (pounds/day)
VOC	75	55
NO_x	100	55
CO	550	550
PM_{10}	150	150
$PM_{2.5}$	55	55
SO_x	150	150

Source: (South Coast Air Quality Management District, 2019)

Project-generated emissions that exceed these mass emissions thresholds would be considered to have a potentially significant impact, which could interfere with regional air quality attainment plans.

Exposure to Localized Pollutant Concentrations

In addition to the mass emissions thresholds identified above, the SCAQMD has established the following threshold criteria to determine if a project has the potential to contribute to a localized exceedance of the CAAQS in the immediate vicinity of the site:

- California State 1-hour CO standard of 20.0 parts per million (ppm)
- California State 8-hour CO standard of 9.0 ppm
- California State 1-hour NO_2 standard of 0.25 ppm
- SCAQMD 24-hour construction PM_{10} LST of 10.4 microgram per cubic meter ($\mu g/m^3$)
- SCAQMD 24-hour construction $PM_{2.5}$ LST of 10.4 $\mu g/m^3$
- SCAQMD 24-hour operational PM_{10} LST of 2.5 $\mu g/m^3$
- SCAQMD 24-hour operational $PM_{2.5}$ LST of 2.5 $\mu g/m^3$

The SCAQMD provides screening criteria that can be relied upon to determine if the daily emissions for proposed construction or operational activities would have a potential to exceed the LSTs. LSTs represent the maximum emissions at a project site that are not expected to cause or contribute to an exceedance of the most stringent Federal or State AAQS. LSTs are based on the ambient concentrations of that pollutant within the project area and the distance to the nearest sensitive receptor. An LST analysis for construction activities is applicable to projects five acres, or less, in size; but can be used to screen larger projects to determine whether or not dispersion modeling may be

required (South Coast Air Quality Management District, 2018). If calculated daily emissions are below the LST screening levels the project would be considered to have a less than significant impact.

In addition to the above criteria for evaluation of localized air quality impacts, projects that would result in emissions of carcinogenic or toxic contaminants that exceed the maximum individual cancer risk of 10 in one million or a hazard index of one would be considered to have a potentially significant impact.

III(b) Result in a cumulatively considerable net increase of any criteria pollutant for which the project region is non-attainment under an applicable federal or state ambient air quality standard.

III(c) Expose sensitive receptors to substantial pollutant concentrations.

III(d) Result in other emissions (such as those leading to odors) adversely affecting a substantial number of people?

3.2.3.4 Construction Impacts

III(a): Conflict with or obstruct implementation of the applicable air quality plan.

The AQMP is based on assumptions provided by CARB and SCAG related to the most recent motor vehicle and demographic information. The AQMP projections are based, in part, on land use designations and growth forecasts identified in land use plans from cities and counties located in the SCAB. Projects that would be considered to conflict with existing or future growth projections or that would exceed SCAQMD-recommended project-level significance thresholds would potentially conflict with the AQMP.

Construction-generated emissions were quantified using the CalEEMod, version 2016.3.2 computer program based on the estimated amount of material to be imported and exported, off-road equipment usage, and construction schedules provided by the project engineers. Other construction modeling assumptions, including mobile-source emission factors and usage rates, were based on default parameters contained in the model for Los Angeles County. Construction emissions are summarized in **Table 3.2-4**. Emissions modeling assumptions and results are included in the *Air Quality and Greenhouse Gas Impact Assessment for the Sixth Street PARC* (AMBIENT Air Quality & Noise Consulting, 2019) prepared for the proposed Project.

As noted in **Table 3.2-4**, construction of the proposed Project would generate maximum-daily emissions of approximately 17.3 pounds per day (lbs/day) of VOCs, 179.8 lbs/day of NO_x, 121.3 lbs/day of CO, 0.3 lbs/day of SO_X, 28.7 lbs/day of PM_{10}, and 17.7 lbs/day of $PM_{2.5}$. Construction-generated emissions of NO_x would exceed SCAQMD's significance threshold of 100 lbs/day. As a result, this impact would be considered potentially significant.

To reduce construction-generated emissions, measures related to NO_x emissions would be implemented (see **MM-AQ-1** and **MM-AQ-2** in Section 3.2.5). With the use of off-road equipment meeting Tier 4 emission standards, maximum daily emissions of NO_x would be reduced to approximately 28 lbs/day and would not exceed SCAQMD's daily significance threshold of 100 lbs/day (refer to **Table 3.2-5**).

Proposed construction would be required to comply with SCAQMD's Rule 402 (Nuisance) and Rule 403 (Fugitive Dust), which identify measures that would be implemented for the control of fugitive dust generated during onsite ground-disturbance activities (see **MM-AQ-3** in Section 3.2.5). Emissions generated during construction could potentially conflict with or obstruct air quality planning efforts.

Table 3.2-4: Construction Emissions without Mitigation

Construction Activity	Emissions (lbs/day)[1]					
	VOC	NO_x	CO	SO_x	PM_{10}	$PM_{2.5}$
Asphalt Demolition	2.9	28.8	22.6	0.0	1.7	1.4
Site Preparation & Material Export	5.5	54.5	31.8	0.1	9.0	5.5
Site Preparation & Material Import	8.3	87.5	51.5	0.1	17.1	10.4
Grading & Excavation	3.9	36.6	32.5	0.1	2.7	2.2
Park & Infrastructure Construction	2.8	26.7	21.2	0.0	1.6	1.3
Paving	3.2	23.3	19.6	0.0	1.5	1.1
Utility Installation	1.6	14.9	14.2	0.0	1.2	1.0
Building Construction	3.7	18.7	18.4	0.0	1.1	0.8
In-River Terracing	3.5	37.8	38.0	0.1	2.6	1.8
Maximum Daily Emissions[2]:	17.3	**179.8**	121.3	0.3	28.7	17.7
SCAQMD Daily Significance Daily Thresholds:	75	100	550	150	150	55
Exceeds Daily Significance Thresholds?	No	**Yes**	No	No	No	No

1. Emissions were quantified using the CalEEMod, v2016.3.2, computer program. Includes onsite and offsite sources. Does not include reductions in fugitive dust associated with compliance with SCAQMD's Rule 403. VOC and ROG emissions were considered equivalent. Totals may not sum due to rounding.
2. Maximum daily emissions assume site preparation, material import and export, and in-river terracing could potentially occur simultaneously on any given day. Maximum daily emissions exceeding SCAQMD significance thresholds depicted in bold font.
lbs/day = pounds per day
Refer to the Air Quality and Greenhouse Gas Impact Assessment prepared for the proposed Project for emissions modeling assumptions and results (AMBIENT Air Quality & Noise Consulting, 2019).

Table 3.2-5: Construction Emissions with Mitigation

Construction Activity	Emissions (lbs/day)[1]					
	VOC	NO_x	CO	SO_x	PM_{10}	$PM_{2.5}$
Asphalt Demolition	0.6	3.4	19.7	0.0	0.4	0.2
Site Preparation & Material Export	1.4	6.3	41.0	0.1	3.2	0.3
Site Preparation & Material Import	1.9	14.6	60.5	0.1	5.9	2.9
Grading & Excavation	0.7	2.3	33.2	0.0	0.3	0.1
Park & Infrastructure Construction	0.6	2.4	25.4	0.0	0.4	0.2
Paving	1.3	2.1	24.0	0.0	0.3	0.0
Utility Installation	0.3	1.1	14.5	0.0	0.2	0.1
Building Construction	2.4	3.4	22.8	0.0	0.4	0.2
In-River Terracing	1.1	7.1	43.2	0.1	0.9	0.3
Maximum Daily[2]:	4.4	28.0	144.7	0.3	10.0	3.5
SCAQMD Significance Thresholds:	75	100	550	150	150	55
Exceeds Thresholds?	No	No	No	No	No	No

1. Emissions were quantified using the CalEEMod, v2016.3.2, computer program. Includes the use of off-road equipment meeting Tier 4 emissions standards and compliance with SCAQMD's Rule 403. VOC and ROG emissions were considered equivalent. Totals may not sum due to rounding.
2. Maximum daily emissions assume some activities, including site preparation, material import and export, and in-river terracing could potentially occur simultaneously on any given day.
Refer to the Air Quality and Greenhouse Gas Impact Assessment prepared for the proposed Project for emissions modeling assumptions and results(AMBIENT Air Quality & Noise Consulting, 2019).

However, with the implementation of **MM-AQ-1** through **MM-AQ-3** and compliance with applicable SCAQMD permits, impacts would be reduced to less than significant.

III(b): Result in a cumulatively considerable net increase of any criteria pollutant for which the project region is non-attainment under an applicable federal or state ambient air quality standard.

According to the SCAQMD, individual projects that would exceed recommended significance thresholds would also be considered to result in a cumulatively considerable increase in emissions for which the basin is designated non-attainment. As noted above, maximum-daily construction-generated emissions of NO_x would exceed SCAQMD's recommended significance thresholds. As a result, construction of the proposed Project could result in a cumulatively considerable net increase of ozone-precursor pollutants for which the region is designated non-attainment, particularly if other projects in the general vicinity of the project site are under construction during the same construction period. However, with the implementation of **MM-AQ-1** through **MM-AQ-3** and compliance with applicable SCAQMD permits, impacts would be reduced to less than significant.

III(c): Expose sensitive receptors to substantial pollutant concentrations.

Localized Pollutant Concentrations from Onsite Sources

Construction projects can result in short-term increases of TACs, as well as emissions of airborne fugitive dust. The SCAQMD has developed LSTs for the evaluation of short-term localized air quality impacts. The LSTs are based on CAAQS, which have been established to provide a margin of safety regarding the protection of public health and welfare.

Proposed Project-generated construction emissions in comparison to SCAQMD's LSTs are summarized in **Table 3.2-6**. Proposed Project-generated construction emissions would not exceed SCAQMD corresponding LSTs. Therefore, localized air quality impacts associated with the proposed Project would be less than significant.

Asbestos

As described in Section 3.2.2.7, the Project Site is not located in an area of naturally occurring asbestos. In addition, the proposed Project would not involve the demolition of structures having ACM. As a result, impacts associated with exposure to asbestos would be less than significant.

Diesel-Exhaust Particulate Matter

Health risks associated with DPM are primarily associated with potential cancer risks (California Air Resources Board, 2019b). The dose to which receptors are exposed is the primary factor used to determine carcinogenic health risks. Dose is a function of the concentration of a substance or substances in the environment and the duration of exposure to the substance. The calculation of cancer risk associated with exposure to TACs are typically calculated based on a 25- to 30-year period of exposure. However, such assessments should be limited to the period and duration during which exposure occurs.

Assuming that construction activities involving the use of diesel-fueled equipment would occur over an approximate thirty-month period, project-related construction activities would constitute less than eight percent of the typical exposure period. As a result, because the use of off-road heavy-duty diesel equipment would be temporary and episodic occurring over a relatively large area, and the highly

dispersive properties of DPM, project construction would not expose sensitive receptors to substantial emissions of DPM in excess of applicable thresholds. In addition, **MM-AQ-1** through **MM-AQ-3** would require the implementation of various measures that would significantly reduce construction-generated emissions, including the use of Tier 4 off-road equipment and newer on-road haul trucks, which would significantly reduce construction-generated DPM. Therefore, impacts would be less than significant.

Table 3.2-6: On-Site Construction Emissions

Construction Activity	Emissions (lbs/day)[1]					
	ROG	NO_x	CO	SO_x	PM_{10}	$PM_{2.5}$
Asphalt Demolition	0.4	1.7	18.5	0.0	0.1	0.1
Site Preparation & Material Export	1.0	4.3	38.0	0.1	2.4	0.1
Site Preparation & Material Import	1.3	5.7	55.9	0.1	4.7	2.6
Grading & Excavation	0.5	2.2	32.0	0.0	0.0	0.0
Park & Infrastructure Construction	0.5	2.3	24.5	0.0	0.1	0.1
Paving	1.3	2.1	23.2	0.0	0.0	0.0
Utility Installation	0.2	1.0	13.9	0.0	0.0	0.0
Building Construction	2.4	3.3	22.4	0.0	0.2	0.2
In-River Terracing	0.7	3.1	10.3	0.1	0.1	0.1
Maximum PARC Construction Emissions[2]:	3.0	13.1	134.2	0.3	7.2	2.8
Sixth Street Viaduct Construction Emissions[4]:	15.8	124.1	80.4	--	6.4	5.7
Total PARC Project and Sixth Street Viaduct Construction Emissions:	18.8	137.2	214.6	0.3	13.6	8.5
SCAQMD Localized Significance Thresholds[2]:	None	108	827	None	43	10
PARC Project Construction Emissions Exceeds Thresholds?	-	No	No	-	No	No
Total PARC Project and Sixth Street Viaduct Project Construction Emissions Exceeds Thresholds?	-	Yes	No	-	No	No

1. Emissions were quantified using the CalEEMod, v2016.3.2 computer program. Includes use of Tier 4 heavy-duty off-road equipment and implementation of dust control measures in compliance with SCAQMD Rule 403. Totals may not sum due to rounding.
2. Maximum daily emissions assume some activities, such as material import and export, could occur simultaneously on any given day.
3. LSTs are based on a two-acre site with sensitive receptors located at 100 meters for PM_{10} and $PM_{2.5}$ and 25 meters for NO_x and CO.
4. Based on emissions estimates derived from the Sixth Street Viaduct Improvement Project Final Environmental Impact Report (2011). Includes construction of main spans, sidewalks, roadway surface road demolition and reconstruction.
Refer to the Air Quality and Greenhouse Gas Impact Assessment prepared for the proposed Project for emissions modeling assumptions and results (AMBIENT Air Quality & Noise Consulting, 2019).

III(d): Result in other emissions (such as those leading to odors) adversely affecting a substantial number of people.

The occurrence and severity of odor impacts depends on numerous factors, including: the nature, frequency, and intensity of the source; wind speed and direction; and the sensitivity of the receptors. While offensive odors rarely cause any physical harm, they still can be very unpleasant, leading to considerable distress among the public and often generating citizen complaints to local governments and regulatory agencies.

No major sources of odors have been identified in the project area. However, construction of the proposed Project would involve the use of a variety of gasoline or diesel-powered equipment that would emit exhaust fumes. Exhaust fumes, particularly diesel-exhaust, may be considered objectionable by some people. In addition, pavement coatings and architectural coatings used during project construction would also emit temporary odors. However, construction-generated emissions would occur intermittently throughout the workday and would dissipate rapidly within increasing distance from the source. As a result, short-term construction activities would not expose a substantial number of people to frequent odorous emissions. Therefore, impacts would be less than significant.

3.2.3.5 Operational Impacts

III(a): Conflict with or obstruct implementation of the applicable air quality plan.

As described Section 3.2.3.4, projects that would conflict with existing or future growth projections or that would exceed SCAQMD-recommended project-level significance thresholds would potentially conflict with the AQMP.

The proposed Project includes the creation of public recreational space on approximately 13 acres in areas underneath and adjacent to the Viaduct in the City of Los Angeles. The proposed Project would not result in overall increases in emissions of ozone-precursor pollutants (VOC and NO_x) or PM that would exceed SCAQMD's recommended significance thresholds. Long-term operational emissions associated with the proposed Project would be primarily associated with motor vehicle operations, energy use, and area sources. Operational emissions were quantified using the CalEEMod, version 2016.3.2 computer program and are summarized in **Table 3.2-7**.

As noted, the proposed Project would result in daily emissions of approximately 6.1 lbs/day of ROG, 29.5 lbs/day of NO_x, 74.3 lbs/day of CO, 0.3 lbs/day of SO_x, 32.7 lbs/day of PM_{10}, and 9.0 lbs/day of $PM_{2.5}$. In comparison to the existing industrial land uses removed, the proposed Project would result in an overall net increase in operational emissions of approximately 0.5 lbs/day of ROG, 26.1 lbs/day of NO_x, 65.5 lbs/day of CO, 0.2 lbs/day of SO_x, 30.9 lbs/day of PM_{10}, and 8.4 lbs/day of $PM_{2.5}$. The maximum-daily emissions identified in **Table 3.2-7** were conservatively estimated assuming all recreational activities and uses could potentially operate simultaneously on any given day. Emissions of criteria air pollutants would not exceed SCAQMD's significance thresholds.

When evaluated on an annual basis, considering the number of events anticipated to occur, the proposed Project would result in an overall emissions reduction when compared to the existing industrial uses that were removed. Estimated net changes in annual operational emissions are summarized in **Table 3.2-8**. As such, long-term operation of the proposed Project would not conflict with or obstruct air quality planning efforts. Therefore, impacts would be less than significant.

Table 3.2-7: Maximum Daily Operational Emissions without Mitigation

Land Use/Event (Capacity)	Emissions (lbs/day)[1]					
	ROG	NO_x	CO	SO_x	PM_{10}	$PM_{2.5}$
Special Events (1,000)	1.1	5.5	13.7	0.1	6.2	1.7
Special Events (2,000)	2.2	10.9	27.4	0.1	12.3	3.4
Special Events (3,250)	3.6	17.7	44.5	0.2	20.0	5.5
Special Events (5,000)	5.5	27.3	68.5	0.3	30.8	8.5
Soccer Fields	0.2	0.8	2.0	0.0	0.9	0.2
East & West Park Uses & Buildings	0.4	1.4	3.8	0.0	1.0	0.3
Peak Daily[2]:	6.1	29.5	74.3	0.3	32.7	9.0
Industrial Land Uses Removed:	5.9	4.7	12.2	0.1	3.3	1.1
Net Change:	0.5	26.1	65.5	0.2	30.9	8.4
SCAQMD Significance Thresholds:	55	55	550	150	150	55
Exceeds Thresholds?	No	No	No	No	No	No

1. Emissions were quantified using the CalEEMod, v2016.3.2, computer program. Totals may not sum due to rounding.
2. Peak daily emissions assumes use of soccer fields, park uses, on-site buildings, and maximum event (5,000 attendees) could occur simultaneously on the same day.
3. Mobile-source emissions were quantified based on trip-generation rates obtained from the traffic analysis prepared for this project and default assumptions contained in CalEEMod for Los Angeles County.
lbs/day = pounds per day
Refer to the Air Quality and Greenhouse Gas Impact Assessment prepared for the proposed Project for emissions modeling assumptions and results (AMBIENT Air Quality & Noise Consulting, 2019).

Table 3.2-8: Annual Operational Emissions

Land Use/Event	Emissions (tons/year)[1,2]					
	ROG	NO_x	CO	SO_x	PM_{10}	$PM_{2.5}$
Special Events (1,000 Attendees)[3]	0.0	0.0	0.1	0.0	0.1	0.0
Special Events (2,000 Attendees)[3]	0.0	0.1	0.2	0.0	0.1	0.0
Special Events (3,250 Attendees)[3]	0.0	0.0	0.0	0.0	0.0	0.0
Special Events (5,000 Attendees)[3]	0.0	0.0	0.0	0.0	0.0	0.0
Soccer Fields	0.0	0.1	0.3	0.0	0.2	0.0
East & West Park Uses & Buildings	0.0	0.1	0.3	0.0	0.1	0.0
Total:	0.1	0.4	1.0	0.0	0.5	0.0
Industrial Land Uses Removed:	1.1	0.9	2.1	0.0	0.6	0.2
Net Change:	-1.0	-0.5	-1.1	0.0	-0.1	-0.2

1. Emissions were quantified using the CalEEMod, v2016.3.2, computer program. Totals may not sum due to rounding.
2. Mobile-source emissions were quantified based on trip-generation rates obtained from the traffic analysis prepared for this project and default assumptions contained in CalEEMod for Los Angeles County.
3. Assumes 24 days/year for events with a capacity of 1,000 attendees, 26 days/year for events with a capacity of 2,000 attendees, 2 days/year for events with a capacity of 3,250 attendees, and 1 day/year for events with a capacity of 5,000 attendees. Some smaller events may have higher annual emissions than larger events given their increased frequency.

Refer to the Air Quality and Greenhouse Gas Impact Assessment prepared for the proposed Project for emissions modeling assumptions and results (AMBIENT Air Quality & Noise Consulting, 2019).

III(b): Result in a cumulatively considerable net increase of any criteria pollutant for which the project region is non-attainment under an applicable federal or state ambient air quality standard.

According to the SCAQMD, individual projects that would exceed recommended significance thresholds would also be considered to result in a cumulatively considerable increase in emissions for which the basin is designated non-attainment. As noted above, operational emissions associated with the proposed Project would not exceed SCAQMD's recommended significance thresholds. Therefore, impacts would be less than significant.

III(c): Expose sensitive receptors to substantial pollutant concentrations.

Localized Pollutant Concentrations from Onsite Sources

The proposed Project is located in an area with relatively high background pollutant concentrations. Major emission sources in the Project Area include the UP LATC railyard and the Four Commerce Railyards. Background health risk from the UP LATC railyard and the Four Commerce Railyards is estimated to range from 10 and 50 in a million. In 2005, the CARB published the *Air Quality and Land Use Handbook: A Community Health Perspective*, which recommended that sensitive land uses be located approximately 500 feet from major freeways or urban roads having high heavy-duty truck volumes with overall traffic volumes of 100,000 vehicles per day. Major roadways in the Project Area include I-5, I-10, and U.S. 101. The CARB *Air Quality and Land Use Handbook* guidelines would not apply to the proposed Project because overall traffic volumes on the Viaduct and surrounding roadways would not exceed 100,000 vehicles per day, as shown in the EIR prepared for the Viaduct Replacement Project (California Department of Transportation and City of Los Angeles, 2011). Patrons of the park may be exposed to high background pollutant concentrations from nearby existing sources, including vehicle traffic on area roadways. However, the proposed Project would not include the installation of major stationary sources of emissions, nor would the proposed Project generate significant increases in diesel vehicle traffic that would contribute significantly to background pollutant concentrations.

Onsite emission sources associated with the proposed Project would be primarily associated with the operation of natural-gas fired water heaters, which would generate daily emissions of approximately 0.1 lbs/day of NO_x. Emissions of criteria air pollutants from other sources would be negligible. The SCAQMD has developed LSTs for the evaluation of long-term localized air quality impacts. The LSTs are based on CAAQS, which have been established to provide a margin of safety regarding the protection of public health and welfare. For emissions of NO_x, the SCAQMD's minimum LST is 103 lbs/day. Operational emissions would not exceed SCAQMD LSTs. Therefore, impacts related to localized onsite emissions associated with onsite operational activities would be less than significant.

Mobile-Source Carbon Monoxide

CO is the primary criteria air pollutant of local concern associated with the proposed Project. Under specific meteorological and operational conditions, such as near areas of heavily congested vehicle traffic, CO concentrations may reach unhealthy levels. Mobile-source emissions of CO are a direct function of traffic volume, speed, and delay. Under normal meteorological conditions, localized concentrations of CO disperse rapidly with increased distance from the source. For this reason, modeling of mobile-source CO concentrations is typically recommended for sensitive land uses located near signalized roadway

intersections that are projected to operate at unacceptable levels of service (LOS) (i.e., LOS E or F). Localized CO concentrations associated with the proposed Project would be considered a less-than-significant impact if (1) traffic generated by the proposed Project would not result in deterioration of a signalized intersection to a LOS E or F; or (2) the proposed Project would not contribute additional traffic to a signalized intersection that already operates at LOS of E or F.

Based on the *Traffic Impact Analysis* prepared for the proposed Project, existing signalized intersections in the Project Area operate at LOS D, or better (Kimley-Horn and Associates, Inc., 2019a). Under existing-plus-project conditions, signalized intersections primarily affected by the proposed Project would continue to operate at LOS D, or better. Under existing-plus-project event conditions, signalized intersections primarily affected by the proposed Project would also continue to operate at LOS D, or better.

Under future cumulative conditions, the intersections of Alameda Street at Seventh Street, Boyle Avenue at Whittier Boulevard, and Alameda Street at Fourth Street are projected to operate at unacceptable LOS during either AM or PM peak hours. With implementation of the proposed Project, the LOS at these intersections would not change. Furthermore, implementation of the proposed Project would be projected to result in slight improvements in overall volume-to-capacity ratios at these intersections. The proposed Project would not result in a degradation of LOS at primarily affected intersections that are projected to operate at unacceptable levels of service. Therefore, impacts related to the proposed Project's contribution to localized CO concentrations would be less than significant.

III(d): Result in other emissions (such as those leading to odors) adversely affecting a substantial number of people.

No major sources of odors have been identified in the Project Area. In addition, the proposed Project would not include the installation of any major sources of odors. Therefore, impacts would be less than significant.

3.2.4 Best Management Practices

BMP-AQ-1: SCAQMD Rules and Regulations

The contractor shall implement measures to ensure that all construction activities are consistent with SCAQMD rules and regulations.

BMP-AQ-2: Construction Worker Incentives

The City shall offer ride-share and transit incentives for construction workers to reduce emissions associated with motor vehicle use.

BMP-AQ-3: Construction Equipment Maintenance

The contractor shall maintain construction equipment by conducting regular tune-ups according to the manufacturers' recommendations.

3.2.5 Mitigation Measures

MM-AQ-1: Newer/Tier 4 Engines in Haul Trucks and Construction Equipment

- Include in all construction contracts the requirement to use 2007 and newer diesel haul trucks (e.g., material delivery trucks and soil import/export).
- Include in all construction contracts the requirement that all off-road diesel-fueled construction equipment greater than 50 horsepower shall meet Tier 4 off-road emission standards. In addition, if not already supplied with a factory-equipped diesel particulate filter, all construction equipment shall be outfitted with Best Available Control Technology (BACT) devices certified by CARB. Any emissions control device used by the contractor shall achieve emissions reductions that are no less than what could be achieved by a Level 3 diesel emissions control strategy for a similarly sized engine as defined by CARB regulations. To the extent locally available, construction equipment shall incorporate emissions savings technology such as hybrid drives. In the event that any equipment required under this mitigation measure is not available, provide documentation as information becomes available. A copy of each unit's certified tier specification, BACT documentation, and CARB or SCAQMD operating permit at the time of mobilization of each applicable unit of equipment shall be provided.
- Maintain construction equipment by conducting regular tune-ups according to the manufacturers' recommendations.
- To the extent possible, the import and export of onsite materials shall be scheduled to minimize empty return trips.

MM-AQ-2: Construction Equipment Requirements

- All on- and off-road diesel-fueled equipment shall not idle for more than 5 minutes when not in use. The idling of diesel-fueled equipment and haul trucks within 1,000 feet of nearby residential land uses shall be prohibited. Signs shall be posted in the designated queuing areas and or job sites to remind drivers and operators of the 5-minute-idling limit.
- Staging and queuing areas shall be located at the furthest distance possible from nearby residential land uses.
- Use alternatively fueled (e.g., compressed natural gas, liquefied natural gas, propane), gasoline-fueled, or electrified construction equipment in place of diesel-fueled equipment to the extent locally available.

MM-AQ-3: Fugitive Dust Controls

- All active portions of the construction site shall be watered twice daily to prevent excessive amounts of dust.
- Non-toxic soil stabilizers shall be applied to all inactive construction areas (previously graded areas inactive for 20 days or more, assuming no rain) according to manufacturers' specifications.
- All excavating and grading operations shall be suspended when wind gusts (as instantaneous gust) exceed 25 miles per hour.

- On-site off-road equipment and on-road vehicles used on-site shall be limited to 15 miles per hour.
- All on-site roads shall be paved as soon as feasible, watered twice daily, or chemically stabilized.
- Visible dust beyond the property line which emanates from the project shall be prevented to the maximum extent feasible.
- All material transported off-site shall be either sufficiently watered or securely covered to prevent excessive amounts of dust prior to departing the job site.
- Track-out devices shall be used at all construction site access points.
- All delivery truck tires shall be watered down and/or scraped down prior to departing the job site.
- Streets shall be swept at the end of the day if visible soil material is carried onto adjacent paved public roads and use of SCAQMD Rule 1186 and 1186.1 certified street sweepers or roadway.
- Replace ground cover in disturbed areas as quickly as possible.
- All trucks that are to haul excavated or graded material on-site shall comply with State Vehicle Code Section 23114 (Spilling Loads on Highways), with special attention to Sections 23114(b)(F), (e)(4) as amended, regarding the prevention of such material spilling onto public streets and roads.
- Conduct continuous, direct-reading, near real-time ambient monitoring of PM_{10}. Install appropriate signage and notify the SCAQMD in accordance with Rule 1466, Control of Particulate Emissions from Soils with Toxic Air Contaminants, prior to conducting any earth-moving activities on any site meeting the applicability of the rule.

3.2.6 Significant Unavoidable Adverse Impacts

Because construction of the proposed Project would result in increased NO_x and fugitive dust emissions, the proposed Project would result in significant impacts related to Air Quality. However, with the implementation of **MM-AQ-1** and **MM-AQ-2** and consistency with SCAQMD rules and regulations (**MM-AQ-3**)**,** the proposed Project would not result in significant unavoidable adverse impacts.

3.2.7 Cumulative Impacts

As discussed in Sections 3.2.3.4 and 3.2.3.5, individual projects that would exceed recommended significance thresholds would also be considered to result in a cumulatively considerable increase in emissions for which the basin is designated non-attainment.

As noted in Section 3.2.3.4, maximum-daily construction-generated emissions of NO_x would exceed SCAQMD's recommended significance thresholds. With the implementation of **MM-AQ-1** through **MM-AQ-3**, impacts would be reduced to less than significant. However, construction of the proposed Project could result in a cumulatively considerable net increase of ozone-precursor pollutants for which the region is designated non-attainment, particularly if other projects in the general vicinity of the project site are under construction during the same construction period.

The 670 Mesquite Project may be under construction during the construction of the Project. It was anticipated to commence in 2019 and be completed as early as 2022, or as late as 2040; however, the 670 Mesquite Project has not commenced construction yet. 670 Mesquite would be constructed in one

phase and would increase emissions during construction, as well as potentially increase traffic and therefore increase emissions during the operational phase of the project.

In addition, some portions of the Viaduct Replacement Project may still be under construction during construction of the proposed Project. Construction activities associated with the Viaduct Replacement Project likely to occur during proposed Project construction include construction of the main spans, sidewalks, barriers, and railings, as well as roadway surface demolition and reconstruction. Based on the EIR prepared for the Viaduct Replacement Project, on-site construction emissions associated with these remaining activities would total approximately 15.8 lbs/day of ROG, 124.1 lbs/day of NO_x, 80.4 lbs/day of CO, 6.4 lbs/day of PM_{10}, and 5.7 lbs/day of $PM_{2.5}$ (California Department of Transportation and City of Los Angeles, 2011). Based on these estimates, and assuming that construction of the Viaduct Replacement Project and the proposed Project were to occur simultaneously, on-site emissions would total approximately 18.8 lbs/day of ROG, 137.2 lbs/day of NO_x, 214.6 lbs/day of CO, 13.6 lbs/day of PM_{10}, and 8.5 lbs/day of $PM_{2.5}$ (see **Table 3.2-9**). As indicated in **Table 3.2-9**, total emissions of NO_x would exceed SCAQMD's LST of 108 lbs/day. As a result, a more detailed analysis of localized air quality impacts was warranted.

Table 3.2-9: Cumulative On-Site Construction Emissions

Construction Activity	Emissions (lbs/day)[1]					
	ROG	NO_x	CO	SO_x	PM_{10}	$PM_{2.5}$
Total Proposed Project Construction Emissions[2]	3.0	13.1	134.2	0.3	7.2	2.8
Viaduct Construction Emissions[4]	15.8	124.1	80.4	-	6.4	5.7
Total Proposed Project and Viaduct Construction Emissions	18.8	137.2	214.6	0.3	13.6	8.5
SCAQMD Localized Significance Thresholds[3]	None	108	827	None	43	10
Proposed Project Construction Emissions Exceeds Thresholds?	-	No	No	-	No	No
Total Proposed Project and Viaduct Project Construction Emissions Exceeds Thresholds?	-	Yes	No	-	No	No

1. Emissions were quantified using the CalEEMod, v2016.3.2 computer program. Includes use of Tier 4 heavy-duty off-road equipment and implementation of dust control measures in compliance with SCAQMD Rule 403. Totals may not sum due to rounding.
2. Maximum daily emissions assume some activities, such as material import and export, could occur simultaneously on any given day.
3. LSTs are based on a two-acre site with sensitive receptors located at 100 meters for PM_{10} and $PM_{2.5}$ and 25 meters for NO_x and CO.
4. Based on emissions estimates derived from the Sixth Street Viaduct Improvement Project Final Environmental Impact Report (2011). Includes construction of main spans, sidewalks, and roadway surface road demolition and reconstruction.

Refer to the Air Quality and Greenhouse Gas Impact Assessment prepared for the proposed Project for emissions modeling assumptions and results (AMBIENT Air Quality & Noise Consulting, 2019).

The analysis of predicted NO_2 concentrations at nearby receptors for the Viaduct Replacement Project was based on maximum daily on-site emissions of 331.9 lbs/day of NO_x, which were estimated to occur during the initial phase of the Viaduct Replacement Project. Subsequent phases of Viaduct construction, including those anticipated to overlap with construction of the proposed Project, were estimated to generate substantially less emissions.

Nonetheless, based on the results of the dispersion modeling conducted for the Viaduct Replacement Project, maximum predicted NO_2 concentrations at nearby land uses, when added to background ambient concentrations, were not found to violate applicable air quality standards. As noted in **Table 3.2-9**, the remaining Viaduct construction activities anticipated to potentially occur during construction of the proposed Project would total approximately 124.1 lbs/day of NO_x. Assuming that both the Viaduct Replacement Project and the proposed Project were to be constructed simultaneously, on-site emissions of NO_x would total 137.2 lbs/day, substantially less than the 331.9 lbs/day analyzed for the Viaduct Replacement Project. To reiterate, the dispersion modeling analysis prepared for the Viaduct Replacement Project, which was based on a much higher mass emissions level of 331.9 lbs/day of NO_x, concluded that localized construction-generated emissions would not exceed applicable ambient air quality standards. As a result, given that emissions for the proposed Project would be substantially less than what was previously analyzed, localized NO_2 concentrations would, likewise, not be anticipated to exceed applicable ambient air quality standards at nearby land uses.

With the implementation of dust control measures in accordance with SCAQMD rules (see **MM-AQ-3** in Section 3.2.5), emissions of PM_{10} and $PM_{2.5}$ are not predicted to exceed applicable standards. Assuming that construction of the remaining Viaduct construction activities and the proposed Project were to occur simultaneously, on-site emissions of PM_{10} and $PM_{2.5}$ would total approximately 13.6 and 8.5 lbs/day, respectively. Total on-site emissions of PM_{10} and $PM_{2.5}$ would not exceed SCAQMD's LSTs of 43 and 10 lbs/day, respectively. Therefore, localized air quality impacts associated with the construction of the proposed Project would be less than significant.

As discussed in Section 3.2.3.5, operational emissions associated with the proposed Project would not exceed SCAQMD's recommended significance thresholds. Therefore, impacts would be less than significant.

The proposed development projects listed in **Table 1-1** would be required to comply with all Federal and State regulations and be consistent with regional policies related to Air Quality, including the FCAA, CCAA, SCAQMD rules and regulations, and RTP/SCS. These projects would also be evaluated based on whether they exceed the SCAQMD's recommended significance thresholds. To reduce impacts related to Air Quality, these projects would be required to develop BMPs and mitigation measures. Therefore, the proposed Project would not result in cumulatively considerable impacts related to Air Quality.

3.3 Biological Resources

The affected environment and regulatory setting for Biological Resources related to the Project Area are described in this section. In addition, this section describes the potential impacts related to Biological Resources that would result from implementation of the proposed Project. As noted in the analysis below, impacts associated with Biological Resources during construction or operation of the proposed Project would be less than significant and no mitigation measures are required.

The information in this section is based on the *Biological Resources Report* (BRR) (GPA Consulting, 2019), the *Sixth Street Viaduct Replacement Project Supplemental Bat Survey Report* (GPA Consulting, 2015b), and the *Sixth Street Viaduct Replacement Project Bat and Nesting Bird Survey Repor*t (GPA Consulting, 2015a). Within this section, special-status species, nesting birds, raptor foraging activities, and bats will be discussed. Special-status species include plants and wildlife species that are listed under the California Department of Fish and Wildlife (CDFW) and the Federal Endangered Species Acts (FESA) (California Department of Fish and Wildlife, 2019); plant species designated by the California Native Plant Society (CNPS) with a California Rare Plant Rank (CRPR) or other plants of local concern (California Native Plant Society, 2019); and wildlife that is designated as a California Species of Special Concern, as defined by CDFW (California Department of Fish and Wildlife, 2019). Biological record searches were reconducted in April 2021.

3.3.1 Regulatory Setting

The following discussion provides a summary of state and federal laws and regulations pertaining to the proposed Project, environmental permits that are required for the proposed Project, and study methods that were undertaken as required by resource agencies and environmental laws.

3.3.1.1 Federal

Clean Water Act

The United States Army Corps of Engineers (USACE) regulates the placement of dredged and fill material into waters of the United States (U.S.), including wetlands, under Section 404 of the Clean Water Act (CWA). No discharge of dredged or fill material into jurisdictional features is permitted unless authorized under an USACE Nationwide Permit or Individual Permit. For all work subject to an USACE Section 404 permit, project proponents must obtain a Water Quality Certification from the applicable RWQCB under CWA Section 401 stating that the project would comply with applicable water quality regulations.

Waters of the United States

The USACE Regulatory Program regulates activities within federal wetlands and waters of the U.S. pursuant to Section 404 of the CWA. Waters of the U.S. are divided into several categories as defined by the Code of Federal Regulations (CFR). Under the CFR (33 CFR 328.3), waters of the U.S. include, but are not limited to:

- All waters which are currently used, or were used in the past, or may be susceptible to use in interstate or foreign commerce (including sightseeing or hunting), including all waters subject to the ebb and flow of the tide;

- All interstate waters including interstate wetlands; and
- All other waters such as intrastate lakes, rivers, streams (including intermittent streams), mudflats; sand flats; wetlands; sloughs; prairie potholes; wet meadows; playa lakes; or natural ponds where the use, degradation, or destruction of which could affect interstate or foreign commerce. This includes any such waters which are or could be used by interstate or foreign travelers for recreational or other purposes, and from which fish or shellfish could be taken and sold in interstate or foreign commerce, or which are used or could be used for industrial purposes in interstate commerce.

In streams and rivers where adjacent wetlands are absent, the USACE jurisdiction extends to the ordinary high-water mark (OHWM). The OHWM is defined as "the line on the shore established by the fluctuations of water and indicated by physical characteristics such as a clear, natural line impressed on the bank, shelving, changes in the character of the soil, destruction of terrestrial vegetation, the presence of litter and debris, or other appropriate means that consider the characteristics of the surrounding areas" (33 CFR 328.3[e]). If the OHWM is not readily distinguishable, the USACE jurisdiction within streams extends to the "bankfull discharge" elevation, which is the level at which water begins to leave the channel and move into the floodplain (Rosgen, 1996). This level is reached at a discharge which generally has a recurrence interval of approximately 1.5 to two years on the annual flood series (Leopold, 1994).

In 2015, the USACE and United States Environmental Protection Agency (U.S. EPA) published the Clean Water Rule, which more clearly defined waters of the U.S. The intent of the rule was to make the definition of waters of the U.S. easier to understand, more predictable, and more consistent with current science, while better protecting waters of the U.S. The rule went into effect on August 28, 2015; however, on October 9, 2015, the U.S. Court of Appeals for the Sixth Circuit stayed the Clean Water Rule nationwide pending further action of the court. In response, the USACE and U.S. EPA resumed using the prior regulations defining waters of the U.S. This report uses the current definition of waters of the U.S., provided above. On April 21, 2020, the U.S. EPA and USACE published the Navigable Waters Rule, which re-defined the scope of waters federally regulated under the Clean Water Act (85 FR 22250).

Federal wetlands are transitional areas between well-drained upland habitats and permanently flooded (deepwater) aquatic habitats and are defined differently by different resource agencies. The USACE and the EPA define adjacent wetlands as those areas that either abut a jurisdictional water; are inundated by flooding from a jurisdictional water; are physically separated from a jurisdictional water by a natural berm, bank, dune, or similar natural feature; or are physically separated from a jurisdictional water by an artificial dike, barrier, or similar artificial structure so long as that structure allows for a direct hydrologic surface connection between the wetlands and jurisdiction water in a typical year (33 CFR 328.3[b]).

Federal Endangered Species Act

The Federal Endangered Species Act (FESA) was established in 1973 to provide a framework to conserve and protect endangered and threatened species and their habitat. Section 10 of the FESA allows for the "incidental take" of endangered and threatened wildlife species by non-federal entities. Incidental take is defined by the FESA as take that is incidental to, and not the purpose of, the carrying out of an otherwise lawful activity. The term "take" means to harass, harm, pursue, hunt, shoot, wound, kill, trap, capture, or collect, or to attempt to engage in any such conduct. Section 10(a)(1)(B) of the FESA authorizes the taking of federally listed wildlife or fish through an incidental take permit. Section 10(a)(2)(A) of the FESA

requires an applicant for an incidental take permit to submit a conservation plan that specifies, among other things, the impacts likely to result from the taking of the species, and the measures the permit applicant will take to minimize and mitigate impacts on the species. Under FESA designated critical habitat is identified as specific areas containing physical or biological features essential to the existence of endangered or threatened species.

Migratory Bird Treaty Act

The Migratory Bird Treaty Act (MBTA) (50 CFR Part 10 and Part 21) protects migratory birds, their occupied nests, and their eggs from disturbance and/or destruction. "Migratory birds" under the MBTA include all bird species listed in 50 CFR Part 10.13, as updated in December 2013 (U.S. Fish and Wildlife Service, 2013). In accordance with the Migratory Bird Treaty Reform Act of 2004, the United States Fish and Wildlife Service (USFWS) included all species native to the United States (or United States territories) that are known to be present as a result of natural biological or ecological processes. In addition, the USFWS provided clarification that the MBTA does not apply to any nonnative species whose presence in the United States is solely the result of intentional or unintentional human-assisted introduction (U.S. Fish and Wildlife Service, 2018). Nonnative bird species not protected by the MBTA include, but are not limited to, the house sparrow (*Passer domesticus*), European starling (*Sturnus vulgaris*), and rock pigeon (*Columba livia*).

3.3.1.2 State

Porter-Cologne Act

The RWQCB also asserts authority over waters of the state under the Porter-Cologne Act, which establishes a regulatory program to protect water quality and to protect beneficial uses of state waters. The Porter-Cologne Act empowers the RWQCB to formulate and adopt a Water Quality Control Plan that designates beneficial uses and establishes water quality objectives that in its judgment would ensure reasonable protection of beneficial uses. Each RWQCB establishes water quality objectives that will ensure the reasonable protection of beneficial uses and the prevention of water quality degradation. Dredge or fill activities with the potential to affect water quality in these waters must comply with Waste Discharge Requirements (WDR) issued by the RWQCB. Waters of the state are defined by the Porter-Cologne Act as any surface or subsurface water or groundwater, including saline waters, within the boundaries of the state.

California Water Code

The term "waters of the state," under jurisdiction of the RWQCB, is defined by California Water Code as "any surface water or groundwater, including saline waters, within the boundaries of the state" (California Water Code Section 13050(e)).

Currently, the RWQCB relies upon the definition used in the CWA to define wetlands. However, the State Water Resources Control Board (SWRCB) recently redefined wetlands as part of their *Procedures for Discharges of Dredged or Fill Material to Waters of the State* (State Water Resources Control Board, 2019). The new definition, which was adopted April 2, 2019, is "an area is wetland if, under normal circumstances, (1) the area has continuous or recurrent saturation of the upper substrate caused by groundwater, or shallow surface water, or both; (2) the duration of such saturation is sufficient to cause

anaerobic conditions in the upper substrate; and (3) the area's vegetation is dominated by hydrophytes or the area lacks vegetation." This report uses the current definition of wetlands.

California Fish and Game Code

Section 1602 of the California Fish and Game Code governs construction activities that substantially divert or obstruct natural stream flow or substantially change the bed, channel, or bank of any river, stream, or lake under the jurisdiction of CDFW. Under the California Fish and Game Code, the limits of CDFW's jurisdiction within streams and other drainages extends from the top of the stream bank to the top of the opposite bank, to the outer drip line in areas containing riparian vegetation, and/or within the 100-year floodplain of a stream or river system containing fish or wildlife resources. Streams are defined in the California Code of Regulations (CCR) (14 CCR Section 1.72) as "a body of water that follows at least periodically or intermittently through a bed or channel having banks and that support fish or other aquatic life. This includes watercourses having surface or subsurface flow that supports or has supported riparian vegetation." Under Section 1602, a Streambed Alteration Agreement must be issued by the CDFW prior to the initiation of construction activities that may substantially divert or obstruct the natural flow of any river, stream, or lake; substantially change or use any material from the bed, channel, or bank, of any river, stream, or lake; or deposit debris, waste, or other materials that could pass into any river, stream, or lake under CDFW's jurisdiction.

The CDFW has jurisdictional authority over waters of the State, including wetlands. In practice, CDFW follows the USFWS' definition of wetlands in Cowardin's *Classification of Wetlands and Deepwater Habitats of the United States*: "Wetlands are lands transitional between terrestrial and aquatic systems where the water table is usually at or near the surface or the land is covered by shallow water. For purposes of this classification, wetlands must have one or more of the following three attributes: 1) at least periodically, the land supports hydrophytes; 2) the substrate is predominantly undrained hydric soil; and 3) the substrate is non-soil and is saturated with water or covered by shallow water at some time during the growing season of each year" (Cowardin, Carter, Golet, & LaRoe, 1979).

Section 2126 of the California Fish and Game Code states that it is unlawful for any person to take any mammal that is identified in Section 2118, including all species of bats.

Sections 3503, 3513, and 3800 of the California Fish and Game Code prohibits the take of birds protected under the MBTA and protects their occupied nests. In addition, Section 3503.5 of the California Fish and Game Code prohibits the take of any birds in the order Falconiformes or Strigiformes (birds-of-prey) and protects their occupied nests. Pursuant to Section 3801 and 3800, the only species authorized for take without prior authorization from the CDFW is the house sparrow and European starling.

State-listed species and those petitioned for listing by the CDFW are fully protected under the California Endangered Species Act (CESA). Under Section 2081, if a project would result in take of a species that is state-only listed as threatened or endangered, then an incidental take permit from the CDFW is required. However, under Section 2080.1 of the California Fish and Game Code, if a project would result in take of a species that is both federally and state listed, a consistency determination with the findings of the FESA determination may be completed in lieu of undergoing separate consultation.

Sections 3511, 4700, 5050, and 5515 of the California Fish and Game Code prohibit the take or possession of 37 fully protected bird, mammal, reptile, amphibian, and fish species. Each of the statutes states that

no provision of this code or any other law shall be construed to authorize the issuance of permits or licenses to "take" the species, and states that no previously issued permit or licenses for take of the species "shall have any force or effect" for authorizing take or possession. The CDFW will not authorize incidental take of fully protected species when activities are proposed in areas inhabited by those species.

3.3.1.3 Local

City of Los Angeles

Every county and city is required by California State Law to adopt a General Plan. The City of Los Angeles General Plan (General Plan) is a document that has several elements which consist of the plans for the City's 35 Community Plan Areas. The General Plan was approved by the City Planning Commission in July 1995 and adopted by the City Council in December 1996 (City of Los Angeles, 2019).

Conservation Element

The Conservation Element of the General Plan addresses conservation, protection, development, utilization, and reclamation of natural resources (City of Los Angeles, 2001). The Conservation Element includes the following goals, objectives, and policies that are relevant to the proposed Project:

Goals

- A city that preserves, protects, and enhances its existing natural and related resources.

Objectives

- Protect and promote restoration, to the greatest extent practical, of sensitive plant and animal species and their habitats; and
- Preserve, protect, restore and enhance natural plant and wildlife diversity, habitats, corridors and linkages so as to enable the healthy propagation and survival of native species, especially those species that are endangered, sensitive, threatened or species of special concern.

Policies

- Continue to require evaluation, avoidance, and minimization of potential significant impacts, as well as mitigation of unavoidable significant impacts on sensitive animal and plant species and their habitats and habitat corridors relative to land development activities;
- Continue to administer city-owned and managed properties so as to protect and/or enhance the survival of sensitive plant and animal species to the greatest practical extent;
- Continue to support legislation that encourages and facilitates protection of endangered, threatened, sensitive and rare species and their habitats and habitats and habitat corridors;
- Continue to identify significant habitat areas, corridors and buffer and to take measures to protect, enhance and/or restore them;
- Continue to protect, restore and/or enhance habitat areas, linkages and corridor segments, to the greatest extent practical, within city owned or managed sites;
- Continue to work cooperatively with other agencies and entities in protecting local habitats and endangered, threatened, sensitive and rare species; and,

- Continue to support legislation that encourages and facilitates protection of local native plant and animal habitats.

3.3.2 Environmental Setting

This section describes the environmental setting or conditions related to Biological Resources and jurisdictional areas within the Project Area. This information is intended to assist in the evaluation and conclusions of the impact analysis provided below and in the formation of BMPs.

As noted in the BRR, two bat surveys were completed in 2015 for the Sixth Street Viaduct Replacement Project (Viaduct Replacement Project), and a site visit was completed for the proposed Project on November 7, 2017, to assess current conditions.

3.3.2.1 Vegetation/Land Use Types

The Project Area is located under and adjacent to the Viaduct Replacement Project area. The Project Area is surrounded by industrial and commercial land uses. The vegetation surrounding the Project Area is mostly comprised of ornamental and weedy plant species.

3.3.2.2 Plants

During the site visit, non-native weedy species were observed in and around the Project Area in disturbed areas, including tree tobacco (*Nicotiana glauca*), Mexican fan palm (*Washingtonia robusta*), crimson fountain grass (*Pennisetum setaceum*), and other herbaceous plants and grasses. There are no natural vegetation communities in the Project Area.

3.3.2.3 Wildlife

Several wildlife species were observed within the Project Area in the 2015 pre-construction surveys for the Viaduct Replacement Project and subsequent construction monitoring surveys, including two bat species and eighteen bird species. The bat species recorded were Yuma myotis (*Myotis yumanensis*) and Mexican free-tailed bat (*Tadarida brasiliensis*). The bird species observed were barn swallow (*Hirundo rustica*), cliff swallow (*Petrochelidon pyrrhonota*), American crow (*Corvus brachyrhynchos*), common raven (*Corvus corax*), red-tailed hawk (*Buteo jamaicensis*), osprey (*Pandion haliaetus*), northern rough-winged swallow (*Stelgidopteryx serripennis*), black necked stilt (*Himantopus mexicanus*), least sandpiper (*Calidris minutilla*), Canada goose (*Branta canadensis*), mallard duck (*Anas platyrhynchos*), great egret (*Ardea alba*), snowy egret (*Egretta thula*), black phoebe (*Sayornis nigricans*), killdeer (*Charadrius vociferous*), great blue heron (*Ardea herodias*), California gull (*Larus californicus*), and rock pigeon. However, due to the level of disturbance and extremely limited amount of vegetated areas, the biological diversity of animals within the Project Area and surrounding areas is low.

3.3.2.4 Federal and State Jurisdictional Aquatic Resources

The Los Angeles River (LA River) is under jurisdiction of the USACE and RWQCB and is designated as waters of the United States and the State. The LA River is also under CDFW jurisdiction. The jurisdiction of the CDFW includes the LA River from the top of the east bank to the top of the west bank. There is no riparian corridor associated with the LA River in the Project Area and there are no existing wetlands in the Project Area.

3.3.2.5 Special-Status Species

Special-status species are plants and animals that are legally protected under the FESA, the CESA, or other regulations, as well as species considered sufficiently rare by the scientific community to qualify for such listing. A list of special-status species, their critical habitats, and sensitive vegetation communities with the potential to be in the Project Area based on geographical location was obtained using the California Natural Diversity Database (CNDDB). A list of special-status plants was obtained from the California Native Plant Society (CNPS) Inventory of Rare and Endangered Vascular Plants of California, which was developed and is maintained by the CNPS Rare Plant Program. A list of special-status species with potential to be in the Project Area based on geographical location was obtained using the USFWS Information for Planning and Conservation (IPaC) System (U.S. Fish and Wildlife Service, 2019). A list of special-status fish species with the potential to be in the Project Area based on geographical location was obtained using the National Marine Fisheries Service (NMFS) California Species List Tool (National Marine Fisheries Service, 2019). The CNDDB, CNPS, USFWS IPaC, and NMFS species lists are included in the BRR prepared for the proposed Project (GPA Consulting, 2019). Biological record searches were reconducted in April 2021.

Special-Status Plants and Sensitive Vegetation Communities

A total of 33 special-status plant species were evaluated for their potential to be within the Project Area, eight of which are identified as federally and/or state threatened and endangered plant species. Survey results, range, and habitat information was used to determine the likelihood for these species to be within the Project Area. Special-status plant species were not observed; therefore, special-status plant species are not anticipated to be in the Project Area.

According to the USFWS, there are no USFWS-designated critical habitats found within the Project Area.

According to the CNDDB search, three sensitive vegetation communities have the potential to be within the Project Area. These sensitive vegetation communities include California Walnut Woodland, Southern Sycamore Alder Riparian Woodlands, and Walnut Forest. None of the sensitive communities were observed, or have the potential to be, within the Project Area.

Special-Status Wildlife

A total of 22 special-status wildlife species were evaluated for their potential to be within the Project Area. Six of which are identified as federally and/or state threatened and endangered wildlife species. Survey results, range, and habitat information was used to determine the likelihood for these species to be within the Project Area. Because the entire Project Area lacks suitable habitat, is disturbed, and is surrounded by industrial and commercial land uses, most of these wildlife species are not anticipated to be in the Project Area. However, the Yuma myotis, a state Species of Special Concern, was recorded in the Project Area during the 2015 Viaduct Replacement Project survey and has a potential to roost or forage in the project area. Bridges and other structures within the project area would provide roosting and nesting habitat for special-status birds and bats. The LA River and other open areas provide foraging habitat for special-status osprey, great egret, and snowy egret. Special-status wildlife such as Yuma myotis, osprey, great egret, and snowy egret have the potential to be within the vicinity of the Project Area.

No USFWS-designated critical habitat for federally threatened and/or endangered wildlife species is designated in the Project Area, and there is no essential fish habitat known to be in the Project Area.

3.3.2.6 Bats

The Fourth Street Bridge and the Seventh Street Bridge contain suitable habitat for bat roosting. As a component of The Sixth Street Viaduct Replacement Project, permanent bat design features will be constructed on the new Sixth Street Viaduct with over the LA River. These habitat features may be occupied by bats prior to the implementation of this proposed Project. Therefore, this EIR also evaluates the potential for bats to be in the newly placed permanent bat design features and any new buildings that provide roosting habitat.

Two bat species, Yuma myotis and the Mexican free-tailed bat, were detected in the Project Area during the bat surveys conducted for the Viaduct Replacement Project in May of 2015, and bats have been detected during subsequent monitoring of the Fourth Street Viaduct. Other special-status bats also have potential to be in the Project Area.

3.3.2.7 Birds

Nesting Birds

The Project Area contains limited suitable nesting habitat for nesting birds, since the entire Project Area is disturbed and is surrounded by industrial and commercial land uses. There is suitable nesting habitat in the Project Area for bird species that frequently nest in and on structures, trees, or other vegetation in developed areas, and are tolerant of disturbance. Several bird species including barn swallows, cliff swallows, American crows, common ravens, and rock pigeons were observed nesting on the Sixth Street Viaduct during a May 2015 survey (GPA Consulting, 2015a).

Raptor Foraging Activities

The Project Area was evaluated for its potential to support raptor foraging activities. Raptors could nest within the Project Area; however, there is limited open area and the foraging habitat is low quality. The Project Area provides limited foraging opportunities for raptor species that are habituated to developed areas.

3.3.2.8 Wildlife Corridors

According to the CDFW Biogeographic Information and Observation System (BIOS), there are no essential wildlife connectivity areas found within the Project Area (California Department of Fish and Wildlife, 2018). The Project Area is within a developed area with minimal habitat for wildlife and is not likely used as a wildlife corridor. However, the Project Area may be used for local foraging and movement by local wildlife species from the surrounding areas.

3.3.3 Environmental Impact Analysis

3.3.3.1 Methodology

Potential significant impacts associated with the proposed Project were gathered from the BRR (October 2019). This report presented findings, conclusions, and recommendations concerning the proposed

Project. The results were based on an analysis of the existing biological resources and jurisdictional areas contained within the Project Area which could be affected by the proposed Project during construction and operation.

Direct impacts result when sensitive biological resources are altered by project implementation, such as through vegetation removal, habitat modifications, and injury or death of wildlife species. Indirect impacts may result from elevated levels of noise or lighting, changes in surface water hydrology, or increased erosion or sedimentation. These types of indirect impacts can affect vegetation communities or their potential use by sensitive wildlife species.

The discussion below identifies potential impacts resulting from the proposed Project, and the BMPs that would be required to reduce impact levels to less than significant.

3.3.3.2 Screening Analysis

Several impacts and corresponding thresholds of significance in the following section were eliminated from further analysis in this EIR. Topics were eliminated if the Initial Study for the proposed Project concluded there would be "No Impact," or if impacts were identified to be "Less Than Significant… and will not be discussed further in the EIR." Therefore, only the topics described in the section below were determined to require further analysis in this EIR. A copy of the Initial Study, which contains the eliminated topics, is provided in **Appendix A**.

3.3.3.3 Thresholds of Significance

According to Appendix G of the CEQA Guidelines and the *L.A. CEQA Thresholds Guide*, the proposed Project would have a significant impact on Biological Resources if it would:

IV(a) Have a substantial adverse effect, either directly or through habitat modifications, on any species identified as a candidate, sensitive, or special status species in local or regional plans, policies, or regulations, or by the CDFW or USFWS.

IV(c) Have a substantial adverse effect on state or federally protected wetlands (including, but not limited to, marshes, vernal pools, coastal, etc.) through direct removal, filling, hydrological interruption, or other means?

3.3.3.4 Construction Impacts

IV(a): Would the project have a substantial adverse effect, either directly or through habitat modifications, on any species identified as a candidate, sensitive, or special-status species in local or regional plans, policies, or regulations, or by the CDFW or USFWS?

The analysis below addresses potential impacts on biological resources including FESA and CESA species, related to the temporary and short-term, direct and indirect impacts on sensitive biological resources anticipated during construction of the proposed Project. As noted below, the proposed Project would result in less than significant impacts on vegetation, wildlife, and special-status plants or wildlife; therefore, no mitigation is required.

Special-Status Plants

Special-status plants species are not expected to be in the Project Area; therefore, mitigation measures are not required.

Special-Status Wildlife

Bats and birds are known to use the bridges over the LA River for roosting and nesting, and raptors could forage in the area. Removal of habitat and increased noise, vibration, night lighting, carbon dioxide, and human activity could impact special-status wildlife, including but not limited to, Yuma myotis, osprey, great egret, and snowy egret. Special-status wildlife could be nesting or roosting with in the Project Area. However, the following BMPs would be implemented to reduce construction-related impacts on wildlife (see Section 3.3.4 and 3.3.5 for additional information):

- Pre-construction wildlife surveys would be completed by a qualified biologist.
- All trash and construction debris would be removed from the LA River on a daily basis.
- No work for the proposed Project would be conducted on or under the Fourth Street Bridge or Seventh Street Bridge structures.
- The LA River Access Tunnel would be surveyed by a qualified biologist to assess the presence of bats or potential bat-roosting habitat. If bats or bat-roosting in the tunnel are identified, then during the non-breeding and active season (typically October), bats would be safely evicted, to the extent feasible, under the direction of a qualified biologist. Once it has been determined that all roosting bats have been safely evicted from roosting cavities, exclusionary devices would be installed and maintained where appropriate to prevent bats from roosting in these cavities prior to construction.
- In the event that a maternal colony of bats is found, no work would be conducted within 100 feet of the maternal roosting site until the maternal season is over or the bats have left the site, or as otherwise directed by a qualified biologist. The site would be designated as a sensitive area and protected as such until the bats have left the site. No activities would be authorized adjacent to the roosting site. Combustion equipment, such as generators, pumps, and vehicles, would not to be parked nor operated under or adjacent to the roosting site. Construction personnel would not be authorized to enter areas beneath the colony, especially during the evening exodus.
- Work on existing structures for the proposed Project (e.g. the LA River Access Tunnel), or within 100 feet of the Sixth Street Viaduct, would be conducted outside of the bat maternity season (typically April-September), if feasible.
- In the event that all bats are not able to be excluded from affected roosting habitat, a qualified biologist would monitor LA River Access Tunnel alterations and tree removals. If bats are disturbed, work would be safely suspended until all bats leave the vicinity on their own, or alternative measures can be identified under the direction of a qualified biologist. Work would resume only once the bats have left the site and/or approval to resume work is given by a qualified biologist.
- If vegetation trimming or clearing is conducted during the nesting season (typically February 15 through September 15), a qualified biologist would conduct a nesting bird survey.

- For construction required during the bird nesting season, for birds protected under the MBTA and California Fish and Game Code Sections, nesting bird surveys would be completed no more than 48 hours prior to construction activities to determine if nesting birds/raptors or active nests are within 300 feet (500 feet for potential raptor nests) of the project area. Surveys would be repeated if construction activities are suspended for five days or more.

With implementation of these BMPs, impacts on wildlife would be less than significant, and mitigation is not required.

IV(c): Would the project have a substantial adverse effect on state or federally protected wetlands (including, but not limited to, marsh, vernal pool, coastal, etc.) through direct removal, filling, hydrological interruption, or other means?

The proposed Project would include changes to the LA River concrete lining and banks outside of the OHWM, which would include terracing and concrete planters. The LA River is under jurisdiction of the Regional Water Quality Control Board as waters of the State. The LA River is also under jurisdiction of the California Department of Fish and Wildlife (CDFW). A WDR from the RWQCB, and California Fish and Game Code Section 1602 Streambed Alteration Agreement would be required for temporary activities and fill. In addition, the following BMPs would be implemented to avoid impacts by staying out of the OHWM. (see Section 3.3.4 for additional information):

- All trash and construction debris would be removed from the LA River construction areas on a daily basis;
- Appropriate hazardous material BMPs would be implemented to reduce the potential for chemical spills or contaminant releases into the LA River, including any non-stormwater discharge; and
- All equipment refueling and maintenance would be conducted in the staging area, which would be confined to the proposed Project Site in areas outside of the LA River.

With implementation of these BMPs, impacts on aquatic resources would be less than significant, and no mitigation is required.

3.3.3.5 Operational Impacts

IV(a): Would the project have a substantial adverse effect, either directly or through habitat modifications, on any species identified as a candidate, sensitive, or special-status species in local or regional plans, policies, or regulations, or by the CDFW, USFWS, or NOAA Fisheries?

The analysis below addresses potential impacts on biological resources including CESA and FESA species, related to the permanent and long-term, direct, and indirect impacts on sensitive biological resources anticipated during operation of the proposed Project. As noted below, no impacts on vegetation, wildlife, and special-status plants or wildlife would occur; therefore, no mitigation is required. In addition, the proposed Project would result in less than significant impacts on bats, nesting birds, and raptor foraging habitat, and no mitigation is required.

Special-Status Plants

Special-status plants species are not expected to be in the Project Area; therefore, there would be no impact on special-status plant species and mitigation is not required.

Special-Status Wildlife

Increased lighting, noise, human activity, and regular maintenance of vegetated areas to the Project Area could result in minor impacts on special-status wildlife, including bats, birds, and raptors; however, because there is already a high level of human activity, night lighting, and noise in the Project Area, the proposed Project would not be expected to deter wildlife from using existing habitat. In addition, the terracing within the LA Riverbank with vegetated planters, buildings, meadow, and a nature walk path are anticipated to include trees, and other natural and artificial substrates that would potentially create additional nesting and roosting habitat for special-status birds and bats. Therefore, impacts on special-status wildlife would be less than significant, and mitigation is not required.

IV(c): Would the project have a substantial adverse effect on state or federally protected wetlands (including, but not limited to, marsh, vernal pool, coastal, etc.) through direct removal, filling, hydrological interruption, or other means?

There are no wetlands in the Project Area; therefore, there would be no operational impacts on wetlands. The proposed Project would include permanent changes to the LA River concrete lining and banks, which may include terracing and concrete planters. The LA River is currently concrete lined, and the addition of these features would not result in a substantial change to the ecological function of the LA River. Therefore, impacts on jurisdictional resources would be less than significant, and mitigation is not required. A WDR from the RWQCB and California Fish and Game Code Section 1602 Streambed Alteration Agreement would be required for permanent fill in the LA River.

3.3.4 Best Management Practices

Impacts on Biological Resources would be avoided or minimized by implementing the following BMPs, which are subject to applicable regulatory agency approval:

BMP-BIO-1: Pre-Construction Wildlife Surveys

Pre-construction wildlife surveys shall be completed by a qualified biologist no more than 48 hours prior to clearing, grubbing, or other construction activities to determine the presence/absence of wildlife species, including special-status species, within 100 feet of the construction area. Special attention will be focused on any existing burrowing, roosting, and nesting habitat within the Project Area. Surveys shall be repeated if construction activities are suspended for five days or more. If any wildlife species are identified, appropriate BMPs shall be developed and implemented to reduce potential impacts on these species, in consultation with regulatory agencies where appropriate.

BMP-BIO-2: Trash and Construction Debris Removal

All trash and construction debris shall be removed from the LA River construction areas on a daily basis. All water quality BMP materials shall be properly maintained during project construction and removed upon completion of construction activities. After completion of proposed construction activities, all construction equipment and materials shall be removed from the Project Area, and the Project Area shall be returned to pre-project conditions.

BMP-BIO-3: Work Area Limitations

No work for the proposed Project shall be conducted on the Fourth Street Bridge or Seventh Street Bridge structures.

BMP-BIO-4: Nesting Bird Survey

If vegetation trimming or clearing is conducted during the nesting season (typically February 15 through September 15), nesting bird surveys shall be completed by a qualified biologist within 300 feet of potential bird-nesting areas and 500 feet of potential raptor-nesting areas no more than 48 hours prior to trimming/removal activities to determine if nesting birds are within the affected vegetation. Surveys shall be repeated if trimming or removal activities are suspended for five days or more.

BMP-BIO-5: Nesting Bird Buffer

If nesting birds protected under the MBTA and California Fish and Game Code Sections are found in the Project Area, appropriate buffer consisting of orange flagging/fencing or similar (typically up to 300 feet for songbirds and 500 feet for raptors shall be installed and maintained until nesting activity has ended, as determined in coordination with the project biologist and regulatory agencies, as appropriate, to ensure that nesting birds and active nests are not harmed.

BMP-BIO-6: Hazardous Material BMPs

Appropriate hazardous material BMPs shall be implemented to reduce the potential for chemical spills or contaminant releases into the LA River, including any non-stormwater discharge.

BMP-BIO-7: Equipment Maintenance

All equipment refueling and maintenance shall be conducted in the staging area. In addition, vehicles and equipment shall be checked daily for fluid and fuel leaks, and drip pans shall be placed under all equipment that is parked and not in operation.

BMP-BIO-8: Regulatory Permits

The City shall consult with the appropriate responsible resource agency (e.g., CDFW and RWQCB) to determine permanent and temporary impact areas. Prior to undertaking ground-disturbing activities within or immediately adjacent to any aquatic resource areas, the City and/or their consultant shall obtain a CWA Section 401 Water Quality Certification, and California Fish and Game Code Section 1602 Streambed Alteration Agreement.

BMP-BIO-9: Pre-Construction Bat Surveys

At least 30 days prior to construction, alterations to the LA River Access Tunnel shall be surveyed by a qualified biologist to assess the presence of bats or potential bat-roosting cavities. If bats or bat-roosting cavities are identified, then during the non-breeding and active season (typically October), bats shall be safely evicted, to the extent feasible, under the direction of a qualified biologist. Once it has been determined that all roosting bats have been safely evicted from roosting cavities, exclusionary devices shall be installed and maintained where appropriate to prevent bats from roosting in these cavities prior to construction.

BMP-BIO-10: Monitoring During LA River Access Tunnel Alteration

In the event that all bats are not able to be excluded from affected roosting habitat, a qualified biologist shall monitor LA River Access Tunnel alterations. If bats are disturbed, work shall be safely suspended until all bats leave the vicinity on their own, or alternative measures can be identified under the direction of a qualified biologist. Work shall resume only once the bats have left the site and/or approval to resume work is given by a qualified biologist.

BMP-BIO-11: Bat Monitoring

In the event that all bats are not able to be excluded from affected roosting habitat, a qualified biologist shall monitor structure alteration activities. If bats are disturbed, work shall be safely suspended until all bats leave the vicinity of the LA River Access Tunnel on their own, or alternative measures shall be identified under the direction of a qualified biologist. Work shall resume only once the bats have left the site and/or approval to resume work is given by a qualified biologist.

Surveys and exclusion measures are expected to prevent maternal colonies from becoming established in structures to be removed or altered. In the event that a maternal colony of bats is found, no work shall be conducted within 100 feet of the maternal roosting site until the maternal season is over or the bats have left the site, or as otherwise directed by a qualified biologist. The site shall be designated as a sensitive area and protected as such until the bats have left the site. No activities shall be authorized adjacent to the roosting site. Combustion equipment, such as generators, pumps, and vehicles, shall not be parked or operated under or adjacent to the roosting site. Construction personnel shall not be authorized to enter areas beneath the colony, especially during the evening exodus.

3.3.5 Mitigation Measures

Impacts on Biological Resources would be less than significant; therefore, mitigation measures are not required.

3.3.6 Significant Unavoidable Adverse Impacts

There are no significant unavoidable adverse impacts on Biological Resources resulting from construction and operation of the proposed Project.

3.3.7 Cumulative Impacts

Biological Resources in the Project Area have been removed or extrapolated due to urbanization and the Project Area is located under and adjacent to the Viaduct Replacement Project area, which is currently an active construction site. Project level impacts on Biological Resources are not likely to result in or have significant cumulative impacts on Biological Resources in relation to other projects in the vicinity of the proposed Project. With implementation of the BMPs described in Section 3.3.4, the proposed Project is not expected to result in significant impacts on Biological Resources. In addition, other projects in the vicinity of the proposed Project (see **Table 1-1**) would be required to comply with all federal and state regulations and be consistent with local policies related to Biological Resources, and to develop BMPs and mitigation measures. Therefore, the proposed Project would not result in cumulatively considerable impacts related to Biological Resources.

3.4 Cultural Resources

This section identifies known cultural resources, including archaeological, tribal cultural resources, and historical, present within the Project Area, evaluates the potential project-related impacts on those resources; and provides mitigation measures, as applicable. The identification of impacts to cultural resources was conducted under the provisions of Section 15064.5 of the California Environmental Quality Act (CEQA) Guidelines. The environmental setting and analysis in this section rely on information from the Project's Historical Resources Evaluation Report (GPA Consulting, 2019) and the Archaeological Assessment (Applied EarthWorks, 2019).

As noted in the analysis below, direct and indirect impacts associated with cultural resources during construction and operation would be less than significant and no mitigation measures are required.

3.4.1 Regulatory Setting

Cultural resources fall within the jurisdiction of several levels of government. Federal, state, and local jurisdictions provide the framework for the identification, documentation, and protection of such resources. As described below, the National Historic Preservation Act (NHPA), California Environmental Quality Act (CEQA), and City of Los Angeles Cultural Heritage Ordinance (Los Angeles Administrative Code Section 22.171) are the primary laws applicable to the proposed Project that govern and affect the preservation of cultural resources of national, state, and local levels of government.

3.4.1.1 Federal

National Historic Preservation Act

The NHPA of 1966, as amended, sets forth national policy and procedures for historic properties, defined as districts, sites, buildings, structures, and objects included in or eligible for listing in the National Register of Historic Places (National Register). Section 106 of the NHPA requires federal agencies to take into account the effects of their undertakings on historic properties and to allow the Advisory Council on Historic Preservation (ACHP) the opportunity to comment on those undertakings, following regulations issued by the ACHP (36 CFR Part 800).

National Register of Historic Places

The National Register is "an authoritative guide to be used by federal, state, and local governments, private groups, and citizens to identify the nation's cultural resources and to indicate what properties should be considered for protection from destruction or impairment (Title 36 Code of Federal Regulations Part 60.2)." The National Register recognizes properties that are significant at the national, state, and/or local levels.

Criteria

To be eligible for listing in the National Register, a property must be at least 50 years of age (unless the property is of "exceptional importance") and possess significance in American history and culture, architecture, or archaeology. A property of potential significance must meet one or more of the following four established criteria (Title 36 Code of Federal Regulations Part 60.4):

A. Associated with events that have made a significant contribution to the broad patterns of our history;

B. Associated with the lives of persons significant in our past;

C. Embody the distinctive characteristics of a type, period, or method of construction or that represent the work of a master, or that possess high artistic values, or that represent a significant and distinguishable entity whose components may lack individual distinction; or

D. Yield, or may be likely to yield, information important in prehistory or history.

Context

To be eligible for listing in the National Register, a property must be significant within a historic context. *National Register Bulletin #15* states that the significance of a historic property can be judged only when it is evaluated within its historic context. Historic contexts are "those patterns, themes, or trends in history by which a specific...property or site is understood and its meaning...is made clear" (National Park Service, 1990). A property must represent an important aspect of the area's history or prehistory and possess the requisite integrity to qualify for the National Register.

Integrity

In addition to possessing significance within a historic context, to be eligible for listing in the National Register a property must have integrity. Integrity is defined in *National Register Bulletin #15* as "the ability of a property to convey its significance" (National Park Service, 1990). Within the concept of integrity, the National Register recognizes the following seven aspects or qualities that in various combinations define integrity: feeling, association, workmanship, location, design, setting, and materials. Integrity is based on significance: why, where, and when a property is important. Thus, the significance of the property must be fully established before the integrity is analyzed.

3.4.1.2 State

California Environmental Quality Act

CEQA requires the consideration of historical resources and tribal cultural resources, as well as "unique" archaeological resources. For the purposes of CEQA, a historical resource is a cultural resource listed in, or determined eligible for listing in, the California Register of Historical Resources (CRHR) (Public Resources Code [PRC] Section 21084.1). Properties listed in, or formally determined eligible for listing in, the NRHP are automatically listed in the CRHR (14 California Code of Regulations Section 4851 [a][1]). Therefore, cultural resources that are "historic properties" under the NHPA are also "historical resources" under CEQA. In addition, cultural resources included in a local register of historical resources or identified as significant in a qualified historical resource survey are also presumed to be historical resources for CEQA.

In 2014, Assembly Bill 52 (AB 52) added the term "tribal cultural resources" to CEQA, and AB 52 is commonly referenced instead of CEQA when discussing the process to identify tribal cultural resources (as well as identifying measures to avoid, preserve, or mitigate effects to them). Defined in PRC Section 21074(a), a tribal cultural resource is a CRHR or local register eligible site, feature, place, cultural landscape, or object which has a cultural value to a California Native American tribe. Tribal

cultural resources must also meet the definition of a historical resource. Unique archaeological resources are referenced in PRC Section 21083.2.

California Register of Historical Resources

The California Register is an authoritative guide used by state and local agencies, private groups, and citizens to identify historical resources and to indicate what properties are to be protected, to the extent prudent and feasible, from substantial adverse impacts (PRC Section 5024.1[a]).

The California Register consists of properties that are listed automatically as well as those that must be nominated through an application and public hearing process. The California Register automatically includes the following:

- California properties listed in the National Register and those formally Determined Eligible for the National Register;
- State Historical Landmarks from No. 0770 onward; and
- Those California Points of Historical Interest that have been evaluated by the State Office of Historic Preservation (SOHP) and have been recommended to the State Historical Resources Commission for inclusion on the California Register (PRC Section 5024.1[d]).

Criteria and Integrity

For those properties not automatically listed, the criteria for eligibility of listing in the California Register are based upon National Register criteria, but are identified as 1-4 instead of A-D. To be eligible for listing in the California Register, a property generally must be at least 50 years of age and must possess significance at the local, state, or national level, under one or more of the following four criteria:

1. It is associated with events that have made a significant contribution to the broad patterns of local or regional history, or the cultural heritage of California or the United States; or
2. It is associated with the lives of persons important to local, California, or national history; or
3. It embodies the distinctive characteristics of a type, period, or method of construction or represents the work of a master, or possesses high artistic values; or
4. It has yielded, or has the potential to yield, information important in the prehistory or history of the local area, California, or the nation.

Properties eligible for listing in the California Register may include buildings, sites, structures, objects, and historic districts. A property less than 50 years of age may be eligible if it can be demonstrated that sufficient time has passed to understand its historical importance. While the enabling legislation for the California Register is less rigorous with regard to the issue of integrity, there is the expectation that properties reflect their appearance during their period of significance (PRC Section 4852).

The California Register may also include properties identified during historic resource surveys. However, the survey must meet all of the following criteria (PRC Section 5024.1):

1. The survey has been or will be included in the State Historic Resources Inventory;
2. The survey and the survey documentation were prepared in accordance with office [SOHP] procedures and requirements;
3. The resource is evaluated and determined by the office [SOHP] to have a significance rating of Category 1 to 5 on a DPR Form 523; and
4. If the survey is five or more years old at the time of its nomination for inclusion in the California Register, the survey is updated to identify historical resources that have become eligible or ineligible due to changed circumstances or further documentation and those that have been demolished or altered in a manner that substantially diminishes the significance of the resource.

State Health and Safety Code, Section 7050.5/California Public Resources Code, Section 5097.9

State Health and Safety Code (HSC) Section 7050.5 and PRC Section 5097.9 contain provisions for the treatment of human remains contained in archaeological sites. Under HSC Section 7050.5, if human remains are discovered during any project activity, the county coroner must be notified immediately. If human remains are exposed, HSC Section 7050.5 states that no further disturbance shall occur until the county coroner has made the necessary findings as to origin and disposition pursuant to PRC Section 5097.98. Construction must halt in the area of the discovery of human remains, the area of the discovery shall be protected, and consultation and treatment shall occur as prescribed by law. If the remains are determined by the coroner to be Native American, the coroner is responsible for contacting the Native American Heritage Commission (NAHC) within 24 hours.

NAHC, pursuant to PRC Section 5097.98, will immediately notify those persons it believes to be most likely descended from the deceased person so they can inspect the burial site and make recommendations for treatment or disposal.

3.4.1.3 Local

City of Los Angeles Cultural Heritage Ordinance

The Los Angeles City Council adopted the Cultural Heritage Ordinance in 1962 and amended it in 2007 (Sections 22.171 et seq. of the Administrative Code). The Ordinance created a Cultural Heritage Commission and criteria for designating Historic-Cultural Monuments (HCM). The Commission is comprised of five citizens, appointed by the Mayor, who have exhibited knowledge of Los Angeles history, culture, and architecture. The four criteria for HCM designation are stated below:

1. The proposed HCM reflects the broad cultural, economic, or social history of the nation, state or community; or
2. The proposed HCM is identified with historic personages or with important events in the main currents of national, state, or local history; or
3. The proposed HCM embodies the characteristics of an architectural type specimen inherently valuable for a study of a period, style, or method of construction; or

4. The proposed HCM is the notable work of a master builder, designer, or architect whose individual genius influenced his or her age (Los Angeles Administrative Code Section 22.171.7).

Unlike the National and California Registers, the Ordinance makes no mention of concepts such as physical integrity or period of significance. Moreover, properties do not have to reach a minimum age requirement, such as 50 years, to be designated as HCMs.

City of Los Angeles Conservation Element

The Conservation Element of the City of Los Angeles General Plan (adopted September 2001) primarily addresses preservation, conservation, protection, and enhancement of the city's natural resources. The Conservation Element specifically addresses archaeological resources in Section 3 of Chapter 2. Cultural and historical resources are addressed in Section 5 of the same chapter.

With regard to archaeological resources, the Conservation Element contains the following objective with an associated policy and program:

- **Objective:** protect the city's archaeological and paleontological resources for historical, cultural, research and/or educational purposes.
- **Policy:** continue to identify and protect significant archaeological and paleontological sites and/or resources known to exist or that are identified during land development, demolition, or property modification activities.
- **Program:** permit processing, monitoring, enforcement, and periodic revision of regulations and procedures.
- **Responsibility:** departments of Building and Safety, City Planning and Cultural Affairs, and/or the lead agency responsible for project implementation.

The Conservation element also includes the following objective, policy, and programs for cultural and historic resources:

- **Objective:** protect important cultural and historical sites and resources for historical, cultural, research, and community educational purposes.
- **Policy:** continue to protect historic and cultural sites and/or resources potentially affected by proposed land development, demolition, or property modification activities.
- **Program 1:** development permit processing, monitoring, enforcement and periodic revision of regulations and procedures.
- **Responsibility:** departments of Building and Safety, City Planning, Cultural Affairs and Community Redevelopment Agency and/or the lead agency responsible for project implementation.
- **Program 2:** prepare the Historic Preservation and Cultural Resources Element of the general plan.
- **Responsibility:** departments of City Planning and Cultural Affairs.
- **Program 3:** continue to survey buildings and structures of any age in neighborhoods throughout the city in order to develop a record that can be used in the present and future for evaluating their

historic and cultural value as individual structures and within the context of surrounding structures.

- **Responsibility**: departments of Building and Safety, City Planning, and Cultural Affairs and the Community Redevelopment Agency.

3.4.2 Environmental Setting

The Project Area is a fully developed, mixed-use urban setting, bisected by the channelized Los Angeles River (see **Figure 2-2**, Project Area). Land uses along the east and west sides of the River are predominantly industrial and commercial. The built environment in the vicinity of the Project Area is characterized by the width of the streets and their grid-like arrangement; railroad rights-of-way and the placement of spur tracks to the rear of parcels; the size of parcels and the corresponding footprint and height of the buildings erected; extensive surface parking areas, often designed to accommodate large trucks; evidence of former rail lines (such as remnant tracks and a rail stop); remnant granite infrastructure (including curbs, swales, and rail beds); and the lack of street trees or other landscaping. The area is characterized by industrial building types that vary widely in size, from modest industrial buildings to massive warehouses spanning full city blocks. Buildings in the area were constructed primarily between 1900 and 1940 and are predominantly vernacular or utilitarian in form and style.

Railroad corridors exist along the east and west banks of the LA River. The Los Angeles River is contained within a trapezoidal concrete-lined channel. There are two extant bridges within the Project Area: the Fourth Street Viaduct (Bridge No. 53C0044) and the Seventh Street Viaduct (Bridge No. 53C1321). The Fourth Street Viaduct is a concrete arch bridge over the Los Angeles River, located along Fourth Street. The Seventh Street Viaduct is a reinforced concrete arch bridge is located along Seventh Street over the Los Angeles River. The Sixth Street Viaduct Replacement is currently under construction within the Project Area.

3.4.2.1 Geological Setting

The Project Area is generally situated within a broad valley of the Los Angeles Basin. This broad, level expanse of land comprises more than 800 square miles extending from Cahuenga Peak southward to the Pacific Coast, and from the Topanga Canyon southeast to the vicinity of Aliso Creek. The Los Angeles Basin is traversed by several large watercourses. The Project Area is surrounded by the Santa Monica Mountains to the northwest and north; the San Gabriel Mountains to the north and northeast; and the Baldwin Hills to the south. The soils are alluvium and colluvium underlain by Miocene marine sedimentary deposits. Geological faulting and folding of the crust in the area have trapped oil deposits beneath the surface (Mayuga, M.N., 1970). The geologic formation underlying the Project Area is tentatively identified as sand, silt, and gravel as well as alluvial fans and streambeds.

3.4.2.2 Prehistoric Background

The sediments and soils within the Project Area date from periods ranging from Holocene to Late Pleistocene. Within the Project Area, most deposits are derived from the Los Angeles River and are unlikely to preserve fossil material because of their recent nature. Remnants of Valley Grassland and Coastal Sage-Scrub zones cover much of the Los Angeles Basin and adjacent hill slopes. Few

stands of native biotic communities remain today within the Los Angeles Basin, with present-day plant communities primarily being landscaped and introduced species.

3.4.2.3 Ethnographic Background

The Project Area lies within the territory of the Gabrieleño Native American people. It is believed that the total Gabrieleño territory covered more than 1,500 square miles and included the watersheds of the Los Angeles River, San Gabriel River, Santa Ana River, and Rio Hondo. The Gabrieleño also occupied the islands of Santa Catalina, San Clemente, and San Nicolas. Within this large territory were more than 50 residential communities with populations that ranged from approximately 50 to 150 individuals.

A typical Gabrieleño settlement contained a variety of structures used for religious, residential, and recreational purposes. This wealth of natural resources, coupled with effective technology and a well-developed trade and ritual system, resulted in a society that was among one of the most materially wealthy and culturally sophisticated cultural groups in California (McCawley, 1996). Trade was an important element of the Gabrieleño economy. In general, the Gabrieleño cultivated alliances with other groups, including a Chumash-Salinan- Gabrieleño alliance (Bean, 1976), and also maintained cult or ritual centers (such as the village Povongna, presumed to be located in the vicinity of Long Beach). Mission San Gabriel was founded on September 8, 1771, at a location near the Whittier Narrows. After this, the traditional Gabrieleño communities were depopulated and epidemics caused by the introduction of European diseases greatly reduced the population.

The ethnographic evidence suggests that several Gabrieleño settlements were located on the Los Angeles plain. Archaeologist Chester King identified several areas where archaeological remains of village sites dating to the ethnohistoric contact period may be located (Applied EarthWorks, 2019). Two of these vaguely defined areas include Ha'utnga in the Lynwood/South Gate/Watts area and Amupunga near the Rancho San Pedro (Dominguez) Adobe. A third village area known as Yaanga (or Yaangna), is believed to have been located on the west bank of the Los Angeles River slightly south of the old Spanish Plaza of Pueblo de Los Angeles in the vicinity of Union Station, north of the Project Area.

3.4.2.4 Historic Background

The Project Area was first utilized as agricultural land by inhabitants of the Pueblo that later became Los Angeles. The area on the east side of the Los Angeles River was used for cattle ranching until the 1830s. The west side of the River was a vineyard in the 1830s. The 1849 Gold Rush brought a large demand for citrus fruit, which was used to protect against scurvy, a common malady of miners. Oranges and grapefruit quickly overtook grapes as the area's primary crops. The fruit industry proved to be the saving grace of the regional economy when a drought in 1862 decimated the cattle industry. In 1858, Andrew Aloysius Boyle purchased a large section of the east side of the River and planted a vineyard. Despite its proximity to the center of Los Angeles, Boyle's land remained pastoral and was generally perceived as unfit for development at the time, due to its geographic isolation from the rest of the city because of the Los Angeles River. The agrarian character of the areas around the River was redefined with the arrival of the railroads in the late nineteenth century.

The development of Los Angeles was heavily dependent on evolving transportation systems for the delivery of raw materials and the moving of finished goods. Until the 1870s, only local rail lines ran through Los Angeles. The Los Angeles and San Pedro Railroad (LA & SP) was incorporated in 1868. The

LA & SP built a local line connecting the port of Wilmington with the inland City of Los Angeles. LA & SP was consolidated with the Southern Pacific in 1874 as part of the arrangement to bring the transcontinental Southern Pacific to Los Angeles. In 1876, Southern Pacific opened the line connecting Los Angeles to San Francisco, linking Los Angeles with the transcontinental railroad. The completion of a transcontinental rail line to Southern California in 1885 and a subsequent fare "war" between the Southern Pacific and Santa Fe railroads brought scores of newcomers to Los Angeles, which in turn produced a surge of land speculation and development activity across the region.

As the railroads increased mobility, Los Angeles ceased to be simply a market for manufactured goods produced in San Francisco and the East and began to support local industries as well. Similarly, as agricultural activities in other areas of the city supplanted those near the city center, the city center evolved from simply a shipping hub to a processing and manufacturing center. This was particularly true of the areas adjacent to the Los Angeles River where transcontinental railroads laid their tracks (Southern Pacific Railroad on the west side of the Los Angeles River and later the Atchison, Topeka & Santa Fe Railway on the east side). Streetcars crossed through the area, facilitating the movement of workers and encouraging development along the spine of the River. By 1901, seven streetcar lines traversed the River, linking downtown Los Angeles on the west with Boyle Heights on the east. These areas evolved into the City's first industrial district.

Industrial development was diverse and included freight houses and freight yards developed by the railroads in addition to warehouses, manufacturing facilities, and salvage yards. Construction-related industries expanded rapidly beginning in the 1880s when the regional real estate boom spurred residential and commercial construction. Industrial development in the area did not begin in earnest until the subdivision of two substantial tracts specifically dedicated for industrial use: the Industrial Tract, recorded in 1903 by the Industrial Realty Company; and the Industrial Center Tract, recorded in 1904. These tracts defined the southwestern section of the Project Area, terminating at Seventh Street. In the early decades of the twentieth century, many of the area's industrial buildings were one of two types: manufacturing or processing facilities and warehouses. A 1909 map of the area notes the considerable number of warehouses and storage facilities which had been constructed in just a few years, as well as a wide variety of processing and manufacturing operations – including lumber yards, freight yards, ice, and cold storage, slaughterhouses, meatpackers, produce companies and canneries, and blacksmiths, among others (Historic Resources Group, 2016). Many of the area's industrial buildings were constructed directly on a rail spur; these buildings often display curved facades that follow the tracks, with docks and large bay doors set several feet above the ground (to the height of a boxcar), to facilitate the loading and unloading of goods. Warehouses were built either as general storage facilities – with space that could be rented by a variety of companies or operators – or were purpose-built facilities associated with a particular company.

As new local industries established themselves, processing and manufacturing operations in the area continued to expand. Two industries flourished during this period: ice and cold storage, and food processing and packaging. Cold storage emerged in response to the demand for fresh products in urban areas and provided a critical link between agricultural goods from farms, fisheries, and ranches and their distribution to fresh produce markets and food processors. Construction of cold storage warehouses was initially linked with that of ice-making plants, with both frequently located within the same facility. Food processing industries represented some of the earliest industrial development in Los Angeles, but the

industry exploded in operation during the 1910s and 1920s as companies began to embrace mechanization to meet the demands of new chain stores. Food processing eventually became one of the dominant industries in the area.

The character of the industrial areas adjacent to the River remains largely a function of the redevelopment of Union Pacific's former railroad facilities during the 1920s. In response to the strong demand for industrial space arising from the economic growth of the Los Angeles region in the 1910s, Union Pacific, on the east side of the River, began removing many of its facilities near the Los Angeles River and dividing its properties into industrial sites. A major incentive attracting business to this industrial district was the Union Pacific spur tracks interlaced among the streets, providing industries with easy access to a national freight rail network. This ushered in a wave of industrial development on the east side of the River.

By the 1920s, the east and west sides of the River were fully established as an industrial hub. This was aided in part by the pattern of development occurring outside the central city. As the City of Los Angeles continued to annex existing communities as well as available land in the San Fernando Valley, zoning was amended to eliminate residential development and accommodate the construction of more offices, retail, and manufacturing facilities in the downtown area. Boyle Heights, just east of the Union Pacific industrial zone along the River, had become a densely populated residential suburb.

The east side of the Los Angeles River and Boyle Heights benefited tremendously from the Viaduct Bond Act of 1923, which set into motion an ambitious and far-reaching bridge building program across the city. The sale of bonds financed the construction of a series of monumental concrete viaducts that spanned both the Los Angeles River and the rail lines that ran adjacent to the riverbed; seven of these viaducts, at Macy (now Cesar Chavez), First, Fourth, Whittier/Sixth, Seventh, Ninth (now Olympic), and Washington Streets, were routed into Boyle Heights and were completed between 1925 and 1933. The Whittier/Sixth Street Bridge built in 1933 (now demolished) was the last bridge built as part of the bond measures. These bridges replaced several existing wood and metal truss bridges, which were susceptible to flood damage and lacked the capacity to accommodate traffic that had been generated by the area's rapid growth.

Industrial development in the area declined following World War II. After the Interstate Highway System was launched in the 1950s, the trucking industry became the preferred mode of transportation for industrial activity and the railroads declined. Locating factories and warehouses in districts with spur track access became less important. At the same time, many pre-war industrial districts had become highly congested urban areas that were less convenient for truck access, unlike newly-built factories and warehouses on the outskirts of cities and in suburbs. The construction of an expansive freeway network throughout Southern California also drastically altered the configuration and physical character of the Project Area. Five freeways and the multi-level East Los Angeles Interchange were routed through Boyle Heights between 1948 and 1965.

While industries evolved over time, the area maintained its character as an industrial center, with one processing or manufacturing operation replacing another. Over the course of the twentieth century, a single manufacturing facility might house the production of everything from dog food to pie. In the 1950s, the area was home to automotive manufacturing, trucking and transport, furniture manufacturing and storage, paint and chemical manufacturing, and paper and plastic production – as well as historically dominant industries such as food processing and lumber and woodworking operations.

By the 1960s, however, the character of the area was evolving away from that of an industrial center. Local industries and manufacturers struggled to adapt to the competition brought on by containerization and other modern technologies. Outlying fledgling industrial centers such as Vernon and the City of Commerce were comparatively undeveloped and offered plentiful land at lower prices, presenting many companies with an opportunity to relocate and construct newer and more efficient facilities. As a result, many buildings in the industrial district were vacant by the 1970s.

The use of the area's industrial buildings evolved as artists and other creative types began to congregate amidst the vacant buildings and empty lots. Priced out of established artists' colonies in neighborhoods such as Venice and Hollywood, Los Angeles' industrial district provided many with an opportunity to live and work inexpensively in vast warehouse buildings. Many of the area's most prominent industrial buildings found new life as gallery space and underground hangouts for a burgeoning art and music scene. By the 1980s, the area was home to several avant-garde art galleries, giving rise to the group of early artists now called the "Young Turks" (Miller, 2014). In 1981, the City of Los Angeles implemented the Artist-in-Residence Program, which legalized the residential use of formerly industrial buildings for artists, legitimizing their efforts. In the mid-1990s, the area was officially designated as the Arts District by the City. A subsequent wave of development began in 1999 with the passage of the Adaptive Reuse Ordinance, which relaxed zoning codes and allowed for the conversion of pre-1974 commercial and industrial buildings into residences for artists and non-artists alike. The area continues to attract new commercial and residential development, as existing facilities are adapted to meet the needs of the growing community.

3.4.3 Identification and Evaluation of Cultural Resources

3.4.3.1 Methodology

Archaeological Resources

Record searches for previous documentation of identified archaeological resources were conducted. A reconnaissance-level archaeological survey of the Project Area was conducted on January 11, 2018. The purpose of the survey was to assess the current conditions of the Project Site (i.e., the footprint of the proposed Project) to examine any exposed native sediments that may be present. In addition, an attempt was made to re-identify the two archaeological sites that had been previously recorded in the Project Site west of the River. At the time of the survey, much of the proposed Project Site was under construction for the Sixth Street Viaduct Seismic Improvement Project. Due to safety concerns and access issues, only the Project Site, and not the area encompassing the Los Angeles River and railroad rights-of-way, was examined by the archaeologist during the reconnaissance survey.

Tribal Cultural Resources

On November 3, 2017, NAHC recommended that local Native American tribes be contacted for information on Native American resources within the Project Area. Applied EarthWorks sent a letter via electronic mail on January 18, 2018, to these groups. A second attempt at correspondence was made on February 7, 2018. Only one response was received, from the Gabrieleño Indians of California Tribal Council. The City is currently consulting with the Gabrieleño Indians of California Tribal Council in accordance with AB 52.

Historical Resources

The study area was defined as roughly a two-parcel radius to the north and south of East Sixth Street and Whittier Boulevard from Interstate 5 on the east to Mill Street on the west. The Project Area also included a segment of the Los Angeles River, adjacent railroad rights-of-way, and two bridges located at East Fourth Street to the north and East Seventh Street to the south. In order to identify and evaluate historical resources, a multi-step methodology was utilized. Record searches for previous documentation of identified historic resources were conducted, including listings in the NRHP, determinations of eligibility for NRHP listings, and the City of Los Angeles' historic resource inventories. Prior historical resource surveys involving the Project Area were also reviewed, including the 6th Street Viaduct Seismic Improvement Project Historical Resources Evaluation Report (Parsons, 2007), Adelante Eastside Redevelopment Project Intensive Historic Resources Survey (PCR Services Corporation, 2008), and SurveyLA (Historic Resources Group, 2016). An intensive survey, including photography and background research, was then made of the study area.

3.4.3.2 Survey Results

Archaeological Resources

Within the Project Area, many of the buildings and structures that were previously located along Whittier Boulevard and Sixth Street have been demolished by the Sixth Street Viaduct Seismic Improvement Project. In the portion of the Project Area east of the Los Angeles River, a series of bridge support columns have been constructed along Whittier Boulevard running in a southeast-to-northwest direction. At the time of the site visit (January 11, 2018), bridge support columns had not yet been installed west of the River, but portions of the west abutment immediately west of Mateo Street were under construction. An inspection of exposed sediments revealed a high level of ground disturbance throughout the Project Area. Examination of the Los Angeles River and adjacent railyards from the public right-of-way indicates that the entire APE is developed with few to no areas of exposed ground.

An archaeological monitor from Duke CRM was on-site at the time of the site visit to observe ground-disturbing activities associated with the Sixth Street Viaduct Seismic Improvement Project. Archaeological monitoring for the Sixth Street Viaduct Seismic Improvement Project had been ongoing since at least August 2017. The archaeological monitor noted that in the portion of the Project Area west of the Los Angeles River, existing ground disturbance extended approximately five or six feet in depth. Although no prehistoric artifacts had been encountered during the monitoring activities, the archaeological monitor stated that various historical ceramic and glass fragments have been recovered throughout the area. She noted that several small stone spheres, which likely date to the historic period, were recovered near the Sixth Street and Mateo Street intersection.

The recorded locations of 19-004192 and 19-004193 were revisited during the reconnaissance survey. An examination of the ground surface in these areas revealed the area had been extensively disturbed and recently graded. Site 19-004192 consists of a historic-period refuse scatter. The site measures 50 by 25 feet in area and is located west of the Los Angeles River and east of Santa Fe Street under the Sixth Street Bridge. The scatter consists of 13 pieces of brick and 2 glass bottle fragments. The site was initially recorded within a proposed maintenance and storage facility for the Westside Subway Extension Project; the resource was previously determined ineligible for listing on either the NRHP or the CRHR (Sikes,

2012). Site 19-004193 consists of an early twentieth-century road remnant. The site measures 3.5 by 2.5 feet in area and is located near the foundation of the Sixth Street Bridge. No artifacts were found in association with the exposed road surface. The site is located within a proposed maintenance and storage facility for the Westside Subway Extension Project; the resource was previously determined ineligible for listing on either the NRHP or the CRHR (Sikes, 2012). No surface evidence was found for the previously documented historical refuse deposit (19-004192) or historical road (19-004193) (Applied EarthWorks, 2019).

Tribal Cultural Resources

NAHC indicated in a letter sent to Applied EarthWorks on November 3, 2017, that Native American resources were recorded in the Project Area. The NAHC recommended that local Native American groups be contacted to elicit specific information on Native American resources. Applied Earthworks sent a letter via electronic mail to these individuals on January 18, 2018.

Individuals/organizations contacted at the request of the NAHC are listed below:

- Charles Alvarez, Gabrieleño Tribe
- Robert Dorame, Chairperson of the Gabrieleño Indians of California Tribal Council
- Sandonne Goad, Chairperson of the Gabrieleño Nation
- Anthony Morales, Chairperson of the Gabrieleño San Gabriel Band of Mission Indians
- Andrew Salas, Chairperson of the Gabrieleño Band of Mission Indians-Kitz Nation

One response was received. Robert Dorame, Chairperson of the Gabrieleño Indians of California Tribal Council, stated that historic-period archaeological materials, as well as abalone shell, had been recovered outside of the Project Area but just north of the Project Area, along the west bank of the Los Angeles River. He also noted that the Los Angeles River's course had fluctuated through time and at one point it had covered much of the Project Area. Because of the proximity of the Project Area to both known archaeological remains and the Los Angeles River, Mr. Dorame stated that the Project Area is sensitive for prehistoric Native American remains. He requested that a Native American monitor affiliated with the Gabrieleño Indians of California Tribal Council observe all ground-disturbing activities (including bore holes and asphalt removal) associated with the proposed Project.

Historical Resources

Within the Project Area, there are no NRHP-listed properties. After research and field survey, it was determined that there are four historical resources as defined by CEQA in the Project Area:

- The Fourth Street Viaduct (LAHCM #904 and Bridge No. 53C0044) is a designated Los Angeles Historic-Cultural Monument and determined eligible for listing in the National and California Registers (Status Code 2S2).
- The Seventh Street Viaduct (LAHCM #906 and Bridge No. 53C1321) is a designated Los Angeles Historic-Cultural Monument and determined eligible for listing in the National and California Registers (Status Code 2S2).

- For the purposes of CEQA review, the segment of the Los Angeles River Channel within the Project Area is presumed to be a historical resource. Segments of the Los Angeles River outside of the Project Area were previously identified as eligible for listing under NRHP Criterion A and CRHR Criterion 1 as a contributing element of the larger, 51-mile linear resource (GPA Consulting, 2019). The river is presumed eligible for its association with flood control in the region and for facilitating the continued development of river-adjacent areas during and after World War II.
- The Downtown Los Angeles Industrial Historic District is a historic district identified as eligible for federal, state, and local historic designation through SurveyLA, a citywide historical resource survey conducted by the City of Los Angeles. The district is significant for its role in the industrial development of Los Angeles; this area served as the city's primary industrial district from the late-nineteenth century through World War II. It was identified as eligible for listing under NRHP Criterion A and CRHR and LAHCM Criterion 1. Five buildings within the Project Area were evaluated as non-contributors to the Downtown Los Angeles Industrial Historic District by SurveyLA. As non-contributors, these buildings do not add to the historic architectural qualities, historic association, or historic patterns for which the District is significant. In accordance with Section 15064.5(a)(2)-(3) of the CEQA Guidelines, these five buildings are not considered historical resources for the purposes of CEQA compliance; however, the District as a whole is considered a historical resource.

GPA Consulting re-surveyed the Project Area and did not identify any potential historical resources that were not already identified by SurveyLA (Historic Resources Group, 2016) and other recent historical resource surveys of the 6th Street Viaduct Seismic Improvement Project Area (Parsons, 2007) and Adelante Eastside Redevelopment Project Area (PCR Services Corporation, 2008). It is unlikely that further research would reveal previously unidentified historic associations and the properties in the Study Area were unlikely to meet the criteria for significance. Due to alterations, most of the properties were too altered to retain integrity to convey significance.

3.4.4 Environmental Impact Analysis

This section outlines the methodology, evaluation, and impacts for archaeological, tribal cultural, and historical resources. It is intended to assist in the evaluation and conclusions of the impact analysis provided below and in the formation of required mitigation measures.

3.4.4.1 Screening Analysis

Several impacts and corresponding thresholds of significance in the following section were eliminated from further analysis in this EIR. Topics were eliminated if the Initial Study for the proposed Project concluded there would be "No Impact," or if impacts were identified to be "Less Than Significant… and will not be discussed further in the EIR." Therefore, only the topics described in the section below were determined to require further analysis in this EIR. A copy of the Initial Study, which contains the eliminated topics, is provided in **Appendix A**.

3.4.4.2 Thresholds of Significance

According to Appendix G of the CEQA Guidelines and the *L.A. CEQA Thresholds Guide*, the proposed Project would have a significant impact on Cultural Resources if it would:

V(a) Cause a substantial adverse change in the significance of a historical resource pursuant to Section 15064.5.

D.3 *Historical Resources.* A project would normally have a significant impact on historical resources if it would result in a substantial adverse change in the significance of a historical resource. A substantial adverse change in significance occurs if the project involves:

- Demolition of a significant resource;
- Relocation that does not maintain the integrity and significance of a significant resource;
- Conversion, rehabilitation, or alteration of a significant resource that does not conform to the Secretary of the Interior's Standards for Rehabilitation and Guidelines for Rehabilitating Historic Buildings; or
- Construction that reduces the integrity or significance of important resources on the site or in the vicinity.

V(b) Cause a substantial adverse change in the significance of an archaeological resource pursuant to Section 15064.5

V(c) Disturb any human remains, including those interred outside of formal cemeteries?

According to Appendix G of the CEQA Guidelines, a project would have a significant impact related to tribal cultural resources if it would:

XVIII Cause a substantial adverse change in the significance of a tribal cultural resource, defined in Public Resources Code section 21074 as either a site, feature, place, cultural landscape that is geographically defined in terms of the size and scope of the landscape, sacred place, or object with cultural value to a California Native American Tribe, and that is:

(a) Listed or eligible for listing in the California Register of Historical Resources, or in a local register of historical resources as defined in Public Resources Code section 5020.1(k).

(b) A resource determined by the lead agency, in its discretion and supported by substantial evidence, to be significant pursuant to criteria set forth in subdivision (c) of Public Resources Code Section 5024.1, the lead agency shall consider the significance of the resource to a California Native American Tribe.

3.4.4.3 Construction Impacts

The analysis below describes the potential temporary and permanent impacts on cultural resources for the proposed Project during construction.

V(a): Cause a substantial adverse change in the significance of a historical resource pursuant to Section 15064.5?

The proposed Project includes the construction of public recreational space on approximately 13 acres in areas underneath and adjacent to the Sixth Street Viaduct Replacement. The proposed Project is organized into three areas, referred to as the West Park, Arts Plaza and River Gateway, and the East Park. The River Gateway would involve permanent alterations to an existing pedestrian and maintenance tunnel (LA River Access Tunnel) that connects the Arts Plaza site with the west bank of the Los Angeles River. In addition, reinforced concrete planted terraces would be constructed on the west and east banks of the LA River channel. Four historical resources were

identified within the Project Area: Fourth Street Viaduct, Seventh Street Viaduct, the Los Angeles River, and the Downtown Los Angeles Industrial Historic District.

The Fourth Street Viaduct and Seventh Street Viaduct (the viaducts) are significant for their method of construction and innovative design. None of the activities associated with the construction phase of the proposed Project would physically impact the viaducts. The construction phase of the proposed Project would not result in a substantial adverse change in the significance of the viaducts.

The Los Angeles River is significant for its association with flood control in the region, for facilitating the continued development of river-adjacent areas during and after World War II, and for its method of construction. The construction phase of the proposed Project includes alterations to LA River Access Tunnel, which include widening the tunnel opening; resurfacing the entryway, pavement, and tunnel floor; painting; installing lighting; and installing safety features, including removable bollards or gate and warning devices. In addition, reinforced concrete planted terraces would be constructed on up to approximately 20,000 square feet of the west and east banks of the LA River channel. The proposed improvements would be compatible with the size, scale and proportion, and massing of the existing concrete channel. The historical resource would not be materially impaired; therefore, the activities associated with the construction phase of the proposed Project would not result in a substantial adverse change in the significance of the River.

The Downtown Los Angeles Industrial Historic District (District) is significant for its role as the City's primary industrial district from the late nineteenth century through World War II. The proposed Project Site is located outside the District boundaries. None of the activities associated with the construction phase of the proposed Project would physically or indirectly impact the District's contributing buildings or its other distinctive features. The construction phase of the proposed Project would not result in a substantial adverse change in the significance of the District.

The historic associations, design elements, and character defining features that convey the significance of the four historical resources in the Project Area would not be affected by the activities associated with the construction phase of the proposed Project. Therefore, impacts during construction would be less than significant and no mitigation measures are required.

V(b): Cause a substantial adverse change in the significance of an archaeological resource pursuant to Section 15064.5?

Results of the archaeological assessment indicate there are no significant archaeological resources that would be affected by the proposed Project. However, the archaeological sensitivity model created for the proposed Project indicates that undisturbed native sediments throughout much of the Project Site have a moderate potential for buried archaeological deposits dating to the prehistoric period. Within the Los Angeles River and railroad rights-of-way, the potential of encountering prehistoric and historic archaeological remains is considered relatively low.

The development of the West Park and East Park portions of the Project Site has the potential to disturb deeply buried and intact prehistoric and historic archaeological resources. Archaeological monitoring would be conducted in the West Park and East Park for excavations at depths greater than five feet (see **BMP-CUL-1**). In the unlikely event that previously undisturbed archaeological resources are encountered during construction, all work in the vicinity would stop until a qualified

archaeologist can visit the site of discovery and assess the significance of the archaeological resource (see **BMP-CUL-4**). Therefore, the project would not cause a substantial adverse change in the significance of an archaeological resource.

V(c): Would the project disturb any human remains, including those interred outside of formal cemeteries?

No human remains are known to exist in the Project Site, and the location does not encompass any formal cemeteries. However, the Gabrieleño Indians of California Tribal Council have indicated that the Project Area is sensitive for prehistoric Native American remains. Health and Safety Code Section 7050.5, Section15064.5(e) of the CEQA Guidelines, and PRC Section 5097.98 mandate the process to be followed in the unlikely event of an accidental discovery of any human remains in a location other than a dedicated cemetery (see **BMP-CUL-5**). Specifically, the Los Angeles County Coroner must be notified within 24 hours of the discovery of potentially human remains. The Coroner must then determine within two working days of being notified if the remains are subject to his or her authority. If the Coroner recognizes the remains to be Native American, he or she must contact the NAHC by phone within 24 hours. The NAHC then designates a Most Likely Descendant (MLD) with respect to the human remains within 48 hours of notification. The MLD will then have the opportunity to recommend to the Project proponent means for treating or disposing of, with appropriate dignity, the human remains and associated grave goods within 24 hours of notification.

XVIII: Cause a substantial adverse change in the significance of a site, feature, place, cultural landscape, sacred place, or object with cultural value to a California Native American Tribe that is listed or determined eligible for listing on the California Register of Historical Resources, listed on a local historical register, or otherwise determined by the lead agency to be a tribal cultural resource?

The Gabrieleño Indians of California Tribal Council has indicated that the Project Area is sensitive for prehistoric Native American remains. Chairperson Dorame requested that a Native American monitor affiliated with the Gabrieleño Indians of California Tribal Council observe all ground-disturbing activities (including bore holes and asphalt removal) associated with the proposed Project. It is anticipated that a qualified tribal cultural resource monitor may be present during excavation activities in the proposed Arts Plaza (see **BMP-CUL-3**). In addition, a tribal cultural resources sensitivity training session would be held for the construction contractor prior to construction activities (see **BMP-CUL-2**). The City will continue working with the tribe in accordance with the requirements of AB 52. Because no tribal cultural resources were observed in the Project Area, impacts would be less than significant and no mitigation measures are required.

3.4.4.4 Operational Impacts

The analysis below describes the temporary and permanent impacts on cultural resources anticipated as a result of the proposed Project during operation. The analysis below evaluates potential impacts, based upon the applicable threshold of significance.

V(a): Cause a substantial adverse change in the significance of a historical resource pursuant to Section 15064.5?

Operation of the proposed Project would involve the use and maintenance of public recreational space on approximately 13 acres in areas underneath and adjacent to the Sixth Street Viaduct. As described above, four historical resources were identified within the Project Area: Fourth Street Viaduct, Seventh Street Viaduct, the Los Angeles River, and the Downtown Los Angeles Industrial Historic District.

The Fourth Street Viaduct and Seventh Street Viaduct (the viaducts) are significant for their method of construction and innovative design. Operation of the proposed Project would not involve activities that could result in the demolition, relocation, conversion, rehabilitation, or alteration of the viaducts. Therefore, the operations phase of the proposed Project would not result in a substantial adverse change in the significance of the viaducts.

The Los Angeles River is significant for its association with flood control in the region; for facilitating the continued development of river-adjacent areas during and after World War II; and for its method of construction. During the operation of the proposed Project, existing access to the River via the LA River Access Tunnel on the west bank would be maintained. In addition, the west and east banks of the LA River channel would include reinforced concrete planted terraces on up to approximately 20,000 square feet of the west and east LA River banks. The proposed improvements are compatible with the size, scale and proportion, and massing of the existing concrete channel. The historical resource would not be materially impaired; therefore, the proposed Project would not cause a substantial adverse change in the significance of the LA River.

The Downtown Los Angeles Industrial Historic District (District) is significant for its role as the City's primary industrial district from the late nineteenth century through World War II. The Project Site is located outside the District boundaries. Though the proposed Project would introduce a new visual element to the area southeast of the District, the impact would be less than significant. Given the Project Site's location outside of the District, the proposed Project would not substantially change the spatial relationships between the District's significant components. As the Project would not materially impair the District, it would not result in a substantial adverse change to the historical resource.

The historic associations and character defining features that convey the significance of the four historical resources in the Project Area would not be affected by the activities associated with the operations phase of the proposed Project. Therefore, impacts during operation would be less than significant and no mitigation measures are required.

V(b): Cause a substantial adverse change in the significance of an archaeological resource pursuant to Section 15064.5?

Operation of the proposed Project would not involve any ground-disturbing activities. Therefore, there would be no potential to disturb, damage, or degrade an archaeological resource or its setting. No operational impacts on archeological resources would occur and no mitigation measures are required.

V(c): Disturb any human remains, including those interred outside of formal cemeteries?

Operation of the proposed Project would not involve any ground-disturbing activities. Therefore, there would be no potential to disturb any human remains. Because operation of the proposed Project would not involve any ground-disturbing activities, no operational impacts on human remains would occur and no mitigation measures are required.

XVIII: Cause a substantial adverse change in the significance of a site, feature, place, cultural landscape, sacred place, or object with cultural value to a California Native American Tribe that is listed or determined eligible for listing on the California Register of Historical Resources, listed on a local historical register, or otherwise determined by the lead agency to be a tribal cultural resource?

Operation of the proposed Project would not involve ground disturbing activities; therefore, operation of the proposed Project would not disturb prehistoric Native American remains nor cause an adverse change in the significance of a site, feature, place, cultural landscape, sacred place, or object with cultural value to a California Native American Tribe. Because operation of the proposed Project would not involve any ground-disturbing activities, no operational impacts on sites, features, places, cultural landscapes, sacred places, or objects with cultural value to a California Native American Tribe would occur and no mitigation measures are required.

3.4.5 Best Management Practices

BMP-CUL-1: Archaeological Monitoring During Excavation

A qualified archaeological monitor shall conduct archaeological monitoring in the West Park and East Park for excavations at depths greater than 5 feet. Monitoring efforts may be reduced or eliminated for those portions of the Project Area shown to have been recently disturbed by construction activities associated with the Sixth Street Viaduct Project.

BMP-CUL-2: Tribal Cultural Resources Sensitivity Training

The City shall invite a qualified tribal representative from the Gabrieleño Band of Mission Indians to a pre-construction meeting to provide a training session to the construction contractor regarding potential tribal resources that could be encountered during construction activities and procedures to follow should a tribal resource be encountered.

BMP-CUL-3: Tribal Cultural Resources Monitoring During Excavation

The City shall retain and compensate for the services of a Tribal monitor who is both approved by the Gabrieleño Band of Mission Indians-Kizh Nation Tribal Government and is listed under the NAHC's Tribal Contact list for the Project Area. The Tribal monitor shall only be present on-site during the construction phases that involve ground-disturbing activities in the proposed Arts Plaza. Monitoring efforts may further be reduced or eliminated for those portions of the proposed Arts Plaza that (1) are underlain with artificial fill of known origin, (2) require superficial scraping of land at depths less than five feet, or (3) are demonstrated to have been recently disturbed by construction activities associated with the Sixth Street Viaduct Project. The on-site monitoring shall cease when the grading and excavation activities in the proposed Arts Plaza are completed, or when the Tribal representatives and monitor have indicated that the site has a low potential for impacting tribal cultural resources.

BMP-CUL-4: Unanticipated Discovery of Archaeological and Tribal Cultural Resources

In the event that potentially significant buried archaeological materials are encountered within the Project Area, all work in the vicinity must stop until the archaeological and Tribal monitor can visit the site and assess the significance of the resource. If the resources are Native American in origin, the Gabrieleño Band of Mission Indians-Kizh Nation shall coordinate with the City regarding treatment and curation of these resources. Work may continue on other parts of the Project Area while evaluation and, if necessary, mitigation takes place (CEQA Guidelines Section 15064.5 [f]).

BMP-CUL-5: Unanticipated Discovery of Human Remains

Health and Safety Code Section 7050.5, Section 15064.5(e) of the CEQA Guidelines, and PRC Section 5097.98 mandate the process to be followed in the unlikely event of an unanticipated discovery of human remains in a location other than a dedicated cemetery. The Los Angeles County Coroner must be notified within 24 hours of the discovery of potentially human remains. The Coroner must then determine within two working days of being notified if the remains are subject to his or her authority.

If the Coroner recognizes the human remains (including bone fragments and funerary objects) to be Native American, he or she must contact the NAHC by phone within 24 hours. The NAHC then designates a Most Likely Descendant (MLD) with respect to the human remains within 48 hours of notification. The MLD will then have the opportunity to recommend to the Project proponent means for treating or disposing of, with appropriate dignity, the human remains and associated grave goods within 24 hours of notification.

3.4.6 Mitigation Measures

Impacts on Cultural Resources would be less than significant; therefore, mitigation measures are not required.

3.4.7 Significant Unavoidable Adverse Impacts

There are no significant unavoidable adverse impacts on archaeological, historical, or tribal cultural resources resulting from construction and operation of the proposed Project.

3.4.8 Cumulative Impacts

3.4.8.1 Historical Resources

Potential impacts to the four historical resources in the Project Area (Fourth Street Viaduct, Seventh Street Viaduct, the Los Angeles River, and the Downtown Los Angeles Industrial Historic District) would be less than significant. Only one resource, the Los Angeles River, would be directly affected. A previously approved project, the Sixth Street Viaduct Replacement Project, is currently underway and involves replacement with the historic Sixth Street Viaduct over the Los Angeles River with a new bridge. No impacts on the historic properties of the Los Angeles River were identified in the EIR prepared for the Sixth Street Viaduct Replacement Project. A foreseeable future project, the Los Angeles River Bike Path Gap Closure Project, would involve an extension of existing segments of the 32-mile greenway proposed in the Los Angeles River Revitalization Master Plan. This future project would take place along the Los Angeles River from Elysian Valley through Downtown Los Angeles

to the City of Vernon. The bike path improvements proposed by the Gap Closure Project would impact the Los Angeles River in a manner similar to the improvements proposed by the PARC Project. Therefore, the impact of the Gap Closure Project to the Los Angeles River is expected to be less than significant. In addition, it is expected that the Gap Closure Project would also be required to comply with applicable regulatory requirements and include similar best management practices. Therefore, cumulative impacts to historical resources would be less than significant and would not be cumulatively considerable.

3.4.8.2 Archaeological Resources

Archaeological monitoring would be conducted in the West Park and East Park for excavations at depths greater than five feet. In the event that potentially significant buried archaeological materials are encountered within the Project Area, all work in the vicinity must be halted until a qualified archaeologist can visit the site of discovery and assess the significance of the archaeological resource. In addition, the City will continue working with the tribe in accordance with the requirements of AB 52. Impacts to archaeological resources would be less than significant. It is expected that related projects and other future development would also be required to comply with applicable regulatory requirements and include similar best management practices. Therefore, cumulative impacts to archaeological resources would be less than significant and would not be cumulatively considerable.

3.4.8.3 Tribal Cultural Resources

The Project Site is sensitive for prehistoric Native American remains. The City will continue working with the tribe in accordance with the requirements of AB 52. Impacts to Tribal Cultural Resources would be less than significant. It is expected that related projects and other future development would also be required to comply with applicable regulatory requirements and include similar best management practices. Therefore, cumulative impacts to tribal cultural resources would be less than significant and would not be cumulatively considerable.

3.5 Energy

This section describes the affected environment and regulatory setting for Energy related to the Project Area. In addition, this section describes the potential impacts related to Energy that would result from the implementation of the proposed Project. As noted in the analysis below, impacts associated with Energy during construction and operation of the proposed Project would be less than significant and no mitigation measures are required.

3.5.1 Regulatory Setting

A review of the various federal, state, regional, and local government regulatory requirements was conducted to identify regulations that relate to Energy. This section summarizes the various regulatory requirements that are relevant to the proposed Project.

3.5.1.1 State

California Environmental Quality Act

Appendix F of the California Environmental Quality Act (CEQA) stipulates that Environmental Impact Reports (EIR) include a discussion of the potential energy impacts of a proposed project, with emphasis on avoiding or reducing inefficient, wasteful, and unnecessary consumption of energy (Sections 21083 and 21087, Public Resources Code). EIRs may include, but are not limited to, discussions of energy consuming equipment and processes used during construction and operation of a project; the energy intensiveness of materials and equipment required for the project; the effects of a project on local and regional energy supplies; and the degree to which a project complies with existing energy standards.

California Long-Term Energy Efficiency Strategic Plan

The California Public Utilities Commission adopted the California Long-Term Energy Efficiency Strategic Plan on September 18, 2008 (California Public Utilities Commission, 2008). The purpose of the strategic plan is to provide a roadmap for achieving maximum energy savings across all major sectors in California. The strategic plan identifies specific short- and long-term strategies to assist in achieving long-term vision goals for energy efficiency.

California Energy Commission

The California Energy Commission (CEC) was established by the Warren-Alquist Act in 1974 (California Energy Commission, 2014). Public Resources Code Sections 25402 subdivisions (a)-(b) and 25402.1 require the CEC to establish performance standards in the form of an "energy budget," which is determined based on the energy consumption per square foot of floor space. In 2014, the CEC developed a strategic plan that established goals for making energy public policy recommendations, collecting and providing energy data to policy makers, developing programs to promote energy investments and solutions, adopting building energy efficiency standards, developing energy-efficient transportation technology, and promoting renewable energy in California (California Energy Commission, 2014).

California Building Standards Code

The California Building Standards Code is contained in Title 24 of the California Code of Regulations (CCR). The code is comprised of building standards to address California's ever-changing conditions and particular concerns, including standards that have been adopted and adapted from national building codes. All occupancies in California are subject to the California Building Standards Code.

2016 Building Energy Efficiency Standards for Residential and Nonresidential Buildings

The 2019 Building Energy Efficiency Standards (or California Energy Code), contained in Title 24, Part 6, of the CCR, were adopted by the CEC in 1976 and are updated approximately every three years (California Energy Commission, 2018). These standards apply to all residential and non-residential buildings, with a few exceptions (hospitals, nursing homes, and jails), and apply to new and existing buildings. The California Energy Code regulates a building's "energy budget" for consuming hydro-carbon fuel and electricity. The California Energy Code also contains energy and water efficiency requirements for newly constructed buildings and alterations to existing buildings. In addition, the California Energy Code provides requirements for manufacturing, construction, and installation of building components.

California Green Building Standards Code

The California Green Building Standards Code (or CALGreen) is contained in Title 24, Part 11 of the CCR. The purpose of CALGreen is to improve public health and safety using building design and construction concepts that result in positive environmental impacts. CALGreen encourages sustainable construction practices in the following categories: planning and design, energy efficiency, water efficiency and conservation, material conservation and resource efficiency, and environmental quality.

3.5.1.2 Local

2016 Power Integrated Resource Plan

The 2016 Power Integrated Resource Plan guides the Los Angeles Department of Water and Power's (LADWP) efforts to supply reliable electricity in an environmentally responsible and cost effective manner (Los Angeles Department of Water and Power, 2016). The 2016 Power Integrated Resource Plan analyzes the economic and environmental impact of increased local solar, energy storage, and transportation electrification and recommends strategies to meet the future electric needs of the City. A primary strategy of the Integrated Resource Plan is to improve energy efficiency through reducing greenhouse gas emissions, with a goal of increasing the renewable portfolio standard to 55 percent by 2030 and 65 percent by 2036.

2017 Los Angeles Green Building Code

The Los Angeles Green Building Code (LAGBC), codified in the City's Green Building Ordinance (Los Angeles Municipal Code, Chapter IX, Article 9), is based on CALGreen. The LAGBC applies to the following types of projects: all new buildings (residential and non-residential); all additions (residential and non-residential); alterations with building valuations of $200,000 or more (residential and nonresidential); and residential alterations that increase the building's conditioned volume. Like CALGreen, the LAGBC includes mandatory measures and standards for achieving energy efficiency.

Sustainable City pLAn

The City developed the *Sustainable City pLAn* (Plan) in 2015, and an updated annual report was published in 2019, titled L.A.'s Green New Deal (Office of the Los Angeles Mayor, 2019). The plan consists of 47 targets with milestones and initiatives for a cleaner environment and stronger economy. The plan describes the City's vision for increasing energy efficiency, with targets of reducing building energy use per square foot for all building types by 34% by 2035.

Green LA and ClimateLA

In May 2007, the City published *Green LA: An Action Plan to Lead the Nation in Fighting Global Warming*, which included more than fifty specific climate mitigation actions designed to reduce the City's contributions to climate change, and to prepare a response to the changes that have already begun to occur (City of Los Angeles, 2007). City departments worked together to respond to the recommendations set forth in the *Green LA* action plan, resulting in *ClimateLA*. *ClimateLA* is an implementation program that provides detailed information about each action item discussed in the *Green LA* framework, as well as adaptation measures and mitigation. Some of the adaptive action items recommended include making Los Angeles a worldwide leader in green buildings, reducing water consumption, utilizing renewable energy sources, and converting the City's fleet to cleaner and more efficient models. *Green LA* and *ClimateLA* were established with the goal of reducing greenhouse gas emissions; however, these efforts would result in the added benefit of decreasing energy consumption in the City.

City of Los Angeles General Plan

As required by the State of California, the City's General Plan addresses goals, policies, and standards related to land use, circulation, housing, conservation, open space, noise, and safety (City of Los Angeles, 2017). To address goals that meet the unique needs of the City, the General Plan also includes elements related to health and wellness, air quality, historic preservation and cultural resources, and public facilities and services. Several of the General Plan elements are currently undergoing revision. The General Plan elements that pertain to Energy include Plan for a Healthy Los Angeles, Air Quality, Mobility Plan 2035, and Conservation, which establish the following applicable policies:

Healthy Building Design and Construction Element

- Policy 2.2: Promote a healthy built environment through constructing buildings designed to reduce energy costs, promoting green building standards, and increasing energy efficiency.

Air Quality Element

- Policy 5.1.2: Effect a reduction in energy consumption and shift to non-polluting sources of energy in its buildings and operations.

Mobility Plan 2035

- Objective SF-12: Continue to refront existing street lighting infrastructure with energy-efficient LEDs.

Conservation Element

- Policy 1: Continue to encourage energy conservation and petroleum product reuse.

3.5.2 Environmental Setting

The CEC California Energy Consumption Database reports energy consumption data for various utilities, agencies, counties, and planning areas. In 2019, the total electricity consumption in Los Angeles County was 46,556 gigawatt hours (GWh) for non-residential sectors and 19,562 GWh for residential sectors, for a total of 66,118 GWh. Gas consumption in Los Angeles County was 1,813 million therms for non-residential uses and 1,236 million therms for residential uses, for a total of 3,048 million therms (California Energy Commission, 2019).

Electricity is supplied to the Project Area by the LADWP. LADWP operates 34 generation plants with a total capacity of approximately 8,009 megawatts. The department's energy supply comes from a variety of energy sources, including renewable sources, natural gas, nuclear, hydroelectric, and coal (Los Angeles Department of Water and Power, 2019).

LADWP serves over 4 million residents covering an area of 465 square miles (Los Angeles Department of Water and Power, 2019). LADWP energy sources for the 2016 calendar year are summarized in **Table 3.5-1**. LADWP's electric capacity is approximately 7,880 megawatts and the record instantaneous peak demand for electricity was 6,502 megawatts, which was reached on August 31, 2017. LADWP electricity usage for various sectors in 2017 is summarized in **Table 3.5-2**.

The Southern California Gas Company (SoCalGas) provides natural gas to the City. SoCalGas is the nation's largest distributor of natural gas, serving 21.6 million consumers over 20,000 square miles throughout Central and Southern California (Southern California Gas Company, n.d.).

Transportation accounted for approximately 40 percent of the energy consumption in California in 2016. In the same year, California consumed approximately 3,116 trillion British thermal units (BTU) for the transportation sector energy, from natural gas, petroleum, and electricity sources. In 2017, California consumed approximately 350,604 thousand barrels of gasoline, or approximately 1,772 trillion BTU, for the transportation sector. In the same year, California consumed approximately 82,842 thousand barrels of diesel, or 477 trillion BTU, for the transportation sector (U.S. Energy Information Administration, 2018).

Table 3.5-1: LADWP Energy Sources (Calendar Year 2019)

Energy Source	Percent
Renewable Energy[1]	34%
Natural Gas	27%
Nuclear	14%
Large Hydroelectric	3%
Coal	21%
Other/Unspecified Sources of Power	0%

1. Renewable energy sources include biomass and waste (0%), geothermal (9%), eligible hydroelectric (3%), solar (12%), and wind (10%).
Source: (Los Angeles Department of Water and Power, 2019)

Table 3.5-2: 2019 LADWP Electricity Consumption

Sector	Electricity Consumption (GWh)
Agriculture & Water Pump	21.6
Commercial Building	11,115.8
Commercial Other	937.8
Industry	11,780.9
Mining & Construction	273.3
Residential	7,388.6
Streetlight	106
Total Usage	21,624

Source: (California Energy Commission, 2019)

The existing energy usage in the Project Area was quantified using the California Emissions Estimator Model (CalEEMod) v2016.3.2 computer program, using the assumption that the existing land use is classified as "General Heavy Industry." Existing energy use is summarized in **Table 3.5-3** and detailed calculations are provided in **Appendix B-14**.

Table 3.5-3: Existing Energy Use in the Project Area

Energy Source	Annual Energy Consumption	Annual MMBTU
Electricity	2,485,290 kWh	8,480
Natural Gas	4,052,590 kBTU	4,053
Mobile Fuel (Diesel)	30,098 gallons	4,135
Mobile Fuel (Gasoline)	47,797 gallons	5,756
Water Conveyance & Treatment	52 million gallons	2,300
	Total	24,724

Energy calculations were quantified using the CalEEMod, v2016.3.2, computer program, using the assumption that the existing land use is classified as "General Heavy Industry."
MMBTU = million British thermal units; kWh = kilowatt hours; kBTU = kilo-British thermal unit
Source: (Ambient Air Quality & Noise Consulting, 2019)

3.5.3 Environmental Impact Analysis

3.5.3.1 Methodology

Construction

Regarding energy use (e.g., fuel use) during construction, it is assumed that only diesel fuel would be used in construction equipment. On-road vehicles for hauling materials and worker commute trips assumed a mix of diesel and gasoline fuel use. Construction schedules, equipment numbers, horsepower ratings, and load factors were used to calculate construction-related fuel use, based on default assumptions contained in the CalEEMod. Diesel fuel used for off-road equipment was estimated based on a factor of 0.05 gallons of diesel fuel per brake-horsepower hour derived from the South Coast Air Quality Management District's (SCAQMD) CEQA Air Quality Handbook (South Coast Air Quality Management District, 1993). Average fuel usage rates by vehicle class, fuel type (e.g., diesel, gasoline, electric, and natural gas), and average vehicle trip distances for on-road vehicles were obtained from the California Air Resources Board's (CARB) EMFAC2017 mobile-source emissions inventory for Los Angeles County. In addition, to aid in the comparison of energy use associated with the various categories evaluated, total energy use was converted to BTU, which are reported in units of one million BTU (MMBTU).

Operation

Proposed Project operation would include the consumption of diesel and gasoline fuel from on-road vehicles. Transportation fuel-use estimates were calculated by applying average fuel usage rates per vehicle mile to vehicle miles traveled (VMT) data associated with the proposed Project. Vehicle miles traveled was derived from the CalEEMod modeling conducted for the proposed Project. Daily VMT for special events were adjusted to annual VMT based on the estimated number of annual events. Average fuel usage rates by vehicle class, fuel type (e.g., diesel, gasoline, electric, and natural gas), and average

vehicle trip distances were obtained from CARB's EMFAC2017 mobile-source emissions inventory for Los Angeles County. Building energy use was estimated using CalEEMod, version 2016.3.2.

Energy use was calculated for both existing and proposed land uses. CalEEMod includes 63 different land use types for which trip rates have been established. The existing land use was classified as General Heavy Industry. Proposed land uses that would occur at the Project Site were classified as the following: City Park (1.45 Acre Park), City Park (5.71 Acre Park) Fast Food Restaurant without Drive Thru (700 square foot café), Health Club (2,000 square foot building), City Park (two soccer fields), City Park (one acre park special events). To aid in the comparison of energy use associated with the various categories evaluated, total energy use was converted to BTU, which are reported in units of MMBTU.

3.5.3.2 Thresholds of Significance

According to Appendix G of the State CEQA Guidelines and the *L.A. CEQA Thresholds Guide*, the proposed Project would have a significant impact on Energy if it would:

VI(a) Result in potentially significant environmental impact due to wasteful, inefficient, or unnecessary consumption of energy resources, during project construction or operation.

VI(b) Conflict with or obstruct a state or local plan for renewable energy or energy efficiency.

3.5.3.3 Construction Impacts

VI(a): Result in potentially significant environmental impact due to wasteful, inefficient, or unnecessary consumption of energy resources, during project construction or operation.

During the construction period, equipment and vehicles would primarily be powered by diesel fuel and would likely require minimal electricity. Estimated construction-period fuel use is summarized in **Table 3.5-4** and detailed calculations are provided in **Appendix B-14**. As shown in **Table 3.5-4**, construction-period fuel use would be 23,681 MMBTU over the entire construction period, or approximately 789 MMBTU when amortized over the anticipated 30-year life of the project.[i]

Construction-period energy use includes the energy that would be used for haul trips, equipment use, and worker commute trips.

[i] Construction-period energy consumption was divided over the anticipated 30-year life of the proposed Project, which is consistent with the methodology for estimating greenhouse gas emissions (see Section 3.7). Although construction would occur over a period of approximately two years for Phase I and six months for Phase II, this method is intended to apportion the upfront energy consumption over the life of the proposed Project.

Table 3.5-4: Estimated Construction-Period Fuel Use

	Diesel Fuel Use (gallons)	Gasoline Fuel Use (gallons)	MMBTU
Overall Construction Energy Use	157,403	17,080	23,681
Amortized Construction Energy Use[1]	5,237	569	789

Energy calculations were quantified using the CalEEMod, v2016.3.2, computer program.
1. Construction energy use was amortized over an assumed 30-year project life.
MMBTU = million British thermal units
Source: (Ambient Air Quality & Noise Consulting, 2019)

The fuel consumption from construction vehicles and equipment would be temporary and would represent a negligible increase in regional energy consumption. Best management practices (BMP) and mitigation measures to reduce air quality and greenhouse gas emissions would be implemented during the construction period, which would contribute to reductions in energy consumption (see Sections 3.2 and 3.7). These measures include complying with SCAQMD rules and regulations, implementing idling limitations, using equipment that meets Tier 4 off-road emission standards, and offering ride-share and transit incentives for construction workers. As such, the proposed Project would not result in a potentially significant environmental impact due to wasteful, inefficient, or unnecessary consumption of energy resources, during project construction. Therefore, impacts would be less than significant and no further mitigation is required.

VI(b): Conflict with or obstruct a state or local plan for renewable energy or energy efficiency.

Applicable plans related to renewable energy or energy efficiency include the California Long-Term Energy Efficiency Strategic Plan, LADWP 2016 Power Integrated Resource Plan, *Sustainable City pLAn*, *Green LA*, and *ClimateLA*, which are described in Section 3.5.1. As discussed under **VI(a)** above, the fuel consumption from construction vehicles and equipment would be temporary and would represent a negligible increase in regional energy consumption. In addition, the proposed Project includes various air quality and greenhouse gas BMPs and mitigation measures that would reduce energy consumption associated with the use of construction equipment. Therefore, the project would not conflict with or obstruct a state or local plan for renewable energy or energy efficiency, and the impacts would be less than significant.

3.5.3.4 Operational Impacts

VI(a): Result in potentially significant environmental impact due to wasteful, inefficient, or unnecessary consumption of energy resources, during project construction or operation.

Proposed Project features, such as park lighting, WiFi, security cameras, on-site buildings (café, concessions area, restrooms, and office), and electric vehicle charging station, would require electricity or natural gas for energy. Special events could require electricity to power sound and lighting equipment. In addition, proposed Project operation would include the consumption of diesel and gasoline fuel from on-road vehicles traveling to the Project Site.

Estimated operational energy use is summarized in **Table 3.5-5** and detailed calculations are provided in **Appendix B-14**. As shown in **Table 3.5-5**, the proposed Project would result in a net reduction in

energy consumption of approximately 15,015 MMBTU, or a decrease of approximately 61 percent, when compared with the energy consumption associated with the existing industrial land use.

Table 3.5-5: Estimated Operational Energy Use

Energy Source	Annual Energy Consumption	Annual MMBTU
Electricity	192,751 kWh	658
Natural Gas	197,732 kBTU	198
Mobile Fuel (Diesel)	25,628 gallons	3,521
Mobile Fuel (Gasoline)	40,698 gallons	4,901
Water Conveyance & Treatment	11 million gallons	432
	Total	9,709
	Total Existing Energy Use	24,724
	Net Change Compared to Existing Energy Use	-15,015 (-61%)

Energy calculations were quantified using the CalEEMod, v2016.3.2, computer program. The existing land use was classified as General Heavy Industry and the proposed land uses at the Project Site include the following: City Park (1.45 acre park), City Park (5.71 acre park) Fast Food Restaurant without Drive Thru (700 square foot café), Health Club (2,000 square foot buildings), City Park (two soccer fields), and City Park (one acre park special events).
MMBTU = million British thermal units; kWh = kilowatt hours; kBTU = kilo-British thermal unit
Source: (Ambient Air Quality & Noise Consulting, 2019)

The proposed Project would include improvements to active transportation options; design features that reduce energy use, water use, and waste generation (i.e., low-flow water fixtures, water-efficient irrigation systems, and high-efficiency lighting); and the conversion of industrial uses to open space uses, which would contribute to reductions in energy consumption. In addition, the proposed buildings would conform to the California Building Standards Code and Los Angeles Green Building Code to meet energy efficiency requirements. As such, the proposed Project would not result in a potentially significant impact due to wasteful, inefficient, or unnecessary consumption of energy features during operation. Therefore, impacts would be less than significant, and no mitigation is required.

VI(b): Conflict with or obstruct a state or local plan for renewable energy or energy efficiency.

Applicable plans related to renewable energy or energy efficiency include the California Long-Term Energy Efficiency Strategic Plan, LADWP 2016 Power Integrated Resource Plan, *Sustainable City pLAn*, and *Green LA* and *ClimateLA*, which are described in Section 3.5.1. In comparison to the existing industrial uses that were removed, the proposed Project would result in an overall net reduction of long-term operational energy use of roughly 15,015 MMBTU, or 61 percent (see **Table 3.5-5**). Proposed Project features, including improvements to active transportation options; design features that reduce energy use, water use, and waste generation (i.e., low-flow water fixtures, water-efficient irrigation systems, and high-efficiency lighting); and the conversion of industrial uses to open space uses, would contribute to reductions in energy consumption. As a result of these energy-saving features, the proposed Project would be consistent with the goals outlined in state and local energy plans. Therefore, the project would

not conflict with or obstruct a state or local plan for renewable energy or energy efficiency and impacts would be less than significant.

3.5.4 Best Management Practices

There are no proposed BMPs specifically for Energy. With implementation of the BMPs identified in Section 3.2.4 (Air Quality) and Section 3.7.4 (Greenhouse Gas Emissions), construction-related energy use would be minimized to the greatest extent feasible.

3.5.5 Mitigation Measures

There are no proposed mitigation measures specifically for Energy. Implementation of the mitigation measures identified in Section 3.2.4 (Air Quality), would reduce impacts related to construction-related energy use. Impacts related to Energy would be less than significant.

3.5.6 Significant Unavoidable Adverse Impacts

There are no significant unavoidable adverse impacts on Energy resulting from implementation of the proposed Project.

3.5.7 Cumulative Impacts

Fuel consumption from construction activities would represent a negligible increase in regional energy consumption, while operation of the proposed Project would result in an overall net reduction of long-term energy use when compared to the existing industrial land use. Therefore, it is anticipated that existing energy service providers have adequate capacity to serve the energy demands of the proposed Project.

Growth and development in the Project Area are anticipated to contribute to increased demand for electricity, natural gas, and transportation energy. However, based on the 2016 Power Integrated Resource Plan, the City's increased energy demands are anticipated to be met with increased use of renewable energy sources, such as solar, wind, and geothermal power. In addition, increased transportation fuel demands would be minimized with improvements to the vehicle fuel economy pursuant to federal and state regulations and trends toward improving active transportation infrastructure (see Section 3.7, Greenhouse Gas Emissions for additional information). Like the proposed Project, other future transportation and development projects would be expected to incorporate energy conservation features, comply with applicable regulations related to energy use and efficiency, and incorporate BMPs and/or mitigation measures to reduce impacts related to energy. Therefore, the proposed Project would not result in cumulative impacts related to energy.

3.6 Geology and Soils

This section describes the affected environment and regulatory setting for Geology and Soils related to the Project Area. In addition, this section describes the potential impacts related to Geology and Soils that would result from the implementation of the proposed Project. As noted in the analysis below, impacts associated with Geology and Soils during the construction and operation of the proposed Project would be less than significant and no mitigation measures are required.

The analysis in this section is based on the Geotechnical Site Investigation report (Hushmand Associates, Inc., 2018) prepared for the proposed Project, which also incorporates findings from the *Foundation Report* prepared for the Viaduct Replacement Project (Earth Mechanics, Inc., 2016). In addition, the environmental setting and analysis in this section rely on information from the Paleontological Resource Assessment (Applied EarthWorks, 2019).

3.6.1 Regulatory Setting

A review of the various federal, state, regional, and local government regulatory requirements was conducted to identify regulations that relate to Geology and Soils. This section summarizes the various regulatory requirements that are relevant to the proposed Project.

3.6.1.1 Federal

Alquist-Priolo Earthquake Fault Zoning Act

The Alquist-Priolo Earthquake Fault Zoning Act (PRC Section 2621.5) was passed to mitigate hazards of surface faulting on structures built for human occupancy (California Department of Conservation, 2018). The Alquist-Priolo Earthquake Fault Zoning Act's main purpose is preventing the construction of buildings used for human occupancy in active fault zones.

3.6.1.2 State

California Building Standards Code

The 2016 California Building Standards Code (CCR, Title 24), which went into effect on January 1, 2017, is included in the City's Municipal Code. The California Building Standards Code is based on the federal Uniform Building Code but has been modified to reflect the seismic and environmental conditions of California. The California Building Standards Code includes guidelines for building design and construction, and includes the following components: California Building, Residential, Electrical, Mechanical, Plumbing, Energy, Historical Building, Fire, Existing Building, and Green Building Codes.

Seismic Hazards Mapping Act

The Seismic Hazards Mapping Act of 1990 (PRC Section 2690-2699.6) requires the identification and mapping of areas that are prone to liquefaction, earthquake-induced landslides, and amplified ground shaking (California Geological Survey, 2003b). The Seismic Hazards Mapping Act aims to minimize the loss of life and property by identifying seismic hazards and mitigation for these hazards.

3.6.1.3 Local

City of Los Angeles General Plan

As required by the State of California, the City's General Plan addresses goals, policies, and standards related to land use, circulation, housing, conservation, open space, noise, and safety (City of Los Angeles, 2017). To address goals that meet the unique needs of the City, the General Plan also includes elements related to health and wellness, air quality, historic preservation and cultural resources, and public facilities and services. Several of the General Plan elements are currently undergoing revision. The General Plan element that pertains to Geology and Soils is described in more detail in the following section.

Safety Element

The Safety Element of the City's General Plan addresses the protection of people from risks associated with natural disasters (City of Los Angeles, 1996). The Safety Element includes goals, objectives, and policies that guide the City's Emergency Operations Organization, which is the City's department responsible for emergency planning, training, and mitigation, as well as response and recovery operations. Chapter IV of the Safety Element describes areas within the City that are susceptible to fault rupture, liquefaction, and landslides, and includes standards related to seismic hazards. Specific policies pertaining to Geology and Soils include:

Hazard Mitigation

- **Policy 1.1.5**: Risk Reduction. Reduce potential risk hazards due to natural disaster to the greatest extent feasible within the resources available, including provision of information and training.

Conservation Element

The Conservation Element of the City of Los Angeles General Plan (adopted September 2001) primarily addresses preservation, conservation, protection and enhancement of the city's natural resources. The Conservation Element specifically addresses paleontological resources in Section 3 of Chapter 2.

With regard to paleontological resources, the Conservation Element contains the following objective with an associated policy and program:

- **Objective:** protect the city's archaeological and paleontological resources for historical, cultural, research and/or educational purposes.
- **Policy:** continue to identify and protect significant archaeological and paleontological sites and/or resources known to exist or that are identified during land development, demolition or property modification activities.
- **Program:** permit processing, monitoring, enforcement and periodic revision of regulations and procedures.
- **Responsibility:** departments of Building and Safety, City Planning and Cultural Affairs and/or the lead agency responsible for project implementation.

City of Los Angeles Building Code

The Los Angeles Building Code is a component of the City's Municipal Code (Chapter IX, Article 1). The Building Code aims to protect public health and property through regulating the design, construction, quality of materials, use and occupancy, and location and maintenance of buildings and structures proposed for development within the City. The Building Code includes requirements regarding the transport of material, excavation, fill materials, erosion control, and general construction activities.

3.6.2 Environmental Setting

3.6.2.1 Regional Geology

The Project Area is in the northern margin of the Los Angeles Basin (Basin), an actively subsiding basin bound by the Santa Monica Mountains and the Elysian, Repetto, and Puente Hills to the north, and the Santa Ana Mountains and San Joaquin Hills to the east and southeast (U.S. Geological Survey, 1965). The Basin is an alluviated lowland that gently slopes south towards the ocean and is interrupted by hills and mesas. The Basin is a northwest-trending structural depression and is filled with sedimentary formations of Tertiary and Cretaceous origin, overlain with Pleistocene and Holocene age alluvium.

3.6.2.2 Local Geologic Setting

According to the California Geological Survey (CGS) Seismic Hazard Zone Report for the Los Angeles 7.5-Minute Quadrangle (California Geological Survey, 1998), the Project Area is located in a region with Holocene age Quaternary alluvial deposits fan consisting of sand, silt, and gravel (Hushmand Associates, Inc., 2018). Based on the Foundation Report for the Viaduct Replacement Project (Earth Mechanics, Inc., 2016), the Project Area is underlain with:

- **Artificial Fill**: Generally, consists of disturbed and reworked alluvial sands, silts, and gravels, varying up to 15 feet thick in the Project Area, due to recent construction along the Los Angeles River.
- **Quaternary Alluvium**: Holocene to Pleistocene age alluvium consisting of active stream channel and unconsolidated floodplain deposits of gravel, sand, silt, and hardened remnants of older deposits.
- **Fernando Formation, Upper (Pico) and Lower (Repetto) Members**: Pliocene-age marine deposits consisting of tan to olive brown, semi-friable sandstone and conglomerate, in addition to gray to greenish gray, soft, poorly bedded marine claystone and siltstone.

3.6.2.3 Faulting, Seismicity, and Ground Shaking

The Project Area is located within a seismically active region, where several active faults could produce substantial shaking (California Department of Transportation and City of Los Angeles, 2011). There are no faults within the Project Area, but nearby active faults include Elysian Park (Lower CFM), Elysian Park (Upper), Puente Hills (LA), Hollywood, Raymond, Verdugo-Eagle Rock, Newport-Inglewood Fault Zone, and Elsinore Fault Zone (Whittier section), which range from 1.5 to 10.3 miles from the Project Area (Hushmand Associates, Inc., 2018).

According to the most recent Alquist-Priolo Earthquake Fault Zoning Map, there are no potentially active faults that pass through the Project Area (California Department of Conservation, 1977). There is no known surface expression of active faults within the Project Area. Therefore, the potential for a fault rupture through the Project Area is considered very low (Hushmand Associates, Inc., 2018).

According to California Geological Survey maps showing the earthquake shaking potential in California, there is a medium intensity of ground shaking and damage in the Project Area from anticipated future earthquakes (California Geological Survey, 2003a).

3.6.2.4 Subsurface Soils

Based on the borehole investigation, subsurface conditions consisted of about 5 to 20 feet of fill soils consisting of loose to medium dense silty sand to poorly graded sand with silt. The fill is underlain by generally dense to very dense coarse-grained materials comprising of sands, silty sands, gravelly sands, sandy gravels, cobbles, and possibly boulders (Hushmand Associates, Inc., 2018).

3.6.2.5 Expansive Soil

Expansive soil is soil that is prone to large volume changes (swelling and shrinking) that are directly related to changes in water content — with higher moisture levels, the soils will swell, and with lower moisture levels, the soils will shrink. According to Table 18-1-B of the California Building Code, a special foundation design is required if the Expansion Index (which predicts the swelling potential of compacted soils) is higher than 20. Based on a 1989 United States Geological Survey (USGS) map, the proposed Project is located in an area where data is insufficient to indicate the clay content and/or swelling potential of clay (U.S. Geological Survey, 1989). The Geotechnical Site Investigation did not include laboratory testing for expansive soils. However, the soils that were observed in the borehole investigation, as described in Section 3.6.2.4, are predominately gravels, sands, and cobbles, which tend to have a low potential for expansive soils. Clayey soils, on the other hand, can have a high expansion potential, but were not observed during borehole investigations (Hushmand Associates, Inc., 2018). Therefore, the potential for expansive soils in the Project Area is expected to be low.

3.6.2.6 Groundwater

Based on the Foundation Report for the Viaduct Replacement Project, measured groundwater elevations varied significantly throughout the Project Area and ranged from 170.9 to 228 feet below ground surface (bgs) (Earth Mechanics, Inc., 2015). Groundwater was not encountered in any of the boreholes performed during the investigations for the proposed Project (Hushmand Associates, Inc., 2018). This is likely because soil boring depths for the Viaduct Replacement Project, which varied from 3 to 200 feet bgs, were deeper than the boring depths for the proposed Project, which vary from 5.67 to 39.08 feet bgs (Earth Mechanics, Inc., 2015; Hushmand Associates, Inc., 2018). In addition, groundwater may fluctuate due to factors such as seasonal variation, nearby construction, irrigation, or other man-made and natural influences (Earth Mechanics, Inc., 2015).

3.6.2.7 Liquefaction Potential

Soil liquefaction occurs when a saturated or partially saturated soil substantially loses strength and stiffness in response to an applied stress, usually earthquake shaking or other sudden change in stress

condition, causing it to behave like a liquid. Other types of ground failure resulting from seismic activities include collapsible soils, subsidence (the gradual caving in or sinking of an area of land), landslides, and lateral spreading (landslides that commonly form on gentle slopes and that have rapid fluid-like flow movement). According to the most recent seismic hazards zones map, the proposed Project is not located in a liquefaction zone (see **Figure 3.6-1**, Seismic Hazards) (California Department of Conservation, 1999).

3.6.2.8 Paleontological Resources

To determine the paleontological sensitivity of geologic units underlying the Project Area, published geologic maps were reviewed. In November 2017, a records search was conducted by the Los Angeles County Museum of Natural History of known fossil localities in the area. Published reports on the regional geology and paleontology of the area were also reviewed (Norris & Webb, 1976; Springer et al., 2009; Yerkes & Campbell, 2005; U.S. Geological Survey, 1965).

Based on the literature review and museum records search results, the paleontological sensitivity was determined for the Project Area in accordance with the Society of Vertebrate Paleontology (SVP) (2010) sensitivity scale (Society of Vertebrate Paleontology, 2010). The near-surface Holocene-age alluvial deposits in the Project Area are likely too young to contain fossilized material. As such, these deposits are determined to have a low paleontological resource potential. Therefore, shallow excavations are unlikely to impact paleontological resources and further paleontological resource management is not recommended.

However, should Project-related ground-disturbance extend deeper into sensitive Pleistocene alluvial deposits or Pliocene rock formations buried at unknown depths within the Project Area and exposed at the ground surface nearby, further paleontological resource consultation may be required.

3.6.3 Environmental Impact Analysis

3.6.3.1 Screening Analysis

Several impacts and corresponding thresholds of significance in the following section were eliminated from further analysis in this EIR. Topics were eliminated if the Initial Study for the proposed Project concluded there would be "No Impact," or if impacts were identified to be "Less Than Significant… and will not be discussed further in the EIR." Therefore, only the topics described in the section below were determined to require further analysis in this EIR. A copy of the Initial Study, which contains the eliminated topics, is provided in **Appendix A**.

3.6.3.2 Thresholds of Significance

According to Appendix G of the State CEQA Guidelines and the *L.A. CEQA Thresholds Guide*, the proposed Project would have a significant impact on Geology and Soils if it would:

VII(b) Result in substantial soil erosion or the loss of topsoil.

VII(c) Be located on expansive soil, as defined in Table 18-1-B of the Uniform Building Code (1994), creating substantial direct or indirect risks to life or property?

VII(f) Directly or indirectly destroy a unique paleontological resource or site or unique geologic feature.

This page has been intentionally left blank.

Figure 3.6-1: Seismic Hazards

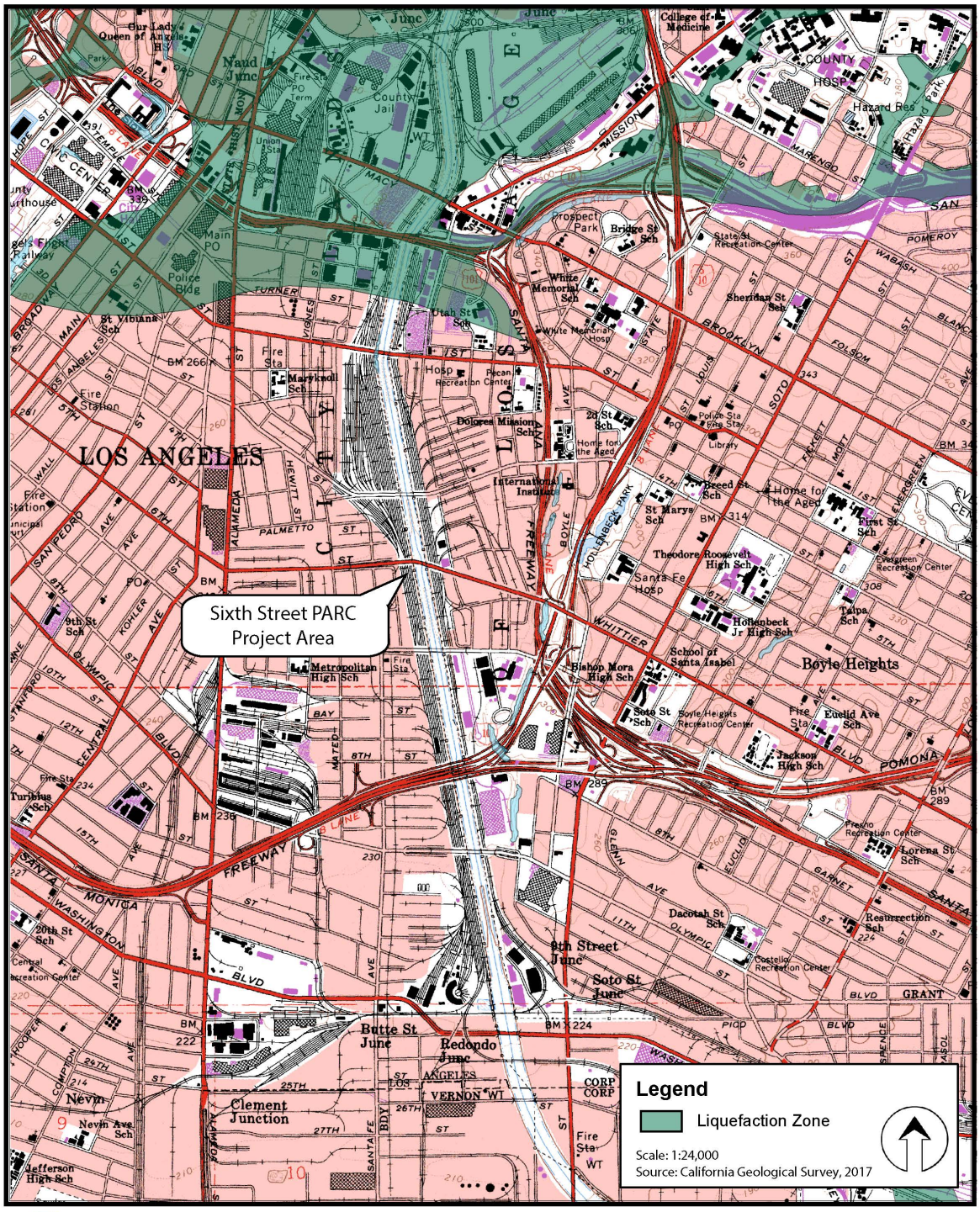

ENGINEERING
CITY OF LOS ANGELES

FIGURE 3.6-1. SEISMIC HAZARDS
Sixth Street PARC Project

D.1 *Paleontological Resources.* The determination of significance shall be made on a case-by-case basis, considering the following factors:

- Whether, or the degree to which, the project might result in the permanent loss of, or loss of access to, a paleontological resource; and
- Whether the paleontological resource is of regional or statewide significance.

3.6.3.3 Construction Impacts

VII(b): Would the project result in substantial soil erosion or the loss of topsoil?

Soil excavation would be required during the construction of the proposed Project. Throughout the Project Area, excavation depths are expected to range up to 5 feet for general earthwork, 10 feet for construction of retaining walls, 15 feet for utility trenching, and 22 feet for the removal of portions of the existing LA River Access Tunnel and existing Viaduct foundations. Because artificial fill makes up the top 5 to 20 feet of topsoil, as described in the Geotechnical Site Investigation, a substantial loss of topsoil is not expected to occur.

During site preparation and other construction activities, the proposed Project could result in soil erosion. Standard Best Management Practices (BMPs), such as fiber rolls and silt fencing, would be implemented during construction to ensure that substantial erosion or the loss of topsoil would not occur, and that construction activities would not result in impacts to the LA River. All grading activities would comply with permits from the Department of Building and Safety, and with the provisions of the City's Building Code (Municipal Code Chapter IX, Article 1). With implementation of BMPs, impacts would be less than significant and no mitigation is required.

VII(c): Would the project be located on expansive soil, as defined in Table 18-1-B of the Uniform Building Code (1994), creating substantial direct or indirect risks to life or property?

Because the proposed Project is located in an area with little or no swelling clay, substantial risks to life or property are not anticipated. However, the Project Area is underlain with fill material which could expand when saturated. Hazards would be reduced by following standard engineering practices, as well as the recommendations identified in the Geotechnical Site Investigation (Hushmand Associates, Inc., 2018). The report recommends that backfill soils would be moisture-conditioned and recompacted to meet American Section of the International Association for Testing Materials (ASTM) standards to counteract the potential adverse effects of soil expansiveness. In addition, the report recommends that if import soils are used, the import soil should not exhibit an Expansion Index greater than 20 or contain more than 35 percent fines (i.e., fine-grained soils), and should be screened by the geotechnical engineer to meet ASTM International standards (Hushmand Associates, Inc., 2018). By following these recommendations, impacts would be less than significant and no mitigation is required.

VII(f): Would the project directly or indirectly destroy a unique paleontological resource or site or unique geologic feature?

Results of the paleontological assessment indicate there are no significant resources that would be affected by the construction of the Project as presently proposed.

In the event that an unanticipated fossil discovery is made during proposed Project construction, in accordance with SVP (2010) guidelines, a qualified professional Paleontologist should be retained to examine the find and to determine if further paleontological resources mitigation is warranted (Society of Vertebrate Paleontology, 2010). The following management recommendation measures have been used by professional paleontologists for many years and have proven to be effective in reducing or eliminating adverse impacts to paleontological resources to a less than significant level pursuant to the requirements of CEQA. Prior to the start of construction within a given development site within the Project Area, all field personnel should be briefed regarding the types of fossils that could be found and the procedures to follow should paleontological resources be encountered. Specifically, the training should provide a description of the fossil resources that may be encountered, outline steps to follow when a fossil discovery is made and provide contact information for the Qualified Paleontologist and on-site monitor(s). The training should be developed by the Qualified Paleontologist and provided as hand-outs or a Power Point Presentation that can be presented concurrently with other environmental training (e.g., cultural and natural resources awareness training, safety training, etc.). As determined by the Qualified Paleontologist, construction Monitoring would not be required in the Project Area because of previous disturbance or the shallow, younger alluvial deposits.

With compliance with SVP (2010) guidelines (see **BMP-PAL-1** and **BMP-PAL-2**), impacts to paleontological resources would be less than significant and no mitigation measures are required.

3.6.3.4 Operational Impacts

VII(b): Would the project result in substantial soil erosion or the loss of topsoil?

The proposed Project would feature changes in elevation; however much of the 13-acre site would be a mix of vegetation, hardscape and park amenities. In the LA River channel, reinforced concrete planted terraces would be anchored into the existing slope liner on the west and east banks. Because the topography of the Project Area is relatively flat, and open spaces would be landscaped or hardscaped, substantial soil erosion and loss of topsoil are not anticipated. Therefore, impacts would be less than significant and no mitigation is required.

VII(c): Would the project be located on expansive soil, as defined in Table 18-1-B of the Uniform Building Code (1994), creating substantial direct or indirect risks to life or property?

See Section 3.6.3.3 above for a discussion of impacts related to expansive soils.

VII(f): Would the project directly or indirectly destroy a unique paleontological resource or site or unique geologic feature.

Operation of the proposed Project would not involve any ground-disturbing activities. Therefore, there would be no potential to disturb, damage, or degrade a paleontological resource or its setting. No operational impacts on paleontological resources would occur and no mitigation measures are required.

3.6.4 Best Management Practices

BMP-GEO-1: Erosion Control

The contractor shall implement standard BMPs, such as the use of fiber rolls and silt fencing, to reduce the amount of dust and dirt from leaving the construction area.

BMP-GEO-2: Geotechnical Site Investigation Recommendations

The Geotechnical Site Investigation report for the proposed Project includes recommendations to ensure that the Project Area is suitable for construction, and to ensure that appropriate measures are taken to reduce impacts during earthwork, excavation, utility trenching, backfilling, and other construction activities (Hushmand Associates, Inc., 2018). Backfill soils shall be moisture-conditioned and recompacted to meet ASTM International standards to counteract the potential adverse effects of soil expansiveness. If import soils are used, the import soil shall not exhibit an Expansion Index greater than 20 or contain more than 35 percent fines (i.e., fine-grained soils), and shall be screened by the geotechnical engineer to meet ASTM International standards.

BMP-PAL-1: Paleontological Sensitivity Training

Prior to the start of construction, all field personnel shall be briefed regarding the types of fossils that could be found and the procedures to follow should paleontological resources be encountered. Specifically, the training shall provide a description of the fossil resources that may be encountered, outline steps to follow when a fossil discovery is made, and provide contact information for a qualified paleontologist. The training shall be developed by a qualified paleontologist and provided as hand-outs or a PowerPoint Presentation that may be presented concurrently with other pre-construction training.

BMP-PAL-2: Unanticipated Paleontological Resource Discoveries

In the event that an unanticipated fossil discovery is made during construction, a qualified professional paleontologist shall be retained to examine the find and to determine whether further paleontological resource mitigation is warranted in accordance with SVP (2010) guidelines.

3.6.5 Mitigation Measures

Impacts related to Geology and Soils would be less than significant; therefore, mitigation measures are not required.

3.6.6 Significant Unavoidable Adverse Impacts

There are no significant unavoidable adverse impacts on Geology and Soils resulting from the implementation of the proposed Project.

3.6.7 Cumulative Impacts

Impacts related to Geology and Soils would be localized to the Project Area. Construction of other development projects in the Project Area listed in **Table 1-1**, could result in Geology and Soils impacts; however, these impacts are not expected to be cumulative because they would be site-specific.

The proposed Project and related projects would not change the geologic properties of the area and would not increase seismic or other geologic risks in the region. Like the proposed Project, all proposed development projects would be subject to seismic standards, safety requirements, standard design practices, and BMPs to minimize potential risks from seismic or other geologic hazards. Projects would also be required to implement standard engineering practices and BMPs to minimize the potential for erosion or loss of topsoil. In addition, all grading activities would be required to comply with the LA City Department of Building and Safety Permits, which would include the provisions of the City's Building Code. Therefore, the proposed Project would not result in cumulative impacts related to Geology and Soils.

In the event that potentially significant buried paleontological materials are encountered within the Project Area, all work in the vicinity must be halted until a qualified paleontologist can visit the site of discovery and assess the significance of the paleontological resource. Impacts to paleontological resources would be less than significant. It is expected that related projects and other future development would also be required to comply with applicable regulatory requirements and include similar best management practices. Therefore, the proposed Project would not result in cumulative impacts on paleontological resources.

3.7 Greenhouse Gas Emissions

This section describes the affected environment and regulatory setting for greenhouse gas (GHG) emissions related to the Project Area. In addition, this section describes the potential impacts related to GHG emissions that would result from the implementation of the proposed Project. As noted in the analysis below, impacts associated with GHG emissions during the construction and operation of the proposed Project would be less than significant.

The information in this section is based on the *Air Quality and Greenhouse Gas Impact Assessment* (Ambient Air Quality & Noise Consulting, 2019) prepared for the proposed Project. Air quality and greenhouse gas emissions were generated for an opening year of 2021 (Ambient Air Quality & Noise Consulting, 2019). Due to project delays, it is now anticipated that the park will open in 2024. There is not anticipated to be a substantial difference in projected emissions from 2021 to 2024 and emissions in 2024 may be slightly lower in 2024 due to continual improvement in vehicle and equipment emission standards.

3.7.1 Regulatory Setting

A review of the various federal, state, regional, and local government regulatory requirements was conducted to identify regulations that relate to GHG emissions. This section summarizes the various regulatory requirements that are relevant to the proposed Project.

3.7.1.1 Federal

Executive Order 13514

Executive Order 13514 is focused on reducing GHG emissions internally in federal agency missions, programs, and operations. In addition, the executive order directs federal agencies to participate in the Interagency Climate Change Adaptation Task Force, which is engaged in developing a national strategy for adaptation to climate change.

On April 2, 2007, in Massachusetts v. U.S. Environmental Protection Agency (U.S. EPA), 549 U.S. 497 (2007), the Supreme Court found that GHGs are air pollutants covered by the Federal Clean Air Act (FCAA) and that the U.S. EPA has the authority to regulate GHG. The Court held that the U.S. EPA Administrator must determine whether or not emissions of GHGs from new motor vehicles cause or contribute to air pollution which may reasonably be anticipated to endanger public health or welfare, or whether the science is too uncertain to make a reasoned decision.

On December 7, 2009, the U.S. EPA Administrator signed two distinct findings regarding GHGs under section 202(a) of the FCAA:

- Endangerment Finding: The Administrator found that the current and projected concentrations of the six key well-mixed GHGs (carbon dioxide [CO_2], methane [CH_4], nitrous oxide [N_2O], hydrofluorocarbons [HFC], perfluorocarbons [PFC], and sulfur hexafluoride [SF_6]) in the atmosphere threaten the public health and welfare of current and future generations.

- Cause or Contribute Finding: The Administrator found that the combined emissions of these well-mixed GHGs from new motor vehicles and new motor vehicle engines contribute to the GHG pollution which threatens public health and welfare.

Although these findings did not themselves impose any requirements on industry or other entities, this action was a prerequisite to finalizing the U.S. EPA's Proposed Greenhouse Gas Emission Standards for Light-Duty Vehicles, which was published on September 15, 2009. On May 7, 2010, the final Light-Duty Vehicle Greenhouse Gas Emissions Standards and Corporate Average Fuel Economy Standards were published in the Federal Register.

U.S. EPA and the National Highway Traffic Safety Administration (NHTSA) are taking coordinated steps to enable the production of a new generation of clean vehicles with reduced GHG emissions and improved fuel efficiency from on-road vehicles and engines. These next steps include developing the first-ever GHG regulations for heavy-duty engines and vehicles, as well as additional light-duty vehicle GHG regulations. These steps were outlined by President Obama in a Presidential Memorandum on May 21, 2010.

The final combined U.S. EPA and NHTSA standards that make up the first phase of this national program apply to passenger cars, light-duty trucks, and medium-duty passenger vehicles, covering model years 2012 through 2016. The standards require these vehicles to meet an estimated combined average emissions level of 250 grams of CO_2 per mile (the equivalent to 35.5 miles per gallon if the automobile industry were to meet this CO_2 level solely through fuel economy improvements). Together, these standards will cut GHG emissions by an estimated 960 million metric tons and 1.8 billion barrels of oil over the lifetime of the vehicles sold under the program (model years 2012-2016). On August 28, 2012, U.S. EPA and NHTSA issued their joint rule to extend this national program of coordinated GHG and fuel economy standards to model years 2017 through 2025 passenger vehicles.

3.7.1.2 State

Assembly Bill 1493

Assembly Bill (AB) 1493 (Pavley) of 2002 (Health and Safety Code Sections 42823 and 43018.5) requires the California Air Resources Board (CARB) to develop and adopt the nation's first GHG emission standards for automobiles. These standards are also known as Pavley I. The California Legislature declared in AB 1493 that global warming is a matter of increasing concern for public health and the environment. It cites several risks that California faces from climate change, including a reduction in the State's water supply, an increase in air pollution caused by higher temperatures, harm to agriculture, an increase in wildfires, damage to the coastline, and economic losses caused by higher food, water, energy, and insurance prices. The bill also states that technological solutions to reduce GHG emissions would stimulate California's economy and provide jobs. In 2004, the State of California submitted a request for a waiver from federal clean air regulations, as the State is authorized to do under the FCAA, to allow the State to require reduced tailpipe emissions of CO_2. In late 2007, the U.S. EPA denied California's waiver request and declined to promulgate adequate federal regulations limiting GHG emissions. In early 2008, the State brought suit against the U.S. EPA related to this denial.

In January 2009, President Obama instructed the U.S. EPA to reconsider the Bush Administration's denial of California's and 13 other states' requests to implement global warming pollution standards for cars

and trucks. In June 2009, the U.S. EPA granted California's waiver request, enabling the State to enforce its GHG emissions standards for new motor vehicles beginning with the current model year.

In 2009, President Obama also announced a national policy aimed at both increasing fuel economy and reducing GHG pollution for all new cars and trucks sold in the United States. The new standards would cover model years 2012 to 2016 and would raise passenger vehicle fuel economy to a fleet average of 35.5 miles per gallon by 2016. California has committed to allowing automakers who show compliance with the national program to also be deemed in compliance with State requirements. California is committed to further strengthening these standards beginning in 2017 to obtain a 45 percent GHG reduction from the 2020 model year vehicles in comparison to the 2009 model year.

Executive Order No. S-3-05

Executive Order S-3-05 (State of California) proclaims that California is vulnerable to the impacts of climate change. It declares that increased temperatures could reduce the Sierra's snowpack, further exacerbate California's air quality problems, and potentially cause a rise in sea levels. To combat those concerns, the Executive Order established total GHG emission targets. Specifically, emissions are to be reduced to the 2000 level by 2010, to the 1990 level by 2020, and to 80 percent below the 1990 level by 2050.

The Executive Order directed the secretary of the California Environmental Protection Agency (CalEPA) to coordinate a multi-agency effort to reduce GHG emissions to the target levels. The secretary will also submit biannual reports to the governor and State legislature describing (1) progress made toward reaching the emission targets, (2) impacts of global warming on California's resources, and (3) mitigation and adaptation plans to combat these impacts. To comply with the Executive Order, the secretary of CalEPA created a Climate Action Team made up of members from various state agencies and commissions. The Climate Action Team released its first report in March 2006 and continues to release periodic reports on progress. The report proposed to achieve the targets by building on voluntary actions of California businesses, local government and community actions, as well as through State incentive and regulatory programs.

Assembly Bill 32 – California Global Warming Solutions Act of 2006

AB 32 (Health and Safety Code Sections 38500, 38501, 28510, 38530, 38550, 38560, 38561–38565, 38570, 38571, 38574, 38580, 38590, 38592–38599) requires that Statewide GHG emissions be reduced to 1990 levels by the year 2020. The gases that are regulated by AB 32 include CO_2, CH_4, N_2O, HFCs, PFCs, nitrogen trifluoride (NF_3), and SF_6. The reduction to 1990 levels will be accomplished through an enforceable statewide cap on GHG emissions that were phased in starting in 2012. To effectively implement the cap, AB 32 directs CARB to develop and implement regulations to reduce Statewide GHG emissions from stationary sources. AB 32 specifies that regulations adopted in response to AB 1493 should be used to address GHG emissions from vehicles. However, AB 32 also includes language stating that if the AB 1493 regulations cannot be implemented, then CARB should develop new regulations to control vehicle GHG emissions under the authorization of AB 32.

AB 32 requires that CARB adopt a quantified cap on GHG emissions representing 1990 emissions levels and disclose how it arrives at the cap, institute a schedule to meet the emissions cap, and develop tracking, reporting, and enforcement mechanisms to ensure that the State achieves reductions in GHG

emissions necessary to meet the cap. AB 32 also includes guidance to institute emissions reductions in an economically efficient manner and conditions to ensure that businesses and consumers are not unfairly affected by the reductions.

Climate Change Scoping Plan

In October 2008, CARB published its Climate Change Proposed Scoping Plan, which is the State's plan to achieve GHG reductions in California required by AB 32. This initial Scoping Plan contained the main strategies to be implemented in order to achieve the target emission levels identified in AB 32. The Scoping Plan included CARB-recommended GHG reductions for each emissions sector of the State's GHG inventory. The largest proposed GHG reduction recommendations were associated with improving emissions standards for light-duty vehicles, implementing the Low Carbon Fuel Standard program, incorporating energy efficiency measures in buildings and appliances and the widespread development of combined heat and power systems, and developing a renewable portfolio standard for electricity production.

The Scoping Plan states that land use planning and urban growth decisions will play important roles in the State's GHG reductions because local governments have primary authority to plan, zone, approve, and permit how land is developed to accommodate population growth and the changing needs of their jurisdictions. CARB further acknowledges that decisions on how land is used will have large impacts on the GHG emissions that will result from the transportation, housing, industry, forestry, water, agriculture, electricity, and natural gas emissions sectors. With regard to land use planning, the Scoping Plan expects approximately 5.0 million metric tons of carbon dioxide equivalents ($MMTCO_2e$) will be achieved associated with implementation of Senate Bill 375, which is discussed further below.

The initial Scoping Plan was first approved by CARB on December 11, 2008, and is updated every five years. The first update of the Scoping Plan was approved by the CARB on May 22, 2014, which looked past 2020 to set mid-term goals (2030-2035) on the road to reaching the 2050 goals. The most recent update released by CARB is the 2017 Climate Change Scoping Plan, which was released in November 2017. The 2017 Climate Change Scoping Plan incorporates strategies for achieving the 2030 GHG-reduction target established in Senate Bill (SB) 32 and Executive Order B-30-15.

California Renewables Portfolio Standards (Senate Bill 1078 and Governor's Order S-14-08)

SB 1078 (Public Utilities Code Sections 387, 390.1, 399.25 and Article 16) addresses electricity supply and requires that retail sellers of electricity, including investor-owned utilities and community choice aggregators, provide a minimum 20 percent of their supply from renewable sources by 2017. This Senate Bill will affect Statewide GHG emissions associated with electricity generation. In 2008, Governor Schwarzenegger signed Executive Order S-14-08, which set the Renewables Portfolio Standard target to 33 percent by 2020. It directed state government agencies and retail sellers of electricity to take all appropriate actions to implement this target. Executive Order S-14-08 was later superseded by Executive Order S-21-09 on September 15, 2009. Executive Order S-21-09 directed the CARB to adopt regulations requiring 33 percent of electricity sold in the State come from renewable energy by 2020. Statute SB X1-2 superseded this Executive Order in 2011, which obligates all California electricity providers, including investor-owned utilities and publicly owned utilities, to obtain at least 33 percent of their energy from renewable electrical generation facilities by 2020.

CARB is required by current law, AB 32 of 2006, to regulate sources of GHGs to meet a State goal of reducing GHG emissions to 1990 levels by 2020 and an 80 percent reduction of 1990 levels by 2050. The California Energy Commission and California Public Utilities Commission serve in advisory roles to help CARB develop the regulations to administer the 33 percent by 2020 requirement. CARB is also authorized to increase the target and accelerate and expand the time frame.

SB 350 (Chapter 547, Statues of 2015) further increased the Renewables Portfolio Standard to 50 percent by 2030. The legislation also included interim targets of 40 percent by 2024 and 45 percent by 2027. SB 350 was signed into law on October 7, 2015.

Mandatory Reporting of GHG Emissions

The California Global Warming Solutions Act (AB 32, 2006) requires reporting of GHGs by major sources to the CARB. Major sources required to report GHG emissions include industrial facilities, suppliers of transportation fuels, natural gas, natural gas liquids, liquefied petroleum gas, and carbon dioxide, operators of petroleum and natural gas systems, and electricity retail providers and marketers.

Cap-and-Trade Regulation

The cap-and-trade regulation is a key element in California's climate plan. It sets a statewide limit on sources responsible for 85 percent of California's GHG emissions and establishes a price signal needed to drive long-term investment in cleaner fuels and more efficient use of energy. The cap-and-trade rules came into effect on January 1, 2013, and apply to large electric power plants and large industrial plants. In 2015, fuel distributors, including distributors of heating and transportation fuels, also became subject to cap-and-trade. At that stage, the program was predicted to encompass around 360 businesses throughout California and nearly 85 percent of the State's total GHG emissions.

Under the cap-and-trade regulation, companies must hold enough emission allowances to cover their emissions and are free to buy and sell allowances on the open market. California held its first auction of GHG allowances on November 14, 2012, which was followed by seven jurisdiction-specific quarterly GHG allowance auctions until August 18, 2014. The first joint auction with Québec's Ministry of Sustainable Development, Environment and the Fight against Climate Change was held on November 25, 2014. California's GHG cap-and-trade system is projected to reduce GHG emissions to 1990 levels by the year 2020 and would achieve an approximate 80 percent reduction from 1990 levels by 2050.

Senate Bill 32

SB 32 was signed by Governor Brown on September 8, 2016. SB 32 effectively extends California's GHG emission-reduction goals from year 2020 to year 2030. This new emission-reduction target of 40 percent below 1990 levels by 2030 is intended to promote further GHG-reductions in support of the State's ultimate goal of reducing GHG emissions by 80 percent below 1990 levels by 2050. SB 32 also directs the CARB to update the Climate Change Scoping Plan to address this interim 2030 emission-reduction target.

Senate Bill 375

SB 375 requires Metropolitan Planning Organizations (MPOs) to adopt a sustainable communities strategy (SCS) or alternative planning strategy (APS) that will address land use allocation in that MPOs regional transportation plan. CARB, in consultation with MPOs, establishes regional reduction targets for GHGs emitted by passenger cars and light trucks for the years 2020 and 2035. These reduction targets

are scheduled to be updated every eight years but can be updated every four years if advancements in emissions technologies affect the reduction strategies to achieve the targets. CARB is also charged with reviewing each MPO's SCS or APS for consistency with its assigned targets. If MPOs do not meet the GHG reduction targets, funding for transportation projects may be withheld.

California Building Code

The California Building Code (CBC) contains standards that regulate the method of use, properties, performance, or types of materials used in the construction, alteration, improvement, repair, or rehabilitation of a building or other improvement to real property. The CBC is adopted every three years by the Building Standards Commission (BSC). In the interim, the BSC also adopts annual updates to make necessary mid-term corrections. The CBC standards apply statewide; however, a local jurisdiction may amend a CBC standard if it makes a finding that the amendment is reasonably necessary due to local climatic, geological, or topographical conditions.

Green Building Standards

In essence, green buildings standards are indistinguishable from any other building standards. Both standards are contained in the CBC and regulate the construction of new buildings and improvements. The only practical distinction between the two is that whereas the focus of traditional building standards has been protecting public health and safety, the focus of green building standards is to improve environmental performance.

AB 32, which mandates the reduction in GHG emissions in California to 1990 levels by 2020, increased the urgency around the adoption of green building standards. In its scoping plan for the implementation of AB 32, CARB identified energy use as the second largest contributor to California's GHG emissions, constituting roughly 25 percent of all such emissions. In recommending a green building strategy as one element of the scoping plan, CARB estimated that green building standards would reduce GHG emissions by approximately 26 $MMTCO_2e$ by 2020. The green buildings standards were most recently updated in 2016.

Senate Bill 97

SB 97 was enacted in 2007. SB 97 required OPR to develop, and the Natural Resources Agency to adopt, amendments to the CEQA Guidelines addressing the analysis and mitigation of GHG emissions. Those CEQA Guidelines amendments clarified several points, including the following:

- Lead agencies must analyze the GHG emissions of proposed projects and must reach a conclusion regarding the significance of those emissions.
- When a project's GHG emissions may be significant, lead agencies must consider a range of potential mitigation measures to reduce those emissions.
- Lead agencies must analyze potentially significant impacts associated with placing projects in hazardous locations, including locations potentially affected by climate change.
- Lead agencies may significantly streamline the analysis of GHGs on a project level by using a programmatic GHG emissions reduction plan meeting certain criteria.

- CEQA mandates analysis of a proposed project's potential energy use (including transportation-related energy), sources of energy supply, and ways to reduce energy demand, including through the use of efficient transportation alternatives.

As part of the administrative rulemaking process, the California Natural Resources Agency developed a Final Statement of Reasons explaining the legal and factual bases, intent, and purpose of the CEQA Guidelines amendments. The amendments to the CEQA Guidelines implementing SB 97 became effective on March 18, 2010.

Short-Lived Climate Pollutant Reduction Strategy

In March 2017, the CARB adopted the Short-Lived Climate Pollutant Reduction Strategy (SLCP Strategy), establishing a path to decrease GHG emissions and displace fossil-based natural gas use. Strategies include avoiding landfill methane emissions by reducing the disposal of organics through edible food recovery, composting, in-vessel digestion, and other processes; and recovering methane from wastewater treatment facilities, and manure methane at dairies, and using the methane as a renewable source of natural gas to fuel vehicles or generate electricity. The SLCP Strategy also identifies steps to reduce natural gas leaks from oil and gas wells, pipelines, valves, and pumps to improve safety, avoid energy losses, and reduce methane emissions associated with natural gas use. The SLCP Strategy identifies measures that can reduce HFC emissions at national and international levels. Lastly, the SLCP identifies State-level actions, including an incentive program to encourage the use of low-Global Warming Potential (GWP) refrigerants and limitations on the use of high-GWP refrigerants in new refrigeration and air-conditioning equipment (California Air Resources Board, 2017a).

3.7.1.3 Regional

Southern California Association of Governments

The Southern California Association of Governments (SCAG) is the regional planning agency for Los Angeles, Orange, Ventura, Riverside, San Bernardino, and Imperial Counties and serves as a forum for regional issues relating to transportation, the economy, community development, and the environment. Under federal law, SCAG is designated as a MPO and under State law as a Regional Transportation Planning Agency and a Council of Governments.

On September 3, 2020, SCAG adopted Connect SoCal: The 2020-2045 RTP/SCS (Southern California Association of Governments, 2020). The RTP is a long-range transportation plan that provides a vision for regional transportation investments over a period of 20 years or more. The SCS is an element of the RTP that demonstrates the integration of land use, transportation strategies, and transportation investments within the Plan. This requirement was put in place by the passage of SB 375, with the goal of ensuring that the SCAG region can meet its regional GHG reduction targets set by the CARB. In comparison to year 2005 levels, the SCS would result in an eight percent reduction in GHG emissions per capita by 2020, an 18 percent reduction by 2035, and a 21 percent reduction by 2040. This meets or exceeds the State's mandated reductions, which are eight percent by 2020 and 13 percent by 2035. SCAG is also responsible under the FCAA for determining federal air quality conformity of projects, plans, and programs within the South Coast Air Quality Management District (SCAQMD).

The 2020-2045 RTP/SCS would also help to reduce vehicle delay and vehicle miles traveled (VMT) within the region. On a per capita basis, vehicle delay would be reduced by roughly 26 percent, and heavy-duty

truck delay on highways 24 percent. VMT per capita would be reduced by five percent and vehicle hours traveled (VHT) would be reduced by approximately nine percent per capita (Southern California Association of Governments, 2020).

South Coast Air Quality Management District

The SCAQMD is the agency responsible for regulating air pollution in the South Coast Air Basin, which includes the Greater Los Angeles Region. The SCAQMD adopted a "Policy on Global Warming and Stratospheric Ozone Depletion" on April 6, 1990. The policy commits the SCAQMD to consider global impacts in rulemaking and in drafting revisions to the Air Quality Management Plan. More recently, in 2008, the Climate Change Policy was approved by the SCAQMD's Governing Board. The Climate Change Policy directs the agency's efforts on the reduction of GHG emissions and also established the SCAQMD's role in emerging GHG-reduction programs. Complementary to the Climate Change Policy, the Governing Board approved a Green Policy in 2009. The Green Policy is intended to help reduce the agency's carbon footprint from building operations, purchases, and employee work-related activities. The Green Policy also established a "Green Team" to evaluate potential practices, purchases, and other actions that can help to further reduce GHG emissions.

3.7.1.4 Local

City of Los Angeles

Green LA and *ClimateLA*

In May 2007, the City published *Green LA: An Action Plan to Lead the Nation in Fighting Global Warming*, which included more than fifty specific climate mitigation actions designed to reduce the City's contributions to climate change, and to prepare a response to the changes that have already begun to occur (City of Los Angeles, 2007). City departments worked together to respond to the recommendations set forth in the *Green LA* action plan, resulting in *ClimateLA*. *ClimateLA* is an implementation program that provides detailed information about each action item discussed in the *Green LA* framework. While the *ClimateLA* program focuses on mitigation, many of the adaptation measures addressed in *ClimateLA* are considered in this report, such as managing urban heat. Some of the adaptive action items recommended include making Los Angeles a worldwide leader in green buildings, decreasing per-capita water use, and implementing a city-wide climate change education program. Information about proposed and/or ongoing programs, opportunities for achieving the City's goals, specific challenges, and a list of milestones is provided for each action item. In the near future, the City aims to prioritize adaptation to climate change and include adaptation goals in departmental action plans.

City of Los Angeles Green Building Code

To achieve goals outlined in *Green LA*, in April 2008, the City adopted the Green Building Program Ordinance to address the impact on climate change from new development, which was amended for consistency with the CalGreen Building Code in 2011. As of January 1, 2011, all new buildings (residential and non-residential) would be subject to the Los Angeles Green Building Code (LAGBC), which is based on the 2013 CalGreen Standards to increase energy efficiency and reduce waste (City of LA Department of Building and Safety, 2017).

Sustainable City pLAn

In April 2015, Mayor Eric Garcetti introduced the Sustainable City pLAn. An updated annual report, titled L.A.'s Green New Deal, was released in 2019 (Office of the Los Angeles Mayor, 2019). The plan consists of 47 targets with milestones and initiatives for a cleaner environment and a stronger economy. These target categories include renewable energy, local water, clean and healthy buildings, housing and development, mobility and public transit, zero emission vehicles, industrial emissions and air quality monitoring, waste and resource recovery, food systems, urban ecosystems and resilience, environmental justice, prosperity, and green jobs, and lead by example.

3.7.2 Environmental Setting

To fully understand global climate change, it is important to recognize the naturally occurring "greenhouse effect" and to define the GHGs that contribute to this phenomenon. Various gases in the earth's atmosphere, classified as atmospheric GHGs, play a critical role in determining the earth's surface temperature. Solar radiation enters the earth's atmosphere from space and a portion of the radiation is absorbed by the earth's surface. The earth emits this radiation back toward space, but the properties of the radiation change from high-frequency solar radiation to lower-frequency infrared radiation. GHGs, which are transparent to solar radiation, are effective in absorbing infrared radiation. As a result, this radiation that otherwise would have escaped back into space is now retained, resulting in a warming of the atmosphere. This phenomenon is known as the greenhouse effect. Among the prominent GHGs contributing to the greenhouse effect are carbon dioxide, methane, nitrous oxide, hydrofluorocarbons, perfluorocarbons, and sulfur hexafluoride.

GWP was developed to compare global warming impacts associated with various gases. GWP is the measure of the total energy that one ton of gas absorbs over a particular period of time (usually 100 years), compared to one ton of CO_2 (U.S. Environmental Protection Agency, 2017). Primary GHGs attributed to global climate change, are discussed, as follows:

- **Carbon Dioxide:** CO_2 is a colorless, odorless gas. CO_2 is emitted in a number of ways, both naturally and through human activities. The largest source of CO_2 emissions globally is the combustion of fossil fuels such as coal, oil, and gas in power plants, automobiles, industrial facilities, and other sources. A number of specialized industrial production processes and product uses such as mineral production, metal production, and the use of petroleum-based products can also lead to CO_2 emissions. The atmospheric lifetime of CO_2 is variable because it is so readily exchanged in the atmosphere (U.S. Environmental Protection Agency, 2019).
- **Methane:** CH_4 is a colorless, odorless gas that is not flammable under most circumstances. CH_4 is the major component of natural gas, about 87 percent by volume. It is also formed and released into the atmosphere by biological processes occurring in anaerobic environments. Methane is emitted from a variety of both human-related and natural sources. Human-related sources include fossil fuel production, animal husbandry (enteric fermentation in livestock and manure management), rice cultivation, biomass burning, and waste management. These activities release significant quantities of methane into the atmosphere. Natural sources of methane include wetlands, gas hydrates, permafrost, termites, oceans, freshwater bodies, non-wetland soils, and other sources

such as wildfires. Methane's atmospheric lifetime is about 12 years (U.S. Environmental Protection Agency, 2019).

- **Nitrous Oxide:** N_2O is a clear, colorless gas with a slightly sweet odor. N_2O is produced by both natural and human-related sources. Primary human-related sources of N_2O are agricultural soil management, animal manure management, sewage treatment, mobile and stationary combustion of fossil fuels, adipic acid production, and nitric acid production. N_2O is also produced naturally from a wide variety of biological sources in soil and water, particularly microbial action in wet tropical forests. The atmospheric lifetime of N_2O is approximately 114 years (U.S. Environmental Protection Agency, 2019).
- **Hydrofluorocarbons:** HFCs are man-made chemicals, many of which have been developed as alternatives to ozone-depleting substances for industrial, commercial, and consumer products. The only significant emissions of HFCs before 1990 were of the chemical HFC-23, which is generated as a byproduct of the production of HCFC-22 (or Freon 22, used in air conditioning applications). The atmospheric lifetime for HFCs varies from just over a year for HFC-152a to 270 years for HFC-23. Most of the commercially used HFCs have atmospheric lifetimes of less than 15 years (e.g., HFC-134a, which is used in automobile air conditioning and refrigeration, has an atmospheric life of 14 years) (U.S. Environmental Protection Agency, 2019).
- **Perfluorocarbons:** PFCs are colorless, highly dense, chemically inert, and nontoxic. There are seven PFC gases: perfluoro methane (CF_4), perfluoro ethane (C_2F_6), perfluoro propane (C_3F_8), perfluoro butane (C_4F_{10}), perfluorocyclobutane (C_4F_8), perfluoro pentane (C_5F_{12}), and perfluoro hexane (C_6F_{14}). Natural geological emissions have been responsible for the PFCs that have accumulated in the atmosphere in the past; however, the largest current source is aluminum production, which releases CF_4 and C_2F_6 as byproducts. The estimated atmospheric lifetimes for PFCs range from 2,500 to 50,000 years (U.S. Environmental Protection Agency, 2019).
- **Nitrogen Trifluoride:** NF_3 is an inorganic, colorless, odorless, toxic, nonflammable gas used as an etchant in microelectronics. Nitrogen trifluoride is predominantly employed in the cleaning of the plasma-enhanced chemical vapor deposition chambers in the production of liquid crystal displays and silicon-based thin film solar cells. It has a GWP of 16,100 carbon dioxide equivalents (CO_2e). While NF_3 may have a lower GWP than other chemical etchants, it is still a potent GHG. In 2009, NF_3 was listed by California as a high GWP GHG to be listed and regulated under AB 32 (Section 38505 Health and Safety Code).
- **Sulfur Hexafluoride:** SF_6 is an inorganic compound that is colorless, odorless, nontoxic, and generally nonflammable. SF_6 is primarily used as an electrical insulator in high voltage equipment. The electric power industry uses roughly 80 percent of all SF_6 produced worldwide. Leaks of SF_6 occur from aging equipment and during equipment maintenance and servicing. SF_6 has an atmospheric life of 3,200 years (U.S. Environmental Protection Agency, 2019).
- **Black Carbon:** Black carbon is the strongest light-absorbing component of particulate matter (PM) emitted from burning fuels such as coal, diesel, and biomass. Black carbon contributes to climate change both directly by absorbing sunlight and indirectly by depositing on snow and by interacting with clouds and affecting cloud formation. Black carbon is considered a short-lived species, which can vary spatially and, consequently, it is very difficult to quantify associated global-warming

potentials. The main sources of black carbon in California are wildfires, off-road vehicles (locomotives, marine vessels, tractors, excavators, dozers, etc.), on-road vehicles (cars, trucks, and buses), fireplaces, agricultural waste burning, and prescribed burning (planned burns of forest or wildlands) (Climate & Clean Air Coalition, n.d.; U.S. Environmental Protection Agency, 2019).

Each GHG differs in its ability to absorb heat in the atmosphere based on the lifetime, or persistence, of the gas molecule in the atmosphere. Often, estimates of GHG emissions are presented in CO_2e, which weight each gas by its GWP. Expressing GHG emissions in CO_2e takes the contribution of all GHG emissions to the greenhouse effect and converts them to a single unit equivalent to the effect that would occur if only CO_2 were being emitted. **Table 3.7-1** provides a summary of the GWP for GHG emissions of typical concern with regard to community development projects, based on a 100-year time horizon. As indicated, CH_4 traps over 25 times more heat per molecule than CO_2, and N_2O absorbs roughly 298 times more heat per molecule than CO_2. Additional GHG with high GWP include NF_3, SF_6, PFCs, and black carbon.

Table 3.7-1: Global Warming Potential for Greenhouse Gases

Greenhouse Gas	Global Warming Potential (100-Year)
Carbon Dioxide (CO_2)	1
Methane (CH_4)	28-36
Nitrous Oxide (N_2O)	265-298

Source: (U.S. Environmental Protection Agency, 2017)

3.7.2.1 Sources of GHG Emissions

On a global scale, GHG emissions are predominantly associated with activities related to energy production; changes in land use, such as deforestation and land clearing; industrial sources; agricultural activities; transportation; waste and wastewater generation; and commercial and residential land uses. Worldwide, energy production including the burning of coal, natural gas, and oil for electricity and heat is the largest single source of global GHG emissions (U.S. Environmental Protection Agency, 2019).

In 2016, GHG emissions within California totaled 429 million metric tons (MMT) of CO_2e. GHG emissions, by sector, are summarized in **Figure 3.7-1,** California GHG Emissions Inventory by Scoping Plan Sector. Within California, the transportation sector is the largest contributor, accounting for approximately 39 percent of the total statewide GHG emissions. Emissions associated with industrial uses are the second largest contributor, totaling roughly 21 percent. Electricity generation totaled roughly 16 percent (California Air Resources Board, 2018b).

Short-Lived Climate Pollutants

Short-lived climate pollutants (SLCPs), such as black carbon, fluorinated gases, and methane also have a dramatic effect on climate change. Though short lived, these pollutants create a warming influence on the climate that is many times more potent than that of carbon dioxide.

As part of the CARB's efforts to address SLCPs, the CARB has developed a statewide emission inventory for black carbon. The black carbon inventory will help support implementation of the SLCP Strategy, but it is not part of the State's GHG Inventory that tracks progress towards the State's climate targets. The

most recent inventory for year 2013 conditions is depicted in **Figure 3.7-2**, California Black Carbon Emissions Inventory (Year 2013). Off-road mobile sources account for a majority of black carbon emissions, totaling roughly 36 percent of the inventory. Other major anthropogenic sources of black carbon include on-road transportation, residential wood burning, fuel combustion, and industrial processes (Climate & Clean Air Coalition, n.d.).

Figure 3.7-1: California GHG Emissions Inventory by Scoping Plan Sector

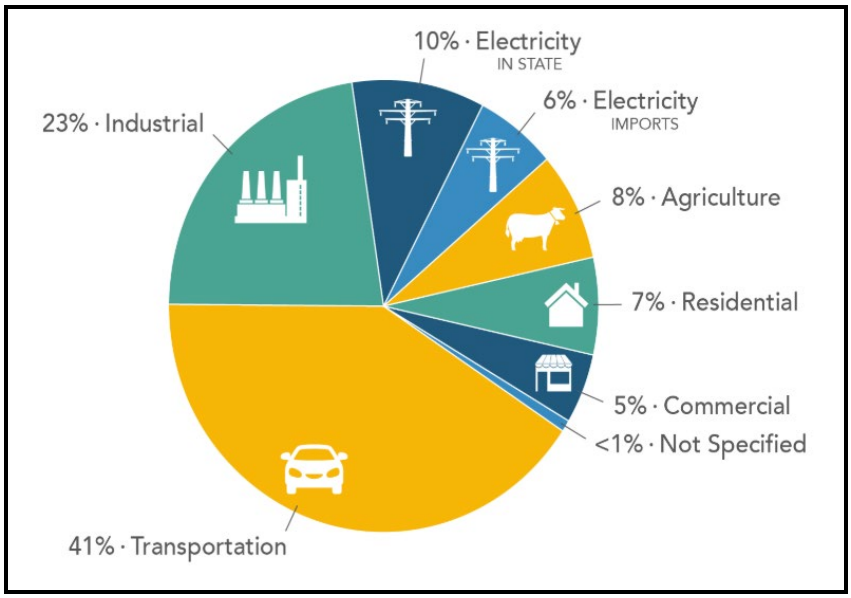

Source: (California Air Resources Board, 2018a)

Figure 3.7-2: California Black Carbon Emissions Inventory (Year 2013)

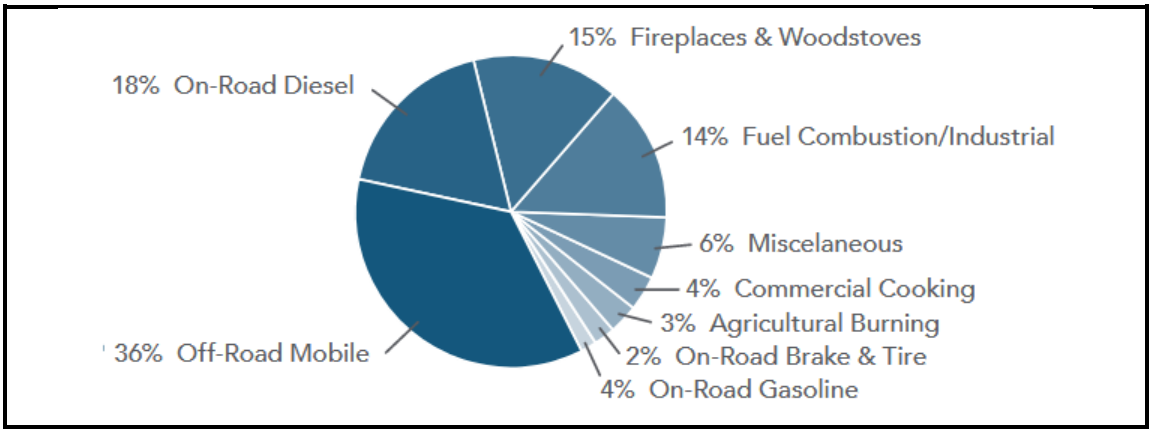

Source: (California Air Resources Board, 2017a)

3.7.2.2 Effects of Global Climate Change

There are uncertainties as to exactly what the climate changes will be in various local areas of the earth. There are also uncertainties associated with the magnitude and timing of other consequences of a warmer planet: sea level rise, spread of certain diseases out of their usual geographic range, the effect on

agricultural production, water supply, sustainability of ecosystems, increased strength and frequency of storms, extreme heat events, increased air pollution episodes, and the consequence of these effects on the economy.

Within California, climate changes would likely alter the ecological characteristics of many ecosystems throughout the State. Such alterations would likely include increases in surface temperatures and changes in the form, timing, and intensity of precipitation. For instance, historical records are depicting an increasing trend toward earlier snowmelt in the Sierra Nevada. This snow pack is a principal supply of water for the State, providing roughly 50 percent of the State's annual runoff. If this trend continues, some areas of the State may experience an increased danger of floods during the winter months and possible exhaustion of the snowpack during spring and summer months. An earlier snowmelt would also impact the State's energy resources. Currently, approximately 13.53 percent of California's electricity comes from hydropower (California Energy Commission, 2019). An early exhaustion of the Sierra snowpack may force electricity producers to switch to more costly or non-renewable forms of electricity generation during spring and summer months. A changing climate may also impact agricultural crop yields, coastal structures, and biodiversity. Therefore, climate change will likely have detrimental effects on some of California's largest industries, including agriculture, wine, tourism, skiing, recreational and commercial fishing, and forestry (Planning and Conservation League, n.d.).

3.7.3 Environmental Impact Analysis

3.7.3.1 Methodology

Construction

Short-term emissions associated with construction activities largely depend on the type of development proposed, the amount of material to be imported and exported, equipment required, and construction schedules. Construction emissions of GHGs were calculated using the California Emissions Estimator Model (CalEEMod), version 2016.3.2 computer program. Modeling was conducted for the proposed Project based on estimated material to be imported and exported, off-road equipment usage, and construction schedules provided by the Project engineers. Other construction modeling assumptions, including mobile-source emission factors and usage rates, were based on default parameters contained in the model for Los Angeles County. In accordance with SCAQMD recommendations, construction-generated GHG emissions were amortized over an assumed 30-year Project life for Year 2021 and year 2030 conditions. Emissions modeling assumptions and output files are provided in the *Air Quality and Greenhouse Gas Impact Assessment* prepared for the proposed Project (Ambient Air Quality & Noise Consulting, 2019).

Operation

Long-term operational emissions of GHGs were also calculated using the CalEEMod, version 2016.3.2, computer program for Year 2021 and year 2030 conditions. Modeling was conducted based on the estimated building square footage to be constructed and vehicle trip-generation rates identified in the *Traffic Impact Analysis* prepared for the proposed Project (Kimley-Horn and Associates, Inc., 2019) . The quantification of Project-generated GHG emissions takes into account compliance with current building standards, such as the use of low-flow water fixtures and water-efficient irrigation systems. Proposed

Project and site enhancements that would contribute to reductions in mobile-source emissions were also accounted for in the analysis, based on methodologies contained in California Air Pollution Control Officers Association's (CAPCOA) Quantifying Greenhouse Gas Mitigation Measures and the default emission reductions identified in CalEEMod. These measures included reductions associated with providing increased diversity (LUT-3), transit accessibility within 0.5 mile of the Project Site (LUT-5), and improvements to the existing pedestrian network (SDT-1).

GHG emissions associated with the existing industrial uses that were removed were also quantified, based on the trip-generation rates identified in the traffic analysis prepared for this project and default energy usage, water usage, and waste-generation rates identified in CalEEMod. Project-generated GHG emissions were compared to estimated emissions associated with the removed industrial uses for determination of net changes in GHGs. The analysis does not account for potential emissions from onsite area or stationary sources that may have been associated with operation of the existing industrial uses. As a result, net changes in operational GHG emissions are conservatively estimated.

For comparison purposes, Project-generated emissions were also quantified for business-as-usual (BAU) conditions. The BAU scenario does not account for measures that would reduce Project-related energy or water use, per current building code requirements, or site enhancements that would contribute to reductions in mobile-source emissions. The BAU scenario includes GHG-reductions expected to be in force by 2020, including reductions associated with implementation of Pavley I vehicle standards, low-carbon fuel standards, and the State's Renewables Portfolio Standards.

3.7.3.2 Screening Analysis

Several impacts and corresponding thresholds of significance in the following section were eliminated from further analysis in this EIR. Topics were eliminated if the IS for the proposed Project concluded there would be "No Impact," or if impacts were identified to be "Less Than Significant… and will not be discussed further in the EIR." Therefore, only the topics described in the section below were determined to require further analysis in this EIR. A copy of the Initial Study, which contains the eliminated topics, is provided in **Appendix A**.

3.7.3.3 Thresholds of Significance

According to Appendix G of the CEQA Guidelines and the *L.A. CEQA Thresholds Guide*, the proposed Project would have a significant impact on GHG emissions if it would:

VIII(a) Generate greenhouse gas emissions, either directly or indirectly, that may have a significant impact on the environment.

VIII(b) Conflict with any applicable plan, policy or regulation of an agency adopted for the purpose of reducing the emissions of greenhouse gases.

The City of Los Angeles has not formally adopted quantitative significance thresholds for determination of whether or not a project would have a significant impact on the environment or conflict with an applicable GHG-reduction plan, policy, or regulation. However, various other entities have identified recommended GHG-significance thresholds, as discussed below:

State of California

By enacting SB 97, California's lawmakers expressly recognized the need to analyze GHG emissions as a part of the CEQA process. SB 97 required OPR to develop, and the Natural Resources Agency to adopt, amendments to the CEQA Guidelines addressing the analysis and mitigation of GHG emissions. The amendments to the CEQA Guidelines implementing SB 97 became effective on March 18, 2010. These amendments, however, do not establish a threshold of significance for the assessment of GHG impacts. Lead agencies are granted discretion to establish significance thresholds for their respective jurisdictions, including looking to thresholds developed by other public agencies, or suggested by other experts (i.e., CAPCOA and SCAQMD), so long as any threshold chosen is supported by substantial evidence. The California Natural Resources Agency has also clarified that the amendments recognized the cumulative effects of GHG emissions as they relate to climate change and that GHG impacts should be analyzed in the context of CEQA's requirements for the assessment of cumulative impacts.

California Air Pollution Control Officers Association (CAPCOA)

In its January 2008 "CEQA and Climate Change" white paper, CAPCOA identified a number of potential approaches for determining the significance of GHG emissions in CEQA documents. In its white paper, CAPCOA suggests making significance determinations "on a case-by-case basis in the context of the project at the time it comes forward" when no significance thresholds have been formally adopted by a lead agency. The CAPCOA white paper suggested a bright-line threshold of 900 $MTCO_2e$/year. As proposed, projects generating emissions exceeding this threshold would be considered to have a potentially significant impact. This threshold reflects the amount of emissions that ninety percent of development projects surveyed in four cities within California would generate, which included the cities of Los Angeles, Pleasanton, Dublin, and Livermore.

South Coast Air Quality Management District (SCAQMD)

At present time, the SCAQMD has not adopted a quantitative project-level GHG significance threshold for land use development projects (e.g., residential/commercial projects) subject to CEQA review. However, the SCAQMD did form a *GHG Significance Threshold Working Group* for the purpose of evaluating potential GHG significance thresholds. In October 2008, SCAQMD released a draft guidance document regarding interim CEQA GHG significance thresholds. Within this document, the SCAQMD proposed interim CEQA GHG indicators of significance using a tiered approach. Accordingly, under Tier 1, projects that would be considered exempt from CEQA would also be considered to have a less-than-significant GHG impact. Under Tier 2, projects that would be consistent with an adopted GHG-reduction plan would be considered to have a less-than-significant GHG impact. Under Tier 3, all non-industrial land use projects that would emit 3,000 $MTCO_2e$ per year, or less, would be considered to have a less-than-significant GHG impact. Under Tier 4, projects that achieve an identified GHG-percent reduction below BAU conditions would also be considered to have a less-than-significant GHG impact. This recommended Tier 4 standard was subsequently amended in November 2009 and September 2010 to include a recommended service population metric for commercial/residential projects that emit greater than 3,000 $MTCO_2e$ per year. Projects that would not exceed these thresholds would be considered to have a less-than-significant impact on the environment and would not conflict with GHG-reduction planning efforts.

For land use development projects, the SCAQMD has not adopted any of the above-discussed GHG significance thresholds recommended by the *GHG Significance Threshold Working Group*. The *GHG*

Significance Threshold Working Group has been inactive since 2011. However, in December 2008, the SCAQMD Governing Board adopted an interim GHG significance threshold of 10,000 $MTCO_2e$ for stationary source/industrial projects where the SCAQMD is the lead agency. This threshold, however, does not apply to the proposed Project given that the project would not include the installation of permitted stationary sources.

3.7.3.4 Construction Impacts

VIII(a): Generate greenhouse gas emissions, either directly or indirectly, that may have a significant impact on the environment.

Short-term annual GHG emissions for the proposed Project are summarized in **Table 3.7-2**. Based on the modeling conducted, the highest annual GHG emissions associated with construction of the proposed Project would total approximately 1,022 $MTCO_2e$. In total, construction activities over the 30-month period would generate approximately 1,386 $MTCO_2e$. A small amount of GHG emissions from waste would also be generated during construction; however, this amount is speculative. Construction emissions, when amortized over the life of the proposed Project, defined as 30 years, would average approximately 46 $MTCO_2e$ per year. Amortized construction-generated GHG emissions were included in the operational GHG emissions inventory for evaluation of Project-generated GHG emissions in comparison to GHG significance thresholds (see Section 3.7.3.4).

Table 3.7-2: Short-Term Construction-Generated GHG Emissions

Year	Total GHG Emissions ($MTCO_2e$)
Construction Year 1	1,022
Construction Year 2	172
Construction Year 3	192
Total:	1,386
Amortized Emissions:	46

Based on CalEEMod computer modeling. Amortized emissions assume an average project life of 30 years. Refer to the Air Quality and Greenhouse Gas Impact Assessment prepared for the proposed Project for modeling results and assumptions. Source: (Ambient Air Quality & Noise Consulting, 2019)

Construction of the proposed Project includes various measures that would reduce short-term emissions from off-road equipment. Such measures include the use of off-road equipment meeting Tier 4 emission standards, idling limitations, and the use of newer, more efficient on-road haul trucks. Implementation of these measures would significantly reduce emissions of black carbon associated with short-term construction activities. For instance, with the use of Tier 4 off-road equipment, construction-generated emissions of black carbon diesel exhaust would be reduced by upwards of approximately 80 percent, compared to statewide fleet averages. With incorporation of measures to reduce short-term emissions from off-road equipment, impacts would be less than significant.

VIII(b): Conflict with any applicable plan, policy or regulation of an agency adopted for the purpose of reducing the emissions of greenhouse gases.

Applicable plans for the reduction of GHGs include the *2017 Climate Change Scoping Plan*, *2016-2040 RTP/SCS*, the *Green LA* action plan, and the *Sustainable City pLAn*, which are discussed in Section 3.7.1 (California Air Resources Board, 2017b; Southern California Association of Governments, 2016; City of Los Angeles, 2007; Office of the Los Angeles Mayor, 2019). As discussed under **GHG-1** above, construction of the proposed Project includes various BMPs that would reduce short-term emissions from off-road equipment. Therefore, impacts would be less than significant.

3.7.3.5 Operational Impacts

VIII(a): Generate greenhouse gas emissions, either directly or indirectly, that may have a significant impact on the environment.

The proposed Project is an infill development within an existing urbanized area and located within 0.5 mile of existing transit services. The proposed Project would provide increased localized access to recreational uses and improved pedestrian and bicycle connectivity. The proposed Project would incorporate water-saving landscape irrigation features, energy-efficient lighting, and use of low-flow water fixtures per current California building code requirements.

Estimated long-term operational GHG emissions are summarized in **Table 3.7-3**. Based on the modeling conducted, operational GHG emissions would total approximately 497 MTCO2e/year during the initial year of operation (Year 2021) and 466 MTCO2e/year in year 2030. During the initial year of proposed Project operations, a majority of the GHG emissions emitted, roughly 73 percent, would be associated with motor vehicle use. Electricity and water use would constitute approximately 14 and 10 percent, respectively. The remaining approximately three percent of GHG emissions would be associated with natural gas use and waste generation (see **Figure 3.7-3**, Annual Operational GHG Emissions Source Contribution [Year 2021]). By year 2030, the electricity and water use would constitute roughly 11 and 8 percent of the proposed Project's GHG emissions inventory and motor vehicle use would constitute roughly 78 percent of total GHG emissions (see **Figure 3.7-4**, Annual Operational GHG Emissions Source Contribution [Year 2030]).

In comparison to BAU conditions (without GHG-reduction measures), the proposed Project would result in GHG reductions of approximately 8.6 percent. A majority of the GHG reductions would be associated with anticipated reductions in onsite electricity consumption and projected reductions in vehicle emission standards.

Development of the proposed Project would be required to comply with current 2016 building standards. For non-residential projects, these newer building standards are approximately 5 percent more efficient than the 2013 building standards and roughly 35 percent more efficient than the 2010 standards. In comparison to BAU conditions, mobile-source emissions would be reduced by approximately 8 percent.

In comparison to the emissions generated by the proposed Project, the industrial land uses that were removed would have generated substantially higher GHG emissions totaling approximately 2,411 $MTCO_2e$ in Year 2021 and approximately 1,945 $MTCO_2e$ in year 2030. Taking into account these removed GHG emissions and with the inclusion of amortized construction-generated GHG emissions, the proposed Project would result in overall net reductions of approximately -1,868 $MTCO_2e$ in Year 2021 and -1,432

$MTCO_2e$ in 2030. The proposed Project would not generate GHG emissions that would result in a net increase in GHG emissions; therefore, impacts would be less than significant.

Table 3.7-3: Summary of Annual Operational GHG Emissions

Land Use/Event (Capacity)	Emissions ($MTCO_2e$)[1]	
	Year 2021	Year 2030
Special Events (1,000)[2]	44	44
Special Events (2,000)[2]	96	96
Special Events (3,250)[2]	7	7
Special Events (5,000) [2]	6	6
Soccer Fields	156	151
Park Uses & Buildings	188	163
Total:	497	466
Business-As-Usual (BAU)[4]:	544	510
Reduction Compared to BAU:	-47 (-8.6%)	-44 (-9.4%)
Total with Amortized Construction Emissions[3]:	543	512
Less Industrial Uses Removed[5]:	-2,411	-1,945
Net Change Compared to Industrial Uses Removed:	-1,868 (-78%)	-1,432 (-74%)

1. Totals may not sum due to rounding. Emissions were quantified using the CalEEMod computer program based on trip-generation rates derived from the Traffic Impact Analysis (Kimley-Horn and Associates, Inc., 2019) prepared for the proposed Project. Refer to the Air Quality and Greenhouse Gas Impact Assessment prepared for the proposed Project (Ambient Air Quality & Noise Consulting, 2019) for emissions modeling assumptions and results. Project emissions include compliance with current building standards, including use of low-flow water fixtures, use of water-efficient irrigation systems, and improved neighborhood connectivity.

2. Assumes 24 days/year for events with a capacity of 1,000 attendees, 26 days/year for events with a capacity of 2,000 attendees, 2 days/year for events with a capacity of 3,250 attendees, and 1 day/year for events with a capacity of 5,000 attendees.

3. Construction-generated emissions were amortized over an estimated 30-year project life.

4. Business-as-usual excludes compliance with current building standards, including use of low-flow water fixtures, use of water-efficient irrigation systems, and improved neighborhood connectivity.

5. Existing industrial uses assumes 223,900 square feet of industrial uses. Vehicle trip-generation rates were derived from the Traffic Impact Analysis prepared for the proposed Project. Excludes stationary-source and off-road equipment emissions.

Figure 3.7-3: Annual Operational GHG Emissions Source Contribution (Year 2021)

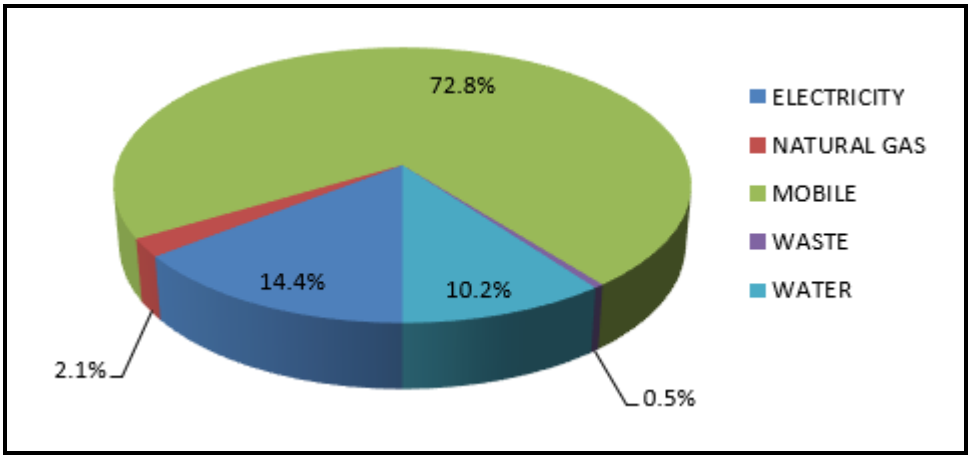

Source: Ambient Air Quality & Noise Consulting, 2019

Figure 3.7-4: Annual Operational GHG Emissions Source Contribution (Year 2030)

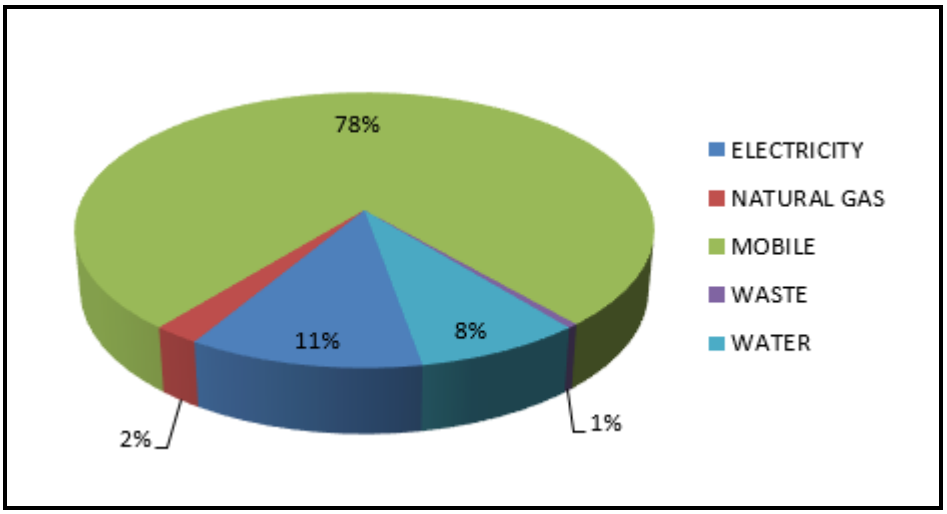

Source: Ambient Air Quality & Noise Consulting, 2019

VIII(b): Conflict with any applicable plan, policy or regulation of an agency adopted for the purpose of reducing the emissions of greenhouse gases.

Applicable plans for the reduction of GHGs include the *2017 Climate Change Scoping Plan*, *2016-2040 RTP/SCS*, the *Green LA* action plan, and the *Sustainable City pLAn*, which are discussed in Section 3.7.1 (California Air Resources Board, 2017b; Southern California Association of Governments, 2016; City of Los Angeles, 2007; Office of the Los Angeles Mayor, 2019). The proposed Project is an infill development project that would provide increased connectivity between existing land uses, including increased pedestrian and biking infrastructure that would improve active transportation options and transit access within the area. Improvements in active transportation options within the area and increased access to local recreational uses would help to reduce overall GHG emissions associated with motor vehicle use. It is estimated that these improvements would reduce mobile-source GHG emissions by a minimum of approximately 8 percent, when compared to conditions without active transportation options.

The proposed Project would also be designed to reduce emissions associated with energy use, water use, and waste generation per current building code requirements. Such measures would include the use of low-flow water fixtures, water-efficient irrigation systems, and high-efficiency lighting, which would reduce related GHG emissions by approximately 15 percent, compared to BAU conditions.

Furthermore, the proposed Project would result in an overall net reduction of long-term operational GHG emissions in comparison to the existing industrial uses that were removed. In comparison to the existing industrial uses that were removed, the proposed Project would result in an overall net GHG reduction of roughly 78 percent in Year 2021 and 74 percent in year 2030 (see **Table 3.7-3**). The proposed Project would also help to reduce urban heat island effect (i.e., built up areas that have higher temperatures compared to nearby rural areas).

Proposed Project features, including improvements to active transportation options; design features that reduce energy use, water use, and waste generation; and the conversion of industrial uses to open space uses, would contribute to reductions in GHG emissions. Therefore, the proposed Project would be consistent with and would not conflict with applicable GHG-reduction plans.

3.7.4 Best Management Practices

BMP-GHG-1: Off-Road Equipment Construction Requirements

Idling shall be limited for vehicles and off-road equipment. Off-road equipment shall meet Tier 4 emission standards and newer. Efficient on-road haul trucks shall be used, where practicable.

3.7.5 Mitigation Measures

Impacts related to GHG emissions would be less than significant; therefore, mitigation measures are not required.

3.7.6 Significant Unavoidable Adverse Impacts

There are no significant unavoidable adverse impacts on GHG emissions resulting from implementation of the proposed Project.

3.7.7 Cumulative Impacts

GHG emissions from a single project would be relatively small in comparison to State or global GHG emissions. A single project would not generate enough GHG emissions to result in climate change; rather, the accumulation of GHG in the atmosphere resulting from many projects may result in global climate change, which can cause significant environmental effects. Therefore, impacts related to GHG emissions are exclusively cumulative.

The analysis in Sections 3.7.3.4 and 3.7.3.5 take cumulative conditions and effects into account. As discussed in Sections 3.7.3.4 and 3.7.3.5, construction of the proposed Project would not generate GHG emissions that would significantly impact the environment and operation of the proposed Project is anticipated to reduce GHG emissions when compared to the existing industrial land use. In addition, the proposed Project would not conflict with GHG emissions reductions plans and policies. Therefore, the proposed Project would not result in cumulative impacts related to GHG emissions.

3.8 Hazards and Hazardous Materials

This section describes the affected environment and regulatory setting for Hazards and Hazardous Materials related to the Project Area and surrounding area. In addition, this section describes the potential impacts related to Hazards and Hazardous Materials that would result from the implementation of the proposed Project. As noted in the analysis below, impacts associated with Hazards and Hazardous Materials during construction or operation of the proposed Project would be less than significant with mitigation measures.

The information in this section is based on the Phase II Environmental Site Assessment (ESA) (Hushmand Associates, Inc., 2019) and the Human Health Risk Assessment (HHRA) (The Fehling Group, LLC, 2019) prepared for the proposed Project.

3.8.1 Regulatory Setting

A review of the various federal, state, regional, and local government regulatory requirements was conducted to identify regulations that relate to Hazards and Hazardous Materials. This section summarizes the various regulatory requirements that are relevant to the proposed Project.

3.8.1.1 Federal

Resource Conservation and Recovery Act

The Resource Conservation and Recovery Act (RCRA) establishes the framework for regulating hazardous and non-hazardous solid wastes (42 U.S.C. 6901 et seq.). Solids, liquids, and contained gaseous material that are discarded may be considered solid waste. RCRA provides "cradle-to-grave" controls and management requirements on generators and transporters of hazardous waste. Subtitle C of RCRA establishes standards for the transportation, treatment, storage, and disposal of hazardous waste. Congress has granted the United States Environmental Protection Agency (U.S. EPA) authority to develop the RCRA to implement policies that ensure safe management and cleanup of solid and hazardous waste (Environmental Protection Agency, 2018a). The U.S. EPA regulates hazardous waste under Subtitle C of the RCRA. The U.S. EPA has delegated responsibility to California Department of Toxic Substance Control to enforce and implement RCRA requirements. Under RCRA, the transportation of hazardous wastes and materials on public roads, highways, rails, and waterways is regulated by United States Department of Transportation (U.S. DOT) regulations.

The Comprehensive Environmental Response, Compensation, and Liability Act

The Comprehensive Environmental Response, Compensation, and Liability Act (CERCLA) or "Superfund" of 1980 aims to identify and clean up abandoned hazardous-waste sites, as well as accidents, spills, and other contaminants that are released into the environment (42 U.S.C. 9601 et seq.). Through CERCLA, U.S. EPA has been granted authority to seek out parties responsible for any release and assure their cooperation to clean up the contaminants. Superfund site identification, monitoring, and response activities are coordinated through the state environmental protection or waste management agencies (Environmental Protection Agency, 2018b).

The Emergency Planning and Community-Right-to-Know Act

The Emergency Planning and Community Right-to-Know Act (EPCRA) of 1986 in response to concerns regarding environmental and safety hazards resulting from the storage and handling of toxic chemicals. EPCRA was created to help communities plan for chemical emergencies. EPCRA requires the reporting of storage, use, and releases of hazardous substances to the federal, state, and local governments.

Toxic Substances Control Act

The Toxic Substances Control Act (TSCA) of 1976 is administered by the U.S. EPA and applies to the manufacture, process, distribution, use, or disposal of TSCA-substances. TSCA regulates the testing, reporting, and record keeping for chemical substances and mixtures that pose an unreasonable risk to human health or the environment. It also identifies special chemical substances, which include polychlorinated biphenyls, asbestos, radon, lead, mercury, and formaldehyde.

Federal Insecticide, Fungicide, and Rodenticide Act

The Federal Insecticide, Fungicide, and Rodenticide Act (FIFRA) govern the registration, distribution, sale, and use of pesticides in the United States (7 U.S.C. 136 et seq.). Before a pesticide may be sold or distributed in the United States, it must be licensed with the U.S. EPA. Section 13 of FIFRA addresses U.S. EPA's authority to issue a "stop sale", use, or removal order whenever a pesticide or device is found to be in violation of FIFRA requirements. To enforce FIFRA requirements, U.S. EPA conducts producer establishment inspections, marketplace surveillance, and pesticide sampling analysis (Environmental Protection Agency, 2018c).

Occupational Safety and Health Act

The Occupational Safety and Health Act (OSHA) of 1970 is a United States labor law which governs occupational health and safety in the private sector and federal government. OSHA aims to ensure that employers provide employees with an environment that is free from hazards, such as exposure to toxic chemicals, excessive noise levels, mechanical dangers, heat or cold stress, or unsanitary conditions (US Department of Labor, n.d.)

Section 402 of the Clean Water Act: National Pollutant Discharge Elimination System Permits

Section 402 establishes the National Pollutant Discharge Elimination System (NPDES), a permitting system for the discharges (except for dredge or fill material) of any pollutant into waters of the U.S. Regional Water Quality Control Boards (RWQCB) administer this permitting program in California. Section 402(p) requires permits for discharges of stormwater from industrial/construction and municipal separate storm sewer systems (MS4s). In addition, construction sites on an acre or greater of land are required to obtain an NPDES permit.

U.S. Environmental Protection Agency Human Health Risk Assessment Guidance

The U.S. EPA developed guidance for conducting HHRAs, which include the following steps (U.S. Environmental Protection Agency, 2016):

- **Planning:** Guidance for identifying at-risk populations, environmental hazards of concern, sources of environmental hazards, pathways of exposure, health effects, and duration of toxic effects.

- **Hazard Identification:** Guidance for determining whether exposure to a stressor can cause an increase in the incidence of specific health effects.
- **Dose-Response:** Guidance for determining the likelihood and severity of adverse health effects in response to the amount and condition of exposure to an agent.
- **Exposure Assessment:** Guidance for measuring or estimating the magnitude, frequency, and duration of human exposure to an agent in the environment or estimating future exposures for an agent that has not yet been released.
- **Risk Characterization:** Guidance for determining the nature and presence or absence of risks, describing how the risk was assessed, and disclosing where uncertainties still exist.

3.8.1.2 State

California Environmental Protection Agency Unified Program

The California Environmental Protection Agency (CalEPA) oversees the implementation of the Unified Program to protect residents of the State from hazardous waste and materials. The Unified Program establishes consistency throughout the State in regard to administrative requirements, permits, inspections, and enforcement of the following environmental and emergency management programs:

- Aboveground Petroleum Storage Act Program
- Area Plans for Hazardous Materials Emergencies
- California Accidental Release Prevention Program
- Hazardous Materials Release Response Plans and Inventories
- Hazardous Material Management Plan and Hazardous Material Inventory Statements (California Fire Code)
- Hazardous Waste Generator and Onsite Hazardous Waste Treatment (tiered permitting) Programs
- Underground Storage Tank Program

Under the Unified Program, CalEPA oversees 81 certified local government agencies, known as Certified Unified Program Agencies (CUPAs), which apply regulatory standards established by CalEPA, the Department of Toxic Substances Control (DTSC), Governor's Office of Emergency Services, California Department of Forestry and Fire Protection - Office of the State Fire Marshal, and the State Water Resources Control Board.

California Environmental Protection Agency Human Health Risk Assessment Guidance

The CalEPA Preliminary Endangerment Assessment (PEA) Guidance Manual provides guidance on determining whether a release of hazardous substances to the environment presents a risk to human health or the environment (California Environmental Protection Agency, 2015). The PEA is the first step in identifying whether a release or threatened release of a hazardous waste, substance, or material has occurred; estimating the potential risk to public health and the environment; evaluating whether immediate response would be needed to reduce the risk; and determining whether further action or investigation would be needed.

CalEPA also released Human Health Risk Assessment Notes, which cover topics such as exposure factors, soil remedial goals for specific types of compounds, recommended screening levels for various constituents, and methodology for conducting screening-level HHRAs (California Department of Toxic Substances Control, 2018).

Department of Toxic Substances Control Environmental Health Standards for the Management of Hazardous Waste

The DTSC Environmental Health Standards for the Management of Hazardous Waste is included in California Code of Regulations (CCR), Title 22, Division 4.5. All hazardous waste generators must comply with the guidelines, which are enforced by DTSC, for identifying, labeling, accumulating, preparing, and preventing outcomes related to hazardous waste. Title 22, Article 3 highlights the procedures of identifying hazardous waste into these 4 categories: ignitable, corrosive, reactive, and toxic. Article 5 categorizes hazardous waste into acutely hazardous waste, extremely hazardous waste, non-RCRA hazardous waste, RCRA hazardous waste, special waste, and universal waste. Title 22 of the CCR also underscores the guidelines for managing hazardous waste, which includes storing, housekeeping, record keeping, and inspecting waste.

Cortese List

Government Code 65962.5 requires CalEPA to develop a hazardous waste and substances site list (Cortese List). The Cortese List complies with the CEQA requirements in providing information about the location of hazardous materials release sites. California Government Code 65962.5 requires CalEPA to annually update the Cortese List (California Department of Toxic Substances Control, 2010).

Porter-Cologne Water Quality Control Act

The Porter-Cologne Water Quality Control Act restricts the disposal of wastes or any other activity that may degrade waters of the state. The Act requires cleanup of wastes that are below hazardous concentrations but could impact ground and surface water quality (Section 13002). The Act established nine Region and State Water Boards, which are primarily responsible for protecting water quality in California. The Regional Water Boards regulate discharges by issuing permits through NPDES for waste discharge requirements for non-point source discharges. Anyone discharging materials or proposing to discharge materials that could affect water quality must file a report of waste discharge unless the discharge would be into a community sewer system (California State Water Resources Control Board, 2014).

3.8.1.3 Regional

South Coast Air Quality Management District

The South Coast Air Quality Management District (SCAQMD) enforces air quality rules and regulations through a variety of means, including inspections, educational and training programs, and fines. Specific SCAQMD rules applicable to the construction of the proposed Project may include, but are not limited to the following:

- *Rule 401 – Visible Emissions*: A person shall not discharge into the atmosphere from any single source of emission whatsoever any air contaminant for a period or periods aggregating more than three

minutes in any one hour which is as dark or darker in shade as that designated No. 1 on the Ringelmann Chart, as published by the United States Bureau of Mines.

- *Rule 402 – Nuisance*: A person shall not discharge from any source whatsoever such quantities of air contaminants or other material which cause injury, detriment, nuisance, or annoyance to any considerable number of persons or to the public, or which endanger the comfort, repose, health, or safety of any such persons or the public, or which cause, or have a natural tendency to cause injury or damage to business or property. The provisions of this rule do not apply to odors emanating from agricultural operations necessary for the growing of crops or the raising of fowl or animals.
- *Rule 403 – Fugitive Dust*: This rule is intended to reduce the amount of particulate matter entrained in the ambient air as a result of anthropogenic (man-made) fugitive dust sources by requiring actions to prevent, reduce, or mitigate fugitive dust emissions. Rule 403 applies to any activity or man-made condition capable of generating fugitive dust.
- *Rule 1113 – Architectural Coatings*: No person shall apply or solicit the application of any architectural coating within the SCAQMD, with a volatile organic compound (VOC) content in excess of the values specified in a table incorporated in the Rule.
- *Rule 1166 – Volatile Organic Compound Emissions from Decontamination of Soil*: The rule sets requirements to control the emission of VOCs during the excavating, grading, handling, and/or treating of VOC-contaminated soil. Prior to these activities, an approved mitigation plan must be obtained from SCAQMD.
- *Rule 1403 – Asbestos Emissions from Demolition/Renovation Activities:* This rule specifies work practice requirements to limit asbestos emissions from building demolition and renovation activities, including the removal and associated disturbance of asbestos-containing materials.
- *Rule 1466 – Control of Particulate Emissions from Soils with Toxic Air Contaminants:* This rule requires notification, monitoring, and record keeping for earth-moving activities of soil with applicable toxic air contaminant(s) of greater than 50 cubic yards at a site that has been designated and notified by the following: (A) U.S. EPA as a Superfund National Priorities List site; (B) DTSC as a Brownfield or Cleanup Program site; (C) the State Water Resources Control Board or RWQCB as a Site Cleanup Program site; (D) a county, local, or state regulatory agency as a Hazardous Material Release site, as defined in California Health and Safety Code Section 25260; or (E) the Executive Officer pursuant to subdivision (i).

3.8.1.4 Local

Los Angeles County Fire Department, Site Mitigation Unit

The Site Mitigation Unit (SMU) of the Health Hazardous Materials Division, Los Angeles County Fire Department (LACoFD) provides corrective action and voluntary oversight for remediation of contaminated sites and approval of closure plans within the jurisdiction of the Los Angeles County Unified Program Agency (LACoCUPA). This service is provided to ensure the protection of public health and the environment, and to facilitate completion of site cleanup by the property owner intending to obtain site closure with agency oversight in the LACoCUPA jurisdiction: RWQCB and the DTSC. DTSC amended CCR Title 22 Chapter 45, Section 67450.7 and adopted Title 22, Chapter 50, Section 68400.11–

.16 in August 2006, to delegate Corrective Action (CA) authority to the CUPAs. DTSC has determined that Los Angeles County CUPA is qualified at the Tier 2 level (highest Tier) to implement and enforce environmental assessment and corrective action conducted pursuant to Health and Safety Code, §25200.3(c)(3), 25187, 25187.1, 25200.10, and 2500.14 and in accordance with the requirement of CCR Title 22, §68400.11 et seq. (County of Los Angeles Fire Department, 2009).

Los Angeles Fire Department, Hazardous Materials Division

The Hazardous Materials Division of the Los Angeles Fire Department (LAFD) oversees the proper handling, storage, and disposal of hazardous substances. Regulations regarding the storage and disposal of hazardous wastes are contained within the California Health & Safety Code, Division 20, Chapter 6.5; CR, Division 4.5, Title 22; Unified Program Ordinance, LA County Code Chapter 12.50; and the City's Municipal Code, Article 7 of Chapter V, Divisions 8, and 14.

City of Los Angeles Methane Gas Ordinance

Division 71 of Chapter IX, Article 1, of the Los Angeles Municipal Code (LAMC) establishes that all new buildings and paved areas located in a Methane Zone or Methane Buffer Zone shall comply with the General Methane Mitigation Requirements and the Methane Mitigation Standards established by the Superintendent of Building. LAMC Table 71 (Minimum Methane Mitigation Requirements of the Methane Seepage Regulations) prescribes the minimum methane mitigation systems for a site, based on the appropriate Site Design Level. The Site Design Level is based on the measured concentration and pressure of methane gas determined during site testing. The Site Design Level ranges from Level I through V, with higher levels corresponding with increased mitigation system requirements. Adopted in 2004, Ordinance 175790 amended Division 71 to establish citywide methane mitigation requirements and include more current construction standards to control methane intrusion into buildings.

3.8.2 Environmental Setting

3.8.2.1 Hazardous Materials and Wastes

The Project Site is in an urban area with industrial and commercial land uses. The Project Site is currently being used for the construction of the Sixth Street Viaduct. The Project Site is surrounded by several commercial buildings to the west and east, open lots, and connecting and underlying roadways. Based on historic sources, the Project Site vicinity has remained the same since the 1980s. The Los Angeles River and the rail lines have been present since the 1890s (Earth Mechanics, Inc., 2014).

For the purposes of the Phase II ESA and HHRA, the Project Site was divided into various PARC Area Designations, which include PARC Area 1A, 1B, 2A, 2B, 2C, 3, 4A, 5, 6, 7, 8, 9, and 10 (see **Figure 3.8-1a** and **Figure 3.8-1b**, Soil Boring Locations; **Figure 3.8-2a** and **Figure 3.8-2b**, Methane and Methane Buffer Zones; and **Figure 3.8-3**a and **Figure 3.8-3b**, Areas of Concern with Contamination). The existing contamination at each PARC Area was determined based on previous site investigations for the Viaduct Replacement Project, and investigations performed for the proposed Project in the Phase II ESA and HHRA. The existing contamination for the Project Site is described in the sections below.

Figure 3.8-1a: Soil Boring Locations (West Park)

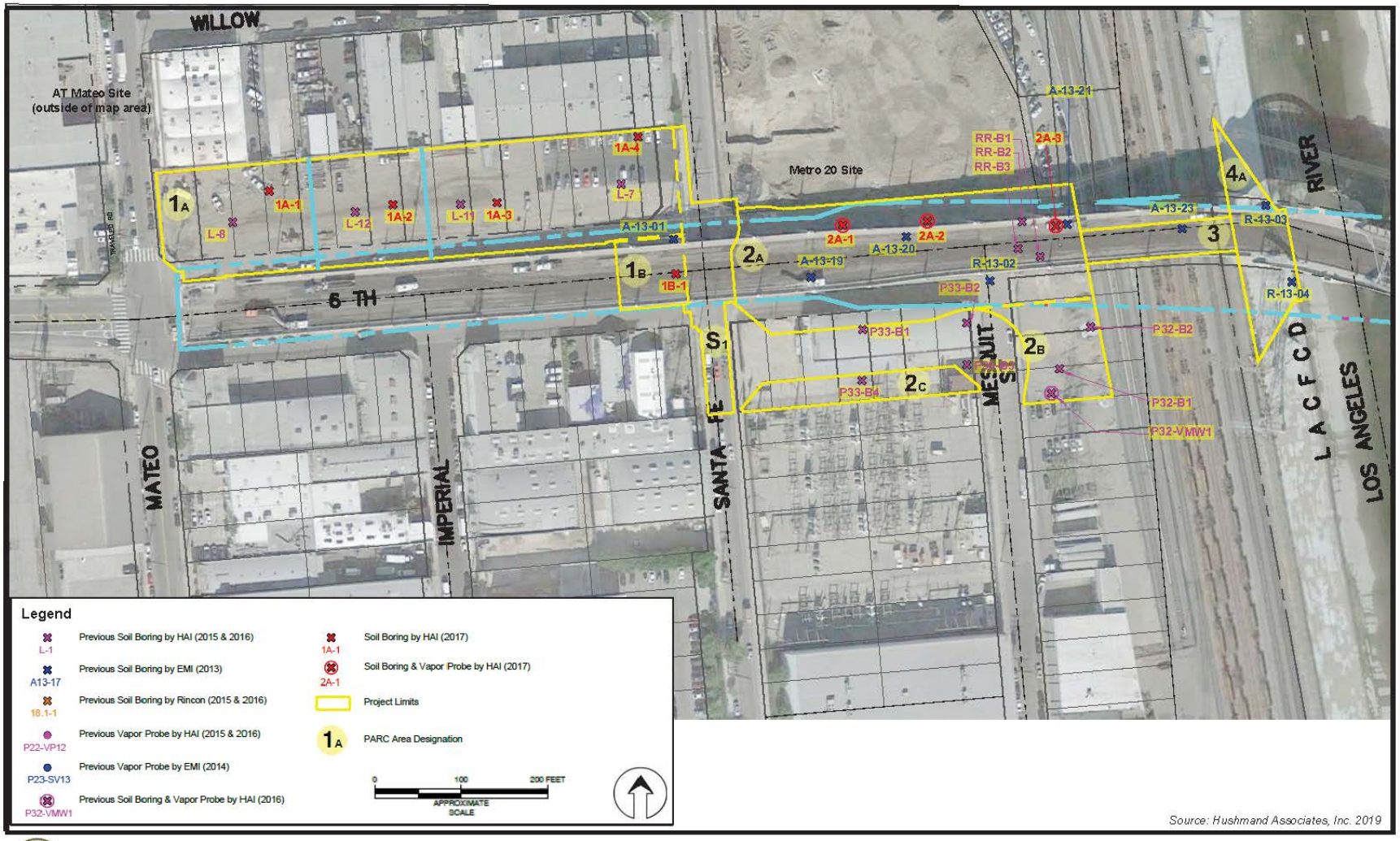

ENGINEERING
CITY OF LOS ANGELES

FIGURE 3.8-1a. SOIL BORING LOCATIONS (WEST)
Sixth Street PARC Project

Figure 3.8-1b: Soil Boring Locations (East Park)



ENGINEERING

FIGURE 3.8-1b. SOIL BORING LOCATIONS (EAST)
Sixth Street PARC Project

Figure 3.8-2a: Methane and Methane Buffer Zones (West Park)



ENGINEERING
CITY OF LOS ANGELES

FIGURE 3.8-2a. METHANE & METHANE BUFFER ZONES (WEST)
Sixth Street PARC Project

Figure 3.8-2b: Methane and Methane Buffer Zones (East Park)



ENGINEERING
CITY OF LOS ANGELES

FIGURE 3.8-3b. AREAS OF CONCERN WITH CONTAMINATION (EAST)
Sixth Street PARC Project

Figure 3.8-3a: Areas of Concern with Contamination

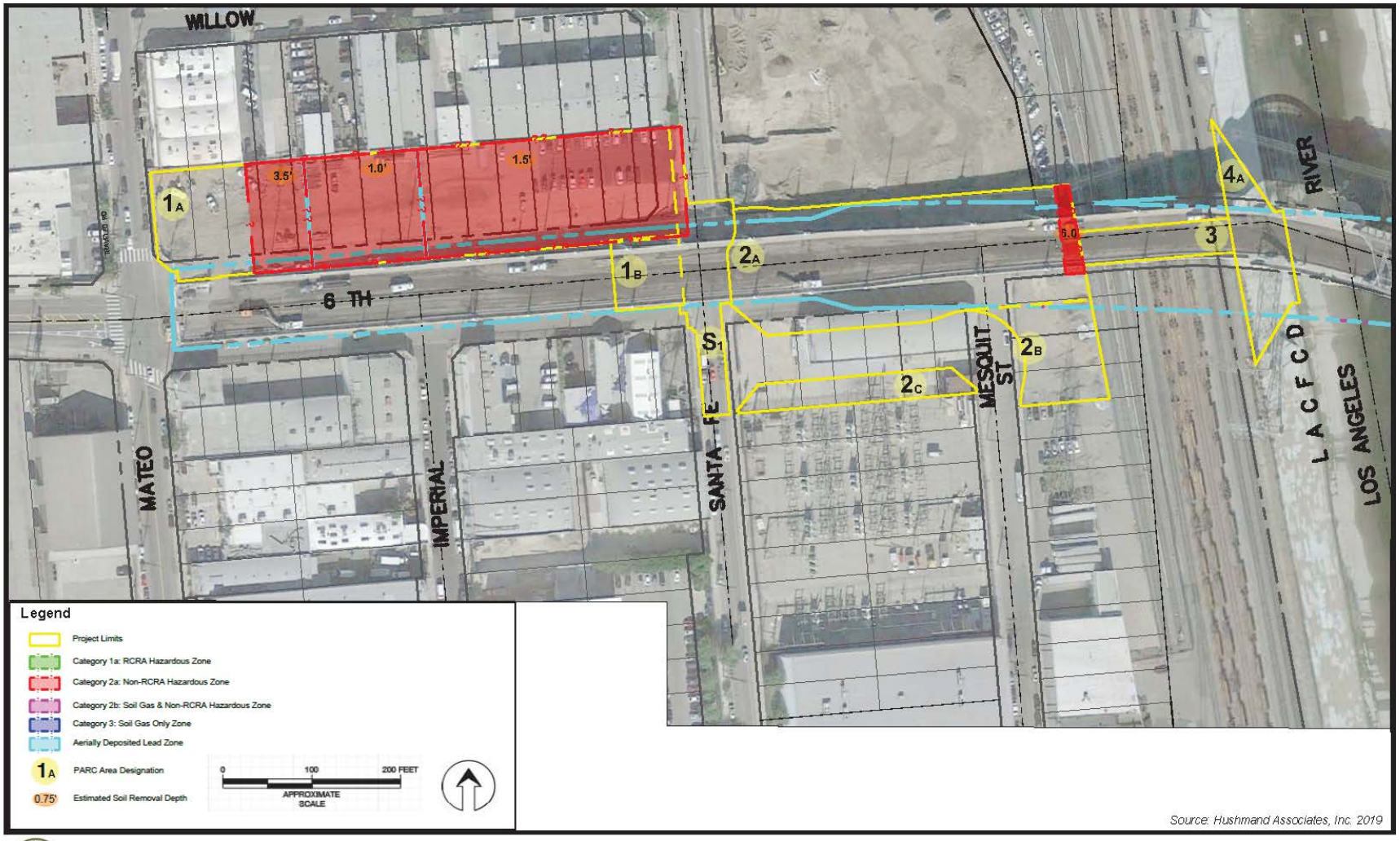

ENGINEERING
CITY OF LOS ANGELES

FIGURE 3.8-3a. AREAS OF CONCERN WITH CONTAMINATION (WEST)
Sixth Street PARC Project

Figure 3.8-3b: Areas of Concern with Contamination



ENGINEERING
CITY OF LOS ANGELES

FIGURE 3.8-3b. AREAS OF CONCERN WITH CONTAMINATION (EAST)
Sixth Street PARC Project

Previous Site Investigations

Previous site investigations were completed at the Project Site by Hushmand Associates, Inc. (2015 and 2016), Earth Mechanics, Inc. (2013 and 2014), and Rincon (2015 and 2016) for the proposed Project and Viaduct Replacement Project. The results of the review and screening indicate six zones with soil contamination classifying the soil as California (Non-RCRA) Hazardous Waste or RCRA Hazardous Waste, and two zones with soil gas contamination (see **Figure 3.8-1a** and **Figure 3.8-1b**). The soil contamination is primarily total petroleum hydrocarbons in the diesel range organics (TPH DRO) and lead. These findings were evaluated in the HHRA for potential risks to human health. In addition, two areas, PARC Area 1A and 7, are within the Methane Zone or had methane detected and are subject to methane mitigation requirements established by the Los Angeles Department of Building and Safety (LADBS) (see **Figure 3.8-2a** and **Figure 3.8-2b**).

Based on the previous site investigations, the Phase II ESA identified the following hazardous materials issues at the Project Area (i.e., area of direct and indirect impacts resulting from construction and operation of the proposed Project):

- Parcel 18.1 at 631 South Anderson Street and Parcel 18.2 at 625 South Anderson Street: The parcels are within PARC Area Designation 6 shown on **Figure 3.8-1b** and underlie the proposed East Park. The City previously filed a RCRA Subtitle C Site Identification Form to notify the CalEPA/DTSC of hazardous levels of heavy metals in the soil. The removal and disposal of the stockpile of soil for Parcel 18.1 was under CalEPA Hazardous Waste Identification (ID) Number CAR000266684.
- Metro 20 (prior Butterfield Property) site at 590 South Santa Fe Avenue: The site is just north of PARC Area Designation 2A shown on **Figure 3.8-1a** and is in proximity to the proposed Arts Plaza. This site is in the process of implementing remediation of groundwater and deep soil contamination plumes that extend under the City's Sixth Street right of way (ROW). The work is being performed under a Voluntary Cleanup Agreement between Metro and U.S. EPA/DTSC.
- Parcel 32: The site is within PARC Area Designation 2B shown on **Figure 3.8-1a**. The site includes a Remedial Action Order by the CalEPA/DTSC that was issued to Amtrak for past operations on the property. The investigation performed in August and September 2015 concluded that VOCs in soil gas exceed DTSC screening levels. This site underlies the proposed Arts Plaza.

In addition to the sites identified in the Phase II ESA, the DTSC identified the following hazardous materials issue at the Project Area:

- AT Mateo Site at 555 Mateo Street: The site is just north of PARC Area Designation 2A shown on Figure 3.8-1a and is in proximity to the proposed Arts Plaza. The site has undergone remediation under DTSC oversight and is currently certified for unrestricted land use.

Database Review

As described in the Initial Study for the proposed Project, the following data sources were reviewed for information on hazardous materials sites in the Project Area (California Environmental Protection Agency, 2012):

- **Cortese List**: There are 27 hazardous waste and substances sites in the City, but none are located within the Project Area.

- **EnviroStor Database**: The Project Area includes the site of a former paint manufacturing facility located southeast of the intersection of South Santa Fe Avenue and Willow Street on the west side of the River. The facility is listed as a voluntary cleanup site and has been active as of December 7, 2012 (Department of Toxic Substances Control, 2007). The site is underlain with contaminated soil and groundwater, and includes metals, petroleum, polynuclear aromatic hydrocarbons, and VOCs as potential contaminants.
- **GeoTracker Database**: There are no active Leaking Underground Storage Tank (LUST) sites in the Project Area. The former paint manufacturing facility site located southeast of the intersection of South Santa Fe Avenue and Willow Street is also listed on the GeoTracker Database as an active Waste Discharge Requirements (WDR) site as of May 27, 2016 (State Water Resources Control Board, 2015).

Phase II Site Investigation

A site investigation was completed as part of the Phase II ESA prepared for the proposed Project. The sampling area consisted of 13 acres of land. A total of 33 locations were drilled to obtain soil samples and install vapor probes for obtaining soil vapor samples at specific depths (see **Figure 3.8-1a** and **Figure 3.8-1b**). Soil samples from the shallow soil borings were analyzed for the compounds of concern, which may include heavy metals (i.e., arsenic, barium, cadmium, chromium, copper, lead, mercury, and zinc), diesel, and oil range petroleum hydrocarbons, and VOCs in soil gas.

The Phase II ESA concluded that the types and extent of contamination (e.g., heavy metals and hydrocarbons in near surface soils) is typical for areas with industrial and commercial land uses, with the exception of the areas adjacent to the Metro 20 site and two zones with soils classified as RCRA Hazardous Waste due to heavy metal contamination (Hushmand Associates, Inc., 2019). Soils contaminated with heavy metals and soil gases were found at a few sample sites in the Project Area (Hushmand Associates, Inc., 2019). The results of the soil sampling performed for the Phase II ESA are summarized in **Table 3.8-1** (see **Figure 3.8-3a** and **Figure 3.8-3b**).

As indicated in **Table 3.8-1**, the hazards and hazardous materials of concern in the Project Site are included below:

- **Title 22 Heavy Metals:** Title 22 of the CCR provides a list of heavy metals including antimony, arsenic, barium, beryllium, cadmium, chromium, cobalt, copper, lead, molybdenum, nickel, selenium, silver, thallium, vanadium, zinc, and hexavalent chromium, which are considered hazardous wastes if their concentration in milligrams per kilogram (mg/kg) exceeds the listed threshold limit concentration.
- **Polychlorinated Biphenyls:** Polychlorinated Biphenyls (PCBs) are a type of toxic chemical regulated by the TSCA. PCBs are most commonly found in electrical transformers and capacitors, air conditioning equipment, and lighting ballasts.
- **Volatile Organic Compounds:** VOCs are emitted gases that are typically released from burning fuel, oil and gas fields, diesel exhaust, or manufacturing processes. Many VOCs are considered hazardous air pollutants because they may have short-term and long-term adverse health effects.

- **Total Petroleum Hydrocarbons:** Total petroleum hydrocarbons (TPH) include chemical compounds that originate from crude oil and other petroleum products. Sources of TPH include gasoline pumps, spilled oil, and commercially used chemicals.
- **Lead and Aerially Deposited Lead:** Elevated lead concentrations exist in soils along older roadways as a result of aerially deposited lead (ADL) from the historical use of leaded gasoline. A Soil Management Agreement for Aerially Deposited Lead-Contaminated Soils (Agreement) was established between the California Department of Transportation (Caltrans) and DTSC. The Agreement applies to soils with elevated lead derived from leaded fuel tailpipe emissions found on the state highway system.
- **Methane:** Methane is a combustible natural gas that may be found in soil gas. LADBS developed the Methane Zone Map based on locations of historical crude oil and natural gas extraction wells.

Human Health Risk Assessment

The HHRA was conducted in accordance with U.S. EPA and CalEPA guidance described in Section 3.8.1. The HHRA evaluated long-term cancer risks, measured as the incremental lifetime cancer risk (ILCR), and toxicity, measured as the Hazard Index (HI), to construction workers and residential users (e.g. unrestricted land use) resulting from the proposed Project. Of the PARC Area Designations in **Table 3.8-1**, the HHRA included PARC Areas 1A, 2A, 2B, 2C, 5, 6, 7, and 8 because prior investigations indicated that these areas had chemicals of potential concern (COPCs) in soil or soil gas. PARC Area 3 was not analyzed because construction activities would not expose soils at the depth where an exceedance occurred. In addition, PARC Area 4 was not analyzed because construction activities are no longer proposed there. Based on the assumption that sensitive receptors would only come into contact with shallow soils, the HHRA incorporates the soil data collected in the upper ten feet of each PARC Area from the Phase II ESA.

The HHRA identified the following chemicals of potential concern (COPC) that contribute to the overall Project Site risk (The Fehling Group, LLC, 2019):

- **Arsenic:** Arsenic has an established regional background threshold value (BTV) for Southern California of 12 mg/kg, which is the level of arsenic that does not exceed background levels of arsenic typically found in soils. The maximum arsenic concentrations were below the arsenic BTV for PARC Areas 1A, 2A, 2B, 2C, 5, 7, and 8, but above the arsenic BTV for PARC Area 6 (26 mg/kg). Therefore, arsenic is a COPC in PARC Area 6.
- **Lead:** CalEPA has an established blood lead model to determine safe levels of lead in soil at residential and industrial sites. The screening level for residential soils is 80 mg/kg, meaning that lead concentrations above this level may pose an adverse health risk to residential receptors. Since the maximum value in each area exceeds 80 mg/kg, lead is considered a COPC for all PARC areas that the HHRA evaluated.
- **Other Metals:** In addition to arsenic and lead, soil samples were analyzed for 15 other metals. Based on the HHRA, antimony, barium, cadmium, copper, mercury, nickel, selenium, silver, and zinc were determined to be COPCs for at least one PARC Area. Eleven different COPCs were found at PARC Area 6, which had the most metal COPCs than any other PARC Area.

Table 3.8-1: Phase II ESA Findings

PARC Area Designation[1]	Location	Tested Contaminants	Findings
1A	Proposed West Park	Title 22 Heavy Metals (Cadmium and Lead)	Heavy metals concentrations exceeded DTSC screening level; Hexavalent chromium non-detect (ND) and below DTSC screening levels; Soluble Lead Concentrations (STLC) exceeded DTSC levels; and Leachable Lead Concentrations (TCLP) below RCRA levels. Soil classified as Non-RCRA or California Hazardous Waste.
		Total Petroleum Hydrocarbons (TPH)	Detected but not at levels approaching screening values
		Volatile Organic Compounds (VOC)	ND in all samples tested except for the area where an ongoing groundwater and deep soil cleanup action is ongoing
		Semi-Volatile Organic Compounds (SVOC)	ND
		Polychlorinated Biphenyls (PCB)	ND, except a type of PCB (Aroclor 1260) was detected at a concentration below the exposure limits of concern for humans
		Organochlorine Pesticides	ND or below the DTSC screening levels
1B	Proposed West Park	Title 22 Heavy Metals	Below DTSC screening levels
2A, 2B, 2C	Proposed Arts Plaza	Title 22 Metals, VOCs and SVOCs	ND or below DTSC screening levels, except for two samples
		TPH	Exceeded the DTSC screening level in one sample. Soils classify as Non-RCRA or California Hazardous Waste
		PCBs	ND
		Organochlorine Pesticides	ND

PARC Area Designation[1]	Location	Tested Contaminants	Findings
		Organophosphorus Pesticides	ND
		Chlorinated Herbicides	ND
		VOCs in Soil Gas	Widespread (Human Health Risk Assessment found VOCs do not exceed acceptable risk criteria)
3	Proposed River Gateway (River Access Tunnel)	Title 22 Metals	Below DTSC screening levels, except one sample with a cadmium concentration that exceeded the DTSC screening level at a depth of 50 feet below ground surface
		TPH	ND
		VOCs	ND
4A	Proposed River Gateway (West Bank of LA River Channel) [2]	Heavy Metals (Arsenic and Cadmium)	Exceeded DTSC screening levels. Soils classified as non-RCRA or California Hazardous Waste
		TPH and VOCs	ND, except very low concentration of gasoline detected
5	Proposed East Park	Total Lead	Exceeded DTSC screening level. Soils classified as non-RCRA or California Hazardous Waste
		Diesel Range TPH	Below DTSC screening level
6	Proposed East Park	Title 22 Metals	Some samples at non-RCRA and RCRA levels
		VOCs	Soils classified as RCRA Hazardous waste
7	Proposed East Park	Heavy Metals	Soils classified as non-RCRA or California Hazardous Waste
		Soil Gas	Soil gas contaminants exceed DTSC screening levels. Human Health Risk Assessment found that soil gas concentrations of PCE and TPH-DPO exceeded health risk criteria.
8	Proposed East Park	Lead	Exceeded DTSC screening levels

PARC Area Designation[1]	Location	Tested Contaminants	Findings
		TCLP	Soils classified as non-RCRA or California Hazardous Waste
		VOCs in Soil Gas	Exceeded DTSC screening levels
9	Proposed East Park (California Department of Transportation ROW)	Aerially Deposited Lead (ADL)	Dataset meets the criteria for a minimum of one foot of clean soil cover or pavement structure. Waste soils not classified as RCRA hazardous. Offsite disposal may be required.

1. *Refer to **Figures 3.8-3a** and **3.8-3b** for locations of PARC Area Designations*
2. Construction activities are no longer proposed in PARC Area 4A
Source: (Hushmand Associates, Inc., 2019)

- **Non-Metals:** Non-metal COPCs, including TPHs, VOCs, semi-volatile organic compounds, PCBs, and organochlorine pesticides (OCP), were found in all PARC Areas, particularly 6 and 7. Soil gas COPCs were most prevalent in PARC Area 2, but were also found in PARC Areas 6, 7, and 8.

In summary, the soil risk values and the maximum indoor and trench air risk values were identified. The HHRA found the following:

- The ILCR values slightly exceed the risk benchmark level for the residential receptor in PARC Areas 6, 7, and 8. The maximum ILCR value for PARC Area 7 is within the risk management range. The risk-driving COPCs are Aroclor 1260, a type of PCB, in soil (PARC Area 5) and tetrachloroethylene (PCE) in soil gas (PARC Areas 7 and 8).
- The HI values exceed the benchmark level for the residential receptor in all PARC Areas except PARC Area 8. The HI values exceed the benchmark level for the construction worker receptor in PARC Area 6 and 7 due to total petroleum hydrocarbons, diesel range organics (TPH-DRO).
- Lead exceeds the residential screening level in PARC Areas 1A, 5, 6, and 8 and exceeds the construction worker screening level in PARC Area 1A and 6.
- TPH-DRO and lead are the primary risk-driving COPCs.
- Residential indoor air risk values and construction worker trench air risk values associated with soil gas contamination did not exceed the ILCR or HI benchmark levels in PARC Area 2. Therefore, PARC Area 2 is not an area of concern for soil gas contamination, and the remediation proposed in the Phase II ESA is no longer recommended at this site.

The final step of the HHRA was the risk characterization, which estimated the potential risks to human health based on the assumed exposure to the COPCs described above. The HHRA employed a conservative approach by using the residential scenario (e.g., unrestricted land use) for park users and construction worker scenario.

3.8.2.2 Sensitive Receptors

Sensitive receptors are those members of the population that are most sensitive to exposure to hazardous materials, and they can be found in areas that include residences, hospitals, elder-care facilities, rehabilitation centers, elementary schools, daycare centers, and parks (see **Table 3.8-2**). The Project Area is primarily surrounded by industrial and commercial land uses immediately adjacent to the north, south, and west. However, residences, schools, and hospitals are located east and further north of the Project Area, and additional residences are located to the west and south of the Project Area.

The nearest residences in the vicinity of the proposed East Park are the Pico Gardens residences approximately 350 feet northeast of the Project Site, along South Clarence Street. The nearest residences in the vicinity of the proposed West Park is a residential development referred to as the "Brick Lofts," which is approximately 700 feet south of the Project Site, near the intersection of Mateo Street and Jesse Street. Additional residences in the vicinity of the proposed Project are included in **Table 3.8-2** and proposed residences are included in **Table 1-1** (see **Figure 1-2**).

Table 3.8-2: Sensitive Receptors

Property Name	Address	Approximate Distance from Project Area
Residences		
Pico Gardens	Housing community bordered by Fourth St. to the north, U.S. 101 to the east, South Clarence St. to the west, and Inez St. to the south	Less than 0.1 mile northeast of Project Area
Coronel Village	935 S Boyle Ave. Los Angeles, CA 90023	Less than 0.1 mile south of Project Area
Brick Lofts LLC	652 Mateo St. Los Angeles, CA 90021	Less than 0.1 mile south of Project Area
Toy Factory Lofts	1855 Industrial St. Los Angeles, CA 90021	Less than 0.1 mile south of Project Area
Joint Living and Working Quarters	East Fourth St. and Anderson St.	0.1 mile east of Project Area
AMP Lofts	695 South Santa Fe Ave. Los Angeles, CA 90021	0.2 mile south of Project Area
One Santa Fe	300 South Santa Fe Ave. Los Angeles, CA 90013	0.2 mile north of Project Area
Telacu Pico Aliso	1450 East First St. Los Angeles, CA 90033	0.3 mile northeast of Project Area
Pueblo del Sol	1400 Gabriel Garcia Marquez St. Los Angeles, CA 90033	0.6 mile north of Project Area
670 Mesquit	670 Mesquit St.	Less than 0.1 miles south of the Project Area
Hospitals		
Guadalajara Medical Clinic	2705 Whittier Blvd. Los Angeles, CA 90023	0.3 mile east of Project Area
Community Centers		
PUENTE Learning Center	501 South Boyle Ave. Los Angeles, CA 90023	0.5 mile east of Project Area
Boyle Heights Technology Youth Center	1600 East Fourth St. Los Angeles, CA 90033	0.5 mile east of Project Area

Property Name	Address	Approximate Distance from Project Area
Elder-Care Facilities		
La Modern Living Inc.	900 East Fourth St. Los Angeles, CA 90013	0.6 mile west of Project Area
Hollenbeck Terrace	610 South St Louis St. Los Angeles, CA 90023	0.5 mile east of Project Area
Rehabilitation Centers		
Fusion Physical Therapy	943 South Boyle Ave. Los Angeles, CA 90023	0.5 mile southeast of Project Area
Schools		
Felicitas and Gonzalo Mendez High School	1220 Plaza Del Sol East Los Angeles, CA 90033	0.6 mile north of Project Area
Dolores Mission School	170 South Gless St. Los Angeles, CA 90033	0.5 mile northeast of Project Area
SIATech Boyle Heights Charter School	501 South Boyle Ave. Los Angeles, CA 90033	0.5 mile east of Project Area
St. Mary Catholic School	416 South St Louis St. Los Angeles, CA 90033	0.7 mile east of Project Area
Boyle Heights High School	544 South Matthews St. Los Angeles, CA 90033	0.6 mile east of Project Area
Para Los Niños Charter Elementary School	1617 East Seventh St. Los Angeles, CA 90021	0.6 mile west of Project Area
Hollenbeck Middle School	2510 East Sixth St. Boyle Heights, CA 90023	0.5 mile east of Project Area
Metropolitan High School	727 Wilson St. Los Angeles, CA 90021	0.4 mile west of Project Area
School of Santa Isabel	2424 Whittier Blvd. Los Angeles, CA 90023	0.3 mile east of Project Area
Bishop Mora Salesian High School	960 South Soto St. Los Angeles, CA 90023	0.3 mile east of Project Area
Soto Street Elementary School	1020 South Soto St. Los Angeles, CA 90023	0.5 mile south east of Project Area

Property Name	Address	Approximate Distance from Project Area
Proposed Knowledge is Power Program in Los Angeles Elementary School	443 S Soto St. Los Angeles, CA 90033	0.6 mile northeast of Project Area
Daycare Centers		
DMWC Day Care	157 South Gless St. Los Angeles, CA 90033	0.5 mile north of Project Area
Garden of Progress Head Start	360 South Gless St. Los Angeles, CA 90033	0.4 mile northeast of Project Area
The Tina & Rick J. Caruso Early Education Center	845 East Sixth St. Los Angeles, CA 90021	0.5 mile west of Project Area
Park Place Head Start	2630 Seventh St. Los Angeles, CA 90023	0.6 mile southeast of Project Area
Parks		
Hollenbeck Park	415 South St Louis St. Los Angeles, CA 90033	0.6 mile north of Project Area
Religious Institutions		
St. Francis Xavier Church - Japanese Catholic Center	222 South Hewitt Street in Los Angeles	0.6 mile northwest of Project Area
Weller Street Baptist Church	129 South Gless Street in Los Angeles	0.4 mile northeast of Project Area
Dolores Mission Church	320 South Gless Street in Los Angeles	0.4 mile northeast of Project Area
Pico Gardens Foursquare Church	320 South Gless Street in Los Angeles	0.4 mile northeast of Project Area
St. Mary's Catholic Church	407 South Chicago Street in Los Angeles	0.5 mile northeast of Project Area
Santa Isabel Church	918 South Soto Street in Los Angeles	0.2 mile southeast of Project Area

Source: (GPA Consulting, 2019)

3.8.3 Environmental Impact Analysis

3.8.3.1 Methodology

Potential significant impacts associated with the proposed Project were determined based on the Phase II ESA, which presented the findings of the subsurface investigation, recommendations for handling potential hazardous materials, and recommendations for additional testing (Hushmand Associates, Inc., 2019). Potential significant impacts were also determined based on the HHRA, which quantified potential health risks for construction workers and future on-site sensitive receptors due to chemicals in soil and soil gas (i.e., vapor) and evaluated whether the potential health risks warrant mitigation (The Fehling Group, LLC, 2019).

Phase II ESA Methodology

As described in Section 3.8.2, the locations of borings and soil vapor probes from prior investigations and this investigation are shown on **Figure 3.8-1a** and **Figure 3.8-1b**. In the Phase II ESA, the data from the prior site environmental investigations and from this investigation on soil and soil gas contaminants were screened against the CalEPA DTSC Screening Levels for the Residential Scenario, RCRA and non-RCRA hazardous material classifications, and Caltrans criteria for the re-use of soils containing lead (for the samples from borings designated as ADL borings). The Phase II ESA presents screening results for soil, soil gas and ambient air, methane, and ADL; findings and recommendations for shallow soil, ADL, and soil gas conditions; recommendations for handling groundwater during construction; and remediation alternatives.

HHRA Methodology

A HHRA involves examining issues regarding site-related contaminants, or COPCs. These issues include characterizing environmental fate and transport, determining if sampling is sufficient to characterize COPCs, and assessing the exposure of COPCs to human receptors. These evaluations comply with CalEPA and U.S. EPA risk assessment guidance (California Environmental Protection Agency, 2015; U.S. Environmental Protection Agency, 1991; U.S. Environmental Protection Agency, 1989).

For the proposed Project, the receptors evaluated in the HHRA include a construction worker and a residential child and adult. These receptors are assessed using the reasonable maximum exposure (RME) approach, which is defined by the U.S. EPA as the "highest exposure that is reasonably expected to occur," by applicable exposure routes (i.e., through inhalation, ingestion, or skin contact) (California Department of Toxic Substances Control, 2014). The assumption of potential exposure represents a conservative approach, which is recommended by U.S. EPA and CalEPA risk assessment guidance to make the HHRA sufficiently protective of the potential receptors (The Fehling Group, LLC, 2019).

The HHRA process consists of four primary components as the basis for identifying potential health risks posed to current and/or future receptors at a Site (The Fehling Group, LLC, 2019). These HHRA components are described in the following sections.

Data Evaluation/Chemicals of Potential Concern

This section evaluated data collected from previous investigations conducted by Earth Mechanics, Inc. (2014) and Hushmand Associates, Inc. (2017) for usability in HHRA. The methods used for selecting COPCs were also presented.

Toxicity Assessment

Relevant toxicity endpoints and criteria are identified for each COPC, which are used to evaluate potential chronic (i.e., greater than seven years) carcinogenic and noncarcinogenic health impacts from oral, dermal, and inhalation exposure routes.

Exposure Assessment

Exposure assessment is the process of measuring or estimating the intensity, frequency, and duration of human exposure. Potential human receptors and the routes through which potential exposure to COPCs may occur are identified. The magnitude and duration of exposure was estimated for each receptor.

Exposure assessment can be quantified using risk-based concentration (RBC) and exposure point concentration (EPC), which are used to calculate risk. RBC is the chemical-specific concentration that corresponds to a target risk level. The HHRA calculated the RBC for the residential receptor and the construction worker receptor. EPC represents a conservative estimate of the chemical concentration from a particular medium or route of exposure. The HHRA included EPCs for indoor air and construction trench air.

Risk Characterization

The HHRA was conducted in accordance with CalEPA and U.S. EPA guidance described in Section 3.8.1.1 and 3.8.1.2. As recommended by the LACoFD, potential health risks associated with a residential (i.e., unrestricted land use) scenario and a construction scenario were quantified. The results of the toxicity assessment and exposure assessment are used to estimate the ILCR and the noncancer HI for each receptor. The thresholds for carcinogenic and noncarcinogenic health risks are as follows:

- Carcinogenic Health Risk: Based on the CalEPA Vapor Intrusion Mitigation Advisory, incremental lifetime cancer risk ILCR is categorized as follows:
    - If the vapor intrusion risk is less than 1E-06, no further action is required.
    - If the vapor intrusion risk is greater than 1E-06, but less than 1E-04, the need for action (e.g., additional data collection or risk characterization, monitoring, vapor intrusion mitigation, or source remediation) must be evaluated.
    - If the risk is greater than 1E-04, then action, such as vapor intrusion mitigation or source remediation, is required (California Environmental Protection Agency, 2011).
- Noncarcinogenic Health Risk: The noncancer HI approximates the effect of substances on a target organ. An HI below 1.0 denotes that would likely not result in adverse non-cancer health effects over a lifetime of exposure and would ordinarily be considered acceptable. An HI equal to or greater than 1.0 does not necessarily suggest a likelihood of adverse effects; however adverse health effects are possible (U.S. Environmental Protection Agency, 2018).

3.8.3.2 Screening Analysis

Several impacts and corresponding thresholds of significance in the following section were eliminated from further analysis in this EIR. Topics were eliminated if the IS for the proposed Project concluded there would be "No Impact," or if impacts were identified to be "Less Than Significant… and will not be discussed further in the EIR." Therefore, only the topics described in the section below were determined to require further analysis in this EIR. A copy of the Initial Study, which contains the eliminated topics, is provided in **Appendix A**.

3.8.3.3 Thresholds of Significance

According to Appendix G of the CEQA Guidelines and the *L.A. CEQA Thresholds Guide*, the proposed Project would have a significant impact on Hazards and Hazardous Materials if it would:

IX(a) Create a significant hazard to the public or the environment through the routine transport, use, or disposal of hazardous materials.

*F.2 Human Health Hazards***:** The determination of significance shall be made on a case-by-case basis, considering the following factors:

- The regulatory framework for the health hazard;
- The probable frequency and severity of consequences to people from exposure to the health hazard; and
- The degree to which project design would reduce the frequency of exposure or severity of consequences of exposure to the health hazard.

IX(d) Be located on a site which is included on a list of hazardous materials sites compiled pursuant to Government Code Section 65962.5 and, as a result, would it create a significant hazard to the public or the environment. (See *LA CEQA Thresholds Guide* Section F.2)

3.8.3.4 Construction Impacts

IX(a): Create a significant hazard to the public or the environment through the routine transport, use, or disposal of hazardous materials.

Proposed Project construction would require the removal of contaminated soils and the use of construction materials that could be hazardous, such as paints, sealants, and cement. The transport, use, and disposal of these materials would be conducted in compliance with applicable federal, state, and local laws pertaining to the safe handling, transport, and disposal of hazardous materials. These laws include RCRA, which includes requirements for hazardous solid waste management; SCAQMD Rules; the DTSC Environmental Health Standards for the Management of Hazardous Waste (California Code of Regulations, Title 22, Division 4.5), which include standards for generators and transporters of hazardous waste; and the provisions of the LAFD, Hazardous Materials Unit, which include requirements for the use and storage of hazardous materials. In addition, the transportation of hazardous wastes and materials would be conducted in compliance with U.S. DOT hazardous materials regulations. A Stormwater Pollution Prevention Plan (SWPPP) would also be developed in accordance with NPDES

permitting requirements and would include construction best management practices (BMP) to prevent spills or leaks of toxic or hazardous materials.

The project area would be remediated to the standards and the requirements of the regulating agencies prior to beginning construction. Based on the Phase II ESA, remediation recommendations were proposed for the handling and disposing of hazardous materials identified in different PARC Area Designations (see **Figure 3.8-3a** and **Figure 3.8-3b**, Areas of Concern with Contamination). **Table 3.8-3** summarizes the remediation recommendations and corresponding mitigation measures for the sample areas. With incorporation of mitigation measures **MM-HAZ-1** through **MM-HAZ-6** (see Section 3.8.5 for additional information), the Project Site would be remediated to standards acceptable by LACoFD and other regulatory agencies as required prior to construction. Under these standards, the concentrations of contaminants of concern would not pose health risks to construction workers or the public.

Potential health risks associated with a construction scenario were quantified and evaluated based on the carcinogenic health risk (ILCR) and noncarcinogenic health risk (HI) thresholds described in Section 3.8.3.1. A summary of the findings from the HHRA is included in **Table 3.8-4**.

Table 3.8-3: Remediation Recommendations

Recommendation Category	PARC Area Designation[1]	Estimated Depth of Contamination (feet bgs)	Summary of Recommendation	Mitigation Measure[2]
Category 1A (RCRA Level Heavy Metals, PCB or TPH DRO Only)	6 (around boring 6-3)	4.0	Remediation by Excavation and Disposal of the Soil at Class 1 Hazardous Waste Landfill (approximately 5,859 cubic yards)	**MM-HAZ-1**
	6 (around boring Parcel 18.1)	4.5		
	6 (around Parcel 18.2)	3.5		
Category 2A (Heavy Metals and/or TPH DRO at Non-RCRA Levels Only)	1A West Portion	3.5	Excavate and Dispose of Soil at Class 2 Landfill as Non-RCRA Hazardous Waste (approximately 7,279 cubic yards)	**MM-HAZ-2**
	1A Central Portion	1.0		
	1A East Portion	1.5		
	2A NE Corner	6.0		
	5 Central Portion	4.0		
	6 (around boring 6-2)	0.75		
	6 (around borings 6-4 and 6-5)	2.0		

Recommendation Category	PARC Area Designation[1]	Estimated Depth of Contamination (feet bgs)	Summary of Recommendation	Mitigation Measure[2]
Category 2B (Heavy Metals and/or TPH DRO at Non-RCRA Levels and VOCs in Soil Gas)	7 North Central	2.0	Excavate and Dispose of Soil at Class 2 Landfill as Non-RCRA Hazardous Waste (approximately 3,267 cubic yards), and Install SVE System and Optional Perimeter Vertical Barrier/Liner, as required by regulating agency	**MM-HAZ-2**
	7 Central Portion	2.0		
	8 West Portion	4.0		
Category 3 (VOCs in Soil Gas but No Heavy Metals or TPH DRO in Soil)	7 North Portion	15.0	Three options are proposed: Option 1 – Excavate and Dispose of Soil as RCRA Hazardous Waste at Class 1 Landfill and Install Liner and/or SVE System; Option 2 – Installation and Operation of SVE System and Optional Perimeter Vertical Barrier/Liner; or Option 3 – Design and Installation of Subsurface Gas Mitigation Systems for Proposed Development Facilities	**MM-HAZ-3**
	7 East Portion	15.0		
	8 East Portion	15.0		
Category 4 (Soil with ADL Only)	9	1.0	Provide Clean Soil Cover or Pavement Cover per the Caltrans/DTSC ADL Agreement (up to approximately 14,949 square feet)[3]	**MM-HAZ-4**
Methane Zone	1A (Paved area near existing building), 7	N/A	Implement Methane Mitigation and Complete Methane Testing	**MM-HAZ-6**

*1. Refer to **Figure 3.8-3a and Figure 3.8-3b** for locations of PARC Area Designations*
2. See Section 3.8.5 for a description of mitigation measures.
3. The results indicate that the soils above a depth of approximately 2.9 feet bgs would require one foot of clean soil cover to remain on site per the Caltrans/DTSC ADL Agreement
bgs = below ground surface
Source: (Hushmand Associates, Inc., 2019)

As shown in **Table 3.8-4**, the ILCR in all PARC Areas was below the CalEPA and U.S. EPA *de minimis* risk target of 1E-06 or within the commonly-applied risk management range (1E-06 to 1E-04). Based on these findings, the HHRA concluded that carcinogenic health impacts would be less than significant and neither mitigation nor remedial actions would be required. The noncancer HI exceeded the regulatory benchmark of 1.0 in PARC Areas 6 (1.0) and 7 (4.0) primarily due to TPH-DRO (see **Table 3.8-4**). In addition, lead exceeded the screening level in PARC Areas 1A and 6 (see **Table 3.8-4**). Based on these findings, the HHRA preliminarily recommended mitigation and/or corrective action at these locations.

Table 3.8-4: Summary of HHRA Findings for Construction Worker Receptor

PARC Area[1]	ILCR (unitless)[2]			HI (unitless)[3]			Lead Soil EPC (mg/kg)[4]	Comments	Recommendations
	Soil	Soil Gas (Indoor Air)	Total	Soil	Soil Gas (Indoor Air)	Total			
1A	3E-09	-	3E-09	3E-01	-	3E-01	**389**	Lead exceeds screening level	Implement **MM-HAZ-2**
2A, 2B, and 2C	0E+00	2E-08	2E-08	7E-02	2E-01	3E-01	28	-	Soil gas remediation not needed; Implement **MM-HAZ-2** for PARC Area 2A
5	0E+00	-	0E+00	3E-01	-	3E-01	81	-	Implement **MM-HAZ-2**
6	8E-08	-	8E-08	**1E+00**	-	**1E+00**	**1839**	Soil HI driven by TPH-DRO; lead exceeds screening level	Implement **MM-HAZ-1**, **MM-HAZ-2**, and **MM-HAZ-5**
7	2E-10	1E-07	1E-07	**2E+00**	**2E+00**	**4E+00**	58	Soil HI driven by TPH-DRO; soil gas trench air HI driven by TPH-DRO	Implement **MM-HAZ-2** and **MM-HAZ-3**
8	0E+00	2E-08	2E-08	1E-01	1E-02	2E-01	130	-	Implement **MM-HAZ-2** and **MM-HAZ-3**

1. *Refer to **Figure 3.8-3a** and **Figure 3.8-3b** for locations of PARC Area Designations*
*2. Values in **bold** indicate ILCR values that exceed CalEPA and U.S. EPA de minimis risk target of 1E-6 and the commonly applied risk management range of 1E-04 to 1E-06.*
*3. Values in **bold** indicate HI values that exceed the regulatory benchmark of 1.0.*
*4. Values in **bold** indicate lead soil EPC values that exceed the construction worker screening level of 160 mg/kg.*
5. PARC Areas 1A, 2A, 2B, 2C, 5, 6, 7, and 8 are addressed because a review of the environmental data collected over the last several years indicated that these parcels likely pose the greatest potential health risks for the proposed Project.
ILCR = incremental lifetime cancer risk; HI = noncancer hazard index (HI); EPC = exposure point concentration; TPH-DRO = total petroleum hydrocarbons, diesel range organics
Source: (The Fehling Group, LLC, 2019)

However, the TPH-DRO and lead exceedances are commonly driven by a limited number of samples within limited areas. The HHRA indicated that additional site characterization may increase the sample size such that CalEPA and U.S. EPA thresholds are no longer exceeded in some PARC Areas. Proposed remedial actions are conservatively estimated, additional site characterization may reduce the need for remediation in some of the PARC Areas.

With implementation of the remediation recommendations from the Phase II ESA and HHRA (**MM-HAZ-1** through **MM-HAZ-6**), the Project Site would be remediated to standards acceptable by LACoFD and other regulatory agencies as required prior to construction. With remediation, health risks to construction workers during construction activities (i.e., excavating, trenching, and transporting soil) would be reduced below CalEPA and U.S. EPA thresholds. During construction activities, the City will coordinate with regulatory agencies (i.e., Metro, U.S. EPA, and DTSC) overseeing ongoing cleanup actions in the Project Area (**BMP-HAZ-1**) and the contractor will comply with all SCAQMD rules and regulations (**BMP-HAZ-2**). Therefore, adverse health effects to construction workers, the public, and the environment are not expected to occur. With implementation of **MM-HAZ-1** through **MM-HAZ-6**, impacts would be less than significant with mitigation.

IX(d): Be located on a site which is included on a list of hazardous materials sites compiled pursuant to Government Code Section 65962.5 and, as a result, would it create a significant hazard to the public or the environment.

As described in Section 3.8.2.1, there are no Hazardous Waste and Substances Sites in the Project Area that are included on the Cortese List (Government Code Section 65962.5). However, the site investigation from the Phase II ESA found contaminated soil and groundwater plumes in the Project Site (i.e., heavy metals, lead, TPH, VOCs, and soil gas). Although the Metro 20 site is not within the boundaries of the proposed Project Site, soils within the Project Site (south of the Metro 20 site) were found to be contaminated with VOCs. A groundwater and deep soil cleanup action is ongoing at this location under a Voluntary Cleanup Agreement between Metro, U.S. EPA, and DTSC. The City would coordinate with these agencies during construction activities to minimize risks to the public or the environment.

Although the At Mateo site is outside the boundaries of the proposed Project Site, the AT Mateo site is another area of concern. This site has undergone remediation under DTSC oversight, and is currently certified for unrestricted land use. However, there is potential for previously unidentified contamination to be discovered. The City would coordinate with DTSC during construction activities to minimize risks to the public or the environment.

Although the site investigation identified areas within the Project Site with soils that could potentially classify as RCRA hazardous waste, implementation of mitigation measures **MM-HAZ-1** through **MM-HAZ-6** (see Section 3.8.5 for additional information) would remediate the Project Site to standards acceptable by LACoFD and other regulatory agencies as required prior to construction (Hushmand Associates, Inc., 2019). Under these standards, the concentrations of contaminants of concern would not pose health risks to construction workers or the public (see **HAZ-3** below for further discussion on human health risks). Therefore, with implementation of **MM-HAZ-1** through **MM-HAZ-6** impacts would be less than significant.

As shown on **Figure 3.8-2a** and **Figure 3.8-2b**, portions of the proposed Project would be located within the City's Methane and Methane Buffer Zone. As such, the construction of facilities (e.g., buildings,

underground vaults with access, and certain paved areas) in these zones must meet the requirements of City Ordinance 175790 and Division 71, Methane Seepage Regulations. Based on sampling and evaluation conducted as part of the Phase II ESA, methane mitigation would be required in PARC Area 1A, which is in the Methane Zone, and PARC Area 7, where soil gases were detected and impervious surfaces would be constructed adjacent to existing buildings.

Any buildings constructed in PARC Area 1A would include methane mitigation systems meeting Division 71 requirements, unless additional testing indicates no subsurface gas pressure and lower methane concentrations. In addition, paved surfaces that are over 5,000 square feet in area and within 15 feet of the exterior wall of a commercial, industrial, institutional building would be vented in accordance with the Methane Mitigation Standards, design Level II, unless additional testing indicates no subsurface gas pressure and lower methane concentrations (see **MM-HAZ-6** in Section 3.8.5 for additional information). With implementation of **MM-HAZ-6**, methane in soil gas would not create a significant hazard to the public or the environment and impacts would be less than significant with mitigation.

3.8.3.5 Operational Impacts

IX(a): Create a significant hazard to the public or the environment through the routine transport, use, or disposal of hazardous materials.

The proposed Project may require the use of hazardous materials during operation, such as paint for the sports field(s), pesticides and fertilizers for the landscaping, and other materials used for maintenance of the facilities. Hazardous materials would be properly handled, contained, transported, and disposed of in compliance with applicable laws and regulations, which may include the RCRA, the DTSC Environmental Health Standards for the Management of Hazardous Waste, the provisions of the LAFD Hazardous Materials Unit, OSHA and the California Division of Occupational Safety and Health (Cal/OSHA) safety standards, and U.S. DOT hazardous materials regulations.

Potential health risks associated with a residential scenario (i.e., unrestricted land use) for a park user were quantified and evaluated based on the carcinogenic health risk (ILCR) and noncarcinogenic health risk (HI) thresholds described in Section 3.8.3.1. A summary of the findings from the HHRA is included in **Table 3.8-5**.

As shown in **Table 3.8-5**, ILCR values slightly exceed the CalEPA and U.S. EPA *de minimis* risk target of 1E-06 for the residential receptor (i.e., park user) in PARC Area 6 (1.1E-06), PARC Area 7 (5E-06), and PARC Area 8 (2E-06). For PARC Area 7, the exceedances are within the risk management range of 1E-04 to 1E-06. Due to the lack of soil gas data for the area, soil gas sampling would be conducted in PARC Area 6 (see **MM-HAZ-5**). If soil gas samples in PARC Area 6 yield ILCR values below the *de minimis* risk target or within the risk management range, carcinogenic health impacts would be less than significant and mitigation and/or remedial actions would not be required. If ILCR values are above the risk management range, then additional remedial actions would be required.

As shown in **Table 3.8-5**, the HI exceeds the regulatory benchmark of 1.0 in all areas except PARC Area 8, primarily due to TPH-DRO. In addition, lead exceeded its screening level in PARC Areas 1A, 5, 6, and 8. As described in Section 3.8.3.4, the TPH-DRO and lead exceedances are commonly driven by a limited number of samples within limited areas. The health risks were conservatively estimated,

Table 3.8-5: Summary of HHRA Findings for Residential Receptor

PARC Area[1]	ILCR (unitless)[2]			HI (unitless)[3]			Lead Soil EPC (mg/kg)[4]	Comments	Recommendations
	Soil	Soil Gas (Indoor Air)	Total	Soil	Soil Gas (Indoor Air)	Total			
1A	8E-08	-	8E-08	**2E+00**	-	**2E+00**	**389**	Soil HI driven by TPH-DRO; lead exceeds screening level	Implement **MM-HAZ-2**
2A, 2B, and 2C	0E+00	9E-07	9E-07	**1E+00**	3E-01	**2E+00**	28	Soil HI driven by TPH-DRO and mercury; target organ assessment indicates no adverse noncancer health effect	Soil gas remediation not needed; Implement **MM-HAZ-2** for PARC Area 2A
5	0E+00	-	0E+00	**3E+00**	-	**3E+00**	**81**	Soil HI driven by TPH-DRO; lead slightly exceeds screening level	Implement **MM-HAZ-2**
6	**1E-06**	-	**1E-06**	**1E+01**	-	**1E+01**	**1839**	Soil ILCR driven by Aroclor 1260; soil HI driven by TPH-DRO; lead exceeds screening level	Implement **MM-HAZ-1**, **MM-HAZ-2**, and **MM-HAZ-5**
7	2E-8	**5E-06**	**5E-06**	**2E+01**	**3E+00**	**2E+01**	58	Soil gas indoor air ILCR driven by PCE; soil HI driven by TPH-DRO; soil gas indoor air HI driven by TPH-DRO	Implement **MM-HAZ-2** and **MM-HAZ-3**
8	0E+00	**2E-06**	**2E-06**	9E-02	4E-02	1E-01	**130**	Soil gas indoor air driven by PCE; lead exceeds screening level	Implement **MM-HAZ-2** and **MM-HAZ-3**

1. *Refer to **Figure 3.8-3a** and **Figure 3.8-3b** for locations of PARC Area Designations*
*2. Values in **bold** indicate ILCR values that exceed CalEPA and U.S. EPA de minimis risk target of 1E-06 and the commonly applied risk management range of 1E-04 to 1E-06.*
*3. Values in **bold** indicate HI values that exceed the regulatory benchmark of 1.0.*
*4. Values in **bold** indicate lead soil EPC values that exceed the residential screening level of 80 mg/kg.*
5. HHRA addresses PARC Areas 1A, 2A, 2B, 2C, 5, 6, 7, and 8 as review of environmental data collected over the last several years indicated that these parcels likely pose the greatest potential health risks
ILCR = incremental lifetime cancer risk; HI = noncancer hazard index; EPC = exposure point concentration; TPH-DRO = total petroleum hydrocarbons, diesel range organics; PCE = tetrachloroethylene
Source: (The Fehling Group, LLC, 2019)

additional site characterization may further reduce health risks below CalEPA and U.S. EPA thresholds such that the need for remediation in some of the PARC Areas may be reduced.

With implementation of the remediation recommendations from the Phase II ESA and HHRA (**MM-HAZ-1** through **MM-HAZ-6**), the Project Site would be remediated to standards acceptable by LACoFD and other regulatory agencies as required prior to construction. Following remediation, health risks to residential receptors (i.e., park users) associated with COPCs would be reduced below CalEPA and U.S. EPA thresholds. Therefore, adverse health effects to residential receptors (i.e., park users) are not expected to occur. With implementation of **MM-HAZ-1** through **MM-HAZ-6**, impacts would be less than significant.

IX(d): Be located on a site which is included on a list of hazardous materials sites compiled pursuant to Government Code Section 65962.5 and, as a result, would it create a significant hazard to the public or the environment.

See response to **IX(d)** under Section 3.8.3.4 above. The Project Site is underlain with contaminated soil and groundwater plumes and portions of the Project Site are located in the City's Methane Zone and Methane Buffer Zone. With implementation of mitigation measures **MM-HAZ-1** through **MM-HAZ-6** (see Section 3.8.5 for additional information), the proposed Project would not create a significant hazard to the public or the environment. Therefore, impacts would be less than significant.

3.8.4 Best Management Practices

BMP-HAZ-1: Coordination with Regulatory Agencies

The City shall coordinate with Metro, U.S. EPA, and DTSC during construction activities to minimize health risks to the public or the environment associated with ongoing cleanup actions within the Project Area.

BMP-HAZ-2: Compliance with SCAQMD Rules and Regulations

The contractor shall implement measures to ensure that all construction activities are consistent with SCAQMD rules and regulations, including Rule 1166 – Volatile Organic Compound Emissions from Decontamination of Soil and Rule 1466 – Control of Particulate Emissions from Soils with Toxic Air Contaminants.

3.8.5 Mitigation Measures

MM-HAZ-1: Remediation Category 1A

The City shall be required to implement the following measures in areas where RCRA Level Heavy Metals, PCBs, or TPH DRO will be excavated and disposed of at Class 1 Hazardous Waste Landfills:

- Soils will be excavated as needed up to a maximum depth of 4.5 feet below ground surface (bgs), consistent with the limits designated on **Figure 3.8-3a** and **Figure 3.8-3b**, Areas of Concern with Contamination.
- The transport and disposal of RCRA hazardous waste will be accompanied with a Hazardous Waste Manifest (i.e., documentation accompanying the transport, treatment, storage and disposal of hazardous waste) completed by a licensed transporter. A site-specific CalEPA Hazardous Waste

Generator Identification Number will be obtained for each RCRA hazardous waste. Additional sampling and testing will likely be required by the facility accepting the soil for disposal.

- For excavations deeper than 4 feet, shoring or other approved means will be required to maintain stability of the excavation walls.
- During excavation activities, dust and runoff controls will be implemented to prevent windborne or surface waterborne migration of the soil from the Project Site. The soils will be directly loaded into the transport trucks, which will require tarps to prevent spillage or windblown loss of soil during transport. These controls will be verified and monitored by an independent third party.
- A site-specific Health and Safety Plan (HASP) will be prepared and implemented during all proposed construction activities, including full time perimeter sampling and testing of particulates and dust from the Project Site.
- All onsite workers and supervisors will complete a 40-hour OSHA Hazardous Waste Operations and Emergency Response (HAZWOPER) training course and be equipped with the appropriate personal protective equipment.
- Excavated areas will be backfilled with certified clean soil.

MM-HAZ-2: Remediation Category 2A

The City shall be required to implement the following measures in areas where soils contaminated with Heavy Metals and/or TPH DRO that are classified as non-RCRA hazardous waste will be excavated. These contaminated soils shall be disposed at Class 2 Landfills:

- Soils will be excavated as needed up to a maximum depth of 6 feet bgs, consistent with the limits designated on **Figure 3.8-3a** and **Figure 3.8-3b,** Areas of Concern with Contamination.
- The transport and disposal of non-RCRA hazardous waste will be accompanied with a Hazardous Waste Manifest completed by a licensed transporter. A CalEPA Non-RCRA Hazardous Waste Generator Identification Number will be obtained. Additional sampling and testing will likely be required by the facility accepting the soil for disposal.
- For excavations deeper than four feet, shoring or other approved means shall be required to maintain stability of the excavation walls.
- During excavation activities, dust and runoff controls will be implemented to prevent windborne or surface waterborne migration of the soil from the Project Site. The soils will be directly loaded into the transport trucks, which will require tarps to prevent spillage or windblown loss of soil during transport. These controls will be verified and monitored by an independent third party.
- A site-specific HASP will be prepared and implemented during all proposed construction activities, including full time perimeter sampling and testing of particulates and dust from the Project Site.
- All onsite workers and supervisors will complete a 40-hour OSHA HAZWOPER training course and be equipped with the appropriate personal protective equipment.
- Excavated areas will be backfilled with certified clean soil.

Remediation Category 2B

In addition to the measures above, the following measures shall be implemented in areas where VOCs were observed in soil gases:

- Emission controls will be used to clear the area of emitting VOCs (i.e., spraying water or applying foam agents to all exposed soil surfaces and/or using large, spark-free fans). Full-time monitoring will be required to verify that the emission controls are effective in preventing the VOCs from impacting workers or the public. Monitoring will comply with SCAQMD Rule 1166.
- A detailed HASP will be prepared and implemented during the excavation and transport of contaminated soils.
- The excavation, transport, and disposal of contaminated soils will require permitting and approval by the CUPA, CalEPA/DTSC, and SCAQMD. A detailed Work Plan/Remedial Action Plan will be prepared and submitted to these agencies for review and approval. Under Rule 1166, a Mitigation Management Plan for potential VOC emissions during excavation will be submitted to SCAQMD and subject to SCAQMD approval. A site-specific CalEPA Hazardous Waste Generator Identification Number will be obtained and manifests completed by the licensed transporter.
- A soil vapor extraction (SVE) system will be designed and installed to remove and treat VOCs in the soil gases. If Health Risk Assessments indicate the need, a vertical barrier/line will be installed around the perimeter of the area to prevent soil gases with VOCs from migrating back into the area. Gases migrating from below the clean backfill or deeper depths will be extracted through the SVE slotted wells and treated by the SVE treatment system. Treatment for VOCs typically involves carbon filtration unless hydrogen sulfide is detected in the gas stream. Operating and maintenance procedures for the SVE system and permit applications will be prepared and approved by the oversight agency and SCAQMD.
- If the City determines it is necessary, a "Pilot Study" will be designed and implemented to evaluate the sustainable flow rate and concentration of VOCs in the soil gas stream and to determine the size of the final SVE system components.
- Design of the SVE system, preparation of a Design Report and Work Plan/Remedial Action Plan (including HASP) will be submitted to and subject to approval by the CUPA and LACoFD Site Mitigation Unit.
- The SVE will be implemented and monitored. This may require several months to over a year.
- The City shall provide documentation to the CUPA, LACoFD Site Mitigation Unit, and SCAQMD when the SVE has reached the specified cleanup goals.
- Excavated areas will be backfilled with certified clean soil.

MM-HAZ-3: Remediation Category 3: The City shall be required to implement one of the following three options in areas where no heavy metals were observed, but VOCs were observed in soil gas:

- Option 1: This alternative will involve the same measures as described under Category 2b above. Contaminated soils will be removed to a depth of up to 15 feet or more and shoring of the excavation walls will be necessary. A liner will be installed on the bottom of the excavation area to

prevent contaminated soil gas from re-entering the backfill soils. Gas migration from the side walls will be mitigated by either installation of a vertical liner placed on the side walls of the excavation or SVE wells installed vertically outside the limits of the excavation after backfilling is done. The backfill soil will be certified clean fill and placement will need to meet the geotechnical specifications of the proposed Project design. During the process, the site will require strict emissions controls and monitoring.

- Option 2: This alternative, the SVE treatment method, utilizes extraction and monitoring wells (In Situ Method) or excavation and encapsulation of impacted soils in above ground piles with horizontal slotted piping (On Site Method), a vacuum pump or pumps, and carbon filtration units to extract and remove VOCs from the soil gas. The process will require several steps as follows:
  1. Design and implementation of a "Pilot Study" to evaluate the sustainable flow rate and concentration of VOCs in the soil gas stream and to size the final SVE system components.
  2. Design of the SVE system, preparation of a Design Report and Work Plan/Remedial Action Plan (including HASP) for submittal to and approval by the CUPA and CalEPA/DTSC.
  3. Solicitation of bids for construction and implementation of the remediation.
  4. Implementation and monitoring of the SVE. This may require several months to over a year.
  5. Reporting to the agencies with documentation that the SVE has reached the specified clean up goals.
- Option 3: This alternative will mitigate the impact of the VOCs and/or methane and hydrogen sulfide by precluding soil gases migration from the subsurface soil and intrusion into structures or other facilities and surface emissions. Depending on the type of soil gases and pressure in the soil gas, the systems can include several of the following components:
  - Shallow excavation (three to four feet bgs) to allow installation of the mitigation components (some of the soil will be used to backfill trenches)
  - Gravel layers and slotted piping for gas collection
  - Liner installation above the slotted piping and extending side wide
  - Vacuum pumps for gas extraction or air injection blowers
  - Filtration systems to remove VOCs and/or hydrogen sulfide from the gas stream
  - Geomembrane barriers placed beneath concrete slabs and/or foundations or fill areas
  - Installation of automated and/or manual monitoring systems

MM-HAZ-4: Remediation Category 4

The City shall be required to implement the following measures in areas within Caltrans ROW where soil contains ADL:

- In accordance with the Caltrans/DTSC ADL Agreement, soils above a depth of approximately 2.9 feet bgs will require one foot of clean soil cover to remain on site per the Caltrans/DTSC ADL Agreement.

MM-HAZ-5: Soil Gas Sampling

Additional soil gas sampling and testing is recommended for completion in PARC Areas 1A, 5, 6, 7, and 8. The additional sampling could potentially eliminate or reduce the need for soil gas remediation.

Ambient air and soil gas samples shall be tested for VOCs. If soil gas samples in PARC Area 6 yield ILCR values below the *de minimis* risk target or within the risk management range, no further mitigation and/or remedial actions will be required. If ILCR values are above the *de minimis* risk target, additional remedial actions will be taken to lower values to within the risk management range, such as applying SVE to a maximum depth of 15 to 20 feet bgs.

MM-HAZ-6: Methane Mitigation and Testing

Methane mitigation applies to PARC Area 1A, which is located within the Methane Zone, and portions of PARC Area 7, where soil gases were detected and impervious surfaces are to be constructed adjacent to existing buildings. Any buildings (except naturally vented) to be constructed in Area 1A shall have methane mitigation systems meeting Level II requirements involving membrane and passive venter per Table 71, unless additional testing indicates no subsurface gas pressure and lower methane concentrations. In addition, paved areas that are over 5,000 square feet in area and within 15 feet of the exterior wall of a commercial, industrial, institutional building, shall be vented in accordance with the Methane Mitigation Standards, design Level II, unless additional testing indicates no subsurface gas pressure and lower methane concentrations.

Additional testing for methane concentrations and subsurface pressure shall be completed in accordance with the Division 71 Methane Seepage Regulations testing requirements should any buildings or paved areas over 5,000 square feet be proposed in PARC Area 1A and in PARC Area 7 where methane was detected.

3.8.6 Significant Unavoidable Adverse Impacts

With implementation of **MM-HAZ-1** through **MM-HAZ-6** described above, the proposed Project would not result in significant unavoidable adverse impacts.

3.8.7 Cumulative Impacts

Project level impacts related to Hazards and Hazardous Materials are not likely to result in or have significant cumulative impacts to Hazards and Hazardous Materials in relation to other projects in the vicinity of the proposed Project. As described in this section, there is a Remedial Action Order at Parcel 32 and there is ongoing cleanup activity at Metro 20, In addition, the City has filed RCRA Subtitle C Site Identification Form to notify the CalEPA/DTSC of hazardous levels of heavy metals in the soil at Parcels 18.1 and 18.2. With implementation of the mitigation measures described in Section 3.8.5, the proposed Project is not expected to result in any significant impacts on Hazards and Hazardous Materials. Other projects in the vicinity of the proposed Project (see **Table 1-1**) would be required to comply with all federal and state regulations and be consistent with local policies related to Hazards and Hazardous Materials, including RCRA, the DTSC Environmental Health Standards for the Management of Hazardous Waste, SCAQMD Rules, the provisions of the LAFD Hazardous Materials Unit, OSHA and Cal/OSHA safety standards, and U.S. DOT hazardous materials regulations. In addition, other projects would be required

to develop avoidance, minimization, and mitigation measures. Therefore, the proposed Project would not result in cumulatively considerable impacts related to Hazards and Hazardous Materials.

3.9 Hydrology and Water Quality

This section describes the affected environment and regulatory setting for Hydrology and Water Quality related to the Project Area. In addition, this section describes the potential impacts related to Hydrology and Water Quality that would result from implementing the proposed Project. As noted in the analysis below, impacts associated with Hydrology and Water Quality during construction and operation of the proposed Project would be less than significant and no mitigation measures are required.

The analysis in this section is based on the *Preliminary Hydrology and Hydraulics Report* (Tetra Tech, 2018a), the *Conceptual Low Impact Development Report* (Tetra Tech, 2018b), and the *Geotechnical Site Investigation* report (Hushmand Associates, Inc., 2018) prepared for the proposed Project.

3.9.1 Regulatory Setting

A review of the various federal, state, regional, and local government regulatory requirements was conducted to identify regulations that relate to Hydrology and Water Quality. This section summarizes the various regulatory requirements that are relevant to the proposed Project.

3.9.1.1 Federal

Clean Water Act

The Federal Water Pollution Control Act, commonly referred to as the Clean Water Act (CWA) of 1972, regulates the discharge of pollutants into waters of the United States. As defined in 40 CFR 230.3(s), waters of the United States include:

1. All waters which are currently used, or were used in the past, or may be susceptible to use in interstate or foreign commerce, including all waters which are subject to the ebb and flow of the tide;
2. All interstate waters including interstate wetlands;
3. All other waters such as intrastate lakes, rivers, streams (including intermittent streams), mudflats, sandflats, wetlands, sloughs, prairie potholes, wet meadows, playa lakes, or natural ponds, the use, degradation or destruction of which could affect interstate or foreign commerce including any such waters:
    a. Which are or could be used by interstate or foreign travelers for recreational or other purposes;
    b. From which fish or shellfish are or could be taken and sold in interstate or foreign commerce; or
    c. Which are used or could be used for industrial purposes by industries in interstate commerce;
4. All impoundments of waters otherwise defined as waters of the United States under this definition;
5. Tributaries of waters identified in paragraphs (s)(1) through (4) of this section;

6. The territorial sea; and
7. Wetlands adjacent to waters (other than waters that are themselves wetlands) identified in paragraphs (s)(1) through (6) of this section; waste treatment systems, including treatment ponds or lagoons designed to meet the requirements of CWA (other than cooling ponds as defined in 40 CFR 423.11(m) which also meet the criteria of this definition) are not waters of the United States.

Under the CWA, the U.S. Environmental Protection Agency (U.S. EPA) implements pollution control and water quality standards for surface waters.

Section 303: Impaired Water Bodies (303[d] list) and Total Maximum Daily Loads

Section 303(d) requires states to identify impaired water bodies that do not meet state water quality standards. Within California, the State Water Resources Control Board (SWRCB) and Regional Water Quality Control Boards (RWQCB) assess water quality monitoring data for surface waters every two years to determine whether water bodies contain levels of pollutants that exceed the water quality standards (i.e., impaired water bodies). A state's list of impaired or threatened water bodies is referred to as a 303(d) list. States are required to develop total maximum daily loads (TMDL) for 303(d) listed impaired water bodies, which are the greatest amount of a pollutant that a water body can receive while still meeting water quality standards. States must then implement programs to remediate and control pollutants to meet the TMDLs. TMDLs specify allowable pollutant loads from all sources (point, non-point, and natural) for a given watershed. TMDLs are used to develop National Pollutant Discharge Elimination System (NPDES) permit limits for stormwater discharges (NPDES permits are discussed further below), which may trigger additional monitoring and reporting.

Section 401: Water Quality Certification

Under Section 401 of the CWA, any project requiring a federal license or permit that may result in a discharge to a water of the United States must obtain a State Water Quality Certification, which certifies that the project will be in compliance with state water quality standards. The most common federal permits triggering 401 Certification are CWA Section 404 permits issued by the United States Army Corps of Engineers (USACE) (see below for a description). The 401 permit certifications are obtained from the appropriate RWQCB, dependent on the project location, and are required before the USACE issues a 404 permit.

In some cases, the RWQCB may have specific concerns with discharges associated with a project. As a result, the RWQCB may issue a set of requirements, known as waste discharge requirements (WDR), under the State Water Code (Porter-Cologne Act) that define activities, such as the inclusion of specific features, effluent limitations, monitoring, and plan submittals that are to be implemented for protecting or benefiting water quality. WDRs can be issued to address both permanent and temporary discharges of a project.

Section 402: National Pollutant Discharge Elimination System Permits

Section 402 establishes the NPDES, a permitting system for the discharges (except for dredge or fill material) of any pollutant into waters of the United States. RWQCBs administer this permitting program in California. Section 402(p) requires permits for discharges of stormwater from industrial/construction and municipal separate storm sewer systems (MS4s).

Section 404: Permits for Dredged or Fill Material

Section 404 establishes a permit program for the discharge of dredge or fill material into waters of the United States (U.S. Environmental Protection Agency, 2019). This permit program is administered by the USACE. Activities that are regulated under this program include fill for development, water resource projects, infrastructure development, and mining projects. Under the permit program, no discharge of dredge or fill material is permitted if (1) a practicable alternative that is less damaging to the aquatic environment exists or (2) the nation's waters would be significantly degraded. The permit requires that steps to avoid or minimize impacts to wetlands, streams, and other aquatic resources are shown, and compensation is provided for unavoidable impacts.

Section 10 of Rivers and Harbors Act of 1899

Section 10 of the Rivers and Harbors Act of 1899 requires that activities conducted below the ordinary high water elevation of navigable waters of the United States be approved and permitted by the USACE. Regulated activities may include the placement or removal of structures; the dredging or disposal of dredged material; and the filling, excavation, or disturbance of soils and sediments, or the modification of a navigable waterway. Navigable waters of the United States are "waters that are subject to the ebb and flow of the tide and/or are presently used, or have been used in the past, or may be susceptible for use to transport interstate or foreign commerce" (33 CFR 329.4).

Section 14 of Rivers and Harbors Act of 1899/Section 408

Section 14 of the Rivers and Harbors Act of 1899, codified as 33 USC 408 (Section 408) requires that any alteration of a public work (e.g., sea wall, bulkhead, jetty, dike, levee, wharf, pier, or other work) built by the United States not be injurious to the public interest and not impair the usefulness of the work. A Section 408 permit allowing such alterations must be obtained from USACE prior to Section 10/404 decisions.

Federal Executive Order 11988 – Floodplain Management

Executive Order 11988 requires federal agencies to avoid long- and short-term adverse impacts related to the occupancy and modification of flood plains to the greatest extent possible (42 FR 26951, 3 CFR, 1977 Comp., p. 117). In addition, federal agencies are required to avoid supporting the development of floodplains unless it is the only practicable alternative. Federal agencies are expected to take action in ways that reduce the risk of flood loss, minimize impacts of floods on human safety and health, and restore and preserve the values and functions of flood plains. USACE must consider the requirements of Executive Order 11988 when determining whether or not to issue a Department of Army permit (i.e., permit required for the discharge of dredged or fill material into waters of the United States).

National Flood Insurance Act and Flood Disaster Protection Act

The National Flood Insurance Act of 1968 led to the creation of the Federal Insurance Administration, and made flood insurance available for the first time (Federal Emergency Management Agency, 1997). The Flood Disaster Protection Act of 1973 required the purchase of flood insurance for properties located in Special Flood Hazard Areas. Both the National Flood Insurance Act and the Flood Disaster Protection Act aim to restrict development in floodplains to limit costs associated with disaster relief and reduce the need for flood protection structures.

3.9.1.2 State

Porter-Cologne Act

The RWQCB also asserts authority over waters of the state under the Porter-Cologne Act, which establishes a regulatory program to protect water quality and to protect beneficial uses of state waters. The Porter-Cologne Act empowers the RWQCB to formulate and adopt a Water Quality Control Plan that designates beneficial uses and establishes water quality objectives that in its judgment would ensure reasonable protection of beneficial uses. Each RWQCB establishes water quality objectives that will ensure the reasonable protection of beneficial uses and the prevention of water quality degradation. Dredge or fill activities with the potential to affect water quality in these waters must comply with Waste Discharge Requirements (WDR) issued by the RWQCB.

California Water Code

The term "waters of the state," under jurisdiction of the RWQCB, is defined by California Water Code as "any surface water or groundwater, including saline waters, within the boundaries of the state" (California Water Code Section 13050(e)). This definition is broader than waters of the United States.

The State Water Resources Control Board (SWRCB) redefined wetlands as part of *Procedures for Discharges of Dredged or Fill Material to Waters of the State* (State Water Resources Control Board 2016). In April 2019, the Board adopted a new common, statewide definition and procedures for wetlands, which became effective on May 28, 2020. The USACE and U.S. EPA definition of wetlands are defined by hydrology, soils, and vegetation. The Board's definition refers to the same three factors, but also allows unvegetated areas (e.g., desert playas) to be classified as wetlands.

National Pollutant Discharge Elimination System

Section 402 of the Clean Water Act requires that a discharge of any pollutant or combination of pollutants to surface waters that are deemed waters of the United States be regulated by a NPDES permit. The NPDES permitting requirements are implemented, monitored, and enforced by the SWRCB and RWQCB. Programs to reduce pollutants carried by stormwater runoff into waters of the United States are to be developed for all communities with populations over 50,000. State or regional general permits regulating discharges are developed and implemented by the SWRCB and RWQCB. These permits aid in the enforcement of the program. Individual NPDES permits can be issued by the SWRCB and RWQCB to cover individual discharges and general permits can be issued to cover a group of discharges. The SWRCB can issue general permits on a statewide basis and the RWQCB can issue general permits on a regional basis.

Construction General Permit

In accordance with CWA Section 402(p) and similar to the goals of the Porter-Cologne Water Quality Control Act, a statewide NPDES General Permit for Stormwater Discharges Associated with Construction Activity (Order No. 2009-0009-DWQ, NPDES No. CAS000002, as amended by Order 2010-0014-DWQ and 2012-006-DWQ) (Construction General Permit) was issued by the SWRCB. Required coverage under this Construction General Permit occurs when a construction project disturbs more than one acre of land or that is part of a common plan of development or sale disturbing more than one acre of land. The landowner or applicable entity is required to file a Notice of Intent (NOI), Stormwater Pollution

Prevention Plan (SWPPP), and mail the permit fee to the SWRCB to obtain coverage by the Construction General Permit.

The Project site is more than one acre; therefore, the NPDES Construction General Permit (Order No. 2009-0009-DWQ, NPDES No. CAS000002) does apply.

Municipal General Permit

Permits for municipal stormwater discharges are mandated by CWA Section 402 and are regulated under the NPDES General Permit for MS4 Permits. Medium municipalities (serving between 100,000 and 250,000 people) and large municipalities (serving more than 250,000 people) are covered by Phase I MS4 Permit regulations. Small municipalities (serving less than 100,000 people) are covered by Phase II MS4 Permit regulations. These facilities include public campuses, military bases, and hospital and prison complexes.

To reduce the discharge of pollutants into stormwater to the maximum extent possible, programs and measures are developed and implemented by cities and counties as required by the MS4 Permits. Some of these include best management practices (BMP), control techniques, system designs, and engineering methods. These permit holders have created stormwater management plans for their individual locations as a part of the permit compliance. The plans lay out the framework for the requirements for construction sites, municipal operations, commercial and industrial businesses, and planning and land development. For specific projects under this program, the project applicants must follow the guidance outlined in the stormwater management plan per the permit holder of that location.

In California, SWRCB recommends the use of Low Impact Development (LID) to adhere to the municipal stormwater permits. To manage stormwater to sustain a site's predeveloped runoff rates and volumes, LID has incorporated site design which includes the use of retention basins and the minimizations of impervious surfaces.

The City of Los Angeles is a permittee under the current MS4 Permit for Los Angeles County (Order No. R4-2012-0175), as described further under Section 3.9.1.3, Los Angeles County Municipal Stormwater NPDES Permit (MS4 Permit).

3.9.1.3 Local

Los Angeles Basin Water Quality Control Plan (Basin Plan)

The California Water Code (Section 13240), as required by the CWA, requires the preparation and adoption of water quality control plans (Basin Plans). CWA Section 303 requires states to implement water quality standards that "consist of the designated uses of the navigable waters involved and the water quality criteria for such waters base upon such uses." California Water Code (Section 13050) states that Basin Plans consists of a list of beneficial uses to be protected, water quality objectives to protect those uses, and a program of operation needed for completing the water quality objectives within a specific area. The Basin Plans are regulatory references used to meet the state and federal requirements for water quality control. All inland surface waters, enclosed bays, and estuaries (including wetlands) in the Region are specified in the Basin Plan. The Basin Plan is currently undergoing a triennial review.

Water Discharge Requirements for Discharges of Groundwater from Construction and Project Dewatering to Surface Waters in Coastal Watersheds of Los Angeles

The General Waste Discharge Requirements for Discharge of Groundwater from Construction and Project Dewatering to Surface Waters in Coastal Watersheds of Los Angeles and Ventura Counties (Order No. R4-2013-0095, NPDES No. CAG994004) is a regional general permit for groundwater discharge produced from dewatering operations or other wastewaters discharges that must be removed from a work location in order to proceed with construction.

The waste from construction dewatering (except stormwater) is regulated as a low-threat discharge to surface waters. To comply with this General Permit, an NOI and Report of Waste Discharge must be submitted to the Los Angeles RWQCB. Based on the depth of the groundwater, the proposed Project may require groundwater dewatering during construction and would be subject to the requirements of this General Permit.

Los Angeles County Municipal Stormwater NPDES Permit (MS4 Permit)

The current MS4 Permit for Los Angeles County (Order No. R4-2012-0175) was adopted on November 8, 2012, became effective December 28, 2012, and expired on December 28, 2017. Although this permit is expired, the permit states "if a new order is not adopted by the expiration date above, then the Permittees shall continue to implement the requirements of this Order until a new one is adopted" (Los Angeles Regional Water Quality Control Board, 2016). Los Angeles County Flood Control District, County of Los Angeles, and 84 incorporated cities within the watershed (including the city of Los Angeles and excluding the city of Long Beach) are included in Order No. R4-2012-0175 of the stormwater permit for the MS4s in the Los Angeles Region. As required by the permit, in order to reduce the discharge of pollutants from stormwater to the maximum extent possible (MEP), effectively prohibit non-stormwater discharges, and protect receiving waters, runoff must be addressed during the major phases of urban development. In order to reduce discharge of pollutants from stormwater to the MEP, protect receiving waters, and effectively prohibit non-stormwater discharges, runoff must be addressed during major phases of urban development.

For all "new development" and "redevelopment" projects that meet criteria as specified in the permit, the permit requires that prior to project completion, the design and implementation of specific post-construction controls to mitigate stormwater pollution. The permit bans non-stormwater discharges to the MEP during the operation of new or redevelopment. As identified in the Los Angeles Basin Water Quality Control Plan (Basin Plan), stormwater waste must meet water quality-based effluent limitations (WQBELs) or water quality standards for discharge and must not contribute to the exceedance of water quality standards for receiving waters. Each permittee is required to develop a Planning and Land Development Program for all new development, which requires permittees to:

1. Minimize the impacts on water quality from development by using smart growth practices such as safeguarding environmentally sensitive areas and directing development towards existing communities via infill or redevelopment.
2. Decrease the adverse impacts from stormwater runoff on the biological integrity of Natural Drainage Systems and the beneficial uses of water bodies in line with the requirements under CEQA (California Public Resources Code Section 21000 et seq.).

3. Decrease the impervious surfaces on land developments by minimizing soil compaction during construction, implementing project designs that minimize the impervious area footprint, and using the LID design principles to mirror pre-development hydrology via infiltration, evapotranspiration, and rainfall harvest and use.
4. Maintain and enhance riparian buffers when possible.
5. Decrease pollutant loadings from impervious structures through the use of appropriate BMPs, LIDs, and treatment control BMPs.
6. Properly select, design, and maintain LID and hydromodification control BMPs to address pollutants that are likely to be generated, reduce changes to pre-development hydrology, and assure long-term function.

Organize the selection of BMPs to remove stormwater pollutants, reduce stormwater runoff volume, and beneficially use stormwater to support an integrated approach to protecting water quality and managing water resources.

City of Los Angeles Development Construction Model Program

NPDES Phase II requirements on construction sites within incorporated city lands are addressed by the City of Los Angeles (City) Development Construction Model Program. The City's Reference Guide for Stormwater Best Practices includes BMPs for construction (City of Los Angeles Bureau of Sanitation, 2004). The BMPs are in line with those created by the state and county and include site management practices, erosion and sedimentation control measures, materials and waste management, and general preventative maintenance and inspection.

City of Los Angeles Low Impact Development Ordinance and Handbook

Ordinance Number 181899 in the City's Municipal Code imposes rainwater Low Impact Development (LID) strategies on projects that require building permits. The purpose of the ordinance is to:

- Promote rainwater harvesting
- Promote stormwater runoff management
- Promote water conservation
- Improve water quality
- Provide groundwater recharge
- Promote recycled water reuse and grey water use

The City's *Planning and Land Development Handbook for Low Impact Development* was created to assist developers in complying with the requirements of the City's Stormwater Program. The handbook reflects the latest LID requirements as defined by the NPDES Permit (NPDES No. CASOO4001) and the City's Municipal Code. The handbook summarizes the City's project review and permitting process, identifies stormwater mitigation measures, and references source and treatment control BMP information (City of Los Angeles, 2016).

3.9.2 Environmental Setting

3.9.2.1 Watershed

The Project Area is within the Los Angeles River Watershed, which covers approximately 834 square miles, equivalent to 533,760 acres (LA Stormwater, n.d.). The watershed is bounded by the Santa Monica, Santa Susana, and San Gabriel mountains to the north and west. The majority of the watershed is highly developed with residential, open space, agricultural, commercial, industrial, and transportation land uses. Much of the southern portion of the watershed captures runoff from urbanized areas, and approximately one-third of the watershed is covered with impervious surfaces.

3.9.2.2 Surface Waters and Local Hydrology

The LA River is the only major surface water that runs through the Project Area. The LA River is approximately 51 miles long, originating in the San Fernando Valley, and emptying into the San Pedro Bay near Long Beach (LA Stormwater, n.d.). Much of the LA River and its tributaries are channelized for flood protection. Within the Project Area, the USACE operates and maintains the flood control channel (U.S. Army Corps of Engineers, n.d.). The LA River flows south through the Project Area.

Water Quality and Beneficial Uses

The Project Area includes Los Angeles River Reach 2, which extends approximately 18.8 miles from Carson to Figueroa Street, and is included on the Final 2016 303(d) List of Impaired Waterbodies (California State Water Resources Control Board, 2019). The water quality impairments for Los Angeles River Reach 2 (Carson to Figueroa Street) are shown in **Table 3.9-1**.

Beneficial uses for Los Angeles River Reach 2 from the LARWQCB Basin Plan (Los Angeles Regional Water Quality Control Board, 2014) are included in **Table 3.9-2**.

The water quality impairments for the downstream receiving waters from the Project Site include:

- **LA River Reach 1 (Estuary to Carson Street):** Ammonia, Cadmium, Coliform Bacteria, Dissolved Copper, Cyanide, Diazinon, Lead, Nutrients (Algae), pH, Trash, and Dissolved Zinc;
- **LA River Estuary (Queensway Bay):** Chlordane (sediment), Dichloro-diphenyl-trichloroethane (DDT) (sediment), Polychlorinated biphenyl (PCB) (sediment), Sediment Toxicity, and Trash; and
- **San Pedro Bay Near/Off Shore Zones**: Chlordane, DDT (tissue and sediment), PCBs (sediment), and Sediment Toxicity (Tetra Tech, 2018b).

The LARWQCB Basin Plan provides the water quality objectives for all inland surface waters and enclosed bays and estuaries in the Region. **Table 3.9-3** includes the water quality constituents described in the Basin Plan and their objectives.

Table 3.9-1: TMDLs for Los Angeles River Reach 2 (Carson to Figueroa Street)

Listed Impairments	Potential Sources	First Year Listed	Estimated U.S. EPA TMDL Completion	Date[1]
Ammonia	Point and Nonpoint Sources	1996	Being addressed with U.S. EPA approved TMDL	2004
Copper	Unknown	2006	Being addressed with U.S. EPA approved TMDL	2005
Indicator Bacteria	Unknown	2014	Being addressed with U.S. EPA approved TMDL	2012
Lead	Point and Nonpoint Sources	1996	Being addressed with U.S. EPA approved TMDL	2005
Nutrients (Algae)	Point and Nonpoint Sources	1996	Being addressed with U.S. EPA approved TMDL	2004
Oil	Natural Sources	1996	TMDL Required	2019
Trash	Nonpoint Source, Surface Runoff, and Urban Runoff/Storm Sewers	1996	Being addressed with U.S. EPA approved TMDL	2008

1. Date of TMDL scheduled completion or U.S. EPA approved TMDL
Source: (California State Water Resources Control Board, 2019)

Table 3.9-2: Beneficial Uses for Los Angeles River Reach 2 (Carson to Figueroa Street)

Beneficial Use	Designation
Municipal and Domestic Supply (MUN)	Potential
Industrial Service Supply (IND)	Potential
Ground Water Recharge (GWR)	Existing
Warm Freshwater Habitat (WARM)	Existing
Wildlife Habitat (WILD)	Potential

Source: (Los Angeles Regional Water Quality Control Board, 2014)

Table 3.9-3: Water Quality Objectives Provided in the Water Quality Control Plan for the LARWQCB Basin Plan

Water Quality Constituent	Water Quality Objective
Ammonia	For inland surface waters not characteristic of freshwater, the four-day average concentration of unionized ammonia shall not exceed 0.035 milligrams per liter (mg/L) and the one-hour average concentration shall not exceed 0.233 mg/L.
Bacteria	In waters designated for non-water contact recreation (REC-2) and not designated for water contact recreation (REC-1), the fecal coliform concentration shall not exceed a log mean of 2000/100 ml (based on a minimum of not less than four samples for any 30-

Water Quality Constituent	Water Quality Objective
	day period), nor shall more than 10 percent of sampled collected during any 30-day period exceed 4000/100 ml.
Bioaccumulation	Toxic pollutants shall not be present at levels that will bioaccumulate in aquatic life to levels which are harmful to aquatic life or human health.
Biochemical Oxygen Demand (BODs)	Waters shall be free of substances that result in increases in the BOD which adversely affect beneficial uses.
Biostimulatory Substances	Waters shall not contain biostimulatory substances in concentrations that promote aquatic growth to the extent that such growth causes nuisance or adversely affects beneficial uses.
Chemical Constituents	Surface waters shall not contain concentration of chemical constituents in amounts that adversely affect any designated beneficial use.
Chlorine, Total Residual	Chlorine residual shall not be present in surface water discharges at concentration that exceed 0.1 mg/L and shall not persist in receiving waters at any concentration that causes impairment of beneficial uses.
Color	Waters shall be free of coloration that causes nuisance or adversely affects beneficial uses.
Exotic Vegetation	Exotic vegetation shall not be introduced around stream courses to the extent that such growth causes nuisance or adversely affects beneficial uses.
Floating Material	Waters shall not contain floating materials, including solids, liquids, foams, and scum, in concentrations that cause nuisance or adversely affect beneficial uses.
Methylene Blue Activated Substances (MBAS)	Waters shall not have MBAS concentrations greater than 0.5 mg/L in water designated MUN.
Nitrogen (Nitrate, Nitrite)	Waters shall not exceed 10 mg/L nitrogen as nitrate-nitrogen plus nitrite-nitrogen (NO_3-N + NO_2-N), 45 mg/L as nitrate (NO_3), 10mg/L as nitrate-nitrogen (NO_3-N), or 1 mg/L as nitrite-nitrogen (NO_2-N).
Oil and Grease	Waters shall not contain oils, greases, waxes, or other materials in concentrations that result in a visible film or coating on the water's surface or on objects in the water, that cause nuisance, or that otherwise adversely affect beneficial uses.
Oxygen, Dissolved (DO)	At a minimum, the mean annual dissolved oxygen concentration of all waters shall be greater than 7 mg/L, and no single determination shall be less than 5.0 mg/L, except when natural conditions cause lesser concentrations.
Pesticides	No individual pesticide or combination of pesticides shall be present in concentrations that adversely affect beneficial uses. There shall be no increase in pesticide concentrations found in bottom sediments or aquatic life.
pH	The pH of inland surface waters shall not be depressed below 6.5 or raised above 8.5 as a result of waste discharges. Ambient pH levels shall not be changed more than 0.5 units from natural conditions as a result of water discharge.

Water Quality Constituent	Water Quality Objective
Polychlorinated Biphenyls (PCBs)	The purposeful discharge of PCBs (the sum of chlorinated biphenyls whose analytical characteristics resemble those of Aroclor-1016, Aroclor-1221, Aroclor-1232, Aroclor-1242, Aroclor-1248, Aroclor-1254, and Aroclor-1260) to waters if the Region, or at locations where the waste can subsequently reach waters of the Region, is prohibited. Pass-through or uncontrollable discharges to waters of the Region, or at locations where the waste can subsequently reach water of the Region, are limited to 70 picograms per liter (30 day average) for protection of human health and 14 nanograms per liter (ng/L) and 30 ng/L (daily average) to protect aquatic life in inland fresh waters and estuarine waters respectively.
Priority Pollutants	The water quality criteria for metals contained in the California Toxics Rule (CTR) are expressed as a function of a water-effect ratio (WER). In the CTR, the U.S. EPA has provided for the adjustment of these water quality criteria through the application by States of the WER procedure. The WER has a default value of 1.0 unless a site-specific WER is approved by the Regional Board. To use a WER other than the default of 1.0, a study must be conducted, establishing the ratio that represents the difference between toxicity in laboratory test water and toxicity in a specific water body based on ambient conditions. The study must be consistent with U.S. EPA procedures on deriving WERs. Notwithstanding the provisions below, regulatory actions to achieve applicable criteria, as modified by site-specific WERs, must ensure that downstream standards will also be achieved. Additional receiving water monitoring shall be required of dischargers subject to site-specific WER(s) to evaluate whether criteria, as modified by the WER(s), are as protective of beneficial uses as the CTR criteria are intended to be.
Radioactive Substances	Radionuclides shall not be present in concentrations that are deleterious to human, plant, animal, or aquatic life or that result in the accumulation of radionuclides in the food web to an extent that presents a hazard to human, plant, animal, or aquatic life.
Solid, Suspended, or Settleable Materials	Waters shall not contain suspended or settleable material in concentrations that cause nuisance or adversely affect beneficial uses.
Taste and Odor	Waters shall not contain taste or odor-producing substances in concentrations that impart undesirable tastes or odors to fish flesh or other edible aquatic resources, cause nuisance, or adversely affect beneficial uses.
Temperature	The natural receiving water temperature of all regional waters shall not be altered unless it can be demonstrated to the satisfaction of the Regional Board that such alteration in temperature does not adversely affect beneficial uses.
Toxicity	All waters shall be maintained free of toxic substances in concentrations that are toxic to, or that produce detrimental physiological responses in, human, plant, animal, or aquatic life.
Turbidity	Waters shall be free of changes in turbidity that cause nuisance or adversely affect beneficial uses. Increases in natural turbidity attributable to controllable water quality factors shall not exceed the following limits:

Water Quality Constituent	Water Quality Objective
	Where natural turbidity is between 0 and 50 Nephelometric Turbidity Units (NTU), increases shall not exceed 20%. Where natural turbidity is greater than 50 NTU, increases shall not exceed 10%.

Source: (Los Angeles Regional Water Quality Control Board, 2014)

3.9.2.3 Site Hydrology

The Project Site currently consists of vacant lots and a construction site for the Viaduct Replacement Project. The Project Area is primarily pervious, with the exception of paved roadways and a few areas of asphalt and concrete paving. The existing impervious surface areas are summarized in **Table 3.9-4.**

Table 3.9-4: Existing Impervious Surfaces

Location	Total Area (Acres)	Existing Impervious Area (Acres)	Existing Impervious Percentage (%)
Proposed Project Site			
West Park	1.93	0.23	12
Arts Plaza	1.62	1.52	94
East Park	7.34	0.22	3
Streets			
Santa Fe Avenue	0.32	0.31	97
Mission Road	0.55	0.50	91
Anderson Street	0.49	0.46	94
Clarence Street	0.34	0.31	91
Total Impervious Surfaces			
Total	12.59	3.55	28

Runoff generally sheet flows across the Project Site into the adjacent roadways, where it is drained by several separate stormwater drain systems that run along the major streets in the Project Area and ultimately drain into the LA River (see **Figure 3.9-1**, Local Stormwater Drain Systems).

The City and LA County maintain the existing catch basins in the Project Area, and the City maintains storm drains in the Project Area. There are no known existing capacity issues associated with the stormwater drainage facilities that receive flows from the Project Site (Los Angeles County Department of Public Works, n.d.). The topography throughout the Project Site is relatively flat (see **Figure 3.9-2**, Topography). Recent improvements to the hydraulic performance of the LA River resulted from the removal of the center pier of the Viaduct, which was demolished during the construction of the Viaduct Replacement Project.

Figure 3.9-1: Local Stormwater Drain Systems

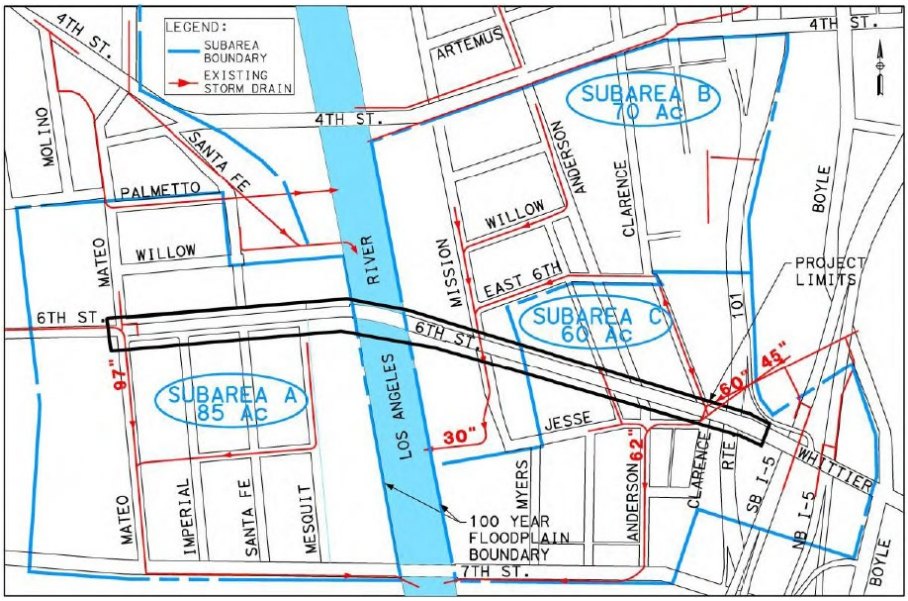

Source: (California Department of Transportation and City of Los Angeles, 2011)

Table 3.9-5 summarizes the peak flow rates of the existing drainage area that encompasses the proposed Project Site and adjacent street areas. The drainage area extends beyond the boundaries of the proposed Project Site because it includes the total land area where precipitation collects and drains into a common outlet.

Table 3.9-5: Existing 24-Hour Design Storm Events

Drainage Subarea	Drainage Area (Acres)	Drainage Impervious Surface Area (Acres)	Percent Impervious Surface Area (%)	2-year (cfs)	5-year (cfs)	10-year (cfs)	25-year (cfs)	50-year (cfs)
Proposed PARC Areas	11.03	1.79	16	4.53	10.51	14.61	19.96	25.33
Adjacent Street Areas	6.03	5.36	89	4.02	7.25	9.48	12.46	15.12
Total	17.06	7.15	42	8.55	17.76	24.09	32.42	40.45

cfs = cubic feet per second
Source: (Los Angeles County Department of Public Works, 2006)

Figure 3.9-2: Topography

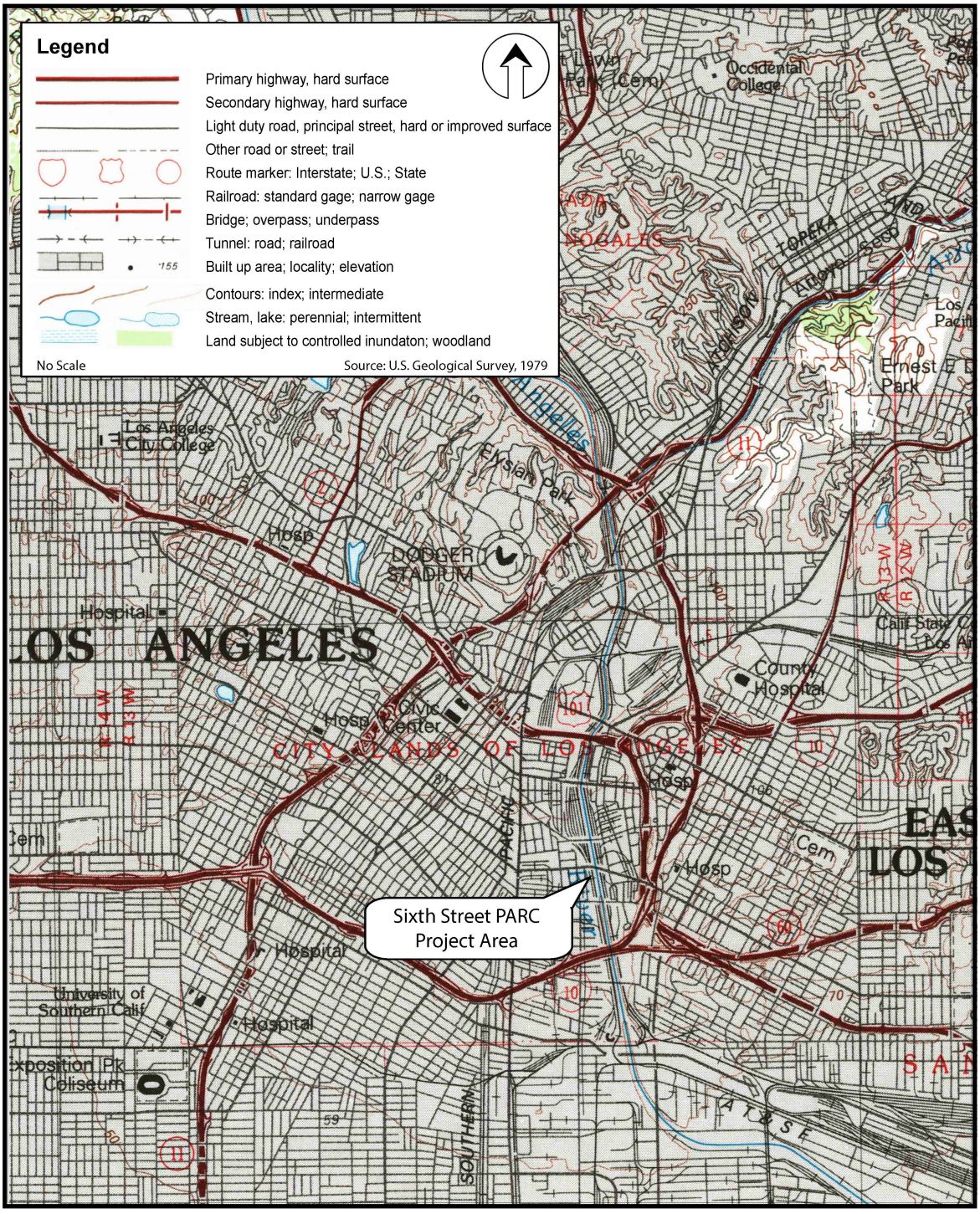

ENGINEERING
CITY OF LOS ANGELES

FIGURE 3.9-2. TOPOGRAPHY
Sixth Street PARC Project

3.9.2.4 Groundwater Hydrology

Regional Groundwater Hydrology

The Project Area is in the Central Subbasin (Subbasin), which covers an area of approximately 177,000 acres in the southeastern portion of the Coastal Plain of Los Angeles Groundwater Basin (California Department of Water Resources, 2004). The Subbasin is bounded on the north by the La Brea high; on the northeast and east by the Elysian, Repetto, Merced, and Puente Hills; on the southeast by Coyote Creek; and on the southwest by the Newport Inglewood fault system. Average precipitation ranges from 11 to 13 inches throughout the Subbasin, with an average of about 12 inches.

Throughout the Subbasin, groundwater occurs at relatively shallow depths in Holocene and Pleistocene age sediments. Groundwater levels throughout the Subbasin have varied over a range of about 25 feet between 1961 and 1977 and have varied through a range of about 5 to 10 feet since 1996 (California Department of Water Resources, 2004).

The Subbasin has not been identified as a critically overdrafted basin (i.e., the average annual amount of groundwater extraction exceeds the long-term average annual supply of water to the basin) (California Department of Water Resources, 2019). Surface flows from the San Gabriel Valley are the major source of replenishment of the groundwater supply in the Subbasin. Groundwater also enters from surface and subsurface flow, and percolation of precipitation, stream flow, and imported and recycled water. Percolation is limited in some areas due to the amount of paved surfaces, and saltwater intrusion occurs in the basin.

Beneficial uses for the Subbasin from the LARWQCB Basin Plan (Los Angeles Regional Water Quality Control Board, 2014) are included in **Table 3.9-6**.

Table 3.9-6: Beneficial Uses for the Central Subbasin

Beneficial Use	Designation
Municipal and Domestic Supply (MUN)	Existing
Industrial Service Supply (IND)	Existing
Industrial Process Supply (PROC)	Existing
Agricultural Supply (AGR)	Existing

Source: (Los Angeles Regional Water Quality Control Board, 2014)

The LARWQB Basin Plan provides the water quality objectives for all ground waters of the Region. **Table 3.9-7** includes the water quality constituents described in the Basin Plan and their objectives.

Table 3.9-7: Regional Objectives for Ground Waters in the LARWQCB Basin Plan

Water Quality Constituent	Water Quality Objective
Bacteria	In ground waters used for MUN the concentration of coliform organisms over any seven day period shall be less than 1.1/100 ml.
Chemical Constituents and Radioactivity	Ground waters designated for use as MUN shall not contain concentrations of chemical constituents and radionuclides in excess of the limits specified in the following provisions of Title 22 of the California Code of Regulations which are incorporated by reference into the following tables of the Basin Plan: Table 64431-A of Section 64431 (Inorganic Chemicals), Table 64444-A of Section 64444 (Organic Chemicals), Table 64442 of Section 64442 (Gross Alpha Particle Activity, Radium-226, Radium-228, and Uranium), and Table 64443 of Section 64443 (Beta Particle and Photon Radioactivity). This incorporation by reference is prospective including future changes to the incorporated provisions as the changes take effect. See Tables 3-8, 3-9, 3-12a, and 3-12b of the Basin Plan. Ground waters shall not contain concentrations of chemical constituents in amounts that adversely affect any designated beneficial use.
Mineral Quality	Numerical mineral quality objectives for the Subbasin include: • TDS: 700 mg/l • Sulfate: 250 mg/l • Chloride: 150 mg/l • Boron: 1.0 mg/l
Nitrogen (Nitrate, Nitrite)	Ground waters shall not exceed 10 mg/L nitrogen as nitrate-nitrogen plus nitrite-nitrogen (NO_3-N + NO_2-N), 45 mg/L as nitrate (NO_3), 10 mg/L as nitrate-nitrogen (NO_3-N), or 1 mg/L as nitrite-nitrogen (NO_2-N).
Taste and Odor	Ground waters shall not contain taste or odor-producing substances in concentrations that cause nuisance or adversely affect beneficial uses.

MUN = Municipal and Domestic Supply; ml = Milliliter; TDS = Total Dissolved Solids; mg/l = Milligram/Liter
Source: (Los Angeles Regional Water Quality Control Board, 2014)

Local Groundwater Hydrology

Based on the Foundation Report for the Viaduct Replacement Project, measured groundwater elevations varied significantly throughout the Project Area and ranged from 170.9 to 228 feet (Earth Mechanics, Inc., 2015). Groundwater was not encountered in any of the boreholes performed during the investigations for the proposed Project (Hushmand Associates, Inc., 2018). This is likely because soil boring depths for the Viaduct Replacement Project, which varied from 3 to 200 feet, were deeper than the boring depths for the proposed Project, which varied from 5.67 to 39.08 feet (Earth Mechanics, Inc., 2015; Hushmand Associates, Inc., 2018). In addition, groundwater may fluctuate due to factors such as seasonal variation, nearby construction, irrigation, or other man-made and natural influences (Earth Mechanics, Inc., 2015).

There is one groundwater supply well that is within the Project Area, located on East Sixth Street near South Clarence Street (California State Water Resources Control Board, 2017). There are several groundwater wells in proximity to the Project Area: 11 environmental monitoring wells near Mateo Street and Seventh Street (approximately 780 feet south of Project Site) and three environmental monitoring wells near Palmetto Street and Seaton Street (approximately 880 feet northwest of Project Site).

As described in Section 3.8, the Los Angeles County Metropolitan Transportation Authority (Metro) 20 site at 590 South Santa Fe Avenue is in the process of implementing remediation of a groundwater and deep soil contamination plumes that extend under the proposed Arts Plaza. This contamination was from leaking underground structures previously located on the Metro site. The work is being performed under a Voluntary Cleanup Agreement between Metro, the U.S. EPA, and the Department of Toxic Substances Control (DTSC).

3.9.2.5 Geology and Soils

As described in Section 3.6, the Project Area is located in a region with Holocene age Quaternary alluvial deposits fan consisting of sand, silt, and gravel (Hushmand Associates, Inc., 2018). According to the Foundation Report for the Viaduct Replacement Project (Earth Mechanics, Inc., 2016), the Project Area is underlain with:

- Artificial Fill: Generally consists of disturbed and reworked alluvial sands, silts, and gravels, varying up to 15 feet thick in the Project Area, due to recent construction along the LA River.
- Quaternary Alluvium: Holocene to Pleistocene age alluvium consisting of active stream channel and unconsolidated floodplain deposits of gravel, sand, silt, and hardened remnants of older deposits.
- Fernando Formation, Upper (Pico) and Lower (Repetto) Members: Pliocene-age marine deposits consisting of tan to olive brown, semi-friable sandstone and conglomerate, in addition to gray to greenish gray, soft, poorly bedded marine claystone, and siltstone.

According to the Web Soil Survey, soils underlying the proposed West Park, Arts Plaza, and East Park are classified as “urban land, commercial, 0 to 5 percent slopes” (Natural Resources Conservation Service, 2017). The portions of the Project Site that include the LA River are underlain with soils classified as “urban land, frequently flooded, 0 to 5 percent slopes.”

Based on the borehole investigation from the *Geotechnical Site Investigation* prepared for the proposed Project, subsurface conditions consisted of about 5 to 20 feet of fill soils consisting of loose to medium dense silty sand to poorly graded sand with silt (Hushmand Associates, Inc., 2018). The fill is underlain by generally dense to very dense coarse grained materials comprising of sands, silty sands, gravelly sands, sandy gravels, cobbles, and possibly boulders.

3.9.2.6 Floodplain

The Project Area is included on the Federal Emergency Management Agency (FEMA) Flood Insurance Rate Map Numbers 06037C1637F and 06037C1636F (Federal Emergency Management Agency, 2008). The Project Area includes the LA River, which is a major floodway; however, flood water is confined within the levees. The remaining portions of the Project Area are located in Zone X, which are areas determined to be outside of the 500-year floodplain (see **Figure 3.9-3**, Floodplain).

Figure 3.9-3: Floodplain

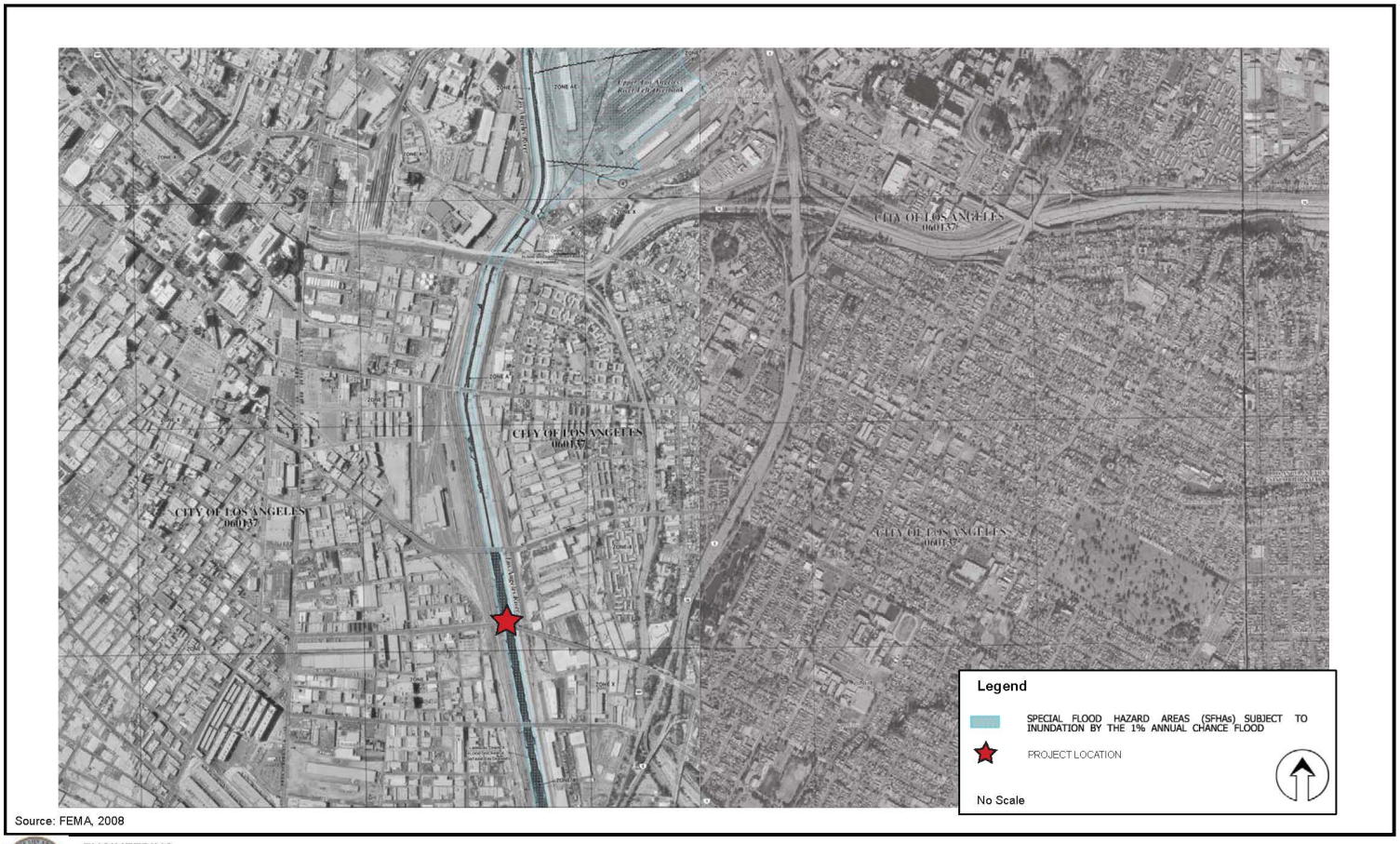

Source: FEMA, 2008

ENGINEERING
CITY OF LOS ANGELES

FIGURE 3.9-3. FLOODPLAIN
Sixth Street PARC Project

3.9.3 Environmental Impact Analysis

3.9.3.1 Methodology

Impacts were analyzed qualitatively based on professional judgment in light of the hydrologic and hydraulic analyses prepared for the proposed Project design. The analysis focused on issues related to water and wastewater facilities, flood risks, groundwater quality, and surface water hydrology. Information from the *Preliminary Hydrology and Hydraulics Report* (Tetra Tech, 2018a), the *Conceptual Low Impact Development Report* (Tetra Tech, 2018b), and the *Geotechnical Site Investigation* report (Hushmand Associates, Inc., 2018) prepared for the proposed Project provided the data for the following analysis.

3.9.3.2 Screening Analysis

Several impacts and corresponding thresholds of significance in the following section were eliminated from further analysis in this EIR. Topics were eliminated if the IS for the proposed Project concluded there would be "No Impact," or if impacts were identified to be "Less Than Significant… and will not be discussed further in the EIR." Therefore, only the topics described in the section below were determined to require further analysis in this EIR. A copy of the Initial Study, which contains the eliminated topics, is provided in Appendix A.

3.9.3.3 Thresholds of Significance

According to Appendix G of the CEQA Guidelines and the *L.A. CEQA Thresholds Guide*, the proposed Project would have a significant impact on Hydrology and Water Quality if it would:

X(b) Substantially decrease groundwater supplies or interfere substantially with groundwater recharge such that the project may impede sustainable groundwater management of the basin.

G.2 Surface Water Quality. A project would normally have a significant impact on surface water quality if discharges associated with the project would create pollution, contamination or nuisance as defined in Section 13050 of the California Water Code (CWC) (see definitions below) or that cause regulatory standards to be violated, as defined in the applicable NPDES stormwater permit or Water Quality Control Plan for the receiving water body.

G.3 Groundwater Level. A project would normally have a significant impact on groundwater level if it would:

- Change potable water levels sufficiently to:
    - Reduce the ability of a water utility to use the groundwater basin for public water supplies, conjunctive use purposes, storage of imported water, summer/winter peaking, or to respond to emergencies and drought;
    - Reduce yields of adjacent wells or well fields (public or private); or
    - Adversely change the rate or direction of flow of groundwater; or
- Result in demonstratable and sustained reduction of groundwater recharge capacity

X(c) Substantially alter the existing drainage pattern of the site or area, including through the alteration of the course of a stream or river or through the addition of impervious surfaces, in a manner which would:

(i) Result in substantial erosion or siltation on- or off-site.

(ii) Substantially increase the rate or amount of surface runoff in a manner which would result in flooding on- or offsite.

(iii) Create or contribute runoff water that would exceed the capacity of existing or planned stormwater drainage systems or provide substantial additional sources of polluted runoff.

(iv) Impede or redirect flood flows.

G.1 Surface Water Hydrology. A proposed project would normally have a significant impact on surface water hydrology if it would:

- Cause flooding during the projected 50-year developed storm event, which would have the potential to harm people or damage property or sensitive biological resources;
- Substantially reduce or increase the amount of surface water in a water body; or
- Result in a permanent, adverse change to the movement of surface water sufficient to produce a substantial change in the current or direction of water flow.

G.2 Surface Water Quality. A project would normally have a significant impact on surface water quality if discharges associated with the project would create pollution, contamination or nuisance as defined in Section 13050 of the CWC (see definitions below) or that cause regulatory standards to be violated, as defined in the applicable NPDES stormwater permit or Water Quality Control Plan for the receiving water body.

G.3. Groundwater Level. A project would normally have a significant impact on groundwater level if it would:

• Change potable water levels sufficiently to:

- Reduce the ability of a water utility to use the groundwater basin for public water supplies, conjunctive use purposes, storage of imported water, summer/winter peaking, or to respond to emergencies and drought;

- Reduce yields of adjacent wells or well fields (public or private); or

- Adversely change the rate or direction of flow of groundwater; or

• Result in demonstrable and sustained reduction of groundwater recharge capacity.

X(e) Conflict with or obstruct implementation of a water quality control plan or sustainable groundwater management plan?

3.9.3.4 Construction Impacts

X(b): Would the project substantially decrease groundwater supplies or interfere substantially with groundwater recharge such that the project may impede sustainable groundwater management of the basin?

Throughout the Project Area, excavation depths are expected to range up to approximately 5 feet for general earthwork, 10 feet for construction of retaining walls, 15 feet for utility trenching, and 22 feet for the removal of portions of the existing LA River Access Tunnel and existing Viaduct foundations. Because measured groundwater elevations ranged from 170.9 to 228 feet and groundwater was not encountered in boring depths up to 39.08 feet, groundwater is not anticipated to be encountered during excavation activities for the proposed Project (Hushmand Associates, Inc., 2018). If groundwater is encountered, the contractor would develop a dewatering plan, and a Dewatering Permit with the Los Angeles RWQCB would also be required.

To evaluate the net increase in impervious surface area as a result of the proposed Project, the baseline condition was defined as the No Project condition. As shown in **Table 3.9-8**, the No Project condition would consist of 7.5 acres (60 percent) of impervious surface area. Under the proposed Project conditions, which include the developed park, roadway improvements, and constructed Viaduct overhead, the Project Site would consist of 8.9 acres (71 percent) of impervious surface area. Therefore, the net increase in impervious surface area as a result of the proposed Project would be 1.4 acres.

The net impervious surface area that the proposed Project would add (1.4 acres) represents 11 percent of the approximately 12.6-acre Project Site and approximately .001 percent of the 177,000-acre Subbasin. Therefore, the reduction of area for surface recharge would be relatively minor when compared to the area of the Subbasin. Because the Subbasin is not critically overdrafted, and given the average precipitation of the Subbasin (12 inches) and depth to groundwater at the Project Site (170.9 to 228 feet), the increase in impervious surface area is not anticipated to substantially reduce groundwater levels. The proposed Project would not substantially decrease groundwater supplies or interfere substantially with groundwater recharge such that the proposed Project may impede sustainable groundwater management of the basin. Therefore, impacts would be less than significant and mitigation is not required.

X(c): Would the project substantially alter the existing drainage pattern of the site or area, including through the alteration of the course of a stream or river or through the addition of impervious surfaces, in a manner which would:

(i) Result in substantial erosion or siltation on- or off-site?

The Project Site is relatively flat. Proposed construction activities would result in temporary changes to the drainage pattern of the Project Site. During construction, the proposed Project would require grading of the entire Project Site (approximately 17,000 cubic yards), excavation to remove hazardous soils (approximately 16,700 cubic yards), and trenching to access below-ground utilities (approximately 35,000 linear feet).

These construction activities would result in erosion and sediment transport, which could increase pollutants in stormwater runoff and receiving waters. To minimize erosion and siltation, the Project Site would be graded to divert water away from structures and from the tops of slopes into existing drainages

Table 3.9-8: Net Impervious Surface Area

Location	Total Acreage (Acres)	Existing Impervious Area (Acres)	Existing Impervious Percentage (%)	Impervious Area to be Removed by the proposed Project	Impervious Area to be Removed under Viaduct	Proposed Project Impervious Area[1] (Acres)	Proposed Project Impervious Percentage[1] (%)	No Project Impervious Area[2] (Acres)	No Project Impervious Percentage[2] (%)	Net Impervious Area[3] (Acres)
Proposed Project Site										
West Park	1.93	0.23	12	0.23	0	0.90	47	0.62	32	0.28
Arts Plaza	1.62	1.52	94	0.77	0.55	1.27	78	1.34	83	-0.07
East Park	7.34	0.22	3	0.22	0	5.05	69	3.93	54	1.12
Total	10.89	1.97	18	1.22	0.55	7.22	66	5.89	54	1.33
Streets										
Santa Fe Avenue	0.32	0.31	97	0.22	0	0.32	100	0.32	100	0.00
Mission Road	0.55	0.50	91	0.39	0	0.55	100	0.53	96	0.02
Anderson Street	0.49	0.46	94	0.19	0	0.49	100	0.47	96	0.02
Clarence Street	0.34	0.31	91	0.12	0	0.34	100	0.33	97	0.01
Total	1.70	1.58	93	0.92	0	1.70	100	1.65	97	0.05
Total Impervious Surfaces										
Total	12.59	3.55	28	2.14	0.55	8.92	71	7.54	60	1.38

1. Under the proposed Project condition, the Project Site would include the developed park, roadway improvements, and constructed Viaduct overhead.
2. Under the No Project condition, the proposed Project Site would not be developed into a park and would remain vacant land with the constructed Viaduct overhead.
3. The net impervious area is equal to the difference between the proposed Project impervious area and the No Project impervious area.

and catch basins. In addition, the proposed Project would comply with the provisions of the NPDES MS4 Permit, which requires the implementation of construction site BMPs to control erosion and sedimentation. A Notice of Intent (NOI) for stormwater discharges associated with construction activities may also be required under the NPDES General Permit. Because the area of proposed construction activities exceeds one acre, a SWPPP would be implemented during the construction phase, which would include BMPs to control erosion and siltation, including silt fencing, fiber rolls, sandbag barriers, drainage inlet protections, and berms at the top of all grade slopes. Stormwater BMPs would follow the latest California Stormwater Quality Association's Stormwater Best Management Practices Handbook (California Stormwater Quality Association, 2003). The proposed Project would incorporate drainage designs that direct stormwater runoff or irrigation runoff away from structures or the top of the slopes. No stormwater would be allowed to discharge over the top of a cut or fill slope. All entrances and exits to the construction site would be stabilized to reduce transport of sediment off-site. Any sediment or other materials tracked off-site would be removed within a reasonable time.

Excavation depths are expected to range from 5 to 22 feet. Because measured groundwater elevations ranged from 170.9 to 228 feet and groundwater was not encountered in boring depths up to 39.08 feet, the need for dewatering is not anticipated (Hushmand Associates, Inc., 2018). If groundwater is encountered, the dewatering plan would include measures to reduce erosion or siltation, in compliance with the requirements of the Los Angeles RWQCB Dewatering Permit.

During Phase II of construction, reinforced concrete planted terraces would be anchored into the existing slope liner on the west and east banks of the LA River. Construction activities within the LA River include installing anchors into the existing slope liner, transporting soil, constructing concrete terraces, and potential future landscaping. The exposure and transport of soil has the potential to increase erosion of bare ground and increase sediment in stormwater runoff. However, as described above, the SWPPP developed for the proposed Project would include BMPs to control erosion and siltation in compliance with NPDES requirements. All work is anticipated to be above the ordinary highwater mark; therefore, a 401/404 permit may not be required. However, as described in Section 3.3, Biological Resources (3.3.1.2) a CDFG Section 1602 Streambed Alteration Agreement from the CDFW would be required as would a CWA Section 408 permit from USACE.

Water diversion is not anticipated to be needed because Phase II construction activities, which include installing anchors into the existing slope liner, transporting soil, constructing concrete terraces, and potential future landscaping, would be performed during the dry season (April 15 through October 15). However, if work in a flowing stream is unavoidable, a water diversion plan would be required, and the entire stream flow would be diverted around the work area by a barrier, temporary culvert, new channel, or other means approved by the CDFW. Should water diversion be necessary, a 401/404 permit would be required (**BMP-HYDRO-13**).

An emergency evacuation plan would be prepared for Phase II construction within the LA River. If measurable rain with 25 percent or greater probability is predicted within 72 hours during project-related activities, all activities within the LA River would cease and protective measures to prevent siltation/erosion would be implemented/maintained (**BMP-HYDRO-13**). With the implementation of BMPs, alterations to drainage patterns during construction in the LA River channel would not result in substantial erosion or siltation onsite or offsite.

The proposed Project would not alter the course of any surface water. In addition, the proposed Project would not result in a substantial alteration to existing drainage patterns that would cause substantial erosion or siltation onsite or offsite. Because the proposed Project would comply with all applicable federal, state, and local requirements to reduce the potential for erosion and siltation onsite and offsite, impacts would be less than significant and no mitigation is required.

(ii) Substantially increase the rate or amount of surface runoff in a manner which would result in flooding on- or offsite?

As described above, construction of the proposed Project would include grading, excavating, and trenching, which could result in temporary changes to the drainage pattern of the Project Site. Impervious surfaces over the proposed Project Site (including the Viaduct overhead) would increase by approximately 1.4 acres, from approximately 7.5 acres (60 percent) to 8.9 acres (71 percent). Therefore, the rate and amount of surface runoff from the Project Site is expected to marginally increase. The Project Site would also be graded to divert water away from structures and from the tops of slopes into drainages and catch basins to prevent flooding onsite or offsite. Construction BMPs would also be included in the MS4 permit that would minimize the potential for flooding.

The proposed Project would not require dewatering. Should dewatering be required, the proposed Project would comply with the General Waste Discharge Requirements for Discharges of Groundwater from Construction and Project Dewatering to Surface Waters in Coastal Watersheds of Los Angeles and Ventura Counties (Order No. R4-2013-0095, NPDES No. CAG994004) to ensure that the proposed Project would not result in flooding onsite or offsite during construction activities. Therefore, flooding from changes to drainage patterns or increases in surface runoff is not anticipated.

Water diversion is not anticipated to be needed for Phase II construction activities, which include installing anchors into the existing slope liner, transporting soil, constructing concrete terraces, and potential future landscaping, would be performed during the dry season (April 15 through October 15). However, if work in a flowing stream is unavoidable, a water diversion plan would be required, and the entire stream flow would be diverted around the work area by a barrier, temporary culvert, new channel, or other means approved by the CDFW. Should water diversion be necessary, a 401/404 permit would be required (**BMP-HYDRO-13**).

The concrete terraces would be constructed above the ordinary high water mark (see **Figure 2-6**), In addition, the removal of the center pier of the former Viaduct in 2016 reduced the water surface elevation of the LA River by about 13.8 feet (HNTB Corporation, 2015). Construction of the terraces would not raise the water surface elevation to levels greater than 13.8 feet (i.e., pre-Viaduct demolition conditions). Therefore, impacts to the capacity of the LA River are not anticipated.

As such, flooding from changes to the existing drainage pattern of the LA River is not anticipated. The proposed Project would not substantially alter the existing drainage pattern of the site or area or substantially increase the rate or amount of surface runoff in a manner that would result in flooding onsite or offsite; therefore, impacts would be less than significant, and no mitigation is required.

(iii) Create or contribute runoff water that would exceed the capacity of existing or planned stormwater drainage systems or provide substantial additional sources of polluted runoff?

Impervious surfaces over the proposed Project Site (including the Viaduct overhead) would increase by approximately 1.4 acres, from approximately 7.5 acres (60 percent) to 8.9 acres (71 percent). Because the proposed Project would reduce the pervious surface area for groundwater recharge, runoff from the Project Site is expected to marginally increase. However, the existing streets and below-grade drainage systems had sufficient capacity to convey runoff from the Project Site, when it was fully developed, with nearly 100 percent impervious surface cover (prior to the construction of the Viaduct Replacement Project).

The proposed Arts Plaza is underlain with contaminated soil and groundwater from the Metro 20 site. The site is currently undergoing remediation under a Voluntary Cleanup Agreement between Metro, U.S. EPA, and DTSC. Proposed construction activities would include grading of the entire Project Site and excavation to remove hazardous soils. The handling, storage, and disposal of contaminants would comply with all applicable federal, state, and local requirements. The Project Site would be remediated to standards acceptable by the Los Angeles County Fire Department (LACoFD) and other regulatory agencies as required, thereby reducing the area affected by contaminants. Therefore, proposed construction activities would not worsen the existing contamination.

The City would coordinate with Metro, U.S. EPA, LACoFD, and DTSC during construction activities. Any non-stormwater discharge would be controlled and properly disposed of through the sanitary sewer system or transported to an approved processing facility to prevent the further contamination of site soils and groundwater. In addition, the proposed Project would include construction BMPs identified in the MS4 permit and SWPPP, including erosion control, sediment control, and waste management BMPs. With implementation of BMPs, which would prevent construction pollutants from entering the LA River, impacts would be less than significant, and mitigation would not be required.

(iv) Impede or redirect flood flows?

As described in Section 3.9.2.6, the Project Area includes the LA River, which is a major floodway with flood flows that are confined within the levees. The remaining portions of the Project Area are located in Zone X, which are areas determined to be outside of the 500-year floodplain. For Phase I, construction staging would be confined to the Project Site in areas outside of the LA River. Phase II construction activities for the proposed River Gateway (i.e., installing anchors into the existing slope liner, transporting soil, constructing concrete terraces, and potential future landscaping) would occur within the 100-year flood hazard area.

There is potential for construction equipment to leak substances that would contaminate stormwater and groundwater. However, the proposed Project would implement stormwater BMPs identified in the MS4 permit and SWPPP, which would reduce the risk of release of pollutants. As described in Section 3.3, vehicles and equipment would be checked daily for fluid and fuel leaks, and drip pans would be placed under all equipment that is parked and not in operation (**BMP-BIO-10**).

To minimize impacts related to flooding, all construction activities within the LA River are anticipated to be performed during the dry season (April 15 through October 15). A water diversion plan is not anticipated for the proposed Project because Phase II construction activities; however, if work in a

flowing stream is unavoidable, a water diversion plan would be required, and the entire stream flow would be diverted around the work area by a barrier, temporary culvert, new channel, or other means approved by the CDFW. Should water diversion be necessary, a 401/404 permit would be required.

An emergency evacuation plan would be prepared for Phase II construction within the LA River. If measurable rain with 25 percent or greater probability is predicted within 72 hours during project-related activities, all activities within the LA River would cease and protective measures to prevent siltation/erosion would be implemented/maintained. With the implementation of BMPs, alterations to drainage patterns during construction in the LA River channel would not result in substantial erosion or siltation onsite or offsite.

As discussed above, the concrete terraces would be constructed above the ordinary high water mark (see **Figure 2-6**), In addition, the removal of the center pier of the former Viaduct in 2016 reduced the water surface elevation of the LA River by about 13.8 feet (HNTB Corporation, 2015). Construction of the terraces would not raise the water surface elevation to levels greater than 13.8 feet (i.e., pre-Viaduct demolition conditions). Therefore, impacts to the capacity of the LA River are not anticipated.

Proposed Project construction would not place structures within a 100-year flood hazard area that would impede or redirect flood flows; therefore, impacts would be less than significant, and mitigation would not be required.

X(e): Would the project conflict with or obstruct implementation of a water quality control plan or sustainable groundwater management plan?

A water quality control plan is designed to preserve and enhance water quality and protect the beneficial uses of all regional waters. The proposed Project is located within the Los Angeles Basin Water Quality Control Plan (Basin Plan), which serves as a regulatory reference used to meet the state and federal requirements for water quality control. All inland surface waters, enclosed bays, and estuaries (including wetlands) in the Region are specified in the Basin Plan. In addition, according to the Sustainable Groundwater Management Act (SGMA), locals Groundwater Sustainability Agencies (GSA) must develop and implement groundwater sustainability plans (GSP) for managing and using groundwater without causing undesirable results, including significant groundwater-level declines, groundwater-storage reductions, seawater intrusion, water-quality degradation, land subsidence, and surface-water depletions.

As stated in Section 3.9.2.4, there is one water supply well in the Project Area. Proposed construction activities would comply with all applicable federal, state, and local requirements to reduce the potential for the release of hazardous waste and other contaminants into groundwater. In addition, construction activities would be subject to the provisions of the CWA and Porter-Cologne Act; NPDES permitting requirements; and other federal, state, and local requirements to ensure that stormwater pollutants resulting from construction would not substantially degrade water quality. A SWPPP would also be prepared, which would require the implementation of water quality construction BMPs to prevent, control, and reduce stormwater pollutants. Therefore, the proposed Project would not conflict with or obstruct implementation of a water quality control plan or sustainable groundwater management plan. Impacts would be less than significant, and no mitigation is required.

3.9.3.5 Operational Impacts

X(b): Would the project substantially decrease groundwater supplies or interfere substantially with groundwater recharge such that the project may impede sustainable groundwater management of the basin?

Although the proposed Project would add new permeable surfaces such as decomposed granite and landscaped areas, the operation of the proposed Project would result in a net increase of 1.4 acres of impervious surface area from approximately 7.5 acres (60 percent) to 8.9 acres (71 percent) due to the construction of hardscaping, sports courts, buildings, playgrounds, and other public amenities. Therefore, the proposed Project would reduce pervious surface area for groundwater recharge.

The net impervious surface area that would be added (1.4 acres) represents 11 percent of the 12.6-acre project site and .001 percent of the 177,000-acre Subbasin. Therefore, the reduction of area for surface recharge would be relatively minor when compared to the area of the Subbasin. Because the Subbasin is not critically overdrafted, and given the average precipitation of the Subbasin (12 inches) and depth to groundwater at the Project Site (170.9 to 228 feet), the increase in impervious surface area is not anticipated to substantially reduce groundwater levels. The proposed Project would not substantially decrease groundwater supplies or interfere substantially with groundwater recharge such that the project may impede sustainable groundwater management of the basin. Therefore, impacts would be less than significant and mitigation is not required.

X(c): Would the project substantially alter the existing drainage pattern of the site or area, including through the alteration of the course of a stream or river or through the addition of impervious surfaces, in a manner which would:

(i) Result in substantial erosion or siltation on- or off-site.

The Project Site consists of a construction site that consists of approximately 3.6 acres of impervious surface area (28 percent cover). Site drainage currently discharges to the streets or existing stormwater drainage systems.

Because the Project Site would be graded and impervious surfaces would be added due to the addition of hardscaping, sports courts, buildings, playgrounds, and other public amenities, the proposed Project would result in changes to the drainage pattern of the Project Site. However, the *Conceptual Low Impact Development Report*, created to conform to the City's LID Manual/Ordinance regarding the installation of post-construction BMPs, includes post-construction stormwater management measures that would be installed during the construction phase to remove pollutants of concern identified in the City's LID Manual from runoff generated during operation of the proposed Project (Tetra Tech, 2018b).

The following structure source control BMPs, based on the City's LID handbook, would be implemented during construction and/or operation of the proposed Project, as applicable (Tetra Tech, 2018b):

- **BMP-HYDRO-3: Storm Drain Message and Signage.** Existing and proposed storm drain catch basins within the vicinity of the Project Site shall be marked and maintained.
- **BMP-HYDRO-4: Outdoor Material Storage Area Design.** Proposed outdoor storage areas shall be organized and maintained to prevent stored materials from being permitted to runoff with stormwater. The outdoor storage of toxic and hazardous materials is not permitted.

- **BMP-HYDRO-5: Outdoor Trash Storage Area Design.** Proposed outdoor trash storage enclosures shall be organized and maintained to prevent the transportation of trash and debris in stormwater. Bins and dumpsters shall remain covered.
- **BMP-HYDRO-6: Employee Training.** Operations and maintenance employees shall be trained and made aware of the source controls, LID BMPs, educational materials, and maintenance requirements for the proposed Project at first hire and yearly thereafter.
- **BMP-HYDRO-7: Common Area Landscape Management.** A landscape maintenance program shall be established in order to optimize water efficiency, limit pollutant introduction from fertilizers and pesticides, manage landscape waste, and prevent soil erosion.
- **BMP-HYDRO-8: Common Area Litter Control.** A waste management program shall be implemented to inspect the Project Site for litter and pick up any litter as necessary on a regular basis.
- **BMP-HYDRO-9: Common Area Catch Basin Inspection.** Catch basins shall be inspected and maintained, at a minimum, yearly and prior to the rainy season.
- **BMP-HYDRO-10: Street Sweeping Parking Lots.** The angled parking spaces along Anderson Street shall be vacuum swept, at a minimum, yearly and prior to the rainy season..
- **BMP-HYDRO-11: BMP Maintenance.** Proposed structural source controls, non-structural source controls, and LID BMPs shall be maintained as outlined in the Operations and Maintenance Plan that would be developed for the proposed Project.

Runoff from the Project Site and tributary Viaduct areas would be captured by proposed stormwater drainage systems, routed to a variety of structural and LID BMPs (e.g., proprietary vaults with media-filled cartridges, catch basin filter inserts, incidental infiltration during sheet flow and within localized vegetated basins, and below-grade capture and use systems), and discharged to the existing stormwater drainage facilities adjacent to the site. In addition, the Project Site would include a combination of paved surfaces and landscaped areas to provide soil stability and further minimize erosion. With incorporation of these stormwater management measures, the proposed Project is not expected to result in substantial erosion or siltation onsite or offsite. Therefore, impacts would be less than significant and no mitigation is required.

(ii) Substantially increase the rate or amount of surface runoff in a manner which would result in flooding on- or offsite.

The proposed Project would increase the impervious surface area of the Project Site by approximately 1.4 acres, which could reduce groundwater recharge and increase the amount of stormwater runoff over the proposed Project Site.

Table 3.9-9 describes the existing and post-Project peak flow rates of the drainage area that encompasses the proposed Project Site and adjacent street areas. The drainage area extends beyond the boundaries of the proposed 12.6-acre Project Site because it includes the total land area where precipitation collects and drains into a common outlet. Although the Viaduct is still under construction, the drainage area for the Viaduct was included in the calculation of the total peak flow rates because the Viaduct would be constructed over, and drain into, portions of the proposed park areas. Therefore, the drainage area of the proposed park areas is linked with the drainage area of the Viaduct. As shown in

Table 3.9-9, the impervious surface percentage of the drainage area would increase from 42 percent to 74 percent, resulting in an increase in peak flow rates for the 2-Year, 5-Year, 10-Year, 25-Year and 50-Year 24-Hour Design Storm Events. Therefore, the proposed Project has the potential to increase runoff that would increase flooding onsite or offsite.

Table 3.9-9: 24-Hour Design Storm Event Results

Drainage Subarea	Drainage Area (Acres)	Drainage Impervious Surface Area (Acres)	Percent Impervious Surface Area (%)	2-year (cfs)	5-year (cfs)	10-year (cfs)	25-year (cfs)	50-year (cfs)
Existing Conditions								
Total	17.06	7.15	42	8.55	17.76	24.09	32.42	40.45
Post-Project Conditions								
Proposed PARC Areas	6.69	2.21	33	6.7	10.9	13.89	17.6	20.54
Viaduct Areas above the Proposed PARC	6.93	6.93	100	7.03	12	15.53	19.28	21.97
Adjacent Street Areas	5.33	4.89	92	4.21	7.34	9.76	12.95	15.17
Total	18.95	14.02	74	17.94	30.24	39.18	49.83	57.68

cfs = cubic feet per second
Source: (Los Angeles County Department of Public Works, 2006)

However, the proposed Project would include the installation of storm drainage systems to convey runoff to the existing main line systems. The existing systems had sufficient capacity to convey runoff from the Project Site, when it was fully developed, with nearly 100 percent impervious surface cover (prior to the construction of the Viaduct Replacement Project). Therefore, the existing stormwater drainage systems would accommodate runoff from the proposed Project Site, which would be more pervious than the pre-Viaduct demolition conditions. As such, impacts would be less than significant, and no mitigation is required.

Although the proposed Project would not provide public access to the LA River channel, the public would be able to enter the LA River Access Tunnel, which would be subject to inundation. Therefore, the proposed Project could cause flooding during the projected 50-year developed storm event that would have the potential to harm people. Safety measures would be added to the LA River Access Tunnel entry point within the Arts Plaza to deter the public from entering the tunnel during a storm event (e.g., vehicular deterrents such as bollards and safety warning devices). In addition, the City would develop a public safety plan to reduce the potential for flooding to cause harm to the public (**MM-HYDRO-1**). The public safety plan would include protocols for protecting pedestrians and potential homeless populations in the LA River Access Tunnel during flood conditions. With implementation of **MM-HYDRO-1**, the proposed Project would not cause flooding during the projected 50-year developed storm event,

which would have the potential to harm people or damage property or sensitive biological resources. Therefore, impacts would be less than significant, and no mitigation is required.

(iii) Create or contribute runoff water that would exceed the capacity of existing or planned stormwater drainage systems or provide substantial additional sources of polluted runoff.

As discussed under **X(c)(ii)** above, the proposed Project would increase impervious surface area, which could increase the amount of surface runoff. Prior to beginning construction of the Viaduct, this area was nearly 100 percent impervious and was served by the existing mainline storm drain system. The proposed stormwater drainage systems would be designed to accommodate stormwater runoff from the Project Site and runoff would not exceed the capacity of the existing and planned stormwater drainage systems.

The proposed Project includes the construction of stormwater drainage systems to capture and route runoff from the Project Site and tributary Viaduct areas to structural or LID BMPs, before being discharged to the existing stormwater drainage facilities adjacent to the site. Runoff from the Project Site would be treated through the use of various capture and use/release BMPs. For the tributary runoff that discharges through the Viaduct bents to the proposed West Park and East Park, structural BMPs (i.e., proprietary vaults with media-filled cartridges) would be installed to treat the runoff for pollutants of concern identified in the City's LID Manual, including sediments, oil and grease, metals, organic materials, and nutrients. Runoff from larger storm events would be bypassed through the internal bypass of each BMP. Due to their locations and depths, it would not be feasible to install additional BMPs at the Viaduct bents draining to the Arts Plaza and directly to the LA River. Rather, these portions of the park would rely on catch basin filter inserts installed as part of the Viaduct Replacement Project to treat the runoff.

The remaining localized rainfall falling on the portion of the Project Site outside of the Viaduct's footprint would be treated through a combination of incidental infiltration during sheet flow along pervious land areas, incidental infiltration within localized vegetated basins, and below-grade capture and use systems below some of the proposed lawn areas in areas with a larger impervious area footprint. The below grade capture and use systems would provide supplemental irrigation for these lawn areas. The incidental infiltration or capture and use of the stormwater would remove pollutants of concern. Larger storm events would be captured and conveyed through proposed local storm drainage systems to new connections to the existing storm drainage system.

The proposed Arts Plaza is underlain with contaminated soil and groundwater from the Metro 20 site. The site is currently undergoing remediation under a Voluntary Cleanup Agreement between Metro, U.S. EPA, and DTSC. Proposed construction activities would include grading of the entire Project Site and excavation to remove hazardous soils. The handling, storage, and disposal of contaminants would comply with all applicable federal, state, and local requirements. The Project Site would be remediated to standards acceptable by LACoFD and other agencies as required, thereby reducing the area affected by contaminants. Therefore, proposed construction activities would not worsen the existing contamination. The City would coordinate with Metro, U.S. EPA, LACoFD, and DTSC during construction activities. Any non-stormwater discharge would be controlled and properly disposed of through the sanitary sewer system or transported to an approved processing facility to prevent the further contamination of site soils and groundwater.

With implementation of the BMPs described above, the proposed Project would not contribute runoff water that would exceed the capacity of existing stormwater drainage systems or provide substantial additional sources of polluted runoff. Therefore, impacts would be less than significant, and no mitigation is required.

(iv): Impede or redirect floodflows.

As described in Section 3.9.2.6, the Project Area includes the LA River, which is a major floodway, with flood flows that are confined within the levees. Phase I of construction would not place structures within a 100-year flood hazard area. However, Phase II of construction would construct reinforced concrete planted terraces on the west and east banks of the LA River channel. Although the structures would be located as high as possible on the LA River banks, the structures could reduce the overall capacity of the LA River and impede or redirect flood flows during high flows.

The former Viaduct included a 22.33-foot by 71-foot pier located in the middle of the floodway, which obstructed flows in the LA River. Demolition of the Viaduct, which occurred in 2016, resulted in improvements to the hydraulic performance of the LA River. As indicated in the 2-Dimensional Hydraulic Study of the LA River prepared for the Viaduct Replacement Project, the bridge and river modifications were projected to reduce the water surface elevation of the LA River by about 13.8 feet (HNTB Corporation, 2015). The new Viaduct, which is anticipated to be complete in 2020, would not obstruct flows in the LA River because the support columns would be located on either side of the LA River channel outside of the high water surface elevation.

The proposed Project would not introduce structures that would raise the water surface elevation to levels greater than 13.8 feet (i.e., pre-Viaduct demolition conditions). Any impacts to the hydraulic performance of the LA River through the construction of reinforced concrete planted terraces are anticipated to be significantly offset by the Viaduct Replacement Project. Therefore, when considered cumulatively with the Viaduct Replacement Project, the proposed reinforced concrete planted terraces terracing and concrete planters are not anticipated to impact flooding within the LA River (see Section 3.9.7 for additional discussion on cumulative impacts). Impacts would be less than significant and no mitigation is required.

Additionally, the proposed Project may require the use of hazardous materials during operation, such as paint for the sports field(s), pesticides and fertilizers for the landscaping, and other materials used for maintenance of the facilities. The handling, storage, and disposal of hazardous materials would comply with all applicable federal, state, and local requirements to reduce the potential for the release of contaminants into groundwater.

The proposed Project includes the construction of capture and use/release BMPs to treat runoff from the Project Site. Structural BMPs (i.e., proprietary vaults with media-filled cartridges) would be installed to treat runoff for pollutants of concern identified in the City's LID Manual, including sediments, oil and grease, metals, organic materials, and nutrients. Runoff would also be treated through lined vegetated biofiltration basins and below-grade capture and use systems, where the runoff would be filtered through the vegetation and soil media to remove pollutants of concern before discharging through a perforated underdrain. These BMPs would prevent the percolation of contaminants into groundwater. Therefore, the proposed Project would not result in an increased level of groundwater contamination.

The proposed Project would result in a net increase in the impervious surface area of the Project Site of 1.4 acres, which represents 11 percent of the 12.6-acre project site and .001 percent of the 177,000-acre Sub basin. The net addition of 1.4 acres of pavement would result in a relatively small addition of impervious surfaces to an area that is already highly developed; therefore, the proposed Project would not substantially affect groundwater recharge. In addition, as discussed under Section 3.9.3.4, the proposed Project would not substantially alter the existing drainage pattern of the proposed Project Site. Therefore, the proposed Project would not substantially affect the rate or change the direction of movement of existing contaminants.

X(e): Would the project conflict with or obstruct implementation of a water quality control plan or sustainable groundwater management plan?

Operation of the proposed Project would be subject to the provisions of the CWA and Porter-Cologne Act; NPDES permitting requirements and the City's LID Ordinance; and other federal, state, and local requirements to ensure that stormwater pollutants resulting from operation would not substantially degrade water quality. In addition, the proposed Project would implement structural and LID BMPs to prevent, control, and reduce stormwater pollutants. Therefore, the proposed Project would not conflict with or obstruct implementation of a water quality control plan or sustainable groundwater management plan. Impacts would not be significant, and no mitigation is required.

3.9.4 Best Management Practices

The following structure source control BMPs, based on the City's LID handbook, would be implemented during construction and/or operation of the proposed Project, as applicable:

BMP-HYDRO-1: Construction Drainage Design

The proposed Project shall incorporate drainage designs that direct stormwater runoff or irrigation runoff away from structures or the top of the slopes. No stormwater will be allowed to discharge over the top of a cut or fill slope.

BMP-HYDRO-2: Off-Site Sediment Transport

All entrances and exits to the construction site shall be stabilized to reduce transport of sediment off-site. Any sediment or other materials tracked off-site shall be removed within a reasonable time.

BMP-HYDRO-3: Storm Drain Message and Signage

Existing and proposed storm drain catch basins within the vicinity of the Project Site shall be marked and maintained.

BMP-HYDRO-4: Outdoor Material Storage Area Design

Proposed outdoor storage areas shall be organized and maintained to prevent stored materials from being permitted to runoff with stormwater. The outdoor storage of toxic and hazardous materials is not permitted.

BMP-HYDRO-5: Outdoor Trash Storage Area Design

Proposed outdoor trash storage enclosures shall be organized and maintained to prevent the transportation of trash and debris in stormwater. Bins and dumpsters shall remain covered.

BMP-HYDRO-6: Employee Training

Operations and maintenance employees shall be trained and made aware of the source controls, LID BMPs, educational materials, and maintenance requirements for the proposed Project at first hire and yearly thereafter.

BMP-HYDRO-7: Common Area Landscape Management

A landscape maintenance program shall be established in order to optimize water efficiency, limit pollutant introduction from fertilizers and pesticides, manage landscape waste, and prevent soil erosion.

BMP-HYDRO-8: Common Area Litter Control

A waste management program shall be implemented to inspect the Project Site for litter and pick up any litter as necessary on a regular basis.

BMP-HYDRO-9: Common Area Catch Basin Inspection

Catch basins shall be inspected and maintained, at a minimum, yearly and prior to the rainy season.

BMP-HYDRO-10: Street Sweeping Parking Lots

The parking plaza shall be vacuum swept, at a minimum, yearly and prior to the rainy season.

BMP-HYDRO-11: BMP Maintenance

Proposed structural source controls, non-structural source controls, and LID BMPs shall be maintained as outlined in the Operations and Maintenance Plan that will be developed for the proposed Project.

BMP-HYDRO-12: Structural and LID BMPs

- Runoff from the Project Site and tributary Viaduct areas shall be captured by proposed stormwater drainage systems, routed to a variety of structural and LID BMPs and discharged to the existing stormwater drainage facilities adjacent to the site. In addition, the Project Site shall include a combination of paved surfaces and landscaped areas to provide soil stability and further minimize erosion.
- The remaining localized rainfall falling on the portion of the Project Site outside of the Viaduct's footprint shall be treated through a combination of incidental infiltration during sheet flow along pervious land areas, incidental infiltration within localized vegetated basins, and below-grade capture and use systems below some of the proposed lawn areas in areas with a larger impervious area footprint. The incidental infiltration or capture and use of the stormwater will remove pollutants of concern. Larger storm events will be captured and conveyed through proposed local storm drainage systems to new connections to the existing storm drainage system.
- Structural BMPs (i.e., proprietary vaults with media-filled cartridges) shall be installed to treat runoff for pollutants of concern identified in the City's LID Manual, including sediments, oil and grease, metals, organic materials, and nutrients. Runoff shall also be treated through lined vegetated biofiltration basins and below-grade capture and use systems, where the runoff will be filtered through the vegetation and soil media to remove pollutants of concern before discharging through a perforated underdrain.

BMP-HYDRO-13: Regulatory Requirements for Water Quality

- To comply with the provisions of the NPDES MS4 Permit, the proposed Project shall implement a SWPPP that includes construction site BMPs to control erosion and sedimentation. BMPs include silt fencing, fiber rolls, sandbag barriers, drainage inlet protections, and berms at the top of all grade slopes. The SWPPP shall also include post-construction stormwater management measures to control pollutants in stormwater discharges during operation of the proposed Project.
- If groundwater is encountered, the contractor shall develop a dewatering plan, and a Dewatering Permit with the Los Angeles RWQCB will also be required. Should dewatering be required, the proposed Project shall comply with the General Waste Discharge Requirements for Discharges of Groundwater from Construction and Project Dewatering to Surface Waters in Coastal Watersheds of Los Angeles and Ventura Counties.
- Proposed construction activities shall comply with all applicable federal, state, and local requirements to reduce the potential for the release of hazardous waste and other contaminants into groundwater. In addition, construction activities will be subject to the provisions of the CWA and Porter-Cologne Act; and other federal, state, and local requirements to ensure that stormwater pollutants resulting from construction will not substantially degrade water quality.
- A water diversion plan is not anticipated for the proposed Project because Phase II construction activities shall be performed during the dry season (April 15 through October 15). However, if work in a flowing stream is unavoidable, a water diversion plan shall be required, and the entire stream flow shall be diverted around the work area by a barrier, temporary culvert, new channel, or other means approved by the CDFW. Should water diversion be necessary, a 401/404 permit will also be required.
- An emergency evacuation plan shall be prepared for Phase II construction within the LA River. If measurable rain with 25 percent or greater probability is predicted within 72 hours during project-related activities, all activities within the LA River shall cease and protective measures to prevent siltation/erosion shall be implemented/maintained. With the implementation of BMPs, alterations to drainage patterns during construction in the LA River channel will not result in substantial erosion or siltation onsite or offsite.
- A Notice of Intent (NOI) for stormwater discharges associated with construction activities may also be required under the NPDES General Permit.
- Stormwater BMPs shall follow the latest California Stormwater Quality Association's Stormwater Best Management Practices Handbook. All entrances and exits to a construction site will be stabilized to reduce transport of sediment off-site. Any sediment or other materials tracked off-site will be removed within a reasonable time.
- Any non-stormwater discharge shall be controlled and properly disposed of through the sanitary sewer system or transported to an approved processing facility to prevent the contamination of site soils and groundwater.

- The handling, storage, and disposal of contaminants shall comply with all applicable federal, state, and local requirements. The Project Site shall be remediated to standards acceptable to LACoFD and other regulatory agencies as required, thereby reducing the area affected by contaminants.

3.9.5 Mitigation Measures

MM-HYDRO-1: Public Safety Plan

Prior to Final Plan approval, the City, in coordination with USACE, shall publish a Public Safety Plan in order to reduce the potential for safety impacts related to flooding. The Public Safety Plan shall include an evacuation plan and protocols for protecting pedestrians and potential homeless populations (e.g., vehicular deterrents such as bollards and safety warning devices) in the LA River Access Tunnel during flood conditions.

3.9.6 Significant Unavoidable Adverse Impacts

There are no significant unavoidable adverse impacts on Hydrology and Water Quality resulting from the construction and operation of the proposed Project.

3.9.7 Cumulative Impacts

The study area for cumulative impacts related to Hydrology and Water Quality is the Los Angeles River watershed. The proposed Project would comply with all required laws, permits, ordinances, and plans, including the MS4 Permit and Construction General Permit requirements, thereby reducing incremental effects to Hydrology and Water Quality. The proposed Project would increase impervious surfaces in the Project Area, which is expected to increase surface runoff and pollutant loads in the receiving watershed.

Prior to the construction of the Viaduct Replacement Project, the Project Site consisted of commercial and industrial properties, with impervious surface area totaling nearly 100 percent. Over the course of the Viaduct construction, the impervious surface area decreased to approximately 3.6 acres (28 percent). As shown in **Table 3.9-8**, the cumulative impervious surface area (including the Viaduct and the proposed Project) would be approximately 8.9 acres (71 percent). Therefore, cumulatively, when combined with the Viaduct Replacement Project, there would be a net decrease in impervious surface area at the Project Site (100 percent to 71 percent), which would result in beneficial impacts on hydrology and water quality such as increasing the area for groundwater recharge and reducing the amount of runoff.

Phase II of the proposed Project includes terracing of the west and east banks of the LA River. Because of the removal of the existing Sixth Street Viaduct as part of the Viaduct Replacement Project, the proposed terracing is not anticipated to impact flooding within the LA River. Any impacts to the hydraulic performance of the LA River through the construction of the terracing are anticipated to be significantly offset by the hydraulic improvements of removing the center pier of the existing Sixth Street Viaduct as part of the Viaduct Replacement Project (Tetra Tech, 2018a). Therefore, when considered cumulatively with the Viaduct Replacement Project, the need for flood control measures would not be necessary.

The areas surrounding the Project Area are heavily urbanized and covered in impervious surfaces. The projects included in **Table 1-1** include primarily infrastructure improvement and in-fill development projects. These projects would occur within already developed areas and would not significantly

contribute to increased runoff as a result of increases in impervious surfaces. Future development projects would comply with all required laws, permits, ordinances, and plans. In addition, projects would be evaluated based on implementation of minimum construction BMPs and LID design principles. In doing so, impacts related to Hydrology and Water Quality, such as flooding, groundwater contamination, and changes to drainage patterns, would be minimized to ensure that the incremental effects of individual projects would not result in substantial cumulative impacts. Therefore, the proposed Project would not result in cumulatively considerable impacts related to Hydrology and Water Quality.

3.10 Land Use and Planning

This section describes the consistency of the Project with adopted land use and planning related regulations applicable to the Project Site and surrounding area. In addition, this section evaluates the potential for the Project to result in environmental impacts related to land uses. As noted in the analysis below, environmental impacts associated with land uses, including impacts during the construction or operation of the proposed Project would be less than significant with the incorporation of mitigation measures.

The information in this section is based on the *Community Impact Assessment* (CIA) prepared for the proposed Project (GPA Consulting, 2019).

3.10.1 Regulatory Setting

A review of the various federal, state, regional, and local government regulatory requirements was conducted to identify regulations that relate to Land Use and Planning. This section summarizes the various regulatory requirements that are relevant to the proposed Project. Relevant goals, policies, and standards are further described in Section 3.10.2.2**.**

3.10.1.1 Local

City of Los Angeles General Plan

As required by the State of California, the City's General Plan addresses goals, policies, and standards related to land use, circulation, housing, conservation, open space, noise, and safety (City of Los Angeles, 2017). To address goals that meet the unique needs of the City, the General Plan also includes elements related to health and wellness, air quality, conservation, and public facilities and services. The City is currently undertaking a comprehensive update to the General Plan.

Framework Element

The General Plan Framework Element is a strategy for long-term growth that guides updates to the community plan and citywide elements, as required by California State law (Government Code Section 65300) (City of Los Angeles, 1996). The Framework Element responds to state and federal mandates to plan for the future by providing goals, policies, and objectives on a variety of topics, such as land use, housing, urban form, open space, transportation, and infrastructure and public services. The Framework Element features several implementation programs, which include amendments to community plans and the zoning ordinance, and the establishment of development standards.

Land Use Element

The Land Use element of the City's General Plan includes Community Plans for 35 community plan areas (along with LAX and Port Plans), within Los Angeles to provide specific neighborhood-level detail, and provide relevant policies and implementation strategies necessary to achieve the General Plan objectives. Community Plans guide the future development in neighborhoods by establishing goals and policies for land use. General land use maps were developed for Boyle Heights and Central City North Community Plan areas where the Project Area is located. The Community Plans for Boyle Heights and Central City North are currently undergoing updates.

Boyle Heights Community Plan

The Boyle Heights Community Plan is part of the City of Los Angeles General Plan and discusses the major planning land use issues and opportunities facing the community. The Boyle Heights Community Plan also establishes a framework for development in accordance with the community's land use policies and programs (City of Los Angeles, 1998). The portion of the Project Area east of the LA River is located in the Boyle Heights community. The Boyle Heights Community Plan is currently being updated, with a draft released in October 2017.

Central City North Community Plan

The Central City North Community Plan is one of the plan areas that comprise the City's Land Use Element and includes land use policies and implementation programs for the community (City of Los Angeles, 2000). The portion of the Project Area west of the LA River is located in the Central City North community.

The City is currently updating the Downtown Community Plan, also known as DTLA 2040 Plan, which includes both the Central City North and Central City Community plan areas (City of Los Angeles, 2019a). The proposed DTLA 2040 Plan intends to address Downtown Los Angeles' growth in population, housing, and employment. An emphasis on transit and new zoning tools are central to the proposed DTLA 2040 Plan.

Open Space Element

The Open Space Element of the City's General Plan provides information to guide decision makers and interested citizens regarding the identification, preservation, conservation, and acquisition of open space in the City (City of Los Angeles, 1973). The Element aims to ensure that the City has sufficient open space to meet its recreational, environmental, health, and safety needs. In addition, the Element aims to conserve and preserve the City's environmental resources, as well as provide open spaces that contribute to the City's identity.

Service Systems Element/Public Recreation Plan

The Public Recreation Plan includes policies and programs that emphasize neighborhood and community facilities, including recreational sites and parks (City of Los Angeles, n.d.). The Plan's objectives include developing standards for the City's public recreational facilities, with the goal of meeting the City's recreational needs and benefiting the greatest number of people, while minimizing costs and environmental impacts.

City of Los Angeles Municipal Code

The City's Municipal Code provides the regulatory framework and ordinances of the City (City of Los Angeles, 2019c). The Municipal Code assists City offices, departments, and other governmental agencies in carrying out their functions, and provides citizens with information regarding the City's regulations. Chapter I of the Municipal Code governs planning, zoning, land regulations, development projects, and other topics pertaining to land use. Chapter I includes definitions and standards for different land uses, and identifies the land uses that are allowed in various zoning districts.

City of Los Angeles River Improvement Overlay District

Effective August 20, 2014, Section 13.17 of the City's Municipal Code provides standards for the establishment of the River Improvement Overlay (RIO) District. The RIO District is a special use district that extends approximately 0.5 miles from the Los Angeles River (LA River) through the communities of Boyle Heights, Arts District, Lincoln Heights, and Chinatown East (City of Los Angeles, 2007b). The RIO District is intended to help the City coordinate land use development along the 32-mile corridor of the LA River within the City's boundaries. Within the RIO District, new projects must conform to the development regulations outlined in the Municipal Code, including landscaping, screening/fencing, lighting, and river access requirements.

re:code LA

The City's existing Zoning Code was adopted in 1946. Re:code LA is a new zoning code for the City that is being developed through the re:code LA effort (City of Los Angeles, 2014). The Department of City Planning initiated re:code LA in 2012 to address the City's current and future transportation, employment, and housing demands based on changes in population size and demographics. The new zoning code is being implemented through community plan updates and it does not apply to the entire city at once.

L.A.'s Green New Deal (Sustainable City pLAn)

The City developed a Sustainable City pLAn (Plan) in 2015 and an updated annual report, titled L.A.'s Green New Deal, was released in 2019 (Office of the Los Angeles Mayor, 2019). The plan consists of 47 targets with milestones and initiatives for a cleaner environment and a stronger economy. The plan includes a vision for expanding tree canopy, providing greater access to parks open space, restoring the LA River, and protecting biodiversity and natural areas. To help meet this vision, the plan established a target of ensuring the proportion of Angelenos living within 0.5 miles of a park or open space is at least 65 percent by 2025, 75 percent by 2035, and 100 percent by 2050. In addition, the plan includes a target for creating 32 miles of bike paths and trails to increase public access to the LA River by 2028.

Los Angeles River Revitalization Master Plan

The Los Angeles River Revitalization Master Plan includes plans to construct a continuous river greenway, providing habitat restoration, open spaces, and pedestrian and bicycle paths along the LA River (City of Los Angeles, 2007a). The Plan includes a 32-mile long and 1-mile-wide planning area, with goals that include, but are not limited to, establishing guidelines for land use and development around the LA River; enhancing and improving communities adjacent to the river; improving public access to the river; and providing recreation and open space.

LA River Design Guidebook

The LA River Design Guidebook provides design recommendations that complement the Los Angeles River Revitalization Master Plan and the design guidelines associated with the RIO Overlay (City of Los Angeles, 2016). The Guidebook is intended for use by the communities of Boyle Heights, Arts District, Lincoln Heights, and Chinatown East, and incorporates the input of residents, stakeholders, and representatives from these communities.

Los Angeles County: LA River Master Plan

The *Los Angeles County LA River Master Plan* was originally published in 1996 to provide for the optimization and enhancement of aesthetic, recreational, flood control, and environmental values by creating a community resource, enriching the quality of life for residents and recognizing the river's primary purpose for flood control (Los Angeles County Department of Public Works, 1996). The plan encompasses all 51-miles of the river, in addition to the Tujunga Wash, which is 9 miles long. The river touches 13 cities and 9 Los Angeles City Council Districts, all of which are addressed in the Master Plan document. The LA River Master Plan goals aim to:

- Ensure flood control and public safety needs are met.
- Improve the appearance of the river and the pride of local communities in it.
- Promote the river as an economic asset to the surrounding communities.
- Preserve, enhance, and restore environmental resources in and along the river.
- Consider stormwater management alternatives.
- Ensure public involvement and coordinate Master Plan development and implementation among jurisdictions.
- Provide a safe environment and a variety of recreational opportunities along the river.
- Ensure safe access to and compatibility between the river and other activity centers.

The LA River Master Plan is currently undergoing a comprehensive update that covers all 51 miles of the river.

3.10.2 Environmental Setting

The Project Area is in the community plan areas of Central City North, located in the eastern portion of Downtown Los Angeles, and Boyle Heights, located immediately east of Downtown Los Angeles (see **Figure 3.10-1**, Community Plan Areas). The LA River forms a natural separation between these two communities. The two communities are also divided by several railroad corridors that run parallel to the LA River along the east and west banks. Existing fencing surrounds the railroad tracks to prevent trespassing onto railroad right-of-way.

Transportation infrastructure in the Project Area includes railroad tracks, United States 101 (U.S. 101), Interstate 5 (I-5), and Interstate 10 (I-10). The Project Area is bordered by Fourth Street to the north and Seventh Street to the south and is bisected by Sixth Street. The other major streets in the Project Area include Mateo Street, Santa Fe Avenue, Mission Road, Anderson Street, and Clarence Street.

Central City North Community Plan Area

The Central City North Community Plan area is bounded by Stadium Way, Lilac Terrace, and North Broadway in the north; the LA River to the east; the City of Vernon to the south; and Alameda Street, Cesar Chavez Avenue, Sunset Boulevard, and Marview Avenue to the west (City of Los Angeles, 2000). Located west of the LA River, the Central City North Community Plan area spans approximately three square miles and is a major industrial district (City of Los Angeles, 2000). Central City North includes

Chinatown, parts of Little Tokyo, and parts of the original Mexican pueblo. The Arts District, formerly an industrial area that was transformed into an artist community in the mid-1970s, is also located within the Central City North Community Plan. The community was traditionally a center of commercial and transit activity but has recently seen an increase in residential units through the conversion of industrial buildings to artists-in-residence and studios.

Boyle Heights Community Plan Area

The Boyle Heights Community Plan Area is bounded by Lincoln Heights and El Sereno to the north, the unincorporated community of East Los Angeles to the east, the City of Vernon to the south, and the LA River to the west (City of Los Angeles, 1998). Located east of the LA River, the Boyle Heights Community Plan area spans approximately six square miles and contains a mix of residential, commercial, industrial, open space, and public facility land uses (City of Los Angeles, 1998). The Boyle Heights Community Plan area includes four major freeways (i.e., I-5, I-10, U.S. 101, and State Route 60 [SR 60]), resulting in segmentation of the community. As one of the first suburbs of Los Angeles, the community includes old infrastructure and residences, as well as some more recent development.

Figure 3.10-1: Community Plan Areas

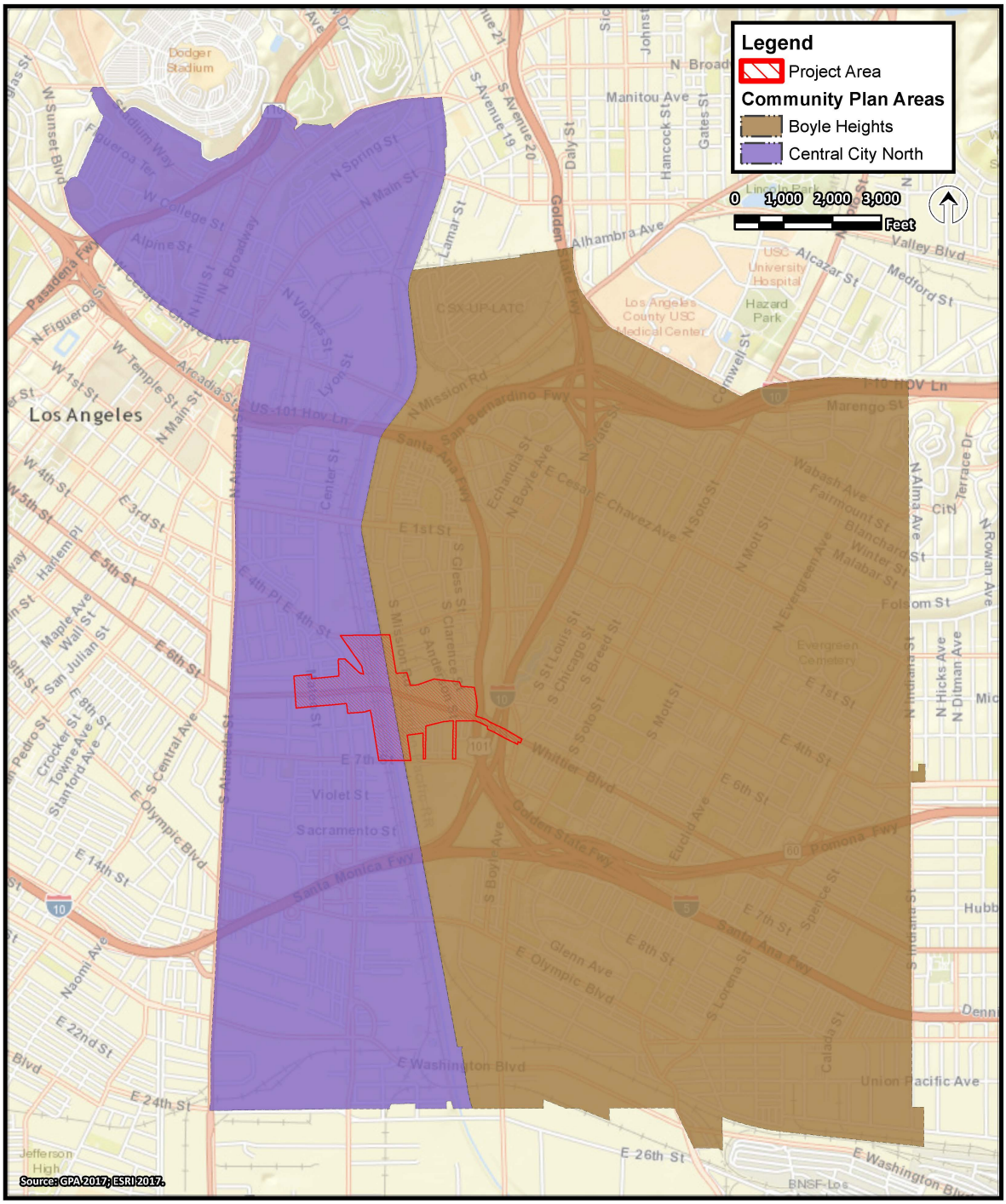

FIGURE 3.10-1: COMMUNITY PLAN AREAS
Sixth Street PARC Project

3.10.2.1 General Plan Zoning and Land Use Designations

The Project Area includes the following land use designations: Limited Industrial (zoned M1), Light Industrial (zoned M2), Heavy Industrial (zoned M3), Open Space (zoned OS) within the LA River channel, and Public Facilities (zoned PF) (see **Figure 3.10-2**, Land Use and **Figure 3.10-3**, Zoning). Zoning regulations for the Project Area are summarized in **Table 3.10-1**. Boyle Heights and Central City North Community Plans are currently undergoing updates.

The entire Project Area west of U.S. 101 is within the RIO District. In 2014, the City's zoning map was amended to include the RIO District, which includes neighborhoods that are adjacent to the LA River within the City (City of Los Angeles, 2007b). The RIO District was implemented to aid in the revitalization of the LA River. All new developments within the RIO District must comply with the prevailing zoning and building codes, in addition to the design guidelines established in the RIO.

Table 3.10-1: Summary of Land Uses within the Project Area

Zone	Use
Manufacturing	
M1	Limited Industrial Restricted Industrial Uses (MR1), Limited Industrial and Manufacturing Uses, no Residential (R) Zone Uses, no hospitals, schools, or churches, any Enclosed Commercial (C2) Use, Wireless Telecommunications, and Household Storage.
M2	Light Industrial M1 and Restricted Light Industrial (MR2) Uses, Additional Industrial Uses, Storage Yards, Animal Keeping, Enclosed Composting, and no R Zone Uses.
M3	Heavy Industrial Restricted Light Industrial (MR2) Uses, any Industrial I Uses, Nuisance Type Uses that are 500 feet from any other zone, and no R Zone Uses.
Other	
PF	Public Facilities Agricultural Uses, Parking Under Freeways, Fire and Police Stations, Government Buildings, Public Libraries, Post Offices, Public Health Facilities, Public Elementary and Secondary Schools, and Qualified Permanent Supportive Housing Projects.
OS	Open Space Parks and Recreation Facilities, Nature Reserves, Closed Sanitary Landfill Sites, Public Water Supply Reservoirs, and Conservation Areas.
Overlay District	
RIO	Provides design guidelines in addition to the underlying zoning regulations.

Source: (City of Los Angeles, 2019b)

Figure 3.10-2: Land Use

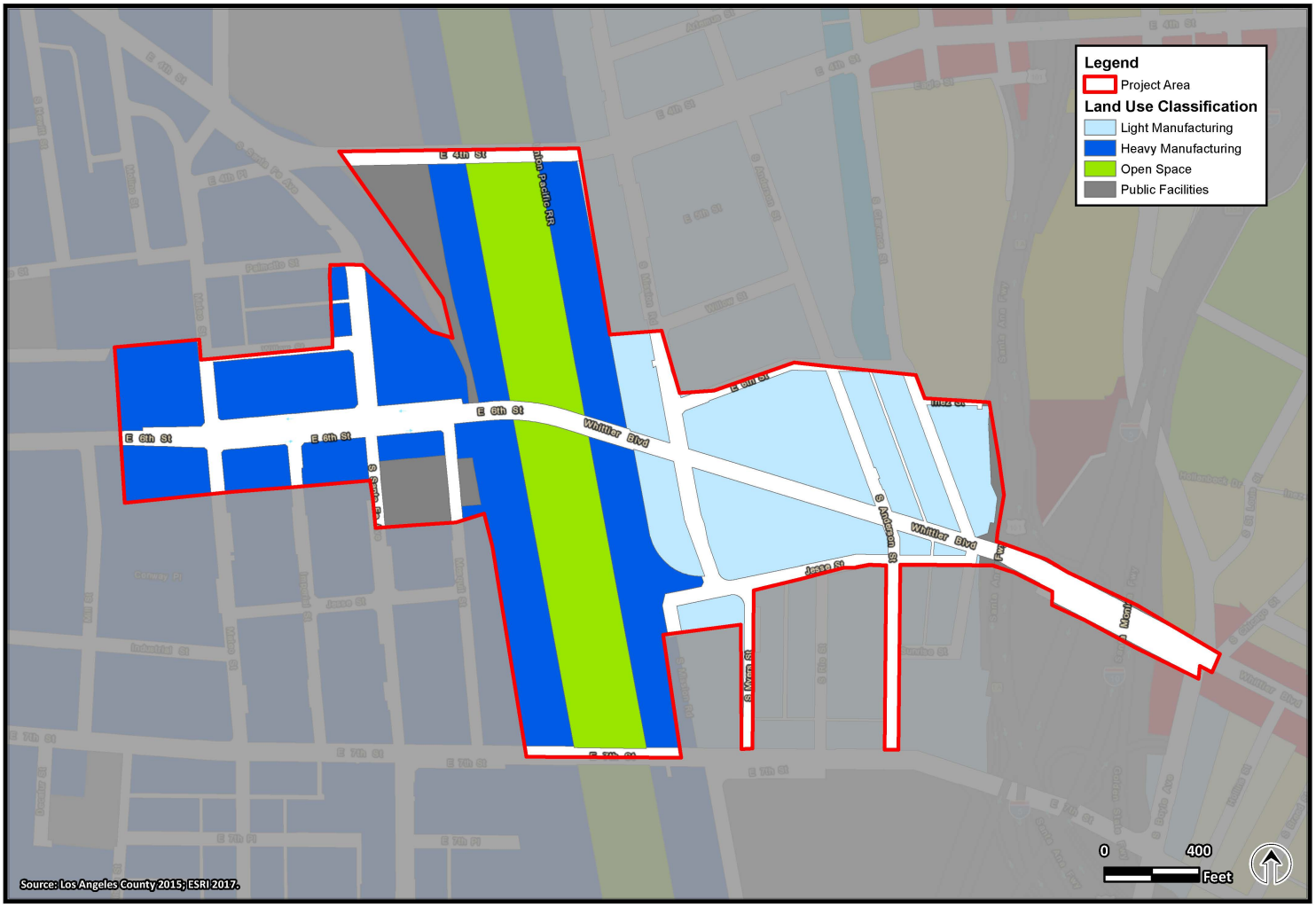

ENGINEERING
CITY OF LOS ANGELES

FIGURE 3.10-2: LAND USE
Sixth Street PARC Project

Figure 3.10-3: Zoning

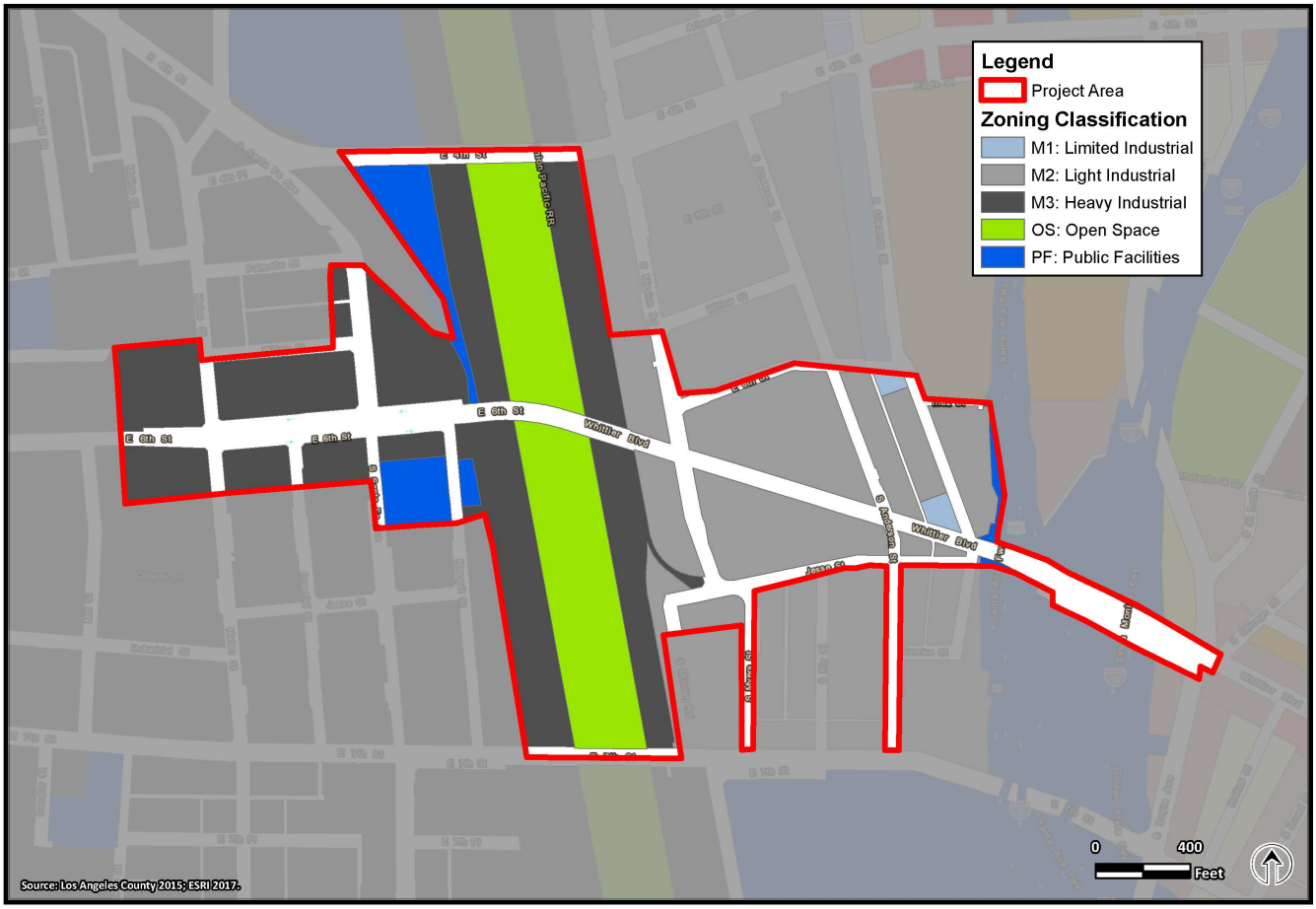

ENGINEERING
CITY OF LOS ANGELES

FIGURE 3.10-3: ZONING
Sixth Street PARC Project

3.10.2.2 Applicable Goals, Objectives, and Policies

The applicable land use plans are described in Section 3.10.1, and applicable land use goals, objectives, and policies associated with the proposed Project are included in **Table 3.10-2**. In addition, according to Case No. ZA 2015-2348 Zoning Administrator's Interpretation (ZAI) – Lists of Uses Permitted in Various Zones, which is a summary of the zoning code, the following zones permit "Park or Playground (Open outdoor space), operated by government agency": OS, A1, A2, RA, RE, RS, R1, RU, RZ, RD, RMP, R3, RAS3, R4, RASR, R5, CR, C1, C1.5, C2, C4, C5, CM, M1, M2, and M3.

Table 3.10-2: Consistency with Applicable Plans and Goals, Objectives, and Policies

Policy/Goal	Proposed Project
City of Los Angeles General Plan – Land Use Element Central City North Community Plan	

Recreation and Parks Facilities
• *Goal 4:* Adequate recreation and park facilities which meet the needs of the residents in the Plan Area
• *Goal 5:* A community with sufficient open space in balance with development to serve the recreational, environmental, and health needs of the community and to protect environmental and aesthetic resources
  • *Objective 5-1:* To preserve existing open space resources and where possible develop new open space.
  • *Policy 5-1.1:* Encourage the retention of passive and visual open space which provides a balance to the urban development of the Plan Area.
  • *Objective 5-2:* To ensure the accessibility, security and safety of parks by their users, particularly families with children and senior citizens.
  • *Policy 5-2.1:* Ensure that parks are adequately illuminated for safe use at night where appropriate.
	Consistent. The proposed Project would provide additional recreation and park facilities to address deficiencies, as well as serve the recreational, environmental, and health needs of the residents in the Central City North Community Plan area. The proposed Project would provide open space that would provide a balance to the surrounding urban environment, comprised of industrial and commercial developments and freight corridors. The proposed Project would be designed to improve environmental and aesthetic resources. In addition, the proposed Project would be designed to be safe and accessible for all users. The proposed Project would include lighting that meets City standards.

City of Los Angeles General Plan – Land Use Element Boyle Heights Community Plan (1998)	
Recreation and Parks Facilities • Objective 1: To provide adequate recreation and park facilities which meet the needs of the residents in the community	**Consistent.** The proposed Project would provide additional recreation and park facilities to meet the needs of the residents in the Boyle Heights Community Plan area. Recreation and park facilities would include public gathering/assembly areas, flexible play areas, adult fitness equipment, dog play areas, sports fields and courts, children's play areas,

Policy/Goal	Proposed Project
	picnic and grilling areas, skate park elements, and pedestrian and bicycle paths.
City of Los Angeles General Plan – Open Space Element	
General • Open space areas shall be provided or developed to serve the needs as appropriate to their location, size, and intended use of the communities in which they are located, as well as the City and region as a whole. • Small parks, public and private, should be located throughout the City. Not only should recreation activities be provided, but an emphasis shall be placed on greenery and openness.	**Consistent.** The proposed Project would be designed to serve the needs of the surrounding Central City North and Boyle Heights Community Plan areas, as well as the City and surrounding region. The proposed Project design would incorporate recreational facilities in conjunction with landscaped seating areas, vegetated planters, and open spaces that would add greenery to the City.
City of Los Angeles General Plan – Service Systems Element	
Recreational use should be considered for available open space and unused or underused land, particularly publicly owned lands having potential for multiple uses.	**Consistent.** The proposed Project would convert public, underused land within and adjacent to a transportation corridor into an open space with park facilities and recreational uses.
City of Los Angeles General Plan – Mobility Plan 2035 (Circulation Element)	
Safety • *Policy 1.2*: Implement a balanced transportation system on all street, tunnels, and bridges using complete streets principles to ensure the safety and mobility of all used. **Infrastructure** • *Policy 2.1:* Design, plan, and operate streets to serve multiple purposes and provide flexibility in design and adapt to future demands. • *Policy 2.*3: Recognize walking as a component of every trip, and ensure high-quality pedestrian access in all site planning and public right-of-way modifications to provide a safe and comfortable walking environment. • *Policy 2.6:* Provide safe, convenient, and comfortable local and regional bicycling facilities for people of all types and abilities. • *Policy 2.12:* Design for pedestrian and bicycle travel when rehabilitating or installing a new bridge, tunnel, or exclusive transit right-of-way. • *Policy 2.15*: Expand funding to improve the built environment for people who walk, bike, take transit, and for other vulnerable roadway users.	**Consistent.** The proposed Project would promote sustainable forms of transportation throughout the Project Area, with the implementation of pedestrian walkways and bicycle paths throughout the park. In addition, the proposed Project would include street improvements to improve pedestrian and bicycle circulation (e.g., the addition of sidewalks and improvements to existing sidewalks, the addition of crosswalks, and the extension of bikeways). The proposed Project would be consistent with other bicycle infrastructure improvement projects in the Project Area, including ATP-1: Sixth Street Viaduct Replacement Project Bicycle and Pedestrian Facilities and ATP-3: Downtown LA Arts District Pedestrian and Cyclist Safety Project.

Policy/Goal	Proposed Project
Access • *Policy 3.1*: Recognize all mode of travel, including pedestrian, bicycle, transit, and vehicular modes as integral components of the City's transportation system. • *Policy 3.2:* Accommodate the needs of people with disabilities when modifying or installing infrastructure in the public right-of-way. **Clean Environments and Healthy Communities** • *Policy 5.1:* Encourage the development of a sustainable transportation system that promotes environmental and public health.	
City of Los Angeles – Complete Streets Design Guide	
• *Goal:* The Complete Streets Design Guide provides a compilation of design concepts and best practices that promote safety, accessibility and convenience for all transportation users as described in California's Complete Streets Act of 2008 (AB 1358); including pedestrians, bicyclists, transit riders, and motorists. By prioritizing people over cars, the streets of Los Angeles can provide lively gathering places that foster community building and neighborhood identity, encourage healthy recreational activities such as walking, running, and bicycling.	**Consistent.** The proposed Project would promote safety, accessibility, and convenience for all visitors, and encourage physical activities with the inclusion of various recreational amenities.
City of Los Angeles – General Plan – Health and Wellness Element	

A City Built for Health
• *Objective:* Increase the number of underutilized spaces (easements, parkways, vacant lots and spaces, vacated railways, and similar) that are repurposed for health-promoting activities in low-income communities.
  • *Policy 2.6:* Work proactively with residents to identify and remove barriers to leverage and repurposed vacant and underutilized spaces as a strategy to improve community health.
  • *Policy 2.9:* Proactively work with residents and public, private, and nonprofit partners to develop, execute, and maintain civic stewardship over community beautification efforts to promote neighborhoods that are clean, healthy, and safe.
  • *Policy 2.11:* Lay the foundation for healthy communities and healthy living by promoting infrastructure improvements that support active
	Consistent. The proposed Project would convert unused public land adjacent to the LA River into an open space with park facilities and recreational uses in order to encourage healthy physical activities and safe communities. The proposed Project also includes safety features to protect the public from hazards associated with surrounding industrial land uses and the LA River. Pedestrian crosswalks would be included at all major roadways intersecting the Project Site (i.e., Santa Fe Avenue, Mission Road, Anderson Street, and Clarence Street). Safety measures would be added to the LA River Access Tunnel entry point within the proposed Arts Plaza to deter the public from entering the tunnel during a storm event (e.g., vehicular deterrents such as bollards and safety warning devices). The City would also develop a public safety plan to address public safety during flood events. The public safety plan

Policy/Goal	Proposed Project

transportation with safe, attractive, and comfortable facilities that meet community needs; prioritize implementation in communities with the greatest infrastructure deficiencies that threaten the health, safety, and well-being of the most vulnerable users.
Bountiful Parks and Open Spaces
• *Objective:* Increase the number of neighborhood and community parks so that every Community Plan Area strives for 3 acres of neighborhood and community park space per 1000 residents (excluding regional parks and open spaces).
• *Objective:* Increase access to parks so that 75% of all residents are within a 1/4 mile walk of a park or open space facility.
• *Objective:* Increase the miles of the Los Angeles River that are revitalized for natural open space and physical activity, particularly in low-income areas.
  • *Policy 3.3:* Support the implementation of the Los Angeles River Revitalization Master Plan to create a continuous greenway of interconnected parks and amenities to extend open space and recreational opportunities.
  • *Policy 3.4:* Promote opportunities for physical activity for users of all ages and abilities by continuing to improve the quality of existing park and open space facilities and creating recreation programs that reflect the city's rich diversity and local community needs.
  • *Policy 3.5:* Encourage greater community use of existing parks and open spaces by improving safety and access in and around parks and open spaces by encouraging land use, design, and infrastructure improvements that promote healthy and safe community environments and park design, programming, and staff-levels that meet local community safety-needs.
Safe and Just Neighborhoods
• *Objective:* Increase the number of Safe Passage programs that are implemented in the City's low-income neighborhoods.
	would include protocols for protecting pedestrians and homeless populations in the LA River Access Tunnel during flood conditions.

Policy/Goal	Proposed Project
• *Policy 7.2:* Promote the development and implementation of comprehensive strategies that foster safe passages in neighborhoods with high crime and gang activity to ensure that all Angelenos can travel with confidence and without fear.	
L.A.'s Green New Deal (Sustainable City pLAn)	
Urban Ecosystems and Resilience • Ensure proportion of Angelenos living within 0.5 mile of a park or open space is at least 65 percent by 2025; 75 percent by 2035; and 100 percent by 2050.	**Consistent.** The proposed Project would provide open space and recreational opportunities for communities that were determined to have a "high" or "very high" need for parks in the Los Angeles Countywide Comprehensive Parks and Recreation Needs Assessment (Los Angeles County Department of Parks and Recreation, 2016).
River Improvement Overlay District	
Los Angeles Municipal Code *Chapter I, Article 3, Section 13.17(A)* The purpose of a River Improvement Overlay (RIO) District is to: • Support the goals of the Los Angeles River Revitalization Master Plan • Contribute to the environmental and ecological health of the City's watersheds • Establish a positive interface between river adjacent property and river parks and/or greenways • Promote pedestrian, bicycle and other multi-modal connection between the river and its surrounding neighborhoods • Provide an aesthetically pleasing environment for pedestrians and bicyclists accessing the river area • Provide safe, convenient access to and circulation along the river • Promote the river identity of river adjacent communities	**Consistent.** The proposed Project would include elements that would be consistent with the purpose of the RIO District. In addition, the proposed Project would conform to the development regulations of the RIO District. The proposed Project would support the goals of the Los Angeles River Revitalization Master Plan; promote pedestrian and bicycle transportation between the LA River and the Central City North and Boyle Heights Community Plan areas; provide an aesthetically pleasing resource for visitors to the park; and provide safe access to the LA River for pedestrians and bicyclists.
Los Angeles River Revitalization Master Plan	
Revitalize the River • *Goal:* Enable Safe Public Access • *Recommendation #4.8:* Provide opportunities for safe access to the water, ensure that people can	**Consistent.** The proposed Project would feature environmentally sensitive design, such as low impact development and stormwater infrastructure improvements. In addition, the proposed Project would provide open space and recreation opportunities. The proposed Project would be

Policy/Goal	Proposed Project

quickly exit the channel, and establish a flood warning system in the event of high flow conditions.
Green the Neighborhoods
• *Goal:* Connect Neighborhoods to the River
  • *Recommendation #5.6:* Increase direct pedestrian and visual access to the River.
• *Goal:* Extend Open Space and Water Quality Features into Neighborhoods
  • *Recommendation #5.8:* Provide a diverse system of interconnected parks, recreational fields, and outdoor classrooms.
	designed to maintain existing bicycle and pedestrian access to the LA River and enhance community awareness of the LA River. The proposed Project design would also preserve flood control features of the LA River to ensure public safety during flood events. In addition, the proposed Project would include a flood warning system and other elements (i.e., vehicular bollards) to deter the public from entering the LA River during a storm event.

Source: (GPA Consulting, 2019)

3.10.3 Environmental Impact Analysis

3.10.3.1 Screening Analysis

Several impacts and corresponding thresholds of significance in the following section were eliminated from further analysis in this Environmental Impact Report (EIR). Topics were eliminated if the IS for the proposed Project concluded there would be "No Impact," or if impacts were identified to be "Less Than Significant… and will not be discussed further in the EIR." Therefore, only the topics described in the section below were determined to require further analysis in this EIR. A copy of the Initial Study, which contains the eliminated topics, is provided in **Appendix A**.

3.10.3.2 Thresholds of Significance

According to Appendix G of the CEQA Guidelines and the *L.A. CEQA Thresholds Guide*, the proposed Project would have a significant impact on Land Use and Planning if it would:

XI(b) Cause a significant environmental impact due to a conflict with any land use plan, policy, or regulation adopted for the purpose of avoiding or mitigating an environmental effect.

H.2 Land Use Compatibility. The determination of significance shall be made on a case-by-case basis, considering the following factors:

- The extent of the area that would be impacted, the nature and degree of impacts, and the type of land uses within that area; and
- The number, degree, and type of secondary impacts to surrounding land uses that could result from implementation of the proposed project.

3.10.3.3 Construction Impacts

XI(b): Cause a significant environmental impact due to a conflict with any land use plan, policy, or regulation adopted for the purpose of avoiding or mitigating an environmental effect.

The land use plans, policies, and regulations shown in **Table 3.10-2** were established to protect the environment and sensitive land uses, and to ensure that proposed developments are consistent with the character and visions of the City and surrounding communities. As shown in **Table 3.10-2**, the proposed Project is consistent with the land use plans, policies, and regulations in the area.

Proposed construction activities would not result in zoning or land use changes, or a revision to any of the adopted plans or policies at the local and regional levels. All anticipated permits and approvals, summarized in **Table 2-2** of this EIR, would be obtained prior to proposed construction activities. Any necessary land use entitlements would be secured prior to the start of construction activities, and would be coordinated with construction of the Viaduct Replacement Project.

Proposed construction activities would be conducted in compliance with the City's development requirements and construction and building permits outlined in Chapter IX, Article 1 (Building Code) of the City's Municipal Code, as well as the California Building Standards Code (California Code of Regulations [CCR], Title 24). Grading would be required prior to excavation activities in order to prepare the Project Site for construction, requiring a Permit to Construct. Proposed construction activities within the LA River channel are under the supervision of the U.S. Army Corps of Engineers and applicable permits would need to be obtained. In addition, any work within railroad right of way would require a Railroad Maintenance Agreement and any other applicable permits from the affected railroad agency. Upon obtaining all required permits and approvals, the proposed Project would not cause a significant environmental impact due to a conflict with any applicable land use plan, policy, or regulation adopted for the purpose of avoiding or mitigating an environmental effect. Therefore, impacts would be less than significant, and mitigation would not be required.

- **The extent of the area that would be impacted, the nature and degree of impacts, and the type of land uses within that area.**

The Project Area includes an existing construction site, which previously included industrial and commercial land uses. The City obtained these properties as part of the Viaduct Replacement Project. The area surrounding the Project Site is heavily developed with predominately industrial and commercial.

Construction staging and activities would be limited to the existing construction site. Land use and zoning designations in these areas would not prohibit the construction activities required to implement the proposed Project. In addition, construction activities would not require changes in land uses that would conflict with zoning designations.

The proposed Project would be required to obtain permits and approvals prior to construction activities (see **Table 2-2** for required permits and approvals), and would be coordinated with construction of the Viaduct Replacement Project. Proposed construction activities would be conducted in compliance with the City's development requirements and construction and building permits outlined in Chapter IX, Article 1 (Building Code) of the City's Municipal Code, as well as the California Building Standards Code (CCR Title 24). Therefore, impacts would be less than significant and mitigation would not be required.

- **The number, degree, and type of secondary impacts to surrounding land uses that could result from implementation of the proposed project.**

As described above, construction activities would not require changes in existing land uses or zoning designations. The use of construction vehicles and equipment to conduct excavation activities, and other activities involved with the removal or addition of structures, could result in reduced visual character and quality in construction areas that are visible from surrounding land uses; greater air pollutant and greenhouse gas emissions; increased light and noise levels; and decreased mobility and access due to construction traffic on surrounding roadways and road closures/detours. These impacts are discussed in more detail in Sections 3.1 through 3.17.

Construction equipment, materials storage, and most construction activities (other than the movement of equipment and materials to and from the construction site) would be contained within the limits of construction, and construction areas would be fenced. Construction activities would be limited to the days and times specified in the City's Noise Ordinance (Chapter IX, Noise Regulation in the City's Municipal Code), which are Mondays through Fridays between 7 a.m. and 9 p.m., and Saturdays and National Holidays between 8 a.m. and 6 p.m. Construction would not be allowed at any time on Sundays. Therefore, adverse effects would be minimized to the extent feasible. In addition, impacts associated with proposed construction activities would be short-term and temporary. Therefore, impacts would be less than significant and mitigation would not be required.

3.10.3.4 Operational Impacts

XI(b): Cause a significant environmental impact due to a conflict with any land use plan, policy, or regulation adopted for the purpose of avoiding or mitigating an environmental effect.

The land use plans, policies, and regulations shown in **Table 3.10-2** were established to protect the environment and sensitive land uses, and to ensure that proposed developments are consistent with the character and and visions of the City and surrounding communities. As shown in **Table 3.10-2**, the proposed Project is consistent with the land use plans, policies, and regulations in the area.

The land use for the proposed Project would be consistent with the City's zoning designations. The proposed Project is considered a "Park or Playground (Open outdoor space), operated by government agency" land use, which is only permitted in the following zones (City of Los Angeles, 2018):

- Open Space: OS
- Agricultural: A1, A2, and RA
- Residential Estate: RE and RS
- One-Family Residential: R1, RU, and RZ
- Multiple Residential: RD, RMP, R3, RAS3, R4, RAS4, and R5
- Commercial: CR, C1, C1.5, C2, C4, C5, and CM
- Manufacturing: M1, M2, and M3

In addition, "Park or Playground (Open outdoor space), operated by government agency" land uses may be permitted in the following zones pending Public Benefit project approval:

- Residential Waterways (RW1 and RW2)
- Parking (P and PB)
- Public Facilities (PF).

The proposed Project would be permitted in the portions of the Project Area that are zoned M1, M2, M3, and OS, and would require approval from the City within areas zoned PF. In addition to the zoning designations described above, the Project Site is entirely within the RIO District. The proposed Project would conform to the development regulations for the RIO District outlined in the Municipal Code (Section 13.17), including landscaping, screening/fencing, lighting, and river access requirements. The proposed Project would comply with the design guidelines for projects within the RIO District, as described in the LA River Design Guidebook.

As described in Section 3.10.2.2, the City is in the process of updating the land use and zoning designations in the Central City North and Boyle Heights Community Plan areas. With these updates, the zoning designations within the Project Site would continue to allow parks and recreational facilities. The City's Bureau of Engineering (BOE) would work with the Los Angeles Department of City Planning to ensure that the proposed Project is consistent with any future zoning changes within the Project Area.

The existing Project Site is a construction site within a heavily developed industrialized area. By providing approximately 13 acres of public recreational space, the proposed Project is expected to improve various qualities of the existing Project Site, which include the following:

- The proposed Project would transform an underutilized lot into an aesthetically pleasing landscaped park that would improve the visual character and quality of the Project Site.
- With the exception of emissions generated during from vehicle traffic during infrequent large events, the proposed Project would contribute less criteria air pollutant and greenhouse gas emissions than industrial land use.
- The proposed Project would include trees and other natural and artificial substrates that would potentially create additional nesting and roosting habitat for birds and bats.
- The proposed Project Site soils would be remediated to standards acceptable by the Los Angeles County Fire Department and other regulatory agencies as required.
- The proposed Project would result in improvements to existing stormwater drainage systems.
- The proposed Project would provide open space and recreational facilities that would meet the existing need for parks and recreational facilities in the surrounding communities.
- The proposed Project would generate noise at levels that are less than the noise levels produced by the existing land use.
- With the exception of traffic during large special events, the proposed Project would generate fewer trips than the existing industrial land use. The proposed Project would support active modes of transportation and public transit.
- The proposed Project would include low impact development design and practices to reduce the consumption of water resources and promote beneficial stormwater treatment and/or capture.

The proposed Project also includes safety features to protect the public from hazards associated with surrounding industrial land uses and the LA River. Pedestrian crosswalks would be included at all major roadways intersecting the Project Site (i.e., Santa Fe Avenue, Mission Road, Anderson Street, and Clarence Street). Safety measures will be added to the LA River Access Tunnel Access entry point within the proposed Arts Plaza to deter the public from entering the LA River during a storm event (i.e., vehicular deterrents such as bollards and safety warning devices). The City would also develop a Safety Plan to further minimize impacts on public safety during flood events.

Given the extent of the area that would be impacted, the nature and degree of the impacts, and the existing land use, the proposed Project would not have a significant impact on Land Use and Planning.

3.10.4 Best Management Practices

BMP-LAND-1: Coordination with Los Angeles Department of City Planning

The City BOE shall continue to work with the Los Angeles Department of City Planning to ensure that the proposed Project is consistent with future zoning changes.

BMP-LAND-2: Coordination with Viaduct Replacement Project

Any necessary land use entitlements shall be secured prior to the start of construction activities and shall be coordinated with construction of the Viaduct Replacement Project.

BMP-LAND-3: Construction Area

Construction equipment, materials storage, and construction activities shall be contained within the limits of construction, and construction areas shall be fenced.

3.10.5 Mitigation Measures

Impacts related to Land Use and Planning would be less than significant; therefore, mitigation measures are not required.

3.10.6 Significant Unavoidable Adverse Impacts

There are no significant unavoidable adverse impacts on Land Use and Planning from construction and operation of the proposed Project.

3.10.7 Cumulative Impacts

As discussed in Section 3.10.2.1, the City is proposing updates to land use and zoning designations for the Central City North and Boyle Heights Community Plan areas. In the Central City North Community Plan Area, the proposed land use and zoning designation would include general uses such as hybrid industrial mixed use, creative office, live/work, and production activity (City of Los Angeles, 2017). In the Boyle Heights Community Plan Area, the proposed land use and zoning designation would encourage the preservation of industrial land for employment generating uses and economic development.

As described above, the proposed Project is not expected to result in significant impacts on Land Use and Planning. The proposed development projects listed in **Table 1-1** of this EIR, which include mixed-use developments, creative office spaces, live/work units, commercial spaces, and infrastructure

improvements would not be inconsistent with the City's vision for promoting active transportation, providing LA River connections, and developing additional housing. Many of these projects would be limited to improvements to existing facilities and in-fill developments that would not conflict with existing land uses and zoning designations. These projects would be required to obtain all necessary permits and approvals prior to construction, as well as comply with the City's development requirements and construction and building permits outlined in the City's Municipal Code and the California Building Standards Code. These projects would also be evaluated based on their consistency with the City's land use plans, policies, and regulations. In addition, all projects would be required to develop avoidance, minimization, and mitigation measures. Therefore, the proposed Project would not result in cumulative impacts related to Land Use and Planning.

3.11 Noise and Vibration

This section describes the affected environment and regulatory setting for Noise and Vibration related to the Project Area and surrounding area. In addition, this section describes the potential impacts related to Noise and Vibration that would result from implementation of the proposed Project. As noted in the analysis below, impacts associated with Noise and Vibration during construction or operation of the proposed Project would be less than significant with the incorporation of mitigation measures.

The information in this section is based on the *Noise Impact Assessment for Sixth Street PARC Project* (AMBIENT Air Quality & Noise Consulting, 2019).

3.11.1 Introduction

3.11.1.1 Acoustic Fundamentals

Noise is generally defined as sound that is loud, disagreeable, or unexpected. Sound is mechanical energy transmitted in the form of a wave because of a disturbance or vibration. Sound levels are described in terms of both amplitude and frequency.

Amplitude

Amplitude is defined as the difference between ambient air pressure and the peak pressure of the sound wave. Amplitude is measured in decibels (dB) on a logarithmic scale. Amplitude is interpreted by the ear as corresponding to different degrees of loudness. Laboratory measurements correlate a 10 dB change as a doubling or halving of loudness and establish a 3 dB change in amplitude as the minimum audible difference perceptible to the average person.

Frequency

The frequency of a sound is defined as the number of fluctuations of the pressure wave per second. The unit of frequency is the Hertz (Hz). One Hz equals one cycle per second. The human ear is not equally sensitive to sound of different frequencies. For instance, the human ear is more sensitive to sound in the higher portion of this range than in the lower and sound waves below 16 Hz or above 20,000 Hz cannot be heard at all. To approximate the sensitivity of the human ear to changes in frequency, environmental sound is usually measured in what is referred to as "A-weighted decibels" (dBA). On this scale, the normal range of human hearing, for most people, extends from about 3 dBA to about 140 dBA with 130 dbA being the threshold of pain (California Department of Transportation, 2013a; California Department of Transportation, 2017). Common community noise sources and associated noise levels, in dBA, are depicted in **Figure 3.11-1**, Common Noise Levels.

Figure 3.11-1: Common Noise Levels

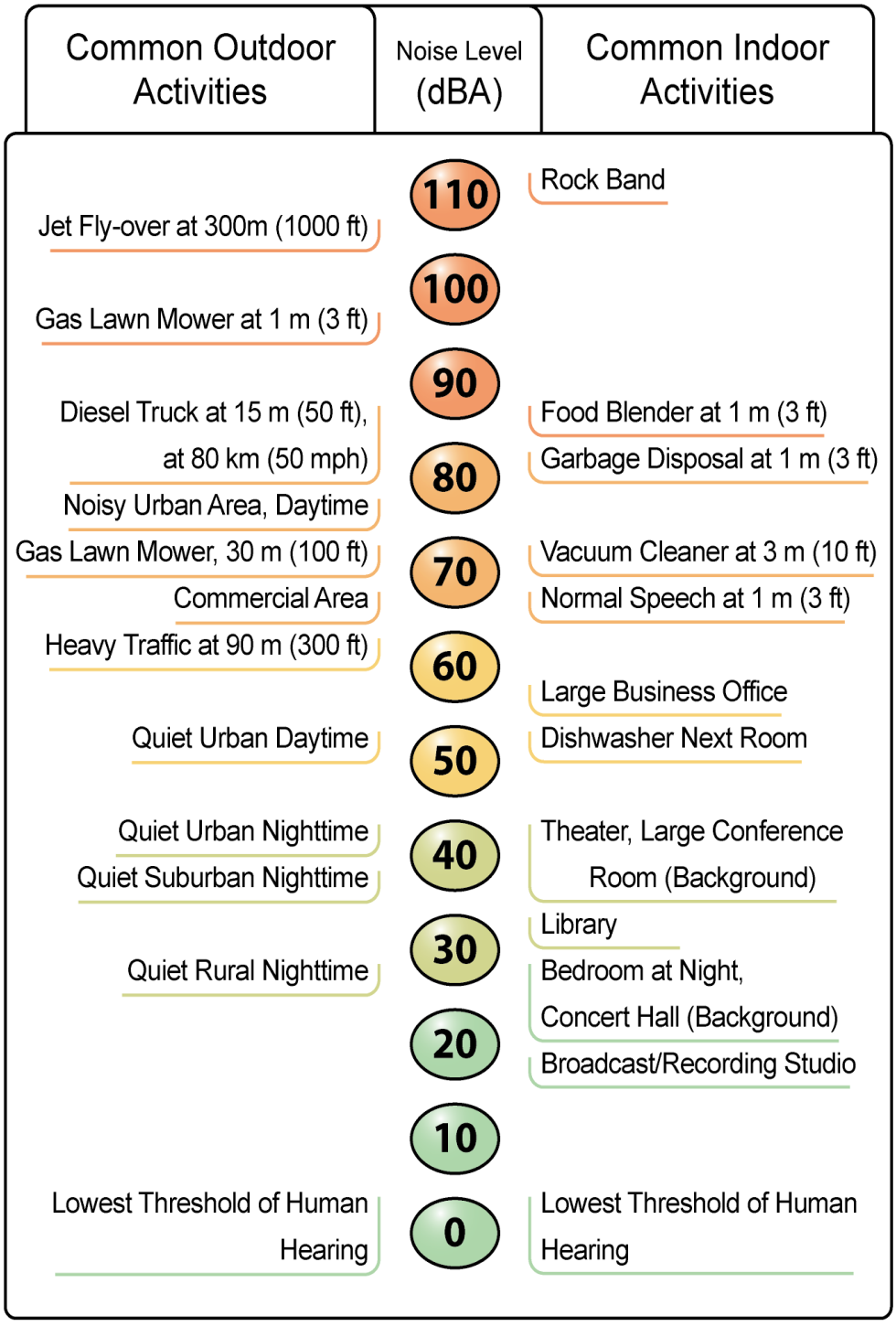

Source: (California Department of Transportation, 2013a)

Addition of Decibels

Because decibels are logarithmic units, sound levels cannot be added or subtracted through ordinary arithmetic. Under the decibel scale, a doubling of sound energy corresponds to a 3-dB increase. In other words, when two identical sources are each producing sound of the same loudness, the resulting sound level at a given distance would be 3 dB higher than one source under the same conditions. For example, if one automobile produces a sound level of 70 dB when it passes an observer, two cars passing simultaneously would not produce 140 dB; rather, they would combine to produce 73 dB. Under the decibel scale, three sources of equal loudness together would produce an increase of 5 dB.

3.11.1.2 Sound Propagation and Attenuation

Geometric Spreading

Noise sources are generally characterized as either a localized source (i.e., point source) or a line source. Examples of point sources include construction equipment, vehicle horns, alarms, and amplified sound systems. Examples of a line sources include trains and on-road vehicular traffic. Sound from a point source propagates uniformly outward in a spherical pattern.

For a point source, sound levels generally decrease (attenuate) at a rate of approximately 6 dB for each doubling of distance from the source, depending on ground surface characteristics. For acoustically hard sites (i.e., sites with a reflective surface between the source and the receiver), no excess ground attenuation is assumed. Parking lots and bodies of water are examples of hard surfaces which generally attenuate at this rate. For acoustically absorptive or soft sites (i.e., those sites with an absorptive ground surface between the source and the receiver, such as soft dirt, grass, or scattered bushes and trees), an excess ground-attenuation value of 1.5 dB per doubling of distance is normally assumed. When soft surfaces are present, the excess ground attenuation for soft surfaces generally results in an overall attenuation rate of approximately 7.5 dB per doubling of distance from the point source.

On-road vehicle traffic consists of several localized noise sources on a defined path, and hence can be treated as a line source, which approximates the effect of several point sources. Noise from a line source propagates outward in a cylindrical pattern, often referred to as cylindrical spreading. Sound levels for line sources attenuate at a rate of approximately 3 decibels for each doubling of distance for hard sites and approximately 4.5 decibels per doubling of distance for soft sites.

Atmospheric Effects

Receptors located downwind from a source can be exposed to increased noise levels relative to calm conditions, whereas locations upwind can have lowered noise levels. Sound levels can be increased at large distances (e.g., more than 500 feet) from the highway due to atmospheric temperature inversion (i.e., increasing temperature with elevation). Other factors such as air temperature, humidity, and turbulence can also have substantial effects on noise levels.

Shielding by Natural or Human-Made Features

A large object or barrier in the path between a noise source and a receiver can substantially attenuate noise levels at the receiver. The amount of attenuation provided by shielding depends on the size of

the object and the frequency content of the noise source. Natural terrain features (e.g., hills and dense woods) and human-made features (e.g., buildings and walls) can substantially reduce noise levels. Walls are often constructed between a source and a receiver specifically to reduce noise. A barrier that breaks the line of sight between a source and a receiver will typically result in minimum 5 dB of noise reduction. Taller barriers provide increased noise reduction.

Noise reductions afforded by building construction can vary depending on construction materials and techniques. Standard construction practices typically provide approximately 15 dBA exterior-to-interior noise reductions for building facades, with windows open, and approximately 20-25 dBA, with windows closed. With compliance with current building construction and insulation requirements, exterior-to-interior noise reductions typically average approximately 25 dBA. The absorptive characteristics of interior rooms, such as carpeted floors, draperies and furniture, can result in further reductions in interior noise.

3.11.1.3 Noise Descriptors

The decibel scale alone does not adequately characterize how humans perceive noise. The dominant frequencies of a sound have a substantial effect on the human response to that sound. Although the intensity (i.e., energy per unit area) of the sound is a purely physical quantity, the loudness or human response is determined by the characteristics of the human ear.

Human hearing is limited in the range of audible frequencies as well as in the way it perceives the sound-pressure level in that range. In general, people are most sensitive to the frequency range of 1,000 to 8,000 Hz and perceive sounds within that range better than sounds of the same amplitude in higher or lower frequencies. To approximate the response of the human ear, sound levels of individual frequency bands are weighted, depending on the human sensitivity to those frequencies, which is referred to as the "A-weighted" sound level (expressed in units of dBA). The A-weighting network approximates the frequency response of the average young ear when listening to most ordinary sounds. When people make judgments of the relative loudness or annoyance of a sound, their judgments correlate well with the A-scale sound levels of those sounds. Other weighting networks have been devised to address high noise levels or other special problems (e.g., B-, C-, and D-scales), but these scales are rarely used in conjunction with environmental noise.

The intensity of environmental noise fluctuates over time, and several descriptors of time-averaged noise levels are typically used. For the evaluation of environmental noise, the most commonly used descriptors are the energy-equivalent noise level (L_{eq}), day-night average noise level (L_{dn}), community equivalent noise level (CNEL) and sound-exposure level (SEL). L_{eq} is a measure of the average energy content (intensity) of noise over any given period. Many communities use 24-hour descriptors of noise levels to regulate noise. L_{dn} is the 24-hour average of the noise intensity, with a 10-dBA "penalty" added for nighttime noise (10 p.m. to 7 a.m.) to account for the greater sensitivity to noise during this period. CNEL is similar to L_{dn} but adds an additional 5-dBA penalty for evening noise (7 p.m. to 10 p.m.) Another descriptor that is commonly discussed is the SEL, also referred to as the single-event noise exposure level. The SEL describes a receiver's cumulative noise exposure from a single noise event, which is defined as an acoustical event of short duration (0.5 second), such as a backup beeper, the sound of an airplane traveling overhead, or a train whistle. Common noise level descriptors are summarized in **Table 3.11-1**.

Table 3.11-1: Common Acoustical Descriptors

Descriptor	Definition
Energy Equivalent Noise Level (L_{eq})	The energy mean (average) noise level. The instantaneous noise levels during a specific period of time in dBA are converted to relative energy values. From the sum of the relative energy values, an average energy value (in dBA) is calculated.
Minimum Noise Level (L_{min})	The minimum instantaneous noise level during a specific period of time.
Maximum Noise Level (L_{max})	The maximum instantaneous noise level during a specific period of time.
Day-Night Average Noise Level (L_{dn})	The L_{dn} takes into account both the frequency of occurrence and duration of all noise events during a 24-hour period with a 10 dBA "penalty" for noise events that occur between the more noise-sensitive hours of 10:00 p.m. and 7:00 a.m. In other words, 10 dBA is "added" to noise events that occur in the nighttime hours to account for increases sensitivity to noise during these hours.
Community Noise Equivalent Level (CNEL)	The CNEL is similar to the L_{dn} described above, but with an additional 5 dBA "penalty" added to noise events that occur between the hours of 7:00 p.m. to 10:00 p.m. The calculated CNEL is typically approximately 0.5 dBA higher than the calculated L_{dn}.
Single Event Level (SEL)	The level of sound accumulated over a given time interval or event. Technically, the sound exposure level is the level of the time-integrated mean square A-weighted sound for a stated time interval or event, with a reference time of one second.

Source: (AMBIENT Air Quality & Noise Consulting, 2019)

3.11.1.4 Human Response to Noise

The human response to environmental noise is subjective and varies considerably from individual to individual. Noise in the community has often been cited as a health problem, not in terms of actual physiological damage, such as hearing impairment, but in terms of inhibiting general well-being and contributing to undue stress and annoyance. The health effects of noise in the community arise from interference with human activities, including sleep, speech, recreation, and tasks that demand concentration or coordination. Hearing loss can occur at the highest noise intensity levels. When community noise interferes with human activities or contributes to stress, public annoyance with the noise source increases. The acceptability of noise and the threat to public well-being are the basis for land use planning policies preventing exposure to excessive community noise levels.

Unfortunately, there is no completely satisfactory way to measure the subjective effects of noise or of the corresponding reactions of annoyance and dissatisfaction. This is primarily because of the wide variation in individual thresholds of annoyance and habituation to noise over differing individual experiences with noise. Thus, an important way of determining a person's subjective reaction to a

new noise is the comparison of it to the existing environment to which one has adapted: the so-called "ambient" environment. In general, the more a new noise exceeds the previously existing ambient noise level, the less acceptable the new noise will be judged. Regarding increases in A-weighted noise levels, knowledge of the following relationships will be helpful in understanding this analysis (Kryter, 1970):

- A change of 1 dB cannot be perceived by humans, except in carefully controlled laboratory experiments.
- Outside of the laboratory, a 3-dB change is considered a just-perceivable difference.
- A change in level of at least 5 dB is required before any noticeable change in community response would be expected.
- A 10-dB change is subjectively heard as an approximate doubling in loudness and would almost certainly cause an adverse change in community response.

3.11.1.5 Vibration Fundamentals

Vibration is an oscillating motion of the earth, which can result from either natural (e.g., earthquakes and volcanic eruptions) or manmade sources (e.g., explosions). As with noise, vibration can be described by both its amplitude and frequency. Amplitude can be described in terms of displacement, velocity, or acceleration. Displacement is the distance that a point on the ground moves away from its static position. Velocity is defined as the instantaneous speed of the ground movement and acceleration is defined as the rate of change in velocity with respect to time.

Although displacement is easier to understand than velocity or acceleration, it is rarely used for describing groundborne vibration. In addition, the effects of groundborne vibration, including human reaction and effects on buildings, is commonly described in environmental assessments using either velocity (measured in inches or millimeters per second) or acceleration (measured in gravities). Frequency is defined as the number of oscillations per second that a particle makes when under the influence of seismic waves. The frequency of a vibration can also affect human perception (California Department of Transportation, 2013b).

The rate at which vibration travels through the earth is referred to as propagation. As with noise, the energy of a vibration wave decreases as the waves propagates with increased distance from a source. Various other factors can also influence the loss of wave energy, including soil type and condition, as well as, the frequency of the wave (California Department of Transportation, 2013b).

3.11.2 Regulatory Setting

Federal, state, and local governments have established noise standards and guidelines to protect citizens from potential hearing damage and various other adverse physiological and social effects associated with noise. Those regulations most applicable to the community are summarized in the following sections.

3.11.2.1 Noise

City of Los Angeles General Plan

Noise Element

The existing Noise Element of the *City of Los Angeles General Plan* includes noise standards intended to ensure compatibility of proposed land uses within exterior noise environments and that noise levels at adjacent land uses do not exceed acceptable levels. These standards are also designed to protect existing land uses, including transportation and industry, from encroaching urban uses. The City's exterior and interior noise standards for General Plan land use designations are summarized in **Table 3.11-2**, City of Los Angeles Land Use Compatibility Noise Criteria. As depicted, areas designated for outdoor spectator sports are generally considered unacceptable in areas of noise exposure above 70 dBA CNEL (i.e., weighted average of noise level over time). These same land uses are considered conditionally acceptable in areas up to 75 dBA CNEL provided that potential noise impacts have been evaluated and any necessary noise-reduction measures have been implemented (City of Los Angeles, 1999).

Land Use Element

The Land Use element of the City's General Plan includes Community Plans for 35 community plan areas (along with LAX and Port Plans) within Los Angeles to address the specific needs and wishes of each community. Land use designations help inform decision-makers, as well as the public, on types of future development to pursue in various areas and neighborhoods. General land use maps were developed for the communities of Boyle Heights and Central City North where the Project Area is located. The Community Plans for Boyle Heights and Central City North are currently undergoing updates.

Boyle Heights Community Plan

The portion of the Project Area east of the LA River is located in the Boyle Heights community. The Boyle Heights Community Plan is part of the City of Los Angeles General Plan and discusses the major planning land use issues and opportunities facing the community. The Boyle Heights Community Plan also establishes a framework for development in accordance with the community's land use policies and programs (City of Los Angeles, 1998).

The Boyle Heights Community Plan is currently being updated, with a draft released in October 2017. The draft plan addresses issues and opportunities related to preserving existing affordable housing; advocating for environmental justice; promoting economic strength and growth; and encouraging safe, walkable, and vibrant neighborhoods. The draft plan is intended to account for future anticipated growth and development through 2040. The draft plan introduces urban design principles that encourage sustainable development in a way that complements the existing built environment.

Central City North Community Plan

The portion of the Project Area west of the LA River is located in the Central City North community. The Central City North Community Plan is part of the City of Los Angeles General Plan and discusses the land use policies and programs in the community (City of Los Angeles, 2000).

The City is currently updating the Downtown Community Plan, also known as DTLA 2040 Plan, which includes both the Central City North and Central City Community plan areas and includes updates for long-term policies, plans, and programs in Downtown Los Angeles (City of Los Angeles, 2019). The proposed DTLA 2040 Plan intends to address Downtown Los Angeles' growth in population, housing, and employment. An emphasis on transit and new zoning tools are central to the proposed DTLA 2040 Plan.

City of Los Angeles Municipal Code

The City of Los Angeles Municipal Code (LAMC) provides noise guidelines and standards for significant noise disturbances in Chapter XI, Noise Regulation. This Chapter is intended to prohibit unnecessary, excessive, and annoying noises from all sources subject to its police power. Accordingly, noise-generating construction activities are generally limited during the hours of 9:00 p.m. and 7:00 a.m., which would result in noise disturbance of occupants of a nearby residence or hotel. In addition, the LAMC also specifies the maximum noise level of powered equipment or powered hand tools. Between the hours of 7:00 a.m. and 10:00 p.m., in any residential zone of the City or within 500 feet thereof, no person shall operate or cause to be operated any powered equipment or powered hand tool that produces a maximum noise level exceeding the following noise limits at a distance of 50 feet therefrom:

(a) 75 dBA for construction, industrial, and agricultural machinery including crawler-tractors, dozers, rotary drills and augers, loaders, power shovels, cranes, derricks, motor graders, paving machines, off-highway trucks, ditchers, trenchers, compactors, scrapers, wagons, pavement breakers, compressors and pneumatic or other powered equipment;

(b) 75 dBA for powered equipment of 20 HP or less intended for infrequent use in residential areas, including chain saws, log chippers and powered hand tools;

(c) 65 dBA for powered equipment intended for repetitive use in residential areas, including lawn mowers, backpack blowers, small lawn and garden tools and riding tractors;

Said noise limitations shall not apply where compliance therewith is technically infeasible. Technical infeasibility shall mean that said noise limitations cannot be complied with despite the use of mufflers, shields, sound barriers and/or other noise reduction device or techniques during the operation of the equipment.

City of Los Angeles CEQA Thresholds

The City provides CEQA significance thresholds for noise analyses. **Table 3.11-2** presents the City's guidelines for determining acceptable and unacceptable community noise exposure limits for various land use categories.

Table 3.11-2: City of Los Angeles Land Use Noise Compatibility Guidelines

Land Use	Normally Acceptable	Conditionally Acceptable	Normally Unacceptable	Clearly Unacceptable
Single-Family, Duplex, Mobile Homes	50–60	55–70	70–75	above 70
Multifamily Homes	50–65	60–70	70–75	above 70
Schools, Libraries, Churches, Hospitals, Nursing Homes	50–70	60–70	70–80	above 80
Transient Lodging – Motels, Hotels	50–65	60–70	70–80	above 80
Auditoriums, Concert Halls, Amphitheaters	—	50–70	—	above 65
Sports Arena, Outdoor Spectator Sports	—	50–75	—	above 70
Playgrounds, Neighborhoods Parks	50–70	—	67–75	above 72
Golf Courses, Riding Stables, Water, Recreation, Cemeteries	50–75	—	70–80	above 80

Normally Acceptable: *Specified land use is satisfactory, based on the assumption that any buildings involved are of normal conventional construction and without any special noise insulation requirements.*
Conditionally Acceptable: *New construction or development should be undertaken only after a detailed analysis of the noise reduction requirements is made and needed noise insulation features included in the design. Conventional construction, but with closed windows and fresh air supply systems or air-conditioning, will normally suffice.*
Normally Unacceptable: *New construction or development generally should be discouraged. If new construction or development does proceed, a detailed analysis of the noise reduction requirements must be made and needed noise insulation features included in the design.*
Clearly Unacceptable: *New construction or development generally should not be undertaken.*
Source: (City of Los Angeles, 2006).

3.11.2.2 Groundborne Vibration

There are no federal, state, or local regulatory standards for groundborne vibration. The California Department of Transportation (Caltrans) has developed vibration criteria based on potential structural damage risks and human annoyance, which the City has adopted for this EIR. Caltrans-recommended criteria for the evaluation of groundborne vibration levels, with regard to structural damage and human annoyance, are summarized in **Table 3.11-3**. The criteria apply to continuous vibration sources, which include vehicle traffic, train, and most construction vibrations, except for transient or intermittent construction activities, such as pile driving. Damage criteria for buildings are in terms of ground motion at the buildings' foundations. No allowance is included for the amplifying effects of structural components (California Department of Transportation, 2013b).

Table 3.11-3: Summary of Groundborne Vibration Levels and Potential Effects

Vibration Level (in/sec ppv)	Human Reaction	Effect on Buildings
0.006-0.019	Threshold of perception; possibility of intrusion.	Vibrations unlikely to cause damage of any type.
0.08	Vibrations readily perceptible.	Recommended upper level of the vibration to which ruins and ancient monuments should be subjected.
0.10	Level at which continuous vibrations begin to annoy people.	Virtually no risk of "architectural" damage to normal buildings.
0.20	Vibrations annoying to people in buildings (this agrees with the levels established for people standing on bridges and subjected to relative short periods of vibrations).	Threshold at which there is a risk of "architectural" damage to fragile buildings and buildings with plastered walls and ceilings.
0.4-0.6	Vibrations considered unpleasant by people subjected to continuous vibrations and unacceptable to some people walking on bridges.	Potential risk of "architectural" damage may occur at levels above 0.3 in/sec ppv for older residential structures and above 0.5 in/sec ppv for newer structures.

The vibration levels are based on ppv in the vertical direction for continuous vibration sources, which includes most construction activities, with the exception of transient or intermittent construction activities, such as pile driving. For pile driving, the minimum criterion level is typically considered to be 0.2 in/sec ppv.
in/sec = inches per second; ppv = peak particle velocity
Source: (California Department of Transportation, 2013b)

As shown in **Table 3.11-3**, the minimum "architectural damage risk level" for continuous vibrations is a peak particle velocity (ppv) of 0.2 inches per second (in/sec) for fragile buildings or buildings with plastered walls and ceilings. This same level corresponds to the level at which vibrations typically become annoying to people in buildings. The "architectural damage risk level" ranges from 0.3 in/sec ppv for older residential structures to 0.5 in/sec ppv for newer structures. (California Department of Transportation, 2013b)

3.11.3 Environmental Setting

3.11.3.1 Noise-Sensitive Land Uses

Noise-sensitive land uses are generally considered to include those uses that would result in noise exposure that could cause health-related risks to individuals. Places where quiet is essential are also considered noise-sensitive uses. Residential dwellings are of primary concern because of the potential for increased and prolonged exposure of individuals to both interior and exterior noise levels. Other land uses such as libraries, places of worship, and recreation areas are also considered noise-sensitive land uses.

Existing land uses located to the north, south, and west of the Project Site (i.e., project footprint) consist predominantly of a mix of industrial and commercial uses. The nearest noise-sensitive land uses in the vicinity of the proposed East Park are residential uses located approximately 350 feet to the north of the proposed East Park, along S. Clarence Street. The nearest noise-sensitive land use in the vicinity of the proposed West Park is a residential development referred to as the "Brick Lofts", which is located approximately 700 feet south of the proposed West Park, near the intersection of Mateo Street and Jesse Street. Additional residential land uses are located approximately 700 feet to the east of the proposed East Park, across U.S. Highway 101 (U.S. 101) (refer to **Figure 3.11-2**, Nearby Land Uses and Noise Monitoring Locations).

Other noise-sensitive land uses are over 1,500 feet from the Project Area. The nearest schools are School of Santa Isabel and Bishop Mora Salesian High School, both approximately 1,600 feet east of the Project Area (proposed East Park). Hollenbeck Park, the nearest recreation area, is approximately 3,200 feet northeast of the Project Area (proposed East Park). The nearest place of worship is Santa Isabel Church, approximately 1,600 feet east of the Project Area (proposed East Park). Benjamin Franklin Library, approximately 3,700 feet northeast of the Project Area, is nearest library (proposed East Park).

3.11.3.2 Existing Noise Environment

Short-term (10-minute) noise level measurements were conducted on November 10, 2016, for the purpose of documenting and measuring the existing noise environment at various locations in the vicinity of the proposed Project Site. Ambient noise measurement locations and corresponding measured values in L_{eq} and L_{max} are summarized in **Table 3.11-4**.

As indicated in **Table 3.11-4**, measured ambient noise levels ranged from approximately 61-65 dBA L_{eq} during the daytime hours and from approximately 52-60 dBA L_{eq} during the evening and nighttime hours. In general, nighttime noise levels are approximately 5-10 dB lower than daytime noise levels. Based on the measurements conducted, ambient noise levels in the proposed Project Site vicinity are largely influenced by vehicle traffic on area roadways. Additional major noise sources in the Project Area include trains traveling along the Union Pacific Railroad (UPRR) and Metrolink rail lines, which are generally located along the west and east banks of the Los Angeles River. Existing traffic and railroad noise levels are discussed in the following sections.

Roadway Traffic Noise

Existing roadway traffic noise levels were calculated using the Federal Highway Administration (FHWA) Roadway Noise Prediction Model (FHWA RD-77-108) based on traffic data obtained from the *Traffic Impact Analysis* prepared for the proposed Project (Kimley-Horn and Associates, Inc., 2019a). Traffic volumes/data were generated for an opening year of 2023. Due to project delays, it is now not anticipated that the park will be open until 2024 at the earliest. There is not anticipated to be a substantial difference in projected traffic volumes/data from Year 2023 to Year 2024.

Figure 3.11-2: Nearby Land Uses and Noise Monitoring Locations



Source: (AMBIENT Air Quality & Noise Consulting, 2019)

Table 3.11-4: Summary of Measured Ambient Noise Levels

Location	Monitoring Period	Primary Noise Sources	Noise Levels (dBA)	
			L_{eq}	L_{max}
ST-1. Santa Fe Avenue at Sixth Street, approximately 20 feet from road centerline.	11:10-11:20	Vehicle Traffic	64.9	79.6
	20:00-20:10	Vehicle Traffic	60.2	77.5
ST-2. S. Clarence Street at Inez Street at residential property line.	13:00-13:10	Vehicle Traffic	62.4	68.1
	21:10-21:20	Vehicle Traffic	56.3	69.4
ST-3. S. Clarence Street at Jesse Street, approximately 15 feet from road centerline.	11:50-12:00	Vehicle Traffic	60.5	72.3
	21:50-22:00	Vehicle Traffic	55.6	70.5
ST-4. Mateo Street at Jesse Street, approximately 30 feet from road centerline.	12:20-12:40	Vehicle Traffic	61.2	73.8
	20:30-20:40	Vehicle Traffic	52.4	75.2

*Refer to **Figure 3.11-2** for noise monitoring locations.*
Noise measurements were conducted on November 3rd, 2017 using a Larson Davis Model 820 Type I sound level meter.
dBA = A-Weighted Decibels
Source: (AMBIENT Air Quality & Noise Consulting, 2019)

Predicted traffic noise levels and distances to projected traffic noise contours for major roadways are summarized in **Table 3.11-5**. Projected traffic noise contours do not include attenuation or shielding provided by intervening structures. Based on the modeling conducted, existing traffic noise levels along area roadways range from approximately 50 to 67 dBA CNEL at 50 feet from the near-travel-lane centerline.

Table 3.11-5: Existing Roadway Traffic Noise Levels & Contour Distances

Roadway Segment	CNEL at 50 ft. from Near-travel-lane Centerline	Distance to CNEL Contour (Feet from Road Centerline)		
		70	65	60
Fourth Street, West of Clarence Street	67	WR	111	233
Sixth Street, West of Mateo Street	65	WR	67	139
Sixth Street, East of Mateo Street	64	WR	63	131
Seventh Street, West of Boyle Avenue	63	WR	64	125
Seventh Street, East of Alameda Street	65	WR	66	139
Seventh Street, West of Mateo Street	64	WR	59	121
Seventh Street, West of Santa Fe Avenue	64	WR	56	115

Seventh Street, East of Santa Fe Avenue	65	WR	63	132
Alameda Street, North of Sixth Street	65	WR	85	173
Alameda Street, South of Sixth Street	65	WR	85	173
Clarence Street, South of Fourth Street	50	WR	WR	WR
Mateo Street, North of Seventh Street	59	WR	WR	WR
Mateo Street, South of Sixth Street	60	WR	WR	52
Mateo Street, North of Sixth Street	59	WR	WR	WR
Santa Fe Avenue, South of Fourth Street	63	WR	WR	84
Santa Fe Avenue, North of Seventh Street	61	WR	WR	69
Whittier Street, West of Boyle Avenue	65	WR	67	141

Traffic noise levels for area roadways were calculated based on data obtained from the Traffic Impact Analysis prepared for the proposed Project (Kimley-Horn and Associates, Inc., 2019a).
Predicted noise contours do not include shielding by intervening structures.
WR=Within Roadway Right-of-Way, CNEL = Community Equivalent Noise Level

Railroad Noise

The UPRR and Metrolink/Amtrak rail lines run in a general north-south direction located along the west and east banks of the Los Angeles River (refer to **Figure 3.11-2**, Nearby Land Uses and Noise Monitoring Locations). Freight train volumes can vary depending on market demands. In year 2000, the UPRR operated approximately 59 through freight trains per peak day over this line. The number of average freight trains dropped to approximately 51 trains per day in 2010, but is projected to increase in future years. By 2035, freight traffic is estimated to average approximately 111 trains per day (Southern California Association of Governments, 2011). Existing Metrolink and Amtrak passenger train volumes currently average approximately 20 trains per day and 12 trains per day, respectively (Metrolink, 2018; Amtrak, 2018).

Predicted railroad noise levels were calculated using the Federal Transit Administration's (FTA) *Noise and Vibration Impact Assessment* guidelines (Federal Transit Administration, 2006). Average-daily freight and passenger train volumes were distributed equally among the track lines running along the west and east banks of the Los Angeles River. Predicted average-daily train volumes at the nearest Project Site boundaries were calculated based on distance from the centerline of the east bank and west bank railroad corridors. Existing railroad noise levels are summarized in **Table 3.11-6**. As depicted, railroad noise levels are largely dominated by freight train traffic. In total, predicted average-daily railroad noise levels average approximately 70 dBA CNEL at approximately 100 feet from the centerline of the east and west bank rail line corridors. Combined existing noise levels at the nearest Project Site boundaries, taking into account contributions from both east and west bank rail corridors, would average approximately 71 dBA CNEL. Modeling assumptions and output files are included in *Noise Impact Assessment for Sixth Street PARC Project*.

Table 3.11-6: Existing Railroad Operations and Noise Levels

Rail Line	Total Average Trains/Day[1]	CNEL (dBA) at 100 feet[2]		Combined CNEL (dBA) at Project Site Property Line[3]
		West Bank	East Bank	
UPRR	59	70	70	71
Metrolink	20	56	56	
Amtrak	12	54	54	
Total:	91	70	70	

1. Average-daily freight train volumes based on maximum of 59 trains/day based on year 2000-2010 estimated volumes (Southern California Association of Governments, 2011). Amtrak and Metrolink train volumes derived from the existing train schedules.
2. Total average-daily train volumes were distributed equally among west bank and east bank rail lines.
3. Combined noise levels at the Project Site property line were calculated taking into account existing UPRR, Metrolink, and Amtrak train volumes. Includes contributions from west bank and east bank rail lines.
UPRR = Union Pacific Railroad, CNEL = Community Equivalent Noise Level, dBA = A-Weighted Decibels

3.11.4 Environmental Impact Analysis

3.11.4.1 Methodology

Construction Noise

Construction noise levels were evaluated based on typical equipment noise levels derived from the FHWA's Roadway Construction Noise Model, version 1.1 (2008). Predicted construction noise levels at the nearest noise-sensitive land uses were quantified assuming that the three loudest pieces of equipment associated with onsite activities could potentially operate simultaneously at the nearest construction site boundary. A minimum 10-dB reduction for intervening structures was applied (U.S. Department of Housing and Urban Development, 1973). Modeling assumptions and output files are included in the *Noise Impact Assessment for Sixth Street PARC Project* (AMBIENT Air Quality & Noise Consulting, 2019).

Operational Noise

Traffic noise levels along major area roadways were estimated using the FHWA Highway Traffic Noise Prediction model (FHWA-RD-77-108.) The FHWA modeling was based upon the California Vehicle Noise (Calveno) emission levels for automobiles and medium- and heavy-duty trucks. Input data used in the model included traffic volumes, day/night percentages of automobiles and medium and heavy trucks, vehicle speeds, ground attenuation factors, roadway widths, and ground elevation data. Traffic volumes for roadway segments in the proposed Project Site vicinity were derived from *Traffic Impact Analysis* prepared for the proposed Project (Kimley-Horn and Associates, Inc., 2019a). Modeling assumptions and output files are included in the *Noise Impact Assessment* prepared for the proposed Project (AMBIENT Air Quality & Noise Consulting, 2019).

Noise levels associated with onsite recreational uses and events were assessed based on the estimated capacity for major onsite events assuming that fifty percent of the attendees would be male and fifty percent would be female. Where applicable, noise levels associated with the use of amplified public address/sound systems were included. Predicted operational noise levels at the nearest noise-sensitive land uses were quantified assuming an average noise-attenuation rate of 6 dB per doubling of distance from the source and up to 10 dB reduction for intervening structures. Modeling assumptions and output files are included in the *Noise Impact Assessment for Sixth Street PARC Project* (AMBIENT Air Quality & Noise Consulting, 2019).

For determination of land use compatibility for the proposed Project, transportation noise levels for U.S. 101 and the adjacent rail lines were calculated for future year 2035 conditions. Traffic noise levels for U.S. 101 were quantified using the FHWA's Roadway Noise Prediction Model (FHWA RD-77-108) based on an estimated year 2035 traffic volume of 173,700 vehicles per day (California Department of Transportation, 2013c). Predicted railroad noise levels were calculated in accordance with the FTA's *Noise and Vibration Impact Assessment* (2006) guidelines assuming projected future year 2035 train volumes of 111 freight trains per day and 37 passenger trains per day (Southern California Association of Governments, 2011). Projected year 2035 passenger train volumes were calculated based on existing volumes and a projected future increase of 1.6 passenger trains per 5-year period for the Los Angeles region (Southern California Association of Governments, 2012). Average-daily freight and passenger train volumes were distributed equally among the track lines running along the west and east bank of the Los Angeles River. Predicted average-daily train volumes at the nearest Project Site boundaries were calculated based on distance from the centerline of the east bank and west bank railroad corridors. Modeling assumptions and output files are included in the *Noise Impact Assessment* prepared for the proposed Project (AMBIENT Air Quality & Noise Consulting, 2019).

Groundborne Vibration

Groundborne vibration levels associated with the proposed Project were qualitatively assessed based on construction-equipment vibration levels typically associated with off-road construction equipment (California Department of Transportation, 2013b). Short-term and long-term impacts associated with transportation and non-transportation noise sources were assessed based on potential increases in ambient noise levels anticipated to occur with proposed Project implementation.

3.11.4.2 Screening Analysis

Several impacts and corresponding thresholds of significance in the following section were eliminated from further analysis in this EIR. Topics were eliminated if the IS for the proposed Project concluded there would be "No Impact," or if impacts were identified to be "Less Than Significant… and will not be discussed further in the EIR." Therefore, only the topics described in the section below were determined to require further analysis in this EIR. A copy of the Initial Study, which contains the eliminated topics, is provided in **Appendix A**.

3.11.4.3 Thresholds of Significance

According to Appendix G of the CEQA Guidelines and the *L.A. CEQA Thresholds Guide*, the proposed Project would have a significant impact on Noise and Vibration if it would:

XIII(a) Result in generation of a substantial temporary or permanent increase in ambient noise levels in the vicinity of the project in excess of standards established in the local general plan or noise ordinance, or applicable standards of other agencies.

I.1 Construction Noise. A project would normally have a significant impact on noise levels from construction if:

- Construction activities lasting more than one day would exceed existing ambient exterior noise levels by 10 dBA or more at a noise sensitive use;
- Construction activities lasting more than 10 days in a three-month period would exceed existing ambient exterior noise levels by 5 dBA or more at a noise sensitive use; or
- Construction activities would exceed the ambient noise level by 5 dBA at a noise sensitive use between the hours of 9:00 p.m. and 7:00 a.m. Monday through Friday, before 8:00 a.m. or after 6:00 p.m. on Saturday, or at any time on Sunday.

I.2 Operational Noise. A project would normally have a significant impact on noise levels from project operations if the project causes the ambient noise level measured at the property line of affected uses to increase by 3 dBA in CNEL to or within the "normally unacceptable" or "clearly unacceptable" category, or any 5 dBA or greater noise increase (See **Table 3.11-2**).

XIII(b) Result in generation of excessive groundborne vibration or groundborne noise levels.

3.11.4.4 Construction Impacts

XIII(a): Result in generation of a substantial temporary or permanent increase in ambient noise levels in the vicinity of the project in excess of standards established in the local general plan or noise ordinance, or applicable standards of other agencies.

Construction noise typically occurs intermittently and varies depending upon the nature or phase of construction (e.g., land clearing, grading, excavation, and building construction). Noise generated by construction equipment, including earth movers, material handlers, and portable generators, can reach high levels. Temporary increases in ambient noise levels, particularly during the nighttime hours, could result in increased levels of annoyance and potential sleep disruption. Although noise ranges were found to be similar for all construction phases, the grading phase tends to involve the most equipment and resulted in slightly higher average-hourly noise levels. Typical noise levels for individual pieces of construction equipment expected to be used during project construction and distances to predicted noise contours are summarized in **Table 3.11-7** (Federal Transit Administration, 2006; Federal Highway Administration, 2017).

As depicted in **Table 3.11-7**, individual equipment noise levels commonly associated with residential development projects typically range from approximately 73 to 83 dBA L_{eq} at 50 feet with intermittent noise levels reaching up to approximately 90 dBA L_{max} at this same distance. Assuming that multiple pieces of construction equipment would be operating simultaneously near the construction site boundary, predicted construction noise levels during the most intensive activities (e.g., grading and excavation) could reach levels of approximately 88 dBA L_{eq} at 50 feet from the Project Site.

Table 3.11-7: Typical Construction Equipment Noise

Equipment	Typical Noise Level (dBA) 50 feet from Source		Distance to Noise Contours (feet, dBA L_{eq})		
	L_{max}	L_{eq}	70 dBA	65 dBA	60 dBA
Air Compressor	80	76	105	187	334
Backhoe/Front End Loader	80	76	105	187	334
Compactor (Ground)	80	73	74	133	236
Concrete Mixer Truck	85	81	187	334	594
Concrete Saw	90	83	236	420	748
Crane	85	77	118	210	374
Dozer/Grader/Excavator/Scraper	85	81	187	334	594
Drill Rig Truck	84	77	118	210	374
Generator	82	79	149	265	472
Gradall	85	81	187	334	594
Hydraulic Break Ram	90	80	167	297	529
Jack Hammer	85	78	133	236	420
Impact Hammer/Hoe Ram (Mounted)	90	83	236	420	748
Pavement Scarifier/Roller	85	78	133	236	420
Paver	85	82	210	374	667
Pneumatic Tools	85	82	210	374	667
Pumps	77	74	83	149	265
Truck (Dump/Flat Bed)	84	80	167	297	529

Based on maximum equipment noise levels. Actual noise levels are typically lower, particularly if equipment is fitted with exhaust mufflers and engine shrouds.
Sources: (Federal Transit Administration, 2006; Federal Highway Administration, 2017)

Construction activities would comply with the allowable hours of construction in the LAMC. Accordingly, construction activities would be limited to Monday through Friday between the hours of 7:00 a.m. to 4:00 p.m., unless otherwise approved by the engineer. Construction on Saturdays from 8:00 a.m. to 6:00 p.m. would be permissible upon approval by the engineer. Construction activities would be prohibited on Sundays and Federal holidays, unless approved by the engineer.

The LAMC limits equipment noise levels to 75 dBA at 50 feet unless technically infeasible. Noise levels associated with onsite construction activities at nearby noise-sensitive land uses, assuming multiple pieces of equipment operating simultaneously, were quantified and are summarized in **Table 3.11-8**. Project construction would not result in a significant increase in daytime ambient noise levels at the

nearest noise-sensitive land uses. However, as noted above, noise levels from individual pieces of equipment, which generally range from 73 to 83 dBA L_{eq} at 50 feet, could potentially exceed the allowable noise level stated in the LAMC. Therefore, the City is adopting **MM-NOISE-1**, which would reduce construction noise to less than significant levels. The proposed mitigation would limit construction activities to the less noise-sensitive periods of the day, which would minimize potential disturbance to nearby residential land uses. The use of mufflers on off-road equipment would reduce equipment noise levels by approximately 10 dBA (**BMP-NOISE-1**). Additional measures were also included to further minimize potential disturbance to nearby land uses, including limitation on equipment idling and locations for equipment staging and queuing areas. Additional measures may also be implemented on an "as-needed" basis to address public concerns.

Table 3.11-8: Construction Noise Levels at Nearby Noise-Sensitive Land Uses

Construction Activity	Noise Level (dBA Leq) at Nearby Noise-Sensitive Land Uses							
	Brick Lofts Residential				Multi-Family Residential on S. Clarence St.			
	Project Construction	Daytime Ambient	Project Plus Ambient	Change	Project Construction	Daytime Ambient	Project Plus Ambient	Change
Site Preparation/ Grubbing	50	61	61	0	56	62	62	1
Grading/ Excavation	51	61	61	0	57	62	62	1
Asphalt Demolition	50	61	61	0	56	62	62	1
Park Construction and Infrastructure Installation	45	61	61	0	51	62	62	0
Paving	46	61	61	0	52	62	62	0
Utilities	46	61	61	0	52	62	62	0
Building Construction	47	61	61	0	53	62	62	1
In-River Terracing	49	61	61	0	48	62	62	0

Construction noise levels were quantified assuming the three loudest pieces of equipment operating simultaneously at the nearest construction site boundary. Predicted noise levels were calculated assuming a noise-attenuation rate of 6 dB per doubling of distance from the source. Includes up to 10 dB shielding provided by intervening structures (U.S. Department of Housing and Urban Development, 1973).

Construction activities may also result in short-term increases in vehicle traffic along area roadways. Typically, a doubling of vehicle traffic would be required before a significant increase in traffic noise levels would occur. Based on the *Traffic Impact Analysis* prepared for the proposed Project, construction activities would generate up to approximately 80 trips per day (Kimley-Horn and Associates, Inc., 2019a). Additional trips associated with the hauling of materials to and from the site may also be required. Traffic volumes along area roadways typically average several thousand vehicle trips per day. Construction-generated traffic would be dispersed over multiple roadways and would not be anticipated to result in a doubling of vehicle traffic along area roadways. As a result, construction of the proposed Project would not be anticipated to result in a substantial increase in traffic noise levels along area roadways that would adversely impact noise-sensitive land uses. Therefore, impacts would be less than significant.

XIII(b): Result in exposure of persons to or generation of excessive groundborne vibration or groundborne noise levels.

The effects of groundborne vibration can vary from no perceptible effects at the lowest levels, low rumbling sounds and detectable vibrations at moderate levels, and slight damage to nearby structures at the highest levels. At the highest levels of vibration, damage to structures is primarily architectural (e.g., loosening and cracking of plaster or stucco coatings) and rarely results in structural damage. The effects of ground vibration are influenced by the duration of the vibration and the distance from the vibration source.

Vibration levels associated with construction equipment likely to be required during project construction are summarized in **Table 3.11-9**. The use of impact pile drivers is not anticipated to be required for the proposed Project.

Table 3.11-9: Representative Construction Equipment Vibration Levels

Equipment	Vibration Level at 25 Feet	
	Peak Particle Velocity (ppv, in/sec)	VdB (micro-inch/second)
Caisson Drilling	0.089	87
Hoe Ram/Pavement Breaker	0.089	87
Large Bulldozers	0.089	87
Loaded Trucks	0.076	86
Jackhammer	0.035	79
Small Bulldozers	0.003	58

ppv = Peak Particle Velocity, in/sec = Inches/Second, VdB = Velocity Decibel
Source: (Federal Transit Administration, 2006; California Department of Transportation, 2013b)

As noted in Section 3.11.2.2, there are no federal, state, or local regulatory standards for groundborne vibration. Groundborne vibration levels were, therefore, evaluated in comparison to Caltrans' recommended criteria (see **Table 3.11-3**). Construction-generated vibration levels would have a potentially significant impact if vibration levels at the nearest structures would exceed the minimum criteria of 0.2 in/sec ppv at fragile structures, 0.3 in/sec ppv at residential dwellings, or 0.5 in/sec ppv at newer buildings, including non-residential structures. This same level corresponds to the level at which vibrations typically become annoying to people in buildings (California Department of Transportation, 2013b).

The nearest existing structures include non-residential structures located adjacent to the Project Site. The nearest residential uses are located approximately 350 feet to the north of the proposed East Park, along South Clarence Street. The nearest noise-sensitive land use in the vicinity of the proposed West Park is a residential development referred to as the "Brick Lofts," which is located approximately 700 feet south of the proposed West Park, near the intersection of Mateo Street and Jesse Street.

As depicted in **Table 3.11-9**, off-road equipment and haul trucks would generate groundborne vibration levels of 0.003 to 0.089 in/sec ppv (58 to 87 micro-inch per second or velocity decibels [VdB]) at 25 feet (Federal Transit Administration, 2006; California Department of Transportation, 2013b). Assuming a distance of 350 feet and a maximum vibration level of 0.089 in/sec ppv, predicted vibration levels would be approximately 0.01 in/sec ppv, or less, at the nearest residential structures. Based on this same vibration level, predicted vibration levels at non-residential land uses located adjacent to the Project Site could exceed 0.05 in/sect ppv when heavy equipment (e.g., dozers) are operated within five feet of existing structures. In addition, haul trucks traveling along area roadways may result in perceptible increases in vibration levels. However, these vibration levels would be transient and instantaneous events, which would be typical of existing vibrations along the roadway network. Based on measurements conducted by Caltrans, on-road heavy-duty trucks would not generate substantial increases in groundborne vibration that would exceed commonly applied criteria for structural damage or annoyance (California Department of Transportation, 2013b).

Groundborne vibration levels associated with off-road equipment and haul trucks would not exceed the minimum commonly applied standards of 0.3 in/sec at the nearest residential structures. However, construction activities occurring within five feet of nearby existing non-residential structures could potentially exceed the threshold of 0.5 in/sec ppv. Therefore, increases in groundborne vibration levels associated with the proposed Project would be considered potentially significant. Therefore, the City is adopting **MM-NOISE-1**, which would reduce groundborne vibration levels to less than significant levels. With implementation of **MM-NOISE-1**, impacts would be less than significant.

3.11.4.5 Operational Impacts

XIII(a): Result in exposure of persons to or generation of noise levels in excess of standards established in the local general plan or noise ordinance, or applicable standards of other agencies.

The proposed Project would not include the installation of major stationary noise sources, such as backup power generators. Potential noise impacts would be associated with project-generated vehicle traffic and onsite recreational uses and events (e.g., concerts and performances; festivals; sports games, practices, and tournaments; farmers markets; and large events).

Increased Traffic Noise

Major existing noise sources in the Project Area consist predominantly of vehicle traffic on U.S. 101 and trains traveling along the adjacent UPRR and Metrolink/Amtrak rail lines. No existing nearby stationary sources of noise were identified in the Project Area. For determination of land use compatibility for the proposed Project, transportation noise levels for U.S. 101 and the adjacent rail lines were calculated for future year 2035 conditions. Traffic noise levels for U.S. 101 were quantified using the FHWA roadway noise model based on an estimated year 2035 traffic volume of 173,700 vehicles per day (California Department of Transportation, 2013c). Predicted railroad noise levels were calculated in accordance with the FTA's *Noise and Vibration Impact Assessment* guidelines assuming projected future year 2035 train volumes of 111 freight trains per day and 37 passenger trains per day (Southern California Association of Governments, 2011; Federal Transit Administration, 2006). Projected year 2035 passenger train volumes were calculated based on existing volumes and assuming an average projected future increase of 1.6 passenger trains per 5-year period (Southern California Association of Governments, 2012).

Based on the noise modeling conducted, the U.S. 101 traffic noise levels for future year 2035 along the eastern boundary of the proposed East Park would be approximately 70 dBA CNEL. Along the boundaries of the proposed East Park and Arts Plaza, adjacent to the UPRR and Metrolink/Amtrak railroad corridors, predicted future year 2035 onsite noise levels associated with railroad operations would be approximately 73 dBA CNEL. Predicted onsite noise levels would decrease with increased distance from the adjacent U.S. 101 and railroad corridors. Predicted onsite noise levels would not exceed the City's "normally acceptable" noise level of 75 dBA CNEL (refer to **Table 3.11-2)**. Therefore, impacts would be less than significant and mitigation is not required.

Traffic noise levels for roadway segments primarily affected by the proposed Project were quantified using the FHWA Highway Traffic Noise Prediction model (FHWA-RD-77-108) based on traffic data derived from the *Traffic Impact Analysis* prepared for the proposed Project (Kimley-Horn and Associates, Inc., 2019a). Project-generated traffic volumes include reductions in vehicle traffic associated with the industrial land uses that were removed. Traffic noise levels were evaluated for both existing and future cumulative conditions, with and without implementation of the proposed Project. Predicted existing and future cumulative traffic noise levels and resultant changes in traffic noise levels attributable to the proposed Project are summarized in **Table 3.11-10** and **Table 3.11-11**, respectively. As indicated in the tables, implementation of the proposed Project would not result in a significant increase in traffic noise levels under either existing or future cumulative conditions because of the removed industrial land uses.

Recreational and Event Noise

Onsite noise within the recreation and event areas would be primarily associated with human speech and amplified music. Use of the recreation yard would be limited to the daytime hours. Average sustained sound levels typically associated with human speech generally range from approximately 53 to 75 dBA at one meter for males and from 50 to 71 dBA for females. Instantaneous noise levels, such as shouting, can generate noise levels ranging from approximately 82 to 88 dBA at one meter (Harris, 1998).

The largest events anticipated to be conducted at the Project Site would range from approximately 500 to 5,000 individuals. Predicted maximum levels of crowd noise associated with these various events were calculated assuming that 50 percent of the individuals would be male and 50 percent would be female. It

is anticipated that some onsite events may also include the use of portable amplified sound systems. To be conservative, this analysis included the use of amplified sound systems for the events evaluated. Noise levels associated with amplified sound systems can vary depending on various factors, including crowd size, but generally range from roughly 60 to 70 dBA L_{eq} at 100 feet. To be conservative, noise from amplified sound systems were assumed to be 70 dBA L_{eq} at 100 feet.

Predicted operational noise levels at the nearest noise-sensitive land uses were calculated based on distance from the source and taking into account intervening structures and terrain. Predicted operational noise levels for onsite uses are summarized in **Table 3.11-12**. As depicted, predicted operational noise levels at the nearest noise-sensitive land uses would range from approximately 30 to 58 dBA CNEL. Operational noise levels associated with events at the proposed Arts Plaza Stage in the proposed West Park area would not result in predicted increase in ambient noise levels at the nearest noise-sensitive receiver (i.e., Brick Lofts, LLC). Operational noise levels associated with events in the East Park area would result in increases of up to approximately 2 dBA CNEL at the nearest residential land uses to the north along S. Clarence Street.

Predicted operational noise levels were conservatively calculated assuming that onsite activity noise levels would occur continuously over a fifteen-hour period (7:00 a.m. to 10:00 p.m.). Actual operational times and associated noise levels would likely be less. Operational noise levels at other noise-sensitive land uses, which are generally located east of the Project Site, across U.S. 101, would be largely shielded by intervening terrain and masked by existing traffic noise levels. Therefore, operational noise levels at the nearest residential land uses would not exceed the "normally acceptable" noise level of 65 dBA CNEL. In addition, assuming an average exterior-to-interior noise reduction of 20 dB, which is typical for newer residential dwellings, predicted interior noise levels at these nearest residences would not exceed the commonly applied interior noise level threshold of 45 dBA CNEL. Therefore, impacts would be less than significant, and mitigation is not required.

XIII(b) Result in exposure of persons to or generation of excessive groundborne vibration or groundborne noise levels.

Proposed Project operations would not include the use of machinery or equipment that would contribute to excessive groundborne noise or vibration levels. Therefore, impacts would be less than significant and mitigation is not required.

Table 3.11-10: Predicted Traffic Noise Levels – Existing Conditions

Scenario/Roadway Segment	Average-Daily Noise Level (dBA CNEL) at 50 feet from Near-travel-lane Centerline[1]			Potentially Significant?[3]
	Existing Without Project	Existing With Project[2]	Change	
Fourth Street, West of Clarence Street	67.4	67.4	0.0	No
Sixth Street, West of Mateo Street	64.8	64.8	0.0	No
Sixth Street, East of Mateo Street	64.4	64.4	0.0	No
Seventh Street, West of Boyle Avenue	63.2	63.1	-0.1	No
Seventh Street, East of Alameda Street	64.8	64.8	0.0	No
Seventh Street, West of Mateo Street	63.9	63.9	0.0	No
Seventh Street, West of Santa Fe Avenue	63.6	63.6	0.0	No
Seventh Street, East of Santa Fe Avenue	64.5	64.5	0.0	No
Alameda Street, North of Sixth Street	65.4	65.3	-0.1	No
Alameda Street, South of Sixth Street	65.4	65.4	0.0	No
Clarence Street, South of Fourth Street	49.5	49.5	0.0	No
Mateo Street, North of Seventh Street	59.2	59.2	0.0	No
Mateo Street, South of Sixth Street	59.5	59.5	0.0	No
Mateo Street, North of Sixth Street	59.1	59.1	0.0	No
Santa Fe Avenue, South of Fourth Street	62.7	62.7	0.0	No
Santa Fe Avenue, North of Seventh Street	61.4	61.4	0.0	No
Whittier Street, West of Boyle Avenue	64.9	64.9	0.0	No

1. Traffic noise levels were calculated using the FHWA roadway noise prediction model for primarily affected roadways based on traffic volumes derived from the Traffic Impact Analysis prepared for the proposed Project (Kimley-Horn and Associates, Inc., 2019a).
2. Predicted traffic noise levels with implementation of the proposed project include reductions in traffic volumes associated with the industrial land uses that were removed (Kimley-Horn and Associates, Inc., 2019a).
3. Potentially significant impact defined as an increase of 3 dBA, or greater.

Table 3.11-11: Predicted Traffic Noise Levels – Future Cumulative Conditions

Scenario/Roadway Segment	Average-Daily Noise Level (dBA CNEL) at 50 ft. from Near-travel-lane Centerline[1]			Potentially Significant?[3]
	Cumulative Without Project	Cumulative With Project[2]	Change	
Fourth Street, West of Clarence Street	69.5	69.5	0.0	No
Sixth Street, West of Mateo Street	64.9	64.8	-0.1	No
Sixth Street, East of Mateo Street	64.4	64.4	0.0	No
Seventh Street, West of Boyle Avenue	65.6	65.6	0.0	No
Seventh Street, East of Alameda Street	67.4	67.4	0.0	No
Seventh Street, West of Mateo Street	67.0	67.0	0.0	No
Seventh Street, West of Santa Fe Avenue	64.4	64.4	0.0	No
Seventh Street, East of Santa Fe Avenue	66.7	66.7	0.0	No
Alameda Street, North of Sixth Street	68.0	68.0	0.0	No
Alameda Street, South of Sixth Street	68.1	68.1	0.0	No
Clarence Street, South of Fourth Street	49.8	49.8	0.0	No
Mateo Street, North of Seventh Street	64.3	64.3	0.0	No
Mateo Street, South of Sixth Street	65.6	65.6	0.0	No
Mateo Street, North of Sixth Street	65.5	65.5	0.0	No
Santa Fe Avenue, South of Fourth Street	63.8	63.7	-0.1	No
Santa Fe Avenue, North of Seventh Street	65.3	65.3	0.0	No
Whittier Street, West of Boyle Avenue	64.9	64.9	0.0	No

1. Traffic noise levels were calculated using the FHWA roadway noise prediction model for primarily affected roadways based on traffic volumes derived from the Traffic Impact Analysis prepared for the proposed Project (Kimley-Horn and Associates, Inc., 2019a).
2. Predicted traffic noise levels with implementation of the proposed project include reductions in traffic volumes associated with the industrial land uses that were removed (Kimley-Horn and Associates, Inc., 2019a).
3. Potentially significant impact defined as an increase of 3 dBA, or greater.

Table 3.11-12: Predicted Operational Noise Levels for Onsite Uses

Event (Capacity)	Average-daily Noise Level (dBA CNEL)[1]						
	Project Noise Levels	Existing Ambient Conditions	Ambient With Project	Noise Increase With Project	Threshold	Exceeds Threshold/ Significant Increase[4]?	Significant Impact
Predicted Noise Levels at Brick Lofts Residential							
Arts Plaza Stage (1,000)	40	58	58	0	65	No	No
Soccer Field (500)	31	58	58	0	65	No	No
Basketball Courts (500)	30	58	58	0	65	No	No
Flex Area 1 (1,500)	40	58	58	0	65	No	No
Flex Area 2 (1,500)	40	58	58	0	65	No	No
Intermediate Event (2,000)[2]	42	58	58	0	65	No	No
Large Event (3,250)[3]	44	58	58	0	65	No	No
Maximum Event (5,000)[3]	45	58	58	0	65	No	No
Predicted Noise Levels at MFR on South Clarence Street							
Arts Plaza Stage (1,000)	34	62	62	0	65	No	No
Soccer Field (500)	41	62	62	0	65	No	No
Basketball Courts (500)	45	62	62	0	65	No	No
Flex Area 1 (1,500)	51	62	62	0	65	No	No
Flex Area 2 (1,500)	53	62	63	1	65	No	No
Intermediate Event (2,000)[2]	55	62	63	1	65	No	No
Large Event (3,250)[3]	57	62	63	1	65	No	No
Maximum Event (5,000)[3]	58	62	64	2	65	No	No

MFR=Multi-family Residential
1. Average-daily noise levels (in dBA CNEL) were calculated assuming continuous operation for 15 hours daily (7:00 a.m. to 10:00 p.m.).
2. Intermediate event includes events in areas of the flex area and basketball court areas operating simultaneously.
3. Large and maximum events (i.e., 3,250 and 5,000 attendees, respectively) includes events in areas of the flex area, soccer fields, and basketball court areas operating simultaneously.
4. Significant increase defined as an increase of 5 dBA, or greater, in areas 65 dBA CNEL, or less, and 3 dBA, or greater, in areas above 65 dBA CNEL.

3.11.5 Best Management Practices

BMP-NOISE-1: Construction Equipment Requirements

Construction equipment shall be properly maintained and equipped with mufflers.

3.11.6 Mitigation Measures

MM-NOISE-1: Construction-Noise Management Plan

A construction-noise management plan (CNMP) shall be prepared for the proposed Project. The CNMP shall, at a minimum, include the following measures:

- Construction activities shall be restricted outside the hours of 7:00 a.m. to 9:00 p.m. Monday through Friday, and between the hours of 8:00 a.m. to 6:00 p.m. on Saturdays. While the intention is not to conduct work on Sundays, occasional Sunday work may be required to ensure the proposed Project schedule is met. If it is determined that Sunday work is necessary, the proper permits will need to be obtained through the Police Commission. Construction activities shall be prohibited on federal holidays.
- Construction equipment shall be properly maintained and equipped with mufflers.
- Equipment shall be turned off when not in use for an excess of five minutes, except for equipment that requires idling to maintain performance.
- A public liaison shall be appointed for project construction and shall be responsible for addressing public concerns about construction activities, including excessive noise. As needed, the liaison shall determine the cause of the concern (e.g., starting too early, bad muffler) and implement measures to address the concern. The liaison will work directly with the construction contractor to ensure implementation of the noise control plan.
- The liaison will work directly with the construction contractor to ensure implementation of the noise control plan.
- The public shall be notified in advance of the location and dates of construction hours and activities.
- Where necessary, temporary sound barriers shall be installed.
- Signage and notification on where to report construction-generated noise shall be posted on-site and around the construction area, as well as on the Bureau of Engineering website.

- Staging and queuing areas shall be located at the furthest distance possible from nearby residential land uses, as well as any other noise-sensitive land uses identified in the Project Area at the time of construction (e.g., transient lodging, schools, libraries, churches, hospitals, and nursing homes).
- Limit noise/vibration intensive activities occurring within ten feet of existing structures and occupied land uses. Where possible and to the extent locally available, select low-noise/vibration generating equipment when activities occur within ten feet of adjacent existing structures.

3.11.7 Significant Unavoidable Adverse Impacts

With implementation of **MM-NOISE-1** described above, the proposed Project would not result in significant unavoidable adverse impacts.

3.11.8 Cumulative Impacts

With implementation of **MM-NOISE-1**, construction-generated noise levels would be reduced to less than significant. As shown in **Table 3.11-11,** the proposed Project would not result in a significant increase in traffic noise levels under future cumulative conditions. Construction-generated and operational impacts related to vibration would be less than significant.

The proposed development projects listed in **Table 1-1** would be required to comply with all noise and vibration regulations and standards, including those outlined in the City's General Plan Noise Element and Municipal Code. To reduce impacts related to Noise and Vibration, these projects would be required to develop avoidance, minimization, and mitigation measures. Therefore, the proposed Project would not result in cumulatively considerable impacts related to Noise and Vibration.

3.12 Population and Housing

This section describes the affected environment and regulatory setting for Population and Housing related to the Project Area and surrounding area. In addition, this section describes the potential impacts related to Population and Housing that would result from implementation of the proposed Project. As noted in the analysis below, impacts associated with Population and Housing during construction or operation of the proposed Project would be less than significant and no mitigation measures are required.

The information in this section is based on the *Community Impact Assessment* (CIA) prepared for the proposed Project (GPA Consulting, 2019). It is unlikely that community conditions have changed substantially from that described in this technical study. In response to public comments received during the public scoping period for the Notice of Preparation/Initial Study (see **Section 3.12.3.1** below), this EIR includes discussions of development and growth in vicinity to the Project Area and the displacement of homeless people.

3.12.1 Regulatory Setting

A review of the various federal, state, regional, and local government regulatory requirements was conducted to identify regulations that relate to Population and Housing. This section summarizes the various regulatory requirements that are relevant to the proposed Project.

3.12.1.1 State

California Environmental Quality Act

The California Environmental Quality Act (CEQA) requires the analysis of a project's potential to induce growth. CEQA guidelines, Section 15126.2(d), require that environmental documents "discuss the ways in which the project could foster economic or population growth, or the construction of additional housing, either directly or indirectly, in the surrounding environment" (California National Resources Agency, 2016).

Under CEQA, growth inducement is not necessarily considered detrimental, beneficial, or environmentally significant. Typically, the growth-inducing potential of a project is considered substantial if it fosters growth or a concentration of population in excess of what is assumed in relevant master plans, land use plans, or in projections made by regional planning agencies.

Substantial growth impacts could be manifested through the provision of infrastructure or service capacity to accommodate growth beyond the levels currently permitted by local or regional plans and policies. In general, growth induced by a project is considered a significant impact if it directly or indirectly affects the ability of agencies to provide needed public services, or if it can be demonstrated that the potential growth significantly affects the environment in some other way.

Assembly Bill 1482

Assembly Bill (AB) 1482, the Tenant Protection Act of 2019, was approved by the Governor on October 8, 2019. AB 1482 is a state law that establishes statewide rent control provisions until January 1, 2030. Under this law, landlords are only able to raise rent for an existent tenant by five percent after inflation.

Previously in the City of Los Angeles, local rent control laws only applied to buildings constructed and occupied prior to October 1, 1978. The passage of AB 1482 applies to tenants living in housing that has been issued a certificate of occupancy 15 years prior.

3.12.1.2 Regional

Southern California Association of Governments Regional Housing Needs Assessment

The *Regional Housing Needs Assessment* (RHNA) quantifies the need for housing in jurisdictions within the Southern California Association of Governments (SCAG) region (Southern California Association of Governments, 2019). SCAG conducts the RHNA every eight years. The most recent assessment was completed in 2012 and covers a projection period between 2013 and 2021. The RHNA guides communities in decisions related to land use planning, resource allocation, and addressing existing and future housing needs based on population, employment, and household growth in the SCAG region.

3.12.1.3 Local

City of Los Angeles General Plan

As required by the State of California, the City's General Plan addresses goals, policies, and standards related to land use, circulation, housing, conservation, open space, noise, and safety (City of Los Angeles, 2017b). To address goals that meet the unique needs of the City, the General Plan also includes elements related to health and wellness, air quality, conservation, and public facilities and services. The City is currently undertaking a comprehensive update to the General Plan.

Housing Element

The Housing Element of the City's General Plan identifies the City's existing housing conditions and needs; establishes goals, objectives, and policies for the City's housing and growth strategy; and describes programs that the City intends to implement to meet the diverse housing needs throughout the City (City of Los Angeles, 2013).

The Housing Element includes goals, objectives, and policies for providing an adequate supply of housing, expanding opportunities and resources for affordable housing, and providing housing and services to meet the needs of the homeless or people at risk of homelessness. The Housing Element also discusses development trends and future growth in the City, identifying opportunities for infill development and redevelopment.

Comprehensive Homeless Strategy

The City developed the *Comprehensive Homeless Strategy* to address homelessness over the next ten years as a joint effort between the City, County, and the Los Angeles Homeless Services Authority (LAHSA). The report provides over 60 recommendations for decision makers with regards to prioritizing and allocating funding, including preventive strategies, case management, and housing services (City of Los Angeles, 2016b). The key areas of the report include the following:

- **No Wrong Door:** Allows homeless people to access housing services through any City agency (e.g., Los Angeles Police Department, Los Angeles Fire Department, and the Public Library System). Each department will receive customized training to engage homeless people and connect them with services.

- **Coordinated Entry System:** Streamlines the process for finding permanent housing with more targeted and cost-effective strategies.
- **Housing:** Includes policies to streamline the planning and zoning process for permanent supportive housing projects, and to increase the investment and use of housing subsidies and vouchers. Suggests the conversion of public and private shelters into bridge and permanent housing options and the expansion of emergency shelters into 24 hour operations.
- **Assistance for the Homeless – El Niño:** Funding provided for inclement weather shelters and other costs associated with El Niño to avoid injury and loss of life.

Executive Directive 16

Executive Directive 16 provides City staff with the resources needed to implement the City's *Comprehensive Homeless Strategy* (Los Angeles Mayor, 2016). The Directive implements a "No Wrong Door" strategy that allows homeless people to have access to City services, regardless of which City Department they seek help from. A budget of $138 million has been allocated to addressing the City's homelessness crisis, with 22% of funding dedicated to expanding services for the homeless provided by LAHSA.

Measure H

Measure H is a County measure that is expected to generate $355 million annually for services to combat homelessness (Los Angeles County, n.d.). Services include programs related to homelessness prevention, foster care and youth, health and mental illness, outreach and case management, re-entry from justice system, and unemployment.

Proposition HHH

The Proposition HHH Permanent Supportive Housing Loan Program is a program that was developed to provide permanent supportive housing for homeless individuals and those at risk of homelessness throughout the City (Los Angeles Housing + Community Investment Department, 2018). The program aims to reduce homelessness by creating safe and affordable housing units and increasing the accessibility of services and treatment programs.

3.12.2 Environmental Setting

The information in the following sections is based on the U.S. Census Bureau's American Community Survey (ACS) 5-Year Estimates. The ACS is an ongoing survey that provides data on various topics that include, but are not limited to population, economy, business, education, employment, families and living arrangements, housing, and income and poverty. The most recent ACS 5-Year Estimates were released in 2018 and include data from 2013-2017 (U.S. Census Bureau, 2018).

Because the ACS 5-Year Estimates provide statistics at the block group level, the environmental setting for Population and Housing is discussed in the context of block groups. The 14 block groups that overlap with or are in proximity to the Project Area, as defined by the U.S. Census Bureau, are listed in **Table 3.12-1** (see **Figure 3.12-1**, Block Groups).

Table 3.12-1: Census Tracts and Block Groups

Census Tract	Block Groups Within Census Tract
Central City North	
Census Tract 2060.31	Block Group 1
	Block Group 2
Boyle Heights	
Census Tract 2035.00	Block Group 1
	Block Group 3
Census Tract 2044.10	Block Group 1
	Block Group 2
Census Tract 2044.20	Block Group 1
	Block Group 2
Census Tract 2046	Block Group 1
	Block Group 2
Census Tract 2060.32	Block Group 1
	Block Group 2
	Block Group 3
Census Tract 2060.50	Block Group 1
Source: (U.S. Census Bureau, 2018)	

3.12.2.1 Regional Population Characteristics

According to the 2019 ACS, populations in the County and the City increased by 3.3 percent and 5.2 percent, respectively, from 2010 to 2019. Populations in the 14 block groups experienced varying levels of decline and growth from 2010 to 2019, ranging from a 28.7 percent decline to a 56.7 percent increase. The average population growth for the 14 block groups was 6.6 percent, which is higher than the population growth in the County and the City (U.S. Census Bureau, 2018).

In the two Central City North block groups, one block group experienced a 56.7 percent increase in population and one block group experienced a 1 percent decline in population, for an average growth of 40 percent. In the twelve Boyle Heights block groups, population growth varied between a 12.2 percent increase in population and a 28.7 percent decline in population, with an average increase of 1.2 percent. Population growth rates for the County, City, and Project Area census tracts are shown in **Table 3.12-2**.

Figure 3.12-1: Block Groups

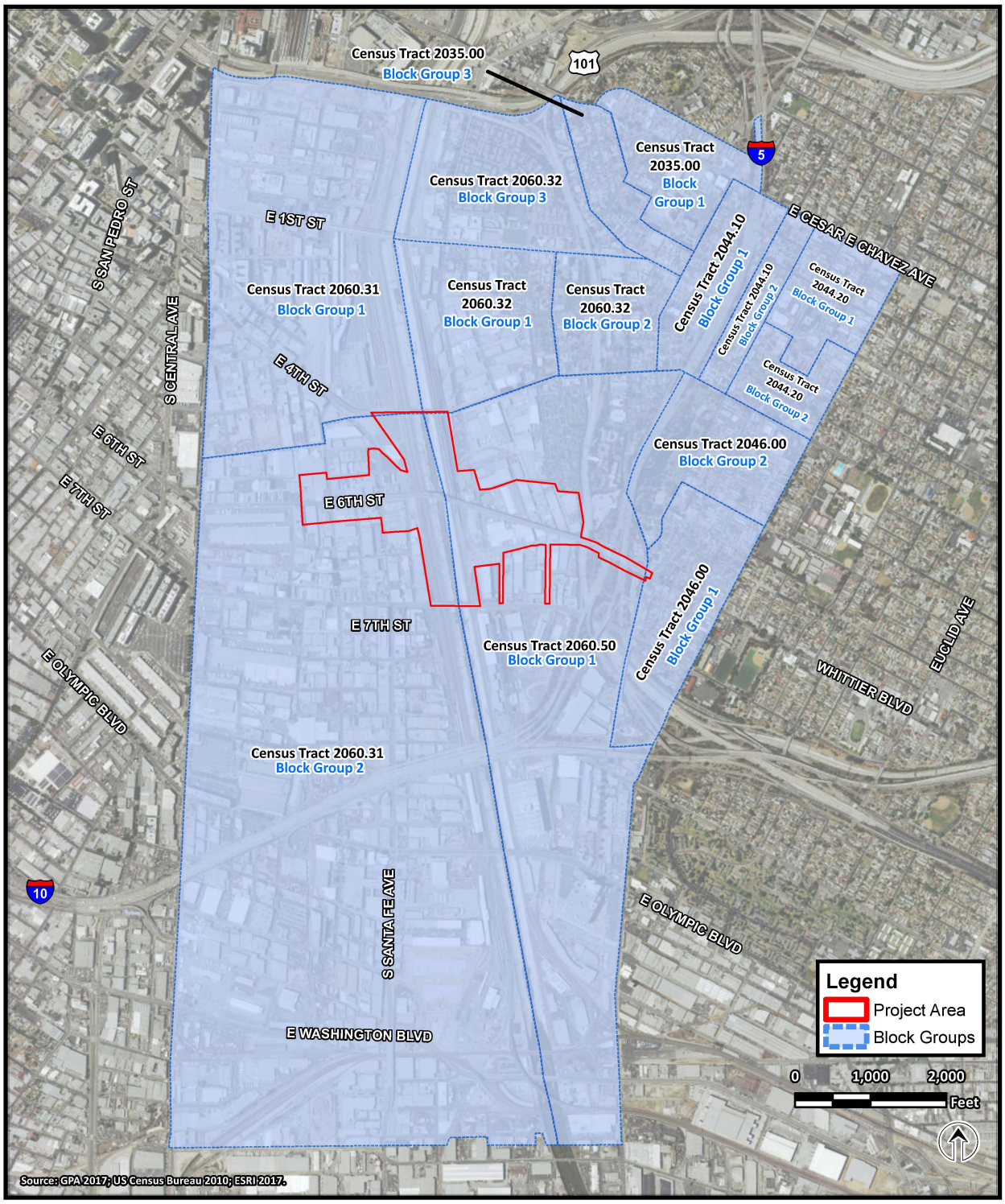

ENGINEERING
CITY OF LOS ANGELES

FIGURE 3.12-1: BLOCK GROUPS
Sixth Street PARC Project

In the County, SCAG forecasts an approximately 13 percent increase in population from 2015 to 2040 (from 10,159,000 to 11,514,000 people). In the City, SCAG forecasts a population growth of approximately 20 percent from 2012 to 2040 (from 3,845,500 to 4,609,400 people) (Southern California Association of Governments, 2016).

From 2010 to 2019, household growth was 2.3 percent in the County and 5 percent in the City. Household growth for the 14 block groups ranged from a 25 percent decline to a 30 percent increase from 2010 to 2017. The average household growth for the 14 block groups was 5 percent, which is higher than the household growth in the County and the City. In the two Central City North block groups, household growth ranged from 28 percent to 30 percent, with an average household growth of 29 percent. In the twelve Boyle Heights block groups, household growth ranged from a 25 percent decline to a 23 percent increase, with an average household growth of 1 percent. Household growth for the County, City, and Project Area census tracts are shown in **Table 3.12-2**.

3.12.2.2 Demographic Characteristics

The City of Los Angeles is characterized as having a high diversity of racial and ethnic groups, with approximately half of the City's population identifying as having Hispanic or Latino origins (Los Angeles County Economic Development Corporation, 2016). In the Central City North block groups, the largest population is White, making up 41 percent of the total population, followed by Asian, making up approximately 31 percent of the total population. In the Boyle Heights block groups, the largest population is Hispanic or Latino making up approximately 84 percent of the total population. The racial and ethnic characteristics of the block groups in Project Area are shown in **Table 3.12-3**.

The majority of the population in the County (43 percent) and the City (45 percent) is between the ages of 25 and 54. In the 14 block groups, the majority of the population is also between the ages of 25 and 54 (45 percent). The population between the ages of 25 and 54 is higher in the Central City North block groups (74.7 percent) than in the Boyle Heights block groups (39.7 percent). Age distributions for the block groups in the Project Area are shown in **Table 3.12-4.**

The percent of households below the poverty level in 2018 was 16 percent for the County and 19 percent for the City. In the Central City North block groups, the percent of households with income below the poverty level in the past 12 months ranges from 13 percent to 20 percent and averages approximately 15 percent, which is lower than the poverty rate for the County (16 percent) and the poverty rate for the City (19 percent). In the Boyle Heights block groups, the percent of households with income below the poverty level in the past 12 months ranges from 21 percent to 50 percent and averages 34 percent, which is higher than the poverty rate for the County (16 percent) and the City (19 percent). Household poverty information is shown in **Table 3.12-5**.

3.12.2.3 Housing Characteristics

From 2014 to 2015, the City experienced a 1.3 percent growth in the total number of housing units and a 0.7 percent decline in owner-occupied housing (Los Angeles City Council Districts, 2017). The percent of vacant homes did not change from 2014 to 2015, comprising 6.3 percent of the housing units. In 2016, renters made up 62 percent of the population and homeowners made up 38 percent of the population (Southern California Association of Governments, 2017).

Table 3.12-2: Projected Population and Household Growth

Study Area	Demographic Characteristic					
	Population			Households		
	2010 Census	2019 ACS 5-Year Estimates	% Change (2010 to 2019)	2010 Census	2019 ACS 5-Year Estimates	% Change (2010 to 2019)
County of Los Angeles	9,758,256	10,081,570	3.3%	3,241,204	3,316,795	2.3%
City of Los Angeles	3,772,486	3,966,936	5.2%	1,318,168	1,383,869	5%
Central City North						
Block Group 1, Census Tract 2060.31	2,088	3,271	56.7%	1,164	1,846	59%
Block Group 2, Census Tract 2060.31	869	860	-1%	499	623	25%
Central City North Block Groups Average (2017)	1,479	1,795	14%	832	1,070	29%
Boyle Heights						
Block Group 1, Census Tract 2035	766	546	-28.7%	236	176	-25%
Block Group 3, Census Tract 2035	1,153	1,135	-1.6%	341	317	-7%
Block Group 1, Census Tract 2044.10	888	977	10%	234	245	5%
Block Group 2, Census Tract 2044.10	1,475	1,598	8.3%	371	382	3%
Block Group 1, Census Tract 2044.20	2,168	2,341	8%	658	679	3%
Block Group 2, Census Tract 2044.20	970	813	-16.2%	250	265	6%
Block Group 1, Census Tract 2046	2,295	2,461	7.2%	587	782	33%
Block Group 2, Census Tract 2046	1,806	1,619	-10.4%	453	426	-6%
Block Group 1, Census Tract 2060.32	1,043	1,072	2.8%	295	308	4%
Block Group 2, Census Tract 2060.32	1,804	1,890	4.8%	709	812	15%

Block Group 3, Census Tract 2060.32	2,428	2,725	12.2%	639	648	1%
Block Group 1, Census Tract 2060.50	2,146	2,031	-5.4%	767	805	5%
Boyle Heights Block Groups Average (2017)	1,579	1,588	-0.7%	462	475	1%
All Block Groups Average	1,564	1,667	6.6%	515	594	15%

Source: U.S. Census Bureau, 2019
Notes: % = Percent

Table 3.12-3: Racial and Ethnic Characteristics

Study Area	Number of Individuals (Percent of Population) based on Race/Ethnicity									
	Total Population	Not Hispanic or Latino							Hispanic or Latino	Total Minority Population
		White Alone	Black or African American Alone	American Indian and Alaska Native Alone	Asian Alone	Native Hawaiian and Other Pacific Islander Alone	Some Other Race Alone	Two or More Races Alone		
County of Los Angeles	10,081,570 (100%)	2,641,770 (26.2%)	790,252 (7.8%)	20,831 (0.2%)	1,454,769 (14.4%)	24,597 (0.2%)	32,413 (0.3%)	215,876 (2.1%)	4,888,434 (48.4%)	7,439,800 (73.8%)
City of Los Angeles	3,966,936 (100%)	1,129,956 (28.5%)	341,750 (8.6%)	6,374 (0.2%)	454,688 (11.5%)	5,103 (0.1%)	14,762 (0.4%)	86,697 (2.2%)	1,922,409 (48.5%)	2,836,980 (71.5%)
Census Tract Block Groups in Project Study Area										
Central City North										
Block Group 1, Census Tract 2060.31	3,271 (100%)	1,123 (34.3%)	193 (6%)	12 (0.4%)	1,214 (37.1%)	88 (2.7%)	0 (0%)	196 (6%)	445 (13.6%)	2,148 (65.7%)
Block Group 2, Census Tract 2060.31	860 (100%)	567 (65.9%)	31 (3.6%)	0 (0%)	52 (6%)	0 (0%)	0 (0%)	57 (6.6%)	153 (17.8%)	293 (34%)

Study Area	Number of Individuals (Percent of Population) based on Race/Ethnicity									
	Total Population	Not Hispanic or Latino							Hispanic or Latino	Total Minority Population
		White Alone	Black or African American Alone	American Indian and Alaska Native Alone	Asian Alone	Native Hawaiian and Other Pacific Islander Alone	Some Other Race Alone	Two or More Races Alone		
Boyle Heights										
Block Group 1, Census Tract 2035	546 (100%)	61 (11.2%)	10 (1.8%)	0 (0%)	149 (27.3%)	0 (0%)	0 (0%)	0 (0%)	326 (59.7%)	485 (88.8%)
Block Group 3, Census Tract 2035	1,135 (100%)	60 (5.3%)	85 (7.5%)	0 (0%)	77 (6.8%)	8 (0.7%)	0 (0%)	0 (0%)	905 (79.7%)	1,075 (94.7%)
Block Group 1, Census Tract 2044.10	977 (100%)	30 (3.1%)	0 (0%)	0 (0%)	35 (3.6%)	0 (0%)	0 (0%)	0 (0%)	912 (93.3%)	947 (97%)
Block Group 2, Census Tract 2044.10	1,598 (100%)	5 (0.3%)	5 (0.3%)	0 (0%)	16 (1%)	0 (0%)	0 (0%)	0 (0%)	1,572 (98.4%)	1,593 (99.7%)

Study Area	Number of Individuals (Percent of Population) based on Race/Ethnicity									
	Total Population	Not Hispanic or Latino							Hispanic or Latino	Total Minority Population
		White Alone	Black or African American Alone	American Indian and Alaska Native Alone	Asian Alone	Native Hawaiian and Other Pacific Islander Alone	Some Other Race Alone	Two or More Races Alone		
Block Group 1, Census Tract 2044.20	2,341 (100%)	15 (0.6%)	144 (6.2%)	0 (0%)	80 (3.4%)	0 (0%)	0 (0%)	20 (0.9%)	2,082 (89%)	2,326 (99.4%)
Block Group 2, Census Tract 2044.20	813 (100%)	24 (3%)	8 (1%)	0 (0%)	0 (0%)	0 (0%)	0 (0%)	0 (0%)	781 (96.1%)	789 (97%)
Block Group 1, Census Tract 2046	2,461 (100%)	119 (4.8%)	91 (3.7%)	0 (0%)	0 (0%)	0 (0%)	0 (0%)	14 (0.6%)	2,237 (90.9%)	2,342 (95.2%)
Block Group 2, Census Tract 2046	1,619 (100%)	42 (2.6%)	0 (0%)	0 (0%)	87 (5.4%)	0 (0%)	11 (0.7%)	0 (0%)	1,479 (91.4%)	1,577 (97.4%)

Study Area	Number of Individuals (Percent of Population) based on Race/Ethnicity									
	Total Population	Not Hispanic or Latino							Hispanic or Latino	Total Minority Population
		White Alone	Black or African American Alone	American Indian and Alaska Native Alone	Asian Alone	Native Hawaiian and Other Pacific Islander Alone	Some Other Race Alone	Two or More Races Alone		
Block Group 1, Census Tract 2060.32	1,072 (100%)	205 (19.1%)	67 (6.3%)	46 (4.3%)	103 (9.6%)	0 (0%)	0 (0%)	0 (0%)	651 (60.7%)	867 (80.9%)
Block Group 2, Census Tract 2060.32	1,890 (100%)	64 (3.4%)	0 (0.0%)	0 (0%)	283 (15%)	0 (0%)	0 (0%)	10 (0.5%)	1,533 (1.1%)	1,826 (96.6%)
Block Group 3, Census Tract 2060.32	2,725 (100%)	93 (3.4%)	58 (2.1%)	0 (0%)	508 (18.6%)	0 (0%)	0 (0%)	0 (0%)	2,066 (75.8%)	2,632 (96.6%)
Block Group 1, Census Tract 2060.50	2,031 (100%)	129 (6.4%)	86 (4.2%)	5 (0.2%)	158 (7.8%)	0 (0%)	13 (0.6%)	23 (1.1%)	1,617 (79.6%)	1,902 (93.6%)

Table 3.12-4: Age Distributions

Study Area	Number of People (Percent of Population) in Age Group						
	Preschool (Under 5 Years)	School (5 to 19 Years)	Young Adults (20 to 24 Years)	Prime Working (25 to 54)	Retirement (55 to 64)	Seniors (65+)	Total[1]
County of Los Angeles	611,485 (6%)	1,915,331 (19%)	756,629 (7%)	4,372,997 (43%)	1,163,870 (12%)	1,264,984 (13%)	10,105,722 (100%)
City of Los Angeles	243,819 (6%)	705,564 (18%)	314,867 (8%)	1,791,835 (45%)	430,853 (11%)	462,838 (12%)	3,949,776 (100%)
Central City North Block Groups	246 (6.1%)	Data Not Available	Data Not Available	3,032 (74.7%)	121 (3%)	170 (4.2%)	4,061 (100%)
Boyle Heights Block Groups	1,652 (8.8%)	4,088 (21.8%)	1,970 (10.5%)	7,429 (39.7%)	1,737 (9.3%)	2,174 (11.6%)	18,718 (100%)
All Block Groups	1,257 (5.5%)	Data Not Available	Data Not Available	10,361 (45.%)	1,507 (6.6%)	2,878 (12.6%)	22,779 (100%)

1. Numbers may not sum to the total due to rounding.
Source: U.S. Census Bureau, 2019

Table 3.12-5: Households with Income below the Poverty Level in 2018

Study Area	Data Source (2016 ACS 5-Year Estimates)		
	Total Households	Households Below Poverty Level	Percent of Households Below Poverty Level
County of Los Angeles	3,295,198	524,489	16%
City of Los Angeles	1,364,227	258,159	19%
Census Tract Block Groups in Project Study Area			
Central City North			
Block Group 1, Census Tract 2060.31	1,492	189	13%
Block Group 2, Census Tract 2060.31	648	128	20%
Central City North Block Group Total	2,140	317	15%
Boyle Heights			
Block Group 1, Census Tract 2035	249	52	21%
Block Group 3, Census Tract 2035	301	84	28%
Block Group 1, Census Tract 2044.10	248	68	27%
Block Group 2, Census Tract 2044.10	384	152	40%
Block Group 1, Census Tract 2044.20	644	319	50%
Block Group 2, Census Tract 2044.20	266	94	35%
Block Group 1, Census Tract 2046	723	271	37%
Block Group 2, Census Tract 2046	430	168	39%
Block Group 1, Census Tract 2060.32	221	56	25%
Block Group 2, Census Tract 2060.32	749	220	29%
Block Group 3, Census Tract 2060.32	668	158	24%
Block Group 1, Census Tract 2060.50	820	277	34%
Boyle Heights Block Group Total	5703	1,919	34%
All Block Group Total	7,843	2,236	29%

Source: U.S. Census Bureau, 2018

The Project Area is within City Council District 14, which includes the eastern portion of Downtown Los Angeles and Boyle Heights, Eagle Rock, El Sereno, Rose Hills, and Highland Park. From 2014 to 2015, Council District 14 experienced a 5.1 percent growth in the total number of housing units. During this same time, Council District 14 experienced a 2.4 percent decline in owner-occupied housing (Los Angeles City Council Districts, 2017). The percent of vacant homes declined by 1.9 percent, comprising 5.6 percent of the housing units (Los Angeles City Council Districts, 2017).

All of the housing units in the Central City North block groups are multi-family units. A majority of the population rents rather than owns, with 71 percent of the population in renter occupied housing units. The average household size varies from 1.28 to 1.85 people. The housing structures were primarily built between 2000 and 2009 (37 percent) or before 1940 (35 percent). The median monthly rent in the Central City North block groups varies by block group, ranging from $2,127 to $2,464, which is higher than the median monthly rent for the City ($1,302) and County ($1,322). The median home value in the Central City North block groups ranges from $589,000 to $945,000, with an average of $767,000, which is higher than the median home value for the City ($549,800) and County ($495,800) (U.S. Census Bureau, 2018).

Nearly all of the housing units (98 percent) in the Boyle Heights block groups are multi-family units. A vast majority of the population rents rather than owns, with 85 percent in renter occupied housing units. The average household size varies from 2.53 to 4.13 people. Many of the housing structures were built in 1939 or earlier (43 percent). The median monthly rent in the Boyle Heights block groups varies by block group, ranging from $670 to $1,189, which is lower than the median monthly rent for the City ($1,302) and County ($1,322). The median home value in the Boyle Heights block groups ranges from $317,300 to $423,500, with an average of $371,258, which is lower than the median home value for the City ($549,800) and County ($495,800) (U.S. Census Bureau, 2018).

3.12.2.4 Homeless Populations

The Project Area census tracts include homeless populations, with 2018 counts shown in **Table 3.12-6**. The 2020 count, which was released in June 2020, did not provide counts at the census tract level. However, the 2020 homeless count for Council District 14 was 7,617 individuals, representing a 7.8 percent increase from 7,068 individuals in 2018 (Los Angeles Homeless Services Authority, 2020).

As part of the Sixth Street Viaduct Replacement Project, any homeless people found within the construction site were vacated and LAHSA was contacted to provide services. At this time, the Project Area is an active construction site, and there are currently no homeless people in the Project Area.

The Project Area is also bordered by Skid Row to the west, which is an area of Downtown Los Angeles that contains one of the largest populations of homeless people in the United States. There are approximately 4,193 homeless people living in Skid Row (Los Angeles Homeless Services Authority, 2018).

The proposed Project may result in the displacement of homeless populations that were previously residing in the Project Area before the construction of the Viaduct Replacement Project. LAHSA, which is an organization that addresses homelessness in the City and County, provided services for displaced homeless populations in the Project Area. Programs include prevention activities, outreach and assessment, emergency shelter, transitional housing, permanent supportive housing, and supportive

services (Los Angeles Homeless Services Authority, 2017). In addition, there are several other resources and facilities in vicinity of the Project Area that aim to serve homeless populations, which are described in **Table 3.12-7.**

Table 3.12-6: Homeless Counts in the Project Area Census Tracts

Census Tract	Number of Homeless Individuals
Central City North	
2060.31	284
Boyle Heights	
2035.00	36
2044.10	9
2044.20	34
2046	15
2060.32	111
2060.50	36

Source: Los Angeles Homeless Services Authority, 2018

Table 3.12-7: Homeless Resources and Facilities

Resource/Facility	Address	Distance from Project Area	Description
Los Angeles Homeless Services Authority	811 Wilshire Blvd #600 in Los Angeles	1.5 miles northwest of the Project Area	A Joint Powers Authority that coordinates housing and services for the homeless in the City and County. LAHSA's primary role is to coordinate the use of Federal and local funding used towards services for homeless people.
United Way of Greater Los Angeles	1150 South Olive Street, Suite T500 in Los Angeles	2 miles west of the Project Area	Organization that aims to help low-income families, students, veterans, and the homeless through enacting policy changes and providing support related to education, financial stability, and health. Launched the Home for Good initiative to work on systems and solutions to end homelessness.
Lamp Community	526 South San Pedro Street in Los Angeles	0.6 miles northwest of the Project Area	Organization that offers permanent housing and health and social services for the most vulnerable homeless individuals, including those with severe mental illness and physical disabilities. Lamp Community serves approximately 3,000 individuals a year through several services sites in Downtown Los Angeles.

Resource/Facility	Address	Distance from Project Area	Description
Los Angeles Mission	303 East 5th Street in Los Angeles	0.7 miles northwest of the Project Area	Organization that provides services to the homeless, which include emergency, recovery and rehabilitation, career, and transition services,
Proyecto Pastoral at Dolores Mission	171 South Gless Street in Los Angeles	0.4 miles northeast of the Project Area	Boyle Heights-based organization that provides support to over 5,000 children and families. Programs include civic engagement, early education centers, food and shelter for the homeless, and youth development.
Jovenes, Inc.	1208 Pleasant Avenue in Los Angeles	0.8 miles northeast of the Project Area	Organization that provides at-risk youth (ages 18-25) with stable housing and other community-based services.
Emmanuel Baptist Rescue Mission	530 East 5th Street in Los Angeles	0.6 miles northwest of the Project Area	Organization that provides meals, shelter, and clothing to the homeless.
Eimago (Union Rescue Mission)	545 South San Pedro Street in Los Angeles	0.7 miles northwest of the Project Area	Organization that provides emergency services, gateway and recovery programs, shelter, health and legal clinics, and learning center.
Weingart Center Association	501 East Sixth Street in Los Angeles	0.7 miles northwest of the Project Area	Organization that provides emergency services, transitional residential programs, health care, substance abuse treatment, community re-entry services, workforce development and education, and other community programs and human services for the homeless.
The Midnight Mission	601 South San Pedro Street in Los Angeles	0.7 miles northwest of the Project Area	Organization that provides emergency services, as well as 12-step recovery, family living, job training, education, and workforce development programs for the homeless.

Source: (GPA Consulting, 2019)

3.12.2.5 Development Trends

The Project Study Area (i.e., Project Area and surrounding half-mile buffer) is developed with transportation infrastructure, commercial and industrial buildings, residential buildings, and government offices. The Project Study Area continues to change due to ongoing redevelopment projects that are being implemented in Los Angeles. In Chapter 1, **Table 1-1** lists current and future development

projects within a half-mile buffer of the Project Area (see **Figure 1-2,** Development Projects) (City of Los Angeles, 2017a; City of Los Angeles, 2019a).

Downtown Los Angeles is comprised of different neighborhoods ranging from the Fashion District to the Downtown Historic Core, and is the hub of the City's Metro Rail transit system. Banks, department stores, and movie palaces at one time drew residents and visitors into the area, but the Downtown District declined economically and suffered a downturn for decades until its recent renaissance starting in the early 2000s.

Since Downtown Los Angeles office markets have migrated west to Bunker Hill and the Financial District, many historic office buildings have been left intact, and were being used for storage or remained vacant. This began to change in 1999, when the Los Angeles City Council passed an adaptive reuse ordinance, making it easier for developers to convert outmoded, vacant office and commercial buildings into renovated lofts and luxury apartment and condo complexes. Because of the Adaptive Reuse Ordinance (Los Angeles Municipal Code Chapter I, Article 2, Section 12.22), which was approved for Downtown Los Angeles in 1999, and extended into the City's other neighborhoods in 2003, the residential population in Downtown Los Angeles has grown substantially, with three times more housing units than in 1999 and additional planned developments that will almost double the existing inventory (Downtown Center Business Improvement District, 2015).

Boyle Heights was initially developed as one of the City's first residential suburbs. Much of the community's infrastructure and housing stock were built in the 1920s (City of Los Angeles, 1998). Over time, industries located west of the LA River began to expand into the Boyle Heights community. As Boyle Heights underwent industrial development in the 1930s and 1940s, the community began to see a demographic shift from European to Mexican immigrants. After construction of several major freeways (I-10, I-5, SR 60, and U.S. 101) in the 1940s and 1960s, the Boyle Heights community became segmented and some of the neighborhoods experienced a reduction in services. Boyle Heights has since seen redevelopment projects such as transportation infrastructure improvements and transit extensions, housing developments, and economic revitalization. In response to proposed redevelopment projects, the community has expressed concerns regarding displacement, gentrification, and higher housing costs.

The City is in the process of updating the Central City North Community Plan (as part of the Downtown Community Plan) and Boyle Heights Community Plan in an effort to accommodate future growth projections and respond to growth and development since the plans were last adopted (City of Los Angeles, 2017b). The City is also undertaking a comprehensive update to the General Plan in order to address the changing needs of LA's diverse population and geography.

In response to development trends, the City has also proposed and adopted ordinances, policies, and programs to facilitate the development of housing for residents of all income levels (City of Los Angeles, 2019c). The following ordinances facilitate housing development to meet the City's housing needs include:

- **Affordable Housing Linkage Fee:** The City Council adopted the Affordable Housing Linkage Fee Ordinance (No. 185342) on December 13, 2017. The Affordable Housing Linkage Fee is an initiative that includes the investigation of sources of local funds to be used for building affordable housing for low-income residents. Of interest are collecting fees from commercial and market-rate residential development.

- **Transit Oriented Communities Affordable Housing Incentive Program:** This program, which became effective on September 22, 2017, provides incentives and requirements for including affordable units within all new residential projects.
- **Density Bonus Program:** The Density Bonus Program is a state-mandated program that was approved by the City on February 28, 2008. The program allows housing developers to build a greater number of units beyond allowable density provided they meet certain citywide housing needs (e.g., allocating a percentage of affordable housing units, providing senior housing, or donating land for housing).
- **Small Lot Ordinance:** The Small Lot Ordinance (No. 176354) was established in 2005. This ordinance allows underutilized land in multi-family and commercial areas to be subdivided for small lot homes.
- **Residential Accessory Services (RAS) Zones:** RAS zones, adopted by the City Council in December 2002, allow exceptions (e.g., increased floor area/height and reduced setback requirements) for residential or mixed-use projects constructed within commercial and transportation corridors.
- **Adaptive Reuse Ordinance:** This ordinance, approved in 1999 for downtown Los Angeles, waives building and zoning requirements for developments that convert underutilized buildings, including historic buildings, into housing.

Many of these ordinances aim to encourage or incentivize the development of affordable housing units. In addition, the City has introduced policies to protect and/or facilitate the development of special needs housing (i.e., homeless shelters, eldercare facilities, residential hotels, and equal access housing for the disabled (City of Los Angeles, 2019c).

3.12.3 Environmental Impact Analysis

3.12.3.1 Methodology

Potential significant impacts associated with the proposed Project were determined based on a review of the regional population, demographic, and housing characteristics from the American Community Survey. In addition, a review of homeless populations was completed based on the homeless counts conducted by LAHSA. Development trends of the Project Area and surrounding area were assessed based on the Community Plans for these areas.

During the public scoping period for the Notice of Preparation/Initial Study, several public comments addressing Population and Housing were received. The comments are summarized in **Table 3.12-8** below and are discussed in more detail in the following sections.

In response to the comments in **Table 3.12-8** regarding displacement of the homeless, a discussion of homeless populations was included in Section 3.12.2.4. Please see Section 3.12.2.5 for discussions of development and growth.

Many factors contribute to the character and economy of a neighborhood, including its demographics, businesses, local land use regulations, and the built and natural environments. The City's investments in better infrastructure, open spaces, and other public amenities, such as revitalization of the LA River, also

play a role in improving or preserving local economies and quality of life. As higher-income people become interested in living and working in urban areas, gentrification has affected neighborhoods across the City. (City of Los Angeles, 2016c)

Table 3.12-8: Public Concerns

Type of Public Concern	Details
Development and Growth	Commenter expressed concerns about impacts related to increased rent and gentrification, specifically on the east side of the Project.
	Commenter expressed interest in preserving existing affordable housing and small businesses on the east side of the LA River. Concerns regarding displacement and gentrification were expressed.
Displacement	Commenter expressed concerns regarding impacts related to homelessness. The commenter requested that the homeless demographic be discussed in the environmental document and Project-specific mitigation measures be considered.

Source: GPA Consulting, 2019

Land and building values adjust to changing demographics, preferences, and levels of investment, with increasing values leading to economic benefits for landowners, but potential displacement of existing renters. Residential tenants can face pressure to vacate leased properties. City regulations do not currently offer protections for renters residing in single-family homes, but many residents in multi-family housing are protected by the Rent Stabilization Ordinance (RSO). (City of Los Angeles, 2016c)

The RSO applies to any property with two or more units built before 1978, representing approximately 80 percent of the City's multi-family rental housing. The ordinance limits annual rent increases to approximately three percent, prohibits evictions without just cause, provides for significant relocation payments under some circumstances, and offers a number of other protections to tenants. (City of Los Angeles, 2016c)

In the short-term, the City is focused on ensuring that landlords and tenants are aware of their rights and responsibilities under the RSO and that the ordinance is being adequately enforced. In the long-term, the City is actively building its Affordable Housing Trust Fund, evaluating land use tools that can help create and preserve affordable housing, and providing RSO exemptions for newly constructed housing that includes at least 20 percent affordable housing units (Ordinance No. 184873). (City of Los Angeles, 2016c)

3.12.3.2 Screening Analysis

Several impacts and corresponding thresholds of significance in the following section were eliminated from further analysis in this EIR. Topics were eliminated if the IS for the proposed Project concluded there would be "No Impact," or if impacts were identified to be "Less Than Significant… and will not be discussed further in the EIR." Therefore, only the topics described in the section below were determined to require further analysis in this EIR. A copy of the Initial Study, which contains the eliminated topics, is provided in **Appendix A**.

3.12.3.3 Thresholds of Significance

According to Appendix G of the CEQA Guidelines and the *L.A. CEQA Thresholds Guide*, the proposed Project would have a significant impact on Population and Housing if it would:

XIV(a) Induce substantial unplanned population growth in an area, either directly (e.g., by proposing new homes and businesses) or indirectly (e.g., through extension of roads or other infrastructure).

J.1 Population and Housing Growth. The determination of significance shall be made on a case-by-case basis, considering the following factors:

- The degree to which the project would cause growth (i.e., new housing or employment generators) or accelerate development in an undeveloped area that exceeds projected/ planned levels for the year of project occupancy/buildout, and that would result in an adverse physical change in the environment;
- Whether the project would introduce unplanned infrastructure that was not previously evaluated in the adopted Community Plan or General Plan; and
- The extent to which growth would occur without implementation of the project.

3.12.3.4 Construction Impacts

XIV(a): Induce substantial unplanned population growth in an area, either directly (e.g., by proposing new homes and businesses) or indirectly (e.g., through extension of roads or other infrastructure).

During construction of the proposed Project, new homes and businesses would not be established. Construction workers would likely be hired from the local area and commute to the job site on a daily basis, rather than relocate from more distant areas. Construction workers would be present for a temporary period of time and are not expected to contribute to unplanned population growth in the Project Area.

Construction activities for the proposed Project would be limited to the construction site in a heavily developed industrial and commercial area and would not result in the extension of roads or other infrastructure to undeveloped areas. Direct and indirect unplanned population growth from construction of the proposed Project is not anticipated; therefore, impacts would be less than significant, and no mitigation is required.

3.12.3.5 Operational Impacts

XIV(a): Induce substantial unplanned population growth in an area, either directly (e.g., by proposing new homes and businesses) or indirectly (e.g., through extension of roads or other infrastructure).

Operation of the proposed Project does not include the establishment of new homes. The proposed Project may include one or more office/community/concession building(s); however, there are limited business sites available within the proposed park. Therefore, the proposed Project is not expected to directly result in substantial unplanned population growth in the Project Area.

The proposed Project includes transportation infrastructure, including pedestrian and bicycle paths that would provide connections to the existing street network and the Los Angeles River. Because the areas surrounding the Los Angeles River are already highly developed, the proposed Project would not result in the extension of roads or infrastructure to undeveloped areas. Therefore, the proposed Project is not expected to result in indirect unplanned growth.

(i) The degree to which the project would cause growth (i.e., new housing or employment generators) or accelerate development in an undeveloped area that exceeds projected/planned levels for the year of project occupancy/buildout, and that would result in an adverse physical change in the environment.

The proposed Project does not include the development of housing and is not expected to contribute to population growth. In addition, the proposed Project would only offer limited opportunities for employment. Any employment opportunities resulting from the proposed Project could be offered to people already residing or working in the area. Therefore, the proposed Project is not expected to result in a substantial increase in in-migrants (i.e., people relocating into the area from some other more distant location).

The proposed Project would attract visitors to the Project Area because of the proposed public amenities (e.g., public gathering/assembly areas, recreational courts and fields, etc.), which could attract developers and businesses to the Project Area. This could potentially induce population, housing, and employment growth in the Project Area, thereby accelerating development in the surrounding communities of Central City North and Boyle Heights. However, the Project Area is already densely developed, and there are relatively few business sites available. Opportunities for development would be primarily limited to infill development (i.e., the development of vacant or under-used parcels in existing urban areas). In addition, future proposed developments would be evaluated on a case-by-case basis on their impacts related to growth, development, and other physical changes. Therefore, adverse physical changes in the environment are not anticipated. Impacts would be less than significant, and no mitigation is required.

(ii) Whether the project would introduce unplanned infrastructure that was not previously evaluated in the adopted Community Plan or General Plan.

The proposed Project would introduce bicycle and pedestrian infrastructure within the park limits. This infrastructure would be designed to connect with the greater network of bicycle and pedestrian facilities in the surrounding communities and along the LA River.

The proposed Project would be consistent with the Los Angeles River Revitalization Master Plan (LARRMP), which includes a vision for the development of bicycle and pedestrian paths providing access along the Los Angeles River (City of Los Angeles, 2007). The 2010 Bicycle Plan incorporates the recommendations outlined in the LARRMP, with the goal of providing a continuous bicycle path along the west and south sides of the LA River (City of Los Angeles, 2011). The 2010 Bicycle Plan also incorporates LARRMP recommendations for identifying connections to the LA River to enhance access to existing and future segments to the LA River bicycle and pedestrian path. In addition, the proposed Project would be consistent with the City's Mobility Plan 2035. One of the main objectives of the Mobility Plan is to complete bicycle path segments along the LA River to form the Los Angeles River Greenway

Trail, which is an effort to complete a bicycle path along the entire 32 mile stretch of the LA River by 2020 (City of Los Angeles, 2016a).

Though the proposed Project is not included in the existing Community Plans for Boyle Heights and Central City North, the Community Plans have not been updated since 1998 and 2000, respectively, and are currently being revised. The Downtown Community Plan, also referred to as DTLA 2040, is a proposed updated to the Central City and Central City North Community Plan (City of Los Angeles, 2019b).

Because the proposed Project is consistent with the City's goals for interconnected pedestrian and bicycle infrastructure along the LA River, impacts would be less than significant, and no mitigation is required.

(iii) The extent to which growth would occur without implementation of the project.

Though population growth varies among block groups in the Project Area, SCAG forecasts indicate that growth will occur for the County and City overall. As discussed in Section 3.12.2.1 above, SCAG projections forecast a 13 percent increase in the County's population and a 20 percent increase in the City's population from 2012 to 2040 (Southern California Association of Governments, 2016).

Because the proposed Project does not include the development of housing, the proposed Project is not expected to contribute to SCAG's projected population growth. As discussed above, the proposed Project would offer limited opportunities for employment. Any employment opportunities resulting from the proposed Project could be offered to people already residing or working in the area. Therefore, the proposed Project is not expected to result in a substantial increase in in-migrants (i.e., people relocating into the area from some other more distant location).

The proposed Project would attract visitors to the Project Area because of the proposed public amenities (e.g., public gathering/assembly areas, recreational courts and fields, etc.), which could potentially spur population, housing, and employment growth in the surrounding communities of Central City North and Boyle Heights. Proposed housing developments would be evaluated on a case-by-case basis to determine their potential contributions to population growth in the surrounding area. To minimize effects on existing residents in proximity to the Project Area (i.e., higher rents and displacement), the City has adopted ordinances and policies that facilitate the development of housing for residents of all income levels and address the City's housing needs. As discussed in Section 3.12.2.5, plans to facilitate housing development include, but are not limited to, a mixed income housing ordinance, density bonus program, adaptive reuse ordinance, and zoning changes (City of Los Angeles, 2019c). Many of these plans aim to encourage or incentivize the development of affordable housing units to combat the potential for displacement of low-income communities caused by population growth. In addition, the rent increase caps provisioned in California AB 1482 in the immediate proposed Project's vicinity would help minimize the potential effects of higher rents on existing residents in proximity to the Project Area.

As discussed above, the Project Area is already densely developed, and there are relatively few business sites available. Opportunities for development would be primarily limited to infill development (i.e., the development of vacant or under-used parcels in existing urban areas). Proposed developments would be evaluated on a case-by-case basis to determine their potential contributions to growth in the surrounding area. In addition, proposed developments would be evaluated based on their consistency with the goals, policies, and objectives of the surrounding communities and the City as a whole.

Though implementation of the proposed Project could induce a small amount of growth, the proposed Project does not have the potential to result in growth that would otherwise not occur. The City is in the process of updating elements of the General Plan, including the Community Plans for Central City North and Boyle Heights. These updates are intended to ensure that the City meets the demands associated with population, housing, and employment growth. Therefore, impacts would be less than significant, and no mitigation is required.

3.12.4 Best Management Practices

There are no Best Management Practices related to Population and Housing.

3.12.5 Mitigation Measures

Impacts related to Population and Housing would be less than significant; therefore, no mitigation measures are required.

3.12.6 Significant Unavoidable Adverse Impacts

There are no significant unavoidable adverse impacts on Population and Housing from construction and operation of the proposed Project.

3.12.7 Cumulative Impacts

The cumulative setting for Population and Housing is the Project Study Area, which includes a half-mile buffer around the Project Area within the Central City North and Boyle Heights Community Plan areas. Because many of the proposed development projects listed in **Table 1-1** include residential, live/work units, and public transportation projects, there is potential for direct growth to occur within the Project Study Area. As discussed above, the Project Study Area is already densely developed, and opportunities for development would be primarily limited to infill development. Proposed developments would be evaluated on a case-by-case basis to determine their potential contributions to growth in the surrounding area. In addition, proposed developments would be evaluated based on their consistency with the City's General Plan and other local and regional plans and policies.

The City is in the process of updating local plans to address growth in the region. In addition, as discussed in Section 3.12.2.5, the City has adopted ordinances and policies to facilitate the development of affordable housing to address the City's housing needs. Therefore, cumulative impacts related to Population and Housing resulting from housing development projects would be less than significant.

Infrastructure projects listed in **Table 1-1** include improvements to existing roadways and development of pedestrian and bike paths. Because the Project Study Area is already densely developed, indirect growth from the extension of roads or infrastructure to undeveloped areas is not expected. In addition, transportation infrastructure projects would be evaluated based on their consistency with the City's local plans (e.g., General Plan, Los Angeles River Revitalization Master Plan, Mobility Plan 2035, and 2010 Bicycle Plan). Therefore, proposed infrastructure projects are not expected to result in indirect growth in the Project Study Area.

Because the proposed Project and other proposed development projects would be required to comply with applicable plans and policies, the proposed Project would not result in cumulative impacts related to Population and Housing.

3.13 Public Services

This section describes the affected environment and regulatory setting for public services related to the Project Area and surrounding area. In addition, this section describes the potential impacts related to public services that would result from implementation of the proposed Project. As noted in the analysis below, impacts associated with Public Services during construction or operation of the proposed Project would be less than significant with mitigation.

Impacts related to Public Services may extend beyond the Project Area (i.e., the area of direct impacts resulting from construction and operation of the proposed Project). Therefore, the discussion of the affected environment and environmental impacts related to Public Services is based on the Project Study Area, which includes the Project Area and a surrounding half-mile buffer.

The information in this section is based on the *Community Impact Assessment* (GPA Consulting, 2019) and the *Traffic Impact Analysis* (Kimley-Horn and Associates, Inc., 2019) prepared for the proposed Project. It is unlikely that community conditions and traffic conditions have changed substantially from that described in these technical studies.

3.13.1 Regulatory Setting

A review of the various federal, state, regional, and local government regulatory requirements was conducted to identify regulations that relate to parks, recreational facilities, and open spaces. This section summarizes the various regulatory requirements that are relevant to the proposed Project.

3.13.1.1 City of Los Angeles General Plan

As required by the State of California, the City's General Plan addresses goals, policies, and standards related to land use, circulation, housing, conservation, open space, noise, and safety (City of Los Angeles, 2017). To address goals that meet the unique needs of the City, the General Plan also includes elements related to health and wellness, air quality, historic preservation and cultural resources, and public facilities and services. Several of the General Plan elements are currently undergoing revision. The General Plan elements that pertain to Public Services are described in more detail in the following sections.

Safety Element

The Safety Element of the City's General Plan addresses the protection of people from risks associated with natural disasters (City of Los Angeles, 1996). The Safety Element includes goals, objectives, and policies that guide the City's Emergency Operations Organization, which is the City's department responsible for emergency planning, training, and mitigation, as well as response and recovery operations. The Safety Element includes standards related to fire protection and prevention, such as standards for the location and expansion of fire facilities, access to structures and clearances around structures, and minimum road widths. The applicable goals, objectives, and policies are described below:

- **Goal 2**: A city that responds with the maximum feasible speed and efficiency to disaster events so as to minimize injury, loss of life, property damage and disruption of the social and economic life of the City and its immediate environs.

- **Objective 2.1**: Develop and implement comprehensive emergency response plans and programs that are integrated with each other and with the City's comprehensive hazard mitigation and recovery plans and programs.
    - **Policy 2.16**: Standards/fire. Continue to maintain, enforce and upgrade requirements, procedures and standards to facilitate more effective fire suppression. [All peak load water and other standards, code requirements (including minimum road widths, access, clearances around structures) and other requirements or procedures related to fire suppression implement this policy.]

      The Fire Department and/or appropriate City agencies shall revise regulations or procedures to include the establishment of minimum standards for location and expansion of fire facilities, based upon fire flow requirements, intensity and type of land use, life hazard, occupancy and degree of hazard so as to provide adequate fire and emergency medical event response. At a minimum, site selection criteria should include the following standards which were contained in the 1979 General Plan Fire Protection and Prevention Plan:

        - Fire stations should be located along improved major or secondary highways. If, in a given service areas, the only available site is on a local street, the site must be on a street which leads directly to an improved major or secondary highway.
        - Fire station properties should be situated so as to provide drive-thru capability for heavy fire apparatus.
        - If a fire station site is on the side of a street or highway where the flow of traffic is toward a signalized intersection, the site should be at least 200 feet from that intersection in order to avoid blockage during ingress and egress.
        - The total number of companies which would be available for dispatch to first alarms would vary with the required fire flow and distance as follows: (a) less than 2,000 gallons per minute (gpm). would require not less than 2 engine companies and 1 truck company; (b) 2,000 but less than 4,500 gpm., not less than 2 or 3 engine companies and 1 or 2 truck companies; and (c) 4,500 or more gpm., not less than 3 engine companies and 2 truck companies.

Framework Element

The General Plan Framework Element is a strategy for long-term growth that guides updates to the community plan and its elements, as required by California State law (Government Code Section 65300) (City of Los Angeles, 1996). The Framework Element describes the primary police and law enforcement services, as well as the fire prevention, fire protection, and Emergency Medical Service for the City. In addition, the Framework Element includes goals for ensuring that every neighborhood in the City has the necessary police protection and fire services to meet existing and future needs as well as ensure public safety. The goals, objectives, and policies in the Framework Element that pertain to police services, fire services, and recreation and park facilities include:

Police

- **Goal 9I:** Every neighborhood in the City has the necessary police services, facilities, equipment, and manpower required to provide for the public safety needs of that neighborhood.
    - **Objective 9.13:** Monitor and forecast demand for existing and projected police service and facilities.
        - **Policy 9.13.1:** Monitor and report police statistics, as appropriate, and population projections for the purpose of evaluating police service based on existing and future needs.
    - **Objective 9.14:** Protect the public and provide adequate police services, facilities, equipment and personnel to meet existing and future needs.
        - **Policy 9.14.1:** Work with the Police Department to maintain standards for the appropriate number of sworn police officers to serve the needs of residents, businesses, and industries.
        - **Policy 9.14.2:** Support the provision of additional sworn police offers to meet the safety needs of the City.
        - **Policy 9.14.3:** Pursue State, Federal, and other non-conventional funding sources to expand the number of sworn police officers.
        - **Policy 9.14.4:** Complete all funded capital facilities in as short a time as possible.
        - **Policy 9.14.5:** Identify neighborhoods in Los Angeles where facilities are needed to provide adequate police protection.
        - **Policy 9.14.6:** Minimize the processing required to establish needed facilities and, if necessary, modify facility standards to utilize existing available structures for this purpose.
        - **Policy 9.14.7:** Participate fully in the planning of activities that assist in defensible space design and utilize the most current law enforcement technology affecting physical development.
    - **Objective 9.15:** Provide for adequate public safety in emergency situations.
        - **Policy 9.15.1:** Maintain mutual assistance agreements with local law enforcement agencies, State law enforcement agencies, and the National Guard to provide for public safety in the event of emergency situations.

Fire

- **Goal 9J:** Every neighborhood has the necessary level of fire protection service, emergency medical service (EMS) and infrastructure.
    - **Objective 9.16:** Monitor and forecast demand for existing and projected fire facilities and service.

- **Policy 9.16.1:** Collect appropriate fire and population development statistics for the purpose of evaluating fire service needs based on existing and future conditions.

- **Objective 9.17:** Assure that all areas of the City have the highest level of fire protection and EMS, at the lowest possible cost, to meet existing and future demand.
  - **Policy 9.17.1:** Complete all currently funded and, as feasible, programmed fire service capital improvements by the year 2010.
  - **Policy 9.17.2:** Identify areas of the City with deficient fire facilities and/or service and prioritize the order in which these areas should be upgraded based on established fire protection standards.
  - **Policy 9.17.3:** Develop an acquisition strategy for fire station sites in areas deficient in fire facilities.
  - **Policy 9.17.4:** Consider the Fire Department's concerns and, where feasible adhere to them, regarding the quality of the area's fire protection and emergency medical services when developing general plan amendments and zone changes or considering discretionary land use permits.
- **Objective 9.18:** Phase the development of new fire facilities with growth.
  - **Policy 9.18.1:** Engage in fire station development advance planning, acknowledging the amount of time needed to fund and construct these facilities.
- **Objective 9.19:** Maintain the Los Angeles Fire Department's ability to assure public safety in emergency situations.
  - **Policy 9.19.1:** Maintain mutual aid or mutual assistance agreements with local fire departments to ensure an adequate response in the event of a major earthquake, wildfire, urban fire, fire in areas with substandard fire protection, or other fire emergencies.
  - **Policy 9.19.3:** Maintain the continued involvement of the Fire Department in the preparation of contingency plans for emergencies and disasters.

Recreation and Parks

- **Goal 9L:** Sufficient and accessible parkland and recreation opportunities in every neighborhood of the City, which gives all residents the opportunity to enjoy green spaces, athletic activities, social activities, and passive recreation.
  - **Objective 9.22:** Monitor and forecast demand for existing and projected recreation and park facilities and programs.
    - **Policy 9.22.1:** Monitor and report appropriate park and recreation statistics and compare with population projections and demand to identify the existing and future recreation and parks needs of the City.
  - **Objective 9.23:** Complete all currently programmed parks and recreation capital improvements by the year 2010, contingent on available funding.

- **Policy 9.23.1:** Develop a strategy to purchase and develop land for parks, which is consistent with the appropriate open space policies found in Chapter 6: Open Space and Conservation.
- **Policy 9.23.2:** Prioritize the implementation of recreation and park projects in areas of the City with the greatest existing deficiencies.
- **Policy 9.23.3:** Establish joint-use agreements with the Los Angeles Unified School District and other public and private entities which could contribute to the availability of recreation opportunities.
- **Policy 9.23.4:** Pursue resources to clean-up land that could be used by the City for public recreation.
- **Policy 9.23.5:** Re-evaluate the current park standards and develop modified standards which recognize urban parks, including multi-level facilities, smaller sites, more intense use of land, public/private partnerships and so on.
- **Policy 9.23.6:** Identify and purchase, whenever possible, sites in every neighborhood, center, and mixed-use boulevard, and maximize opportunities for the development and/or use of public places and open spaces on private land in targeted growth areas.
- **Policy 9.23.7:** Establish guidelines for developing non-traditional public park spaces like community gardens, farmer's markets, and public plazas.
- **Policy 9.23.8:** Prepare an update of the General Plan Public Facilities and Services Element based on the new Los Angeles Department of Recreation and Parks standards by 2005.

- **Objective 9.24:** Phase recreational programming and park development with growth.
  - **Policy 9.24.1:** Phase the development of new programs and facilities to accommodate projected growth.
  - **Policy 9.24.2:** Develop Capital Improvement Programs that take into account the City's forecasted growth patterns and current deficiencies.

3.13.1.2 City of Los Angeles Municipal Code

Los Angeles Fire Code

The 2017 Los Angeles Fire Code is part of the City's Municipal Code (Chapter V, Article 7), and incorporates the requirements outlined in the California Fire Code, as well as City amendments. The Fire Code includes, but is not limited to, requirements regarding fire safety during construction, emergency response, fire protection, and materials for existing and proposed buildings (City of Los Angeles, 2017). Division 9 of the Fire Code provides requirements related to fire department access, and response distance and fire-flow requirements for different land uses.

Los Angeles Building Code

The Los Angeles Building Code is a component of the City's Municipal Code (Chapter IX, Article 1), which provides regulations for the design, construction, quality of materials, use and occupancy, location, and

maintenance of all buildings and structures. The Building Code includes guidelines for fire-resistant materials and construction, as well as requirements for fire-protection systems. In addition, the Building Code provides safety guidelines, including requirements for exterior illumination and safeguards during construction.

3.13.2 Environmental Setting

3.13.2.1 Police Protection

Police protection services and law enforcement are provided by the Los Angeles Police Department (LAPD), which operates 18 stations throughout the City within the Central, South, West, and Valley Bureaus. The Project Area is within the Central Bureau and is served by the Central Division of the LAPD to the west of the Los Angeles River, and the Hollenbeck Division to the east of the Los Angeles River. There are no police stations within the Project Study Area. There are two police stations located just outside the half-mile buffer area, which are listed in **Table 3.13-1** (see **Figure 3.13-1**, Emergency Services)**.**

Table 3.13-1: Police Stations

Location	Property Name	Address	Distance from Project Area
PD-1	Los Angeles Police Department Central Community Police Station	215 East Sixth Street in Los Angeles	Approximately 0.8 miles northwest of Project Area
PD-2	Los Angeles Police Department Hollenbeck Community Police Station	211 East First Street in Los Angeles	Approximately 0.9 miles northwest of Project Area

Source: (GPA Consulting, 2019)

The Project Area experiences minor delays in emergency response times due to the existing construction site and closure of the Viaduct as part of the Viaduct Replacement Project. As part of the Viaduct Replacement Project, a Work Area Traffic Control Plan and Traffic Management Plan were developed to provide alternate traffic detour routes, construction materials hauling routes, bus stops, transit routes and operation hours, pedestrian routes, and residential and commercial access routes for the construction period. Because the Project Area is currently a construction site with restricted public access, existing LAPD service demands are minimal.

The Park Ranger Division oversees the safety and preservation of parks within the City's Department of Recreation and Parks (RAP) system. Park rangers are sworn law enforcement officers and certified firefighters with credentials to fight fires and administer basic first aid (City of Los Angeles Department of Recreation and Parks, 2019). Park Rangers patrol City parks using a variety of different methods such as vehicle patrols, mounted unit patrols (i.e., horseback), and foot-beats (i.e., foot or bicycle). Currently, the Park Ranger Division provides service to primarily Griffith Park, Runyon Canyon Park, Elysian Park, Hansen Dam Recreation Area, Ernest E. Debs Regional Park, and Ken Malloy Harbor Regional Park. In

addition to the park ranger system, an existing memorandum of understanding (MOU) between LAPD and RAP requires LAPD to patrol all parks in the RAP system.

3.13.2.2 Fire Protection

The Los Angeles City Fire Department (LAFD) provides fire prevention and suppression services, as well as emergency medical services, within the City. The LAFD operates three divisions, which include 18 battalions and over 100 fire stations. The Project Area is served by Battalion 1 of the Central Bureau of the LAFD. There are no fire stations within the Project Study Area. There are four fire stations located just outside of the Project Study Area, which are listed in **Table 3.13-2** (see **Figure 3.13-1**, Emergency Services)**.** The average operational response times for emergencies in 2017 are also included on **Table 3.13-2** (Los Angeles Fire Department, 2017)**.**

As discussed in Section 3.13.2.1, the Project Area experiences minor delays in emergency response times due to the existing construction site and closure of the Viaduct as part of the Viaduct Replacement Project. Because the Project Area is currently a construction site for the Viaduct Replacement Project, construction activities are required to incorporate LAFD recommendations and comply with applicable standards and permits, including Fire Code requirements regarding fire department access, response distances, and fire-flow. Therefore, existing fire protection demands are minimal.

Table 3.13-2: Fire Stations

Location	Property Name	Address	Distance From Project Area	2017 Response Times (minutes, seconds)
FD-1	Los Angeles Fire Department Station 4	450 East Temple Street in Los Angeles	Approximately 0.6 miles northwest of Project Area	EMS: 6 mins, 19 secs Non-EMS: 6 mins, 3 secs Critical ALS: 5 mins, 30 secs Structure Fire: 4 mins, 24 secs
FD-2	Los Angeles Fire Department Station 2	1962 East Cesar Chavez Avenue in Los Angeles	Approximately 0.9 miles northeast of Project Area	EMS: 6 mins, 24 secs Non-EMS: 6 mins, 11 secs Critical ALS: 5 mins, 33 secs Structure Fire: 4 mins, 40 secs
FD-3	Los Angeles Fire Department Station 25	2927 Whittier Boulevard in Los Angeles	Approximately 0.7 miles southeast of Project Area	EMS: 6 mins, 46 secs Non-EMS: 6 mins, 29 secs Critical ALS: 6 mins, 8 secs Structure Fire: 3 mins, 45 secs
FD-4	Los Angeles Fire Department Station 17	1601 South Santa Fe Avenue in Los Angeles	Approximately 0.7 miles south of Project Area	EMS: 6 mins, 38 secs Non-EMS: 6 mins, 31 secs Critical ALS: 5 mins, 35 secs Structure Fire: 5 mins, 19 secs

mins = minutes, secs = seconds, EMS = Emergency Medical Services, ALS = Advanced Life Support
Source: (GPA Consulting, 2019; Los Angeles Fire Department, 2017)

Figure 3.13-1: Emergency Services

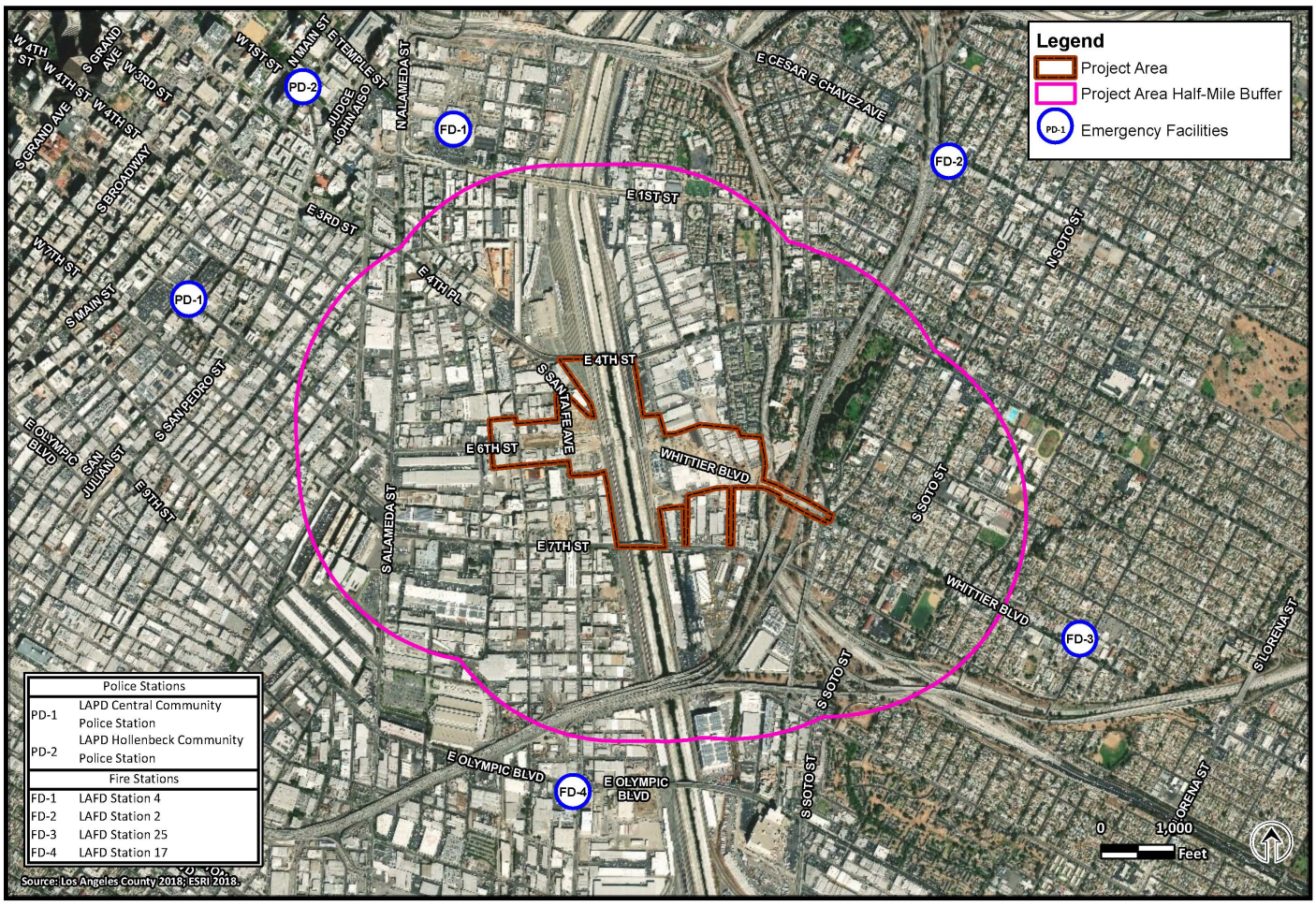

FIGURE 3.13-1: EMERGENCY SERVICES
Sixth Street PARC Project

3.13.2.3 Parks

The Project Area is primarily commercial and industrial, and there are no existing parks or recreation facilities. For additional discussion of parks and recreational facilities in the Project Study Area, see Chapter 3.14.

3.13.3 Environmental Impact Analysis

3.13.3.1 Screening Analysis

Several impacts and corresponding thresholds of significance in the following section were eliminated from further analysis in this EIR, including a discussion of public schools and other public facilities. These topics were eliminated because the IS for the proposed Project concluded there would be "No Impact," or impacts were identified to be "Less Than Significant… and will not be discussed further in the EIR." Only the topics described in the section below were determined to require further analysis in this EIR. Please see Chapter 3.14 for a discussion of parks. A copy of the Initial Study, which contains the eliminated topics, is provided in **Appendix A**.

3.13.3.2 Thresholds of Significance

According to Appendix G of the CEQA Guidelines and the *L.A. CEQA Thresholds Guide*, the proposed Project would have a significant impact on Public Services if it would:

XV(a) Would the project result in substantial adverse physical impacts associated with the provision of new or physically altered governmental facilities or a need for new or physically altered governmental facilities, the construction of which could cause significant environmental impacts, in order to maintain acceptable service ratios, response times, or other performance objectives for any of the following public services:

- Fire Protection
- Police Protection

  K.1 Police Protection. The determination of significance shall be made on a case-by-case basis, considering the following factors:

  - The demand for police services anticipated at the time of project buildout compared to the expected level of service available. Consider, as applicable, scheduled improvements to LAPD services (facilities, equipment, and officers) and the project's proportional contribution to the demand; and
  - Whether the project includes security and/or design features that would reduce the demand for police services.

- Parks

  K.4 Recreation and Parks. The determination of significance shall be made on a case-by-case basis, considering the following factors:

  - The demand for recreation and park services anticipated at the time of project buildout compared to the expected level of service available. Consider, as applicable, scheduled

improvements to recreation and park services (renovation, expansion, or addition) and the project's proportional contribution to the demand.

3.13.3.3 Construction Impacts

XV(a) Would the project result in substantial adverse physical impacts associated with the provision of new or physically altered governmental facilities or a need for new or physically altered governmental facilities, the construction of which could cause significant environmental impacts, in order to maintain acceptable service ratios, response times, or other performance objectives for any of the following public services:

(i) **Fire Protection**

Because the Project Area is already a construction site, impacts on fire protection services from proposed construction activities are anticipated to be similar to the existing condition. During construction of the proposed Project, hazards associated with construction sites, such as the operation of mechanical equipment and use of flammable materials, would increase the risk of personal injury and fires. However, construction contractors and workers would be required to comply with mandatory Occupational Safety and Health Administration (OSHA) and California Occupational Safety and Health Administration (Cal/OSHA) regulations to minimize these hazards. The proposed Project would comply with the Los Angeles Building Code to ensure that proper safeguards to protect construction site workers, pedestrians, and neighboring properties are in place.

During construction, lane or road closures and the movement of construction equipment on local roads could affect fire protection services, such as emergency vehicle response. However, these impacts would be temporary and would not result in lasting effects. Construction-related trips would be scheduled with increased frequency during off-peak hours to minimize congestion that could delay emergency vehicles. Temporary detour routes would also be provided to minimize delays to emergency vehicles. In addition, the nearest LAFD responders would be notified to coordinate emergency response routing during construction. Despite road or lane closures, emergency vehicles would continue to have the right-of-way, and emergency vehicle response would not be substantially affected. In addition, the proposed Project would be required to comply with Los Angeles Fire Code standards to ensure that access to fire hydrants and fire lanes is provided.

Project construction would require the removal of contaminated soils, and the use of materials that could be hazardous (e.g., paints, sealants, cement). The transport, use, and disposal of these materials would be conducted in compliance with applicable federal, state, and local laws pertaining to the safe handling, transport, and disposal of hazardous materials, including the provisions of the LAFD, Hazardous Materials Unit, which include requirements for the use and storage of hazardous materials (see Section 3.8 for additional details). Therefore, impacts related to the use of hazardous materials would be less than significant.

During construction of the proposed Project, the construction of additional facilities is not expected to be required to maintain acceptable service ratios, response times, or other performance objectives for fire protection. Therefore, impacts would be less than significant, and no mitigation is required.

(ii) Police Protection

Because the Project Area is currently a construction site, impacts on police protection services from proposed construction activities are anticipated to be similar to the existing condition. During construction, lane or road closures and the movement of construction equipment on local roads could affect police protection services. However, these impacts would be temporary and would not result in lasting effects. In addition, the nearest LAPD station would be notified to coordinate emergency response routing during construction. Despite road or lane closures, law enforcement vehicles would continue to have the right-of-way, and police response would not be substantially affected.

During construction, the Project Site would be fenced and screened, and access would be controlled to deter theft, vandalism, and other crimes. Construction of additional facilities is not expected to be required to maintain acceptable service ratios, response times, or other performance objectives for police protection. The contractor would provide private security personnel to patrol and guard the site after work hours. If any traffic control plans are needed during construction, the nearest local police station would be notified to coordinate emergency response routing. Therefore, with implementation of these security features impacts would be less than significant, and no mitigation is required.

(iii) Parks

The proposed Project does not include the construction of housing, and construction workers would commute to the job site on a daily basis. Therefore, temporary construction of the proposed Project would not result in population growth that would increase the number of visitors to existing parks or other recreational facilities. Impacts would be less than significant, and no mitigation is required.

3.13.3.4 Operational Impacts

XV(a) Would the project result in substantial adverse physical impacts associated with the provision of new or physically altered governmental facilities or a need for new or physically altered governmental facilities, the construction of which could cause significant environmental impacts, in order to maintain acceptable service ratios, response times, or other performance objectives for any of the following public services:

(i) Fire Protection

The proposed Project would not include the construction of housing that would increase the population within the Project Study Area. However, the open space, recreational facilities, and events hosted in the park would increase traffic and visitors in the Project Study Area when compared to the existing construction site. Therefore, the demand for LAFD services would potentially increase. Project plans would be reviewed by the LAFD, and the final design of the proposed Project would be required to incorporate LAFD recommendations. In addition, fire prevention measures would be incorporated into building plans in accordance with the California Fire Code and City's Fire Code. The proposed Project would also be evaluated based on whether adequate access and any special equipment is provided onsite for firefighters. Therefore, impacts would be less than significant.

Proposed programming for the park includes large events with an estimated maximum capacity of up to 5,000 people (additional estimates for event capacity included in **Table 2.1**). For larger events, the proposed Project may require additional emergency services. However, large events would require

approval from the LAFD, and any additional permits or requirements from the LAPD, Department of City Planning, and Department of Public Works. By incorporating LAFD recommendations and complying with applicable standards and permits, impacts would be less than significant.

Because the proposed Project would attract visitors to the Project Study Area, additional traffic could result in impacts to service ratios or response times. The *Traffic Impact Analysis* (Kimley-Horn and Associates, Inc., 2019) prepared for the proposed Project identifies two intersections (Hewitt Street at Fourth Street and Santa Fe Avenue at Third Street) that would operate at level of service[i] (LOS) F during the PM peak hour in Existing (2018) With Project Conditions. However, the LOS at these intersections is expected to improve with implementation of the proposed Project, when compared to the LOS for the existing industrial land use (see Section 3.15 for additional discussion). Therefore, impacts to service ratios and response times would not be significant.

During large events, the LOS at these two intersections would also operate at LOS F during the PM peak hour. By implementing a site-specific traffic control plan for large events (see Section 3.15.4), impacts to service ratios or response times would be minimized. Mitigation measures to promote alternate modes of transportation, such as the creating mobility and bike share hubs, creating rideshare zones, and analyzing potential locations for creating and expanding public transportation in the vicinity of the proposed Project Site would be implemented to further minimize impacts due to traffic during large events (see **MM-TRANS-1**, **MM-TRANS-2**, **MM-TRANS-3**, and **MM-TRANS-4** in Section 3.15.5).

The proposed Project would not be located in a fire hazard area. To prevent hazards that would increase the need for fire protection, the proposed Project would be constructed in accordance with all applicable fire codes set forth by the state Fire Marshall and LAFD. The proposed Project would not create a fire hazard and would not require services that would exceed the capacity of LAFD to serve the site or surrounding areas.

Project operation would require the minor use of materials that could be hazardous, such as paint for the sports field(s), pesticides and fertilizers for the landscaping, and other materials used for maintenance of the facilities. The transport, use, and disposal of these materials would be conducted in compliance with applicable federal, state, and local laws pertaining to the safe handling, transport, and disposal of hazardous materials, including the provisions of the LAFD, Hazardous Materials Unit, which include requirements for the use and storage of hazardous materials (see Section 3.8 for additional details). Therefore, impacts related to the use of hazardous materials would be less than significant.

The proposed Project would incorporate LAFD recommendations and comply with applicable standards and permits, including Fire Code requirements regarding fire department access, response distances, and fire-flow. Therefore, the proposed Project is not expected to result in the need for the expansion of or construction of new fire protection facilities. Impacts would be less than significant, and no mitigation is required.

(ii) Police Protection

The proposed Project would not include the construction of housing that would increase the population within the Project Study Area. However, the open space, recreational facilities, and events hosted in the

[i] LOS describes the quality of traffic flow, ranging from LOS A (free flow conditions) to LOS F (excessive delay). See Section 3.15 (Transportation) for additional information.

park would increase traffic and visitors in the Project Study Area when compared to the existing condition. Because the proposed Project would increase the number of people in the Project Area, the demand for LAPD services could potentially increase. Project plans were reviewed by the LAPD, and the proposed Project would be required to incorporate LAPD recommendations in the final design. Once the proposed Project becomes part of RAP jurisdiction, the police protection services in the park would be covered by the existing park ranger system and the MOU between LAPD and RAP.

Proposed programming for the park includes large events with an estimated maximum capacity of 5,000 people (additional estimates for event capacity included in **Table 2.1**). For larger events, the proposed Project may require additional security and law enforcement services. Large events would require approval from the LAPD, and any additional permits or requirements from the LAFD, Department of City Planning, and Department of Public Works.

The proposed Project would increase traffic and visitors in the Project Study Area and provide additional public access to the LA River, when compared to the existing construction site. Therefore, there could be an increased demand for additional police protection, especially during flood conditions and public events. As discussed above, police protection services in the park would be covered by the existing park ranger system and LAPD, as mandated in the existing MOU. By incorporating LAPD recommendations and complying with applicable permits, the proposed Project is not expected to result in the need for the expansion of or construction of new police protection facilities. Therefore, impacts would be less than significant, and no mitigation is required.

The proposed Project would conform to the California Building Code, which establishes the minimum construction, engineering, and safety requirements for new buildings. In addition, the proposed Project includes lighting along the park's perimeter and sidewalks, and at the playgrounds, performance stages, and sports fields. Park lighting would be limited to the proposed operating hours (between 5:00 a.m. and 10:30 p.m.) and would be consistent with the City's Municipal Code and River Improvement Overlay (RIO) Ordinance (Ordinance Number 183145). The lighting would meet the following requirements to improve visibility near roadways and in dark areas, increase the sense of security for park users, and deter crime (Horton Lees Brogden Lighting Design, 2018):

- Provide adequate vertical illuminance to identify a face from a distance of at least 30 feet;
- Be uniform throughout the Project Site to reduce the necessity for eye adjustment when scanning or using the area;
- Minimize glare that would result in annoyance, discomfort, or loss in visibility; and
- Provide uniform vertical illuminance to minimize shadows.

There are several streets that bisect the park (i.e., Santa Fe Avenue, Mesquit Street, Mission road, Anderson Street, and Clarence Street), which could result in safety hazards from oncoming motorists for visitors traveling throughout the park. Raised pedestrian crosswalks would be provided at these intersections to increase safety and visibility for pedestrians and bicyclists. In addition, the eastern end of the proposed Arts Plaza and the western end of the proposed East Park border several railroad tracks. Existing fencing separates the railroad tracks from the proposed Project Site, minimizing risks to public safety and security.

With the safety features described above, the proposed Project is not expected to increase the demand for police services. Therefore, impacts would be less than significant, and no mitigation is required.

(iii) Parks

The proposed Project would not result in population growth or substantial employment growth that would increase the demand for existing parks or other recreational facilities in the Project Study Area. The proposed Project would not require the expansion of existing park facilities for construction of new park facilities. Rather, the proposed Project would provide additional recreation and park services that may alleviate the demand for other existing parks and recreational facilities in the Project Study Area (for additional discussion see Chapter 3.14). Therefore, impacts would be less than significant, and no mitigation is required.

3.13.4 Best Management Practices

There are no best management practices for Public Services. With implementation of the best management practices identified in Section 3.15.4 (Transportation), impacts associated with delays to emergency vehicles would be avoided or minimized.

3.13.5 Mitigation Measures

There are no mitigation measures for Public Services. The mitigation measures identified in Section 3.15.5 (Transportation) address impacts associated with traffic concerns. As discussed in Section 3.15.5, traffic control plans for large events shall identify emergency services egress and access. Therefore, impacts on Public Services would be less than significant.

3.13.6 Significant Unavoidable Adverse Impacts

With implementation of the mitigation measures described in Section 3.15.5 (Transportation), there are no significant unavoidable adverse impacts on Public Services resulting from implementation of the proposed Project.

3.13.7 Cumulative Impacts

The cumulative setting for Public Services is the Project Study Area. Within Central City North, proposed development projects include residential and live/work units, commercial spaces (i.e., office and retail), and hotels. These proposed development projects could result in an increase in permanent residents and visitors to the Project Study Area, and therefore an increase in the demand for police and fire protection services within the Project Study Area. Higher demand for police and fire protection services could contribute to adverse impacts related to Public Services (i.e., a reduction in acceptable service ratios, response times, or other performance objectives that would require the need for new or physically altered governmental facilities).

However, proposed development projects would be required to meet the City's response distance, emergency access, fire flow, and other safety standards and requirements in the Los Angeles Fire Code and Building Code. Proposed development projects would also be subject to review by LADOT, LAPD, and LAFD to minimize any potential impacts. In addition, proposed developments would be evaluated based on whether they are consistent with the City's General Plan and Municipal Code. Currently, there

are no fire or police stations that are proposed for development within the Project Study Area. Therefore, the proposed Project would not result in cumulative impacts related to fire and police protection.

An increase in residential units could also increase the usage of parks and recreational facilities within the Project Study Area, which could contribute to the deterioration of existing park facilities. However, these proposed development projects would be required to comply with the Quimby Act and City Ordinance Number 184505, which require proposed housing developments to set aside funds or land for the provision of parks and recreational facilities (for additional discussion, see Section 3.14). Proposed developments would also be evaluated based on whether they are consistent with the City's General Plan and other local development regulations. In addition, the proposed Project would provide open space and recreational opportunities for these communities, helping to alleviate usage of nearby parks and recreational facilities. Therefore, the proposed Project would not result in cumulative impacts related to parks.

3.14 Recreation

This section describes the affected environment and regulatory setting for Recreation related to the Project Area and surrounding area. In addition, this section describes the potential impacts related to Recreation that would result from implementation of the proposed Project. As noted in the analysis below, impacts associated with Recreation during construction or operation of the proposed Project would be less than significant and no mitigation measures are required.

Impacts related to Recreation may extend beyond the Project Area, which includes the area of direct impacts resulting from construction and operation of the proposed Project. Therefore, the discussion of the affected environment and environmental impacts related to Recreation is based on the Project Study Area, which includes the Project Area and a surrounding half-mile buffer.

The information in this section is based on the Community Impact Assessment (CIA) prepared for the proposed Project (GPA Consulting, 2019). It is unlikely that community conditions have changed substantially from that described in this technical study.

3.14.1 Regulatory Setting

A review of the various federal, state, regional, and local government regulatory requirements was conducted to identify regulations that relate to parks, recreational facilities, and open spaces. This section summarizes the various regulatory requirements that are relevant to the proposed Project.

3.14.1.1 State

Quimby Act

Passed in the State of California in 1975, the Quimby Act allows governing bodies within a city or county to dedicate land or impose fees for park or recreational purposes as a condition for the approval of development projects (California Legislative Information, 2015). The goal of the Quimby Act is to require developers to mitigate the impacts of their proposed developments, ensuring adequate acres of open space for residents (three to five acres for every 1,000 residents).

3.14.1.2 Local

Los Angeles Municipal Code – Ordinance Number 184505

Under California's Quimby Act, Ordinance Number 184505 requires housing developers to dedicate land and/or pay a "park and recreation impact fee" for the purpose of acquiring, expanding, and improving park and recreational facilities for residents (City of Los Angeles, 2016). The fees or acreage of land set aside for park and recreation purposes varies depending on the number of dwelling units and/or the number of occupants per dwelling unit. Recreational sites and facilities must also be within a specified radius of the proposed development.

City of Los Angeles General Plan

As required by the State of California, the City's General Plan addresses goals, policies, and standards related to land use, circulation, housing, conservation, open space, noise, and safety (City of Los Angeles, 2017). To address goals that meet the unique needs of the City, the General Plan also includes elements

related to health and wellness, air quality, historic preservation and cultural resources, and public facilities and services. Several of the General Plan elements are currently undergoing revisions. The General Plan elements that pertain to Recreation are described in more detail in the following sections.

Central City North Community Plan

The Central City North Community Plan summarizes goals, objectives, and policies related to recreation and parks facilities, as well as open spaces, as listed below (City of Los Angeles, 2000). The Central City North Community Plan is being updated, but the update will not be complete before the availability of the Draft EIR for public comment.

- **Goal 4:** Adequate recreation and park facilities which meet the needs of the residents in the Plan Area
- **Goal 5:** A community with sufficient open space in balance with development to serve the recreational, environmental, and health needs of the community and to protect environmental and aesthetic resources.
- **Objective 5-1:** To preserve existing open space resources and where possible develop new open space.
- **Policy 5-1.1:** Encourages the retention of passive and visual open space which provides a balance to the urban development of the Plan Area.
- **Objective 5-2:** To ensure the accessibility, security, and safety of parks by their users, particularly families with children and senior citizens.
- **Policy 5-2.1:** Ensure that parks are adequately illuminated for safe use at night where appropriate.

The Downtown Community Plan, DTLA 2040, includes a vision for providing high quality public spaces that support the growth in populations of workers, residents, and visitors in Downtown, and that are accessible to all (City of Los Angeles, 2019).

Boyle Heights Community Plan

The Boyle Heights Community Plan is intended to ensure that sufficient land is designated for the community's needs (City of Los Angeles, 1998). The Boyle Heights Community Plan is being updated, but the update will not be complete before the availability of the Draft EIR for public comment. The Community Plan includes objectives, policies, and programs related to recreation and parks facilities, as well as open spaces, as listed below.

- **Objective 1:** To provide adequate recreation and park facilities which meet the needs of the residents in the community.

Open Space Element

The Open Space Element of the City's General Plan provides information to guide decision makers and interested citizens regarding the identification, preservation, conservation, and acquisition of open space in the City (City of Los Angeles, 1973). The Element aims to ensure that the City has sufficient open space to meet its recreational, environmental, health, and safety needs. In addition, the Element aims to conserve and preserve the City's environmental resources, as well as provide open spaces that contribute to the City's identity.

Service Systems Element/Public Recreation Plan

The Public Recreation Plan includes policies and programs that emphasize neighborhood and community facilities, including recreational sites and parks (City of Los Angeles, n.d.). The Plan's objectives include developing standards for the City's public recreational facilities, with the goal of meeting the City's recreational needs and benefiting the greatest number of people, while minimizing costs and environmental impacts.

Los Angeles Countywide Comprehensive Parks and Recreation Needs Assessment

The Los Angeles Countywide Comprehensive Parks and Recreation Needs Assessment, initiated by the Los Angeles County Department of Parks and Recreation, provides an evaluation of the existing facilities within individual study areas to determine levels of need for additional parks (Los Angeles County Department of Parks and Recreation, 2016). The Needs Assessment is intended to inform planners and decision-makers with regards to future funding, equitable allocation, staffing and programming, and other needs. The latest Needs Assessment was completed in 2016. Existing park facilities throughout the County were inventoried, and this inventory included local parks, regional recreation parks, and regional open space parks.

Based on the Needs Assessment, Boyle Heights and Central City North demonstrate fewer park acres available for the amount of residents compared to Los Angeles County as a whole (Los Angeles County Department of Parks and Recreation, 2016). In addition, Boyle Heights and Central City North demonstrate a higher need for parks compared to Los Angeles County as a whole.

3.14.2 Environmental Setting

The City's Department of Recreation and Parks (RAP) operates and manages the City's parks and recreational facilities (Department of Recreation and Parks, 2018). In addition, RAP supervises the construction of new facilities and improvements to existing facilities. The RAP park system includes more than 16,000 acres of parkland, with recreational, social, and cultural programs offered at 444 park sites throughout every neighborhood in the City.

The Project Area is primarily commercial and industrial, and there are no existing parks or recreation facilities. Within the Project Study Area (i.e., half-mile buffer around the Project Area), the area east of South Clarence Street is heavily residential area. Residences are sparse in the portion of the Project Study Area that is west of the Los Angeles River. The parks and recreation facilities within the Project Study Area are listed in **Table 3.14-1** (see **Figure 3.14-1**, Parks and Recreation Centers).

According to the *Los Angeles Countywide Comprehensive Parks and Recreation Needs Assessment*, Boyle Heights and Central City North demonstrate fewer park acres available for the amount of residents compared to Los Angeles County as a whole (Los Angeles County Department of Parks and Recreation, 2016). In addition, Boyle Heights and Central City North demonstrate a higher need for parks compared to Los Angeles County as a whole. The results of the assessment are summarized in **Table 3.14-2**.

Table 3.14-1: Parks and Recreation Facilities

Location	Property Name	Address	Distance from Project Area	Owner/Operator	Amenities
Parks					
P-1	Gladys Park	East Sixth Street and Gladys Avenue in Los Angeles	0.5 mile west of Project Area	City of Los Angeles, Department of Recreation and Parks	Basketball Courts (Unlighted/Outdoor), Outdoor Gym, Picnic Tables
P-2	Arts District Park	501 South Hewitt Street in Los Angeles	0.2 mile northwest of Project Area	City of Los Angeles, Department of Recreation and Parks	Children's Play Area, Picnic Area
P-3	Hollenbeck Park	415 South Street Louis Street in Los Angeles	0.3 mile northeast of Project Area	City of Los Angeles, Department of Recreation and Parks	Barbeque Pits, Children's Play Area, Picnic Tables, Lake, Bridge
P-4	Boyle Heights Sports Center	933 South Mott Street in Los Angeles	0.3 mile southeast of Project Area	City of Los Angeles, Department of Recreation and Parks	Barbecue Pits, Baseball Diamond, Basketball Courts, Children's Play Area, Community Room, Picnic Tables, Track Field, Jogging Path, Multipurpose Sports Field, Synthetic Field
Recreation Facilities					
R-1	Pecan Recreation Facility	145 South Pecan Street in Los Angeles	0.5 mile northeast of Project Area	City of Los Angeles, Department of Recreation and Parks	Basketball Courts, Children's Play Area, Community Room, Handball Courts, Picnic Tables, Restrooms, Seasonal Pool, Volleyball Courts, Multipurpose Sports Field, Baseball Diamond
R-2	Aliso Pico Recreation Center	370 South Clarence Street in Los Angeles	0.3 mile northeast of Project Area	Los Angeles Parks Foundation	Children's Play Area, Auditorium, Basketball Courts, Indoor Gym, Volleyball Courts, Baseball Diamond, Tennis Courts,

Location	Property Name	Address	Distance from Project Area	Owner/Operator	Amenities
					Community Room, Computer Labs, Cultural Educational Facility, Kitchens, Multi-Purpose Sports Field (with youth-sized ball diamond), Music Room
R-3	Hollenbeck Recreation Center	415 South Street Louis Street in Los Angeles	0.4 mile northeast of Project Area	City of Los Angeles, Department of Recreation and Parks	Auditorium, Barbecue Pits, Children's Play Area, Community Room, Picnic Tables, Bandshell, Kitchen, Outdoor Fitness Equipment, Preschool

Source: (GPA Consulting, 2019)

Table 3.14-2: Parks and Recreation Needs Assessment

Location	Park Acres per 1,000 People	Percent of Population (%)	
		High Need	Very High Need
Los Angeles County	3.3	28	23
Boyle Heights	0.6	44	50
Central City North	1.6	30	35

Source: (Los Angeles County Department of Parks and Recreation, 2016)

Figure 3.14-1: Parks and Recreation Centers

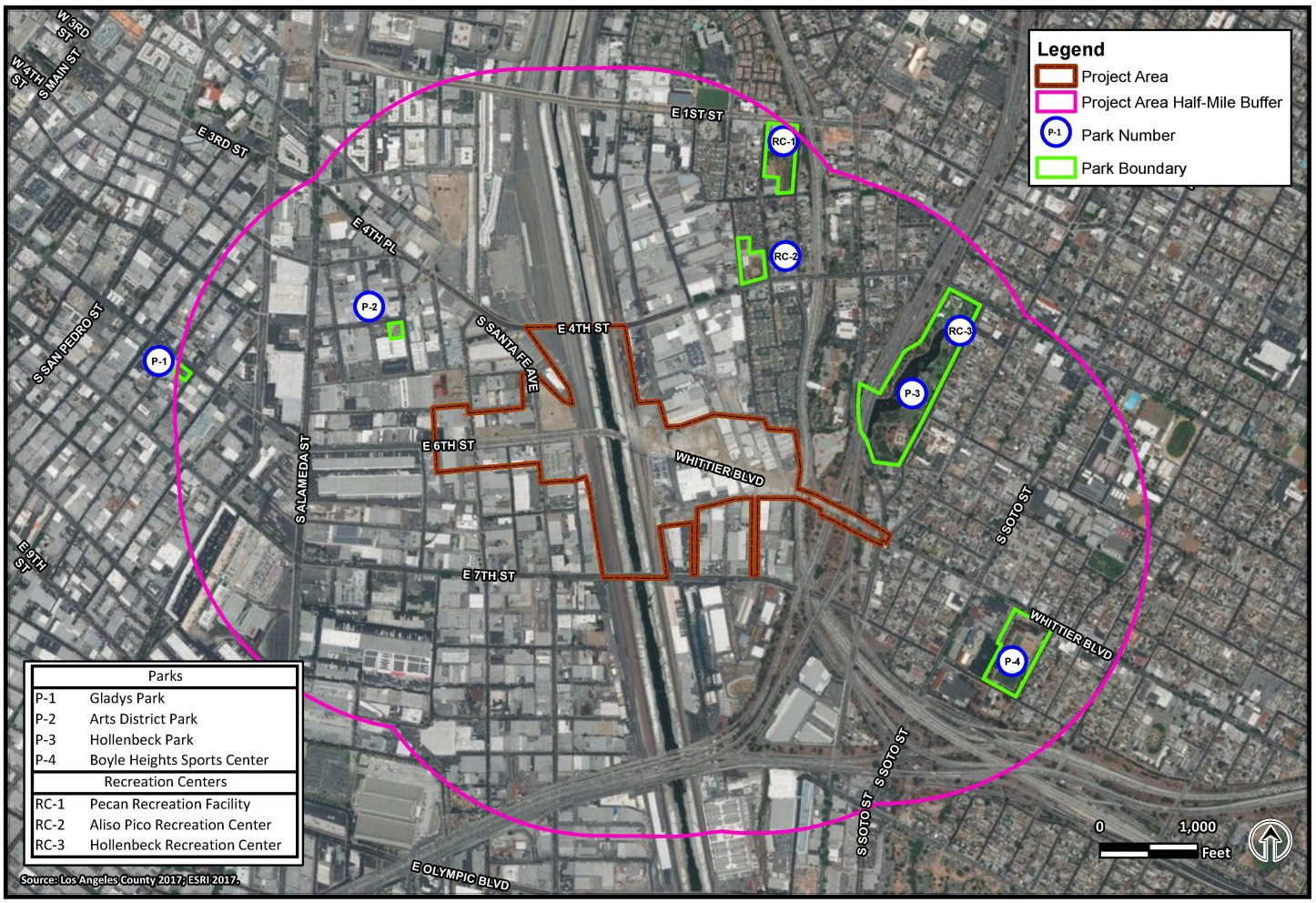

ENGINEERING
CITY OF LOS ANGELES

FIGURE 3.14-1: PARKS AND RECREATION CENTERS
Sixth Street PARC Project

3.14.3 Environmental Impact Analysis

3.14.3.1 Screening Analysis

Several impacts and corresponding thresholds of significance in the following section were eliminated from further analysis in this EIR. Topics were eliminated if the Initial Study for the proposed Project concluded there would be "No Impact," or if impacts were identified to be "Less Than Significant… and will not be discussed further in the EIR." Therefore, only the topics described in the section below were determined to require further analysis in this EIR. A copy of the Initial Study, which contains the eliminated topics, is provided in **Appendix A**.

3.14.3.2 Thresholds of Significance

According to Appendix G of the CEQA Guidelines and the *L.A. CEQA Thresholds Guide*, the proposed Project would have a significant impact on Recreation if it would:

XVI(a) Increase the use of existing neighborhood and regional parks or other recreational facilities such that substantial physical deterioration of the facility would occur or be accelerated.

K.4 Recreation and Parks. The determination of significance shall be made on a case-by-case basis, considering the following factors:

- The demand for recreation and park services anticipated at the time of project buildout compared to the expected level of service available. Consider, as applicable, scheduled improvements to recreation and park services (renovation, expansion, or addition) and the project's proportional contribution to the demand; and

XVI(b) Include recreational facilities or require the construction or expansion of recreational facilities which might have an adverse physical effect on the environment. (See *LA CEQA Threshold Guide* K.4 Recreation and Parks)

3.14.3.3 Construction Impacts

XVI(a): Increase the use of existing neighborhood and regional parks or other recreational facilities such that substantial physical deterioration of the facility would occur or be accelerated.

The proposed Project does not include the construction of housing, and construction workers would commute to the job site on a daily basis. Therefore, temporary construction of the proposed Project would not result in population growth that would increase the number of visitors to existing parks or other recreational facilities.

The Arts District Park, located approximately 0.15 mile from the Project Area, is the closest park to the areas where construction activities and staging would occur. Based on distance, construction of the proposed Project is not expected to deter visitors from using any of the parks or recreational facilities in the Project Study Area (listed in **Table 3.14-1**), nor would construction increase usage of these facilities.

Because construction of the proposed Project would not affect the usage of parks in the Project Study Area, the deterioration of existing facilities is not anticipated to occur or be accelerated. Therefore, impacts would be less than significant, and no mitigation is required.

XVI(b): Include recreational facilities or require the construction or expansion of recreational facilities which might have an adverse physical effect on the environment.

During construction of the proposed park and recreational facilities, construction activities could result in the release of hazardous materials, and the use of construction equipment could result in temporary impacts related to noise, air quality, and greenhouse gas emissions. These impacts are addressed in Sections 3.2, 3.7, 3.8, and 3.11. Construction impacts related to hazardous materials, noise, air quality, and greenhouse gas emissions would be temporary, and would cease following completion of construction. Therefore, impacts would be less than significant, and no mitigation is required.

3.14.3.4 Operational Impacts

XVI(a): Increase the use of existing neighborhood and regional parks or other recreational facilities such that substantial physical deterioration of the facility would occur or be accelerated.

The proposed Project does not include the construction of housing, and therefore, would not result in population growth that would increase the use of existing parks or other recreational facilities in the Project Study Area.

One of the objectives of the proposed Project is to serve the open space and recreational needs of surrounding communities. By converting an existing construction zone into approximately 13 acres of public recreational space, the proposed Project would increase the number of park acres available to residents in the Project Study Area. In addition, the proposed Project would serve communities that were determined to have a "high" or "very high" need for parks in the Los Angeles Countywide Comprehensive Parks and Recreation Needs Assessment.

The proposed Project is expected to result in beneficial impacts because it would reduce the pressure on existing parks and recreational facilities, rather than cause substantial physical deterioration to occur or be accelerated. Therefore, impacts would be less than significant, and no mitigation is required.

XVI(b): Include recreational facilities or require the construction or expansion of recreational facilities which might have an adverse physical effect on the environment.

The proposed Project would include the construction of recreational facilities that may include sports field(s) and court(s), bicycle paths, skate park/facilities, recreation trails, community building(s), a dog park, playgrounds, and stationary exercise equipment. Because the Project Area is a construction zone located in a highly developed urban environment, the proposed Project would not result in the destruction of natural environment or alteration of landforms that would have physical impacts on the environment. Rather, the proposed Project would improve the natural environment by providing more open space and remediating hazardous soils to standards acceptable by the Los Angeles County Fire Department and other regulatory agencies as required.

However, the proposed Project would attract visitors to the Project Study Area, resulting in increased vehicular traffic that could result in impacts related to air quality, greenhouse gas emissions, and transportation. These impacts are addressed in Sections 3.2, 3.7, and 3.15. The analysis in this EIR has determined that these operational impacts can be reduced to less than significant levels with standard regulatory requirements and/or the implementation of BMPs and mitigation measures. Therefore, physical effects on the environment would be less than significant.

In addition, the proposed Project would not result in population growth or substantial employment growth that would increase the demand for existing parks or other recreational facilities in the Project Study Area. As stated above, the proposed Project would not reduce the area available for recreational activities; rather, the proposed Project would provide additional recreation and park services that may alleviate the demand for other existing parks and recreational facilities in the Project Study Area. As also discussed above, the proposed Project would serve communities that were determined to have a "high" or "very high" need for parks in the Los Angeles Countywide Comprehensive Parks and Recreation Needs Assessment. Therefore, impacts would be less than significant, and no mitigation is required.

3.14.4 Best Management Practices

There are no Best Management Practices related to Recreation.

3.14.5 Mitigation Measures

Impacts related to Recreation would be less than significant; therefore, mitigation measures are not required.

3.14.6 Significant Unavoidable Adverse Impacts

There are no significant unavoidable adverse impacts on Recreation resulting from implementation of the proposed Project.

3.14.7 Cumulative Impacts

The cumulative setting for Recreation is the Project Study Area. Of the parks in the Project Study Area (listed in **Table 3.14-1**), Hollenbeck Park is the only park or recreational facility with proposed or scheduled improvements. Walkway improvements are currently under construction at Hollenbeck Park, and the park is in the design phase for the addition of a new walking path (Department of Recreation and Parks, 2016). In addition, LA Sanitation is proposing a Lake Rehabilitation and Stormwater Management Project for Hollenbeck Park, which is currently undergoing environmental review, with construction proposed from September 2019 to October 2020 (LA Stormwater, 2017). Therefore, some portions of Hollenbeck Park may be closed to the public during the time of buildout of the proposed Project. However, the proposed Project would serve as an alternative to Hollenbeck Park, providing additional park area and recreational facilities to meet the demand for recreation and park services.

Within Central City North, many of the proposed development projects include residential and live/work units. The proposed Los Angeles to Anaheim section of the California High Speed rail system would have the potential to promote higher density, mixed-use, pedestrian-oriented development around the stations. Thus, an increase in residential units and public transportation could increase the usage of parks and recreational facilities within the Project Study Area, which could contribute to adverse impacts related to Recreation (i.e., deterioration of existing facilities). However, these proposed development projects would be required to comply with the Quimby Act and City Ordinance Number 184505, which require proposed housing developments to set aside funds or land for the provision of parks and recreational facilities. Proposed developments would also be evaluated based on whether they are consistent with the City's General Plan and other local development regulations. In addition, the proposed Project would provide open space and recreational opportunities for these communities,

helping to alleviate usage of nearby parks and recreational facilities. Therefore, the proposed Project is not expected to contribute to cumulative impacts related to Recreation.

3.15 Transportation

This section describes the affected environment and regulatory setting for Transportation related to the Project Area and surrounding area. In addition, this section describes the potential impacts related to Transportation that would result from implementation of the proposed Project. As noted in the analysis below, impacts associated with Transportation during construction or operation of the proposed Project would be less than significant with mitigation, which includes **MM-TRANS-1: Mobility Hub, MM-TRANS-2: Bicycle Facilities, MM-TRANS-3: Rideshare Zones, and MM-TRANS-4: Public Transportation.** Best management practices related to managing construction traffic, requiring access to surrounding parcels during construction, and site-specific traffic control plans for large events are also included. Consistent with Senate Bill (SB) 743, transportation impacts are considered based on vehicle miles traveled (VMT). A transportation impact analysis based on level of service was initially prepared for this project and is also included. The information in this section is based on the *Community Impact Assessment* (GPA Consulting, 2019), *Traffic Impact Analysis* (Kimley-Horn and Associates, Inc., 2019a), and *Parking Demand Analysis* (Kimley-Horn and Associates, Inc., 2019b) prepared for the proposed Project.

3.15.1 Regulatory Setting

3.15.1.1 State

Assembly Bill 1385 – California Complete Streets Act

Assembly Bill (AB) 1385, also known as the California Complete Streets Act, was adopted by the California State Legislature in 2008. AB 1385 requires local jurisdictions to "plan for a balanced, multimodal transportation network that meets the needs of all users of streets, roads, and highways, defined to include motorists, pedestrians, bicyclists, children, persons with disabilities, seniors, movers of commercial goods, and users of public transportation, in a manner that is suitable to the rural, suburban or urban context." AB 1358 ensures that local streets and roads are designed to accommodate the needs of bicyclists, pedestrians, and public transit users, in addition to motorists.

California Senate Bill 743

California Senate Bill (SB) 743, which was signed into law in 2013, requires the Office of Planning and Research to amend the California Environmental Quality Act (CEQA) guidelines for transportation impact analysis. Under SB 743, level of service (LOS) and other measures of vehicular capacity or traffic congestion will no longer serve as the basis for determining significant impacts for land use projects and plans. Measurements of transportation impacts may include VMT, VMT per capita, automobile trip generation rates, or automobile trips generated. SB 743 was enacted in order to balance the needs of congestion management with statewide goals of reducing greenhouse gas emissions, developing multimodal transportation networks, and promoting a diversity of land uses. Section 15046.3 of the CEQA Guidelines requires that these guidelines apply prospectively beginning on July 1, 2020, statewide. The City of Los Angeles adopted guidance to implement SB 743 in July 2019, updated it in August 2019, and revised the Transportation Assessment Guidelines (TAG) further in July 2020.

3.15.1.2 Regional

Southern California Association of Governments Regional Transportation Plan/Sustainable Communities Strategy

The Southern California Association of Governments (SCAG) Regional Transportation Plan/Sustainable Communities Strategy (RTP/SCS) is a long-range plan that balances future mobility and housing needs with economic, environmental, and public health goals (Southern California Association of Governments, 2020). The SCAG region is made up of Imperial, Los Angeles, Orange, Riverside, San Bernardino, and Ventura Counties. The RTP/SCS includes input from local and tribal governments, transportation commissions, non-profit organizations, businesses, and local stakeholders.

The strategies outlined in the RTP/SCS aim to help the region meet greenhouse gas emission reduction goals, achieve Federal Clean Air Act requirements, preserve open spaces, improve public health, enhance roadway safety, and support the movement of goods and use of resources throughout the SCAG region. The RTP/SCS includes over 4,000 transportation projects within the SCAG region, including highway improvements, railroad grade separations, bicycle lanes, transit, and bridge replacements.

3.15.1.3 Local

City of Los Angeles Transportation Assessment Guidelines

The Los Angeles Department of Transportation (LADOT) released the TAG in July 2019, updated them in August 2019, and revised further in July 2020. The TAG provides standards for preparation of transportation assessments in the City and supersedes the Transportation Impact Study guidelines that were last updated in December 2016. The TAG conforms to the requirements of SB 743, incorporates the December 2018 updates to the CEQA guidelines proposed by the Governor's Office of Planning and Research, and conforms with the City's most recent CEQA Thresholds Guide update. As part of the TAG, the City updated its travel demand simulation model and transportation impact thresholds to be consistent with the VMT methodology (Los Angeles Department of Transportation, 2020).

City of Los Angeles Municipal Code

The City's Municipal Code provides the regulatory framework and ordinances of the City (City of Los Angeles, 2018). The Municipal Code assists City offices, departments, and other governmental agencies in carrying out their functions, and provides citizens with information regarding the City's regulations. Section 12.21 of the City's Municipal Code includes general provisions for parking regulations, which indicate the number of spaces required per square foot of a given land use.

LAMC 12.26.J City of Los Angeles Transportation Demand Management Ordinance

The City's Transportation Demand Management (TDM) Ordinance requires certain projects to incorporate strategies that reduce drive-alone vehicle trips and improve access to destinations and services. The ordinance is revised and updated periodically (Los Angeles Department of Transportation, 2020).

City of Los Angeles General Plan

As required by the State of California, the City's General Plan addresses goals, policies, and standards related to land use, circulation, housing, conservation, open space, noise, and safety (City of Los Angeles, 2017). To address goals that meet the unique needs of the City, the General Plan also includes elements related to health and wellness, air quality, historic preservation and cultural resources, and public facilities and services. Several of the General Plan elements are currently being updated.

Mobility Plan 2035 (Circulation Element)

The City's Mobility Plan 2035 is an element of the General Plan that updates the Circulation Element and integrates the 2010 Bicycle Plan (City of Los Angeles, 2016). The Mobility Plan implements the requirements of AB 1385 by providing the policy foundation for achieving a transportation system that balances the needs of all road users. The Mobility Plan lays the foundation for a network of complete streets and establishes new complete street standards that will provide safe and efficient transportation for pedestrians (especially for vulnerable users such as children, seniors and the disabled), bicyclists, transit riders, and car and truck drivers. The policies outlined in the Mobility Plan include the following:

Safety

- **Policy 1.2:** Implement a balanced transportation system on all streets, tunnels, and bridges using complete streets principles to ensure the safety and mobility of all used.

Infrastructure

- **Policy 2.1:** Design, plan, and operate streets to serve multiple purposes and provide flexibility in design and adapt to future demands.
- **Policy 2.6:** Provide safe, convenient, and comfortable local and regional bicycling facilities for people of all types and abilities.

Access

- **Policy 3.1:** Recognize all modes of travel, including pedestrian, bicycle, transit, and vehicular modes as integral components of the City's transportation system.
- **Policy 3.2:** Accommodate the needs of people with disabilities when modifying or installing infrastructure in the public right-of-way.

Clean Environments and Healthy Communities

- **Policy 5.1:** Encourage the development of a sustainable transportation system that promotes environmental and public health.

Downtown Los Angeles Community Plan

A draft Downtown LA Community Plan was released in November 2020 and is currently pending adoption. Mobility and connectivity goals include supporting the development of mobility hubs at key destinations, facilitating integration between different modes of travel to create a seamless experience as users switch between modes and to promote transit use and active transportation, and strengthening pedestrian and bicycle connections to the LA River to provide access to open space and recreation.

Boyle Heights Community Plan Update

An update to the Boyle Heights Community Plan is currently underway. One of the mobility and connectivity policies focuses on prioritizing street improvements and the completion of a comprehensive bicycle lane network that enables people of all ages and abilities to safely and comfortably reach the community's schools, job centers and transit stations from any part of Boyle Heights. These policies promote dedicated bicycle signals at key intersections and improved pedestrian and bicycle safety and mobility.

City of Los Angeles Vision Zero Action Plan

The stated goal of Vision Zero is to eliminate traffic-related deaths in Los Angeles by 2025 through a number of strategies, including modifying the design of streets to increase the safety of vulnerable road users. Extensive crash data analysis is conducted on an ongoing basis to prioritize intersections and corridors for implementation of projects throughout the City that will have the greatest effect on overall fatality reduction. Vision Zero Corridor Plans help implement Vision Zero. If a proposed project is within the High Injury Network (HIN), appropriate improvements will be determined in consultation with LADOT (Los Angeles Department of Transportation, 2020).

Complete Street Design Guide

The Complete Streets Design Guide provides design concepts and best practices to promote safe and accessible streets for all transportation users (i.e., pedestrians, bicyclists, transit riders, and motorists) within the City (City of Los Angeles, n.d.). The purpose of the guide is to supplement existing engineering practices and requirements in order to meet the goals of California's Complete Streets Act (AB 1358). The guide accompanies Mobility Plan 2035 and provides a framework for stakeholders to plan for, implement, and maintain complete streets.

Citywide Design Guidelines

The City of Los Angeles Citywide design guidelines adopted in October 2019 include sections relevant to development projects where improvements are proposed within the public realm. Specifically, Guidelines one through three provide building design strategies that support the pedestrian experience. The Guidelines provide best practices in designing that apply in three spatial categories of site planning, building design and public right of way. Guideline 1: Promote a safe, comfortable and accessible pedestrian experience for all. Guideline 2: Carefully incorporate vehicular access such that it does not degrade the pedestrian experience. Guideline 3: Design projects to actively engage with streets and public space and maintain human scale.

Los Angeles County Congestion Management Program

The Los Angeles County Congestion Management Program (CMP) was developed in response to California Proposition 111 (i.e., the Traffic Congestion Relief and Spending Limitation Act of 1990) and approved June 1990. The most recent CMP is the 2010 CMP. The CMP is intended to address the impact of local growth on the regional transportation system and address regional congestion by linking land use, transportation, and air quality decisions (Los Angeles County Metropolitan Transportation Authority, 2010).

Los Angeles River Revitalization Master Plan

The Los Angeles River Revitalization Master Plan (Master Plan) includes plans to construct a continuous river greenway, providing habitat restoration, open spaces, and pedestrian and bicycle paths along the Los Angeles River (City of Los Angeles, 2007). A few segments of the path have been constructed, with plans to extend the trail along the entire 32-mile corridor. The primary goals of the Master Plan are:

- Establishing design, land use, and development guidelines within the River zone;
- Improving water quality, water resources, and ecological functioning of the LA River;
- Providing public access to the LA River;
- Providing recreation, open space, and wildlife habitat;
- Preserving and enhancing flood control features of the LA River; and
- Increasing community awareness of the LA River.

To achieve these goals, the Master Plan includes visions for bikeways and pedestrian paths to the LA River, including the Los Angeles River Bike Path Gap Closure Project to create a continuous greenway adjacent to the LA River.

3.15.2 Environmental Setting

3.15.2.1 Existing Street System

The Project Study Area (i.e., Project Area and surrounding half-mile buffer) has a dense street network ranging from freeways to local city streets. Primary roadways in the Project Study Area are listed in **Table 3.15-1** (See **Figure 3.15-1**, Transportation Facilities). Descriptions of the roadway types in the Project Study Area, which are summarized in **Table 3.15-2**, are based on street classifications defined in Mobility Plan 2035 and the Complete Streets Design Guide (City of Los Angeles, 2016; City of Los Angeles, n.d.).

Table 3.15-1: Major Roadways

Roadway Name	Location	Description	Owner/Operator
First Street	East-west street to the north of the Project Area	Avenue II	City of Los Angeles, Department of Public Works
Third Street	East-west street to the north of the Project Area	Avenue II	City of Los Angeles, Department of Public Works
Fourth Street	East-west street that runs along the northern edge of the Project Area	Avenue II	City of Los Angeles, Department of Public Works

Roadway Name	Location	Description	Owner/Operator
Sixth Street/Whittier Boulevard	East-west street located in the northwest portion of the Project Area. The arterial is Sixth Street west of the LA River and Whittier Boulevard east of the LA River	Avenue II	City of Los Angeles, Department of Public Works
Seventh Street	East-west street that runs along the southern edge of the Project Area	Avenue II west of Boyle Avenue; collector street east of Boyle Avenue	City of Los Angeles, Department of Public Works
Alameda Street	North-South street to the west of the Project Area	Avenue I	City of Los Angeles, Department of Public Works
South Anderson Street	North-South street located in the eastern area of the Project Area	Local street	City of Los Angeles, Department of Public Works
Boyle Avenue	North-South street to the east of the Project Area	Avenue II; Modified streets north of Whittier Avenue	City of Los Angeles, Department of Public Works
South Central Avenue	North-South street to the west of the Project Area	Avenue I	City of Los Angeles, Department of Public Works
South Clarence Street	North-South street located in the eastern area of the Project Area	Local street	City of Los Angeles, Department of Public Works
Hewitt Street	North-South street to the west of the Project Area	Collector Street	City of Los Angeles, Department of Public Works
Jesse Street	East-west street located in the eastern area of the Project Area	Local street	City of Los Angeles, Department of Public Works
Mateo Street	North-South street located in the northwest portion of the Project Area	Avenue III	City of Los Angeles, Department of Public Works
Mesquit Street	North-South street located in the western area of the Project Area	Local street	City of Los Angeles, Department of Public Works
Meyer Street	North-south street located in the southeastern area of the Project Area	Local street	City of Los Angeles, Department of Public Works

Roadway Name	Location	Description	Owner/Operator
South Mission Road	North-south street centrally located in the Project Area, east of the Los Angeles River	Avenue III	City of Los Angeles, Department of Public Works
Santa Fe Avenue	North-South street located in the northwest portion of the Project Area	Avenue II	City of Los Angeles, Department of Public Works
Soto Street	North-south street located to the east of the Project Area	Avenue II	City of Los Angeles, Department of Public Works
State Route 60	East-west highway located the southeast of the Project Area	Freeway	California Department of Transportation
Interstate 5	North-south interstate that crosses over through eastern extend of the Project Area	Freeway	California Department of Transportation
Interstate 10	East-west interstate that crosses over the easternmost extend of the Project Area	Freeway	California Department of Transportation
U.S. Route 101	North-south highway that runs along the eastern edge of the Project Area	Freeway	California Department of Transportation

Source: (GPA Consulting, 2019; Kimley-Horn and Associates, Inc., 2019a; City of Los Angeles, 2016)

Table 3.15-2: Citywide Street Classification

Street Classification	Number of Lanes in Each Direction	Roadway Width (feet)	Right-of-Way Width (feet)	Sidewalk/Border Width (feet)	Target Operating Speed (mph)
Arterial Streets					
Avenue[1] I	1-2	70	100	15	35
Avenue II	1-2	56	86	15	30
Avenue III	1-2	46	72	15	25
Non-Arterial Streets					
Collector[2]	1	40	66	13	25
Local Street[3] (Standard)	1	36	60	12	20

[1]Avenues are arterial streets that pass through residential and commercial areas.
[2]Collectors are generally located in residential neighborhoods. They provide access to and from arterial streets for local traffic and are not intended for cut-through traffic.
[3]Local streets are intended to accommodate lower volumes of vehicle traffic and have parking on both sides of the street.
mph = miles per hour
Source: (City of Los Angeles, n.d.)

Figure 3.15-1: Transportation Facilities

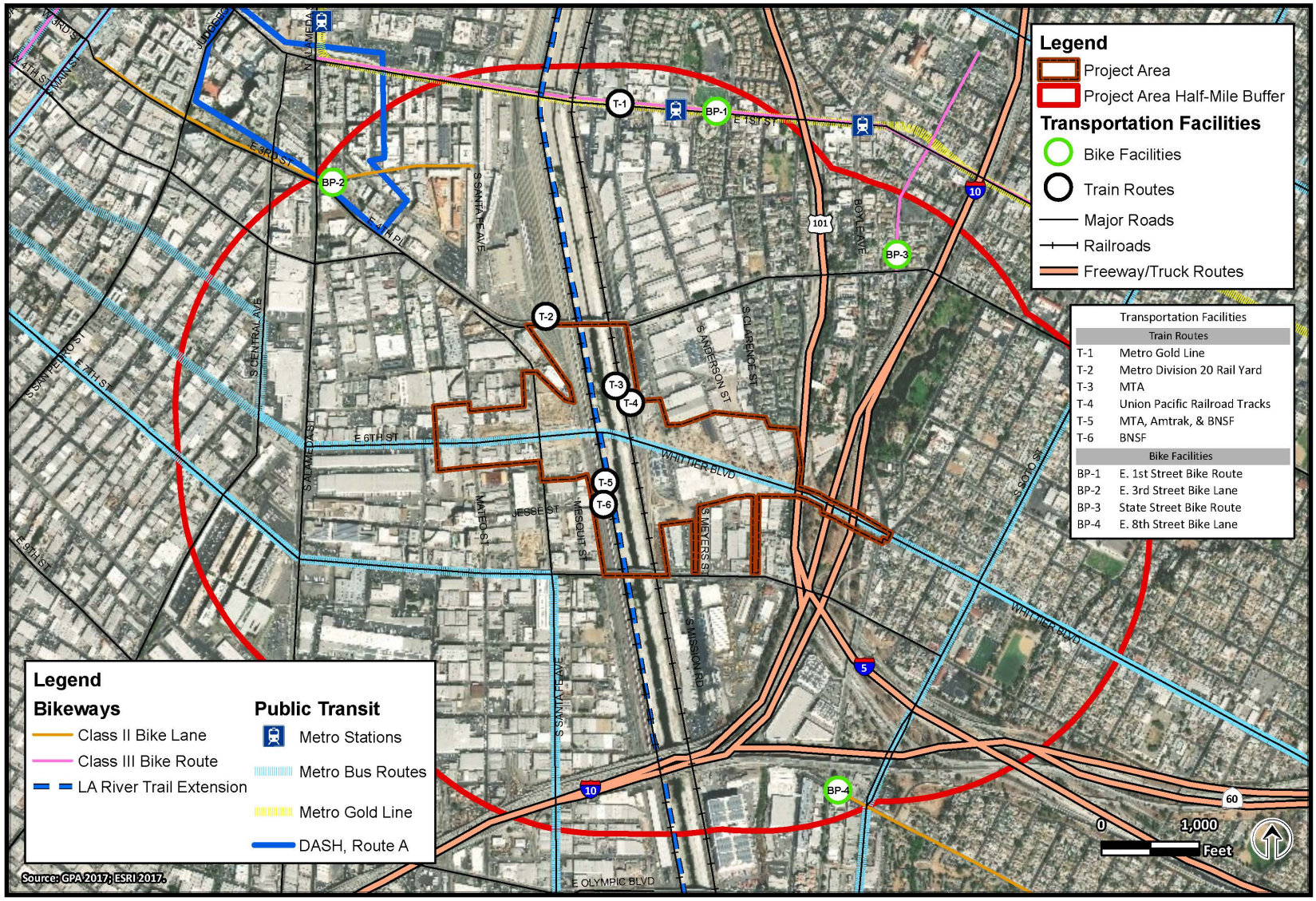

FIGURE 3.15-1: TRANSPORTATION FACILITIES
Sixth Street PARC Project

3.15.2.2 Existing Transit System and Train Routes

There are no bus stops or routes within the Project Site. The Project Area is served by LADOT Transit Services and Los Angeles County Metropolitan Transportation Authority (Metro) bus systems. Bus routes in the Project Study Area include DASH Downtown, operated by LADOT Transit Services, and Metro Routes 18, 30/330, 53, 60, 62, 251-252, 720, 751, and 760, which are described in more detail below (see **Figure 3.15-1**, Transportation Facilities):

- **DASH Downtown:** Operates several routes throughout Downtown LA. Route A travels from Little Tokyo to City West, providing services through the Arts District in proximity to the Project Area.
- **Metro Line 18:** Travels eastbound and westbound along Sixth Street through Downtown LA, providing services through Koreatown, Wilshire Center, Westlake, Boyle Heights, East Los Angeles, City of Commerce, and Montebello.
- **Metro Line 30/330:** Travels eastbound and westbound service from East Los Angeles to Beverly Hills, providing services through Boyle Heights, Downtown LA, Miracle Mile, Mid-City, and West Hollywood.
- **Metro Line 53:** Travels northbound and southbound from Downtown LA to Carson, providing services through Downtown LA, South Los Angeles, Willowbrook, and Compton.
- **Metro Line 60:** Travels northbound and southbound from Downtown LA to Downtown Long Beach, providing services through Downtown LA, Vernon, Huntington Park, South Gate, Lynwood, Compton, and Long Beach.
- **Metro Line 62:** Travels northbound and southbound from Downtown LA to Hawaiian Gardens, providing services through Downtown LA, Boyle Heights, Montebello, City of Commerce, Pico Rivera, Santa Fe Springs, Downey, Norwalk, Artesia, Cerritos, Lakewood, and Long Beach.
- **Metro Line 106:** Travels westbound and eastbound from Boyle Heights to Monterey Park, providing services through East LA.
- **Metro Line 251-252:** Travels northbound and southbound from Cypress Park to Lynwood, providing services through Montecito Heights, El Sereno, Lincoln Heights, Boyle Heights, Vernon, Huntington Park, and South Gate.
- **Metro Line 720:** A Metro Rapid line that travels eastbound and westbound from Commerce to Santa Monica, providing services through East Los Angeles, Boyle Heights, Downtown LA, Koreatown, Hancock Park, Park La Brea, Beverly Hills, Westwood, Century City, West LA, Brentwood, and Santa Monica.
- **Metro Line 751:** A Metro Rapid line that travels northbound and southbound from Cypress Park to Huntington Park, providing services through Lincoln Heights, Boyle Heights, Vernon, and South Gate.
- **Metro Line 760:** A Metro Rapid line that travels northbound and southbound from Downtown LA to Long Beach, providing services through Downtown LA, Vernon, Huntington Park, South Gate, Watts, and Lynwood.

Light rail tracks for the Metro Gold and Purple Lines, and tracks for the Metro Division 20 Rail Yard are within the Project Study Area. Union Pacific Railroad, Amtrak, and Burlington Northern Santa Fe Railway also have tracks that run along the east and west banks of the LA River in the Project Study Area. The train stations and routes located within the Project Study Area are listed in **Table 3.15-3** (see **Figure 3.15-1**, Transportation Facilities).

Table 3.15-3: Train Routes

Number	Property Name	Location	Description	Owner/Operator
T-1	Metro Gold Line (Pico/Aliso Station)	Along First Street in Los Angeles	Light rail serving Little Tokyo, Union Station, Chinatown, and Old Town Pasadena	Los Angeles Metropolitan Transportation Authority
T-2	Metro Division 20 Rail Yard	Along the west side of the Los Angeles River in Los Angeles	Tracks are used to transport rail lines to the Metro Division 20 Rail Yard for fleet maintenance	Los Angeles Metropolitan Transportation Authority
T-3	MTA Tracks	Along the east side of the Los Angeles River in Los Angeles	Tracks provide rail service in Downtown Los Angeles	Los Angeles Metropolitan Transportation Authority
T-4	Union Pacific Railroad Tracks	Along the east side of the Los Angeles River in Los Angeles	Tracks are used to ship a variety of goods, such as agricultural products, automotive, chemicals, coal, and industrial products.	Union Pacific Corporation
T-5	MTA, Amtrak, and Burlington Northern Santa Fe railway	Along the west side of the Los Angeles River in Los Angeles	Tracks are used by Metro for public transportation, Amtrak for private transportation, and Burlington Northern Santa Fe Railway for the shipment of various types of goods.	Los Angeles Metropolitan Transportation Authority, Amtrak, and Burlington Northern Santa Fe Corporation
T-6	Burlington Northern Santa Fe Tracks	Along the west side of the Los Angeles River in Los Angeles	Tracks are used to transport a variety of goods, such as clothes, food, agricultural products, automotive, industrial products, and coal.	Burlington Northern Santa Fe Corporation

Source: (GPA Consulting, 2019)

3.15.2.3 Existing Transit System and Train Routes

There are two existing Class II bike lanes and two existing Class III bike routes within the Project Study Area, but they do not connect to the Project Area. **Table 3.15-4** describes each of the bike lanes and routes (see **Figure 3.15-1**, Transportation Facilities). Within the Project Area, there are sidewalks lining the major roadways and local city streets listed in **Table 3.15-1**. Crosswalks are provided at signalized intersections.

Table 3.15-4: Bike Facilities

Location	Property Name	Address	Description	Owner/Operator
B-1	City Bike Route	Along First Street in Los Angeles	Class III	LADOT Transit Services
B-2	City Bike Lane	Along Third Street in Los Angeles	Class II	LADOT Transit Services
B-3	City Bike Route	Along South State Street in Los Angeles	Class III	LADOT Transit Services
B-4	City Bike Lane	Along East Eighth Street in Los Angeles	Class II	LADOT Transit Services

Source: (GPA Consulting, 2019)

The Los Angeles River Bike Path Gap Closure Project, identified in **Table 1-1** of this EIR, is a planned extension of existing segments of the 32-mile greenway (bicycle and pedestrian path) proposed in the Los Angeles River Revitalization Master Plan that is currently in the environmental review process (Los Angeles County Metropolitan Transportation Authority, 2019). If approved, construction is anticipated to begin in 2023. In addition, there are three proposed Active Transportation (ATP) projects that include improvements to the safety and accessibility of bicycle and/or pedestrian facilities in the vicinity of the proposed Project. The ATP projects, which are currently in design, include ATP-1: Sixth Street Viaduct Replacement Project Bicycle and Pedestrian Facilities, ATP-2: Boyle Heights Pedestrian Linkages, and ATP-3: Downtown LA Arts District Pedestrian and Cyclist Safety Project (see **Table 1-1**).

3.15.2.4 Existing Traffic Congestion and Levels of Service

Methodology

The *Traffic Impact Analysis* defines existing conditions in vicinity to Project Site (i.e., the proposed park footprint) (Kimley-Horn and Associates, Inc., 2019a). The 12 study intersections, described in **Table 3.15-5**, were defined in consultation with the LADOT (see **Figure 3.15-2,** Traffic Study Intersections).

Table 3.15-5: Study Area Intersections

Intersection Number	Northbound/ Southbound	Eastbound/ Westbound	Jurisdiction	Signalized	Signal System
1	Alameda Street	Sixth Street	City of Los Angeles	Yes	ATSAC[1]
2	Mateo Street	Sixth Street	City of Los Angeles	Yes	ATSAC
3	Alameda Street	Seventh Street	City of Los Angeles	Yes	ATSAC
4	Mateo Street	Seventh Street	City of Los Angeles	Yes	ATSAC
5	Santa Fe Avenue	Seventh Street	City of Los Angeles	Yes	ATSAC
6	Boyle Avenue	Seventh Street	City of Los Angeles	Yes	ATSAC
7	Boyle Avenue	Whittier Boulevard	City of Los Angeles	Yes	ATSAC
8	Alameda Street	Fourth Street	City of Los Angeles	Yes	ATSAC
9	Hewitt Street	Fourth Street	City of Los Angeles	No	N/A
10	Clarence Street	Fourth Street	City of Los Angeles	No	N/A
11	Santa Fe Avenue	Mateo Street	City of Los Angeles	No	N/A
12	Santa Fe Avenue	Third Street	City of Los Angeles	No	N/A

ATSAC = Automated Traffic Surveillance and Control
1. The ATSAC system allows for monitoring of intersection traffic conditions to adjust the traffic signal timing in response to changing traffic conditions. Funding for the adaptive traffic control system (ATCS) has been obtained for the project intersections and is expected to be installed prior to the build out year. The ATCS continuously detects vehicular traffic volumes to determine "optimal" signal timings based on the traffic volumes collected.
Source: (Kimley-Horn and Associates, Inc., 2019a)

Figure 3.15-2: Traffic Study Intersections

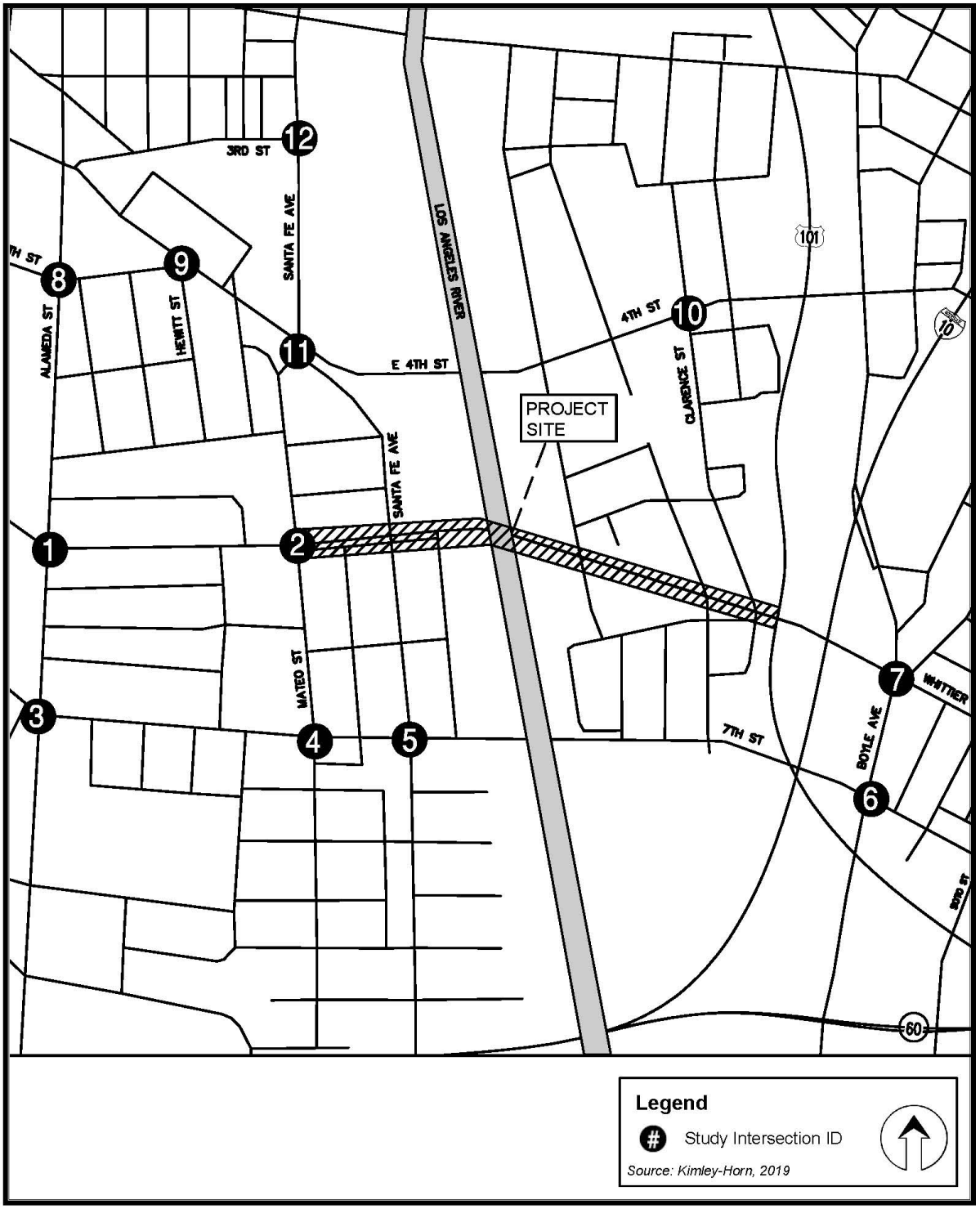

ENGINEERING
CITY OF LOS ANGELES

FIGURE 3.15-2. TRAFFIC STUDY INTERSECTIONS
Sixth Street PARC Project

Peak hour traffic volumes and existing operating conditions were determined at each study intersection, based on the Transportation Research Board's Critical Movement Analysis (CMA), Circular 212 Planning Method guidelines (Institute of Transportation Engineers, 1989). The CMA method quantifies traffic operating conditions at a signalized study intersection based on the volume to capacity (V/C) ratio and the associated LOS (see **Table 3.15-6**). The V/C ratio varies from 0 to 1.000 and measures the operating capacity of a roadway or intersection based on the number of vehicles passing through divided by the theoretical number of vehicles that could pass through. The V/C ratio corresponds to LOS ranging from "A" to "F". LOS describes the quality of traffic flow, which is based on travel speed, travel time, and flow interruptions.

Table 3.15-6: Intersection LOS Definitions

V/C Value (Signalized Intersections)[1]	Related LOS Rating
0 to 0.600	A – Excellent free flow conditions
0.601 to 0.700	B – Unconstrained flow
0.701 to 0.800	C – Somewhat constrained flow, maneuverability is reduced
0.801 to 0.900	D – Constrained flow, little maneuverability
0.901 to 1.000	E – Significant vehicle queuing; not all vehicles clear intersection in one cycle
Greater than 1.000	F – Excessive delay; vehicles require more than one signal cycle to clear the intersection

1. Based upon Circular 212 methodology for signalized intersections
Source: (Kimley-Horn and Associates, Inc., 2019a)

The CMA method only applies to signalized intersections. Unsignalized intersections were not included in the impact analysis. However, in accordance with LADOT procedures, unsignalized intersections were evaluated based on the Highway Capacity Manual (HCM) method to determine the need for the installation of a traffic signal or other traffic control device (Transportation Research Board, 2010).

In accordance with LADOT analysis procedures, the V/C ratio calculated using the CMA methodology is reduced by 0.07 for all the project intersections, since they are all included in the Automated Traffic Surveillance and Control (ATSAC) system. The ATSAC system allows for monitoring of intersection traffic conditions to adjust the traffic signal timing in response to changing traffic conditions. An additional reduction of 0.03 is applied to the V/C ratio to account for improved operation due to the Adaptive Traffic Control System (ATCS), and increased efficiency from the ATSAC/ATCS system that is not captured in the CMA methodology. Funding for the ATCS has been obtained for the project intersections and the ATCS is expected to be installed prior to the build out year. The ATCS continuously detects vehicular traffic volumes to determine "optimal" signal timings based on the traffic volumes collected.

Traffic Analysis

Weekday traffic counts were conducted during the morning peak hours (7:00 to 9:00 a.m.) and evening peak hours (4:00 to 6:00 p.m.). Because traffic counts were collected in 2017, a conservative growth rate

of one percent per year was applied to calculate traffic projections for existing conditions (i.e., 2018). The year 2018 was used instead of 2017 to provide a conservative estimate for the base year. As requested by LADOT, existing conditions were determined based on the assumption that the Viaduct was in operation. Because the Viaduct was demolished in February 2016, the LOS analysis includes traffic data taken from 2014 and 2015 traffic studies to account for the Viaduct being in operation. Existing conditions are summarized in **Table 3.15-7**.

Table 3.15-7: Existing (2018) Conditions for Study Intersections

Signalized Intersections		Existing (2018) LOS Analysis Results			
		A.M. Peak Hour		P.M. Peak Hour	
		V/C Ratio	LOS	V/C Ratio	LOS
1	Alameda Street at Sixth Street	0.613	B	0.656	B
2	Mateo Street at Sixth Street	0.460	A	0.759	C
3	Alameda Street at Seventh Street	0.604	B	0.639	B
4	Mateo Street at Seventh Street	0.331	A	0.420	A
5	Santa Fe Avenue at Seventh Street	0.468	A	0.644	B
6	Boyle Avenue at Seventh Street	0.493	A	0.540	A
7	Boyle Avenue at Whittier Boulevard	0.797	C	0.824	D
8	Alameda Street at Fourth Street	0.321	A	0.574	A
Unsignalized Intersections[1]		**Delay (Seconds)**	**LOS**	**Delay (Seconds)**	**LOS**
9	Hewitt Street at Fourth Street	8.1	A	229.5	F
10	Clarence Street at Fourth Street	23.1	C	7.9	A
11	Santa Fe Avenue at Mateo Street	7.6	A	9.7	A
12	Santa Fe Avenue at Third Street	35.2	E	59.9	F

1. Highway Capacity Manual (HCM) 2000 method was used because HCM 2010 does not support this intersection lane configuration
Source: Kimley-Horn and Associates, Inc., 2019a

3.15.2.5 Existing Parking

Existing public parking in the Project Area consists of on-road street parking along many of the major roadways identified in **Table 3.15-1**. Public parking facilities within two miles of the Project Site are included in **Table 3.15-8** and **Figure 3.15-3.**

Table 3.15-8: Public Parking Facilities

Location	Property Name	Address
1	Standard Parking	1400 S Grand Ave.
2	City Center Parking	1317 S Grand Ave.
3	Joe's Auto Parks	1000 W Eighth St.
4	LAZ Parking	1150 S Grand Ave.
5	ABM	1150 S Olive St.
6	Standard Parking	801 S Figueroa St.
7	LAZ Parking	725 Grand Ave.
8	Joe's Auto Parks	808 S Olive St.
9	The Parking Spot	1112 Santee St.
10	SP+ Parking	611 W Sixth St.
11	Standard Parking	241 S Figueroa St.
12	Joe's Auto Parks	802 S Los Angeles St.
13	Joe's Auto Parks	649 Spring St.
14	Paragon Parking	710 S Spring St.
15	Joe's Auto Parks	759 S Maple Ave.
16	Joe's Auto Parks	530 S Spring St.
17	Joe's Auto Parks	212 E Seventh St.
18	City Center Parking	434 S Broadway
19	Los Angeles Garage Associates	545 S Main St.
20	SP+ Parking	208 E Sixth St.
21	Joe's Auto Parks	601 E Eighth St.
22	Paragon Parking	526 S Los Angeles St.
23	Perfect Parking, Inc.	1000 E Olympic Blvd.
24	Los Angeles Times Garage	213 S Spring St.
25	Joe's Auto Parks	334 S Main St.

Location	Property Name	Address
26	Joe's Auto Parks	243 S Spring St.
27	Joe's Auto Parks	246 S Spring St.
28	Joe's Auto Park	330 S Main St.
29	Joe's Auto Parks	220 S Spring St.
30	United Valet Parking, Inc.	216 E Fourth St.
31	Joe's Auto Parks	253 S Main St.
32	Joe's Auto Parks	231 S Main St.
33	Corner Lot (Perfect Parking, Inc.)	1251 E Olympic Blvd.
34	Toy District Garage (S.C. Prestige Parking, Inc.)	Boyd St. and Wall St.
35	Little Tokyo Library Garage/Cathedral Lot 755	237S N Los Angeles St.
36	S.C. Prestige Parking, Inc.	326 Boyd St.
37	AVA Little Tokyo (Ace Parking Management, Inc.)	S Los Angeles St. and E Second St.
38	DoubleTree by Hilton Garage	120 S Los Angeles St.
39	Weller Court (Hodes Parking, Inc.)	S Los Angeles St. and E Second St.
40	Little Tokyo Associates (SP Plus Corporation)	S San Pedro and E Third St.
41	Wakaba LA Leasing & Retail (Joe's Auto Parks)	S San Pedro and E Second St.
42	S.C. Prestige Parking, Inc.	420 Boyd St.
43	Joe's Auto Parks	350 E Second St.
44	Joe's Auto Parks	319 E Second St.
45	Japanese Village Plaza Garage	335 E Second St.
46	Parking Company of America	171 Arcadia St.
47	City of Los Angeles Lot 2	101 Judge John Aiso St.
48	Unified Parking Service, Inc.	315 E First St.
49	Joe's Auto Parks	360 E Second St.
50	El Pueblo Historical Monument - Lot 1	171 Arcadia St.
51	City of Los Angeles Lot 2	352 E Temple St.
52	Perfect Parking, Inc.	300 S Central Ave.
53	Honda Plaza Garage (Modern Parking, Inc.)	S Central Ave. and E Second St.

Location	Property Name	Address
54	El Pueblo Historical Monument - Lot 2	W Cesar Estrada Chavez Ave. and N Main St.
55	Advanced Parking Systems	401 E Second St.
56	El Pueblo Historical Monument - Lot 4	426 N Los Angeles St.
57	Best Auto Park (Little Tokyo Galleria)	333 Alameda St.
58	Perfect Parking, Inc.	360 S Alameda St.
59	El Pueblo Historical Monument - Lot 3	W Cesar Estrada Chavez Ave. and N Alameda St.
60	Perfect Parking, Inc.	713 E Third St.
61	El Pueblo Historical Monument - Lot 5	711 Alameda St.
62	Joe's Auto Parks	414 E Commercial St.
63	SP Plus Corporation	428 E Temple St.
64	SP Plus Corporation	428 E Temple St.
65	Park Little Tokyo	129 S Hewitt St.
66	Japanese Catholic Center	222 S Hewitt St.
67	Perfect Parking, Inc.	830 Traction Ave.
68	Fourth & Traction Garage	963E E Fourth St.
69	Sixth St and Factory Pl	Sixth St. and Factory Pl.
70	Palmetto Lot	1250 Palmetto St.
71	Union Station MTA Garage - Gateway Center	1 Gateway Plaza
72	Jesse St and Mateo St	660 Mateo St.
73	Advanced Parking Systems	740 E Temple St.
74	Perfect Parking	905S Santa Fe Ave.
75	Boyle Heights City Hall	2127E E Second St.
76	LADOT Facility No. 713	247N S Chicago St.
77	LADOT Facility No 682	318N N Breed St.
88	Metro Gold Line - Indiana Station Park & Ride	210 S Indiana St.

Source: (GPA Consulting, 2019)

This page intentionally left blank.

Figure 3.15-3: Public Parking Facilities

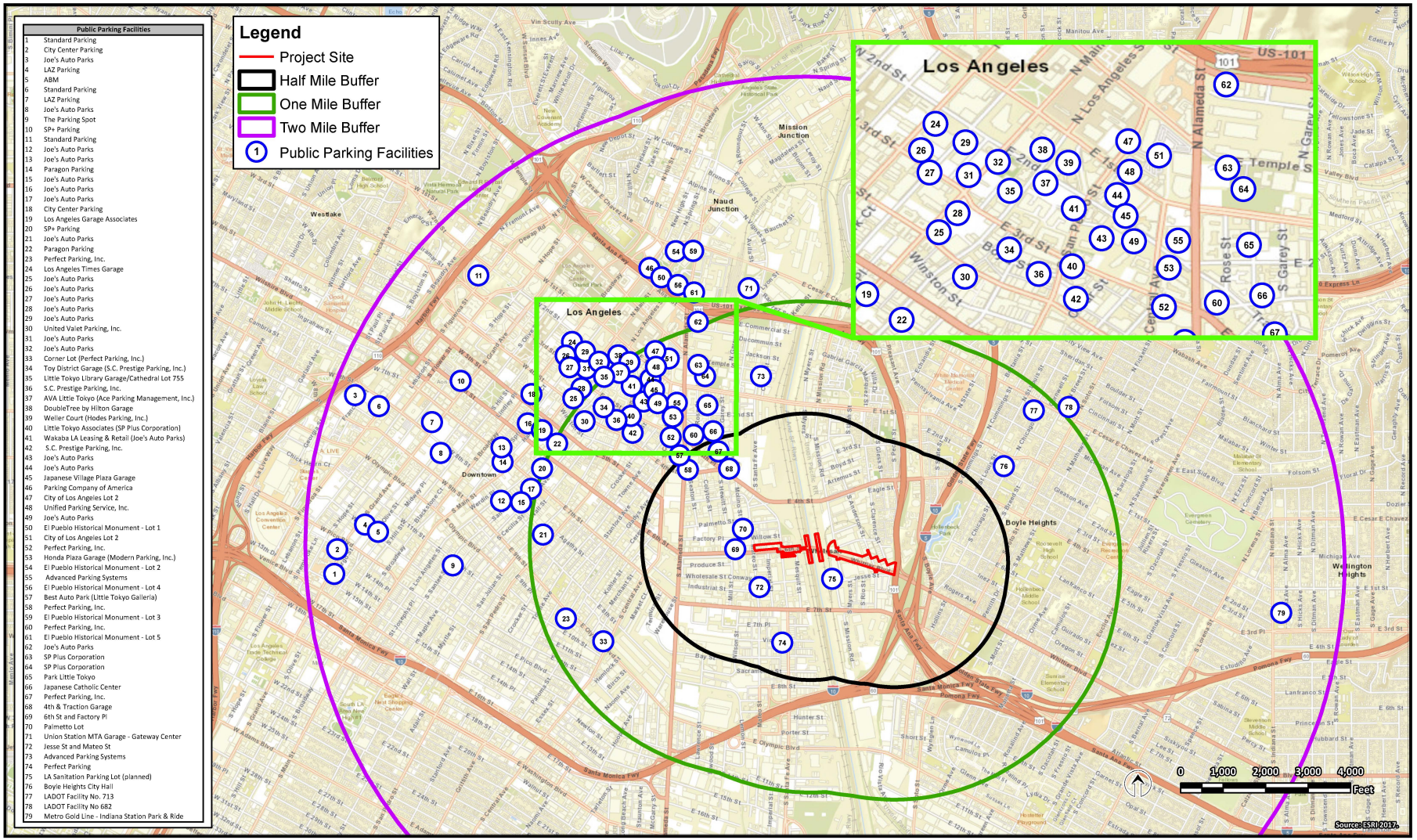

ENGINEERING
CITY OF LOS ANGELES

Figure 3.15-3: PUBLIC PARKING FACILITIES
Sixth Street PARC Project

This page intentionally left blank.

3.15.3 Environmental Impact Analysis

3.15.3.1 Methodology and Assumptions

Vehicle Miles Traveled

Pursuant to the requirements of SB 743 and LADOT's Transportation Assessment Guidelines (July 2020), the City implemented a VMT approach to analyzing traffic impacts. According to the screening criteria outlined in the LADOT's TAG, a VMT analysis is warranted if a development project is expected to generate a net increase of 250 or more daily vehicle trips (Los Angeles Department of Transportation, 2020). The proposed Project is expected to generate 177 trips; however, once the existing land use credit is applied, the proposed Project would result in 159 less daily trips than the existing industrial land use (see Section 3.15.3.5 for additional information). Therefore, this project's recreational land use and low trip generation do not meet the land use designations or trip generation thresholds required for a VMT analysis. In addition, the proposed Project is primarily expected to serve the recreational needs of the local surrounding communities rather than be a regional generator of traffic. Regarding special events, which may occasionally have a regional draw a few times a year (see **Table 2-1** in Chapter 2 of this EIR for anticipated size and frequency of events), large event permittees would be required to develop traffic control plans that address parking and circulation to minimize congestion.

Trip Generation and Trip Distribution

Weekday daily a.m. and p.m. peak hour trips were estimated for the proposed Project using trip generation rates from the *ITE Trip Generation, 9th Edition*. When estimating trip generation, an existing land use credit was applied because the proposed Project would replace approximately 223,900 square feet of heavy industrial land use. Trip generation was submitted to and approved by the LADOT as part of the MOU (Los Angeles Department of Transportation, 2018).

The proposed Project Site would host events with estimated event capacities between 25 people and 5,000 people. These events were analyzed separately from the trip generation estimates because they would not represent the number of trips for a typical day. Smaller events such as recreational games and farmer's markets are estimated to occur approximately once or twice a week. Larger events such as concerts, festivals, and soccer tournaments with estimated capacities greater than 1,000 people would each occur approximately one to two times per year. Therefore, the study analyzed a 2,000-person event during a typical weekday p.m. peak hour to represent a worst-case conservative scenario that would encompass a single, large event that could occur infrequently as well as multiple, simultaneous small events that could occur weekly.

For weekday evening events, it was assumed that attendees would arrive during the p.m. peak period. Weekday evening events would start around 7 p.m. and 25 percent of attendees would arrive by 6 p.m. An average vehicle occupancy of two persons per vehicle was assumed for a conservative estimate. Trip generation for special events were submitted to and approved by the LADOT under the MOU (Kimley-Horn and Associates, Inc., 2019a).

Incoming and outgoing project trip distribution were projected for the 12 study intersections. These estimates were used to calculate the potential trip distribution for weekday evening events. Trip

distribution was submitted to and approved by the LADOT as part of the MOU (Kimley-Horn and Associates, Inc., 2019a).

Parking

The ITE *Parking Generation, 4th Edition* is an informational report that has been adopted in many areas as the standard for parking requirements (Institute of Transportation Engineers, 2010). *Parking Generation* specifies the off-street parking requirements for a variety of land uses, which include land uses such as "Soccer Complex," "Coffee Shop," and "City Park." According to the *Parking Demand Analysis*, parking demand for the proposed Project for a typical weekday and weekend were estimated based on the parking rates in *Parking Generation* (Kimley-Horn and Associates, Inc., 2019b).

Three parking analysis scenarios were considered. Scenario 1 classified the entire project area under the "City Park" land use designation. The total parking demand for Scenario 1 was calculated based on the total acreage of the Project Site (approximately 13 acres). Scenario 2 calculated the parking demand for the project using the "Soccer Complex" land description based on the number of soccer fields (two fields). The "City Park" land use is more appropriate based on the project description; however, the "Soccer Complex" represents a conservative estimate for daily parking demand at the Project Site because of the higher parking demand rate. Scenario 3 calculated the parking demand when the park hosts a special event.

According to Section 12.21A.4 of the City of Los Angeles Municipal Code (LAMC), parking spaces located within 1,500 feet of a fixed rail station, bus station, or other similar transit facility, may replace up to 30 percent of the required automobile parking spaces with bicycle spaces at a ratio of one parking space for every four bicycle spaces provided. The following existing Metro bus stops are within 1,500 feet of the proposed project site: Sixth Street/Alameda Street, Seventh Street/Mateo Street, and Seventh Street/South Santa Fe Street, and Seventh Street/South Anderson Street. This parking study replaced 30 percent of the required parking spaces with bicycle parking spaces.

Level of Service

The *Traffic Impact Analysis* included the following scenarios to analyze traffic conditions (Kimley-Horn and Associates, Inc., 2019a):

1. Existing (2018) With Project Conditions
2. Existing (2018) With Project Event Conditions
3. Cumulative (2023) Without Project Conditions
4. Cumulative (2023) With Project Conditions
5. Cumulative (2023) With Project Event Conditions

A Memorandum of Understanding (MOU) was developed between the City and LADOT, which outlined all the study assumptions, growth rate, and project trip generation and distribution (Los Angeles Department of Transportation, 2018). The MOU is included as an appendix to the *Traffic Impact Analysis* (Kimley-Horn and Associates, Inc., 2019a). As described in Section 3.15.2.2, traffic conditions were analyzed at 12 study intersections (see **Table 3.15-5** and **Figure 3.15-2**). Peak hour traffic volumes and existing operating conditions were determined at each study intersection, based on the Transportation

Research Board's CMA, Circular 212 Planning Method guidelines. In accordance with the CMA method, traffic operating conditions at a signalized study intersection were quantified based on the V/C ratio and associated LOS (see Section 3.15.2.2 for additional information).

Traffic count data was collected in March 2017. As requested by LADOT, Existing (2018) Conditions were estimated with the assumption that the Viaduct was in operation. Because the Viaduct was demolished in February 2016, traffic count data from 2014 to 2015 traffic studies was utilized to supplement counts collected in 2017. To be conservative, a growth rate of one percent was applied to count data collected in 2014 and 2017 to obtain 2018 traffic volumes for Existing (2018) Conditions.

Existing (2018) With Project Conditions adds the estimated proposed Project traffic to the existing base conditions, which were used to evaluate the net change in traffic conditions. Existing (2018) With Project Event Conditions add the estimated event traffic to the existing base conditions, which were used to evaluate the net change in traffic conditions and to identify potential traffic impacts associated with events hosted at the proposed Project.

Per the Los Angeles County Congestion Management Program, traffic volumes in Los Angeles are forecast to increase by a growth factor of 1.011 from 2010 to 2023. Therefore, a growth factor of 1.011 was applied to 2018 volumes in order to calculate potential traffic projections for Cumulative (2023) scenarios, which was approved by LADOT (Los Angeles Department of Transportation, 2018).

3.15.3.2 Screening Analysis

Several impacts and corresponding thresholds of significance in the following section were eliminated from further analysis in this EIR. Topics were eliminated if the Initial Study for the proposed Project concluded there would be "No Impact," or if impacts were identified to be "Less Than Significant… and will not be discussed further in the EIR." Therefore, only the topics described in the section below were determined to require further analysis in this EIR. A copy of the Initial Study, which contains the eliminated topics, is provided in **Appendix A**.

3.15.3.3 Thresholds of Significance

According to Appendix G of the CEQA Guidelines, the *L.A. CEQA Thresholds Guide*, and the City of Los Angeles Transportation Assessment Guidelines, the proposed Project would have a significant impact on Transportation if it would:

T-1: Conflict with a program, plan, ordinance or policy addressing the circulation system, including transit, roadway, bicycle and pedestrian facilities.

T-2.1: For a land use project, would the project conflict or be inconsistent with CEQA Guidelines section 15064.3, subdivision (b)(1)? Would the project cause substantial vehicle miles traveled?

T-3: Substantially increase hazards due to a geometric design feature or incompatible use.

T-4 Conflict with an applicable congestion management program, including, but not limited to, level-of-service standards and travel demand measures or other standards established by the county congestion management agency for designated roads or highways.

L.4 Neighborhood Intrusion Impacts. A project would normally have a significant neighborhood intrusion impact if project traffic increases the average daily traffic (ADT) volume on a local residential street in an amount equal to or greater than the following:

- ADT increase ≥ 16% if final ADT* <1,000
- ADT increase >12% if final ADT* >1,000 and <2,000
- ADT increase >10% if final ADT* >2,000 and <3,000
- ADT increase >8% if final ADT* >3,000

∗ "Final ADT" is defined as total projected future daily volume including project, ambient, and related project growth.

The significance of neighborhood intrusion impacts related to vehicle delay shall be determined on a case-by-case basis.

L.7 Parking. A project would normally have a significant impact on parking if the project provides less parking than needed as determined through an analysis of demand from the project.

*L.8 In-Street Construction Impacts***.** The determination of significance shall be made on a case-by-case basis, considering the following factors:

- Temporary Traffic Impacts
  - The length of time of temporary street closures or closures of two or more traffic lanes.
  - The classification of the street (major arterial, state highway) affected.
  - The existing traffic levels and level of service (LOS) on the affected street segments and intersections.
  - Whether the affected street directly leads to a freeway on- or off-ramp or other state highway.
  - Potential safety issues involved with street or lane closures.
  - The presence of emergency services (fire, hospital, etc.) located nearby that regularly use the affected street.
- Temporary Loss of Access
  - The length of time of any loss of vehicular or pedestrian access to a parcel fronting the construction area.
  - The availability of alternative vehicular or pedestrian access within ¼ mile of the lost access.
  - The type of land uses affected, and related safety, convenience, and/or economic issues.
- Temporary Loss of Bus Stops or Rerouting of Bus Lines
  - The length of time that an existing bus stop would be unavailable or that existing service would be interrupted;
  - The availability of a nearby location (within 0.25 mile) to which the bus stop or route can be temporarily relocated;

  - The existence of other bus stops or routes with similar routes/destinations within a 0.25 mile radius of the affected stops or routes; and
  - Whether the interruption would occur on a weekday, weekend or holiday, and whether the existing bus route typically provides service that/those day(s).

- Temporary Loss of On-Street Parking
  - The current utilization of existing on-street parking;
  - The availability of alternative parking locations or public transit options (e.g. bus, train) within 0.25 mile of the project site; and
  - The length of time that existing parking spaces would be unavailable.

3.15.3.4 Construction Impacts

T-1: Conflict with a program, plan, ordinance or policy addressing the circulation system, including transit, roadway, bicycle and pedestrian facilities.

Construction vehicles or equipment along the roadways surrounding the construction site may result in temporary impacts to the circulation system. Traffic volumes along roadways in the Project Area typically average several thousand vehicle trips per day. Based on the *Traffic Impact Analysis* prepared for the proposed Project, construction activities would generate up to approximately 80 trips per day (Kimley-Horn and Associates, Inc., 2019a). However, construction-generated traffic would be dispersed over multiple roadways. In addition, construction vehicles and equipment on the roadways surrounding the construction site would only be present for the short-term and would be removed following construction. Construction related trip would also be scheduled with increased frequency during off-peak hours.

Adopted policies, plans, and programs supporting alternative transportation include AB 1358 California Complete Streets Act, SB 743, Los Angeles Mobility Plan 2035, LAMC the Complete Streets Design Guide (see Section 3.15.1 for additional information), Vision Zero Action Plan, Citywide Design Guidelines, and the local community plans for Downtown LA and Boyle Heights. During proposed construction activities, temporary detours would be provided for any affected pedestrian and bicycle facilities. Because there are no bus stops or routes within the Project Site, public transportation facilities would not be affected. Therefore, construction activities would not conflict with adopted policies, plans, or programs supporting alternative transportation, and impacts would be less than significant.

T-4: Conflict with an applicable congestion management program, including, but not limited to, level-of-service standards and travel demand measures or other standards established by the county congestion management agency for designated roads or highways.

During proposed construction activities, personnel, materials, and machinery would utilize the local street and freeway system to access the Project Site. Construction vehicles or equipment along the roadways surrounding the construction site may result in temporary impacts to the circulation system (e.g., temporary road closures, slow-moving construction vehicles, and temporarily obstructed sidewalks and roadways).

Temporary road closures would be required for the proposed improvements to two arterial streets (Santa Fe Avenue and Mission Road) and two local streets (Anderson Street and Clarence Street). Each

street closure is anticipated to last approximately two to four weeks. Alternate routes and detours for pedestrians, bicyclists, and vehicles would be provided. Streets would re-open following construction, and the proposed Project would not result in any permanent closures.

Traffic volumes along roadways in the Project Area typically average several thousand vehicle trips per day. As described in **Section 3.15.2.2**, there are known capacity issues at a few of the signalized and unsignalized study intersections: Boyle Avenue/Whittier Boulevard, Hewitt Street/Fourth Street, and Santa Fe Avenue/Third Street operate at LOS D or worse during the p.m. peak hour.

The CMP TIA Guidelines indicate that if a proposed project would add 50 or more peak hour trips (during the peak hour of adjacent street traffic) to a CMP arterial intersection, then a CMP arterial intersection analysis must be conducted. Alameda Street is a CMP arterial, with a monitoring station at Washington Street south of the Project Site.

Based on the *Traffic Impact Analysis* prepared for the proposed Project, construction activities would generate up to approximately 80 trips per day (Kimley-Horn and Associates, Inc., 2019a). However, construction-generated traffic would be dispersed over multiple roadways and the vehicles trips would be distributed throughout the day (i.e., not all 80 trips would occur during the a.m. or p.m. peak hours). Construction vehicles and equipment on the roadways surrounding the construction site would only be present for the short-term and would be removed following construction. In addition, construction-related trips would be scheduled with increased frequency during off-peak hours to minimize delays and obstructions to commuters. Therefore, construction-related trips are not anticipated to generate new capacity issues or contribute to existing capacity issues.

The number of construction workers traveling to the Project Site would vary throughout the construction process. Because proposed construction activities would take place between 7:00 a.m. and 9:00 p.m. on a typical weekday, construction worker traffic would likely occur during the morning and afternoon peak commute hours. However, the number of construction workers traveling to the Project Site would be considered negligible, when compared to the existing traffic volumes. As discussed in Section 3.2 (Air Quality), the City would offer ride-share and transit incentives for construction workers to consolidate the number of daily trips taken by construction workers.

Proposed construction activities would generate up to approximately 80 trips per day. However, impacts associated with construction-related trips (i.e., trucks and construction employees) on the street system are anticipated to be negligible because these trips would be scheduled with increased frequency during off-peak hours. In addition, construction-generated traffic would be dispersed over multiple roadways and distributed throughout the day (i.e., not all 80 trips would occur during the a.m. or p.m. peak hours). Construction vehicles and equipment on the roadways surrounding the construction site would only be present for the short-term and would be removed following construction. Therefore, the proposed Project would not conflict with an applicable congestion management program, including, but not limited to LOS standards and travel demand measures, or other standards established by the county congestion management agency for designated roads or highways. Impacts would be less than significant and mitigation would not be required.

Because construction-related trips on the street system would be negligible, the proposed Project would not exceed the capacity of the existing circulation system, based on an applicable measure of

effectiveness taking into account all relevant components of the circulation system. Therefore, impacts would be less than significant and mitigation would not be required.

Temporary Traffic Impacts

Construction staging would occur entirely within the Project Site. However, construction of the proposed Project would require the movement of construction equipment and vehicles to and from the construction site, which may temporarily reduce pedestrian, bicycle, and vehicle access throughout the Project Area. Construction-related trips would be scheduled with increased frequency during off-peak hours to minimize traffic impacts. Construction vehicles and equipment would be removed following construction, and pedestrian, bicycle, and vehicle access would be restored.

Temporary road and sidewalk closures would be required for the proposed improvements to two arterial streets (Santa Fe Avenue and Mission Road) and two local streets (Anderson Street and Clarence Street). Within the Project Area, none of these streets directly leads to freeway on- or off-ramps or other state highways. Each street closure is anticipated to last approximately two to four weeks. Alternate routes and detours for pedestrians, bicyclists, and vehicles would be provided (**BMP-TRANS-1**). Streets would re-open following construction, and the proposed Project would not result in any permanent closures.

The nearest emergency services, including police and fire stations, are over 0.5 mile from the Project Site, and the nearest hospitals are over 0.3 mile from the Project Site. The nearest Los Angeles Fire Department (LAFD) responders and Los Angeles Police Department (LAPD) stations would be notified to coordinate emergency response routing during construction, and detour routes would be provided for all street closures. As discussed above, construction-related trips would be scheduled with increased frequency during off-peak hours to minimize congestion that could delay emergency vehicles. Therefore, emergency services would not be substantially affected by construction of the proposed Project.

Construction could pose hazards to pedestrians, bicyclists, and motorists traveling around the construction site, such as falling objects, the movement of construction vehicles, and unstable ground surfaces. A construction staging plan would be developed to reduce impacts related to noise, dust, traffic, and other health hazards **(BMP-TRANS-2)**. The construction site BMPs (e.g., fencing, signs, and detours) would be implemented to minimize hazards and prevent safety issues on the roadways and sidewalks surrounding the construction site.

Table 3.15-5 summarizes existing LOS for the 12 study intersections. As discussed above, traffic impacts from construction-related trips would be negligible. Trips would be scheduled with increased frequency during off-peak hours, and construction-related trips are not expected to substantially impact existing LOS. Therefore, impacts would be less than significant with implementation of mitigation measures.

Temporary Loss of Access

The Project Site is primarily surrounded by industrial properties. Because many of the properties in the vicinity of the Project Site were vacated as part of the Viaduct Replacement Project, the proposed Project would not result in a loss of access to any additional property. If proposed construction activities would result in temporary or permanent loss of access to existing parcels, then temporary access and/or construction of new access points would be provided. As discussed above, detour routes would be provided to maintain access throughout the Project Area during any road closures. Therefore, impacts would be less than significant.

Temporary Loss of Bus Stops or Rerouting of Bus Lines

There are no bus stops or routes on streets where road closures would occur, and bus stops and routes in proximity to the proposed Project would continue to be available. The proposed Project would not result in the temporary or permanent closure of bus stops, the interruption of bus services, or the relocation of bus routes. Therefore, impacts would be less than significant, and mitigation would not be required.

Temporary Loss of On-Street Parking

The Project Area is currently a construction site for the Viaduct Replacement Project, with available street parking, some of which has been temporarily removed to construct the falsework for the Viaduct. On-street parking spaces along the streets adjacent to the Project Site would be impacted during construction of the proposed Project as summarized below:

- **Anderson Street:** Existing street parking is available along both sides of Anderson Street adjacent to the Project Site, but it is limited due to existing driveway curb cuts and fire hydrants. As part of the proposed Project, most of the street parking along the western side of the roadway would be eliminated with the construction of proposed angled parking, which would push the sidewalk into the existing street parking zone. This would not only allow for construction of the proposed angled parking but would also provide an American with Disabilities Act (ADA) accessible sidewalk connection to the existing sidewalk to the north. The existing sidewalk does not connect to the northern sidewalk due to an elevated platform in front of an existing building to the north that separates the pathways. Lost street parking spaces would be offset by the added angled parking; however, most of the spaces would be reserved for City staff. Although proposed curb cuts and the elevated crosswalk would impact street parking along the eastern side of the street, the available street parking would be similar to the existing condition with the reconstruction of the curb and sidewalk to remove multiple existing curb cuts that would no longer be in use.
- **Mission Road:** Existing street parking is available along both sides of Mission Road adjacent to the Project Site. As part of the proposed Project, new curb and a multi-use path would be constructed along the western side of the road to match the proposed improvements of the separate ATP Cycle 1 project (ATP Cycle 1 includes active transportation elements consisting of sidewalk and bike lane improvements, concrete American with Disabilities Act [ADA] ramps at intersections, continental striping, and lighting). New curb and sidewalk would also be constructed along the eastern side of the road. Existing driveways that served the previous improvements would be removed. However, street parking would be available along portions of the roadway adjacent to the Project.
- **Santa Fe Avenue:** Existing parking spaces immediately adjacent to the Project site along Santa Fe Avenue are limited (approximately seven spaces). The proposed Project would include new curb and sidewalk construction along the roadway to match the existing conditions north and south of the Project Site. Street parking adjacent to the proposed Project along Santa Fe Avenue would be eliminated by the separate Active Transportation Program (ATP) Cycle 3 project to allow for the construction of bike lanes along Santa Fe Avenue (ATP Cycle 3 includes pedestrian and cyclist safety, access, and connectivity improvements, including cycle tracks/bike lanes/bike routes; new/widened sidewalks with curb extensions; high visibility and raised crosswalks; traffic-controlled

intersections; shade trees; pedestrian lighting; wayfinding signage; and alley conversion into a Shared Street connecting to the proposed Arts Plaza).

- **Clarence Street:** Existing street parking is available along both sides of Clarence Street adjacent to the Project Site, but it is limited by existing driveway curb cuts. While proposed curb cuts and an elevated crosswalk would impact street parking along both sides of the street, the available street parking would be similar to the existing condition with the reconstruction of the curb and sidewalk to remove multiple existing curb cuts that would no longer be in use.

During proposed construction activities, street parking on other roadways within 0.25 mile of the Project Site would continue to remain available (see **Table 3.15-1**). In addition, the following existing transit lines that are near the proposed Project Site would continue to be available:

- Metro Local and Limited Lines (18, 53, 60, 62, 106, 720, 760) (Bus) (all within 0.5 mile of project)
- Metro DASH Line A (Bus) (0.4 mile from project)

Therefore, impacts would be less than significant and mitigation is not required.

3.15.3.5 Operational Impacts

T-1: Conflict with a program, plan, ordinance or policy addressing the circulation system, including transit, roadway, bicycle and pedestrian facilities.

Adopted policies, plans, and programs supporting alternative transportation include AB 1358 California Complete Streets Act, SB 743, Los Angeles Mobility Plan 2035, Los Angeles Municipal Code (LAMC) the Complete Streets Design Guide (see Section 3.15.1 for additional information), Vision Zero Action Plan, Citywide Design Guidelines, and the local community plans for .

The objectives for the proposed Project include encouraging active modes of transportation and public transit. To meet these objectives and support alternative transportation, the proposed Project would include the following features:

- Bike/pedestrian ramps to provide connections to the upcoming Sixth Street Viaduct;
- Bike racks; and
- Space for future secure bike parking and a future Metro bikeshare.

The project will provide short-term and long-term bicycle parking consistent with LAMC requirements. To address plans and policies promoting pedestrian safety, the project will include pedestrian paths, bicycle paths and connections, park lighting, pedestrian street lighting on Santa Fe Avenue, Anderson Street, and South Clarence Street. Additionally, connectivity improvements may also include but are not limited to a pedestrian activated crosswalk signal on Santa Fe Avenue, a speed table at the continental crosswalk on Santa Fe Avenue, and speed-tables with solar-powered rectangular rapid flashing beacons at South Clarence Street, Mission Road, and South Anderson Street.

Therefore, the proposed Project would be consistent with adopted policies, plans, and programs addressing circulation and supporting alternative transportation and pedestrian safety.

A project would result in significant impacts on a signalized intersection if the conditions in **Table 3.15-9** are met. Based on these criteria, the proposed Project would not result in a significant impact at an

intersection if it operates at LOS D after the addition of the proposed Project traffic and the incremental change in V/C is less than 0.020. However, if the intersection is operating at LOS F after the addition of the proposed Project traffic and the V/C ratio is 0.010 or greater, the proposed Project would result in significant impacts.

Table 3.15-9: City Significant Impact Criteria

LOS	V/C Ratio	Project Related Increase in V/C Ratio
C	>0.701-0.800	Equal to or greater than 0.040
D	>0.801-0.900	Equal to or greater than 0.020
E	>0.901-1.00	Equal to or greater than 0.010
F	Greater than 1.000	Equal to or greater than 0.010

Source: (Los Angeles Department of Transportation, 2020)

Existing (2018) With Project conditions are summarized in **Table 3.15-10** and Existing (2018) With Project Event conditions are summarized in **Table 3.15-11**. Based on the results of the LOS analysis, the proposed Project would not result in a significant change in traffic conditions from existing conditions. In addition, an event hosted at the proposed Project would not result in a significant change in traffic conditions from existing conditions.

Two unsignalized intersections (9 and 12) would continue to operate at LOS F under Existing (2018) With Project and Existing (2018) With Project Event conditions. These intersections were evaluated, and it was determined that these intersections do not warrant traffic signals (Kimley-Horn and Associates, Inc., 2019a).

Based on the City's significant traffic impact criteria, the proposed Project would not exceed the capacity of the existing circulation system during a typical day. Although large special events would increase the number of trips generated, these trips would occur infrequently (approximately once every six months). In addition, large event permittees would be required to implement site-specific traffic control plans to improve circulation and minimize congestion. Therefore, the proposed Project would not exceed the capacity of the existing circulation system during large special events. Impacts would be less than significant and mitigation would not be required.

Table 3.15-10: Existing (2018) With Project Conditions for Study Intersections

Signalized Intersections		Existing (2018) Without Project LOS Analysis Results				Existing (2018) With Project LOS Analysis Results				Change in V/C		Significant Impact?	
		A.M. Peak Hour		P.M. Peak Hour		A.M. Peak Hour		P.M. Peak Hour					
		V/C Ratio	LOS	V/C Ratio	LOS	V/C Ratio	LOS	V/C Ratio	LOS	A.M.	P.M.	A.M.	P.M.
1	Alameda Street at Sixth Street	0.613	B	0.656	B	0.612	B	0.655	B	-0.001	-0.001	No	No
2	Mateo Street at Sixth Street	0.460	A	0.759	C	0.459	A	0.758	C	-0.001	-0.001	No	No
3	Alameda Street at Seventh Street	0.604	B	0.639	B	0.603	B	0.637	B	-0.001	-0.002	No	No
4	Mateo Street at Seventh Street	0.331	A	0.420	A	0.331	A	0.419	A	0.000	-0.001	No	No
5	Santa Fe Avenue at Seventh Street	0.468	A	0.644	B	0.467	A	0.641	B	-0.001	-0.003	No	No
6	Boyle Avenue at Seventh Street	0.493	A	0.540	A	0.489	A	0.531	A	-0.004	-0.009	No	No

7	Boyle Avenue at Whittier Boulevard	0.797	C	0.824	D	0.796	C	0.822	D	-0.001	-0.002	No	No
8	Alameda Street at Fourth Street	0.321	A	0.574	A	0.321	A	0.573	A	0.000	-0.001	No	No
Unsignalized Intersections		**Delay (Seconds)**	**LOS**	**Delay (Seconds)**	**LOS**	**Delay (Seconds)**	**LOS**	**Delay (Seconds)**	**LOS**	**Signal Warrant Analysis Required?**			
9	Hewitt Street at Fourth Street[1]	8.1	A	229.5	F	8.1	A	228.4	F	Yes			
10	Clarence Street at Fourth Street	23.1	C	7.9	A	22.7	C	7.6	A	No			
11	Santa Fe Avenue at Mateo Street	7.6	A	9.7	A	7.6	A	9.7	A	No			
12	Santa Fe Avenue at Third Street	35.2	E	59.9	F	34.7	D	57.5	F	Yes			

1. HCM 2000 method was used because HCM 2010 does not support this intersection lane configuration
Source: (Kimley-Horn and Associates, Inc., 2019a)

Table 3.15-11: Existing (2018) With Project Event Conditions for Study Intersections

Signalized Intersections		Existing (2018) Without Project LOS Analysis Results		Existing (2018) With Project LOS Analysis Results		Change in V/C	Significant Impact?
		P.M. Peak Hour		P.M. Peak Hour			
		V/C Ratio	LOS	V/C Ratio	LOS	P.M.	P.M.
1	Alameda Street at Sixth Street	0.656	B	0.659	B	0.003	No
2	Mateo Street at Sixth Street	0.759	C	0.758	C	-0.001	No
3	Alameda Street at Seventh Street	0.639	B	0.641	B	0.002	No
4	Mateo Street at Seventh Street	0.420	A	0.427	A	0.007	No
5	Santa Fe Avenue at Seventh Street	0.644	B	0.649	B	0.005	No
6	Boyle Avenue at Seventh Street	0.540	A	0.563	A	0.023	No
7	Boyle Avenue at Whittier Boulevard	0.824	D	0.822	D	-0.002	No
8	Alameda Street at Fourth Street	0.574	A	0.579	A	0.005	No
Unsignalized Intersections		**Delay (Seconds)**	**LOS**	**Delay (Seconds)**	**LOS**	**Signal Warrant Analysis Required?**	
9	Hewitt Street at Fourth Street[1]	229.5	F	219.5	F	Yes	
10	Clarence Street at Fourth Street	7.9	A	7.8	A	No	
11	Santa Fe Avenue at Mateo Street	9.7	A	10.1	B	No	
12	Santa Fe Avenue at Third Street	59.9	F	60.1	F	Yes	

1. HCM 2000 method was used because HCM 2010 does not support this intersection lane configuration
Source: (Kimley-Horn and Associates, Inc., 2019a)

T-2.1: For a land use project, would the project conflict or be inconsistent with CEQA Guidelines section 15064.3, subdivision (b)(1)? Would the project cause substantial vehicle miles traveled?

The proposed Project is expected to generate 177 trips; however, once the existing land use credit is applied, the proposed Project would result in 159 less daily trips than the existing industrial land use (see Section 3.15.3.5 for additional information). The proposed Project is primarily expected to serve the recreational needs of the local surrounding communities rather than be a regional generator of traffic. Regarding special events, which may occasionally have a regional draw a few times a year (see **Table 2-1** in Chapter 2 of this EIR for anticipated size and frequency of events), large event permittees would be required to develop traffic control and transit plans that address parking and circulation to minimize congestion and inform visitors of transit options to access events. Therefore, the proposed Project would not cause substantial VMT.

T-3: Substantially increase hazards due to a geometric design feature or incompatible use.

Primary pedestrian access would be provided via the streets adjacent to the project areas. Visitors and employees arriving to the Project site by bicycle would have the same access opportunities as pedestrians. Pedestrian entrances would be separate from vehicular driveways. The driveways would be designed to City standards and provide adequate sight distance, sidewalks, and pedestrian movement controls that meet the City's requirements to protect pedestrian safety. Additionally, the project would provide access to on-site parking located on Anderson Street and street parking located at Mateo Street, Mission Road, Anderson Street, and Clarence Street. Street traffic from adjacent industrial uses would be calmed through the use of speed tables and pedestrian crossings with rectangular rapid flashing beacons at the crossings at South Clarence Street, Mission Road, and South Anderson Street to address pedestrian safety. A speed table is also proposed at the Santa Fe Avenue crossing. Therefore, the proposed Project would not substantially increase hazards due to a geometric design feature or incompatible use. Impacts would be less than significant and mitigation would not be required.

T-4: Conflict with an applicable congestion management program, including, but not limited to level of service standards and travel demand measures, or other standards established by the county congestion management agency for designated roads or highways.

As discussed in Section 3.15.3.4, the CMP TIA Guidelines indicate that if a proposed project would add 50 or more peak hour trips (during the peak hour of adjacent street traffic) to a CMP arterial intersection, then a CMP arterial intersection analysis must be conducted. Alameda Street is a CMP arterial, with a monitoring station at Washington Street south of the Project Site.

As discussed in Section 3.15.3.1, trip generation for the proposed Project was estimated using rates from the ITE *Trip Generation, 9th Edition*. The proposed Project would attract visitors to the Project Area. According to the *Traffic Impact Analysis*, the proposed Project would generate approximately 177 new daily trips, with 81 new trips generated during the a.m. peak hour and 68 new trips during the p.m. peak hour. The proposed Project would replace approximately 223,900 square feet of heavy industrial land use. The existing heavy industrial land use generates approximately 336 daily trips, with 115 trips generated in the a.m. peak hour and 153 in the p.m. peak hour. After subtracting the number of trips generated from the existing land use, the proposed Project would generate 159 fewer daily trips (34 in the a.m. peak hour and 85 in the p.m. peak hour) than the existing industrial land use.

During a typical day, the proposed Project would generate fewer trips than the trips generated by the existing industrial land use. Therefore, the proposed Project is projected to add fewer than 50 peak hour trips to the arterial monitoring station on Alameda Street and a separate CMP arterial analysis is not required.

The proposed Project would host special events (e.g., concerts, festivals, soccer tournaments, and farmer's markets), which would attract additional visitors to the Project Area during the p.m. peak period. As discussed in **Section 3.15.3.1**, a 2,000-person event during a typical weekday p.m. peak hour was analyzed to represent a worst-case conservative scenario that would encompass a single, large event that could occur infrequently as well as multiple, simultaneous small events that could occur weekly. Based on this assumption, it is estimated that an additional 250 vehicles would arrive during the p.m. peak period during special events.

In addition, 3,250-person events and 5,000-person events are expected to occur 1-2 times per year. These events typically occur during off-peak hours and are not expected to result in impacts to the local street network during typical busy periods (weekday a.m. and p.m. peaks). During these events, the City would require event permittees to develop site-specific traffic control plans to address and manage traffic circulation and parking during large events.

A freeway impact screening analysis was conducted based on the LADOT Traffic Study Guidelines for the freeway monitoring stations along U.S. Route 101 (U.S. 101), Interstate 10 (I-10), and State Route 60 (SR 60). The proposed Project is expected to contribute the greatest freeway trip generation on I-10, increasing the existing trips by about 10 percent. However, the trip generation from the proposed Project would be less than that of the existing industrial land use. The proposed Project is expected to add fewer than 150 peak hour trips to the monitoring stations on U.S. 101, I-10, and SR 60. Therefore, no additional Congestion Management Plan (CMP) or freeway screening analysis is required.

During a typical day, the proposed Project would not conflict with an applicable congestion management plan or other standards for designated roads or highways. Large event permittees would be required to implement site-specific traffic control plans, such that large events would not conflict with an applicable congestion management plan or other standards for designated roads or highways. Therefore, impacts would be less than significant, and mitigation would not be required.

Loss of Parking

The proposed Project would provide several on- and off-street parking areas. 31 public parking spaces plus 14 dedicated parking spaces would be provided. The 31 public parking spaces are distributed among four on-street parking locations. The West Park has one on-street parking zone located on Mateo Street south of Willow Street. The remaining three on-street parking zones are in the East Park on Mission Road, South Anderson Street, and South Clarence Street. The 14 dedicated parking spaces are in a parking lot in the East Park on South Anderson Street; however, 9 of the 14 dedicated parking spaces would be assigned to City of Los Angeles Recreation and Park (RAP) staff. The remaining 5 parking spaces would be available for the park's users.

As discussed in Section 3.15.3.1, parking demand for the proposed Project was calculated under three scenarios for weekdays and weekends. **Table 3.15-12** summarizes the number of required parking spaces during a typical weekday, and **Table 3.15-13** summarizes the number of required parking spaces

during a typical weekend for each scenario. Scenario 2 "Soccer Complex" was conservatively used to determine the parking requirements for the proposed Project. Scenario 3 was not used because special events would occur less frequently.

The Scenario 2 methodology determined that 54 vehicle parking spaces and 92 bicycle parking spaces are required for the typical weekday demand (**Table 3.15-12**) and 83 vehicle parking spaces and 140 bicycle parking spaces are required for the typical weekend demand (**Table 3.15-13**). The proposed site plan identifies 31 public vehicle parking spaces and 5 dedicated vehicle parking spaces in the East Park (angled parking along Anderson Street) for a total of 36 parking spaces for park users. Therefore, the number of total parking spaces provided would not meet the parking requirement for the proposed Project on a typical weekday, typical weekend day, or special event. The 9 parking spaces in the East Park are not included in the total number of parking spaces because they are reserved for RAP staff.

As shown in **Table 3.15-8** and on **Figure 3.15-3**, additional parking would be available at the 88 public and private lots within two miles of the Project Site. Visitors to the proposed Project Site would also be able to utilize the following existing transit lines:

- Metro Local and Limited Lines (18, 53, 60, 62, 106, 720, 760) (Bus) (all within 0.5 mile of project); and
- Metro DASH Line A (Bus) (0.4 mile from project).

Table 3.15-12: Weekday Parking Demand

Scenario	Land Use	Units	Weekday Parking Requirement	Vehicle Parking Spaces Required	Total Vehicle Parking Spaces Required[3]	Bicycle Parking Spaces Required[4]
1	City Park[1]	13 acres	5.10 spaces/acre[2]	67	47	80
2	Soccer Complex	2 Fields	38.30 spaces/field	77	54	92
3	Live Theater	5,000 Attendees	0.38 spaces/attendee	1,900	1,330	2,280

Source: Kimley-Horn and Associates, Inc., 2019b
[1]City Park Site 1
[2]Applied weekend parking demand ratio because weekday parking demand ratio is not available
[3]Replaced 30 percent of total required parking spaces with bicycle parking
[4]Calculated using replacement ratio of one parking space for every four bicycle spaces per LAMC Section 12.21.4

Table 3.15-13: Weekend Parking Demand

Scenario	Land Use	Units	Weekday Parking Requirement	Vehicle Parking Spaces Required	Total Vehicle Parking Spaces Required[3]	Bicycle Parking Spaces Required[4]
1	City Park[1]	13 acres	5.10 spaces/acre[2]	67	47	80
2	Soccer Complex	2 Fields	58.30 spaces/field	118	83	140
3	Live Theater	5,000 Attendees	0.38 spaces/attendee	1,900	1,330	2,280

Source: Kimley-Horn and Associates, Inc., 2019b
[1]City Park Site 1
[2]Applied weekday parking demand ratio because weekend parking demand ratio is not available
[3]Replaced 30 percent of total required parking spaces with bicycle parking
[4]Calculated using replacement ratio of one parking space for every four bicycle spaces per LAMC Section 12.21.4

Future improvements to increase DASH services in proximity to the Project Area have been approved, which include redesigning the Metro DASH F (Bus) route to stop at the proposed West Park and implementing a DASH Boyle Heights West (Bus) route within 0.4 mile of the proposed East Park. DASH A (Bus) was also re-routed to further increase public transit service in the Arts District. In addition, the construction of an Arts District/Sixth Street Metro Station (Rail) adjacent to the Project Area is currently undergoing an environmental review process by Metro, which is anticipated to release a draft environmental impact report in 2022 for public review. See Section 3.15.7 for more information regarding these planned and proposed transportation improvements.

To mitigate for impacts due to the loss of parking, the City would construct rideshare pick-up/drop-off zones and reserve space for facilities to encourage alternative modes of transportation, such as mobility and bike share hubs (see **MM-TRANS-1**, **MM-TRANS-2**, and **MM-TRANS-3** in Section 3.15.5). The City would also reserve space to accommodate a future Arts District/Sixth Street Metro Station in the Arts Plaza (see **MM-TRANS-4** in Section 3.15.5). Furthermore, the implementation of site-specific traffic control plans for large events would help reduce parking impacts related to large events (see **BMP-TRANS-5** in Section 3.15.4). With implementation of these mitigation measures, park users would have more options for alternate forms of transportation (i.e., rideshare, bicycles, and public transit), which would reduce the demand for parking spaces. Therefore, impacts would be less than significant.

3.15.4 Best Management Practices

BMP-TRANS-1: Temporary Detour Routes

During proposed construction activities, temporary detours shall be provided for any affected pedestrian and bicycle facilities.

BMP-TRANS-2: Construction Staging Plan

A construction staging plan shall be developed to reduce impacts related to noise, dust, traffic, and other health hazards. In addition, construction site BMPs (e.g., fencing, signs, and detours) shall be implemented to minimize hazards and prevent safety issues on the roadways and sidewalks surrounding the construction site.

BMP-TRANS-3: Construction Traffic

Construction-related trips shall be scheduled with increased frequency during off-peak hours to minimize impacts to commuters.

BMP-TRANS-4: Access to Parcels

If access to any existing parcels is removed during proposed construction activities, temporary access shall be provided, and/or new points of access shall be constructed.

BMP-TRANS-5: Site-Specific Traffic Control and Transit Plan for Large Events

Large event permittees shall develop a site-specific traffic control plan to provide information on parking and circulation and highlight transit options for event attendees to minimize congestion and vehicle miles traveled. Traffic control strategies for events will include inbound/outbound flex lanes and sheriff-controlled intersections. Traffic control plans will also identify nearby public parking facilities and identify passenger pick-up/drop-off locations. Permittees will be required to consider the cumulative traffic impacts of their event in relation to other events in the Project Area. The traffic control plans will also identify emergency services egress and access.

3.15.5 Mitigation Measures

MM-TRANS-1: Mobility Hub

The City shall reserve space for a mobility hub at the proposed Project Site, including additional amenities for bicyclists, drivers, and transit users, to encourage event attendees to use alternative modes of transportation.

MM-TRANS-2: Bicycle Facilities

The City shall reserve space for a Bike Share hub at the proposed Project Site to allow Bike Share participants to dock bicycles and scooters.

MM-TRANS-3: Rideshare Zones

The City shall create permanent rideshare pick-up and drop-off zones for the East Park and West Park. Rideshare pick-up/drop-off zones could be located on South Santa Fe Street adjacent to the proposed West Park and South Mission Road adjacent to the proposed East Park. The pick-up/drop-off zones shall be clearly marked, and wayfinding signage shall be installed throughout the proposed Project Site.

MM-TRANS-4: Public Transportation

The City shall reserve space at the proposed Project Site to accommodate access to a future Sixth Street Metro Station near the Arts Plaza.

3.15.6 Significant Unavoidable Adverse Impacts

With implementation of **MM-TRANS-1** through **MM-TRANS-4,** the proposed Project would not result in significant unavoidable adverse impacts.

3.15.7 Cumulative Impacts

According to the TAG, a project could have a significant cumulative impact on VMT if the project has both a significant project-level impact and is not consistent with the Southern California Association of Governments' Regional Transportation Plan/Sustainable Communities Strategy (SCAG RTP/SCS) in terms of development location, density and intensity. As noted above, the proposed Project is not projected to have a significant impact on VMT and no VMT analysis is required. Given its location in a dense area of the City served by public transit and the project features that encourage walking and bicycling, the Project would be consistent with the applicable goals and objectives of the SCAG 2016-2040 RTP/SCS to locate developments in infill locations served by public transit and facilitating active transportation. Therefore, the Project's cumulative impact on VMT would not be significant.

Cumulative traffic conditions are summarized in **Table 3.15-14** and **Table 3.15-15**. Under Cumulative (2023) With Project conditions, the proposed Project would not result in a significant change in the V/C ratio. Six of the eight signalized study intersections are projected to operate at LOS D or worse during the a.m. peak hour, and all of the intersections are projected to operate at LOS D or worse during the p.m. peak hour (see **Table 3.15-14**). Three of the four unsignalized study intersections are projected to operate at LOS E or worse during the a.m. and p.m. peak periods. These intersections were evaluated for the installation of a new traffic signal per LADOT analysis procedures. The analysis indicated that existing conditions warrant a traffic signal at two intersections (Hewitt Street at Fourth Street and Santa Fe Avenue at Third Street), which would be installed as part of the separate ATP-3 project.

Under Cumulative (2023) With Project Event conditions, a special event would result in temporary impacts at the intersection of Boyle Avenue and Seventh Street (see **Table 3.15-15**). However, LOS impacts would only occur during the specific time and day of the event. Impacts would be less than significant with implementation of **MM-TRANS-1** through **MM-TRANS-4**.

The proposed development projects listed in **Table 1-1** includes the construction of mixed-use developments, public transportation, and bike paths which would attract additional residents and visitors in the vicinity of the Project Area and potentially contribute to impacts on Transportation. However, these projects would be evaluated on their consistency with the City's adopted policies, plans, and programs related to transportation, including the City's Mobility Plan 2035 (City of Los Angeles, 2016). In addition, these projects would be required to implement BMPs and/or mitigation measures to reduce impacts related to Transportation.

In accordance with AB 1358, the City is planning to move towards a balanced, multimodal transportation system that would reduce potential impacts related to Transportation. Several transportation infrastructure improvement projects in vicinity of the Project Site are planned or under consideration, and include the following:

- Planned projects to improve and add bicycle- and pedestrian-friendly infrastructure (see **Table 1-1**). For the East Park, the ATP-1 project would a Class I bike path that extends from the Viaduct bike

ramp south along Mission Road and Myers Street to Seventh Street. In addition, Mission Road between Cesar Chavez and Jesse Street is listed as a Tier 2 Bicycle Lane (i.e., bicycle facilities on arterial roadways with striped separation) in the 2035 Mobility Plan. For the West Park, the ATP-3 project would result in Class II and Class IV bicycle lanes along Mateo Street between Santa Fe Avenue and Seventh Street and on Santa Fe Avenue between Mateo Street and Seventh Street. The proposed Los Angeles River Path Project would create a new pedestrian and bicycle path that connects Elysian Valley through Downtown Los Angeles to the City of Maywood. These proposed bicycle facilities adjacent to the proposed Project Site would provide park users the necessary means to access the park using bicycles. The ATP projects are anticipated to be completed by 2024 and the Los Angeles River Path Project is anticipated to be completed by 2027.

- Planned installation of ATCS, which would dynamically control the signalized intersections in real-time operations to enhance mobility.
- In 2019, the City Council and Metro agreed to enter an MOU to begin design activities and complete and EIR for a proposed Arts District/6th Street Station. The station would be located between 6th and 7th Street bridges in an existing rail facility. Metro anticipates that the EIR will be completed in 2023. Funding for construction has not been identified for this potential project.
- Planned expansion of transit access to the Arts District and Boyle Heights neighborhoods will reduce the number of vehicle trips to the Project Site, especially during large events. The City Council adopted the LADOT's Transit Service Analysis (TSA) on October 31, 2018. The TSA increases DASH services across the City, including adjacent to the Project Site. To better serve the Arts District, DASH A was re-routed to travel further south to Palmetto Street and Molino Street. In addition, a redesigned DASH F route has been approved that would travel from Union Station down Mateo Street to Seventh Street, stopping at the proposed West Park site. The redesigned DASH F route is anticipated to begin operations by January 2022. Furthermore, a new DASH Boyle Heights West route was approved, which will provide transit access to the Pico Gardens area with stops within 0.4 mile north of the proposed East Park site. The DASH Boyle Heights West route is anticipated to begin service by January 2022.
- Planned LA Sanitation parking lot at the intersection of South Mission Road and Jesse Street (see **Figure 1-2**), which could add approximately 30 to 40 public parking spaces approximately 500 feet south of the proposed East Park. The project is anticipated to be completed in 2025.

Therefore, the proposed Project would not result in cumulatively considerable impacts related to Transportation.

Table 3.15-14: Cumulative (2023) With Project Conditions for Study Intersections

Signalized Intersections		Cumulative (2023) Without Project LOS Analysis Results				Cumulative (2023) With Project LOS Analysis Results				Change in V/C		Significant Impact?	
		A.M. Peak Hour		P.M. Peak Hour		A.M. Peak Hour		P.M. Peak Hour					
		V/C Ratio	LOS	V/C Ratio	LOS	V/C Ratio	LOS	V/C Ratio	LOS	A.M.	P.M.	A.M.	P.M.
1	Alameda Street at Sixth Street	0.895	D	1.009	F	0.894	D	1.008	F	0.001	0.001	No	No
2	Mateo Street at Sixth Street	0.945	E	1.333	F	0.945	E	1.331	F	0.000	-0.002	No	No
3	Alameda Street at Seventh Street	1.193	F	1.341	F	1.193	F	1.339	F	0.000	-0.002	No	No
4	Mateo Street at Seventh Street	0.976	E	1.379	F	0.976	E	1.377	F	0.000	-0.002	No	No
5	Santa Fe Avenue at Seventh Street	0.811	D	0.993	E	0.811	D	0.990	E	0.000	-0.003	No	No
6	Boyle Avenue at Seventh Street	0.762	C	0.884	D	0.758	C	0.875	D	-0.004	-0.009	No	No
7	Boyle Avenue at Whittier Boulevard	0.826	D	0.862	D	0.825	D	0.860	D	-0.001	-0.002	No	No
8	Alameda Street at Fourth Street	0.571	A	0.935	E	0.571	A	0.934	E	0.000	-0.001	No	No

Unsignalized Intersections		Delay (Seconds)	LOS	Delay (Seconds)	LOS	Delay (Seconds)	LOS	Delay (Seconds)	LOS	Signal Warrant Analysis Required?
9	Hewitt Street at Fourth Street[1]	56.2	F	*	F	56.0	F	*	F	Yes
10	Clarence Street at Fourth Street	*	F	39.8	E	*	F	39.8	E	Yes
11	Santa Fe Avenue at Mateo Street	8.6	A	14.9	B	8.6	A	14.6	B	No
12	Santa Fe Avenue at Third Street	95.4	F	139.4	F	92.9	F	136.5	F	Yes

*1. HCM 2000 method was used because HCM 2010 does not support this intersection lane configuration; *Delay exceeds LOS F threshold*
Source: (Kimley-Horn and Associates, Inc., 2019a)

Table 3.15-15: Cumulative (2023) With Project Event Conditions for Study Intersections

Signalized Intersections		Cumulative (2023) Without Project LOS Analysis Results		Existing (203) With Project LOS Analysis Results		Change in V/C	Significant Impact?
		P.M. Peak Hour		P.M. Peak Hour			
		V/C Ratio	LOS	V/C Ratio	LOS	P.M.	P.M.
1	Alameda Street at Sixth Street	1.009	F	1.012	F	0.003	No
2	Mateo Street at Sixth Street	1.333	F	1.331	F	-0.002	No
3	Alameda Street at Seventh Street	1.341	F	1.339	F	-0.002	No
4	Mateo Street at Seventh Street	1.379	F	1.385	F	0.006	No
5	Santa Fe Avenue at Seventh Street	0.993	E	0.998	E	0.005	No
6	Boyle Avenue at Seventh Street	0.884	D	0.907	E	**0.023**	**Yes**
7	Boyle Avenue at Whittier Boulevard	0.862	D	0.860	D	-0.002	No
8	Alameda Street at Fourth Street	0.935	E	0.940	E	0.005	No
Unsignalized Intersections		**Delay (Seconds)**	**LOS**	**Delay (Seconds)**	**LOS**	**Signal Warrant Analysis Required?**	
9	Hewitt Street at Fourth Street[1]	*	F	*	F	Yes	

10	Clarence Street at Fourth Street	39.8	E	39.4	E	Yes
11	Santa Fe Avenue at Mateo Street	14.9	B	16.3	**C**	No
12	Santa Fe Avenue at Third Street	139.4	F	141.4	F	Yes

1. HCM 2000 method was used because HCM 2010 does not support this intersection lane configuration
Source: (Kimley-Horn and Associates, Inc., 2019a)

3.16 Utilities and Service Systems

This section describes the affected environment and regulatory setting for Utilities and Service Systems related to the Project Area and surrounding area. In addition, this section describes the potential impacts related to Utilities and Service Systems that would result from implementation of the proposed Project. As noted in the analysis below, impacts associated with Utilities and Service Systems during construction or operation of the proposed Project would be less than significant and mitigation measures are not required.

3.16.1 Regulatory Setting

A review of the various federal, state, regional, and local government regulatory requirements was conducted to identify regulations that relate to Utilities and Service Systems. This section summarizes the various regulatory requirements that are relevant to the proposed Project.

3.16.1.1 State

California Environmental Quality Act

CEQA requires agencies to address impacts on public services, utilities, and service systems. As required by CEQA, agencies must determine whether a project would result in adverse impacts on acceptable maintenance ratios, response times or other performance objectives for any public services, specifically on fire protection, police protection, schools, parks, and other public facilities.

3.16.1.2 Local

City of Los Angeles Low Impact Development Ordinance

The Low Impact Development (LID) ordinance (Ordinance Number 181899), which became effective May 2012, requires development and redevelopment projects to mitigate runoff in a manner that utilizes natural resources to capture rainwater. The LID ordinance applies to all development and redevelopment projects that create, add, or replace 500 square feet or more of impervious surface area. The LID ordinance expands on the existing Standard Urban Mitigation Plan (SUSMP) requirements adopted in 2000, which only applied to projects falling under certain categories (City of Los Angeles, 2019b). Under the LID ordinance, projects must implement LID Best Management Practices (BMP), as recommended in the City's *Planning and Land Development Handbook for Low Impact Development* (City of Los Angeles, 2016). LID BMPs include infiltration, capture and use, and high efficiency bio-filtration/retention system BMPs (i.e., infiltration trenches and basins, dry wells, underground detention chambers, permeable pavement, cisterns and rain tanks, flow-through planters, and vegetated bioswales).

3.16.2 Environmental Setting

Descriptions of the utilities in the Project Area are based on the information in the Final EIR/EIS for the Viaduct Replacement Project (California Department of Transportation and City of Los Angeles, 2011).

3.16.2.1 Energy

Electricity is supplied to the Project Area by the Los Angeles Department of Water and Power (LADWP). LADWP operates 22 generation plants with a total capacity of approximately 7,640 megawatts. The department's energy supply comes from a variety of energy sources, including renewable sources, natural gas, nuclear, hydroelectric, and coal (Los Angeles Department of Water and Power, 2013).

LADWP owns and operates several overhead and underground transmission and distribution lines in the Project Area. The transmission line system is within the LADWP Transmission Right of Way (TLRW) along the east and west banks of the LA River. There are several 230-kilovolt (kV) underground transmission lines that run along the frontage roads north and south of Sixth Street between Mateo Street and Santa Fe Avenue. In addition, there are several power poles along these frontage roads that support 34.5-kV overhead electrical transmission lines. There are four transmission towers within the vicinity of the Viaduct, with electrical conduits and overhead lines following the same alignment as the transmission lines. There are also overhead lines running along the streets perpendicular to Sixth Street throughout the Project Area.

The Southern California Gas Company (SoCalGas) provides natural gas to the City. SoCalGas is the nation's largest distributor of natural gas, serving 21.8 million consumers over 24,000 square miles throughout Central and Southern California (Southern California Gas Company, n.d.). Within the Project Area, there is a 6-inch line running along the southern Sixth Street frontage road and a 4-inch line running along the northern Sixth Street frontage road, extending from Mateo Street to South Santa Fe Avenue. There are other gas lines under the streets perpendicular to Sixth Street throughout the Project Area (i.e., Mateo Street, Imperial Street, Santa Fe Avenue, Mesquit Street, Mission Road, Anderson Street, and Clarence Street).

3.16.2.2 Water and Wastewater

LADWP provides water services within the Project Area. The primary sources of water include Los Angeles Aqueducts, local groundwater, and water purchased from the Metropolitan Water District of Southern California (MWD). The MWD delivers the purchased water to the area via the Colorado River Aqueduct and the State Water Project's California Aqueduct (Los Angeles Department of Water and Power, 2013).

The existing active water lines in the Project Area run along the Sixth Street frontage roads, including an 8-inch line on the north frontage road and 8-inch lines on the south frontage road. There is also an 8-inch abandoned water line along the north and south frontage roads that terminates at Santa Fe Street, as well as an abandoned 36-inch water line directly underneath the Viaduct. These lines run eastbound from Mateo Street to Mesquit Street. In addition, there are several active water lines perpendicular to Sixth Street at Santa Fe Avenue (8-inch), Mission Road (8-inch), Anderson Street 8-inch), and Clarence Street (6-inch).

The City's Department of Public Works, Bureau of Sanitation (LA Sanitation), provides the sewer services in the Project Area. LA Sanitation operates over 6,700 miles of public sewers and four water reclamation plants with a service population of approximately 4 million people (City of Los Angeles, 2019a).

There are 10 active sewer lines in the Project Area, which include the following lines: The portion of the Project Area west of the LA River channel includes a line that runs along the north frontage road (8-inch); one line along the south frontage road (8-inch) from Mateo Street to Santa Fe Avenue that connect to a main sewer line at Santa Fe Avenue (36-inch); an abandoned sewer line underneath the Viaduct from Mateo Street to Santa Fe Avenue (8-inch). There are also two 36-inch sewer lines within the proposed Arts Plaza. The portion of the Project Area east of the LA River channel includes large sewer pipes at Mission Road (63-inch and 96-inch), Anderson Street (10-inch), and Clarence Street (12-inch). All of these lines flow in a southerly direction.

3.16.2.3 Storm Drains

The Project Area includes stormwater drain inlets and underground pipes, which are owned and operated by the City. Stormwater flows originating from the Project Area typically discharge into the LA River. The LA River Channel is maintained by the United States Army Corps of Engineers (USACE) and the underlying drainage network is maintained by the City (Los Angeles County Department of Public Works, n.d.).

Under the Viaduct and west of the LA River, there are two recently constructed stormwater drain lines (18- and 24-inch diameter) that drain the new Viaduct approach. These lines discharge into an existing drain (36-inch) which is tributary to the 97-inch stormwater drain sewer Number 3.

The industrial area north of the Viaduct and east of the LA River is served by lines running along Mission Road (30-inch), Clarence Street (42-inch), and between Mission Road and Anderson Street (15-inch/18-inch). These lines discharge into a 62-inch trunk line at Jesse Street, which also collects flows from the areas north of the Viaduct and west of U.S. 101. There is also a 96-inch County line that runs parallel with the 62-inch trunk line along Jesse Street.

3.16.2.4 Telephone, Cable, and Fiber Optics

There are several telephone, cable, and fiber-optic lines within the Project Area, which run along the north and south frontage roads, LA Riverbanks and perpendicular cross streets, and Mesquit Street. These lines are operated by AT&T, Bell System, and Western Union.

3.16.2.5 Solid Waste

LA Sanitation provides services for solid waste pickup in the Project Area. The primary services offered include trash, recycling, and green waste. Approximately 6,652 tons of waste, manure, and bulky items are collected per day from over 750,000 residences. LA Sanitation owns a waste transfer station, a composting facility, and a trimming facility (City of Los Angeles, 2017b).

The Los Angeles County Sanitation District oversees the operation of landfills that would accept the solid waste generated during proposed construction activities. The closest landfill to the Project Area is the Puente Hills Landfill in the City of Industry.

The City purchased Central Los Angeles Recycling & Transfer Station (CLARTS) in 2004 (City of Los Angeles, 2017a). CLARTS was designed to accommodate a capacity of 4,025 tons per day. CLARTS services the City's curbside collection operations, commercial waste haulers, independent operators, and the general public. From CLARTS, waste is transferred to a landfill or recycling facility.

3.16.2.6 Railroads

There are railroad corridors along the east and west banks of the LA River. On the west bank of the LA River, the two tracks closest to the LA River are owned by the Southern California Regional Rail Authority (SCRRA) and are used primarily by Metrolink trains. The five tracks west of the SCRRA tracks are owned by Burlington Northern and Santa Fe (BNSF) Railway, and the rest of the tracks are owned and operated by the Los Angeles County Metropolitan Transportation Authority (Metro). Amtrak also operates trains on a BNSF track and a Metro track on the west bank. On the east bank, the two tracks closest to the river are owned by SCRRA, which are used by Metrolink and the Union Pacific Railroad (UPRR). The remainder of the ten tracks are owned by UPRR and utilized by UPRR.

3.16.2.7 River Access Tunnel

A City-owned tunnel is located under the Viaduct on the west side of the River. The tunnel was constructed as part of the Viaduct and consists of an access ramp with retaining walls on both sides of the ramp and portals (entrance). The tunnel provides access to the River from the frontage road on the south side of the Viaduct at the Santa Fe Avenue intersection. In addition, the tunnel provides access to the LADWP TLRW.

3.16.3 Environmental Impact Analysis

3.16.3.1 Screening Analysis

Several impacts and corresponding thresholds of significance were eliminated from further analysis in this EIR. Topics were eliminated if the IS for the Project concluded there would be No Impact, or if impacts were identified to be Less Than Significant and will not be discussed further in the EIR. Only the topics described in Section 3.16.3.2 were determined to require further analysis in this EIR. A copy of the Initial Study, which contains the eliminated topics, is provided in **Appendix A**.

During proposed construction activities, existing utilities would be protected in place. Water, sewer, gas, and stormwater connections in existing buildings have been removed and/or capped during the demolition activities for the Viaduct Replacement Project. Therefore, impacts to these utilities are not anticipated, and will not be discussed further in this EIR. There is potential to replace aboveground LADWP power poles with underground utilities in the future between Mateo Street and Santa Fe Avenue. Avenue. However, utility relocations would be coordinated with LADWP, and would be conducted in compliance with all applicable federal and state regulations and local policies. Therefore, significant impacts to these utilities are not anticipated, and will not be discussed further in this EIR.

3.16.3.2 Thresholds of Significance

According to Appendix G of the CEQA Guidelines and the *L.A. CEQA Thresholds Guide*, the proposed Project would have a significant impact on Utilities and Service Systems if it would:

XIX(a) Require or result in the relocation or construction of new or expanded water, wastewater treatment or storm water drainage, electric power, natural gas, or telecommunications facilities, the construction or relocation of which could cause significant environmental effects.

G.1 Surface Water Hydrology. A proposed project would normally have a significant impact on surface water hydrology if it would:

- Cause flooding during the projected 50-year developed storm event, which would have the potential to harm people or damage property or sensitive biological resources;

XIX(b) Have sufficient water supplies available to serve the project and reasonably foreseeable future development during normal, dry and multiple dry years.

M.1. Water. The determination of significance shall be made on a case-by-case basis, considering the following factors:

- Whether sufficient capacity exists in the water infrastructure that would serve the project, taking into account the anticipated conditions at project buildout;
- The amount by which the project would cause the projected growth in population, housing or employment for the Community Plan area to be exceeded in the year of the project completion; and
- The degree to which scheduled water infrastructure improvements or project design features would reduce or offset service impacts.

3.16.3.3 Construction Impacts

XIX(a): Require or result in the relocation or construction of new or expanded water, wastewater treatment or storm water drainage, electric power, natural gas, or telecommunications facilities, the construction or relocation of which could cause significant environmental effects.

The proposed construction activities would not require or result in the construction of new water or wastewater treatment facilities or expand existing facilities. During construction, wastewater containing diesel and oil, paint, solvents, cleaners, and other chemicals, as well as construction debris and dirt, may be generated. This water would be collected, screened, and discharged in accordance with the stormwater pollution prevention plan (SWPPP). Any remaining sludge would be disposed of in accordance with water and solid waste disposal regulations, including the Clean Water Act (CWA), the Porter-Cologne Water Quality Control Act, and the Resource Conservation and Recovery Act (RCRA). The wastewater treatment provider that serves the Project Area has adequate capacity to serve the construction needs of the proposed Project. Therefore, impacts on water and wastewater treatment facilities would be less than significant and mitigation is not required.

The proposed Project includes the construction of new stormwater drainage systems to capture and route runoff from the Project Site and Viaduct to LID or structural treatment BMPs (e.g., capture and use systems, proprietary treatment vaults with media-filled cartridges, and vegetated biofiltration basins), before being discharged to the existing stormwater drainage facilities adjacent to the site. Temporary stormwater drainage BMPs that would be implemented during construction could include, but would not be limited to, the installation of earth dikes, drainage swales and ditches, silt fences, wattles, desilting basins, and stormwater drain inlet protection. These BMPs would be implemented in compliance with the CWA, the Porter-Cologne Water Quality Control Act, the City's Stormwater Program, and the City's LID Ordinance (Ordinance Number 181899). Temporary stormwater drainage facilities would be installed within the limits of the construction site, and no environmental effects would result from the

installation of these facilities. With implementation of the temporary stormwater drainage BMPs listed above, impacts on stormwater drainage systems would be less than significant and mitigation is not required.

The proposed Project would require construction of new utility connections, relocations and undergrounding of utilities, and other utility improvements. Utility installation and relocations would be limited to within the Project Area, where there are little to no known sensitive resources. As such, no significant environmental effects are anticipated during proposed Project construction. During construction activities, the City would coordinate with service providers to ensure that there are no disruptions in utility services. Therefore, impacts on electric power, natural gas, and telecommunications facilities would be less than significant and mitigation is not required.

- **Cause flooding during the projected 50-year developed storm event, which would have the potential to harm people, damage property or sensitive biological resources.**

As discussed in the Hydrology and Water Quality section (Section 3.9), the Project Area does not include sensitive biological resources or properties located within special flood hazard areas subject to inundation. In addition, the proposed construction site would not be accessible to the public. Proposed construction activities within the LA River would be performed during the dry season. Therefore, the proposed Project is not anticipated to cause flooding during the projected 50-year developed storm event that would have the potential to harm people or damage property or sensitive biological resources. Impacts would be less than significant and no mitigation is required.

XIX(b): Have sufficient water supplies available to serve the project and reasonably foreseeable future development during normal, dry and multiple dry years.

There are sufficient water supplies available to serve the water needs required for proposed construction activities, such as water for cleaning surfaces, mixing with concrete or other materials, or suppressing dust. The relatively minor water supply needed for proposed construction activities would leave sufficient water supplies available for other reasonably foreseeable future development during normal, dry, and multiple dry years. Therefore, impacts would be less than significant and mitigation is not required.

- **Whether sufficient capacity exists in the water infrastructure that would serve the project, taking into account the anticipated conditions at project buildout?**

As discussed above, there is sufficient water infrastructure capacity to serve the proposed construction activities. Therefore, impacts would be less than significant and mitigation is not required.

- **The amount by which the project would cause the projected growth in population, housing or employment for the Community Plan area to be exceeded in the year of the project completion.**

Proposed construction activities would not result in a measurable growth in population, housing, or employment. Construction workers would commute to the job site on a daily basis. Construction workers would likely be hired from the local area and are not likely to relocate from more distant areas. In addition, employment resulting from proposed construction activities would be short-term and temporary. Because proposed construction activities are not expected to result in population, housing, or employment growth, impacts would be less than significant and mitigation is not required.

- **The degree to which scheduled water infrastructure improvements or project design features would reduce or offset service impacts.**

Proposed construction activities would not reduce or offset services. If necessary, the City would work in close coordination with utility providers to develop a relocation plan to minimize possible impacts and disruption to service utilities. Therefore, impacts would be less than significant and mitigation is not required.

3.16.3.4 Operational Impacts

XIX(a): Require or result in the relocation or construction of new or expanded water, wastewater treatment or storm water drainage, electric power, natural gas, or telecommunications facilities, the construction or relocation of which could cause significant environmental effects.

Features of the proposed Project, including recreational playing fields and performance and event spaces, could result in increased day-use populations in the Project Area and additional water consumption and wastewater generation. Amenities, such as a community building and/or concession building, public restrooms, event vendor hook-ups, and drinking water fountains are proposed to accommodate the proposed Project. Aesthetic and recreational features, such as water features and landscape irrigation, are proposed to enhance the experience of the proposed Project. The features listed above are not expected to require or result in the construction of new water or wastewater treatment facilities or expand existing facilities. Therefore, impacts on water and wastewater treatment facilities would be less than significant and mitigation is not required.

The irrigation system for the proposed Project would be designed to receive recycled water (i.e., purple pipe) in the event that future supplies become available but would initially be hooked up to a potable water supply. There is potential for the proposed Project to receive treated overflow water from the nearby Hollenbeck Park Lake for irrigation purposes. Space may be reserved on the east side of Clarence Street for a future irrigation water connection and future building with treatment equipment.

Large-scale stormwater capture and use would not be feasible for irrigation purposes because of budget constraints and the physical characteristics of the Project Site (i.e., the Project Site is bisected by the LA River and has a linear configuration). Localized below-grade capture and use systems may be implemented below some of the proposed lawn areas to supplement potable irrigation water with captured site stormwater.

The proposed Project includes the construction of stormwater drainage systems to capture and route runoff from the Project Site and Viaduct to LID and structural treatment BMPs, before being discharged to the existing stormwater drainage facilities adjacent to the site. As described in the Hydrology and Water Quality section (Section 3.9), runoff from the Project Site would be treated through the use of various capture and use/release BMPs. For the tributary runoff that discharges through the Viaduct bents to the proposed West Park and East Park, structural treatment BMPs (i.e., proprietary vaults with media-filled cartridges) would be installed to treat the runoff for pollutants of concern. Runoff from larger storm events would be bypassed through the internal bypass of each BMP to new connections to the existing storm drain system. Due to their discharge locations and depths, it would not be feasible to install additional BMPs at the Viaduct bents draining to the Arts Plaza and directly to the LA River. Rather, these

portions of the Viaduct would rely on catch basin filter inserts installed as part of the Viaduct Replacement Project to treat the runoff.

The remaining localized rainfall falling on the portion of the Project Site outside of the Viaduct's footprint would be treated through a combination of incidental infiltration during sheet flow along proposed pervious land areas, incidental infiltration within localized vegetated basins, and below-grade capture and use systems below some of the proposed lawn areas in areas with a larger impervious surface area footprint. The incidental infiltration or capture and use of the stormwater would remove pollutants of concern. The captured site stormwater could then be used to supplement potable irrigation water at the lawns, as discussed above. Larger storm events would be captured and conveyed through proposed local storm drainage systems to new connections to the existing storm drainage systems. Engineering drawings showing the existing drainage area and storm drain facilities, as well as the placement of proposed LID BMPs are included in **Figure 3.16-1a** and **Figure 3.16-1b**. Additional figures depicting the design of the LID BMPs are included in the Conceptual Low Impact Development Report prepared for the proposed Project (Tetra Tech, 2018b).

The project would increase the amount of impervious surface areas from current conditions. However, prior to beginning the construction of the Sixth Street Viaduct, the existing mainline served this area, which was nearly 100 percent impervious. As described in Section 3.16.3.3, construction of the proposed stormwater drainage systems and BMPs would comply with the City's LID Ordinance (Ordinance Number 181899), as well as all applicable permits, design standards, and regulations to reduce significant environmental effects. Therefore, impacts on stormwater drainage facilities would be less than significant and mitigation is not required.

The proposed Project would require new utility connections and other utility improvements. Electricity would be required to power various proposed Project features such as park and street lighting, buildings (e.g., café building, concessions area, restrooms, and office and storage spaces), and electric vehicle charging stations and other mobility hub elements. Food truck and temporary performance equipment (sound and lighting) hookups would be required for special events. Natural gas may be required to heat water and interior spaces, operate cooling equipment, and generate power for buildings. Other utility improvements would include the installation of WiFi and security cameras.

As discussed in Section 3.16.3.4, the proposed utilities and utility relocations would be limited to within the Project Area, where there are little to no known sensitive resources. As such, no significant environmental effects are anticipated during proposed Project operation. The City would coordinate with service providers to ensure that there are no disruptions in utility services. Therefore, impacts would be less than significant and mitigation is not required.

- **Cause flooding during the projected 50-year developed storm event, which would have the potential to harm people or damage property or sensitive biological resources.**

As discussed in the Hydrology and Water Quality section (Section 3.9), the construction of terraces and vegetated planters would result in modifications to the LA River channel that could affect the hydraulic performance of the LA River. In addition, the proposed Project would increase the impervious surface area of the Project Site, which could result in increased stormwater runoff draining to the LA River. Therefore, the proposed Project could marginally increase flood flows during the 50-year design storm event. However, the proposed terraces and vegetated planters would be constructed as high as possible

Figure 3.16-1a: Low Impact Development Exhibit (West)

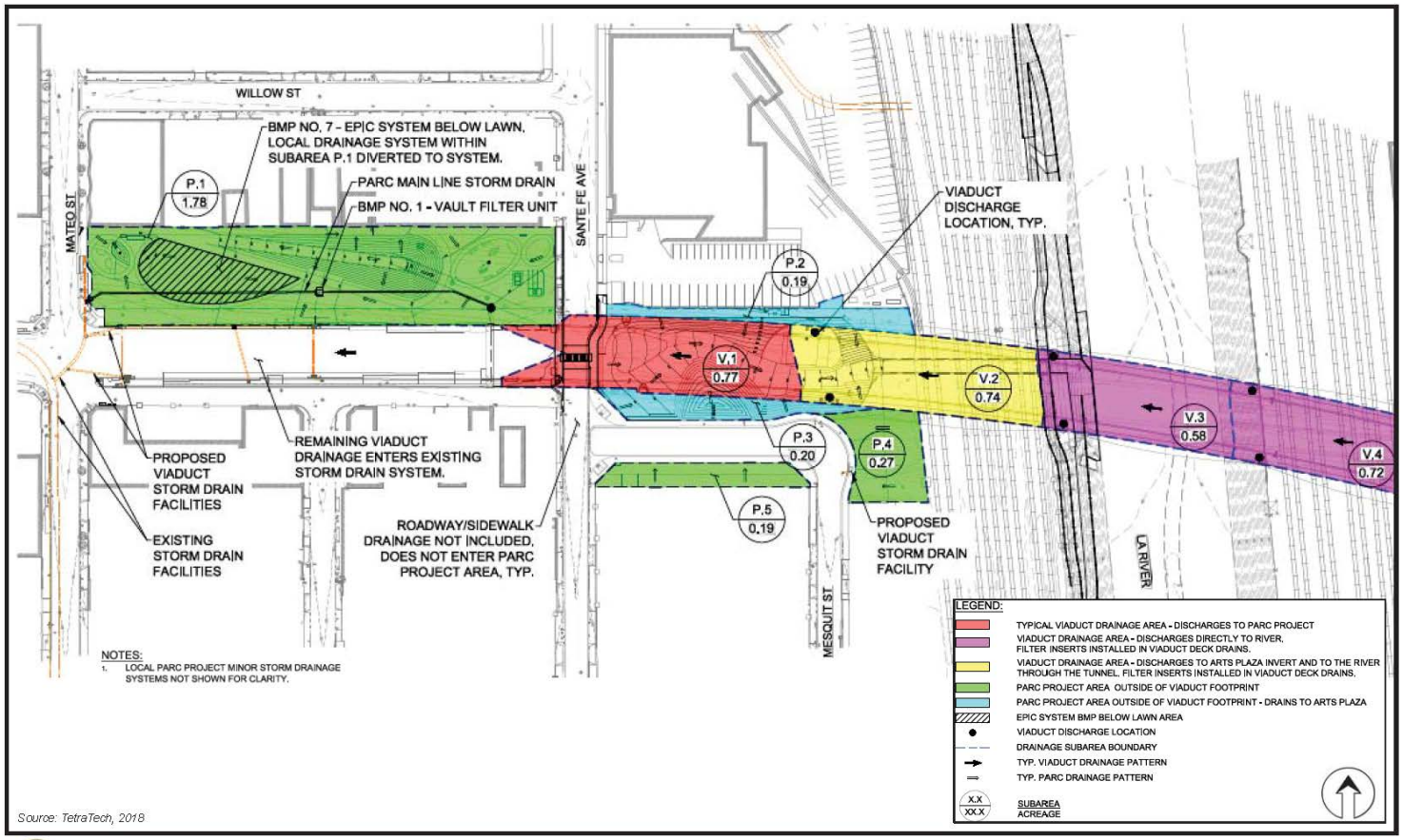

ENGINEERING
CITY OF LOS ANGELES

FIGURE 3.16-1a. LOW IMPACT DEVELOPMENT EXHIBIT (WEST)
Sixth Street PARC Project

Figure 3.16-1b: Low Impact Development Exhibit (East)

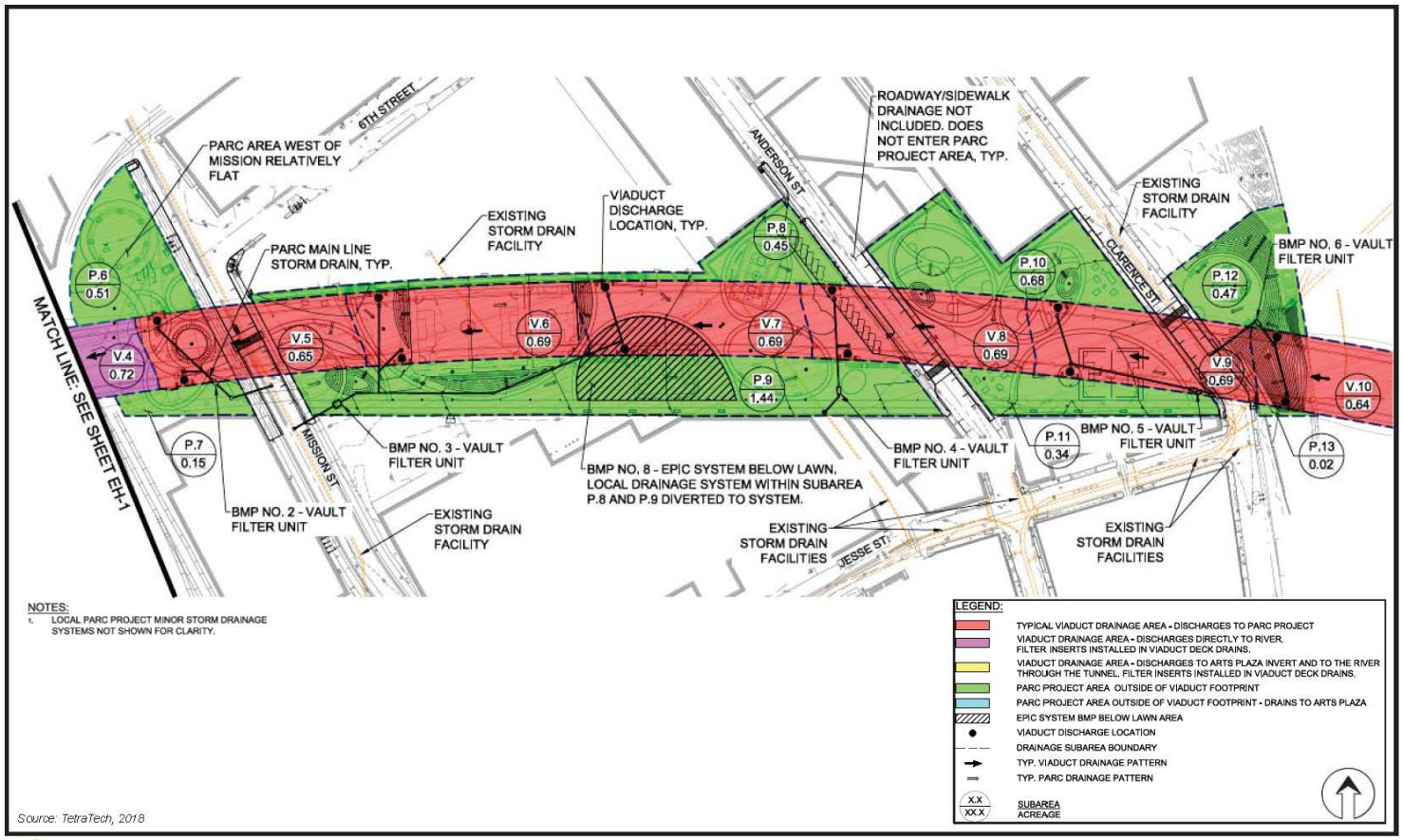

ENGINEERING
CITY OF LOS ANGELES

FIGURE 3.16-1b. LOW IMPACT DEVELOPMENT EXHIBIT (EAST)
Sixth Street PARC Project

on the west and east banks of the LA River such that flood waters would only be received in the rarest of storm events. In addition, the terracing would not increase water surface elevations greater than levels prior to the Viaduct Replacement Project. Therefore, any impacts to the hydraulic performance of the LA River through the construction of terraces and concrete planters are anticipated to be significantly offset by the Viaduct Replacement Project (see Section 3.16.7 for additional discussion on cumulative impacts).

As discussed in Section 3.9, there are no properties located within special flood hazard areas subject to inundation. In addition, as discussed in Section 3.3, there are no sensitive biological resources within the Project Area. Therefore, the proposed Project is not anticipated to cause flooding during the projected 50-year developed storm event that would have the potential to damage property or sensitive biological resources.

Although the proposed Project would not provide public access to the LA River channel, the public would be able to enter the LA River Access Tunnel, which would be subject to inundation. Therefore, the proposed Project could result in flooding that would have the potential to harm people. Safety measures would be added to the LA River Access Tunnel entry point within the Arts Plaza to deter the public from entering the tunnel during a storm event (e.g., vehicular deterrents such as bollards and safety warning devices). In addition, the City would develop a public safety plan to reduce the potential for flooding to cause harm to the public (**MM-HYDRO-1**). The public safety plan would include protocols for protecting pedestrians and potential homeless populations in the LA River Access Tunnel during flood conditions. With implementation of **MM-HYDRO-1**, the proposed Project would not cause flooding during the projected 50-year developed storm event, which would have the potential to harm people or damage property or sensitive biological resources; therefore, impacts would be less than significant and no mitigation is required.

XIX(b): Have sufficient water supplies available to serve the project and reasonably foreseeable future development during normal, dry and multiple dry years.

The LADWP water supply for the 2017-2018 fiscal year was 521,915 acre-feet (City of Los Angeles, 2018). The projected water demand for the City in 2030 is 776,000 acre-feet (City of Los Angeles Department of Water and Power, 2008).

The annual estimated water usage for the proposed Project is shown in **Table 3.16-1**. The proposed Project is anticipated to use approximately 20.16 acre-feet of water per year—approximately .004 percent of existing water usage—which is substantially lower than the annual water use threshold that triggers an assessment and consultation with LADWP (200-acre feet/year). The proposed Project would not meet the definition of a "Project" under California Water Code Section 10910 because the proposed work would not have a water demand that is equivalent to, or greater than, the amount of water required by a 500 dwelling unit project. The proposed Project would implement design features to reduce the consumption of water resources, such as low-flow water fixtures and water efficient irrigation design and practices.

In addition, the proposed Project would include drought-tolerant landscaping to further reduce water consumption (**BMP-USS-4**). Proposed Project landscaping would be consistent with the City's River Improvement Overlay (RIO) Ordinance (Ordinance Number 183145), which stipulates that 75 percent of any project's newly landscaped area shall be planted with any combination of the following: native

trees, plants and shrubs, or species defined as WatershedWise, or species listed in the Los Angeles County River Master Plan Landscaping Guidelines and Plant Palettes.

Table 3.16-1: Annual Estimated Water Usage

Proposed Project Feature	Volume (gallons/year)	Annual Projected Water Demand (acre-foot*)
General Irrigation Demand	4,841,246	14.86
Splash Pad	1,284,375	3.94
Non-Residential Buildings	444,844	1.37
Total	6,570,465	20.16

Notes: The landscaping water demand was calculated based on the Model Water Efficient Landscape Ordinance.
1 acre-foot = 325,851 gallons

The proposed Project is expected to receive potable water from several sources, including treated State Water Project (SWP) water from Northern California, groundwater, and/or water imported by the City from the Owens Valley and the Colorado River Aqueduct. As described above, the irrigation system would be designed with purple pipe to accommodate potential recycled water supply lines in the future and may eventually receive treated overflow water from Hollenbeck Park Lake.

Based on the projected water usage in **Table 3.16-1**, the proposed Project would leave sufficient water supplies available for other reasonably foreseeable future development during normal, dry, and multiple dry years. Therefore, impacts would be less than significant and mitigation is not required.

- **Whether sufficient capacity exists in the water infrastructure that would serve the project, taking into account the anticipated conditions at project buildout.**

See responses above. The proposed Project is anticipated to use approximately 20.16 acre-feet of water per year and would receive potable water from several sources. In addition, the irrigation system for the proposed Project would be designed to accommodate recycled water in the event that supplies become available. Based on the projected water usage, the existing water infrastructure has sufficient capacity to serve the proposed Project at buildout. Therefore, impacts would be less than significant and mitigation is not required.

- **The amount by which the project would cause the projected growth in population, housing or employment for the Community Plan area to be exceeded in the year of the project completion.**

As discussed in the Population and Housing section (Section 3.112), the proposed Project does not include the establishment of new homes or the extension of roads or infrastructure to undeveloped areas. In addition, the proposed Project would not create a substantial number of jobs. Therefore, the proposed Project is not expected to result in population, housing, or employment growth in the Central City North and Boyle Heights Community Plan areas. Therefore, impacts would be less than significant, and mitigation is not required.

- **The degree to which scheduled water infrastructure improvements or project design features would reduce or offset service impacts.**

The proposed Project would require new potable water connections for the proposed West and East Park buildings, drinking fountains and hookups throughout the Project Site, splash pad, and irrigation systems. As described above, the proposed Project would be designed with low-flow water fixtures, drought friendly landscaping, and water efficient irrigation design and practices to reduce the consumption of water resources. In addition, the irrigation system would be designed with purple pipe to accommodate potential recycled water supply lines in the future. The proposed Project would also be designed to promote beneficial stormwater treatment and/or capture, including structural BMPs and vegetated biofiltration basins to remove pollutants of concern before being discharged into the stormwater drain system.

The Project Area includes water infrastructure that accommodated the demands of the previous commercial and industrial buildings that were demolished as part of the Viaduct Replacement Project. Therefore, the proposed Project would not increase water demands that would result in service impacts to existing water infrastructure. These water conservation and treatment practices are expected to offset long-term service impacts. Therefore, impacts would be less than significant and mitigation is not required.

3.16.4 Best Management Practices

Impacts on Utilities and Service Systems would be avoided or minimized by implementing the following BMPs:

BMP-USS-1: Wastewater Treatment

Any wastewater produced as a result of proposed construction activities, such as water containing diesel and oil, paint, solvents, cleaners, and other chemicals, as well as construction debris and dirt, shall be collected in settlement tanks and screened. The clean water shall be discharged, and the remaining sludge shall be disposed of in accordance with water and solid waste disposal regulations, including the CWA, the Porter-Cologne Water Quality Control Act, and the RCRA.

BMP-USS-2: Temporary Stormwater Drainage Measures

Temporary stormwater drainage measures to prevent polluted runoff in the construction site shall include, but not be limited to, the installation of earth dikes, drainage swales, and ditches, silt fences, desilting basins, and stormwater drain inlet protection.

BMP-USS-3: Coordination with Service Providers

The location of underground utilities shall be confirmed prior to proposed construction activities by contacting the Underground Service Alert of Southern California (DigAlert). If necessary, the City shall work in close coordination with utility providers to develop a relocation plan to minimize possible impacts and disruption to service utilities.

BPM-USS-4: Reduced Consumption of Water Resources

Design features to reduce the consumption of water resources shall be implemented, such as low-flow water fixtures and water efficient irrigation design and practices. In addition, drought-tolerant landscaping shall be planted to further reduce water consumption.

3.16.5 Mitigation Measures

MM-HYDRO-1: Public Safety Plan

Prior to Final Plan approval, the City, in coordination with USACE, shall publish a Public Safety Plan in order to reduce the potential for safety impacts related to flooding. The Public Safety Plan shall include an evacuation plan and protocols for protecting pedestrians and potential homeless populations (e.g., vehicular deterrents such as bollards and safety warning devices) in the LA River Access Tunnel during flood conditions.

3.16.6 Significant Unavoidable Adverse Impacts

There are no significant unavoidable adverse impacts on Utilities and Service Systems resulting from construction and operation of the proposed Project.

3.16.7 Cumulative Impacts

As discussed in the Hydrology and Water Quality section (Section 3.9), any impacts to the hydraulic performance of the LA River through the construction of the terracing and vegetated planters are anticipated to be significantly offset by the hydraulic improvements of removing the center pier of the existing Sixth Street Viaduct as part of the Viaduct Replacement Project (Tetra Tech, 2018a). Therefore, when considered cumulatively with the Viaduct Replacement Project, impacts related to flooding would be less than significant.

As also discussed in Section 3.9, the Project Site consisted of commercial and industrial properties prior to the construction of the Viaduct Replacement Project, with impervious surface area totaling nearly 100 percent. Over the course of the Viaduct construction, the impervious surface area decreased to approximately 3.6 acres (28 percent). As shown in Section 3.9, the cumulative impervious surface area (including the Viaduct and the proposed Project) would be approximately 8.9 acres (71 percent). Therefore, cumulatively, when combined with the Viaduct Replacement Project, there would be a net decrease in impervious surface area at the Project Site, which would result in beneficial impacts on utilities and service systems (e.g., reductions in stormwater drainage and wastewater infrastructure demands).

With implementation of the BMPs described in Section 3.16.4, the proposed Project is not expected to result in any significant impacts on Utilities and Service Systems. Other projects in the vicinity of the proposed Project (see **Table 1-1**) would be required to comply with all federal and state regulations and be consistent with local policies related to Utilities and Service Systems. Projects would be required to confirm the presence of utilities that could be affected and consult with utility owners regarding potential relocations or service disruptions. Projects would also be required to consult with overseeing agencies (such as LADWP or SoCalGas) if water, energy, or other resource consumption is anticipated to be higher than developed thresholds. In addition, projects would be evaluated based on whether waste generation

(e.g., solid waste and wastewater) would exceed the capacity of the existing utility and service systems. Other development projects would be required to develop BMPs and mitigation measures to reduce impacts on Utilities and Service Systems. Therefore, the proposed Project would not result in cumulatively considerable impacts related to Utilities and Service Systems.

3.17 Mandatory Findings of Significance

3.17.1 Thresholds of Significance

According to Appendix G of the CEQA Guidelines and the *L.A. CEQA Thresholds Guide*, the proposed Project would have a significant impact if it would:

XXI(a) Have the potential to substantially degrade the quality of the environment, substantially reduce the habitat of a fish or wildlife species, cause a fish or wildlife population to drop below self-sustaining levels, threaten to eliminate a plant or animal community, substantially reduce the number or restrict the range of a rare or endangered plant or animal or eliminate important examples of the major periods of California history or prehistory.

XXI(b) Have impacts that are individually limited, but cumulatively considerable? ("cumulatively considerable" means that the incremental effects of a project are considerable when viewed in connection with the effects of past projects, the effects of other current projects, and the effects of probable future projects).

XXI(c) Have environmental effects that will cause substantial adverse effects on human beings, either directly or indirectly.

3.17.2 Construction Impacts

XXI(a): Have the potential to substantially degrade the quality of the environment, substantially reduce the habitat of a fish or wildlife species, cause a fish or wildlife population to drop below self-sustaining levels, threaten to eliminate a plant or animal community, substantially reduce the number or restrict the range of a rare or endangered plant or animal or eliminate important examples of the major periods of California history or prehistory.

Sections 3.1 through 3.16 address and disclose all potential environmental effects associated with proposed construction activities, which are summarized in **Table ES-1**. Proposed construction activities would result in temporary impacts to the quality of the environment, which include the following:

- Construction staging and activities would temporarily degrade the aesthetics of the Project Site.
- The use of construction equipment would also increase emissions of criteria air pollutants that would result in temporary impacts related to air quality and greenhouse gases.
- Removal of habitat and increased noise, vibration, light, carbon dioxide emissions, and human activity could impact wildlife.
- Changes to the concrete lining and banks of the Los Angeles River, including direct removal and replacement of concrete, could result in temporary impacts on jurisdictional aquatic resources.
- Excavation and other ground-disturbing activities could result in unanticipated fossil discovery and/or unearthing of buried archaeological remains, including prehistoric Native American remains.

- Modifications to the Los Angeles River, which would not impair the integrity of the historic resource.
- Proposed construction activities, including the remediation of contaminated soils would generate hazardous wastes and materials.
- Construction activities could result in erosion and increase sediments in stormwater runoff or generate dust.
- The use of construction equipment, which include dozers, pavement breakers, core drills, industrial saws, motor graders, rollers, backhoe loaders, trench diggers, soil compactors, and pavers, would temporarily generate additional noise and vibration in the Project Area.
- The presence of construction equipment could result in temporary congestion on roadways, loss of on-street parking, and delays to emergency service providers.

All construction impacts related to the quality of the environment would be temporary and short-term. The proposed Project would comply with required laws, permits, ordinances, and plans. Implementation of mitigation measures and best management practices (BMP), as identified in **Table 3.17-1** at the end of this section, would reduce impacts during proposed construction activities to less than significant.

XXI(b): Have impacts that are individually limited, but cumulatively considerable? ("cumulatively considerable" means that the incremental effects of a project are considerable when viewed in connection with the effects of past projects, the effects of other current projects, and the effects of probable future projects).

Sections 3.1 through 3.16 address and disclose all potential cumulatively considerable impacts associated with the proposed Project. With the incorporation of mitigation measures and BMPs, as identified in **Table 3.17-1**, impacts during proposed construction activities would be less than significant.

XXI(c): Have environmental effects that will cause substantial adverse effects on human beings, either directly or indirectly.

Sections 3.1 through 3.16 address and disclose all potential environmental effects associated with proposed construction activities, which are summarized in **Table ES-1**. As described above, proposed construction activities would result in temporary impacts to the quality of the environment, which could result in direct and indirect effects on human beings, including:

- Visual impacts associated with construction staging and activities.
- Health risks associated with greater pollutant emissions and exposure to hazardous wastes and materials.
- Sensitivity to increased light, noise, and vibration.
- Traffic and transportation impacts from temporary road closures and the movement of construction equipment/vehicles.

Proposed construction activities would comply with required laws, permits, ordinances, and plans. Implementation of mitigation measures and BMPs, as identified in **Table 3.17-1,** would reduce impacts during proposed construction activities to less than significant.

3.17.3 Operational Impacts

XXI(a): Have the potential to substantially degrade the quality of the environment, substantially reduce the habitat of a fish or wildlife species, cause a fish or wildlife population to drop below self-sustaining levels, threaten to eliminate a plant or animal community, substantially reduce the number or restrict the range of a rare or endangered plant or animal or eliminate important examples of the major periods of California history or prehistory.

Sections 3.1 through 3.16 address and disclose all potential environmental effects associated with operation of the proposed Project, which are summarized in **Table ES-1**. Operation of the proposed Project could result in potentially significant impacts to the quality of the environment, which include the following:

- During large special events, increased vehicle traffic would result in greater emissions of criteria air pollutants, resulting in impacts on air quality.
- Proposed and existing parking spaces would not meet the anticipated parking demand during operation of the proposed Project.
- During large special events, increased vehicle traffic would result in impacts related to traffic and parking.

The proposed Project would comply with required laws, permits, ordinances, and plans. Implementation of the mitigation measures and BMPs, as identified in **Table 3.17-1,** would be implemented to reduce impacts to less than significant.

Operation of the proposed Project would result in beneficial impacts to the quality of the environment, which include the following:

- The proposed Project would transform an underutilized lot into an aesthetically pleasing landscaped park that would improve the visual character and quality of the Project Site.
- The proposed Project would include trees and other natural and artificial substrates that would potentially create additional nesting and roosting habitat for birds and bats.
- The proposed Project would remediate contaminated soils to standards allowing unrestricted use of the land.
- The proposed Project would provide open space and recreational facilities that would meet the existing need for parks and recreational facilities in the surrounding communities.
- The proposed Project would generate noise at levels that are less than the noise levels produced by the existing land use.
- The proposed Project would support active modes of transportation and public transit.

- The proposed Project would include low impact development design and practices to reduce the consumption of water resources and promote beneficial stormwater treatment and/or capture.

Therefore, impacts during the operation of the proposed Project would be reduced to less than significant.

XXI(b): Have impacts that are individually limited, but cumulatively considerable? ("cumulatively considerable" means that the incremental effects of a project are considerable when viewed in connection with the effects of past projects, the effects of other current projects, and the effects of probable future projects).

Sections 3.1 through 3.16 address and disclose all potential cumulatively considerable impacts associated with the proposed Project. Implementation of the mitigation measures and BMPs, as identified in **Table 3.17-1**, would reduce cumulatively considerable impacts to less than significant.

XXI(c): Have environmental effects that will cause substantial adverse effects on human beings, either directly or indirectly.

Sections 3.1 through 3.16 address and disclose all potential environmental effects associated with operation of the proposed Project, which are summarized in **Table ES-1**. As described above, operation of the proposed Project would result in potential impacts to the quality of the environment, which could result in direct and indirect effects on human beings, including:

- Health risks associated with increased criteria air pollutant emissions during large special events.
- Vehicle delays associated with increased traffic during large special events.

Operation of the proposed Project would comply with required laws, permits, ordinances, and plans. Implementation of the mitigation measures and BMPs, identified in **Table 3.17-1,** would reduce impacts to less than significant. With incorporation of mitigation measures, operation of the proposed Project would not result in environmental effects that would cause substantial adverse effects on human beings, either directly or indirectly.

Table 3.17-1: Summary of Mitigation Measures and Best Management Practices

Environmental Resource	Mitigation Measures	Best Management Practices (BMP)
Aesthetics	No mitigation measures are required.	**BMP-AES-1: Construction Lighting** If nighttime lighting at the construction site is required, lighting shall be directed downward, on-site, and away from surrounding land uses. **BMP-AES-2: Construction Staging and Construction Staging Area** Construction staging shall be coordinated with the construction of the Viaduct Replacement Project; therefore, additional use or acquisition of public space for equipment and vehicles will not be required. The construction area shall be fenced to obscure views of construction activities, materials, and staged equipment. **BMP-AES-3: Operational Lighting** Outdoor lighting for recreational activities shall be limited to the proposed operating hours. **BMP-AES-4: Regulatory Requirements for Lighting** • Proposed Project illumination shall comply with the provisions in the City's Municipal Code, including LAMC Chapter 1, Article 2, Sec. 12.21A5(k); LAMC Chapter 1, Article 7, Sec. 17.08C; and LAMC Chapter 9, Article 3, Section 93.0117. • The new walkway lighting shall be compliant with all regulations set forth by the City's Bureau of Street Lighting Design Standards and Guidelines to ensure that the area receives lighting that meets national illumination standards for vehicular and pedestrian traffic, does not emit light pollution, and produces little glare. • Lighting for sports fields and courts shall operate in compliance with Los Angeles City Recreation and Parks (RAP) illuminance level standards for outdoor sports and recreational facilities.

Environmental Resource	Mitigation Measures	Best Management Practices (BMP)
		• Lighting for security shall be illuminated in accordance with the Illuminating Engineering Society (IES) standards, IES RP-33-14 *Lighting for Exterior Environments* and IES G-1-03 *Security Lighting for People, Property and Public Spaces*, as updated by IES G-1-16 *Guide for Security Lighting for People, Property and Critical Infrastructure*.
Air Quality	**MM-AQ-1: Newer/Tier 4 Engines in Haul Trucks and Construction Equipment** • Include in all construction contracts the requirement to use 2007 and newer diesel haul trucks (e.g., material delivery trucks and soil import/export). • Include in all construction contracts the requirement that all off-road diesel-fueled construction equipment greater than 50 horsepower shall meet Tier 4 off-road emission standards. In addition, if not already supplied with a factory-equipped diesel particulate filter, all construction equipment shall be outfitted with Best Available Control Technology (BACT) devices certified by CARB. Any emissions control device used by the contractor shall achieve emissions reductions that are no less than what could be achieved by a Level 3 diesel emissions control strategy for a similarly sized engine as defined by CARB regulations. To the extent locally available, construction equipment shall incorporate emissions savings technology such as hybrid drives. In the event that any equipment required under this mitigation measure is not available, provide documentation as information becomes available. A copy of each unit's certified tier specification, BACT documentation, and CARB or SCAQMD operating permit at	**BMP-AQ-1: SCAQMD Rules and Regulations** The contractor shall implement measures to ensure that all construction activities are consistent with SCAQMD rules and regulations. **BMP-AQ-2: Construction Worker Incentives** The City shall offer ride-share and transit incentives for construction workers to reduce emissions associated with motor vehicle use. **BMP-AQ-3: Construction Equipment Maintenance** The contractor shall maintain construction equipment by conducting regular tune-ups according to the manufacturers' recommendations.

Environmental Resource	Mitigation Measures	Best Management Practices (BMP)
	the time of mobilization of each applicable unit of equipment shall be provided. • Maintain construction equipment by conducting regular tune-ups according to the manufacturers' recommendations. • To the extent possible, the import and export of onsite materials shall be scheduled to minimize empty return trips. **MM-AQ-2: Construction Equipment Requirements** • All on- and off-road diesel-fueled equipment shall not idle for more than 5 minutes when not in use. The idling of diesel-fueled equipment and haul trucks within 1,000 feet of nearby residential land uses shall be prohibited. Signs shall be posted in the designated queuing areas and or job sites to remind drivers and operators of the 5-minute-idling limit. • Staging and queuing areas shall be located at the furthest distance possible from nearby residential land uses; • Use alternatively fueled (e.g., compressed natural gas, liquefied natural gas, propane), gasoline-fueled, or electrified construction equipment in place of diesel-fueled equipment to the extent locally available. The following additional measures are recommended to help ensure consistency with SCAQMD rules and regulations, including (but not limited to) Rule 403 for the control of fugitive dust.	

	MM-AQ-3: Fugitive Dust Controls • All active portions of the construction site shall be watered twice daily to prevent excessive amounts of dust. • Non-toxic soil stabilizers shall be applied to all inactive construction areas (previously graded areas inactive for 20 days or more, assuming no rain) according to manufacturers' specifications. • All excavating and grading operations shall be suspended when wind gusts (as instantaneous gust) exceed 25 miles per hour. • On-site off-road equipment and on-road vehicles used on-site shall be limited to 15 miles per hour. • All on-site roads shall be paved as soon as feasible, watered twice daily, or chemically stabilized. • Visible dust beyond the property line which emanates from the project shall be prevented to the maximum extent feasible. • All material transported off-site shall be either sufficiently watered or securely covered to prevent excessive amounts of dust prior to departing the job site. • Track-out devices shall be used at all construction site access points. • All delivery truck tires shall be watered down and/or scraped down prior to departing the job site. • Streets shall be swept at the end of the day if visible soil material is carried onto adjacent paved public roads and use of SCAQMD Rule 1186 and 1186.1 certified street sweepers or roadway.	

Environmental Resource	Mitigation Measures	Best Management Practices (BMP)
	• Replace ground cover in disturbed areas as quickly as possible. • All trucks that are to haul excavated or graded material on-site shall comply with State Vehicle Code Section 23114 (Spilling Loads on Highways), with special attention to Sections 23114(b)(F), (e)(4) as amended, regarding the prevention of such material spilling onto public streets and roads. • Conduct continuous, direct-reading, near real-time ambient monitoring of PM10. Install appropriate signage and notify the SCAQMD in accordance with Rule 1466, Control of Particulate Emissions from Soils with Toxic Air Contaminants, prior to conducting any earth-moving activities on any site meeting the applicability of the rule.	
Biological Resources	Impacts on Biological Resources would be less than significant; therefore, mitigation measures are not required.	Impacts on Biological Resources would be avoided or minimized by implementing the following avoidance and minimization measures, which are subject to applicable regulatory agency approval**:** **BMP-BIO-1: Pre-Construction Wildlife Surveys** Pre-construction wildlife surveys shall be completed by a qualified biologist no more than 48 hours prior to clearing, grubbing, or other construction activities to determine the presence/absence of wildlife species, including special-status species, within 100 feet of the construction area. Special attention will be focused on any existing burrowing, roosting, and nesting habitat within the Project Area. Surveys shall be repeated if construction activities are suspended for five days or more. If any wildlife species are identified, appropriate BMPs shall be developed and implemented to reduce potential

		impacts on these species, in consultation with regulatory agencies where appropriate. **BMP-BIO-2: Trash and Construction Debris Removal** All trash and construction debris shall be removed from the LA River construction areas on a daily basis. All water quality BMP materials shall be properly maintained during project construction, and removed upon completion of construction activities. After completion of proposed construction activities, all construction equipment and materials shall be removed from the Project Area, and the Project Area shall be returned to pre-project conditions. **BMP-BIO-3: Work Area Limitations** No work for the proposed Project shall be conducted on the Fourth Street Bridge or Seventh Street Bridge structures. **BMP-BIO-4: Nesting Bird Survey** If vegetation trimming or clearing is conducted during the nesting season (typically February 15 through September 15), nesting bird surveys shall be completed by a qualified biologist within 300 feet of potential bird-nesting areas and 500 feet of potential raptor-nesting areas no more than 48 hours prior to trimming/removal activities to determine if nesting birds are within the affected vegetation. Surveys shall be repeated if trimming or removal activities are suspended for five days or more. **BMP-BIO-5: Nesting Bird Buffer** If nesting birds protected under the MBTA and California Fish and Game Code Sections are found in the Project Area, appropriate buffer consisting of orange flagging/fencing or similar (typically up to 300 feet for songbirds and 500 feet for raptors shall be installed and maintained until nesting activity has ended, as determined in coordination with the project biologist and regulatory agencies, as appropriate, to ensure that nesting birds and active nests are not harmed.

		BMP-BIO-6: Hazardous Material BMPs Appropriate hazardous material BMPs shall be implemented to reduce the potential for chemical spills or contaminant releases into the LA River, including any non-stormwater discharge. **BMP-BIO-7: Equipment Maintenance** All equipment refueling and maintenance shall be conducted in the staging area. In addition, vehicles and equipment shall be checked daily for fluid and fuel leaks, and drip pans shall be placed under all equipment that is parked and not in operation. **BMP-BIO-8: Regulatory Permits** The City shall consult with the appropriate responsible resource agency (e.g., CDFW and RWQCB) to determine permanent and temporary impact areas. Prior to undertaking ground-disturbing activities within or immediately adjacent to any aquatic resource areas, the City and/or their consultant shall obtain a CWA Section 401 Water Quality Certification, and California Fish and Game Code Section 1602 Streambed Alteration Agreement. **BMP-BIO-9: Pre-Construction Bat Surveys** At least 30 days prior to construction, alterations to the LA River Access Tunnel shall be surveyed by a qualified biologist to assess the presence of bats or potential bat-roosting cavities. If bats or bat-roosting cavities are identified, then during the non-breeding and active season (typically October), bats shall be safely evicted, to the extent feasible, under the direction of a qualified biologist. Once it has been determined that all roosting bats have been safely evicted from roosting cavities, exclusionary devices shall be installed and maintained where appropriate to prevent bats from roosting in these cavities prior to construction. **BMP-BIO-10: Monitoring During LA River Access Tunnel Alteration**

Environmental Resource	Mitigation Measures	Best Management Practices (BMP)
		In the event that all bats are not able to be excluded from affected roosting habitat, a qualified biologist shall monitor LA River Access Tunnel alterations. If bats are disturbed, work shall be safely suspended until all bats leave the vicinity on their own, or alternative measures can be identified under the direction of a qualified biologist. Work shall resume only once the bats have left the site and/or approval to resume work is given by a qualified biologist. **BMP-BIO-11: Bat Monitoring** In the event that all bats are not able to be excluded from affected roosting habitat, a qualified biologist shall monitor structure alteration activities. If bats are disturbed, work shall be safely suspended until all bats leave the vicinity of the LA River Access Tunnel on their own, or alternative measures shall be identified under the direction of a qualified biologist. Work shall resume only once the bats have left the site and/or approval to resume work is given by a qualified biologist. Surveys and exclusion measures are expected to prevent maternal colonies from becoming established in structures to be removed or altered. In the event that a maternal colony of bats is found, no work shall be conducted within 100 feet of the maternal roosting site until the maternal season is over or the bats have left the site, or as otherwise directed by a qualified biologist. The site shall be designated as a sensitive area and protected as such until the bats have left the site. No activities shall be authorized adjacent to the roosting site. Combustion equipment, such as generators, pumps, and vehicles, shall not be parked or operated under or adjacent to the roosting site. Construction personnel shall not be authorized to enter areas beneath the colony, especially during the evening exodus.
Cultural Resources	No mitigation measures are required.	**BMP-CUL-1: Archaeological Monitoring During Excavation**

Environmental Resource	Mitigation Measures	Best Management Practices (BMP)
		A qualified archaeological monitor shall conduct archaeological monitoring in the West Park and East Park for excavations at depths greater than 5 feet. Monitoring efforts may be reduced or eliminated for those portions of the Project Area shown to have been recently disturbed by construction activities associated with the Sixth Street Viaduct Project. **BMP-CUL-2: Tribal Cultural Resources Sensitivity Training** The City shall invite a qualified tribal representative from the Gabrieleño Band of Mission Indians to a pre-construction meeting to provide a training session to the construction contractor regarding potential tribal resources that could be encountered during construction activities and procedures to follow should a tribal resource be encountered. **BMP-CUL-3: Tribal Cultural Resources Monitoring During Excavation** The City shall retain and compensate for the services of a Tribal monitor who is both approved by the Gabrieleño Band of Mission Indians-Kizh Nation Tribal Government and is listed under the NAHC's Tribal Contact list for the Project Area. The Tribal monitor shall only be present on-site during the construction phases that involve ground-disturbing activities in the proposed Arts Plaza. Monitoring efforts may further be reduced or eliminated for those portions of the in the proposed Arts Plaza that (1) are underlain with artificial fill of known origin, (2) require superficial scraping of land at depths less than five feet, or (3) are demonstrated to have been recently disturbed by construction activities associated with the Sixth Street Viaduct Project. The on-site monitoring shall cease when the grading and excavation activities in the proposed Arts Plaza are completed, or when the Tribal representatives and monitor have

Environmental Resource	Mitigation Measures	Best Management Practices (BMP)
		indicated that the site has a low potential for impacting tribal cultural resources. **BMP-CUL-4: Unanticipated Discovery of Archaeological and Tribal Cultural Resources** In the event that potentially significant buried archaeological materials are encountered within the Project Area, all work in the vicinity must stop until the archaeological and Tribal monitor can visit the site and assess the significance of the resource. If the resources are Native American in origin, the Gabrieleño Band of Mission Indians-Kizh Nation shall coordinate with the City regarding treatment and curation of these resources. Work may continue on other parts of the Project Area while evaluation and, if necessary, mitigation takes place (CEQA Guidelines Section 15064.5 [f]). **BMP-CUL-5: Unanticipated Discovery of Human Remains** Health and Safety Code Section 7050.5, Section 15064.5(e) of the CEQA Guidelines, and PRC Section 5097.98 mandate the process to be followed in the unlikely event of an unanticipated discovery of human remains in a location other than a dedicated cemetery. The Los Angeles County Coroner must be notified within 24 hours of the discovery of potentially human remains. The Coroner must then determine within two working days of being notified if the remains are subject to his or her authority. If the Coroner recognizes the human remains (including bone fragments and funerary objects) to be Native American, he or she must contact the NAHC by phone within 24 hours. The NAHC then designates a Most Likely Descendant (MLD) with respect to the human remains within 48 hours of notification. The MLD will then have the opportunity to recommend to the Project proponent means for treating or disposing of, with appropriate dignity, the human remains and associated grave goods within 24 hours of notification.

Environmental Resource	Mitigation Measures	Best Management Practices (BMP)
Energy	Implementation of the mitigation measures identified in Section 3.2.4 (Air Quality), would reduce impacts related to construction-related energy use. No mitigation measures specifically for Energy are required.	Implementation of the BMPs identified in Section 3.2.4 (Air Quality) and Section 3.7.4 (Greenhouse Gas Emissions), construction-related energy use would be minimized to the greatest extent feasible. No BMPs specifically for Energy are required.
Geology and Soils	No mitigation measures are required.	**BMP-GEO-1: Erosion Control** The contractor shall implement standard BMPs, such as the use of fiber rolls and silt fencing, to reduce the amount of dust and dirt from leaving the construction area. **BMP-GEO-2: Geotechnical Site Investigation Recommendations** The Geotechnical Site Investigation report for the proposed Project includes recommendations to ensure that the Project Area is suitable for construction, and to ensure that appropriate measures are taken to reduce impacts during earthwork, excavation, utility trenching, backfilling, and other construction activities (Hushmand Associates, Inc., 2018). Backfill soils shall be moisture-conditioned and recompacted to meet ASTM International standards to counteract the potential adverse effects of soil expansiveness. If import soils are used, the import soil shall not exhibit an Expansion Index greater than 20 or contain more than 35 percent fines (i.e., fine-grained soils), and shall be screened by the geotechnical engineer to meet ASTM International standards. **BMP-PAL-1: Paleontological Sensitivity Training** Prior to the start of construction, all field personnel shall be briefed regarding the types of fossils that could be found and the procedures to follow should paleontological resources be encountered. Specifically, the training shall provide a description of the fossil resources that may be encountered, outline steps to follow when a

Environmental Resource	Mitigation Measures	Best Management Practices (BMP)
		fossil discovery is made, and provide contact information for a qualified paleontologist. The training shall be developed by a qualified paleontologist and provided as hand-outs or a PowerPoint Presentation that may be presented concurrently with other pre-construction training. **BMP-PAL-2: Unanticipated Paleontological Resource Discoveries** In the event that an unanticipated fossil discovery is made during construction, a qualified professional paleontologist shall be retained to examine the find and to determine whether further paleontological resource mitigation is warranted in accordance with SVP (2010) guidelines.
Greenhouse Gas Emissions	No mitigation measures are required.	**BMP-GHG-1: Off-Road Equipment Construction Requirements** Idling shall be limited for vehicles and off-road equipment. Off-road equipment shall meet Tier 4 emission standards and newer. Efficient on-road haul trucks shall be used, where practicable.
Hazards and Hazardous Materials	**MM-HAZ-1: Remediation Category 1A** The City shall be required to implement the following measures in areas where Resource Conservation and Recovery Act (RCRA) Level Heavy Metals, polychlorinated biphenyls (PCB), or total petroleum hydrocarbon diesel range organics (TPH DRO) will be excavated and disposed of at Class 1 Hazardous Waste Landfills: • Soils will be excavated as needed up to a maximum depth of 4.5 feet below ground surface (bgs), consistent with the limits designated on **Figures 3.8-3a** and **3.8-3b**, Areas of Concern with Contamination. • The transport and disposal of RCRA hazardous waste will be accompanied with a Hazardous Waste Manifest (i.e., documentation accompanying the transport, treatment,	**BMP-HAZ-1: Coordination with Regulatory Agencies** The City shall coordinate with Metro, U.S. EPA, and DTSC during construction activities to minimize health risks to the public or the environment associated with ongoing cleanup actions within the Project Area. **BMP-HAZ-2: Compliance with SCAQMD Rules and Regulations** The contractor shall implement measures to ensure that all construction activities are consistent with SCAQMD rules and regulations, including Rule 1166 - Volatile Organic Compound Emissions from Decontamination of Soil and Rule 1466 - Control of Particulate Emissions from Soils with Toxic Air Contaminants.

Environmental Resource	Mitigation Measures	Best Management Practices (BMP)
	storage and disposal of hazardous waste) completed by a licensed transporter. A site-specific CalEPA Hazardous Waste Generator Identification Number will be obtained for each RCRA hazardous waste. Additional sampling and testing will likely be required by the facility accepting the soil for disposal. • For excavations deeper than 4 feet, shoring or other approved means will be required to maintain stability of the excavation walls. • During excavation activities, dust and runoff controls will be implemented to prevent windborne or surface waterborne migration of the soil from the Project Site. The soils will be directly loaded into the transport trucks, which will require tarps to prevent spillage or windblown loss of soil during transport. These controls will be verified and monitored by an independent third party. • A site-specific Health and Safety Plan (HASP) will be prepared and implemented during all proposed construction activities, including full time perimeter sampling and testing of particulates and dust from the Project Site. • All onsite workers and supervisors will complete a 40-hour Occupational Safety and Health Administration (OSHA) Hazardous Waste Operations and Emergency Response (HAZWOPER) training course and be equipped with the appropriate personal protective equipment. • Excavated areas will be backfilled with certified clean soil. **MM-HAZ-2: Remediation Category 2A**	

Environmental Resource	Mitigation Measures	Best Management Practices (BMP)
	The City shall be required to implement the following measures in areas where soils contaminated with Heavy Metals and/or TPH DRO that are classified as non-RCRA hazardous waste will be excavated. These contaminated soils shall be disposed at Class 2 Landfills: • Soils will be excavated as needed up to a maximum depth of 6 feet bgs, consistent with the limits designated on **Figures 3.8-3a** and **3.8-3b**, Areas of Concern with Contamination. • The transport and disposal of non-RCRA hazardous waste will be accompanied with a Hazardous Waste Manifest completed by a licensed transporter. A CalEPA Non-RCRA Hazardous Waste Generator Identification Number will be obtained. Additional sampling and testing will likely be required by the facility accepting the soil for disposal. • For excavations deeper than four feet, shoring or other approved means shall be required to maintain stability of the excavation walls. • During excavation activities, dust and runoff controls will be implemented to prevent windborne or surface waterborne migration of the soil from the Project Site. The soils will be directly loaded into the transport trucks, which will require tarps to prevent spillage or windblown loss of soil during transport. These controls will be verified and monitored by an independent third party. • A site-specific HASP will be prepared and implemented during all proposed construction activities, including full time perimeter sampling and testing of particulates and dust from the Project Site.	

Environmental Resource	Mitigation Measures	Best Management Practices (BMP)
	• All onsite workers and supervisors will complete a 40-hour OSHA HAZWOPER training course and be equipped with the appropriate personal protective equipment. • Excavated areas will be backfilled with certified clean soil. **Remediation Category 2B** In addition to the measures above, the following measures shall be implemented in areas where VOCs were observed in soil gases: • Emission controls will be used to clear the area of emitting VOCs (i.e., spraying water or applying foam agents to all exposed soil surfaces and/or using large, spark-free fans). Full-time monitoring will be required to verify that the emission controls are effective in preventing the VOCs from impacting workers or the public. Monitoring will comply with SCAQMD Rule 1166. • A detailed HASP will be prepared and implemented during the excavation and transport of contaminated soils. • The excavation, transport, and disposal of contaminated soils will require permitting and approval by the CUPA, CalEPA/DTSC, and SCAQMD. A detailed Work Plan/Remedial Action Plan will be prepared and submitted to these agencies for review and approval. Under Rule 1166, a Mitigation Management Plan for potential VOC emissions during excavation will be submitted to SCAQMD and subject to SCAQMD approval. A site-specific CalEPA Hazardous Waste Generator	

Environmental Resource	Mitigation Measures	Best Management Practices (BMP)
	Identification Number will be obtained and manifests completed by the licensed transporter. • A soil vapor extraction (SVE) system will be designed and installed to remove and treat VOCs in the soil gases. If Health Risk Assessments indicate the need, a vertical barrier/line will be installed around the perimeter of the area to prevent soil gases with VOCs from migrating back into the area. Gases migrating from below the clean backfill or deeper depths will be extracted through the SVE slotted wells and treated by the SVE treatment system. Treatment for VOCs typically involves carbon filtration unless hydrogen sulfide is detected in the gas stream. Operating and maintenance procedures for the SVE system and permit applications will be prepared and approved by the oversight agency and SCAQMD. • If the City determines it is necessary, a "Pilot Study" will be designed and implemented to evaluate the sustainable flow rate and concentration of VOCs in the soil gas stream and to determine the size of the final SVE system components. • Design of the SVE system, preparation of a Design Report and Work Plan/Remedial Action Plan (including HASP) will be submitted to and subject to approval by the CUPA and LACoFD Site Mitigation Unit. • The SVE will be implemented and monitored. This may require several months to over a year. • The City shall provide documentation to the CUPA, LACoFD Site Mitigation Unit, and SCAQMD when the SVE has reached the specified clean-up goals.	

Environmental Resource	Mitigation Measures	Best Management Practices (BMP)
	• Excavated areas will be backfilled with certified clean soil. **MM-HAZ-4: Remediation Category 3** The City shall be required to implement one of the following three options in areas where no heavy metals were observed, but VOCs were observed in soil gas: • Option 1: This alternative will involve the same measures as described under Category 2b above. Contaminated soils will be removed to a depth of up to 15 feet or more and shoring of the excavation walls will be necessary. A liner will be installed on the bottom of the excavation area to prevent contaminated soil gas from re-entering the backfill soils. Gas migration from the side walls will be mitigated by either installation of a vertical liner placed on the side walls of the excavation or SVE wells installed vertically outside the limits of the excavation after backfilling is done. The backfill soil will be certified clean fill and placement will need to meet the geotechnical specifications of the proposed Project design. During the process, the site will require strict emissions controls and monitoring. • Option 2: This alternative, the SVE treatment method, utilizes extraction and monitoring wells (In Situ Method) or excavation and encapsulation of impacted soils in above ground piles with horizontal slotted piping (On Site Method), a vacuum pump or pumps, and carbon filtration units to extract and remove VOCs from the soil gas. The process requires several steps as follows: 1. Design and implementation of a "Pilot Study" to evaluate the sustainable flow rate and concentration	

Environmental Resource	Mitigation Measures	Best Management Practices (BMP)
	of VOCs in the soil gas stream and to size the final SVE system components. 2. Design of the SVE system, preparation of a Design Report and Work Plan/Remedial Action Plan (including HASP) for submittal to and approval by the CUPA and CalEPA/DTSC. 3. Solicitation of bids for construction and implementation of the remediation. 4. Implementation and monitoring of the SVE. This may require several months to over a year. 5. Reporting to the agencies with documentation that the SVE has reached the specified clean up goals. • Option 3: This alternative will mitigate the impact of the VOCs and/or methane and hydrogen sulfide by precluding soil gases migration from the subsurface soil and intrusion into structures or other facilities and surface emissions. Depending on the type of soil gases and pressure in the soil gas, the systems can include several of the following components: o Shallow excavation (three to four feet below ground surface [bgs]) to allow installation of the mitigation components (some of the soil will be used to backfill trenches) o Gravel layers and slotted piping for gas collection o Liner installation above the slotted piping and extending side wide o Vacuum pumps for gas extraction or air injection blowers	

Environmental Resource	Mitigation Measures	Best Management Practices (BMP)
	○ Filtration systems to remove VOCs and/or hydrogen sulfide from the gas stream ○ Geomembrane barriers placed beneath concrete slabs and/or foundations or fill areas ○ Installation of automated and/or manual monitoring systems **MM-HAZ-4: Remediation Category 4** The City shall be required to implement the following measure in areas within Caltrans ROW where soil contains ADL: • In accordance with the Caltrans/DTSC ADL Agreement, soils above a depth of approximately 2.9 feet bgs will require one foot of clean soil cover to remain on site per the Caltrans/DTSC ADL Agreement. **MM-HAZ-5: Soil Gas Sampling** Additional soil gas sampling and testing is recommended for completion in PARC Areas 1A, 5, 6, 7, and 8. The additional sampling could potentially eliminate or reduce the need for soil gas remediation. Ambient air and soil gas samples shall be tested for VOCs. If soil gas samples in PARC Area 6 yield ILCR values below the *de minimis* risk target or within the risk management range, no further mitigation and/or remedial actions will be required. If ILCR values are above the *de minimis* risk target, additional remedial actions will be taken to lower values to within the risk management range, such as applying SVE to a maximum depth of 15 to 20 feet bgs. **MM-HAZ-6. Methane Mitigation and Testing**	

Environmental Resource	Mitigation Measures	Best Management Practices (BMP)
	Methane mitigation applies to PARC Area 1A, which is located within the Methane Zone, and portions of PARC Area 7, where soil gases were detected and impervious surfaces are to be constructed adjacent to existing buildings. Any buildings (except naturally vented) to be constructed in Area 1A shall have methane mitigation systems meeting Level II requirements involving membrane and passive venter per Table 71, unless additional testing indicates no subsurface gas pressure and lower methane concentrations. In addition, paved areas that are over 5,000 square feet in area and within 15 feet of the exterior wall of a commercial, industrial, institutional building, shall be vented in accordance with the Methane Mitigation Standards, design Level II, unless additional testing indicates no subsurface gas pressure and lower methane concentrations. Additional testing for methane concentrations and subsurface pressure shall be completed in accordance with the Division 71 Methane Seepage Regulations testing requirements should any buildings or paved areas over 5,000 square feet be proposed in PARC Area 1A and in PARC Area 7 where methane was detected.	
Hydrology and Water Quality	**MM-HYDRO-1: Public Safety Plan** The City will develop a public safety plan to reduce impacts related to flooding. The public safety plan shall include an evacuation plan and protocols for protecting pedestrians and potential homeless populations (e.g., vehicular deterrents such as bollards and safety warning devices) in the LA River Access Tunnel during flood conditions.	The following structure source control BMPs, based on the City's LID handbook, would be implemented during construction and/or operation of the proposed Project, as applicable: **BMP-HYDRO-1: Construction Drainage Design** The proposed Project will incorporate drainage designs that direct stormwater runoff or irrigation runoff away from structures or the top of the slopes. No stormwater will be allowed to discharge over the top of a cut or fill slope.

Environmental Resource	Mitigation Measures	Best Management Practices (BMP)
		BMP-HYDRO-2: Off-Site Sediment Transport All entrances and exits to the construction site will be stabilized to reduce transport of sediment off-site. Any sediment or other materials tracked off-site will be removed within a reasonable time. **BMP-HYDRO-3: Storm Drain Message and Signage** Existing and proposed storm drain catch basins within the vicinity of the Project Site shall be marked and maintained. **BMP-HYDRO-4: Outdoor Material Storage Area Design** Proposed outdoor storage areas shall be organized and maintained to prevent stored materials from being permitted to runoff with stormwater. The outdoor storage of toxic and hazardous materials is not permitted. **BMP-HYDRO-5: Outdoor Trash Storage Area Design** Proposed outdoor trash storage enclosures shall be organized and maintained to prevent the transportation of trash and debris in stormwater. Bins and dumpsters shall remain covered. **BMP-HYDRO-6: Employee Training** Operations and maintenance employees shall be trained and made aware of the source controls, LID BMPs, educational materials, and maintenance requirements for the proposed Project at first hire and yearly thereafter. **BMP-HYDRO-7: Common Area Landscape Management** A landscape maintenance program shall be established in order to optimize water efficiency, limit pollutant introduction from fertilizers and pesticides, manage landscape waste, and prevent soil erosion. **BMP-HYDRO-8: Common Area Litter Control**

Environmental Resource	Mitigation Measures	Best Management Practices (BMP)
		A waste management program shall be implemented to inspect the Project Site for litter and pick up any litter as necessary on a regular basis. **BMP-HYDRO-9: Common Area Catch Basin Inspection** Catch basins shall be inspected and maintained, at a minimum, yearly and prior to the rainy season. **BMP-HYDRO-10: Street Sweeping Parking Lots** The angled parking spaces along Anderson Street shall be vacuum swept, at a minimum, yearly and prior to the rainy season. **BMP-HYDRO-11: BMP Maintenance** Proposed structural source controls, non-structural source controls, and LID BMPs shall be maintained as outlined in the Operations and Maintenance Plan that will be developed for the proposed Project. **BMP-HYDRO-12: Structural and LID BMPs** • Runoff from the Project Site and tributary Viaduct areas will be captured by proposed stormwater drainage systems, routed to a variety of structural and LID BMPs and discharged to the existing stormwater drainage facilities adjacent to the site. In addition, the Project Site will include a combination of paved surfaces and landscaped areas to provide soil stability and further minimize erosion. • The remaining localized rainfall falling on the portion of the Project Site outside of the Viaduct's footprint will be treated through a combination of incidental infiltration during sheet flow along pervious land areas, incidental infiltration within

		localized vegetated basins, and below-grade capture and use systems below some of the proposed lawn areas in areas with a larger impervious area footprint. The incidental infiltration or capture and use of the stormwater will remove pollutants of concern. Larger storm events will be captured and conveyed through proposed local storm drainage systems to new connections to the existing storm drainage system. • Structural BMPs (i.e., proprietary vaults with media-filled cartridges) will be installed to treat runoff for pollutants of concern identified in the City's LID Manual, including sediments, oil and grease, metals, organic materials, and nutrients. Runoff will also be treated through lined vegetated biofiltration basins and below-grade capture and use systems, where the runoff will be filtered through the vegetation and soil media to remove pollutants of concern before discharging through a perforated underdrain. **BMP-HYDRO-13: Regulatory Requirements for Water Quality** • To comply with the provisions of the NPDES MS4 Permit, the proposed Project will implement a SWPPP that includes construction site BMPs to control erosion and sedimentation. BMPs include silt fencing, fiber rolls, sandbag barriers, drainage inlet protections, and berms at the top of all grade slopes. The SWPPP will also include post-construction stormwater management measures to control pollutants in stormwater discharges during operation of the proposed Project. • If groundwater is encountered, the contractor will develop a dewatering plan, and a Dewatering Permit with the Los Angeles RWQCB will also be required. Should dewatering be required, the proposed Project will comply with the General Waste Discharge Requirements for Discharges of Groundwater from Construction and Project Dewatering to Surface Waters in Coastal Watersheds of Los Angeles and Ventura Counties.

		• Proposed construction activities will comply with all applicable federal, state, and local requirements to reduce the potential for the release of hazardous waste and other contaminants into groundwater. In addition, construction activities will be subject to the provisions of the CWA and Porter-Cologne Act; and other federal, state, and local requirements to ensure that stormwater pollutants resulting from construction will not substantially degrade water quality. • A water diversion plan is not anticipated for the proposed Project because Phase II construction activities will be performed during the dry season (April 15 through October 15). However, if work in a flowing stream is unavoidable, a water diversion plan shall be required, and the entire stream flow shall be diverted around the work area by a barrier, temporary culvert, new channel, or other means approved by the CDFW. Should water diversion be necessary, a 401/404 permit will also be required. • An emergency evacuation plan shall be prepared for Phase II construction within the LA River. If measurable rain with 25 percent or greater probability is predicted within 72 hours during project-related activities, all activities within the LA River shall cease and protective measures to prevent siltation/erosion shall be implemented/maintained. With the implementation of BMPs, alterations to drainage patterns during construction in the LA River channel will not result in substantial erosion or siltation onsite or offsite. • A Notice of Intent (NOI) for stormwater discharges associated with construction activities may also be required under the NPDES General Permit. • Stormwater BMPs should follow the latest California Stormwater Quality Association's Stormwater Best Management Practices Handbook. All entrances and exits to a

Environmental Resource	Mitigation Measures	Best Management Practices (BMP)
		construction site will be stabilized to reduce transport of sediment off-site. Any sediment or other materials tracked off-site will be removed within a reasonable time. • Any non-stormwater discharge will be controlled and properly disposed of through the sanitary sewer system or transported to an approved processing facility to prevent the contamination of site soils and groundwater. • The handling, storage, and disposal of contaminants will comply with all applicable federal, state, and local requirements. The Project Site will be remediated to standards acceptable to LACoFD and other regulatory agencies as required, thereby reducing the area affected by contaminants.
Land Use and Planning	No mitigation measures are required.	**BMP-LAND-1: Coordination with Los Angeles Department of City Planning** The City BOE shall continue to work with the Los Angeles Department of City Planning to ensure that the proposed Project is consistent with future zoning changes. **BMP-LAND-2: Coordination with Viaduct Replacement Project** Any necessary land use entitlements shall be secured prior to the start of construction activities, and shall be coordinated with construction of the Viaduct Replacement Project. **BMP-LAND-3: Construction Area** Construction equipment, materials storage, and construction activities shall be contained within the limits of construction, and construction areas shall be fenced.

Environmental Resource	Mitigation Measures	Best Management Practices (BMP)
Noise and Vibration	**MM-NOISE-1: Construction-Noise Management Plan** A construction-noise management plan (CNMP) shall be prepared for the proposed Project. The CNMP shall, at a minimum, include the following measures: • Construction activities shall be restricted outside the hours of 7:00 a.m. to 9:00 p.m. Monday through Friday, and between the hours of 8:00 a.m. to 6:00 p.m. on Saturdays. While the intention is not to conduct work on Sundays, occasional Sunday work may be required to ensure the proposed Project schedule is met. If it is determined that Sunday work is necessary, the proper permits will need to be obtained through the Police Commission. Construction activities shall be prohibited on federal holidays. • Construction equipment shall be properly maintained and equipped with mufflers. • Equipment shall be turned off when not in use for an excess of five minutes, except for equipment that requires idling to maintain performance. • A public liaison shall be appointed for project construction and shall be responsible for addressing public concerns about construction activities, including excessive noise. As needed, the liaison shall determine the cause of the concern (e.g., starting too early, bad muffler) and implement measures to address the concern. The liaison will work directly with the	**BMP-NOISE-1: Construction Equipment Requirements** Construction equipment shall be properly maintained and equipped with mufflers.

Environmental Resource	Mitigation Measures	Best Management Practices (BMP)
	construction contractor to ensure implementation of the noise control plan. • The liaison will work directly with the construction contractor to ensure implementation of the noise control plan. • The public shall be notified in advance of the location and dates of construction hours and activities. • Where necessary, temporary sound barriers shall be installed. • Signage and notification on where to report construction-generated noise shall be posted on-site and around the construction area, as well as on the Bureau of Engineering website. • Staging and queuing areas shall be located at the furthest distance possible from nearby residential land uses, as well as any other noise-sensitive land uses identified in the Project Area at the time of construction (e.g., transient lodging, schools, libraries, churches, hospitals, and nursing homes). • Limit noise/vibration intensive activities occurring within ten feet of existing structures and occupied land uses. Where possible and to the extent locally available, select low-noise/vibration generating equipment when activities occur within ten feet of adjacent existing structures.	
Population and Housing	No mitigation measures are required.	No BMPs are required.

Environmental Resource	Mitigation Measures	Best Management Practices (BMP)
Public Services	There are no mitigation measures for Public Services. The mitigation measures identified in the Transportation section below address impacts associated with traffic concerns during operation of the proposed Project.	Implementation of the BMPs identified in Section 3.15.4 (Transportation), impacts associated with delays to emergency vehicles would be avoided and minimized. No BMPs specifically for Public Services are required.
Recreation	No mitigation measures are required.	No BMPs are required.
Transportation and Traffic	**MM-TRANS-1: Mobility Hub** The City shall reserve space for a mobility hub at the proposed Project Site, including additional amenities for bicyclists, drivers, and transit users, to encourage event attendees to use alternative modes of transportation. **MM-TRANS-2: Bicycle Facilities** The City shall reserve space for a Bike Share hub at the proposed Project Site to allow Bike Share participants to dock bicycles and scooters. **MM-TRANS-3: Rideshare Zones** The City shall create permanent rideshare pick-up and drop-off zones for the East Park and West Park. Rideshare pick-up/drop-off zones could be located on South Santa Fe Street adjacent to the proposed West Park and South Mission Road adjacent to the proposed East Park. The pick-up/drop-off zones shall be clearly marked, and wayfinding signage shall be installed throughout the proposed Project Site. **MM-TRANS-4: Public Transportation** The City shall reserve space at the proposed Project Site to accommodate a future Sixth Street Metro Station in the Arts Plaza.	**BMP-TRANS-1: Temporary Detour Routes** During proposed construction activities, temporary detours will be provided for any affected pedestrian and bicycle facilities. **BMP-TRANS-2: Construction Staging Plan** A construction staging plan shall be developed to reduce impacts related to noise, dust, traffic, and other health hazards. In addition, construction site BMPs (e.g., fencing, signs, and detours) shall be implemented to minimize hazards and prevent safety issues on the roadways and sidewalks surrounding the construction site. **BMP-TRANS-3: Construction Traffic** Construction-related trips shall be scheduled with increased frequency during off-peak hours to minimize impacts to commuters. **BMP-TRANS-4: Access to Parcels** If access to any existing parcels are removed during proposed construction activities, temporary access shall be provided, and/or new points of access shall be constructed. **BMP-TRANS-5: Site-Specific Traffic Control and Transit Plan for Large Events** Large event permittees shall develop a site-specific traffic control plan to provide information on parking and circulation and highlight transit options for event attendees to minimize congestion and vehicle miles traveled. Traffic control strategies for events will

Environmental Resource	Mitigation Measures	Best Management Practices (BMP)
		include inbound/outbound flex lanes and sheriff controlled intersections. Traffic control plans will also identify nearby public parking facilities and identify passenger pick-up/drop-off locations. Permittees will be required to consider the cumulative traffic impacts of their event in relation to other events in the Project Area. The traffic control plans will also identify emergency services egress and access.
Utilities and Service Systems	**MM-HYDRO-1: Public Safety Plan** Prior to Final Plan approval, the City, in coordination with USACE, shall publish a Public Safety Plan in order to reduce the potential for safety impacts related to flooding. The Public Safety Plan shall include an evacuation plan and protocols for protecting pedestrians and potential homeless populations (e.g., vehicular deterrents such as bollards and safety warning devices) in the LA River Access Tunnel during flood conditions.	**BMP-USS-1. Wastewater Treatment** Any wastewater produced as a result of proposed construction activities, such as water containing diesel and oil, paint, solvents, cleaners, and other chemicals, as well as construction debris and dirt, shall be collected in settlement tanks and screened. The clean water shall be discharged, and the remaining sludge shall be disposed of in accordance with water and solid waste disposal regulations, including the CWA, the Porter-Cologne Water Quality Control Act, and the RCRA. **BMP-USS-2. Temporary Stormwater Drainage Measures** Temporary stormwater drainage measures to prevent polluted runoff in the construction site shall include, but not be limited to, the installation of earth dikes, drainage swales, and ditches, silt fences, desilting basins, and stormwater drain inlet protection. **BMP-USS-3. Coordination with Service Providers** The location of underground utilities shall be confirmed prior to proposed construction activities by contacting the Underground Service Alert of Southern California (DigAlert). If necessary, the City shall work in close coordination with utility providers to develop a relocation plan to minimize possible impacts and disruption to service utilities. **BPM-USS-4. Reduced Consumption of Water Resources**

Environmental Resource	Mitigation Measures	Best Management Practices (BMP)
		Design features to reduce the consumption of water resources shall be implemented, such as low-flow water fixtures and water efficient irrigation design and practices. In addition, drought-tolerant landscaping shall be planted to further reduce water consumption.

This page intentionally left blank.

Chapter 4
Comparison of Alternatives

4.1 Introduction

Section 15126.6(a) of the CEQA Guidelines requires that an EIR "describe a range of reasonable alternatives to the project, or to the location of the project, which would feasibly attain most of the basic objectives of the project but would avoid or substantially lessen any of the significant effects of the project." In addition, Section 15126.6(e) requires that an EIR evaluate a "no project" alternative. These alternatives are discussed in the sections below.

4.2 CEQA Alternatives

As stated in Chapter 2, the objectives of the proposed Project are to:

- Serve the open space and recreational needs of surrounding communities;
- Connect and improve neighborhoods;
- Incorporate sustainable design consistent with the City's plans and goals;
- Encourage active modes of transportation and public transit;
- Promote beneficial stormwater treatment and/or capture; and
- Provide safe pedestrian and bicycle access to the River.

With implementation of mitigation measures described in Sections 3.1 through 3.16, the proposed Project would not result in significant and unavoidable impacts. Although no significant and unavoidable impacts were identified, the following alternatives to the proposed Project have been evaluated in accordance with Section 15126.6 of the CEQA Guidelines:

- No Project Alternative
- Alternative 1 – Nature Focused Alternative
- Alternative 2 – Sports Focused Alternative

These alternatives are described below.

4.2.1 No Project Alternative

Under the No Project Alternative, the area of the proposed 13-acre Project Site would remain as vacant land and an industrial and freight corridor. The land is comprised of a combination of City, State, and Caltrans right-of-way, which could potentially be used as a storage area. Under the No Project Alternative, no public park amenities would be constructed and no landscaping, lighting, or pedestrian improvements would be made. No improvements to the LA River channel, including terracing and landscaping, would be made.

4.2.2 Alternative 1 – Nature Focused Alternative

Alternative 1 – Nature Focused Alternative is similar to the proposed Project. Under this alternative, the Project Site would be located in the same area as under the proposed Project. Alternative 1 would also include the following elements:

West Park/Arts Plaza

Under Alternative 1, the West Park/Arts Plaza would include the same features and programming as the proposed Project.

East Park

Alternative 1 would feature less programming than the proposed Project, and would include the following elements and activities:

- Approximately 2,000-square-foot building with concessions and public restrooms;
- Two synthetic turf soccer field with field lighting;
- Two flexible play and performance lawns with combined capacity to hold events up to approximately 2,800 people;
- Salvaged bridge light poles and salvaged arch as barrier/seat wall;
- Nature walk and meadow and treed areas;
- Children's nature-play area and splash pad;
- Designated picnic and grilling areas;
- Landscaped seating areas and rain gardens;
- Small dog and large dog play areas; and
- Parking plaza with 14 spaces on-site.

LA River Park Elements

Under Alternative 1, the LA River park elements would include the same features and programming as the proposed Project.

General Park Elements

Under Alternative 1, the general park elements would include the same features and programming as the proposed Project.

4.2.3 Alternative 2 – Sports Focused Alternative

Alternative 2 – Sports Focused Alternative is similar to the proposed Project. Under this alternative, the park would be located in the same area as the proposed Project. Alternative 2 would also include the following elements:

West Park/Arts Plaza

Under Alternative 2, the West Park/Arts Plaza would include the same features and programming as the proposed Project.

East Park

Alternative 2 would feature more programming than the proposed Project, and would include the following elements and activities:

- Approximately 2,000-square-foot building with concessions and public restrooms;
- Two synthetic turf soccer fields with field lighting;
- Two adult-sized flexible sports courts for basketball, futsal, and volleyball with combined capacity to hold events up to approximately 700 people;
- Two flexible play and performance lawns with combined capacity to hold events up to approximately 2,800 people;
- Skate plaza;
- Salvaged bridge light poles and salvaged arch as barrier/seat wall;
- Nature walk and meadow and treed areas;
- Children's nature-play area and splash pad;
- Designated picnic and grilling areas;
- Landscaped seating areas and rain gardens;
- Small dog and large dog play areas; and
- Parking plaza with 14 spaces on-site.

LA River Park Elements

Under Alternative 2, the LA River park elements would include the same features and programming as the proposed Project.

General Park Elements

Under Alternative 2, the general park elements would include the same features and programming as the proposed Project.

4.3 Alternatives Considered but Rejected as Infeasible

Section 15126.6(c) of the State CEQA Guidelines requires that an EIR "identify any alternatives that were considered by the Lead Agency but were rejected as infeasible during the scoping process," as well as explain the reasons for the Lead Agency's determination. An alternative may be eliminated from consideration if it (1) fails to meet most of the project's basic objectives, (2) is infeasible, or (3) is unable to avoid significant environmental impacts.

There are no alternatives that the City can identify that would avoid significant environmental impacts and meet the project's basic objectives. The following alternative was considered and eliminated from further evaluation:

Alternative Project Site. The City already owns the Project Site and cannot reasonably be expected to acquire, control, or access an alternative site that would meet the project's basic objectives in a timely fashion. It is anticipated that significant and unavoidable impacts associated with noise, traffic, water quality, and land use could occur if an Alternative Project Site could be found in Downtown LA, along the LA River. As such, development of the proposed Project at an alternative site could potentially produce other environmental impacts that would otherwise not occur at the current Project Site and result in greater environmental impacts than the proposed Project. Therefore, an alternative site is not considered feasible since the City does not own another suitable site that would achieve the underlying purpose and objectives of the proposed Project.

4.4 Evaluation of CEQA Alternatives

The impacts of each of the alternatives are briefly described below and are compared to the objectives of the proposed Project. The analysis includes a discussion of a No Project Alternative as required under Section 15126(e)(1) of the CEQA Guidelines so that decision-makers can compare the impacts of approving the proposed Project with the impacts of not approving the proposed Project. The proposed Project meets all of the objectives described in Section 4.2, Alternative 1 and Alternative 2 meet some of the objectives, and the No Project Alternative does not meet any of the objectives. Alternatives 1 and 2 would be required to comply with the same mitigation measures that would be implemented for the proposed Project for all environmental resources with a "Less than Significant Impact with Mitigation" determination.

4.4.1 No Project Alternative

Because the area of the proposed 13-acre Project Site would remain as vacant land and an industrial and freight corridor, the objectives of the proposed Project described in Section 4.2 would not be met. Although the No Project Alternative would not result in significant environmental impacts, it would also not include the following benefits that would occur with implementation of the proposed Project, Alternative 1, or Alternative 2:

- **Aesthetics:** The No Project Alternative would not result in the visual character and quality improvements under the proposed Project, Alternative 1, and Alternative 2, which include landscaping, vegetation, recreational areas, and public art.
- **Air Quality:** With the exception of emissions generated from vehicle traffic during large events, the existing industrial land use associated with the No Project Alternative would contribute greater operational emissions than the land uses associated with the proposed Project, Alternative 1, and Alternative 2 (i.e., smaller special events, soccer fields, park uses, and buildings).
- **Energy:** The existing industrial land use associated with the No Project Alternative would require greater energy consumption than the land uses associated with the proposed Project, Alternative 1, and Alternative 2.

- **Greenhouse Gas Emissions:** With the exception of greenhouse gas (GHG) emissions generated from vehicle traffic during infrequent large events (up to 5,000 people), the existing industrial land use associated with the No Project Alternative would contribute greater GHG emissions than the land uses associated with the proposed Project, Alternative 1, and Alternative 2 (i.e., smaller special events, soccer fields, park uses, and buildings).
- **Hazards and Hazardous Materials:** Under the No Project Alternative, contaminated soils would be left in place and would not be remediated to standards acceptable by the Los Angeles County Fire Department (LACoFD) and other regulatory agencies as required.
- **Recreation:** Under the No Project Alternative, there would continue to be a high need for parks in the communities of Boyle Heights and Central City North. The proposed Project, Alternative 1, and Alternative 2 would provide additional park and recreation services that may alleviate the demand for other existing parks and recreational facilities in the vicinity of the Project Area.
- **Noise and Vibration:** Under the No Project Alternative, the existing industrial land use would continue to generate noise at levels greater than that projected for the proposed Project (i.e., special events, soccer fields, park uses, and buildings).
- **Traffic and Transportation:** Under the No Project Alternative, improvements to pedestrian and bicycle access throughout the Project Area would not occur.

4.4.2 Alternative 1 – Nature Focused Alternative

Alternative 1 would meet the objectives of the proposed Project described in Section 4.2. However, Alternative 1 would provide reduced programming compared to the proposed Project. As such, the public indicated greater support for the proposed Project because it would provide a better balance of the open space and recreational needs for the surrounding communities than Alternative 1.

Impacts during construction would be similar to the proposed Project. During operation, Alternative 1 would feature smaller event capacity and reduced recreational programming, which would result in less project-generated vehicle traffic to the Project Site. The impacts for each environmental resource are discussed below.

4.4.2.1 Aesthetics

Impacts would be similar to the proposed Project. Compared to the proposed Project, the East Park would feature more vegetation and landscaping under Alternative 1, which would marginally change the visual character and quality of the Project Site.

4.4.2.2 Air Quality

Impacts would be similar to the proposed Project. Under Alternative 1, event capacity for large events in the proposed East Park would be reduced to 2,800 people, compared to 3,300 people under the proposed Project. In addition, the East Park would feature fewer sports fields under Alternative 1 than under the proposed Project. Because Alternative 1 features less recreational programming than the proposed Project, it is anticipated that Alternative 1 would result in less operational emissions of criteria air pollutants (i.e., reactive organic gas, nitrogen oxides, carbon monoxide, sulfur oxide, and particulate matter) than the proposed Project.

4.4.2.3 Biological Resources

Impacts would be similar to the proposed Project. Like the proposed Project, best management practices (BMP) would be implemented to avoid and minimize construction impacts (i.e., habitat removal; increased noise, vibration, light, carbon dioxide, and human activity; and construction staging and activities in the LA River channel) on special-status species and aquatic resources. Compared to the proposed Project, the East Park would feature more vegetation and landscaping under Alternative 1, which could potentially create additional nesting habitat for special-status birds during operations.

4.4.2.4 Cultural Resources

Impacts would be similar to the proposed Project. Like the proposed Project, standard measures would be implemented in the case of an unanticipated discovery of cultural resources during construction of Alternative 1. As with the proposed Project, operation of Alternative 1 would not involve any ground-disturbing activities; therefore, there would be no potential to disturb, damage, or degrade cultural resources.

4.4.2.5 Energy

Impacts would be similar to the proposed Project. Under the proposed Project and Alternative 1, energy consumption would be required for park lighting, WiFi, security cameras, on-site buildings, electric vehicle charging station, and sound and lighting equipment for special events. In addition, diesel and gasoline fuel would be consumed from on-road vehicles. Under Alternative 1, smaller event capacity and reduced recreational programming would reduce energy consumption, when compared to the proposed Project. Therefore, energy consumption would be marginally less under Alternative 1.

4.4.2.6 Geology and Soils

Impacts would be similar to the proposed Project. Like the proposed Project, BMPs would be implemented to reduce the potential for erosion during soil excavation and other construction activities. In addition, Alternative 1 would follow standard engineering practices and recommendations identified in the *Geotechnical Site Investigation* (Hushmand Associates, Inc., 2018) to reduce the potential for geologic hazards. Similar to the proposed Project, open spaces would be landscaped or hardscaped such that soil erosion and the loss of topsoil are not anticipated during operation of Alternative 1.

4.4.2.7 Greenhouse Gas Emissions

Impacts would be similar to the proposed Project. Under the proposed Project and Alternative 1, the majority of GHG emissions would be associated with motor vehicle use. Under Alternative 1, smaller event capacity and reduced recreational programming would reduce motor vehicle use to the Project Site, when compared to the proposed Project. Therefore, GHG emissions would be marginally less under Alternative 1.

4.4.2.8 Hazards and Hazardous Materials

Impacts would be similar to the proposed Project. Like the proposed Project, Alternative 1 would result in remediation of the Project Site to standards acceptable by LACoFD and other regulatory agencies as required. Under these standards, the concentrations of contaminants of concern would not pose health

risks to construction workers or the public. The use of hazardous materials during construction or during routine maintenance and landscaping would be subject to proper handling and disposal in compliance with applicable laws and regulations.

4.4.2.9 Hydrology and Water Quality

Impacts would be similar to the proposed Project. Like the proposed Project, Alternative 1 would result in the net addition of impervious surfaces. However, this minor increase would not substantially deplete groundwater supplies, interfere with groundwater recharge, or increase the potential for flooding. Alternative 1 would include construction and low impact development (LID) BMPs to prevent, control, and reduce the potential for stormwater pollutants to degrade ground or surface water quality.

4.4.2.10 Land Use and Planning

Impacts would be similar to the proposed Project. Like the proposed Project, Alternative 1 is consistent with the City's General Plan land use and zoning designations. The City Bureau of Engineering would continue to work with the Los Angeles Department of City Planning to ensure that Alternative 1 is consistent with future zoning changes.

4.4.2.11 Noise and Vibration

Impacts would be similar to the proposed Project. Under the proposed Project and Alternative 1, operational noise levels would be associated with project-generated vehicle traffic and onsite recreational uses and events. Alternative 1 features smaller event capacity and reduced recreational programming than the proposed Project. Therefore, operational noise levels would be marginally less under Alternative 1 compared to the proposed Project.

4.4.2.12 Population and Housing

Impacts would be similar to the proposed Project. Like the proposed Project, Alternative 1 would not have the potential to result in growth that would otherwise not occur.

4.4.2.13 Public Services

Impacts would be similar to the proposed Project. Like the proposed Project, Alternative 1 could increase the demand for fire and police protection services; however, the expansion or construction of new fire or police protection facilities would not be required. Alternative 1 would provide additional recreation and park services that may alleviate the demand for other existing parks and recreational facilities in the vicinity of the Project Area.

4.4.2.14 Recreation

Impacts would be similar to the proposed Project. Like the proposed Project, Alternative 1 would provide additional recreation and park services that may alleviate the demand for other existing parks and recreational facilities in the vicinity of the Project Area.

4.4.2.15 Transportation and Traffic

Impacts from proposed construction activities would be similar to the proposed Project. Under Alternative 1, event capacity for large events in the proposed East Park would be reduced to 2,800 people, compared to 3,300 people under the proposed Project. In addition, the East Park would feature fewer sports fields under Alternative 1 than under the proposed Project. Because Alternative 1 features smaller event capacity and reduced recreational programming than the proposed Project, project-generated vehicle traffic would be marginally less under Alternative 1. In addition, the demand for parking under Alternative 1 during large events would be marginally reduced compared to the proposed Project.

4.4.2.16 Utilities and Service Systems

Impacts would be similar to the proposed Project. Like the proposed Project, construction activities for Alternative 1 would be conducted in accordance with the Stormwater Pollution Prevention Plan (SWPPP) and all other applicable laws, policies, and regulations to avoid and minimize potential impacts. The water consumption and wastewater generation demands for operation of Alternative 1, like the proposed Project, would not require the construction of new water or wastewater treatment facilities or the expansion of existing facilities.

4.4.3 Alternative 2 – Sports Focused Alternative

Alternative 2 would meet the objectives of the proposed Project described in Section 4.2. However, Alternative 2 would provide increased programming compared to the proposed Project. As such, the public indicated greater support for the proposed Project because it would provide a better balance of the open space and recreational needs for the surrounding communities than Alternative 2.

Impacts during construction would be similar to the proposed Project. During operation, Alternative 2 would feature larger event capacity and increased recreational programming, which would result in more project-generated vehicle traffic to the Project Site. The impacts for each environmental resource are discussed below.

4.4.3.1 Aesthetics

Impacts would be similar to the proposed Project. Compared to the proposed Project, the East Park would feature less vegetation and landscaping under Alternative 2, which would marginally change the visual character and quality of the Project Site.

4.4.3.2 Air Quality

Impacts would be similar to the proposed Project. Under Alternative 2, event capacity for large events in the proposed East Park would be increased to 3,500 people, compared to 3,300 people under the proposed Project. In addition, the East Park would feature more sports fields under Alternative 2 than under the proposed Project. Because Alternative 2 features more recreational programming than the proposed Project, it is anticipated that Alternative 2 would result in greater operational emissions of criteria air pollutants (i.e., reactive organic gas, nitrogen oxides, carbon monoxide, sulfur oxide, and particulate matter) than the proposed Project.

4.4.3.3 Biological Resources

Impacts would be similar to the proposed Project. Like the proposed Project, BMPs would be implemented to avoid and minimize construction impacts (i.e., habitat removal; increased noise, vibration, light, carbon dioxide, and human activity; and construction staging and activities in the LA River channel) on special-status species and aquatic resources. Compared to the proposed Project, the East Park would feature less vegetation and landscaping under Alternative 2, which would create less nesting habitat for special-status birds during operations.

4.4.3.4 Cultural Resources

Impacts would be similar to the proposed Project. Like the proposed Project, standard measures would be implemented in the case of an unanticipated discovery of cultural resources during construction of Alternative 2. As with the proposed Project, operation of Alternative 2 would not involve any ground-disturbing activities; therefore, there would be no potential to disturb, damage, or degrade cultural resources.

4.4.3.5 Energy

Impacts would be similar to the proposed Project. Like the proposed Project, energy consumption would be required for park lighting, WiFi, security cameras, on-site buildings, electric vehicle charging station, and sound and lighting equipment for special events. In addition, diesel and gasoline fuel would be consumed from on-road vehicles. Under Alternative 2, larger event capacity and increased recreational programming would increase energy consumption, when compared to the proposed Project. Therefore, energy consumption would be marginally greater under Alternative 2.

4.4.3.6 Geology and Soils

Impacts would be similar to the proposed Project. Like the proposed Project, BMPs would be implemented to reduce the potential for erosion during soil excavation and other construction activities. In addition, Alternative 2 would follow standard engineering practices and recommendations identified in the *Geotechnical Site Investigation* (Hushmand Associates, Inc., 2018) to reduce the potential for geologic hazards. Similar to the proposed Project, open spaces would be landscaped or hardscaped such that soil erosion and the loss of topsoil are not anticipated during operation of Alternative 2.

4.4.3.7 Greenhouse Gas Emissions

Impacts would be similar to the proposed Project. Under the proposed Project, Alternative 1, and Alternative 2, the majority of GHG emissions would be associated with motor vehicle use. Under Alternative 2, larger event capacity and increased recreational programming would increase motor vehicle use to the Project Site, when compared to the proposed Project. Therefore, GHG emissions would be marginally greater under Alternative 2.

4.4.3.8 Hazards and Hazardous Materials

Impacts would be similar to the proposed Project. Like the proposed Project, Alternative 2 would result in remediation of the Project Site to standards acceptable by LACoFD and other regulatory agencies as required. Under these standards, the concentrations of contaminants of concern would not pose health

risks to construction workers or the public. The use of hazardous materials during construction or during routine maintenance and landscaping would be subject to proper handling and disposal in compliance with applicable laws and regulations.

4.4.3.9 Hydrology and Water Quality

Impacts would be similar to the proposed Project. Like the proposed Project, Alternative 2 would result in the net addition of impervious surfaces. However, this minor increase would not substantially deplete groundwater supplies, interfere with groundwater recharge, or increase the potential for flooding. Alternative 1 would include construction and low impact development (LID) BMPs to prevent, control, and reduce the potential for stormwater pollutants to degrade ground or surface water quality.

4.4.3.10 Land Use and Planning

Impacts would be similar to the proposed Project. Like the proposed Project, Alternative 2 is consistent with the City's General Plan land use and zoning designations. The City Bureau of Engineering would continue to work with the Los Angeles Department of City Planning to ensure that Alternative 2 is consistent with future zoning changes.

4.4.3.11 Noise and Vibration

Impacts would be similar to the proposed Project. Under the proposed Project, Alternative 1, and Alternative 2, operational noise levels would be associated with project-generated vehicle traffic and onsite recreational uses and events. Alternative 2 features larger event capacity and increased recreational programming than the proposed Project. Therefore, operational noise levels would be marginally greater under Alternative 2 compared to the proposed Project.

4.4.3.12 Population and Housing

Impacts would be similar to the proposed Project. Like the proposed Project, Alternative 2 would not have the potential to result in growth that would otherwise not occur.

4.4.3.13 Public Services

Impacts would be similar to the proposed Project. Like the proposed Project, Alternative 2 could increase the demand for fire and police protection services; however, the expansion or construction of new fire or police protection facilities would not be required. Alternative 2 would provide additional recreation and park services that may alleviate the demand for other existing parks and recreational facilities in the vicinity of the Project Area.

4.4.3.14 Recreation

Impacts would be similar to the proposed Project. Like the proposed Project, Alternative 2 would provide additional recreation and park services that may alleviate the demand for other existing parks and recreational facilities in the vicinity of the Project Area.

4.4.3.15 Transportation and Traffic

Impacts from proposed construction activities would be similar to the proposed Project. Under Alternative 2, event capacity for large events in the proposed East Park would be increased to 3,500 people, compared to 3,300 people under the proposed Project. In addition, the East Park would feature more sports fields under Alternative 2 than under the proposed Project. Because Alternative 2 features larger event capacity and increased recreational programming than the proposed Project, project-generated vehicle traffic would be marginally greater under Alternative 2. In addition, the demand for parking under Alternative 2 during large events would be marginally greater compared to the proposed Project.

4.4.3.16 Utilities and Service Systems

Impacts would be similar to the proposed Project. Like the proposed Project, construction activities for Alternative 2 would be conducted in accordance with the SWPPP and all other applicable laws, policies, and regulations to avoid and minimize potential impacts. The water consumption and wastewater generation demands for operation of Alternative 2, like the proposed Project, would not require the construction of new water or wastewater treatment facilities or the expansion of existing facilities.

4.5 Comparison of CEQA Alternatives

Table 4-1 compares the potential environmental impacts that would result from the proposed Project, No Project Alternative, Alternative 1 – Nature Focused Alternative, and Alternative 2 – Sports Focused Alternative. **Table 4-2** summarizes the environmental impacts of each alternative compared to the proposed Project. **Table 4-3** summarizes the impacts of each alternative compared to the existing condition and ranks each alternative based on these relative environmental impacts.

As noted in Section 4.4, the proposed Project, Alternative 1, and Alternative 2 would have similar impacts. However, as shown in **Table 4-2**, impacts would be relatively reduced under Alternative 1 and relatively greater under Alternative 2, when compared to the proposed Project. As shown in **Table 4-3**, when compared to the existing condition, Alternative 1 would result in a slight increase in impacts, followed by the proposed Project. Alternative 2 would result in the greatest increase in impacts when compared to the existing condition.

Impacts under Alternative 1 would be marginally less than the proposed Project because of the reduced programming, smaller event sizes, and reduced project-generated vehicle traffic (see Section 4.4.2). Alternative 2 would result in the greatest impacts because of the increased programming, larger event sizes, and increased project-generated vehicle traffic (see Section 4.2.3).

The No Project Alternative would result in no impacts to the existing land use because it would not result in an action and would not require discretionary approvals that trigger CEQA compliance; however, it would not provide the benefits that would result from implementation of the proposed Project, Alternative 1, or Alternative 2 (see Section 4.4.1), nor would it meet the proposed Project objectives.

Table 4-1: Summary of CEQA Analysis by Alternative

Environmental Resource	No Project Alternative	Proposed Project	Alternative 1 – Nature Focused Alternative	Alternative 2 – Sports Focused Alternative
Aesthetics				
Construction	No Impact.	Less than Significant Impact.	Less than Significant Impact.	Less than Significant Impact.
Operation		Less than Significant Impact.	Less than Significant Impact.	Less than Significant Impact.
Air Quality				
Construction	No Impact.	Less than Significant Impact with Mitigation.	Less than Significant Impact with Mitigation.	Less than Significant Impact with Mitigation.
Operation		Less than Significant Impact.	Less than Significant Impact. Environmentally Superior.	Less than Significant Impact.
Biological Resources				
Construction	No Impact.	Less than Significant Impact.	Less than Significant Impact.	Less than Significant Impact.
Operation		Less than Significant Impact.	Less than Significant Impact.	Less than Significant Impact.
Cultural Resources				
Construction	No Impact. Environmentally Superior.	Less than Significant Impact.	Less than Significant Impact.	Less than Significant Impact.
Operation		Less than Significant Impact.	Less than Significant Impact.	Less than Significant Impact.
Energy				
Construction	No Impact.	Less than Significant Impact.	Less than Significant Impact.	Less than Significant Impact.
Operation		Less than Significant Impact.	Less than Significant Impact. Environmentally Superior.	Less than Significant Impact.
Geology and Soils				
Construction	No Impact.	Less than Significant Impact.	Less than Significant Impact.	Less than Significant Impact.

Environmental Resource	No Project Alternative	Proposed Project	Alternative 1 – Nature Focused Alternative	Alternative 2 – Sports Focused Alternative
Operation	Environmentally Superior.	Less than Significant Impact.	Less than Significant Impact.	Less than Significant Impact.
Greenhouse Gas Emissions				
Construction	No Impact.	Less than Significant Impact.	Less than Significant Impact.	Less than Significant Impact.
Operation		Less than Significant Impact.	Less than Significant Impact. Environmentally Superior.	Less than Significant Impact.
Hazards and Hazardous Materials				
Construction	No Impact.	Less than Significant Impact with Mitigation.	Less than Significant Impact with Mitigation.	Less than Significant Impact with Mitigation.
Operation		Less than Significant Impact with Mitigation.	Less than Significant Impact with Mitigation.	Less than Significant Impact with Mitigation.
Hydrology and Water Quality				
Construction	No Impact.	Less than Significant Impact.	Less than Significant Impact.	Less than Significant Impact.
Operation		Less than Significant Impact with Mitigation.	Less than Significant Impact with Mitigation.	Less than Significant Impact with Mitigation.
Land Use and Planning				
Construction	No Impact.	Less than Significant Impact.	Less than Significant Impact.	Less than Significant Impact.
Operation		Less than Significant Impact.	Less than Significant Impact.	Less than Significant Impact.
Noise and Vibration				
Construction	No Impact.	Less than Significant Impact with Mitigation.	Less than Significant Impact with Mitigation.	Less than Significant Impact with Mitigation.
Operation		Less than Significant Impact.	Less than Significant Impact. Environmentally Superior.	Less than Significant Impact.

Environmental Resource	No Project Alternative	Proposed Project	Alternative 1 – Nature Focused Alternative	Alternative 2 – Sports Focused Alternative
Population and Housing				
Construction	No Impact. Environmentally Superior.	Less than Significant Impact.	Less than Significant Impact.	Less than Significant Impact.
Operation		Less than Significant Impact.	Less than Significant Impact.	Less than Significant Impact.
Public Services				
Construction	No Impact. Environmentally Superior.	Less than Significant Impact.	Less than Significant Impact.	Less than Significant Impact.
Operation		Less than Significant Impact.	Less than Significant Impact.	Less than Significant Impact.
Recreation				
Construction	No Impact.	Less than Significant Impact.	Less than Significant Impact.	Less than Significant Impact.
Operation		Less than Significant Impact.	Less than Significant Impact.	Less than Significant Impact.
Transportation and Traffic				
Construction	No Impact.	Less than Significant Impact.	Less than Significant Impact.	Less than Significant Impact.
Operation		Less than Significant Impact with Mitigation.	Less than Significant Impact with Mitigation. Environmentally Superior.	Less than Significant Impact with Mitigation.
Utilities and Service Systems				
Construction	No Impact. Environmentally Superior.	Less than Significant Impact.	Less than Significant Impact.	Less than Significant Impact.
Operation		Less than Significant Impact with Mitigation.	Less than Significant Impact with Mitigation.	Less than Significant Impact with Mitigation.

Table 4-2: Comparison of Alternatives to the Proposed Project (Operational)

Environmental Resource	Proposed Project	Alternative 1 – Nature Focused Alternative	Alternative 2 – Sports Focused Alternative
Aesthetics	0	0	0
Air Quality	0	-1	+1
Biological Resources	0	-1	+1
Cultural Resources	0	0	0
Energy	0	-1	+1
Geology and Soils	0	0	0
Greenhouse Gas Emissions	0	-1	+1
Hazards and Hazardous Materials	0	0	0
Hydrology and Water Quality	0	0	0
Land Use and Planning	0	0	0
Noise and Vibration	0	-1	+1
Population and Housing	0	0	0
Public Services	0	-1	+1
Recreation	0	0	0
Transportation/Traffic	0	-1	+1
Utilities and Service Systems	0	0	0
Total	**0**	**-7**	**+7**

Notes:
(-3) = Impacts considered to be substantially reduced when compared with the proposed Project.
(-2) = Impacts considered to be moderately reduced when compared with the proposed Project.
(-1) = Impacts considered to be somewhat reduced when compared with the proposed Project.
(0) = Impacts considered to be equal to the proposed Project.
(+1) = Impacts considered to be somewhat increased when compared with the proposed Project.
(+2) = Impacts considered to be moderately increased when compared with the proposed Project.
(+3) = Impacts considered to be substantially increased when compared with the proposed Project.
Where significant unavoidable impacts would occur across different alternatives but there are impact intensity differences between those alternatives, numeric differences are used to differentiate alternatives (i.e., in some cases, there are differences at the individual impact level, such as differences in number of impacts or relative intensity).

Table 4-3: Comparison of Alternatives to the Existing Condition (Operational)

Environmental Resource	Proposed Project	Alternative 1 – Nature Focused Alternative	Alternative 2 – Sports Focused Alternative	No Project Alternative
Aesthetics	-2	-2	-2	0
Air Quality	-1	-2	-1	0
Biological Resources	-1	-2	-1	0
Cultural Resources	0	0	0	0
Energy	-1	-2	-1	0
Geology and Soils	0	0	0	0
Greenhouse Gas Emissions	-1	-2	-1	0
Hazards and Hazardous Materials	+2	+2	+2	0
Hydrology and Water Quality	+1	+1	+1	0
Land Use and Planning	0	0	0	0
Noise and Vibration	-1	-1	-1	0
Population and Housing	0	0	0	0
Public Services	-1	-1	-1	0
Recreation	-2	-2	-2	0
Transportation/Traffic	+1	+1	+2	0
Utilities and Service Systems	0	0	0	0
Total	**-6**	**-10**	**-5**	**0**
Ranking	**2**	**1**	**3**	**0**

Notes:
(-3) = Impacts considered to be substantially reduced when compared with the existing condition.
(-2) = Impacts considered to be moderately reduced when compared with the existing condition.
(-1) = Impacts considered to be somewhat reduced when compared with the existing condition.
(0) = Impacts considered to be equal to the existing condition.
(+1) = Impacts considered to be somewhat increased when compared with the existing condition.
(+2) = Impacts considered to be moderately increased when compared with the existing condition.
(+3) = Impacts considered to be substantially increased when compared with the existing condition.
Where significant unavoidable impacts would occur across different alternatives but there are impact intensity differences between those alternatives, numeric differences are used to differentiate alternatives (i.e., in some cases, there are differences at the individual impact level, such as differences in number of impacts or relative intensity).

4.6 Environmentally Superior Alternative

Section 15126.6 of the CEQA Guidelines requires that an "environmentally superior" alternative be identified. The environmentally superior alternative is the alternative that would be expected to generate the least amount of significant impacts. As shown in **Table 4-1**, none of the alternatives would result in significant impacts. Although the No Project Alternative would result in the fewest impacts on the existing environment, this alternative would not result in the improvements anticipated under the proposed Project, Alternative 1, or Alternative 2. The No Project Alternative would not result in the following improvements, as described in Section 4.4.1: enhanced visual character and quality of the Project Site, remediated soils, increased park and recreational facilities, and improved bicycle and pedestrian access. In addition, the existing industrial land use under the No Project Alternative would contribute greater air quality and greenhouse gas emissions and noise and vibration levels than the land uses associated with the proposed Project (except during large events).

Pursuant to Section 15126.6(e)(2) of the CEQA Guidelines, when the No Project Alternative is identified as the environmentally superior alternative, the EIR must also identify an environmentally superior alternative from the remaining alternatives. As noted in **Table 4-1**, impacts associated with the proposed Project, Alternative 1, and Alternative 2 would be similar. Under Alternative 1, smaller event capacity and reduced recreational programming would result in less project-generated vehicle traffic to the Project Site than the proposed Project. As such, implementation of Alternative 1 would result in marginally less impacts to Air Quality, Energy, Greenhouse Gas Emissions, Noise and Vibration, and Transportation and Traffic than the proposed Project. Therefore, Alternative 1 is considered the Environmentally Superior Alternative.

CEQA Guidelines do not require an agency to select the environmentally superior alternative (CEQA Guidelines 15042-15043). Because Alternative 1 would provide reduced programming compared to the proposed Project, it would not meet the recreational needs of the surrounding communities. At the community meetings, the public overwhelmingly supported the proposed Project as the preferred alternative because it meets all of the objectives described in Section 4.2.

This page intentionally left blank.

Chapter 5
Other Environmental Considerations

This chapter evaluates other environmental considerations, including effects found to be not significant, based on analysis contained in the Initial Study (IS) (see **Appendix A** of this Draft Environmental Impact Report [EIR]), and therefore were subsequently omitted from analysis in this Draft EIR. It also addresses significant irreversible environmental changes that would be caused by the proposed Project should it be implemented, including the use and consumption of nonrenewable resources or long-term commitments of these resources. The proposed Project's potential for growth inducement is also addressed in this section.

5.1 Effects Found Not to Be Significant

Section 15128 of the California Environmental Quality Act (CEQA) Guidelines states that "an EIR shall contain a statement briefly indicating the reasons that various possible significant effects of the project were determined not to be significant and were therefore not discussed in detail in the EIR. Such a statement may be contained in an attached copy of an [IS]."

In accordance with the requirements of CEQA, the City of Los Angeles (City) prepared an IS, dated April 13, 2017, that identified the topics to be analyzed in the EIR. The IS is contained in **Appendix A** of this Draft EIR.

Because the analysis contained in the IS determined that the proposed Project would result in less than significant or no impacts related to the following environmental resource areas, they were eliminated from further analysis:

- Agriculture and Forestry Resources
- Mineral Resources

In addition, the analysis contained in the IS also determined that some thresholds of significance for environmental resources addressed in this Draft EIR could be eliminated. These include the following:

- Aesthetics
- Biological Resources
- Cultural Resources
- Geology and Soils
- Hazards and Hazardous Materials
- Hydrology and Water Quality
- Land Use and Planning
- Noise and Vibration
- Population and Housing
- Public Services
- Transportation and Traffic
- Utilities and Service Systems

As noted in the IS, the thresholds of significance eliminated for further analysis for each of these environmental resources are noted by the statement, "This issue is not proposed for further analysis in the EIR." The supporting analysis, findings, and conclusions in support of this determination are provided for each of these.

After analysis of the remaining thresholds in the Draft EIR, impacts related to the following issues were determined to be less than significant or less than significant with the implementation of mitigation measures:

- Aesthetics
- Air Quality
- Biological Resources
- Cultural Resources and Tribal Cultural Resources
- Energy
- Geology and Soils
- Greenhouse Gas Emissions
- Hazards and Hazardous Materials
- Hydrology and Water Quality
- Land Use and Planning
- Noise and Vibration
- Population and Housing
- Public Services
- Recreation
- Transportation and Traffic
- Utilities and Service Systems

5.2 Significant Irreversible Environmental Changes That Would Be Caused by the Proposed Project Should It Be Implemented

Section 15126.2(c) of the CEQA Guidelines indicates that uses of nonrenewable resources during the initial and continued phases of a project may be irreversible because a large commitment of such resources makes removal or nonuse thereafter unlikely. Primary impacts and, particularly, secondary impacts (such as a street improvement that provides access to a previously inaccessible area) generally commit future generations to similar uses. Also, irreversible damage can result from environmental accidents associated with a project. Irretrievable commitments of resources should be evaluated to ensure that such current consumption is justified.

Implementing the proposed Project would commit nonrenewable (e.g., petroleum) or slowly renewable (e.g., timber) resources during construction and operation. In order to construct the proposed Project, machinery, equipment, materials (e.g., lumber, sand, gravel), and workers would be required, representing an irreversible commitment of some of these resources. Similarly, during operation, some of these resources (e.g., energy, electricity) would again be needed, representing a long-term commitment and permanent investment. The consumption and use of some of these resources would limit their availability for future generations. However, the proposed Project would provide public recreational facilities to communities that demonstrate high need. In addition, the proposed Project would be designed to meet the City's sustainability and active transportation goals. Therefore, the significant irreversible changes have been deemed acceptable in light of the proposed Project's overall benefits.

5.3 Growth-Inducing Impacts

Section 15126.2(d) of the CEQA Guidelines indicates the following relative to growth-inducement:

> Discuss the way in which a proposed project could foster economic or population growth, or the construction of additional housing, either directly or indirectly, in the surrounding environment. Included in this are projects which would remove obstacles to population growth (a major expansion of a wastewater treatment plant might, for example, allow for more construction in service areas). Increases in the population may tax existing community service facilities, requiring construction of new facilities that could cause significant environmental effects. Also discuss the characteristic of some projects which may encourage and facilitate other activities that could significantly affect the environment, either individually or cumulatively. It must not be assumed that growth in any area is necessarily beneficial, detrimental, or of little significance to the environment.

A proposed project can result in both direct and indirect growth-inducing impacts. Typically, the development of new housing would result in direct growth-inducement, while the development of new employment opportunities (both short- and long-term) would result in indirect growth-inducement. The removal of an obstacle to growth, such as construction of a necessary public service of infrastructure can also result in indirect growth-inducement. If not considered in local land use or growth management plans, such projects can result in potentially significant and adverse impacts.

As stated in Chapter 2, Project Description, the overall objectives of the proposed Project are to (1) serve the open space and recreational needs of surrounding communities; (2) connect and improve neighborhoods; (3) incorporate sustainable design consistent with the City's plans and goals; (4) encourage active modes of transportation and public transit; (5) promote beneficial stormwater treatment and/or capture; and (6) provide safe pedestrian and bicycle access to the River. The proposed Project is not intended to facilitate growth but instead serve the recreational needs of the local surrounding communities.

5.4 Direct Population-Generating Uses

The proposed Project does not include the development of new housing or other population-generating uses that would directly induce population growth or attract a substantial number or workers, nor would it tax existing community service facilities, thereby requiring the construction of new facilities, which could cause significant environmental effects. Population-generating uses are not proposed. Furthermore, the proposed Project is considered infill and is located in a highly urbanized area that experienced significant development over the past century, and the service area is primarily built out. Therefore, the proposed Project would not directly induce new residential development or result in population growth in the service area. Impacts would be less than significant, and mitigation would not be required.

5.5 Growth Accommodation

The population of the area served by the proposed Project has been growing and is projected to keep growing regardless of whether the proposed Project is implemented. Furthermore, the proposed Project would meet the current and future need for parks and recreational facilities in communities that

demonstrate high need. Therefore, the proposed Project is not growth inducing but, rather, growth accommodating. Impacts would be less than significant, and mitigation would not be required.

5.6 Expansion of Public Services or Utilities

Since the proposed Project involves creating public recreational facilities, it inherently involves the expansion of a public service. However, the improvements would be growth accommodating rather than growth inducing, as described in Section 5.5. Although the proposed Project would involve the creation of a public facility, it would not induce population growth but, rather, accommodate growth that would occur independent of the proposed Project implementation and meet the existing need for parks and recreational facilities. Impacts would be less than significant, and mitigation would not be required.

Chapter 6
Preparers, Contributors, and Oversight

6.1 City of Los Angeles

Bureau of Engineering

Deborah Weintraub, Chief Deputy City Engineer

Mary Nemick, Director of Communications

Julie Allen, Sixth Street Viaduct Division Manager

Gary Lam, Senior Civil Engineer

Natalie Moore, Civil Engineering Associate II

Dr. Jan Green Rebstock, Environmental Supervisor II

Amanda Griesbach Amaral, Environmental Specialist III

Talmadge Maxwell Jordan, Environmental Specialist II

Department of Recreation and Parks

Tom Gibson, Landscape Architect

Elena Maggioni, Environmental Specialist II

Bureau of Sanitation

Deborah Deets, Landscape Architect

Department of Cultural Affairs

Becky Snodgrass, Program Manager

Councilmember Kevin de León, 14th District

Nate Hayward, Capital Projects Director

Rocio Hernandez, Boyle Heights Area Director (former)

Miriam Rodriguez, Boyle Heights Area Director

6.2 TetraTech

Mauricio Argente, Vice President

Justin Smith, Project Engineer

6.3 GPA Consulting

Richard Galvin, Vice President/Principal Environmental Planner

Glenn Lajoie, Principal Planner and Environmental Manager

Sylvia Vega, Principal Environmental Planner

George Gorman, Senior Environmental Planner

Nicole Greenfield, Associate Environmental Planner

Allie Acuña, Associate Environmental Planner

Danielle Thayer, Associate Environmental Planner

Alen Estrada-Rodas, Environmental Planner

Buddy Burch, Environmental Planner

Justin Nguyen, Environmental Planner

Noeli Topete, Environmental Planner

Martin Rose, Senior GIS Analyst

Marieka Schrader, Senior Associate Environmental Planner/Biologist

Adelina Munoz, Senior Biologist

Angela Scudiere, Senior Biologist

Hannah Hart, Biologist

Jenna Kachour, Senior Preservation Planner

Allison Lyons, Associate Architectural Historian

6.4 AMBIENT Air Quality & Noise Consulting

Kurt Legleiter, Principal

6.5 Applied EarthWorks, Inc.

Mary Clark Balonian, President/Principal Archaeologist

Tiffany Clark, Senior Archaeologist/Project Manager

Amy Ollendorf, Program Manager Paleontology

Chrisotpher Shi, Paleontology Supervisor

Scott Rohlf, Associate Paleontologist

6.6 Kimley-Horn and Associates, Inc.

Greg Kyle, QA/QC

Sri Chakravarthy, Project Manager

Carlie Campuzano, Senior Project Engineer

Laura Forinash, Project Engineer

Rossina Chichiri, Technical Support

Matt Stewart, Analyst

Kathleen Nguyen, Analyst

6.7 Hushmand Associates, Inc.

Naresh Bellana, Senior Staff Engineer

6.8 Hargreaves Associates

Mary Margaret Jones, President

Gavin McMillan, Senior Principal

Megan Esopenko, Landscape Designer

6.9 Michael Maltzan Architecture

Michael Maltzan, Design Principal

Tim Williams, Managing Principal

Paul Stoelting, Project Manager

6.10 FAST – Fixing Angelenos Stuck in Traffic/Urban Strategy Group

Hilary Norton, Executive Director, Community Relations Strategist

Arturo Gonzalez, Director of Community Affairs

Joanna Amador, Community Relations Coordinator, Urban Strategy Group

6.11 Urban Design Center

Griffin Wright, Project Manager

6.12 Stacy and Witbeck, Inc

Robert Thorpe, Engineer

6.13 Kaino Co

Glenn Kaino, Conceptual Artist

Taked Royer

Gideon Webster

This page intentionally left blank.

Chapter 7
References

Executive Summary

City of Los Angeles. (2007, April). Los Angeles River Revitilization Master Plan. Retrieved from City of Los Angeles River Revitilization: http://boe.lacity.org/lariverrmp/CommunityOutreach/masterplan_download.htm

1.0 Introduction

City of Los Angeles. (2006). L.A. CEQA Thresholds Guide. Retrieved from Los Angeles City Planning: https://planning.lacity.org/odocument/cc8fb2f5-dc6c-47f1-bfc3-864b84621abb/CEQAThresholdsGuide.pdf

City of Los Angeles. (2007). Los Angeles River Revitalization Master Plan. Retrieved from http://boe.lacity.org/lariverrmp/CommunityOutreach/pdf/LARRMP_Final_05_03_07.pdf

City of Los Angeles. (2017). Downtown LA Development. Retrieved from https://www.google.com/maps/d/viewer?mid=1mTXj5STlZz66Dzs2MS9ZWmlfONI&hl=en_US&ll=34.04386005649254%2C-118.2207374082119&z=15

City of Los Angeles. (2019). Case Summary & Documents. Retrieved from Los Angeles City Planning: https://planning.lacity.org/pdiscaseinfo/

Kimley-Horn and Associates, Inc. (2019). Traffic Impact Analysis. Los Angeles: Kimley-Horn and Associates, Inc.

2.0 Project Description

City of Los Angeles. (1998). *Boyle Heights Community Plan.* Retrieved from Los Angeles City Planning: https://planning.lacity.org/plans-policies/community-plan-area/boyle-heights

City of Los Angeles. (2020). *Boyle Heights Community Plan Summer 2020 Draft.* Retrieved from Los Angeles City Planning: https://planning.lacity.org/odocument/a21becea-0083-44a8-9864-cef634ef669c/Boyle_Heights_Community_Plan_-_Summer_2020_Draft.pdf

City of Los Angeles. (2000). *Central City North Community Plan.* Retrieved from Los Angeles City Planning: https://planning.lacity.org/plans-policies/community-plan-area/central-city-north

City of Los Angeles. (2020). *Downtown Community Plan Fall 2020 Draft.* Retrieved from Los Angeles City Planning: https://planning.lacity.org/odocument/4b8c3990-0ca7-4870-bd4d-59e80193d810/Draft_Plan_Nov_2020.pdf

City of Los Angeles. (2007, April). *Los Angeles River Revitalization Master Plan.* Retrieved March 13, 2019, from http://boe.lacity.org/lariverrmp/CommunityOutreach/masterplan_download.htm

City of Los Angeles. (2016, September 7). *Mobility Plan 2035.* Retrieved March 13, 2019, from Los Angeles City Planning: https://planning.lacity.org/plans-policies/initiatives-policies/mobility

City of Los Angeles. (2018, April). *One Water LA 2040 Plan.* Retrieved March 13, 2019, from One Water LA: https://www.lacitysan.org/san/faces/home/portal/s-lsh-es/s-lsh-es-owla/s-lsh-es-owla-r/s-lsh-es-owla-r-owlap?_adf.ctrl-state=vs336psz1_5&_afrLoop=5405828261511859#!

3.1 Aesthetics

Bureau of Street Lighting. (2007, May). *Design Standards and Guidelines.* Retrieved from Los Angeles Department of Public Works: http://bsl.lacity.org/downloads/business/bsldesignstandardsandguidelines0507web.pdf

City of Los Angeles. (1998). *Boyle Heights Community Plan.* Retrieved from Los Angeles City Planning: https://planning.lacity.org/plans-policies/community-plan-area/boyle-heights

City of Los Angeles. (2020). *Boyle Heights Community Plan Summer 2020 Draft.* Retrieved from Los Angeles City Planning: https://planning.lacity.org/odocument/a21becea-0083-44a8-9864-cef634ef669c/Boyle_Heights_Community_Plan_-_Summer_2020_Draft.pdf

City of Los Angeles. (2000). *Central City North Community Plan.* Retrieved from Los Angeles City Planning: https://planning.lacity.org/plans-policies/community-plan-area/central-city-north

City of Los Angeles. (2020). *Downtown Community Plan Fall 2020 Draft*. Retrieved from Los Angeles City Planning: https://planning.lacity.org/odocument/4b8c3990-0ca7-4870-bd4d-59e80193d810/Draft_Plan_Nov_2020.pdf

City of Los Angeles. (2006). *LA CEQA Thresholds Guide.* Retrieved from Los Angeles City Planning: https://planning.lacity.org/eir/CrossroadsHwd/deir/files/references/A07.pdf

City of Los Angeles. (2016). *LA River Design Guidebook.* Retrieved from Los Angeles River Revitalization: http://lariver.org/blog/la-river-design-guidebook

City of Los Angeles. (2017, February). *OurLA2040*. Retrieved from Los Angeles City Planning: https://planning.lacity.org/plans-policies/general-plan-updates

City of Los Angeles. (n.d.). *General Plan Overview*. Retrieved from Los Angeles City Planning: https://planning.lacity.org/plans-policies/general-plan-overview

GPA Consulting. (2019). *Visual Impact Assessment, Sixth Street Park, Arts, River & Connectivity Improvements (PARC) Project.* El Segundo: GPA Consulting.

Los Angeles County Department of Public Works. (1996). *Los Angeles River Master Plan*. Retrieved from: https://dpw.lacounty.gov/wmd/watershed/LA/LARMP/

Hargreaves Associates. (2019, May). Conceptual Design.Los Angeles County Department of Public Works. (1996, June). *Los Angeles River Master Plan*. Retrieved from Los Angeles County Department of Public Works: http://ladpw.org/wmd/watershed/la/larmp/

3.2 Air Quality

AMBIENT Air Quality & Noise Consulting. (2019). *Air Quality & Greenhouse Gas Impact Assessment for 6th Street PARC Project.* Paso Robles.

California Air Resources Board. (2005a, April). *Air Quality and Land Use Handbook: A Community Health Perspective.* Retrieved February 28, 2019, from California Air Resources Board: https://www.arb.ca.gov/ch/handbook.pdf

California Air Resources Board. (2005b, February). *Carbon Monoxide Redesignation Request and Maintenance Plan.* Retrieved from California State Implementation Plans: https://www.arb.ca.gov/planning/sip/sccosip05/sccosip_redesig_mplan.pdf

California Air Resources Board. (2007a, November 6). *Health Risk Assessment for the Union Pacific Railroad Los Angeles Transportation Center Railyard.* Retrieved February 28, 2019, from Stationary Source Division: https://www.arb.ca.gov/railyard/hra/up_latc_hra.pdf

California Air Resources Board. (2007b, November 30). *Health Risk Assessment for the Four Commerce Railyards.* Retrieved from Stationary Source Division: https://www.arb.ca.gov/railyard/hra/4com_hra.pdf

California Air Resources Board. (2016, October). *In-Use Off-Road Diesel Fueled Fleets Regulation Overview.* Retrieved February 28, 2019, from https://www.arb.ca.gov/msprog/ordiesel/faq/overview_fact_sheet_dec_2010-final.pdf

California Air Resources Board. (2019a, March 5). *In-Use Off-Road Diesel-Fueled Fleets Regulation.* Retrieved from California Air Resources Board: https://ww2.arb.ca.gov/our-work/programs/use-road-diesel-fueled-fleets-regulation

California Air Resources Board. (2019b). *Overview: Diesel Exhaust & Health.* Retrieved from https://ww2.arb.ca.gov/resources/overview-diesel-exhaust-and-health

California Department of Transportation and City of Los Angeles. (2011). *6th Street Viaduct Seismic Improvement Project Final Environmental Impact Report/Environmental Impact Statement and Section 4(f) Evaluation.* Los Angeles.

California Geological Survey. (2011). *Reported Historic Asbestos Mines, Historic Asbestos Prospects, and Other Natural Occurrences of Asbestos in California.* Retrieved February 28, 2019, from State of California Department of Conservation: https://pubs.usgs.gov/of/2011/1188/pdf/Pamphlet.pdf

Centers for Disease Control and Prevention. (2014, December 4). *Hydrogen sulfide.* Retrieved from The National Institute for Occupational Safety and Health: https://www.cdc.gov/niosh/idlh/7783064.html

Centers for Disease Control and Prevention. (2018, June 18). *Lead.* Retrieved from The National Institute for Occupational Safety and Health: https://www.cdc.gov/niosh/topics/lead/health.html

City of Los Angeles. (1992, November 24). *Air Quality Element, An Element of the General Plan of the City of Los Angeles.* Retrieved February 28, 2019, from Los Angeles City Planning: https://planning.lacity.org/odocument/0ff9a9b0-0adf-49b4-8e07-0c16feea70bc/Air_Quality_Element.pdf

Kimley-Horn and Associates, Inc. (2019a). *Traffic Impact Analysis.* Los Angeles: Kimley-Horn and Associates.

South Coast Air Quality Management District. (1980, November). *A Climatological/Air Quality Profile, California South Coast Air Basin.* Retrieved from California Air Resources Board: https://ww3.arb.ca.gov/research/apr/reports/l6016.pdf

South Coast Air Quality Management District. (2005, May 6). *Guidance Document for Addressing Air Quality.* Retrieved from Addressing Air Quality Issues in General Plans, Local Planning, and School Siting: http://www.aqmd.gov/docs/default-source/planning/air-quality-guidance/complete-guidance-document.pdf

South Coast Air Quality Management District. (2008, July). *Final Localized Significance Threshold Methodology.* Retrieved February 28, 2019, from Localized Significance Thresholds: http://www.aqmd.gov/docs/default-source/ceqa/handbook/localized-significance-thresholds/final-lst-methodology-document.pdf?sfvrsn=2

South Coast Air Quality Management District. (2012, May 4). *Final 2012 Lead State Implementation Plan Los Angeles County.* Retrieved from Lead State Implementation Plan: http://www3.aqmd.gov/hb/attachments/2011-2015/2012May/2012-May4-030.pdf

South Coast Air Quality Management District. (2015, May). *Final Report, Multiple Air Toxics Exposure Study in the South Coast Air Basin.* Retrieved February 28, 2019, from MATES-IV: http://www.aqmd.gov/docs/default-source/air-quality/air-toxic-studies/mates-iv/mates-iv-final-draft-report-4-1-15.pdf

South Coast Air Quality Management District. (2016, February). *National Ambient Air Quality Standards (NAAQS) and California Ambient Air Quality Standards (CAAQS) Attainment Status for South Coast Air Basin.* Retrieved from http://www.aqmd.gov/docs/default-source/clean-air-plans/air-quality-management-plans/naaqs-caaqs-feb2016.pdf

South Coast Air Quality Management District. (2017, March). *Final 2016 Air Quality Management Plan.* Retrieved from Final 2016 AQMP-CARB/EPA/SIP Submittal: https://www.aqmd.gov/docs/default-source/clean-air-plans/air-quality-management-plans/2016-air-quality-management-plan/final-2016-aqmp/final2016aqmp.pdf?sfvrsn=15

South Coast Air Quality Management District. (2018). *Localized Significance Thresholds*. Retrieved February 28, 2019, from Air Quality Analysis Handbook: http://www.aqmd.gov/home/rules-compliance/ceqa/air-quality-analysis-handbook/localized-significance-thresholds

South Coast Air Quality Management District. (2019, April). *South Coast AQMD Air Quality Significance Thresholds.* Retrieved from http://www.aqmd.gov/docs/default-source/ceqa/handbook/scaqmd-air-quality-significance-thresholds.pdf?sfvrsn=2

Southern California Association of Governments. (2020). *CONNECTSocal 2020-2045 Regional Transportation Plan/Sustainable Communities Strategy.* Retrieved April 29, 2021 from: https://scag.ca.gov/sites/main/files/file-attachments/0903fconnectsocal-plan_0.pdf?1606001176.

U.S. Environmental Protection Agency. (2013, June). *Integrated Science Assessment (ISA) for Lead.* Retrieved from Integrated Science Assessments: https://cfpub.epa.gov/ncea/risk/recordisplay.cfm?deid=255721

U.S. Environmental Protection Agency. (2017a, February 27). *Ecosystem Effects of Ozone Pollution.* Retrieved from Ground-level Ozone Pollution: https://www.epa.gov/ground-level-ozone-pollution/ecosystem-effects-ozone-pollution

U.S. Environmental Protection Agency. (2017b, August 15). *Particle Pollution Exposure*. Retrieved February 28, 2019, from Particle Pollution and Your Patients' Health: https://www.epa.gov/pmcourse/particle-pollution-exposure

U.S. Environmental Protection Agency. (2017d, April). *Technical Overview of Volatile Organic Compounds.* Retrieved from Indoor Air Quality: https://www.epa.gov/indoor-air-quality-iaq/technical-overview-volatile-organic-compounds

U.S. Environmental Protection Agency. (2017e, November 6). *Volatile Organic Compounds' Impact on Indoor Air Quality.* Retrieved from Indoor Air Quality: https://www.epa.gov/indoor-air-quality-iaq/volatile-organic-compounds-impact-indoor-air-quality

U.S. Environmental Protection Agency. (2018a, June 20). *Health and Environmental Effects of Particulate Matter (PM).* Retrieved from Particulate Matter (PM) Pollution: https://www.epa.gov/pm-pollution/health-and-environmental-effects-particulate-matter-pm

U.S. Environmental Protection Agency. (2018b, October 10). *Health Effects of Ozone Pollution.* Retrieved from Ground-level Ozone Pollution: https://www.epa.gov/ground-level-ozone-pollution/health-effects-ozone-pollution

U.S. Environmental Protection Agency. (2018c, August 29). *Managing Air Quality - Program Implementation*. Retrieved February 28, 2019, from https://www.epa.gov/air-quality-management-process/managing-air-quality-program-implementation

Western Regional Climate Center. (2018, April 17). *Climate Summaries*. Retrieved from https://wrcc.dri.edu/Climate/summaries.phpAMBIENT Air Quality & Noise Consulting. (2019). Air Quality & Greenhouse Gas Impact Assessment for 6th Street PARC Project. Paso Robles.

California Air Resources Board. (2005a, April). Air Quality and Land Use Handbook: A Community Health Perspective. Retrieved February 28, 2019, from California Air Resources Board: https://www.arb.ca.gov/ch/handbook.pdf

California Air Resources Board. (2005b, February). Carbon Monoxide Redesignation Request and Maintenance Plan. Retrieved from California State Implementation Plans: https://www.arb.ca.gov/planning/sip/sccosip05/sccosip_redesig_mplan.pdf

California Air Resources Board. (2007a, November 6). Health Risk Assessment for the Union Pacific Railroad Los Angeles Transportation Center Railyard. Retrieved February 28, 2019, from Stationary Source Division: https://www.arb.ca.gov/railyard/hra/up_latc_hra.pdf

California Air Resources Board. (2007b, November 30). Health Risk Assessment for the Four Commerce Railyards. Retrieved from Stationary Source Division: https://www.arb.ca.gov/railyard/hra/4com_hra.pdf

California Air Resources Board. (2016, October). In-Use Off-Road Diesel Fueled Fleets Regulation Overview. Retrieved February 28, 2019, from https://www.arb.ca.gov/msprog/ordiesel/faq/overview_fact_sheet_dec_2010-final.pdf

California Air Resources Board. (2019a, March 5). In-Use Off-Road Diesel-Fueled Fleets Regulation. Retrieved from California Air Resources Board: https://www.arb.ca.gov/msprog/ordiesel/ordiesel.htm

California Air Resources Board. (2019b). Overview: Diesel Exhaust & Health. Retrieved from https://ww2.arb.ca.gov/resources/overview-diesel-exhaust-and-health

California Department of Transportation and City of Los Angeles. (2011). 6th Street Viaduct Seismic Improvement Project Final Environmental Impact Report/Environmental Impact Statement and Section 4(f) Evaluation. Los Angeles.

California Geological Survey. (2011). Reported Historic Asbestos Mines, Historic Asbestos Prospects, and Other Natural Occurrences of Asbestos in California. Retrieved February 28, 2019, from State of California Department of Conservation: ftp://ftp.consrv.ca.gov/pub/dmg/pubs/ms/59/MS59_Plate.pdf

Centers for Disease Control and Prevention. (2014, December 4). Hydrogen sulfide. Retrieved from The National Institute for Occupational Safety and Health: https://www.cdc.gov/niosh/idlh/7783064.html

Centers for Disease Control and Prevention. (2018, June 18). Lead. Retrieved from The National Institute for Occupational Safety and Health: https://www.cdc.gov/niosh/topics/lead/health.html

City of Los Angeles. (1992, November 24). Air Quality Element, An Element of the General Plan of the City of Los Angeles. Retrieved February 28, 2019, from General Plan Elements: https://planning.lacity.org/cwd/gnlpln/aqltyelt.pdf

Kimley-Horn and Associates, Inc. (2019a). Traffic Impact Analysis. Los Angeles: Kimley-Horn and Associates.

South Coast Air Quality Management District. (1980, November). A Climatological/Air Quality Profile, California South Coast Air Basin. Retrieved from California Air Resources Board: https://ww3.arb.ca.gov/research/apr/reports/l6016.pdf

South Coast Air Quality Management District. (2005, May 6). Guidance Document for Addressing Air Quality. Retrieved from Addressing Air Quality Issues in General Plans, Local Planning, and School Siting: http://www.aqmd.gov/docs/default-source/planning/air-quality-guidance/complete-guidance-document.pdf

South Coast Air Quality Management District. (2008, July). Final Localized Significance Threshold Methodology. Retrieved February 28, 2019, from Localized Significance Thresholds:

http://www.aqmd.gov/docs/default-source/ceqa/handbook/localized-significance-thresholds/final-lst-methodology-document.pdf?sfvrsn=2

South Coast Air Quality Management District. (2012, May 4). Final 2012 Lead State Implementation Plan Los Angeles County. Retrieved from Lead State Implementation Plan: http://www3.aqmd.gov/hb/attachments/2011-2015/2012May/2012-May4-030.pdf

South Coast Air Quality Management District. (2015, May). Final Report, Multiple Air Toxics Exposure Study in the South Coast Air Basin. Retrieved February 28, 2019, from MATES-IV: http://www.aqmd.gov/docs/default-source/air-quality/air-toxic-studies/mates-iv/mates-iv-final-draft-report-4-1-15.pdf

South Coast Air Quality Management District. (2016, February). National Ambient Air Quality Standards (NAAQS) and California Ambient Air Quality Standards (CAAQS) Attainment Status for South Coast Air Basin. Retrieved from http://www.aqmd.gov/docs/default-source/clean-air-plans/air-quality-management-plans/naaqs-caaqs-feb2016.pdf

South Coast Air Quality Management District. (2017, March). Final 2016 Air Quality Management Plan. Retrieved from Final 2016 AQMP-CARB/EPA/SIP Submittal: https://www.aqmd.gov/docs/default-source/clean-air-plans/air-quality-management-plans/2016-air-quality-management-plan/final-2016-aqmp/final2016aqmp.pdf?sfvrsn=15

South Coast Air Quality Management District. (2018). Localized Significance Thresholds. Retrieved February 28, 2019, from Air Quality Analysis Handbook: http://www.aqmd.gov/home/rules-compliance/ceqa/air-quality-analysis-handbook/localized-significance-thresholds

Southern California Association of Governments. (2020). *CONNECTSocal 2020-2045 Regional Transportation Plan/Sustainable Communities Strategy.* Retrieved April 29, 2021 from: https://scag.ca.gov/sites/main/files/file-attachments/0903fconnectsocal-plan_0.pdf?1606001176.

U.S. Environmental Protection Agency. (2013, June). Integrated Science Assessment (ISA) for Lead. Retrieved from Integrated Science Assessments: https://cfpub.epa.gov/ncea/risk/recordisplay.cfm?deid=255721

U.S. Environmental Protection Agency. (2017a, February 27). Ecosystem Effects of Ozone Pollution. Retrieved from Ground-level Ozone Pollution: https://www.epa.gov/ground-level-ozone-pollution/ecosystem-effects-ozone-pollution

U.S. Environmental Protection Agency. (2017b, August 15). Particle Pollution Exposure. Retrieved February 28, 2019, from Particle Pollution and Your Patients' Health: https://www.epa.gov/pmcourse/particle-pollution-exposure

U.S. Environmental Protection Agency. (2017c, August 15). Particle Pollution Exposure. Retrieved from Particle Pollution and Your Patients' Health: https://www.epa.gov/pmcourse/particle-pollution-exposure

U.S. Environmental Protection Agency. (2017d, April). Technical Overview of Volatile Organic Compounds. Retrieved from Indoor Air Quality: https://www.epa.gov/indoor-air-quality-iaq/technical-overview-volatile-organic-compounds

U.S. Environmental Protection Agency. (2017e, November 6). Volatile Organic Compounds' Impact on Indoor Air Quality. Retrieved from Indoor Air Quality: https://www.epa.gov/indoor-air-quality-iaq/volatile-organic-compounds-impact-indoor-air-quality

U.S. Environmental Protection Agency. (2018a, June 20). Health and Environmental Effects of Particulate Matter (PM). Retrieved from Particulate Matter (PM) Pollution: https://www.epa.gov/pm-pollution/health-and-environmental-effects-particulate-matter-pm

U.S. Environmental Protection Agency. (2018b, October 10). Health Effects of Ozone Pollution. Retrieved from Ground-level Ozone Pollution: https://www.epa.gov/ground-level-ozone-pollution/health-effects-ozone-pollution

U.S. Environmental Protection Agency. (2018c, August 29). Managing Air Quality - Program Implementation. Retrieved February 28, 2019, from https://www.epa.gov/air-quality-management-process/managing-air-quality-program-implementation

Western Regional Climate Center. (2018, April 17). Climate Summaries. Retrieved from https://wrcc.dri.edu/Climate/summaries.php

3.3 Biological Resources

California Department of Fish and Wildlife. (2018, March 6). *BIOS Habitat Connectivity Viewer*. Retrieved from California Department of Fish and Wildlife BIOS: https://www.wildlife.ca.gov/Data/BIOS

California Department of Fish and Wildlife. (2019). *Special Animals List*. Retrieved from California Department of Fish and Wildlife, California Natural Diversity Database (CNDDB): https://www.wildlife.ca.gov/Data/CNDDB

California Native Plant Society. (2019). *The CNPS Inventory of Rare and Endangered Plants*. Retrieved from https://www.cnps.org/rare-plants/cnps-inventory-of-rare-plants

City of Los Angeles. (2001, September 26). *Conservation Element of the City of Los Angeles General Plan*. Retrieved from Los Angeles City Planning: https://planning.lacity.org/odocument/28af7e21-ffdd-4f26-84e6-dfa967b2a1ee/Conservation_Element.pdf

City of Los Angeles. (2019). *General Plan Elements*. Retrieved from Los Angeles City Planning: https://planning.lacity.org/plans-policies/general-plan-overview

Cowardin, L., Carter, V., Golet, F., & LaRoe, E. (1979, December). *Classification of Wetlands and Deepwater Habitats of the United States.* Retrieved from U.S. Fish & Wildlife Service: https://www.fws.gov/wetlands/Documents/Classification-of-Wetlands-and-Deepwater-Habitats-of-the-United-States.pdf

GPA Consulting. (2015a). *Sixth Street Viaduct Replacement Project: Bat and Nesting Bird Survey Report.*

GPA Consulting. (2015b). *Supplemental Bat Survey Report.*

GPA Consulting. (2019). *Biological Resources Report.* Los Angeles: GPA Consulting.

Leopold, L. (1994). *A View of the River.* Cambridge: Harvard University Press.

National Marine Fisheries Service. (2019, February). *NMFS WCR CA Species List December 2016*. Retrieved March 16, 2018, from NOAA Fisheries West Coast Region: http://www.westcoast.fisheries.noaa.gov/maps_data/california_species_list_tools.html

Rosgen, D. (1996). *Applied River Morphology. Wildlands Hydrology.*

State Water Resources Control Board. (2019, April 2). *State Wetland Definition and Procedures for Discharges of Dredged or Fill Material to Waters of the State.* Retrieved from Wetland Riparian Area Protection Policy: https://www.waterboards.ca.gov/water_issues/programs/cwa401/wrapp.html

U.S. Fish and Wildlife Service. (2020, March). *Migratory Bird Treaty Act Protected Species (10.13 List)*. Retrieved April 29, 2021, from U.S. Fish and Wildlife Service Migratory Bird Program: https://www.fws.gov/birds/management/managed-species/migratory-bird-treaty-act-protected-species.php

U.S. Fish and Wildlife Service. (2020, April). *Migratory Bird Treaty Act: Birds Protected*. Retrieved April 29, 2021, from U.S. Fish and Wildlife Service Migratory Bird Program: https://www.fws.gov//birds/policies-and-regulations/laws-legislations/migratory-bird-treaty-act.php

U.S. Fish and Wildlife Service. (2019, February). *IPaC Information for Planning and Consultation*. Retrieved from https://ecos.fws.gov/ipac/

3.4 Cultural Resources

Applied EarthWorks. (2019). *Archaeological Assessment for the Sixth Street PARC Improvements Project.* Hemet.

Bean. (1976). Native Californians: A Theoretical Retrospective. In L. J. Bean. Ramona, California : Ballena Press.

GPA Consulting. (2019). *Historical Resource Evaluation Report.* Los Angeles: GPA Consulting.

Historic Resources Group. (2016). *Historic Resources Survey Report: Central City North Community Plan Area.* Retrieved from Office of Historic Resources: https://planning.lacity.org/preservation-design/survey-la-results-central-city-north

Mayuga, M.N. (1970). Geology and Development of California's Giant—Wilmington Oil Field. *Geology of Giant Petroleum Fields, Memoirs of the American Association of Petroleum*, 14: 158–184.

McCawley. (1996). The First Angelinos. In W. McCawley. Banning, California: Malki Museum Press.

Miller. (2014). *Isolation and Authenticity in Los Angeles' Art District Neighborhood - Master's Thesis.* University of Southern California.

National Park Service. (1990). *Bulletin #15: How to Apply the National Register Criteria for Evaluation.* Retrieved from National Register Publications: https://www.nps.gov/subjects/nationalregister/publications.htm

Parsons. (2007). *Historical Resources Evaluation Report: 6th Street Viaduct Seismic Improvement Project.* Los Angeles: Los Angeles Department of Public Works, Bureau of Engineering Environmental Management Group.

PCR Services Corporation. (2008). *Intensive Historic Resources Survey: Adelante Eastside Redevelopment Project Area, Los Angeles, California.* Los Angeles: Community Redevelopment Agency of the City of Los Angeles.

Sikes. (2012). *Archaeological Resources Supplemental Survey Technical Report. In The Westside Subway Extension Final Environmental Impact Statement/Environmental Impact Report – Volume 1, State Clearinghouse No. 2009031083.* Retrieved from http://media.metro.net/projects_studies/westside/images/final_eir-eis/Archaeological%20Resources%20Suppl%20Survey%20Tech%20Report%20-%20Part%208%20of%2011.pdf

3.5 Energy

Ambient Air Quality & Noise Consulting. (2019, April 23). Sixth Street PARC Energy Use.

California Energy Commission. (2014, June). *Strategic Plan.* Retrieved February 22, 2019, from California Energy Commission: https://www.energy.ca.gov/sites/default/files/2020-01/2014-06_California_Energy_Commission_Strategic_Plan_ada.pdf

California Energy Commission. (2018, December). *2019 Building Energy Efficiency Standards for Residential and Nonresidential Buildings.* Retrieved April 29, 2021, from California Energy Commission: https://ww2.energy.ca.gov/publications/displayOneReport_cms.php?pubNum=CEC-400-2018-020-CMF

California Energy Commission. (2019). *California Energy Consumption Database.* Retrieved May 6, 2021, from California Energy Commission: http://www.ecdms.energy.ca.gov/

California Public Utilities Commission. (2008, September). *California Long Term Energy Efficiency Strategic Plan.* Retrieved February 28, 2019, from Energy Efficiency Strategic Plan: http://www.cpuc.ca.gov/general.aspx?id=4125

City of Los Angeles. (2007, May). *Green LA: An Action Plan to Lead the Nation in Fighting Global Warming.* Retrieved from Sustainability Initiatives: http://environmentla.org/pdf/GreenLA_CAP_2007.pdf

City of Los Angeles. (2017, February). *OurLA2040*. Retrieved February 28, 2019, from Los Angeles City Planning: https://www.ourla2040.org/sites/default/files/PC1_Los_Angeles_General_Plan_Overview_FEB2017.pdf

Los Angeles Department of Water and Power. (2013). *Water - Sources of Supply*. Retrieved February 28, 2019, from Los Angeles Department of Water and Power: https://www.ladwp.com/ladwp/faces/wcnav_externalId/a-w-source-sply?_adf.ctrl-state=a7nicm5kh_4&_afrLoop=187922303698961&_afrWindowMode=0&_afrWindowId=bdcw

s7mqr_14#%40%3F_afrWindowId%3Dbdcws7mqr_14%26_afrLoop%3D187922303698961%26_afrWindowMode%3D0%26_adf.c

Los Angeles Department of Water and Power. (2016). *2016 Power Integrated Resource Plan.* Los Angeles.

Los Angeles Department of Water and Power. (2019). *Facts & Figures.* Retrieved May 6, 2021, from Power: https://www.ladwp.com/ladwp/faces/ladwp/aboutus/a-power/a-p-factandfigures;jsessionid=DQ1fgJWShnvVmkPvWJNszXnp2np2xkX1y2B8PGG4TFJvyvGgJsJQ!-91018853?_adf.ctrl-state=15mr4c5w1t_4&_afrLoop=97868875263758&_afrWindowMode=0&_afrWindowId=null#%40%3F_afrWindowId%3Dnull%26_afrLoop%3D97868875263758%26_afrWindowMode%3D0%26_adf.ctrl-state%3Dm0wu1duck_4

Office of the Los Angeles Mayor. (2019). *L.A.'s Green New Deal Sustainable City pLAn 2019.* Retrieved February 28, 2019, from Green New Deal: http://plan.lamayor.org/sites/default/files/pLAn_2019_final.pdf

South Coast Air Quality Management District. (1993). *CEQA Air Quality Handbook.*

Southern California Gas Company. (n.d.). *About SoCalGas*. Retrieved February 28, 2019, from SoCalGas: https://www.socalgas.com/about-us/company-profile

U.S. Energy Information Administration. (2018, November 15). *Profile Overview*. Retrieved April 25, 2019, from California State Profile and Energy Estimates: https://www.eia.gov/state/?sid=CA#tabs-2

3.6 Geology and Soils

Applied EarthWorks. (2019). *Paleontological Resource Assessment for the Sixth Street PARC Improvements Project.* Pasadena.

California Department of Conservation. (1977, January 1). *Los Angeles Quadrangle.* Retrieved February 28, 2019, from State of California Special Studies Zones: http://gmw.consrv.ca.gov/shmp/download/quad/LOS_ANGELES/maps/LOSANGELES.PDF

California Department of Conservation. (1999, March 25). *State of California Seismic Hazard Zones.* Retrieved February 28, 2019, from https://www.conservation.ca.gov/cgs/shp

California Department of Conservation. (2018). *California Geological Survey - Alquist-Priolo Earthquake Fault Zoning Act*. Retrieved February 28, 2019, from California Department of Conservation: https://www.conservation.ca.gov/cgs/alquist-priolo

California Department of Transportation and City of Los Angeles. (2011). *6th Street Viaduct Seismic Improvement Project.* Final Environmental Impact Report/Environmental Impact Statement and Section 4(f) Evaluation.

California Geological Survey. (1998). *Seismic Hazard Zone Report for the Los Angeles 7.5-Minute Quadrangle.* Retrieved February 28, 2019, from California Department of Conservation: http://gmw.conservation.ca.gov/SHP/EZRIM/Reports/SHZR/SHZR_029_Los_Angeles.pdf

California Geological Survey. (2003a). *Earthquake Shaking Potential for California.* Retrieved February 28, 2019, from https://www.arcgis.com/home/webmap/viewer.html?featurecollection=https%3A%2F%2Fgis.conservation.ca.gov%2Fserver%2Frest%2Fservices%2FCGS%2FMS48_ShakingPotential%2FMapServer%3Ff%3Djson%26option%3Dfootprints&supportsProjection=true&supportsJSONP=true

California Geological Survey. (2003b, May 12). *Fact Sheet: Seismic Hazards Zonation Program*. Retrieved February 28, 2019, from California Department of Conservation: https://www.conservation.ca.gov/cgs/Pages/Program-SHP/article10.aspx

City of Los Angeles. (1996, November 26). *Safety Element of the Los Angeles City General Plan.* Retrieved February 28, 2019, from Los Angeles City Planning: https://planning.lacity.org/odocument/31b07c9a-7eea-4694-9899-f00265b2dc0d/Safety%20Element.pdf

City of Los Angeles. (2017, February). *OurLA2040*. Retrieved February 28, 2019, from Los Angeles City Planning: https://planning.lacity.org/plans-policies/general-plan-updates

Earth Mechanics, Inc. (2015). *Foundation Report for Sixth Street Viaduct.* Fountain Valley: Earth Mechanics, Inc.

Earth Mechanics, Inc. (2016). *Foundation Report West, North East, and South East Bike Ramps, Sixth Street Viaduct Replacement Project.* Santa Ana: Earth Mechanics, Inc.

Hushmand Associates, Inc. (2018). *Geotechnical Site Investigation, Sixth Street Viaduct - PARC Improvements.* Irvine: Hushmand Associates, Inc.

Norris, R. M., & Webb, R. W. (1976). *Geology of California.* New York: John Wiley & Sons.

Society of Vertebrate Paleontology. (2010). *Standard Procedures for the Assessment and Mitigation of Adverse Impacts to Paleontological Resources.* Retrieved from Society of Vertebrate Paleontology Impact Mitigation Guidelines Revision Committee: h https://vertpaleo.org/wp-content/uploads/2021/01/SVP_Impact_Mitigation_Guidelines.pdf

Springer et al. (2009). The Diamond Valley Lake Local Fauna - Late Pleistocene Vertebrates from Inland Southern California. *Albright, L. B. III, ed., Papers on Geology, Vertebrate Paleontology, and Biostratigraphy in Honor of Michael O. Woodburne. Museum of Northern Arizona Bulletin 65, Flagstaff, Arizona*.

U.S. Geological Survey. (1965). *Geology of the Los Angeles Basin, California; an Introduction.* Retrieved February 28, 2019, from U.S. Geological Survey: https://pubs.usgs.gov/pp/0420a/report.pdf

U.S. Geological Survey. (1989). *Swelling Clays Map of the Conterminous United States.* Retrieved February 28, 2019, from National Geologic Map Database: https://ngmdb.usgs.gov/Prodesc/proddesc_10014.htm

Yerkes, R. F., & Campbell, R. H. (2005). *Preliminary Geologic Map of Los Angeles 30'X60 Quadrangle, Southern California.*

3.7 Greenhouse Gas Emissions

Ambient Air Quality & Noise Consulting. (2019). Air Quality & Greenhouse Gas Impact Assessment for 6th Street PARC Project. Paso Robles.

California Air Resources Board. (2017a, March). Short-Lived Climate Pollutant Reduction Strategy. Retrieved from California Environmental Protection Agency: https://www.arb.ca.gov/cc/shortlived/meetings/03142017/final_slcp_report.pdf

California Air Resources Board. (2017b, January 20). The 2017 Climate Change Scoping Plan Update. Retrieved from AB 32 Scoping Plan: https://www.arb.ca.gov/cc/scopingplan/2030sp_pp_final.pdf

California Air Resources Board. (2018a, July 11). California Greenhouse Gas Emission Inventory - 2018 Edition. Retrieved from https://www.arb.ca.gov/cc/inventory/data/data.htm

California Air Resources Board. (2019). California Greenhouse Gas Emissions for 2000 to 2017 - Trends of Emissions and Other Indicators. Retrieved February 28, 2019, from 2019 Edition California GHG Emission Inventory: https://www.arb.ca.gov/cc/inventory/pubs/reports/2000_2016/ghg_inventory_trends_00-16.pdf

California Energy Commission. (2019). California Hydroelectric Statistics & Data. Retrieved February 28, 2019, from California Energy Almanac: http://www.energy.ca.gov/almanac/renewables_data/hydro/

City of LA Department of Building and Safety. (2017). 2017 Green Building Forms & Correction Sheets. Retrieved from Green Building: http://www.ladbs.org/forms-publications/forms/green-building/green-building-for-2017-codes

City of Los Angeles. (2007, May). Green LA: An Action Plan to Lead the Nation in Fighting Global Warming. Retrieved from Sustainability Initiatives: https://www.adaptationclearinghouse.org/resources/greenla-an-action-plan-to-lead-the-nation-in-fighting-global-warming-los-angeles-california.html

Climate & Clean Air Coalition. (n.d.). Black Carbon and Co-pollutants from Incomplete Combustion. Retrieved November 30, 2018, from Black Carbon: http://www.ccacoalition.org/en/slcps/black-carbon

Kimley-Horn and Associates, Inc. (2019). Traffic Impact Analysis. Los Angeles: Kimley-Horn and Associates.

Office of the Los Angeles Mayor. (2019). L.A.'s Green New Deal Sustainable City pLAn 2019. Retrieved February 28, 2019, from Green New Deal: http://plan.lamayor.org/sites/default/files/pLAn_2019_final.pdf

Planning and Conservation League. (n.d.). Climate Change and the California Environmental Quality Act. Retrieved November 30, 2018, from https://www.pcl.org/media/prior-c/CEQA-Climate-Change-and-CEQA-full-memo-1.pdf

Southern California Association of Governments. (2020). *CONNECTSocal 2020-2045 Regional Transportation Plan/Sustainable Communities Strategy.* Retrieved April 29, 2021 from: https://scag.ca.gov/sites/main/files/file-attachments/0903fconnectsocal-plan_0.pdf?1606001176.

U.S. Environmental Protection Agency. (2017, February 14). Understanding Global Warming Potentials. Retrieved from Greenhouse Gas Emissions: https://www.epa.gov/ghgemissions/understanding-global-warming-potentials

U.S. Environmental Protection Agency. (2019, April 11). Overview of Greenhouse Gases. Retrieved from Greenhouse Gas Emissions: https://www.epa.gov/ghgemissions/overview-greenhouse-gases

3.8 Hazards and Hazardous Materials

California Department of Toxic Substances Control. (2010). *DTSC's Hazardous Waste and Substances Site List - Site Cleanup (Cortese List)*. Retrieved from California Department of Toxic Substances Control: https://dtsc.ca.gov/dtscs-cortese-list/

California Department of Toxic Substances Control. (2014, September 30). *Office of Human and Ecological Risk (HERO) Human Health Risk Assessment (HHRA) Note Number: 1.* Retrieved from https://dtsc.ca.gov/wp-content/uploads/sites/31/2019/04/HHRA-Note-1-April-2019.pdf

California Department of Toxic Substances Control. (2018, June 28). *Human Health Risk (HERO)*. Retrieved from Office of Human and Ecological Risk: https://www.dtsc.ca.gov/assessingrisk/humanrisk2.cfm

California Environmental Protection Agency. (2011, October). *Vapor Intrusion Mitigation Advisory*. Retrieved from Department of Toxic Substances Control: https://dtsc.ca.gov/wp-content/uploads/sites/31/2016/01/VIPPA_Final_03_05_12.pdf

California Environmental Protection Agency. (2012, February 6). *Cortese List Data Resources*. Retrieved November 30, 2015, from http://www.calepa.ca.gov/SiteCleanup/CorteseList/

California Environmental Protection Agency. (2015, October). *Preliminary Endangerment Assessment Guidance Manual.* Retrieved from Department of Toxic Substances Control: https://dtsc.ca.gov/wp-content/uploads/sites/31/2018/01/PEA_Guidance_Manual.pdf

California State Water Resources Control Board. (2014, December 15). *Federal, State and Local Laws, Policy and Regulations*. Retrieved from California Environmental Protection Agency -- State Water Resources Control Board: https://www.waterboards.ca.gov/water_issues/programs/nps/encyclopedia/0a_laws_policy.shtml

County of Los Angeles Fire Department. (2009, December 3). *Compliance Guideline for Hazardous Wastes and Materials.* Retrieved from Health Hazardous Materials Division: https://fire.lacounty.gov/wp-content/uploads/2019/08/HHMD-Compliance-Guidance-Document-2-1.pdf

Department of Toxic Substances Control. (2007). *EnviroStor Database*. Retrieved from EnviroStor: http://www.envirostor.dtsc.ca.gov/public/profile_report.asp?global_id=19281223

Earth Mechanics, Inc. (2014). *Phase II Subsurface Environmental Site Assessment, Soil and Groundwater Sampling - Sixth Street Viaduct Replacement Project.* Los Angeles.

Environmental Protection Agency. (2018a, August 15). *Summary of the Resource Conservation and Recovery Act*. Retrieved from Environmental Protection Agency: https://www.epa.gov/laws-regulations/summary-resource-conservation-and-recovery-act

Environmental Protection Agency. (2018b, August 15). *Summary of the Comprehensive Environmental Response, Compensation, and Liability Act (Superfund)*. Retrieved from Environmental Protection Agency: https://www.epa.gov/laws-regulations/summary-comprehensive-environmental-response-compensation-and-liability-act

Environmental Protection Agency. (2018c, January 29). *Federal Insecticide, Fungicide, and Rodenticide Act (FIFRA) and Federal Facilities*. Retrieved from Environmental Protection Agency: https://www.epa.gov/enforcement/federal-insecticide-fungicide-and-rodenticide-act-fifra-and-federal-facilities#Key%20Federal%20Facility%20Responsibilities%20Under%20FIFRA

GPA Consulting. (2019). *Community Impact Assessment for the Sixth Street Park, Arts, River & Connectivity (PARC) Project.* El Segundo: GPA Consulting.

Hushmand Associates, Inc. (2019). *Environmental Site Investigations, Sixth Street Viaduct - PARC Improvements.* Irvine: Hushmand Associates, Inc.

State Water Resources Control Board. (2015). *Metro Location 61 South (Former Butterfield Property)*. Retrieved from GeoTracker: https://geotracker.waterboards.ca.gov/profile_report.asp?global_id=WDR100039448

The Fehling Group, LLC. (2019). *Draft Human Health Risk Assessment.* Los Angeles.

U.S. Environmental Protection Agency. (1989). *Risk Assessment Guidance for Superfund (RAGS)*. Retrieved from Risk Assessment: https://www.epa.gov/risk/risk-assessment-guidance-superfund-rags-part

U.S. Environmental Protection Agency. (1991, December). *Guidance for Data Useability in Risk Assessment (Part A).* Retrieved from https://rais.ornl.gov/documents/USERISKA.pdf

U.S. Environmental Protection Agency. (2016, October 3). *Human Health Risk Assessment*. Retrieved from Risk Assessment: https://www.epa.gov/risk/human-health-risk-assessment

U.S. Environmental Protection Agency. (2018, August 17). *NATA: Glossary of Terms*. Retrieved from National Air Toxics Assessment: https://www.epa.gov/national-air-toxics-assessment/nata-glossary-terms#hi

US Department of Labor. (n.d.). *SEC. 2. Congressional Findings and Purpose* . Retrieved from US Department of Labor : https://www.osha.gov/laws-regs/oshact/section_2

3.9 Hydrology and Water Quality

California Department of Transportation and City of Los Angeles. (2011). *6th Street Viaduct Seismic Improvement Project Final Environmental Impact Report/Environmental Impact Statement and Section 4(f) Evaluation.* Los Angeles.

California Department of Water Resources. (2004, February 27). *Coastal Plain of Los Angeles Groundwater Basin, Central Subbasin.* Retrieved from California's Groundwater Bulletin 118: https://water.ca.gov/-/media/DWR-Website/Web-Pages/Programs/Groundwater-Management/Bulletin-118/Files/2003-Basin-Descriptions/4_011_04_CentralSubbasin.pdf

California Department of Water Resources. (2019, February 11). *Groundwater Basins Subject to Critical Conditions of Overdraft*. Retrieved from Critically Overdrafted Basins: https://water.ca.gov/Programs/Groundwater-Management/Bulletin-118/Critically-Overdrafted-Basins

California State Water Resources Control Board. (2017, January 19). *GeoTracker GAMA*. Retrieved from GAMA - Groundwater Ambient Monitoring and Assessment Program: https://www.waterboards.ca.gov/gama/geotracker_gama.shtml

California State Water Resources Control Board. (2019, April 2). *Final 2014/2016 California Integrated Report (Clean Water Act Section 303(d) List/305(b) Report)*. Retrieved from Impaired Water Bodies: https://www.waterboards.ca.gov/water_issues/programs/tmdl/integrated2014_2016.shtml

California Stormwater Quality Association. (2003, January). *BMP Handbooks*. Retrieved from https://www.casqa.org/resources/bmp-handbooks

City of Los Angeles. (2016, May 9). *Planning and Land Development Handbook for Low Impact Development.* Retrieved from LA Stormwater: https://www.lacitysan.org/san/faces/home/portal/s-lsh-wwd/s-lsh-wwd-wp/s-lsh-wwd-wp-lid/s-lsh-wwd-wp-lid-ld?_adf.ctrl-state=p4kin3a4x_5&_afrLoop=8484850305726562#!

City of Los Angeles Bureau of Sanitation. (2004, September 29). *Development Best Management Practices Handbook*.

Earth Mechanics, Inc. (2015). *Foundation Report for Sixth Street Viaduct.* Fountain Valley: Earth Mechanics, Inc.

Earth Mechanics, Inc. (2016). *Foundation Report West, North East, and South East Bike Ramps, Sixth Street Viaduct Replacement Project.* Santa Ana: Earth Mechanics, Inc.

Federal Emergency Management Agency. (1997, August 1). *National Flood Insurance Act of 1968 and Flood Disaster Protection Act of 1973*. Retrieved from Federal Emergency Management Agency: https://www.fema.gov/flood-insurance/rules-legislation/laws

Federal Emergency Management Agency. (2008, September 26). *FEMA Flood Map Service Center*. Retrieved from Federal Emergency Management Agency: https://msc.fema.gov/portal

HNTB Corporation. (2015). *2-Dimensional Hydraulic Study Los Angeles River Supplemental Report - 1 for the Sixth Street Viaduct Replacement Project.* Los Angeles.

Hushmand Associates, Inc. (2018). *Geotechnical Site Investigation, Sixth Street Viaduct - PARC Improvements.* Irvine: Hushmand Associates, Inc.

LA Stormwater. (n.d.). *Los Angeles River Watershed*. Retrieved November 30, 2018, from LA Stormwater: http://www.lastormwater.org/about-us/about-watersheds/los-angeles-river/

Los Angeles County Department of Public Works. (2006, January). *Hydrology Manual.* Retrieved from Los Angeles County Department of Public Works - Water Resources Division: https://dpw.lacounty.gov/services/publications.cfm

Los Angeles County Department of Public Works. (n.d.). *Los Angeles County Storm Drain System*. Retrieved July 2018, from Department of Public Works: http://dpw.lacounty.gov/fcd/stormdrain/index.cfm

Los Angeles Regional Water Quality Control Board. (2014, September 11). *Basin Plan*. Retrieved from Los Angeles Regional Water Quality Control Board: https://www.waterboards.ca.gov/losangeles/water_issues/programs/basin_plan/

Los Angeles Regional Water Quality Control Board. (2016, November 23). *Waste Discharge Requirements for Municipal Separate Storm Sewer System (MS4) Discharges Within the Coastal Watersheds of Los Angeles County*. Retrieved from Los Angeles County MS4 Permit: https://www.waterboards.ca.gov/losangeles/water_issues/programs/stormwater/municipal/losangeles.html

Natural Resources Conservation Service. (2017, August 21). *Soil Map*. Retrieved from Web Soil Survey: https://websoilsurvey.sc.egov.usda.gov/App/HomePage.htm

State Water Resources Control Board. (2016). *Procedures for Discharges of Dredged or Fill Material to Waters of the State.*

Tetra Tech. (2018a). *Sixth Street Park, Arts and River Connectivity Improvements (PARC) Preliminary Hydrology and Hydraulics Report - Draft.* Los Angeles.

Tetra Tech. (2018b). *Sixth Street Park, Arts and River Connectivity Improvements (PARC) Conceptual Los Impact Development Report - Draft.* Los Angeles.

U.S. Army Corps of Engineers. (n.d.). *Los Angeles River*. Retrieved November 30, 2018, from U.S. Army Corps of Engineers: http://www.spl.usace.army.mil/Missions/Asset-Management/Los-Angeles-River/

U.S. Environmental Protection Agency. (2019, May 14). *Section 404 Permit Program*. Retrieved from U.S. Environmental Protection Agency: https://www.epa.gov/cwa-404

3.10 Land Use and Planning

City of Los Angeles. (1973, June). *Open Space Plan.* Retrieved from Los Angeles City Planning: https://planning.lacity.org/Code_Studies/GeneralElement/openspaceelement.pdf

City of Los Angeles. (1996, December 11). *The Framework Element of the Los Angeles General Plan.* Retrieved from Los Angeles City Planning: http://cityplanning.lacity.org/cwd/framwk/fwhome0.htm

City of Los Angeles. (1998). *Boyle Heights Community Plan.* Retrieved from Los Angeles City Planning: https://planning.lacity.org/plans-policies/community-plan-area/boyle-heights

City of Los Angeles. (2020). *Boyle Heights Community Plan Summer 2020 Draft.* Retrieved from Los Angeles City Planning: https://planning.lacity.org/odocument/a21becea-0083-44a8-9864-cef634ef669c/Boyle_Heights_Community_Plan_-_Summer_2020_Draft.pdf

City of Los Angeles. (2000). *Central City North Community Plan.* Retrieved from Los Angeles City Planning: https://planning.lacity.org/plans-policies/community-plan-area/central-city-north

City of Los Angeles. (2020). *Downtown Community Plan Fall 2020 Draft.* Retrieved from Los Angeles City Planning: https://planning.lacity.org/odocument/4b8c3990-0ca7-4870-bd4d-59e80193d810/Draft_Plan_Nov_2020.pdf

City of Los Angeles. (2007a, April). *Los Angeles River Revitilization Master Plan.* Retrieved from City of Los Angeles River Revitilization: http://boe.lacity.org/lariverrmp/CommunityOutreach/masterplan_download.htm

City of Los Angeles. (2007b, July). *RIO Fact Sheet.* Retrieved from Los Angeles City Planning: http://cityplanning.lacity.org/Code_Studies/Rioproject/factsheet.pdf

City of Los Angeles. (2014, December 16). *Zoning Code Evaluation Report - Public Review Draft.* Retrieved from re:code LA: https://recode.la/sites/default/files/project_files/2014-12-16-Zoning_Code_Evaluation_Report-FINAL.pdf

City of Los Angeles. (2016). *LA River Design Guidebook.* Retrieved from Los Angeles River Revitalization: http://lariver.org/blog/la-river-design-guidebook

City of Los Angeles. (2017, February). *OurLA2040*. Retrieved from Los Angeles City Planning: https://planning.lacity.org/plans-policies/general-plan-updates

City of Los Angeles. (2018, May 3). *Case No. ZA 2015-2348(ZAI) Zoning Administrator's Interpretation, Lists of Uses Permitted in Various Zones.* Retrieved from Los Angeles City Planning: https://planning.lacity.org/odocument/647665b9-6246-4eaf-a70c-f06285ff28c4/UseListMemo.pdf

City of Los Angeles. (2019a). *Downtown Los Angeles Community Plan Update.* Retrieved from Los Angeles City Planning: https://planning.lacity.org/plans-policies/community-plan-update/downtown-los-angeles-community-plan-update

City of Los Angeles. (2019b, June). *Los Angeles City Planning.* Retrieved from Generalized Summary of Zoning Regulations: https://planning.lacity.org/odocument/eadcb225-a16b-4ce6-bc94-c915408c2b04/Zoning_Code_Summary.pdf

City of Los Angeles. (2019c, March 31). *Official City of Los Angeles Municipal Code.* Retrieved from American Legal Publishing Corporation: http://library.amlegal.com/nxt/gateway.dll/California/lamc/municipalcode?f=templates$fn=default.htm$3.0$vid=amlegal:losangeles_ca_mc

City of Los Angeles. (n.d.). *Public Recreation Plan.* Retrieved 2018, from Los Angeles City Planning: https://planning.lacity.org/Code_Studies/GeneralElement/PublicRecreationPlan.pdf

GPA Consulting. (2019). *Community Impact Assessment for the Sixth Street Park, Arts, River & Connectivity (PARC) Project.* El Segundo: GPA Consulting.

Los Angeles County Department of Parks and Recreation. (2016, May 9). *Los Angeles Countywide Comprehensive Parks and Recreation Needs Assessment.* Retrieved from Los Angeles County Department of Parks and Recreation: http://lacountyparkneeds.org/wp-content/uploads/2016/06/FinalReport.pdf

Los Angeles County Department of Public Works. (1996). *Los Angeles River Master Plan*. Retrieved from: https://dpw.lacounty.gov/wmd/watershed/LA/LARMP/

Office of the Los Angeles Mayor. (2019). *L.A.'s Green New Deal Sustainable City pLAn 2019.* Retrieved February 28, 2019, from Green New Deal: http://plan.lamayor.org/sites/default/files/pLAn_2019_final.pdf

3.11 Noise and Vibration

AMBIENT Air Quality & Noise Consulting. (2019). *Noise Impact Assessment for 6th Street PARC Project.* Paso Robles.

Amtrak. (2018). *Amtrak Tickets, Schedules, and Train Routes*. Retrieved from https://www.amtrak.com/home.html

California Department of Transportation. (2013a, September). *Technical Noise Supplement to the Traffic Noise Analysis Protocol.* Retrieved from Noise and Vibration: https://dot.ca.gov/programs/environmental-analysis/noise-vibration

California Department of Transportation. (2013b, September). *Transportation and Construction Vibration Guidance Manual.* Retrieved from Noise and Vibration: http://www.dot.ca.gov/hq/env/noise/pub/TCVGM_Sep13_FINAL.pdf

California Department of Transportation. (2013c, July). *Transportation Concept Report, U.S. 101.*

California Department of Transportation. (2017, April 20). *Intensity and the Decibel Scale*. Retrieved from Typical Noise Levels: https://dot.ca.gov/programs/maintenance/pavement/noise-levels

City of Los Angeles. (1998). *Boyle Heights Community Plan.* Retrieved from Los Angeles City Planning: https://planning.lacity.org/plans-policies/community-plan-area/boyle-heights

City of Los Angeles. (2020). *Boyle Heights Community Plan Summer 2020 Draft.* Retrieved from Los Angeles City Planning: https://planning.lacity.org/odocument/a21becea-0083-44a8-9864-cef634ef669c/Boyle_Heights_Community_Plan_-_Summer_2020_Draft.pdf

City of Los Angeles. (1999, February 3). *Noise Element.* Retrieved from Los Angeles City Planning: https://planning.lacity.org/odocument/b49a8631-19b2-4477-8c7f-08b48093cddd/Noise%20Element.pdf

City of Los Angeles. (2000). *Central City North Community Plan.* Retrieved from Los Angeles City Planning: https://planning.lacity.org/plans-policies/community-plan-area/central-city-north

City of Los Angeles. (2020). *Downtown Community Plan Fall 2020 Draft*. Retrieved from Los Angeles City Planning: https://planning.lacity.org/odocument/4b8c3990-0ca7-4870-bd4d-59e80193d810/Draft_Plan_Nov_2020.pdf

City of Los Angeles. (2006). *LA CEQA Thresholds Guide.* Retrieved from Los Angeles City Planning: https://planning.lacity.org/eir/CrossroadsHwd/deir/files/references/A07.pdf

City of Los Angeles. (2019). *Downtown Los Angeles Community Plan Update.* Retrieved from Los Angeles City Planning: https://planning.lacity.org/plans-policies/community-plan-update/downtown-los-angeles-community-plan-update

Federal Highway Administration. (2017, August 24). *Construction Noise Handbook*. Retrieved from Office of Planning, Environment, and Realty: https://www.fhwa.dot.gov/Environment/noise/construction_noise/handbook/

Federal Transit Administration. (2006, May). *Transit Noise and Vibration Impact Assessment.* Retrieved from https://www.transit.dot.gov/sites/fta.dot.gov/files/docs/FTA_Noise_and_Vibration_Manual.pdf

Harris, C. M. (1998). *Handbook of Noise Control.*

Kimley-Horn and Associates, Inc. (2019a). *Traffic Impact Analysis.* Los Angeles: Kimley-Horn and Associates.

Kryter, K. D. (1970). *The Effects of Noise on Man.*

Metrolink. (2018). *Schedules*. Retrieved from Southern California Regional Rail Authority: https://www.metrolinktrains.com/schedules/?type =station&originId=131&destinationId=105&weekend=0

Southern California Association of Governments. (2011, November). *Regional Rail Simulation Update Summary Report.* Retrieved from FreightWorks: http://www.freightworks.org/Pages/default.aspx

Southern California Association of Governments. (2012, April). *2012-2035 Regional Transportation Plan/Sustainable Communities Strategy (RTP/SCS).* Retrieved from http://scagrtpscs.net/Pages/2012RTPSCS.aspx

Southern California Association of Governments. (2020). *CONNECTSocal 2020-2045 Regional Transportation Plan/Sustainable Communities Strategy.* Retrieved April 29, 2021 from: https://scag.ca.gov/sites/main/files/file-attachments/0903fconnectsocal-plan_0.pdf?1606001176

U.S. Department of Housing and Urban Development. (1973). *A Study of Techniques to Increase the Sound Insulation of Building Elements. Report No. WR73-5.* Washington, D.C.

3.12 Population and Housing

City of Los Angeles. (1998). *Boyle Heights Community Plan.* Retrieved from Los Angeles City Planning: https://planning.lacity.org/plans-policies/community-plan-area/boyle-heights

City of Los Angeles. (2020). *Boyle Heights Community Plan Summer 2020 Draft.* Retrieved from Los Angeles City Planning: https://planning.lacity.org/odocument/a21becea-0083-44a8-9864-cef634ef669c/Boyle_Heights_Community_Plan_-_Summer_2020_Draft.pdf

City of Los Angeles. (2007, April). *Los Angeles River Revitilization Master Plan.* Retrieved from City of Los Angeles River Revitilization: http://boe.lacity.org/lariverrmp/CommunityOutreach/masterplan_download.htm

City of Los Angeles. (2011, March 1). *2010 Bicycle Plan.* Retrieved from Los Angeles City Planning: https://planning.lacity.org/odocument/1378be7a-c7e2-4941-b2e2-937f929c17c2/Bicycle%20Plan%20-%202010.pdf

City of Los Angeles. (2013, December 3). *Housing Element 2013-2021.* Retrieved from Los Angeles City Planning: https://planning.lacity.org/plans-policies/housing-element

City of Los Angeles. (2016a, September 7). *Mobility Plan 2035.* Retrieved from Los Angeles City Planning: https://planning.lacity.org/odocument/523f2a95-9d72-41d7-aba5-1972f84c1d36/Mobility%20Plan%202035.pdf

City of Los Angeles. (2016b, February 9). *Comprehensive Homeless Strategy.* Retrieved from Office of the LA Mayor: http://clkrep.lacity.org/onlinedocs/2015/15-1138-S1_misc_1-7-16.pdf

City of Los Angeles. (2016c). *Reader's Guide for the LA River Ecosystem Restoration Project.* Retrieved from http://eng2.lacity.org/techdocs/emg/docs/lariver/LA_River_Reader_Guide.pdf

City of Los Angeles. (2017a). *Downtown LA Development*. Retrieved from https://www.google.com/maps/d/viewer?mid=1mTXj5STlZz66Dzs2MS9ZWmlfONI&hl=en_US&ll=34.04386005649254%2C-118.2207374082119&z=15

City of Los Angeles. (2017b, February). *OurLA2040*. Retrieved from Los Angeles City Planning: https://planning.lacity.org/plans-policies/general-plan-updates

City of Los Angeles. (2019a). *Case Reports*. Retrieved from Los Angeles City Planning: https://planning.lacity.org/pdiscaseinfo/

City of Los Angeles. (2019b). *Downtown Los Angeles Community Plan Update.* Retrieved from Los Angeles City Planning: https://planning.lacity.org/plans-policies/community-plan-update/downtown-los-angeles-community-plan-update

City of Los Angeles. (2019c). *Housing*. Retrieved from Los Angeles City Planning: https://planning.lacity.org/plans-policies/initiatives-policies/housing

Downtown Center Business Improvement District. (2020). *2020 Downtown Los Angeles Survey Report.* Retrieved from Downtown Center Business Improvement District: https://downtownla.com/business/reports-and-research/survey-report

GPA Consulting. (2019). *Community Impact Assessment for the Sixth Street Park, Arts, River & Connectivity (PARC) Project.* El Segundo: GPA Consulting.

Los Angeles City Council Districts. (2017). *2017 Economic Report.* Retrieved from Los Angeles Area Chamber of Commerce: http://events.lachamber.com/sbaweb/events/evite/PDFS/17_BeaconReport.pdf

Los Angeles County Economic Development Corporation. (2016). *Los Angeles: People, Industry, and Jobs 2015-2020.* Retrieved from Los Angeles County Economic Development Corporation: https://laedc.org/wp-content/uploads/2016/05/People-Industry-and-Jobs_20160515.pdf

Los Angeles County. (n.d.). *Putting Measure H to Work*. Retrieved November 30, 2018, from The Los Angeles County Homeless Initiative: http://homeless.lacounty.gov/measure-h/

Los Angeles Homeless Services Authority. (2017). *About LAHSA*. Retrieved from Los Angeles Homeless Services Authority: https://www.lahsa.org/about

Los Angeles Homeless Services Authority. (2018, October 22). *Homeless Count 2018 Results by Census Tract*. Retrieved February 25, 2019, from Greater Los Angeles Homeless Count: https://www.lahsa.org/news?article=410-2018-homeless-count-results&ref=hc

Los Angeles Homeless Services Authority. (2020). *2020 Greater Los Angeles Homeless Count - Data Summary City of Los Angeles Council District 14.* Retrieved May 8, 2021, from https://www.lahsa.org/data?id=44-2020-homeless-county-by-city-council-district

Los Angeles Housing + Community Investment Department. (2018). *Supportive Housing (Proposition HHH).* Retrieved from Los Angeles Housing and Community Investment Department: https://hcidla2.lacity.org/housing/housing-development/supportive-housing-prop-hhh

Los Angeles Mayor. (2016, April 29). *Executive Directive No. 16: Implementing the Comprehensive Homeless Strategy.* Retrieved from Los Angeles mayor: https://www.lamayor.org/mayor_garcetti_s_executive_directives

Southern California Association of Governments. (2017). *Profile of the City of Los Angeles.* Retrieved from Southern California Association of Governments: https://scag.ca.gov/data-tools-local-profiles

Southern California Association of Governments. (2019). *Regional Housing Needs Assessment (RHNA) & Housing.* Retrieved from Southern California Association of Governments: http://www.scag.ca.gov/programs/Pages/Housing.aspx

Southern California Association of Governments. (2020). CONNECTSocal 2020-2045 Regional Transportation Plan/Sustainable Communities Strategy. Retrieved April 29, 2021 from: https://scag.ca.gov/sites/main/files/file-attachments/0903fconnectsocal-plan_0.pdf?1606001176.

U.S. Census Bureau. (2019). *American Community Survey*. Retrieved from United States Census Bureau: https://www.census.gov/acs/www/data/data-tables-and-tools/data-profiles/

3.13 Public Services

City of Los Angeles. (1996, November 26). *Safety Element of the Los Angeles City General Plan.* Retrieved from Los Angeles City Planning: https://planning.lacity.org/odocument/31b07c9a-7eea-4694-9899-f00265b2dc0d/Safety%20Element.pdf

City of Los Angeles. (1996, December 11). *The Framework Element of the Los Angeles General Plan.* Retrieved from Los Angeles City Planning: http://cityplanning.lacity.org/cwd/framwk/fwhome0.htm

City of Los Angeles. (2017). *2017 City of Los Angeles Fire Code.* Retrieved from International Code Council: https://codes.iccsafe.org/public/document/details/toc/1042

City of Los Angeles. (2017, February). *OurLA2040*. Retrieved from Los Angeles City Planning: https://planning.lacity.org/plans-policies/general-plan-updates

City of Los Angeles Department of Recreation and Parks. (2019). *Ranger*. Retrieved August 20, 2019, from City of Los Angeles Department of Recreation and Parks: https://www.laparks.org/ranger

GPA Consulting. (2019). *Community Impact Assessment for the Sixth Street Park, Arts, River & Connectivity (PARC) Project.* El Segundo: GPA Consulting.

Horton Lees Brogden Lighting Design. (2018). *Sixth Street PARC Light Level Memo.* Los Angeles.

Kimley-Horn and Associates, Inc. (2019). *Traffic Impact Analysis.* Los Angeles: Kimley-Horn and Associates.

Los Angeles Fire Department. (2017). *FireStatLA*. Retrieved from Los Angeles Fire Department: http://www.lafd.org/fsla/stations-map

3.14 Recreation

California Legislative Information. (2015, September 8). *Assembly Bill No. 1191, Chapter 276*. Retrieved from California Legislative Information: https://leginfo.legislature.ca.gov/faces/billTextClient.xhtml?bill_id=201520160AB1191

City of Los Angeles. (1973, June). *Open Space Plan.* Retrieved from Los Angeles City Planning: https://planning.lacity.org/Code_Studies/GeneralElement/openspaceelement.pdf

City of Los Angeles. (1998). *Boyle Heights Community Plan.* Retrieved from Los Angeles City Planning: https://planning.lacity.org/plans-policies/community-plan-area/boyle-heights

City of Los Angeles. (2020). *Boyle Heights Community Plan Summer 2020 Draft.* Retrieved from Los Angeles City Planning: https://planning.lacity.org/odocument/a21becea-0083-44a8-9864-cef634ef669c/Boyle_Heights_Community_Plan_-_Summer_2020_Draft.pdf

City of Los Angeles. (2000). *Central City North Community Plan.* Retrieved from Los Angeles City Planning: https://planning.lacity.org/plans-policies/community-plan-area/central-city-north

City of Los Angeles. (2020). *Downtown Community Plan Fall 2020 Draft*. Retrieved from Los Angeles City Planning: https://planning.lacity.org/odocument/4b8c3990-0ca7-4870-bd4d-59e80193d810/Draft_Plan_Nov_2020.pdf

City of Los Angeles. (2016, September 7). *Ordinance Number 184505*. Retrieved from Los Angeles Municipal Code: https://planning.lacity.org/ordinances/docs/ParksDedication/UpdateOrdinance.pdf

City of Los Angeles. (2017, February). *OurLA2040*. Retrieved from Los Angeles City Planning: https://planning.lacity.org/plans-policies/general-plan-updates

City of Los Angeles. (2019). *Downtown Los Angeles Community Plan Update*. Retrieved from Los Angeles City Planning: https://planning.lacity.org/plans-policies/community-plan-update/downtown-los-angeles-community-plan-update

City of Los Angeles. (n.d.). *Public Recreation Plan.* Retrieved November 30, 2018, from Los Angeles City Planning: https://planning.lacity.org/Code_Studies/GeneralElement/PublicRecreationPlan.pdf

Department of Recreation and Parks. (2016, July). *Projects in Design.* Retrieved from Department of Recreation and Parks: https://www.laparks.org/sites/default/files/planning/2016-07%20design%20projects.pdf

Department of Recreation and Parks. (2018). *Who We Are*. Retrieved from Department of Recreation and Parks: https://www.laparks.org/department/who-we-are

GPA Consulting. (2019). *Community Impact Assessment for the Sixth Street Park, Arts, River & Connectivity (PARC) Project.* El Segundo: GPA Consulting.

LA Stormwater. (2017). *Hollenbeck Park Lake Rehabilitation*. Retrieved from LA Stormwater: http://www.lastormwater.org/green-la/hollenbeck-park-lake-rehabilitation/

Los Angeles County Department of Parks and Recreation. (2016, May 9). *Los Angeles Countywide Comprehensive Parks and Recreation Needs Assessment.* Retrieved from Los Angeles County Department of Parks and Recreation: http://lacountyparkneeds.org/wp-content/uploads/2016/06/FinalReport.pdf

3.15 Transportation

City of Los Angeles. (2007, April). Los Angeles River Revitilization Master Plan. Retrieved from City of Los Angeles River Revitilization: http://boe.lacity.org/lariverrmp/CommunityOutreach/masterplan_download.htm

City of Los Angeles. (2016, September 7). Mobility Plan 2035. Retrieved from Los Angeles City Planning: https://planning.lacity.org/odocument/523f2a95-9d72-41d7-aba5-1972f84c1d36/Mobility_Plan_2035.pdf

City of Los Angeles. (2017, February). OurLA2040. Retrieved from Los Angeles City Planning: https://planning.lacity.org/plans-policies/general-plan-updates

City of Los Angeles. (n.d.). Complete Streets Design Guide. Retrieved from Los Angeles City Planning: https://planning.lacity.org/odocument/c9596f05-0f3a-4ada-93aa-e70bbde68b0b/Complete%20Street%20Design%20Guide.pdf

GPA Consulting. (2019). Community Impact Assesment for the Sixth Street Park, Arts, River & Connectivity (PARC) Project. El Segundo: GPA Consulting.

Institute of Transportation Engineers. (1989). Transportation Research Board Critical Movement Analysis, Circular 212. Washington, DC: Institute of Transportation Engineers.

Institute of Transportation Engineers. (2010). Parking Generation, 4th Edition.

Kimley-Horn and Associates, Inc. (2019a). Traffic Impact Analysis. Los Angeles: Kimley-Horn and Associates.

Kimley-Horn and Associates, Inc. (2019b). Parking Demand Analysis - Sixth Street Park, Arts, River and Connectivity Project. Los Angeles: Kimley-Horn and Associates, Inc.

Los Angeles County Metropolitan Transportation Authority. (2010). 2010 Congestion Management Program. Retrieved from Metro: http://media.metro.net/docs/cmp_final_2010.pdf

Los Angeles County Metropolitan Transportation Authority. (2019, October 23). Notice of Preparation of a Draft Environmental Impact Report. Retrieved November 1, 2019, from Los Angeles River Path Project: http://media.metro.net/projects_studies/lariverpath/Final_Executed_NOP-lariver_path.pdf

Los Angeles Department of Transportation. (2020, July). Transportation Impact Study Guidelines. Retrieved from: https://ladot.lacity.org/sites/default/files/documents/ta_guidelines_all-sections_2020.07.04_attachments.pdf

Los Angeles Department of Transportation. (2018). Transportation Impact Study Memorandum of Understanding. Los Angeles.

Los Angeles Department of Transportation. (2019). Los Angeles Department of Transportation Assessment Guidelines. Los Angeles.

Southern California Association of Governments. (2020). What is the 2020-2045 RTP/SCS? Retrieved from 2020-2045 RTP/SCS: https://scag.ca.gov/connect-socal

Southern California Association of Governments. (2021). What is Connect SoCal? Retrieved from Southern California Association of Governments: https://scag.ca.gov/connect-socal

Transportation Research Board. (2010). Highway Capacity Manual.

3.16 Utilities and Service Systems

California Department of Transportation and City of Los Angeles. (2011). *Final Environmental Impact Report/Environmental Impact Statement and Section 4(f) Evaluation for the 6th Street Viaduct Seismic Improvement Project.* Los Angeles: California Department of Transportation and City of Los Angeles.

City of Los Angeles. (2016, May 9). *Planning and Land Development Handbook for Low Impact Development.* Retrieved from LA Sanitation: https://www.lacitysan.org/san/faces/home/portal/s-lsh-wwd/s-lsh-wwd-wp/s-lsh-wwd-wp-lid/s-lsh-wwd-wp-lid-ld?_adf.ctrl-state=lxy01x62a_154&_afrLoop=8488934078708685#!

City of Los Angeles. (2017a). *CLARTS and Landfills*. Retrieved from LA Sanitation: https://www.lacitysan.org/san/faces/home/portal/s-lsh-wwd/s-lsh-wwd-s/s-lsh-wwd-s-cl?_adf.ctrl-state=dm3i7ux4q_4&_afrLoop=15433854544786816#!

City of Los Angeles. (2017b). *Solid Resources*. Retrieved from LA Sanitation: https://www.lacitysan.org/san/faces/home/portal/s-lsh-wwd/s-lsh-wwd-s?_afrLoop=2852224363688358&_afrWindowMode=0&_afrWindowId=null#!%40%40%3F_afrWindowId%3Dnull%26_afrLoop%3D2852224363688358%26_afrWindowMode%3D0%26_adf.ctrl-state%3D15rlrb6d1n_225

City of Los Angeles. (2018, June 30). *LADWP Water Supply in Acre Feet*. Retrieved from Los Angeles Open Data: https://data.lacity.org/A-Livable-and-Sustainable-City/LADWP-Water-Supply-in-Acre-Feet/qyvz-diiw

City of Los Angeles. (2019a). *Clean Water*. Retrieved from LA Sanitation: https://www.lacitysan.org/san/faces/home/portal/s-lsh-wwd/s-lsh-wwd-cw?_adf.ctrl-state=o5rgebm3y_5&_afrLoop=8832033799261106#!

City of Los Angeles. (2019b). *Low Impact Development*. Retrieved from LA Sanitation: https://www.lacitysan.org/san/faces/wcnav_externalId/s-lsh-wwd-wp-lid?_adf.ctrl-state=3e9oztuei_1048&_afrLoop=12319687506351905#!

City of Los Angeles Department of Water and Power. (2008, May). *Securing L.A.'s Water Supply.* Retrieved from https://inyo-monowater.org/wp-content/uploads/2011/09/LACITY_004714.pdf

Los Angeles County Department of Public Works. (n.d.). *Los Angeles County Storm Drain System*. Retrieved from http://dpw.lacounty.gov/fcd/stormdrain/index.cfm

Los Angeles Department of Water and Power. (2013). *Water - Sources of Supply*. Retrieved from Los Angeles Department of Water and Power: https://www.ladwp.com/ladwp/faces/wcnav_externalId/a-w-source-sply?_adf.ctrl-state=a7nicm5kh_4&_afrLoop=187922303698961&_afrWindowMode=0&_afrWindowId=bdcws7mqr_14#%40%3F_afrWindowId%3Dbdcws7mqr_14%26_afrLoop%3D187922303698961%26_afrWindowMode%3D0%26_adf.c

Southern California Gas Company. (n.d.). *About SoCalGas*. Retrieved from SoCalGas: https://www.socalgas.com/about-us/company-profile

Tetra Tech. (2018a). *Sixth Street Park, Arts and River Connectivity Improvements (PARC) Preliminary Hydrology and Hydraulics Report - Draft.* Los Angeles.

Tetra Tech. (2018b). *Sixth Street Park, Arts and River Connectivity Improvements (PARC) Conceptual Los Impact Development Report - Draft.* Los Angeles.

Chapter 8
Acronyms and Abbreviations

°F	Fahrenheit
%	Percentage
AAM	Annual Arithmetic Mean
AB	Assembly Bill
ACHP	Advisory Council on Historic Preservation
ACM	Asbestos containing materials
ACS	American Community Survey
ADA	American with Disabilities Act
ADL	Aerially Deposited Lead
AGR	Agricultural Supply
AHERA	Asbestos Emergency Response Act
APS	Alternative Planning Strategy
AQMP	Air Quality Management Plan
ARG	Agricultural Supply
Art Piece	30-foot tall public art piece
ASL	Advanced Life Support
ASTM	Association of Testing Materials
ATCS	Adaptive Traffic Control System
ATP	Active Transportation Program
ATSAC	Automated Traffic Surveillance and Control
BACT	Best Available Control Technology
Basin	Los Angeles Basin
Basin Plan	Los Angeles Basin Water Quality Control Plan
BAU	Business-as-usual
bgs	Below ground surface
BIOS	Biogeographic Information and Observation System
BMP	Best Management Practices
BNSF	Burlington Northern Santa Fe
BOD	Biochemical Oxygen Demand
BOE	Bureau of Engineering (Department of Public Works)
BPW	Board of Public Works
BRR	Biological Resources Report
BSC	Building Standards Commission
BTU	British Thermal Units
C_2F_6	perfluoropropane
C_2H_3Cl/VCM	Vinyl Chloride

C_3F_8	perfluoropropane
C_4F_{10}	perfluorobutane
C_4F_8	perfluorocyclobutane
C_5F_{12}	perfluoropentane
C_6F_{14}	perfluorohexane
CA	California
CAAQS	California Ambient Air Quality Standards
CalEEMod	California Emissions Estimator Model
CalEPA	California Environmental Protection Agency
CALGreen	California Green Building Standards Code
Caltrans	California Department of Transportation
Calveno	California Vehicle Noise
CAPCOA	California Air Pollution Control Officers Association
CARB	California Air Resources Board
CBC	California Building Code
CCAA	California Clean Air Act
CCR	California Code of Regulations
CDFW	California Department of Fish and Wildlife
CEC	California Energy Commission
CEQA	California Environmental Quality Act
CERCLA	Comprehensive Environmental Response, Compensation, and Liability Act
CESA	California Endangered Species Act
CF_4	perfluoromethane
CFR	Code of Federal Regulations
cfs	Cubic Feet per Second
CGS	California Geological Survey
CH_4	Methane
CIA	Community Impact Assessment
City	City of Los Angeles
CLARTS	Central Los Angeles Recycling and Transfer Station
CMA	Critical Movement Analysis
CMP	Congestion Management Plan
CNDDB	California Natural Diversity Database
CNEL	Community Equivalent Noise Level
CNMP	Construction Noise Management Plan
CNPS	California Native Plant Society
CO	Carbon Monoxide
CO_2	Carbon Dioxide
CO_2e	carbon dioxide equivalents

COPC	Chemicals of Potential Concern
CRHR	California Register of Historical Resources
CRPR	California Rare Plant Rank
CTR	California Toxics Rule
CUPA	Certified Unified Program Agencies
CWA	Clean Water Act
CWC	California Water Code
dB	Decibels
dBA	A-weighted decibels
dBA CNEL	Average-daily noise level
DigAlert	Underground Service Alert of Southern California
District	Downtown Los Angeles Industrial Historic District
DO	Oxygen, Dissolved
DPM	Diesel exhaust particulate matter
DTSC	Department of Toxic Substances Control
EIR	Environmental Impact Report
EMS	Emergency Medical Service
EPC	Exposure Point Concentration
EPCRA	Emergency Planning and Community Right-to-Know Act
ESA	Environmental Site Assessment
FCAA	Federal Clean Air Act
FEMA	Federal Emergency Management Agency
FESA	Federal Endangered Species Act
FHWA	Federal Highway Administration
FIFRA	Federal Insecticide, Fungicide, and Rodenticide Act
FTA	Federal Transit Administration
General Plan	City of Los Angeles General Plan
GHG	Greenhouse Gas
GSA	Groundwater Sustainability Agency
GSP	Groundwater Sustainability Plan
GWh	Gigawatt hours
GWP	Global Warming Potential
GWR	Ground Water Recharge
H_2S	Hydrogen Sulfide
HAP	Hazardous Air Pollutants
HASP	Health and Safety Plan
HAZWOPER	Hazardous Waste Operations and Emergency Response
HCM	Highway Capacity Manual
HCM	Historic Cultural Monuments
HFC	Hydrofluorocarbons
HHRA	Human Health Risk Assessment

HI	Hazard Index
HSC	State Health and Safety Code
Hz	Hertz
I-10	Interstate 10
I-5	Interstate 5
ID	Identification
IES	Illuminating Engineering Society
ILCR	Incremental Lifetime Cancer Risk
In/sec	inches per second
IND	Industrial Service Supply
IPaC	Information for Planning and Consultation
IS	Initial Study
kBTU	Kilo-British Thermal Units
KOP	Key Observation Point
kV	kilovolt
kWh	Kilowatt Hours
LA	Los Angeles
LA & SP	Los Angeles and San Pedro Railroad
LA River	Los Angeles River
LABOE	City of Los Angeles Department of Public Works, Bureau of Engineering
LACoFD	Los Angeles County Fire Department
LADOT	Los Angeles Department of Transportation
LADWP	Los Angeles Department of Water and Power
LAFD	Los Angeles Fire Department
LAGBC	Los Angeles Green Building Code
LAHCM	Los Angeles Historic Cultural Monument
LAHSA	Los Angeles Homeless Services Authority
LAMC	City of Los Angeles Municipal Code
LAMC	Los Angeles Municipal Code
LAPD	Los Angeles Police Department
LARRMP	Los Angeles River Revitalization Master Plan
LARWQCB	Los Angeles Regional Water Quality Control Board
Lbs/day	Pounds per day
L_{dn}	Day-Night Average Noise Level
L_{eq}	Energy Equivalent Noise Level
LID	Low-Impact Development
L_{max}	Maximum Noise Level
L_{min}	Minimum Noise Level
LOS	Level of Service
LST	Localized Significance Threshold

LUST	Leaking Underground Storage Tank
MBAS	Methylene Blue Activated Substances
MBTA	Migratory Bird Treaty Act
MEP	Maximum Extent Possible
Metro	Los Angeles County Metropolitan Transportation Authority
MFR	Multi-family Residential
Mg/L	Milligrams per Liter
MLD	Most Likely Descendant
MMBTU	Million British Thermal Units
MMT	Metric Meter Tons
MMT	Million Metric Tons
$MMTCO_2e$	Million Metric Tons of Carbon Dioxide Equivalent
MOW	Maintenance of Way
MPO	Metropolitan Planning Organization
MS4s	Municipal separate storm sewer systems
MUN	Municipal and Domestic Supply
MWD	Metropolitan Water District of Southern California
N_2O	Nitrous Oxide
NAAQS	National Ambient Air Quality Standards
NAHC	Native American Heritage Commission
ND	Non-detect
NESHAP	National Emission Standards for Hazardous Air Pollutants
NF_3	Nitrogen Trifluoride
Ng/L	Nanograms per Liter
NHPA	National Historic Preservation Act
NHTSA	National Highway Traffic Safety Administration
NMFS	National Marine Fisheries Service
NO_2	Nitrogen Dioxide
NO_2-N	Nitrite-nitrogen
NO_3	Nitrate
NO_3-N	Nitrate-nitrogen
NO_3-N + NO_2-N	Nitrogen as nitrate-nitrogen plus nitrite-nitrogen
NOA	Naturally Occurring Asbestos
NOA	Notice of Availability
NOD	Notice of Determination
NOI	Notice of Intent
NOP	Notice of Preparation
NOP/IS	Notice of Preparation/Initial Study
NOx	Nitrogen oxide
NPDES	National Pollutant Discharge Elimination System

NTU	Nephelometric Turbidity Units
°	Degrees
O_3	Ozone
OEHHA	Office of Environmental Health Hazard Assessment
OHWM	Ordinary High-Water Mark
OS	Open Space
OSHA	Occupational Safety and Health Administration
PARC	Park, Arts, River & Connectivity Improvements
Pb	Lead
PB	Parking
PCB	Polychlorinated Biphenyls
PEA	Preliminary Endangerment Assessment
PF	Public Facilities
PFC	Perfluorocarbons
PM	Particulate Matter
PM_{10}	Particulate Matter
$PM_{2.5}$	Fine Particulate Matter
ppb	parts per billion
ppm	Parts per million
ppv	peak particle velocity
PRC	Public Resources Code
PROC	Industrial Process Supply
RAP	Department of Recreation and Parks
RAP	Recreation and Parks
RAS	Residential Accessory Services
RBC	Risk-Based Concentration
RCP&G	Regional Comprehensive Plan & guide
RCRA	Resource Conservation and Recovery Act
RHNA	Regional Housing Needs Assessment
RIO	River Improvement Overlay
River	Los Angeles River
ROG	Reactive Organic Gases
ROW	Right of Way
RSO	Rent Stabilization Ordinance
RTP/SCS	Regional Transportation Plan/Sustainable Communities Strategy
RW	Residential Waterways
RWQCB	Regional Water Quality Control Boards
SB	Senate Bill
SCAB	South Coast Air Basin
SCAG	Southern California Association of Governments

SCAQMD	South Coast Air Quality Management District
SCRAA	Southern California Regional Rail Authority
SCS	Sustainable Communities Strategies
SEL	Sound-exposure level
SEL	Single Event Level
SF_6	Sulfur Hexafluoride
SGMA	Sustainable Groundwater Management Act
SIP	Statewide Implementation Plan
SLCP	Short-lived Climate Pollutants
SLCP Strategy	Short-Lived Climate Pollutant Reduction Strategy
SMU	Site Mitigation Units
SO_2	Sulfur Dioxide
$SO_4(2-)$	Sulfates
SOC	Statement of Overriding Consideration
SoCalGas	Southern California Gas Company
SOHP	State Office of Historic Preservation
SO_x	Sulfur Oxide
SR 60	State Route 60
STLC	Soluble Lad Concentrations
Subbasin	Central Subbasin
SUSMP	Standard Urban Mitigation Plan
SVE	Soil Vapor Extraction
SVP	Society of Vertebrate Paleontology
SWP	State water project
SWPPP	Stormwater Pollution Prevention Plan
SWRCB	State Water Resources Control Board
TAG	Transportation Assessment Guidelines
TAC	Toxic Air Contaminants
TCE	Temporary Construction Easement
TCLP	Leachable Lead Concentrations
TLRW	Transmission Right of Way
TMDL	Total Maximum Daily Loads
TOG	Total Organic Gases
TPH	Total Petroleum Hydrocarbons
TPH-DRO	Total Petroleum Hydrocarbons, Diesel Range Organics
TSCA	Toxic Substances Control Act
U.S.	United States
U.S. 101	United States Highway 101
U.S. EPA	United States Environmental Protection Agency
UFP	Ultrafine Particles

UP	Union Pacific
UP LATC	Union Pacific Los Angeles Transportation Center
UPRR	Union Pacific Railroad
USACE	United States Army Corps of Engineers
USDOT	United States Department of Transportation
USFWS	United States Fish and Wildlife Service
USGS	United States Geological Survey
VdB	Velocity Decibel
VHT	Vehicle Hours Traveled
VIA	Visual Impact Assessment
Viaduct	Sixth Street Viaduct
VMT	Vehicle Miles Traveled
VOC	Volatile Organic Compound
WARM	Warm Freshwater Habitat
WDR	Water Discharge Requirements
WER	Water Effect Ratio
WILD	Wildlife Habitat
WQBELs	Water Quality-Based Effluent Limitation
ZAI	Zoning Administrator's Interpretation
$\mu g/m^3$	microgram per cubic meter

Sixth Street Park, Arts, River & Connectivity (PARC) Project

SCH #2017041045

FINAL ENVIRONMENTAL IMPACT REPORT



March 2022

PREPARED FOR:

City of Los Angeles, Department of Public Works
Bureau of Engineering, Environmental Management Group
1149 S. Broadway, Suite 600, Los Angeles CA 90015
Contact: Dr. Jan Green Rebstock, Environmental Supervisor II
213-485-5761, Jan.Green.Rebstock@lacity.org

WITH ASSISTANCE FROM:

GPA Consulting

ENGINEERING
CITY OF LOS ANGELES

This page intentionally left blank.

Chapter 1
Introduction

1.1 Introduction

In accordance with Section 15089 of the California Environmental Quality Act (CEQA) Guidelines, a lead agency must prepare a final environmental impact report (EIR) before approving a proposed project. The purpose of a final EIR is to provide an opportunity for the lead agency to respond to comments following public review of a Draft EIR. Pursuant to Section 15132 of the CEQA Guidelines, a final EIR must include revisions to a Draft EIR; a list of persons, organizations, and agencies that provided comments on the Draft EIR; and responses to significant environmental points and comments received during the review period for the Draft EIR.

The Draft EIR for the Sixth Street Park, Arts, River & Connectivity Improvements (PARC) Project (proposed Project) was circulated for public and agency review and comment from May 27, 2021, to July 26, 2021. The Draft EIR constitutes the first part of the EIR and is incorporated by reference and bound separately. This Final EIR constitutes the second part of the EIR and is intended to be a companion to the Draft EIR. Pursuant to CEQA Guidelines, Section 4 of this Final EIR includes a Mitigation Monitoring Program (MMP) for the proposed Project.

1.2 Organization of the Final EIR

This Final EIR is organized into four main sections as follows:

- **Section 1 – Introduction:** This section provides an introduction to the Final EIR, presents the contents of this Final EIR, summarizes the Final EIR public review process, and provides a summary of the proposed Project.
- **Section 2 – Responses to Comments**: This section presents a matrix of the parties that commented on the Draft EIR and the issues that they raised. This matrix is followed by copies of the written comments responding to the Draft EIR, as well as a transcript of the oral comments received during a public meeting. Numbered responses are provided for each of the written and oral comments made regarding the Draft EIR. Copies of the full original comment letters and the public meeting transcript are provided in **Appendix Final EIR-1** of this Final EIR.
- **Section 3 – Revisions, Clarifications, and Corrections to the Draft EIR:** This section provides a list of revisions, clarifications, and correction that have been made to the Draft EIR for the proposed Project based on comments received from the public and agencies.
- **Section 4 – Mitigation Monitoring Program (MMP):** This section provides the full MMP for the proposed Project. The MMP lists project design features and mitigation measures by environmental topic and identifies for each of the features and measures the applicable enforcement agency, monitoring agency, monitoring phase, monitoring frequency, and action indicating compliance.

This Final EIR also includes the following appendices:

- **Appendix Final EIR-1, Draft EIR Comment Letters and Public Meeting Transcript:** This appendix to the Final EIR includes copies of all written and oral comments received on the Draft EIR.
- **Appendix Final EIR-2, Air Quality Emission Memorandum:** This appendix to the Final EIR includes a memorandum completed by AMBIENT Air Quality and Noise Consulting to update the operational and construction air quality emission estimates in response to comments received from the South Coast Air Quality Management District.

1.3 Project Summary

The City is proposing to create approximately 13 acres of public recreational space underneath and adjacent to the Sixth Street Viaduct. The proposed Project would be divided into two phases. The following elements would be constructed as part of Phase I of the proposed Project.

- **General Park Elements:** Elements that would be constructed throughout the Sixth Street PARC would include constructing or installing typical park site furnishings, pedestrian and bicycle paths, interpretive exhibits, utility connections and irrigation, crosswalks, and stormwater infrastructure improvements.
- **East Park:** The proposed East Park, located in the Boyle Heights Community Plan area, would include amenities such as a concessions area, public restrooms, office and storage space for operations and maintenance staff, sports courts and fields, two flexible play and performance lawns, adult fitness circuit, splash pad with outdoor shower, picnic and grilling areas, on-street parking, landscaped seating areas and rain gardens, small and large dog play areas, children's play area, and skate park elements. A public art piece could also potentially be installed in East Park.
- **West Park:** The proposed West Park, located in the Central City North Community Plan area, would include amenities such as a flexible play and performance lawn, small and large dog play areas, an adult fitness circuit, a café building, public restroom, landscaped areas and a rain garden, and a public art piece.
- **Arts Plaza and River Gateway:** The proposed Arts Plaza, located in the Central City North Community Plan area, would include amenities such as performance and public gathering areas and space for future mobility hub elements, bike parking, and bikeshare. The proposed River Gateway would include rehabilitating an existing pedestrian/vehicular tunnel that provides access to the LA River channel.

Phase II would include installing reinforced concrete planted terraces on the east and west banks of the LA River channel. The proposed Project generally includes components noted in the Los Angeles River Revitalization Master Plan (City of Los Angeles, 2007).

1.4 Public Review Process

In accordance with CEQA, the environmental review process for the proposed Project commenced with solicitation of comments from identified responsible and trustee agencies, as well as interested

parties in the scope of the Draft EIR, through a Notice of Preparation (NOP) Process. The City prepared an Initial Study (IS) and circulated an NOP to members of the public, local and state agencies, organizations, and interested parties to solicit comments on the proposed Project between April 13, 2017, and May 15, 2017. Two public scoping meetings were held, one on May 3, 2017, at the Puenta Learning Center and one on May 11, 2017, at the Aliso Pico Gymnasium. Informational materials were made available in Spanish and English.

The NOP/IS was available on the Los Angeles Bureau of Engineering (LABOE) website and at local public facilities. A notice, informing the public of the availability of the NOP/IS, was printed in English in *DTLA News* and in Spanish in *La Opinión*. The notice was also circulated to members of the public, local and state agencies, organizations, and interested parties to solicit comments on the proposed Project. The NOP/IS was also available at the following public facilities during the public review period:

- Central Library, 630 West Fifth Street, Los Angeles, CA 90071
- Little Tokyo Library, 203 South Los Angeles Street, Los Angeles, CA 90012
- Robert Louis Stevenson Library, 803 Spence Street, Los Angeles, CA 90023
- Benjamin Franklin Library, 2200 East First Street, Los Angeles, CA 90033
- BH Technology Center, 1600 East Fourth Street, Los Angeles, CA 90033
- Boyle Heights City Hall, 2130 East First Street Suite 241, Los Angeles, CA 90033

Following the comment period for the IS/NOP, a Draft EIR was prepared for the proposed Project. The IS, NOP, and NOP comment letters were included in **Appendix A** of the Draft EIR.

Consistent with the requirements of Sections 15087 and 15105 of the CEQA Guidelines, the Draft EIR was submitted to the Los Angeles County Clerk and the State Clearinghouse, a division of the Governor's Office of Planning and Research and circulated for public review. The public comment period for the Draft EIR was from May 27, 2021, to July 26, 2021, exceeding CEQA's 45-day public comment period requirement.

During the comment period, the Draft EIR was made available for review on LABOE's project website, https://eng.lacity.org/about-us/divisions/environmental-management/projects/sixth-street-park-arts-river-connectivity-improvements-parc. In addition, hard copies of the Draft EIR were made available at the following public facilities:

- Central Library, 630 West Fifth Street, Los Angeles, CA 90071
- Robert Louis Stevenson Library, 803 Spence Street, Los Angeles, CA 90023
- BH Technology Center, 1600 East Fourth Street, Los Angeles, CA 90033
- East Los Angeles County Library, 4837 East 3rd Street, Los Angeles, CA 90022

Due to the global pandemic, a virtual public meeting was held in English and Spanish on July 14, 2021, at 6:30 PM on Zoom during the 45-day public comment period for the Draft EIR. Accommodations were also made available at PUENTE Learning Center in the Boyle Heights Neighborhood for anyone requiring access to a screen or internet connection for the virtual public meeting. A notice regarding the public review period and how to access the public meeting was posted on the LABOE project website: https://eng.lacity.org/about-us/divisions/environmental-management/projects/sixth-street-park-arts-river-connectivity-improvements-parc, and published in the *DTLA News* in English and *La Opinion* in Spanish. Project stakeholders also received mail and email notifications regarding the virtual public meeting.

This Final EIR was prepared following the Draft EIR comment period. In accordance with CEQA Guideline Section 15088, this Final EIR includes responses to comments on environmental issues that were received during the comment period for the Draft EIR.

Chapter 2
Response to Comments

2.1 Introduction

Section 21091(d) of the Public Resources Code (PRC) states that, "With respect to the consideration of comments received on a draft environmental impact report, the lead agency shall evaluate comments on environmental issues that are received from persons who have reviewed the draft and shall prepare a written response." The lead agency is not required to provide a response to comments provided outside of the allotted comment period. Section 21092.5 of the PRC requires that, "At least 10 days prior to certifying an environmental impact report, the lead agency shall provide a written proposed response to a public agency on comments made by that agency which conform with the requirements of this division."

The City of Los Angeles (City), Department of Public Works, Bureau of Engineering (LABOE) is the Lead Agency for the Sixth Street Park, Arts, River & Connectivity Improvements (PARC) Project (proposed Project). This section of the Final EIR provides the City's responses to the written comments received during the comment period for the Draft EIR. Section 2.2, Matrix of Comments Received on the Draft EIR, includes a table that summarizes the environmental issues raised by each commenter regarding the Draft EIR. Section 2.3, Responses to Comments, provides the City's responses to the comment letters received on the Draft EIR. Copies of the original comment letters and the oral transcript from the public meeting are provided in **Appendix Final EIR-1** of this Final EIR.

2.2 Matrix of Comments Received on the Draft EIR

Table 2.2-1 Matrix of Comments Received on the Draft EIR

Letter No.	Commenter	Executive Summary	Introduction	Project Description	Aesthetics	Air Quality	Biological Resources	Cultural Resources	Energy	Geology & Soils	Greenhouse Gas Emissions	Hazards & Hazardous Materials	Hydrology & Water Quality	Land Use & Planning	Noise & Vibration	Population & Housing	Public Services	Recreation	Transportation & Traffic	Utilities & Service Systems	Mandatory Findings	Comparison of Alternatives	Other Environmental	Cumulative Impact	General/Other	Support
Written Comments Received from Agencies and Elected Officials																										
A1	Frances Duong, Acting IGR/CEQA Branch Chief, Caltrans District 7, Office of Regional Planning, 100 S. Main Street, Suite 100, Los Angeles, CA 90012	X	X	X										X					X							X
A2	Lijin Sun, J.D., Program Supervisor, CEQA IGR, South Coast Air Quality Management District Planning, Rule Development & Area Sources, 21865 Copley Drive, Diamond Bar, CA 91765-4178					X																				
A3	Shine Ling, AICP, Manager, Transit Oriented Communities,	X	X	X								X	X	X	X			X	X	X				X	X	X

Letter No.	Commenter	Executive Summary	Introduction	Project Description	Aesthetics	Air Quality	Biological Resources	Cultural Resources	Energy	Geology & Soils	Greenhouse Gas Emissions	Hazards & Hazardous Materials	Hydrology & Water Quality	Land Use & Planning	Noise & Vibration	Population & Housing	Public Services	Recreation	Transportation & Traffic	Utilities & Service Systems	Mandatory Findings	Comparison of Alternatives	Other Environmental	Cumulative Impact	General/Other	Support
	Metro Development Review, One Gateway Plaza, MS 99-22-1, Los Angeles, CA 90012 2952																									
A4	Ali Poosti, Division Manager, Wastewater Engineering Services Division, LA Sanitation and Environment, 1149 S Broadway 9th floor, Los Angeles, CA 90015			X								X	X													
Written Comments Received from Members of the Public																										
P1	Vince and Frank Gallo Co-Owners, Rancho Cold Storage, Inc., 670 Mesquit Street, Los Angeles, CA 90021			X										X		X	X	X	X						X	X
P2	Benjamin Hanelin, Latham and Watkins, LLP, 355 South Grand Avenue, Suite 100, Los Angeles, CA 90071-1560			X	X								X	X		X	X	X	X					X	X	X

Letter No.	Commenter	Executive Summary	Introduction	Project Description	Aesthetics	Air Quality	Biological Resources	Cultural Resources	Energy	Geology & Soils	Greenhouse Gas Emissions	Hazards & Hazardous Materials	Hydrology & Water Quality	Land Use & Planning	Noise & Vibration	Population & Housing	Public Services	Recreation	Transportation & Traffic	Utilities & Service Systems	Mandatory Findings	Comparison of Alternatives	Other Environmental	Cumulative Impact	General/Other	Support
P3	Mia Lehrer, President, Studio MLA, 251 South Mission Road, Los Angeles, CA 90033			X											X										X	
Verbal Comments Received During Draft EIR Public Meeting																										
T1	Martin Torres																		X							
T2	Frank Gallo																		X							
T3	Kat Halsey						X																			
T4	Martin Torres																	X								
T5	Malissa Strong																	X								
T6	Veta Gashgai															X	X									
T7	Lori Atwater															X										
T8	Sol Marquez				X											X	X									X
T9	Malissa Strong															X		X								X

2.3 Responses to Comments

Comment Letter No. A1
Frances Duong
Acting IGR/CEQA Branch Chief
Caltrans District 7, Office of Regional Planning
100 S. Main Street, Suite 100
Los Angeles, CA 90012

Comment No. A1-1

Thank you for including the California Department of Transportation (Caltrans) in the environmental review process for the above referenced project. The proposed Project would create public recreational space on approximately 13 acres in areas underneath and adjacent to the upcoming Sixth Street Viaduct. Features of the proposed Project include, but are not limited to, a café, concession area, public restrooms on each side of the LA River, performance and public gathering areas, flexible play areas and lawns, adult fitness equipment, dog play areas, landscaped areas, public art, sports fields and courts, children's play areas and splash pad, picnic and grilling areas, parking spaces, skate park elements, bicycle and pedestrian paths, roadway connectivity improvements, stormwater infrastructure improvements, and rain gardens. In addition, the proposed Project could include the installation of reinforced concrete planted terraces on the west and east banks of the LA River. The proposed Project generally includes components noted in the Los Angeles River Revitalization Master Plan.

LABOE Response: This comment confirms Caltrans' receipt of the Draft EIR. It provides background information regarding the proposed Project and does not state a specific concern or question regarding the sufficiency of the analysis or mitigation measures contained in the Draft EIR.

Comment No. A1-2

The nearest State facility to the proposed project is US [United States Interstate] 101. After reviewing the DEIR [Draft EIR], Caltrans has the following comments:

Caltrans acknowledges and supports infill development that provides valuable urban park space and prioritizes walking, biking, and transit. The Project's goals are in direct alignment with State-level sustainable transportation policy goals which seek to reduce the number of trips made by driving, reduce Greenhouse Gas (GHG) emissions, and encourage alternative modes of travel. Caltrans' Strategic Management Plan has set targets of tripling trips made by bicycle and doubling trips made by walking and public transit, as well as achieving a reduction in statewide, per capita, vehicle miles traveled (VMT). Similar goals are embedded in the California Transportation Plan 2040, California Transportation Plan 2050, and Southern California Association of Governments (SCAG) Connect SoCal (2020-2045 Regional Transportation Plan/Sustainable Communities Strategy). Statewide legislation such as AB [Assembly Bill] 32 and SB [Senate Bill] 375, as well as Executive Order S-3-05 and N-19-19, echo the need to pursue

more sustainable development. Projects, like the one proposed, can help California meet these goals.

LABOE Response: Thank you for your support of the proposed Project. This comment states Caltrans' support for the proposed Project and does not state a specific concern or question regarding the sufficiency of the analysis or mitigation measures contained in the Draft EIR.

Comment No. A1-3

Caltrans also concurs that the following Mitigation Measures are effective infrastructure to reduce VMT and more effectively meet the transportation needs of all people:

- *MM-TRANS-1: Mobility Hub*
- *MM-TRANS-2: Bicycle Facilities*
- *MM-TRANS-3: Rideshare Zones*
- *MM-TRANS-4: Public Transportation*

LABOE Response: Thank you for your support of the proposed Project's mitigation measures. This comment states Caltrans' support for proposed mitigation measures **MM-TRANS-1**, **MM-TRANS-2**, **MM-TRANS-3**, and **MM-TRANS-4**. The comment does not state a specific concern or question regarding the sufficiency of the analysis or mitigation measures contained in the Draft EIR.

Comment No. A1-4

While Caltrans does not expect project approval to result in a direct adverse impact to the existing State transportation facilities, the eastern edge of the Project is adjacent to Caltrans Right-of-Way. Therefore, an encroachment permit will be required, and all environmental concerns must be adequately addressed. Please note that any modifications to the State facility will be subject to additional review by the Office of Permits prior to issuance of the permit.

LABOE Response: The City is aware that an encroachment permit will be needed when doing work within or adjacent to Caltrans Right-of-Way. Table ES-1 and Section 3.15 of the Draft EIR have been updated to specify that a Caltrans Encroachment Permit will be needed for work along the eastern edge of the proposed Project adjacent to Caltrans Right-of-Way. Caltrans has also been included in the list of Responsible Parties that was in Section 1.4 of the Draft EIR.

Comment No. A1-5

Additionally, any transportation of heavy construction equipment and/or materials which requires use of oversized-transport vehicles on State highways will need a Caltrans transportation permit. We recommend large size truck trips be limited to off-peak commute periods.

LABOE Response: The City is aware that a transportation permit will be needed when using oversized vehicles on State highways. Section 3.15 and Table ES-1 of the Draft EIR have been updated to state that a Caltrans Transportation Permit will be needed and the construction

contractor will be required to comply with all applicable regulations regarding the use of State highways and local roads. **BMP-TRANS-3** (see section 3.15.4 of the Draft EIR) already requires construction-related trips be scheduled with increased frequency during off-peak hours to minimize impacts to commuters.

Comment Letter No. A2

Lijin Sun, J.D.
Program Supervisor, CEQA IGR
South Coast Air Quality Management District
Planning, Rule Development & Area Sources
21865 Copley Drive
Diamond Bar, CA 91765-4178

Comment No. A2-1

South Coast Air Quality Management District (South Coast AQMD) staff appreciates the opportunity to comment on the above-mentioned document. The following comments include recommended revisions to the CEQA air quality impact analysis for regional construction impacts and air quality mitigation measures that the City of Los Angeles (Lead Agency) should include in the Final EIR.

LABOE Response: This comment confirms the South Coast AQMD's receipt of the Draft EIR. The comment provides background information and does not state a specific concern or question regarding the sufficiency of the analysis or mitigation measures contained in the Draft EIR.

Comment No. A2-2

South Coast AQMD Staff's Summary of the Proposed Project and CEQA Air Quality Impact Analysis

Based on the Draft EIR, the Lead Agency will develop recreational and stormwater management facilities on 13 acres (Proposed Project). The Proposed Project is located on the northwest corner of South Boyle Avenue and Seventh Street in the communities of Central City North and Boyle Heights within the designated AB [Assembly Bill] 617 East Los Angeles, Boyle Heights, West Commerce community.

In the Draft EIR, the Lead Agency analyzed the Proposed Project's regional air quality impacts from construction activities associated with hauling construction materials and importing or exporting soil. During the grading phase, the Proposed Project will import and export 16,700 cubic yards of soil, resulting in 835 haul truck trips[1]. The Lead Agency calculated criteria pollutants emissions from construction activities after incorporating air quality mitigation measures, including the use of 2007 and newer diesel haul trucks (e.g., material delivery trucks and soil import/export) and Tier 4 off-road construction equipment of greater than 50 horsepower[2]. The Lead Agency concluded that the mitigated maximum daily emissions from NOx would be 28 pounds per day (lbs/day), which would not exceed South Coast AQMD regional air quality CEQA significance threshold for NOx at 100 lbs/day for construction[3]. The Lead

[1] *Draft EIR. Air Quality and Greenhous Gas Impact Assessment. CalEEMod Output Files. Page 2.*
[2] *Draft EIR. MM-AQ-1. Page 3.2-14.*
[3] *MND. Page 4-19.*

Agency also concluded that the Proposed Project's regional construction air quality impacts from other criteria pollutants would be less than significant with mitigation.

LABOE Response: This comment confirms receipt of the Draft EIR from the South Coast AQMD. It provides background information regarding the project description and does not state a specific concern or question regarding the sufficiency of the analysis or mitigation measures contained in the Draft EIR. The City has revised the construction emission calculations based on the South Coast AQMD's comments, which is provided in **Appendix Final EIR-2**.

Comment No. A2-3

CEQA Air Quality Impact Analysis for Regional Construction Impacts Associated with Truck Trip Length

Based on a review of the Hazards and Hazardous Materials Section and the Utilities and Service Systems Section of the Draft EIR, South Coast AQMD staff found that implementation of the Proposed Project requires excavation of soil contaminated with Resource Conservation and Recovery Act level heavy metals, polychlorinated biphenyls, or total petroleum hydrocarbon diesel range organics that would need to be disposed at Class 1 hazardous waste landfills and Class 2 landfills[4]. Solid waste generated from the Proposed Project's construction activities will be collected by the Central Los Angeles Recycling and Transfer Station (CLARTS), and from CLARTS, waste is transferred to a landfill or recycling facility. Based on the Proposed Project's location, the closest landfill to the Proposed Project is the Puente Hills Landfill in the City of Industry[5].

In the Air Quality Section, the Lead Agency used a default one-way trip length of 20 miles to quantify the Proposed Project's construction emissions from importing and exporting soil and might have underestimated the Proposed Project's soil hauling emissions. According to the City of Los Angele Sanitation and Environment Department, hazardous waste is not accepted at CLARTS[6]. The Puente Hills Landfill that is located at 13130 Crossroads Parkway South in the City of Industry was owned and/or operated by the Los Angeles County Sanitation Districts, and on December 31, 2014, it ceased operation as one of six major Class III landfills within the County[7]. It is likely that contaminated soil will not be accepted by CLARTS or transferred to the Puente Hills Landfill for disposal. Additionally, depending on the type of contamination, contaminated soil may need to be disposed at a permitted hazardous disposal facility outside

[4] Draft EIR. Page 3.17-6.
[5] Draft EIR. Page 3.16-3.
[6] City of Los Angeles. CLARTS Facts and Services. Accessed at: https://www.lacitysan.org/san/faces/home/portal/s-lsh-wwd/s-lsh-wwd-s/s-lsh-wwd-s-cl/s-lsh-wwd-s-cl-fs?_afrLoop=11339668849486601&_afrWindowMode=0&_afrWindowId=py5xjm1uy&_adf.ctrl-state=esjuboubd_473#!%40%40%3F_afrWindowId%3Dpy5xjm1uy%26_afrLoop%3D11339668849486601%26_afrWindowMode%3D0%26_adf.ctrl-state%3Desjuboubd_477.
[7] Los Angeles County. Countywide Siting Element – Existing Solid Waste Disposal Facilities. Accessed at: http://dpw.lacounty.gov/epd/nas/epd/epd_dms/TSKFRC%60JOLEE%60TaskForce%60PUB_Y%60FREQ_N%6011_12_2015%60%60REC_N%600000_00%600000_00%60TFMPAC%60CSE%20Chapter%203%20Redline_11_10_15%6039.pdf.

Los Angeles County with a one-way trip length that is likely longer than 20 miles. During the grading phase, 835 truck trips would take place for hauling 16,700 cubic yards of soil. Using a one-way truck trip length of 20 miles likely underestimated the Proposed Project's construction emissions. Therefore, South Coast AQMD staff recommends that the Lead Agency identify the permitted hazardous disposal facilities that the Proposed Project will use to dispose contaminated soil, disclose them in the Final EIR, and re-calculate the Proposed Project's construction emissions from haul truck trips based on the appropriate one-way trip length. If the Lead Agency finds, after revisions, that the Proposed Project's regional air quality impacts from construction activities would be significant, mitigation measures will be required (CEQA Guidelines Section 15126.4).

LABOE Response: Thank you for providing updated information regarding LA Puente Hills Landfill and CLARTS. The City has identified the following landfills that would be used instead for haul trips: Simi Valley Landfill (non-hazardous impacted soil), La Paz County Landfill (non-Resource and Conservation Recovery Act [RCRA] California hazardous soil), and Kettleman Hills Landfill (RCRA hazardous soil). The latest version of California Emissions Estimator Model (CalEEMod) was used to recalculate air quality emissions and update the construction emissions with new haul lengths. These calculations are provided in **Appendix Final EIR-2**. Impacts to air quality remain less than significant with mitigation.

Comment No. A2-4

Recommended Revisions to Existing Air Quality Mitigation Measure

*CEQA requires that all feasible mitigation measures that go beyond what is required by law be utilized to minimize or eliminate any significant adverse air quality impacts. The Draft EIR included an air quality mitigation measure (**MM-AQ-1**), which requires, among others, the use of 2007 and newer diesel haul trucks (e.g., material delivery trucks and soil import/export). South Coast AQMD staff recommends that the Lead Agency require cleaner haul trucks to strengthen the mitigation. The recommended additions and changes to the portion of **MM-AQ-1** related to haul trucks are shown in underline and ~~strikethrough~~, respectively.*

Implement MM-AQ-1: Newer/Tier 4 Engines in Haul Trucks and Construction Equipment

- *Include in all construction contracts the requirement to use zero-emission (ZE) or near-zero emission (NZE) on-road haul trucks (e.g., material delivery trucks and soil import/export) such as heavy-duty trucks with natural gas engines that meet the California Air Resources Board (CARB)'s adopted optional NOx emission standard at 0.02 grams per brake horsepower-hour (g/bhp-hr), and ensure that supportive infrastructure will be available for ZE/NZE trucks. At a minimum, require the use of ~~2007~~ 2010 and newer diesel haul trucks (e.g., material delivery trucks and soil import/export) that meet CARB's 2010 engine emissions standards at 0.01 g/bhp-hr of particulate matter (PM) and 0.20 g/bhp-hr of NOx emissions or newer, cleaner trucks. To monitor and ensure ZE, NZE, or 2010 model year trucks are used at the future development projects, the lead agency should require that operators maintain records of all trucks associated with the future development projects' construction and make these records available to the lead agency upon request. The records*

will serve as evidence to prove that each truck called to the future development projects during construction meets the minimum 2010 model year engine emission standards. Alternatively, the Lead Agency should require periodic reporting and provision of written records by contractors working on the future development projects and conduct regular inspections of the records.

LABOE Response: MM-AQ-1 has been updated to require the use of 2010 or newer diesel haul trucks. The results of the revised construction emissions do not necessitate the use of ZE or NZE technologies. These calculations are provided in **Appendix Final EIR-2**. Impacts to air quality remain less than significant with mitigation.

Comment No. A2-5

Conclusion

Pursuant to California Public Resources Code Section 21092.5(a) and CEQA Guidelines Section 15088(b), South Coast AQMD staff requests that the Lead Agency provide South Coast AQMD staff with written responses to all comments contained herein prior to the certification of the Final EIR. In addition, issues raised in the comments should be addressed in detail giving reasons why specific comments and suggestions are not accepted. There should be good faith, reasoned analysis in response. Conclusory statements unsupported by factual information will not suffice (CEQA Guidelines Section 15088(c)). Conclusory statements do not facilitate the purpose and goal of CEQA on public disclosure and are not meaningful, informative, or useful to decision makers and to the public who are interested in the Proposed Project. Further, if the Lead Agency makes the finding that the recommended revisions to the existing air quality mitigation measure are not feasible, the Lead Agency should describe the specific reasons supported by substantial evidence for rejecting them in the Final EIR (CEQA Guidelines Section 15091).

South Coast AQMD staff is available to work with the Lead Agency to address any air quality questions that may arise from this comment letter. Please contact me at lsun@aqmd.gov if you have questions or wish to discuss the comments.

LABOE Response: The City appreciates the South Coast AQMD's support and the opportunity to work with the South Coast AQMD to deliver the proposed Project. The City has prepared a memorandum to address the South Coast AQMD's comments, which is included as **Appendix Final EIR-2**. The South Coast AQMD will be provided a copy of this memorandum as well as our written responses to their comments prior to certification of the Final EIR in accordance with CEQA Guidelines. Impacts to air quality remain less than significant with mitigation.

Comment Letter No. A3

Shine Ling, AICP
Manager, Transit Oriented Communities
Metro Development Review
One Gateway Plaza
MS 99-22-1
Los Angeles, CA 90012-2952

Comment No. A3-1

Thank you for coordinating with the Los Angeles County Metropolitan Transportation Authority (Metro) regarding the proposed Sixth Street PARC (Project) located in the City of Los Angeles (City). Metro is committed to working with local municipalities, developers, and other stakeholders across Los Angeles County on transit-supportive developments to grow ridership, reduce driving, and promote walkable neighborhoods.

Per Metro's area of statutory responsibility pursuant to sections 15082(b) and 15086(a) of the Guidelines for Implementation of the California Environmental Quality Act (CEQA: Cal. Code of Regulations, Title 14, Ch. 3), the purpose of this letter is to provide the City with specific comments on the Draft Environmental Impact Report (EIR) for the Project. In particular, this letter outlines topics regarding the Project's potential impacts on Metro projects, infrastructure, and right of way (ROW) which should be analyzed in the EIR, and provides recommendations for mitigation measures as appropriate. Effects of a project on transit systems and infrastructure are within the scope of transportation impacts to be evaluated under CEQA[1].

In addition to the specific comments outlined below, Metro is providing the City with the Metro Adjacent Development Handbook (attached), which provides an overview of common concerns for development adjacent to Metro ROW and transit facilities, available at www.metro.net/projects/devreview/.

Metro supports the City's efforts to create vibrant and multi-beneficial amenities that improve stakeholder connections to parks, transit, and active transportation. Metro looks forward to continuing to work collaboratively with the City to ensure that the Project will be designed, engineered, and constructed with sensitivity to the critical transportation infrastructure in the surrounding area.

LABOE Response: This comment confirms Metro's receipt of the Draft EIR. The comment provides background information and does not state a specific concern or question regarding the sufficiency of the analysis or mitigation measures contained in the Draft EIR. The Metro Adjacent Development Handbook has been saved in the project folder.

[1] See CEQA Guidelines section 15064.3(a); Governor's Office of Planning and Research Technical Advisory on Evaluating Transportation Impacts In CEQA, December 2018, p. 19.

Comment No. A3-2

Project Description

The Project includes a new approximately 13 acres of public recreational space underneath and adjacent to the Sixth Street Viaduct. The Project would include an East Park, West Park, and Arts Plaza and River Gateway. The proposed East Park, located in the Boyle Heights Community Plan area would include amenities such as concessions area, public restrooms, office and storage space for operations and maintenance staff, etc. The proposed West Park would include amenities such as a café building, landscaped area and a rain garden, public art piece, etc. The Arts Plaza and River Gateway would include rehabilitating an existing pedestrian/vehicular tunnel that provides access to the LA River channel.

LABOE Response: This comment provides background information regarding the proposed Project and does not state a specific concern or question regarding the sufficiency of the analysis or mitigation measures contained in the Draft EIR.

Comment No. A3-3

Future Transit Corridor Projects under study

Metro is studying the following new transit corridor projects which are within the Project area. These projects should be incorporated into the EIR [Draft EIR]'s analysis. In addition, the City should consult with the SCRRA [Southern California Regional Rail Authority], which operates Metrolink, on their capital planning efforts.

1. *Metro's LA River Path Project: Funded by Measure M, Metro is evaluating a new bicycle and pedestrian path along an approximately eight-mile stretch of the Los Angeles River from Elysian Valley through Downtown Los Angeles to the City of Maywood. Metro released a Notice of Preparation for this project in October 2019 with a target operation date by 2028. The project is currently in the Environmental Phase with anticipated selection of a locally preferred alternative (LPA) by 2023. More information may be found online at: https://www.metro.net/projects/lariverpath/.*
2. *Arts District/6th Street Station: The Arts District/6th St Station is a proposed new Metro B Line (Red) and/or D Line (Purple) station near 6th Street that would provide regional and local transit connections to and from Arts District, Boyle Heights, Little Tokyo and surrounding communities. The station would be located south of LA Metro's Division 20 Rail Yard and would be generally bounded by the 6th Street Bridge to the north, 7th Street to the south, the Los Angeles River to the east, and by Mesquit Street to the west. With funding support from the City of Los Angeles, Metro is preparing an Environmental Impact Report (EIR) and conducting public outreach for the EIR. Funding for construction has not been identified for this potential project. Completing this study does not commit Metro to funding and constructing the potential Arts District/6th St Station and extending heavy rail transit to it. More information may be found online at: https://www.metro.net/projects/arts-dist-6th-station/.*

LABOE Response: The City looks forward to continuing to work with Metro through the development of the proposed LA River Path Project and Arts District/6th Street Station Project. Thank you for providing additional information regarding these projects. This information has been saved in the project record. Table 1-1 of the Draft EIR was updated to reflect the name change of the "Los Angeles River Bicycle Path Gap Closure Project" to "LA River Path Project" in accordance with the comment. In addition, the Arts District/6th Street Station was added to Figure 1-2 (see Section 1.7.2 of the of the Draft EIR). The City understands that Metro is currently preparing environmental documents for both of these projects and final alignments and locations have yet to be determined. The City welcomes any additional information Metro can provide regarding these projects and look forward to continuing to work with Metro through the development of these proposed projects.

Comment No. A3-4

Metrolink Adjacency

1. *Operations: The Project site is above and adjacent to Metro-owned ROW operated and maintained by the SCRRA to run the Metrolink commuter rail service. Amtrak intercity passenger trains and other freight trains also operate on this line. The City is advised that rail service operates in both directions and that trains may operate 24 hours a day, seven days a week, in the ROW below the Project.*

LABOE Response: The proposed Project would be adjacent to Metro-owned ROW and include improvements to an existing Los Angeles River access tunnel beneath existing railroad ROW. The proposed Project does not currently include work within or above the railroad ROW as suggested by the comment. The City would coordinate with Metro and SCRRA should the need for any work above or immediately adjacent to Metro-owned ROW (e.g., for a crane) arise during construction. The construction contract would also require that construction activities be performed in a manner that would not endanger or interfere with the safe and timely operations of Metro's tracks, its facilities, or the public.

Comment No. A3-5a

2. *Impact Analysis: Due to the Project's proximity to Metrolink ROW, the EIR must analyze potential effects on rail operations and identify mitigation measures as appropriate. Critical impacts to be studied should include (without limitation): impacts of Project construction and operation on and potential damage to the structural and systems integrity of tracks and related infrastructure; and disruption to rail service. Specific impacts and mitigation measures that should be studied include:*

a. *Structure Setback: Structures that are immediately adjacent to the railroad ROW can pose safety hazards and may disrupt transit service and/or damage Metrolink infrastructure. Such conflicts can occur during Project construction and/or operation.*

LABOE Response: The proposed Project would be adjacent to Metrolink-owned ROW and include improvements to an existing Los Angeles River access tunnel beneath the existing railroad ROW. The proposed Project is not anticipated to potentially damage any structures or system integrity of tracks or related infrastructure. The proposed Project does not include

work above the railroad ROW as suggested by the comment. Should work be performed in close proximity to railroad ROW or a crane be needed above railroad ROW during construction, the City would consult with Metro.

Comment No. A3-5b

Recommended Mitigation Measure

i. Technical Review: The City shall submit engineering drawings and calculations, as well as construction work plans and methods including any crane placement and radius, to evaluate any impacts to SCRRA infrastructure in relationship to the Project. Before issuance of any building permit for the Project, the City shall obtain Metro's and SCRRA's approval of final construction drawings.

LABOE Response: The proposed Project does not require any building permits because the structures will be built in the public right of way. The construction contract would require that construction activities be performed in a manner that will not endanger or interfere with the safe and timely operations of Metro's tracks, its facilities, or the public. The City would be required, prior to beginning construction, submit to Metro detailed plans and specifications for Metro's review and comment for any work over, under, or adjacent to Metro's tracks. Prior to commencing any work on or in close proximity to SCRRA's property, the City's contractor would be required to comply with SCRRA's Track Allocation Work Permit Process. The City's Contractor would also be required to notify SCRRA's Manager, Third Party Coordination, One Gateway Plaza, 16th Floor, Los Angeles California, 90012, Telephone (213) 922-7255, Fax (213) 922-7392 ("Third Party Coordinator") in writing at least five working days prior to commencing any work on or near SCRRA property. The recommended new mitigation measure is not required and project impacts will remain less than significant with mitigation.

Comment No. A3-5c

ii. Access: Any access to railroad property is strictly at the discretion of Metro and SCRRA. The City shall obtain specific Right-of-Entry temporary access permits from SCRRA for any work performed on the Project's structures or property requiring access to the railroad ROW.

LABOE Response: The City identified Metro and SCRRA as agencies that potentially could require approvals or permits in Section 1.4 of the Draft EIR. Table ES-1 was revised to reflect the need for a Right-of-Entry from SCRRA should any work require access to railroad ROW.

Comment No. A3-5d

iii. Construction Monitoring: The City shall permit Metro and/or SCRRA staff to monitor construction activity to ascertain any impact to the ROW. During construction, the City shall construct a protection barrier to prevent objects, material, or debris from falling onto the ROW. The City shall notify Metro and SCRRA of any changes to the construction/building plans that may or may not impact the ROW.

LABOE Response: The proposed Project is not anticipated to require work above the railroad ROW as suggested by the comment. Therefore, there should be no need to construct

a barrier to prevent objects, material, or debris from falling on railroad ROW. If, for unforeseen circumstances, work occurs over the railroad ROW (e.g., a crane is needed), the construction contract would require that construction activities be performed in a manner that would not endanger or interfere with the safe and timely operations of Metro's tracks, its facilities, or the public. The City would, prior to beginning construction, submit to Metro detailed plans and specifications for Metro's review and comment for any work over, under, or adjacent to Metro's tracks. Prior to commencing any work on or in close proximity to SCRRA's property, the City's contractor would be required to comply with SCRRA's Track allocation Work Permit Process. The City's Contractor would also be required to notify SCRRA's Manager, Third Party Coordination, One Gateway Plaza, 16th Floor, Los Angeles California, 90012, Telephone (213) 922-7255, Fax (213) 922-7392 ("Third Party Coordinator") in writing at least five working days prior to commencing any work on or near SCRRA property.

Comment No. A3-6a

3. *Advisories to City: The City is encouraged to contact Metro Development Review and Metrolink staff early in the design process to plan for potential impacts. The City should also be advised of the following: Occupational Safety and Health Administration (OSHA) Requirements: Construction work in proximity to Metrolink ROW with potential to damage rail tracks and related infrastructure may be subject to additional OSHA safety requirements.*

LABOE Response: The City has coordinated with Metro during the design of the proposed Project, as is evidenced by receipt of comments from Metro on the NOP and the NOA for the Draft EIR. The City is committed to continue to work with Metro during design and project implementation. Construction contractors would be required to comply with all applicable OSHA requirements. The City understand that the construction contract may be required to comply with additional OSHA requirements for work within or in proximity to railroad ROW. The proposed Project has been designed to avoid potentially damaging rail tracks and related infrastructure.

Comment No. A3-6b

a. *Technical Review: Metro and Metrolink charge for staff time spent on engineering review and construction monitoring.*

LABOE Response: The City looks forward to continuing to work with Metro with the development of the proposed Project and acknowledges that Metro and/or Metrolink may charge for engineering review or construction monitoring should this be needed.

Comment No. A3-6c

b. *ROW Access: The City should contact SCRRA for Right-of Entry requirements. Information can be found at www.metrolinktrains.com. Other requirements may include permits for construction of buildings and any future repairs, painting, graffiti removal, etc., including the use of overhead cranes or any other equipment that could potentially impact railroad*

operations and safety. Frequent access for maintenance tasks such as graffiti removal, will necessitate an active license agreement. This agreement will include an annual license fee and other requirements that meet safety standards for access to a ROW with active rail operations.

LABOE Response: The City looks forward to continuing to work with Metro on the development of the proposed Project and is aware that Rights-of Entry may be required should work be conducted within SCRRA ROW. Please see the prior responses regarding potential work within or above Metro and SCRRA ROW. There are no proposed Project facilities planned within Metro or SCRRA ROW. Once operational, the Los Angeles Department of Recreation and Parks (RAP) would be in charge of maintaining the proposed Project facilities.

Comment No. A3-6d

c. *Cost of Impacts: The City will be responsible for costs incurred by Metro and/or SCRRA due to Project construction/operation issues that cause delay or harm to Metrolink service delivery or infrastructure. The City will also bear all costs for any noise mitigation required for the Project.*

LABOE Response: The proposed Project is not anticipated to damage structural and system integrity of the tracks or related infrastructure, nor would the proposed Project disrupt current rail services. In addition, the City would implement and be financially responsible for Best Management Practices and Mitigation Measures to mitigate noise impacts during construction. Noise mitigation from construction activities would be implemented in accordance with **MM-NOI-1**.

Comment No. A3-7

Transit Supportive Planning: Recommendations and Resources Considering the Project's proximity to the future Arts District/6th Street Station, Metro would like to identify the potential synergies associated with transit-oriented development:

1. *Transit Supportive Planning Toolkit: Metro strongly recommends that the City review the Transit Supportive Planning Toolkit which identifies 10 elements of transit-supportive places and, applied collectively, has been shown to reduce vehicle miles traveled by establishing community-scaled density, diverse land use mix, combination of affordable housing, and infrastructure projects for pedestrians, bicyclists, and people of all ages and abilities. This resource is available at https://www.metro.net/projects/tod-toolkit.*

LABOE Response: The City looks forward to continuing to work with Metro to develop the proposed Arts District/Sixth Street Station. The Transit Supportive Planning Toolkit is no longer available on the Metro website provided. Please provide a copy of the toolkit for the City to include in the project record.

Comment No. A3-8a

2. *Transit Connections and Access: Metro strongly encourages the City to install Project features that help facilitate safe and convenient connections for pedestrians, people riding bicycles, and transit users to/from the Project site and nearby destinations. The City should incorporate the installation of such features as part of the Project, including:*

    a. *Walkability: The provision of wide sidewalks, pedestrian lighting, a continuous canopy of shade trees, enhanced crosswalks with ADA-compliant curb ramps, and other amenities along all public street frontages of the development site to improve pedestrian safety and comfort to access the nearby future Arts District/6th Street Station.*

LABOE Response: The proposed Project (referred to as "Canopy and Objects" concept) seeks a balance of active recreation, passive recreational space, and shade trees. ADA curb ramps would be installed to improve pedestrian safety. The proposed Project would be consistent with Mobility Plan as stated in Table 3.10-2 of the Draft EIR.

Comment No. A3-8b

b. *Bicycle Use and Micromobility Devices: The provision of adequate short-term bicycle parking, such as ground-level bicycle racks, and secure, access-controlled, enclosed long-term bicycle parking for residents, employees, and guests. Bicycle parking facilities should be designed with best practices in mind, including highly visible siting, effective surveillance, ease to locate, and equipment installation with preferred spacing dimensions, so bicycle parking can be safely and conveniently accessed. Similar provisions for micro-mobility devices are also encouraged.*

LABOE Response: MM-TRANS-1 requires the City to reserve space for the installation of a mobility hub at the Project Site, including additional amenities for bicyclists, drivers, and transit users. **MM-TRANS-2** requires the City to reserve space for the installation of a Bike Share hub at the Project Site to allow Bike Share participants to dock bicycles and scooters. This space is depicted in Figure 2-15 of the Draft EIR, in the Arts Plaza Site Plan along Mesquit Street.

Comment No. A3-8c

c. *First & Last Mile Access: The Project should address first-last mile connections to transit and is encouraged to support these connections with wayfinding signage inclusive of all modes of transportation. For reference, please review the First Last Mile Strategic Plan, authored by Metro and the Southern California Association of Governments (SCAG), available on-line at: http://media.metro.net/docs/sustainability_path_design_guidelines.pdf*

LABOE Response: The City looks forward to working with Metro to identify locations for wayfinding signs as part of the proposed Metro Arts District/Sixth Street Project.

Comment No. A3-8d

3. *Wayfinding: Any wayfinding or other signage that includes the Metro brand and/or directs the public to Metro facilities must conform to Metro Signage Standards (including but not*

limited to Metro Standards Chapters 2.0 Graphic Standards, 10.0 Materials and Fabrication Standards, and 12.0 Trailblazing Standards).

LABOE Response: The City looks forward to working with Metro to identify locations for wayfinding signs as part of the proposed Metro Arts District/Sixth Street Project and LA River Path Project.

Comment No. A3-9

In addition to comments contained within the body of this letter, Attachment A contains specific technical comments pertaining to the DEIR [Draft EIR].

Table ES-53: Summary of Environmental Impacts and Mitigation Measures, Mobility Hubs, pg. ES-53:

- *Clarify whether this is planned to be a Metro-branded Mobility (i.e. "Metro Bike") Hub. Also "Bike Share Hub" nomenclature noted under MM-TRANS-2 is confusing. A Bike Share amenity consisting of docking facilities is not normally referred to as a "Bike Share Hub."*

LABOE Response: In accordance with **MM-TRANS-2**, there is space reserved for a bike share hub in the current design of the proposed Project. This bike share hub may but would not necessarily be a Metro Bike Hub that incorporates Metro branding, which would be determined at a later date.

Comment No. A3-10

Table 1-1: Current and Future Development Projects, pg. 1-11:

- *Include Metro Arts District/6th Street Station to table 1-1. The Arts District/6th Street Station is a proposed heavy rail extension and station currently in the planning phase*.

LABOE Response: Thank you for providing additional information regarding the proposed Arts District/Sixth Street Station. Although the City understands that the proposed station is not currently funded, it has been added to the cumulative project list. The City has saved a copy of the NOP for the Arts District/Sixth Street Station in the project folder and welcomes any additional information Metro can provide regarding the proposed Arts District/Sixth Street Station Project.

Comment No. A3-11

2.5 Project Proposed Project Elements, Section 2.5.2 Phase II, pg. 2-13:

- *Ensure that the design of the reinforced concrete planted terraces which may alter the existing banks of the LA River channel will be compatible with the design of the LA River Path alignments.*

LABOE Response: The City looks forward to continuing to work with Metro in the development of the LA River Path. As described in Section 2.8 and the Initial Study, the proposed Project had included construction of a bikeway within the LA River channel bank, adjacent to the proposed Arts Plaza. This project feature was removed during the preparation

of the Draft EIR because Metro is proposing the LA River Path Project. The terraces within the LA River Channel would be designed to accommodate a future path through this area.

Comment No. A3-12

2.7 Project Schedule, pg. 2-16:

- *With the construction phase anticipated to overlap with LA River Path construction activities, coordination between the two projects will be required to ensure that any potential conflicts are minimized, so as to limit any potential cumulative impacts as a result of overlapping construction activities (e.g. truck routes, street closures, emissions, etc.).*

LABOE Response: The City is aware that construction activities for the 8-mile long LA River Path is scheduled to begin in 2023 and is anticipated to be completed prior to 2028. The City welcomes any additional information Metro can provide regarding the proposed construction activities for the LA River Path to ensure any potential conflicts are minimized should the timing of construction activities overlap in the vicinity of the proposed Project.

Comment No. A3-13

Figure 2-15: Arts Plaza Site Plan:

- *The proposed LA River Path alignment alternatives (A, B & C) all provide a connection to Santa Fe Ave via the 6th Street tunnel. The Arts Plaza site plan provides access to the 6th Street tunnel from Santa Fe Avenue via a 4.9% sloping walkway. This walkway runs between a proposed stage and amphitheater seating. The LA River Path project is anticipating significant daily volumes at this access point, so there may be conflicts between PARC users who are there to enjoy performances, and path users attempting to connect to the LA River Path for transportation, utilitarian and recreation purposes. Adequate signage and design features should be implemented to avoid user conflicts. Additionally, the proposed 4.9% walkway should be reduced to 4.5% to account for construction tolerances to avoid exceeding 5% maximum slope.*

LABOE Response: The proposed Project would not exceed a 5% maximum slope. The City would implement controls to facilitate accessibility to the LA River Path during events on a case-by-case basis.

Comment No. A3-14

Table 3.8-3: Remediation Recommendations:

- *Suggest informing Metro of any potentially significant issues and/or new findings that may arise as a result of remediation activities.*

LABOE Response: The Remediation Action Plan would be a publicly available document. The City would share the Remediation Action Plan with Metro when it is finalized.

Comment No. A3-15

3.9 Hydrology and Water Quality, pg. 3.9-26:

- *Suggest coordination between the City and Metro to ensure that the Public Safety Plan related to flooding is compatible with the LA River Path project.*

LABOE Response: The City looks forward to coordinating with Metro on the Public Safety Plan mentioned in **MM-HYDRO-1**. Once the Public Safety Plan is available, the City will share a copy with Metro for review and comment.

Comment No. A3-16

3.14 Recreation and 3.15 Transportation, pg. 3.14-1 and 3.15-1:

- *Consider describing the LA River Path project to acknowledge an increase in future users through West side plaza.*

LABOE Response: The Los Angeles River Bike Path Gap Closure Project (now referred to as the LA River Path Project) was included in the list of cumulative projects in the Draft EIR. The City acknowledges that once constructed, the LA River Path would improve bicycle and pedestrian access to the proposed Project. However, both the LA River Path Project and proposed Project are intended to better serve local users and relieve pressure on existing recreation facilities rather than increase capacity for recreation in the area.

Comment No. A3-17

3.15 Transportation, pg. 3.15-10:

- *In October 2020, Metro adopted the NextGen Bus Plan, which is a major update to Metro Bus service. Many lines have changed or have been consolidated, with significant service changes implemented in June 2021. Recommend reviewing the NextGen Bus Plan and recent service changes to update the discussion of existing transit service. For additional information, see https://www.metro.net/projects/nextgen/* and *https://mybus.metro.net/*

LABOE Response: The City appreciates Metro sharing the NextGen Bus Plan (2020) and has updated Metro bus service information in Section 3.15 of the Draft EIR in Section 3.2.11 of the Final EIR.

Comment No. A3-18

3.15 Transportation, pg. 3.15-12:

- *Revise title for Section 3.15.2.3 ("Existing Bike Network"?)*

LABOE Response: The title in Section 3.15.2.3 of the Draft EIR has been changed in accordance with the comment.

Comment No. A3-19

3.15 Transportation, pg. 3.15-40:

- *Recommend revision to MM-TRANS-4 to read as follows: "The City shall reserve space and electrical power as required at the proposed Project Site to ensure access through the Arts*

Plaza or adjacent sidewalk to a future potential Arts District/Sixth Street Metro Station and to provide associated wayfinding signage to this station.

- *The City shall continue to coordinate closely with the Arts District/6th Street Station Metro project team to confirm feasibility of MM-TRANS-4.*
- *Figure 3.15-1: Transportation Facilities: Update name from "LA River Trail Extension" to LA River Path project.*

LABOE Response: Thank you for your comment. The City looks forward to coordinating with Metro to accommodate access to the future Arts District/Sixth Street Metro Station. **MM-TRANS-4** was not updated to reserve electrical power for the proposed Metro Station as that is a separate project, which would require its own metering and utilities. The reference to the LA River Path Project in Figure 3.15-1 of the Draft EIR was updated with latest project name.

Comment No. A3-20

3.16 Utilities and Service Systems, pg. 3.16.5 – 3.16-8:

- *Suggest coordination between the City and Metro to ensure that any applicable utility connections, relocations and undergrounding of utilities, and other utility improvements adjacent to and within the LA River Path corridor does not lead to any potential conflicts and/or issues during future construction activities.*

LABOE Response: BMP-USS-3 was updated to state that the City will coordinate with Metro to ensure that any applicable utility connections, relocations and undergrounding of utilities, and other utility improvements adjacent to and within the LA River Path corridor do not lead to any potential conflicts and/or issues during future construction activities. Coordination between the City and Metro has also been identified in the cumulative impacts chapter for Utilities and Service Systems.

Comment No. A3-21

General:

- *Update name from "Los Angeles River Bike Path Gap Closure Project" to LA River Path throughout the DEIR [Draft EIR] document.*

LABOE Response: The name of the Los Angeles River Bike Gap Closure Project has been updated to LA River Path Project in accordance with the comment.

Comment No. A3-22

- *Consider using temporary banners on construction fences to communicate potential impacts to transit riders.*

LABOE Response: Construction fencing would be used to ensure public safety during construction. Temporary banners would not be needed since there are no anticipated impacts to transit riders. The proposed Project is anticipated to be constructed prior to the completion of the Arts District/Sixth Street Metro Station.

Comment No. A3-23

- *Metro strongly recommends that the project team enlist the services of a professional Environmental Graphic Design consultant to program and develop signage designs for the project.*

LABOE Response: This comment is noted for the record. The comment does not state a specific concern or question regarding the sufficiency of the analysis or mitigation measures contained in the Draft EIR.

Comment *Letter* No. A4

Ali Poosti
Division Manager
Wastewater Engineering Services Division
LA Sanitation and Environment
1149 S Broadway 9th floor
Los Angeles, CA 90015

Comment No. A4-1

This is in response to your May 27, 2021 Notice of Availability of a Draft Environmental Impact Report for the proposed Sixth Street Park, Arts, River, and Connectivity Improvements project located at beneath and adjacent to the Sixth Street Viaduct between Mateo Street to the west and the United States Highway 101 to the east, Los Angeles, CA 90021. LA Sanitation, Wastewater Engineering Services Division has received and logged the notification. Upon review, it has been determined the project is unrelated to sewers and does not require any hydraulic analysis. Please notify our office in the instance that additional environmental review is necessary for this project.

LABOE Response: This comment confirms receipt of the Draft EIR from City of Los Angles Sanitation and Environment. The comment provides background information and does not state a specific concern or question regarding the sufficiency of the analysis or mitigation measures contained in the Draft EIR.

Comment Letter No. P1
Vince Gallo and Frank Gallo
Co-Owners, Rancho Cold Storage, Inc.
670 Mesquit St
Los Angeles, CA 90021

Comment No. P1-1

Thank you for the opportunity to comment on the Draft EIR for the proposed Sixth Street Park, Arts, River & Connectivity Improvements (PARC) Project.

We write to offer our continued support for the park project. By way of background, we are the owners of Rancho Cold Storage, Inc. (RCSI) and two other properties that are located on Mesquit Street between the 6th Street and 7th Street bridges in the City of Los Angeles. Both the PARC Project and the Sixth Street Viaduct Replacement Project include land that we made available to the City through agreements we reached with it.

Our father was employed in what is now known as the "Arts District" of DTLA since 1964 and our family purchased the Rancho Cold Storage business and property in 1985. We are long-term stakeholders in this community.

From 1987 through 1997 we undertook the seismic upgrading under Division 88 of our property along Mesquit Street at substantial expense to our business. At the time there was no "new" construction in our area, and we were the first to invest any significant amount of money into what was then aging infrastructure. We invested 100% of our earnings including taking out seconds on our personal homes to fund the upgrade of our facility. This upgrade included not only the required pinning of floors to walls, but also the replacement of failing brick and mortar walls with new concrete block walls. Many people told us that we were crazy to invest money in an area that at that time was not seeing any new investment. During the 10 years that we were working on our building three new buildings were built on the corner of Jesse street: and Santa Fe Avenue. We have no doubt that our investment in our building was the catalyst for the construction of these three buildings.

During our time as stakeholders, we have also been active members in the community. We have worked with LAFD at our facility to train fire-fighters in the challenges that Cold Storage presents. We are participants in the SRT program through the LADWP [Los Angeles Department of Water and Power] in which we shut down our facility during peak power demand days to provide relief for the power grid. We have also provided $ 25,000 per year in free storage for the organization that provides and cooks all the food for the Summer Night Lights.

We had the opportunity to sell our property several years ago as property values in the "Arts District" continued to increase. However, due to our legacy in the District and our desire to see a first class project built on our site, we chose to partner on a project and maintain our position as long-term stakeholders.

Our and our partners' project will harmonize with the PARC Project to support the ongoing and future transformation of the Arts District into a vibrant mixed-use community. We have appreciated our coordination with the City on our application submitted in 2017 and as we

anticipate the release of our Draft EIR this summer. As members of RCS VE LLC, the joint venture for development of the 670 Mesquit Project, we are submitting a separate letter discussing that project in relation to the PARC.

LABOE Response: This comment provides background information and does not state a specific concern or question regarding the sufficiency of the analysis or mitigation measures contained in the Draft EIR.

Comment No. P1-2

As the owners of RCSI and other properties adjacent to the PARC, we write to express our desire for continuing coordination to avoid unintentional impacts on our existing uses while we continue to move forward with our entitlements. We request coordination during PARC construction to ensure continued ability to access the 670 Mesquit Street property by way of "Little Mesquit Street" just south of the bridge. Any closure of this access street to our facility will have a negative impact on our ability to service the volume of trucks that we do on a daily basis. We also look forward to reviewing detailed proposals to confirm the proposed PARC Improvements will not interfere with our business's current operations.

LABOE Response: Temporary closures of E 6th St (aka Little Mesquit St) will be required to safeguard the well-being of the public during certain construction activities. It is expected that the closures will be infrequent and for short durations. The City will notify and coordinate with residents as necessary to maintain the functionality of the street as best as possible through a public liaison for construction activities (see MM- NOISE-1).

Comment No. P1-3

Additionally, we want to confirm that the City does not propose modifications to the existing restrictions that exist for on-street parking along Mesquit Street between Jesse Street and the PARC. As agreed with the City and BOE [Los Angeles Bureau of Engineering], truck ingress and egress to RCSI precludes street parking in this area. The current yellow-painted curbs on the portion of Mesquit Street north of Jesse Street should retain their Commercial Loading and Unloading designation as agreed upon with the City and BOE. These items of concern are depicted on an annotated Arts Plaza Site Plan included as Exhibit A.

LABOE Response: The improvements along Mesquit Street are related to the Sixth Street Viaduct Project, which is currently in construction, not the proposed Project. The proposed Project is not anticipated to affect parking along Mesquit Street.

Comment No. P1-4

We also want to ask that the City provide appropriate security for the PARC Project area. Recognizing that much of the PARC consists of passive recreational uses, we would like to work with the City to prevent encampments of unhoused individuals and disturbances from intruding on the public use and enjoyment of the PARC improvements. As landowners and community stakeholders, security in the area is of paramount concern.

LABOE Response: As described in Section 3.13.3.4 of the Draft EIR, the proposed Project plans will be reviewed by the Los Angeles Police Department (LAPD). Once the proposed Project becomes part of RAP jurisdiction, it is anticipated that the police protection services in the proposed Project would be covered by the existing park ranger system and the Memorandum of Understanding (MOU) between LAPD and RAP.

Comment No. P1-5

Finally, we request clarification on the City's plans for the portion of our property surrounding and to the north of the existing power transmission tower, which is located south of the under construction Ribbon of Light Bridge between Mesquit Street and the railroad tracks. We have reviewed the PARC's Draft EIR and it is unclear to us how this area may be used. Thank you in advance for this clarification.

We look forward to discussing these items with the City.

We are very excited about the proposed park improvements and look forward to continuing our collaboration with the City as the design of the PARC moves forward and ensures that existing businesses, such as ours, are protected from unnecessary disruptions.

Thank you for the opportunity to provide our input.

LABOE Response: Chapter 2 of the Draft EIR provides the design for the proposed Project. Figure 2-15 shows the site plan for the Arts Plaza. A maintenance easement would be maintained to access the Sixth Street Viaduct. A portion of the Arts Plaza would be located within the Viaduct Easement area. In addition, there is terracing proposed within the northwest corner of a Maintenance Access Easement area. There are no project features proposed within the Amtrack Easement or the Mesquit Park Option area. In addition, the City would not be acquiring any portion of the Mesquit Park Option area for the proposed Project. The City is designing the proposed Project to avoid impeding on the interest of the 670 Mesquit, and the proposed Project would not conflict with the two monitoring wells within Maintenance Access Easement area.

Comment Letter No. P2

Benjamin Hanelin
Latham & Watkins LLP
355 South Grand Avenue, Suite 100
Los Angeles, CA 90071-1560

Comment No. P2-1

We are writing on behalf of our clients, RCS VE LLC, the joint venture for development of the 670 Mesquit project adjacent to the City's proposed Sixth Street Park, Arts, River & Connectivity Improvements (PARC) Project. Our clients include Frank and Vince Gallo, the property owners of Rancho Cold Storage and of portions of the site proposed for the PARC. Recognizing that our clients have been in the City entitlement process for the 670 Mesquit Project since 2017, we appreciate the opportunity to comment on the Draft EIR for the PARC Project.

In general, we believe the PARC Project and the 670 Mesquit Project are very compatible in intent, and our clients support this major investment to create public recreational space in areas underneath and adjacent to the Sixth Street Viaduct. There are several points of clarification, however, which we respectfully request should be addressed with our clients prior to the Final EIR for the PARC Project.

LABOE Response: Thank you for your support of the proposed Project. This comment provides background information and does not state a specific concern or question regarding the sufficiency of the analysis or mitigation measures contained in the Draft EIR.

Comment No. P2-2

As background, the 670 Mesquit Project contains approximately 1,800,000 square feet of floor area on an approximately 5.45-acre site. The project will provide creative office space, a 236-room hotel, 308 units of multi-family housing (including affordable housing consistent with Measure JJJ standards), general retail uses, restaurants, an event and gallery space, and a gym. The project also includes substantial open space and has the potential to enliven the riverfront between 7th Street and the under construction Sixth Street Viaduct. In addition to landscaped areas, pedestrian passageways and walkways, viewing platforms, above-grade landscaped terraces and pool decks, the project includes an innovative proposal to provide a publicly accessible multi-use deck along the Los Angeles River. This river access harmonizes with the PARC Project.

LABOE Response: This comment provides background information regarding the 670 Mesquit Project and does not state a specific concern or question regarding the sufficiency of the analysis or mitigation measures contained in the Draft EIR.

Comment No. P2-3

As noted above, the PARC Project includes areas owned by our clients ("Park Easement Area"). Frank and Vince Gallo, longtime stakeholders in the Arts District, are making this portion of the PARC Project possible through a prior agreement entered into with the City in connection with

negotiations for construction easements on the Gallos' property for the Sixth Street Viaduct. Under that agreement, the City agreed that the PARC Project shall not "in any way interfere with the Gallos' application for the entitlement of the 670 Mesquit Project…." In addition to the Park Easement, the Gallos also provided easements for the construction, operation, and maintenance of the Sixth Street Viaduct Replacement Project. Our clients' continuing accommodation has contributed greatly to the realization of the PARC Project.

LABOE Response: Thank you for your continual support of the proposed Project. Chapter 2 of the Draft EIR provides the design for the proposed Project. As stated in the response to comment P1-5, Figure 2-15 shows the site plan for the Arts Plaza. A maintenance easement would be maintained to access the Sixth Street Viaduct. A portion of the Arts Plaza would be located within the Viaduct Easement area. In addition, there is terracing proposed within the northwest corner of a Maintenance Access Easement area. There are no project features proposed within the Amtrack Easement or the Mesquit Park Option area. In addition, the City would not be acquiring any portion of the Mesquit Park Option area for the proposed Project. The City is designing the proposed Project to avoid impeding on the interest of the 670 Mesquit, and the proposed Project would not conflict with the two monitoring wells within Maintenance Access Easement area.

Comment No. P2-4

We would like to obtain greater clarity regarding the following points as to the PARC Project.

Limit boundaries to ensure the Project will not interfere with 670 Mesquit. The PARC Project EIR describes that Phase II would include the installation of reinforced concrete planted terraces on up to approximately 20,000 square feet of the west and east banks of the LA River channel. However, these railroad properties are not included in the PARC Project conceptual design that the City has presented to stakeholders. The EIR also depicts the PARC Project Area extending to Seventh Street along the banks of the Los Angeles River. This boundary includes the railroad properties adjacent to our clients' properties, where the 670 Mesquit Project multiuse deck is proposed. The 670 Mesquit Project has recently achieved agreement with Amtrak on an MOU [Memorandum of Understanding] for the necessary rights to construct over the Amtrak property. We would like to ensure that Phase II of the PARC Project will not interfere with the 670 Mesquit Project or the proposed deck, which is a significant public benefit.

LABOE Response: Chapter 2 of the Draft EIR provides the design for the proposed Project. Figure 2-3 of the Draft EIR shows the project limits for the proposed Project as was provided in the Initial Study (IS). Section 2.8 of the Draft EIR identifies design changes to the proposed Project since the Sixth Street PARC NOP/IS. These changes include removing the proposed bikeway within the Los Angeles River Channel from Fourth Street to Seventh Street. Removing the bikeway reduced the in-river work to that depicted in Figure 2-3 (Project Site) and Figure 2-6 (River Channel Site Plan). Figure 2-6 depicts the proposed location of terracing along the banks of the Los Angeles River during Phase II of the proposed Project. Although Phase I would include improvements to an existing access tunnel under railroad right-of-way. Phase II does not include any work within railroad right of way. The City would coordinate with Metro and SCRRA should any work be conducted above or immediately adjacent to

Metro-owned ROW (e.g., for a crane) during construction. The construction contract would also require that construction activities be performed in a manner that would not endanger or interfere with the safe and timely operations of Metro's tracks, its facilities, or the public, including the 670 Mesquit Project. Phase II would consist of constructing terraces within the Los Angeles River Channel, above the ordinary high-water mark, and should not conflict with the proposed multiuse deck from the 670 Mesquit Project, which appears to be located outside the Los Angeles River Channel.

Comment No. P2-5

Include Sixth Street Metro Station. We would like to request that the Sixth Street Metro Station be included in the PARC Project plans. The Arts District/6th Street Station Project Notice of Preparation was recently released, identifying a location adjacent to the PARC Project and 670 Mesquit. However, the PARC Project does not fully embrace the potential synergies between the Arts District/6th Street Station Project, the 670 Mesquit Project, and the PARC Project. We appreciate that MM-TRANS-4 would reserve space to accommodate access to the future station, and we respectfully request that additional analysis and commitment be made now to reflect the proposed new station in the PARC Project plans. We also look forward to continuing discussions with Metro and you regarding how the Arts District/6th Street Station will be integrated with both the PARC and the Mesquit Project.

LABOE Response: Metro's Sixth Street/Arts District Station and the 670 Mesquit Project are not part of the proposed Project and would be largely constructed outside the boundaries of the proposed Project. These projects are included in the cumulative projects list. The City looks forward to continuing to work with Metro and the 670 Mesquit project teams as these projects move forward.

Comment No. P2-6

Clarify shared uses for portions of the Park Easement Area. As noted above, our clients have an agreement with the City whereby the City has the option to obtain the Park Easement Area, subject to our clients retention of rights to continue to use that area. Specifically, we are concerned with a potential inconsistency between the PARC Project conceptual design and the 670 Mesquit Project. The 670 Mesquit Project proposes to use some of the Park Easement Area for the project's groundwater retention wells, as depicted on the attached LID [Low Impact Development] Drywells Layout Diagram. The diagram is based on LID volume calculations and preliminary drywell sizing analysis. As site storm drainage design continues, we look forward to coordinating with the PARC design team to take these retention wells into account to avoid any interference.

LABOE Response: Please see Responses to Comments P1-5 and P2-3. The City would not be acquiring the Park Option area and would not be impeding on the interest of the 670 Mesquit Project. The City is designing the proposed Project to avoid conflicting with the monitoring wells within the Maintenance Access Easement area depicted in the figure that was enclosed in your letter.

Comment No. P2-7

Confirm security plans for Park Easement Area. The 670 Mesquit Project will ensure that appropriate security is provided onsite, and it is important that the same commitment is provided by the City for the adjacent PARC, including the Park Easement Area. Recognizing that the Park Easement Area consists of passive recreational uses, if not correctly programmed and adequately funded for proper security and enforcement, the area could become problematic. Accordingly, we would like to request coordination with respect to the City's plan to address potential encampments of unhoused individuals and security issues. In particular, we would like to understand plans for the security of the proposed amphitheater.

LABOE Response: As described in Section 3.13.3.4 of the Draft EIR, the proposed Project plans will be reviewed by LAPD. Once the proposed Project becomes part of RAP jurisdiction, it is anticipated that the police protection services within the boundaries of the proposed Project would be covered by the existing park ranger system and a MOU between LAPD and RAP.

Comment No. P2-8

Ensure appropriate mitigation for potential traffic and parking impacts associated with the PARC Project. What is being proposed with respect to traffic management and/or transportation enhancement? What has been done to ensure adequate parking for visitors to the PARC Project?

Thank you very much for your time and attention. Our clients look forward to ongoing coordination between the PARC Project and 670 Mesquit Project.

LABOE Response: Impacts to transportation is discussed in Section 3.15 of the Draft EIR, Transportation, and in the Traffic Impact Analysis (Kimley-Horn and Associates, Inc., 2019a) and Parking Demand Analysis (Kimley-Horn and Associates, Inc., 2019b), which were prepared for the proposed Project. Mitigation measures for potential transportation impacts are provided Section 3.15 of the Draft EIR. The City looks forward to continuing to coordinate with RCS VE LLC in the development of the proposed Project.

Comment Letter No. P3

Mia Lehrer
President, Studio MLA
251 South Mission Road
Los Angeles, CA 90033

Comment No. P3-1

As owners and stakeholders within a 5 mile radius of the park, we appreciate the improvements being proposed for this project. Without having time to really study the documents in the EIR, I would be interested to uncover why the design is so complex. One can assume it is based on the community's aspirations for the project.

LABOE Response: As described in Section 1.3.2 of the Draft EIR, the proposed Project design was based on input received from community members through site tours, small focus groups, six large community meetings, public scoping meetings, small group meetings, and a community survey. The proposed Project (referred to as "Canopy and Objects" concept) seeks a balance of active recreation, passive recreational space, and shade trees. This concept was overwhelmingly preferred by the local community members over the other proposed alternatives.

Comment No. P3-2

It would be interesting to know what the acoustical factors are given the performance stage located under the viaduct.

LABOE Response: Operational noise associated with performances are available for review in Section 3.11 of the Draft EIR and the Noise Impact Assessment (Ambient, 2019) that was prepared for the proposed Project.

Comment No. P3-3

We would appreciate notifications as we are located within a mile of the park, we are land owners and 20 of us are residents within a 5 mile radius. We received a notification two days after the meeting on July 14. We look forward to meaningful participation by our team in the future.

LABOE Response: Section 15087 of the CEQA Guidelines provides the notification requirements for Draft EIRs. Section 15087(a) requires notifying organizations and individual who previously requested notice and either publication in a newspaper of general circulation, posting notice on or off site, or direct mailing to owners and occupants of properties contiguous (i.e., sharing a common border) to the proposed Project. Section 150897(a) does not preclude the lead agency from providing additional notices by other means. The City posted the Notice of Availability and Notice of Public Hearing for the Draft EIR in the LA Times, DTLA News, and *La Opinion*. In addition, a 2,000-foot radius from the proposed Project's disturbance limits was used to notify property owners and occupants and

3,684 notices were mailed. Studio-MLA has been included in the project mailing list and will receive any future public notices regarding the status of the EIR.

Public Meeting Comments
Virtual Meeting was held at
July 14, 2021 at 6:30 PM

Comment No. T1

Will Metro have a bike station?

LABOE Response: MM-TRANS-1 requires the City to reserve space for a mobility hub at the Project Site, including additional amenities for bicyclists, drivers, and transit users. **MM-TRANS-2** requires the City to reserve space for a Bike Share hub at the Project Site to allow Bike Share participants to dock bicycles and scooters. This space is depicted in Figure 2-15 of the Draft EIR, in the Arts Plaza Site Plan along Mesquit Street.

Comment No. T2

The only question I had, you know, in this design, are we still taking into consideration the future Sixth Street Stop in terms of on the west side of the flood control and on the south side of the Sixth Street Bridge?

LABOE Response: The City looks forward to coordinating with Metro on the Sixth Street/Arts District Station location once they have identified a preferred site. That project is currently undergoing an environmental review process, so the site has not yet been identified.

Comment No. T3

This seems like a disappointing lack of green space in a heavily built up area, yet consideration for the river entrance has not even been drafted. Where might progress on some natural space be undertaken?

LABOE Response: As described in Section 1.3.2, the City designed the proposed Project based on input received from community members through site tours, small focus groups, six large community meetings, public scoping meetings, small group meetings, and a community survey. The proposed Project (referred to as "Canopy and Objects" concept) seeks a balance of active recreation, passive recreational space, and shade trees. As described in Section 4 other alternatives were considered in the preparation of the Draft EIR, including a Nature Focused Alternative.

The proposed Project includes 2.88 acres of landscaping and incorporates 328 new trees. The detailed design for Project Phase II, which includes the park entrance, is due to be released in the near future.

Comment No. T4

Does the City plan to, over time, turn the river into a usable park?

LABOE Response: As described in Section 2.5.2 of the Draft EIR, Phase II of the proposed Project includes constructing terraces within the LA River Channel. The proposed Project would also include improvements to an existing tunnel to improve access to the LA River. There are other projects that are currently being proposed that would further encourage recreational activities within the LA River Channel in the vicinity of the proposed Project, namely Metro's LA River Path Project.

Comment No. T5

Can we request a pickleball court?

LABOE Response: The comment requests a project feature be added to the park (i.e., pickleball court) and does not state a specific concern or question regarding the sufficiency of the analysis or mitigation measures contained in the Draft EIR. As described in Section 1.3.2, the City developed the proposed Project elements based on community input that was received through site tours, small focus groups, six large community meetings, public scoping meetings, small group meetings, and a community survey.

Comment No.T6

I live close to the bridge, and I just -- you know, we have a lot of problems with the homeless crisis and also a lack of maintenance departments. For example, sanitation, we don't have street sweeping on our major streets, and our trashcans are constantly overflowing. We don't have sufficient city services.

And how are you guys are going to help us to keep it clean at the park? Because we already have a problem with things being maintained as it is.

LABOE Response: Maintenance of proposed Project facilities would be conducted by RAP once the proposed Project becomes operational.

Comment No. T7

My name is Lori Atwater, and I live on Clarence Street and 1st, which is about four blocks from the site. So my question is that during the preliminary design phase, I raised the request that the EIR incorporate study of the surrounding homeless population and how the Sixth Street Bridge Project would impact that population. It's substantial.

And I was told at the time by a city engineer that incorporating homelessness or that that wasn't a component of the housing element. And so my question is: how will the impacts to the existing homeless population be mitigated during and after construction of the Sixth Street Bridge?

LABOE Response: In response to the comments received during public scoping, a discussion of homeless populations was included in Section 3.12.2.4. As described in Section 3.12.3.1, the City is focused on ensuring that landlords and tenants are aware of their rights and responsibilities under the Rent Stabilization Ordinance (RSO) and that the ordinance is being adequately enforced. In the long-term, the City is actively building its Affordable Housing Trust Fund, evaluating land use tools that can help create and preserve affordable housing,

and providing RSO exemptions for newly constructed housing that includes at least 20 percent affordable housing units (Ordinance No. 184873).

Comment No. T8

Awesome. Thank you so much. I also live in Boyle Heights, and, you know, there are concerns about homeless people, but also I would say that hopefully things can stay culturally appropriated as well. I did see the presentation that you made, and it was wonderful. It looked beautiful.

And I know that, you know, there's, like, a push to try to have a little Tokyo area renamed as the Arts District, right? It's, like, a new thing, but I would like to hopefully see some reference to, at least, you know, Little Tokyo, Japanese culture, especially on that side of the bridge and then closer to us.

You know, I'm not sure what they're calling Boyle Heights. Maybe a continuation of the Arts District, but, you know, the culture here is very Chicano, is very Mexican-American, very Latino, and hopefully there's some kind of, you know, cultural aspect to making sure that the area fits in with that, right?

It looked gorgeous, and I also would echo what Veta said regarding cleanliness, because, you know, we do have a lot of parks in Boyle Heights, like, Hollenbeck Park, which is another beautiful park, but maintenance is an issue. And sometimes, you know, ourselves, the community, especially Veta and her project. She runs a project that's completely voluntary and sometimes it ends up being on our shoulders as residents of Boyle Heights.

So we hope that, you know, that can be addressed as well as, you, just like safety. We don't want there to be cops called because a lot of issues do revolve around the cops and, especially, in Boyle Heights with police brutality. But, yeah, I hope that this stays within the community and the public, and it appeals to us. Thank you.

LABOE Response: As described in Section 1.3.2, the City designs for the proposed Project are based on input received from community members through site tours, small focus groups, six large community meetings, public scoping meetings, small group meetings, and a community survey. The proposed Project (referred to as "Canopy and Objects" concept) seeks a balance of active recreation, passive recreational space, and plenty of shade trees. Maintenance of proposed Project facilities, including the collection of solid waste, would be conducted by RAP once the proposed Project becomes operational.

Comment No. T9

Hi, everyone. Thank you very much for having this meeting today, and my name is Malissa Strong, and I'm actually the past president of the Boyle Heights Historical Society. And do I -- and was actually doing meetings about the Viaduct Project early on and was very pleased to be in the meeting when they decided to make it a contest to get this incredibly dynamic project that's in progress right now.

I guess, my question is about -- it's really about equity, right? I mean, it's become in many ways this sort of east versus west side in terms of what the park will look like. And I'm the one who wrote about pickleball. I like pickleball.

And I know a lot of questions are about -- I live literally across the street from Hollenbeck Park and the homeless population, and the issues regarding that community are complicated and contentious, as many people know. And so I don't know if there is any easy answers about that, and for a city the size of Los Angeles, there aren't real answers about how that will be mitigated.

But, I guess, my bigger issue is that whatever we see in the end, that there is parity on both sides. My neighbor's dog is barking. I'm sorry. Parity about how the park is going to look in terms of programming, in terms of infrastructure, in terms of activity and that's actually my biggest concern.

But I am very pleased about the conduct and the construction of the bridge. I see it daily because I can -- you know, I can actually literally walk from my home or drive by and see the construction progress, and it's great. And it's very commendable the efforts that have been made on the part of the organizations and the architects and the construction crews that are working on it.

And then, like, we'd like to see that continue on through programming and infrastructure after completion. Thank you very, very much, Staff and Council people for your attention to this.

LABOE Response: As described in Section 1.3.2, the City designed the proposed Project based on input received from community members through site tours, small focus groups, six large community meetings, public scoping meetings, small group meetings, and a community survey. The proposed Project (referred to as "Canopy and Objects" concept) seeks a balance of active recreation, passive recreational space, and plenty of shade trees. This includes park elements in both East Park and West Park/Arts Plaza and River Gateway.

The Bureau of Engineering, which is overseeing the construction of the Sixth Street Viaduct, will also be overseeing the construction of the proposed Project.

Regarding impacts to nearby populations that are experiencing homelessness, Chapter 3.12 of the Draft EIR addresses the existing condition of homelessness in the area. Los Angeles Homeless Services Authority has been identified as a point of contact to ensure that homeless populations in the vicinity of the proposed Project are connected to services. Table 3.12-7 in the Draft EIR also identifies resources and facilities within 2 miles of the proposed Project area that serve homeless populations through housing, advocacy, career support, recovery and rehabilitation, legal and educational support, and more.

This page intentionally left blank.

Chapter 3
Revisions, Clarifications, and Correction of the Draft Environmental Impact Report

3.1 Introduction

This section of the Final Environmental Impact Report (EIR) provides changes to the Draft EIR for the Sixth Street PARC Project (proposed Project) that have been made to revise, clarify, or correct the EIR. Such changes are a result of public and agency comments received in response to the Draft EIR and/or additional information that has become available since publication of the Draft EIR. The changes described in this Section do not result in the proposed Project creating any new or increased significant environmental impacts.

This section is divided into two parts: Section 3.2, Corrections and Additions to Draft EIR sections, and Section 3.3, Effect of Corrections and Revisions. Texts that is underline indicates added text. Text that is struck out indicates deleted or removed text.

3.2 Corrections and Additions to Draft EIR Sections

3.2.1 Executive Summary

The City has identified minor changes to the Project Description due to budget or engineering constraints. Executive Summary, Proposed Project Summary, on page ES-1, revise the second paragraph as follows:

> The City is proposing to create approximately 13 acres of public recreational space underneath and adjacent to the Sixth Street Viaduct. The proposed Project would be divided into two phases. The following elements would be constructed as part of Phase I of the proposed Project.
>
> - **General Park Elements:** Elements that would be constructed throughout the Sixth Street PARC would include constructing or installing typical park site furnishings, pedestrian and bicycle paths, interpretive exhibits, utility connections and irrigation, crosswalks, and stormwater infrastructure improvements.
> - **East Park:** The proposed East Park, located in the Boyle Heights Community Plan area, would include amenities such as a concessions area, public restrooms, office and storage space for operations and maintenance staff, sports courts and fields, two flexible play and performance lawns, adult fitness circuit, ~~splash pad with outdoor shower~~ mister pad, picnic and grilling areas, on-street parking, landscaped seating areas and rain gardens, small and large dog play areas, children's play area, and skate park elements. A public art piece could also potentially be installed in East Park.

- **West Park:** The proposed West Park, located in the Central City North Community Plan area, would include amenities such as a flexible play and performance lawn, ~~small and large~~ dog play area~~s~~, an adult fitness circuit, a café building, public restroom, landscaped areas and a rain garden, and a public art piece.
- **Arts Plaza and River Gateway:** The proposed Arts Plaza, located in the Central City North Community Plan area, would include amenities such as performance and public gathering areas and space for future mobility hub elements, bike parking, and bikeshare. The proposed River Gateway would include rehabilitating an existing pedestrian/vehicular tunnel that provides access to the LA River channel.

The Sixth Street Viaduct Replacement Project is now anticipated to be completed prior to implementing the proposed construction of the proposed Project. Executive Summary, Project Schedule, on page ES-3, revise the second paragraph as follows:

> Construction and maintenance would be coordinated with the Sixth Street Viaduct Replacement Project ~~to the greatest extent feasible~~ as needed ~~to ensure that Viaduct work would not be interrupted and to prevent potential conflicts~~. Construction of the Viaduct is expected to be completed by mid-2022, and it is not anticipated that the Project and the Viaduct Replacement Project would be constructed at the same time.

Executive Summary, Proposed Project Summary, Required Approvals, Table ES-1, Required Permits, Approvals, and Permission, starting on page ES-3, add the following table row under "State":

California Department of Transportation (Caltrans)	Encroachment permit for East Park Caltrans Transportation Permit for transportation of heavy construction equipment and/or materials which requires use of oversized-transport vehicles on State highways

Executive Summary, Proposed Project Summary, Required Approvals, Table ES-1, Required Permits, Approvals, and Permission, starting on page ES-3, update the following table row under "Regional":

Los Angeles County Metropolitan Transit Authority	Any applicable permits, including Right-of-Entry (ROE), should any work require access to a railroad right-of-way (ROW) Coordination related to public transit, bikeways, and adjacent facilities

Executive Summary, Proposed Project Summary, Required Approvals, Table ES-1, Required Permits, Approvals, and Permission, starting on page ES-3, update the following table row under "Local":

All railroad agencies owning and operating railroad tracks along both sides of the LA River	Railroad Maintenance Agreement for work within railroad right-of-way ROE, should any work require access to a railroad ROW

Executive Summary, Summary of Impacts and Environmental Measures, Table ES-4: Best Management Practices, on page ES-57, update **BMP-AES-2: Construction Staging and Construction Staging Area** as follows:

> Construction staging shall be coordinated with the construction and maintenance of the Viaduct Replacement Project as needed; therefore, additional use or acquisition of public space for equipment and vehicles will not be required. The construction area shall be fenced to obscure views of construction activities, materials, and staged equipment.

Executive Summary, Summary of Impacts and Environmental Measures, Table ES-4: Best Management Practices, on page ES-65, update **BMP-LAND-2: Coordination with Viaduct Replacement Project** as follows:

> Any necessary land use entitlements shall be secured prior to the start of construction activities, and shall be coordinated with construction and maintenance of the Viaduct Replacement Project as needed.

3.2.2 Introduction

Chapter 1, Section 4, Responsible and Trustee Agencies and Project Approvals, starting on page 1-7, include the following bullet point:

- California Department of Transportation

Chapter 1, Section 7, Key Principles, Subsection 2, Reliance on Environmental Thresholds and Substantial Evidence, Table 1-1, Current and Future Development Projects, starting on page 1-14, update table row P-39 as follows:

P-39	Los Angeles River ~~Bike Path Gap Closure~~ Path Project	Along LA River from Elysian valley through Downtown Los Angeles to the City of Vernon	8-mile extension of existing segments of the 32-mile greenway proposed in the Los Angeles River Revitalization Master Plan

Chapter 1, Section 7, Key Principles, Subsection 2, Reliance on Environmental Thresholds and Substantial Evidence, Table 1-1, Current and Future Development Projects, starting on page 1-14, add table row P-41 as follows:

P-41	Metro Arts District/Sixth Street Station	Trackwork between Fourth Place and Seventh Street along the LA River; Proposed Station between Mesquit and Seventh Street	Proposed heavy rail extension and station currently in the planning phase

Chapter 1, Section 7, Key Principles, Subsection 2, Reliance on Environmental Thresholds and Substantial Evidence, Figure 1-2, Development Projects, starting on page 1-16, add P-41, Metro Arts District/Sixth Street Station, to the figure:

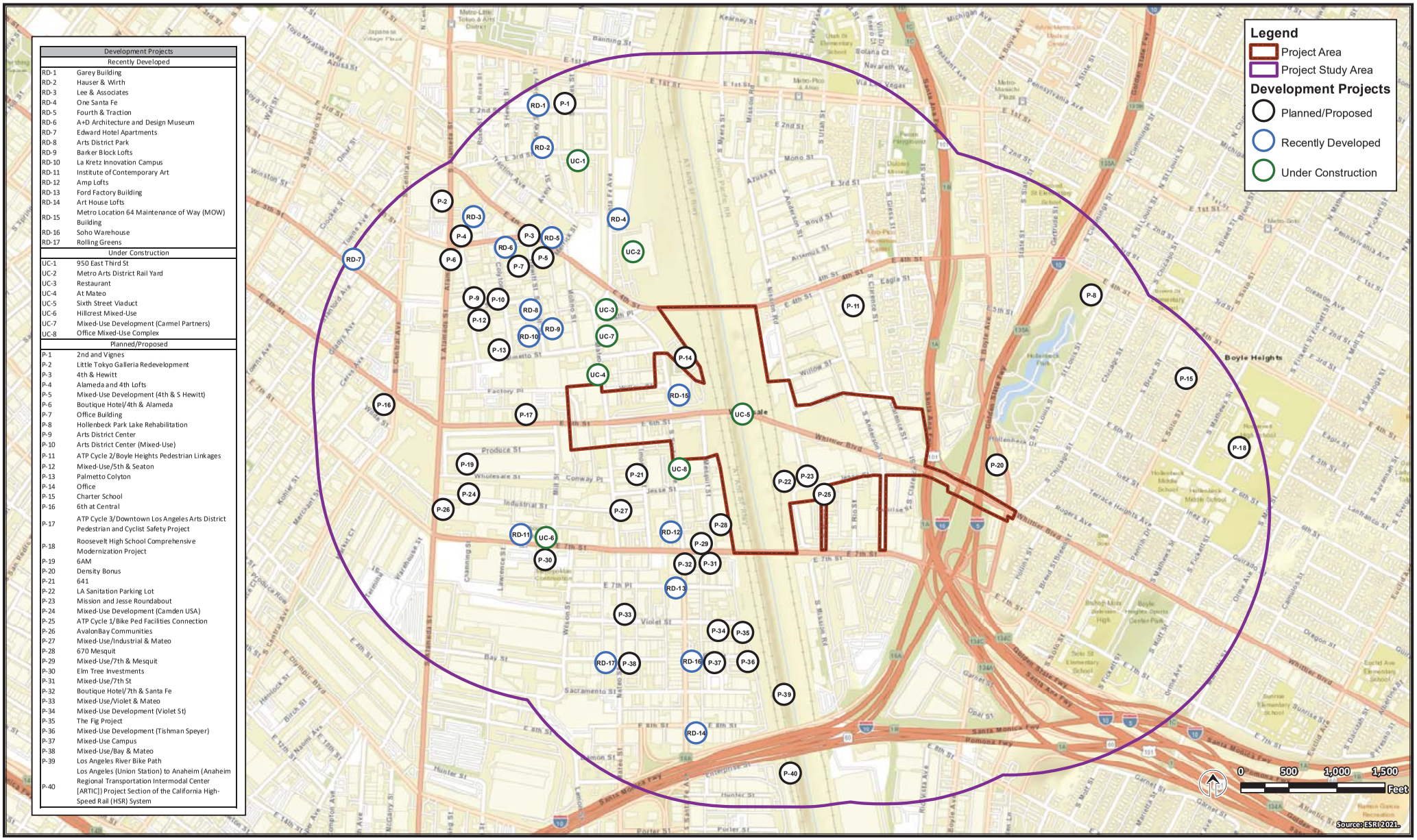

Development Projects	
Recently Developed	
RD-1	Garey Building
RD-2	Hauser & Wirth
RD-3	Lee & Associates
RD-4	One Santa Fe
RD-5	Fourth & Traction
RD-6	A+D Architecture and Design Museum
RD-7	Edward Hotel Apartments
RD-8	Arts District Park
RD-9	Barker Block Lofts
RD-10	La Kretz Innovation Campus
RD-11	Institute of Contemporary Art
RD-12	Amp Lofts
RD-13	Ford Factory Building
RD-14	Art House Lofts
RD-15	Metro Location 64 Maintenance of Way (MOW) Building
RD-16	Soho Warehouse
RD-17	Rolling Greens
Under Construction	
UC-1	950 East Third St
UC-2	Metro Arts District Rail Yard
UC-3	Restaurant
UC-4	At Mateo
UC-5	Sixth Street Viaduct
UC-6	Hillcrest Mixed-Use
UC-7	Mixed-Use Development (Carmel Partners)
UC-8	Office Mixed-Use Complex
Planned/Proposed	
P-1	2nd and Vignes
P-2	Little Tokyo Galleria Redevelopment
P-3	4th & Hewitt
P-4	Alameda and 4th Lofts
P-5	Mixed-Use Development (4th & S Hewitt)
P-6	Boutique Hotel/4th & Alameda
P-7	Office Building
P-8	Hollenbeck Park Lake Rehabilitation
P-9	Arts District Center
P-10	Arts District Center (Mixed-Use)
P-11	ATP Cycle 2/Boyle Heights Pedestrian Linkages
P-12	Mixed-Use/5th & Seaton
P-13	Palmetto Colyton
P-14	Office
P-15	Charter School
P-16	6th at Central
P-17	ATP Cycle 3/Downtown Los Angeles Arts District Pedestrian and Cyclist Safety Project
P-18	Roosevelt High School Comprehensive Modernization Project
P-19	6AM
P-20	Density Bonus
P-21	641
P-22	LA Sanitation Parking Lot
P-23	Mission and Jesse Roundabout
P-24	Mixed-Use Development (Camden USA)
P-25	ATP Cycle 1/Bike Ped Facilities Connection
P-26	AvalonBay Communities
P-27	Mixed-Use/Industrial & Mateo
P-28	670 Mesquit
P-29	Mixed-Use/7th & Mesquit
P-30	Elm Tree Investments
P-31	Mixed-Use/7th St
P-32	Boutique Hotel/7th & Santa Fe
P-33	Mixed-Use/Violet & Mateo
P-34	Mixed-Use Development (Violet St)
P-35	The Fig Project
P-36	Mixed-Use Development (Tishman Speyer)
P-37	Mixed-Use Campus
P-38	Mixed-Use/Bay & Mateo
P-39	Los Angeles River Bike Path
P-40	Los Angeles (Union Station) to Anaheim (Anaheim Regional Transportation Intermodal Center [ARTIC]) Project Section of the California High-Speed Rail (HSR) System

ENGINEERING
CITY OF LOS ANGELES

FIGURE 1-2: DEVELOPMENT PROJECTS
Sixth Street PARC Project

This page intentionally left blank.

3.2.3 Project Description

Chapter 2, Project Description, Section 5, Proposed Project Elements, Subsection 1, Phase I, General Park Elements, on page 2-3, update the following sentences as follows:

- Connectivity improvements, which may include, but are not limited to, a continental crosswalk on Santa Fe Avenue with a pedestrian activated crosswalk signal, which is also part of the separate ATP-3 project, a continental crosswalk on Mission Road with rectangular rapid flashing beacons, and speed tables/raised crosswalks with ~~solar powered~~ rectangular rapid flashing beacons at South Clarence Street*~~, Mission Road~~ and South Anderson Street;

  …
- Stormwater infrastructure improvements, which would include proposed stormwater drainage systems that would capture runoff from the Project Site and tributary Viaduct areas, route stormwater to structural and LID best management practices (BMP) (e.g., hydrodynamic separators ~~proprietary vaults with media filled cartridges~~, catch basin filter inserts, incidental infiltration during sheet flow and within localized vegetated basins, and below-grade capture and use systems), and discharge to existing stormwater drainage facilities that drain to the LA River.

Chapter 2, Project Description, Section 5, Proposed Project Elements, Subsection 1, Phase I, East Park, on page 2-4, update the following sentences as follows:

- Adult-sized flexible sports court for basketball, futsal, and volleyball

  …
- ~~Splash pad with outdoor shower~~ Mister pad

Chapter 2, Project Description, Section 5, Proposed Project Elements, Subsection 1, Phase I, West Park, on page 2-4, update the following sentences as follows:

- ~~Small dog and large dog play areas~~ Dog play area

Chapter 2, Project Description, Section 7, Project Schedule, on page 2-8, update the following sentences as follows:

> The proposed Project would include two construction phases. Construction of Phase I would begin ~~at or near~~ after the completion of the Viaduct Replacement Project. The Viaduct construction is expected to be completed by mid-2022 ~~but is subject to change~~, and construction of the Viaduct Replacement Project would not conflict with construction of the Project.

3.2.4 Aesthetics

Chapter 3, Environmental Impact Analysis, Section 1, Aesthetics, Subsection 4, Environmental Impact Analysis, Subsection 4, Construction Impacts, on page 3.1-18, update the first paragraph as follows:

> The Project Area is in an urbanized area that includes the following land use designations: Limited Industrial (zoned M1), Light Industrial (zoned M2), Heavy Industrial (zoned M3),

Open Space (zoned OS) within the LA River, and Public Facilities (zoned PF). In addition, the entire Project Area west of U.S. 101 is zoned RIO. Los Angeles zoning code and regulations would not prohibit any of the proposed construction activities. Staging during construction of the proposed Project would be coordinated as needed with the construction and maintenance of the Viaduct Replacement Project; therefore, the proposed Project would not require the additional use or acquisition of public space for equipment and vehicles.

Chapter 3, Environmental Impact Analysis, Section 1, Aesthetics, Subsection 5, Best Management Practices, on page 3.1-26, update **BMP-AES-2: Construction Staging and Construction Staging Area** as follows:

Construction staging shall be coordinated with the construction and maintenance of the Viaduct Replacement Project as needed; therefore, additional use or acquisition of public space for equipment and vehicles will not be required. The construction area shall be fenced to obscure views of construction activities, materials, and staged equipment.

3.2.5 Air Quality

Chapter 3, Environmental Impact Analysis, Section 2, Air Quality, Subsection 3, Environmental Impact Analysis, on page 3.2-5, update Table 3.2-4: Construction Emissions without Mitigation as follows:

Table 3.2-4: Construction Emissions without Mitigation

Construction Activity	Emissions (lbs/day)[1,3]					
	VOC	NO_x	CO	SO_x	PM_{10}	$PM_{2.5}$
Asphalt Demolition	2.8	25.4	29.8	0.0	1.6	1.2
Site Preparation & Material Export	1.9	35.6	13.8	0.0	10.4	4.9
Site Preparation & Material Import	2.6	35.9	26.0	0.1	9.6	5.0
Grading & Excavation	2.9	28.3	32.0	0.0	7.3	2.1
Park & Infrastructure Construction	3.1	21.4	28.9	0.0	5.5	1.8
Paving	2.8	17.6	19.4	0.0	1.2	0.8
Utility Installation	1.3	12.8	14.1	0.0	1.0	0.7
Building Construction	2.8	12.9	33.2	0.1	6.0	2.0
In-River Terracing	3.8	40.3	41.9	0.1	3.6	2.0
Maximum Daily Emissions[2]:	8.3	110.8	81.6	0.1	23.6	11.9
SCAQMD Daily Significance Daily Thresholds:	75	100	550	150	150	55
Exceeds Daily Significance Thresholds?	No	**Yes**	No	No	No	No

1. Emissions were quantified using the CalEEMod, ~~v2016.3.2~~ v2020.4.0, computer program. Includes onsite and offsite sources. Does not include reductions in fugitive dust associated with compliance with SCAQMD's Rule 403. VOC and ROG emissions were considered equivalent. Totals may not sum due to rounding.

2. Maximum daily emissions assume site preparation, material import and export, and in-river terracing could potentially occur simultaneously on any given day. Maximum daily emissions exceeding SCAQMD significance thresholds depicted in bold font.
3. Includes EMFAC Off-Model Adjustment Factors to account for SAFE Vehicle Rule Part One.
lbs/day = pounds per day; VOC = volatile organic compound; NOX = oxides of nitrogen; CO = carbon monoxide; SOX = sulfur oxides; PM10 = respirable particulate matter (10 micrometers or less); PM2.5 = fine particulate matter (2.5 micrometers or less)
Refer to the Air Quality and Greenhouse Gas Impact Assessment (AMBIENT Air Quality & Noise Consulting, 2019) and the Updated Construction Emissions Modeling Analysis for the City of Los Angeles Sixth Street Park, Arts, River & Connectivity Project (AMBIENT Air Quality & Noise Consulting, 2021) prepared for the proposed Project for emissions modeling assumptions and results.

Chapter 3, Environmental Impact Analysis, Section 2, Air Quality, Subsection 3, Environmental Impact Analysis, on page 3.2-6, update Table 3.2-5 as follows:

Table 3.2.5: Construction Emissions with Mitigation

Construction Activity	Emissions (lbs/day)[1,3]					
	VOC	NO_x	CO	SO_x	PM_{10}	$PM_{2.5}$
Asphalt Demolition	0.9	5.7	29.9	0.0	0.5	0.2
Site Preparation & Material Export	0.8	24.2	14.2	0.1	5.8	2.3
Site Preparation & Material Import	0.9	14.5	27.0	0.1	4.4	1.9
Grading & Excavation	0.7	3.2	33.6	0.0	3.1	0.4
Park & Infrastructure Construction	1.5	3.8	34.5	0.1	3.6	0.9
Paving	1.9	3.5	25.0	0.0	0.4	0.1
Utility Installation	0.3	1.3	14.5	0.0	0.2	0.1
Building Construction	2.2	6.1	37.5	0.1	5.7	1.6
In-River Terracing	1.1	6.4	47.8	0.1	0.9	0.3
Maximum Daily[2]:	2.8	45.1	89.1	0.2	11.2	4.5
SCAQMD Significance Thresholds:	75	100	550	150	150	55
Exceeds Thresholds?	No	No	No	No	No	No

1. Emissions were quantified using the CalEEMod, ~~v2016.3.2~~ v2020.4.0, computer program. Includes the use of off-road equipment meeting Tier 4 emissions standards and compliance with SCAQMD's Rule 403. VOC and ROG emissions were considered equivalent. Totals may not sum due to rounding.
2. Maximum daily emissions assume some activities, including site preparation, material import and export, and in-river terracing could potentially occur simultaneously on any given day.
3. Includes EMFAC Off-Model Adjustment Factors to account for SAFE Vehicle Rule Part One.
lbs/day = pounds per day; VOC = volatile organic compound; NOX = oxides of nitrogen; CO = carbon monoxide; SOX = sulfur oxides; PM10 = respirable particulate matter (10 micrometers or less); PM2.5 = fine particulate matter (2.5 micrometers or less)
Refer to the Air Quality and Greenhouse Gas Impact Assessment (AMBIENT Air Quality & Noise Consulting, 2019) and the Updated Construction Emissions Modeling Analysis for the City of Los Angeles Sixth Street Park, Arts, River & Connectivity Project (AMBIENT Air Quality & Noise Consulting, 2021) prepared for the proposed Project for emissions modeling assumptions and results.

Chapter 3, Environmental Impact Analysis, Section 2, Air Quality, Subsection 3, Environmental Impact Analysis, on page 3.2-8, update Table 3.2-6 as follows:

Table 3.2-6: On-Site Construction Emissions

Construction Activity	Emissions (lbs/day)[1]					
	ROG	NO_x	CO	SO_X	PM_{10}	$PM_{2.5}$
Asphalt Demolition	0.8	5.2	28.9	0.0	0.2	0.2
Site Preparation & Material Export	0.1	0.8	8.5	0.0	2.6	1.3
Site Preparation & Material Import	0.4	1.8	22.6	0.0	2.6	1.3
Grading & Excavation	0.5	2.3	32.2	0.0	2.6	0.2
Park & Infrastructure Construction	0.6	2.5	25.7	0.0	0.6	0.1
Paving	1.8	2.1	23.9	0.0	0.0	0.0
Utility Installation	0.2	1.0	13.9	0.0	0.0	0.0
Building Construction	0.7	4.4	21.2	0.0	0.2	0.2
In-River Terracing	0.8	3.4	44.6	0.1	0.0	0.0
Maximum PARC Construction Emissions[2]:	1.3	5.9	75.7	0.1	5.2	2.7
Sixth Street Viaduct Construction Emissions[4]:	15.8	124.1	80.4	--	6.4	5.7
Total PARC Project and Sixth Street Viaduct Construction Emissions:	17.1	130	156.1	0.1	11.6	8.4
SCAQMD Localized Significance Thresholds[2]:	None	108	827	None	43	10
PARC Project Construction Emissions Exceeds Thresholds?	-	No	No	-	No	No
Total PARC Project and Sixth Street Viaduct Project Construction Emissions Exceeds Thresholds?	-	Yes	No	-	No	No

1. Emissions were quantified using the CalEEMod, ~~v2016.3.2~~ v2020.4.0, computer program. Includes the use of off-road equipment meeting Tier 4 emissions standards and compliance with SCAQMD's Rule 403. VOC and ROG emissions were considered equivalent. Totals may not sum due to rounding.

2. Maximum daily emissions assume some activities, such as material import and export, could occur simultaneously on any given day.

3. LSTs are based on a two-acre site with sensitive receptors located at 100 meters for PM10 and PM2.5 and 25 meters for NOx and CO.

4. Refer to the Air Quality and Greenhouse Gas Impact Assessment (AMBIENT Air Quality & Noise Consulting, 2019) and the Updated Construction Emissions Modeling Analysis for the City of Los Angeles Sixth Street Park, Arts, River & Connectivity Project (AMBIENT Air Quality & Noise Consulting, 2021) prepared for the proposed Project for emissions modeling assumptions and results.

Chapter 3, Environmental Impact Analysis, Section 2, Air Quality, Subsection 7, Cumulative Impacts, on page 3.2-16, update the first and second sentences of the second paragraph as follows:

> ~~In addition, some portions of~~ ~~t~~The Viaduct Replacement Project ~~may still~~ is not expected to be under construction during construction of the proposed Project. ~~Construction activities associated with the Viaduct Replacement Project likely to occur during proposed Project construction include construction of the main spans, sidewalks, barriers, and railings, as well as roadway surface demolition and reconstruction.~~

Chapter 3, Environmental Impact Analysis, Section 2, Air Quality, Subsection 7, Cumulative Impacts, on page 3.2-16, update Table 3.2-9: Cumulative On-Site Construction Emissions as follows:

Table 3.2-9: Cumulative On-Site Construction Emissions

Construction Activity	Emissions (lbs/day)[1]					
	ROG	NO_x	CO	SO_x	PM_{10}	$PM_{2.5}$
Total Proposed Project Construction Emissions[2]	1.3	5.9	75.7	0.1	5.2	2.7
Viaduct Construction Emissions[4]	15.8	124.1	80.4	--	6.4	5.7
Total Proposed Project and Viaduct Construction Emissions	17.1	130	156.1	0.1	11.6	8.4
SCAQMD Localized Significance Thresholds[3]	None	108	827	None	43	10
Proposed Project Construction Emissions Exceeds Thresholds?	-	No	No	-	No	No
Total Proposed Project and Viaduct Project Construction Emissions Exceeds Thresholds?	-	Yes	No	-	No	No

1. Emissions were quantified using the CalEEMod, ~~v2016.3.2~~ v2020.4.0, computer program. Includes the use of off-road equipment meeting Tier 4 emissions standards and compliance with SCAQMD's Rule 403. VOC and ROG emissions were considered equivalent. Totals may not sum due to rounding.
2. Maximum daily emissions assume some activities, such as material import and export, could occur simultaneously on any given day.
3. LSTs are based on a two-acre site with sensitive receptors located at 100 meters for PM_{10} and $PM_{2.5}$ and 25 meters for NO_x and CO.
4. Based on emissions estimates derived from the Sixth Street Viaduct Improvement Project Final EIR (2011). Includes construction of main spans, sidewalks, and roadway surface road demolition and reconstruction.
Refer to the Air Quality and Greenhouse Gas Impact Assessment prepared for the proposed Project for emissions modeling assumptions and results (AMBIENT Air Quality & Noise Consulting, 2019).

Chapter 3, Environmental Impact Analysis, Section 2, Air Quality, Subsection 7, Cumulative Impacts, on page 3.2-17, update the second paragraph as follows:

> Nonetheless, based on the results of the dispersion modeling conducted for the Viaduct Replacement Project, maximum predicted NO_2 concentrations at nearby land uses, when added to background ambient concentrations, were not found to violate applicable air quality standards. As noted in **Table 3.2-9**, the remaining Viaduct construction activities anticipated

to potentially occur during construction of the proposed Project would total approximately 124.1 lbs/day of NO_x. Assuming that both the Viaduct Replacement Project and the proposed Project were to be constructed simultaneously, on-site emissions of NO_x would total ~~137.2~~ 130 lbs/day, substantially less than the 331.9 lbs/day analyzed for the Viaduct Replacement Project.

3.2.6 Cultural Resources

Chapter 3, Environmental Impact Analysis, Section 4, Cultural Resources, Subsection 8, Cumulative Impacts, Subsection 1, Historical Resources, starting on page 3.4-19, revise the paragraph as follows:

A foreseeable future project, the Los Angeles River ~~Bike Path Gap Closure~~ Path Project, would involve an extension of existing segments of the 32-mile greenway proposed in the Los Angeles River Revitalization Master Plan. This future project would take place along the Los Angeles River from Elysian Valley through Downtown Los Angeles to the City of Vernon. The bike path improvements proposed by the Los Angeles River ~~Bike Path Gap Closure~~ Path Project would impact the Los Angeles River in a manner similar to the improvements proposed by the ~~PARC~~ proposed Project. Therefore, the impact of the Los Angeles River ~~Bike Path Gap Closure~~ Path Project to the Los Angeles River is expected to be less than significant. In addition, it is expected that the LA River ~~Gap Closure Project~~ Path Project would also be required to comply with applicable regulatory requirements and include similar best management practices. Therefore, cumulative impacts to historical resources would be less than significant and would not be cumulatively considerable.

3.2.7 Hazards and Hazardous Materials

Chapter 3, Section 8, Hazards and Hazardous Materials, Subsection 3, Environmental Impact Analysis, Subsection 4, Construction Impacts, revise the second paragraph on page 3.8-30 as follows:

With implementation of the remediation recommendations from the Phase II ESA and HHRA (**MM-HAZ-1** through **MM-HAZ-6**), the Project Site would be remediated to standards acceptable by the Los Angeles County Fire Department (LACoFD) and other regulatory agencies as required prior to construction. With remediation, health risks to construction workers during construction activities (i.e., excavating, trenching, and transporting soil) would be reduced below CalEPA and U.S. EPA thresholds. During construction activities, the City will coordinate with regulatory agencies (i.e., Metro, U.S. EPA, and DTSC) overseeing ongoing cleanup actions in the Project Area (**BMP [Best Management Practice]-HAZ-1**, see Section 3.8.4 of the Draft EIR) and the contractor will comply with all SCAQMD rules and regulations (**BMP-HAZ-2**, see Section 3.8.4 of the Draft EIR). Therefore, adverse health effects to construction workers, the public, and the environment are not expected to occur. With implementation of **MM-HAZ-1** through **MM-HAZ-6**, impacts would be less than significant with mitigation.

3.2.8 Hydrology and Water Quality

Chapter 3, Environmental Impact Analysis, Section 9, Hydrology and Water Quality, Subsection 4, Best Management Practices, starting on page 3.9-34, update **BMP-HYDRO-12: Structural and Low Impact Development (LID)** as follows:

- Runoff from the Project Site and tributary Viaduct areas shall be captured by proposed stormwater drainage systems, routed to a variety of structural and LID BMPs and discharged to the existing stormwater drainage facilities adjacent to the site. In addition, the Project Site shall include a combination of paved surfaces and landscaped areas to provide soil stability and further minimize erosion.
- ~~The remaining localized rainfall falling on the portion of the Project Site outside of the Viaduct's footprint shall be treated through a combination of incidental infiltration during sheet flow along pervious land areas, incidental infiltration within localized vegetated basins, and below-grade capture and use systems below some of the proposed lawn areas in areas with a larger impervious area footprint. The incidental infiltration or capture and use of the stormwater will remove pollutants of concern. Larger storm events will be captured and conveyed through proposed local storm drainage systems to new connections to the existing storm drainage system.~~
- Structural BMPs (i.e., ~~proprietary vaults with media-filled cartridges~~ hydrodynamic separators) shall be installed to treat the runoff from the Viaduct to the maximum extent practicable ~~for pollutants of concern identified in the City's LID Manual, including sediments, oil and grease, metals, organic materials, and nutrients. Runoff shall also be treated through lined vegetated biofiltration basins and below-grade capture and use systems, where the runoff will be filtered through the vegetation and soil media to remove pollutants of concern before discharging through a perforated underdrain.~~
- The remaining localized rainfall falling on the portion of the Project Site outside of the Viaduct's footprint shall be treated through a combination of incidental infiltration during sheet flow along pervious land areas, incidental infiltration within localized vegetated basins, and below-grade capture and use systems below some of the proposed lawn areas in areas with a larger impervious area footprint. The incidental infiltration or capture and use of the stormwater will remove pollutants of concern. Larger storm events will be captured and conveyed through proposed local storm drainage systems to new connections to the existing storm drainage system.

3.2.9 Land Use and Planning

Chapter 3, Environmental Impact Analysis, Section 10, Land Use and Planning, Subsection 3, Environmental Impact Analysis, Subsection 3, Construction Impacts, on page 3.10-6, update the final sentence of the second paragraph as follows:

> Any necessary land use entitlements would be secured prior to the start of construction activities, and would be coordinated with construction and maintenance of the Viaduct Replacement Project as needed.

Chapter 3, Environmental Impact Analysis, Section 10, Land Use and Planning, Subsection 3, Environmental Impact Analysis, Subsection 3, Construction Impacts, on page 3.10-6, update the first sentence of the final paragraph as follows:

> The proposed Project would be required to obtain permits and approvals prior to construction activities (see **Table 2-2** for required permits and approvals), and would be coordinated with construction and maintenance of the Viaduct Replacement Project as needed.

Chapter 3, Environmental Impact Analysis, Section 10, Land Use and Planning, Subsection 4, Best Management Practices, on page 3.10-19, update **BMP-LAND-2: Coordination with Viaduct Replacement Project** as follows:

> Any necessary land use entitlements shall be secured prior to the start of construction activities and shall be coordinated with construction and maintenance of the Viaduct Replacement Project as needed.

3.2.10 Recreation

Chapter 3, Environmental Impact Analysis , Section 14, Recreation, Subsection 7, Cumulative Impacts, starting on page 3.14-10, add the following paragraph:

> The LA River Path Project, which is anticipated to be constructed and operational by 2027, would likely be constructed in a similar time frame as the proposed Project (Los Angeles County Metropolitan Transportation Authority, 2019). The proposed Project was designed with the understanding that a bike path within the Los Angeles River could be constructed. Although the LA River Path Project would improve bicycle and pedestrian access to PARC facilities, both the LA River Path Project and the proposed Project are intended to better serve local users. Therefore, the proposed Project is not expected to contribute to cumulative impacts related to Recreation.

3.2.11 Transportation and Traffic

Chapter 3, Environmental Impact Analysis, Section 15, Transportation and Traffic, Subsection 1, Regulatory Setting, Subsection 3, Local, starting on page 3.15-5, include the following section:

> ***LA Metro NextGen Bus Plan***
>
> The NextGen Bus Plan, which began its three-phase rollout in December 2020, aims to provide a faster, more frequent, reliable, and accessible bus system for LA Metro's ridership (Los Angeles County Metropolitan Transportation Authority, 2020). The plan creates new routes, updated schedules, and other system changes to ensure bus service that meets the demand of users. The improvements envisioned for LA Metro's bus system would:
>
> - Double the number of frequent Metro bus lines
> - Provide more than 80 percent of current bus riders with 10 minute or better frequency

- Improve and expand midday, evening, and weekend service, creating an all-day, 7-day-a-week service
- Ensure a quarter mile walk to a bus stop for 99 percent of current riders
- Create a more comfortable and safer waiting environment

Chapter 3, Environmental Impact Analysis, Section 15, Transportation and Traffic, Subsection 2, Environmental Setting, Subsection 2, Existing Transit System and Train Routes, starting on page 3.15-12, revise the section as follows:

There are no bus stops or routes within the Project Site. The Project Area is served by LADOT Transit Services and Los Angeles County Metropolitan Transportation Authority (Metro) bus systems. Bus routes in the Project Study Area include DASH Downtown, operated by LADOT Transit Services, and Metro Routes 18, 30/330, 53, 60, 62, 251-252, 720, 751, and 760, which are described in more detail below (see **Figure 3.15-1**, Transportation Facilities):

- **DASH Downtown:** Operates several routes throughout Downtown LA. Route A travels from Little Tokyo to City West, providing services through the Arts District in proximity to the Project Area.
- **Metro Line 18:** Travels eastbound and westbound along Sixth Street through Downtown LA, providing services through Koreatown, Wilshire Center, Westlake, Boyle Heights, East Los Angeles, City of Commerce, and Montebello.
- **Metro Line 30/330:** Travels eastbound and westbound service from East Los Angeles to Beverly Hills, providing services through Boyle Heights, Downtown LA, Miracle Mile, Mid-City, and West Hollywood. Following the implementation of the NextGen Bus Plan, Lines 30 and 330 would be merged between West Hollywood and the L Line (Gold) Indiana Station via San Vicente Boulevard, Pico Boulevard, and First Street, via existing lines 30/330 between Pico Rampau Transit Center and the L Line (Gold) Little Tokyo/Arts District Station. Existing Line 30 Service between the Little Tokyo and Indiana L Line (Gold) stations would be eliminated, and underutilized bus stops would be consolidated on Pico Boulevard (Los Angeles County Metropolitan Transportation Authority, 2020).

  …

- **Metro Line 251-252:** Travels northbound and southbound from Cypress Park to Lynwood, providing services through Montecito Heights, El Sereno, Lincoln Heights, Boyle Heights, Vernon, Huntington Park, and South Gate. Following the implementation of the NextGen Bus Plan, Line 252 would be discontinued between Montecito Heights, Lincoln Heights, and Boyle Heights via Soto Street Duplicate service along Line 81, Line 45, Line 78, Line 76, and Line 251 would remain available (Los Angeles County Metropolitan Transportation Authority, 2020).

Chapter 3, Environmental Impact Analysis, Section 15, Transportation and Traffic, Subsection 2, Environmental Setting, Subsection 3, Existing Transit System and Train Routes, starting on page 3.15-15, revise title as follows:

3.15.2.3 Existing ~~Transit System and Train Routes~~ Bike Network

Chapter 3, Section 15, Transportation and Traffic, Subsection 2, Environmental Setting, Subsection 3, Existing Transit System and Train Routes, starting on page 3.15-15, revise paragraph as follows:

> The Los Angeles River ~~Bike Path Gap Closure~~ Path Project, identified in **Table 1-1** of ~~this~~ the Draft EIR, is a planned extension of existing segments of the 32-mile greenway (bicycle and pedestrian path) proposed in the Los Angeles River Revitalization Master Plan that is currently in the environmental review process (Los Angeles County Metropolitan Transportation Authority, 2019). If approved, construction is anticipated to begin in 2023 (Los Angeles County Metropolitan Transportation Authority, 2021a). In addition, there are three proposed Active Transportation (ATP) projects that include improvements to the safety and accessibility of bicycle and/or pedestrian facilities in the vicinity of the proposed Project. The ATP projects, which are currently in design, include ATP-1: Sixth Street Viaduct Replacement Project Bicycle and Pedestrian Facilities, ATP-2: Boyle Heights Pedestrian Linkages, and ATP-3: Downtown LA Arts District Pedestrian and Cyclist Safety Project (see **Table 1-1**).

Chapter 3, Environmental Impact Analysis, Section 15, Transportation and Traffic, Subsection 3, Environmental Impact Analysis, Subsection 4, Construction Impacts, on page 3.15-34, change the second paragraph as follows:

> Temporary Loss of On-Street Parking
>
> The Project Area is currently a construction site for the Viaduct Replacement Project, with available street parking, some of which has been temporarily removed to construct the falsework for the Viaduct. Construction of the Viaduct Replacement Project is anticipated to be complete by mid-2022, prior to the construction of the proposed Project. Any loss of on-street parking from the Viaduct Replacement Project would have been restored prior to the construction of the proposed Project. On-street parking spaces along the streets adjacent to the Project Site would be impacted during construction of the proposed Project as summarized below:

Chapter 3, Environmental Impact Analysis, Section 15, Transportation and Traffic, Subsection 4, Best Management Practices, starting on page 3.15-44, revise **BMP-TRANS-3** as follows:

> Construction-related trips shall be scheduled with increased frequency during off-peak hours to minimize impacts to commuters. Additionally, a Caltrans Transportation Permit would be required for the use of oversized vehicles on State highways.

Chapter 3, Environmental Impact Analysis, Section 15, Transportation and Traffic, Subsection 7, Cumulative Impacts, Subsection 3, starting on page 3.15-45, revise bullet points as follows:

Planned projects to improve and add bicycle- and pedestrian-friendly infrastructure (see **Table 1-1**). For the East Park, the ATP-1 project would a Class I bike path that extends from the Viaduct bike ramp south along Mission Road and Myers Street to Seventh Street. In addition, Mission Road between Cesar Chavez and Jesse Street is listed as a Tier 2 Bicycle Lane (i.e., bicycle facilities on arterial roadways with striped separation) in the 2035 Mobility Plan. For the West Park, the ATP-3 project would result in Class II and Class IV bicycle lanes along Mateo Street between Santa Fe Avenue and Seventh Street and on Santa Fe Avenue between Mateo Street and Seventh Street. The ATP projects are anticipated to be completed by 2024. The proposed ~~Los Angeles River Bike Path Gap Closure~~ LA River Path Project would create a new bicycle and pedestrian path along an approximately eight-mile stretch of the Los Angeles River from Elysian Valley through Downtown Los Angeles to the City of Maywood. Metro released a Notice of Preparation for this project in October 2019 with a target operation date by 2027. The project is currently in the environmental document phase with anticipated selection of a locally preferred alternative by 2023 (Los Angeles County Metropolitan Transportation Authority, 2021a). ~~would create a new pedestrian and bicycle path that connects Elysian Valley through Downtown Los Angeles to the City of Maywood. These proposed bicycle facilities adjacent to the proposed Project Site would provide park users the necessary means to access the park using bicycles. The ATP projects are anticipated to be completed by 2024 and the Los Angeles River Bike Path Gap Closure Project is anticipated to be completed by 2027.~~

- Planned installation of ATCS, which would dynamically control the signalized intersections in real-time operations to enhance mobility.
- The Arts District/Sixth Street Station is a proposed new Metro B Line (Red) and/or D Line (Purple) station near Sixth Street that would provide regional and local transit connections to and from Arts District, Boyle Heights, Little Tokyo and surrounding communities. The proposed station would be located south of Metro's Division 20 Rail Yard and would be generally bounded by the Sixth Street Bridge to the north, Seventh Street to the south, the Los Angeles River to the east, and by Mesquit Street to the west. With funding support from the City of Los Angeles, Metro is preparing an environmental impact report (EIR) for the Arts District/Sixth Street Station; however, funding has not been identified for construction (Los Angeles County Metropolitan Transportation Authority, 2021b).
- Planned expansion of transit access to the Arts District and Boyle Heights neighborhoods will reduce the number of vehicle trips to the Project Site, especially during large events. The City Council adopted the LADOT's Transit Service Analysis (TSA) on October 31, 2018. The TSA increases DASH services across the City, including adjacent to the Project Site. To better serve the Arts District, DASH A was re-routed to travel further south to Palmetto Street and Molino Street. In addition, a redesigned DASH F route has been approved that would travel from Union Station down Mateo Street to Seventh Street, stopping at the proposed West Park site. The redesigned DASH F route is anticipated to

begin operations by January 2022. Furthermore, a new DASH Boyle Heights West route was approved, which will provide transit access to the Pico Gardens area with stops within 0.4 mile north of the proposed East Park site. The DASH Boyle Heights West route is anticipated to begin service by January 2022.

- Planned LA Sanitation parking lot at the intersection of South Mission Road and Jesse Street (see **Figure 1-2**), which could add approximately 30 to 40 public parking spaces approximately 500 feet south of the proposed East Park. The project is anticipated to be completed in 2025.

3.2.12 Utilities and Service Systems

Chapter 3, Environmental Impact Analysis, Section 16, Utilities and Service Systems, Subsection 2, Environmental Setting, Subsection 5, Solid Waste, revise the section as follows:

~~LA Sanitation provides services for solid waste pickup in the Project Area. The primary services offered include trash, recycling, and green waste. Approximately 6,652 tons of waste, manure, and bulky items are collected per day from over 750,000 residences. LA Sanitation owns a waste transfer station, a composting facility, and a trimming facility (City of Los Angeles, 2017b).~~

~~The Los Angeles County Sanitation District oversees the operation of landfills that would accept the solid waste generated during proposed construction activities.~~ The closest landfill to the Project Area that accepts non- Resource Conservation and Recovery Act (RCRA) soil is ~~the Puente Hills Landfill in the City of Industry~~ La Paz County Landfill in La Paz, Arizona. This facility is located approximately 265 miles from the Project Area. The nearest facility that accepts non-hazardous impacted soil is the Simi Valley Landfill, located 45 miles from the Project Area.

~~The City purchased Central Los Angeles Recycling & Transfer Station (CLARTS) in 2004 (City of Los Angeles, 2017a). CLARTS was designed to accommodate a capacity of 4,025 tons per day. CLARTS services the City's curbside collection operations, commercial waste haulers, independent operators, and the general public. From CLARTS, waste is transferred to a landfill or recycling facility.~~

Chapter 3, Environmental Impact Analysis, Section 16, Utilities and Service Systems, Subsection 4, Best Management Practices, beginning on page 3.16-3, revise **BMP-USS-3** as follows:

BMP-USS-3: Coordination with Service Providers

The location of underground utilities shall be confirmed prior to proposed construction activities by contacting the Underground Service Alert of Southern California (DigAlert). If necessary, the City shall work in close coordination with utility providers to develop a relocation plan to minimize possible impacts and disruption to service utilities. The City will also coordinate with Metro to ensure that any applicable utility connections, relocations and undergrounding of utilities, and other utility improvements adjacent to and within the LA River Path corridor do not lead to any potential conflicts and/or issues during future construction activities.

Chapter 3, Environmental Impact Analysis, Section 16, Utilities and Service Systems, Subsection 4, Best Management Practices, beginning on page 3.16-4, add **BMP-USS-5** as follows:

> **BMP-USS-5: High Voltage Electrical Conductors**
>
> The right-of-way contains high-voltage electrical conductors. Only such equipment, material, and construction techniques that are permitted under applicable safety ordinances and statutes, including the following, shall be used: State of California Code of Regulations, Title 8, Industrial Relations, Chapter 4, Division of Industrial Safety, Subchapter 5, Electrical Safety Orders, and California Public Utilities Commission, General Order No. 95, Rules for Overhead Electric Line Construction.

Chapter 3, Environmental Impact Analysis, Section 16, Utilities and Service Systems, Subsection 7, Cumulative Impacts, beginning on page 3.16-5, revise the third paragraph as follows:

> With implementation of the BMPs described in Section 3.16.4, the proposed Project is not expected to result in any significant impacts on Utilities and Service Systems. Other projects in the vicinity of the proposed Project (see **Table 1-1**) would be required to comply with all federal and state regulations and be consistent with local policies related to Utilities and Service Systems. Projects would be required to confirm the presence of utilities that could be affected and consult with utility owners regarding potential relocations or service disruptions. Projects would also be required to consult with overseeing agencies (such as LADWP or SoCalGas) if water, energy, or other resource consumption is anticipated to be higher than developed thresholds. The City would coordinate with Metro regarding the LA River Path Project to ensure that any applicable utility connections, relocations and undergrounding of utilities, and other utility improvements adjacent to and within the LA River Path corridor do not lead to any potential conflicts and/or issues during future construction activities. In addition, projects would be evaluated based on whether waste generation (e.g., solid waste and wastewater) would exceed the capacity of the existing utility and service systems. Other development projects would be required to develop BMPs and mitigation measures to reduce impacts on Utilities and Service Systems. Therefore, the proposed Project would not result in cumulatively considerable impacts related to Utilities and Service Systems.

3.2.13 Mandatory Findings of Significance

Chapter 3, Environmental Impact Analysis, Section 17, Mandatory Findings of Significance, Subsection 3, Operational Impacts, on page 3.17-5, update **BMP-AES-2: Construction Staging and Construction Staging Area** in the first row of Table 3.17-1: Summary of Mitigation Measures and Best Management Practices as follows:

> Construction staging shall be coordinated with the construction and maintenance of the Viaduct Replacement Project as needed; therefore, additional use or acquisition of public space for equipment and vehicles will not be required. The construction area shall be fenced to obscure views of construction activities, materials, and staged equipment.

Chapter 3, Environmental Impact Analysis, Section 17, Mandatory Findings of Significance, Subsection 3, Operational Impacts, update **BMP-LAND-2: Coordination with Viaduct Replacement Project** in the first row of Table 3.17-1: Summary of Mitigation Measures and Best Management Practices on page 3.17-29 as follows:

> Any necessary land use entitlements shall be secured prior to the start of construction activities, and shall be coordinated with construction and maintenance of the Viaduct Replacement Project as needed.

Chapter 3, Environmental Impact Analysis, Section 17, Mandatory Findings of Significance, Subsection 3, Operational Impacts, update **BMP-USS-3: Coordination with Service Providers** on page 3.17-33 as follows:

> The location of underground utilities shall be confirmed prior to proposed construction activities by contacting the Underground Service Alert of Southern California (DigAlert). If necessary, the City shall work in close coordination with utility providers to develop a relocation plan to minimize possible impacts and disruption to service utilities. The City will also coordinate with Metro to ensure that any applicable utility connections, relocations and undergrounding of utilities, and other utility improvements adjacent to and within the LA River Path corridor do not lead to any potential conflicts and/or issues during future construction activities.

Chapter 3, Environmental Impact Analysis, Section 17, Mandatory Findings of Significance, Subsection 3, Operational Impacts, add **BMP-USS-5** on page 3.17-33 as follows:

> The right-of-way contains high-voltage electrical conductors. Only such equipment, material, and construction techniques that are permitted under applicable safety ordinances and statutes, including the following, shall be used: State of California Code of Regulations, Title 8, Industrial Relations, Chapter 4, Division of Industrial Safety, Subchapter 5, Electrical Safety Orders, and California Public Utilities Commission, General Order No. 95, Rules for Overhead Electric Line Construction.

3.2.14 References

Chapter 7, Section 3.2, page 7-3, add the following reference:

AMBIENT Air Quality & Noise Consulting. (2021). Updated Construction Emissions Modeling Analysis for the City of Los Angeles Sixth Street Park, Arts, River & Connectivity Project

Chapter 7, Section 3.14, page 7-24, add the following reference:

Los Angeles County Metropolitan Transportation Authority. (2019). *Notice of Preparation of a Draft Environmental Impact Report.* Retrieved November 1, 2019, from Los Angeles River Path Project: http://media.metro.net/projects_studies/lariverpath/Final_Executed_NOP-lariver_path.pdf

Chapter 7, Section 3.15, page 7-25, add the following reference:

Los Angeles County Metropolitan Transportation Authority. (2019). *Notice of Preparation of a Draft Environmental Impact Report.* Retrieved November 1, 2019, from Los Angeles River Path Project: http://media.metro.net/projects_studies/lariverpath/Final_Executed_NOP-lariver_path.pdf

Chapter 7, Section 3.15, Transportation, page 7-25, add the following reference:

Los Angeles County Metropolitan Transportation Authority. (2020). *NextGen Bus Plan.*

Chapter 7, Section 3.15, Transportation, page 7-25, add the following reference:

Los Angeles County Metropolitan Transportation Authority. (2021a). *LA River Path Project.* Retrieved from: https://www.metro.net/projects/lariverpath/

Chapter 7, Section 3.15, Transportation, page 7-25, add the following reference:

Los Angeles County Metropolitan Transportation Authority. (2021b). *Updated Notice of Preparation of a Draft Environmental Impact Report.*

3.3 Effect of Corrections and Revisions and Summary of Changes

CEQA Guidelines Section 15088.5 requires that an EIR which has been made available for public review, but not yet certified, be recirculated whenever significant new information has been added to the EIR. The entire document need not be circulated if revisions are limited to specific portions of the document.

The relevant portions of CEQA Guidelines Section 15088.5 is as follows:

(a) A lead agency is required to recirculate an EIR when significant new information is added to the EIR after public notice is given of the availably of the draft EIR for public review under Section 15087 but before certification. As used in this section, the term 'information' can include changes in the project or environmental setting as well as additional data or other information. New information added to an EIR is not "significant" unless the EIR is changed in a way that deprives the public of a meaningful opportunity to comment upon a substantial adverse environmental effect of the project or a feasible way to mitigate or avoid such an effect (including a feasible project alternative) that the project's proponents have declined to implement. "Significant new information" requiring recirculation include, for example, a disclosure showing that:

(1) A new significant environmental impact would result from the project or from a new mitigation measure proposed to be implemented.

(2) A substantial increase in the severity of an environmental impact would result unless mitigation measures are adopted that reduce the impact to a level of insignificance.

(3) A feasible project alternative or mitigation measure considerably different from others previously analyzed would clearly lessen the environmental impacts of the project, but the project's proponents decline to adopt it.

(4) The draft EIR was so fundamentally and basically inadequate and conclusory in nature that meaningful public review and comment were precluded. (Mountain Lion Coalition v. Fish and Game Com. (1989) 214 Cal.App.3d 1043)

(b) Recirculation is not required where the new information added to the EIR merely clarifies or amplifies or makes insignificant modifications in an adequate EIR.

The information contained in Chapter clarifies or refines information in the Draft EIR but does not make any changes that would meet the definition of "significant new information" as defined above. The information added to the Draft EIR does not change the Draft EIR in a way that deprives the public of a meaningful opportunity to comment upon a new or substantially increased significant environmental effect of the proposed Project or disclose a feasible alternative or mitigation measure the Applicant has declined to adopt. As provided by the discussion below, the revisions, clarifications, and corrections to the Draft EIR would not result in new significant impacts or increase any impact already identified in the Draft EIR.

3.3.1 Executive Summary

The City has made minor changes to the Project Description due to budget and engineering constraints. In addition, changes to the Executive Summary update and clarify which encroachment permits, ROE permits, and maintenance agreements could be required by Caltrans, Metro, and railroad agencies respectively. The project schedule was also updated for the Viaduct Replacement Project. The Viaduct Replacement Project and the proposed Project are no longer anticipated to be constructed at the same time. Impacts on the environment would be similar to those described in the Draft EIR.

3.3.2 Introduction

The additions and corrections to Chapter 1, Introduction update the name of the Los Angeles River Path Project and add the Metro Arts District/Sixth Street Station to Table 1-1, Current and Future Development Projects, and Figure 1-2, Development Projects. These additions and corrections provide updated information about surrounding projects. Impacts on the environment would be similar to those described in the Draft EIR.

3.3.3 Project Description

The additions and corrections to Chapter 2, Project Description clarify that construction timeline and provide updated names Proposed Project Elements. The proposed project would likely start construction once the Viaduct Replacement Project is complete. The "Splash pad with outdoor shower" has been renamed the "Mister Pad." The "Small dog and large dog play areas" have been renamed the "Dog Play Area". Impacts on the environment would be similar to those described in the Draft EIR.

3.3.4 Air Quality

Construction emissions estimates were updated using updated truck haul routes and the latest version of CalEEMod. The revised estimates are similar to what was stated in Chapter 3.2 of the Draft EIR. Impacts on air quality would be similar to those described in the Draft EIR. The proposed mitigation measures would be the same as those described in the Draft EIR. The proposed Project would continue to result in a less than significant impacts to air quality with mitigation.

3.3.5 Cultural Resources

The updates provided would not result in any new impacts to cultural resources.

3.3.6 Hazards and Hazardous Materials

The additions to Chapter 3.8, Hazards and Hazardous Materials include a reference to a section of the Draft EIR for clarification and an updated list of landfills that would be utilized for hazardous waste disposal. Impacts on hazards and hazardous materials would be similar to those described in the Draft EIR. The proposed mitigation measures would be the same as those described in the Draft EIR. The proposed Project would continue to result in a less than significant impact to hazards and hazardous materials with mitigation.

3.3.7 Hydrology and Water Quality

The updates and corrections to Chapter 3.9, Hydrology and Water Quality provide updated guidance from the City regarding the filtration units that would be used onsite. The City has deemed that the hydrodynamic separators would treat stormwater to the maximum extent practicable. Under the City's Low LID Standards Manual, this treatment level is acceptable. Additionally, **BMP-HYDRO-12** has been rearranged for clarity. Impacts on hydrology and water quality would be similar to those described in the Draft EIR. The proposed mitigation measure would be the same as the one described in the Draft EIR. The proposed Project would continue to result in a less than significant impact to hydrology and water quality with mitigation.

3.3.8 Land Use and Planning

The updates and corrections to Chapter 3.10, Land Use and Planning clarify the coordination that would be required between the Viaduct Replacement Project and the proposed Project given that construction of the two projects is not anticipated to conflict. Impacts on land use and planning would be the same as those described in the Draft EIR. The proposed Project would continue to result in a less than significant impact on land use and planning.

3.3.9 Recreation

The additions and corrections to Chapter 3.14, Recreation provide additional information about the Los Angeles River Path Project. Impacts on recreation would be the same as those described in the Draft EIR. The proposed Project would continue to result in a less than significant impact to recreation.

3.3.10 Transportation and Traffic

The additions and corrections to Chapter 3.15, Transportation and Traffic update the regulatory setting and existing transit systems and train routes and provide additional information about the Los Angeles River Path Project and Metro Arts District/Sixth Street Stop as described in Sections 3.3.2 and 3.3.5 above. Impacts on transportation and traffic would be similar to those described in the Draft EIR. The proposed mitigation measures would be the same as those described in the Draft EIR. The proposed Project would continue to result in a less than significant impact to transportation and traffic with mitigation.

3.3.11 Utilities and Service Systems

The additions and corrections to Chapter 3.16 Utilities and Service Systems clarify the coordination that would occur between the City and Metro regarding surrounding utilities, provide updated information regarding the nearest landfill to the proposed Project, and introduce an additional BMP that clarifies the techniques required for electrical work during construction. Impacts to utilities and service systems would be similar to those described in the Draft EIR. The proposed Project would continue to result in a less than significant impact to utilities and service systems.

3.3.12 Mandatory Findings of Significance

The updates and corrections to Chapter 3.17, Mandatory Findings of Significance reflect updates and corrections made to Best Management Practices in Chapter 3.1, Aesthetics, Chapter 3.16, Utilities and Service Systems, and Chapter 3.10, Land Use and Planning. These changes were made for consistency and would not result in any new environmental impacts.

3.3.13 References

The additional to Chapter 7, References provide updated citations used throughout the Draft EIR. The additions would not result in any new environmental impacts.

3.3.14 Conclusions

Based on the supplemental analysis presented above, the revisions, clarifications, and corrections to the Draft EIR would not result in any new significant impacts or a substantial increase in an impact already identified in the Draft EIR or disclose a feasible alternative or mitigation measure the Applicant has declined to adopt. The revisions to the Draft EIR clarify or refine the information in the Draft EIR. Therefore, no new significant information has been added to the EIR requiring recirculation of the EIR as required by Section 15088.5 of the CEQA Guidelines.

Chapter 4
Mitigation Monitoring Program

4.1 Introduction

The Mitigation Monitoring Reporting Program ("MMP") has been prepared pursuant to Public Resources Code Section 21081.6, which requires a Lead Agency to adopt a "reporting or monitoring program for changes to the project or conditions of project approval, adopted in order to mitigate or avoid significant effects on the environment." In addition, Section 15097(a) of the California Environmental Quality Act (CEQA) Guidelines requires that a public agency adopt a program for monitoring or reporting mitigation measures and project revisions, which it has required to mitigate or avoid significant environmental effects. This MMP has been prepared in compliance with the requirements of CEQA, Public Resources Code Section 21081.6, and Section 15097 of the State CEQA Guidelines.

The City of Los Angeles (City), the Lead Agency on behalf of the Los Angeles Department of Public Works (LADPW), Bureau of Engineering (LABOE), is the Lead Agency for the Sixth Street PARC Project (proposed Project), and therefore is responsible for administering and implementing the MMP. A public agency may delegate reporting or monitoring responsibilities to another public agency or to a private entity that accepts the delegation. However, until mitigation measures have been completed, the Lead Agency remains responsible for ensuring that implementation of the mitigation measures occurs in accordance with the program.

4.2 Purpose

The purpose of the MMP is to do the following:

- Coordinate all mitigation monitoring activities
- Manage the preparation, approval, and filing of monitoring or permit compliance records
- Maintain records concerning the status of all approved mitigation measures (MM) and best management practices (BMP)
- Provide quality control assurance of field monitoring personnel
- Coordinate with other agencies regarding compliance with mitigation or permit requirements
- Review and recommend acceptance and certification of implementation documentation
- Act as a contact for interested parties or surrounding property owners who wish to register concerns regarding environmental issues; verifying any such circumstances; and developing any necessary corrective actions.

4.3 Organization

As shown in the following pages, each identified mitigation measure for the proposed Project is listed and categorized by environmental issue area, with accompanying discussion of:

- Time Frame for Implementation: When the measure will be implemented.
- Monitoring Period: Indicates when monitoring for compliance with the measure will occur.
- Monitoring Agency: The agency to which reports involving feasibility, compliance, implementation, and development are made.
- Verification of Compliance: The date that monitoring is complete to ensure compliance with the measure.

4.4 Monitoring and Reporting Procedures

This MMP shall be enforced throughout all phases of the proposed Project. LABOE shall be responsible for implementing each project design feature and mitigation measure and shall be obligated to provide verification, as identified below, to the appropriate monitoring and enforcement agencies that each project design feature and mitigation measure has been implemented. LABOE shall maintain records demonstrating compliance with each project design feature and mitigation measure listed below.

All applicable construction-related mitigation measures and best management practices will be included in any bid specification released for construction of the proposed Project. Prior to the release of the bid specifications, construction plans and specifications will be provided to LABOE's Environmental Management Group (EMG) for review and approval regarding environmental mitigation. Unless otherwise specified herein, LABOE will be responsible for taking all actions necessary to implement the mitigation measures according to the provided specifications and demonstrating that each action has been successfully completed. LABOE, at its discretion, may delegate implementation responsibility or portions thereof to a licensed contractor. This MMP for the proposed Project will be in place through design, construction, and operation. LABOE will be responsible for administering the MMP and ensuring that all parties comply with its provisions. LABOE may delegate monitoring responsibilities to staff, consultants, or contractors.

The construction contractor shall submit an Environmental Compliance Plan for LABOE Construction Management and LABOE EMG approval prior to the beginning of ground-disturbing construction activities. The Environmental Compliance Plan will document how the contractor intends to comply with all environmental measures applicable to the contract, including application of BMPs. LABOE Construction Management will also ensure that monitoring is documented in an Environmental Compliance Report and that deficiencies are promptly corrected. A designated environmental monitor with LABOE Construction Management will track and document compliance with mitigation measures, note any problems that may result, and take appropriate action to rectify problems. LABOE will monitor compliance with operational mitigation measures.

During the construction phase and prior to going through plan check review, LABOE shall retain an independent Construction Monitor (either via the City or through a third-party consultant), who shall be responsible for monitoring implementation of mitigation measures and best management practices during construction activities consistent with the monitoring phase and frequency set forth in this MMP.

The Construction Monitor shall also prepare documentation of the City's compliance with the project design features and mitigation measures during construction every 90 days in a form satisfactory to LABOE. The documentation must be signed by LABOE and the Construction Monitor and be included as part of the City's Compliance Report. The Construction Monitor shall be obligated to immediately report to the Enforcement Agency any non-compliance with mitigation measures and project design features within two businesses days if the non-compliance is not corrected within a reasonable time or if the non-compliance is repeated.

Changes to Mitigation Measures

Changes to Mitigation Measures Under CEQA, mitigation measures may be modified or deleted if the relevant decision-maker approves such action, gives a legitimate reason for making the change, and supports those reasons with substantial evidence, including an appropriate subsequent CEQA document. Any substantive change to the MMP shall be documented in writing. Modifications to the mitigation measures/BMPs may be made by the LABOE subject to one of the following findings and documented by evidence included in the record:

1. The measure/BMP included in the EIR and the MMP is no longer required because the significant environmental impact identified in the EIR has been found not to exist, or to occur at a level which makes the impact less than significant as a result of changes in the Project, changes in conditions of the environment, or other factors.

   OR

   2. The modified or substitute mitigation measure/BMP to be included in the MMRP provides a level of environmental protection equal to or greater than that afforded by the mitigation measure included in the EIR and the MMP.

   AND

   3. The modified or substitute mitigation measure/BMP does not have significant adverse effect on the environment in addition to or greater than those which were considered by LABOE in its decisions regarding the EIR and the Proposed Project.

   AND

   4. The modified or substitute mitigation measure/BMP is feasible, and LABOE, through measures included in the MMP or other established procedures, can assure its implementation.

Findings and related documentation supporting the findings involving modifications to mitigation measures shall be maintained in the Project file with the MMP and shall be made available to the public upon request.

4.5 Mitigation Monitoring Program

4.5.1 Mitigation Measures

4.5.1.1 Air Quality

MM-AQ-1: Newer/Tier 4 Engines in Haul Trucks and Construction Equipment

- Measures:
  - Include in all construction contracts the requirement to use 2010 and newer diesel haul trucks (e.g., material delivery trucks and soil import/export).
  - Include in all construction contracts the requirement that all off-road diesel-fueled construction equipment greater than 50 horsepower shall meet Tier 4 off-road emission standards. In addition, if not already supplied with a factory-equipped diesel particulate filter, all construction equipment shall be outfitted with Best Available Control Technology (BACT) devices certified by California Air Resources Board (CARB). Any emissions control device used by the contractor shall achieve emissions reductions that are no less than what could be achieved by a Level 3 diesel emissions control strategy for a similarly sized engine as defined by CARB regulations. To the extent locally available, construction equipment shall incorporate emissions savings technology such as hybrid drives. In the event that any equipment required under this mitigation measure is not available, provide documentation as information becomes available. A copy of each unit's certified tier specification, BACT documentation, and CARB or Southern California Air Quality Management District (SCAQMD) operating permit at the time of mobilization of each applicable unit of equipment shall be provided.
  - Maintain construction equipment by conducting regular tune-ups according to the manufacturers' recommendations.
  - To the extent possible, the import and export of onsite materials shall be scheduled to minimize empty return trips.
- Time Frame for Implementation:

Design Phase:

Timing/Schedule: Prior to Project construction.

Implementation: LABOE Project Engineer shall include requirement in contract specs and plans. Mitigation measures shall be included in contractor bid documents and Environmental Compliance Plan prepared by the contractor.

Enforcement: LABOE Project Manager and LABOE EMG will review specs and plans for compliance

Construction Phase:

Timing/Schedule: Throughout Project construction.

Implementation: LABOE Project Engineer and Construction contractor shall implement mitigation measure and review engine and equipment certified tier specification and best available control

technology documentation. Similarly, contractor may provide the ARB or SCAQMD operating permit at the time of mobilization of each applicable unit of equipment. Considered complete after end of Project construction.

Enforcement: LABOE Construction Manager and LADPW, Bureau of Contracts Administration, Construction Inspector. BOE EMG will review Environmental Compliance Plan prepared by Contractor, the Environmental Compliance Report and the Project Acceptance and Closeout Report.

MM-AQ-2: Construction Equipment Requirements

- Measures:
  - All on- and off-road diesel-fueled equipment shall not idle for more than 5 minutes when not in use. The idling of diesel-fueled equipment and haul trucks within 1,000-feet of nearby residential land uses shall be prohibited. Signs shall be posted in the designated queuing areas and or job sites to remind drivers and operators of the 5-minute-idling limit.
  - Staging and queuing areas shall be located at the furthest distance possible from nearby residential land uses.
  - Use alternatively fueled (e.g., compressed natural gas, liquefied natural gas, propane), gasoline-fueled, or electrified construction equipment in place of diesel-fueled equipment to the extent locally available.

Design Phase:

Timing/Schedule: Prior to Project construction.

Implementation: LABOE Project Engineer shall include requirement in contract specs and plans. Mitigation measures shall be included in contractor bid documents and Environmental Compliance Plan prepared by contractor.

Enforcement: LABOE Project Manager and LABOE EMG will review specs and plans for compliance

Construction Phase:

Timing/Schedule: Throughout Project construction.

Implementation: LABOE Project Engineer and Construction contractor

Enforcement: LABOE Construction Manager and LADPW, Bureau of Contracts Administration, Construction Inspector. BOE EMG will review Environmental Compliance Plan prepared by Contractor, the Environmental Compliance Report and the Project Acceptance and Closeout Report.

MM-AQ-3: Fugitive Dust Controls

- Measures:
  - All active portions of the construction site shall be watered twice daily to prevent excessive amounts of dust.

- Non-toxic soil stabilizers shall be applied to all inactive construction areas (previously graded areas inactive for 20 days or more, assuming no rain) according to manufacturers' specifications.
- All excavating and grading operations shall be suspended when wind gusts (as instantaneous gust) exceed 25 miles per hour.
- On-site off-road equipment and on-road vehicles used on-site shall be limited to 15 miles per hour.
- All on-site roads shall be paved as soon as feasible, watered twice daily, or chemically stabilized.
- Visible dust beyond the property line which emanates from the project shall be prevented to the maximum extent feasible.
- All material transported off-site shall be either sufficiently watered or securely covered to prevent excessive amounts of dust prior to departing the job site.
- Track-out devices shall be used at all construction site access points.
- All delivery truck tires shall be watered down and/or scraped down prior to departing the job site.
- Streets shall be swept at the end of the day if visible soil material is carried onto adjacent paved public roads and use of SCAQMD Rule 1186 and 1186.1 certified street sweepers or roadway.
- Replace ground cover in disturbed areas as quickly as possible.
- All trucks that are to haul excavated or graded material on-site shall comply with State Vehicle Code Section 23114 (Spilling Loads on Highways), with special attention to Sections 23114(b)(F), (e)(4) as amended, regarding the prevention of such material spilling onto public streets and roads.
- Conduct continuous, direct-reading, near real-time ambient monitoring of Particulate Matter (PM)10. Install appropriate signage and notify the SCAQMD in accordance with Rule 1466, Control of Particulate Emissions from Soils with Toxic Air Contaminants, prior to conducting any earth-moving activities on any site meeting the applicability of the rule.

Design Phase:

Timing/Schedule: Prior to Project construction.

Implementation: LABOE Project Engineer shall include requirement in contract specs and plans. Mitigation measures shall be included in contractor bid documents and Environmental Compliance Plan prepared by contractor.

Enforcement: LABOE Project Manager and LABOE EMG will review specs and plans for compliance

Construction Phase:

- Timing/Schedule: Throughout Project construction.
- Implementation: LABOE Project Engineer and Construction contractor

- Enforcement: LABOE Construction Manager and LADPW, Bureau of Contracts Administration, Construction Inspector. BOE EMG will review Environmental Compliance Plan prepared by Contractor, the Environmental Compliance Report and the Project Acceptance and Closeout Report.
-

4.5.1.2 Hazards and Hazardous Materials

MM-HAZ-1: Remediation Category 1A

- Measures: The City shall be required to implement the following measures in areas where Resource Conservation and Recovery Act (RCRA) Level Heavy Metals, polychlorinated biphenyls (PCB), or total petroleum hydrocarbon diesel range organics (TPH DRO) will be excavated and disposed of at Class 1 Hazardous Waste Landfills:
  - Soils will be excavated as needed up to a maximum depth of 4.5-feet below ground surface (bgs), consistent with the limits designated on Figures 3.8-3a and 3.8-3b, Areas of Concern with Contamination.
  - The transport and disposal of RCRA hazardous waste will be accompanied with a Hazardous Waste Manifest (i.e., documentation accompanying the transport, treatment, storage and disposal of hazardous waste) completed by a licensed transporter. A site-specific California Environmental Protection Agency (CalEPA) Hazardous Waste Generator Identification Number will be obtained for each RCRA hazardous waste. Additional sampling and testing will likely be required by the facility accepting the soil for disposal.
  - For excavations deeper than 4-feet, shoring or other approved means will be required to maintain stability of the excavation walls.
  - During excavation activities, dust and runoff controls will be implemented to prevent windborne or surface waterborne migration of the soil from the Project Site. The soils will be directly loaded into the transport trucks, which will require tarps to prevent spillage or windblown loss of soil during transport. These controls will be verified and monitored by an independent third party.
  - A site-specific Health and Safety Plan (HASP) will be prepared and implemented during all proposed construction activities, including full time perimeter sampling and testing of particulates and dust from the Project Site.
  - All onsite workers and supervisors will complete a 40-hour Occupational Safety and Health Administration (OSHA) Hazardous Waste Operations and Emergency Response (HAZWOPER) training course and be equipped with the appropriate personal protective equipment.
  - Excavated areas will be backfilled with certified clean soil.

Design Phase:

Timing/Schedule: During Project design, prior to Project construction.

Implementation: LABOE Project Engineer shall include requirement in contract specs and plans. Mitigation measures shall be included in contractor bid documents and Environmental Compliance Plan prepared by contractor.

Enforcement: LABOE Project Manager and LABOE EMG will review specs and plans for compliance

Construction Phase:

- Timing/Schedule: Throughout Project construction.
- Implementation: LABOE Project Engineer and Construction contractor
- Enforcement: LABOE Construction Manager and LADPW, Bureau of Contracts Administration, Construction Inspector. BOE EMG will review Environmental Compliance Plan prepared by Contractor, the Environmental Compliance Report and the Project Acceptance and Closeout Report.

MM-HAZ-2: Remediation Category 2A and 2B

Remediation Category 2A

- Measures: The City shall be required to implement the following measures in areas where soils contaminated with Heavy Metals and/or TPH DRO that are classified as non-RCRA hazardous waste will be excavated. These contaminated soils shall be disposed at Class 2 Landfills:
  - Soils will be excavated as needed up to a maximum depth of 6-feet bgs, consistent with the limits designated on Figures 3.8-3a and 3.8-3b, Areas of Concern with Contamination.
  - The transport and disposal of non-RCRA hazardous waste will be accompanied with a Hazardous Waste Manifest completed by a licensed transporter. A CalEPA Non-RCRA Hazardous Waste Generator Identification Number will be obtained. Additional sampling and testing will likely be required by the facility accepting the soil for disposal.
  - For excavations deeper than 4-feet, shoring or other approved means shall be required to maintain stability of the excavation walls.
  - During excavation activities, dust and runoff controls will be implemented to prevent windborne or surface waterborne migration of the soil from the Project Site. The soils will be directly loaded into the transport trucks, which will require tarps to prevent spillage or windblown loss of soil during transport. These controls will be verified and monitored by an independent third party.
  - A site-specific Health and Safety Plan (HASP) will be prepared and implemented during all proposed construction activities, including full time perimeter sampling and testing of particulates and dust from the Project Site.
  - All onsite workers and supervisors will complete a 40-hour OSHA HAZWOPER training course and be equipped with the appropriate personal protective equipment.
  - Excavated areas will be backfilled with certified clean soil.

Remediation Category 2B

- Measures: In addition to the measures above, the following measures shall be implemented in areas where volatile organic compounds (VOC) were observed in soil gases:
  - Emission controls will be used to clear the area of emitting VOCs (i.e., spraying water or applying foam agents to all exposed soil surfaces and/or using large, spark-free fans). Full-time monitoring will be required to verify that the emission controls are effective in preventing the VOCs from impacting workers or the public. Monitoring will comply with SCAQMD Rule 1166.
  - A detailed HASP will be prepared and implemented during the excavation and transport of contaminated soils.
  - The excavation, transport, and disposal of contaminated soils will require permitting and approval by the Certified Unified Program Agency (CUPA), CalEPA/Department of Toxic Substances Control (DTSC), and SCAQMD. A detailed Work Plan/Remedial Action Plan will be prepared and submitted to these agencies for review and approval. Under Rule 1166, a Mitigation Management Plan for potential VOC emissions during excavation will be submitted to SCAQMD and subject to SCAQMD approval. A site-specific CalEPA Hazardous Waste Generator Identification Number will be obtained and manifests completed by the licensed transporter.
  - A soil vapor extraction (SVE) system will be designed and installed to remove and treat VOCs in the soil gases. If Health Risk Assessments indicate the need, a vertical barrier/line will be installed around the perimeter of the area to prevent soil gases with VOCs from migrating back into the area. Gases migrating from below the clean backfill or deeper depths will be extracted through the SVE slotted wells and treated by the SVE treatment system. Treatment for VOCs typically involves carbon filtration unless hydrogen sulfide is detected in the gas stream. Operating and maintenance procedures for the SVE system and permit applications will be prepared and approved by the oversight agency and SCAQMD.
  - If the City determines it is necessary, a "Pilot Study" will be designed and implemented to evaluate the sustainable flow rate and concentration of VOCs in the soil gas stream and to determine the size of the final SVE system components.
  - Design of the SVE system, preparation of a Design Report and Work Plan/Remedial Action Plan (including HASP) will be submitted to and subject to approval by the CUPA and Los Angeles County Fire Department (LACoFD) Site Mitigation Unit.
  - The SVE will be implemented and monitored. This may require several months to over a year.
  - The City shall provide documentation to the CUPA, LACoFD Site Mitigation Unit, and SCAQMD when the SVE has reached the specified clean-up goals.
  - Excavated areas will be backfilled with certified clean soil.

Design Phase:

Timing/Schedule: During Project design, prior to Project construction.

Implementation: LABOE Project Engineer shall include requirement in contract specs and plans. Mitigation measures shall be included in contractor bid documents and Environmental Compliance Plan prepared by contractor.

Enforcement: LABOE Project Manager and LABOE EMG will review specs and plans for compliance.

Construction Phase:

- Timing/Schedule: Throughout Project construction.
- Implementation: LABOE Project Engineer and Construction contractor
- Enforcement: LABOE Construction Manager and LADPW, Bureau of Contracts Administration, Construction Inspector. BOE EMG will review Environmental Compliance Plan prepared by Contractor, the Environmental Compliance Report and the Project Acceptance and Closeout Report.

MM-HAZ-3: Remediation Category 3

Option 1

- Measures: This alternative will involve the same measures as described under Category 2b above. Contaminated soils will be removed to a depth of up to 15-feet or more and shoring of the excavation walls will be necessary. A liner will be installed on the bottom of the excavation area to prevent contaminated soil gas from re-entering the backfill soils. Gas migration from the side walls will be mitigated by either installation of a vertical liner placed on the side walls of the excavation or SVE wells installed vertically outside the limits of the excavation after backfilling is done. The backfill soil will be certified clean fill and placement will need to meet the geotechnical specifications of the Project design. During the process, the site will require strict emissions controls and monitoring.

Option 2

- Measures: This alternative, the SVE treatment method, utilizes extraction and monitoring wells (In Situ Method) or excavation and encapsulation of impacted soils in above ground piles with horizontal slotted piping (On Site Method), a vacuum pump or pumps, and carbon filtration units to extract and remove VOCs from the soil gas. The process requires several steps as follows:
  - Design and implementation of a "Pilot Study" to evaluate the sustainable flow rate and concentration of VOCs in the soil gas stream and to size the final SVE system components.
  - Design of the SVE system, preparation of a Design Report and Work Plan/Remedial Action Plan (including HASP) for submittal to and approval by the CUPA and CalEPA/DTSC.
  - Solicitation of bids for construction and implementation of the remediation.
  - Implementation and monitoring of the SVE. This may require several months to over a year.
  - Reporting to the agencies with documentation that the SVE has reached the specified clean up goals.

Option 3

- Measures: This alternative will mitigate the impact of the VOCs and/or methane and hydrogen sulfide by precluding soil gases migration from the subsurface soil and intrusion into structures or other facilities and surface emissions. Depending on the type of soil gases and pressure in the soil gas, the systems can include several of the following components:
  - Shallow excavation (3- to 4-feet bgs) to allow installation of the mitigation components (some of the soil will be used to backfill trenches)
  - Gravel layers and slotted piping for gas collection
  - Liner installation above the slotted piping and extending side wide
  - Vacuum pumps for gas extraction or air injection blowers
  - Filtration systems to remove VOCs and/or hydrogen sulfide from the gas stream
  - Geomembrane barriers placed beneath concrete slabs and/or foundations or fill areas
  - Installation of automated and/or manual monitoring systems

Design Phase:

Timing/Schedule: During Project design, prior to Project construction.

Implementation: LABOE Project Engineer shall include requirement in contract specs and plans. Mitigation measures shall be included in contractor bid documents and Environmental Compliance Plan prepared by contractor.

Enforcement: LABOE Project Manager and LABOE EMG will review specs and plans for compliance.

Construction Phase:

- Timing/Schedule: Throughout Project construction.
- Implementation: LABOE Project Engineer and Construction contractor
- Enforcement: LABOE Construction Manager and LADPW, Bureau of Contracts Administration, Construction Inspector. BOE EMG will review Environmental Compliance Plan prepared by Contractor, the Environmental Compliance Report and the Project Acceptance and Closeout Report.

MM-HAZ-4: Remediation Category 4

- Measures: The City shall be required to implement the following measure in areas within Caltrans right-of-way (ROW) where soil contains aerially deposited lead (ADL):
  - In accordance with the Caltrans/DTSC ADL Agreement, soils above a depth of approximately 2.9-feet bgs will require 1-foot of clean soil cover to remain on site per the Caltrans/DTSC ADL Agreement.
- Time Frame for Implementation: Prior to construction

- Monitoring Period: Prior to construction
- Monitoring Agency: LADPW, Contracts Administration Bureau, Construction Inspector

Design Phase:

Timing/Schedule: During Project design, prior to Project construction.

Implementation: LABOE Project Engineer shall include requirement in contract specs and plans. Mitigation measures shall be included in contractor bid documents and Environmental Compliance Plan prepared by contractor.

Enforcement: LABOE Project Manager and LABOE EMG will review specs and plans for compliance.

Construction Phase:

- Timing/Schedule: Throughout Project construction.
- Implementation: LABOE Project Engineer and Construction contractor
- Enforcement: LABOE Construction Manager and LADPW, Bureau of Contracts Administration, Construction Inspector. BOE EMG will review Environmental Compliance Plan prepared by Contractor, the Environmental Compliance Report and the Project Acceptance and Closeout Report.

MM-HAZ-5: Soil Gas Sampling

- Measures: Additional soil gas sampling and testing is recommended for completion in PARC Areas 1A, 5, 6, 7, and 8. The additional sampling could potentially eliminate or reduce the need for soil gas remediation.

  Ambient air and soil gas samples shall be tested for VOCs. If soil gas samples in PARC Area 6 yield ILCR values below the de minimis risk target or within the risk management range, no further mitigation and/or remedial actions will be required. If ILCR values are above the de minimis risk target, additional remedial actions will be taken to lower values to within the risk management range, such as applying SVE to a maximum depth of 15- to 20-feet bgs.

Design Phase:

Timing/Schedule: During Project design, prior to Project construction.

Implementation: LABOE Project Engineer shall include requirement in contract specs and plans. Mitigation measures shall be included in contractor bid documents and Environmental Compliance Plan prepared by contractor.

Enforcement: LABOE Project Manager and LABOE EMG will review specs and plans for compliance.

Construction Phase:

- Timing/Schedule: Throughout Project construction.
- Implementation: LABOE Project Engineer and Construction contractor

- Enforcement: LABOE Construction Manager and LADPW, Bureau of Contracts Administration, Construction Inspector. BOE EMG will review Environmental Compliance Plan prepared by Contractor, the Environmental Compliance Report and the Project Acceptance and Closeout Report.

MM-HAZ-6: Methane Mitigation and Testing

- Measures: Methane mitigation applies to PARC Area 1A, which is located within the Methane Zone, and portions of PARC Area 7, where soil gases were detected and impervious surfaces are to be constructed adjacent to existing buildings. Any buildings (except naturally vented) to be constructed in Area 1A shall have methane mitigation systems meeting Level II requirements involving membrane and passive venter per Table 71 unless additional testing indicates no subsurface gas pressure and lower methane concentrations. In addition, paved areas that are over 5,000 square feet in area and within 15-feet of the exterior wall of a commercial, industrial, institutional building, shall be vented in accordance with the Methane Mitigation Standards, design Level II, unless additional testing indicates no subsurface gas pressure and lower methane concentrations.

  Additional testing for methane concentrations and subsurface pressure shall be completed in accordance with the Division 71 Methane Seepage Regulations testing requirements should any buildings or paved areas over 5,000 square feet be proposed in PARC Area 1A and in PARC Area 7 where methane was detected.

Design Phase:

Timing/Schedule: During Project design, prior to Project construction.

Implementation: LABOE Project Engineer shall include requirement in contract specs and plans. Mitigation measures shall be included in contractor bid documents and Environmental Compliance Plan prepared by contractor.

Enforcement: LABOE Project Manager and LABOE EMG will review specs and plans for compliance.

Construction Phase:

- Timing/Schedule: Throughout Project construction.
- Implementation: LABOE Project Engineer and Construction contractor
- Enforcement: LABOE Construction Manager and LADPW, Bureau of Contracts Administration, Construction Inspector. BOE EMG will review Environmental Compliance Plan prepared by Contractor, the Environmental Compliance Report and the Project Acceptance and Closeout Report.

4.5.1.3 Hydrology and Water Quality

MM-HYDRO-1: Public Safety Plan

- Measures: The City, in coordination with United States Army Corps. of Engineers, shall publish a Public Safety Plan in order to reduce the potential for safety impacts related to flooding. The Public Safety Plan shall include an evacuation plan and protocols for protecting pedestrians and potential homeless populations (e.g., vehicular deterrents such as bollards and safety warning devices) in the LA River Access Tunnel during flood conditions.
- Time Frame for Implementation: Design, Construction, and Operation
- Monitoring Period: Design, Construction and Operation
- Monitoring Agency: LADPW, Department of Recreation and Parks

Design Phase:

Timing/Schedule: During Project design, prior to Project construction.

Implementation: LABOE Project Engineer shall lead preparation of the Public Safety Plan and coordinate with Recreation and Parks, other relevant City departments and the United States Army Corp. The LABOE Project Engineer shall include any physical deterrents or safety warning devices in the contract specs and plans. The Contractor bid documents and Environmental Compliance Plan prepared by contractor shall reflect these items.

Enforcement: LABOE Project Manager and LABOE EMG will review specs and plans for compliance.

Construction Phase:

- Timing/Schedule: Must be completed prior to end of construction.
- Implementation: LABOE Project Engineer and required stakeholders (publish Public Safety Plan prior to project operations) and Construction contractor (physical elements)
- Enforcement: LABOE Construction Manager and LADPW, Bureau of Contracts Administration, Construction Inspector for physical plan elements.

Operations Phase:

- Timing/Schedule: ongoing
- Implementation: City of Los Angeles, Department of Recreation and Parks, Los Angeles Police Department, US Army Corp, and other relevant stakeholders

4.5.1.4 Noise and Vibration

MM-NOISE-1: Construction-Noise Management Plan

- Measures: A construction-noise management plan (CNMP) shall be prepared for the Project. The CNMP shall, at a minimum, include the following measures:

- Construction activities shall be restricted outside the hours of 7:00 a.m. to 9:00 p.m. Monday through Friday, and between the hours of 8:00 a.m. to 6:00 p.m. on Saturdays. While the intention is not to conduct work on Sundays, occasional Sunday work may be required to ensure the Project schedule is met. If it is determined that Sunday work is necessary, the proper permits will need to be obtained through the Police Commission. Construction activities shall be prohibited on federal holidays.
- Construction equipment shall be properly maintained and equipped with mufflers.
- Equipment shall be turned off when not in use for an excess of five minutes, except for equipment that requires idling to maintain performance.
- A public liaison shall be appointed for project construction and shall be responsible for addressing public concerns about construction activities, including excessive noise. As needed, the liaison shall determine the cause of the concern (e.g., starting too early, bad muffler) and implement measures to address the concern. The liaison will work directly with the construction contractor to ensure implementation of the noise control plan.
- The liaison will work directly with the construction contractor to ensure implementation of the noise control plan.
- The public shall be notified in advance of the location and dates of construction hours and activities.
- Where necessary, temporary sound barriers shall be installed.
- Signage and notification on where to report construction-generated noise shall be posted on-site and around the construction area, as well as on the Bureau of Engineering website.
- Staging and queuing areas shall be located at the furthest distance possible from nearby residential land uses, as well as any other noise-sensitive land uses identified in the Project Area at the time of construction (e.g., transient lodging, schools, libraries, churches, hospitals, and nursing homes).
- Limit noise/vibration intensive activities occurring within 10-feet of existing structures and occupied land uses. Where possible and to the extent locally available, select low-noise/vibration generating equipment when activities occur within 10-feet of adjacent existing structures.

Design Phase:

Timing/Schedule: During Project design, prior to Project construction.

Implementation: LABOE Project Engineer shall include requirement in contract specs and plans. Mitigation measures shall be included in contractor bid documents and Environmental Compliance Plan prepared by contractor.

Enforcement: LABOE Project Manager and LABOE EMG will review specs and plans for compliance.

Construction Phase:

- Timing/Schedule: Throughout Project construction.

- Implementation: LABOE Project Engineer and Construction contractor
- Enforcement: LABOE Construction Manager and LADPW, Bureau of Contracts Administration, Construction Inspector. BOE EMG will review Environmental Compliance Plan prepared by Contractor, the Environmental Compliance Report and the Project Acceptance and Closeout Report.

4.5.1.5 Transportation and Traffic

MM-TRANS-1: Mobility Hub

- Measures: The City shall reserve space for a mobility hub at the Project Site, including additional amenities for bicyclists, drivers, and transit users, to encourage event attendees to use alternative modes of transportation.

Design Phase:

Timing/Schedule: During Project design, prior to Project construction.

Implementation: LABOE Project Engineer shall include requirement in contract specs and plans. Mitigation measures shall be included in contractor bid documents and Environmental Compliance Plan prepared by contractor.

Enforcement: LABOE Project Manager and LABOE EMG will review specs and plans for compliance.

Construction Phase:

- Timing/Schedule: Throughout Project construction.
- Implementation: LABOE Project Engineer and Construction contractor
- Enforcement: LABOE Construction Manager and LADPW, Bureau of Contracts Administration, Construction Inspector. BOE EMG will review Environmental Compliance Plan prepared by Contractor, the Environmental Compliance Report and the Project Acceptance and Closeout Report.

MM-TRANS-2: Bicycle Facilities

- Measures: The City shall reserve space for a Bike Share hub at the Project Site to allow Bike Share participants to dock bicycles and scooters.

Design Phase:

Timing/Schedule: During Project design, prior to Project construction.

Implementation: LABOE Project Engineer shall include requirement in contract specs and plans. Mitigation measures shall be included in contractor bid documents and Environmental Compliance Plan prepared by contractor.

Enforcement: LABOE Project Manager and LABOE EMG will review specs and plans for compliance.

Construction Phase:

- Timing/Schedule: Throughout Project construction.
- Implementation: LABOE Project Engineer and Construction contractor
- Enforcement: LABOE Construction Manager and LADPW, Bureau of Contracts Administration, Construction Inspector. BOE EMG will review Environmental Compliance Plan prepared by Contractor, the Environmental Compliance Report and the Project Acceptance and Closeout Report.

MM-TRANS-3: Rideshare Zones

- Measures: The City shall create permanent rideshare pick-up and drop-off zones for the East Park and West Park. Rideshare pick-up/drop-off zones could be located on South Santa Fe Street adjacent to the proposed West Park and South Mission Road adjacent to the proposed East Park. The pick-up/drop-off zones shall be clearly marked, and wayfinding signage shall be installed throughout the Project Site.

Design Phase:

Timing/Schedule: During Project design, prior to Project construction.

Implementation: LABOE Project Engineer shall include requirement in contract specs and plans. Mitigation measures shall be included in contractor bid documents and Environmental Compliance Plan prepared by contractor.

Enforcement: LABOE Project Manager and LABOE EMG will review specs and plans for compliance.

Construction Phase:

- Timing/Schedule: Throughout Project construction.
- Implementation: LABOE Project Engineer and Construction contractor

Enforcement: LABOE Construction Manager and LADPW, Bureau of Contracts Administration, Construction Inspector. BOE EMG will review Environmental Compliance Plan prepared by Contractor, the Environmental Compliance Report and the Project Acceptance and Closeout Report.

MM-TRANS-4: Public Transportation

- Measures: The City shall reserve space at the Project Site to accommodate a future Sixth Street Metro Station in the Arts Plaza.

Design Phase:

Timing/Schedule: During Project design, prior to Project construction.

Implementation: LABOE Project Engineer shall include requirement in contract specs and plans. Mitigation measures shall be included in contractor bid documents and Environmental Compliance Plan prepared by contractor.

Enforcement: LABOE Project Manager and LABOE EMG will review specs and plans for compliance.

Construction Phase:

- Timing/Schedule: Throughout Project construction.
- Implementation: LABOE Project Engineer and Construction contractor
- Enforcement: LABOE Construction Manager and LADPW, Bureau of Contracts Administration, Construction Inspector. BOE EMG will review Environmental Compliance Plan prepared by Contractor, the Environmental Compliance Report and the Project Acceptance and Closeout Report.

4.5.2 Best Management Practices

As standard best practices, the BOE Project Engineer shall incorporate the following requirements in the contract specs and plans and ensure the contractor includes the best management practices in the Environmental Compliance Plan prepared by the contractor. The BOE Construction Manager and Contracts Administration Bureau Construction Inspector will ensure the BMPs are implemented during construction. BMPs related to operations will be implemented by the Department of Recreation and Parks and/or other appropriate organizations.

4.5.2.1 Aesthetics

BMP-AES-1: Construction Lighting

- Measures: If nighttime lighting at the construction site is required, lighting shall be directed downward, on-site, and away from surrounding land uses.
- Implementation Phase: Construction
- Monitoring Phase: Construction
- Enforcement Agency: LADPW, Contracts Administration Bureau, Construction Inspector

BMP-AES-2: Construction Staging and Construction Staging Area

- Measures: Construction staging shall be coordinated with the construction and maintenance of the Viaduct Replacement Project as needed; therefore, additional use or acquisition of public space for equipment and vehicles will not be required. The construction area shall be fenced to obscure views of construction activities, materials, and staged equipment.
- Implementation Phase: Prior to Construction and Construction
- Monitoring Phase: Construction
- Enforcement Agency: LADPW, Contracts Administration Bureau, Construction Inspector

BMP-AES-3: Operational Lighting

- Measures: Outdoor lighting for recreational activities shall be limited to the proposed operating hours.
- Implementation Phase: Operation
- Monitoring Phase: Operation
- Enforcement Agency: LABOE and Department of Recreation and Parks

BMP-AES-4: Regulatory Requirements for Lighting

- Measures:
  - Project illumination shall comply with the provisions in the City's Municipal Code, including LAMC Chapter 1, Article 2, Sec. 12.21A5(k); LAMC Chapter 1, Article 7, Sec. 17.08C; and LAMC Chapter 9, Article 3, Section 93.0117.
  - The new walkway lighting shall be compliant with all regulations set forth by the City's Bureau of Street Lighting Design Standards and Guidelines to ensure that the area receives lighting that meets national illumination standards for vehicular and pedestrian traffic, does not emit light pollution, and produces little glare.
  - Lighting for sports fields and courts shall operate in compliance with Los Angeles City Recreation and Parks (RAP) illuminance level standards for outdoor sports and recreational facilities.
  - Lighting for security shall be illuminated in accordance with the Illuminating Engineering Society (IES) standards, IES RP-33-14 *Lighting for Exterior Environments* and IES G-1-03 *Security Lighting for People, Property and Public Spaces*, as updated by IES G-1-16 *Guide for Security Lighting for People, Property and Critical Infrastructure*.
- Implementation Phase: Design, Operation
- Monitoring Phase: Design, Operation
- Enforcement Agency: LADPW and Department of Recreation and Parks

4.5.2.2 Air Quality

BMP-AQ-1: SCAQMD Rules and Regulations

- Measures: The contractor shall implement measures to ensure that all construction activities are consistent with SCAQMD rules and regulations.
- Implementation Phase: Construction
- Monitoring Phase: Construction
- Enforcement Agency: LADPW, Contracts Administration Bureau, Construction Inspector

BMP-AQ-2: Construction Worker Incentives

- Measures: The City shall offer ride-share and transit incentives for construction workers to reduce emissions associated with motor vehicle use.
- Implementation Phase: Construction
- Monitoring Phase: Construction
- Enforcement Agency: LADPW, Contracts Administration Bureau, Construction Inspector

BMP-AQ-3: Construction Equipment Maintenance

- Measures: The contractor shall maintain construction equipment by conducting regular tune-ups according to the manufacturers' recommendations.
- Implementation Phase: Construction
- Monitoring Phase: Construction
- Enforcement Agency: LADPW, Contracts Administration Bureau, Construction Inspector

4.5.2.3 Biological Resources

BMP-BIO-1: Pre-Construction Wildlife Surveys

- Measures: Pre-construction wildlife surveys shall be completed by a qualified biologist no more than 48 hours prior to clearing, grubbing, or other construction activities to determine the presence/absence of wildlife species, including special-status species, within 100-feet of the construction area. Special attention will be focused on any existing burrowing, roosting, and nesting habitat within the Project Area. Surveys shall be repeated if construction activities are suspended for five days or more. If any wildlife species are identified, appropriate BMPs shall be developed and implemented to reduce potential impacts on these species, in consultation with regulatory agencies where appropriate.
- Implementation Phase: Prior to construction
- Monitoring Phase: Construction if construction activities are suspended for five days or more
- Enforcement Agency: LADPW (Project Biologist)

BMP-BIO-2: Trash and Construction Debris Removal

- Measures: All trash and construction debris shall be removed from the LA River construction areas on a daily basis. All water quality BMP materials shall be properly maintained during project construction and removed upon completion of construction activities. After completion of proposed construction activities, all construction equipment and materials shall be removed from the Project Area, and the Project Area shall be returned to pre-project conditions.
- Implementation Phase: Construction
- Monitoring Phase: Construction
- Enforcement Agency: LADPW, Contracts Administration Bureau, Construction Inspector

BMP-BIO-3: Work Area Limitations

- Measures: No work for the Project shall be conducted on the Fourth Street Bridge or Seventh Street Bridge structures.
- Implementation Phase: Construction
- Monitoring Phase: Construction
- Enforcement Agency: LADPW, Contracts Administration Bureau, Construction Inspector

BMP-BIO-4: Nesting Bird Survey

- Measures: If vegetation trimming or clearing is conducted during the nesting season (typically February 15 through September 15), nesting bird surveys shall be completed by a qualified biologist within 300-feet of potential bird-nesting areas and 500-feet of potential raptor-nesting areas no more than 48 hours prior to trimming/removal activities to determine if nesting birds are within the affected vegetation. Surveys shall be repeated if trimming or removal activities are suspended for five days or more.
- Implementation Phase: Construction during the nesting season (February 15 through September 15)
- Monitoring Phase: None unless active nests are discovered
- Enforcement Agency: LADPW (Project Biologist)

BMP-BIO-5: Nesting Bird Buffer

- Measures: If nesting birds protected under the MBTA and California Fish and Game Code Sections are found in the Project Area, appropriate buffer consisting of orange flagging/fencing or similar (typically up to 300-feet for songbirds and 500-feet for raptors shall be installed and maintained until nesting activity has ended, as determined in coordination with the project biologist and regulatory agencies, as appropriate, to ensure that nesting birds and active nests are not harmed.
- Implementation Phase: Construction
- Monitoring Phase: Construction
- Enforcement Agency: LADPW (Project Biologist)

BMP-BIO-6: Hazardous Materials BMPs

- Measures: Appropriate hazardous material BMPs shall be implemented to reduce the potential for chemical spills or contaminant releases into the LA River, including any non-stormwater discharge.
- Implementation Phase: Construction
- Monitoring Phase: Construction
- Enforcement Agency: LADPW, Contracts Administration Bureau, Construction Inspector

BMP-BIO-7: Equipment Maintenance

- Measures: All equipment refueling and maintenance shall be conducted in the staging area. In addition, vehicles and equipment shall be checked daily for fluid and fuel leaks, and drip pans shall be placed under all equipment that is parked and not in operation.
- Implementation Phase: Construction
- Monitoring Phase: Construction
- Enforcement Agency: LADPW, Contracts Administration Bureau, Construction Inspector

BMP-BIO-8: Regulatory Permits

- Measures: The City shall consult with the appropriate responsible resource agency (e.g., California Department of Fish and Wildlife [CDFW] and Regional Water Quality Control Board [RWQCB]) to determine permanent and temporary impact areas. Prior to undertaking ground-disturbing activities within or immediately adjacent to any aquatic resource areas, the City and/or their consultant shall obtain a Clean Water Act (CWA) Section 401 Water Quality Certification, and California Fish and Game Code Section 1602 Streambed Alteration Agreement.
- Implementation Phase: Prior to Construction
- Monitoring Phase: Construction
- Enforcement Agency: LABOE, LADPW, Contracts Administration Bureau, Construction Inspector

BMP-BIO-9: Pre-Construction Bat Surveys

- Measures: At least 30 days prior to construction, alterations to the LA River Access Tunnel shall be surveyed by a qualified biologist to assess the presence of bats or potential bat-roosting cavities. If bats or bat-roosting cavities are identified, then during the non-breeding and active season (typically October), bats shall be safely evicted, to the extent feasible, under the direction of a qualified biologist. Once it has been determined that all roosting bats have been safely evicted from roosting cavities, exclusionary devices shall be installed and maintained where appropriate to prevent bats from roosting in these cavities prior to construction.
- Implementation Phase: 30 days prior to construction
- Monitoring Phase: Survey work only
- Enforcement Agency: LADPW (Project Biologist)

BMP-BIO-10: Monitoring During LA River Access Tunnel Alteration

- Measures: In the event that all bats are not able to be excluded from affected roosting habitat, a qualified biologist shall monitor LA River Access Tunnel alterations. If bats are disturbed, work shall be safely suspended until all bats leave the vicinity on their own, or alternative measures can be identified under the direction of a qualified biologist. Work shall resume only once the bats have left the site and/or approval to resume work is given by a qualified biologist.
- Implementation Phase: Construction

- Monitoring Phase: Construction
- Enforcement Agency: LADPW (Project Biologist)

BMP-BIO-11: Bat Monitoring

- Measures: In the event that all bats are not able to be excluded from affected roosting habitat, a qualified biologist shall monitor structure alteration activities. If bats are disturbed, work shall be safely suspended until all bats leave the vicinity of the LA River Access Tunnel on their own, or alternative measures shall be identified under the direction of a qualified biologist. Work shall resume only once the bats have left the site and/or approval to resume work is given by a qualified biologist.
    - Surveys and exclusion measures are expected to prevent maternal colonies from becoming established in structures to be removed or altered. In the event that a maternal colony of bats is found, no work shall be conducted within 100-feet of the maternal roosting site until the maternal season is over or the bats have left the site, or as otherwise directed by a qualified biologist. The site shall be designated as a sensitive area and protected as such until the bats have left the site. No activities shall be authorized adjacent to the roosting site. Combustion equipment, such as generators, pumps, and vehicles, shall not be parked or operated under or adjacent to the roosting site. Construction personnel shall not be authorized to enter areas beneath the colony, especially during the evening exodus.
- Implementation Phase: Construction
- Monitoring Phase: Construction
- Enforcement Agency: LADPW (Project Biologist)

4.5.2.4 Cultural Resources

BMP-CUL-1: Archeological Monitoring During Excavation

- Measures: A qualified archaeological monitor shall conduct archaeological monitoring in the West Park and East Park for excavations at depths greater than 5-feet. Monitoring efforts may be reduced or eliminated for those portions of the Project Area shown to have been recently disturbed by construction activities associated with the Sixth Street Viaduct Project.
- Implementation Phase: Construction activities involving excavations greater than 5-feet
- Monitoring Phase: Construction activities involving excavations greater than 5-feet
- Enforcement Agency: LADPW

BMP-CUL-2: Tribal Cultural Resources Sensitivity Training

- Measures: The City shall invite a qualified tribal representative from the Gabrieleño Band of Mission Indians to a pre-construction meeting to provide a training session to the construction contractor regarding potential tribal resources that could be encountered during construction activities and procedures to follow should a tribal resource be encountered.
- Implementation Phase: Prior to construction

- Monitoring Phase: Prior to construction
- Enforcement Agency: LABOE and qualified Tribal representative from the Gabrieleño Band of Mission Indians

BMP-CUL-3: Tribal Cultural Resources Monitoring During Excavation

- Measures: The City shall retain and compensate for the services of a tribal monitor who is both approved by the Gabrieleño Band of Mission Indians-Kizh Nation Tribal Government and is listed under the California Native American Heritage's (NAHC) Tribal Contact list for the Project Area. The Tribal monitor shall only be present on-site during the construction phases that involve ground-disturbing activities in the proposed Arts Plaza. Monitoring efforts may further be reduced or eliminated for those portions of the in the proposed Arts Plaza that (1) are underlain with artificial fill of known origin, (2) require superficial scraping of land at depths less than 5-feet, or (3) are demonstrated to have been recently disturbed by construction activities associated with the Sixth Street Viaduct Project. The on-site monitoring shall cease when the grading and excavation activities in the proposed Arts Plaza are completed, or when the Tribal representatives and monitor have indicated that the site has a low potential for impacting tribal cultural resources.
- Implementation Phase: Construction
- Monitoring Phase: Construction activities involving ground-disturbing activities in the proposed Arts Plaza
- Enforcement Agency: LADPW (Tribal Monitor)

BMP-CUL-4: Unanticipated Discovery of Archaeological and Tribal Cultural Resources

- Measures: In the event that potentially significant buried archaeological materials are encountered within the Project Area, all work in the vicinity must stop until the archaeological and Tribal monitor can visit the site and assess the significance of the resource. If the resources are Native American in origin, the Gabrieleño Band of Mission Indians-Kizh Nation shall coordinate with the City regarding treatment and curation of these resources. Work may continue on other parts of the Project Area while evaluation and, if necessary, mitigation takes place (CEQA Guidelines Section 15064.5 [f]).
- Implementation Phase: Construction
- Monitoring Phase: Construction
- Enforcement Agency: LADPW (Tribal Monitor)

BMP-CUL-5: Unanticipated Discovery of Human Remains

- Measures: Health and Safety Code Section 7050.5, Section 15064.5(e) of the CEQA Guidelines, and PRC Section 5097.98 mandate the process to be followed in the unlikely event of an unanticipated discovery of human remains in a location other than a dedicated cemetery. The Los Angeles County Coroner must be notified within 24 hours of the discovery of potentially human

remains. The Coroner must then determine within two working days of being notified if the remains are subject to his or her authority.

- If the Coroner recognizes the human remains (including bone fragments and funerary objects) to be Native American, he or she must contact the NAHC by phone within 24 hours. The NAHC then designates a Most Likely Descendant (MLD) with respect to the human remains within 48 hours of notification. The MLD will then have the opportunity to recommend to the Project proponent means for treating or disposing of, with appropriate dignity, the human remains and associated grave goods within 24 hours of notification.

- Implementation Phase: Construction
- Monitoring Phase: Construction
- Enforcement Agency: LADPW, Contracts Administration Bureau, Construction Inspector

4.5.2.5 Geology and Soils

BMP-GEO-1: Erosion Control

- Measures: The contractor shall implement standard BMPs, such as the use of fiber rolls and silt fencing, to reduce the amount of dust and dirt from leaving the construction area.
- Implementation Phase: Construction
- Monitoring Phase: Construction
- Enforcement Agency: LADPW, Contracts Administration Bureau, Construction Inspector

BMP-GEO-2: Geotechnical Site Investigation Recommendations

- Measures: The Geotechnical Site Investigation report for the Project includes recommendations to ensure that the Project Area is suitable for construction, and to ensure that appropriate measures are taken to reduce impacts during earthwork, excavation, utility trenching, backfilling, and other construction activities (Hushmand Associates, Inc., 2018). Backfill soils shall be moisture-conditioned and recompacted to meet ASTM International standards to counteract the potential adverse effects of soil expansiveness. If import soils are used, the import soil shall not exhibit an Expansion Index greater than 20 or contain more than 35 percent fines (i.e., fine-grained soils), and shall be screened by the geotechnical engineer to meet ASTM International standards.
- Implementation Phase: Construction
- Monitoring Phase: Construction
- Enforcement Agency: LADPW, Contracts Administration Bureau, Construction Inspector

BMP-PAL-1: Paleontological Sensitivity Training

- Measures: Prior to the start of construction, all field personnel shall be briefed regarding the types of fossils that could be found and the procedures to follow should paleontological resources be encountered. Specifically, the training shall provide a description of the fossil resources that may be encountered, outline steps to follow when a fossil discovery is made and provide contact

information for a qualified paleontologist. The training shall be developed by a qualified paleontologist and provided as hand-outs or a PowerPoint Presentation that may be presented concurrently with other pre-construction training.

- Implementation Phase: Prior to construction
- Monitoring Phase: Prior to construction
- Enforcement Agency: LADPW (Project Paleontologist), Contracts Administration Bureau, Construction Inspector

BMP-PAL-2: Unanticipated Paleontological Resource Discoveries

- Measures: In the event that an unanticipated fossil discovery is made during construction, a qualified professional paleontologist shall be retained to examine the find and to determine whether further paleontological resource mitigation is warranted in accordance with Society of Vertebrate Paleontology (2010) guidelines.
- Implementation Phase: Construction
- Monitoring Phase: Construction
- Enforcement Agency: LADPW (Project Paleontologist)

4.5.2.6 Greenhouse Gas Emissions

BMP-GHG-1: Off-Road Equipment Construction Requirements

- Measures: Idling shall be limited for vehicles and off-road equipment. Off-road equipment shall meet Tier 4 emission standards and newer. Efficient on-road haul trucks shall be used, where practicable.
- Implementation Phase: Construction
- Monitoring Phase: Construction
- Enforcement Agency: LADPW, Contracts Administration Bureau, Construction Inspector

4.5.2.7 Hazards and Hazardous Materials

BMP-HAZ-1: Coordination with Regulatory Agencies

- Measures: The City shall coordinate with Metro, U.S. EPA, and DTSC during construction activities to minimize health risks to the public or the environment associated with ongoing cleanup actions within the Project Area.
- Implementation Phase: Construction
- Monitoring Phase: Construction
- Enforcement Agency: LABOE

BMP-HAZ-2: Compliance with SCAQMD Rules and Regulations

- Measures: The contractor shall implement measures to ensure that all construction activities are consistent with SCAQMD rules and regulations, including Rule 1166 - Volatile Organic Compound Emissions from Decontamination of Soil and Rule 1466 - Control of Particulate Emissions from Soils with Toxic Air Contaminants.
- Implementation Phase: Construction
- Monitoring Phase: Construction
- Enforcement Agency: LADPW, Contracts Administration Bureau, Construction Inspector

4.5.2.8 Hydrology and Water Quality

BMP-HYDRO-1: Construction Drainage Design

- Measures: The Project shall incorporate drainage designs that direct stormwater runoff or irrigation runoff away from structures or the top of the slopes. No stormwater will be allowed to discharge over the top of a cut or fill slope.
- Implementation Phase: Design and Construction
- Monitoring Phase: Design and Construction
- Enforcement Agency: LADPW, Contracts Administration Bureau, Construction Inspector

BMP-HYDRO-2: Off-Site Sediment Transport

- Measures: All entrances and exits to the construction site shall be stabilized to reduce transport of sediment off-site. Any sediment or other materials tracked off-site shall be removed within a reasonable time.
- Implementation Phase: Construction
- Monitoring Phase: Construction
- Enforcement Agency: LADPW, Contracts Administration Bureau, Construction Inspector

BMP-HYDRO-3: Storm Drain Message and Signage

- Measures: Existing and proposed storm drain catch basins within the vicinity of the Project Site shall be marked and maintained.
- Implementation Phase: Construction and Operation
- Monitoring Phase: Construction and Operation
- Enforcement Agency: Construction Contractor (Construction), LADPW (Operation)

BMP-HYDRO-4: Outdoor Material Storage Area Design

- Measures: Proposed outdoor storage areas shall be organized and maintained to prevent stored materials from being permitted to runoff with stormwater. The outdoor storage of toxic and hazardous materials is not permitted.

- Implementation Phase: Construction and Operation
- Monitoring Phase: Construction and Operation
- Enforcement Agency: Construction Contractor (Construction), LADPW (Operation)

BMP-HYDRO-5: Outdoor Trash Storage Area Design

- Measures: Proposed outdoor trash storage enclosures shall be organized and maintained to prevent the transportation of trash and debris in stormwater. Bins and dumpsters shall remain covered.
- Implementation Phase: Construction and Operation
- Monitoring Phase: Construction and Operation
- Enforcement Agency: Construction Contractor (Construction), LADPW (Operation)

BMP-HYDRO-6: Employee Training

- Measures: Operations and maintenance employees shall be trained and made aware of the source controls, LID BMPs, educational materials, and maintenance requirements for the Project at first hire and yearly thereafter.
- Implementation Phase: Construction and Operation
- Monitoring Phase: Construction and Operation
- Enforcement Agency: LADPW (Construction), RAP (Operation)

BMP-HYDRO-7: Common Area Landscape Management

- Measures: A landscape maintenance program shall be established prior to construction in order to optimize water efficiency, limit pollutant introduction from fertilizers and pesticides, manage landscape waste, and prevent soil erosion.
- Implementation Phase: Prior to Construction and Operation
- Monitoring Phase: Operation
- Enforcement Agency: LADPW (Prior to Construction), RAP (Operation)

BMP-HYDRO-8: Common Area Litter Control

- Measures: A waste management program shall be implemented to inspect the Project Site for litter and pick up any litter as necessary on a regular basis.
- Implementation Phase: Construction and Operation
- Monitoring Phase: Operation
- Enforcement Agency: Construction Contractor (Construction), RAP (Operation)

BMP-HYDRO-9: Common Area Catch Basin Inspection

- Measures: Catch basins shall be inspected and maintained, at a minimum, yearly and prior to the rainy season.

- Implementation Phase: Construction and Operation
- Monitoring Phase: Construction and Operation
- Enforcement Agency: Construction Contractor (Construction), LADWP (Construction), RAP (Operation)

BMP-HYDRO-10: Street Sweeping Parking Lots

- Measures: The angled parking spaces along Anderson Street shall be vacuum swept, at a minimum, yearly and prior to the rainy season.
- Implementation Phase: Operation
- Monitoring Phase: Operation
- Enforcement Agency: RAP

BMP-HYDRO-11: BMP Maintenance

- Measures: Proposed structural source controls, non-structural source controls, and LID BMPs shall be maintained as outlined in the Operations and Maintenance Plan that would be developed for the Project.
- Implementation Phase: Operation
- Monitoring Phase: Operation
- Enforcement Agency: LADPW and RAP

BMP-HYDRO-12: Structural and Low-Impact Development (LID) BMPs

- Measures:
    - Runoff from the Project Site and tributary Viaduct areas shall be captured by proposed stormwater drainage systems, routed to a variety of structural and LID BMPs and discharged to the existing stormwater drainage facilities adjacent to the site. In addition, the Project Site shall include a combination of paved surfaces and landscaped areas to provide soil stability and further minimize erosion.
    - Structural BMPs (i.e., hydrodynamic separators) shall be installed to treat the runoff from the Viaduct to the maximum extent practicable
    - The remaining localized rainfall falling on the portion of the Project Site outside of the Viaduct's footprint shall be treated through a combination of incidental infiltration during sheet flow along pervious land areas, incidental infiltration within localized vegetated basins, and below-grade capture and use systems below some of the proposed lawn areas in areas with a larger impervious area footprint. The incidental infiltration or capture and use of the stormwater will remove pollutants of concern. Larger storm events will be captured and conveyed through proposed local storm drainage systems to new connections to the existing storm drainage system.
- Implementation Phase: Construction and Operation

- Monitoring Phase: Construction and Operation
- Enforcement Agency: LABOE, LADWP, and the Construction Contractor

BMP-HYDRO-13: Regulatory Requirements for Water Quality

- Measures:
  - To comply with the provisions of the National Pollutant Discharge Elimination System (NPDES) MS4 Permit, the Project shall implement a Stormwater Pollution Prevention Plan (SWPPP) that includes construction site BMPs to control erosion and sedimentation. BMPs include silt fencing, fiber rolls, sandbag barriers, drainage inlet protections, and berms at the top of all grade slopes. The SWPPP shall also include post-construction stormwater management measures to control pollutants in stormwater discharges during operation of the Project.
  - If groundwater is encountered, the contractor shall develop a dewatering plan, and a Dewatering Permit with the Los Angeles RWQCB will also be required. Should dewatering be required, the Project shall comply with the General Waste Discharge Requirements for Discharges of Groundwater from Construction and Project Dewatering to Surface Waters in Coastal Watersheds of Los Angeles and Ventura Counties.
  - Proposed construction activities shall comply with all applicable federal, state, and local requirements to reduce the potential for the release of hazardous waste and other contaminants into groundwater. In addition, construction activities will be subject to the provisions of the CWA and Porter-Cologne Act; and other federal, state, and local requirements to ensure that stormwater pollutants resulting from construction will not substantially degrade water quality.
  - A water diversion plan is not anticipated for the Project because Phase II construction activities shall be performed during the dry season (April 15 through October 15). However, if work in a flowing stream is unavoidable, a water diversion plan shall be required, and the entire stream flow shall be diverted around the work area by a barrier, temporary culvert, new channel, or other means approved by the CDFW. Should water diversion be necessary, a 401/404 permit will also be required.
  - An emergency evacuation plan shall be prepared for Phase II construction within the LA River. If measurable rain with 25 percent or greater probability is predicted within 72 hours during project-related activities, all activities within the LA River shall cease and protective measures to prevent siltation/erosion shall be implemented/maintained. With the implementation of BMPs, alterations to drainage patterns during construction in the LA River channel will not result in substantial erosion or siltation onsite or offsite.
  - A Notice of Intent (NOI) for stormwater discharges associated with construction activities may also be required under the NPDES General Permit.
  - Stormwater BMPs shall follow the latest California Stormwater Quality Association's Stormwater Best Management Practices Handbook. All entrances and exits to a construction site will be stabilized to reduce transport of sediment off-site. Any sediment or other materials tracked off-site will be removed within a reasonable time.

- Any non-stormwater discharge shall be controlled and properly disposed of through the sanitary sewer system or transported to an approved processing facility to prevent the contamination of site soils and groundwater.
- The handling, storage, and disposal of contaminants shall comply with all applicable federal, state, and local requirements. The Project Site shall be remediated to standards acceptable to LACoFD and other regulatory agencies as required, thereby reducing the area affected by contaminants.

- Implementation Phase: Prior to Construction
- Monitoring Phase: Construction
- Enforcement Agency: LADPW, Contracts Administration Bureau, Construction Inspector

4.5.2.9 Land Use and Planning

BMP-LAND-1: Coordination with Los Angeles City Planning

- Measures: LABOE shall continue to work with the Los Angeles Department of City Planning to ensure that the Project is consistent with future zoning changes.
- Implementation Phase: Ongoing
- Monitoring Phase: Ongoing
- Enforcement Agency: LABOE

BMP-LAND-2: Coordination with Viaduct Replacement Project

- Measures: Any necessary land use entitlements shall be secured prior to the start of construction activities and shall be coordinated with construction and maintenance of the Viaduct Replacement Project as needed.
- Implementation Phase: Prior to Construction
- Monitoring Phase: Prior to Construction
- Enforcement Agency: LABOE and LADWP

BMP-LAND-3: Construction Area

- Measures: Construction equipment, materials storage, and construction activities shall be contained within the limits of construction, and construction areas shall be fenced.
- Implementation Phase: Construction
- Monitoring Phase: Construction
- Enforcement Agency: LADPW, Contracts Administration Bureau, Construction Inspector

4.5.2.10 Noise and Vibration

BMP-NOISE-1: Construction Equipment Requirements

- Measures: Construction equipment shall be properly maintained and equipped with mufflers.

- Implementation Phase: Construction
- Monitoring Phase: Construction
- Enforcement Agency: LADPW, Contracts Administration Bureau, Construction Inspector

4.5.2.11 Transportation and Traffic

BMP-TRANS-1: Temporary Detour Routes

- Measures: During proposed construction activities, temporary detours shall be provided for any affected pedestrian and bicycle facilities.
- Implementation Phase: Construction
- Monitoring Phase: Construction
- Enforcement Agency: LADPW, Contracts Administration Bureau, Construction Inspector

BMP-TRANS-2: Construction Staging Plan

- Measures: A construction staging plan shall be developed to reduce impacts related to noise, dust, traffic, and other health hazards. In addition, construction site BMPs (e.g., fencing, signs, and detours) shall be implemented to minimize hazards and prevent safety issues on the roadways and sidewalks surrounding the construction site.
- Implementation Phase: Prior to construction
- Monitoring Phase: Construction
- Enforcement Agency: LADPW, Contracts Administration Bureau, Construction Inspector

BMP-TRANS-3: Construction Traffic

- Measures: Construction-related trips shall be scheduled with increased frequency during off-peak hours to minimize impacts to commuters.
- Implementation Phase: Prior to construction
- Monitoring Phase: Construction
- Enforcement Agency: LADPW, Contracts Administration Bureau, Construction Inspector

BMP-TRANS-4: Access to Parcels

- Measures: If access to any existing parcels are removed during proposed construction activities, temporary access shall be provided, and/or new points of access shall be constructed.
- Implementation Phase: Prior to construction
- Monitoring Phase: Construction
- Enforcement Agency: LADPW, Contracts Administration Bureau, Construction Inspector

BMP-TRANS-5:Site-Specific Traffic Control and Transit Plan for Large Events

- Measures: Large event permittees shall develop a site-specific traffic control plan to provide information on parking and circulation and highlight transit options for event attendees to minimize congestion and vehicle miles traveled. Traffic control strategies for events will include inbound/outbound flex lanes and sheriff-controlled intersections. Traffic control plans will also identify nearby public parking facilities and identify passenger pick-up/drop-off locations. Permittees will be required to consider the cumulative traffic impacts of their event in relation to other events in the Project Area. The traffic control plans will also identify emergency services egress and access.
- Implementation Phase: Operation (larger events)
- Monitoring Phase: Operation (larger events)
- Enforcement Agency: LABOE, RAP, and Individual Permittees

4.5.2.12 Utilities and Service Systems

BMP-USS-1: Wastewater Treatment

- Measures: Any wastewater produced as a result of proposed construction activities, such as water containing diesel and oil, paint, solvents, cleaners, and other chemicals, as well as construction debris and dirt, shall be collected in settlement tanks and screened. The clean water shall be discharged, and the remaining sludge shall be disposed of in accordance with water and solid waste disposal regulations, including the CWA, the Porter-Cologne Water Quality Control Act, and the RCRA.
- Implementation Phase: Construction
- Monitoring Phase: Construction
- Enforcement Agency: LADPW, Contracts Administration Bureau, Construction Inspector

BMP-USS-2: Temporary Stormwater Drainage Measures

- Measures: Temporary stormwater drainage measures to prevent polluted runoff in the construction site shall include, but not be limited to, the installation of earth dikes, drainage swales, and ditches, silt fences, desilting basins, and stormwater drain inlet protection.
- Implementation Phase: Construction
- Monitoring Phase: Construction
- Enforcement Agency: LADPW, Contracts Administration Bureau, Construction Inspector

BMP-USS-3: Coordination with Service Providers

- Measures: The location of underground utilities shall be confirmed prior to proposed construction activities by contacting the Underground Service Alert of Southern California (DigAlert). If necessary, the City shall work in close coordination with utility providers to develop a relocation plan to minimize possible impacts and disruption to service utilities.

- Implementation Phase: Prior to Construction
- Monitoring Phase: Prior to Construction and Ongoing
- Enforcement Agency: LADPW

BMP-USS-4: Reduced Consumption of Water Resources

- Measures: Design features to reduce the consumption of water resources shall be implemented, such as low-flow water fixtures and water efficient irrigation design and practices. In addition, drought-tolerant landscaping shall be planted to further reduce water consumption.
- Implementation Phase: Design
- Monitoring Phase: Design
- Enforcement Agency: LADPW

BMP-USS-5: High voltage electrical conductors

- Measures: The ROW contains high-voltage electrical conductors. Only such equipment, material, and construction techniques that are permitted under applicable safety ordinances and statutes, including the following, shall be used: California Code of Regulations, Title 8, Industrial Relations, Chapter 4, Division of Industrial Safety, Subchapter 5, Electrical Safety Orders, and California Public Utilities Commission, General Order No. 95, Rules for Overhead Electric Line Construction.
- Implementation Phase: Construction
- Monitoring Phase: Construction
- Enforcement Agency: LADWP

This page intentionally left blank.

ENVIRONMENTAL IMPACT REPORT APPENDICES

This page is intentionally blank

APPENDIX FINAL EIR-1: DRAFT EIR COMMENT LETTERS AND PUBLIC MEETING TRANSCRIPT

This page is intentionally blank

DEPARTMENT OF TRANSPORTATION
DISTRICT 7- OFFICE OF REGIONAL PLANNING
100 S. MAIN STREET, SUITE 100
LOS ANGELES, CA 90012
PHONE (213) 266-3574
FAX (213) 897-1337
TTY 711
www.dot.ca.gov

Making Conservation a California Way of Life.

June 15, 2021

Dr. Jan Green Rebstock
City of Los Angeles, Public Works, Bureau of Engineering
Environmental Management Group
1149 S. Broadway, 6th Floor, Mail Stop 939,
Los Angeles, CA 90015-2213

RE: Sixth Street Park, Arts, River and Connectivity (PARC) Project – Draft Environmental Impact Report (DEIR)
SCH# 2017041045
GTS# 07-LA-2017-03603
Vic. LA-101 PM 0.36

Dear Dr. Jan Green Rebstock:

Thank you for including the California Department of Transportation (Caltrans) in the environmental review process for the above referenced project. The proposed Project would create public recreational space on approximately13acres in areas underneath and adjacent to the upcoming Sixth Street Viaduct. Features of the proposed Project include, but are not limited to, a café, concession area, public restrooms on each side of the LA River, performance and public gathering areas, flexible play areas and lawns, adult fitness equipment, dog play areas, landscaped areas, public art, sports fields and courts, children's play areas and splash pad, picnic and grilling areas, parking spaces, skate park elements, bicycle and pedestrian paths, roadway connectivity improvements, stormwater infrastructure improvements, and rain gardens. In addition, the proposed Project could include the installation of reinforced concrete planted terraces on the west and east banks of the LA River. The proposed Project generally includes components noted in the Los Angeles River Revitalization Master Plan.

The nearest State facility to the proposed project is US 101. After reviewing the DEIR, Caltrans has the following comments:

Caltrans acknowledges and supports infill development that provides valuable urban park space and prioritizes walking, biking, and transit. The Project's goals are in direct alignment with State-level sustainable transportation policy goals which seek to reduce the number of trips made by driving, reduce Greenhouse Gas (GHG) emissions, and encourage alternative modes of travel. Caltrans' Strategic Management Plan has set targets of tripling trips made by bicycle and doubling trips made by walking and public transit, as well as achieving a reduction in statewide, per capita, vehicle miles traveled (VMT). Similar goals are embedded in the California Transportation Plan 2040, California Transportation Plan 2050, and Southern California Association of Governments (SCAG) Connect SoCal (2020-2045 Regional Transportation Plan/Sustainable Communities Strategy). Statewide legislation such as AB 32 and SB 375, as well as Executive Order S-3-05

and N-19-19, echo the need to pursue more sustainable development. Projects, like the one proposed, can help California meet these goals.

Caltrans also concurs that the following Mitigation Measures are effective infrastructure to reduce VMT and more effectively meet the transportation needs of all people:

- MM-TRANS-1: Mobility Hub
- MM-TRANS-2: Bicycle Facilities
- MM-TRANS-3: Rideshare Zones
- MM-TRANS-4: Public Transportation.

While Caltrans does not expect project approval to result in a direct adverse impact to the existing State transportation facilities, the eastern edge of the Project is adjacent to Caltrans Right-of-Way. Therefore, an encroachment permit will be required, and all environmental concerns must be adequately addressed. Please note that any modifications to the State facility will be subject to additional review by the Office of Permits prior to issuance of the permit.

Additionally, any transportation of heavy construction equipment and/or materials which requires use of oversized-transport vehicles on State highways will need a Caltrans transportation permit. We recommend large size truck trips be limited to off-peak commute periods.

If you have any questions, please contact project coordinator Anthony Higgins, at anthony.higgins@dot.ca.gov and refer to GTS# 07-LA-2017-03603.

Sincerely,

Frances Duong

Frances Duong
Acting IGR/CEQA Branch Chief

Cc: State Clearinghouse

South Coast
Air Quality Management District
21865 Copley Drive, Diamond Bar, CA 91765-4178
(909) 396-2000 • www.aqmd.gov

SENT VIA E-MAIL: July 20, 2021

Jan.green.rebstock@lacity.org
Dr. Jan Green Rebstock
City of Los Angeles, Public Works Department
Bureau of Engineering, Environmental Management Group
1149 South Broadway, Sixth Floor, Mail Stop 939
Los Angeles, California 90015

Draft Environmental Impact Report (EIR) for the Sixth Street Park, Arts, River, and Connectivity Improvements Project (Proposed Project) (State Clearinghouse No.: 2017041045)

South Coast Air Quality Management District (South Coast AQMD) staff appreciates the opportunity to comment on the above-mentioned document. The following comments include recommended revisions to the CEQA air quality impact analysis for regional construction impacts and air quality mitigation measures that the City of Los Angeles (Lead Agency) should include in the Final EIR.

South Coast AQMD Staff's Summary of the Proposed Project and CEQA Air Quality Impact Analysis

Based on the Draft EIR, the Lead Agency will develop recreational and stormwater management facilities on 13 acres (Proposed Project). The Proposed Project is located on the northwest corner of South Boyle Avenue and Seventh Street in the communities of Central City North and Boyle Heights within the designated AB 617 East Los Angeles, Boyle Heights, West Commerce community.

In the Draft EIR, the Lead Agency analyzed the Proposed Project's regional air quality impacts from construction activities associated with hauling construction materials and importing or exporting soil. During the grading phase, the Proposed Project will import and export 16,700 cubic yards of soil, resulting in 835 haul truck trips[1]. The Lead Agency calculated criteria pollutants emissions from construction activities after incorporating air quality mitigation measures, including the use of 2007 and newer diesel haul trucks (e.g., material delivery trucks and soil import/export) and Tier 4 off-road construction equipment of greater than 50 horsepower[2]. The Lead Agency concluded that the mitigated maximum daily emissions from NOx would be 28 pounds per day (lbs/day), which would not exceed South Coast AQMD regional air quality CEQA significance threshold for NOx at 100 lbs/day for construction[3]. The Lead Agency also concluded that the Proposed Project's regional construction air quality impacts from other criteria pollutants would be less than significant with mitigation.

[1] Draft EIR. Air Quality and Greenhous Gas Impact Assessment. CalEEMod Output Files. Page 2.
[2] Draft EIR. MM-AQ-1. Page 3.2-14.
[3] MND. Page 4-19.

South Coast AQMD Staff's Comments

CEQA Air Quality Impact Analysis for Regional Construction Impacts Associated with Truck Trip Length

Based on a review of the Hazards and Hazardous Materials Section and the Utilities and Service Systems Section of the Draft EIR, South Coast AQMD staff found that implementation of the Proposed Project requires excavation of soil contaminated with Resource Conservation and Recovery Act level heavy metals, polychlorinated biphenyls, or total petroleum hydrocarbon diesel range organics that would need to be disposed at Class 1 hazardous waste landfills and Class 2 landfills[4]. Solid waste generated from the Proposed Project's construction activities will be collected by the Central Los Angeles Recycling and Transfer Station (CLARTS), and from CLARTS, waste is transferred to a landfill or recycling facility. Based on the Proposed Project's location, the closest landfill to the Proposed Project is the Puente Hills Landfill in the City of Industry[5].

In the Air Quality Section, the Lead Agency used a default one-way trip length of 20 miles to quantify the Proposed Project's construction emissions from importing and exporting soil and might have underestimated the Proposed Project's soil hauling emissions. According to the City of Los Angele Sanitation and Environment Department, hazardous waste is not accepted at CLARTS[6]. The Puente Hills Landfill that is located at 13130 Crossroads Parkway South in the City of Industry was owned and/or operated by the Los Angeles County Sanitation Districts, and on December 31, 2014, it ceased operation as one of six major Class III landfills within the County[7]. It is likely that contaminated soil will not be accepted by CLARTS or transferred to the Puente Hills Landfill for disposal. Additionally, depending on the type of contamination, contaminated soil may need to be disposed at a permitted hazardous disposal facility outside Los Angeles County with a one-way trip length that is likely longer than 20 miles. During the grading phase, 835 truck trips would take place for hauling 16,700 cubic yards of soil. Using a one-way truck trip length of 20 miles likely underestimated the Proposed Project's construction emissions. Therefore, South Coast AQMD staff recommends that the Lead Agency identify the permitted hazardous disposal facilities that the Proposed Project will use to dispose contaminated soil, disclose them in the Final EIR, and re-calculate the Proposed Project's construction emissions from haul truck trips based on the appropriate one-way trip length. If the Lead Agency finds, after revisions, that the Proposed Project's regional air quality impacts from construction activities would be significant, mitigation measures will be required (CEQA Guidelines Section 15126.4).

[4] Draft EIR. Page 3.17-6.
[5] Draft EIR. Page 3.16-3.
[6] City of Los Angeles. CLARTS Facts and Services. Accessed at: https://www.lacitysan.org/san/faces/home/portal/s-lsh-wwd/s-lsh-wwd-s/s-lsh-wwd-s-cl/s-lsh-wwd-s-cl-fs?_afrLoop=11339668849486601&_afrWindowMode=0&_afrWindowId=py5xjm1uy&_adf.ctrl-state=esjuboubd_473#!%40%40%3F_afrWindowId%3Dpy5xjm1uy%26_afrLoop%3D11339668849486601%26_afrWindowMode%3D0%26_adf.ctrl-state%3Desjuboubd_477.
[7] Los Angeles County. Countywide Siting Element – Existing Solid Waste Disposal Facilities. Accessed at: http://dpw.lacounty.gov/epd/nas/epd/epd_dms/TSKFRC%60JOLEE%60TaskForce%60PUB_Y%60FREQ_N%6011_12_2015%60%60REC_N%600000_00%600000_00%60TFMPAC%60CSE%20Chapter%203%20Redline_11_10_15%6039.pdf.

Recommended Revisions to Existing Air Quality Mitigation Measure

CEQA requires that all feasible mitigation measures that go beyond what is required by law be utilized to minimize or eliminate any significant adverse air quality impacts. The Draft EIR included an air quality mitigation measure (MM-AQ-1), which requires, among others, the use of 2007 and newer diesel haul trucks (e.g., material delivery trucks and soil import/export). South Coast AQMD staff recommends that the Lead Agency require cleaner haul trucks to strengthen the mitigation. The recommended additions and changes to the portion of MM-AQ-1 related to haul trucks are shown in underline and ~~strikethrough~~, respectively.

> Implement **MM-AQ-1: Newer/Tier 4 Engines in Haul Trucks and Construction Equipment**
>
> - Include in all construction contracts the requirement to use zero-emission (ZE) or near-zero emission (NZE) on-road haul trucks (e.g., material delivery trucks and soil import/export) such as heavy-duty trucks with natural gas engines that meet the California Air Resources Board (CARB)'s adopted optional NOx emission standard at 0.02 grams per brake horsepower-hour (g/bhp-hr), and ensure that supportive infrastructure will be available for ZE/NZE trucks. At a minimum, require the use of ~~2007~~ 2010 and newer diesel haul trucks (e.g., material delivery trucks and soil import/export) that meet CARB's 2010 engine emissions standards at 0.01 g/bhp-hr of particulate matter (PM) and 0.20 g/bhp-hr of NOx emissions or newer, cleaner trucks. To monitor and ensure ZE, NZE, or 2010 model year trucks are used at the future development projects, the lead agency should require that operators maintain records of all trucks associated with the future development projects' construction and make these records available to the lead agency upon request. The records will serve as evidence to prove that each truck called to the future development projects during construction meets the minimum 2010 model year engine emission standards. Alternatively, the Lead Agency should require periodic reporting and provision of written records by contractors working on the future development projects and conduct regular inspections of the records.

Conclusion

Pursuant to California Public Resources Code Section 21092.5(a) and CEQA Guidelines Section 15088(b), South Coast AQMD staff requests that the Lead Agency provide South Coast AQMD staff with written responses to all comments contained herein prior to the certification of the Final EIR. In addition, issues raised in the comments should be addressed in detail giving reasons why specific comments and suggestions are not accepted. There should be good faith, reasoned analysis in response. Conclusory statements unsupported by factual information will not suffice (CEQA Guidelines Section 15088(c)). Conclusory statements do not facilitate the purpose and goal of CEQA on public disclosure and are not meaningful, informative, or useful to decision makers and to the public who are interested in the Proposed Project. Further, if the Lead Agency makes the finding that the recommended revisions to the existing air quality mitigation measure are not feasible, the Lead Agency should describe the specific reasons supported by substantial evidence for rejecting them in the Final EIR (CEQA Guidelines Section 15091).

South Coast AQMD staff is available to work with the Lead Agency to address any air quality questions that may arise from this comment letter. Please contact me at lsun@aqmd.gov if you have questions or wish to discuss the comments.

Sincerely,

Lijin Sun

Lijin Sun, J.D.
Program Supervisor, CEQA IGR
Planning, Rule Development & Area Sources

LS
LAC210527-02
Control Number

Los Angeles County
Metropolitan Transportation Authority

One Gateway Plaza
Los Angeles, CA 90012-2952

213.922.2000 Tel
metro.net

Metro

July 26, 2021

Dr. Jan Green Rebstock
City of Los Angeles, Public Works, Bureau of Engineering
Environmental Management Group
1149 S. Broadway, 6th Floor, Mail Stop 939
Los Angeles, CA 90015-2213
Sent by Email: jan.green.rebstock@lacity.org

RE: Sixth Street PARC
Draft Environmental Impact Report (EIR): Metro Comments

Dear Dr. Jan Green Rebstock:

Thank you for coordinating with the Los Angeles County Metropolitan Transportation Authority (Metro) regarding the proposed Sixth Street PARC (Project) located in the City of Los Angeles (City). Metro is committed to working with local municipalities, developers, and other stakeholders across Los Angeles County on transit-supportive developments to grow ridership, reduce driving, and promote walkable neighborhoods.

Per Metro's area of statutory responsibility pursuant to sections 15082(b) and 15086(a) of the Guidelines for Implementation of the California Environmental Quality Act (CEQA: Cal. Code of Regulations, Title 14, Ch. 3), the purpose of this letter is to provide the City with specific comments on the Draft Environmental Impact Report (EIR) for the Project. In particular, this letter outlines topics regarding the Project's potential impacts on Metro projects, infrastructure, and right of way (ROW) which should be analyzed in the EIR, and provides recommendations for mitigation measures as appropriate. Effects of a project on transit systems and infrastructure are within the scope of transportation impacts to be evaluated under CEQA.[1]

In addition to the specific comments outlined below, Metro is providing the City with the Metro Adjacent Development Handbook (attached), which provides an overview of common concerns for development adjacent to Metro ROW and transit facilities, available at www.metro.net/projects/devreview/.

Metro supports the City's efforts to create vibrant and multi-beneficial amenities that improve stakeholder connections to parks, transit, and active transportation. Metro looks forward to continuing to work collaboratively with the City to ensure that the Project will be designed, engineered, and constructed with sensitivity to the critical transportation infrastructure in the surrounding area.

[1] See CEQA Guidelines section 15064.3(a); Governor's Office of Planning and Research Technical Advisory on Evaluating Transportation Impacts In CEQA, December 2018, p. 19.

Project Description

The Project includes a new approximately 13 acres of public recreational space underneath and adjacent to the Sixth Street Viaduct. The Project would include an East Park, West Park, and Arts Plaza and River Gateway. The proposed East Park, located in the Boyle Heights Community Plan area would include amenities such as concessions area, public restrooms, office and storage space for operations and maintenance staff, etc. The proposed West Park would include amenities such as a café building, landscaped area and a rain garden, public art piece, etc. The Arts Plaza and River Gateway would include rehabilitating an existing pedestrian/vehicular tunnel that provides access to the LA River channel.

Comments

Future Transit Corridor Projects under study

Metro is studying the following new transit corridor projects which are within the Project area. These projects should be incorporated into the EIR's analysis. In addition, the City should consult with the SCRRA, which operates Metrolink, on their capital planning efforts.

1. Metro's LA River Path Project: Funded by Measure M, Metro is evaluating a new bicycle and pedestrian path along an approximately eight-mile stretch of the Los Angeles River from Elysian Valley through Downtown Los Angeles to the City of Maywood. Metro released a Notice of Preparation for this project in October 2019 with a target operation date by 2028. The project is currently in the Environmental Phase with anticipated selection of a locally preferred alternative (LPA) by 2023. More information may be found online at: https://www.metro.net/projects/lariverpath/.

2. Arts District/6th Street Station: The Arts District/6th St Station is a proposed new Metro B Line (Red) and/or D Line (Purple) station near 6th Street that would provide regional and local transit connections to and from Arts District, Boyle Heights, Little Tokyo and surrounding communities. The station would be located south of LA Metro's Division 20 Rail Yard and would be generally bounded by the 6th Street Bridge to the north, 7th Street to the south, the Los Angeles River to the east, and by Mesquit Street to the west. With funding support from the City of Los Angeles, Metro is preparing an Environmental Impact Report (EIR) and conducting public outreach for the EIR. Funding for construction has not been identified for this potential project. Completing this study does not commit Metro to funding and constructing the potential Arts District/6th St Station and extending heavy rail transit to it. More information may be found online at: https://www.metro.net/projects/arts-dist-6th-station/.

Metrolink Adjacency

1. Operations: The Project site is above and adjacent to Metro-owned ROW operated and maintained by the SCRRA to run the Metrolink commuter rail service. Amtrak intercity passenger trains and other freight trains also operate on this line. The City is advised that rail service operates in both directions and that trains may operate 24 hours a day, seven days a week, in the ROW below the Project.

2. Impact Analysis: Due to the Project's proximity to Metrolink ROW, the EIR must analyze potential effects on rail operations and identify mitigation measures as appropriate. Critical

impacts to be studied should include (without limitation): impacts of Project construction and operation on and potential damage to the structural and systems integrity of tracks and related infrastructure; and disruption to rail service. Specific impacts and mitigation measures that should be studied include:

a. Structure Setback: Structures that are immediately adjacent to the railroad ROW can pose safety hazards and may disrupt transit service and/or damage Metrolink infrastructure. Such conflicts can occur during Project construction and/or operation.

Recommended mitigation measure:

i. Technical Review: The City shall submit engineering drawings and calculations, as well as construction work plans and methods including any crane placement and radius, to evaluate any impacts to SCRRA infrastructure in relationship to the Project. Before issuance of any building permit for the Project, the City shall obtain Metro's and SCRRA's approval of final construction drawings.

ii. Access: Any access to railroad property is strictly at the discretion of Metro and SCRRA. The City shall obtain specific Right-of-Entry temporary access permits from SCRRA for any work performed on the Project's structures or property requiring access to the railroad ROW.

iii. Construction Monitoring: The City shall permit Metro and/or SCRRA staff to monitor construction activity to ascertain any impact to the ROW. During construction, the City shall construct a protection barrier to prevent objects, material, or debris from falling onto the ROW. The City shall notify Metro and SCRRA of any changes to the construction/building plans that may or may not impact the ROW.

3. Advisories to City: The City is encouraged to contact Metro Development Review and Metrolink staff early in the design process to plan for potential impacts. The City should also be advised of the following:

a. Occupational Safety and Health Administration (OSHA) Requirements: Construction work in proximity to Metrolink ROW with potential to damage rail tracks and related infrastructure may be subject to additional OSHA safety requirements.

b. Technical Review: Metro and Metrolink charge for staff time spent on engineering review and construction monitoring.

c. ROW Access: The City should contact SCRRA for Right-of Entry requirements. Information can be found at www.metrolinktrains.com. Other requirements may include permits for construction of buildings and any future repairs, painting, graffiti removal, etc., including the use of overhead cranes or any other equipment that could potentially impact railroad operations and safety. Frequent access for maintenance tasks such as graffiti removal, will necessitate an active license agreement. This agreement will include an annual license fee and other requirements that meet safety standards for access to a ROW with active rail operations.

d. Cost of Impacts: The City will be responsible for costs incurred by Metro and/or SCRRA due to Project construction/operation issues that cause delay or harm to Metrolink service delivery or infrastructure. The City will also bear all costs for any noise mitigation required for the Project.

Transit Supportive Planning: Recommendations and Resources

Considering the Project's proximity to the future Arts District/6th Street Station, Metro would like to identify the potential synergies associated with transit-oriented development:

1. Transit Supportive Planning Toolkit: Metro strongly recommends that the City review the Transit Supportive Planning Toolkit which identifies 10 elements of transit-supportive places and, applied collectively, has been shown to reduce vehicle miles traveled by establishing community-scaled density, diverse land use mix, combination of affordable housing, and infrastructure projects for pedestrians, bicyclists, and people of all ages and abilities. This resource is available at https://www.metro.net/projects/tod-toolkit.

2. Transit Connections and Access: Metro strongly encourages the City to install Project features that help facilitate safe and convenient connections for pedestrians, people riding bicycles, and transit users to/from the Project site and nearby destinations. The City should incorporate the installation of such features as part of the Project, including:

    a. Walkability: The provision of wide sidewalks, pedestrian lighting, a continuous canopy of shade trees, enhanced crosswalks with ADA-compliant curb ramps, and other amenities along all public street frontages of the development site to improve pedestrian safety and comfort to access the nearby future Arts District/6th Street Station.

    b. Bicycle Use and Micromobility Devices: The provision of adequate short-term bicycle parking, such as ground-level bicycle racks, and secure, access-controlled, enclosed long-term bicycle parking for residents, employees, and guests. Bicycle parking facilities should be designed with best practices in mind, including highly visible siting, effective surveillance, ease to locate, and equipment installation with preferred spacing dimensions, so bicycle parking can be safely and conveniently accessed. Similar provisions for micro-mobility devices are also encouraged.

    c. First & Last Mile Access: The Project should address first-last mile connections to transit and is encouraged to support these connections with wayfinding signage inclusive of all modes of transportation. For reference, please review the First Last Mile Strategic Plan, authored by Metro and the Southern California Association of Governments (SCAG), available on-line at: http://media.metro.net/docs/sustainability_path_design_guidelines.pdf

3. Wayfinding: Any wayfinding or other signage that includes the Metro brand and/or directs the public to Metro facilities must conform to Metro Signage Standards (including but not limited to Metro Standards Chapters 2.0 Graphic Standards, 10.0 Materials and Fabrication Standards, and 12.0 Trailblazing Standards).

In addition to comments contained within the body of this letter, **Attachment A** contains specific technical comments pertaining to the DEIR.

If you have any questions regarding this letter, please contact me by phone at 213-922-2671, by email at DevReview@metro.net, or by mail at the following address:

Metro Development Review
One Gateway Plaza
MS 99-22-1
Los Angeles, CA 90012-2952

Sincerely,

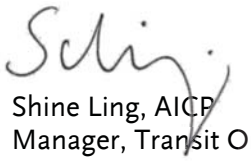

Shine Ling, AICP
Manager, Transit Oriented Communities

Attachments and links:

- Adjacent Development Handbook: https://www.metro.net/projects/devreview/
- Attachment A: Technical Comments

Attachment A
Technical Comments

Table ES-53: Summary of Environmental Impacts and Mitigation Measures, Mobility Hubs, pg. ES-53:

- Clarify whether this is planned to be a Metro-branded Mobility (i.e. "Metro Bike") Hub. Also "Bike Share Hub" nomenclature noted under MM-TRANS-2 is confusing. A Bike Share amenity consisting of docking facilities is not normally referred to as a "Bike Share Hub."

Table 1-1: Current and Future Development Projects, pg. 1-11:

- Include Metro Arts District/6th Street Station to table 1-1. The Arts District/6th Street Station is a proposed heavy rail extension and station currently in the planning phase.

2.5 Project Proposed Project Elements, Section 2.5.2 Phase II, pg. 2-13:

- Ensure that the design of the reinforced concrete planted terraces which may alter the existing banks of the LA River channel will be compatible with the design of the LA River Path alignments.

2.7 Project Schedule, pg. 2-16:

- With the construction phase anticipated to overlap with LA River Path construction activities, coordination between the two projects will be required to ensure that any potential conflicts are minimized, so as to limit any potential cumulative impacts as a result of overlapping construction activities (e.g. truck routes, street closures, emissions, etc.).

Figure 2-15: Arts Plaza Site Plan:

- The proposed LA River Path alignment alternatives (A,B & C) all provide a connection to Santa Fe Ave via the 6th Street tunnel. The Arts Plaza site plan provides access to the 6th Street tunnel from Santa Fe Avenue via a 4.9% sloping walkway. This walkway runs between a proposed stage and amphitheater seating. The LA River Path project is anticipating significant daily volumes at this access point, so there may be conflicts between PARC users who are there to enjoy performances, and path users attempting to connect to the LA River Path for transportation, utilitarian and recreation purposes. Adequate signage and design features should be implemented to avoid user conflicts. Additionally, the proposed 4.9% walkway should be reduced to 4.5% to account for construction tolerances to avoid exceeding 5% maximum slope.

Table 3.8-3: Remediation Recommendations:

- Suggest informing Metro of any potentially significant issues and/or new findings that may arise as a result of remediation activities.

3.9 Hydrology and Water Quality, pg. 3.9-26:

- Suggest coordination between the City and Metro to ensure that the Public Safety Plan related to flooding is compatible with the LA River Path project.

3.14 Recreation and 3.15 Transportation, pg. 3.14-1 and 3.15-1:

- Consider describing the LA River Path project to acknowledge an increase in future users through West side plaza.

3.15 Transportation, pg. 3.15-10:

- In October 2020, Metro adopted the NextGen Bus Plan, which is a major update to Metro Bus service. Many lines have changed or have been consolidated, with significant service changes implemented in June 2021. Recommend reviewing the NextGen Bus Plan and recent service changes to update the discussion of existing transit service. For additional information, see https://www.metro.net/projects/nextgen/ and https://mybus.metro.net/

3.15 Transportation, pg. 3.15-12:

- Revise title for Section 3.15.2.3 ("Existing Bike Network"?)

3.15 Transportation, pg. 3.15-40:

- Recommend revision to MM-TRANS-4 to read as follows: "The City shall reserve space and electrical power as required at the proposed Project Site to ensure access through the Arts Plaza or adjacent sidewalk to a future potential Arts District/Sixth Street Metro Station and to provide associated wayfinding signage to this station.

- The City shall continue to coordinate closely with the Arts District/6th Street Station Metro project team to confirm feasibility of MM-TRANS-4.

- **Figure 3.15-1: Transportation Facilities:** Update name from "LA River Trail Extension" to LA River Path project.

3.16 Utilities and Service Systems, pg. 3.16.5 – 3.16-8:

- Suggest coordination between the City and Metro to ensure that any applicable utility connections, relocations and undergrounding of utilities, and other utility improvements adjacent to and within the LA River Path corridor does not lead to any potential conflicts and/or issues during future construction activities.

General:

- Update name from "Los Angeles River Bike Path Gap Closure Project" to LA River Path project throughout the DEIR document.

- Consider using temporary banners on construction fences to communicate potential impacts to transit riders.

- Metro strongly recommends that the project team enlist the services of a professional Environmental Graphic Design consultant to program and develop signage designs for the project.

This page is intentionally blank

FORM GEN. 160 (Rev. 8-12)

CITY OF LOS ANGELES

INTER-DEPARTMENTAL CORRESPONDENCE

DATE: July 19, 2021

TO: Dr. Jan Green Rebstock, Environmental Supervisor II
City of Los Angeles, Public Works, Bureau of Engineering
Environmental Management Group

FROM: Ali Poosti, Division Manager
Wastewater Engineering Services Division
LA Sanitation and Environment

SUBJECT: **SIXTH STREET PARK, ARTS, RIVER, AND CONNECTIVITY IMPROVEMENTS (PARC) PROJECT - NOTICE OF AVAILABILITY OF A DRAFT ENVIRONMENTAL IMPACT REPORT .**

This is in response to your May 27, 2021 Notice of Availability of a Draft Environmental Impact Report for the proposed Sixth Street Park, Arts, River, and Connectivity Improvements project located at beneath and adjacent to the Sixth Street Viaduct between Mateo Street to the west and the United States Highway 101 to the east, Los Angeles, CA 90021. LA Sanitation, Wastewater Engineering Services Division has received and logged the notification. Upon review, it has been determined the project is unrelated to sewers and does not require any hydraulic analysis. Please notify our office in the instance that additional environmental review is necessary for this project.

If you have any questions, please call Christopher DeMonbrun at (323) 342-1567 or email at chris.demonbrun@lacity.org

CD/AP: sa

c: Shahram Kharaghani, LASAN
Michael Scaduto, LASAN
Wing Tam, LASAN
Christopher DeMonbrun, LASAN

File Location: CEQA Review\FINAL CEQA Response LTRs\FINAL DRAFT\Sixth Street Park, Arts, River, and Connectivity Improvements (PARC) Project - NOA of dEIR.docx

This page is intentionally blank

RANCHO COLD STORAGE, INC.

670 MESQUIT STREET
LOS ANGELES, CA. 90021
(213)624-8861 FAX(213)622-8256

July 26, 2021

BY EMAIL

Dr. Jan Green Rebstock, Environmental Supervisor II
City of Los Angeles, Department of Public Works
Bureau of Engineering, Environmental Management Group
1149 S. Broadway, Suite 600, Mail Stop 939
Los Angeles, CA 90015

RE: Sixth Street PARC Draft EIR

Dear Dr. Rebstock,

Thank you for the opportunity to comment on the Draft EIR for the proposed Sixth Street Park, Arts, River & Connectivity Improvements (PARC) Project.

We write to offer our continued support for the park project. By way of background, we are the owners of Rancho Cold Storage, Inc. (RCSI) and two other properties that are located on Mesquit Street between the 6th Street and 7th Street bridges in the City of Los Angeles. Both the PARC Project and the Sixth Street Viaduct Replacement Project include land that we made available to the City through agreements we reached with it.

Our father was employed in what is now known as the "Arts District" of DTLA since 1964 and our family purchased the Rancho Cold Storage business and property in 1985. We are long-term stakeholders in this community.

From 1987 through 1997 we undertook the seismic upgrading under Division 88 of our property along Mesquit Street at substantial expense to our business. At the time there was no "new" construction in our area, and we were the first to invest any significant amount of money into what was then aging infrastructure. We invested 100% of our earnings including taking out seconds on our personal homes to fund the upgrade of our facility. This upgrade included not only the required pinning of floors to walls, but also the replacement of failing brick and mortar walls with new concrete block walls. Many people told us that we were crazy to invest money in an area that at that time was not seeing any new investment. During the 10 years that we were working on our building three new buildings were built on the corner of Jesse street and Santa Fe Avenue. We have no doubt that our investment in our building was the catalyst for the construction of these three buildings.

During our time as stakeholders, we have also been active members in the community. We have worked with LAFD at our facility to train fire-fighters in the challenges that Cold Storage presents. We are participants in the SRT program through the LADWP in which we shut down our facility during peak power demand days to provide relief for the power grid. We have also provided $ 25,000 per year in free storage for the organization that provides and cooks all the food for the Summer Night Lights.

We had the opportunity to sell our property several years ago as property values in the "Arts District" continued to increase. However, due to our legacy in the District and our desire to see a first class project built on our site, we chose to partner on a project and maintain our position as long-term stakeholders.

Our and our partners' project will harmonize with the PARC Project to support the ongoing and future transformation of the Arts District into a vibrant mixed-use community. We have appreciated our coordination with the City on our application submitted in 2017 and as we anticipate the release of our Draft EIR this summer. As members of RCS VE LLC, the joint venture for development of the 670 Mesquit Project, we are submitting a separate letter discussing that project in relation to the PARC.

As the owners of RCSI and other properties adjacent to the PARC, we write to express our desire for continuing coordination to avoid unintentional impacts on our existing uses while we continue to move forward with our entitlements. We request coordination during PARC construction to ensure continued ability to access the 670 Mesquit Street property by way of "Little Mesquit Street" just south of the bridge. Any closure of this access street to our facility will have a negative impact on our ability to service the volume of trucks that we do on a daily basis. We also look forward to reviewing detailed proposals to confirm the proposed PARC Improvements will not interfere with our business's current operations.

Additionally, we want to confirm that the City does not propose modifications to the existing restrictions that exist for on-street parking along Mesquit Street between Jesse Street and the PARC. As agreed with the City and BOE, truck ingress and egress to RCSI precludes street parking in this area. The current yellow-painted curbs on the portion of Mesquit Street north of Jesse Street should retain their Commercial Loading and Unloading designation as agreed upon with the City and BOE. These items of concern are depicted on an annotated Arts Plaza Site Plan included as Exhibit A.

We also want to ask that the City provide appropriate security for the PARC Project area. Recognizing that much of the PARC consists of passive recreational uses, we would like to work with the City to prevent encampments of unhoused individuals and disturbances from intruding on the public use and enjoyment of the PARC improvements. As landowners and community stakeholders, security in the area is of paramount concern.

Finally, we request clarification on the City's plans for the portion of our property surrounding and to the north of the existing power transmission tower, which is located south of the under construction Ribbon of Light Bridge between Mesquit Street and the railroad tracks. We have reviewed the PARC's Draft EIR and it is unclear to us how this area may be used. Thank you in advance for this clarification.

We look forward to discussing these items with the City.

We are very excited about the proposed park improvements and look forward to continuing our collaboration with the City as the design of the PARC moves forward and ensures that existing businesses, such as ours, are protected from unnecessary disruptions.

Thank you for the opportunity to provide our input.

Sincerely,

Vince Gallo
Owner
Rancho Cold Storage, Inc.

Frank Gallo
Owner
Rancho Cold Storage, Inc.

Exhibit A

Figure 2-15: Arts Plaza Site Plan

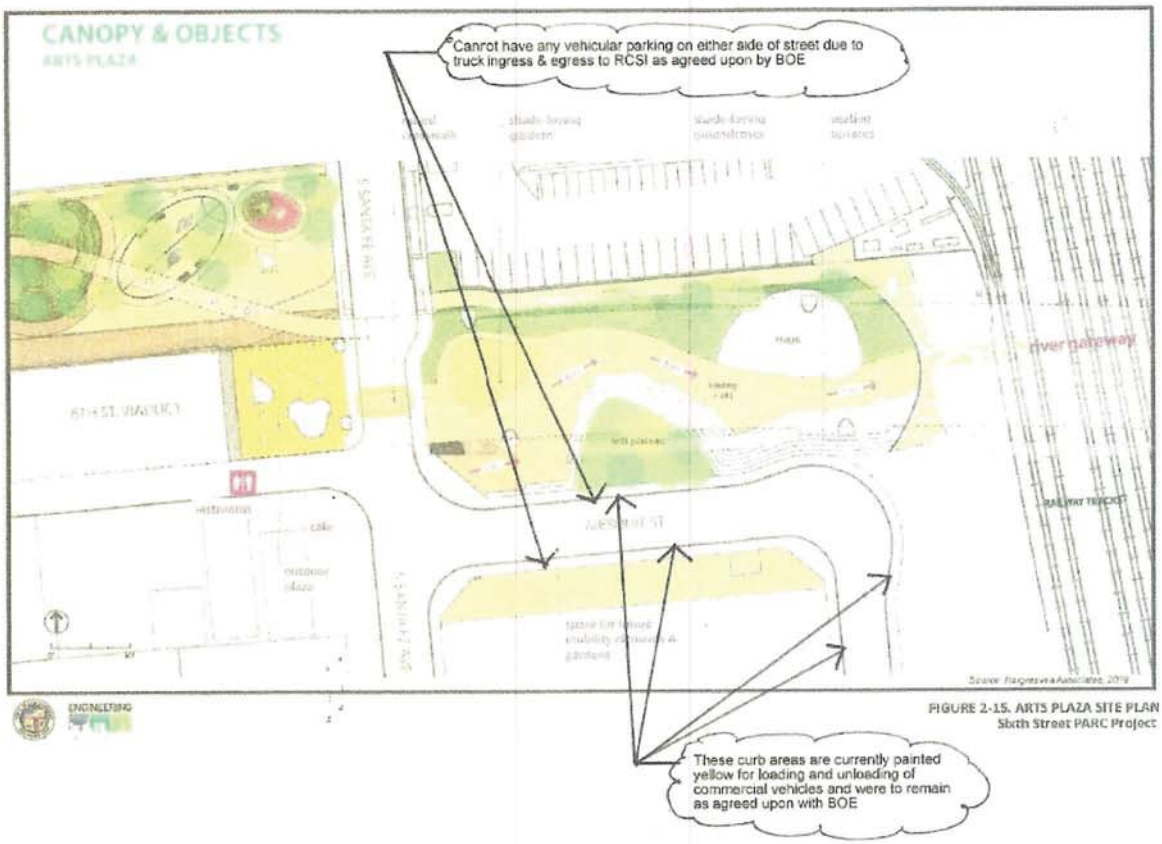

FIGURE 2-15. ARTS PLAZA SITE PLAN
Sixth Street PARC Project

This page is intentionally blank

355 South Grand Avenue, Suite 100
Los Angeles, California 90071-1560
Tel: +1.213.485.1234 Fax: +1.213.891.8015
www.lw.com

LATHAM & WATKINS LLP

FIRM / AFFILIATE OFFICES

Beijing	Moscow
Boston	Munich
Brussels	New York
Century City	Orange County
Chicago	Paris
Dubai	Riyadh
Düsseldorf	San Diego
Frankfurt	San Francisco
Hamburg	Seoul
Hong Kong	Shanghai
Houston	Silicon Valley
London	Singapore
Los Angeles	Tokyo
Madrid	Washington, D.C.
Milan	

July 26, 2021

VIA EMAIL

Dr. Jan Green Rebstock, Environmental Supervisor II
City of Los Angeles, Department of Public Works
Bureau of Engineering, Environmental Management Group
1149 S. Broadway, Suite 600, Mail Stop 939
Los Angeles, CA 90015

Re: Sixth Street PARC Draft EIR Comments

Dear Dr. Rebstock:

We are writing on behalf of our clients, RCS VE LLC, the joint venture for development of the 670 Mesquit project adjacent to the City's proposed Sixth Street Park, Arts, River & Connectivity Improvements (PARC) Project. Our clients include Frank and Vince Gallo, the property owners of Rancho Cold Storage and of portions of the site proposed for the PARC. Recognizing that our clients have been in the City entitlement process for the 670 Mesquit Project since 2017, we appreciate the opportunity to comment on the Draft EIR for the PARC Project.

In general, we believe the PARC Project and the 670 Mesquit Project are very compatible in intent, and our clients support this major investment to create public recreational space in areas underneath and adjacent to the Sixth Street Viaduct. There are several points of clarification, however, which we respectfully request should be addressed with our clients prior to the Final EIR for the PARC Project.

As background, the 670 Mesquit Project contains approximately 1,800,000 square feet of floor area on an approximately 5.45-acre site. The project will provide creative office space, a 236-room hotel, 308 units of multi-family housing (including affordable housing consistent with Measure JJJ standards), general retail uses, restaurants, an event and gallery space, and a gym. The project also includes substantial open space and has the potential to enliven the riverfront between 7th Street and the under construction Sixth Street Viaduct. In addition to landscaped areas, pedestrian passageways and walkways, viewing platforms, above-grade landscaped terraces and pool decks, the project includes an innovative proposal to provide a publicly accessible multi-use deck along the Los Angeles River. This river access harmonizes with the PARC Project.

As noted above, the PARC Project includes areas owned by our clients ("Park Easement Area"). Frank and Vince Gallo, longtime stakeholders in the Arts District, are making this portion of the PARC Project possible through a prior agreement entered into with the City in

connection with negotiations for construction easements on the Gallos' property for the Sixth Street Viaduct. Under that agreement, the City agreed that the PARC Project shall not "in any way interfere with the Gallos' application for the entitlement of the 670 Mesquit Project…." In addition to the Park Easement, the Gallos also provided easements for the construction, operation, and maintenance of the Sixth Street Viaduct Replacement Project. Our clients' continuing accommodation has contributed greatly to the realization of the PARC Project

We would like to obtain greater clarity regarding the following points as to the PARC Project.

1. Limit boundaries to ensure the Project will not interfere with 670 Mesquit. The PARC Project EIR describes that Phase II would include the installation of reinforced concrete planted terraces on up to approximately 20,000 square feet of the west and east banks of the LA River channel. However, these railroad properties are not included in the PARC Project conceptual design that the City has presented to stakeholders. The EIR also depicts the PARC Project Area extending to Seventh Street along the banks of the Los Angeles River. This boundary includes the railroad properties adjacent to our clients' properties, where the 670 Mesquit Project multi-use deck is proposed. The 670 Mesquit Project has recently achieved agreement with Amtrak on an MOU for the necessary rights to construct over the Amtrak property. We would like to ensure that Phase II of the PARC Project will not interfere with the 670 Mesquit Project or the proposed deck, which is a significant public benefit.

2. Include Sixth Street Metro Station. We would like to request that the Sixth Street Metro Station be included in the PARC Project plans. The Arts District/6th Street Station Project Notice of Preparation was recently released, identifying a location adjacent to the PARC Project and 670 Mesquit. However, the PARC Project does not fully embrace the potential synergies between the Arts District/6th Street Station Project, the 670 Mesquit Project, and the PARC Project. We appreciate that MM-TRANS-4 would reserve space to accommodate access to the future station, and we respectfully request that additional analysis and commitment be made now to reflect the proposed new station in the PARC Project plans. We also look forward to continuing discussions with Metro and you regarding how the Arts District/6th Street Station will be integrated with both the PARC and the Mesquit Project.

3. Clarify shared uses for portions of the Park Easement Area. As noted above, our clients have an agreement with the City whereby the City has the option to obtain the Park Easement Area, subject to our clients retention of rights to continue to use that area. Specifically, we are concerned with a potential inconsistency between the PARC Project conceptual design and the 670 Mesquit Project. The 670 Mesquit Project proposes to use some of the Park Easement Area for the project's groundwater retention wells, as depicted on the attached LID Drywells Layout Diagram. The diagram is based on LID volume calculations and preliminary drywell sizing analysis. As site storm drainage design continues, we look forward to coordinating with the PARC design team to take these retention wells into account to avoid any interference.

4. Confirm security plans for Park Easement Area. The 670 Mesquit Project will ensure that appropriate security is provided onsite, and it is important that the same commitment is provided by the City for the adjacent PARC, including the Park Easement Area. Recognizing that the Park Easement Area consists of passive recreational uses, if not correctly programmed and adequately funded for proper security and enforcement, the area could become problematic. Accordingly, we would like to request coordination with respect to the City's plan to address potential encampments of unhoused individuals and security issues. In particular, we would like to understand plans for the security of the proposed amphitheater.

5. Ensure appropriate mitigation for potential traffic and parking impacts associated with the PARC Project. What is being proposed with respect to traffic management and/or transportation enhancement? What has been done to ensure adequate parking for visitors to the PARC Project?

Thank you very much for your time and attention. Our clients look forward to ongoing coordination between the PARC Project and 670 Mesquit Project.

Very truly yours,

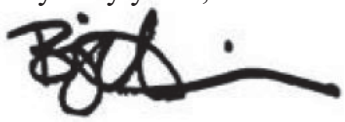

Benjamin Hanelin
of LATHAM & WATKINS LLP

cc: Mr. Zach Vella
Mr. Frank Gallo
Mr. Vince Gallo
Mr. Michael LoGrande
Cindy Starrett, Esq.
Derek Galey, Esq.

LID Drywells Layout Diagram

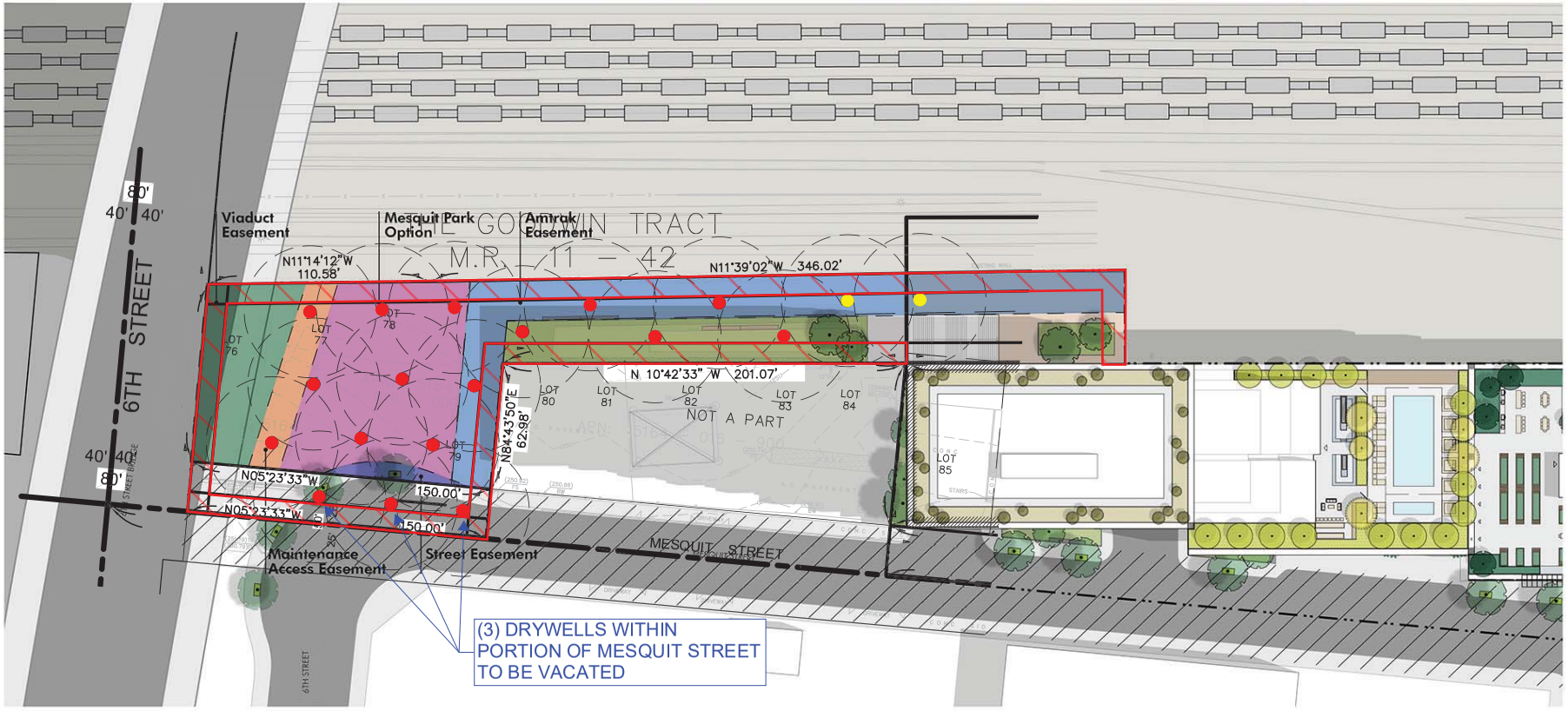

DPRCS01.EP

SOURCE: Bjarke Ingels Group with Gruen Associates, 2017

670 Mesquit

kpff 09/27/2018

Figure A-4
City Easements

ESA

This page is intentionally blank

STUDIO-
MLA

251 South Mission Road
Los Angeles, California 90033
T. 213 384 3844

studio-mla.com

July 26, 2021

RE: Sixth Street PARC

Dr. Jan Green Rebstock
City of Los Angeles
Department of Public Works, Bureau of Engineering,
Environmental Management Group
1149 S. Broadway, 6th Floor
Mail Stop 939
Los Angeles, CA 90015

Dear Dr. Rebstock:

As owners and stakeholders within a 5 mile radius of the park, we appreciate the improvements being proposed for this project. Without having time to really study the documents in the EIR, I would be interested to uncover why the design is so complex. One can assume it is based on the community's aspirations for the project.

It would be interesting to know what the acoustical factors are given the performance stage located under the viaduct.

We would appreciate notifications as we are located within a mile of the park, we are land owners and 20 of us are residents within a 5 mile radius.

We received a notification two days after the meeting on July 14.

We look forward to meaningful participation by our team in the future.

Sincerely,



Mia Lehrer
President

Powerful
LITIGATION SUPPORT

COURT REPORTING
LEGAL VIDEOGRAPHY
VIDEOCONFERENCING
TRIAL PRESENTATION
MOCK JURY SERVICES
LEGAL TRANSCRIPTION
COPYING AND SCANNING
LANGUAGE INTERPRETERS



NAEGELI
DEPOSITION & TRIAL

CELEBRATING 40 YEARS IN BUSINESS

(800) 528-3335
NAEGELIUSA.COM

CITY OF LOS ANGELES
PROPOSED SIXTH STREET PARK, ARTS, RIVER, AND CONNECTIVITY IMPROVEMENTS (PARC) PROJECT

PUBLIC MEETING

HELD IN PERSON AND VIA ZOOM ON
WEDNESDAY, JULY 14, 2021
6:30 P.M.

6381 LINDENHURST AVENUE
WEST HOLLYWOOD, CALIFORNIA 90048

PUBLIC MEETING

HELD IN PERSON AND VIA ZOOM ON

WEDNESDAY, JULY 14, 2021

6:30 P.M.

MR. LAM: Hi. Good evening, and thank you for joining us tonight for our meeting. Before we proceed, I will have Miguel Luna provide information on the Spanish translation. Go ahead, Miguel.

MR. LUNA:

SPANISH] Back to you, Gary.

MR. LAM: Thank you, Miguel.

Good evening again, everybody. My name is Gary Lam from the City of Los Angeles, Department of Public Works, Bureau of Engineering. I am the City Project Manager in charge of delivering the Park Development Project that we are presenting tonight.

I am also joined by my colleague, Dr. Jan Green Rebstock, from the Bureau's Environmental Management Group. She will provide an overview of the environmental findings for the project.

Before we get going tonight, I would like to introduce Nate Hayward from Council District No. 14. Nate is the Capital Projects Director, and he would like to say some welcoming statements. Nate?

MR. HAYWARD: Thank you so much, Gary, and I hope everybody can hear me. I just want to thank so much everybody for attending tonight. Council Member, Kevin de Leon, is extremely committed to providing this crucial park space to the Boyle Heights and Arts District community. This will bring over 12 acres of open space, much needed in both of these communities with a variety of amenities from sports fields to dog parks, playgrounds, arts plaza, and, obviously, whatever access.

So we're very, very excited for this project. We hope everyone makes your voice heard. Please provide comments and questions. We've got a great presentation for you tonight and please stay engaged. Thank you, Gary.

MR. LAM: Okay. Thank you, Nate. Okay. Like, Nate said, we have a wonderful meeting tonight. Let's go ahead and start with our agenda.

Next slide, please. What we're going to do is we're going to go ahead and present a broad overview of the California Environmental Quality Act, Environmental Review Process, also known as CEQA.

Next, I will present the proposed project

called the Sixth Street Park Arts and River Connectivity Project, as better known as the PARC Project.

And, finally, Jan will review the findings from the Draft Environmental Impact Report or EIR. Once we are done, we will open it up to receive public comments.

As Miguel Luna stated, Spanish translation is available, and the meeting transcript will be posted online. Please indicate if you'd like to provide a brief comment following the presentation. Each speaker will be given one to two minutes to speak depending on a number of speakers.

Next slide, please. Well, before I proceed any further, let's go ahead and talk about the rules for tonight's meeting or the meeting norms.

First, only presenters will be on camera during the Project Overview portion.

Next, if you like to speak during the comment period, please use Chat to write your name to indicate you would like to provide a comment following the presentation. Each speaker will be given one to two minutes to speak depending on a numbers of speakers. Please provide us your full

name now on Chat to make sure we call on you. You will be unmuted when it is your turn to speak, and we will give you a 10-second prompt to finish your statement when your time is up. Please be aware we're going to have a clock on your screen, so keep an eye on that clock. All right.

Next slide, please. I'll go ahead and hand it over Jan at this point to go over the CEQA review process. Jan?

MS. REBSTOCK: Thanks, Gary. So, briefly, we started our California Environmental Quality Act Review Process in the spring of 2017, where we prepared an initial study outlining all the potential environmental impacts that could result from the proposed project. And we released that for public review and had a public meeting and shared that with you and asked for some feedback.

And then we went back and prepared a slew of technical studies, and those are now being presented in the Draft EIR, which is available for review right now. We released that on May 27th, and we are accepting comments on the technical documents through July 26th.

After we close the comment period, we'll look at all the comments that we've received, see if

any changes need to be made and address those comments, and you'll see that in a final EIR document, which we hope to release this fall or winter.

At that point, we will move forward with the certification process and bring it to the City Council for consideration. Back to you, Gary.

MR. LAM: Thank you, Jan. Okay.

Next slide, please. All right. So we are getting right into the project here. So, in this slide, we were showing you the location of the proposed PARC Project. Again, PARC stands for Park Arts and River Connectivity. The project is approximately 13 acres large and follows the alignment of the new Sixth Street Viaduct.

As you can see here, the western boundary of the park is at Mateo Street in the Arts District, and the eastern most boundary of the project is at the 101 Freeway in Boyle Heights. The park crosses Sante Fe Avenue, the LA River, Mission Road, Anderson Street and Clarence Street. Next slide please.

All right. So, in developing the PARC Project, what are our project objectives? First, we want to serve the open space and recreational needs

of the surrounding communities.

Next, we desire to connect and improve neighborhoods.

Third, we want our design to be sustainable and consistent with the City's plans and goals.

Fourth, we want to encourage active modes of transportation and public transit.

Fifth, we want to promote beneficial stormwater capture.

And, finally, we want to provide safe pedestrian and bicycle access to the river.

Next slide please. And here is our current Project Design. Now, keep in mind, this is a community driven design. What that means is that -- well, many of you in the audience will recall that we had a total of six large community meetings back in 2017 and 2018 along both sides of the river to receive your input as to what features you wanted to see in the park.

In the early stages of the conceptional design, we took polls, both online and in person, and received a lot of feedback. You voted on the features that were the most important, and we listened. The theme that the community selected is

called Canopy and Objects.

Canopy and Objects is basically a balance of active recreation, passive recreational space and plenty of shade trees. And, because the park is very linear, it has been divided into four segments to help with our presentation tonight here.

And you can see on the screen here the four different segments that I'm talking about. It's called the West Park, Arts Plaza, River Gateway and East Park. And we're going to go ahead and walk you through each of the sections right now.

Next slide, please. Okay. What we're going to do is we're going to start with the West Park. Now, West Park is bounded by Mateo Street on the west and Santa Fe Avenue on the east. In this section of the park, there will be a flexible play and performance lawn, a raingarden, seating areas, a large and small dog park, exercise equipment and general landscaping. West Park will also have the pedestrian ramp that touches down onto the park from Viaduct. And then, as you can see, the yellow square is the space that will have the public restroom building and a food vending building as well.

Next slide, please. Here, we are simply

showing you an aerial view of the West Park. Again, you can see how the ramp from the Viaduct provides access between the park and the bridge above.

Next slide, please. All right. We're going to make our way eastward now. We're still on the west side of the river, and this next area is called the Arts Plaza. This area of the park will feature a performance stage for events. There will be a concrete terrace seating for people to watch performances as well. This area is also the entrance for the River Gateway, which is the existing Sixth Street Tunnel. And just south of the Arts Plaza along Mesquite Street, we are planning to have a future mobility hub, which may include bike share stations and also electric vehicle charging stations.

Next slide, please. And next here we're just basically showing you the aerial view of the Arts Plaza. Okay. And then here's another view closeup of the Plaza, and here you can see the stage and these concrete seating areas.

Next slide, please. All right. So now we're going to cross the river and move over to the East Park. The East Park has the most of our active recreational space. It's going to feature U10 and

U8 synthetic turf field, two flexible performance lawns, which can basically be used for performances or recreational spaces or simply relaxing. And there's going to be picnic and grilling areas, an adult fitness equipment area, a children's splashpad, a dog park. We're going to have public restrooms along East Park as well. There's going to be a Recreational and Parks staff office building. There's going to be a flexible court that could be used both basketball and volleyball. There's going to be walking and jogging paths. And then there's going to be a space reserved for a future skate park and also a future children's playground area.

Okay. Next slide please. And here's simply a rendering looking towards Boyle Heights, and you see the oval in the front. That's the basketball court area. And you can see in gray, the oval in gray, kind of in the middle there. That's going to be the restroom building.

Next slide, please. And here's simply a rendering showing the synthetic turf field. Again, this is going to be a U8 and U10 turf field.

Next slide, please. And then, on this rendering here, this is showing the dog park, east of Clarence Street. You can see the dog park kind

of in the background there.

Next slide, please. And then, finally, the last segment of the project here is the River Gateway. This is just a concept at this stage, and it basically shows the potential of creating a landscape terrace along the river bank. Again, it's a concept only at this stage.

Next slide, please. Okay. So where we are at in terms of getting the project into construction? Well, the PARC Project, construction duration is going to be approximately 24 months, and it may be open to the public in phases, all right? And construction is anticipated to occur after the Viaduct is completed in 2022, and the park construction will last through 2024.

Okay. Next slide, please. Okay. Now, I would like to hand it over to Miguel to make another announcement about Spanish translation again. Miguel?

MR. LUNA:

SPANISH] Back to you, Gary.

MR. LAM: All right. Thanks, Miguel. All right. So, next, I'm going to go ahead and hand it over to Jan to discuss the Draft Environmental Impact Report Findings. Jan?

MS. REBSTOCK: Thanks, Gary. So, yes, we looked at a range of issues in the draft EIR. You can see those listed on the screen as part of the presentation, and I will step through a few of those in detail with you in a moment, but I would just like to be happy to report that we were able to address or avoid all of the environment impacts associated with the proposed project, either through using best management practices or applying mitigation measures or changing the project design or construction approaches to reduce those impacts. So, therefore, all impacts were found to be less and insignificant, which is great.

Okay. Next slide. Okay. So regarding aesthetics or visual resources, we are using some best management practices, such as using project lighting for events and recreational activities to be designed to Recreation and Park Department standards. We are also requiring construction lighting to be shielded and directed away from other land uses.

Regarding air quality, to control emissions from construction equipment and vehicles, we are requiring that Tier 4 engines be used and newer trucks as haul trucks and cleaner engines for

construction equipment. And fugitive dust controls and idling restrictions are required.

Related to biological resources, we do have some bats and nesting birds in the area, and they could be disturbed by light and noise from the project. So we are requiring preconstruction biological surveys before construction begins to understand where those populations might be and how to avoid them.

Next slide please. Okay. Related to cultural resources, we are requiring archaeological monitoring during excavation during the construction process, and we also are going to have Cultural Tribal Resources Sensitivity Training and some monitoring by a tribe in certain areas of the park during excavation.

Related to hazards and hazardous materials, the project construction will require removal of contaminated soils, and there's many different classes of waste on the site. Additional soil remediation may also be required during that process and site specific health and safety plans are going to be used. Related to population and housing, we found that the project will not construct new homes or businesses and that it is

designed to serve the local community with occasional regional events, so the project is not growth-inducing.

Next slide please. Okay. Regarding traffic. We do have several mitigation measures in place. We will reserve space on the site for a bike share hub, which Gary referred to earlier, and a mobility hub. And access to the future proposed Sixth Street Metro Station will be made available. There will be a designated rideshare pick-up and drop-off zones, and we are also requiring event parking and transit management plans for large events.

Okay. Regarding noise, a construction noise management plan will be required and a public liaison will be appointed to address concerns, including those related to noise during construction activities. Public notification of construction hours and activities will be provided and sound barriers will be used as needed.

Regarding water quality and hydrology, there is a public safety plan related to flooding, which shall be prepared and included, and it will include an evacuation plan and protocols for protecting [FROZEN SCREEN.]

MR. LUNA: Jan, this is Miguel. I think you're frozen. Jan, did you get that? Gary, you want to take this slide for now?

MR. LAM: Sure. Okay. So the purpose of this meeting tonight is really to have you guys, of course, hear the findings about the Environmental Impact Report, at least the summary findings, and also to have you guys provide your verbal comments for the meeting.

Okay. So we have a written comment card, which you guys can complete and submit. And, also, you guys can send email comments to Jan. Her email is up on this slide here. It's Jan.Green.Rebstock@lacity.org, and in the subject heading, please put Sixth Street PARC Project, along with your contact info and mailing address. And you can submit the comment card by letter by mail to the following address here:

Bureau of Engineering/ Department of Public Works

Attention: Dr. Jan Green Rebstock.

1149 S. Broadway, Suite 600

Los Angeles, California 90015

And very important to keep in mind the due date, okay? So the comments are due no later than

July 26, 2021, okay? Again, comments need to be submitted by July 26, 2021. Okay. And tonight we're also going to receive your public feedback here in this presentation meeting tonight as well.

So we'll go onto the next slide here. Do we have a next slide here? Okay. Did you want to go ahead and talk about Spanish translation again, Miguel?

MR. LUNA: Sure. Thank you.

MR. LAM: Okay.

MR. LUNA:

SPANISH] Back to you, Gary.

MR. LAM: Thank you, Miguel. Yeah, I see that Jan has joined us again.

Jan, I went ahead and talked about the public comment review period and the due date for receiving written public comments. And we kind of lost you, I think, prior to that slide. Did you have any further comment or presentation material to make prior to that slide where we asked for public comments?

MS. REBSTOCK: No, the information I was going to share is pretty much drawn out on the slide, so it's there for reference. And, yeah, please send us your comments. We're happy to take

them tonight. We're happy to take them by email later. You have until the 26th.

MR. LAM: Okay. I'll go ahead and hand it to you, Miguel, to see if what comments we have available tonight.

MR. LUNA: Gary, at this moment, we have a typed comment from Mr. Martin Torres, just asking a question of will Metro have a bike station, but, other than that, nobody, at this moment, has signed onto make public comments. Perhaps, if you want to wait a couple of minutes and see if people are thinking through, that might --

MR. LAM: Yes.

MR. LUNA: -- be good.

MR. LAM: Yeah, that's an excellent idea, Miguel. So we're good on time right now, so we will definitely pause -- well, we'll go ahead and wait a few minutes for comments to roll in.

MR. LUNA: Okay. It looks like we have Frank Gallo, and Frank, I will be permitting you to allow you to speak live, so give me one second to do that. So it's Frank, so --

FRANK GALLO: Can you hear me?

MR. LUNA: Yes, we can, Frank. Go ahead.

FRANK GALLO: The only question I had, you

know, in this design, are we still taking into consideration the future Sixth Street Stop in terms of on the west side of the flood control and on the south side of the Sixth Street Bridge?

MR. LUNA: So, Gary, and just if you can clarify that. What the process is today for these comments?

MR. LAM: Yes, so tonight we're listening to the public comment. We're going to take your comments back, and then issue a written response later on. Thank you for your comment, Frank.

FRANK GALLO: Thank you.

MR. LUNA: Thank you, Frank. We'll go ahead and wait a few more minutes for comments to come in.

MR. LUNA:

SPANISH] Kat, I see that you've made a comment on Chat. Would you like to articulate that live with us, Ms. Kat Halsey? Okay. So Ms. Halsey -- Gary, if you don't mind, she said she's on a phone and unable to make that comment, so would you like me to read it out loud so that it's states for the record?

MR. LAM: Sure, please go ahead and do so, Miguel.

MR. LUNA: Okay. So, Ms. Kat Halsey says

that, verbatim:

"This seems like a disappointing lack of green space in a heavily built up area, yet consideration for the river entrance has not even been drafted. When my progress on some natural space be undertaken?"

So that is her comment, and we've captured that on Chat, and we'll make that to submit as formal. Thank you so much, Ms. Halsey.

Martin Torres, would you like to make your comment live? Okay. Martin says he doesn't have a microphone, so I'll go ahead and read that publicly for the record. Martin Torres says:

"Does the City plan to, over time, turn the river into a usable park?"

And that's his comment for the record. Thank you so much, Martin, for participating.

Gary, in the meantime, I'm going to go ahead and, again, post the link to where people can find the Draft EIR and the project.

MR. LAM: Thank you.

MR. LUNA: Gary, at this moment, we don't have any additional comments from the public. I'll leave it up to you.

MR. LAM: Okay. Okay. Right now it's

7:09. Why don't we stay until at least 7:15. Is everybody okay with that? All right. I just want to make sure everybody can get in their comments if they could.

Miguel, do we need to remind them about using the Chat feature or anything, or is everybody able to use that okay?

MR. LUNA: Yeah, Chat is abled.

MR. LAM: Okay.

MR. LUNA: And, if you're interested in making a comment, even if it's a brief comment, you can type it in Chat. If you're shy of going onscreen, please type it, and I'll be happy to read it so that the public hears it. You know, this is a very important project for the community, so your input is highly appreciated and very much needed so don't be shy.

Again, if you don't want to articulate it, please feel free to type it in. I'd be happy to read it along with your name for the record, but I'm also happy to promote you as a panelist to be able to speak to all of us.

Gary, there is a question. Mr. John English mentioned that he got on late:

"Will this be available to review at a

later date?"

MR. LAM: Okay. So, yeah, I see the comment there. Okay. So the transcript is going to be available. Although the meeting is being recorded, it's only available for the internal staff to do transcription services only. So the recording is not going to be made public, but the transcription is going to be posted or the transcript is going to be posted. Okay. So I see -- okay, thank you, Jan. So there's a question here.

Oh, did you want to go ahead and read it, Miguel? I didn't want to overstep here.

MR. LUNA: No, not at all, Gary. That was a question from me to you. I was just --

MR. LAM: Okay. Yeah, so there's a question.

"Will the presentation be available online?"

And Jan just responded via the Chat "It will be available online."

MR. LUNA: There's also another question from Mr. English asking if this is the last meeting before the closing of the comment period, July 26th.

MR. LAM: Well, this is the only public meeting that we're having on this, but, again, we

are receiving all written comments by July 26th, so, please get those comments in by that date.

MR. LUNA: Okay. And then we -- Malissa, I'm going to read your question as a request of sorts. She says:

"Can we request a pickleball court?"

So Malissa Strong is asking, for her comment, is to have a pickleball court.

And we do have -- Veta Gashgai would like to make a public comment, so Veta, I'm going to go ahead. You'll get a prompt from me that will allow you to talk. So, and I will share my screen to have the two minutes, so if you start sharing yours. Go ahead, Veta. Veta, if you're unable to make your comment, there is a button that would allow you to speak, so if you could see that on your screen, that's the prompt. You need to accept that. I'm going to send you another prompt now, asking you to unmute. There we go.

VETA GASHGAI: Hello?

MR. LUNA: Yes, we can hear you. Go ahead.

VETA GASHGAI: Hello?

MR. LAM: Yes.

VETA GASHGAI: Hi, I don't know if you can

hear me, but I live close to the bridge, and I just -- you know, we have a lot of problems with the homeless crisis and also a lack of maintenance departments. For example, sanitation, we don't have street sweeping on our major streets, and our trashcans are constantly overflowing. We don't have sufficient city services.

And how are you guys are going to help us to keep it clean at the park? Because we already have a problem with things being maintained as it is.

MR. LAM: Okay. Thank you for that comment, Veta. Comment noted.

VETA GASHGAI: Hello?

MR. LAM: Hello, yes. Did you hear me? Yes, we noted your comment. Did you have further --

VETA GASHGAI: No.

MR. LAM: -- questions to ask, or any concerns?

VETA GASHGAI: No, sir. That's it. Thank you.

MR. LAM: Okay. Thank you.

MR. LUNA: Gary, we have a comment from Lori Atwater:

"Will I be able to provide" -- oh, Lori,

yes, I'm going to -- sorry -- I'm going to go ahead and give you talking permission, Lori. Look for a prompt on your computer.

LORI ATWATER: Can you hear me?

MR. LUNA: Yes, please go ahead.

LORI ATWATER: Hello. My name is Lori Atwater, and I live on Clarence Street and 1st, which is about four blocks from the site.

MR. LAM: Lori, please wait.

LORI ATWATER: Hello?

MR. LUNA: Hello, yes. I can hear you.

LORI ATWATER: So my question is that during the preliminary design phase, I raised the request that the EIR incorporate study of the surrounding homeless population and how the Sixth Street Bridge Project would impact that population. It's substantial.

And I was told at the time by a city engineer that incorporating homelessness or that that wasn't a component of the housing element. And so my question is: how will the impacts to the existing homeless population be mitigated during and after construction of the Sixth Street Bridge?

MR. LAM: Okay. Thank you for that comment, Lori. You still have 49 seconds. Did you

have any further comments?

LORI ATWATER: No, the concern is just that --

MR. LAM: Okay.

LORI ATWATER: -- the homeless would be under the bridge.

MR. LAM: Okay. Noted. Thank you.

LORI ATWATER: Thank you.

MR. LUNA: All right, Gary, we have Sol Marquez next who would like to make a comment, and so give me one second, and I will allow you to do that. Please look for a prompt on your computer. Sol, please go ahead.

SOL MARQUEZ: Awesome.

MR. LUNA: Thank you.

SOL MARQUEZ: I think it worked, right?

MR. LUNA: Yes, it did. We can hear you just fine. Please proceed.

SOL MARQUEZ: Awesome. Thank you so much. I also live in Boyle Heights, and, you know, there are concerns about homeless people, but also I would say that hopefully things can stay culturally appropriated as well. I did see the presentation that you made, and it was wonderful. It looked beautiful.

And I know that, you know, there's, like, a push to try to have a little Tokyo area renamed as the Arts District, right? It's, like, a new thing, but I would like to hopefully see some reference to, at least, you know, Little Tokyo, Japanese culture, especially on that side of the bridge and then closer to us.

You know, I'm not sure what they're calling Boyle Heights. Maybe a continuation of the Arts District, but, you know, the culture here is very Chicano, is very Mexican-American, very Latino, and hopefully there's some kind of, you know, cultural aspect to making sure that the area fits in with that, right?

It looked gorgeous, and I also would echo what Veta said regarding cleanliness, because, you know, we do have a lot of parks in Boyle Heights, like, Hollenbeck Park, which is another beautiful park, but maintenance is an issue.

And sometimes, you know, ourselves, the community, especially Veta and her project. She runs a project that's completely voluntary and sometimes it ends up being on our shoulders as residents of Boyle Heights.

So we hope that, you know, that can be

addressed and as well as, you know, just like safety. We don't want there to be cops called because a lot of issues do revolve around the cops and, especially, in Boyle Heights with police brutality. But, yeah, I hope that this stays within the community and the public, and it appeals to us. Thank you.

MR. LAM: Thank you for that comment, Sol.

MR. LUNA: We don't have anybody else in the queue at this point, Gary, but it's your call.

MR. LAM: Okay. Okay. Again, let's go ahead and remind everybody that this your opportunity to make a public comment as Miguel -- oh, I see someone is raising their hand.

MR. LUNA: Yeah, okay, great.

MR. LAM: Okay.

MR. LUNA: Malissa Strong, give me one second, and I'll give you -- allow you to speak.

MALISSA STRONG: Hi, everyone. Thank you very much for having this meeting today, and my name is Malissa Strong, and I'm actually the past president of the Boyle Heights Historical Society. And do I -- and was actually doing meetings about the Viaduct Project early on and was very pleased to be in the meeting when they decided to make it a

contest to get this incredibly dynamic project that's in progress right now.

I guess, my question is about -- it's really about equity, right? I mean, it's become in many ways this sort of east versus west side in terms of what the park will look like. And I'm the one who wrote about pickleball. I like pickleball.

And I know a lot of questions are about -- I live literally across the street from Hollenbeck Park and the homeless population, and the issues regarding that community are complicated and contentious, as many people know. And so I don't know if there is any easy answers about that, and for a city the size of Los Angeles, there aren't real answers about how that will be mitigated.

But, I guess, my bigger issue is that whatever we see in the end, that there is parity on both sides. My neighbor's dog is barking. I'm sorry. Parity about how the park is going to look in terms of programming, in terms of infrastructure, in terms of activity and that's actually my biggest concern.

But I am very pleased about the conduct and the construction of the bridge. I see it daily because I can -- you know, I can actually literally

walk from my home or drive by and see the construction progress, and it's great. And it's very commendable the efforts that have been made on the part of the organizations and the architects and the construction crews that are working on it.

And then, like, we'd like to see that continue on through programming and infrastructure after completion. Thank you very, very much, Staff and Council people for your attention to this.

MR. LAM: Thank you, Malissa. Comment noted. Thank you.

Okay. And just to remind everybody to either use the Chat function or raise your hand to provide a public comment. We're going to go ahead and make a last call for public comments. We'll give everyone another minute or two to try to get their comments in. Again, this is the last call for public comments.

Miguel, can you also go back to the slide where people can submit their written comments in by the 26th? I just want to -- thank you.

So, if anyone is shy or they don't -- they haven't come up with any comments yet, but feel that they're going to have some comments in the next few days, please send your comment into Jan. Again, you

do see the email in front of you on that slide. It's Jan.Green.Rebstock@lacity.org, or you can also submit a comment via mail, and the address is right there, is being highlighted right there with the pointer of the mouse.

Okay. Again, I do remind everybody to submit their comments by July 26th. Okay. So, you guys have ample opportunity to provide your public comment. Again, we'll make one last call one more time for public comment for tonight's meeting, presentation.

Miguel, are there any more comments coming in from the Chat right now?

MR. LUNA: Nope. The last comment we have here is from Malissa, thanking us again --

MR. LAM: Okay.

MR. LUNA: -- for having this session.

MR. LAM: Okay. I will give one more minute here. Again, this last minute is to provide comments for the public hearing. Okay. I do thank everybody for taking time from their busy evening tonight to attend our meeting.

So, again, please submit any comment you have by the 26th. I know I'm repeating myself, but please get those comments in either via email to Jan

in the email there, or submit via comment card by mail.

MR. LUNA: Gary, would you mind making another, just, last comment about, you know, how this information will be shared, the transcript again, just for folks who joined late?

MR. LAM: Yeah, so the meeting presentation is going to be posted online, and the transcript was also being posted as well. Did we post the website where the presentation and transcript will be? Is it on our viewing -- Jan, maybe you can chime in where everything is going to be. In the Chat? Okay. Posted it earlier in the Chat, okay.

MS. REBSTOCK: Yeah, we posted the links in the Chat, so --

MR. LAM: Thank you.

MS. REBSTOCK: -- you can go the BOE website and download the EIR to look at the full document. I recommend looking at the Executive Summary, which highlights all of the best management practices and mitigation measures. And you'll also find a copy of the presentation and the transcript when it becomes available. Give us a week or so for that.

MR. LAM: Thank you, Jan. All right, everybody, again, I thank you for attending this meeting, and the meeting is hereby adjourned.

(WHEREUPON, the meeting was concluded at 8:17 p.m.)

CERTIFICATE

I, Monica DeLong, do hereby certify that I reported all proceedings adduced in the foregoing matter and that the foregoing transcript pages constitutes a full, true and accurate record of said proceedings to the best of my ability.

I further certify that I am neither related to counsel or any party to the proceedings nor have any interest in the outcome of the proceedings.

IN WITNESS HEREOF, I have hereunto set my hand this 21st day of July, 2021.



Monica DeLong
WA CCR#3489

1

101 6:19
10-second 5:3
1149 15:22
12 3:7
13 6:14
14 2:3 2:24
1st 24:7

2

2017 5:12 7:18
2018 7:18
2021 2:3 16:1 16:2
2022 11:14
2024 11:15
24 11:11
26 16:1 16:2
26th 5:23 17:2 21:23 22:1 29:21 30:7 30:24
27th 5:21

4

4 12:24
49 24:25

6

6:30 2:4
600 15:22

7

7:09 20:1
7:15 20:1

8

8:17 32:5

9

90015 15:23

A

able 12:6 20:7 20:21 23:25
abled 20:8
accept 22:17
accepting 5:22
access 3:11 7:12 9:3 14:8
acres 3:7 6:14
across 28:9
Act 3:23 5:11
active 7:7 8:3 9:24
activities 12:17 14:18 14:19
activity 28:21
actually 27:21 27:23 28:21 28:25
additional 13:20 19:23
address 6:1 12:7 14:16 15:16 15:18 30:3
addressed 27:1
adjourned 32:3
adult 10:5
aerial 9:1 9:18
aesthetics 12:15
agenda 3:19
ahead 2:9 3:19 3:21 4:15 5:7 8:10 11:23 16:7 16:15 17:3 17:17 17:24 18:14 18:23 19:12 19:19 21:11 22:11 22:14 22:22 24:1 24:5 25:13 27:12 29:14
air 12:22
alignment 6:15
allow 17:21 22:11 22:15 25:11 27:18
already 23:9
am 2:15 2:18 28:23
amenities 3:9
ample 30:8
Anderson 6:21
Angeles 2:14 15:23 28:14
announcement 11:18
answers 28:13 28:15
anticipated 11:13
anybody 27:9
anyone 29:22
anything 20:6
appeals 27:6
applying 12:9
appointed 14:16
appreciated 20:16
approaches 12:11
appropriated 25:23
approximately 6:14 11:11
archaeological 13:11
architects 29:4
area 9:6 9:7 9:10 10:5 10:13 10:17 13:4 19:3

26:2 26:13
areas 8:17 9:21 10:4 13:15
aren't 28:14
articulate 18:18 20:18
arts 3:6 3:10 4:1 6:13 6:17 8:9 9:7 9:13 9:19 26:3 26:10
aspect 26:13
associated 12:8
attend 30:22
attending 3:3 32:2
attention 15:21 29:9
Atwater 23:24 24:4 24:6 24:7 24:10 24:12 25:2 25:5 25:8
audience 7:16
available 4:9 5:20 14:9 17:5 20:25 21:4 21:5 21:17 21:20 31:24
Avenue 6:20 8:15
avoid 12:7 13:9
aware 5:4
away 12:20
Awesome 25:14 25:19

B

background 11:1
balance 8:2
bank 11:6
barking 28:18
barriers 14:20
basically 8:2 9:18 10:2 11:5
basketball 10:10 10:17
bats 13:4
beautiful 25:25 26:18
become 28:4
becomes 31:24
begins 13:7
beneficial 7:9
best 12:9 12:16 31:21
better 4:2
bicycle 7:12
bigger 28:16
biggest 28:21
bike 9:14 14:6 17:8
biological 13:3 13:7
birds 13:4
blocks 24:8
BOE 31:18
boundary 6:16 6:18
bounded 8:14
Boyle 3:5 6:19 10:15 25:20 26:9 26:17 26:24 27:4 27:22
bridge 9:3 18:4 23:1 24:16 24:23 25:6 26:6 28:24
brief 4:11 20:11
briefly 5:10
bring 3:7 6:6
broad 3:21
Broadway 15:22
brutality 27:5
building 8:23 8:23 10:8 10:19
built 19:3
Bureau 2:15 15:19
Bureau's 2:19
businesses 13:25
busy 30:21
button 22:15

C

California 3:22 5:11 15:23
camera 4:18
Canopy 8:1 8:2
Capital 2:24
capture 7:10
captured 19:7
card 15:10 15:17 31:1
CEQA 3:24 5:8
certain 13:15
certification 6:6
changes 6:1
changing 12:10
charge 2:16
charging 9:15
Chat 4:21 5:1 18:18 19:8 20:6 20:8 20:12 21:19 29:13 30:13 31:13 31:14 31:16
Chicano 26:11
children's 10:5 10:13

chime 31:12
city 2:14 2:15 6:6 19:14 23:7 24:18 28:14
City's 7:5
Clarence 6:21 10:25 24:7
clarify 18:6
classes 13:20
clean 23:9
cleaner 12:25
cleanliness 26:16
clock 5:5 5:6
close 5:24 23:1
closer 26:7
closeup 9:20
closing 21:23
colleague 2:18
coming 30:12
commendable 29:3
comment 4:11 4:21 4:22 5:24 15:10 15:17 16:16 16:19 17:7 18:9 18:11 18:17 18:21 19:7 19:11 19:16 20:11 20:11 21:3 21:23 22:8 22:10 22:15 23:13 23:13 23:16 23:23 24:25 25:10 27:8 27:13 29:10 29:14 29:25 30:3 30:9 30:10 30:14 30:23 31:1 31:4
comments 3:14 4:7 5:22 5:25 6:2 15:8 15:12 15:25 16:1 16:17 16:21 16:25 17:4 17:10 17:18 18:7 18:10 18:14 19:23 20:3 22:1 22:2 25:1 29:15 29:17 29:18 29:20 29:23 29:24 30:7 30:12 30:20 30:25
committed 3:4
communities 3:8 7:1
community 3:6 7:15 7:17 7:25 14:1 20:15 26:21 27:6 28:11
complete 15:11
completed 11:14
completely 26:22
completion 29:8
complicated 28:11
component 24:20
computer 24:3 25:12
concept 11:4 11:7
conceptional 7:21
concern 25:2 28:22
concerns 14:16 23:19 25:21
concluded 32:4
concrete 9:9 9:21
conduct 28:23
connect 7:2
Connectivity 4:2 6:13
consideration 6:7 18:2 19:4
consistent 7:5
constantly 23:6
construct 13:25
construction 11:10 11:10 11:13 11:15 12:11 12:19 12:23 13:1 13:7 13:12 13:18 14:14 14:17 14:18 24:23 28:24 29:2 29:5
contact 15:16
contaminated 13:19
contentious 28:12
contest 28:1
continuation 26:9
continue 29:7
control 12:22 18:3
controls 13:1
cops 27:2 27:3
copy 31:23
Council 2:23 3:3 6:7 29:9
couple 17:11
course 15:6

court 10:9 10:17 22:6 22:8
creating 11:5
crews 29:5
crisis 23:3
cross 9:23
crosses 6:19
crucial 3:5
cultural 13:11 13:13 26:13
culturally 25:22
culture 26:5 26:10
current 7:14

D

daily 28:24
date 15:25 16:16 21:1 22:2
days 29:25
de 3:4
decided 27:25
definitely 17:17
delivering 2:16
Department 2:14 12:18 15:19
departments 23:4
depending 4:13 4:24
design 7:4 7:14 7:15 7:22 12:10 18:1 24:13
designated 14:10
designed 12:18 14:1
desire 7:2
detail 12:5
developing 6:23
Development 2:17
different 8:8 13:20
directed 12:20
Director 2:24
disappointing 19:2
discuss 11:24
District 2:23 3:6 6:17 26:3 26:10
disturbed 13:5
divided 8:5
document 6:3 31:20
documents 5:22
dog 3:9 8:18 10:6 10:24 10:25 28:18
done 4:6
download 31:19
Dr 2:18 15:21
draft 4:5 5:20 11:24 12:2 19:20
drafted 19:5
drawn 16:23
drive 29:1
driven 7:15
drop-off 14:11
due 15:24 15:25 16:16
duration 11:11
during 4:19 4:20 13:12 13:12 13:16 13:21 14:17 24:13 24:22
dust 13:1
dynamic 28:1

E

earlier 14:7 31:13
early 7:21 27:24
east 8:10 8:15 9:24 9:24 10:7 10:24 28:5
eastern 6:18
eastward 9:5
easy 28:13
echo 26:15
efforts 29:3
EIR 4:5 5:20 6:2 12:2 19:20 24:14 31:19
either 12:8 29:13 30:25
electric 9:15
element 24:20
else 27:9
email 15:12 15:12 17:1 30:1 30:25 31:1
emissions 12:23
encourage 7:7
engaged 3:16
engineer 24:19
Engineering 2:15 15:19
engines 12:24 12:25
English 20:24 21:22
entrance 9:11 19:4
environment

12:7
environmental 2:19 2:21 3:22 3:23 4:5 5:11 5:14 11:24 15:6
equipment 8:18 10:5 12:23 13:1
equity 28:4
especially 26:6 26:21 27:4
evacuation 14:24
evening 2:6 2:13 30:21
event 14:11
events 9:8 12:17 14:2 14:13
everybody 2:13 3:2 3:3 20:2 20:3 20:6 27:12 29:12 30:6 30:21 32:2
everyone 3:13 27:19 29:16
everything 31:12
example 23:4
excavation 13:12 13:16
excellent 17:15
excited 3:12
Executive 31:20
exercise 8:18
existing 9:12 24:22
extremely 3:4
eye 5:6

F

fall 6:3
Fe 6:20 8:15
feature 9:8 9:25 20:6
features 7:19 7:24
feedback 5:17 7:23 16:3
feel 20:19 29:23
field 10:1 10:21 10:22
fields 3:9
Fifth 7:9
final 6:2
finally 4:4 7:11 11:2
findings 2:21 4:4 11:25 15:6 15:7
fine 25:18
finish 5:3
First 4:18 6:24
fitness 10:5
fits 26:13
flexible 8:16 10:1 10:9
flood 18:3
flooding 14:22
folks 31:6
food 8:23
formal 19:9
forward 6:5
Fourth 7:7
Frank 17:20 17:20 17:22 17:23 17:24 17:25 18:11 18:12 18:13
free 20:19
Freeway 6:19
front 10:16 30:1
frozen 14:25 15:2
fugitive 13:1
full 4:25 31:19
function 29:13
future 9:14 10:12 10:13 14:8 18:2

G

Gallo 17:20 17:23 17:25 18:12
Gary 2:11 2:14 3:1 3:16 5:10 6:7 11:21 12:1 14:7 15:2 16:12 17:6 18:5 18:19 19:18 19:22 20:23 21:13 23:23 25:9 27:10 31:3
Gashgai 22:9 22:20 22:23 22:25 23:14 23:17 23:20
Gateway 8:9 9:11 11:4
general 8:19
getting 6:10 11:9
given 4:12 4:24
goals 7:6
gorgeous 26:15
gray 10:17 10:18
great 3:15 12:13 27:15 29:2
green 2:19 15:21 19:3
grilling 10:4
Group 2:20
growth-

inducing 14:3
guess 28:3 28:16
guys 15:5 15:8 15:11 15:12 23:8 30:8

H

Halsey 18:19 18:19 18:25 19:9
hand 5:8 11:17 11:23 17:3 27:14 29:13
happy 12:6 16:25 17:1 20:13 20:19 20:21
haul 12:25
haven't 29:23
having 21:25 27:20 30:17
Hayward 2:23 3:1
hazardous 13:17
hazards 13:17
heading 15:15
health 13:22
hear 3:2 15:6 17:23 22:21 23:1 23:15 24:4 24:11 25:17
heard 3:13
hearing 30:20
hears 20:14
heavily 19:3
Heights 3:6 6:19 10:15 25:20 26:9 26:17 26:24 27:4 27:22
HELD 2:2
Hello 22:20 22:23 23:14 23:15 24:6 24:10 24:11
help 8:6 23:8
hereby 32:3
here's 9:19 10:14 10:20
Hi 2:6 22:25 27:19
highlighted 30:4
highlights 31:21
highly 20:16
Historical 27:22
Hollenbeck 26:18 28:9
home 29:1
homeless 23:3 24:15 24:22 25:5 25:21 28:10
homelessness 24:19
homes 13:25
hope 3:2 3:13 6:3 26:25 27:5
hopefully 25:22 26:4 26:12
hours 14:19
housing 13:24 24:20
hub 9:14 14:7 14:8
hydrology 14:21

I

I'd 20:19
idea 17:15
idling 13:2
I'll 5:7 17:3 19:12 19:23 20:13 27:18
I'm 8:8 11:23 19:18 20:20 22:4 22:10 22:17 24:1 24:1 26:8 27:21 28:6 28:18 30:24
impact 4:5 11:25 15:7 24:16
impacts 5:14 12:7 12:11 12:12 24:21
important 7:24 15:24 20:15
improve 7:2
include 9:14 14:24
included 14:23
including 14:17
incorporate 24:14
incorporating 24:19
incredibly 28:1
indicate 4:10 4:22
info 15:16
information 2:8 2:10 11:20 16:11 16:22 18:16 31:5
infrastructure 28:20 29:7
initial 5:13
input 7:19 20:16
insignificant 12:13
interested

20:10
internal 21:5
introduce 2:23
issue 18:10 26:19 28:16
issues 12:2 27:3 28:10

J

Jan 2:18 4:4 5:8 5:9 6:8 11:24 11:25 15:1 15:2 15:12 15:21 16:14 16:15 21:10 21:19 29:25 30:25 31:11 32:1
Jan.Green.Rebstock@lacity.org 15:14 30:2
Japanese 26:5
jogging 10:11
John 20:23
joined 2:18 16:14 31:6
joining 2:7
July 2:3 5:23 16:1 16:2 21:23 22:1 30:7

K

Kat 18:17 18:19 18:25
Kevin 3:4
known 3:23 4:2

L

LA 6:20
lack 19:2 23:3
Lam 2:6 2:12 2:14 3:17 6:8 11:22 15:4 16:10 16:13 17:3 17:13 17:15 18:8 18:23 19:21 19:25 20:9 21:2 21:15 21:24 22:24 23:12 23:15 23:18 23:22 24:9 24:24 25:4 25:7 27:8 27:11 27:16 29:10 30:16 30:18 31:7 31:17 32:1
land 12:21
landscape 11:6
landscaping 8:19
large 6:14 7:17 8:18 14:12
last 11:3 11:15 21:22 29:15 29:17 30:9 30:14 30:19 31:4
late 20:24 31:6
later 15:25 17:2 18:11 21:1
Latino 26:11
lawn 8:17
lawns 10:2
least 15:7 20:1 26:5
leave 19:24
Leon 3:4
less 12:12
let's 3:19 4:15 27:11
letter 15:17
liaison 14:16
light 13:5
lighting 12:17 12:20
linear 8:5
link 19:19
links 31:15
listed 12:3
listened 7:25
listening 18:8
literally 28:9 28:25
little 26:2 26:5
live 17:21 18:18 19:11 23:1 24:7 25:20 28:9
local 14:1
location 6:11
Lori 23:24 23:25 24:2 24:4 24:6 24:6 24:9 24:10 24:12 24:25 25:2 25:5 25:8
Los 2:14 15:23 28:14
lost 16:18
lot 7:23 23:2 26:17 27:3 28:8
loud 18:22
Luna 2:8 2:10 4:8 11:20 15:1 16:9 16:11 17:6 17:14 17:19 17:24 18:5 18:13 18:16 18:25 19:22 20:8 20:10 21:13 21:21 22:3

22:21 23:23 24:5 24:11 25:9 25:15 25:17 27:9 27:15 27:17 30:14 30:17 31:3

M

mail 15:17 30:3 31:2

mailing 15:16

maintained 23:10

maintenance 23:3 26:19

major 23:5

Malissa 22:3 22:7 27:17 27:19 27:21 29:10 30:15

management 2:20 12:9 12:16 14:12 14:15 31:21

Manager 2:16

Marquez 25:10 25:14 25:16 25:19

Martin 17:7 19:10 19:11 19:13 19:17

Mateo 6:17 8:14

material 16:19

materials 13:18

may 5:21 9:14 11:12 13:21

maybe 26:9 31:12

mean 28:4

means 7:15

meantime 19:18

measures 12:10 14:5 31:22

meeting 2:1 2:7 3:18 4:9 4:16 4:16 5:16 15:5 15:9 16:4 21:4 21:22 21:25 27:20 27:25 30:10 30:22 31:7 32:3 32:3 32:4

meetings 7:17 27:23

Member 3:4

mentioned 20:24

Mesquite 9:13

Metro 14:9 17:8

Mexican-American 26:11

microphone 19:12

middle 10:18

Miguel 2:8 2:9 2:12 4:8 11:17 11:19 11:22 15:1 16:8 16:13 17:4 17:16 18:24 20:5 21:12 27:13 29:19 30:12

mind 7:14 15:24 18:20 31:3

minute 29:16 30:19 30:19

minutes 4:12 4:24 17:11 17:18 18:14 22:13

Mission 6:20

mitigated 24:22 28:15

mitigation 12:10 14:5 31:22

mobility 9:14 14:8

modes 7:7

moment 12:5 17:6 17:9 19:22

monitoring 13:12 13:15

months 11:11

mouse 30:5

move 6:5 9:23

myself 30:24

N

Nate 2:23 2:24 2:25 3:17 3:18

natural 19:5

neighborhoods 7:3

neighbor's 28:18

nesting 13:4

newer 12:25

nobody 17:9

noise 13:5 14:14 14:15 14:17

Nope 30:14

norms 4:17

noted 23:13 23:16 25:7 29:11

notification 14:18

O

objectives 6:24

Objects 8:1 8:2

obviously 3:10

occasional 14:2

occur 11:13
office 10:8
oh 21:11 23:25 27:14
okay 3:17 3:17 6:8 8:12 9:19 10:14 11:8 11:16 11:16 12:14 12:14 13:10 14:4 14:14 15:4 15:10 15:25 16:1 16:2 16:6 16:10 17:3 17:19 18:19 18:25 19:11 19:25 19:25 20:2 20:7 20:9 21:2 21:3 21:9 21:10 21:15 22:3 23:12 23:22 24:24 25:4 25:7 27:11 27:11 27:15 27:16 29:12 30:6 30:7 30:16 30:18 30:20 31:13 31:14
online 4:10 7:22 21:18 21:20 31:8
onscreen 20:13
onto 8:20 16:5 17:10
open 3:7 4:6 6:25 11:12
opportunity 27:13 30:8
organizations 29:4
ourselves 26:20
outlining 5:13
oval 10:16 10:18
overflowing 23:6
overstep 21:12
overview 2:20 3:22 4:19

P

p.m 2:4 32:5
panelist 20:21
PARC 4:2 6:12 6:12 6:23 11:10 15:15
parity 28:17 28:19
park 2:16 3:5 4:1 6:12 6:17 6:19 7:20 8:4 8:9 8:10 8:14 8:14 8:16 8:18 8:19 8:20 9:1 9:3 9:7 9:24 9:24 10:6 10:7 10:12 10:24 10:25 11:14 12:18 13:15 19:15 23:9 26:18 26:19 28:6 28:10 28:19
parking 14:12
parks 3:9 10:8 26:17
participating 19:17
passive 8:3
past 27:21
paths 10:11
pause 17:17
pedestrian 7:12 8:20
people 9:9 17:11 19:19 25:21 28:12 29:9 29:20
performance 8:17 9:8 10:1
performances 9:10 10:2
Perhaps 17:10
period 4:21 5:24 16:16 21:23
permission 24:2
permitting 17:20
person 2:2 7:22
phase 24:13
phases 11:12
phone 18:20
pickleball 22:6 22:8 28:7 28:7
pick-up 14:10
picnic 10:4
plan 14:15 14:22 14:24 19:14
planning 9:13
plans 7:5 13:22 14:12
play 8:16
playground 10:13
playgrounds 3:10
plaza 3:10 8:9 9:7 9:13 9:19 9:20
please 3:14 3:15 3:20 4:10 4:14 4:21 4:25 5:4 5:7 6:9 6:22 7:13

8:12 8:25 9:4 9:17 9:22 10:14 10:20 10:23 11:2 11:8 11:16 13:10 14:4 15:15 16:25 18:23 20:13 20:19 22:2 24:5 24:9 25:12 25:13 25:18 29:25 30:23 30:25

pleased 27:24 28:23

plenty 8:4

point 5:8 6:5 27:10

pointer 30:5

police 27:4

polls 7:22

population 13:23 24:15 24:16 24:22 28:10

populations 13:8

portion 4:19

post 19:19 31:10

posted 4:10 21:8 21:9 31:8 31:9 31:13 31:15

potential 5:14 11:5

practices 12:9 12:16 31:22

preconstruction 13:6

preliminary 24:13

prepared 5:13 5:18 14:23

present 3:21 3:25

presentation 3:15 4:11 4:23 8:6 12:4 16:4 16:19 21:17 25:23 30:11 31:8 31:10 31:23

presented 5:20

presenters 4:18

presenting 2:17

president 27:22

pretty 16:23

prior 16:18 16:20

problem 23:10

problems 23:2

proceed 2:8 4:15 25:18

process 3:23 5:9 5:12 6:6 13:13 13:22 18:6

programming 28:20 29:7

progress 19:5 28:2 29:2

project 2:16 2:17 2:21 3:13 3:25 4:2 4:3 4:19 5:15 6:10 6:12 6:13 6:18 6:24 6:24 7:14 11:3 11:9 11:10 12:8 12:10 12:16 13:6 13:18 13:24 14:2 15:15 19:20 20:15 24:16 26:21 26:22 27:24 28:1

Projects 2:24

promote 7:9 20:21

prompt 5:3 22:11 22:17 22:18 24:3 25:12

proposed 3:25 5:15 6:12 12:8 14:8

protecting 14:25

protocols 14:24

provide 2:8 2:20 3:14 4:11 4:22 4:25 7:11 15:8 23:25 29:14 30:8 30:19

provided 2:10 11:20 14:19 16:11 18:16

provides 9:2

providing 3:5

public 2:1 2:15 4:7 5:16 5:16 7:8 8:22 10:6 11:12 14:15 14:18 14:22 15:19 16:3 16:16 16:17 16:20 17:10 18:9 19:23 20:14 21:7 21:24 22:10 27:6 27:13 29:14 29:15 29:18 30:8 30:10 30:20

publicly 19:12

purpose 15:4

push 26:2

Q

quality

3:22 5:11 12:22 14:21
question 17:8 17:25 20:23 21:10 21:14 21:16 21:21 22:4 24:12 24:21 28:3
questions 3:14 23:18 28:8
queue 27:10

R

raingarden 8:17
raise 29:13
raised 24:13
raising 27:14
ramp 8:20 9:2
range 12:2
real 28:15
really 15:5 28:4
Rebstock 2:19 5:10 12:1 15:21 16:22 31:15 31:18
recall 7:16
receive 4:6 7:19 16:3
received 5:25 7:23
receiving 16:17 22:1
recommend 31:20
record 18:22 19:13 19:16 20:20
recorded 21:5
recording 21:6
recreation 8:3 12:18
recreational 6:25 8:3 9:25 10:3 10:8 12:17
reduce 12:11
reference 16:24 26:4
referred 14:7
regarding 12:14 12:22 14:4 14:14 14:21 26:16 28:11
regional 14:2
related 13:3 13:10 13:17 13:23 14:17 14:22
relaxing 10:3
release 6:3
released 5:15 5:21
remediation 13:21
remind 20:5 27:12 29:12 30:6
removal 13:19
renamed 26:2
rendering 10:15 10:21 10:24
repeating 30:24
report 4:5 11:25 12:6 15:7
request 22:4 22:6 24:14
require 13:18
required 13:2 13:21 14:15
requiring 12:19 12:24 13:6 13:11 14:11
reserve 14:6
reserved 10:12
residents 26:24
resources 12:15 13:3 13:11 13:14
responded 21:19
response 18:10
restrictions 13:2
restroom 8:23 10:19
restrooms 10:7
result 5:14
review 3:23 4:4 5:9 5:12 5:16 5:21 16:16 20:25
revolve 27:3
rideshare 14:10
river 4:1 6:13 6:20 7:12 7:18 8:9 9:6 9:11 9:23 11:3 11:6 19:4 19:15
Road 6:20
roll 17:18
rules 4:16
runs 26:22

S

safe 7:11
safety 13:22 14:22 27:2
sanitation 23:4
Santa 8:15
Sante 6:20
screen 5:5 8:7 12:3 14:25 22:12 22:16
seating

8:17 9:9 9:21
second 17:21 25:11 27:18
seconds 24:25
section 8:16
sections 8:11
seems 19:2
segment 11:3
segments 8:5 8:8
selected 7:25
send 15:12 16:25 22:18 29:25
Sensitivity 13:14
serve 6:25 14:1
services 21:6 23:7
session 30:17
several 14:5
shade 8:4
share 9:15 14:7 16:23 22:12
shared 5:16 31:5
sharing 22:13
she's 18:20
shielded 12:20
shoulders 26:23
showing 6:11 9:1 9:18 10:21 10:24
shows 11:5
shy 20:12 20:17 29:22
sides 7:18 28:18
signed 17:9
simply 8:25 10:3 10:15 10:20
sir 23:20
site 13:20 13:22 14:6 24:8
six 7:17
Sixth 4:1 6:15 9:12 14:9 15:15 18:2 18:4 24:15 24:23
size 28:14
skate 10:12
slew 5:18
slide 3:20 4:14 5:7 6:9 6:11 6:21 7:13 8:12 8:25 9:4 9:17 9:22 10:14 10:20 10:23 11:2 11:8 11:16 12:14 13:10 14:4 15:3 15:13 16:5 16:6 16:18 16:20 16:24 29:19 30:1
small 8:18
Society 27:22
soil 13:21
soils 13:19
Sol 25:9 25:13 25:14 25:16 25:19 27:8
someone 27:14
sorry 24:1 28:19
sort 28:5
sorts 22:5
sound 14:19
south 9:12 18:4
space 3:5 3:7 6:25 8:3 8:22 9:25 10:12 14:6 19:3 19:6
spaces 10:3
Spanish 2:9 2:11 4:8 11:18 11:21 16:7 16:12 18:17
speak 4:13 4:20 4:24 5:2 17:21 20:22 22:16 27:18
speaker 4:12 4:23
speakers 4:13 4:25
specific 13:22
splashpad 10:6
sports 3:9
spring 5:12
square 8:22
staff 10:8 21:5 29:8
stage 9:8 9:20 11:4 11:7
stages 7:21
standards 12:19
stands 6:12
start 3:19 8:13 22:13
started 5:11
stated 4:8
statement 5:4
statements 2:25
states 18:22
station 14:9 17:8
stations 9:15

9:16
stay 3:15 20:1 25:22
stays 27:5
step 12:4
Stop 18:2
stormwater 7:10
street 4:1 6:15 6:17 6:21 6:21 8:14 9:12 9:13 10:25 14:9 15:15 18:2 18:4 23:5 24:7 24:16 24:23 28:9
streets 23:5
Strong 22:7 27:17 27:19 27:21
studies 5:19
subject 15:14
submit 15:11 15:17 19:8 29:20 30:3 30:7 30:23 31:1
submitted 16:2
substantial 24:17
sufficient 23:7
Suite 15:22
summary 15:7 31:21
sure 5:1 15:4 16:9 18:23 20:3 26:8 26:13
surrounding 7:1 24:15
surveys 13:7
sustainable 7:5
sweeping 23:5
synthetic 10:1 10:21

T

taking 18:1 30:21
talk 4:15 16:7 22:12
talked 16:15
talking 8:8 24:2
technical 5:19 5:22
terms 11:9 18:2 28:6 28:20 28:20 28:21
terrace 9:9 11:6
thank 2:6 2:12 3:1 3:2 3:16 3:17 6:8 16:9 16:13 18:11 18:12 18:13 19:9 19:17 19:21 21:10 23:12 23:20 23:22 24:24 25:7 25:8 25:15 25:19 27:7 27:8 27:19 29:8 29:10 29:11 29:21 30:20 31:17 32:1 32:2
thanking 30:15
Thanks 5:10 11:22 12:1
theme 7:25
therefore 12:12
there's 10:4 10:7 10:9 10:10 10:11 13:19 21:10 21:15 21:21 26:1 26:12
they're 26:8 29:24
Third 7:4
Tier 12:24
today 18:6 27:20
Tokyo 26:2 26:5
tonight 2:7 2:17 2:22 3:3 3:15 3:19 8:6 15:5 16:2 16:4 17:1 17:5 18:8 30:22
tonight's 4:16 30:10
Torres 17:7 19:10 19:13
total 7:17
touches 8:20
towards 10:15
traffic 14:5
Training 13:14
transcript 4:9 21:3 21:9 31:5 31:9 31:11 31:23
transcription 21:6 21:8
transit 7:8 14:12
translation 2:9 4:8 11:18 16:7
transportation 7:8
trashcans 23:6
trees 8:4
Tribal 13:14

tribe 13:15
trucks 12:25 12:25
try 26:2 29:16
Tunnel 9:12
turf 10:1 10:21 10:22
turn 5:2 19:14
type 20:12 20:13 20:19
typed 17:7

U

U10 9:25 10:22
U8 10:1 10:22
unable 18:21 22:14
understand 13:8
undertaken 19:6
unmute 22:19
unmuted 5:2
usable 19:15

V

variety 3:8
vehicle 9:15
vehicles 12:23
vending 8:23
verbal 15:8
verbatim 19:1
versus 28:5
Veta 22:9 22:10 22:14 22:14 22:20 22:23 22:25 23:13 23:14 23:17 23:20 26:16 26:21
via 2:2 21:19 30:3 30:25 31:1
Viaduct 6:15 8:21 9:2 11:14 27:24
view 9:1 9:18 9:19
viewing 31:11
visual 12:15
voice 3:13
volleyball 10:10
voluntary 26:22
voted 7:23

W

wait 17:11 17:17 18:14 24:9
walk 8:10 29:1
walking 10:11
wasn't 24:20
waste 13:20
watch 9:9
water 14:21
ways 28:5
website 31:10 31:19
we'd 29:6
WEDNESDAY 2:3
week 31:24
welcoming 2:25
we'll 5:24 16:5 17:17 18:13 19:8 29:15 30:9
we're 3:12 3:20 3:21 5:5 8:10 8:12 8:13 9:4 9:5 9:17 9:23 10:6 16:3 16:25 17:1 17:16 18:8 18:9 21:25 29:14
west 8:9 8:13 8:14 8:15 8:19 9:1 9:6 18:3 28:5
western 6:16
we've 3:14 5:25 19:7
whatever 3:10 28:17
WHEREUPON 32:4
winter 6:4
wonderful 3:18 25:24
worked 25:16
working 29:5
Works 2:15 15:20
write 4:21
written 15:10 16:17 18:10 22:1 29:20
wrote 28:7

Y

yellow 8:21
yet 19:3 29:23
you'll 6:2 22:11 31:22
yours 22:13
you've 18:17

Z

zones 14:11
ZOOM 2:2

This page is intentionally blank

APPENDIX FINAL EIR-2: UPDATED CONSTRUCTION EMISSIONS MODELING

This page is intentionally blank

AMBIENT
AIR QUALITY & NOISE CONSULTING

75 Higuera Street, Suite 105
San Luis Obispo, CA 93401
805.226.2727
www.Ambient.Consulting

UPDATED CONSTRUCTION EMISSIONS MODELING ANALYSIS

Date: November 8, 2021

To: George Gorman, JD, Senior Environmental Planner
GPA Consulting, Inc.

From: Kurt Legleiter, Principal
AMBIENT Air Quality & Noise Consulting

Subject: Updated Construction Emissions Modeling Analysis for the City of Los Angeles Sixth Street Park, Arts, River & Connectivity Project

INTRODUCTION

This memorandum provides updated construction emissions modeling for the City of Los Angeles' Sixth Street Park, Arts, River & Connectivity (PARC) Project (Project). Emissions were quantified using the recently updated California Emissions Estimator Model (CalEEMod), version 2020.4.0, for criteria air pollutants and greenhouse gases (GHGs). The federal General Conformity Determination previously prepared for the proposed Project has also been updated and has been included in Appendix A. Emissions modeling assumptions and results have been included in Appendix B.

METHODOLOGY

Short-term emissions associated with construction activities are largely dependent on the type of development proposed, area of ground disturbance, amount of material to be imported and exported, equipment required, and construction schedules. Construction emissions of criteria air pollutants were calculated using the recently updated California Emissions Estimator Model (CalEEMod), version 2020.4.0 computer program. The newly updated emissions model includes updated equipment usage rates and emission factors for off-road equipment and on-road vehicles. In addition, the previously modeled construction schedule, which reflected an estimated start year of 2019, was updated to reflect a construction start year of 2022. Modeling was conducted for the proposed Project based on estimated material to be imported and exported, off-road equipment usage, and construction schedules provided by the project engineers. To be conservative, exported material was assumed to be hauled out of state to the La Paz County landfill in La Paz, Arizona, with an in-basin haul distance of 210 miles/trip. Other construction modeling assumptions, including mobile-source emission factors and usage rates, were based on default parameters contained in the model for Los Angeles County. Mitigated construction emissions included the application of dust control measures in compliance with South Coast Air Quality Management District (SCAQMD) Rule 403, and use of Tier 4 off-road equipment and 2010 and newer haul trucks. It is important to note that when compared to the previous modeling assessment, the combination of updated emissions data contained in the updated CalEEMod model along with revisions to the construction start year would result in overall reductions in off-road equipment emissions. Emissions modeling assumptions and output files are provided in Appendix B.

CONSTRUCTION-GENERATED EMISSIONS WITHOUT MITIGATION

As previously noted, construction-generated emissions were quantified using the CalEEMod, version 2020.4.0 computer program based on the estimated amount of material to be imported and exported, off-road equipment usage, and construction schedules provided by the project engineers. Other construction modeling assumptions, including mobile-source emission factors and usage rates, were based on default parameters contained in the model for Los Angeles County. Construction-generated emissions without mitigation are summarized in Table 1.

Table 1
Construction Emissions without Mitigation

Construction Activity	Emissions (lbs/day)[1,3]					
	VOC	NO_X	CO	SO_X	PM_{10}	$PM_{2.5}$
Asphalt Demolition	2.8	25.4	29.8	0.0	1.6	1.2
Site Preparation & Material Export	1.9	35.6	13.8	0.0	10.4	4.9
Site Preparation & Material Import	2.6	35.9	26.0	0.1	9.6	5.0
Grading & Excavation	2.9	28.3	32.0	0.0	7.3	2.1
Park & Infrastructure Construction	3.1	21.4	28.9	0.1	5.5	1.8
Paving	2.8	17.6	19.4	0.0	1.2	0.8
Utility Installation	1.3	12.8	14.1	0.0	1.0	0.7
Building Construction	2.8	12.9	33.2	0.1	6.0	2.0
In-River Terracing	3.8	40.3	41.9	0.1	3.6	2.0
Maximum Daily Emissions[2]:	8.3	110.8	81.6	0.1	23.6	11.9
SCAQMD Daily Significance Thresholds:	75	100	550	150	150	55
Exceeds Daily Significance Thresholds?	No	**Yes**	No	No	No	No

1. *Emissions were quantified using the CalEEMod, v2020.4.0, computer program. Includes onsite and offsite sources. Does not include reductions in fugitive dust associated with compliance with SCAQMD's Rule 403. VOC and ROG emissions were considered equivalent. Totals may not sum due to rounding.*
2. *Maximum daily emissions assumes site preparation, material import and export, and in-river terracing could potentially occur simultaneously on any given day.*
3. *Includes EMFAC Off-Model Adjustment Factors to account for SAFE Vehicle Rule Part One.*

lbs/day = pounds per day; VOC = volatile organic compound; NO_X = oxides of nitrogen; CO = carbon monoxide; SO_X = sulfur oxides; PM_{10} = respirable particulate matter (10 micrometers or less); $PM_{2.5}$ = fine particulate matter (2.5 micrometers or less)
Refer to Appendix B for emissions modeling assumptions and results.

As noted in Table 1, construction of the proposed Project would generate maximum-daily emissions of approximately 8.3 lbs/day of VOCs, 110.8 lbs/day of NO_X, 81.6 lbs/day of CO, 0.1 lbs/day of SO_X, 23.6 lbs/day of PM_{10}, and 11.9 lbs/day of $PM_{2.5}$. These updated emissions estimates are slightly lower than those identified in the previously prepared air quality assessment due largely to changes in off-road and on-road usage data/emission factors contained in the updated CalEEMod emissions model and changes to the construction start year. Nonetheless, as depicted in Table 1 and consistent with the findings in the previously prepared air quality assessment, construction-generated emissions of NO_x would exceed SCAQMD's daily significance thresholds. This impact would be considered potentially significant impact.

CONSTRUCTION-GENERATED EMISSIONS WITH MITIGATION

The previously prepared air quality emissions analysis included numerous mitigation measures for the control of construction generated emissions from on-site (e.g., off-road equipment, fugitive dust) and off-site (e.g., haul trucks) emissions sources. Updated emissions estimates, with implementation of the proposed mitigation measures are summarized in Table 2. As indicated, with implementation of proposed mitigation measures, maximum-daily construction emissions would be reduced to approximately 2.8 lbs/day of VOCs, 45.1 lbs/day of NO_X, 89.1 lbs/day of CO, 0.2 lbs/day of SO_X, 11.2 lbs/day of PM_{10}, and 4.5 lbs/day of $PM_{2.5}$. With mitigation, construction-generated emissions would not exceed SCAQMD's daily significance thresholds and would be considered to have a less-than-significant impact.

Table 2
Construction Emissions with Mitigation

Construction Activity	Emissions (lbs/day)[1,3]					
	VOC	NO_X	CO	SO_X	PM_{10}	$PM_{2.5}$
Asphalt Demolition	0.9	5.7	29.9	0.0	0.5	0.2
Site Preparation & Material Export	0.8	24.2	14.2	0.1	5.8	2.3
Site Preparation & Material Import	0.9	14.5	27.0	0.1	4.4	1.9
Grading & Excavation	0.7	3.2	33.6	0.0	3.1	0.4
Park & Infrastructure Construction	1.5	3.8	34.5	0.1	3.6	0.9
Paving	1.9	3.5	25.0	0.0	0.4	0.1
Utility Installation	0.3	1.3	14.5	0.0	0.2	0.1
Building Construction	2.2	6.1	37.5	0.1	5.7	1.6
In-River Terracing	1.1	6.4	47.8	0.1	0.9	0.3
Maximum Daily Emissions[2]:	2.8	45.1	89.1	0.2	11.2	4.5
SCAQMD Significance Thresholds:	75	100	550	150	150	55
Exceeds Thresholds?	No	No	No	No	No	No

1. *Emissions were quantified using the CalEEMod, v2020.4.0, computer program. Includes the use of off-road equipment meeting Tier 4 emissions standards and compliance with SCAQMD's Rule 403. VOC and ROG emissions were considered equivalent. Totals may not sum due to rounding.*
2. *Maximum daily emissions assumes some activities, including site preparation, material import and export, and in-river terracing could potentially occur simultaneously on any given day.*
3. *Includes EMFAC Off-Model Adjuatment Factors to account for SAFE Vehicle Rule Part One.*

lbs/day = pounds per day; VOC = volatile organic compound; NO_X = oxides of nitrogen; CO = carbon monoxide; SO_X = sulfur oxides; PM_{10} = respirable particulate matter (10 micrometers or less); $PM_{2.5}$ = fine particulate matter (2.5 micrometers or less)
Refer to Appendix B for emissions modeling assumptions and results.

LOCALIZED CONSTRUCTION-GENERATED EMISSIONS FROM ON-SITE SOURCES

Construction projects can result in short-term increases of TACs, as well as emissions of airborne fugitive dust. The SCAQMD has developed localized significance thresholds (LSTs) for the evaluation of short-term localized air quality impacts. The LSTs are based on CAAQS, which have been established to provide a margin of safety regarding the protection of public health and welfare.

Updated construction emissions from on-site sources in comparison to SCAQMD's LSTs are summarized in Table 3. It is important to note that the previously prepared emission analysis assumed that some portions of

the approved *Sixth Street Viaduct Improvement Project* would be under construction during construction of the proposed Project. Construction of the *Sixth Street Viaduct Improvement Project* has since been completed and, therefore, has been removed from this analysis. As noted in Table 3, on-site construction emissions associated with the Proposed project would total approximately 1.3 lbs/day of ROG, 5.9 lbs/day of NO_X, 75.7 lbs/day of CO, 5.2 lbs/day of PM_{10}, and 2.7 lbs/day of $PM_{2.5}$. Project-generated on-site construction emissions would not exceed SCAQMD corresponding LSTs. This impact would be considered less than significant.

Table 3
On-Site Construction Emissions

Construction Activity	Emissions (lbs/day)[1]					
	VOC	NO_X	CO	SO_X	PM_{10}	$PM_{2.5}$
Asphalt Demolition	0.8	5.2	28.9	0.0	0.2	0.2
Site Preparation & Material Export	0.1	0.8	8.5	0.0	2.6	1.3
Site Preparation & Material Import	0.4	1.8	22.6	0.0	2.6	1.3
Grading & Excavation	0.5	2.3	32.2	0.0	2.6	0.2
Park & Infrastructure Construction	0.6	2.5	25.7	0.0	0.6	0.1
Paving	1.8	2.1	23.9	0.0	0.0	0.0
Utility Installation	0.2	1.0	13.9	0.0	0.0	0.0
Building Construction	0.7	4.4	21.2	0.0	0.2	0.2
In-River Terracing	0.8	3.4	44.6	0.1	0.0	0.0
Maximum PARC Construction Emissions[2]:	1.3	5.9	75.7	0.1	5.2	2.7
SCAQMD Localized Significance Thresholds[3]:	None	108	827	None	43	10
PARC Project Construction Emissions Exceeds Thresholds?	-	No	No	-	No	No

1. *Emissions were quantified using the CalEEMod, v2020.4.0 computer program. Includes use of Tier 4 heavy-duty off-road equipment and implementation of dust control measures in compliance with SCAQMD Rule 403. Totals may not sum due to rounding. Includes EMFAC Off-Model Adjuatment Factors to account for SAFE Vehicle Rule Part One.*
2. *Maximum daily emissions assume some activities, such as material import and export, and in-river terracing could potentially occur simultaneously on any given day.*
3. *LSTs are based on a two-acre site with sensitive receptors located at 100 meters for PM_{10} and $PM_{2.5}$ and 25 meters for NO_X and CO.*

lbs/day = pounds per day; VOC = volatile organic compound; NO_X = oxides of nitrogen; CO = carbon monoxide; SO_X = sulfur oxides; PM_{10} = respirable particulate matter (10 micrometers or less); $PM_{2.5}$ = fine particulate matter (2.5 micrometers or less)
Refer to Appendix B for emissions modeling assumptions and results.

SHORT-TERM GREENHOUSE GAS EMISSIONS

Short-term annual GHG emissions for the proposed Project are summarized in Table 4. Based on the conservative assumption that in-river terracing could potentially occur during the initial year of construction, the highest annual emissions of GHGs associated with construction of the proposed Project would total approximately 1,267 $MTCO_2e$. In total, construction activities would generate approximately 1,786 $MTCO_2e$. There would also be a small amount of GHG emissions from waste generated during construction; however, this amount is speculative. Construction emissions, when amortized over the life of the project, defined as 30 years, would average approximately 60 $MTCO_2e$/yr. Amortized construction-generated GHG emissions were included in the operational GHG emissions inventory for evaluation of project-generated GHG emissions in comparison to GHG significance thresholds.

75 Higuera Street, Suite 105
San Luis Obispo, CA 93401
805.226.2727
www.Ambient.Consulting

Table 4
Short-Term Construction-Generated GHG Emissions

Year	Total GHG Emissions ($MTCO_2e$)[1,2]
Construction Year 1	1,267
Construction Year 2	175
Construction Year 3	344
Total:	1,786
Amortized Emissions:	60

1. Based on CalEEMod computer modeling. Amortized emissions assume an average project life of 30 years. Refer to Appendix B for modeling results and assumptions.
2. Includes EMFAC Off-Model Adjustment Factors to account for SAFE Vehicle Rule Part One and the Final SAFE Rule.
$MTCO_2e$ = Metric tons of carbon dioxide equivalent
Refer to Appendix B for emissions modeling assumptions and results.

LONG-TERM GREENHOUSE GAS EMISSIONS

Estimated long-term operational GHG emissions were updated to reflect the inclusion of the updated amortized construction GHG emissions noted in Table 4. Updated long-term operational GHG emissions are summarized in Table 5. As noted, operational GHG emissions would total approximately 497 $MTCO_2e$/year during the initial year of operation and 467 $MTCO_2e$/year in year 2030. In comparison to BAU conditions (without GHG-reduction measures) the proposed Project would result in GHG reductions of approximately 8.6 percent for opening year conditions and approximately 9.4 percent for future year 2030 conditions. A majority of the GHG reductions would be associated with anticipated reductions in onsite electricity consumption and projected reductions in vehicle emission standards.

In comparison to the emissions generated by the proposed Project, the industrial land uses that were removed would have generated substantially higher GHG emissions totaling approximately 2,411 $MTCO_2e$ for opening year conditions and approximately 1,945 $MTCO_2e$ for future year 2030 conditions. Taking into account these removed GHG emissions and with the inclusion of amortized construction-generated GHG emissions, the proposed Project would result in overall net reductions of approximately -1,855 $MTCO_2e$ in the opening year and -1,419 $MTCO_2e$ in 2030. The proposed Project would not generate GHG emissions that would result in a net increase in GHG emissions. This impact is considered less than significant.

75 Higuera Street, Suite 105
San Luis Obispo, CA 93401
805.226.2727
www.Ambient.Consulting

Table 5
Summary of Annual Operational GHG Emissions

Land Use/Event (Capacity)	Emissions ($MTCO_2e$)[1]	
	Opening Year	Year 2030
Special Events (1,000)[2]	44	44
Special Events (2,000)[2]	96	96
Special Event (3,250)[2]	7	7
Special Events (5,000)[2]	6	6
Soccer Fields	156	151
Park Uses & Buildings	188	163
Total:	497	467
Business-As-Usual[4]:	544	510
Reduction Compared to BAU:	-47 (-8.6%)	-44 (-9.4%)
Total with Amortized Construction Emissions[3]:	557	527
Less Industrial Uses Removed[5]:	-2,411	-1,945
Net Change Compared to Industrial Uses Removed:	-1.854 (-78%)	-1,418 (-74%)

1. *Totals may not sum due to rounding. Emissions were quantified using the CalEEMod computer program based on trip-generation rates derived from the traffic analysis prepared for this project. Refer to Appendix B for emissions modeling assumptions and results. Project emissions include compliance with current building standards, including use of low-flow water fixtures, use of water-efficient irrigation systems, and improved neighborhood connectivity. To be conservative, opening year is conservatively based on year 2021 conditions.*
2. *Assumes 24 days/year for events with a capacity of 1,000 attendees, 26 days/year for events with a capacity of 2,000 attendees, 2 days/year for events with a capacity of 3,250 attendees,1 day/year for events with a capacity of 5,000 attendees.*
3. *Construction-generated emissions were amortized over an estimated 30-year project life.*
4. *Business-as-usual excludes compliance with current building standards, including use of low-flow water fixtures, use of water-efficient irrigation systems, and improved neighborhood connectivity.*
5. *Existing industrial uses assumes 223,900 square feet of industrial uses. Vehicle trip-generation rates were derived from the traffic analysis prepared for this project. Excludes stationary-source and off-road equipment emissions.*

$MTCO_2e$ = Metric tons of carbon dioxide equivalent
Refer to Appendix B for emissions modeling assumptions and results.

APPENDIX A

General Conformity Determination

GENERAL CONFORMITY REGULATORY OVERVIEW

Title 40 of the Code of Federal Regulations, Part 93, requires that the federal government not engage, support, or provide financial assistance for licensing, permitting, or approving any activity not conforming to an approved CAA implementation plan. Title I, section 176(c)(1), of the CAA defines conformity as the upholding of "an implementation plan's purpose of eliminating or reducing the severity and number of violations of the NAAQS and achieving attainment of such standards." Accordingly, proposed Federal actions should not, through additional air pollutant emissions:

- cause or contribute to new violations of any NAAQS in any area;
- increase the frequency or severity of any existing violation of any NAAQS; or
- delay timely attainment of any NAAQS or interim emission reductions.

The General Conformity regulations take into account air pollutant emissions associated with actions that are federally funded, licensed, permitted, or approved. These regulations ensure that emissions associated with federal actions do not contribute to air quality degradation, thus preventing the achievement of state and federal air quality goals. In short, General Conformity refers to the process of evaluating plans, programs, and projects to determine and demonstrate that they meet the requirements of the CAA and applicable SIP. In general, the General Conformity regulations divide the air conformity process into two distinct areas: (1) Applicability Analysis, and (2) Conformity Determination. Federal agencies must initially assess if an action is subject to the Conformity Rule (Applicability Analysis) and then, if applicable, whether the action conforms to an applicable implementation plan (Conformity Determination).

On March 24, 2010, the U.S. EPA revised the General Conformity regulations. These revisions improved the process federal entities use to demonstrate that their actions will not contribute to a NAAQS violation, provides tools to encourage better communication and air quality planning between states and federal agencies, and encourages both the federal agencies and the states to take early actions to ensure projects will conform to the appropriate state, tribal, or federal implementation plans for attaining or maintaining the NAAQS. The following is a summary of the revisions made to the Conformity regulations (U.S.EPA 2010).[1]

- Allows federal facilities expecting future expansion or modifications to negotiate a facility-wide emission budget with applicable state air quality agencies. Actions taken that do not exceed these budgets would be deemed to conform to the SIP and would not need a conformity determination.
- Incorporates an early emission reduction credit program for all agencies that follow the Airport Early Emission Reduction guidance developed jointly by EPA and the Federal Aviation Administration. This program encourages emission reduction actions on federal installations by providing emission reduction credits that can be used to demonstrate conformity for subsequent actions on the facility.
- Allows emissions of one precursor pollutant to be offset by the reduction of emissions of another precursor pollutant. For example, both oxides of nitrogen and volatile organic compounds are ozone precursors – they are emitted and then react in the atmosphere to form ground-level ozone. In an area that does not meet EPA's ground-level ozone standard, reductions in nitrogen oxide emissions could be offset by reductions of volatile organic compounds.
- Allows alternative schedules for mitigating emission increases where state air quality agencies can accommodate temporary emission increases in exchange for long-term or permanent emission reductions.
- Removes requirements for federal agencies to conduct conformity determinations for "regionally significant" actions. Such actions have emissions greater than 10 percent of the emissions inventory

[1] United States Environmental Protection Agency (U.S.EPA). Accessed: June 24, 2010. General Conformity, Regulatory Actions, Final revisions to the General Conformity Regulations. Fact Sheet. Available at: url: http://www.epa.gov/air/genconform/regs.html

for a nonattainment area. These analyses have been conducted for 16 years and have never shown an action to interfere with attainment or maintenance of a NAAQS.
- Lists categories of actions that federal agencies can presume to conform. The final rule also allows states to establish "presumed to conform" lists for actions in their state.

GENERAL CONFORMITY *DE MINIMIS* EMISSION LEVELS

When assessing the applicability of a proposed Federal action to General Conformity requirements, General Conformity requirements would be deemed to apply to a Proposed Federal action when the total of direct and indirect emissions caused by the Federal action would equal or exceed the *de minimis* emission levels of criteria pollutants within corresponding nonattainment or maintenance areas. General Conformity *de minimis* emission levels, expressed in tons per year (TPY), are summarized in Table A-1. If the federal action will cause emissions that equal or exceed the *de minimis* emission levels in any nonattainment or maintenance area and the action is not otherwise exempt, "presumed to conform," or included in the existing emissions budget of the applicable implementation plan for attaining or maintaining the NAAQS, the agency must conduct a conformity determination before implementation of the proposed Federal action. In such instances, compliance with the General Conformity Rule can be demonstrated in one or more of the following ways, which must be completed prior to initiation of construction:

- By reducing emissions to below the General Conformity *de minimis* emission levels;
- By showing that the emissions are included in the area's emission budget for the state implementation plan (SIP);
- By demonstrating that the state agrees to include the emission increases in the area's SIP without exceeding emission budgets;
- By offsetting the project's emissions in each year that the General Conformity de minimis threshold values are exceeded;
- By an air quality modeling analysis demonstrating the project would not cause or exacerbate a national ambient air quality standard (NAAQS)

EXEMPTIONS FROM GENERAL CONFORMITY REQUIREMENTS

In accordance with General Conformity regulations, the following actions are exempt:

- Actions where the total of direct and indirect emissions are below the specified emissions levels
- Actions which would result in no emissions increase or an increase in emissions that is clearly de minimis
- Actions where the emissions are not reasonably foreseeable, such as the following:
  - Initial Outer Continental Shelf lease sales which are made on a broad scale and are followed by exploration and development plans on a project level
  - Electric power marketing activities that involve the acquisition, sale and transmission of electric energy
- Actions which implement a decision to conduct or carry out a conforming program such as prescribed burning actions which are consistent with a conforming land management plan.
- Actions which include major or minor new or modified stationary sources requiring a permit under the New Source Review program or the prevention of significant deterioration program.
- Actions in response to emergencies or natural disasters such as hurricanes, earthquakes, etc., which are commenced on the order of hours or days after the emergency or disaster and, if applicable, which meet the requirements for Federal actions which are part of a continuing response
- Actions which include research, investigations, studies, demonstrations, or training (unless otherwise exempted) where no environmental detriment is incurred and/or, the particular action

furthers air quality research, as determined by the State agency primarily responsible for the applicable SIP

- Actions which include alteration and additions of existing structures as specifically required by new or existing applicable environmental legislation or environmental regulations (e.g., hush houses for aircraft engines and scrubbers for air emissions)
- Actions which include direct emissions from remedial and removal actions carried out under CERCLA (and associated regulations to the extent such emissions either comply with the substantive requirements of the PSD/NSR permitting program or are exempted from other environmental regulation under the provisions of CERCLA and applicable regulations issued under CERCLA.)

APPLICABILITY ANALYSIS

The first step in a general conformity evaluation is an analysis of whether the General Conformity requirements apply to a Federal action proposed to be taken in a nonattainment or a maintenance area. Unless exempted by the regulations or otherwise presumed to conform, a Federal action requires a general conformity determination for each pollutant where the total of direct and indirect emissions caused by the Federal action would equal or exceed an annual *de minimis* emission level for the criteria air pollutants identified within corresponding nonattainment or maintenance areas. The following provides an analysis of General Conformity requirements applicable to the proposed Project.

Federal Attainment Status

As noted in Table A-1, the SCAB is designated extreme nonattainment for the federal ozone standards and serious nonattainment for the federal $PM_{2.5}$ standard. The SCAB is designated maintenance for federal PM_{10} and CO standards. The relevant *de minimis* levels for the South Coast Air Basin are shown below in Table A-2.

Emissions Analysis

Methodology

Construction

Construction emissions were calculated using the California Emissions Estimator Model (CalEEMod), version 2020.40 computer program. Modeling was conducted for the proposed Project based on estimated material to be imported and exported, off-road equipment usage, and construction schedules provided by the project engineers. Other construction modeling assumptions, including mobile-source emission factors and usage rates, were based on default parameters contained in the model for Los Angeles County. Emissions were quantified for both direct and indirect emission sources using the most current methodologies and techniques available. Emissions modeling assumptions and output files are provided in Appendix B.

Long-term Operation

Long-term operational emissions of criteria air pollutants were calculated using the CalEEMod, version 2016.3.2, computer program. Modeling was conducted based on the estimated building square footage to be constructed and vehicle trip-generation rates identified in the traffic analysis prepared for this project. Project and site enhancements that would contribute to reductions in mobile-source emissions were also accounted for in the analysis, based on methodologies contained in CAPCOA's *Quantifying Greenhouse Gas Mitigation Measures* and the default emission reductions identified in CalEEMod. These measures included reductions associated with providing increased diversity (LUT-3), transit accessibility within 0.5 miles of the project site (LUT-5), and improvements to the existing pedestrian network (SDT-1). Increased exposure of sensitive land uses to localized pollutant concentrations were qualitatively assessed. Emissions were quantified for both

direct and indirect emission sources using the most current methodologies and techniques available. Emissions modeling files are provided in Appendix B.

Table A-1
Federal General Conformity *de minimis* Levels

Pollutant	Emission Levels (tons per year)
Nonattainment Areas (NAAs)	
Ozone (VOC's or NO_X)	
Serious NAAs	50
Severe NAAs	25
Extreme NAAs	10
Other Ozone NAA's outside an ozone transport region	100
Other Ozone NAA's inside an ozone transport region	
VOC	50
NO_X	100
CO: All NAAs	100
SO_2 and NO_2: All NAAs	100
PM_{10}	
Moderate NAAs	100
Serious NAAs	70
$PM_{2.5}$	
Moderate NAAs	100
Serious NAAs	70
Maintenance Areas (MAs)	
Ozone (NO_X), SO_2 or NO_2: All MAs	100
Ozone (VOCs):	
MAs inside an ozone transport region	50
MAs outside an ozone transport region	100
CO: All MAs	100
PM_{10} (All MAs):	100
Pb (All MAs):	25

VOC = volatile organic compound; NO_X = oxides of nitrogen; CO = carbon monoxide; SO_2 = sulfur dioxide; NO_2 = nitrogen dioxide; PM_{10} = respirable particulate matter (10 micrometers or less); $PM_{2.5}$ = fine particulate matter (2.5 micrometers or less); Pb = lead
Source: United States Environmental Protection Agency (U.S.EPA). Accessed: April 27, 2018. General Conformity. Website url: https://www.epa.gov/general-conformity.

Table A-2
Federal General Conformity *de minimis* Levels for Los Angeles County

Pollutant	De Minimis Level
VOC	10
NO_X	10
CO	100
PM_{10}	100
$PM_{2.5}$	70

VOC = volatile organic compound; NO_X = oxides of nitrogen; CO = carbon monoxide;
PM_{10} = respirable particulate matter (10 micrometers or less); $PM_{2.5}$ = fine particulate matter (2.5 micrometers or less)
Source: United States Environmental Protection Agency (U.S.EPA). Accessed: April 27, 2018. General Conformity. Website url: https://www.epa.gov/general-conformity.

Operational emissions associated with the existing industrial uses that were removed were also quantified based on the trip-generation rates identified in the traffic analysis prepared for this project and default energy usage, water usage, and waste-generation rates identified in CalEEMod. Project-generated emissions were compared to estimated emissions associated with the removed industrial uses for determination of net changes in operational emissions. It is important to note that the analysis does not account for potential

emissions from onsite area or stationary sources that may have been associated with operation of the existing industrial uses. As a result, net changes in operational emissions are conservative.

Proposed Project Emissions

Construction

Annual construction-generated emissions are summarized in Table A-3. As depicted, the highest annual construction-generated emissions would total approximately 0.4 tons/year of VOC, 5.0 tons/year of NO_X, 3.3 tons/year of CO, 1.1 tons/year of PM_{10}, and 0.5 tons/year of $PM_{2.5}$. Uncontrolled direct and indirect annual emissions would not exceed General Conformity *de minimis* levels.

Table A-3
Uncontrolled Annual Construction Emissions
Compared to Federal General Conformity *de minimis* Levels

Construction Year	Emissions (tons/year)[1,2]				
	VOC	NO_X	CO	PM_{10}	$PM_{2.5}$
Year 1[3]	0.4	5.0	3.3	1.1	0.5
Federal General Conformity *De Minimis* Levels:	10	10	100	100	70
Exceeds Federal General Conformity *De Minimis* Levels?	No	No	No	No	No
Year 2	0.1	0.5	0.7	0.1	0.0
Federal General Conformity *De Minimis* Levels:	10	10	100	100	70
Exceeds Federal General Conformity *De Minimis* Levels?	No	No	No	No	No
Year 3	0.1	0.7	1.6	0.3	0.1
Federal General Conformity *De Minimis* Levels:	10	10	100	100	70
Exceeds Federal General Conformity *De Minimis* Levels?	No	No	No	No	No

1. Based on uncontrolled emissions estimates. Includes direct and indirect emission sources. Totals may not sum due to rounding.
2. Emissions were calculated using the CalEEMod computer program, version 2020.4.0. Includes EMFAC Off-Model Adjuatment Factors to account for SAFE Vehicle Rule Part One.
3. Based on a conservative assumption that In-River terrecing could occur potentially occur during the initial construction year..
Refer to Appendix B for modeling assumptions and results.

Operational Emissions

Annual operational emissions associated with the proposed Project and net increases in annual operational emissions, in comparison to the industrial uses that were removed, are summarized in Table 4. As depicted in Table A-4, annual operational emissions would not exceed Federal General Conformity *de minimis* levels.

APPLICABILITY DETERMINATION

As discussed above, annual construction and operational emissions attributable to the proposed Project would not exceed General Conformity *de minimis* emission levels. As a result, the proposed Project is not subject to General Conformity determination requirements.

Table A-4
Annual Operational Emissions
Compared to Federal General Conformity *de minimis* Levels

Land Use/Event (Capacity)	Direct & Indirect Emissions (tons/year)[1,2]				
	VOC	NO_X	CO	PM_{10}	$PM_{2.5}$
Special Events (1,000)[3]	0.0	0.0	0.1	0.1	0.0
Special Events (2,000)[3]	0.0	0.1	0.2	0.1	0.0
Special Events (3,250)[3]	0.0	0.0	0.0	0.0	0.0
Special Events (5,000)[3]	0.0	0.0	0.0	0.0	0.0
Soccer Fields	0.0	0.1	0.3	0.2	0.0
East & West Park Uses & Buildings	0.0	0.1	0.3	0.1	0.0
Total:	0.1	0.4	1.0	0.5	0.0
Industrial Land Uses Removed:	1.1	0.9	2.1	0.6	0.2
Net Change:	-1.0	-0.5	-1.1	-0.1	-0.2
Federal General Conformity *De Minimis* Levels:	10	10	100	100	70
Exceeds Thresholds?	No	No	No	No	No

1. *Emissions were quantified using the CalEEMod, v2016.3.2, computer program. Includes direct and indirect emissions. Totals may not sum due to rounding.*
2. *Mobile-source emissions were quantified based on trip-generation rates obtained from the traffic analysis prepared for this project and default assumptions contained in CalEEMod for Los Angeles County.*
3. *Assumes 24 days/year for events with a capacity of 1,000 attendees, 26 days/year for events with a capacity of 2,000 attendees, 2 days/year for events with a capacity of 3,250 attendees, and 1 day/year for events with a capacity of 5,000 attendees.*

Refer to Appendix B for emissions modeling assumptions and results.

APPENDIX B

Emissions Modeling

6th Street PARC - Construction Emissions Only - Los Angeles-South Coast County, Annual

EMFAC Off-Model Adjustment Factors for Gasoline Light Duty Vehicle to Account for the SAFE Vehicle Rule Applied

6th Street PARC - Construction Emissions Only

Los Angeles-South Coast County, Annual

1.0 Project Characteristics

1.1 Land Usage

Land Uses	Size	Metric	Lot Acreage	Floor Surface Area	Population
Parking Lot	87.00	Space	0.78	34,800.00	0
City Park	12.22	Acre	12.22	532,303.20	0
Fast Food Restaurant w/o Drive Thru	0.70	1000sqft	0.02	700.00	0
Health Club	2.00	1000sqft	0.05	2,000.00	0

1.2 Other Project Characteristics

Urbanization	Urban	**Wind Speed (m/s)**	2.2	**Precipitation Freq (Days)**	33
Climate Zone	12			**Operational Year**	2025
Utility Company	Los Angeles Department of Water & Power				
CO2 Intensity (lb/MWhr)	691.98	**CH4 Intensity (lb/MWhr)**	0.033	**N2O Intensity (lb/MWhr)**	0.004

1.3 User Entered Comments & Non-Default Data

Project Characteristics -

Land Use - Includes 200 sq.ft. cafe, 2,000 sq.ft. rec. building, 87 paved parking spaces (0.78 acres), 12.22 acres of park uses, 13 acres total.

Construction Phase - Based on construction schedules provided.

Off-road Equipment - Offroad equipment based on information provided.

Off-road Equipment - Offroad equipment based on information provided.

Off-road Equipment - Offroad equipment based on information provided.

6th Street PARC - Construction Emissions Only - Los Angeles-South Coast County, Annual

EMFAC Off-Model Adjustment Factors for Gasoline Light Duty Vehicle to Account for the SAFE Vehicle Rule Applied

Off-road Equipment - Offroad equipment based on information provided.

Off-road Equipment - Offroad equipment based on information provided.

Off-road Equipment - Offroad equipment based on information provided.

Off-road Equipment - .Offroad equipment based on information provided.

Off-road Equipment - Offroad equipment based on information provided.

Off-road Equipment - Offroad equipment based on information provided.

Off-road Equipment - Offroad equipment based on information provided.

Off-road Equipment - .Offroad equipment based on information provided.

Off-road Equipment - Offroad equipment based on information provided.

Off-road Equipment - Offroad equipment based on information provided.

Off-road Equipment - Offroad equipment based on information provided.

Trips and VMT - Based on trip and haul information provided.

Grading - .

Vehicle Trips - Construction run only.

Water And Wastewater -

Solid Waste -

Construction Off-road Equipment Mitigation - Tier 4 engins with Level 3 DPF applied.

Table Name	Column Name	Default Value	New Value
tblConstDustMitigation	WaterUnpavedRoadVehicleSpeed	0	15
tblConstEquipMitigation	DPF	No Change	Level 3
tblConstEquipMitigation	DPF	No Change	Level 3
tblConstEquipMitigation	DPF	No Change	Level 3
tblConstEquipMitigation	DPF	No Change	Level 3

6th Street PARC - Construction Emissions Only - Los Angeles-South Coast County, Annual

EMFAC Off-Model Adjustment Factors for Gasoline Light Duty Vehicle to Account for the SAFE Vehicle Rule Applied

tblConstEquipMitigation	DPF	No Change	Level 3
tblConstEquipMitigation	DPF	No Change	Level 3
tblConstEquipMitigation	DPF	No Change	Level 3
tblConstEquipMitigation	DPF	No Change	Level 3
tblConstEquipMitigation	DPF	No Change	Level 3
tblConstEquipMitigation	DPF	No Change	Level 3
tblConstEquipMitigation	DPF	No Change	Level 3
tblConstEquipMitigation	DPF	No Change	Level 3
tblConstEquipMitigation	DPF	No Change	Level 3
tblConstEquipMitigation	DPF	No Change	Level 3
tblConstEquipMitigation	DPF	No Change	Level 3
tblConstEquipMitigation	NumberOfEquipmentMitigated	0.00	2.00
tblConstEquipMitigation	NumberOfEquipmentMitigated	0.00	3.00
tblConstEquipMitigation	NumberOfEquipmentMitigated	0.00	1.00
tblConstEquipMitigation	NumberOfEquipmentMitigated	0.00	2.00
tblConstEquipMitigation	NumberOfEquipmentMitigated	0.00	16.00
tblConstEquipMitigation	NumberOfEquipmentMitigated	0.00	2.00
tblConstEquipMitigation	NumberOfEquipmentMitigated	0.00	3.00
tblConstEquipMitigation	NumberOfEquipmentMitigated	0.00	5.00
tblConstEquipMitigation	NumberOfEquipmentMitigated	0.00	1.00
tblConstEquipMitigation	NumberOfEquipmentMitigated	0.00	1.00
tblConstEquipMitigation	NumberOfEquipmentMitigated	0.00	2.00
tblConstEquipMitigation	NumberOfEquipmentMitigated	0.00	8.00
tblConstEquipMitigation	NumberOfEquipmentMitigated	0.00	3.00
tblConstEquipMitigation	NumberOfEquipmentMitigated	0.00	32.00
tblConstEquipMitigation	NumberOfEquipmentMitigated	0.00	2.00
tblConstEquipMitigation	Tier	No Change	Tier 4 Final
tblConstEquipMitigation	Tier	No Change	Tier 4 Final
tblConstEquipMitigation	Tier	No Change	Tier 4 Final

6th Street PARC - Construction Emissions Only - Los Angeles-South Coast County, Annual

EMFAC Off-Model Adjustment Factors for Gasoline Light Duty Vehicle to Account for the SAFE Vehicle Rule Applied

tblConstEquipMitigation	Tier	No Change	Tier 4 Final
tblConstEquipMitigation	Tier	No Change	Tier 4 Final
tblConstEquipMitigation	Tier	No Change	Tier 4 Final
tblConstEquipMitigation	Tier	No Change	Tier 4 Final
tblConstEquipMitigation	Tier	No Change	Tier 4 Final
tblConstEquipMitigation	Tier	No Change	Tier 4 Final
tblConstEquipMitigation	Tier	No Change	Tier 4 Final
tblConstEquipMitigation	Tier	No Change	Tier 4 Final
tblConstEquipMitigation	Tier	No Change	Tier 4 Final
tblConstEquipMitigation	Tier	No Change	Tier 4 Final
tblConstEquipMitigation	Tier	No Change	Tier 4 Final
tblConstEquipMitigation	Tier	No Change	Tier 4 Final
tblConstructionPhase	NumDays	300.00	60.00
tblConstructionPhase	NumDays	300.00	120.00
tblConstructionPhase	NumDays	300.00	30.00
tblConstructionPhase	NumDays	20.00	40.00
tblConstructionPhase	NumDays	30.00	9.00
tblConstructionPhase	NumDays	20.00	60.00
tblConstructionPhase	NumDays	20.00	3.00
tblConstructionPhase	NumDays	20.00	30.00
tblConstructionPhase	NumDays	20.00	120.00
tblConstructionPhase	NumDays	10.00	150.00
tblConstructionPhase	NumDays	10.00	30.00
tblConstructionPhase	NumDays	10.00	33.00
tblConstructionPhase	NumDays	10.00	60.00
tblGrading	AcresOfGrading	9.00	31.50
tblGrading	AcresOfGrading	0.00	49.50
tblGrading	AcresOfGrading	0.00	90.00
tblGrading	MaterialExported	0.00	16,700.00

6th Street PARC - Construction Emissions Only - Los Angeles-South Coast County, Annual

EMFAC Off-Model Adjustment Factors for Gasoline Light Duty Vehicle to Account for the SAFE Vehicle Rule Applied

tblGrading	MaterialImported	0.00	16,700.00
tblOffRoadEquipment	HorsePower	231.00	226.00
tblOffRoadEquipment	HorsePower	231.00	226.00
tblOffRoadEquipment	HorsePower	187.00	174.00
tblOffRoadEquipment	HorsePower	130.00	125.00
tblOffRoadEquipment	HorsePower	247.00	255.00
tblOffRoadEquipment	HorsePower	221.00	81.00
tblOffRoadEquipment	HorsePower	221.00	205.00
tblOffRoadEquipment	HorsePower	9.00	300.00
tblOffRoadEquipment	HorsePower	9.00	300.00
tblOffRoadEquipment	HorsePower	9.00	300.00
tblOffRoadEquipment	HorsePower	16.00	400.00
tblOffRoadEquipment	HorsePower	16.00	400.00
tblOffRoadEquipment	HorsePower	158.00	162.00
tblOffRoadEquipment	HorsePower	187.00	174.00
tblOffRoadEquipment	HorsePower	402.00	400.00
tblOffRoadEquipment	HorsePower	402.00	400.00
tblOffRoadEquipment	HorsePower	402.00	400.00
tblOffRoadEquipment	HorsePower	402.00	400.00
tblOffRoadEquipment	HorsePower	172.00	85.00
tblOffRoadEquipment	HorsePower	78.00	80.00
tblOffRoadEquipment	LoadFactor	0.73	0.38
tblOffRoadEquipment	LoadFactor	0.29	0.20
tblOffRoadEquipment	LoadFactor	0.42	0.36
tblOffRoadEquipment	LoadFactor	0.37	0.40
tblOffRoadEquipment	LoadFactor	0.50	0.73
tblOffRoadEquipment	LoadFactor	0.50	0.29
tblOffRoadEquipment	LoadFactor	0.56	0.29
tblOffRoadEquipment	LoadFactor	0.56	0.20

6th Street PARC - Construction Emissions Only - Los Angeles-South Coast County, Annual

EMFAC Off-Model Adjustment Factors for Gasoline Light Duty Vehicle to Account for the SAFE Vehicle Rule Applied

tblOffRoadEquipment	LoadFactor	0.56	0.42
tblOffRoadEquipment	LoadFactor	0.38	0.40
tblOffRoadEquipment	LoadFactor	0.38	0.48
tblOffRoadEquipment	LoadFactor	0.38	0.74
tblOffRoadEquipment	LoadFactor	0.41	0.42
tblOffRoadEquipment	LoadFactor	0.38	0.42
tblOffRoadEquipment	LoadFactor	0.38	0.48
tblOffRoadEquipment	LoadFactor	0.38	0.42
tblOffRoadEquipment	LoadFactor	0.74	0.20
tblOffRoadEquipment	LoadFactor	0.74	0.45
tblOffRoadEquipment	LoadFactor	0.38	0.37
tblOffRoadEquipment	LoadFactor	0.38	0.40
tblOffRoadEquipment	LoadFactor	0.38	0.37
tblOffRoadEquipment	LoadFactor	0.37	0.38
tblOffRoadEquipment	OffRoadEquipmentUnitAmount	1.00	0.00
tblOffRoadEquipment	OffRoadEquipmentUnitAmount	2.00	0.00
tblOffRoadEquipment	OffRoadEquipmentUnitAmount	3.00	0.00
tblOffRoadEquipment	OffRoadEquipmentUnitAmount	3.00	0.00
tblOffRoadEquipment	OffRoadEquipmentUnitAmount	3.00	0.00
tblOffRoadEquipment	OffRoadEquipmentUnitAmount	1.00	0.00
tblOffRoadEquipment	OffRoadEquipmentUnitAmount	1.00	0.00
tblOffRoadEquipment	OffRoadEquipmentUnitAmount	1.00	0.00
tblOffRoadEquipment	OffRoadEquipmentUnitAmount	1.00	2.00
tblOffRoadEquipment	OffRoadEquipmentUnitAmount	2.00	0.00
tblOffRoadEquipment	OffRoadEquipmentUnitAmount	2.00	0.00
tblOffRoadEquipment	OffRoadEquipmentUnitAmount	2.00	1.00
tblOffRoadEquipment	OffRoadEquipmentUnitAmount	2.00	0.00
tblOffRoadEquipment	OffRoadEquipmentUnitAmount	2.00	0.00
tblOffRoadEquipment	OffRoadEquipmentUnitAmount	2.00	0.00

6th Street PARC - Construction Emissions Only - Los Angeles-South Coast County, Annual

EMFAC Off-Model Adjustment Factors for Gasoline Light Duty Vehicle to Account for the SAFE Vehicle Rule Applied

tblOffRoadEquipment	OffRoadEquipmentUnitAmount	2.00	0.00
tblOffRoadEquipment	OffRoadEquipmentUnitAmount	2.00	0.00
tblOffRoadEquipment	OffRoadEquipmentUnitAmount	2.00	0.00
tblOffRoadEquipment	OffRoadEquipmentUnitAmount	2.00	1.00
tblOffRoadEquipment	OffRoadEquipmentUnitAmount	2.00	1.00
tblOffRoadEquipment	OffRoadEquipmentUnitAmount	2.00	0.00
tblOffRoadEquipment	OffRoadEquipmentUnitAmount	2.00	1.00
tblOffRoadEquipment	OffRoadEquipmentUnitAmount	1.00	0.00
tblOffRoadEquipment	OffRoadEquipmentUnitAmount	3.00	1.00
tblOffRoadEquipment	OffRoadEquipmentUnitAmount	3.00	1.00
tblOffRoadEquipment	OffRoadEquipmentUnitAmount	3.00	0.00
tblOffRoadEquipment	OffRoadEquipmentUnitAmount	3.00	0.00
tblOffRoadEquipment	OffRoadEquipmentUnitAmount	2.00	0.00
tblOffRoadEquipment	OffRoadEquipmentUnitAmount	3.00	0.00
tblOffRoadEquipment	OffRoadEquipmentUnitAmount	3.00	0.00
tblOffRoadEquipment	OffRoadEquipmentUnitAmount	3.00	0.00
tblOffRoadEquipment	OffRoadEquipmentUnitAmount	2.00	0.00
tblOffRoadEquipment	OffRoadEquipmentUnitAmount	4.00	8.00
tblOffRoadEquipment	OffRoadEquipmentUnitAmount	4.00	8.00
tblOffRoadEquipment	OffRoadEquipmentUnitAmount	4.00	8.00
tblOffRoadEquipment	OffRoadEquipmentUnitAmount	4.00	3.00
tblOffRoadEquipment	OffRoadEquipmentUnitAmount	1.00	0.00
tblOffRoadEquipment	OffRoadEquipmentUnitAmount	1.00	0.00
tblOffRoadEquipment	OffRoadEquipmentUnitAmount	1.00	0.00
tblOffRoadEquipment	UsageHours	8.00	4.00
tblOffRoadEquipment	UsageHours	7.00	8.00
tblOffRoadEquipment	UsageHours	7.00	8.00
tblOffRoadEquipment	UsageHours	8.00	2.00
tblTripsAndVMT	HaulingTripLength	20.00	210.00

6th Street PARC - Construction Emissions Only - Los Angeles-South Coast County, Annual

EMFAC Off-Model Adjustment Factors for Gasoline Light Duty Vehicle to Account for the SAFE Vehicle Rule Applied

tblTripsAndVMT	VendorTripNumber	0.00	8.00
tblTripsAndVMT	VendorTripNumber	0.00	8.00
tblTripsAndVMT	VendorTripNumber	0.00	8.00
tblTripsAndVMT	VendorTripNumber	0.00	8.00
tblTripsAndVMT	VendorTripNumber	93.00	8.00
tblTripsAndVMT	VendorTripNumber	93.00	8.00
tblTripsAndVMT	VendorTripNumber	0.00	8.00
tblTripsAndVMT	VendorTripNumber	0.00	8.00
tblTripsAndVMT	VendorTripNumber	0.00	8.00
tblTripsAndVMT	VendorTripNumber	0.00	8.00
tblTripsAndVMT	VendorTripNumber	0.00	8.00
tblTripsAndVMT	VendorTripNumber	93.00	8.00
tblTripsAndVMT	VendorTripNumber	0.00	8.00
tblTripsAndVMT	VendorTripNumber	0.00	8.00
tblVehicleTrips	ST_TR	1.96	0.00
tblVehicleTrips	ST_TR	696.00	0.00
tblVehicleTrips	ST_TR	20.87	0.00
tblVehicleTrips	SU_TR	2.19	0.00
tblVehicleTrips	SU_TR	500.00	0.00
tblVehicleTrips	SU_TR	26.73	0.00
tblVehicleTrips	WD_TR	0.78	0.00
tblVehicleTrips	WD_TR	346.23	0.00
tblVehicleTrips	WD_TR	32.93	0.00

2.0 Emissions Summary

6th Street PARC - Construction Emissions Only - Los Angeles-South Coast County, Annual

EMFAC Off-Model Adjustment Factors for Gasoline Light Duty Vehicle to Account for the SAFE Vehicle Rule Applied

2.1 Overall Construction

Unmitigated Construction

	ROG	NOx	CO	SO2	Fugitive PM10	Exhaust PM10	PM10 Total	Fugitive PM2.5	Exhaust PM2.5	PM2.5 Total	Bio- CO2	NBio- CO2	Total CO2	CH4	N2O	CO2e
Year	tons/yr										MT/yr					
2022	0.2919	4.2594	2.6308	0.0115	0.9506	0.1278	1.0783	0.3864	0.1182	0.5046						1,140.6352
2023	0.0752	0.5403	0.6817	1.9300e-003	0.1008	0.0214	0.1222	0.0194	0.0198	0.0392						175.4384
2024	0.1392	0.7438	1.6119	3.7400e-003	0.2456	0.0358	0.2813	0.0654	0.0331	0.0984						344.4573
Maximum	**0.2919**	**4.2594**	**2.6308**	**0.0115**	**0.9506**	**0.1278**	**1.0783**	**0.3864**	**0.1182**	**0.5046**						**1,140.6352**

Mitigated Construction

	ROG	NOx	CO	SO2	Fugitive PM10	Exhaust PM10	PM10 Total	Fugitive PM2.5	Exhaust PM2.5	PM2.5 Total	Bio- CO2	NBio- CO2	Total CO2	CH4	N2O	CO2e
Year	tons/yr										MT/yr					
2022	0.1139	2.2521	2.7845	0.0115	0.5344	0.0197	0.5541	0.1954	0.0187	0.2142						1,140.6348
2023	0.0338	0.1231	0.8801	1.9300e-003	0.0717	8.1000e-004	0.0725	0.0163	7.8000e-004	0.0170						175.4383
2024	0.0940	0.2490	1.7219	3.7400e-003	0.2456	6.8500e-003	0.2524	0.0654	6.3300e-003	0.0717						344.4571
Maximum	**0.1139**	**2.2521**	**2.7845**	**0.0115**	**0.5344**	**0.0197**	**0.5541**	**0.1954**	**0.0187**	**0.2142**						**1,140.6348**

6th Street PARC - Construction Emissions Only - Los Angeles-South Coast County, Annual

EMFAC Off-Model Adjustment Factors for Gasoline Light Duty Vehicle to Account for the SAFE Vehicle Rule Applied

	ROG	NOx	CO	SO2	Fugitive PM10	Exhaust PM10	PM10 Total	Fugitive PM2.5	Exhaust PM2.5	PM2.5 Total	Bio- CO2	NBio-CO2	Total CO2	CH4	N20	CO2e
Percent Reduction	52.27	52.66	-9.38	0.00	34.34	85.21	40.68	41.21	84.89	52.84	0.00	0.00	0.00	0.00	0.00	0.00

Quarter	Start Date	End Date	Maximum Unmitigated ROG + NOX (tons/quarter)	Maximum Mitigated ROG + NOX (tons/quarter)
1	1-1-2022	3-31-2022	1.4064	0.5897
2	4-1-2022	6-30-2022	1.3336	0.8451
3	7-1-2022	9-30-2022	1.1553	0.7395
4	10-1-2022	12-31-2022	0.5395	0.0846
5	1-1-2023	3-31-2023	0.3571	0.0809
6	4-1-2023	6-30-2023	0.0929	0.0258
7	7-1-2023	9-30-2023	0.0115	0.0115
8	10-1-2023	12-31-2023	0.1511	0.0379
9	1-1-2024	3-31-2024	0.4305	0.0873
10	4-1-2024	6-30-2024	0.3272	0.1680
11	7-1-2024	9-30-2024	0.0751	0.0526
		Highest	1.4064	0.8451

6th Street PARC - Construction Emissions Only - Los Angeles-South Coast County, Annual

EMFAC Off-Model Adjustment Factors for Gasoline Light Duty Vehicle to Account for the SAFE Vehicle Rule Applied

2.2 Overall Operational

Unmitigated Operational

	ROG	NOx	CO	SO2	Fugitive PM10	Exhaust PM10	PM10 Total	Fugitive PM2.5	Exhaust PM2.5	PM2.5 Total	Bio- CO2	NBio- CO2	Total CO2	CH4	N2O	CO2e
Category	tons/yr										MT/yr					
Area	0.0189	1.0000e-005	1.3000e-003	0.0000		0.0000	0.0000		0.0000	0.0000						2.6900e-003
Energy	1.0600e-003	9.6600e-003	8.1200e-003	6.0000e-005		7.3000e-004	7.3000e-004		7.3000e-004	7.3000e-004						30.7894
Mobile	0.0000	0.0000	0.0000	0.0000	0.0000	0.0000	0.0000	0.0000	0.0000	0.0000						0.0000
Waste						0.0000	0.0000		0.0000	0.0000						10.3145
Water						0.0000	0.0000		0.0000	0.0000						53.0278
Total	**0.0199**	**9.6700e-003**	**9.4200e-003**	**6.0000e-005**	**0.0000**	**7.3000e-004**	**7.3000e-004**	**0.0000**	**7.3000e-004**	**7.3000e-004**						**94.1344**

EMFAC Off-Model Adjustment Factors for Gasoline Light Duty Vehicle to Account for the SAFE Vehicle Rule Applied

2.2 Overall Operational

Mitigated Operational

	ROG	NOx	CO	SO2	Fugitive PM10	Exhaust PM10	PM10 Total	Fugitive PM2.5	Exhaust PM2.5	PM2.5 Total	Bio- CO2	NBio- CO2	Total CO2	CH4	N2O	CO2e
Category	tons/yr										MT/yr					
Area	0.0189	1.0000e-005	1.3000e-003	0.0000		0.0000	0.0000		0.0000	0.0000						2.6900e-003
Energy	1.0600e-003	9.6600e-003	8.1200e-003	6.0000e-005		7.3000e-004	7.3000e-004		7.3000e-004	7.3000e-004						30.7894
Mobile	0.0000	0.0000	0.0000	0.0000	0.0000	0.0000	0.0000	0.0000	0.0000	0.0000						0.0000
Waste						0.0000	0.0000		0.0000	0.0000						10.3145
Water						0.0000	0.0000		0.0000	0.0000						53.0278
Total	**0.0199**	**9.6700e-003**	**9.4200e-003**	**6.0000e-005**	**0.0000**	**7.3000e-004**	**7.3000e-004**	**0.0000**	**7.3000e-004**	**7.3000e-004**						**94.1344**

	ROG	NOx	CO	SO2	Fugitive PM10	Exhaust PM10	PM10 Total	Fugitive PM2.5	Exhaust PM2.5	PM2.5 Total	Bio- CO2	NBio-CO2	Total CO2	CH4	N20	CO2e
Percent Reduction	**0.00**	**0.00**	**0.00**	**0.00**	**0.00**	**0.00**	**0.00**	**0.00**	**0.00**	**0.00**	**0.00**	**0.00**	**0.00**	**0.00**	**0.00**	**0.00**

3.0 Construction Detail

Construction Phase

Phase Number	Phase Name	Phase Type	Start Date	End Date	Num Days Week	Num Days	Phase Description
1	Demolition	Demolition	1/1/2022	2/25/2022	5	40	
2	Site Preparation - Export	Site Preparation	2/28/2022	9/23/2022	5	150	
3	Site Preparation - Import	Site Preparation	3/1/2022	4/11/2022	5	30	

EMFAC Off-Model Adjustment Factors for Gasoline Light Duty Vehicle to Account for the SAFE Vehicle Rule Applied

4	Site Preparation - Grading	Grading	9/23/2022	10/5/2022	5	9	
5	Site Preparation - Excavation	Site Preparation	10/5/2022	11/18/2022	5	33	
6	Park & Infrastructure - Construction	Site Preparation	11/18/2022	2/9/2023	5	60	
7	Park & Infrastructure - Concrete	Building Construction	2/10/2023	3/23/2023	5	30	
8	Paving - Asphalt	Paving	3/23/2023	5/3/2023	5	30	
9	Paving - Concrete	Paving	5/3/2023	10/17/2023	5	120	
10	Paving - DG	Paving	10/17/2023	1/8/2024	5	60	
11	Paving - Earthwork	Paving	1/8/2024	1/10/2024	5	3	
12	Utilities	Trenching	1/10/2024	3/12/2024	5	45	
13	Structures - Construction	Building Construction	3/13/2024	6/4/2024	5	60	
14	Structures - Concrete	Building Construction	6/5/2024	11/19/2024	5	120	

Acres of Grading (Site Preparation Phase): 75

Acres of Grading (Grading Phase): 31.5

Acres of Paving: 0.78

Residential Indoor: 0; Residential Outdoor: 0; Non-Residential Indoor: 0; Non-Residential Outdoor: 0; Striped Parking Area: 0 (Architectural Coating – sqft)

OffRoad Equipment

Phase Name	Offroad Equipment Type	Amount	Usage Hours	Horse Power	Load Factor
Demolition	Bore/Drill Rigs	1	4.00	81	0.73
Demolition	Concrete/Industrial Saws	1	4.00	81	0.38
Demolition	Excavators	3	8.00	158	0.38
Demolition	Off-Highway Trucks	1	6.00	400	0.38
Demolition	Other Construction Equipment	1	8.00	85	0.42
Demolition	Rubber Tired Dozers	1	8.00	255	0.40
Demolition	Tractors/Loaders/Backhoes	2	8.00	97	0.37
Site Preparation - Export	Dumpers/Tenders	8	6.00	400	0.40
Site Preparation - Export	Rubber Tired Dozers	1	8.00	247	0.40

6th Street PARC - Construction Emissions Only - Los Angeles-South Coast County, Annual

EMFAC Off-Model Adjustment Factors for Gasoline Light Duty Vehicle to Account for the SAFE Vehicle Rule Applied

Site Preparation - Export	Tractors/Loaders/Backhoes	8	2.00	97	0.37
Site Preparation - Import	Dumpers/Tenders	8	6.00	400	0.48
Site Preparation - Import	Rubber Tired Dozers	1	8.00	247	0.40
Site Preparation - Import	Tractors/Loaders/Backhoes	8	8.00	97	0.37
Site Preparation - Grading	Excavators	0	8.00	158	0.38
Site Preparation - Grading	Graders	2	8.00	174	0.41
Site Preparation - Grading	Rollers	2	8.00	80	0.40
Site Preparation - Grading	Rubber Tired Dozers	0	8.00	247	0.40
Site Preparation - Grading	Scrapers	0	8.00	367	0.48
Site Preparation - Grading	Tractors/Loaders/Backhoes	0	8.00	97	0.37
Site Preparation - Excavation	Rubber Tired Dozers	0	8.00	247	0.40
Site Preparation - Excavation	Tractors/Loaders/Backhoes	8	8.00	97	0.37
Park & Infrastructure - Construction	Off-Highway Trucks	2	6.00	400	0.48
Park & Infrastructure - Construction	Rollers	1	8.00	80	0.37
Park & Infrastructure - Construction	Rubber Tired Dozers	0	8.00	247	0.40
Park & Infrastructure - Construction	Tractors/Loaders/Backhoes	3	8.00	97	0.40
Park & Infrastructure - Concrete	Cement and Mortar Mixers	1	8.00	300	0.20
Park & Infrastructure - Concrete	Cranes	1	8.00	226	0.29
Park & Infrastructure - Concrete	Forklifts	0	8.00	89	0.20
Park & Infrastructure - Concrete	Generator Sets	0	8.00	84	0.74
Park & Infrastructure - Concrete	Pumps	1	8.00	84	0.45
Park & Infrastructure - Concrete	Tractors/Loaders/Backhoes	0	7.00	97	0.37
Park & Infrastructure - Concrete	Welders	0	8.00	46	0.45
Paving - Asphalt	Off-Highway Trucks	1	6.00	400	0.42
Paving - Asphalt	Pavers	1	8.00	125	0.36
Paving - Asphalt	Paving Equipment	0	8.00	132	0.36
Paving - Asphalt	Rollers	1	8.00	80	0.38
Paving - Concrete	Cement and Mortar Mixers	1	8.00	300	0.42
Paving - Concrete	Pavers	0	8.00	130	0.42

6th Street PARC - Construction Emissions Only - Los Angeles-South Coast County, Annual

EMFAC Off-Model Adjustment Factors for Gasoline Light Duty Vehicle to Account for the SAFE Vehicle Rule Applied

Paving - Concrete	Paving Equipment	0	8.00	132	0.36
Paving - Concrete	Rollers	0	8.00	80	0.38
Paving - DG	Off-Highway Trucks	1	6.00	400	0.42
Paving - DG	Pavers	0	8.00	130	0.42
Paving - DG	Paving Equipment	0	8.00	132	0.36
Paving - DG	Rollers	0	8.00	80	0.38
Paving - DG	Tractors/Loaders/Backhoes	1	8.00	97	0.38
Paving - Earthwork	Graders	1	8.00	174	0.42
Paving - Earthwork	Pavers	0	8.00	130	0.42
Paving - Earthwork	Paving Equipment	0	8.00	132	0.36
Paving - Earthwork	Rollers	1	8.00	80	0.38
Utilities	Rollers	2	8.00	80	0.38
Utilities	Tractors/Loaders/Backhoes	2	8.00	97	0.37
Utilities	Trenchers	2	8.00	80	0.50
Structures - Construction	Bore/Drill Rigs	1	8.00	205	0.29
Structures - Construction	Cranes	1	8.00	226	0.20
Structures - Construction	Excavators	2	8.00	162	0.74
Structures - Construction	Forklifts	0	8.00	89	0.20
Structures - Construction	Generator Sets	0	8.00	84	0.74
Structures - Construction	Rollers	1	8.00	80	0.37
Structures - Construction	Tractors/Loaders/Backhoes	0	7.00	97	0.37
Structures - Construction	Welders	0	8.00	46	0.45
Structures - Concrete	Cement and Mortar Mixers	1	8.00	300	0.29
Structures - Concrete	Cranes	0	7.00	231	0.29
Structures - Concrete	Forklifts	0	8.00	89	0.20
Structures - Concrete	Generator Sets	0	8.00	84	0.74
Structures - Concrete	Pumps	1	8.00	84	0.20
Structures - Concrete	Tractors/Loaders/Backhoes	0	7.00	97	0.37
Structures - Concrete	Welders	0	8.00	46	0.45

6th Street PARC - Construction Emissions Only - Los Angeles-South Coast County, Annual

EMFAC Off-Model Adjustment Factors for Gasoline Light Duty Vehicle to Account for the SAFE Vehicle Rule Applied

Trips and VMT

Phase Name	Offroad Equipment Count	Worker Trip Number	Vendor Trip Number	Hauling Trip Number	Worker Trip Length	Vendor Trip Length	Hauling Trip Length	Worker Vehicle Class	Vendor Vehicle Class	Hauling Vehicle Class
Demolition	10	25.00	8.00	0.00	14.70	6.90	20.00	LD_Mix	HDT_Mix	HHDT
Site Preparation - Export	17	43.00	8.00	2,088.00	14.70	6.90	210.00	LD_Mix	HDT_Mix	HHDT
Site Preparation - Import	17	43.00	8.00	2,088.00	14.70	6.90	20.00	LD_Mix	HDT_Mix	HHDT
Site Preparation - Grading	4	10.00	8.00	0.00	14.70	6.90	20.00	LD_Mix	HDT_Mix	HHDT
Site Preparation - Excavation	8	20.00	8.00	0.00	14.70	6.90	20.00	LD_Mix	HDT_Mix	HHDT
Park & Infrastructure - Construction	6	15.00	8.00	0.00	14.70	6.90	20.00	LD_Mix	HDT_Mix	HHDT
Park & Infrastructure - Concrete	3	239.00	8.00	0.00	14.70	6.90	20.00	LD_Mix	HDT_Mix	HHDT
Paving - Asphalt	3	8.00	8.00	0.00	14.70	6.90	20.00	LD_Mix	HDT_Mix	HHDT
Paving - Concrete	1	3.00	8.00	0.00	14.70	6.90	20.00	LD_Mix	HDT_Mix	HHDT
Paving - DG	2	5.00	8.00	0.00	14.70	6.90	20.00	LD_Mix	HDT_Mix	HHDT
Paving - Earthwork	2	5.00	8.00	0.00	14.70	6.90	20.00	LD_Mix	HDT_Mix	HHDT
Utilities	6	15.00	8.00	0.00	14.70	6.90	20.00	LD_Mix	HDT_Mix	HHDT
Structures - Construction	5	239.00	8.00	0.00	14.70	6.90	20.00	LD_Mix	HDT_Mix	HHDT
Structures - Concrete	2	239.00	8.00	0.00	14.70	6.90	20.00	LD_Mix	HDT_Mix	HHDT

3.1 Mitigation Measures Construction

Use Cleaner Engines for Construction Equipment

Use DPF for Construction Equipment

Use Soil Stabilizer

Water Exposed Area

Reduce Vehicle Speed on Unpaved Roads

6th Street PARC - Construction Emissions Only - Los Angeles-South Coast County, Annual

EMFAC Off-Model Adjustment Factors for Gasoline Light Duty Vehicle to Account for the SAFE Vehicle Rule Applied

3.2 Demolition - 2022

Unmitigated Construction On-Site

	ROG	NOx	CO	SO2	Fugitive PM10	Exhaust PM10	PM10 Total	Fugitive PM2.5	Exhaust PM2.5	PM2.5 Total	Bio- CO2	NBio- CO2	Total CO2	CH4	N2O	CO2e
Category	tons/yr										MT/yr					
Off-Road	0.0531	0.4980	0.5743	9.5000e-004		0.0244	0.0244		0.0225	0.0225						84.3355
Total	**0.0531**	**0.4980**	**0.5743**	**9.5000e-004**		**0.0244**	**0.0244**		**0.0225**	**0.0225**						**84.3355**

Unmitigated Construction Off-Site

	ROG	NOx	CO	SO2	Fugitive PM10	Exhaust PM10	PM10 Total	Fugitive PM2.5	Exhaust PM2.5	PM2.5 Total	Bio- CO2	NBio- CO2	Total CO2	CH4	N2O	CO2e
Category	tons/yr										MT/yr					
Hauling	0.0000	0.0000	0.0000	0.0000	0.0000	0.0000	0.0000	0.0000	0.0000	0.0000						0.0000
Vendor	3.1000e-004	8.2300e-003	2.7300e-003	3.0000e-005	1.0100e-003	7.0000e-005	1.0800e-003	2.9000e-004	7.0000e-005	3.6000e-004						3.1892
Worker	1.7100e-003	1.4300e-003	0.0186	5.0000e-005	5.4800e-003	4.0000e-005	5.5100e-003	1.4600e-003	3.0000e-005	1.4900e-003						4.5753
Total	**2.0200e-003**	**9.6600e-003**	**0.0213**	**8.0000e-005**	**6.4900e-003**	**1.1000e-004**	**6.5900e-003**	**1.7500e-003**	**1.0000e-004**	**1.8500e-003**						**7.7645**

6th Street PARC - Construction Emissions Only - Los Angeles-South Coast County, Annual

EMFAC Off-Model Adjustment Factors for Gasoline Light Duty Vehicle to Account for the SAFE Vehicle Rule Applied

3.2 Demolition - 2022

Mitigated Construction On-Site

	ROG	NOx	CO	SO2	Fugitive PM10	Exhaust PM10	PM10 Total	Fugitive PM2.5	Exhaust PM2.5	PM2.5 Total	Bio- CO2	NBio- CO2	Total CO2	CH4	N2O	CO2e
Category	tons/yr										MT/yr					
Off-Road	0.0166	0.1044	0.5778	9.5000e-004		3.2800e-003	3.2800e-003		3.0300e-003	3.0300e-003						84.3354
Total	**0.0166**	**0.1044**	**0.5778**	**9.5000e-004**		**3.2800e-003**	**3.2800e-003**		**3.0300e-003**	**3.0300e-003**						**84.3354**

Mitigated Construction Off-Site

	ROG	NOx	CO	SO2	Fugitive PM10	Exhaust PM10	PM10 Total	Fugitive PM2.5	Exhaust PM2.5	PM2.5 Total	Bio- CO2	NBio- CO2	Total CO2	CH4	N2O	CO2e
Category	tons/yr										MT/yr					
Hauling	0.0000	0.0000	0.0000	0.0000	0.0000	0.0000	0.0000	0.0000	0.0000	0.0000						0.0000
Vendor	3.1000e-004	8.2300e-003	2.7300e-003	3.0000e-005	1.0100e-003	7.0000e-005	1.0800e-003	2.9000e-004	7.0000e-005	3.6000e-004						3.1892
Worker	1.7100e-003	1.4300e-003	0.0186	5.0000e-005	5.4800e-003	4.0000e-005	5.5100e-003	1.4600e-003	3.0000e-005	1.4900e-003						4.5753
Total	**2.0200e-003**	**9.6600e-003**	**0.0213**	**8.0000e-005**	**6.4900e-003**	**1.1000e-004**	**6.5900e-003**	**1.7500e-003**	**1.0000e-004**	**1.8500e-003**						**7.7645**

6th Street PARC - Construction Emissions Only - Los Angeles-South Coast County, Annual

EMFAC Off-Model Adjustment Factors for Gasoline Light Duty Vehicle to Account for the SAFE Vehicle Rule Applied

3.3 Site Preparation - Export - 2022

Unmitigated Construction On-Site

	ROG	NOx	CO	SO2	Fugitive PM10	Exhaust PM10	PM10 Total	Fugitive PM2.5	Exhaust PM2.5	PM2.5 Total	Bio- CO2	NBio- CO2	Total CO2	CH4	N2O	CO2e
Category	tons/yr										MT/yr					
Fugitive Dust					0.4924	0.0000	0.4924	0.2527	0.0000	0.2527						0.0000
Off-Road	0.0875	0.9109	0.6043	1.1100e-003		0.0448	0.0448		0.0412	0.0412						98.0489
Total	**0.0875**	**0.9109**	**0.6043**	**1.1100e-003**	**0.4924**	**0.0448**	**0.5372**	**0.2527**	**0.0412**	**0.2939**						**98.0489**

Unmitigated Construction Off-Site

	ROG	NOx	CO	SO2	Fugitive PM10	Exhaust PM10	PM10 Total	Fugitive PM2.5	Exhaust PM2.5	PM2.5 Total	Bio- CO2	NBio- CO2	Total CO2	CH4	N2O	CO2e
Category	tons/yr										MT/yr					
Hauling	0.0403	1.7465	0.2926	6.5400e-003	0.1884	0.0135	0.2019	0.0517	0.0130	0.0647						682.2620
Vendor	1.1700e-003	0.0309	0.0102	1.2000e-004	3.7800e-003	2.8000e-004	4.0600e-003	1.0900e-003	2.7000e-004	1.3600e-003						11.9596
Worker	0.0111	9.2100e-003	0.1197	3.2000e-004	0.0353	2.3000e-004	0.0356	9.3900e-003	2.1000e-004	9.6000e-003						29.5106
Total	**0.0525**	**1.7866**	**0.4226**	**6.9800e-003**	**0.2275**	**0.0141**	**0.2416**	**0.0622**	**0.0134**	**0.0756**						**723.7321**

6th Street PARC - Construction Emissions Only - Los Angeles-South Coast County, Annual

EMFAC Off-Model Adjustment Factors for Gasoline Light Duty Vehicle to Account for the SAFE Vehicle Rule Applied

3.3 Site Preparation - Export - 2022

Mitigated Construction On-Site

	ROG	NOx	CO	SO2	Fugitive PM10	Exhaust PM10	PM10 Total	Fugitive PM2.5	Exhaust PM2.5	PM2.5 Total	Bio- CO2	NBio- CO2	Total CO2	CH4	N2O	CO2e
Category	tons/yr										MT/yr					
Fugitive Dust					0.1920	0.0000	0.1920	0.0986	0.0000	0.0986						0.0000
Off-Road	0.0135	0.0587	0.6388	1.1100e-003		2.7000e-004	2.7000e-004		2.7000e-004	2.7000e-004						98.0487
Total	**0.0135**	**0.0587**	**0.6388**	**1.1100e-003**	**0.1920**	**2.7000e-004**	**0.1923**	**0.0986**	**2.7000e-004**	**0.0988**						**98.0487**

Mitigated Construction Off-Site

	ROG	NOx	CO	SO2	Fugitive PM10	Exhaust PM10	PM10 Total	Fugitive PM2.5	Exhaust PM2.5	PM2.5 Total	Bio- CO2	NBio- CO2	Total CO2	CH4	N2O	CO2e
Category	tons/yr										MT/yr					
Hauling	0.0403	1.7465	0.2926	6.5400e-003	0.1884	0.0135	0.2019	0.0517	0.0130	0.0647						682.2620
Vendor	1.1700e-003	0.0309	0.0102	1.2000e-004	3.7800e-003	2.8000e-004	4.0600e-003	1.0900e-003	2.7000e-004	1.3600e-003						11.9596
Worker	0.0111	9.2100e-003	0.1197	3.2000e-004	0.0353	2.3000e-004	0.0356	9.3900e-003	2.1000e-004	9.6000e-003						29.5106
Total	**0.0525**	**1.7866**	**0.4226**	**6.9800e-003**	**0.2275**	**0.0141**	**0.2416**	**0.0622**	**0.0134**	**0.0756**						**723.7321**

6th Street PARC - Construction Emissions Only - Los Angeles-South Coast County, Annual

EMFAC Off-Model Adjustment Factors for Gasoline Light Duty Vehicle to Account for the SAFE Vehicle Rule Applied

3.4 Site Preparation - Import - 2022

Unmitigated Construction On-Site

	ROG	NOx	CO	SO2	Fugitive PM10	Exhaust PM10	PM10 Total	Fugitive PM2.5	Exhaust PM2.5	PM2.5 Total	Bio- CO2	NBio- CO2	Total CO2	CH4	N2O	CO2e
Category	tons/yr										MT/yr					
Fugitive Dust					0.0992	0.0000	0.0992	0.0507	0.0000	0.0507						0.0000
Off-Road	0.0323	0.3330	0.3223	5.0000e-004		0.0171	0.0171		0.0157	0.0157						44.4038
Total	**0.0323**	**0.3330**	**0.3223**	**5.0000e-004**	**0.0992**	**0.0171**	**0.1163**	**0.0507**	**0.0157**	**0.0664**						**44.4038**

Unmitigated Construction Off-Site

	ROG	NOx	CO	SO2	Fugitive PM10	Exhaust PM10	PM10 Total	Fugitive PM2.5	Exhaust PM2.5	PM2.5 Total	Bio- CO2	NBio- CO2	Total CO2	CH4	N2O	CO2e
Category	tons/yr										MT/yr					
Hauling	4.8100e-003	0.1847	0.0412	6.5000e-004	0.0180	1.3000e-003	0.0193	4.9300e-003	1.2500e-003	6.1800e-003						67.6188
Vendor	2.3000e-004	6.1700e-003	2.0500e-003	2.0000e-005	7.6000e-004	6.0000e-005	8.1000e-004	2.2000e-004	5.0000e-005	2.7000e-004						2.3919
Worker	2.2100e-003	1.8400e-003	0.0240	6.0000e-005	7.0700e-003	5.0000e-005	7.1100e-003	1.8800e-003	4.0000e-005	1.9200e-003						5.9021
Total	**7.2500e-003**	**0.1927**	**0.0672**	**7.3000e-004**	**0.0258**	**1.4100e-003**	**0.0272**	**7.0300e-003**	**1.3400e-003**	**8.3700e-003**						**75.9129**

6th Street PARC - Construction Emissions Only - Los Angeles-South Coast County, Annual

EMFAC Off-Model Adjustment Factors for Gasoline Light Duty Vehicle to Account for the SAFE Vehicle Rule Applied

3.4 Site Preparation - Import - 2022

Mitigated Construction On-Site

	ROG	NOx	CO	SO2	Fugitive PM10	Exhaust PM10	PM10 Total	Fugitive PM2.5	Exhaust PM2.5	PM2.5 Total	Bio- CO2	NBio- CO2	Total CO2	CH4	N2O	CO2e
Category	tons/yr										MT/yr					
Fugitive Dust					0.0387	0.0000	0.0387	0.0198	0.0000	0.0198						0.0000
Off-Road	6.1300e-003	0.0266	0.3386	5.0000e-004		1.2000e-004	1.2000e-004		1.2000e-004	1.2000e-004						44.4037
Total	**6.1300e-003**	**0.0266**	**0.3386**	**5.0000e-004**	**0.0387**	**1.2000e-004**	**0.0388**	**0.0198**	**1.2000e-004**	**0.0199**						**44.4037**

Mitigated Construction Off-Site

	ROG	NOx	CO	SO2	Fugitive PM10	Exhaust PM10	PM10 Total	Fugitive PM2.5	Exhaust PM2.5	PM2.5 Total	Bio- CO2	NBio- CO2	Total CO2	CH4	N2O	CO2e
Category	tons/yr										MT/yr					
Hauling	4.8100e-003	0.1847	0.0412	6.5000e-004	0.0180	1.3000e-003	0.0193	4.9300e-003	1.2500e-003	6.1800e-003						67.6188
Vendor	2.3000e-004	6.1700e-003	2.0500e-003	2.0000e-005	7.6000e-004	6.0000e-005	8.1000e-004	2.2000e-004	5.0000e-005	2.7000e-004						2.3919
Worker	2.2100e-003	1.8400e-003	0.0240	6.0000e-005	7.0700e-003	5.0000e-005	7.1100e-003	1.8800e-003	4.0000e-005	1.9200e-003						5.9021
Total	**7.2500e-003**	**0.1927**	**0.0672**	**7.3000e-004**	**0.0258**	**1.4100e-003**	**0.0272**	**7.0300e-003**	**1.3400e-003**	**8.3700e-003**						**75.9129**

6th Street PARC - Construction Emissions Only - Los Angeles-South Coast County, Annual

EMFAC Off-Model Adjustment Factors for Gasoline Light Duty Vehicle to Account for the SAFE Vehicle Rule Applied

3.5 Site Preparation - Grading - 2022

Unmitigated Construction On-Site

	ROG	NOx	CO	SO2	Fugitive PM10	Exhaust PM10	PM10 Total	Fugitive PM2.5	Exhaust PM2.5	PM2.5 Total	Bio- CO2	NBio- CO2	Total CO2	CH4	N2O	CO2e
Category	tons/yr										MT/yr					
Fugitive Dust					0.0167	0.0000	0.0167	1.8000e-003	0.0000	1.8000e-003						0.0000
Off-Road	6.5600e-003	0.0631	0.0572	8.0000e-005		3.5400e-003	3.5400e-003		3.2600e-003	3.2600e-003						7.1576
Total	**6.5600e-003**	**0.0631**	**0.0572**	**8.0000e-005**	**0.0167**	**3.5400e-003**	**0.0202**	**1.8000e-003**	**3.2600e-003**	**5.0600e-003**						**7.1576**

Unmitigated Construction Off-Site

	ROG	NOx	CO	SO2	Fugitive PM10	Exhaust PM10	PM10 Total	Fugitive PM2.5	Exhaust PM2.5	PM2.5 Total	Bio- CO2	NBio- CO2	Total CO2	CH4	N2O	CO2e
Category	tons/yr										MT/yr					
Hauling	0.0000	0.0000	0.0000	0.0000	0.0000	0.0000	0.0000	0.0000	0.0000	0.0000						0.0000
Vendor	7.0000e-005	1.8500e-003	6.1000e-004	1.0000e-005	2.3000e-004	2.0000e-005	2.4000e-004	7.0000e-005	2.0000e-005	8.0000e-005						0.7176
Worker	1.5000e-004	1.3000e-004	1.6700e-003	0.0000	4.9000e-004	0.0000	5.0000e-004	1.3000e-004	0.0000	1.3000e-004						0.4118
Total	**2.2000e-004**	**1.9800e-003**	**2.2800e-003**	**1.0000e-005**	**7.2000e-004**	**2.0000e-005**	**7.4000e-004**	**2.0000e-004**	**2.0000e-005**	**2.1000e-004**						**1.1294**

6th Street PARC - Construction Emissions Only - Los Angeles-South Coast County, Annual

EMFAC Off-Model Adjustment Factors for Gasoline Light Duty Vehicle to Account for the SAFE Vehicle Rule Applied

3.5 Site Preparation - Grading - 2022

Mitigated Construction On-Site

	ROG	NOx	CO	SO2	Fugitive PM10	Exhaust PM10	PM10 Total	Fugitive PM2.5	Exhaust PM2.5	PM2.5 Total	Bio- CO2	NBio- CO2	Total CO2	CH4	N2O	CO2e
Category	tons/yr										MT/yr					
Fugitive Dust					6.5100e-003	0.0000	6.5100e-003	7.0000e-004	0.0000	7.0000e-004						0.0000
Off-Road	9.8000e-004	4.2600e-003	0.0607	8.0000e-005		2.0000e-005	2.0000e-005		2.0000e-005	2.0000e-005						7.1576
Total	**9.8000e-004**	**4.2600e-003**	**0.0607**	**8.0000e-005**	**6.5100e-003**	**2.0000e-005**	**6.5300e-003**	**7.0000e-004**	**2.0000e-005**	**7.2000e-004**						**7.1576**

Mitigated Construction Off-Site

	ROG	NOx	CO	SO2	Fugitive PM10	Exhaust PM10	PM10 Total	Fugitive PM2.5	Exhaust PM2.5	PM2.5 Total	Bio- CO2	NBio- CO2	Total CO2	CH4	N2O	CO2e
Category	tons/yr										MT/yr					
Hauling	0.0000	0.0000	0.0000	0.0000	0.0000	0.0000	0.0000	0.0000	0.0000	0.0000						0.0000
Vendor	7.0000e-005	1.8500e-003	6.1000e-004	1.0000e-005	2.3000e-004	2.0000e-005	2.4000e-004	7.0000e-005	2.0000e-005	8.0000e-005						0.7176
Worker	1.5000e-004	1.3000e-004	1.6700e-003	0.0000	4.9000e-004	0.0000	5.0000e-004	1.3000e-004	0.0000	1.3000e-004						0.4118
Total	**2.2000e-004**	**1.9800e-003**	**2.2800e-003**	**1.0000e-005**	**7.2000e-004**	**2.0000e-005**	**7.4000e-004**	**2.0000e-004**	**2.0000e-005**	**2.1000e-004**						**1.1294**

6th Street PARC - Construction Emissions Only - Los Angeles-South Coast County, Annual

EMFAC Off-Model Adjustment Factors for Gasoline Light Duty Vehicle to Account for the SAFE Vehicle Rule Applied

3.6 Site Preparation - Excavation - 2022

Unmitigated Construction On-Site

	ROG	NOx	CO	SO2	Fugitive PM10	Exhaust PM10	PM10 Total	Fugitive PM2.5	Exhaust PM2.5	PM2.5 Total	Bio- CO2	NBio- CO2	Total CO2	CH4	N2O	CO2e
Category	tons/yr										MT/yr					
Fugitive Dust					0.0263	0.0000	0.0263	2.8300e-003	0.0000	2.8300e-003						0.0000
Off-Road	0.0217	0.2212	0.2954	4.1000e-004		0.0119	0.0119		0.0109	0.0109						36.3646
Total	**0.0217**	**0.2212**	**0.2954**	**4.1000e-004**	**0.0263**	**0.0119**	**0.0382**	**2.8300e-003**	**0.0109**	**0.0138**						**36.3646**

Unmitigated Construction Off-Site

	ROG	NOx	CO	SO2	Fugitive PM10	Exhaust PM10	PM10 Total	Fugitive PM2.5	Exhaust PM2.5	PM2.5 Total	Bio- CO2	NBio- CO2	Total CO2	CH4	N2O	CO2e
Category	tons/yr										MT/yr					
Hauling	0.0000	0.0000	0.0000	0.0000	0.0000	0.0000	0.0000	0.0000	0.0000	0.0000						0.0000
Vendor	2.6000e-004	6.7900e-003	2.2500e-003	3.0000e-005	8.3000e-004	6.0000e-005	8.9000e-004	2.4000e-004	6.0000e-005	3.0000e-004						2.6311
Worker	1.1300e-003	9.4000e-004	0.0123	3.0000e-005	3.6200e-003	2.0000e-005	3.6400e-003	9.6000e-004	2.0000e-005	9.8000e-004						3.0197
Total	**1.3900e-003**	**7.7300e-003**	**0.0145**	**6.0000e-005**	**4.4500e-003**	**8.0000e-005**	**4.5300e-003**	**1.2000e-003**	**8.0000e-005**	**1.2800e-003**						**5.6508**

6th Street PARC - Construction Emissions Only - Los Angeles-South Coast County, Annual

EMFAC Off-Model Adjustment Factors for Gasoline Light Duty Vehicle to Account for the SAFE Vehicle Rule Applied

3.6 Site Preparation - Excavation - 2022

Mitigated Construction On-Site

	ROG	NOx	CO	SO2	Fugitive PM10	Exhaust PM10	PM10 Total	Fugitive PM2.5	Exhaust PM2.5	PM2.5 Total	Bio- CO2	NBio- CO2	Total CO2	CH4	N2O	CO2e
Category	tons/yr										MT/yr					
Fugitive Dust					0.0102	0.0000	0.0102	1.1100e-003	0.0000	1.1100e-003						0.0000
Off-Road	5.0100e-003	0.0217	0.3092	4.1000e-004		1.0000e-004	1.0000e-004		1.0000e-004	1.0000e-004						36.3645
Total	**5.0100e-003**	**0.0217**	**0.3092**	**4.1000e-004**	**0.0102**	**1.0000e-004**	**0.0103**	**1.1100e-003**	**1.0000e-004**	**1.2100e-003**						**36.3645**

Mitigated Construction Off-Site

	ROG	NOx	CO	SO2	Fugitive PM10	Exhaust PM10	PM10 Total	Fugitive PM2.5	Exhaust PM2.5	PM2.5 Total	Bio- CO2	NBio- CO2	Total CO2	CH4	N2O	CO2e
Category	tons/yr										MT/yr					
Hauling	0.0000	0.0000	0.0000	0.0000	0.0000	0.0000	0.0000	0.0000	0.0000	0.0000						0.0000
Vendor	2.6000e-004	6.7900e-003	2.2500e-003	3.0000e-005	8.3000e-004	6.0000e-005	8.9000e-004	2.4000e-004	6.0000e-005	3.0000e-004						2.6311
Worker	1.1300e-003	9.4000e-004	0.0123	3.0000e-005	3.6200e-003	2.0000e-005	3.6400e-003	9.6000e-004	2.0000e-005	9.8000e-004						3.0197
Total	**1.3900e-003**	**7.7300e-003**	**0.0145**	**6.0000e-005**	**4.4500e-003**	**8.0000e-005**	**4.5300e-003**	**1.2000e-003**	**8.0000e-005**	**1.2800e-003**						**5.6508**

6th Street PARC - Construction Emissions Only - Los Angeles-South Coast County, Annual

EMFAC Off-Model Adjustment Factors for Gasoline Light Duty Vehicle to Account for the SAFE Vehicle Rule Applied

3.7 Park & Infrastructure - Construction - 2022

Unmitigated Construction On-Site

	ROG	NOx	CO	SO2	Fugitive PM10	Exhaust PM10	PM10 Total	Fugitive PM2.5	Exhaust PM2.5	PM2.5 Total	Bio- CO2	NBio- CO2	Total CO2	CH4	N2O	CO2e
Category	tons/yr										MT/yr					
Fugitive Dust					0.0477	0.0000	0.0477	5.1500e-003	0.0000	5.1500e-003						0.0000
Off-Road	0.0262	0.2276	0.2387	5.8000e-004		0.0103	0.0103		9.4700e-003	9.4700e-003						51.5361
Total	**0.0262**	**0.2276**	**0.2387**	**5.8000e-004**	**0.0477**	**0.0103**	**0.0580**	**5.1500e-003**	**9.4700e-003**	**0.0146**						**51.5361**

Unmitigated Construction Off-Site

	ROG	NOx	CO	SO2	Fugitive PM10	Exhaust PM10	PM10 Total	Fugitive PM2.5	Exhaust PM2.5	PM2.5 Total	Bio- CO2	NBio- CO2	Total CO2	CH4	N2O	CO2e
Category	tons/yr										MT/yr					
Hauling	0.0000	0.0000	0.0000	0.0000	0.0000	0.0000	0.0000	0.0000	0.0000	0.0000						0.0000
Vendor	2.4000e-004	6.3800e-003	2.1100e-003	2.0000e-005	7.8000e-004	6.0000e-005	8.4000e-004	2.3000e-004	6.0000e-005	2.8000e-004						2.4716
Worker	8.0000e-004	6.6000e-004	8.6300e-003	2.0000e-005	2.5500e-003	2.0000e-005	2.5600e-003	6.8000e-004	2.0000e-005	6.9000e-004						2.1275
Total	**1.0400e-003**	**7.0400e-003**	**0.0107**	**4.0000e-005**	**3.3300e-003**	**8.0000e-005**	**3.4000e-003**	**9.1000e-004**	**8.0000e-005**	**9.7000e-004**						**4.5992**

6th Street PARC - Construction Emissions Only - Los Angeles-South Coast County, Annual

EMFAC Off-Model Adjustment Factors for Gasoline Light Duty Vehicle to Account for the SAFE Vehicle Rule Applied

3.7 Park & Infrastructure - Construction - 2022

Mitigated Construction On-Site

	ROG	NOx	CO	SO2	Fugitive PM10	Exhaust PM10	PM10 Total	Fugitive PM2.5	Exhaust PM2.5	PM2.5 Total	Bio- CO2	NBio- CO2	Total CO2	CH4	N2O	CO2e
Category	tons/yr										MT/yr					
Fugitive Dust					0.0186	0.0000	0.0186	2.0100e-003	0.0000	2.0100e-003						0.0000
Off-Road	7.1200e-003	0.0309	0.3209	5.8000e-004		1.4000e-004	1.4000e-004		1.4000e-004	1.4000e-004						51.5361
Total	**7.1200e-003**	**0.0309**	**0.3209**	**5.8000e-004**	**0.0186**	**1.4000e-004**	**0.0188**	**2.0100e-003**	**1.4000e-004**	**2.1500e-003**						**51.5361**

Mitigated Construction Off-Site

	ROG	NOx	CO	SO2	Fugitive PM10	Exhaust PM10	PM10 Total	Fugitive PM2.5	Exhaust PM2.5	PM2.5 Total	Bio- CO2	NBio- CO2	Total CO2	CH4	N2O	CO2e
Category	tons/yr										MT/yr					
Hauling	0.0000	0.0000	0.0000	0.0000	0.0000	0.0000	0.0000	0.0000	0.0000	0.0000						0.0000
Vendor	2.4000e-004	6.3800e-003	2.1100e-003	2.0000e-005	7.8000e-004	6.0000e-005	8.4000e-004	2.3000e-004	6.0000e-005	2.8000e-004						2.4716
Worker	8.0000e-004	6.6000e-004	8.6300e-003	2.0000e-005	2.5500e-003	2.0000e-005	2.5600e-003	6.8000e-004	2.0000e-005	6.9000e-004						2.1275
Total	**1.0400e-003**	**7.0400e-003**	**0.0107**	**4.0000e-005**	**3.3300e-003**	**8.0000e-005**	**3.4000e-003**	**9.1000e-004**	**8.0000e-005**	**9.7000e-004**						**4.5992**

6th Street PARC - Construction Emissions Only - Los Angeles-South Coast County, Annual

EMFAC Off-Model Adjustment Factors for Gasoline Light Duty Vehicle to Account for the SAFE Vehicle Rule Applied

3.7 Park & Infrastructure - Construction - 2023

Unmitigated Construction On-Site

	ROG	NOx	CO	SO2	Fugitive PM10	Exhaust PM10	PM10 Total	Fugitive PM2.5	Exhaust PM2.5	PM2.5 Total	Bio- CO2	NBio- CO2	Total CO2	CH4	N2O	CO2e
Category	tons/yr										MT/yr					
Fugitive Dust					0.0477	0.0000	0.0477	5.1500e-003	0.0000	5.1500e-003						0.0000
Off-Road	0.0231	0.1925	0.2210	5.5000e-004		8.3400e-003	8.3400e-003		7.6800e-003	7.6800e-003						48.2484
Total	**0.0231**	**0.1925**	**0.2210**	**5.5000e-004**	**0.0477**	**8.3400e-003**	**0.0561**	**5.1500e-003**	**7.6800e-003**	**0.0128**						**48.2484**

Unmitigated Construction Off-Site

	ROG	NOx	CO	SO2	Fugitive PM10	Exhaust PM10	PM10 Total	Fugitive PM2.5	Exhaust PM2.5	PM2.5 Total	Bio- CO2	NBio- CO2	Total CO2	CH4	N2O	CO2e
Category	tons/yr										MT/yr					
Hauling	0.0000	0.0000	0.0000	0.0000	0.0000	0.0000	0.0000	0.0000	0.0000	0.0000						0.0000
Vendor	1.3000e-004	4.6700e-003	1.7500e-003	2.0000e-005	7.3000e-004	2.0000e-005	7.5000e-004	2.1000e-004	2.0000e-005	2.3000e-004						2.2014
Worker	6.9000e-004	5.5000e-004	7.4300e-003	2.0000e-005	2.3800e-003	1.0000e-005	2.4000e-003	6.3000e-004	1.0000e-005	6.5000e-004						1.9369
Total	**8.2000e-004**	**5.2200e-003**	**9.1800e-003**	**4.0000e-005**	**3.1100e-003**	**3.0000e-005**	**3.1500e-003**	**8.4000e-004**	**3.0000e-005**	**8.8000e-004**						**4.1382**

6th Street PARC - Construction Emissions Only - Los Angeles-South Coast County, Annual

EMFAC Off-Model Adjustment Factors for Gasoline Light Duty Vehicle to Account for the SAFE Vehicle Rule Applied

3.7 Park & Infrastructure - Construction - 2023

Mitigated Construction On-Site

	ROG	NOx	CO	SO2	Fugitive PM10	Exhaust PM10	PM10 Total	Fugitive PM2.5	Exhaust PM2.5	PM2.5 Total	Bio- CO2	NBio- CO2	Total CO2	CH4	N2O	CO2e
Category	tons/yr										MT/yr					
Fugitive Dust					0.0186	0.0000	0.0186	2.0100e-003	0.0000	2.0100e-003						0.0000
Off-Road	6.6600e-003	0.0289	0.3002	5.5000e-004		1.3000e-004	1.3000e-004		1.3000e-004	1.3000e-004						48.2483
Total	**6.6600e-003**	**0.0289**	**0.3002**	**5.5000e-004**	**0.0186**	**1.3000e-004**	**0.0187**	**2.0100e-003**	**1.3000e-004**	**2.1400e-003**						**48.2483**

Mitigated Construction Off-Site

	ROG	NOx	CO	SO2	Fugitive PM10	Exhaust PM10	PM10 Total	Fugitive PM2.5	Exhaust PM2.5	PM2.5 Total	Bio- CO2	NBio- CO2	Total CO2	CH4	N2O	CO2e
Category	tons/yr										MT/yr					
Hauling	0.0000	0.0000	0.0000	0.0000	0.0000	0.0000	0.0000	0.0000	0.0000	0.0000						0.0000
Vendor	1.3000e-004	4.6700e-003	1.7500e-003	2.0000e-005	7.3000e-004	2.0000e-005	7.5000e-004	2.1000e-004	2.0000e-005	2.3000e-004						2.2014
Worker	6.9000e-004	5.5000e-004	7.4300e-003	2.0000e-005	2.3800e-003	1.0000e-005	2.4000e-003	6.3000e-004	1.0000e-005	6.5000e-004						1.9369
Total	**8.2000e-004**	**5.2200e-003**	**9.1800e-003**	**4.0000e-005**	**3.1100e-003**	**3.0000e-005**	**3.1500e-003**	**8.4000e-004**	**3.0000e-005**	**8.8000e-004**						**4.1382**

6th Street PARC - Construction Emissions Only - Los Angeles-South Coast County, Annual

EMFAC Off-Model Adjustment Factors for Gasoline Light Duty Vehicle to Account for the SAFE Vehicle Rule Applied

3.8 Park & Infrastructure - Concrete - 2023

Unmitigated Construction On-Site

	ROG	NOx	CO	SO2	Fugitive PM10	Exhaust PM10	PM10 Total	Fugitive PM2.5	Exhaust PM2.5	PM2.5 Total	Bio- CO2	NBio- CO2	Total CO2	CH4	N2O	CO2e
Category	tons/yr										MT/yr					
Off-Road	8.1500e-003	0.0811	0.0609	1.4000e-004		3.5700e-003	3.5700e-003		3.3800e-003	3.3800e-003						12.6614
Total	**8.1500e-003**	**0.0811**	**0.0609**	**1.4000e-004**		**3.5700e-003**	**3.5700e-003**		**3.3800e-003**	**3.3800e-003**						**12.6614**

Unmitigated Construction Off-Site

	ROG	NOx	CO	SO2	Fugitive PM10	Exhaust PM10	PM10 Total	Fugitive PM2.5	Exhaust PM2.5	PM2.5 Total	Bio- CO2	NBio- CO2	Total CO2	CH4	N2O	CO2e
Category	tons/yr										MT/yr					
Hauling	0.0000	0.0000	0.0000	0.0000	0.0000	0.0000	0.0000	0.0000	0.0000	0.0000						0.0000
Vendor	1.4000e-004	4.8400e-003	1.8100e-003	2.0000e-005	7.6000e-004	2.0000e-005	7.8000e-004	2.2000e-004	2.0000e-005	2.4000e-004						2.2773
Worker	0.0114	9.0400e-003	0.1225	3.4000e-004	0.0393	2.4000e-004	0.0395	0.0104	2.2000e-004	0.0107						31.9252
Total	**0.0115**	**0.0139**	**0.1243**	**3.6000e-004**	**0.0400**	**2.6000e-004**	**0.0403**	**0.0107**	**2.4000e-004**	**0.0109**						**34.2025**

6th Street PARC - Construction Emissions Only - Los Angeles-South Coast County, Annual

EMFAC Off-Model Adjustment Factors for Gasoline Light Duty Vehicle to Account for the SAFE Vehicle Rule Applied

3.8 Park & Infrastructure - Concrete - 2023

Mitigated Construction On-Site

	ROG	NOx	CO	SO2	Fugitive PM10	Exhaust PM10	PM10 Total	Fugitive PM2.5	Exhaust PM2.5	PM2.5 Total	Bio- CO2	NBio- CO2	Total CO2	CH4	N2O	CO2e
Category	tons/yr										MT/yr					
Off-Road	1.6400e-003	7.1100e-003	0.0752	1.4000e-004		3.0000e-005	3.0000e-005		3.0000e-005	3.0000e-005						12.6613
Total	**1.6400e-003**	**7.1100e-003**	**0.0752**	**1.4000e-004**		**3.0000e-005**	**3.0000e-005**		**3.0000e-005**	**3.0000e-005**						**12.6613**

Mitigated Construction Off-Site

	ROG	NOx	CO	SO2	Fugitive PM10	Exhaust PM10	PM10 Total	Fugitive PM2.5	Exhaust PM2.5	PM2.5 Total	Bio- CO2	NBio- CO2	Total CO2	CH4	N2O	CO2e
Category	tons/yr										MT/yr					
Hauling	0.0000	0.0000	0.0000	0.0000	0.0000	0.0000	0.0000	0.0000	0.0000	0.0000						0.0000
Vendor	1.4000e-004	4.8400e-003	1.8100e-003	2.0000e-005	7.6000e-004	2.0000e-005	7.8000e-004	2.2000e-004	2.0000e-005	2.4000e-004						2.2773
Worker	0.0114	9.0400e-003	0.1225	3.4000e-004	0.0393	2.4000e-004	0.0395	0.0104	2.2000e-004	0.0107						31.9252
Total	**0.0115**	**0.0139**	**0.1243**	**3.6000e-004**	**0.0400**	**2.6000e-004**	**0.0403**	**0.0107**	**2.4000e-004**	**0.0109**						**34.2025**

6th Street PARC - Construction Emissions Only - Los Angeles-South Coast County, Annual

EMFAC Off-Model Adjustment Factors for Gasoline Light Duty Vehicle to Account for the SAFE Vehicle Rule Applied

3.9 Paving - Asphalt - 2023

Unmitigated Construction On-Site

	ROG	NOx	CO	SO2	Fugitive PM10	Exhaust PM10	PM10 Total	Fugitive PM2.5	Exhaust PM2.5	PM2.5 Total	Bio- CO2	NBio- CO2	Total CO2	CH4	N2O	CO2e
Category	tons/yr										MT/yr					
Off-Road	0.0109	0.0916	0.1041	2.6000e-004		4.0200e-003	4.0200e-003		3.7000e-003	3.7000e-003						23.1141
Paving	1.0200e-003					0.0000	0.0000		0.0000	0.0000						0.0000
Total	**0.0119**	**0.0916**	**0.1041**	**2.6000e-004**		**4.0200e-003**	**4.0200e-003**		**3.7000e-003**	**3.7000e-003**						**23.1141**

Unmitigated Construction Off-Site

	ROG	NOx	CO	SO2	Fugitive PM10	Exhaust PM10	PM10 Total	Fugitive PM2.5	Exhaust PM2.5	PM2.5 Total	Bio- CO2	NBio- CO2	Total CO2	CH4	N2O	CO2e
Category	tons/yr										MT/yr					
Hauling	0.0000	0.0000	0.0000	0.0000	0.0000	0.0000	0.0000	0.0000	0.0000	0.0000						0.0000
Vendor	1.4000e-004	4.8400e-003	1.8100e-003	2.0000e-005	7.6000e-004	2.0000e-005	7.8000e-004	2.2000e-004	2.0000e-005	2.4000e-004						2.2773
Worker	3.8000e-004	3.0000e-004	4.1000e-003	1.0000e-005	1.3100e-003	1.0000e-005	1.3200e-003	3.5000e-004	1.0000e-005	3.6000e-004						1.0686
Total	**5.2000e-004**	**5.1400e-003**	**5.9100e-003**	**3.0000e-005**	**2.0700e-003**	**3.0000e-005**	**2.1000e-003**	**5.7000e-004**	**3.0000e-005**	**6.0000e-004**						**3.3459**

6th Street PARC - Construction Emissions Only - Los Angeles-South Coast County, Annual

EMFAC Off-Model Adjustment Factors for Gasoline Light Duty Vehicle to Account for the SAFE Vehicle Rule Applied

3.9 Paving - Asphalt - 2023

Mitigated Construction On-Site

	ROG	NOx	CO	SO2	Fugitive PM10	Exhaust PM10	PM10 Total	Fugitive PM2.5	Exhaust PM2.5	PM2.5 Total	Bio- CO2	NBio- CO2	Total CO2	CH4	N2O	CO2e
Category	tons/yr										MT/yr					
Off-Road	3.2000e-003	0.0139	0.1471	2.6000e-004		6.0000e-005	6.0000e-005		6.0000e-005	6.0000e-005						23.1140
Paving	1.0200e-003					0.0000	0.0000		0.0000	0.0000						0.0000
Total	**4.2200e-003**	**0.0139**	**0.1471**	**2.6000e-004**		**6.0000e-005**	**6.0000e-005**		**6.0000e-005**	**6.0000e-005**						**23.1140**

Mitigated Construction Off-Site

	ROG	NOx	CO	SO2	Fugitive PM10	Exhaust PM10	PM10 Total	Fugitive PM2.5	Exhaust PM2.5	PM2.5 Total	Bio- CO2	NBio- CO2	Total CO2	CH4	N2O	CO2e
Category	tons/yr										MT/yr					
Hauling	0.0000	0.0000	0.0000	0.0000	0.0000	0.0000	0.0000	0.0000	0.0000	0.0000						0.0000
Vendor	1.4000e-004	4.8400e-003	1.8100e-003	2.0000e-005	7.6000e-004	2.0000e-005	7.8000e-004	2.2000e-004	2.0000e-005	2.4000e-004						2.2773
Worker	3.8000e-004	3.0000e-004	4.1000e-003	1.0000e-005	1.3100e-003	1.0000e-005	1.3200e-003	3.5000e-004	1.0000e-005	3.6000e-004						1.0686
Total	**5.2000e-004**	**5.1400e-003**	**5.9100e-003**	**3.0000e-005**	**2.0700e-003**	**3.0000e-005**	**2.1000e-003**	**5.7000e-004**	**3.0000e-005**	**6.0000e-004**						**3.3459**

6th Street PARC - Construction Emissions Only - Los Angeles-South Coast County, Annual

EMFAC Off-Model Adjustment Factors for Gasoline Light Duty Vehicle to Account for the SAFE Vehicle Rule Applied

3.10 Paving - Concrete - 2023

Unmitigated Construction On-Site

	ROG	NOx	CO	SO2	Fugitive PM10	Exhaust PM10	PM10 Total	Fugitive PM2.5	Exhaust PM2.5	PM2.5 Total	Bio- CO2	NBio- CO2	Total CO2	CH4	N2O	CO2e
Category	tons/yr										MT/yr					
Off-Road	0.0000	0.0000	0.0000	0.0000		0.0000	0.0000		0.0000	0.0000						0.0000
Paving	1.0200e-003					0.0000	0.0000		0.0000	0.0000						0.0000
Total	**1.0200e-003**	**0.0000**	**0.0000**	**0.0000**		**0.0000**	**0.0000**		**0.0000**	**0.0000**						**0.0000**

Unmitigated Construction Off-Site

	ROG	NOx	CO	SO2	Fugitive PM10	Exhaust PM10	PM10 Total	Fugitive PM2.5	Exhaust PM2.5	PM2.5 Total	Bio- CO2	NBio- CO2	Total CO2	CH4	N2O	CO2e
Category	tons/yr										MT/yr					
Hauling	0.0000	0.0000	0.0000	0.0000	0.0000	0.0000	0.0000	0.0000	0.0000	0.0000						0.0000
Vendor	5.4000e-004	0.0193	7.2400e-003	9.0000e-005	3.0300e-003	9.0000e-005	3.1200e-003	8.7000e-004	9.0000e-005	9.6000e-004						9.1091
Worker	5.7000e-004	4.5000e-004	6.1500e-003	2.0000e-005	1.9700e-003	1.0000e-005	1.9800e-003	5.2000e-004	1.0000e-005	5.4000e-004						1.6029
Total	**1.1100e-003**	**0.0198**	**0.0134**	**1.1000e-004**	**5.0000e-003**	**1.0000e-004**	**5.1000e-003**	**1.3900e-003**	**1.0000e-004**	**1.5000e-003**						**10.7120**

6th Street PARC - Construction Emissions Only - Los Angeles-South Coast County, Annual

EMFAC Off-Model Adjustment Factors for Gasoline Light Duty Vehicle to Account for the SAFE Vehicle Rule Applied

3.10 Paving - Concrete - 2023

Mitigated Construction On-Site

	ROG	NOx	CO	SO2	Fugitive PM10	Exhaust PM10	PM10 Total	Fugitive PM2.5	Exhaust PM2.5	PM2.5 Total	Bio- CO2	NBio- CO2	Total CO2	CH4	N2O	CO2e
Category	tons/yr										MT/yr					
Off-Road	0.0000	0.0000	0.0000	0.0000		0.0000	0.0000		0.0000	0.0000						0.0000
Paving	1.0200e-003					0.0000	0.0000		0.0000	0.0000						0.0000
Total	**1.0200e-003**	**0.0000**	**0.0000**	**0.0000**		**0.0000**	**0.0000**		**0.0000**	**0.0000**						**0.0000**

Mitigated Construction Off-Site

	ROG	NOx	CO	SO2	Fugitive PM10	Exhaust PM10	PM10 Total	Fugitive PM2.5	Exhaust PM2.5	PM2.5 Total	Bio- CO2	NBio- CO2	Total CO2	CH4	N2O	CO2e
Category	tons/yr										MT/yr					
Hauling	0.0000	0.0000	0.0000	0.0000	0.0000	0.0000	0.0000	0.0000	0.0000	0.0000						0.0000
Vendor	5.4000e-004	0.0193	7.2400e-003	9.0000e-005	3.0300e-003	9.0000e-005	3.1200e-003	8.7000e-004	9.0000e-005	9.6000e-004						9.1091
Worker	5.7000e-004	4.5000e-004	6.1500e-003	2.0000e-005	1.9700e-003	1.0000e-005	1.9800e-003	5.2000e-004	1.0000e-005	5.4000e-004						1.6029
Total	**1.1100e-003**	**0.0198**	**0.0134**	**1.1000e-004**	**5.0000e-003**	**1.0000e-004**	**5.1000e-003**	**1.3900e-003**	**1.0000e-004**	**1.5000e-003**						**10.7120**

6th Street PARC - Construction Emissions Only - Los Angeles-South Coast County, Annual

EMFAC Off-Model Adjustment Factors for Gasoline Light Duty Vehicle to Account for the SAFE Vehicle Rule Applied

3.11 Paving - DG - 2023

Unmitigated Construction On-Site

	ROG	NOx	CO	SO2	Fugitive PM10	Exhaust PM10	PM10 Total	Fugitive PM2.5	Exhaust PM2.5	PM2.5 Total	Bio- CO2	NBio- CO2	Total CO2	CH4	N2O	CO2e
Category	tons/yr										MT/yr					
Off-Road	0.0154	0.1220	0.1351	3.8000e-004		4.9800e-003	4.9800e-003		4.5800e-003	4.5800e-003						33.7147
Paving	9.2000e-004					0.0000	0.0000		0.0000	0.0000						0.0000
Total	**0.0163**	**0.1220**	**0.1351**	**3.8000e-004**		**4.9800e-003**	**4.9800e-003**		**4.5800e-003**	**4.5800e-003**						**33.7147**

Unmitigated Construction Off-Site

	ROG	NOx	CO	SO2	Fugitive PM10	Exhaust PM10	PM10 Total	Fugitive PM2.5	Exhaust PM2.5	PM2.5 Total	Bio- CO2	NBio- CO2	Total CO2	CH4	N2O	CO2e
Category	tons/yr										MT/yr					
Hauling	0.0000	0.0000	0.0000	0.0000	0.0000	0.0000	0.0000	0.0000	0.0000	0.0000						0.0000
Vendor	2.4000e-004	8.7000e-003	3.2600e-003	4.0000e-005	1.3600e-003	4.0000e-005	1.4000e-003	3.9000e-004	4.0000e-005	4.3000e-004						4.0991
Worker	4.3000e-004	3.4000e-004	4.6100e-003	1.0000e-005	1.4800e-003	1.0000e-005	1.4900e-003	3.9000e-004	1.0000e-005	4.0000e-004						1.2022
Total	**6.7000e-004**	**9.0400e-003**	**7.8700e-003**	**5.0000e-005**	**2.8400e-003**	**5.0000e-005**	**2.8900e-003**	**7.8000e-004**	**5.0000e-005**	**8.3000e-004**						**5.3013**

6th Street PARC - Construction Emissions Only - Los Angeles-South Coast County, Annual

EMFAC Off-Model Adjustment Factors for Gasoline Light Duty Vehicle to Account for the SAFE Vehicle Rule Applied

3.11 Paving - DG - 2023

Mitigated Construction On-Site

	ROG	NOx	CO	SO2	Fugitive PM10	Exhaust PM10	PM10 Total	Fugitive PM2.5	Exhaust PM2.5	PM2.5 Total	Bio- CO2	NBio- CO2	Total CO2	CH4	N2O	CO2e
Category	tons/yr										MT/yr					
Off-Road	4.6500e-003	0.0202	0.1970	3.8000e-004		9.0000e-005	9.0000e-005		9.0000e-005	9.0000e-005						33.7147
Paving	9.2000e-004					0.0000	0.0000		0.0000	0.0000						0.0000
Total	**5.5700e-003**	**0.0202**	**0.1970**	**3.8000e-004**		**9.0000e-005**	**9.0000e-005**		**9.0000e-005**	**9.0000e-005**						**33.7147**

Mitigated Construction Off-Site

	ROG	NOx	CO	SO2	Fugitive PM10	Exhaust PM10	PM10 Total	Fugitive PM2.5	Exhaust PM2.5	PM2.5 Total	Bio- CO2	NBio- CO2	Total CO2	CH4	N2O	CO2e
Category	tons/yr										MT/yr					
Hauling	0.0000	0.0000	0.0000	0.0000	0.0000	0.0000	0.0000	0.0000	0.0000	0.0000						0.0000
Vendor	2.4000e-004	8.7000e-003	3.2600e-003	4.0000e-005	1.3600e-003	4.0000e-005	1.4000e-003	3.9000e-004	4.0000e-005	4.3000e-004						4.0991
Worker	4.3000e-004	3.4000e-004	4.6100e-003	1.0000e-005	1.4800e-003	1.0000e-005	1.4900e-003	3.9000e-004	1.0000e-005	4.0000e-004						1.2022
Total	**6.7000e-004**	**9.0400e-003**	**7.8700e-003**	**5.0000e-005**	**2.8400e-003**	**5.0000e-005**	**2.8900e-003**	**7.8000e-004**	**5.0000e-005**	**8.3000e-004**						**5.3013**

6th Street PARC - Construction Emissions Only - Los Angeles-South Coast County, Annual

EMFAC Off-Model Adjustment Factors for Gasoline Light Duty Vehicle to Account for the SAFE Vehicle Rule Applied

3.11 Paving - DG - 2024

Unmitigated Construction On-Site

	ROG	NOx	CO	SO2	Fugitive PM10	Exhaust PM10	PM10 Total	Fugitive PM2.5	Exhaust PM2.5	PM2.5 Total	Bio- CO2	NBio- CO2	Total CO2	CH4	N2O	CO2e
Category	tons/yr										MT/yr					
Off-Road	1.6700e-003	0.0127	0.0149	4.0000e-005		5.0000e-004	5.0000e-004		4.6000e-004	4.6000e-004						3.7477
Paving	1.0000e-004					0.0000	0.0000		0.0000	0.0000						0.0000
Total	**1.7700e-003**	**0.0127**	**0.0149**	**4.0000e-005**		**5.0000e-004**	**5.0000e-004**		**4.6000e-004**	**4.6000e-004**						**3.7477**

Unmitigated Construction Off-Site

	ROG	NOx	CO	SO2	Fugitive PM10	Exhaust PM10	PM10 Total	Fugitive PM2.5	Exhaust PM2.5	PM2.5 Total	Bio- CO2	NBio- CO2	Total CO2	CH4	N2O	CO2e
Category	tons/yr										MT/yr					
Hauling	0.0000	0.0000	0.0000	0.0000	0.0000	0.0000	0.0000	0.0000	0.0000	0.0000						0.0000
Vendor	3.0000e-005	9.7000e-004	3.5000e-004	0.0000	1.5000e-004	0.0000	1.6000e-004	4.0000e-005	0.0000	5.0000e-005						0.4486
Worker	4.0000e-005	3.0000e-005	4.8000e-004	0.0000	1.6000e-004	0.0000	1.7000e-004	4.0000e-005	0.0000	4.0000e-005						0.1308
Total	**7.0000e-005**	**1.0000e-003**	**8.3000e-004**	**0.0000**	**3.1000e-004**	**0.0000**	**3.3000e-004**	**8.0000e-005**	**0.0000**	**9.0000e-005**						**0.5794**

6th Street PARC - Construction Emissions Only - Los Angeles-South Coast County, Annual

EMFAC Off-Model Adjustment Factors for Gasoline Light Duty Vehicle to Account for the SAFE Vehicle Rule Applied

3.11 Paving - DG - 2024

Mitigated Construction On-Site

	ROG	NOx	CO	SO2	Fugitive PM10	Exhaust PM10	PM10 Total	Fugitive PM2.5	Exhaust PM2.5	PM2.5 Total	Bio- CO2	NBio- CO2	Total CO2	CH4	N2O	CO2e
Category	tons/yr										MT/yr					
Off-Road	5.2000e-004	2.2400e-003	0.0219	4.0000e-005		1.0000e-005	1.0000e-005		1.0000e-005	1.0000e-005						3.7477
Paving	1.0000e-004					0.0000	0.0000		0.0000	0.0000						0.0000
Total	**6.2000e-004**	**2.2400e-003**	**0.0219**	**4.0000e-005**		**1.0000e-005**	**1.0000e-005**		**1.0000e-005**	**1.0000e-005**						**3.7477**

Mitigated Construction Off-Site

	ROG	NOx	CO	SO2	Fugitive PM10	Exhaust PM10	PM10 Total	Fugitive PM2.5	Exhaust PM2.5	PM2.5 Total	Bio- CO2	NBio- CO2	Total CO2	CH4	N2O	CO2e
Category	tons/yr										MT/yr					
Hauling	0.0000	0.0000	0.0000	0.0000	0.0000	0.0000	0.0000	0.0000	0.0000	0.0000						0.0000
Vendor	3.0000e-005	9.7000e-004	3.5000e-004	0.0000	1.5000e-004	0.0000	1.6000e-004	4.0000e-005	0.0000	5.0000e-005						0.4486
Worker	4.0000e-005	3.0000e-005	4.8000e-004	0.0000	1.6000e-004	0.0000	1.7000e-004	4.0000e-005	0.0000	4.0000e-005						0.1308
Total	**7.0000e-005**	**1.0000e-003**	**8.3000e-004**	**0.0000**	**3.1000e-004**	**0.0000**	**3.3000e-004**	**8.0000e-005**	**0.0000**	**9.0000e-005**						**0.5794**

6th Street PARC - Construction Emissions Only - Los Angeles-South Coast County, Annual

EMFAC Off-Model Adjustment Factors for Gasoline Light Duty Vehicle to Account for the SAFE Vehicle Rule Applied

3.12 Paving - Earthwork - 2024

Unmitigated Construction On-Site

	ROG	NOx	CO	SO2	Fugitive PM10	Exhaust PM10	PM10 Total	Fugitive PM2.5	Exhaust PM2.5	PM2.5 Total	Bio- CO2	NBio- CO2	Total CO2	CH4	N2O	CO2e
Category	tons/yr										MT/yr					
Off-Road	9.2000e-004	8.4800e-003	9.4100e-003	1.0000e-005		4.6000e-004	4.6000e-004		4.3000e-004	4.3000e-004						1.1947
Paving	1.0200e-003					0.0000	0.0000		0.0000	0.0000						0.0000
Total	**1.9400e-003**	**8.4800e-003**	**9.4100e-003**	**1.0000e-005**		**4.6000e-004**	**4.6000e-004**		**4.3000e-004**	**4.3000e-004**						**1.1947**

Unmitigated Construction Off-Site

	ROG	NOx	CO	SO2	Fugitive PM10	Exhaust PM10	PM10 Total	Fugitive PM2.5	Exhaust PM2.5	PM2.5 Total	Bio- CO2	NBio- CO2	Total CO2	CH4	N2O	CO2e
Category	tons/yr										MT/yr					
Hauling	0.0000	0.0000	0.0000	0.0000	0.0000	0.0000	0.0000	0.0000	0.0000	0.0000						0.0000
Vendor	1.0000e-005	4.8000e-004	1.8000e-004	0.0000	8.0000e-005	0.0000	8.0000e-005	2.0000e-005	0.0000	2.0000e-005						0.2243
Worker	2.0000e-005	2.0000e-005	2.4000e-004	0.0000	8.0000e-005	0.0000	8.0000e-005	2.0000e-005	0.0000	2.0000e-005						0.0654
Total	**3.0000e-005**	**5.0000e-004**	**4.2000e-004**	**0.0000**	**1.6000e-004**	**0.0000**	**1.6000e-004**	**4.0000e-005**	**0.0000**	**4.0000e-005**						**0.2897**

6th Street PARC - Construction Emissions Only - Los Angeles-South Coast County, Annual

EMFAC Off-Model Adjustment Factors for Gasoline Light Duty Vehicle to Account for the SAFE Vehicle Rule Applied

3.12 Paving - Earthwork - 2024

Mitigated Construction On-Site

	ROG	NOx	CO	SO2	Fugitive PM10	Exhaust PM10	PM10 Total	Fugitive PM2.5	Exhaust PM2.5	PM2.5 Total	Bio- CO2	NBio- CO2	Total CO2	CH4	N2O	CO2e
Category	tons/yr										MT/yr					
Off-Road	1.6000e-004	7.1000e-004	0.0101	1.0000e-005		0.0000	0.0000		0.0000	0.0000						1.1947
Paving	1.0200e-003					0.0000	0.0000		0.0000	0.0000						0.0000
Total	**1.1800e-003**	**7.1000e-004**	**0.0101**	**1.0000e-005**		**0.0000**	**0.0000**		**0.0000**	**0.0000**						**1.1947**

Mitigated Construction Off-Site

	ROG	NOx	CO	SO2	Fugitive PM10	Exhaust PM10	PM10 Total	Fugitive PM2.5	Exhaust PM2.5	PM2.5 Total	Bio- CO2	NBio- CO2	Total CO2	CH4	N2O	CO2e
Category	tons/yr										MT/yr					
Hauling	0.0000	0.0000	0.0000	0.0000	0.0000	0.0000	0.0000	0.0000	0.0000	0.0000						0.0000
Vendor	1.0000e-005	4.8000e-004	1.8000e-004	0.0000	8.0000e-005	0.0000	8.0000e-005	2.0000e-005	0.0000	2.0000e-005						0.2243
Worker	2.0000e-005	2.0000e-005	2.4000e-004	0.0000	8.0000e-005	0.0000	8.0000e-005	2.0000e-005	0.0000	2.0000e-005						0.0654
Total	**3.0000e-005**	**5.0000e-004**	**4.2000e-004**	**0.0000**	**1.6000e-004**	**0.0000**	**1.6000e-004**	**4.0000e-005**	**0.0000**	**4.0000e-005**						**0.2897**

6th Street PARC - Construction Emissions Only - Los Angeles-South Coast County, Annual

EMFAC Off-Model Adjustment Factors for Gasoline Light Duty Vehicle to Account for the SAFE Vehicle Rule Applied

3.13 Utilities - 2024

Unmitigated Construction On-Site

	ROG	NOx	CO	SO2	Fugitive PM10	Exhaust PM10	PM10 Total	Fugitive PM2.5	Exhaust PM2.5	PM2.5 Total	Bio- CO2	NBio- CO2	Total CO2	CH4	N2O	CO2e
Category	tons/yr										MT/yr					
Off-Road	0.0287	0.2796	0.3035	4.1000e-004		0.0167	0.0167		0.0154	0.0154						36.6867
Total	**0.0287**	**0.2796**	**0.3035**	**4.1000e-004**		**0.0167**	**0.0167**		**0.0154**	**0.0154**						**36.6867**

Unmitigated Construction Off-Site

	ROG	NOx	CO	SO2	Fugitive PM10	Exhaust PM10	PM10 Total	Fugitive PM2.5	Exhaust PM2.5	PM2.5 Total	Bio- CO2	NBio- CO2	Total CO2	CH4	N2O	CO2e
Category	tons/yr										MT/yr					
Hauling	0.0000	0.0000	0.0000	0.0000	0.0000	0.0000	0.0000	0.0000	0.0000	0.0000						0.0000
Vendor	2.0000e-004	7.2700e-003	2.6600e-003	3.0000e-005	1.1300e-003	4.0000e-005	1.1700e-003	3.3000e-004	3.0000e-005	3.6000e-004						3.3648
Worker	1.0000e-003	7.6000e-004	0.0107	3.0000e-005	3.7000e-003	2.0000e-005	3.7200e-003	9.8000e-004	2.0000e-005	1.0000e-003						2.9425
Total	**1.2000e-003**	**8.0300e-003**	**0.0134**	**6.0000e-005**	**4.8300e-003**	**6.0000e-005**	**4.8900e-003**	**1.3100e-003**	**5.0000e-005**	**1.3600e-003**						**6.3073**

6th Street PARC - Construction Emissions Only - Los Angeles-South Coast County, Annual

EMFAC Off-Model Adjustment Factors for Gasoline Light Duty Vehicle to Account for the SAFE Vehicle Rule Applied

3.13 Utilities - 2024

Mitigated Construction On-Site

	ROG	NOx	CO	SO2	Fugitive PM10	Exhaust PM10	PM10 Total	Fugitive PM2.5	Exhaust PM2.5	PM2.5 Total	Bio- CO2	NBio- CO2	Total CO2	CH4	N2O	CO2e
Category	tons/yr										MT/yr					
Off-Road	5.0600e-003	0.0219	0.3121	4.1000e-004		1.0000e-004	1.0000e-004		1.0000e-004	1.0000e-004						36.6866
Total	**5.0600e-003**	**0.0219**	**0.3121**	**4.1000e-004**		**1.0000e-004**	**1.0000e-004**		**1.0000e-004**	**1.0000e-004**						**36.6866**

Mitigated Construction Off-Site

	ROG	NOx	CO	SO2	Fugitive PM10	Exhaust PM10	PM10 Total	Fugitive PM2.5	Exhaust PM2.5	PM2.5 Total	Bio- CO2	NBio- CO2	Total CO2	CH4	N2O	CO2e
Category	tons/yr										MT/yr					
Hauling	0.0000	0.0000	0.0000	0.0000	0.0000	0.0000	0.0000	0.0000	0.0000	0.0000						0.0000
Vendor	2.0000e-004	7.2700e-003	2.6600e-003	3.0000e-005	1.1300e-003	4.0000e-005	1.1700e-003	3.3000e-004	3.0000e-005	3.6000e-004						3.3648
Worker	1.0000e-003	7.6000e-004	0.0107	3.0000e-005	3.7000e-003	2.0000e-005	3.7200e-003	9.8000e-004	2.0000e-005	1.0000e-003						2.9425
Total	**1.2000e-003**	**8.0300e-003**	**0.0134**	**6.0000e-005**	**4.8300e-003**	**6.0000e-005**	**4.8900e-003**	**1.3100e-003**	**5.0000e-005**	**1.3600e-003**						**6.3073**

6th Street PARC - Construction Emissions Only - Los Angeles-South Coast County, Annual

EMFAC Off-Model Adjustment Factors for Gasoline Light Duty Vehicle to Account for the SAFE Vehicle Rule Applied

3.14 Structures - Construction - 2024

Unmitigated Construction On-Site

	ROG	NOx	CO	SO2	Fugitive PM10	Exhaust PM10	PM10 Total	Fugitive PM2.5	Exhaust PM2.5	PM2.5 Total	Bio- CO2	NBio- CO2	Total CO2	CH4	N2O	CO2e
Category	tons/yr										MT/yr					
Off-Road	0.0360	0.3142	0.5140	9.7000e-004		0.0146	0.0146		0.0134	0.0134						85.4832
Total	**0.0360**	**0.3142**	**0.5140**	**9.7000e-004**		**0.0146**	**0.0146**		**0.0134**	**0.0134**						**85.4832**

Unmitigated Construction Off-Site

	ROG	NOx	CO	SO2	Fugitive PM10	Exhaust PM10	PM10 Total	Fugitive PM2.5	Exhaust PM2.5	PM2.5 Total	Bio- CO2	NBio- CO2	Total CO2	CH4	N2O	CO2e
Category	tons/yr										MT/yr					
Hauling	0.0000	0.0000	0.0000	0.0000	0.0000	0.0000	0.0000	0.0000	0.0000	0.0000						0.0000
Vendor	2.6000e-004	9.6900e-003	3.5400e-003	4.0000e-005	1.5100e-003	5.0000e-005	1.5600e-003	4.4000e-004	4.0000e-005	4.8000e-004						4.4864
Worker	0.0212	0.0161	0.2282	6.6000e-004	0.0786	4.6000e-004	0.0790	0.0209	4.3000e-004	0.0213						62.5112
Total	**0.0215**	**0.0258**	**0.2317**	**7.0000e-004**	**0.0801**	**5.1000e-004**	**0.0806**	**0.0213**	**4.7000e-004**	**0.0218**						**66.9977**

6th Street PARC - Construction Emissions Only - Los Angeles-South Coast County, Annual

EMFAC Off-Model Adjustment Factors for Gasoline Light Duty Vehicle to Account for the SAFE Vehicle Rule Applied

3.14 Structures - Construction - 2024

Mitigated Construction On-Site

	ROG	NOx	CO	SO2	Fugitive PM10	Exhaust PM10	PM10 Total	Fugitive PM2.5	Exhaust PM2.5	PM2.5 Total	Bio- CO2	NBio- CO2	Total CO2	CH4	N2O	CO2e
Category	tons/yr										MT/yr					
Off-Road	0.0203	0.1325	0.6022	9.7000e-004		5.1100e-003	5.1100e-003		4.7200e-003	4.7200e-003						85.4831
Total	**0.0203**	**0.1325**	**0.6022**	**9.7000e-004**		**5.1100e-003**	**5.1100e-003**		**4.7200e-003**	**4.7200e-003**						**85.4831**

Mitigated Construction Off-Site

	ROG	NOx	CO	SO2	Fugitive PM10	Exhaust PM10	PM10 Total	Fugitive PM2.5	Exhaust PM2.5	PM2.5 Total	Bio- CO2	NBio- CO2	Total CO2	CH4	N2O	CO2e
Category	tons/yr										MT/yr					
Hauling	0.0000	0.0000	0.0000	0.0000	0.0000	0.0000	0.0000	0.0000	0.0000	0.0000						0.0000
Vendor	2.6000e-004	9.6900e-003	3.5400e-003	4.0000e-005	1.5100e-003	5.0000e-005	1.5600e-003	4.4000e-004	4.0000e-005	4.8000e-004						4.4864
Worker	0.0212	0.0161	0.2282	6.6000e-004	0.0786	4.6000e-004	0.0790	0.0209	4.3000e-004	0.0213						62.5112
Total	**0.0215**	**0.0258**	**0.2317**	**7.0000e-004**	**0.0801**	**5.1000e-004**	**0.0806**	**0.0213**	**4.7000e-004**	**0.0218**						**66.9977**

EMFAC Off-Model Adjustment Factors for Gasoline Light Duty Vehicle to Account for the SAFE Vehicle Rule Applied

3.15 Structures - Concrete - 2024

Unmitigated Construction On-Site

	ROG	NOx	CO	SO2	Fugitive PM10	Exhaust PM10	PM10 Total	Fugitive PM2.5	Exhaust PM2.5	PM2.5 Total	Bio- CO2	NBio- CO2	Total CO2	CH4	N2O	CO2e
Category	tons/yr										MT/yr					
Off-Road	4.9600e-003	0.0418	0.0603	1.1000e-004		1.9000e-003	1.9000e-003		1.9000e-003	1.9000e-003						9.1756
Total	**4.9600e-003**	**0.0418**	**0.0603**	**1.1000e-004**		**1.9000e-003**	**1.9000e-003**		**1.9000e-003**	**1.9000e-003**						**9.1756**

Unmitigated Construction Off-Site

	ROG	NOx	CO	SO2	Fugitive PM10	Exhaust PM10	PM10 Total	Fugitive PM2.5	Exhaust PM2.5	PM2.5 Total	Bio- CO2	NBio- CO2	Total CO2	CH4	N2O	CO2e
Category	tons/yr										MT/yr					
Hauling	0.0000	0.0000	0.0000	0.0000	0.0000	0.0000	0.0000	0.0000	0.0000	0.0000						0.0000
Vendor	5.3000e-004	0.0194	7.0900e-003	9.0000e-005	3.0300e-003	9.0000e-005	3.1200e-003	8.7000e-004	9.0000e-005	9.6000e-004						8.9729
Worker	0.0425	0.0323	0.4563	1.3300e-003	0.1571	9.3000e-004	0.1581	0.0417	8.5000e-004	0.0426						125.0225
Total	**0.0430**	**0.0517**	**0.4634**	**1.4200e-003**	**0.1602**	**1.0200e-003**	**0.1612**	**0.0426**	**9.4000e-004**	**0.0436**						**133.9954**

EMFAC Off-Model Adjustment Factors for Gasoline Light Duty Vehicle to Account for the SAFE Vehicle Rule Applied

3.15 Structures - Concrete - 2024

Mitigated Construction On-Site

	ROG	NOx	CO	SO2	Fugitive PM10	Exhaust PM10	PM10 Total	Fugitive PM2.5	Exhaust PM2.5	PM2.5 Total	Bio- CO2	NBio- CO2	Total CO2	CH4	N2O	CO2e
Category	tons/yr										MT/yr					
Off-Road	1.0700e-003	4.6200e-003	0.0658	1.1000e-004		2.0000e-005	2.0000e-005		2.0000e-005	2.0000e-005						9.1756
Total	**1.0700e-003**	**4.6200e-003**	**0.0658**	**1.1000e-004**		**2.0000e-005**	**2.0000e-005**		**2.0000e-005**	**2.0000e-005**						**9.1756**

Mitigated Construction Off-Site

	ROG	NOx	CO	SO2	Fugitive PM10	Exhaust PM10	PM10 Total	Fugitive PM2.5	Exhaust PM2.5	PM2.5 Total	Bio- CO2	NBio- CO2	Total CO2	CH4	N2O	CO2e
Category	tons/yr										MT/yr					
Hauling	0.0000	0.0000	0.0000	0.0000	0.0000	0.0000	0.0000	0.0000	0.0000	0.0000						0.0000
Vendor	5.3000e-004	0.0194	7.0900e-003	9.0000e-005	3.0300e-003	9.0000e-005	3.1200e-003	8.7000e-004	9.0000e-005	9.6000e-004						8.9729
Worker	0.0425	0.0323	0.4563	1.3300e-003	0.1571	9.3000e-004	0.1581	0.0417	8.5000e-004	0.0426						125.0225
Total	**0.0430**	**0.0517**	**0.4634**	**1.4200e-003**	**0.1602**	**1.0200e-003**	**0.1612**	**0.0426**	**9.4000e-004**	**0.0436**						**133.9954**

4.0 Operational Detail - Mobile

6th Street PARC - Construction Emissions Only - Los Angeles-South Coast County, Annual

EMFAC Off-Model Adjustment Factors for Gasoline Light Duty Vehicle to Account for the SAFE Vehicle Rule Applied

4.1 Mitigation Measures Mobile

	ROG	NOx	CO	SO2	Fugitive PM10	Exhaust PM10	PM10 Total	Fugitive PM2.5	Exhaust PM2.5	PM2.5 Total	Bio- CO2	NBio- CO2	Total CO2	CH4	N2O	CO2e
Category	tons/yr										MT/yr					
Mitigated	0.0000	0.0000	0.0000	0.0000	0.0000	0.0000	0.0000	0.0000	0.0000	0.0000						0.0000
Unmitigated	0.0000	0.0000	0.0000	0.0000	0.0000	0.0000	0.0000	0.0000	0.0000	0.0000						0.0000

4.2 Trip Summary Information

	Average Daily Trip Rate			Unmitigated	Mitigated
Land Use	Weekday	Saturday	Sunday	Annual VMT	Annual VMT
City Park	0.00	0.00	0.00		
Fast Food Restaurant w/o Drive Thru	0.00	0.00	0.00		
Health Club	0.00	0.00	0.00		
Parking Lot	0.00	0.00	0.00		
Total	0.00	0.00	0.00		

4.3 Trip Type Information

	Miles			Trip %			Trip Purpose %		
Land Use	H-W or C-W	H-S or C-C	H-O or C-NW	H-W or C-W	H-S or C-C	H-O or C-NW	Primary	Diverted	Pass-by
City Park	16.60	8.40	6.90	33.00	48.00	19.00	66	28	6
Fast Food Restaurant w/o Drive	16.60	8.40	6.90	1.50	79.50	19.00	51	37	12
Health Club	16.60	8.40	6.90	16.90	64.10	19.00	52	39	9
Parking Lot	16.60	8.40	6.90	0.00	0.00	0.00	0	0	0

6th Street PARC - Construction Emissions Only - Los Angeles-South Coast County, Annual

EMFAC Off-Model Adjustment Factors for Gasoline Light Duty Vehicle to Account for the SAFE Vehicle Rule Applied

4.4 Fleet Mix

Land Use	LDA	LDT1	LDT2	MDV	LHD1	LHD2	MHD	HHD	OBUS	UBUS	MCY	SBUS	MH
City Park	0.540171	0.064547	0.189075	0.126673	0.023412	0.006384	0.010926	0.008089	0.000929	0.000597	0.025155	0.000706	0.003335
Fast Food Restaurant w/o Drive Thru	0.540171	0.064547	0.189075	0.126673	0.023412	0.006384	0.010926	0.008089	0.000929	0.000597	0.025155	0.000706	0.003335
Health Club	0.540171	0.064547	0.189075	0.126673	0.023412	0.006384	0.010926	0.008089	0.000929	0.000597	0.025155	0.000706	0.003335
Parking Lot	0.540171	0.064547	0.189075	0.126673	0.023412	0.006384	0.010926	0.008089	0.000929	0.000597	0.025155	0.000706	0.003335

5.0 Energy Detail

Historical Energy Use: N

5.1 Mitigation Measures Energy

	ROG	NOx	CO	SO2	Fugitive PM10	Exhaust PM10	PM10 Total	Fugitive PM2.5	Exhaust PM2.5	PM2.5 Total	Bio- CO2	NBio- CO2	Total CO2	CH4	N2O	CO2e
Category	tons/yr										MT/yr					
Electricity Mitigated						0.0000	0.0000		0.0000	0.0000						20.2062
Electricity Unmitigated						0.0000	0.0000		0.0000	0.0000						20.2062
NaturalGas Mitigated	1.0600e-003	9.6600e-003	8.1200e-003	6.0000e-005		7.3000e-004	7.3000e-004		7.3000e-004	7.3000e-004						10.5833
NaturalGas Unmitigated	1.0600e-003	9.6600e-003	8.1200e-003	6.0000e-005		7.3000e-004	7.3000e-004		7.3000e-004	7.3000e-004						10.5833

6th Street PARC - Construction Emissions Only - Los Angeles-South Coast County, Annual

EMFAC Off-Model Adjustment Factors for Gasoline Light Duty Vehicle to Account for the SAFE Vehicle Rule Applied

5.2 Energy by Land Use - NaturalGas

Unmitigated

	NaturalGas Use	ROG	NOx	CO	SO2	Fugitive PM10	Exhaust PM10	PM10 Total	Fugitive PM2.5	Exhaust PM2.5	PM2.5 Total	Bio- CO2	NBio- CO2	Total CO2	CH4	N2O	CO2e
Land Use	kBTU/yr	tons/yr										MT/yr					
City Park	0	0.0000	0.0000	0.0000	0.0000		0.0000	0.0000		0.0000	0.0000						0.0000
Fast Food Restaurant w/o Drive Thru	161231	8.7000e-004	7.9000e-003	6.6400e-003	5.0000e-005		6.0000e-004	6.0000e-004		6.0000e-004	6.0000e-004						8.6550
Health Club	35920	1.9000e-004	1.7600e-003	1.4800e-003	1.0000e-005		1.3000e-004	1.3000e-004		1.3000e-004	1.3000e-004						1.9282
Parking Lot	0	0.0000	0.0000	0.0000	0.0000		0.0000	0.0000		0.0000	0.0000						0.0000
Total		**1.0600e-003**	**9.6600e-003**	**8.1200e-003**	**6.0000e-005**		**7.3000e-004**	**7.3000e-004**		**7.3000e-004**	**7.3000e-004**						**10.5833**

6th Street PARC - Construction Emissions Only - Los Angeles-South Coast County, Annual

EMFAC Off-Model Adjustment Factors for Gasoline Light Duty Vehicle to Account for the SAFE Vehicle Rule Applied

5.2 Energy by Land Use - NaturalGas

Mitigated

	NaturalGas Use	ROG	NOx	CO	SO2	Fugitive PM10	Exhaust PM10	PM10 Total	Fugitive PM2.5	Exhaust PM2.5	PM2.5 Total	Bio- CO2	NBio- CO2	Total CO2	CH4	N2O	CO2e
Land Use	kBTU/yr	tons/yr										MT/yr					
City Park	0	0.0000	0.0000	0.0000	0.0000		0.0000	0.0000		0.0000	0.0000						0.0000
Fast Food Restaurant w/o Drive Thru	161231	8.7000e-004	7.9000e-003	6.6400e-003	5.0000e-005		6.0000e-004	6.0000e-004		6.0000e-004	6.0000e-004						8.6550
Health Club	35920	1.9000e-004	1.7600e-003	1.4800e-003	1.0000e-005		1.3000e-004	1.3000e-004		1.3000e-004	1.3000e-004						1.9282
Parking Lot	0	0.0000	0.0000	0.0000	0.0000		0.0000	0.0000		0.0000	0.0000						0.0000
Total		**1.0600e-003**	**9.6600e-003**	**8.1200e-003**	**6.0000e-005**		**7.3000e-004**	**7.3000e-004**		**7.3000e-004**	**7.3000e-004**						**10.5833**

6th Street PARC - Construction Emissions Only - Los Angeles-South Coast County, Annual

EMFAC Off-Model Adjustment Factors for Gasoline Light Duty Vehicle to Account for the SAFE Vehicle Rule Applied

5.3 Energy by Land Use - Electricity

Unmitigated

	Electricity Use	Total CO2	CH4	N2O	CO2e
Land Use	kWh/yr	MT/yr			
City Park	0				0.0000
Fast Food Restaurant w/o Drive Thru	30289				9.5347
Health Club	21720				6.8373
Parking Lot	12180				3.8342
Total					**20.2062**

EMFAC Off-Model Adjustment Factors for Gasoline Light Duty Vehicle to Account for the SAFE Vehicle Rule Applied

5.3 Energy by Land Use - Electricity

Mitigated

	Electricity Use	Total CO2	CH4	N2O	CO2e
Land Use	kWh/yr	MT/yr			
City Park	0				0.0000
Fast Food Restaurant w/o Drive Thru	30289				9.5347
Health Club	21720				6.8373
Parking Lot	12180				3.8342
Total					**20.2062**

6.0 Area Detail

6.1 Mitigation Measures Area

EMFAC Off-Model Adjustment Factors for Gasoline Light Duty Vehicle to Account for the SAFE Vehicle Rule Applied

	ROG	NOx	CO	SO2	Fugitive PM10	Exhaust PM10	PM10 Total	Fugitive PM2.5	Exhaust PM2.5	PM2.5 Total	Bio- CO2	NBio- CO2	Total CO2	CH4	N2O	CO2e
Category	tons/yr										MT/yr					
Mitigated	0.0189	1.0000e-005	1.3000e-003	0.0000		0.0000	0.0000		0.0000	0.0000						2.6900e-003
Unmitigated	0.0189	1.0000e-005	1.3000e-003	0.0000		0.0000	0.0000		0.0000	0.0000						2.6900e-003

6.2 Area by SubCategory

Unmitigated

	ROG	NOx	CO	SO2	Fugitive PM10	Exhaust PM10	PM10 Total	Fugitive PM2.5	Exhaust PM2.5	PM2.5 Total	Bio- CO2	NBio- CO2	Total CO2	CH4	N2O	CO2e
SubCategory	tons/yr										MT/yr					
Architectural Coating	1.7400e-003					0.0000	0.0000		0.0000	0.0000						0.0000
Consumer Products	0.0170					0.0000	0.0000		0.0000	0.0000						0.0000
Landscaping	1.2000e-004	1.0000e-005	1.3000e-003	0.0000		0.0000	0.0000		0.0000	0.0000						2.6900e-003
Total	**0.0189**	**1.0000e-005**	**1.3000e-003**	**0.0000**		**0.0000**	**0.0000**		**0.0000**	**0.0000**						**2.6900e-003**

6th Street PARC - Construction Emissions Only - Los Angeles-South Coast County, Annual

EMFAC Off-Model Adjustment Factors for Gasoline Light Duty Vehicle to Account for the SAFE Vehicle Rule Applied

6.2 Area by SubCategory

Mitigated

	ROG	NOx	CO	SO2	Fugitive PM10	Exhaust PM10	PM10 Total	Fugitive PM2.5	Exhaust PM2.5	PM2.5 Total	Bio- CO2	NBio- CO2	Total CO2	CH4	N2O	CO2e
SubCategory	tons/yr										MT/yr					
Architectural Coating	1.7400e-003					0.0000	0.0000		0.0000	0.0000						0.0000
Consumer Products	0.0170					0.0000	0.0000		0.0000	0.0000						0.0000
Landscaping	1.2000e-004	1.0000e-005	1.3000e-003	0.0000		0.0000	0.0000		0.0000	0.0000						2.6900e-003
Total	**0.0189**	**1.0000e-005**	**1.3000e-003**	**0.0000**		**0.0000**	**0.0000**		**0.0000**	**0.0000**						**2.6900e-003**

7.0 Water Detail

7.1 Mitigation Measures Water

EMFAC Off-Model Adjustment Factors for Gasoline Light Duty Vehicle to Account for the SAFE Vehicle Rule Applied

	Total CO2	CH4	N2O	CO2e
Category	MT/yr			
Mitigated				53.0278
Unmitigated				53.0278

7.2 Water by Land Use

Unmitigated

	Indoor/Outdoor Use	Total CO2	CH4	N2O	CO2e
Land Use	Mgal	MT/yr			
City Park	0 / 14.5599				50.9209
Fast Food Restaurant w/o Drive Thru	0.212474 / 0.0135621				1.2076
Health Club	0.118286 / 0.0724981				0.8994
Parking Lot	0 / 0				0.0000
Total					**53.0278**

EMFAC Off-Model Adjustment Factors for Gasoline Light Duty Vehicle to Account for the SAFE Vehicle Rule Applied

7.2 Water by Land Use

Mitigated

	Indoor/Outdoor Use	Total CO2	CH4	N2O	CO2e
Land Use	Mgal	MT/yr			
City Park	0 / 14.5599				50.9209
Fast Food Restaurant w/o Drive Thru	0.212474 / 0.0135621				1.2076
Health Club	0.118286 / 0.0724981				0.8994
Parking Lot	0 / 0				0.0000
Total					**53.0278**

8.0 Waste Detail

8.1 Mitigation Measures Waste

6th Street PARC - Construction Emissions Only - Los Angeles-South Coast County, Annual

EMFAC Off-Model Adjustment Factors for Gasoline Light Duty Vehicle to Account for the SAFE Vehicle Rule Applied

Category/Year

	Total CO2	CH4	N2O	CO2e
	MT/yr			
Mitigated				10.3145
Unmitigated				10.3145

8.2 Waste by Land Use

Unmitigated

	Waste Disposed	Total CO2	CH4	N2O	CO2e
Land Use	tons	MT/yr			
City Park	1.05				0.5281
Fast Food Restaurant w/o Drive Thru	8.06				4.0534
Health Club	11.4				5.7331
Parking Lot	0				0.0000
Total					**10.3145**

6th Street PARC - Construction Emissions Only - Los Angeles-South Coast County, Annual

EMFAC Off-Model Adjustment Factors for Gasoline Light Duty Vehicle to Account for the SAFE Vehicle Rule Applied

8.2 Waste by Land Use

Mitigated

	Waste Disposed	Total CO2	CH4	N2O	CO2e
Land Use	tons	MT/yr			
City Park	1.05				0.5281
Fast Food Restaurant w/o Drive Thru	8.06				4.0534
Health Club	11.4				5.7331
Parking Lot	0				0.0000
Total					**10.3145**

9.0 Operational Offroad

Equipment Type	Number	Hours/Day	Days/Year	Horse Power	Load Factor	Fuel Type

10.0 Stationary Equipment

Fire Pumps and Emergency Generators

Equipment Type	Number	Hours/Day	Hours/Year	Horse Power	Load Factor	Fuel Type

Boilers

Equipment Type	Number	Heat Input/Day	Heat Input/Year	Boiler Rating	Fuel Type

User Defined Equipment

6th Street PARC - Construction Emissions Only - Los Angeles-South Coast County, Annual

EMFAC Off-Model Adjustment Factors for Gasoline Light Duty Vehicle to Account for the SAFE Vehicle Rule Applied

Equipment Type	Number

11.0 Vegetation

EMFAC Off-Model Adjustment Factors for Gasoline Light Duty Vehicle to Account for the SAFE Vehicle Rule Applied

6th Street PARC - Construction Emissions Only

Los Angeles-South Coast County, Summer

1.0 Project Characteristics

1.1 Land Usage

Land Uses	Size	Metric	Lot Acreage	Floor Surface Area	Population
Parking Lot	87.00	Space	0.78	34,800.00	0
City Park	12.22	Acre	12.22	532,303.20	0
Fast Food Restaurant w/o Drive Thru	0.70	1000sqft	0.02	700.00	0
Health Club	2.00	1000sqft	0.05	2,000.00	0

1.2 Other Project Characteristics

Urbanization	Urban	**Wind Speed (m/s)**	2.2	**Precipitation Freq (Days)**	33
Climate Zone	12			**Operational Year**	2025
Utility Company	Los Angeles Department of Water & Power				
CO2 Intensity (lb/MWhr)	691.98	**CH4 Intensity (lb/MWhr)**	0.033	**N2O Intensity (lb/MWhr)**	0.004

1.3 User Entered Comments & Non-Default Data

Project Characteristics -

Land Use - Includes 200 sq.ft. cafe, 2,000 sq.ft. rec. building, 87 paved parking spaces (0.78 acres), 12.22 acres of park uses, 13 acres total.

Construction Phase - Based on construction schedules provided.

Off-road Equipment - Offroad equipment based on information provided.

Off-road Equipment - Offroad equipment based on information provided.

Off-road Equipment - Offroad equipment based on information provided.

6th Street PARC - Construction Emissions Only - Los Angeles-South Coast County, Summer

EMFAC Off-Model Adjustment Factors for Gasoline Light Duty Vehicle to Account for the SAFE Vehicle Rule Applied

Off-road Equipment - Offroad equipment based on information provided.

Off-road Equipment - Offroad equipment based on information provided.

Off-road Equipment - Offroad equipment based on information provided.

Off-road Equipment - .Offroad equipment based on information provided.

Off-road Equipment - Offroad equipment based on information provided.

Off-road Equipment - Offroad equipment based on information provided.

Off-road Equipment - Offroad equipment based on information provided.

Off-road Equipment - .Offroad equipment based on information provided.

Off-road Equipment - Offroad equipment based on information provided.

Off-road Equipment - Offroad equipment based on information provided.

Off-road Equipment - Offroad equipment based on information provided.

Trips and VMT - Based on trip and haul information provided.

Grading - .

Vehicle Trips - Construction run only.

Water And Wastewater -

Solid Waste -

Construction Off-road Equipment Mitigation - Tier 4 engins with Level 3 DPF applied.

Table Name	Column Name	Default Value	New Value
tblConstDustMitigation	WaterUnpavedRoadVehicleSpeed	0	15
tblConstEquipMitigation	DPF	No Change	Level 3
tblConstEquipMitigation	DPF	No Change	Level 3
tblConstEquipMitigation	DPF	No Change	Level 3
tblConstEquipMitigation	DPF	No Change	Level 3

EMFAC Off-Model Adjustment Factors for Gasoline Light Duty Vehicle to Account for the SAFE Vehicle Rule Applied

tblConstEquipMitigation	DPF	No Change	Level 3
tblConstEquipMitigation	DPF	No Change	Level 3
tblConstEquipMitigation	DPF	No Change	Level 3
tblConstEquipMitigation	DPF	No Change	Level 3
tblConstEquipMitigation	DPF	No Change	Level 3
tblConstEquipMitigation	DPF	No Change	Level 3
tblConstEquipMitigation	DPF	No Change	Level 3
tblConstEquipMitigation	DPF	No Change	Level 3
tblConstEquipMitigation	DPF	No Change	Level 3
tblConstEquipMitigation	DPF	No Change	Level 3
tblConstEquipMitigation	DPF	No Change	Level 3
tblConstEquipMitigation	NumberOfEquipmentMitigated	0.00	2.00
tblConstEquipMitigation	NumberOfEquipmentMitigated	0.00	3.00
tblConstEquipMitigation	NumberOfEquipmentMitigated	0.00	1.00
tblConstEquipMitigation	NumberOfEquipmentMitigated	0.00	2.00
tblConstEquipMitigation	NumberOfEquipmentMitigated	0.00	16.00
tblConstEquipMitigation	NumberOfEquipmentMitigated	0.00	2.00
tblConstEquipMitigation	NumberOfEquipmentMitigated	0.00	3.00
tblConstEquipMitigation	NumberOfEquipmentMitigated	0.00	5.00
tblConstEquipMitigation	NumberOfEquipmentMitigated	0.00	1.00
tblConstEquipMitigation	NumberOfEquipmentMitigated	0.00	1.00
tblConstEquipMitigation	NumberOfEquipmentMitigated	0.00	2.00
tblConstEquipMitigation	NumberOfEquipmentMitigated	0.00	8.00
tblConstEquipMitigation	NumberOfEquipmentMitigated	0.00	3.00
tblConstEquipMitigation	NumberOfEquipmentMitigated	0.00	32.00
tblConstEquipMitigation	NumberOfEquipmentMitigated	0.00	2.00
tblConstEquipMitigation	Tier	No Change	Tier 4 Final
tblConstEquipMitigation	Tier	No Change	Tier 4 Final
tblConstEquipMitigation	Tier	No Change	Tier 4 Final

EMFAC Off-Model Adjustment Factors for Gasoline Light Duty Vehicle to Account for the SAFE Vehicle Rule Applied

tblConstEquipMitigation	Tier	No Change	Tier 4 Final
tblConstEquipMitigation	Tier	No Change	Tier 4 Final
tblConstEquipMitigation	Tier	No Change	Tier 4 Final
tblConstEquipMitigation	Tier	No Change	Tier 4 Final
tblConstEquipMitigation	Tier	No Change	Tier 4 Final
tblConstEquipMitigation	Tier	No Change	Tier 4 Final
tblConstEquipMitigation	Tier	No Change	Tier 4 Final
tblConstEquipMitigation	Tier	No Change	Tier 4 Final
tblConstEquipMitigation	Tier	No Change	Tier 4 Final
tblConstEquipMitigation	Tier	No Change	Tier 4 Final
tblConstEquipMitigation	Tier	No Change	Tier 4 Final
tblConstEquipMitigation	Tier	No Change	Tier 4 Final
tblConstructionPhase	NumDays	300.00	60.00
tblConstructionPhase	NumDays	300.00	120.00
tblConstructionPhase	NumDays	300.00	30.00
tblConstructionPhase	NumDays	20.00	40.00
tblConstructionPhase	NumDays	30.00	9.00
tblConstructionPhase	NumDays	20.00	60.00
tblConstructionPhase	NumDays	20.00	3.00
tblConstructionPhase	NumDays	20.00	30.00
tblConstructionPhase	NumDays	20.00	120.00
tblConstructionPhase	NumDays	10.00	150.00
tblConstructionPhase	NumDays	10.00	30.00
tblConstructionPhase	NumDays	10.00	33.00
tblConstructionPhase	NumDays	10.00	60.00
tblGrading	AcresOfGrading	9.00	31.50
tblGrading	AcresOfGrading	0.00	49.50
tblGrading	AcresOfGrading	0.00	90.00
tblGrading	MaterialExported	0.00	16,700.00

6th Street PARC - Construction Emissions Only - Los Angeles-South Coast County, Summer

EMFAC Off-Model Adjustment Factors for Gasoline Light Duty Vehicle to Account for the SAFE Vehicle Rule Applied

tblGrading	MaterialImported	0.00	16,700.00
tblOffRoadEquipment	HorsePower	231.00	226.00
tblOffRoadEquipment	HorsePower	231.00	226.00
tblOffRoadEquipment	HorsePower	187.00	174.00
tblOffRoadEquipment	HorsePower	130.00	125.00
tblOffRoadEquipment	HorsePower	247.00	255.00
tblOffRoadEquipment	HorsePower	221.00	81.00
tblOffRoadEquipment	HorsePower	221.00	205.00
tblOffRoadEquipment	HorsePower	9.00	300.00
tblOffRoadEquipment	HorsePower	9.00	300.00
tblOffRoadEquipment	HorsePower	9.00	300.00
tblOffRoadEquipment	HorsePower	16.00	400.00
tblOffRoadEquipment	HorsePower	16.00	400.00
tblOffRoadEquipment	HorsePower	158.00	162.00
tblOffRoadEquipment	HorsePower	187.00	174.00
tblOffRoadEquipment	HorsePower	402.00	400.00
tblOffRoadEquipment	HorsePower	402.00	400.00
tblOffRoadEquipment	HorsePower	402.00	400.00
tblOffRoadEquipment	HorsePower	402.00	400.00
tblOffRoadEquipment	HorsePower	172.00	85.00
tblOffRoadEquipment	HorsePower	78.00	80.00
tblOffRoadEquipment	LoadFactor	0.73	0.38
tblOffRoadEquipment	LoadFactor	0.29	0.20
tblOffRoadEquipment	LoadFactor	0.42	0.36
tblOffRoadEquipment	LoadFactor	0.37	0.40
tblOffRoadEquipment	LoadFactor	0.50	0.73
tblOffRoadEquipment	LoadFactor	0.50	0.29
tblOffRoadEquipment	LoadFactor	0.56	0.29
tblOffRoadEquipment	LoadFactor	0.56	0.20

EMFAC Off-Model Adjustment Factors for Gasoline Light Duty Vehicle to Account for the SAFE Vehicle Rule Applied

tblOffRoadEquipment	LoadFactor	0.56	0.42
tblOffRoadEquipment	LoadFactor	0.38	0.40
tblOffRoadEquipment	LoadFactor	0.38	0.48
tblOffRoadEquipment	LoadFactor	0.38	0.74
tblOffRoadEquipment	LoadFactor	0.41	0.42
tblOffRoadEquipment	LoadFactor	0.38	0.42
tblOffRoadEquipment	LoadFactor	0.38	0.48
tblOffRoadEquipment	LoadFactor	0.38	0.42
tblOffRoadEquipment	LoadFactor	0.74	0.20
tblOffRoadEquipment	LoadFactor	0.74	0.45
tblOffRoadEquipment	LoadFactor	0.38	0.37
tblOffRoadEquipment	LoadFactor	0.38	0.40
tblOffRoadEquipment	LoadFactor	0.38	0.37
tblOffRoadEquipment	LoadFactor	0.37	0.38
tblOffRoadEquipment	OffRoadEquipmentUnitAmount	1.00	0.00
tblOffRoadEquipment	OffRoadEquipmentUnitAmount	2.00	0.00
tblOffRoadEquipment	OffRoadEquipmentUnitAmount	3.00	0.00
tblOffRoadEquipment	OffRoadEquipmentUnitAmount	3.00	0.00
tblOffRoadEquipment	OffRoadEquipmentUnitAmount	3.00	0.00
tblOffRoadEquipment	OffRoadEquipmentUnitAmount	1.00	0.00
tblOffRoadEquipment	OffRoadEquipmentUnitAmount	1.00	0.00
tblOffRoadEquipment	OffRoadEquipmentUnitAmount	1.00	0.00
tblOffRoadEquipment	OffRoadEquipmentUnitAmount	1.00	2.00
tblOffRoadEquipment	OffRoadEquipmentUnitAmount	2.00	0.00
tblOffRoadEquipment	OffRoadEquipmentUnitAmount	2.00	0.00
tblOffRoadEquipment	OffRoadEquipmentUnitAmount	2.00	1.00
tblOffRoadEquipment	OffRoadEquipmentUnitAmount	2.00	0.00
tblOffRoadEquipment	OffRoadEquipmentUnitAmount	2.00	0.00
tblOffRoadEquipment	OffRoadEquipmentUnitAmount	2.00	0.00

6th Street PARC - Construction Emissions Only - Los Angeles-South Coast County, Summer

EMFAC Off-Model Adjustment Factors for Gasoline Light Duty Vehicle to Account for the SAFE Vehicle Rule Applied

tblOffRoadEquipment	OffRoadEquipmentUnitAmount	2.00	0.00
tblOffRoadEquipment	OffRoadEquipmentUnitAmount	2.00	0.00
tblOffRoadEquipment	OffRoadEquipmentUnitAmount	2.00	0.00
tblOffRoadEquipment	OffRoadEquipmentUnitAmount	2.00	1.00
tblOffRoadEquipment	OffRoadEquipmentUnitAmount	2.00	1.00
tblOffRoadEquipment	OffRoadEquipmentUnitAmount	2.00	0.00
tblOffRoadEquipment	OffRoadEquipmentUnitAmount	2.00	1.00
tblOffRoadEquipment	OffRoadEquipmentUnitAmount	1.00	0.00
tblOffRoadEquipment	OffRoadEquipmentUnitAmount	3.00	1.00
tblOffRoadEquipment	OffRoadEquipmentUnitAmount	3.00	1.00
tblOffRoadEquipment	OffRoadEquipmentUnitAmount	3.00	0.00
tblOffRoadEquipment	OffRoadEquipmentUnitAmount	3.00	0.00
tblOffRoadEquipment	OffRoadEquipmentUnitAmount	2.00	0.00
tblOffRoadEquipment	OffRoadEquipmentUnitAmount	3.00	0.00
tblOffRoadEquipment	OffRoadEquipmentUnitAmount	3.00	0.00
tblOffRoadEquipment	OffRoadEquipmentUnitAmount	3.00	0.00
tblOffRoadEquipment	OffRoadEquipmentUnitAmount	2.00	0.00
tblOffRoadEquipment	OffRoadEquipmentUnitAmount	4.00	8.00
tblOffRoadEquipment	OffRoadEquipmentUnitAmount	4.00	8.00
tblOffRoadEquipment	OffRoadEquipmentUnitAmount	4.00	8.00
tblOffRoadEquipment	OffRoadEquipmentUnitAmount	4.00	3.00
tblOffRoadEquipment	OffRoadEquipmentUnitAmount	1.00	0.00
tblOffRoadEquipment	OffRoadEquipmentUnitAmount	1.00	0.00
tblOffRoadEquipment	OffRoadEquipmentUnitAmount	1.00	0.00
tblOffRoadEquipment	UsageHours	8.00	4.00
tblOffRoadEquipment	UsageHours	7.00	8.00
tblOffRoadEquipment	UsageHours	7.00	8.00
tblOffRoadEquipment	UsageHours	8.00	2.00
tblTripsAndVMT	HaulingTripLength	20.00	210.00

EMFAC Off-Model Adjustment Factors for Gasoline Light Duty Vehicle to Account for the SAFE Vehicle Rule Applied

tblTripsAndVMT	VendorTripNumber	0.00	8.00
tblTripsAndVMT	VendorTripNumber	0.00	8.00
tblTripsAndVMT	VendorTripNumber	0.00	8.00
tblTripsAndVMT	VendorTripNumber	0.00	8.00
tblTripsAndVMT	VendorTripNumber	93.00	8.00
tblTripsAndVMT	VendorTripNumber	93.00	8.00
tblTripsAndVMT	VendorTripNumber	0.00	8.00
tblTripsAndVMT	VendorTripNumber	0.00	8.00
tblTripsAndVMT	VendorTripNumber	0.00	8.00
tblTripsAndVMT	VendorTripNumber	0.00	8.00
tblTripsAndVMT	VendorTripNumber	0.00	8.00
tblTripsAndVMT	VendorTripNumber	93.00	8.00
tblTripsAndVMT	VendorTripNumber	0.00	8.00
tblTripsAndVMT	VendorTripNumber	0.00	8.00
tblVehicleTrips	ST_TR	1.96	0.00
tblVehicleTrips	ST_TR	696.00	0.00
tblVehicleTrips	ST_TR	20.87	0.00
tblVehicleTrips	SU_TR	2.19	0.00
tblVehicleTrips	SU_TR	500.00	0.00
tblVehicleTrips	SU_TR	26.73	0.00
tblVehicleTrips	WD_TR	0.78	0.00
tblVehicleTrips	WD_TR	346.23	0.00
tblVehicleTrips	WD_TR	32.93	0.00

2.0 Emissions Summary

6th Street PARC - Construction Emissions Only - Los Angeles-South Coast County, Summer

EMFAC Off-Model Adjustment Factors for Gasoline Light Duty Vehicle to Account for the SAFE Vehicle Rule Applied

2.1 Overall Construction (Maximum Daily Emission)

Unmitigated Construction

	ROG	NOx	CO	SO2	Fugitive PM10	Exhaust PM10	PM10 Total	Fugitive PM2.5	Exhaust PM2.5	PM2.5 Total	Bio- CO2	NBio- CO2	Total CO2	CH4	N2O	CO2e
Year	lb/day										lb/day					
2022	4.5128	69.0753	39.8289	0.1906	18.0178	2.0170	20.0347	8.0652	1.8657	9.9310						20,953.1172
2023	2.1481	13.6155	20.1895	0.0545	2.8634	0.5779	3.3890	0.7617	0.5317	1.2520						5,483.1906
2024	2.6502	18.7328	25.3118	0.0566	2.7227	1.0556	3.2263	0.7232	0.9712	1.1866						5,692.6004
Maximum	**4.5128**	**69.0753**	**39.8289**	**0.1906**	**18.0178**	**2.0170**	**20.0347**	**8.0652**	**1.8657**	**9.9310**						**20,953.1172**

Mitigated Construction

	ROG	NOx	CO	SO2	Fugitive PM10	Exhaust PM10	PM10 Total	Fugitive PM2.5	Exhaust PM2.5	PM2.5 Total	Bio- CO2	NBio- CO2	Total CO2	CH4	N2O	CO2e
Year	lb/day										lb/day					
2022	1.7804	37.2835	41.3733	0.1906	9.9778	0.2928	10.2706	3.9499	0.2804	4.2304						20,953.1172
2023	1.2000	2.5630	24.0076	0.0545	2.8634	0.0262	2.8896	0.7617	0.0247	0.7864						5,483.1906
2024	1.3977	5.2008	28.2515	0.0566	2.7227	0.1874	2.9102	0.7232	0.1729	0.8961						5,692.6004
Maximum	**1.7804**	**37.2835**	**41.3733**	**0.1906**	**9.9778**	**0.2928**	**10.2706**	**3.9499**	**0.2804**	**4.2304**						**20,953.1172**

6th Street PARC - Construction Emissions Only - Los Angeles-South Coast County, Summer

EMFAC Off-Model Adjustment Factors for Gasoline Light Duty Vehicle to Account for the SAFE Vehicle Rule Applied

	ROG	NOx	CO	SO2	Fugitive PM10	Exhaust PM10	PM10 Total	Fugitive PM2.5	Exhaust PM2.5	PM2.5 Total	Bio- CO2	NBio-CO2	Total CO2	CH4	N20	CO2e
Percent Reduction	52.98	55.59	-9.73	0.00	34.06	86.13	39.70	43.09	85.81	52.20	0.00	0.00	0.00	0.00	0.00	0.00

6th Street PARC - Construction Emissions Only - Los Angeles-South Coast County, Summer

EMFAC Off-Model Adjustment Factors for Gasoline Light Duty Vehicle to Account for the SAFE Vehicle Rule Applied

2.2 Overall Operational

Unmitigated Operational

	ROG	NOx	CO	SO2	Fugitive PM10	Exhaust PM10	PM10 Total	Fugitive PM2.5	Exhaust PM2.5	PM2.5 Total	Bio- CO2	NBio- CO2	Total CO2	CH4	N2O	CO2e
Category	lb/day										lb/day					
Area	0.1037	9.0000e-005	0.0104	0.0000		4.0000e-005	4.0000e-005		4.0000e-005	4.0000e-005						0.0238
Energy	5.8300e-003	0.0530	0.0445	3.2000e-004		4.0200e-003	4.0200e-003		4.0200e-003	4.0200e-003						63.9235
Mobile	0.0000	0.0000	0.0000	0.0000	0.0000	0.0000	0.0000	0.0000	0.0000	0.0000						0.0000
Total	**0.1095**	**0.0530**	**0.0549**	**3.2000e-004**	**0.0000**	**4.0600e-003**	**4.0600e-003**	**0.0000**	**4.0600e-003**	**4.0600e-003**						**63.9472**

Mitigated Operational

	ROG	NOx	CO	SO2	Fugitive PM10	Exhaust PM10	PM10 Total	Fugitive PM2.5	Exhaust PM2.5	PM2.5 Total	Bio- CO2	NBio- CO2	Total CO2	CH4	N2O	CO2e
Category	lb/day										lb/day					
Area	0.1037	9.0000e-005	0.0104	0.0000		4.0000e-005	4.0000e-005		4.0000e-005	4.0000e-005						0.0238
Energy	5.8300e-003	0.0530	0.0445	3.2000e-004		4.0200e-003	4.0200e-003		4.0200e-003	4.0200e-003						63.9235
Mobile	0.0000	0.0000	0.0000	0.0000	0.0000	0.0000	0.0000	0.0000	0.0000	0.0000						0.0000
Total	**0.1095**	**0.0530**	**0.0549**	**3.2000e-004**	**0.0000**	**4.0600e-003**	**4.0600e-003**	**0.0000**	**4.0600e-003**	**4.0600e-003**						**63.9472**

6th Street PARC - Construction Emissions Only - Los Angeles-South Coast County, Summer

EMFAC Off-Model Adjustment Factors for Gasoline Light Duty Vehicle to Account for the SAFE Vehicle Rule Applied

	ROG	NOx	CO	SO2	Fugitive PM10	Exhaust PM10	PM10 Total	Fugitive PM2.5	Exhaust PM2.5	PM2.5 Total	Bio- CO2	NBio-CO2	Total CO2	CH4	N20	CO2e
Percent Reduction	0.00	0.00	0.00	0.00	0.00	0.00	0.00	0.00	0.00	0.00	0.00	0.00	0.00	0.00	0.00	0.00

3.0 Construction Detail

Construction Phase

Phase Number	Phase Name	Phase Type	Start Date	End Date	Num Days Week	Num Days	Phase Description
1	Demolition	Demolition	1/1/2022	2/25/2022	5	40	
2	Site Preparation - Export	Site Preparation	2/28/2022	9/23/2022	5	150	
3	Site Preparation - Import	Site Preparation	3/1/2022	4/11/2022	5	30	
4	Site Preparation - Grading	Grading	9/23/2022	10/5/2022	5	9	
5	Site Preparation - Excavation	Site Preparation	10/5/2022	11/18/2022	5	33	
6	Park & Infrastructure - Construction	Site Preparation	11/18/2022	2/9/2023	5	60	
7	Park & Infrastructure - Concrete	Building Construction	2/10/2023	3/23/2023	5	30	
8	Paving - Asphalt	Paving	3/23/2023	5/3/2023	5	30	
9	Paving - Concrete	Paving	5/3/2023	10/17/2023	5	120	
10	Paving - DG	Paving	10/17/2023	1/8/2024	5	60	
11	Paving - Earthwork	Paving	1/8/2024	1/10/2024	5	3	
12	Utilities	Trenching	1/10/2024	3/12/2024	5	45	
13	Structures - Construction	Building Construction	3/13/2024	6/4/2024	5	60	
14	Structures - Concrete	Building Construction	6/5/2024	11/19/2024	5	120	

Acres of Grading (Site Preparation Phase): 75

Acres of Grading (Grading Phase): 31.5

Acres of Paving: 0.78

Residential Indoor: 0; Residential Outdoor: 0; Non-Residential Indoor: 0; Non-Residential Outdoor: 0; Striped Parking Area: 0 (Architectural Coating – sqft)

6th Street PARC - Construction Emissions Only - Los Angeles-South Coast County, Summer

EMFAC Off-Model Adjustment Factors for Gasoline Light Duty Vehicle to Account for the SAFE Vehicle Rule Applied

OffRoad Equipment

Phase Name	Offroad Equipment Type	Amount	Usage Hours	Horse Power	Load Factor
Demolition	Bore/Drill Rigs	1	4.00	81	0.73
Demolition	Concrete/Industrial Saws	1	4.00	81	0.38
Demolition	Excavators	3	8.00	158	0.38
Demolition	Off-Highway Trucks	1	6.00	400	0.38
Demolition	Other Construction Equipment	1	8.00	85	0.42
Demolition	Rubber Tired Dozers	1	8.00	255	0.40
Demolition	Tractors/Loaders/Backhoes	2	8.00	97	0.37
Site Preparation - Export	Dumpers/Tenders	8	6.00	400	0.40
Site Preparation - Export	Rubber Tired Dozers	1	8.00	247	0.40
Site Preparation - Export	Tractors/Loaders/Backhoes	8	2.00	97	0.37
Site Preparation - Import	Dumpers/Tenders	8	6.00	400	0.48
Site Preparation - Import	Rubber Tired Dozers	1	8.00	247	0.40
Site Preparation - Import	Tractors/Loaders/Backhoes	8	8.00	97	0.37
Site Preparation - Grading	Excavators	0	8.00	158	0.38
Site Preparation - Grading	Graders	2	8.00	174	0.41
Site Preparation - Grading	Rollers	2	8.00	80	0.40
Site Preparation - Grading	Rubber Tired Dozers	0	8.00	247	0.40
Site Preparation - Grading	Scrapers	0	8.00	367	0.48
Site Preparation - Grading	Tractors/Loaders/Backhoes	0	8.00	97	0.37
Site Preparation - Excavation	Rubber Tired Dozers	0	8.00	247	0.40
Site Preparation - Excavation	Tractors/Loaders/Backhoes	8	8.00	97	0.37
Park & Infrastructure - Construction	Off-Highway Trucks	2	6.00	400	0.48
Park & Infrastructure - Construction	Rollers	1	8.00	80	0.37
Park & Infrastructure - Construction	Rubber Tired Dozers	0	8.00	247	0.40
Park & Infrastructure - Construction	Tractors/Loaders/Backhoes	3	8.00	97	0.40
Park & Infrastructure - Concrete	Cement and Mortar Mixers	1	8.00	300	0.20

EMFAC Off-Model Adjustment Factors for Gasoline Light Duty Vehicle to Account for the SAFE Vehicle Rule Applied

Park & Infrastructure - Concrete	Cranes	1	8.00	226	0.29
Park & Infrastructure - Concrete	Forklifts	0	8.00	89	0.20
Park & Infrastructure - Concrete	Generator Sets	0	8.00	84	0.74
Park & Infrastructure - Concrete	Pumps	1	8.00	84	0.45
Park & Infrastructure - Concrete	Tractors/Loaders/Backhoes	0	7.00	97	0.37
Park & Infrastructure - Concrete	Welders	0	8.00	46	0.45
Paving - Asphalt	Off-Highway Trucks	1	6.00	400	0.42
Paving - Asphalt	Pavers	1	8.00	125	0.36
Paving - Asphalt	Paving Equipment	0	8.00	132	0.36
Paving - Asphalt	Rollers	1	8.00	80	0.38
Paving - Concrete	Cement and Mortar Mixers	1	8.00	300	0.42
Paving - Concrete	Pavers	0	8.00	130	0.42
Paving - Concrete	Paving Equipment	0	8.00	132	0.36
Paving - Concrete	Rollers	0	8.00	80	0.38
Paving - DG	Off-Highway Trucks	1	6.00	400	0.42
Paving - DG	Pavers	0	8.00	130	0.42
Paving - DG	Paving Equipment	0	8.00	132	0.36
Paving - DG	Rollers	0	8.00	80	0.38
Paving - DG	Tractors/Loaders/Backhoes	1	8.00	97	0.38
Paving - Earthwork	Graders	1	8.00	174	0.42
Paving - Earthwork	Pavers	0	8.00	130	0.42
Paving - Earthwork	Paving Equipment	0	8.00	132	0.36
Paving - Earthwork	Rollers	1	8.00	80	0.38
Utilities	Rollers	2	8.00	80	0.38
Utilities	Tractors/Loaders/Backhoes	2	8.00	97	0.37
Utilities	Trenchers	2	8.00	80	0.50
Structures - Construction	Bore/Drill Rigs	1	8.00	205	0.29
Structures - Construction	Cranes	1	8.00	226	0.20
Structures - Construction	Excavators	2	8.00	162	0.74

EMFAC Off-Model Adjustment Factors for Gasoline Light Duty Vehicle to Account for the SAFE Vehicle Rule Applied

Structures - Construction	Forklifts	0	8.00	89	0.20
Structures - Construction	Generator Sets	0	8.00	84	0.74
Structures - Construction	Rollers	1	8.00	80	0.37
Structures - Construction	Tractors/Loaders/Backhoes	0	7.00	97	0.37
Structures - Construction	Welders	0	8.00	46	0.45
Structures - Concrete	Cement and Mortar Mixers	1	8.00	300	0.29
Structures - Concrete	Cranes	0	7.00	231	0.29
Structures - Concrete	Forklifts	0	8.00	89	0.20
Structures - Concrete	Generator Sets	0	8.00	84	0.74
Structures - Concrete	Pumps	1	8.00	84	0.20
Structures - Concrete	Tractors/Loaders/Backhoes	0	7.00	97	0.37
Structures - Concrete	Welders	0	8.00	46	0.45

Trips and VMT

Phase Name	Offroad Equipment Count	Worker Trip Number	Vendor Trip Number	Hauling Trip Number	Worker Trip Length	Vendor Trip Length	Hauling Trip Length	Worker Vehicle Class	Vendor Vehicle Class	Hauling Vehicle Class
Demolition	10	25.00	8.00	0.00	14.70	6.90	20.00	LD_Mix	HDT_Mix	HHDT
Site Preparation - Export	17	43.00	8.00	2,088.00	14.70	6.90	210.00	LD_Mix	HDT_Mix	HHDT
Site Preparation - Import	17	43.00	8.00	2,088.00	14.70	6.90	20.00	LD_Mix	HDT_Mix	HHDT
Site Preparation - Grading	4	10.00	8.00	0.00	14.70	6.90	20.00	LD_Mix	HDT_Mix	HHDT
Site Preparation - Excavation	8	20.00	8.00	0.00	14.70	6.90	20.00	LD_Mix	HDT_Mix	HHDT
Park & Infrastructure - Construction	6	15.00	8.00	0.00	14.70	6.90	20.00	LD_Mix	HDT_Mix	HHDT
Park & Infrastructure - Concrete	3	239.00	8.00	0.00	14.70	6.90	20.00	LD_Mix	HDT_Mix	HHDT
Paving - Asphalt	3	8.00	8.00	0.00	14.70	6.90	20.00	LD_Mix	HDT_Mix	HHDT
Paving - Concrete	1	3.00	8.00	0.00	14.70	6.90	20.00	LD_Mix	HDT_Mix	HHDT
Paving - DG	2	5.00	8.00	0.00	14.70	6.90	20.00	LD_Mix	HDT_Mix	HHDT
Paving - Earthwork	2	5.00	8.00	0.00	14.70	6.90	20.00	LD_Mix	HDT_Mix	HHDT
Utilities	6	15.00	8.00	0.00	14.70	6.90	20.00	LD_Mix	HDT_Mix	HHDT

EMFAC Off-Model Adjustment Factors for Gasoline Light Duty Vehicle to Account for the SAFE Vehicle Rule Applied

Structures - Construction	5	239.00	8.00	0.00	14.70	6.90	20.00	LD_Mix	HDT_Mix	HHDT
Structures - Concrete	2	239.00	8.00	0.00	14.70	6.90	20.00	LD_Mix	HDT_Mix	HHDT

3.1 Mitigation Measures Construction

Use Cleaner Engines for Construction Equipment

Use DPF for Construction Equipment

Use Soil Stabilizer

Water Exposed Area

Reduce Vehicle Speed on Unpaved Roads

3.2 Demolition - 2022

Unmitigated Construction On-Site

	ROG	NOx	CO	SO2	Fugitive PM10	Exhaust PM10	PM10 Total	Fugitive PM2.5	Exhaust PM2.5	PM2.5 Total	Bio- CO2	NBio- CO2	Total CO2	CH4	N2O	CO2e
Category	lb/day										lb/day					
Off-Road	2.6549	24.9004	28.7166	0.0477		1.2190	1.2190		1.1246	1.1246						4,648.1988
Total	**2.6549**	**24.9004**	**28.7166**	**0.0477**		**1.2190**	**1.2190**		**1.1246**	**1.1246**						**4,648.1988**

EMFAC Off-Model Adjustment Factors for Gasoline Light Duty Vehicle to Account for the SAFE Vehicle Rule Applied

3.2 Demolition - 2022

Unmitigated Construction Off-Site

	ROG	NOx	CO	SO2	Fugitive PM10	Exhaust PM10	PM10 Total	Fugitive PM2.5	Exhaust PM2.5	PM2.5 Total	Bio- CO2	NBio- CO2	Total CO2	CH4	N2O	CO2e
Category	lb/day										lb/day					
Hauling	0.0000	0.0000	0.0000	0.0000	0.0000	0.0000	0.0000	0.0000	0.0000	0.0000						0.0000
Vendor	0.0157	0.3919	0.1344	1.5700e-003	0.0512	3.7300e-003	0.0550	0.0148	3.5700e-003	0.0183						175.7401
Worker	0.0865	0.0632	0.9853	2.5600e-003	0.2794	1.7900e-003	0.2812	0.0741	1.6500e-003	0.0758						262.0720
Total	**0.1023**	**0.4550**	**1.1197**	**4.1300e-003**	**0.3307**	**5.5200e-003**	**0.3362**	**0.0889**	**5.2200e-003**	**0.0941**						**437.8121**

Mitigated Construction On-Site

	ROG	NOx	CO	SO2	Fugitive PM10	Exhaust PM10	PM10 Total	Fugitive PM2.5	Exhaust PM2.5	PM2.5 Total	Bio- CO2	NBio- CO2	Total CO2	CH4	N2O	CO2e
Category	lb/day										lb/day					
Off-Road	0.8305	5.2184	28.8894	0.0477		0.1640	0.1640		0.1516	0.1516						4,648.1988
Total	**0.8305**	**5.2184**	**28.8894**	**0.0477**		**0.1640**	**0.1640**		**0.1516**	**0.1516**						**4,648.1988**

EMFAC Off-Model Adjustment Factors for Gasoline Light Duty Vehicle to Account for the SAFE Vehicle Rule Applied

3.2 Demolition - 2022

Mitigated Construction Off-Site

	ROG	NOx	CO	SO2	Fugitive PM10	Exhaust PM10	PM10 Total	Fugitive PM2.5	Exhaust PM2.5	PM2.5 Total	Bio- CO2	NBio- CO2	Total CO2	CH4	N2O	CO2e
Category	lb/day										lb/day					
Hauling	0.0000	0.0000	0.0000	0.0000	0.0000	0.0000	0.0000	0.0000	0.0000	0.0000						0.0000
Vendor	0.0157	0.3919	0.1344	1.5700e-003	0.0512	3.7300e-003	0.0550	0.0148	3.5700e-003	0.0183						175.7401
Worker	0.0865	0.0632	0.9853	2.5600e-003	0.2794	1.7900e-003	0.2812	0.0741	1.6500e-003	0.0758						262.0720
Total	**0.1023**	**0.4550**	**1.1197**	**4.1300e-003**	**0.3307**	**5.5200e-003**	**0.3362**	**0.0889**	**5.2200e-003**	**0.0941**						**437.8121**

3.3 Site Preparation - Export - 2022

Unmitigated Construction On-Site

	ROG	NOx	CO	SO2	Fugitive PM10	Exhaust PM10	PM10 Total	Fugitive PM2.5	Exhaust PM2.5	PM2.5 Total	Bio- CO2	NBio- CO2	Total CO2	CH4	N2O	CO2e
Category	lb/day										lb/day					
Fugitive Dust					6.5649	0.0000	6.5649	3.3694	0.0000	3.3694						0.0000
Off-Road	1.1665	12.1449	8.0579	0.0148		0.5976	0.5976		0.5498	0.5498						1,441.0716
Total	**1.1665**	**12.1449**	**8.0579**	**0.0148**	**6.5649**	**0.5976**	**7.1625**	**3.3694**	**0.5498**	**3.9192**						**1,441.0716**

6th Street PARC - Construction Emissions Only - Los Angeles-South Coast County, Summer

EMFAC Off-Model Adjustment Factors for Gasoline Light Duty Vehicle to Account for the SAFE Vehicle Rule Applied

3.3 Site Preparation - Export - 2022

Unmitigated Construction Off-Site

	ROG	NOx	CO	SO2	Fugitive PM10	Exhaust PM10	PM10 Total	Fugitive PM2.5	Exhaust PM2.5	PM2.5 Total	Bio- CO2	NBio- CO2	Total CO2	CH4	N2O	CO2e
Category	lb/day										lb/day					
Hauling	0.5381	22.0413	3.9017	0.0872	2.5555	0.1806	2.7361	0.7004	0.1727	0.8731						10,027.3995
Vendor	0.0157	0.3919	0.1344	1.5700e-003	0.0512	3.7300e-003	0.0550	0.0148	3.5700e-003	0.0183						175.7401
Worker	0.1488	0.1087	1.6948	4.4000e-003	0.4806	3.0800e-003	0.4837	0.1275	2.8400e-003	0.1303						450.7638
Total	**0.7027**	**22.5418**	**5.7308**	**0.0932**	**3.0874**	**0.1874**	**3.2748**	**0.8426**	**0.1792**	**1.0218**						**10,653.9034**

Mitigated Construction On-Site

	ROG	NOx	CO	SO2	Fugitive PM10	Exhaust PM10	PM10 Total	Fugitive PM2.5	Exhaust PM2.5	PM2.5 Total	Bio- CO2	NBio- CO2	Total CO2	CH4	N2O	CO2e
Category	lb/day										lb/day					
Fugitive Dust					2.5603	0.0000	2.5603	1.3141	0.0000	1.3141						0.0000
Off-Road	0.1805	0.7822	8.5177	0.0148		3.6100e-003	3.6100e-003		3.6100e-003	3.6100e-003						1,441.0716
Total	**0.1805**	**0.7822**	**8.5177**	**0.0148**	**2.5603**	**3.6100e-003**	**2.5639**	**1.3141**	**3.6100e-003**	**1.3177**						**1,441.0716**

EMFAC Off-Model Adjustment Factors for Gasoline Light Duty Vehicle to Account for the SAFE Vehicle Rule Applied

3.3 Site Preparation - Export - 2022

Mitigated Construction Off-Site

	ROG	NOx	CO	SO2	Fugitive PM10	Exhaust PM10	PM10 Total	Fugitive PM2.5	Exhaust PM2.5	PM2.5 Total	Bio- CO2	NBio- CO2	Total CO2	CH4	N2O	CO2e
Category	lb/day										lb/day					
Hauling	0.5381	22.0413	3.9017	0.0872	2.5555	0.1806	2.7361	0.7004	0.1727	0.8731						10,027.3995
Vendor	0.0157	0.3919	0.1344	1.5700e-003	0.0512	3.7300e-003	0.0550	0.0148	3.5700e-003	0.0183						175.7401
Worker	0.1488	0.1087	1.6948	4.4000e-003	0.4806	3.0800e-003	0.4837	0.1275	2.8400e-003	0.1303						450.7638
Total	**0.7027**	**22.5418**	**5.7308**	**0.0932**	**3.0874**	**0.1874**	**3.2748**	**0.8426**	**0.1792**	**1.0218**						**10,653.9034**

3.4 Site Preparation - Import - 2022

Unmitigated Construction On-Site

	ROG	NOx	CO	SO2	Fugitive PM10	Exhaust PM10	PM10 Total	Fugitive PM2.5	Exhaust PM2.5	PM2.5 Total	Bio- CO2	NBio- CO2	Total CO2	CH4	N2O	CO2e
Category	lb/day										lb/day					
Fugitive Dust					6.6153	0.0000	6.6153	3.3770	0.0000	3.3770						0.0000
Off-Road	2.1548	22.1988	21.4856	0.0334		1.1383	1.1383		1.0473	1.0473						3,263.1193
Total	**2.1548**	**22.1988**	**21.4856**	**0.0334**	**6.6153**	**1.1383**	**7.7536**	**3.3770**	**1.0473**	**4.4243**						**3,263.1193**

EMFAC Off-Model Adjustment Factors for Gasoline Light Duty Vehicle to Account for the SAFE Vehicle Rule Applied

3.4 Site Preparation - Import - 2022

Unmitigated Construction Off-Site

	ROG	NOx	CO	SO2	Fugitive PM10	Exhaust PM10	PM10 Total	Fugitive PM2.5	Exhaust PM2.5	PM2.5 Total	Bio- CO2	NBio- CO2	Total CO2	CH4	N2O	CO2e
Category	lb/day										lb/day					
Hauling	0.3243	11.6892	2.7255	0.0433	1.2183	0.0868	1.3051	0.3340	0.0831	0.4171						4,968.5191
Vendor	0.0157	0.3919	0.1344	1.5700e-003	0.0512	3.7300e-003	0.0550	0.0148	3.5700e-003	0.0183						175.7401
Worker	0.1488	0.1087	1.6948	4.4000e-003	0.4806	3.0800e-003	0.4837	0.1275	2.8400e-003	0.1303						450.7638
Total	**0.4888**	**12.1898**	**4.5546**	**0.0492**	**1.7501**	**0.0937**	**1.8438**	**0.4762**	**0.0895**	**0.5657**						**5,595.0229**

Mitigated Construction On-Site

	ROG	NOx	CO	SO2	Fugitive PM10	Exhaust PM10	PM10 Total	Fugitive PM2.5	Exhaust PM2.5	PM2.5 Total	Bio- CO2	NBio- CO2	Total CO2	CH4	N2O	CO2e
Category	lb/day										lb/day					
Fugitive Dust					2.5800	0.0000	2.5800	1.3170	0.0000	1.3170						0.0000
Off-Road	0.4084	1.7697	22.5701	0.0334		8.1700e-003	8.1700e-003		8.1700e-003	8.1700e-003						3,263.1193
Total	**0.4084**	**1.7697**	**22.5701**	**0.0334**	**2.5800**	**8.1700e-003**	**2.5881**	**1.3170**	**8.1700e-003**	**1.3252**						**3,263.1193**

EMFAC Off-Model Adjustment Factors for Gasoline Light Duty Vehicle to Account for the SAFE Vehicle Rule Applied

3.4 Site Preparation - Import - 2022

Mitigated Construction Off-Site

	ROG	NOx	CO	SO2	Fugitive PM10	Exhaust PM10	PM10 Total	Fugitive PM2.5	Exhaust PM2.5	PM2.5 Total	Bio- CO2	NBio- CO2	Total CO2	CH4	N2O	CO2e
Category	lb/day										lb/day					
Hauling	0.3243	11.6892	2.7255	0.0433	1.2183	0.0868	1.3051	0.3340	0.0831	0.4171						4,968.5191
Vendor	0.0157	0.3919	0.1344	1.5700e-003	0.0512	3.7300e-003	0.0550	0.0148	3.5700e-003	0.0183						175.7401
Worker	0.1488	0.1087	1.6948	4.4000e-003	0.4806	3.0800e-003	0.4837	0.1275	2.8400e-003	0.1303						450.7638
Total	**0.4888**	**12.1898**	**4.5546**	**0.0492**	**1.7501**	**0.0937**	**1.8438**	**0.4762**	**0.0895**	**0.5657**						**5,595.0229**

3.5 Site Preparation - Grading - 2022

Unmitigated Construction On-Site

	ROG	NOx	CO	SO2	Fugitive PM10	Exhaust PM10	PM10 Total	Fugitive PM2.5	Exhaust PM2.5	PM2.5 Total	Bio- CO2	NBio- CO2	Total CO2	CH4	N2O	CO2e
Category	lb/day										lb/day					
Fugitive Dust					3.7118	0.0000	3.7118	0.4008	0.0000	0.4008						0.0000
Off-Road	1.4581	14.0135	12.7060	0.0180		0.7864	0.7864		0.7235	0.7235						1,753.3038
Total	**1.4581**	**14.0135**	**12.7060**	**0.0180**	**3.7118**	**0.7864**	**4.4981**	**0.4008**	**0.7235**	**1.1242**						**1,753.3038**

EMFAC Off-Model Adjustment Factors for Gasoline Light Duty Vehicle to Account for the SAFE Vehicle Rule Applied

3.5 Site Preparation - Grading - 2022

Unmitigated Construction Off-Site

	ROG	NOx	CO	SO2	Fugitive PM10	Exhaust PM10	PM10 Total	Fugitive PM2.5	Exhaust PM2.5	PM2.5 Total	Bio- CO2	NBio- CO2	Total CO2	CH4	N2O	CO2e
Category	lb/day										lb/day					
Hauling	0.0000	0.0000	0.0000	0.0000	0.0000	0.0000	0.0000	0.0000	0.0000	0.0000						0.0000
Vendor	0.0157	0.3919	0.1344	1.5700e-003	0.0512	3.7300e-003	0.0550	0.0148	3.5700e-003	0.0183						175.7401
Worker	0.0346	0.0253	0.3941	1.0200e-003	0.1118	7.2000e-004	0.1125	0.0296	6.6000e-004	0.0303						104.8288
Total	**0.0504**	**0.4171**	**0.5285**	**2.5900e-003**	**0.1630**	**4.4500e-003**	**0.1675**	**0.0444**	**4.2300e-003**	**0.0486**						**280.5689**

Mitigated Construction On-Site

	ROG	NOx	CO	SO2	Fugitive PM10	Exhaust PM10	PM10 Total	Fugitive PM2.5	Exhaust PM2.5	PM2.5 Total	Bio- CO2	NBio- CO2	Total CO2	CH4	N2O	CO2e
Category	lb/day										lb/day					
Fugitive Dust					1.4476	0.0000	1.4476	0.1563	0.0000	0.1563						0.0000
Off-Road	0.2187	0.9478	13.4873	0.0180		4.3700e-003	4.3700e-003		4.3700e-003	4.3700e-003						1,753.3038
Total	**0.2187**	**0.9478**	**13.4873**	**0.0180**	**1.4476**	**4.3700e-003**	**1.4520**	**0.1563**	**4.3700e-003**	**0.1607**						**1,753.3038**

EMFAC Off-Model Adjustment Factors for Gasoline Light Duty Vehicle to Account for the SAFE Vehicle Rule Applied

3.5 Site Preparation - Grading - 2022

Mitigated Construction Off-Site

	ROG	NOx	CO	SO2	Fugitive PM10	Exhaust PM10	PM10 Total	Fugitive PM2.5	Exhaust PM2.5	PM2.5 Total	Bio- CO2	NBio- CO2	Total CO2	CH4	N2O	CO2e
Category	lb/day										lb/day					
Hauling	0.0000	0.0000	0.0000	0.0000	0.0000	0.0000	0.0000	0.0000	0.0000	0.0000						0.0000
Vendor	0.0157	0.3919	0.1344	1.5700e-003	0.0512	3.7300e-003	0.0550	0.0148	3.5700e-003	0.0183						175.7401
Worker	0.0346	0.0253	0.3941	1.0200e-003	0.1118	7.2000e-004	0.1125	0.0296	6.6000e-004	0.0303						104.8288
Total	**0.0504**	**0.4171**	**0.5285**	**2.5900e-003**	**0.1630**	**4.4500e-003**	**0.1675**	**0.0444**	**4.2300e-003**	**0.0486**						**280.5689**

3.6 Site Preparation - Excavation - 2022

Unmitigated Construction On-Site

	ROG	NOx	CO	SO2	Fugitive PM10	Exhaust PM10	PM10 Total	Fugitive PM2.5	Exhaust PM2.5	PM2.5 Total	Bio- CO2	NBio- CO2	Total CO2	CH4	N2O	CO2e
Category	lb/day										lb/day					
Fugitive Dust					1.5908	0.0000	1.5908	0.1718	0.0000	0.1718						0.0000
Off-Road	1.3177	13.4051	17.9036	0.0249		0.7210	0.7210		0.6633	0.6633						2,429.3969
Total	**1.3177**	**13.4051**	**17.9036**	**0.0249**	**1.5908**	**0.7210**	**2.3117**	**0.1718**	**0.6633**	**0.8350**						**2,429.3969**

EMFAC Off-Model Adjustment Factors for Gasoline Light Duty Vehicle to Account for the SAFE Vehicle Rule Applied

3.6 Site Preparation - Excavation - 2022

Unmitigated Construction Off-Site

	ROG	NOx	CO	SO2	Fugitive PM10	Exhaust PM10	PM10 Total	Fugitive PM2.5	Exhaust PM2.5	PM2.5 Total	Bio- CO2	NBio- CO2	Total CO2	CH4	N2O	CO2e
Category	lb/day										lb/day					
Hauling	0.0000	0.0000	0.0000	0.0000	0.0000	0.0000	0.0000	0.0000	0.0000	0.0000						0.0000
Vendor	0.0157	0.3919	0.1344	1.5700e-003	0.0512	3.7300e-003	0.0550	0.0148	3.5700e-003	0.0183						175.7401
Worker	0.0692	0.0505	0.7883	2.0400e-003	0.2236	1.4300e-003	0.2250	0.0593	1.3200e-003	0.0606						209.6576
Total	**0.0850**	**0.4424**	**0.9226**	**3.6100e-003**	**0.2748**	**5.1600e-003**	**0.2800**	**0.0740**	**4.8900e-003**	**0.0789**						**385.3977**

Mitigated Construction On-Site

	ROG	NOx	CO	SO2	Fugitive PM10	Exhaust PM10	PM10 Total	Fugitive PM2.5	Exhaust PM2.5	PM2.5 Total	Bio- CO2	NBio- CO2	Total CO2	CH4	N2O	CO2e
Category	lb/day										lb/day					
Fugitive Dust					0.6204	0.0000	0.6204	0.0670	0.0000	0.0670						0.0000
Off-Road	0.3038	1.3166	18.7365	0.0249		6.0800e-003	6.0800e-003		6.0800e-003	6.0800e-003						2,429.3969
Total	**0.3038**	**1.3166**	**18.7365**	**0.0249**	**0.6204**	**6.0800e-003**	**0.6265**	**0.0670**	**6.0800e-003**	**0.0731**						**2,429.3969**

EMFAC Off-Model Adjustment Factors for Gasoline Light Duty Vehicle to Account for the SAFE Vehicle Rule Applied

3.6 Site Preparation - Excavation - 2022

Mitigated Construction Off-Site

	ROG	NOx	CO	SO2	Fugitive PM10	Exhaust PM10	PM10 Total	Fugitive PM2.5	Exhaust PM2.5	PM2.5 Total	Bio- CO2	NBio- CO2	Total CO2	CH4	N2O	CO2e
Category	lb/day										lb/day					
Hauling	0.0000	0.0000	0.0000	0.0000	0.0000	0.0000	0.0000	0.0000	0.0000	0.0000						0.0000
Vendor	0.0157	0.3919	0.1344	1.5700e-003	0.0512	3.7300e-003	0.0550	0.0148	3.5700e-003	0.0183						175.7401
Worker	0.0692	0.0505	0.7883	2.0400e-003	0.2236	1.4300e-003	0.2250	0.0593	1.3200e-003	0.0606						209.6576
Total	**0.0850**	**0.4424**	**0.9226**	**3.6100e-003**	**0.2748**	**5.1600e-003**	**0.2800**	**0.0740**	**4.8900e-003**	**0.0789**						**385.3977**

3.7 Park & Infrastructure - Construction - 2022

Unmitigated Construction On-Site

	ROG	NOx	CO	SO2	Fugitive PM10	Exhaust PM10	PM10 Total	Fugitive PM2.5	Exhaust PM2.5	PM2.5 Total	Bio- CO2	NBio- CO2	Total CO2	CH4	N2O	CO2e
Category	lb/day										lb/day					
Fugitive Dust					1.5908	0.0000	1.5908	0.1718	0.0000	0.1718						0.0000
Off-Road	1.6923	14.6821	15.4018	0.0376		0.6643	0.6643		0.6112	0.6112						3,665.0886
Total	**1.6923**	**14.6821**	**15.4018**	**0.0376**	**1.5908**	**0.6643**	**2.2550**	**0.1718**	**0.6112**	**0.7829**						**3,665.0886**

6th Street PARC - Construction Emissions Only - Los Angeles-South Coast County, Summer

EMFAC Off-Model Adjustment Factors for Gasoline Light Duty Vehicle to Account for the SAFE Vehicle Rule Applied

3.7 Park & Infrastructure - Construction - 2022

Unmitigated Construction Off-Site

	ROG	NOx	CO	SO2	Fugitive PM10	Exhaust PM10	PM10 Total	Fugitive PM2.5	Exhaust PM2.5	PM2.5 Total	Bio- CO2	NBio- CO2	Total CO2	CH4	N2O	CO2e
Category	lb/day										lb/day					
Hauling	0.0000	0.0000	0.0000	0.0000	0.0000	0.0000	0.0000	0.0000	0.0000	0.0000						0.0000
Vendor	0.0157	0.3919	0.1344	1.5700e-003	0.0512	3.7300e-003	0.0550	0.0148	3.5700e-003	0.0183						175.7401
Worker	0.0519	0.0379	0.5912	1.5300e-003	0.1677	1.0700e-003	0.1687	0.0445	9.9000e-004	0.0455						157.2432
Total	**0.0677**	**0.4298**	**0.7256**	**3.1000e-003**	**0.2189**	**4.8000e-003**	**0.2237**	**0.0592**	**4.5600e-003**	**0.0638**						**332.9833**

Mitigated Construction On-Site

	ROG	NOx	CO	SO2	Fugitive PM10	Exhaust PM10	PM10 Total	Fugitive PM2.5	Exhaust PM2.5	PM2.5 Total	Bio- CO2	NBio- CO2	Total CO2	CH4	N2O	CO2e
Category	lb/day										lb/day					
Fugitive Dust					0.6204	0.0000	0.6204	0.0670	0.0000	0.0670						0.0000
Off-Road	0.4593	1.9902	20.7023	0.0376		9.1900e-003	9.1900e-003		9.1900e-003	9.1900e-003						3,665.0886
Total	**0.4593**	**1.9902**	**20.7023**	**0.0376**	**0.6204**	**9.1900e-003**	**0.6296**	**0.0670**	**9.1900e-003**	**0.0762**						**3,665.0886**

EMFAC Off-Model Adjustment Factors for Gasoline Light Duty Vehicle to Account for the SAFE Vehicle Rule Applied

3.7 Park & Infrastructure - Construction - 2022

Mitigated Construction Off-Site

	ROG	NOx	CO	SO2	Fugitive PM10	Exhaust PM10	PM10 Total	Fugitive PM2.5	Exhaust PM2.5	PM2.5 Total	Bio- CO2	NBio- CO2	Total CO2	CH4	N2O	CO2e
Category	lb/day										lb/day					
Hauling	0.0000	0.0000	0.0000	0.0000	0.0000	0.0000	0.0000	0.0000	0.0000	0.0000						0.0000
Vendor	0.0157	0.3919	0.1344	1.5700e-003	0.0512	3.7300e-003	0.0550	0.0148	3.5700e-003	0.0183						175.7401
Worker	0.0519	0.0379	0.5912	1.5300e-003	0.1677	1.0700e-003	0.1687	0.0445	9.9000e-004	0.0455						157.2432
Total	**0.0677**	**0.4298**	**0.7256**	**3.1000e-003**	**0.2189**	**4.8000e-003**	**0.2237**	**0.0592**	**4.5600e-003**	**0.0638**						**332.9833**

3.7 Park & Infrastructure - Construction - 2023

Unmitigated Construction On-Site

	ROG	NOx	CO	SO2	Fugitive PM10	Exhaust PM10	PM10 Total	Fugitive PM2.5	Exhaust PM2.5	PM2.5 Total	Bio- CO2	NBio- CO2	Total CO2	CH4	N2O	CO2e
Category	lb/day										lb/day					
Fugitive Dust					1.5908	0.0000	1.5908	0.1718	0.0000	0.1718						0.0000
Off-Road	1.5905	13.2749	15.2400	0.0376		0.5754	0.5754		0.5293	0.5293						3,667.9126
Total	**1.5905**	**13.2749**	**15.2400**	**0.0376**	**1.5908**	**0.5754**	**2.1661**	**0.1718**	**0.5293**	**0.7011**						**3,667.9126**

6th Street PARC - Construction Emissions Only - Los Angeles-South Coast County, Summer

EMFAC Off-Model Adjustment Factors for Gasoline Light Duty Vehicle to Account for the SAFE Vehicle Rule Applied

3.7 Park & Infrastructure - Construction - 2023

Unmitigated Construction Off-Site

	ROG	NOx	CO	SO2	Fugitive PM10	Exhaust PM10	PM10 Total	Fugitive PM2.5	Exhaust PM2.5	PM2.5 Total	Bio- CO2	NBio- CO2	Total CO2	CH4	N2O	CO2e
Category	lb/day										lb/day					
Hauling	0.0000	0.0000	0.0000	0.0000	0.0000	0.0000	0.0000	0.0000	0.0000	0.0000						0.0000
Vendor	9.2100e-003	0.3071	0.1190	1.4900e-003	0.0512	1.5400e-003	0.0528	0.0148	1.4800e-003	0.0162						167.2249
Worker	0.0480	0.0335	0.5436	1.4800e-003	0.1677	1.0100e-003	0.1687	0.0445	9.3000e-004	0.0454						153.0181
Total	**0.0572**	**0.3406**	**0.6625**	**2.9700e-003**	**0.2189**	**2.5500e-003**	**0.2215**	**0.0592**	**2.4100e-003**	**0.0616**						**320.2430**

Mitigated Construction On-Site

	ROG	NOx	CO	SO2	Fugitive PM10	Exhaust PM10	PM10 Total	Fugitive PM2.5	Exhaust PM2.5	PM2.5 Total	Bio- CO2	NBio- CO2	Total CO2	CH4	N2O	CO2e
Category	lb/day										lb/day					
Fugitive Dust					0.6204	0.0000	0.6204	0.0670	0.0000	0.0670						0.0000
Off-Road	0.4593	1.9902	20.7023	0.0376		9.1900e-003	9.1900e-003		9.1900e-003	9.1900e-003						3,667.9126
Total	**0.4593**	**1.9902**	**20.7023**	**0.0376**	**0.6204**	**9.1900e-003**	**0.6296**	**0.0670**	**9.1900e-003**	**0.0762**						**3,667.9126**

EMFAC Off-Model Adjustment Factors for Gasoline Light Duty Vehicle to Account for the SAFE Vehicle Rule Applied

3.7 Park & Infrastructure - Construction - 2023

Mitigated Construction Off-Site

	ROG	NOx	CO	SO2	Fugitive PM10	Exhaust PM10	PM10 Total	Fugitive PM2.5	Exhaust PM2.5	PM2.5 Total	Bio- CO2	NBio- CO2	Total CO2	CH4	N2O	CO2e
Category	lb/day										lb/day					
Hauling	0.0000	0.0000	0.0000	0.0000	0.0000	0.0000	0.0000	0.0000	0.0000	0.0000						0.0000
Vendor	9.2100e-003	0.3071	0.1190	1.4900e-003	0.0512	1.5400e-003	0.0528	0.0148	1.4800e-003	0.0162						167.2249
Worker	0.0480	0.0335	0.5436	1.4800e-003	0.1677	1.0100e-003	0.1687	0.0445	9.3000e-004	0.0454						153.0181
Total	**0.0572**	**0.3406**	**0.6625**	**2.9700e-003**	**0.2189**	**2.5500e-003**	**0.2215**	**0.0592**	**2.4100e-003**	**0.0616**						**320.2430**

3.8 Park & Infrastructure - Concrete - 2023

Unmitigated Construction On-Site

	ROG	NOx	CO	SO2	Fugitive PM10	Exhaust PM10	PM10 Total	Fugitive PM2.5	Exhaust PM2.5	PM2.5 Total	Bio- CO2	NBio- CO2	Total CO2	CH4	N2O	CO2e
Category	lb/day										lb/day					
Off-Road	0.5431	5.4070	4.0601	9.6500e-003		0.2379	0.2379		0.2254	0.2254						930.4498
Total	**0.5431**	**5.4070**	**4.0601**	**9.6500e-003**		**0.2379**	**0.2379**		**0.2254**	**0.2254**						**930.4498**

EMFAC Off-Model Adjustment Factors for Gasoline Light Duty Vehicle to Account for the SAFE Vehicle Rule Applied

3.8 Park & Infrastructure - Concrete - 2023

Unmitigated Construction Off-Site

	ROG	NOx	CO	SO2	Fugitive PM10	Exhaust PM10	PM10 Total	Fugitive PM2.5	Exhaust PM2.5	PM2.5 Total	Bio- CO2	NBio- CO2	Total CO2	CH4	N2O	CO2e
Category	lb/day										lb/day					
Hauling	0.0000	0.0000	0.0000	0.0000	0.0000	0.0000	0.0000	0.0000	0.0000	0.0000						0.0000
Vendor	9.2100e-003	0.3071	0.1190	1.4900e-003	0.0512	1.5400e-003	0.0528	0.0148	1.4800e-003	0.0162						167.2249
Worker	0.7653	0.5336	8.6607	0.0237	2.6715	0.0161	2.6876	0.7085	0.0148	0.7233						2,438.0888
Total	**0.7745**	**0.8406**	**8.7797**	**0.0251**	**2.7227**	**0.0177**	**2.7404**	**0.7232**	**0.0163**	**0.7396**						**2,605.3137**

Mitigated Construction On-Site

	ROG	NOx	CO	SO2	Fugitive PM10	Exhaust PM10	PM10 Total	Fugitive PM2.5	Exhaust PM2.5	PM2.5 Total	Bio- CO2	NBio- CO2	Total CO2	CH4	N2O	CO2e
Category	lb/day										lb/day					
Off-Road	0.1094	0.4739	5.0098	9.6500e-003		2.1900e-003	2.1900e-003		2.1900e-003	2.1900e-003						930.4498
Total	**0.1094**	**0.4739**	**5.0098**	**9.6500e-003**		**2.1900e-003**	**2.1900e-003**		**2.1900e-003**	**2.1900e-003**						**930.4498**

EMFAC Off-Model Adjustment Factors for Gasoline Light Duty Vehicle to Account for the SAFE Vehicle Rule Applied

3.8 Park & Infrastructure - Concrete - 2023

Mitigated Construction Off-Site

	ROG	NOx	CO	SO2	Fugitive PM10	Exhaust PM10	PM10 Total	Fugitive PM2.5	Exhaust PM2.5	PM2.5 Total	Bio- CO2	NBio- CO2	Total CO2	CH4	N2O	CO2e
Category	lb/day										lb/day					
Hauling	0.0000	0.0000	0.0000	0.0000	0.0000	0.0000	0.0000	0.0000	0.0000	0.0000						0.0000
Vendor	9.2100e-003	0.3071	0.1190	1.4900e-003	0.0512	1.5400e-003	0.0528	0.0148	1.4800e-003	0.0162						167.2249
Worker	0.7653	0.5336	8.6607	0.0237	2.6715	0.0161	2.6876	0.7085	0.0148	0.7233						2,438.0888
Total	**0.7745**	**0.8406**	**8.7797**	**0.0251**	**2.7227**	**0.0177**	**2.7404**	**0.7232**	**0.0163**	**0.7396**						**2,605.3137**

3.9 Paving - Asphalt - 2023

Unmitigated Construction On-Site

	ROG	NOx	CO	SO2	Fugitive PM10	Exhaust PM10	PM10 Total	Fugitive PM2.5	Exhaust PM2.5	PM2.5 Total	Bio- CO2	NBio- CO2	Total CO2	CH4	N2O	CO2e
Category	lb/day										lb/day					
Off-Road	0.7275	6.1048	6.9409	0.0174		0.2680	0.2680		0.2466	0.2466						1,698.5924
Paving	0.0681					0.0000	0.0000		0.0000	0.0000						0.0000
Total	**0.7956**	**6.1048**	**6.9409**	**0.0174**		**0.2680**	**0.2680**		**0.2466**	**0.2466**						**1,698.5924**

EMFAC Off-Model Adjustment Factors for Gasoline Light Duty Vehicle to Account for the SAFE Vehicle Rule Applied

3.9 Paving - Asphalt - 2023

Unmitigated Construction Off-Site

	ROG	NOx	CO	SO2	Fugitive PM10	Exhaust PM10	PM10 Total	Fugitive PM2.5	Exhaust PM2.5	PM2.5 Total	Bio- CO2	NBio- CO2	Total CO2	CH4	N2O	CO2e
Category	lb/day										lb/day					
Hauling	0.0000	0.0000	0.0000	0.0000	0.0000	0.0000	0.0000	0.0000	0.0000	0.0000						0.0000
Vendor	9.2100e-003	0.3071	0.1190	1.4900e-003	0.0512	1.5400e-003	0.0528	0.0148	1.4800e-003	0.0162						167.2249
Worker	0.0256	0.0179	0.2899	7.9000e-004	0.0894	5.4000e-004	0.0900	0.0237	5.0000e-004	0.0242						81.6097
Total	**0.0348**	**0.3249**	**0.4089**	**2.2800e-003**	**0.1407**	**2.0800e-003**	**0.1428**	**0.0385**	**1.9800e-003**	**0.0404**						**248.8346**

Mitigated Construction On-Site

	ROG	NOx	CO	SO2	Fugitive PM10	Exhaust PM10	PM10 Total	Fugitive PM2.5	Exhaust PM2.5	PM2.5 Total	Bio- CO2	NBio- CO2	Total CO2	CH4	N2O	CO2e
Category	lb/day										lb/day					
Off-Road	0.2131	0.9235	9.8093	0.0174		4.2600e-003	4.2600e-003		4.2600e-003	4.2600e-003						1,698.5924
Paving	0.0681					0.0000	0.0000		0.0000	0.0000						0.0000
Total	**0.2813**	**0.9235**	**9.8093**	**0.0174**		**4.2600e-003**	**4.2600e-003**		**4.2600e-003**	**4.2600e-003**						**1,698.5924**

EMFAC Off-Model Adjustment Factors for Gasoline Light Duty Vehicle to Account for the SAFE Vehicle Rule Applied

3.9 Paving - Asphalt - 2023

Mitigated Construction Off-Site

	ROG	NOx	CO	SO2	Fugitive PM10	Exhaust PM10	PM10 Total	Fugitive PM2.5	Exhaust PM2.5	PM2.5 Total	Bio- CO2	NBio- CO2	Total CO2	CH4	N2O	CO2e
Category	lb/day										lb/day					
Hauling	0.0000	0.0000	0.0000	0.0000	0.0000	0.0000	0.0000	0.0000	0.0000	0.0000						0.0000
Vendor	9.2100e-003	0.3071	0.1190	1.4900e-003	0.0512	1.5400e-003	0.0528	0.0148	1.4800e-003	0.0162						167.2249
Worker	0.0256	0.0179	0.2899	7.9000e-004	0.0894	5.4000e-004	0.0900	0.0237	5.0000e-004	0.0242						81.6097
Total	**0.0348**	**0.3249**	**0.4089**	**2.2800e-003**	**0.1407**	**2.0800e-003**	**0.1428**	**0.0385**	**1.9800e-003**	**0.0404**						**248.8346**

3.10 Paving - Concrete - 2023

Unmitigated Construction On-Site

	ROG	NOx	CO	SO2	Fugitive PM10	Exhaust PM10	PM10 Total	Fugitive PM2.5	Exhaust PM2.5	PM2.5 Total	Bio- CO2	NBio- CO2	Total CO2	CH4	N2O	CO2e
Category	lb/day										lb/day					
Off-Road	0.0000	0.0000	0.0000	0.0000		0.0000	0.0000		0.0000	0.0000						0.0000
Paving	0.0170					0.0000	0.0000		0.0000	0.0000						0.0000
Total	**0.0170**	**0.0000**	**0.0000**	**0.0000**		**0.0000**	**0.0000**		**0.0000**	**0.0000**						**0.0000**

6th Street PARC - Construction Emissions Only - Los Angeles-South Coast County, Summer

EMFAC Off-Model Adjustment Factors for Gasoline Light Duty Vehicle to Account for the SAFE Vehicle Rule Applied

3.10 Paving - Concrete - 2023

Unmitigated Construction Off-Site

	ROG	NOx	CO	SO2	Fugitive PM10	Exhaust PM10	PM10 Total	Fugitive PM2.5	Exhaust PM2.5	PM2.5 Total	Bio- CO2	NBio- CO2	Total CO2	CH4	N2O	CO2e
Category	lb/day										lb/day					
Hauling	0.0000	0.0000	0.0000	0.0000	0.0000	0.0000	0.0000	0.0000	0.0000	0.0000						0.0000
Vendor	9.2100e-003	0.3071	0.1190	1.4900e-003	0.0512	1.5400e-003	0.0528	0.0148	1.4800e-003	0.0162						167.2249
Worker	9.6100e-003	6.7000e-003	0.1087	3.0000e-004	0.0335	2.0000e-004	0.0337	8.8900e-003	1.9000e-004	9.0800e-003						30.6036
Total	**0.0188**	**0.3138**	**0.2277**	**1.7900e-003**	**0.0848**	**1.7400e-003**	**0.0865**	**0.0236**	**1.6700e-003**	**0.0253**						**197.8285**

Mitigated Construction On-Site

	ROG	NOx	CO	SO2	Fugitive PM10	Exhaust PM10	PM10 Total	Fugitive PM2.5	Exhaust PM2.5	PM2.5 Total	Bio- CO2	NBio- CO2	Total CO2	CH4	N2O	CO2e
Category	lb/day										lb/day					
Off-Road	0.0000	0.0000	0.0000	0.0000		0.0000	0.0000		0.0000	0.0000						0.0000
Paving	0.0170					0.0000	0.0000		0.0000	0.0000						0.0000
Total	**0.0170**	**0.0000**	**0.0000**	**0.0000**		**0.0000**	**0.0000**		**0.0000**	**0.0000**						**0.0000**

EMFAC Off-Model Adjustment Factors for Gasoline Light Duty Vehicle to Account for the SAFE Vehicle Rule Applied

3.10 Paving - Concrete - 2023

Mitigated Construction Off-Site

	ROG	NOx	CO	SO2	Fugitive PM10	Exhaust PM10	PM10 Total	Fugitive PM2.5	Exhaust PM2.5	PM2.5 Total	Bio- CO2	NBio- CO2	Total CO2	CH4	N2O	CO2e
Category	lb/day										lb/day					
Hauling	0.0000	0.0000	0.0000	0.0000	0.0000	0.0000	0.0000	0.0000	0.0000	0.0000						0.0000
Vendor	9.2100e-003	0.3071	0.1190	1.4900e-003	0.0512	1.5400e-003	0.0528	0.0148	1.4800e-003	0.0162						167.2249
Worker	9.6100e-003	6.7000e-003	0.1087	3.0000e-004	0.0335	2.0000e-004	0.0337	8.8900e-003	1.9000e-004	9.0800e-003						30.6036
Total	**0.0188**	**0.3138**	**0.2277**	**1.7900e-003**	**0.0848**	**1.7400e-003**	**0.0865**	**0.0236**	**1.6700e-003**	**0.0253**						**197.8285**

3.11 Paving - DG - 2023

Unmitigated Construction On-Site

	ROG	NOx	CO	SO2	Fugitive PM10	Exhaust PM10	PM10 Total	Fugitive PM2.5	Exhaust PM2.5	PM2.5 Total	Bio- CO2	NBio- CO2	Total CO2	CH4	N2O	CO2e
Category	lb/day										lb/day					
Off-Road	0.5711	4.5201	5.0041	0.0141		0.1843	0.1843		0.1695	0.1695						1,376.4490
Paving	0.0341					0.0000	0.0000		0.0000	0.0000						0.0000
Total	**0.6051**	**4.5201**	**5.0041**	**0.0141**		**0.1843**	**0.1843**		**0.1695**	**0.1695**						**1,376.4490**

6th Street PARC - Construction Emissions Only - Los Angeles-South Coast County, Summer

EMFAC Off-Model Adjustment Factors for Gasoline Light Duty Vehicle to Account for the SAFE Vehicle Rule Applied

3.11 Paving - DG - 2023

Unmitigated Construction Off-Site

	ROG	NOx	CO	SO2	Fugitive PM10	Exhaust PM10	PM10 Total	Fugitive PM2.5	Exhaust PM2.5	PM2.5 Total	Bio- CO2	NBio- CO2	Total CO2	CH4	N2O	CO2e
Category	lb/day										lb/day					
Hauling	0.0000	0.0000	0.0000	0.0000	0.0000	0.0000	0.0000	0.0000	0.0000	0.0000						0.0000
Vendor	9.2100e-003	0.3071	0.1190	1.4900e-003	0.0512	1.5400e-003	0.0528	0.0148	1.4800e-003	0.0162						167.2249
Worker	0.0160	0.0112	0.1812	4.9000e-004	0.0559	3.4000e-004	0.0562	0.0148	3.1000e-004	0.0151						51.0060
Total	**0.0252**	**0.3182**	**0.3002**	**1.9800e-003**	**0.1071**	**1.8800e-003**	**0.1090**	**0.0296**	**1.7900e-003**	**0.0314**						**218.2309**

Mitigated Construction On-Site

	ROG	NOx	CO	SO2	Fugitive PM10	Exhaust PM10	PM10 Total	Fugitive PM2.5	Exhaust PM2.5	PM2.5 Total	Bio- CO2	NBio- CO2	Total CO2	CH4	N2O	CO2e
Category	lb/day										lb/day					
Off-Road	0.1723	0.7468	7.2943	0.0141		3.4500e-003	3.4500e-003		3.4500e-003	3.4500e-003						1,376.4490
Paving	0.0341					0.0000	0.0000		0.0000	0.0000						0.0000
Total	**0.2064**	**0.7468**	**7.2943**	**0.0141**		**3.4500e-003**	**3.4500e-003**		**3.4500e-003**	**3.4500e-003**						**1,376.4490**

EMFAC Off-Model Adjustment Factors for Gasoline Light Duty Vehicle to Account for the SAFE Vehicle Rule Applied

3.11 Paving - DG - 2023

Mitigated Construction Off-Site

	ROG	NOx	CO	SO2	Fugitive PM10	Exhaust PM10	PM10 Total	Fugitive PM2.5	Exhaust PM2.5	PM2.5 Total	Bio- CO2	NBio- CO2	Total CO2	CH4	N2O	CO2e
Category	lb/day										lb/day					
Hauling	0.0000	0.0000	0.0000	0.0000	0.0000	0.0000	0.0000	0.0000	0.0000	0.0000						0.0000
Vendor	9.2100e-003	0.3071	0.1190	1.4900e-003	0.0512	1.5400e-003	0.0528	0.0148	1.4800e-003	0.0162						167.2249
Worker	0.0160	0.0112	0.1812	4.9000e-004	0.0559	3.4000e-004	0.0562	0.0148	3.1000e-004	0.0151						51.0060
Total	**0.0252**	**0.3182**	**0.3002**	**1.9800e-003**	**0.1071**	**1.8800e-003**	**0.1090**	**0.0296**	**1.7900e-003**	**0.0314**						**218.2309**

3.11 Paving - DG - 2024

Unmitigated Construction On-Site

	ROG	NOx	CO	SO2	Fugitive PM10	Exhaust PM10	PM10 Total	Fugitive PM2.5	Exhaust PM2.5	PM2.5 Total	Bio- CO2	NBio- CO2	Total CO2	CH4	N2O	CO2e
Category	lb/day										lb/day					
Off-Road	0.5578	4.2323	4.9769	0.0141		0.1671	0.1671		0.1537	0.1537						1,377.0301
Paving	0.0341					0.0000	0.0000		0.0000	0.0000						0.0000
Total	**0.5918**	**4.2323**	**4.9769**	**0.0141**		**0.1671**	**0.1671**		**0.1537**	**0.1537**						**1,377.0301**

EMFAC Off-Model Adjustment Factors for Gasoline Light Duty Vehicle to Account for the SAFE Vehicle Rule Applied

3.11 Paving - DG - 2024

Unmitigated Construction Off-Site

	ROG	NOx	CO	SO2	Fugitive PM10	Exhaust PM10	PM10 Total	Fugitive PM2.5	Exhaust PM2.5	PM2.5 Total	Bio- CO2	NBio- CO2	Total CO2	CH4	N2O	CO2e
Category	lb/day										lb/day					
Hauling	0.0000	0.0000	0.0000	0.0000	0.0000	0.0000	0.0000	0.0000	0.0000	0.0000						0.0000
Vendor	8.9300e-003	0.3077	0.1164	1.4700e-003	0.0512	1.5500e-003	0.0528	0.0148	1.4900e-003	0.0162						164.7232
Worker	0.0149	9.9700e-003	0.1687	4.8000e-004	0.0559	3.2000e-004	0.0562	0.0148	3.0000e-004	0.0151						49.9353
Total	**0.0239**	**0.3177**	**0.2851**	**1.9500e-003**	**0.1071**	**1.8700e-003**	**0.1090**	**0.0296**	**1.7900e-003**	**0.0314**						**214.6585**

Mitigated Construction On-Site

	ROG	NOx	CO	SO2	Fugitive PM10	Exhaust PM10	PM10 Total	Fugitive PM2.5	Exhaust PM2.5	PM2.5 Total	Bio- CO2	NBio- CO2	Total CO2	CH4	N2O	CO2e
Category	lb/day										lb/day					
Off-Road	0.1723	0.7468	7.2943	0.0141		3.4500e-003	3.4500e-003		3.4500e-003	3.4500e-003						1,377.0301
Paving	0.0341					0.0000	0.0000		0.0000	0.0000						0.0000
Total	**0.2064**	**0.7468**	**7.2943**	**0.0141**		**3.4500e-003**	**3.4500e-003**		**3.4500e-003**	**3.4500e-003**						**1,377.0301**

EMFAC Off-Model Adjustment Factors for Gasoline Light Duty Vehicle to Account for the SAFE Vehicle Rule Applied

3.11 Paving - DG - 2024

Mitigated Construction Off-Site

	ROG	NOx	CO	SO2	Fugitive PM10	Exhaust PM10	PM10 Total	Fugitive PM2.5	Exhaust PM2.5	PM2.5 Total	Bio- CO2	NBio- CO2	Total CO2	CH4	N2O	CO2e
Category	lb/day										lb/day					
Hauling	0.0000	0.0000	0.0000	0.0000	0.0000	0.0000	0.0000	0.0000	0.0000	0.0000						0.0000
Vendor	8.9300e-003	0.3077	0.1164	1.4700e-003	0.0512	1.5500e-003	0.0528	0.0148	1.4900e-003	0.0162						164.7232
Worker	0.0149	9.9700e-003	0.1687	4.8000e-004	0.0559	3.2000e-004	0.0562	0.0148	3.0000e-004	0.0151						49.9353
Total	**0.0239**	**0.3177**	**0.2851**	**1.9500e-003**	**0.1071**	**1.8700e-003**	**0.1090**	**0.0296**	**1.7900e-003**	**0.0314**						**214.6585**

3.12 Paving - Earthwork - 2024

Unmitigated Construction On-Site

	ROG	NOx	CO	SO2	Fugitive PM10	Exhaust PM10	PM10 Total	Fugitive PM2.5	Exhaust PM2.5	PM2.5 Total	Bio- CO2	NBio- CO2	Total CO2	CH4	N2O	CO2e
Category	lb/day										lb/day					
Off-Road	0.6147	5.6517	6.2741	8.9900e-003		0.3085	0.3085		0.2838	0.2838						877.9266
Paving	0.6812					0.0000	0.0000		0.0000	0.0000						0.0000
Total	**1.2959**	**5.6517**	**6.2741**	**8.9900e-003**		**0.3085**	**0.3085**		**0.2838**	**0.2838**						**877.9266**

EMFAC Off-Model Adjustment Factors for Gasoline Light Duty Vehicle to Account for the SAFE Vehicle Rule Applied

3.12 Paving - Earthwork - 2024

Unmitigated Construction Off-Site

	ROG	NOx	CO	SO2	Fugitive PM10	Exhaust PM10	PM10 Total	Fugitive PM2.5	Exhaust PM2.5	PM2.5 Total	Bio- CO2	NBio- CO2	Total CO2	CH4	N2O	CO2e
Category	lb/day										lb/day					
Hauling	0.0000	0.0000	0.0000	0.0000	0.0000	0.0000	0.0000	0.0000	0.0000	0.0000						0.0000
Vendor	8.9300e-003	0.3077	0.1164	1.4700e-003	0.0512	1.5500e-003	0.0528	0.0148	1.4900e-003	0.0162						164.7232
Worker	0.0149	9.9700e-003	0.1687	4.8000e-004	0.0559	3.2000e-004	0.0562	0.0148	3.0000e-004	0.0151						49.9353
Total	**0.0239**	**0.3177**	**0.2851**	**1.9500e-003**	**0.1071**	**1.8700e-003**	**0.1090**	**0.0296**	**1.7900e-003**	**0.0314**						**214.6585**

Mitigated Construction On-Site

	ROG	NOx	CO	SO2	Fugitive PM10	Exhaust PM10	PM10 Total	Fugitive PM2.5	Exhaust PM2.5	PM2.5 Total	Bio- CO2	NBio- CO2	Total CO2	CH4	N2O	CO2e
Category	lb/day										lb/day					
Off-Road	0.1095	0.4745	6.7528	8.9900e-003		2.1900e-003	2.1900e-003		2.1900e-003	2.1900e-003						877.9266
Paving	0.6812					0.0000	0.0000		0.0000	0.0000						0.0000
Total	**0.7907**	**0.4745**	**6.7528**	**8.9900e-003**		**2.1900e-003**	**2.1900e-003**		**2.1900e-003**	**2.1900e-003**						**877.9266**

EMFAC Off-Model Adjustment Factors for Gasoline Light Duty Vehicle to Account for the SAFE Vehicle Rule Applied

3.12 Paving - Earthwork - 2024

Mitigated Construction Off-Site

	ROG	NOx	CO	SO2	Fugitive PM10	Exhaust PM10	PM10 Total	Fugitive PM2.5	Exhaust PM2.5	PM2.5 Total	Bio- CO2	NBio- CO2	Total CO2	CH4	N2O	CO2e
Category	lb/day										lb/day					
Hauling	0.0000	0.0000	0.0000	0.0000	0.0000	0.0000	0.0000	0.0000	0.0000	0.0000						0.0000
Vendor	8.9300e-003	0.3077	0.1164	1.4700e-003	0.0512	1.5500e-003	0.0528	0.0148	1.4900e-003	0.0162						164.7232
Worker	0.0149	9.9700e-003	0.1687	4.8000e-004	0.0559	3.2000e-004	0.0562	0.0148	3.0000e-004	0.0151						49.9353
Total	**0.0239**	**0.3177**	**0.2851**	**1.9500e-003**	**0.1071**	**1.8700e-003**	**0.1090**	**0.0296**	**1.7900e-003**	**0.0314**						**214.6585**

3.13 Utilities - 2024

Unmitigated Construction On-Site

	ROG	NOx	CO	SO2	Fugitive PM10	Exhaust PM10	PM10 Total	Fugitive PM2.5	Exhaust PM2.5	PM2.5 Total	Bio- CO2	NBio- CO2	Total CO2	CH4	N2O	CO2e
Category	lb/day										lb/day					
Off-Road	1.2767	12.4259	13.4886	0.0184		0.7426	0.7426		0.6832	0.6832						1,797.3383
Total	**1.2767**	**12.4259**	**13.4886**	**0.0184**		**0.7426**	**0.7426**		**0.6832**	**0.6832**						**1,797.3383**

6th Street PARC - Construction Emissions Only - Los Angeles-South Coast County, Summer

EMFAC Off-Model Adjustment Factors for Gasoline Light Duty Vehicle to Account for the SAFE Vehicle Rule Applied

3.13 Utilities - 2024

Unmitigated Construction Off-Site

	ROG	NOx	CO	SO2	Fugitive PM10	Exhaust PM10	PM10 Total	Fugitive PM2.5	Exhaust PM2.5	PM2.5 Total	Bio- CO2	NBio- CO2	Total CO2	CH4	N2O	CO2e
Category	lb/day										lb/day					
Hauling	0.0000	0.0000	0.0000	0.0000	0.0000	0.0000	0.0000	0.0000	0.0000	0.0000						0.0000
Vendor	8.9300e-003	0.3077	0.1164	1.4700e-003	0.0512	1.5500e-003	0.0528	0.0148	1.4900e-003	0.0162						164.7232
Worker	0.0448	0.0299	0.5060	1.4400e-003	0.1677	9.7000e-004	0.1686	0.0445	8.9000e-004	0.0454						149.8058
Total	**0.0537**	**0.3376**	**0.6224**	**2.9100e-003**	**0.2189**	**2.5200e-003**	**0.2214**	**0.0592**	**2.3800e-003**	**0.0616**						**314.5290**

Mitigated Construction On-Site

	ROG	NOx	CO	SO2	Fugitive PM10	Exhaust PM10	PM10 Total	Fugitive PM2.5	Exhaust PM2.5	PM2.5 Total	Bio- CO2	NBio- CO2	Total CO2	CH4	N2O	CO2e
Category	lb/day										lb/day					
Off-Road	0.2250	0.9748	13.8723	0.0184		4.5000e-003	4.5000e-003		4.5000e-003	4.5000e-003						1,797.3383
Total	**0.2250**	**0.9748**	**13.8723**	**0.0184**		**4.5000e-003**	**4.5000e-003**		**4.5000e-003**	**4.5000e-003**						**1,797.3383**

EMFAC Off-Model Adjustment Factors for Gasoline Light Duty Vehicle to Account for the SAFE Vehicle Rule Applied

3.13 Utilities - 2024

Mitigated Construction Off-Site

	ROG	NOx	CO	SO2	Fugitive PM10	Exhaust PM10	PM10 Total	Fugitive PM2.5	Exhaust PM2.5	PM2.5 Total	Bio- CO2	NBio- CO2	Total CO2	CH4	N2O	CO2e
Category	lb/day										lb/day					
Hauling	0.0000	0.0000	0.0000	0.0000	0.0000	0.0000	0.0000	0.0000	0.0000	0.0000						0.0000
Vendor	8.9300e-003	0.3077	0.1164	1.4700e-003	0.0512	1.5500e-003	0.0528	0.0148	1.4900e-003	0.0162						164.7232
Worker	0.0448	0.0299	0.5060	1.4400e-003	0.1677	9.7000e-004	0.1686	0.0445	8.9000e-004	0.0454						149.8058
Total	**0.0537**	**0.3376**	**0.6224**	**2.9100e-003**	**0.2189**	**2.5200e-003**	**0.2214**	**0.0592**	**2.3800e-003**	**0.0616**						**314.5290**

3.14 Structures - Construction - 2024

Unmitigated Construction On-Site

	ROG	NOx	CO	SO2	Fugitive PM10	Exhaust PM10	PM10 Total	Fugitive PM2.5	Exhaust PM2.5	PM2.5 Total	Bio- CO2	NBio- CO2	Total CO2	CH4	N2O	CO2e
Category	lb/day										lb/day					
Off-Road	1.1988	10.4734	17.1339	0.0322		0.4866	0.4866		0.4476	0.4476						3,140.9714
Total	**1.1988**	**10.4734**	**17.1339**	**0.0322**		**0.4866**	**0.4866**		**0.4476**	**0.4476**						**3,140.9714**

EMFAC Off-Model Adjustment Factors for Gasoline Light Duty Vehicle to Account for the SAFE Vehicle Rule Applied

3.14 Structures - Construction - 2024

Unmitigated Construction Off-Site

	ROG	NOx	CO	SO2	Fugitive PM10	Exhaust PM10	PM10 Total	Fugitive PM2.5	Exhaust PM2.5	PM2.5 Total	Bio- CO2	NBio- CO2	Total CO2	CH4	N2O	CO2e
Category	lb/day										lb/day					
Hauling	0.0000	0.0000	0.0000	0.0000	0.0000	0.0000	0.0000	0.0000	0.0000	0.0000						0.0000
Vendor	8.9300e-003	0.3077	0.1164	1.4700e-003	0.0512	1.5500e-003	0.0528	0.0148	1.4900e-003	0.0162						164.7232
Worker	0.7133	0.4765	8.0615	0.0230	2.6715	0.0155	2.6869	0.7085	0.0142	0.7227						2,386.9058
Total	**0.7223**	**0.7842**	**8.1779**	**0.0245**	**2.7227**	**0.0170**	**2.7397**	**0.7232**	**0.0157**	**0.7390**						**2,551.6290**

Mitigated Construction On-Site

	ROG	NOx	CO	SO2	Fugitive PM10	Exhaust PM10	PM10 Total	Fugitive PM2.5	Exhaust PM2.5	PM2.5 Total	Bio- CO2	NBio- CO2	Total CO2	CH4	N2O	CO2e
Category	lb/day										lb/day					
Off-Road	0.6754	4.4166	20.0736	0.0322		0.1704	0.1704		0.1572	0.1572						3,140.9714
Total	**0.6754**	**4.4166**	**20.0736**	**0.0322**		**0.1704**	**0.1704**		**0.1572**	**0.1572**						**3,140.9714**

EMFAC Off-Model Adjustment Factors for Gasoline Light Duty Vehicle to Account for the SAFE Vehicle Rule Applied

3.14 Structures - Construction - 2024

Mitigated Construction Off-Site

	ROG	NOx	CO	SO2	Fugitive PM10	Exhaust PM10	PM10 Total	Fugitive PM2.5	Exhaust PM2.5	PM2.5 Total	Bio- CO2	NBio- CO2	Total CO2	CH4	N2O	CO2e
Category	lb/day										lb/day					
Hauling	0.0000	0.0000	0.0000	0.0000	0.0000	0.0000	0.0000	0.0000	0.0000	0.0000						0.0000
Vendor	8.9300e-003	0.3077	0.1164	1.4700e-003	0.0512	1.5500e-003	0.0528	0.0148	1.4900e-003	0.0162						164.7232
Worker	0.7133	0.4765	8.0615	0.0230	2.6715	0.0155	2.6869	0.7085	0.0142	0.7227						2,386.9058
Total	**0.7223**	**0.7842**	**8.1779**	**0.0245**	**2.7227**	**0.0170**	**2.7397**	**0.7232**	**0.0157**	**0.7390**						**2,551.6290**

3.15 Structures - Concrete - 2024

Unmitigated Construction On-Site

	ROG	NOx	CO	SO2	Fugitive PM10	Exhaust PM10	PM10 Total	Fugitive PM2.5	Exhaust PM2.5	PM2.5 Total	Bio- CO2	NBio- CO2	Total CO2	CH4	N2O	CO2e
Category	lb/day										lb/day					
Off-Road	0.0827	0.6969	1.0054	1.7800e-003		0.0317	0.0317		0.0317	0.0317						168.5729
Total	**0.0827**	**0.6969**	**1.0054**	**1.7800e-003**		**0.0317**	**0.0317**		**0.0317**	**0.0317**						**168.5729**

6th Street PARC - Construction Emissions Only - Los Angeles-South Coast County, Summer

EMFAC Off-Model Adjustment Factors for Gasoline Light Duty Vehicle to Account for the SAFE Vehicle Rule Applied

3.15 Structures - Concrete - 2024

Unmitigated Construction Off-Site

	ROG	NOx	CO	SO2	Fugitive PM10	Exhaust PM10	PM10 Total	Fugitive PM2.5	Exhaust PM2.5	PM2.5 Total	Bio- CO2	NBio- CO2	Total CO2	CH4	N2O	CO2e
Category	lb/day										lb/day					
Hauling	0.0000	0.0000	0.0000	0.0000	0.0000	0.0000	0.0000	0.0000	0.0000	0.0000						0.0000
Vendor	8.9300e-003	0.3077	0.1164	1.4700e-003	0.0512	1.5500e-003	0.0528	0.0148	1.4900e-003	0.0162						164.7232
Worker	0.7133	0.4765	8.0615	0.0230	2.6715	0.0155	2.6869	0.7085	0.0142	0.7227						2,386.9058
Total	**0.7223**	**0.7842**	**8.1779**	**0.0245**	**2.7227**	**0.0170**	**2.7397**	**0.7232**	**0.0157**	**0.7390**						**2,551.6290**

Mitigated Construction On-Site

	ROG	NOx	CO	SO2	Fugitive PM10	Exhaust PM10	PM10 Total	Fugitive PM2.5	Exhaust PM2.5	PM2.5 Total	Bio- CO2	NBio- CO2	Total CO2	CH4	N2O	CO2e
Category	lb/day										lb/day					
Off-Road	0.0178	0.0770	1.0963	1.7800e-003		3.6000e-004	3.6000e-004		3.6000e-004	3.6000e-004						168.5729
Total	**0.0178**	**0.0770**	**1.0963**	**1.7800e-003**		**3.6000e-004**	**3.6000e-004**		**3.6000e-004**	**3.6000e-004**						**168.5729**

EMFAC Off-Model Adjustment Factors for Gasoline Light Duty Vehicle to Account for the SAFE Vehicle Rule Applied

3.15 Structures - Concrete - 2024

Mitigated Construction Off-Site

	ROG	NOx	CO	SO2	Fugitive PM10	Exhaust PM10	PM10 Total	Fugitive PM2.5	Exhaust PM2.5	PM2.5 Total	Bio- CO2	NBio- CO2	Total CO2	CH4	N2O	CO2e
Category	lb/day										lb/day					
Hauling	0.0000	0.0000	0.0000	0.0000	0.0000	0.0000	0.0000	0.0000	0.0000	0.0000						0.0000
Vendor	8.9300e-003	0.3077	0.1164	1.4700e-003	0.0512	1.5500e-003	0.0528	0.0148	1.4900e-003	0.0162						164.7232
Worker	0.7133	0.4765	8.0615	0.0230	2.6715	0.0155	2.6869	0.7085	0.0142	0.7227						2,386.9058
Total	**0.7223**	**0.7842**	**8.1779**	**0.0245**	**2.7227**	**0.0170**	**2.7397**	**0.7232**	**0.0157**	**0.7390**						**2,551.6290**

4.0 Operational Detail - Mobile

4.1 Mitigation Measures Mobile

6th Street PARC - Construction Emissions Only - Los Angeles-South Coast County, Summer

EMFAC Off-Model Adjustment Factors for Gasoline Light Duty Vehicle to Account for the SAFE Vehicle Rule Applied

	ROG	NOx	CO	SO2	Fugitive PM10	Exhaust PM10	PM10 Total	Fugitive PM2.5	Exhaust PM2.5	PM2.5 Total	Bio- CO2	NBio- CO2	Total CO2	CH4	N2O	CO2e
Category	lb/day										lb/day					
Mitigated	0.0000	0.0000	0.0000	0.0000	0.0000	0.0000	0.0000	0.0000	0.0000	0.0000						0.0000
Unmitigated	0.0000	0.0000	0.0000	0.0000	0.0000	0.0000	0.0000	0.0000	0.0000	0.0000						0.0000

4.2 Trip Summary Information

	Average Daily Trip Rate			Unmitigated	Mitigated
Land Use	Weekday	Saturday	Sunday	Annual VMT	Annual VMT
City Park	0.00	0.00	0.00		
Fast Food Restaurant w/o Drive Thru	0.00	0.00	0.00		
Health Club	0.00	0.00	0.00		
Parking Lot	0.00	0.00	0.00		
Total	0.00	0.00	0.00		

4.3 Trip Type Information

	Miles			Trip %			Trip Purpose %		
Land Use	H-W or C-W	H-S or C-C	H-O or C-NW	H-W or C-W	H-S or C-C	H-O or C-NW	Primary	Diverted	Pass-by
City Park	16.60	8.40	6.90	33.00	48.00	19.00	66	28	6
Fast Food Restaurant w/o Drive	16.60	8.40	6.90	1.50	79.50	19.00	51	37	12
Health Club	16.60	8.40	6.90	16.90	64.10	19.00	52	39	9
Parking Lot	16.60	8.40	6.90	0.00	0.00	0.00	0	0	0

4.4 Fleet Mix

6th Street PARC - Construction Emissions Only - Los Angeles-South Coast County, Summer

EMFAC Off-Model Adjustment Factors for Gasoline Light Duty Vehicle to Account for the SAFE Vehicle Rule Applied

Land Use	LDA	LDT1	LDT2	MDV	LHD1	LHD2	MHD	HHD	OBUS	UBUS	MCY	SBUS	MH
City Park	0.540171	0.064547	0.189075	0.126673	0.023412	0.006384	0.010926	0.008089	0.000929	0.000597	0.025155	0.000706	0.003335
Fast Food Restaurant w/o Drive Thru	0.540171	0.064547	0.189075	0.126673	0.023412	0.006384	0.010926	0.008089	0.000929	0.000597	0.025155	0.000706	0.003335
Health Club	0.540171	0.064547	0.189075	0.126673	0.023412	0.006384	0.010926	0.008089	0.000929	0.000597	0.025155	0.000706	0.003335
Parking Lot	0.540171	0.064547	0.189075	0.126673	0.023412	0.006384	0.010926	0.008089	0.000929	0.000597	0.025155	0.000706	0.003335

5.0 Energy Detail

Historical Energy Use: N

5.1 Mitigation Measures Energy

	ROG	NOx	CO	SO2	Fugitive PM10	Exhaust PM10	PM10 Total	Fugitive PM2.5	Exhaust PM2.5	PM2.5 Total	Bio- CO2	NBio- CO2	Total CO2	CH4	N2O	CO2e
Category	lb/day										lb/day					
NaturalGas Mitigated	5.8300e-003	0.0530	0.0445	3.2000e-004		4.0200e-003	4.0200e-003		4.0200e-003	4.0200e-003						63.9235
NaturalGas Unmitigated	5.8300e-003	0.0530	0.0445	3.2000e-004		4.0200e-003	4.0200e-003		4.0200e-003	4.0200e-003						63.9235

EMFAC Off-Model Adjustment Factors for Gasoline Light Duty Vehicle to Account for the SAFE Vehicle Rule Applied

5.2 Energy by Land Use - NaturalGas

Unmitigated

	NaturalGas Use	ROG	NOx	CO	SO2	Fugitive PM10	Exhaust PM10	PM10 Total	Fugitive PM2.5	Exhaust PM2.5	PM2.5 Total	Bio- CO2	NBio- CO2	Total CO2	CH4	N2O	CO2e
Land Use	kBTU/yr	lb/day										lb/day					
City Park	0	0.0000	0.0000	0.0000	0.0000		0.0000	0.0000		0.0000	0.0000						0.0000
Fast Food Restaurant w/o Drive Thru	441.729	4.7600e-003	0.0433	0.0364	2.6000e-004		3.2900e-003	3.2900e-003		3.2900e-003	3.2900e-003						52.2769
Health Club	98.411	1.0600e-003	9.6500e-003	8.1000e-003	6.0000e-005		7.3000e-004	7.3000e-004		7.3000e-004	7.3000e-004						11.6466
Parking Lot	0	0.0000	0.0000	0.0000	0.0000		0.0000	0.0000		0.0000	0.0000						0.0000
Total		**5.8200e-003**	**0.0530**	**0.0445**	**3.2000e-004**		**4.0200e-003**	**4.0200e-003**		**4.0200e-003**	**4.0200e-003**						**63.9235**

EMFAC Off-Model Adjustment Factors for Gasoline Light Duty Vehicle to Account for the SAFE Vehicle Rule Applied

5.2 Energy by Land Use - NaturalGas

Mitigated

	NaturalGas Use	ROG	NOx	CO	SO2	Fugitive PM10	Exhaust PM10	PM10 Total	Fugitive PM2.5	Exhaust PM2.5	PM2.5 Total	Bio- CO2	NBio- CO2	Total CO2	CH4	N2O	CO2e
Land Use	kBTU/yr	lb/day										lb/day					
City Park	0	0.0000	0.0000	0.0000	0.0000		0.0000	0.0000		0.0000	0.0000						0.0000
Fast Food Restaurant w/o Drive Thru	0.441729	4.7600e-003	0.0433	0.0364	2.6000e-004		3.2900e-003	3.2900e-003		3.2900e-003	3.2900e-003						52.2769
Health Club	0.098411	1.0600e-003	9.6500e-003	8.1000e-003	6.0000e-005		7.3000e-004	7.3000e-004		7.3000e-004	7.3000e-004						11.6466
Parking Lot	0	0.0000	0.0000	0.0000	0.0000		0.0000	0.0000		0.0000	0.0000						0.0000
Total		**5.8200e-003**	**0.0530**	**0.0445**	**3.2000e-004**		**4.0200e-003**	**4.0200e-003**		**4.0200e-003**	**4.0200e-003**						**63.9235**

6.0 Area Detail

6.1 Mitigation Measures Area

EMFAC Off-Model Adjustment Factors for Gasoline Light Duty Vehicle to Account for the SAFE Vehicle Rule Applied

	ROG	NOx	CO	SO2	Fugitive PM10	Exhaust PM10	PM10 Total	Fugitive PM2.5	Exhaust PM2.5	PM2.5 Total	Bio- CO2	NBio- CO2	Total CO2	CH4	N2O	CO2e
Category	lb/day										lb/day					
Mitigated	0.1037	9.0000e-005	0.0104	0.0000		4.0000e-005	4.0000e-005		4.0000e-005	4.0000e-005						0.0238
Unmitigated	0.1037	9.0000e-005	0.0104	0.0000		4.0000e-005	4.0000e-005		4.0000e-005	4.0000e-005						0.0238

6.2 Area by SubCategory

Unmitigated

	ROG	NOx	CO	SO2	Fugitive PM10	Exhaust PM10	PM10 Total	Fugitive PM2.5	Exhaust PM2.5	PM2.5 Total	Bio- CO2	NBio- CO2	Total CO2	CH4	N2O	CO2e
SubCategory	lb/day										lb/day					
Architectural Coating	9.5100e-003					0.0000	0.0000		0.0000	0.0000						0.0000
Consumer Products	0.0932					0.0000	0.0000		0.0000	0.0000						0.0000
Landscaping	9.6000e-004	9.0000e-005	0.0104	0.0000		4.0000e-005	4.0000e-005		4.0000e-005	4.0000e-005						0.0238
Total	**0.1037**	**9.0000e-005**	**0.0104**	**0.0000**		**4.0000e-005**	**4.0000e-005**		**4.0000e-005**	**4.0000e-005**						**0.0238**

EMFAC Off-Model Adjustment Factors for Gasoline Light Duty Vehicle to Account for the SAFE Vehicle Rule Applied

6.2 Area by SubCategory

Mitigated

	ROG	NOx	CO	SO2	Fugitive PM10	Exhaust PM10	PM10 Total	Fugitive PM2.5	Exhaust PM2.5	PM2.5 Total	Bio- CO2	NBio- CO2	Total CO2	CH4	N2O	CO2e
SubCategory	lb/day										lb/day					
Architectural Coating	9.5100e-003					0.0000	0.0000		0.0000	0.0000						0.0000
Consumer Products	0.0932					0.0000	0.0000		0.0000	0.0000						0.0000
Landscaping	9.6000e-004	9.0000e-005	0.0104	0.0000		4.0000e-005	4.0000e-005		4.0000e-005	4.0000e-005						0.0238
Total	**0.1037**	**9.0000e-005**	**0.0104**	**0.0000**		**4.0000e-005**	**4.0000e-005**		**4.0000e-005**	**4.0000e-005**						**0.0238**

7.0 Water Detail

7.1 Mitigation Measures Water

EMFAC Off-Model Adjustment Factors for Gasoline Light Duty Vehicle to Account for the SAFE Vehicle Rule Applied

8.0 Waste Detail

8.1 Mitigation Measures Waste

9.0 Operational Offroad

Equipment Type	Number	Hours/Day	Days/Year	Horse Power	Load Factor	Fuel Type

10.0 Stationary Equipment

Fire Pumps and Emergency Generators

Equipment Type	Number	Hours/Day	Hours/Year	Horse Power	Load Factor	Fuel Type

Boilers

Equipment Type	Number	Heat Input/Day	Heat Input/Year	Boiler Rating	Fuel Type

User Defined Equipment

Equipment Type	Number

11.0 Vegetation

EMFAC Off-Model Adjustment Factors for Gasoline Light Duty Vehicle to Account for the SAFE Vehicle Rule Applied

6th Street PARC - Construction Emissions Only

Los Angeles-South Coast County, Winter

1.0 Project Characteristics

1.1 Land Usage

Land Uses	Size	Metric	Lot Acreage	Floor Surface Area	Population
Parking Lot	87.00	Space	0.78	34,800.00	0
City Park	12.22	Acre	12.22	532,303.20	0
Fast Food Restaurant w/o Drive Thru	0.70	1000sqft	0.02	700.00	0
Health Club	2.00	1000sqft	0.05	2,000.00	0

1.2 Other Project Characteristics

Urbanization	Urban	**Wind Speed (m/s)**	2.2	**Precipitation Freq (Days)**	33
Climate Zone	12			**Operational Year**	2025
Utility Company	Los Angeles Department of Water & Power				
CO2 Intensity (lb/MWhr)	691.98	**CH4 Intensity (lb/MWhr)**	0.033	**N2O Intensity (lb/MWhr)**	0.004

1.3 User Entered Comments & Non-Default Data

Project Characteristics -

Land Use - Includes 200 sq.ft. cafe, 2,000 sq.ft. rec. building, 87 paved parking spaces (0.78 acres), 12.22 acres of park uses, 13 acres total.

Construction Phase - Based on construction schedules provided.

Off-road Equipment - Offroad equipment based on information provided.

Off-road Equipment - Offroad equipment based on information provided.

Off-road Equipment - Offroad equipment based on information provided.

6th Street PARC - Construction Emissions Only - Los Angeles-South Coast County, Winter

EMFAC Off-Model Adjustment Factors for Gasoline Light Duty Vehicle to Account for the SAFE Vehicle Rule Applied

Off-road Equipment - Offroad equipment based on information provided.

Off-road Equipment - Offroad equipment based on information provided.

Off-road Equipment - Offroad equipment based on information provided.

Off-road Equipment - .Offroad equipment based on information provided.

Off-road Equipment - Offroad equipment based on information provided.

Off-road Equipment - Offroad equipment based on information provided.

Off-road Equipment - Offroad equipment based on information provided.

Off-road Equipment - .Offroad equipment based on information provided.

Off-road Equipment - Offroad equipment based on information provided.

Off-road Equipment - Offroad equipment based on information provided.

Off-road Equipment - Offroad equipment based on information provided.

Trips and VMT - Based on trip and haul information provided.

Grading - .

Vehicle Trips - Construction run only.

Water And Wastewater -

Solid Waste -

Construction Off-road Equipment Mitigation - Tier 4 engins with Level 3 DPF applied.

Table Name	Column Name	Default Value	New Value
tblConstDustMitigation	WaterUnpavedRoadVehicleSpeed	0	15
tblConstEquipMitigation	DPF	No Change	Level 3
tblConstEquipMitigation	DPF	No Change	Level 3
tblConstEquipMitigation	DPF	No Change	Level 3
tblConstEquipMitigation	DPF	No Change	Level 3

EMFAC Off-Model Adjustment Factors for Gasoline Light Duty Vehicle to Account for the SAFE Vehicle Rule Applied

tblConstEquipMitigation	DPF	No Change	Level 3
tblConstEquipMitigation	DPF	No Change	Level 3
tblConstEquipMitigation	DPF	No Change	Level 3
tblConstEquipMitigation	DPF	No Change	Level 3
tblConstEquipMitigation	DPF	No Change	Level 3
tblConstEquipMitigation	DPF	No Change	Level 3
tblConstEquipMitigation	DPF	No Change	Level 3
tblConstEquipMitigation	DPF	No Change	Level 3
tblConstEquipMitigation	DPF	No Change	Level 3
tblConstEquipMitigation	DPF	No Change	Level 3
tblConstEquipMitigation	DPF	No Change	Level 3
tblConstEquipMitigation	NumberOfEquipmentMitigated	0.00	2.00
tblConstEquipMitigation	NumberOfEquipmentMitigated	0.00	3.00
tblConstEquipMitigation	NumberOfEquipmentMitigated	0.00	1.00
tblConstEquipMitigation	NumberOfEquipmentMitigated	0.00	2.00
tblConstEquipMitigation	NumberOfEquipmentMitigated	0.00	16.00
tblConstEquipMitigation	NumberOfEquipmentMitigated	0.00	2.00
tblConstEquipMitigation	NumberOfEquipmentMitigated	0.00	3.00
tblConstEquipMitigation	NumberOfEquipmentMitigated	0.00	5.00
tblConstEquipMitigation	NumberOfEquipmentMitigated	0.00	1.00
tblConstEquipMitigation	NumberOfEquipmentMitigated	0.00	1.00
tblConstEquipMitigation	NumberOfEquipmentMitigated	0.00	2.00
tblConstEquipMitigation	NumberOfEquipmentMitigated	0.00	8.00
tblConstEquipMitigation	NumberOfEquipmentMitigated	0.00	3.00
tblConstEquipMitigation	NumberOfEquipmentMitigated	0.00	32.00
tblConstEquipMitigation	NumberOfEquipmentMitigated	0.00	2.00
tblConstEquipMitigation	Tier	No Change	Tier 4 Final
tblConstEquipMitigation	Tier	No Change	Tier 4 Final
tblConstEquipMitigation	Tier	No Change	Tier 4 Final

6th Street PARC - Construction Emissions Only - Los Angeles-South Coast County, Winter

EMFAC Off-Model Adjustment Factors for Gasoline Light Duty Vehicle to Account for the SAFE Vehicle Rule Applied

tblConstEquipMitigation	Tier	No Change	Tier 4 Final
tblConstEquipMitigation	Tier	No Change	Tier 4 Final
tblConstEquipMitigation	Tier	No Change	Tier 4 Final
tblConstEquipMitigation	Tier	No Change	Tier 4 Final
tblConstEquipMitigation	Tier	No Change	Tier 4 Final
tblConstEquipMitigation	Tier	No Change	Tier 4 Final
tblConstEquipMitigation	Tier	No Change	Tier 4 Final
tblConstEquipMitigation	Tier	No Change	Tier 4 Final
tblConstEquipMitigation	Tier	No Change	Tier 4 Final
tblConstEquipMitigation	Tier	No Change	Tier 4 Final
tblConstEquipMitigation	Tier	No Change	Tier 4 Final
tblConstEquipMitigation	Tier	No Change	Tier 4 Final
tblConstructionPhase	NumDays	300.00	60.00
tblConstructionPhase	NumDays	300.00	120.00
tblConstructionPhase	NumDays	300.00	30.00
tblConstructionPhase	NumDays	20.00	40.00
tblConstructionPhase	NumDays	30.00	9.00
tblConstructionPhase	NumDays	20.00	60.00
tblConstructionPhase	NumDays	20.00	3.00
tblConstructionPhase	NumDays	20.00	30.00
tblConstructionPhase	NumDays	20.00	120.00
tblConstructionPhase	NumDays	10.00	150.00
tblConstructionPhase	NumDays	10.00	30.00
tblConstructionPhase	NumDays	10.00	33.00
tblConstructionPhase	NumDays	10.00	60.00
tblGrading	AcresOfGrading	9.00	31.50
tblGrading	AcresOfGrading	0.00	49.50
tblGrading	AcresOfGrading	0.00	90.00
tblGrading	MaterialExported	0.00	16,700.00

6th Street PARC - Construction Emissions Only - Los Angeles-South Coast County, Winter

EMFAC Off-Model Adjustment Factors for Gasoline Light Duty Vehicle to Account for the SAFE Vehicle Rule Applied

tblGrading	MaterialImported	0.00	16,700.00
tblOffRoadEquipment	HorsePower	231.00	226.00
tblOffRoadEquipment	HorsePower	231.00	226.00
tblOffRoadEquipment	HorsePower	187.00	174.00
tblOffRoadEquipment	HorsePower	130.00	125.00
tblOffRoadEquipment	HorsePower	247.00	255.00
tblOffRoadEquipment	HorsePower	221.00	81.00
tblOffRoadEquipment	HorsePower	221.00	205.00
tblOffRoadEquipment	HorsePower	9.00	300.00
tblOffRoadEquipment	HorsePower	9.00	300.00
tblOffRoadEquipment	HorsePower	9.00	300.00
tblOffRoadEquipment	HorsePower	16.00	400.00
tblOffRoadEquipment	HorsePower	16.00	400.00
tblOffRoadEquipment	HorsePower	158.00	162.00
tblOffRoadEquipment	HorsePower	187.00	174.00
tblOffRoadEquipment	HorsePower	402.00	400.00
tblOffRoadEquipment	HorsePower	402.00	400.00
tblOffRoadEquipment	HorsePower	402.00	400.00
tblOffRoadEquipment	HorsePower	402.00	400.00
tblOffRoadEquipment	HorsePower	172.00	85.00
tblOffRoadEquipment	HorsePower	78.00	80.00
tblOffRoadEquipment	LoadFactor	0.73	0.38
tblOffRoadEquipment	LoadFactor	0.29	0.20
tblOffRoadEquipment	LoadFactor	0.42	0.36
tblOffRoadEquipment	LoadFactor	0.37	0.40
tblOffRoadEquipment	LoadFactor	0.50	0.73
tblOffRoadEquipment	LoadFactor	0.50	0.29
tblOffRoadEquipment	LoadFactor	0.56	0.29
tblOffRoadEquipment	LoadFactor	0.56	0.20

EMFAC Off-Model Adjustment Factors for Gasoline Light Duty Vehicle to Account for the SAFE Vehicle Rule Applied

tblOffRoadEquipment	LoadFactor	0.56	0.42
tblOffRoadEquipment	LoadFactor	0.38	0.40
tblOffRoadEquipment	LoadFactor	0.38	0.48
tblOffRoadEquipment	LoadFactor	0.38	0.74
tblOffRoadEquipment	LoadFactor	0.41	0.42
tblOffRoadEquipment	LoadFactor	0.38	0.42
tblOffRoadEquipment	LoadFactor	0.38	0.48
tblOffRoadEquipment	LoadFactor	0.38	0.42
tblOffRoadEquipment	LoadFactor	0.74	0.20
tblOffRoadEquipment	LoadFactor	0.74	0.45
tblOffRoadEquipment	LoadFactor	0.38	0.37
tblOffRoadEquipment	LoadFactor	0.38	0.40
tblOffRoadEquipment	LoadFactor	0.38	0.37
tblOffRoadEquipment	LoadFactor	0.37	0.38
tblOffRoadEquipment	OffRoadEquipmentUnitAmount	1.00	0.00
tblOffRoadEquipment	OffRoadEquipmentUnitAmount	2.00	0.00
tblOffRoadEquipment	OffRoadEquipmentUnitAmount	3.00	0.00
tblOffRoadEquipment	OffRoadEquipmentUnitAmount	3.00	0.00
tblOffRoadEquipment	OffRoadEquipmentUnitAmount	3.00	0.00
tblOffRoadEquipment	OffRoadEquipmentUnitAmount	1.00	0.00
tblOffRoadEquipment	OffRoadEquipmentUnitAmount	1.00	0.00
tblOffRoadEquipment	OffRoadEquipmentUnitAmount	1.00	0.00
tblOffRoadEquipment	OffRoadEquipmentUnitAmount	1.00	2.00
tblOffRoadEquipment	OffRoadEquipmentUnitAmount	2.00	0.00
tblOffRoadEquipment	OffRoadEquipmentUnitAmount	2.00	0.00
tblOffRoadEquipment	OffRoadEquipmentUnitAmount	2.00	1.00
tblOffRoadEquipment	OffRoadEquipmentUnitAmount	2.00	0.00
tblOffRoadEquipment	OffRoadEquipmentUnitAmount	2.00	0.00
tblOffRoadEquipment	OffRoadEquipmentUnitAmount	2.00	0.00

6th Street PARC - Construction Emissions Only - Los Angeles-South Coast County, Winter

EMFAC Off-Model Adjustment Factors for Gasoline Light Duty Vehicle to Account for the SAFE Vehicle Rule Applied

tblOffRoadEquipment	OffRoadEquipmentUnitAmount	2.00	0.00
tblOffRoadEquipment	OffRoadEquipmentUnitAmount	2.00	0.00
tblOffRoadEquipment	OffRoadEquipmentUnitAmount	2.00	0.00
tblOffRoadEquipment	OffRoadEquipmentUnitAmount	2.00	1.00
tblOffRoadEquipment	OffRoadEquipmentUnitAmount	2.00	1.00
tblOffRoadEquipment	OffRoadEquipmentUnitAmount	2.00	0.00
tblOffRoadEquipment	OffRoadEquipmentUnitAmount	2.00	1.00
tblOffRoadEquipment	OffRoadEquipmentUnitAmount	1.00	0.00
tblOffRoadEquipment	OffRoadEquipmentUnitAmount	3.00	1.00
tblOffRoadEquipment	OffRoadEquipmentUnitAmount	3.00	1.00
tblOffRoadEquipment	OffRoadEquipmentUnitAmount	3.00	0.00
tblOffRoadEquipment	OffRoadEquipmentUnitAmount	3.00	0.00
tblOffRoadEquipment	OffRoadEquipmentUnitAmount	2.00	0.00
tblOffRoadEquipment	OffRoadEquipmentUnitAmount	3.00	0.00
tblOffRoadEquipment	OffRoadEquipmentUnitAmount	3.00	0.00
tblOffRoadEquipment	OffRoadEquipmentUnitAmount	3.00	0.00
tblOffRoadEquipment	OffRoadEquipmentUnitAmount	2.00	0.00
tblOffRoadEquipment	OffRoadEquipmentUnitAmount	4.00	8.00
tblOffRoadEquipment	OffRoadEquipmentUnitAmount	4.00	8.00
tblOffRoadEquipment	OffRoadEquipmentUnitAmount	4.00	8.00
tblOffRoadEquipment	OffRoadEquipmentUnitAmount	4.00	3.00
tblOffRoadEquipment	OffRoadEquipmentUnitAmount	1.00	0.00
tblOffRoadEquipment	OffRoadEquipmentUnitAmount	1.00	0.00
tblOffRoadEquipment	OffRoadEquipmentUnitAmount	1.00	0.00
tblOffRoadEquipment	UsageHours	8.00	4.00
tblOffRoadEquipment	UsageHours	7.00	8.00
tblOffRoadEquipment	UsageHours	7.00	8.00
tblOffRoadEquipment	UsageHours	8.00	2.00
tblTripsAndVMT	HaulingTripLength	20.00	210.00

EMFAC Off-Model Adjustment Factors for Gasoline Light Duty Vehicle to Account for the SAFE Vehicle Rule Applied

tblTripsAndVMT	VendorTripNumber	0.00	8.00
tblTripsAndVMT	VendorTripNumber	0.00	8.00
tblTripsAndVMT	VendorTripNumber	0.00	8.00
tblTripsAndVMT	VendorTripNumber	0.00	8.00
tblTripsAndVMT	VendorTripNumber	93.00	8.00
tblTripsAndVMT	VendorTripNumber	93.00	8.00
tblTripsAndVMT	VendorTripNumber	0.00	8.00
tblTripsAndVMT	VendorTripNumber	0.00	8.00
tblTripsAndVMT	VendorTripNumber	0.00	8.00
tblTripsAndVMT	VendorTripNumber	0.00	8.00
tblTripsAndVMT	VendorTripNumber	0.00	8.00
tblTripsAndVMT	VendorTripNumber	93.00	8.00
tblTripsAndVMT	VendorTripNumber	0.00	8.00
tblTripsAndVMT	VendorTripNumber	0.00	8.00
tblVehicleTrips	ST_TR	1.96	0.00
tblVehicleTrips	ST_TR	696.00	0.00
tblVehicleTrips	ST_TR	20.87	0.00
tblVehicleTrips	SU_TR	2.19	0.00
tblVehicleTrips	SU_TR	500.00	0.00
tblVehicleTrips	SU_TR	26.73	0.00
tblVehicleTrips	WD_TR	0.78	0.00
tblVehicleTrips	WD_TR	346.23	0.00
tblVehicleTrips	WD_TR	32.93	0.00

2.0 Emissions Summary

6th Street PARC - Construction Emissions Only - Los Angeles-South Coast County, Winter

EMFAC Off-Model Adjustment Factors for Gasoline Light Duty Vehicle to Account for the SAFE Vehicle Rule Applied

2.1 Overall Construction (Maximum Daily Emission)

Unmitigated Construction

	ROG	NOx	CO	SO2	Fugitive PM10	Exhaust PM10	PM10 Total	Fugitive PM2.5	Exhaust PM2.5	PM2.5 Total	Bio- CO2	NBio- CO2	Total CO2	CH4	N2O	CO2e
Year	lb/day										lb/day					
2022	4.5240	70.4654	39.6133	0.1901	18.0178	2.0172	20.0350	8.0652	1.8659	9.9312						20,908.1624
2023	2.2064	13.6334	19.4735	0.0532	2.8634	0.5779	3.3890	0.7617	0.5318	1.2520						5,353.0820
2024	2.6542	18.7659	24.6704	0.0554	2.7227	1.0556	3.2263	0.7232	0.9712	1.1866						5,569.1897
Maximum	**4.5240**	**70.4654**	**39.6133**	**0.1901**	**18.0178**	**2.0172**	**20.0350**	**8.0652**	**1.8659**	**9.9312**						**20,908.1624**

Mitigated Construction

	ROG	NOx	CO	SO2	Fugitive PM10	Exhaust PM10	PM10 Total	Fugitive PM2.5	Exhaust PM2.5	PM2.5 Total	Bio- CO2	NBio- CO2	Total CO2	CH4	N2O	CO2e
Year	lb/day										lb/day					
2022	1.7916	38.6736	41.1577	0.1901	9.9778	0.2931	10.2709	3.9499	0.2807	4.2306						20,908.1624
2023	1.2582	2.6496	23.2916	0.0532	2.8634	0.0262	2.8896	0.7617	0.0248	0.7865						5,353.0820
2024	1.4530	5.2650	27.6101	0.0554	2.7227	0.1875	2.9102	0.7232	0.1729	0.8961						5,569.1897
Maximum	**1.7916**	**38.6736**	**41.1577**	**0.1901**	**9.9778**	**0.2931**	**10.2709**	**3.9499**	**0.2807**	**4.2306**						**20,908.1624**

6th Street PARC - Construction Emissions Only - Los Angeles-South Coast County, Winter

EMFAC Off-Model Adjustment Factors for Gasoline Light Duty Vehicle to Account for the SAFE Vehicle Rule Applied

	ROG	NOx	CO	SO2	Fugitive PM10	Exhaust PM10	PM10 Total	Fugitive PM2.5	Exhaust PM2.5	PM2.5 Total	Bio- CO2	NBio-CO2	Total CO2	CH4	N20	CO2e
Percent Reduction	52.02	54.71	-9.91	0.00	34.06	86.12	39.70	43.09	85.80	52.20	0.00	0.00	0.00	0.00	0.00	0.00

6th Street PARC - Construction Emissions Only - Los Angeles-South Coast County, Winter

EMFAC Off-Model Adjustment Factors for Gasoline Light Duty Vehicle to Account for the SAFE Vehicle Rule Applied

2.2 Overall Operational

Unmitigated Operational

	ROG	NOx	CO	SO2	Fugitive PM10	Exhaust PM10	PM10 Total	Fugitive PM2.5	Exhaust PM2.5	PM2.5 Total	Bio- CO2	NBio- CO2	Total CO2	CH4	N2O	CO2e
Category	lb/day										lb/day					
Area	0.1037	9.0000e-005	0.0104	0.0000		4.0000e-005	4.0000e-005		4.0000e-005	4.0000e-005						0.0238
Energy	5.8300e-003	0.0530	0.0445	3.2000e-004		4.0200e-003	4.0200e-003		4.0200e-003	4.0200e-003						63.9235
Mobile	0.0000	0.0000	0.0000	0.0000	0.0000	0.0000	0.0000	0.0000	0.0000	0.0000						0.0000
Total	**0.1095**	**0.0530**	**0.0549**	**3.2000e-004**	**0.0000**	**4.0600e-003**	**4.0600e-003**	**0.0000**	**4.0600e-003**	**4.0600e-003**						**63.9472**

Mitigated Operational

	ROG	NOx	CO	SO2	Fugitive PM10	Exhaust PM10	PM10 Total	Fugitive PM2.5	Exhaust PM2.5	PM2.5 Total	Bio- CO2	NBio- CO2	Total CO2	CH4	N2O	CO2e
Category	lb/day										lb/day					
Area	0.1037	9.0000e-005	0.0104	0.0000		4.0000e-005	4.0000e-005		4.0000e-005	4.0000e-005						0.0238
Energy	5.8300e-003	0.0530	0.0445	3.2000e-004		4.0200e-003	4.0200e-003		4.0200e-003	4.0200e-003						63.9235
Mobile	0.0000	0.0000	0.0000	0.0000	0.0000	0.0000	0.0000	0.0000	0.0000	0.0000						0.0000
Total	**0.1095**	**0.0530**	**0.0549**	**3.2000e-004**	**0.0000**	**4.0600e-003**	**4.0600e-003**	**0.0000**	**4.0600e-003**	**4.0600e-003**						**63.9472**

6th Street PARC - Construction Emissions Only - Los Angeles-South Coast County, Winter

EMFAC Off-Model Adjustment Factors for Gasoline Light Duty Vehicle to Account for the SAFE Vehicle Rule Applied

	ROG	NOx	CO	SO2	Fugitive PM10	Exhaust PM10	PM10 Total	Fugitive PM2.5	Exhaust PM2.5	PM2.5 Total	Bio- CO2	NBio-CO2	Total CO2	CH4	N20	CO2e
Percent Reduction	0.00	0.00	0.00	0.00	0.00	0.00	0.00	0.00	0.00	0.00	0.00	0.00	0.00	0.00	0.00	0.00

3.0 Construction Detail

Construction Phase

Phase Number	Phase Name	Phase Type	Start Date	End Date	Num Days Week	Num Days	Phase Description
1	Demolition	Demolition	1/1/2022	2/25/2022	5	40	
2	Site Preparation - Export	Site Preparation	2/28/2022	9/23/2022	5	150	
3	Site Preparation - Import	Site Preparation	3/1/2022	4/11/2022	5	30	
4	Site Preparation - Grading	Grading	9/23/2022	10/5/2022	5	9	
5	Site Preparation - Excavation	Site Preparation	10/5/2022	11/18/2022	5	33	
6	Park & Infrastructure - Construction	Site Preparation	11/18/2022	2/9/2023	5	60	
7	Park & Infrastructure - Concrete	Building Construction	2/10/2023	3/23/2023	5	30	
8	Paving - Asphalt	Paving	3/23/2023	5/3/2023	5	30	
9	Paving - Concrete	Paving	5/3/2023	10/17/2023	5	120	
10	Paving - DG	Paving	10/17/2023	1/8/2024	5	60	
11	Paving - Earthwork	Paving	1/8/2024	1/10/2024	5	3	
12	Utilities	Trenching	1/10/2024	3/12/2024	5	45	
13	Structures - Construction	Building Construction	3/13/2024	6/4/2024	5	60	
14	Structures - Concrete	Building Construction	6/5/2024	11/19/2024	5	120	

Acres of Grading (Site Preparation Phase): 75

Acres of Grading (Grading Phase): 31.5

Acres of Paving: 0.78

Residential Indoor: 0; Residential Outdoor: 0; Non-Residential Indoor: 0; Non-Residential Outdoor: 0; Striped Parking Area: 0 (Architectural Coating – sqft)

6th Street PARC - Construction Emissions Only - Los Angeles-South Coast County, Winter

EMFAC Off-Model Adjustment Factors for Gasoline Light Duty Vehicle to Account for the SAFE Vehicle Rule Applied

OffRoad Equipment

Phase Name	Offroad Equipment Type	Amount	Usage Hours	Horse Power	Load Factor
Demolition	Bore/Drill Rigs	1	4.00	81	0.73
Demolition	Concrete/Industrial Saws	1	4.00	81	0.38
Demolition	Excavators	3	8.00	158	0.38
Demolition	Off-Highway Trucks	1	6.00	400	0.38
Demolition	Other Construction Equipment	1	8.00	85	0.42
Demolition	Rubber Tired Dozers	1	8.00	255	0.40
Demolition	Tractors/Loaders/Backhoes	2	8.00	97	0.37
Site Preparation - Export	Dumpers/Tenders	8	6.00	400	0.40
Site Preparation - Export	Rubber Tired Dozers	1	8.00	247	0.40
Site Preparation - Export	Tractors/Loaders/Backhoes	8	2.00	97	0.37
Site Preparation - Import	Dumpers/Tenders	8	6.00	400	0.48
Site Preparation - Import	Rubber Tired Dozers	1	8.00	247	0.40
Site Preparation - Import	Tractors/Loaders/Backhoes	8	8.00	97	0.37
Site Preparation - Grading	Excavators	0	8.00	158	0.38
Site Preparation - Grading	Graders	2	8.00	174	0.41
Site Preparation - Grading	Rollers	2	8.00	80	0.40
Site Preparation - Grading	Rubber Tired Dozers	0	8.00	247	0.40
Site Preparation - Grading	Scrapers	0	8.00	367	0.48
Site Preparation - Grading	Tractors/Loaders/Backhoes	0	8.00	97	0.37
Site Preparation - Excavation	Rubber Tired Dozers	0	8.00	247	0.40
Site Preparation - Excavation	Tractors/Loaders/Backhoes	8	8.00	97	0.37
Park & Infrastructure - Construction	Off-Highway Trucks	2	6.00	400	0.48
Park & Infrastructure - Construction	Rollers	1	8.00	80	0.37
Park & Infrastructure - Construction	Rubber Tired Dozers	0	8.00	247	0.40
Park & Infrastructure - Construction	Tractors/Loaders/Backhoes	3	8.00	97	0.40
Park & Infrastructure - Concrete	Cement and Mortar Mixers	1	8.00	300	0.20

6th Street PARC - Construction Emissions Only - Los Angeles-South Coast County, Winter

EMFAC Off-Model Adjustment Factors for Gasoline Light Duty Vehicle to Account for the SAFE Vehicle Rule Applied

Park & Infrastructure - Concrete	Cranes	1	8.00	226	0.29
Park & Infrastructure - Concrete	Forklifts	0	8.00	89	0.20
Park & Infrastructure - Concrete	Generator Sets	0	8.00	84	0.74
Park & Infrastructure - Concrete	Pumps	1	8.00	84	0.45
Park & Infrastructure - Concrete	Tractors/Loaders/Backhoes	0	7.00	97	0.37
Park & Infrastructure - Concrete	Welders	0	8.00	46	0.45
Paving - Asphalt	Off-Highway Trucks	1	6.00	400	0.42
Paving - Asphalt	Pavers	1	8.00	125	0.36
Paving - Asphalt	Paving Equipment	0	8.00	132	0.36
Paving - Asphalt	Rollers	1	8.00	80	0.38
Paving - Concrete	Cement and Mortar Mixers	1	8.00	300	0.42
Paving - Concrete	Pavers	0	8.00	130	0.42
Paving - Concrete	Paving Equipment	0	8.00	132	0.36
Paving - Concrete	Rollers	0	8.00	80	0.38
Paving - DG	Off-Highway Trucks	1	6.00	400	0.42
Paving - DG	Pavers	0	8.00	130	0.42
Paving - DG	Paving Equipment	0	8.00	132	0.36
Paving - DG	Rollers	0	8.00	80	0.38
Paving - DG	Tractors/Loaders/Backhoes	1	8.00	97	0.38
Paving - Earthwork	Graders	1	8.00	174	0.42
Paving - Earthwork	Pavers	0	8.00	130	0.42
Paving - Earthwork	Paving Equipment	0	8.00	132	0.36
Paving - Earthwork	Rollers	1	8.00	80	0.38
Utilities	Rollers	2	8.00	80	0.38
Utilities	Tractors/Loaders/Backhoes	2	8.00	97	0.37
Utilities	Trenchers	2	8.00	80	0.50
Structures - Construction	Bore/Drill Rigs	1	8.00	205	0.29
Structures - Construction	Cranes	1	8.00	226	0.20
Structures - Construction	Excavators	2	8.00	162	0.74

EMFAC Off-Model Adjustment Factors for Gasoline Light Duty Vehicle to Account for the SAFE Vehicle Rule Applied

Structures - Construction	Forklifts	0	8.00	89	0.20
Structures - Construction	Generator Sets	0	8.00	84	0.74
Structures - Construction	Rollers	1	8.00	80	0.37
Structures - Construction	Tractors/Loaders/Backhoes	0	7.00	97	0.37
Structures - Construction	Welders	0	8.00	46	0.45
Structures - Concrete	Cement and Mortar Mixers	1	8.00	300	0.29
Structures - Concrete	Cranes	0	7.00	231	0.29
Structures - Concrete	Forklifts	0	8.00	89	0.20
Structures - Concrete	Generator Sets	0	8.00	84	0.74
Structures - Concrete	Pumps	1	8.00	84	0.20
Structures - Concrete	Tractors/Loaders/Backhoes	0	7.00	97	0.37
Structures - Concrete	Welders	0	8.00	46	0.45

Trips and VMT

Phase Name	Offroad Equipment Count	Worker Trip Number	Vendor Trip Number	Hauling Trip Number	Worker Trip Length	Vendor Trip Length	Hauling Trip Length	Worker Vehicle Class	Vendor Vehicle Class	Hauling Vehicle Class
Demolition	10	25.00	8.00	0.00	14.70	6.90	20.00	LD_Mix	HDT_Mix	HHDT
Site Preparation - Export	17	43.00	8.00	2,088.00	14.70	6.90	210.00	LD_Mix	HDT_Mix	HHDT
Site Preparation - Import	17	43.00	8.00	2,088.00	14.70	6.90	20.00	LD_Mix	HDT_Mix	HHDT
Site Preparation - Grading	4	10.00	8.00	0.00	14.70	6.90	20.00	LD_Mix	HDT_Mix	HHDT
Site Preparation - Excavation	8	20.00	8.00	0.00	14.70	6.90	20.00	LD_Mix	HDT_Mix	HHDT
Park & Infrastructure - Construction	6	15.00	8.00	0.00	14.70	6.90	20.00	LD_Mix	HDT_Mix	HHDT
Park & Infrastructure - Concrete	3	239.00	8.00	0.00	14.70	6.90	20.00	LD_Mix	HDT_Mix	HHDT
Paving - Asphalt	3	8.00	8.00	0.00	14.70	6.90	20.00	LD_Mix	HDT_Mix	HHDT
Paving - Concrete	1	3.00	8.00	0.00	14.70	6.90	20.00	LD_Mix	HDT_Mix	HHDT
Paving - DG	2	5.00	8.00	0.00	14.70	6.90	20.00	LD_Mix	HDT_Mix	HHDT
Paving - Earthwork	2	5.00	8.00	0.00	14.70	6.90	20.00	LD_Mix	HDT_Mix	HHDT
Utilities	6	15.00	8.00	0.00	14.70	6.90	20.00	LD_Mix	HDT_Mix	HHDT

EMFAC Off-Model Adjustment Factors for Gasoline Light Duty Vehicle to Account for the SAFE Vehicle Rule Applied

Structures - Construction	5	239.00	8.00	0.00	14.70	6.90	20.00	LD_Mix	HDT_Mix	HHDT
Structures - Concrete	2	239.00	8.00	0.00	14.70	6.90	20.00	LD_Mix	HDT_Mix	HHDT

3.1 Mitigation Measures Construction

Use Cleaner Engines for Construction Equipment

Use DPF for Construction Equipment

Use Soil Stabilizer

Water Exposed Area

Reduce Vehicle Speed on Unpaved Roads

3.2 Demolition - 2022

Unmitigated Construction On-Site

	ROG	NOx	CO	SO2	Fugitive PM10	Exhaust PM10	PM10 Total	Fugitive PM2.5	Exhaust PM2.5	PM2.5 Total	Bio- CO2	NBio- CO2	Total CO2	CH4	N2O	CO2e
Category	lb/day										lb/day					
Off-Road	2.6549	24.9004	28.7166	0.0477		1.2190	1.2190		1.1246	1.1246						4,648.1988
Total	**2.6549**	**24.9004**	**28.7166**	**0.0477**		**1.2190**	**1.2190**		**1.1246**	**1.1246**						**4,648.1988**

6th Street PARC - Construction Emissions Only - Los Angeles-South Coast County, Winter

EMFAC Off-Model Adjustment Factors for Gasoline Light Duty Vehicle to Account for the SAFE Vehicle Rule Applied

3.2 Demolition - 2022

Unmitigated Construction Off-Site

	ROG	NOx	CO	SO2	Fugitive PM10	Exhaust PM10	PM10 Total	Fugitive PM2.5	Exhaust PM2.5	PM2.5 Total	Bio- CO2	NBio- CO2	Total CO2	CH4	N2O	CO2e
Category	lb/day										lb/day					
Hauling	0.0000	0.0000	0.0000	0.0000	0.0000	0.0000	0.0000	0.0000	0.0000	0.0000						0.0000
Vendor	0.0156	0.4080	0.1390	1.5700e-003	0.0512	3.7500e-003	0.0550	0.0148	3.5800e-003	0.0183						175.8122
Worker	0.0926	0.0698	0.9047	2.4200e-003	0.2794	1.7900e-003	0.2812	0.0741	1.6500e-003	0.0758						248.4534
Total	**0.1082**	**0.4778**	**1.0437**	**3.9900e-003**	**0.3307**	**5.5400e-003**	**0.3362**	**0.0889**	**5.2300e-003**	**0.0941**						**424.2656**

Mitigated Construction On-Site

	ROG	NOx	CO	SO2	Fugitive PM10	Exhaust PM10	PM10 Total	Fugitive PM2.5	Exhaust PM2.5	PM2.5 Total	Bio- CO2	NBio- CO2	Total CO2	CH4	N2O	CO2e
Category	lb/day										lb/day					
Off-Road	0.8305	5.2184	28.8894	0.0477		0.1640	0.1640		0.1516	0.1516						4,648.1988
Total	**0.8305**	**5.2184**	**28.8894**	**0.0477**		**0.1640**	**0.1640**		**0.1516**	**0.1516**						**4,648.1988**

EMFAC Off-Model Adjustment Factors for Gasoline Light Duty Vehicle to Account for the SAFE Vehicle Rule Applied

3.2 Demolition - 2022

Mitigated Construction Off-Site

	ROG	NOx	CO	SO2	Fugitive PM10	Exhaust PM10	PM10 Total	Fugitive PM2.5	Exhaust PM2.5	PM2.5 Total	Bio- CO2	NBio- CO2	Total CO2	CH4	N2O	CO2e
Category	lb/day										lb/day					
Hauling	0.0000	0.0000	0.0000	0.0000	0.0000	0.0000	0.0000	0.0000	0.0000	0.0000						0.0000
Vendor	0.0156	0.4080	0.1390	1.5700e-003	0.0512	3.7500e-003	0.0550	0.0148	3.5800e-003	0.0183						175.8122
Worker	0.0926	0.0698	0.9047	2.4200e-003	0.2794	1.7900e-003	0.2812	0.0741	1.6500e-003	0.0758						248.4534
Total	**0.1082**	**0.4778**	**1.0437**	**3.9900e-003**	**0.3307**	**5.5400e-003**	**0.3362**	**0.0889**	**5.2300e-003**	**0.0941**						**424.2656**

3.3 Site Preparation - Export - 2022

Unmitigated Construction On-Site

	ROG	NOx	CO	SO2	Fugitive PM10	Exhaust PM10	PM10 Total	Fugitive PM2.5	Exhaust PM2.5	PM2.5 Total	Bio- CO2	NBio- CO2	Total CO2	CH4	N2O	CO2e
Category	lb/day										lb/day					
Fugitive Dust					6.5649	0.0000	6.5649	3.3694	0.0000	3.3694						0.0000
Off-Road	1.1665	12.1449	8.0579	0.0148		0.5976	0.5976		0.5498	0.5498						1,441.0716
Total	**1.1665**	**12.1449**	**8.0579**	**0.0148**	**6.5649**	**0.5976**	**7.1625**	**3.3694**	**0.5498**	**3.9192**						**1,441.0716**

6th Street PARC - Construction Emissions Only - Los Angeles-South Coast County, Winter

EMFAC Off-Model Adjustment Factors for Gasoline Light Duty Vehicle to Account for the SAFE Vehicle Rule Applied

3.3 Site Preparation - Export - 2022

Unmitigated Construction Off-Site

	ROG	NOx	CO	SO2	Fugitive PM10	Exhaust PM10	PM10 Total	Fugitive PM2.5	Exhaust PM2.5	PM2.5 Total	Bio- CO2	NBio- CO2	Total CO2	CH4	N2O	CO2e
Category	lb/day										lb/day					
Hauling	0.5365	22.9019	3.9063	0.0872	2.5555	0.1806	2.7361	0.7004	0.1728	0.8732						10,027.6968
Vendor	0.0156	0.4080	0.1390	1.5700e-003	0.0512	3.7500e-003	0.0550	0.0148	3.5800e-003	0.0183						175.8122
Worker	0.1593	0.1201	1.5561	4.1600e-003	0.4806	3.0800e-003	0.4837	0.1275	2.8400e-003	0.1303						427.3398
Total	**0.7114**	**23.4300**	**5.6014**	**0.0930**	**3.0874**	**0.1874**	**3.2748**	**0.8426**	**0.1792**	**1.0218**						**10,630.8488**

Mitigated Construction On-Site

	ROG	NOx	CO	SO2	Fugitive PM10	Exhaust PM10	PM10 Total	Fugitive PM2.5	Exhaust PM2.5	PM2.5 Total	Bio- CO2	NBio- CO2	Total CO2	CH4	N2O	CO2e
Category	lb/day										lb/day					
Fugitive Dust					2.5603	0.0000	2.5603	1.3141	0.0000	1.3141						0.0000
Off-Road	0.1805	0.7822	8.5177	0.0148		3.6100e-003	3.6100e-003		3.6100e-003	3.6100e-003						1,441.0716
Total	**0.1805**	**0.7822**	**8.5177**	**0.0148**	**2.5603**	**3.6100e-003**	**2.5639**	**1.3141**	**3.6100e-003**	**1.3177**						**1,441.0716**

EMFAC Off-Model Adjustment Factors for Gasoline Light Duty Vehicle to Account for the SAFE Vehicle Rule Applied

3.3 Site Preparation - Export - 2022

Mitigated Construction Off-Site

	ROG	NOx	CO	SO2	Fugitive PM10	Exhaust PM10	PM10 Total	Fugitive PM2.5	Exhaust PM2.5	PM2.5 Total	Bio- CO2	NBio- CO2	Total CO2	CH4	N2O	CO2e
Category	lb/day										lb/day					
Hauling	0.5365	22.9019	3.9063	0.0872	2.5555	0.1806	2.7361	0.7004	0.1728	0.8732						10,027.6968
Vendor	0.0156	0.4080	0.1390	1.5700e-003	0.0512	3.7500e-003	0.0550	0.0148	3.5800e-003	0.0183						175.8122
Worker	0.1593	0.1201	1.5561	4.1600e-003	0.4806	3.0800e-003	0.4837	0.1275	2.8400e-003	0.1303						427.3398
Total	**0.7114**	**23.4300**	**5.6014**	**0.0930**	**3.0874**	**0.1874**	**3.2748**	**0.8426**	**0.1792**	**1.0218**						**10,630.8488**

3.4 Site Preparation - Import - 2022

Unmitigated Construction On-Site

	ROG	NOx	CO	SO2	Fugitive PM10	Exhaust PM10	PM10 Total	Fugitive PM2.5	Exhaust PM2.5	PM2.5 Total	Bio- CO2	NBio- CO2	Total CO2	CH4	N2O	CO2e
Category	lb/day										lb/day					
Fugitive Dust					6.6153	0.0000	6.6153	3.3770	0.0000	3.3770						0.0000
Off-Road	2.1548	22.1988	21.4856	0.0334		1.1383	1.1383		1.0473	1.0473						3,263.1193
Total	**2.1548**	**22.1988**	**21.4856**	**0.0334**	**6.6153**	**1.1383**	**7.7536**	**3.3770**	**1.0473**	**4.4243**						**3,263.1193**

EMFAC Off-Model Adjustment Factors for Gasoline Light Duty Vehicle to Account for the SAFE Vehicle Rule Applied

3.4 Site Preparation - Import - 2022

Unmitigated Construction Off-Site

	ROG	NOx	CO	SO2	Fugitive PM10	Exhaust PM10	PM10 Total	Fugitive PM2.5	Exhaust PM2.5	PM2.5 Total	Bio- CO2	NBio- CO2	Total CO2	CH4	N2O	CO2e
Category	lb/day										lb/day					
Hauling	0.3165	12.1636	2.7735	0.0433	1.2183	0.0870	1.3053	0.3340	0.0833	0.4173						4,969.9707
Vendor	0.0156	0.4080	0.1390	1.5700e-003	0.0512	3.7500e-003	0.0550	0.0148	3.5800e-003	0.0183						175.8122
Worker	0.1593	0.1201	1.5561	4.1600e-003	0.4806	3.0800e-003	0.4837	0.1275	2.8400e-003	0.1303						427.3398
Total	**0.4913**	**12.6917**	**4.4685**	**0.0490**	**1.7501**	**0.0939**	**1.8440**	**0.4762**	**0.0897**	**0.5659**						**5,573.1227**

Mitigated Construction On-Site

	ROG	NOx	CO	SO2	Fugitive PM10	Exhaust PM10	PM10 Total	Fugitive PM2.5	Exhaust PM2.5	PM2.5 Total	Bio- CO2	NBio- CO2	Total CO2	CH4	N2O	CO2e
Category	lb/day										lb/day					
Fugitive Dust					2.5800	0.0000	2.5800	1.3170	0.0000	1.3170						0.0000
Off-Road	0.4084	1.7697	22.5701	0.0334		8.1700e-003	8.1700e-003		8.1700e-003	8.1700e-003						3,263.1193
Total	**0.4084**	**1.7697**	**22.5701**	**0.0334**	**2.5800**	**8.1700e-003**	**2.5881**	**1.3170**	**8.1700e-003**	**1.3252**						**3,263.1193**

EMFAC Off-Model Adjustment Factors for Gasoline Light Duty Vehicle to Account for the SAFE Vehicle Rule Applied

3.4 Site Preparation - Import - 2022

Mitigated Construction Off-Site

	ROG	NOx	CO	SO2	Fugitive PM10	Exhaust PM10	PM10 Total	Fugitive PM2.5	Exhaust PM2.5	PM2.5 Total	Bio- CO2	NBio- CO2	Total CO2	CH4	N2O	CO2e
Category	lb/day										lb/day					
Hauling	0.3165	12.1636	2.7735	0.0433	1.2183	0.0870	1.3053	0.3340	0.0833	0.4173						4,969.9707
Vendor	0.0156	0.4080	0.1390	1.5700e-003	0.0512	3.7500e-003	0.0550	0.0148	3.5800e-003	0.0183						175.8122
Worker	0.1593	0.1201	1.5561	4.1600e-003	0.4806	3.0800e-003	0.4837	0.1275	2.8400e-003	0.1303						427.3398
Total	**0.4913**	**12.6917**	**4.4685**	**0.0490**	**1.7501**	**0.0939**	**1.8440**	**0.4762**	**0.0897**	**0.5659**						**5,573.1227**

3.5 Site Preparation - Grading - 2022

Unmitigated Construction On-Site

	ROG	NOx	CO	SO2	Fugitive PM10	Exhaust PM10	PM10 Total	Fugitive PM2.5	Exhaust PM2.5	PM2.5 Total	Bio- CO2	NBio- CO2	Total CO2	CH4	N2O	CO2e
Category	lb/day										lb/day					
Fugitive Dust					3.7118	0.0000	3.7118	0.4008	0.0000	0.4008						0.0000
Off-Road	1.4581	14.0135	12.7060	0.0180		0.7864	0.7864		0.7235	0.7235						1,753.3038
Total	**1.4581**	**14.0135**	**12.7060**	**0.0180**	**3.7118**	**0.7864**	**4.4981**	**0.4008**	**0.7235**	**1.1242**						**1,753.3038**

6th Street PARC - Construction Emissions Only - Los Angeles-South Coast County, Winter

EMFAC Off-Model Adjustment Factors for Gasoline Light Duty Vehicle to Account for the SAFE Vehicle Rule Applied

3.5 Site Preparation - Grading - 2022

Unmitigated Construction Off-Site

	ROG	NOx	CO	SO2	Fugitive PM10	Exhaust PM10	PM10 Total	Fugitive PM2.5	Exhaust PM2.5	PM2.5 Total	Bio- CO2	NBio- CO2	Total CO2	CH4	N2O	CO2e
Category	lb/day										lb/day					
Hauling	0.0000	0.0000	0.0000	0.0000	0.0000	0.0000	0.0000	0.0000	0.0000	0.0000						0.0000
Vendor	0.0156	0.4080	0.1390	1.5700e-003	0.0512	3.7500e-003	0.0550	0.0148	3.5800e-003	0.0183						175.8122
Worker	0.0371	0.0279	0.3619	9.7000e-004	0.1118	7.2000e-004	0.1125	0.0296	6.6000e-004	0.0303						99.3813
Total	**0.0526**	**0.4360**	**0.5009**	**2.5400e-003**	**0.1630**	**4.4700e-003**	**0.1675**	**0.0444**	**4.2400e-003**	**0.0486**						**275.1936**

Mitigated Construction On-Site

	ROG	NOx	CO	SO2	Fugitive PM10	Exhaust PM10	PM10 Total	Fugitive PM2.5	Exhaust PM2.5	PM2.5 Total	Bio- CO2	NBio- CO2	Total CO2	CH4	N2O	CO2e
Category	lb/day										lb/day					
Fugitive Dust					1.4476	0.0000	1.4476	0.1563	0.0000	0.1563						0.0000
Off-Road	0.2187	0.9478	13.4873	0.0180		4.3700e-003	4.3700e-003		4.3700e-003	4.3700e-003						1,753.3038
Total	**0.2187**	**0.9478**	**13.4873**	**0.0180**	**1.4476**	**4.3700e-003**	**1.4520**	**0.1563**	**4.3700e-003**	**0.1607**						**1,753.3038**

EMFAC Off-Model Adjustment Factors for Gasoline Light Duty Vehicle to Account for the SAFE Vehicle Rule Applied

3.5 Site Preparation - Grading - 2022

Mitigated Construction Off-Site

	ROG	NOx	CO	SO2	Fugitive PM10	Exhaust PM10	PM10 Total	Fugitive PM2.5	Exhaust PM2.5	PM2.5 Total	Bio- CO2	NBio- CO2	Total CO2	CH4	N2O	CO2e
Category	lb/day										lb/day					
Hauling	0.0000	0.0000	0.0000	0.0000	0.0000	0.0000	0.0000	0.0000	0.0000	0.0000						0.0000
Vendor	0.0156	0.4080	0.1390	1.5700e-003	0.0512	3.7500e-003	0.0550	0.0148	3.5800e-003	0.0183						175.8122
Worker	0.0371	0.0279	0.3619	9.7000e-004	0.1118	7.2000e-004	0.1125	0.0296	6.6000e-004	0.0303						99.3813
Total	**0.0526**	**0.4360**	**0.5009**	**2.5400e-003**	**0.1630**	**4.4700e-003**	**0.1675**	**0.0444**	**4.2400e-003**	**0.0486**						**275.1936**

3.6 Site Preparation - Excavation - 2022

Unmitigated Construction On-Site

	ROG	NOx	CO	SO2	Fugitive PM10	Exhaust PM10	PM10 Total	Fugitive PM2.5	Exhaust PM2.5	PM2.5 Total	Bio- CO2	NBio- CO2	Total CO2	CH4	N2O	CO2e
Category	lb/day										lb/day					
Fugitive Dust					1.5908	0.0000	1.5908	0.1718	0.0000	0.1718						0.0000
Off-Road	1.3177	13.4051	17.9036	0.0249		0.7210	0.7210		0.6633	0.6633						2,429.3969
Total	**1.3177**	**13.4051**	**17.9036**	**0.0249**	**1.5908**	**0.7210**	**2.3117**	**0.1718**	**0.6633**	**0.8350**						**2,429.3969**

6th Street PARC - Construction Emissions Only - Los Angeles-South Coast County, Winter

EMFAC Off-Model Adjustment Factors for Gasoline Light Duty Vehicle to Account for the SAFE Vehicle Rule Applied

3.6 Site Preparation - Excavation - 2022

Unmitigated Construction Off-Site

	ROG	NOx	CO	SO2	Fugitive PM10	Exhaust PM10	PM10 Total	Fugitive PM2.5	Exhaust PM2.5	PM2.5 Total	Bio- CO2	NBio- CO2	Total CO2	CH4	N2O	CO2e
Category	lb/day										lb/day					
Hauling	0.0000	0.0000	0.0000	0.0000	0.0000	0.0000	0.0000	0.0000	0.0000	0.0000						0.0000
Vendor	0.0156	0.4080	0.1390	1.5700e-003	0.0512	3.7500e-003	0.0550	0.0148	3.5800e-003	0.0183						175.8122
Worker	0.0741	0.0558	0.7237	1.9400e-003	0.2236	1.4300e-003	0.2250	0.0593	1.3200e-003	0.0606						198.7627
Total	**0.0897**	**0.4639**	**0.8627**	**3.5100e-003**	**0.2748**	**5.1800e-003**	**0.2800**	**0.0740**	**4.9000e-003**	**0.0790**						**374.5749**

Mitigated Construction On-Site

	ROG	NOx	CO	SO2	Fugitive PM10	Exhaust PM10	PM10 Total	Fugitive PM2.5	Exhaust PM2.5	PM2.5 Total	Bio- CO2	NBio- CO2	Total CO2	CH4	N2O	CO2e
Category	lb/day										lb/day					
Fugitive Dust					0.6204	0.0000	0.6204	0.0670	0.0000	0.0670						0.0000
Off-Road	0.3038	1.3166	18.7365	0.0249		6.0800e-003	6.0800e-003		6.0800e-003	6.0800e-003						2,429.3969
Total	**0.3038**	**1.3166**	**18.7365**	**0.0249**	**0.6204**	**6.0800e-003**	**0.6265**	**0.0670**	**6.0800e-003**	**0.0731**						**2,429.3969**

EMFAC Off-Model Adjustment Factors for Gasoline Light Duty Vehicle to Account for the SAFE Vehicle Rule Applied

3.6 Site Preparation - Excavation - 2022

Mitigated Construction Off-Site

	ROG	NOx	CO	SO2	Fugitive PM10	Exhaust PM10	PM10 Total	Fugitive PM2.5	Exhaust PM2.5	PM2.5 Total	Bio- CO2	NBio- CO2	Total CO2	CH4	N2O	CO2e
Category	lb/day										lb/day					
Hauling	0.0000	0.0000	0.0000	0.0000	0.0000	0.0000	0.0000	0.0000	0.0000	0.0000						0.0000
Vendor	0.0156	0.4080	0.1390	1.5700e-003	0.0512	3.7500e-003	0.0550	0.0148	3.5800e-003	0.0183						175.8122
Worker	0.0741	0.0558	0.7237	1.9400e-003	0.2236	1.4300e-003	0.2250	0.0593	1.3200e-003	0.0606						198.7627
Total	**0.0897**	**0.4639**	**0.8627**	**3.5100e-003**	**0.2748**	**5.1800e-003**	**0.2800**	**0.0740**	**4.9000e-003**	**0.0790**						**374.5749**

3.7 Park & Infrastructure - Construction - 2022

Unmitigated Construction On-Site

	ROG	NOx	CO	SO2	Fugitive PM10	Exhaust PM10	PM10 Total	Fugitive PM2.5	Exhaust PM2.5	PM2.5 Total	Bio- CO2	NBio- CO2	Total CO2	CH4	N2O	CO2e
Category	lb/day										lb/day					
Fugitive Dust					1.5908	0.0000	1.5908	0.1718	0.0000	0.1718						0.0000
Off-Road	1.6923	14.6821	15.4018	0.0376		0.6643	0.6643		0.6112	0.6112						3,665.0886
Total	**1.6923**	**14.6821**	**15.4018**	**0.0376**	**1.5908**	**0.6643**	**2.2550**	**0.1718**	**0.6112**	**0.7829**						**3,665.0886**

6th Street PARC - Construction Emissions Only - Los Angeles-South Coast County, Winter

EMFAC Off-Model Adjustment Factors for Gasoline Light Duty Vehicle to Account for the SAFE Vehicle Rule Applied

3.7 Park & Infrastructure - Construction - 2022

Unmitigated Construction Off-Site

	ROG	NOx	CO	SO2	Fugitive PM10	Exhaust PM10	PM10 Total	Fugitive PM2.5	Exhaust PM2.5	PM2.5 Total	Bio- CO2	NBio- CO2	Total CO2	CH4	N2O	CO2e
Category	lb/day										lb/day					
Hauling	0.0000	0.0000	0.0000	0.0000	0.0000	0.0000	0.0000	0.0000	0.0000	0.0000						0.0000
Vendor	0.0156	0.4080	0.1390	1.5700e-003	0.0512	3.7500e-003	0.0550	0.0148	3.5800e-003	0.0183						175.8122
Worker	0.0556	0.0419	0.5428	1.4500e-003	0.1677	1.0700e-003	0.1687	0.0445	9.9000e-004	0.0455						149.0720
Total	**0.0711**	**0.4499**	**0.6818**	**3.0200e-003**	**0.2189**	**4.8200e-003**	**0.2237**	**0.0592**	**4.5700e-003**	**0.0638**						**324.8843**

Mitigated Construction On-Site

	ROG	NOx	CO	SO2	Fugitive PM10	Exhaust PM10	PM10 Total	Fugitive PM2.5	Exhaust PM2.5	PM2.5 Total	Bio- CO2	NBio- CO2	Total CO2	CH4	N2O	CO2e
Category	lb/day										lb/day					
Fugitive Dust					0.6204	0.0000	0.6204	0.0670	0.0000	0.0670						0.0000
Off-Road	0.4593	1.9902	20.7023	0.0376		9.1900e-003	9.1900e-003		9.1900e-003	9.1900e-003						3,665.0886
Total	**0.4593**	**1.9902**	**20.7023**	**0.0376**	**0.6204**	**9.1900e-003**	**0.6296**	**0.0670**	**9.1900e-003**	**0.0762**						**3,665.0886**

6th Street PARC - Construction Emissions Only - Los Angeles-South Coast County, Winter

EMFAC Off-Model Adjustment Factors for Gasoline Light Duty Vehicle to Account for the SAFE Vehicle Rule Applied

3.7 Park & Infrastructure - Construction - 2022

Mitigated Construction Off-Site

	ROG	NOx	CO	SO2	Fugitive PM10	Exhaust PM10	PM10 Total	Fugitive PM2.5	Exhaust PM2.5	PM2.5 Total	Bio- CO2	NBio- CO2	Total CO2	CH4	N2O	CO2e
Category	lb/day										lb/day					
Hauling	0.0000	0.0000	0.0000	0.0000	0.0000	0.0000	0.0000	0.0000	0.0000	0.0000						0.0000
Vendor	0.0156	0.4080	0.1390	1.5700e-003	0.0512	3.7500e-003	0.0550	0.0148	3.5800e-003	0.0183						175.8122
Worker	0.0556	0.0419	0.5428	1.4500e-003	0.1677	1.0700e-003	0.1687	0.0445	9.9000e-004	0.0455						149.0720
Total	**0.0711**	**0.4499**	**0.6818**	**3.0200e-003**	**0.2189**	**4.8200e-003**	**0.2237**	**0.0592**	**4.5700e-003**	**0.0638**						**324.8843**

3.7 Park & Infrastructure - Construction - 2023

Unmitigated Construction On-Site

	ROG	NOx	CO	SO2	Fugitive PM10	Exhaust PM10	PM10 Total	Fugitive PM2.5	Exhaust PM2.5	PM2.5 Total	Bio- CO2	NBio- CO2	Total CO2	CH4	N2O	CO2e
Category	lb/day										lb/day					
Fugitive Dust					1.5908	0.0000	1.5908	0.1718	0.0000	0.1718						0.0000
Off-Road	1.5905	13.2749	15.2400	0.0376		0.5754	0.5754		0.5293	0.5293						3,667.9126
Total	**1.5905**	**13.2749**	**15.2400**	**0.0376**	**1.5908**	**0.5754**	**2.1661**	**0.1718**	**0.5293**	**0.7011**						**3,667.9126**

6th Street PARC - Construction Emissions Only - Los Angeles-South Coast County, Winter

EMFAC Off-Model Adjustment Factors for Gasoline Light Duty Vehicle to Account for the SAFE Vehicle Rule Applied

3.7 Park & Infrastructure - Construction - 2023

Unmitigated Construction Off-Site

	ROG	NOx	CO	SO2	Fugitive PM10	Exhaust PM10	PM10 Total	Fugitive PM2.5	Exhaust PM2.5	PM2.5 Total	Bio- CO2	NBio- CO2	Total CO2	CH4	N2O	CO2e
Category	lb/day										lb/day					
Hauling	0.0000	0.0000	0.0000	0.0000	0.0000	0.0000	0.0000	0.0000	0.0000	0.0000						0.0000
Vendor	8.8900e-003	0.3215	0.1227	1.4900e-003	0.0512	1.5500e-003	0.0528	0.0148	1.4900e-003	0.0162						167.5129
Worker	0.0516	0.0370	0.4996	1.4100e-003	0.1677	1.0100e-003	0.1687	0.0445	9.3000e-004	0.0454						145.0818
Total	**0.0605**	**0.3585**	**0.6223**	**2.9000e-003**	**0.2189**	**2.5600e-003**	**0.2215**	**0.0592**	**2.4200e-003**	**0.0616**						**312.5947**

Mitigated Construction On-Site

	ROG	NOx	CO	SO2	Fugitive PM10	Exhaust PM10	PM10 Total	Fugitive PM2.5	Exhaust PM2.5	PM2.5 Total	Bio- CO2	NBio- CO2	Total CO2	CH4	N2O	CO2e
Category	lb/day										lb/day					
Fugitive Dust					0.6204	0.0000	0.6204	0.0670	0.0000	0.0670						0.0000
Off-Road	0.4593	1.9902	20.7023	0.0376		9.1900e-003	9.1900e-003		9.1900e-003	9.1900e-003						3,667.9126
Total	**0.4593**	**1.9902**	**20.7023**	**0.0376**	**0.6204**	**9.1900e-003**	**0.6296**	**0.0670**	**9.1900e-003**	**0.0762**						**3,667.9126**

EMFAC Off-Model Adjustment Factors for Gasoline Light Duty Vehicle to Account for the SAFE Vehicle Rule Applied

3.7 Park & Infrastructure - Construction - 2023

Mitigated Construction Off-Site

	ROG	NOx	CO	SO2	Fugitive PM10	Exhaust PM10	PM10 Total	Fugitive PM2.5	Exhaust PM2.5	PM2.5 Total	Bio- CO2	NBio- CO2	Total CO2	CH4	N2O	CO2e
Category	lb/day										lb/day					
Hauling	0.0000	0.0000	0.0000	0.0000	0.0000	0.0000	0.0000	0.0000	0.0000	0.0000						0.0000
Vendor	8.8900e-003	0.3215	0.1227	1.4900e-003	0.0512	1.5500e-003	0.0528	0.0148	1.4900e-003	0.0162						167.5129
Worker	0.0516	0.0370	0.4996	1.4100e-003	0.1677	1.0100e-003	0.1687	0.0445	9.3000e-004	0.0454						145.0818
Total	**0.0605**	**0.3585**	**0.6223**	**2.9000e-003**	**0.2189**	**2.5600e-003**	**0.2215**	**0.0592**	**2.4200e-003**	**0.0616**						**312.5947**

3.8 Park & Infrastructure - Concrete - 2023

Unmitigated Construction On-Site

	ROG	NOx	CO	SO2	Fugitive PM10	Exhaust PM10	PM10 Total	Fugitive PM2.5	Exhaust PM2.5	PM2.5 Total	Bio- CO2	NBio- CO2	Total CO2	CH4	N2O	CO2e
Category	lb/day										lb/day					
Off-Road	0.5431	5.4070	4.0601	9.6500e-003		0.2379	0.2379		0.2254	0.2254						930.4498
Total	**0.5431**	**5.4070**	**4.0601**	**9.6500e-003**		**0.2379**	**0.2379**		**0.2254**	**0.2254**						**930.4498**

EMFAC Off-Model Adjustment Factors for Gasoline Light Duty Vehicle to Account for the SAFE Vehicle Rule Applied

3.8 Park & Infrastructure - Concrete - 2023

Unmitigated Construction Off-Site

	ROG	NOx	CO	SO2	Fugitive PM10	Exhaust PM10	PM10 Total	Fugitive PM2.5	Exhaust PM2.5	PM2.5 Total	Bio- CO2	NBio- CO2	Total CO2	CH4	N2O	CO2e
Category	lb/day										lb/day					
Hauling	0.0000	0.0000	0.0000	0.0000	0.0000	0.0000	0.0000	0.0000	0.0000	0.0000						0.0000
Vendor	8.8900e-003	0.3215	0.1227	1.4900e-003	0.0512	1.5500e-003	0.0528	0.0148	1.4900e-003	0.0162						167.5129
Worker	0.8223	0.5894	7.9606	0.0224	2.6715	0.0161	2.6876	0.7085	0.0148	0.7233						2,311.6370
Total	**0.8312**	**0.9109**	**8.0833**	**0.0239**	**2.7227**	**0.0177**	**2.7404**	**0.7232**	**0.0163**	**0.7396**						**2,479.1499**

Mitigated Construction On-Site

	ROG	NOx	CO	SO2	Fugitive PM10	Exhaust PM10	PM10 Total	Fugitive PM2.5	Exhaust PM2.5	PM2.5 Total	Bio- CO2	NBio- CO2	Total CO2	CH4	N2O	CO2e
Category	lb/day										lb/day					
Off-Road	0.1094	0.4739	5.0098	9.6500e-003		2.1900e-003	2.1900e-003		2.1900e-003	2.1900e-003						930.4498
Total	**0.1094**	**0.4739**	**5.0098**	**9.6500e-003**		**2.1900e-003**	**2.1900e-003**		**2.1900e-003**	**2.1900e-003**						**930.4498**

EMFAC Off-Model Adjustment Factors for Gasoline Light Duty Vehicle to Account for the SAFE Vehicle Rule Applied

3.8 Park & Infrastructure - Concrete - 2023

Mitigated Construction Off-Site

	ROG	NOx	CO	SO2	Fugitive PM10	Exhaust PM10	PM10 Total	Fugitive PM2.5	Exhaust PM2.5	PM2.5 Total	Bio- CO2	NBio- CO2	Total CO2	CH4	N2O	CO2e
Category	lb/day										lb/day					
Hauling	0.0000	0.0000	0.0000	0.0000	0.0000	0.0000	0.0000	0.0000	0.0000	0.0000						0.0000
Vendor	8.8900e-003	0.3215	0.1227	1.4900e-003	0.0512	1.5500e-003	0.0528	0.0148	1.4900e-003	0.0162						167.5129
Worker	0.8223	0.5894	7.9606	0.0224	2.6715	0.0161	2.6876	0.7085	0.0148	0.7233						2,311.6370
Total	**0.8312**	**0.9109**	**8.0833**	**0.0239**	**2.7227**	**0.0177**	**2.7404**	**0.7232**	**0.0163**	**0.7396**						**2,479.1499**

3.9 Paving - Asphalt - 2023

Unmitigated Construction On-Site

	ROG	NOx	CO	SO2	Fugitive PM10	Exhaust PM10	PM10 Total	Fugitive PM2.5	Exhaust PM2.5	PM2.5 Total	Bio- CO2	NBio- CO2	Total CO2	CH4	N2O	CO2e
Category	lb/day										lb/day					
Off-Road	0.7275	6.1048	6.9409	0.0174		0.2680	0.2680		0.2466	0.2466						1,698.5924
Paving	0.0681					0.0000	0.0000		0.0000	0.0000						0.0000
Total	**0.7956**	**6.1048**	**6.9409**	**0.0174**		**0.2680**	**0.2680**		**0.2466**	**0.2466**						**1,698.5924**

6th Street PARC - Construction Emissions Only - Los Angeles-South Coast County, Winter

EMFAC Off-Model Adjustment Factors for Gasoline Light Duty Vehicle to Account for the SAFE Vehicle Rule Applied

3.9 Paving - Asphalt - 2023

Unmitigated Construction Off-Site

	ROG	NOx	CO	SO2	Fugitive PM10	Exhaust PM10	PM10 Total	Fugitive PM2.5	Exhaust PM2.5	PM2.5 Total	Bio- CO2	NBio- CO2	Total CO2	CH4	N2O	CO2e
Category	lb/day										lb/day					
Hauling	0.0000	0.0000	0.0000	0.0000	0.0000	0.0000	0.0000	0.0000	0.0000	0.0000						0.0000
Vendor	8.8900e-003	0.3215	0.1227	1.4900e-003	0.0512	1.5500e-003	0.0528	0.0148	1.4900e-003	0.0162						167.5129
Worker	0.0275	0.0197	0.2665	7.5000e-004	0.0894	5.4000e-004	0.0900	0.0237	5.0000e-004	0.0242						77.3770
Total	**0.0364**	**0.3412**	**0.3892**	**2.2400e-003**	**0.1407**	**2.0900e-003**	**0.1428**	**0.0385**	**1.9900e-003**	**0.0405**						**244.8899**

Mitigated Construction On-Site

	ROG	NOx	CO	SO2	Fugitive PM10	Exhaust PM10	PM10 Total	Fugitive PM2.5	Exhaust PM2.5	PM2.5 Total	Bio- CO2	NBio- CO2	Total CO2	CH4	N2O	CO2e
Category	lb/day										lb/day					
Off-Road	0.2131	0.9235	9.8093	0.0174		4.2600e-003	4.2600e-003		4.2600e-003	4.2600e-003						1,698.5924
Paving	0.0681					0.0000	0.0000		0.0000	0.0000						0.0000
Total	**0.2813**	**0.9235**	**9.8093**	**0.0174**		**4.2600e-003**	**4.2600e-003**		**4.2600e-003**	**4.2600e-003**						**1,698.5924**

EMFAC Off-Model Adjustment Factors for Gasoline Light Duty Vehicle to Account for the SAFE Vehicle Rule Applied

3.9 Paving - Asphalt - 2023

Mitigated Construction Off-Site

	ROG	NOx	CO	SO2	Fugitive PM10	Exhaust PM10	PM10 Total	Fugitive PM2.5	Exhaust PM2.5	PM2.5 Total	Bio- CO2	NBio- CO2	Total CO2	CH4	N2O	CO2e
Category	lb/day										lb/day					
Hauling	0.0000	0.0000	0.0000	0.0000	0.0000	0.0000	0.0000	0.0000	0.0000	0.0000						0.0000
Vendor	8.8900e-003	0.3215	0.1227	1.4900e-003	0.0512	1.5500e-003	0.0528	0.0148	1.4900e-003	0.0162						167.5129
Worker	0.0275	0.0197	0.2665	7.5000e-004	0.0894	5.4000e-004	0.0900	0.0237	5.0000e-004	0.0242						77.3770
Total	**0.0364**	**0.3412**	**0.3892**	**2.2400e-003**	**0.1407**	**2.0900e-003**	**0.1428**	**0.0385**	**1.9900e-003**	**0.0405**						**244.8899**

3.10 Paving - Concrete - 2023

Unmitigated Construction On-Site

	ROG	NOx	CO	SO2	Fugitive PM10	Exhaust PM10	PM10 Total	Fugitive PM2.5	Exhaust PM2.5	PM2.5 Total	Bio- CO2	NBio- CO2	Total CO2	CH4	N2O	CO2e
Category	lb/day										lb/day					
Off-Road	0.0000	0.0000	0.0000	0.0000		0.0000	0.0000		0.0000	0.0000						0.0000
Paving	0.0170					0.0000	0.0000		0.0000	0.0000						0.0000
Total	**0.0170**	**0.0000**	**0.0000**	**0.0000**		**0.0000**	**0.0000**		**0.0000**	**0.0000**						**0.0000**

6th Street PARC - Construction Emissions Only - Los Angeles-South Coast County, Winter

EMFAC Off-Model Adjustment Factors for Gasoline Light Duty Vehicle to Account for the SAFE Vehicle Rule Applied

3.10 Paving - Concrete - 2023

Unmitigated Construction Off-Site

	ROG	NOx	CO	SO2	Fugitive PM10	Exhaust PM10	PM10 Total	Fugitive PM2.5	Exhaust PM2.5	PM2.5 Total	Bio- CO2	NBio- CO2	Total CO2	CH4	N2O	CO2e
Category	lb/day										lb/day					
Hauling	0.0000	0.0000	0.0000	0.0000	0.0000	0.0000	0.0000	0.0000	0.0000	0.0000						0.0000
Vendor	8.8900e-003	0.3215	0.1227	1.4900e-003	0.0512	1.5500e-003	0.0528	0.0148	1.4900e-003	0.0162						167.5129
Worker	0.0103	7.4000e-003	0.0999	2.8000e-004	0.0335	2.0000e-004	0.0337	8.8900e-003	1.9000e-004	9.0800e-003						29.0164
Total	**0.0192**	**0.3289**	**0.2226**	**1.7700e-003**	**0.0848**	**1.7500e-003**	**0.0865**	**0.0236**	**1.6800e-003**	**0.0253**						**196.5292**

Mitigated Construction On-Site

	ROG	NOx	CO	SO2	Fugitive PM10	Exhaust PM10	PM10 Total	Fugitive PM2.5	Exhaust PM2.5	PM2.5 Total	Bio- CO2	NBio- CO2	Total CO2	CH4	N2O	CO2e
Category	lb/day										lb/day					
Off-Road	0.0000	0.0000	0.0000	0.0000		0.0000	0.0000		0.0000	0.0000						0.0000
Paving	0.0170					0.0000	0.0000		0.0000	0.0000						0.0000
Total	**0.0170**	**0.0000**	**0.0000**	**0.0000**		**0.0000**	**0.0000**		**0.0000**	**0.0000**						**0.0000**

EMFAC Off-Model Adjustment Factors for Gasoline Light Duty Vehicle to Account for the SAFE Vehicle Rule Applied

3.10 Paving - Concrete - 2023

Mitigated Construction Off-Site

	ROG	NOx	CO	SO2	Fugitive PM10	Exhaust PM10	PM10 Total	Fugitive PM2.5	Exhaust PM2.5	PM2.5 Total	Bio- CO2	NBio- CO2	Total CO2	CH4	N2O	CO2e
Category	lb/day										lb/day					
Hauling	0.0000	0.0000	0.0000	0.0000	0.0000	0.0000	0.0000	0.0000	0.0000	0.0000						0.0000
Vendor	8.8900e-003	0.3215	0.1227	1.4900e-003	0.0512	1.5500e-003	0.0528	0.0148	1.4900e-003	0.0162						167.5129
Worker	0.0103	7.4000e-003	0.0999	2.8000e-004	0.0335	2.0000e-004	0.0337	8.8900e-003	1.9000e-004	9.0800e-003						29.0164
Total	**0.0192**	**0.3289**	**0.2226**	**1.7700e-003**	**0.0848**	**1.7500e-003**	**0.0865**	**0.0236**	**1.6800e-003**	**0.0253**						**196.5292**

3.11 Paving - DG - 2023

Unmitigated Construction On-Site

	ROG	NOx	CO	SO2	Fugitive PM10	Exhaust PM10	PM10 Total	Fugitive PM2.5	Exhaust PM2.5	PM2.5 Total	Bio- CO2	NBio- CO2	Total CO2	CH4	N2O	CO2e
Category	lb/day										lb/day					
Off-Road	0.5711	4.5201	5.0041	0.0141		0.1843	0.1843		0.1695	0.1695						1,376.4490
Paving	0.0341					0.0000	0.0000		0.0000	0.0000						0.0000
Total	**0.6051**	**4.5201**	**5.0041**	**0.0141**		**0.1843**	**0.1843**		**0.1695**	**0.1695**						**1,376.4490**

6th Street PARC - Construction Emissions Only - Los Angeles-South Coast County, Winter

EMFAC Off-Model Adjustment Factors for Gasoline Light Duty Vehicle to Account for the SAFE Vehicle Rule Applied

3.11 Paving - DG - 2023

Unmitigated Construction Off-Site

	ROG	NOx	CO	SO2	Fugitive PM10	Exhaust PM10	PM10 Total	Fugitive PM2.5	Exhaust PM2.5	PM2.5 Total	Bio- CO2	NBio- CO2	Total CO2	CH4	N2O	CO2e
Category	lb/day										lb/day					
Hauling	0.0000	0.0000	0.0000	0.0000	0.0000	0.0000	0.0000	0.0000	0.0000	0.0000						0.0000
Vendor	8.8900e-003	0.3215	0.1227	1.4900e-003	0.0512	1.5500e-003	0.0528	0.0148	1.4900e-003	0.0162						167.5129
Worker	0.0172	0.0123	0.1665	4.7000e-004	0.0559	3.4000e-004	0.0562	0.0148	3.1000e-004	0.0151						48.3606
Total	**0.0261**	**0.3338**	**0.2892**	**1.9600e-003**	**0.1071**	**1.8900e-003**	**0.1090**	**0.0296**	**1.8000e-003**	**0.0314**						**215.8735**

Mitigated Construction On-Site

	ROG	NOx	CO	SO2	Fugitive PM10	Exhaust PM10	PM10 Total	Fugitive PM2.5	Exhaust PM2.5	PM2.5 Total	Bio- CO2	NBio- CO2	Total CO2	CH4	N2O	CO2e
Category	lb/day										lb/day					
Off-Road	0.1723	0.7468	7.2943	0.0141		3.4500e-003	3.4500e-003		3.4500e-003	3.4500e-003						1,376.4490
Paving	0.0341					0.0000	0.0000		0.0000	0.0000						0.0000
Total	**0.2064**	**0.7468**	**7.2943**	**0.0141**		**3.4500e-003**	**3.4500e-003**		**3.4500e-003**	**3.4500e-003**						**1,376.4490**

EMFAC Off-Model Adjustment Factors for Gasoline Light Duty Vehicle to Account for the SAFE Vehicle Rule Applied

3.11 Paving - DG - 2023

Mitigated Construction Off-Site

	ROG	NOx	CO	SO2	Fugitive PM10	Exhaust PM10	PM10 Total	Fugitive PM2.5	Exhaust PM2.5	PM2.5 Total	Bio- CO2	NBio- CO2	Total CO2	CH4	N2O	CO2e
Category	lb/day										lb/day					
Hauling	0.0000	0.0000	0.0000	0.0000	0.0000	0.0000	0.0000	0.0000	0.0000	0.0000						0.0000
Vendor	8.8900e-003	0.3215	0.1227	1.4900e-003	0.0512	1.5500e-003	0.0528	0.0148	1.4900e-003	0.0162						167.5129
Worker	0.0172	0.0123	0.1665	4.7000e-004	0.0559	3.4000e-004	0.0562	0.0148	3.1000e-004	0.0151						48.3606
Total	**0.0261**	**0.3338**	**0.2892**	**1.9600e-003**	**0.1071**	**1.8900e-003**	**0.1090**	**0.0296**	**1.8000e-003**	**0.0314**						**215.8735**

3.11 Paving - DG - 2024

Unmitigated Construction On-Site

	ROG	NOx	CO	SO2	Fugitive PM10	Exhaust PM10	PM10 Total	Fugitive PM2.5	Exhaust PM2.5	PM2.5 Total	Bio- CO2	NBio- CO2	Total CO2	CH4	N2O	CO2e
Category	lb/day										lb/day					
Off-Road	0.5578	4.2323	4.9769	0.0141		0.1671	0.1671		0.1537	0.1537						1,377.0301
Paving	0.0341					0.0000	0.0000		0.0000	0.0000						0.0000
Total	**0.5918**	**4.2323**	**4.9769**	**0.0141**		**0.1671**	**0.1671**		**0.1537**	**0.1537**						**1,377.0301**

6th Street PARC - Construction Emissions Only - Los Angeles-South Coast County, Winter

EMFAC Off-Model Adjustment Factors for Gasoline Light Duty Vehicle to Account for the SAFE Vehicle Rule Applied

3.11 Paving - DG - 2024

Unmitigated Construction Off-Site

	ROG	NOx	CO	SO2	Fugitive PM10	Exhaust PM10	PM10 Total	Fugitive PM2.5	Exhaust PM2.5	PM2.5 Total	Bio- CO2	NBio- CO2	Total CO2	CH4	N2O	CO2e
Category	lb/day										lb/day					
Hauling	0.0000	0.0000	0.0000	0.0000	0.0000	0.0000	0.0000	0.0000	0.0000	0.0000						0.0000
Vendor	8.6000e-003	0.3222	0.1201	1.4700e-003	0.0512	1.5600e-003	0.0528	0.0148	1.5000e-003	0.0163						165.0122
Worker	0.0161	0.0110	0.1552	4.6000e-004	0.0559	3.2000e-004	0.0562	0.0148	3.0000e-004	0.0151						47.3474
Total	**0.0247**	**0.3332**	**0.2753**	**1.9300e-003**	**0.1071**	**1.8800e-003**	**0.1090**	**0.0296**	**1.8000e-003**	**0.0314**						**212.3596**

Mitigated Construction On-Site

	ROG	NOx	CO	SO2	Fugitive PM10	Exhaust PM10	PM10 Total	Fugitive PM2.5	Exhaust PM2.5	PM2.5 Total	Bio- CO2	NBio- CO2	Total CO2	CH4	N2O	CO2e
Category	lb/day										lb/day					
Off-Road	0.1723	0.7468	7.2943	0.0141		3.4500e-003	3.4500e-003		3.4500e-003	3.4500e-003						1,377.0301
Paving	0.0341					0.0000	0.0000		0.0000	0.0000						0.0000
Total	**0.2064**	**0.7468**	**7.2943**	**0.0141**		**3.4500e-003**	**3.4500e-003**		**3.4500e-003**	**3.4500e-003**						**1,377.0301**

EMFAC Off-Model Adjustment Factors for Gasoline Light Duty Vehicle to Account for the SAFE Vehicle Rule Applied

3.11 Paving - DG - 2024

Mitigated Construction Off-Site

	ROG	NOx	CO	SO2	Fugitive PM10	Exhaust PM10	PM10 Total	Fugitive PM2.5	Exhaust PM2.5	PM2.5 Total	Bio- CO2	NBio- CO2	Total CO2	CH4	N2O	CO2e
Category	lb/day										lb/day					
Hauling	0.0000	0.0000	0.0000	0.0000	0.0000	0.0000	0.0000	0.0000	0.0000	0.0000						0.0000
Vendor	8.6000e-003	0.3222	0.1201	1.4700e-003	0.0512	1.5600e-003	0.0528	0.0148	1.5000e-003	0.0163						165.0122
Worker	0.0161	0.0110	0.1552	4.6000e-004	0.0559	3.2000e-004	0.0562	0.0148	3.0000e-004	0.0151						47.3474
Total	**0.0247**	**0.3332**	**0.2753**	**1.9300e-003**	**0.1071**	**1.8800e-003**	**0.1090**	**0.0296**	**1.8000e-003**	**0.0314**						**212.3596**

3.12 Paving - Earthwork - 2024

Unmitigated Construction On-Site

	ROG	NOx	CO	SO2	Fugitive PM10	Exhaust PM10	PM10 Total	Fugitive PM2.5	Exhaust PM2.5	PM2.5 Total	Bio- CO2	NBio- CO2	Total CO2	CH4	N2O	CO2e
Category	lb/day										lb/day					
Off-Road	0.6147	5.6517	6.2741	8.9900e-003		0.3085	0.3085		0.2838	0.2838						877.9266
Paving	0.6812					0.0000	0.0000		0.0000	0.0000						0.0000
Total	**1.2959**	**5.6517**	**6.2741**	**8.9900e-003**		**0.3085**	**0.3085**		**0.2838**	**0.2838**						**877.9266**

6th Street PARC - Construction Emissions Only - Los Angeles-South Coast County, Winter

EMFAC Off-Model Adjustment Factors for Gasoline Light Duty Vehicle to Account for the SAFE Vehicle Rule Applied

3.12 Paving - Earthwork - 2024

Unmitigated Construction Off-Site

	ROG	NOx	CO	SO2	Fugitive PM10	Exhaust PM10	PM10 Total	Fugitive PM2.5	Exhaust PM2.5	PM2.5 Total	Bio- CO2	NBio- CO2	Total CO2	CH4	N2O	CO2e
Category	lb/day										lb/day					
Hauling	0.0000	0.0000	0.0000	0.0000	0.0000	0.0000	0.0000	0.0000	0.0000	0.0000						0.0000
Vendor	8.6000e-003	0.3222	0.1201	1.4700e-003	0.0512	1.5600e-003	0.0528	0.0148	1.5000e-003	0.0163						165.0122
Worker	0.0161	0.0110	0.1552	4.6000e-004	0.0559	3.2000e-004	0.0562	0.0148	3.0000e-004	0.0151						47.3474
Total	**0.0247**	**0.3332**	**0.2753**	**1.9300e-003**	**0.1071**	**1.8800e-003**	**0.1090**	**0.0296**	**1.8000e-003**	**0.0314**						**212.3596**

Mitigated Construction On-Site

	ROG	NOx	CO	SO2	Fugitive PM10	Exhaust PM10	PM10 Total	Fugitive PM2.5	Exhaust PM2.5	PM2.5 Total	Bio- CO2	NBio- CO2	Total CO2	CH4	N2O	CO2e
Category	lb/day										lb/day					
Off-Road	0.1095	0.4745	6.7528	8.9900e-003		2.1900e-003	2.1900e-003		2.1900e-003	2.1900e-003						877.9266
Paving	0.6812					0.0000	0.0000		0.0000	0.0000						0.0000
Total	**0.7907**	**0.4745**	**6.7528**	**8.9900e-003**		**2.1900e-003**	**2.1900e-003**		**2.1900e-003**	**2.1900e-003**						**877.9266**

EMFAC Off-Model Adjustment Factors for Gasoline Light Duty Vehicle to Account for the SAFE Vehicle Rule Applied

3.12 Paving - Earthwork - 2024

Mitigated Construction Off-Site

	ROG	NOx	CO	SO2	Fugitive PM10	Exhaust PM10	PM10 Total	Fugitive PM2.5	Exhaust PM2.5	PM2.5 Total	Bio- CO2	NBio- CO2	Total CO2	CH4	N2O	CO2e
Category	lb/day										lb/day					
Hauling	0.0000	0.0000	0.0000	0.0000	0.0000	0.0000	0.0000	0.0000	0.0000	0.0000						0.0000
Vendor	8.6000e-003	0.3222	0.1201	1.4700e-003	0.0512	1.5600e-003	0.0528	0.0148	1.5000e-003	0.0163						165.0122
Worker	0.0161	0.0110	0.1552	4.6000e-004	0.0559	3.2000e-004	0.0562	0.0148	3.0000e-004	0.0151						47.3474
Total	**0.0247**	**0.3332**	**0.2753**	**1.9300e-003**	**0.1071**	**1.8800e-003**	**0.1090**	**0.0296**	**1.8000e-003**	**0.0314**						**212.3596**

3.13 Utilities - 2024

Unmitigated Construction On-Site

	ROG	NOx	CO	SO2	Fugitive PM10	Exhaust PM10	PM10 Total	Fugitive PM2.5	Exhaust PM2.5	PM2.5 Total	Bio- CO2	NBio- CO2	Total CO2	CH4	N2O	CO2e
Category	lb/day										lb/day					
Off-Road	1.2767	12.4259	13.4886	0.0184		0.7426	0.7426		0.6832	0.6832						1,797.3383
Total	**1.2767**	**12.4259**	**13.4886**	**0.0184**		**0.7426**	**0.7426**		**0.6832**	**0.6832**						**1,797.3383**

6th Street PARC - Construction Emissions Only - Los Angeles-South Coast County, Winter

EMFAC Off-Model Adjustment Factors for Gasoline Light Duty Vehicle to Account for the SAFE Vehicle Rule Applied

3.13 Utilities - 2024

Unmitigated Construction Off-Site

	ROG	NOx	CO	SO2	Fugitive PM10	Exhaust PM10	PM10 Total	Fugitive PM2.5	Exhaust PM2.5	PM2.5 Total	Bio- CO2	NBio- CO2	Total CO2	CH4	N2O	CO2e
Category	lb/day										lb/day					
Hauling	0.0000	0.0000	0.0000	0.0000	0.0000	0.0000	0.0000	0.0000	0.0000	0.0000						0.0000
Vendor	8.6000e-003	0.3222	0.1201	1.4700e-003	0.0512	1.5600e-003	0.0528	0.0148	1.5000e-003	0.0163						165.0122
Worker	0.0483	0.0330	0.4655	1.3700e-003	0.1677	9.7000e-004	0.1686	0.0445	8.9000e-004	0.0454						142.0422
Total	**0.0569**	**0.3552**	**0.5856**	**2.8400e-003**	**0.2189**	**2.5300e-003**	**0.2215**	**0.0592**	**2.3900e-003**	**0.0616**						**307.0544**

Mitigated Construction On-Site

	ROG	NOx	CO	SO2	Fugitive PM10	Exhaust PM10	PM10 Total	Fugitive PM2.5	Exhaust PM2.5	PM2.5 Total	Bio- CO2	NBio- CO2	Total CO2	CH4	N2O	CO2e
Category	lb/day										lb/day					
Off-Road	0.2250	0.9748	13.8723	0.0184		4.5000e-003	4.5000e-003		4.5000e-003	4.5000e-003						1,797.3383
Total	**0.2250**	**0.9748**	**13.8723**	**0.0184**		**4.5000e-003**	**4.5000e-003**		**4.5000e-003**	**4.5000e-003**						**1,797.3383**

EMFAC Off-Model Adjustment Factors for Gasoline Light Duty Vehicle to Account for the SAFE Vehicle Rule Applied

3.13 Utilities - 2024

Mitigated Construction Off-Site

	ROG	NOx	CO	SO2	Fugitive PM10	Exhaust PM10	PM10 Total	Fugitive PM2.5	Exhaust PM2.5	PM2.5 Total	Bio- CO2	NBio- CO2	Total CO2	CH4	N2O	CO2e
Category	lb/day										lb/day					
Hauling	0.0000	0.0000	0.0000	0.0000	0.0000	0.0000	0.0000	0.0000	0.0000	0.0000						0.0000
Vendor	8.6000e-003	0.3222	0.1201	1.4700e-003	0.0512	1.5600e-003	0.0528	0.0148	1.5000e-003	0.0163						165.0122
Worker	0.0483	0.0330	0.4655	1.3700e-003	0.1677	9.7000e-004	0.1686	0.0445	8.9000e-004	0.0454						142.0422
Total	**0.0569**	**0.3552**	**0.5856**	**2.8400e-003**	**0.2189**	**2.5300e-003**	**0.2215**	**0.0592**	**2.3900e-003**	**0.0616**						**307.0544**

3.14 Structures - Construction - 2024

Unmitigated Construction On-Site

	ROG	NOx	CO	SO2	Fugitive PM10	Exhaust PM10	PM10 Total	Fugitive PM2.5	Exhaust PM2.5	PM2.5 Total	Bio- CO2	NBio- CO2	Total CO2	CH4	N2O	CO2e
Category	lb/day										lb/day					
Off-Road	1.1988	10.4734	17.1339	0.0322		0.4866	0.4866		0.4476	0.4476						3,140.9714
Total	**1.1988**	**10.4734**	**17.1339**	**0.0322**		**0.4866**	**0.4866**		**0.4476**	**0.4476**						**3,140.9714**

6th Street PARC - Construction Emissions Only - Los Angeles-South Coast County, Winter

EMFAC Off-Model Adjustment Factors for Gasoline Light Duty Vehicle to Account for the SAFE Vehicle Rule Applied

3.14 Structures - Construction - 2024

Unmitigated Construction Off-Site

	ROG	NOx	CO	SO2	Fugitive PM10	Exhaust PM10	PM10 Total	Fugitive PM2.5	Exhaust PM2.5	PM2.5 Total	Bio- CO2	NBio- CO2	Total CO2	CH4	N2O	CO2e
Category	lb/day										lb/day					
Hauling	0.0000	0.0000	0.0000	0.0000	0.0000	0.0000	0.0000	0.0000	0.0000	0.0000						0.0000
Vendor	8.6000e-003	0.3222	0.1201	1.4700e-003	0.0512	1.5600e-003	0.0528	0.0148	1.5000e-003	0.0163						165.0122
Worker	0.7690	0.5262	7.4164	0.0218	2.6715	0.0155	2.6869	0.7085	0.0142	0.7227						2,263.2061
Total	**0.7776**	**0.8483**	**7.5365**	**0.0232**	**2.7227**	**0.0170**	**2.7397**	**0.7232**	**0.0157**	**0.7390**						**2,428.2183**

Mitigated Construction On-Site

	ROG	NOx	CO	SO2	Fugitive PM10	Exhaust PM10	PM10 Total	Fugitive PM2.5	Exhaust PM2.5	PM2.5 Total	Bio- CO2	NBio- CO2	Total CO2	CH4	N2O	CO2e
Category	lb/day										lb/day					
Off-Road	0.6754	4.4166	20.0736	0.0322		0.1704	0.1704		0.1572	0.1572						3,140.9714
Total	**0.6754**	**4.4166**	**20.0736**	**0.0322**		**0.1704**	**0.1704**		**0.1572**	**0.1572**						**3,140.9714**

EMFAC Off-Model Adjustment Factors for Gasoline Light Duty Vehicle to Account for the SAFE Vehicle Rule Applied

3.14 Structures - Construction - 2024

Mitigated Construction Off-Site

	ROG	NOx	CO	SO2	Fugitive PM10	Exhaust PM10	PM10 Total	Fugitive PM2.5	Exhaust PM2.5	PM2.5 Total	Bio- CO2	NBio- CO2	Total CO2	CH4	N2O	CO2e
Category	lb/day										lb/day					
Hauling	0.0000	0.0000	0.0000	0.0000	0.0000	0.0000	0.0000	0.0000	0.0000	0.0000						0.0000
Vendor	8.6000e-003	0.3222	0.1201	1.4700e-003	0.0512	1.5600e-003	0.0528	0.0148	1.5000e-003	0.0163						165.0122
Worker	0.7690	0.5262	7.4164	0.0218	2.6715	0.0155	2.6869	0.7085	0.0142	0.7227						2,263.2061
Total	**0.7776**	**0.8483**	**7.5365**	**0.0232**	**2.7227**	**0.0170**	**2.7397**	**0.7232**	**0.0157**	**0.7390**						**2,428.2183**

3.15 Structures - Concrete - 2024

Unmitigated Construction On-Site

	ROG	NOx	CO	SO2	Fugitive PM10	Exhaust PM10	PM10 Total	Fugitive PM2.5	Exhaust PM2.5	PM2.5 Total	Bio- CO2	NBio- CO2	Total CO2	CH4	N2O	CO2e
Category	lb/day										lb/day					
Off-Road	0.0827	0.6969	1.0054	1.7800e-003		0.0317	0.0317		0.0317	0.0317						168.5729
Total	**0.0827**	**0.6969**	**1.0054**	**1.7800e-003**		**0.0317**	**0.0317**		**0.0317**	**0.0317**						**168.5729**

6th Street PARC - Construction Emissions Only - Los Angeles-South Coast County, Winter

EMFAC Off-Model Adjustment Factors for Gasoline Light Duty Vehicle to Account for the SAFE Vehicle Rule Applied

3.15 Structures - Concrete - 2024

Unmitigated Construction Off-Site

	ROG	NOx	CO	SO2	Fugitive PM10	Exhaust PM10	PM10 Total	Fugitive PM2.5	Exhaust PM2.5	PM2.5 Total	Bio- CO2	NBio- CO2	Total CO2	CH4	N2O	CO2e
Category	lb/day										lb/day					
Hauling	0.0000	0.0000	0.0000	0.0000	0.0000	0.0000	0.0000	0.0000	0.0000	0.0000						0.0000
Vendor	8.6000e-003	0.3222	0.1201	1.4700e-003	0.0512	1.5600e-003	0.0528	0.0148	1.5000e-003	0.0163						165.0122
Worker	0.7690	0.5262	7.4164	0.0218	2.6715	0.0155	2.6869	0.7085	0.0142	0.7227						2,263.2061
Total	**0.7776**	**0.8483**	**7.5365**	**0.0232**	**2.7227**	**0.0170**	**2.7397**	**0.7232**	**0.0157**	**0.7390**						**2,428.2183**

Mitigated Construction On-Site

	ROG	NOx	CO	SO2	Fugitive PM10	Exhaust PM10	PM10 Total	Fugitive PM2.5	Exhaust PM2.5	PM2.5 Total	Bio- CO2	NBio- CO2	Total CO2	CH4	N2O	CO2e
Category	lb/day										lb/day					
Off-Road	0.0178	0.0770	1.0963	1.7800e-003		3.6000e-004	3.6000e-004		3.6000e-004	3.6000e-004						168.5729
Total	**0.0178**	**0.0770**	**1.0963**	**1.7800e-003**		**3.6000e-004**	**3.6000e-004**		**3.6000e-004**	**3.6000e-004**						**168.5729**

EMFAC Off-Model Adjustment Factors for Gasoline Light Duty Vehicle to Account for the SAFE Vehicle Rule Applied

3.15 Structures - Concrete - 2024

Mitigated Construction Off-Site

	ROG	NOx	CO	SO2	Fugitive PM10	Exhaust PM10	PM10 Total	Fugitive PM2.5	Exhaust PM2.5	PM2.5 Total	Bio- CO2	NBio- CO2	Total CO2	CH4	N2O	CO2e
Category	lb/day										lb/day					
Hauling	0.0000	0.0000	0.0000	0.0000	0.0000	0.0000	0.0000	0.0000	0.0000	0.0000						0.0000
Vendor	8.6000e-003	0.3222	0.1201	1.4700e-003	0.0512	1.5600e-003	0.0528	0.0148	1.5000e-003	0.0163						165.0122
Worker	0.7690	0.5262	7.4164	0.0218	2.6715	0.0155	2.6869	0.7085	0.0142	0.7227						2,263.2061
Total	**0.7776**	**0.8483**	**7.5365**	**0.0232**	**2.7227**	**0.0170**	**2.7397**	**0.7232**	**0.0157**	**0.7390**						**2,428.2183**

4.0 Operational Detail - Mobile

4.1 Mitigation Measures Mobile

6th Street PARC - Construction Emissions Only - Los Angeles-South Coast County, Winter

EMFAC Off-Model Adjustment Factors for Gasoline Light Duty Vehicle to Account for the SAFE Vehicle Rule Applied

	ROG	NOx	CO	SO2	Fugitive PM10	Exhaust PM10	PM10 Total	Fugitive PM2.5	Exhaust PM2.5	PM2.5 Total	Bio- CO2	NBio- CO2	Total CO2	CH4	N2O	CO2e
Category	lb/day										lb/day					
Mitigated	0.0000	0.0000	0.0000	0.0000	0.0000	0.0000	0.0000	0.0000	0.0000	0.0000						0.0000
Unmitigated	0.0000	0.0000	0.0000	0.0000	0.0000	0.0000	0.0000	0.0000	0.0000	0.0000						0.0000

4.2 Trip Summary Information

	Average Daily Trip Rate			Unmitigated	Mitigated
Land Use	Weekday	Saturday	Sunday	Annual VMT	Annual VMT
City Park	0.00	0.00	0.00		
Fast Food Restaurant w/o Drive Thru	0.00	0.00	0.00		
Health Club	0.00	0.00	0.00		
Parking Lot	0.00	0.00	0.00		
Total	0.00	0.00	0.00		

4.3 Trip Type Information

	Miles			Trip %			Trip Purpose %		
Land Use	H-W or C-W	H-S or C-C	H-O or C-NW	H-W or C-W	H-S or C-C	H-O or C-NW	Primary	Diverted	Pass-by
City Park	16.60	8.40	6.90	33.00	48.00	19.00	66	28	6
Fast Food Restaurant w/o Drive	16.60	8.40	6.90	1.50	79.50	19.00	51	37	12
Health Club	16.60	8.40	6.90	16.90	64.10	19.00	52	39	9
Parking Lot	16.60	8.40	6.90	0.00	0.00	0.00	0	0	0

4.4 Fleet Mix

6th Street PARC - Construction Emissions Only - Los Angeles-South Coast County, Winter

EMFAC Off-Model Adjustment Factors for Gasoline Light Duty Vehicle to Account for the SAFE Vehicle Rule Applied

Land Use	LDA	LDT1	LDT2	MDV	LHD1	LHD2	MHD	HHD	OBUS	UBUS	MCY	SBUS	MH
City Park	0.540171	0.064547	0.189075	0.126673	0.023412	0.006384	0.010926	0.008089	0.000929	0.000597	0.025155	0.000706	0.003335
Fast Food Restaurant w/o Drive Thru	0.540171	0.064547	0.189075	0.126673	0.023412	0.006384	0.010926	0.008089	0.000929	0.000597	0.025155	0.000706	0.003335
Health Club	0.540171	0.064547	0.189075	0.126673	0.023412	0.006384	0.010926	0.008089	0.000929	0.000597	0.025155	0.000706	0.003335
Parking Lot	0.540171	0.064547	0.189075	0.126673	0.023412	0.006384	0.010926	0.008089	0.000929	0.000597	0.025155	0.000706	0.003335

5.0 Energy Detail

Historical Energy Use: N

5.1 Mitigation Measures Energy

	ROG	NOx	CO	SO2	Fugitive PM10	Exhaust PM10	PM10 Total	Fugitive PM2.5	Exhaust PM2.5	PM2.5 Total	Bio- CO2	NBio- CO2	Total CO2	CH4	N2O	CO2e
Category	lb/day										lb/day					
NaturalGas Mitigated	5.8300e-003	0.0530	0.0445	3.2000e-004		4.0200e-003	4.0200e-003		4.0200e-003	4.0200e-003						63.9235
NaturalGas Unmitigated	5.8300e-003	0.0530	0.0445	3.2000e-004		4.0200e-003	4.0200e-003		4.0200e-003	4.0200e-003						63.9235

EMFAC Off-Model Adjustment Factors for Gasoline Light Duty Vehicle to Account for the SAFE Vehicle Rule Applied

5.2 Energy by Land Use - NaturalGas

Unmitigated

	NaturalGas Use	ROG	NOx	CO	SO2	Fugitive PM10	Exhaust PM10	PM10 Total	Fugitive PM2.5	Exhaust PM2.5	PM2.5 Total	Bio- CO2	NBio- CO2	Total CO2	CH4	N2O	CO2e
Land Use	kBTU/yr	lb/day										lb/day					
City Park	0	0.0000	0.0000	0.0000	0.0000		0.0000	0.0000		0.0000	0.0000						0.0000
Fast Food Restaurant w/o Drive Thru	441.729	4.7600e-003	0.0433	0.0364	2.6000e-004		3.2900e-003	3.2900e-003		3.2900e-003	3.2900e-003						52.2769
Health Club	98.411	1.0600e-003	9.6500e-003	8.1000e-003	6.0000e-005		7.3000e-004	7.3000e-004		7.3000e-004	7.3000e-004						11.6466
Parking Lot	0	0.0000	0.0000	0.0000	0.0000		0.0000	0.0000		0.0000	0.0000						0.0000
Total		**5.8200e-003**	**0.0530**	**0.0445**	**3.2000e-004**		**4.0200e-003**	**4.0200e-003**		**4.0200e-003**	**4.0200e-003**						**63.9235**

EMFAC Off-Model Adjustment Factors for Gasoline Light Duty Vehicle to Account for the SAFE Vehicle Rule Applied

5.2 Energy by Land Use - NaturalGas

Mitigated

	NaturalGas Use	ROG	NOx	CO	SO2	Fugitive PM10	Exhaust PM10	PM10 Total	Fugitive PM2.5	Exhaust PM2.5	PM2.5 Total	Bio- CO2	NBio- CO2	Total CO2	CH4	N2O	CO2e
Land Use	kBTU/yr	lb/day										lb/day					
City Park	0	0.0000	0.0000	0.0000	0.0000		0.0000	0.0000		0.0000	0.0000						0.0000
Fast Food Restaurant w/o Drive Thru	0.441729	4.7600e-003	0.0433	0.0364	2.6000e-004		3.2900e-003	3.2900e-003		3.2900e-003	3.2900e-003						52.2769
Health Club	0.098411	1.0600e-003	9.6500e-003	8.1000e-003	6.0000e-005		7.3000e-004	7.3000e-004		7.3000e-004	7.3000e-004						11.6466
Parking Lot	0	0.0000	0.0000	0.0000	0.0000		0.0000	0.0000		0.0000	0.0000						0.0000
Total		**5.8200e-003**	**0.0530**	**0.0445**	**3.2000e-004**		**4.0200e-003**	**4.0200e-003**		**4.0200e-003**	**4.0200e-003**						**63.9235**

6.0 Area Detail

6.1 Mitigation Measures Area

6th Street PARC - Construction Emissions Only - Los Angeles-South Coast County, Winter

EMFAC Off-Model Adjustment Factors for Gasoline Light Duty Vehicle to Account for the SAFE Vehicle Rule Applied

	ROG	NOx	CO	SO2	Fugitive PM10	Exhaust PM10	PM10 Total	Fugitive PM2.5	Exhaust PM2.5	PM2.5 Total	Bio- CO2	NBio- CO2	Total CO2	CH4	N2O	CO2e
Category	lb/day										lb/day					
Mitigated	0.1037	9.0000e-005	0.0104	0.0000		4.0000e-005	4.0000e-005		4.0000e-005	4.0000e-005						0.0238
Unmitigated	0.1037	9.0000e-005	0.0104	0.0000		4.0000e-005	4.0000e-005		4.0000e-005	4.0000e-005						0.0238

6.2 Area by SubCategory

Unmitigated

	ROG	NOx	CO	SO2	Fugitive PM10	Exhaust PM10	PM10 Total	Fugitive PM2.5	Exhaust PM2.5	PM2.5 Total	Bio- CO2	NBio- CO2	Total CO2	CH4	N2O	CO2e
SubCategory	lb/day										lb/day					
Architectural Coating	9.5100e-003					0.0000	0.0000		0.0000	0.0000						0.0000
Consumer Products	0.0932					0.0000	0.0000		0.0000	0.0000						0.0000
Landscaping	9.6000e-004	9.0000e-005	0.0104	0.0000		4.0000e-005	4.0000e-005		4.0000e-005	4.0000e-005						0.0238
Total	**0.1037**	**9.0000e-005**	**0.0104**	**0.0000**		**4.0000e-005**	**4.0000e-005**		**4.0000e-005**	**4.0000e-005**						**0.0238**

EMFAC Off-Model Adjustment Factors for Gasoline Light Duty Vehicle to Account for the SAFE Vehicle Rule Applied

6.2 Area by SubCategory

Mitigated

	ROG	NOx	CO	SO2	Fugitive PM10	Exhaust PM10	PM10 Total	Fugitive PM2.5	Exhaust PM2.5	PM2.5 Total	Bio- CO2	NBio- CO2	Total CO2	CH4	N2O	CO2e
SubCategory	lb/day										lb/day					
Architectural Coating	9.5100e-003					0.0000	0.0000		0.0000	0.0000						0.0000
Consumer Products	0.0932					0.0000	0.0000		0.0000	0.0000						0.0000
Landscaping	9.6000e-004	9.0000e-005	0.0104	0.0000		4.0000e-005	4.0000e-005		4.0000e-005	4.0000e-005						0.0238
Total	**0.1037**	**9.0000e-005**	**0.0104**	**0.0000**		**4.0000e-005**	**4.0000e-005**		**4.0000e-005**	**4.0000e-005**						**0.0238**

7.0 Water Detail

7.1 Mitigation Measures Water

EMFAC Off-Model Adjustment Factors for Gasoline Light Duty Vehicle to Account for the SAFE Vehicle Rule Applied

8.0 Waste Detail

8.1 Mitigation Measures Waste

9.0 Operational Offroad

Equipment Type	Number	Hours/Day	Days/Year	Horse Power	Load Factor	Fuel Type

10.0 Stationary Equipment

Fire Pumps and Emergency Generators

Equipment Type	Number	Hours/Day	Hours/Year	Horse Power	Load Factor	Fuel Type

Boilers

Equipment Type	Number	Heat Input/Day	Heat Input/Year	Boiler Rating	Fuel Type

User Defined Equipment

Equipment Type	Number

11.0 Vegetation

6th Street PARC In-River Planted Terracing - Construction Emissions Only - Los Angeles-South Coast County, Annual

EMFAC Off-Model Adjustment Factors for Gasoline Light Duty Vehicle to Account for the SAFE Vehicle Rule Applied

6th Street PARC In-River Planted Terracing - Construction Emissions Only

Los Angeles-South Coast County, Annual

1.0 Project Characteristics

1.1 Land Usage

Land Uses	Size	Metric	Lot Acreage	Floor Surface Area	Population
City Park	0.50	Acre	0.50	21,780.00	0

1.2 Other Project Characteristics

Urbanization	Urban	**Wind Speed (m/s)**	2.2	**Precipitation Freq (Days)**	33
Climate Zone	12			**Operational Year**	2023
Utility Company	Los Angeles Department of Water & Power				
CO2 Intensity (lb/MWhr)	691.98	**CH4 Intensity (lb/MWhr)**	0.033	**N2O Intensity (lb/MWhr)**	0.004

1.3 User Entered Comments & Non-Default Data

Project Characteristics - In-River Terracing updated to 2020 utility intensity factor.

Land Use - Land use based on in-river planted terracing information provided.

Construction Phase - Construction phases based on information provided.

Off-road Equipment - Off-road equipment based on information provided.

Off-road Equipment - Off-road equipment based on information provided.

Off-road Equipment - Off-road equipment based on information provided.

Off-road Equipment - Off-road equipment based on information provided.

Off-road Equipment - Off-road equipment based on information provided.

Trips and VMT - Total # trips hauling based on information provided.

Grading - Material imported based on information provided.

Vehicle Trips - .

6th Street PARC In-River Planted Terracing - Construction Emissions Only - Los Angeles-South Coast County, Annual

EMFAC Off-Model Adjustment Factors for Gasoline Light Duty Vehicle to Account for the SAFE Vehicle Rule Applied

Construction Off-road Equipment Mitigation - Mitigation assumes T4 offroad equipment with level 3 DPF, 55% CE for watering unpaved travel surfaces/roads, 61% CE for
watering exposed surfaces, 15 mph speed limit for onsite unpaved travel surfaces/roads, clean track out CE 16%.

Water Mitigation - WUW-1 based on information provided.

Table Name	Column Name	Default Value	New Value
tblConstDustMitigation	CleanPavedRoadPercentReduction	0	16
tblConstDustMitigation	WaterUnpavedRoadVehicleSpeed	0	15
tblConstEquipMitigation	DPF	No Change	Level 3
tblConstEquipMitigation	DPF	No Change	Level 3
tblConstEquipMitigation	DPF	No Change	Level 3
tblConstEquipMitigation	DPF	No Change	Level 3
tblConstEquipMitigation	DPF	No Change	Level 3
tblConstEquipMitigation	DPF	No Change	Level 3
tblConstEquipMitigation	DPF	No Change	Level 3
tblConstEquipMitigation	DPF	No Change	Level 3
tblConstEquipMitigation	DPF	No Change	Level 3
tblConstEquipMitigation	DPF	No Change	Level 3
tblConstEquipMitigation	DPF	No Change	Level 3
tblConstEquipMitigation	NumberOfEquipmentMitigated	0.00	6.00
tblConstEquipMitigation	NumberOfEquipmentMitigated	0.00	2.00
tblConstEquipMitigation	NumberOfEquipmentMitigated	0.00	3.00
tblConstEquipMitigation	NumberOfEquipmentMitigated	0.00	4.00
tblConstEquipMitigation	NumberOfEquipmentMitigated	0.00	2.00
tblConstEquipMitigation	NumberOfEquipmentMitigated	0.00	4.00
tblConstEquipMitigation	NumberOfEquipmentMitigated	0.00	2.00
tblConstEquipMitigation	NumberOfEquipmentMitigated	0.00	2.00
tblConstEquipMitigation	Tier	No Change	Tier 4 Final
tblConstEquipMitigation	Tier	No Change	Tier 4 Final
tblConstEquipMitigation	Tier	No Change	Tier 4 Final
tblConstEquipMitigation	Tier	No Change	Tier 4 Final

6th Street PARC In-River Planted Terracing - Construction Emissions Only - Los Angeles-South Coast County, Annual

EMFAC Off-Model Adjustment Factors for Gasoline Light Duty Vehicle to Account for the SAFE Vehicle Rule Applied

tblConstEquipMitigation	Tier	No Change	Tier 4 Final
tblConstEquipMitigation	Tier	No Change	Tier 4 Final
tblConstEquipMitigation	Tier	No Change	Tier 4 Final
tblConstEquipMitigation	Tier	No Change	Tier 4 Final
tblConstEquipMitigation	Tier	No Change	Tier 4 Final
tblConstEquipMitigation	Tier	No Change	Tier 4 Final
tblConstEquipMitigation	Tier	No Change	Tier 4 Final
tblConstructionPhase	NumDays	100.00	40.00
tblConstructionPhase	NumDays	100.00	40.00
tblConstructionPhase	NumDays	2.00	20.00
tblConstructionPhase	NumDays	1.00	40.00
tblGrading	AcresOfGrading	0.00	0.50
tblGrading	MaterialImported	0.00	2,000.00
tblOffRoadEquipment	HorsePower	221.00	81.00
tblOffRoadEquipment	HorsePower	9.00	300.00
tblOffRoadEquipment	HorsePower	231.00	226.00
tblOffRoadEquipment	HorsePower	231.00	226.00
tblOffRoadEquipment	HorsePower	16.00	400.00
tblOffRoadEquipment	HorsePower	172.00	171.00
tblOffRoadEquipment	HorsePower	172.00	167.00
tblOffRoadEquipment	LoadFactor	0.42	0.40
tblOffRoadEquipment	OffRoadEquipmentUnitAmount	1.00	0.00
tblOffRoadEquipment	OffRoadEquipmentUnitAmount	1.00	0.00
tblOffRoadEquipment	OffRoadEquipmentUnitAmount	1.00	0.00
tblOffRoadEquipment	OffRoadEquipmentUnitAmount	2.00	0.00
tblOffRoadEquipment	OffRoadEquipmentUnitAmount	2.00	0.00
tblOffRoadEquipment	OffRoadEquipmentUnitAmount	1.00	0.00
tblOffRoadEquipment	OffRoadEquipmentUnitAmount	1.00	0.00
tblOffRoadEquipment	OffRoadEquipmentUnitAmount	2.00	0.00

6th Street PARC In-River Planted Terracing - Construction Emissions Only - Los Angeles-South Coast County, Annual

EMFAC Off-Model Adjustment Factors for Gasoline Light Duty Vehicle to Account for the SAFE Vehicle Rule Applied

tblOffRoadEquipment	OffRoadEquipmentUnitAmount	2.00	0.00
tblOffRoadEquipment	OffRoadEquipmentUnitAmount	1.00	2.00
tblOffRoadEquipment	OffRoadEquipmentUnitAmount	1.00	0.00
tblOffRoadEquipment	UsageHours	6.00	1.00
tblOffRoadEquipment	UsageHours	7.00	6.00
tblTripsAndVMT	HaulingTripNumber	0.00	160.00
tblVehicleTrips	ST_TR	1.96	22.75
tblVehicleTrips	SU_TR	2.19	16.74
tblVehicleTrips	WD_TR	0.78	1.89

2.0 Emissions Summary

6th Street PARC In-River Planted Terracing - Construction Emissions Only - Los Angeles-South Coast County, Annual

EMFAC Off-Model Adjustment Factors for Gasoline Light Duty Vehicle to Account for the SAFE Vehicle Rule Applied

2.1 Overall Construction

Unmitigated Construction

	ROG	NOx	CO	SO2	Fugitive PM10	Exhaust PM10	PM10 Total	Fugitive PM2.5	Exhaust PM2.5	PM2.5 Total	Bio- CO2	NBio- CO2	Total CO2	CH4	N2O	CO2e
Year	tons/yr										MT/yr					
2022	0.0664	0.7022	0.7657	1.4000e-003	0.0166	0.0327	0.0493	4.4300e-003	0.0303	0.0347						126.5138
Maximum	**0.0664**	**0.7022**	**0.7657**	**1.4000e-003**	**0.0166**	**0.0327**	**0.0493**	**4.4300e-003**	**0.0303**	**0.0347**						**126.5138**

Mitigated Construction

	ROG	NOx	CO	SO2	Fugitive PM10	Exhaust PM10	PM10 Total	Fugitive PM2.5	Exhaust PM2.5	PM2.5 Total	Bio- CO2	NBio- CO2	Total CO2	CH4	N2O	CO2e
Year	tons/yr										MT/yr					
2022	0.0190	0.1036	0.8695	1.4000e-003	0.0143	6.6000e-004	0.0149	3.8700e-003	6.4000e-004	4.5100e-003						126.5137
Maximum	**0.0190**	**0.1036**	**0.8695**	**1.4000e-003**	**0.0143**	**6.6000e-004**	**0.0149**	**3.8700e-003**	**6.4000e-004**	**4.5100e-003**						**126.5137**

	ROG	NOx	CO	SO2	Fugitive PM10	Exhaust PM10	PM10 Total	Fugitive PM2.5	Exhaust PM2.5	PM2.5 Total	Bio- CO2	NBio-CO2	Total CO2	CH4	N20	CO2e
Percent Reduction	**71.48**	**85.24**	**-13.56**	**0.00**	**14.13**	**97.98**	**69.69**	**12.64**	**97.89**	**87.02**	**0.00**	**0.00**	**0.00**	**0.00**	**0.00**	**0.00**

6th Street PARC In-River Planted Terracing - Construction Emissions Only - Los Angeles-South Coast County, Annual

EMFAC Off-Model Adjustment Factors for Gasoline Light Duty Vehicle to Account for the SAFE Vehicle Rule Applied

Quarter	Start Date	End Date	Maximum Unmitigated ROG + NOX (tons/quarter)	Maximum Mitigated ROG + NOX (tons/quarter)
1	1-3-2022	4-2-2022	0.5239	0.0702
2	4-3-2022	7-2-2022	0.2067	0.0459
3	7-3-2022	9-30-2022	0.0192	0.0029
		Highest	0.5239	0.0702

2.2 Overall Operational

Unmitigated Operational

	ROG	NOx	CO	SO2	Fugitive PM10	Exhaust PM10	PM10 Total	Fugitive PM2.5	Exhaust PM2.5	PM2.5 Total	Bio- CO2	NBio- CO2	Total CO2	CH4	N2O	CO2e
Category	tons/yr										MT/yr					
Area	2.1000e-004	0.0000	1.0000e-005	0.0000		0.0000	0.0000		0.0000	0.0000						1.0000e-005
Energy	0.0000	0.0000	0.0000	0.0000		0.0000	0.0000		0.0000	0.0000						0.0000
Mobile	1.7500e-003	1.9700e-003	0.0176	4.0000e-005	3.7800e-003	3.0000e-005	3.8100e-003	1.0100e-003	3.0000e-005	1.0300e-003						3.4892
Waste						0.0000	0.0000		0.0000	0.0000						0.0201
Water						0.0000	0.0000		0.0000	0.0000						2.0835
Total	**1.9600e-003**	**1.9700e-003**	**0.0176**	**4.0000e-005**	**3.7800e-003**	**3.0000e-005**	**3.8100e-003**	**1.0100e-003**	**3.0000e-005**	**1.0300e-003**						**5.5929**

6th Street PARC In-River Planted Terracing - Construction Emissions Only - Los Angeles-South Coast County, Annual

EMFAC Off-Model Adjustment Factors for Gasoline Light Duty Vehicle to Account for the SAFE Vehicle Rule Applied

2.2 Overall Operational

Mitigated Operational

	ROG	NOx	CO	SO2	Fugitive PM10	Exhaust PM10	PM10 Total	Fugitive PM2.5	Exhaust PM2.5	PM2.5 Total	Bio- CO2	NBio- CO2	Total CO2	CH4	N2O	CO2e
Category	tons/yr										MT/yr					
Area	2.1000e-004	0.0000	1.0000e-005	0.0000		0.0000	0.0000		0.0000	0.0000						1.0000e-005
Energy	0.0000	0.0000	0.0000	0.0000		0.0000	0.0000		0.0000	0.0000						0.0000
Mobile	1.7500e-003	1.9700e-003	0.0176	4.0000e-005	3.7800e-003	3.0000e-005	3.8100e-003	1.0100e-003	3.0000e-005	1.0300e-003						3.4892
Waste						0.0000	0.0000		0.0000	0.0000						0.0201
Water						0.0000	0.0000		0.0000	0.0000						1.9564
Total	**1.9600e-003**	**1.9700e-003**	**0.0176**	**4.0000e-005**	**3.7800e-003**	**3.0000e-005**	**3.8100e-003**	**1.0100e-003**	**3.0000e-005**	**1.0300e-003**						**5.4658**

	ROG	NOx	CO	SO2	Fugitive PM10	Exhaust PM10	PM10 Total	Fugitive PM2.5	Exhaust PM2.5	PM2.5 Total	Bio- CO2	NBio-CO2	Total CO2	CH4	N20	CO2e
Percent Reduction	**0.00**	**0.00**	**0.00**	**0.00**	**0.00**	**0.00**	**0.00**	**0.00**	**0.00**	**0.00**	**0.00**	**0.00**	**0.00**	**0.00**	**0.00**	**2.27**

3.0 Construction Detail

Construction Phase

Phase Number	Phase Name	Phase Type	Start Date	End Date	Num Days Week	Num Days	Phase Description
1	Site Preparation	Site Preparation	1/3/2022	2/25/2022	5	40	
2	Building Construction 1	Building Construction	2/26/2022	4/22/2022	5	40	Terrace Box Construction
3	Grading	Grading	4/23/2022	5/20/2022	5	20	Soil Import and Planting

EMFAC Off-Model Adjustment Factors for Gasoline Light Duty Vehicle to Account for the SAFE Vehicle Rule Applied

4	Building Construction 2	Building Construction	5/21/2022	7/15/2022	5	40	Soil Import and Planting

Acres of Grading (Site Preparation Phase): 0.5

Acres of Grading (Grading Phase): 0

Acres of Paving: 0

Residential Indoor: 0; Residential Outdoor: 0; Non-Residential Indoor: 0; Non-Residential Outdoor: 0; Striped Parking Area: 0 (Architectural Coating – sqft)

OffRoad Equipment

Phase Name	Offroad Equipment Type	Amount	Usage Hours	Horse Power	Load Factor
Site Preparation	Bore/Drill Rigs	6	8.00	81	0.50
Site Preparation	Cranes	1	4.00	226	0.29
Site Preparation	Forklifts	2	8.00	89	0.20
Site Preparation	Graders	0	8.00	187	0.41
Site Preparation	Other Construction Equipment	2	8.00	171	0.42
Site Preparation	Tractors/Loaders/Backhoes	0	8.00	97	0.37
Building Construction 1	Cement and Mortar Mixers	2	6.00	300	0.56
Building Construction 1	Cranes	0	4.00	231	0.29
Building Construction 1	Cranes	0	4.00	231	0.29
Building Construction 1	Forklifts	0	6.00	89	0.20
Building Construction 1	Pumps	2	4.00	84	0.74
Building Construction 1	Tractors/Loaders/Backhoes	0	8.00	97	0.37
Grading	Concrete/Industrial Saws	0	8.00	81	0.73
Grading	Cranes	2	6.00	226	0.29
Grading	Dumpers/Tenders	4	2.00	400	0.38
Grading	Rubber Tired Dozers	0	1.00	247	0.40
Grading	Tractors/Loaders/Backhoes	2	6.00	97	0.37
Building Construction 2	Cranes	0	4.00	231	0.29
Building Construction 2	Forklifts	0	6.00	89	0.20

6th Street PARC In-River Planted Terracing - Construction Emissions Only - Los Angeles-South Coast County, Annual

EMFAC Off-Model Adjustment Factors for Gasoline Light Duty Vehicle to Account for the SAFE Vehicle Rule Applied

Building Construction 2	Other Construction Equipment	2	4.00	167	0.40
Building Construction 2	Tractors/Loaders/Backhoes	0	8.00	97	0.37

Trips and VMT

Phase Name	Offroad Equipment Count	Worker Trip Number	Vendor Trip Number	Hauling Trip Number	Worker Trip Length	Vendor Trip Length	Hauling Trip Length	Worker Vehicle Class	Vendor Vehicle Class	Hauling Vehicle Class
Site Preparation	11	28.00	0.00	0.00	14.70	6.90	20.00	LD_Mix	HDT_Mix	HHDT
Building Construction 1	4	9.00	4.00	160.00	14.70	6.90	20.00	LD_Mix	HDT_Mix	HHDT
Grading	8	20.00	0.00	198.00	14.70	6.90	20.00	LD_Mix	HDT_Mix	HHDT
Building Construction 2	2	9.00	4.00	0.00	14.70	6.90	20.00	LD_Mix	HDT_Mix	HHDT

3.1 Mitigation Measures Construction

Use Cleaner Engines for Construction Equipment

Use DPF for Construction Equipment

Use Soil Stabilizer

Water Exposed Area

Reduce Vehicle Speed on Unpaved Roads

Clean Paved Roads

6th Street PARC In-River Planted Terracing - Construction Emissions Only - Los Angeles-South Coast County, Annual

EMFAC Off-Model Adjustment Factors for Gasoline Light Duty Vehicle to Account for the SAFE Vehicle Rule Applied

3.2 Site Preparation - 2022

Unmitigated Construction On-Site

	ROG	NOx	CO	SO2	Fugitive PM10	Exhaust PM10	PM10 Total	Fugitive PM2.5	Exhaust PM2.5	PM2.5 Total	Bio- CO2	NBio- CO2	Total CO2	CH4	N2O	CO2e
Category	tons/yr										MT/yr					
Fugitive Dust					2.7000e-004	0.0000	2.7000e-004	3.0000e-005	0.0000	3.0000e-005						0.0000
Off-Road	0.0395	0.4427	0.5040	7.7000e-004		0.0216	0.0216		0.0199	0.0199						68.4118
Total	**0.0395**	**0.4427**	**0.5040**	**7.7000e-004**	**2.7000e-004**	**0.0216**	**0.0219**	**3.0000e-005**	**0.0199**	**0.0199**						**68.4118**

Unmitigated Construction Off-Site

	ROG	NOx	CO	SO2	Fugitive PM10	Exhaust PM10	PM10 Total	Fugitive PM2.5	Exhaust PM2.5	PM2.5 Total	Bio- CO2	NBio- CO2	Total CO2	CH4	N2O	CO2e
Category	tons/yr										MT/yr					
Hauling	0.0000	0.0000	0.0000	0.0000	0.0000	0.0000	0.0000	0.0000	0.0000	0.0000						0.0000
Vendor	0.0000	0.0000	0.0000	0.0000	0.0000	0.0000	0.0000	0.0000	0.0000	0.0000						0.0000
Worker	1.9200e-003	1.6000e-003	0.0208	6.0000e-005	6.1400e-003	4.0000e-005	6.1800e-003	1.6300e-003	4.0000e-005	1.6700e-003						5.1243
Total	**1.9200e-003**	**1.6000e-003**	**0.0208**	**6.0000e-005**	**6.1400e-003**	**4.0000e-005**	**6.1800e-003**	**1.6300e-003**	**4.0000e-005**	**1.6700e-003**						**5.1243**

6th Street PARC In-River Planted Terracing - Construction Emissions Only - Los Angeles-South Coast County, Annual

EMFAC Off-Model Adjustment Factors for Gasoline Light Duty Vehicle to Account for the SAFE Vehicle Rule Applied

3.2 Site Preparation - 2022

Mitigated Construction On-Site

	ROG	NOx	CO	SO2	Fugitive PM10	Exhaust PM10	PM10 Total	Fugitive PM2.5	Exhaust PM2.5	PM2.5 Total	Bio- CO2	NBio- CO2	Total CO2	CH4	N2O	CO2e
Category	tons/yr										MT/yr					
Fugitive Dust					1.0000e-004	0.0000	1.0000e-004	1.0000e-005	0.0000	1.0000e-005						0.0000
Off-Road	9.6300e-003	0.0417	0.5765	7.7000e-004		1.9000e-004	1.9000e-004		1.9000e-004	1.9000e-004						68.4117
Total	**9.6300e-003**	**0.0417**	**0.5765**	**7.7000e-004**	**1.0000e-004**	**1.9000e-004**	**2.9000e-004**	**1.0000e-005**	**1.9000e-004**	**2.0000e-004**						**68.4117**

Mitigated Construction Off-Site

	ROG	NOx	CO	SO2	Fugitive PM10	Exhaust PM10	PM10 Total	Fugitive PM2.5	Exhaust PM2.5	PM2.5 Total	Bio- CO2	NBio- CO2	Total CO2	CH4	N2O	CO2e
Category	tons/yr										MT/yr					
Hauling	0.0000	0.0000	0.0000	0.0000	0.0000	0.0000	0.0000	0.0000	0.0000	0.0000						0.0000
Vendor	0.0000	0.0000	0.0000	0.0000	0.0000	0.0000	0.0000	0.0000	0.0000	0.0000						0.0000
Worker	1.9200e-003	1.6000e-003	0.0208	6.0000e-005	5.2900e-003	4.0000e-005	5.3300e-003	1.4200e-003	4.0000e-005	1.4600e-003						5.1243
Total	**1.9200e-003**	**1.6000e-003**	**0.0208**	**6.0000e-005**	**5.2900e-003**	**4.0000e-005**	**5.3300e-003**	**1.4200e-003**	**4.0000e-005**	**1.4600e-003**						**5.1243**

6th Street PARC In-River Planted Terracing - Construction Emissions Only - Los Angeles-South Coast County, Annual

EMFAC Off-Model Adjustment Factors for Gasoline Light Duty Vehicle to Account for the SAFE Vehicle Rule Applied

3.3 Building Construction 1 - 2022

Unmitigated Construction On-Site

	ROG	NOx	CO	SO2	Fugitive PM10	Exhaust PM10	PM10 Total	Fugitive PM2.5	Exhaust PM2.5	PM2.5 Total	Bio- CO2	NBio- CO2	Total CO2	CH4	N2O	CO2e
Category	tons/yr										MT/yr					
Off-Road	7.0400e-003	0.0594	0.0746	1.3000e-004		3.1100e-003	3.1100e-003		3.1100e-003	3.1100e-003						11.3186
Total	**7.0400e-003**	**0.0594**	**0.0746**	**1.3000e-004**		**3.1100e-003**	**3.1100e-003**		**3.1100e-003**	**3.1100e-003**						**11.3186**

Unmitigated Construction Off-Site

	ROG	NOx	CO	SO2	Fugitive PM10	Exhaust PM10	PM10 Total	Fugitive PM2.5	Exhaust PM2.5	PM2.5 Total	Bio- CO2	NBio- CO2	Total CO2	CH4	N2O	CO2e
Category	tons/yr										MT/yr					
Hauling	3.7000e-004	0.0142	3.1500e-003	5.0000e-005	1.3800e-003	1.0000e-004	1.4800e-003	3.8000e-004	1.0000e-004	4.7000e-004						5.1815
Vendor	1.6000e-004	4.1100e-003	1.3600e-003	2.0000e-005	5.0000e-004	4.0000e-005	5.4000e-004	1.5000e-004	4.0000e-005	1.8000e-004						1.5946
Worker	6.2000e-004	5.1000e-004	6.6800e-003	2.0000e-005	1.9700e-003	1.0000e-005	1.9900e-003	5.2000e-004	1.0000e-005	5.4000e-004						1.6471
Total	**1.1500e-003**	**0.0188**	**0.0112**	**9.0000e-005**	**3.8500e-003**	**1.5000e-004**	**4.0100e-003**	**1.0500e-003**	**1.5000e-004**	**1.1900e-003**						**8.4232**

6th Street PARC In-River Planted Terracing - Construction Emissions Only - Los Angeles-South Coast County, Annual

EMFAC Off-Model Adjustment Factors for Gasoline Light Duty Vehicle to Account for the SAFE Vehicle Rule Applied

3.3 Building Construction 1 - 2022

Mitigated Construction On-Site

	ROG	NOx	CO	SO2	Fugitive PM10	Exhaust PM10	PM10 Total	Fugitive PM2.5	Exhaust PM2.5	PM2.5 Total	Bio- CO2	NBio- CO2	Total CO2	CH4	N2O	CO2e
Category	tons/yr										MT/yr					
Off-Road	1.3200e-003	5.7000e-003	0.0811	1.3000e-004		3.0000e-005	3.0000e-005		3.0000e-005	3.0000e-005						11.3186
Total	**1.3200e-003**	**5.7000e-003**	**0.0811**	**1.3000e-004**		**3.0000e-005**	**3.0000e-005**		**3.0000e-005**	**3.0000e-005**						**11.3186**

Mitigated Construction Off-Site

	ROG	NOx	CO	SO2	Fugitive PM10	Exhaust PM10	PM10 Total	Fugitive PM2.5	Exhaust PM2.5	PM2.5 Total	Bio- CO2	NBio- CO2	Total CO2	CH4	N2O	CO2e
Category	tons/yr										MT/yr					
Hauling	3.7000e-004	0.0142	3.1500e-003	5.0000e-005	1.2100e-003	1.0000e-004	1.3100e-003	3.4000e-004	1.0000e-004	4.3000e-004						5.1815
Vendor	1.6000e-004	4.1100e-003	1.3600e-003	2.0000e-005	4.5000e-004	4.0000e-005	4.8000e-004	1.3000e-004	4.0000e-005	1.7000e-004						1.5946
Worker	6.2000e-004	5.1000e-004	6.6800e-003	2.0000e-005	1.7000e-003	1.0000e-005	1.7100e-003	4.6000e-004	1.0000e-005	4.7000e-004						1.6471
Total	**1.1500e-003**	**0.0188**	**0.0112**	**9.0000e-005**	**3.3600e-003**	**1.5000e-004**	**3.5000e-003**	**9.3000e-004**	**1.5000e-004**	**1.0700e-003**						**8.4232**

6th Street PARC In-River Planted Terracing - Construction Emissions Only - Los Angeles-South Coast County, Annual

EMFAC Off-Model Adjustment Factors for Gasoline Light Duty Vehicle to Account for the SAFE Vehicle Rule Applied

3.4 Grading - 2022

Unmitigated Construction On-Site

	ROG	NOx	CO	SO2	Fugitive PM10	Exhaust PM10	PM10 Total	Fugitive PM2.5	Exhaust PM2.5	PM2.5 Total	Bio- CO2	NBio- CO2	Total CO2	CH4	N2O	CO2e
Category	tons/yr										MT/yr					
Fugitive Dust					0.0000	0.0000	0.0000	0.0000	0.0000	0.0000						0.0000
Off-Road	7.9400e-003	0.0865	0.0613	1.3000e-004		3.9000e-003	3.9000e-003		3.5900e-003	3.5900e-003						11.6323
Total	**7.9400e-003**	**0.0865**	**0.0613**	**1.3000e-004**	**0.0000**	**3.9000e-003**	**3.9000e-003**	**0.0000**	**3.5900e-003**	**3.5900e-003**						**11.6323**

Unmitigated Construction Off-Site

	ROG	NOx	CO	SO2	Fugitive PM10	Exhaust PM10	PM10 Total	Fugitive PM2.5	Exhaust PM2.5	PM2.5 Total	Bio- CO2	NBio- CO2	Total CO2	CH4	N2O	CO2e
Category	tons/yr										MT/yr					
Hauling	4.6000e-004	0.0175	3.9000e-003	6.0000e-005	1.7000e-003	1.2000e-004	1.8300e-003	4.7000e-004	1.2000e-004	5.9000e-004						6.4121
Vendor	0.0000	0.0000	0.0000	0.0000	0.0000	0.0000	0.0000	0.0000	0.0000	0.0000						0.0000
Worker	6.9000e-004	5.7000e-004	7.4200e-003	2.0000e-005	2.1900e-003	1.0000e-005	2.2100e-003	5.8000e-004	1.0000e-005	6.0000e-004						1.8301
Total	**1.1500e-003**	**0.0181**	**0.0113**	**8.0000e-005**	**3.8900e-003**	**1.3000e-004**	**4.0400e-003**	**1.0500e-003**	**1.3000e-004**	**1.1900e-003**						**8.2422**

6th Street PARC In-River Planted Terracing - Construction Emissions Only - Los Angeles-South Coast County, Annual

EMFAC Off-Model Adjustment Factors for Gasoline Light Duty Vehicle to Account for the SAFE Vehicle Rule Applied

3.4 Grading - 2022

Mitigated Construction On-Site

	ROG	NOx	CO	SO2	Fugitive PM10	Exhaust PM10	PM10 Total	Fugitive PM2.5	Exhaust PM2.5	PM2.5 Total	Bio- CO2	NBio- CO2	Total CO2	CH4	N2O	CO2e
Category	tons/yr										MT/yr					
Fugitive Dust					0.0000	0.0000	0.0000	0.0000	0.0000	0.0000						0.0000
Off-Road	1.6100e-003	6.9800e-003	0.0733	1.3000e-004		3.0000e-005	3.0000e-005		3.0000e-005	3.0000e-005						11.6323
Total	**1.6100e-003**	**6.9800e-003**	**0.0733**	**1.3000e-004**	**0.0000**	**3.0000e-005**	**3.0000e-005**	**0.0000**	**3.0000e-005**	**3.0000e-005**						**11.6323**

Mitigated Construction Off-Site

	ROG	NOx	CO	SO2	Fugitive PM10	Exhaust PM10	PM10 Total	Fugitive PM2.5	Exhaust PM2.5	PM2.5 Total	Bio- CO2	NBio- CO2	Total CO2	CH4	N2O	CO2e
Category	tons/yr										MT/yr					
Hauling	4.6000e-004	0.0175	3.9000e-003	6.0000e-005	1.5000e-003	1.2000e-004	1.6200e-003	4.2000e-004	1.2000e-004	5.4000e-004						6.4121
Vendor	0.0000	0.0000	0.0000	0.0000	0.0000	0.0000	0.0000	0.0000	0.0000	0.0000						0.0000
Worker	6.9000e-004	5.7000e-004	7.4200e-003	2.0000e-005	1.8900e-003	1.0000e-005	1.9000e-003	5.1000e-004	1.0000e-005	5.2000e-004						1.8301
Total	**1.1500e-003**	**0.0181**	**0.0113**	**8.0000e-005**	**3.3900e-003**	**1.3000e-004**	**3.5200e-003**	**9.3000e-004**	**1.3000e-004**	**1.0600e-003**						**8.2422**

6th Street PARC In-River Planted Terracing - Construction Emissions Only - Los Angeles-South Coast County, Annual

EMFAC Off-Model Adjustment Factors for Gasoline Light Duty Vehicle to Account for the SAFE Vehicle Rule Applied

3.5 Building Construction 2 - 2022

Unmitigated Construction On-Site

	ROG	NOx	CO	SO2	Fugitive PM10	Exhaust PM10	PM10 Total	Fugitive PM2.5	Exhaust PM2.5	PM2.5 Total	Bio- CO2	NBio- CO2	Total CO2	CH4	N2O	CO2e
Category	tons/yr										MT/yr					
Off-Road	6.9500e-003	0.0706	0.0744	1.1000e-004		3.6800e-003	3.6800e-003		3.3900e-003	3.3900e-003						10.1196
Total	**6.9500e-003**	**0.0706**	**0.0744**	**1.1000e-004**		**3.6800e-003**	**3.6800e-003**		**3.3900e-003**	**3.3900e-003**						**10.1196**

Unmitigated Construction Off-Site

	ROG	NOx	CO	SO2	Fugitive PM10	Exhaust PM10	PM10 Total	Fugitive PM2.5	Exhaust PM2.5	PM2.5 Total	Bio- CO2	NBio- CO2	Total CO2	CH4	N2O	CO2e
Category	tons/yr										MT/yr					
Hauling	0.0000	0.0000	0.0000	0.0000	0.0000	0.0000	0.0000	0.0000	0.0000	0.0000						0.0000
Vendor	1.6000e-004	4.1100e-003	1.3600e-003	2.0000e-005	5.0000e-004	4.0000e-005	5.4000e-004	1.5000e-004	4.0000e-005	1.8000e-004						1.5946
Worker	6.2000e-004	5.1000e-004	6.6800e-003	2.0000e-005	1.9700e-003	1.0000e-005	1.9900e-003	5.2000e-004	1.0000e-005	5.4000e-004						1.6471
Total	**7.8000e-004**	**4.6200e-003**	**8.0400e-003**	**4.0000e-005**	**2.4700e-003**	**5.0000e-005**	**2.5300e-003**	**6.7000e-004**	**5.0000e-005**	**7.2000e-004**						**3.2417**

6th Street PARC In-River Planted Terracing - Construction Emissions Only - Los Angeles-South Coast County, Annual

EMFAC Off-Model Adjustment Factors for Gasoline Light Duty Vehicle to Account for the SAFE Vehicle Rule Applied

3.5 Building Construction 2 - 2022

Mitigated Construction On-Site

	ROG	NOx	CO	SO2	Fugitive PM10	Exhaust PM10	PM10 Total	Fugitive PM2.5	Exhaust PM2.5	PM2.5 Total	Bio- CO2	NBio- CO2	Total CO2	CH4	N2O	CO2e
Category	tons/yr										MT/yr					
Off-Road	1.4100e-003	6.1300e-003	0.0872	1.1000e-004		3.0000e-005	3.0000e-005		3.0000e-005	3.0000e-005						10.1196
Total	**1.4100e-003**	**6.1300e-003**	**0.0872**	**1.1000e-004**		**3.0000e-005**	**3.0000e-005**		**3.0000e-005**	**3.0000e-005**						**10.1196**

Mitigated Construction Off-Site

	ROG	NOx	CO	SO2	Fugitive PM10	Exhaust PM10	PM10 Total	Fugitive PM2.5	Exhaust PM2.5	PM2.5 Total	Bio- CO2	NBio- CO2	Total CO2	CH4	N2O	CO2e
Category	tons/yr										MT/yr					
Hauling	0.0000	0.0000	0.0000	0.0000	0.0000	0.0000	0.0000	0.0000	0.0000	0.0000						0.0000
Vendor	1.6000e-004	4.1100e-003	1.3600e-003	2.0000e-005	4.5000e-004	4.0000e-005	4.8000e-004	1.3000e-004	4.0000e-005	1.7000e-004						1.5946
Worker	6.2000e-004	5.1000e-004	6.6800e-003	2.0000e-005	1.7000e-003	1.0000e-005	1.7100e-003	4.6000e-004	1.0000e-005	4.7000e-004						1.6471
Total	**7.8000e-004**	**4.6200e-003**	**8.0400e-003**	**4.0000e-005**	**2.1500e-003**	**5.0000e-005**	**2.1900e-003**	**5.9000e-004**	**5.0000e-005**	**6.4000e-004**						**3.2417**

4.0 Operational Detail - Mobile

4.1 Mitigation Measures Mobile

	ROG	NOx	CO	SO2	Fugitive PM10	Exhaust PM10	PM10 Total	Fugitive PM2.5	Exhaust PM2.5	PM2.5 Total	Bio- CO2	NBio- CO2	Total CO2	CH4	N2O	CO2e
Category	tons/yr										MT/yr					
Mitigated	1.7500e-003	1.9700e-003	0.0176	4.0000e-005	3.7800e-003	3.0000e-005	3.8100e-003	1.0100e-003	3.0000e-005	1.0300e-003						3.4892
Unmitigated	1.7500e-003	1.9700e-003	0.0176	4.0000e-005	3.7800e-003	3.0000e-005	3.8100e-003	1.0100e-003	3.0000e-005	1.0300e-003						3.4892

4.2 Trip Summary Information

	Average Daily Trip Rate			Unmitigated	Mitigated
Land Use	Weekday	Saturday	Sunday	Annual VMT	Annual VMT
City Park	0.95	11.38	8.37	10,059	10,059
Total	0.95	11.38	8.37	10,059	10,059

4.3 Trip Type Information

	Miles			Trip %			Trip Purpose %		
Land Use	H-W or C-W	H-S or C-C	H-O or C-NW	H-W or C-W	H-S or C-C	H-O or C-NW	Primary	Diverted	Pass-by
City Park	16.60	8.40	6.90	33.00	48.00	19.00	66	28	6

4.4 Fleet Mix

Land Use	LDA	LDT1	LDT2	MDV	LHD1	LHD2	MHD	HHD	OBUS	UBUS	MCY	SBUS	MH
City Park	0.544785	0.062844	0.187478	0.127235	0.023089	0.006083	0.010475	0.008012	0.000925	0.000611	0.024394	0.000698	0.003374

6th Street PARC In-River Planted Terracing - Construction Emissions Only - Los Angeles-South Coast County, Annual

EMFAC Off-Model Adjustment Factors for Gasoline Light Duty Vehicle to Account for the SAFE Vehicle Rule Applied

5.0 Energy Detail

Historical Energy Use: N

5.1 Mitigation Measures Energy

	ROG	NOx	CO	SO2	Fugitive PM10	Exhaust PM10	PM10 Total	Fugitive PM2.5	Exhaust PM2.5	PM2.5 Total	Bio- CO2	NBio- CO2	Total CO2	CH4	N2O	CO2e
Category	tons/yr										MT/yr					
Electricity Mitigated						0.0000	0.0000		0.0000	0.0000						0.0000
Electricity Unmitigated						0.0000	0.0000		0.0000	0.0000						0.0000
NaturalGas Mitigated	0.0000	0.0000	0.0000	0.0000		0.0000	0.0000		0.0000	0.0000						0.0000
NaturalGas Unmitigated	0.0000	0.0000	0.0000	0.0000		0.0000	0.0000		0.0000	0.0000						0.0000

6th Street PARC In-River Planted Terracing - Construction Emissions Only - Los Angeles-South Coast County, Annual

EMFAC Off-Model Adjustment Factors for Gasoline Light Duty Vehicle to Account for the SAFE Vehicle Rule Applied

5.2 Energy by Land Use - NaturalGas

Unmitigated

	NaturalGas Use	ROG	NOx	CO	SO2	Fugitive PM10	Exhaust PM10	PM10 Total	Fugitive PM2.5	Exhaust PM2.5	PM2.5 Total	Bio- CO2	NBio- CO2	Total CO2	CH4	N2O	CO2e
Land Use	kBTU/yr	tons/yr										MT/yr					
City Park	0	0.0000	0.0000	0.0000	0.0000		0.0000	0.0000		0.0000	0.0000						0.0000
Total		**0.0000**	**0.0000**	**0.0000**	**0.0000**		**0.0000**	**0.0000**		**0.0000**	**0.0000**						**0.0000**

Mitigated

	NaturalGas Use	ROG	NOx	CO	SO2	Fugitive PM10	Exhaust PM10	PM10 Total	Fugitive PM2.5	Exhaust PM2.5	PM2.5 Total	Bio- CO2	NBio- CO2	Total CO2	CH4	N2O	CO2e
Land Use	kBTU/yr	tons/yr										MT/yr					
City Park	0	0.0000	0.0000	0.0000	0.0000		0.0000	0.0000		0.0000	0.0000						0.0000
Total		**0.0000**	**0.0000**	**0.0000**	**0.0000**		**0.0000**	**0.0000**		**0.0000**	**0.0000**						**0.0000**

5.3 Energy by Land Use - Electricity

Unmitigated

	Electricity Use	Total CO2	CH4	N2O	CO2e
Land Use	kWh/yr	MT/yr			
City Park	0				0.0000
Total					**0.0000**

Mitigated

	Electricity Use	Total CO2	CH4	N2O	CO2e
Land Use	kWh/yr	MT/yr			
City Park	0				0.0000
Total					**0.0000**

6.0 Area Detail

6.1 Mitigation Measures Area

6th Street PARC In-River Planted Terracing - Construction Emissions Only - Los Angeles-South Coast County, Annual

EMFAC Off-Model Adjustment Factors for Gasoline Light Duty Vehicle to Account for the SAFE Vehicle Rule Applied

	ROG	NOx	CO	SO2	Fugitive PM10	Exhaust PM10	PM10 Total	Fugitive PM2.5	Exhaust PM2.5	PM2.5 Total	Bio- CO2	NBio- CO2	Total CO2	CH4	N2O	CO2e
Category	tons/yr										MT/yr					
Mitigated	2.1000e-004	0.0000	1.0000e-005	0.0000		0.0000	0.0000		0.0000	0.0000						1.0000e-005
Unmitigated	2.1000e-004	0.0000	1.0000e-005	0.0000		0.0000	0.0000		0.0000	0.0000						1.0000e-005

6.2 Area by SubCategory

Unmitigated

	ROG	NOx	CO	SO2	Fugitive PM10	Exhaust PM10	PM10 Total	Fugitive PM2.5	Exhaust PM2.5	PM2.5 Total	Bio- CO2	NBio- CO2	Total CO2	CH4	N2O	CO2e
SubCategory	tons/yr										MT/yr					
Architectural Coating	0.0000					0.0000	0.0000		0.0000	0.0000						0.0000
Consumer Products	2.0000e-004					0.0000	0.0000		0.0000	0.0000						0.0000
Landscaping	0.0000	0.0000	1.0000e-005	0.0000		0.0000	0.0000		0.0000	0.0000						1.0000e-005
Total	**2.0000e-004**	**0.0000**	**1.0000e-005**	**0.0000**		**0.0000**	**0.0000**		**0.0000**	**0.0000**						**1.0000e-005**

6th Street PARC In-River Planted Terracing - Construction Emissions Only - Los Angeles-South Coast County, Annual

EMFAC Off-Model Adjustment Factors for Gasoline Light Duty Vehicle to Account for the SAFE Vehicle Rule Applied

6.2 Area by SubCategory

Mitigated

	ROG	NOx	CO	SO2	Fugitive PM10	Exhaust PM10	PM10 Total	Fugitive PM2.5	Exhaust PM2.5	PM2.5 Total	Bio- CO2	NBio- CO2	Total CO2	CH4	N2O	CO2e
SubCategory	tons/yr										MT/yr					
Architectural Coating	0.0000					0.0000	0.0000		0.0000	0.0000						0.0000
Consumer Products	2.0000e-004					0.0000	0.0000		0.0000	0.0000						0.0000
Landscaping	0.0000	0.0000	1.0000e-005	0.0000		0.0000	0.0000		0.0000	0.0000						1.0000e-005
Total	**2.0000e-004**	**0.0000**	**1.0000e-005**	**0.0000**		**0.0000**	**0.0000**		**0.0000**	**0.0000**						**1.0000e-005**

7.0 Water Detail

7.1 Mitigation Measures Water

Use Water Efficient Irrigation System

6th Street PARC In-River Planted Terracing - Construction Emissions Only - Los Angeles-South Coast County, Annual

EMFAC Off-Model Adjustment Factors for Gasoline Light Duty Vehicle to Account for the SAFE Vehicle Rule Applied

	Total CO2	CH4	N2O	CO2e
Category	MT/yr			
Mitigated				1.9564
Unmitigated				2.0835

7.2 Water by Land Use

Unmitigated

	Indoor/Outdoor Use	Total CO2	CH4	N2O	CO2e
Land Use	Mgal	MT/yr			
City Park	0 / 0.595741				2.0835
Total					**2.0835**

EMFAC Off-Model Adjustment Factors for Gasoline Light Duty Vehicle to Account for the SAFE Vehicle Rule Applied

7.2 Water by Land Use

Mitigated

	Indoor/Outdoor Use	Total CO2	CH4	N2O	CO2e
Land Use	Mgal	MT/yr			
City Park	0 / 0.5594				1.9564
Total					**1.9564**

8.0 Waste Detail

8.1 Mitigation Measures Waste

Category/Year

	Total CO2	CH4	N2O	CO2e
	MT/yr			
Mitigated				0.0201
Unmitigated				0.0201

EMFAC Off-Model Adjustment Factors for Gasoline Light Duty Vehicle to Account for the SAFE Vehicle Rule Applied

8.2 Waste by Land Use

Unmitigated

	Waste Disposed	Total CO2	CH4	N2O	CO2e
Land Use	tons	MT/yr			
City Park	0.04				0.0201
Total					**0.0201**

Mitigated

	Waste Disposed	Total CO2	CH4	N2O	CO2e
Land Use	tons	MT/yr			
City Park	0.04				0.0201
Total					**0.0201**

9.0 Operational Offroad

Equipment Type	Number	Hours/Day	Days/Year	Horse Power	Load Factor	Fuel Type

6th Street PARC In-River Planted Terracing - Construction Emissions Only - Los Angeles-South Coast County, Annual

EMFAC Off-Model Adjustment Factors for Gasoline Light Duty Vehicle to Account for the SAFE Vehicle Rule Applied

10.0 Stationary Equipment

Fire Pumps and Emergency Generators

Equipment Type	Number	Hours/Day	Hours/Year	Horse Power	Load Factor	Fuel Type

Boilers

Equipment Type	Number	Heat Input/Day	Heat Input/Year	Boiler Rating	Fuel Type

User Defined Equipment

Equipment Type	Number

11.0 Vegetation

EMFAC Off-Model Adjustment Factors for Gasoline Light Duty Vehicle to Account for the SAFE Vehicle Rule Applied

6th Street PARC In-River Planted Terracing - Construction Emissions Only

Los Angeles-South Coast County, Summer

1.0 Project Characteristics

1.1 Land Usage

Land Uses	Size	Metric	Lot Acreage	Floor Surface Area	Population
City Park	0.50	Acre	0.50	21,780.00	0

1.2 Other Project Characteristics

Urbanization	Urban	**Wind Speed (m/s)**	2.2	**Precipitation Freq (Days)**	33
Climate Zone	12			**Operational Year**	2023
Utility Company	Los Angeles Department of Water & Power				
CO2 Intensity (lb/MWhr)	691.98	**CH4 Intensity (lb/MWhr)**	0.033	**N2O Intensity (lb/MWhr)**	0.004

1.3 User Entered Comments & Non-Default Data

Project Characteristics - In-River Terracing updated to 2020 utility intensity factor.

Land Use - Land use based on in-river planted terracing information provided.

Construction Phase - Construction phases based on information provided.

Off-road Equipment - Off-road equipment based on information provided.

Off-road Equipment - Off-road equipment based on information provided.

Off-road Equipment - Off-road equipment based on information provided.

Off-road Equipment - Off-road equipment based on information provided.

Off-road Equipment - Off-road equipment based on information provided.

Trips and VMT - Total # trips hauling based on information provided.

Grading - Material imported based on information provided.

Vehicle Trips - .

6th Street PARC In-River Planted Terracing - Construction Emissions Only - Los Angeles-South Coast County, Summer

EMFAC Off-Model Adjustment Factors for Gasoline Light Duty Vehicle to Account for the SAFE Vehicle Rule Applied

Construction Off-road Equipment Mitigation - Mitigation assumes T4 offroad equipment with level 3 DPF, 55% CE for watering unpaved travel surfaces/roads, 61% CE for
watering exposed surfaces, 15 mph speed limit for onsite unpaved travel surfaces/roads, clean track out CE 16%.

Water Mitigation - WUW-1 based on information provided.

Table Name	Column Name	Default Value	New Value
tblConstDustMitigation	CleanPavedRoadPercentReduction	0	16
tblConstDustMitigation	WaterUnpavedRoadVehicleSpeed	0	15
tblConstEquipMitigation	DPF	No Change	Level 3
tblConstEquipMitigation	DPF	No Change	Level 3
tblConstEquipMitigation	DPF	No Change	Level 3
tblConstEquipMitigation	DPF	No Change	Level 3
tblConstEquipMitigation	DPF	No Change	Level 3
tblConstEquipMitigation	DPF	No Change	Level 3
tblConstEquipMitigation	DPF	No Change	Level 3
tblConstEquipMitigation	DPF	No Change	Level 3
tblConstEquipMitigation	DPF	No Change	Level 3
tblConstEquipMitigation	DPF	No Change	Level 3
tblConstEquipMitigation	DPF	No Change	Level 3
tblConstEquipMitigation	NumberOfEquipmentMitigated	0.00	6.00
tblConstEquipMitigation	NumberOfEquipmentMitigated	0.00	2.00
tblConstEquipMitigation	NumberOfEquipmentMitigated	0.00	3.00
tblConstEquipMitigation	NumberOfEquipmentMitigated	0.00	4.00
tblConstEquipMitigation	NumberOfEquipmentMitigated	0.00	2.00
tblConstEquipMitigation	NumberOfEquipmentMitigated	0.00	4.00
tblConstEquipMitigation	NumberOfEquipmentMitigated	0.00	2.00
tblConstEquipMitigation	NumberOfEquipmentMitigated	0.00	2.00
tblConstEquipMitigation	Tier	No Change	Tier 4 Final
tblConstEquipMitigation	Tier	No Change	Tier 4 Final
tblConstEquipMitigation	Tier	No Change	Tier 4 Final
tblConstEquipMitigation	Tier	No Change	Tier 4 Final

6th Street PARC In-River Planted Terracing - Construction Emissions Only - Los Angeles-South Coast County, Summer

EMFAC Off-Model Adjustment Factors for Gasoline Light Duty Vehicle to Account for the SAFE Vehicle Rule Applied

tblConstEquipMitigation	Tier	No Change	Tier 4 Final
tblConstEquipMitigation	Tier	No Change	Tier 4 Final
tblConstEquipMitigation	Tier	No Change	Tier 4 Final
tblConstEquipMitigation	Tier	No Change	Tier 4 Final
tblConstEquipMitigation	Tier	No Change	Tier 4 Final
tblConstEquipMitigation	Tier	No Change	Tier 4 Final
tblConstEquipMitigation	Tier	No Change	Tier 4 Final
tblConstructionPhase	NumDays	100.00	40.00
tblConstructionPhase	NumDays	100.00	40.00
tblConstructionPhase	NumDays	2.00	20.00
tblConstructionPhase	NumDays	1.00	40.00
tblGrading	AcresOfGrading	0.00	0.50
tblGrading	MaterialImported	0.00	2,000.00
tblOffRoadEquipment	HorsePower	221.00	81.00
tblOffRoadEquipment	HorsePower	9.00	300.00
tblOffRoadEquipment	HorsePower	231.00	226.00
tblOffRoadEquipment	HorsePower	231.00	226.00
tblOffRoadEquipment	HorsePower	16.00	400.00
tblOffRoadEquipment	HorsePower	172.00	171.00
tblOffRoadEquipment	HorsePower	172.00	167.00
tblOffRoadEquipment	LoadFactor	0.42	0.40
tblOffRoadEquipment	OffRoadEquipmentUnitAmount	1.00	0.00
tblOffRoadEquipment	OffRoadEquipmentUnitAmount	1.00	0.00
tblOffRoadEquipment	OffRoadEquipmentUnitAmount	1.00	0.00
tblOffRoadEquipment	OffRoadEquipmentUnitAmount	2.00	0.00
tblOffRoadEquipment	OffRoadEquipmentUnitAmount	2.00	0.00
tblOffRoadEquipment	OffRoadEquipmentUnitAmount	1.00	0.00
tblOffRoadEquipment	OffRoadEquipmentUnitAmount	1.00	0.00
tblOffRoadEquipment	OffRoadEquipmentUnitAmount	2.00	0.00

EMFAC Off-Model Adjustment Factors for Gasoline Light Duty Vehicle to Account for the SAFE Vehicle Rule Applied

tblOffRoadEquipment	OffRoadEquipmentUnitAmount	2.00	0.00
tblOffRoadEquipment	OffRoadEquipmentUnitAmount	1.00	2.00
tblOffRoadEquipment	OffRoadEquipmentUnitAmount	1.00	0.00
tblOffRoadEquipment	UsageHours	6.00	1.00
tblOffRoadEquipment	UsageHours	7.00	6.00
tblTripsAndVMT	HaulingTripNumber	0.00	160.00
tblVehicleTrips	ST_TR	1.96	22.75
tblVehicleTrips	SU_TR	2.19	16.74
tblVehicleTrips	WD_TR	0.78	1.89

2.0 Emissions Summary

6th Street PARC In-River Planted Terracing - Construction Emissions Only - Los Angeles-South Coast County, Summer

EMFAC Off-Model Adjustment Factors for Gasoline Light Duty Vehicle to Account for the SAFE Vehicle Rule Applied

2.1 Overall Construction (Maximum Daily Emission)

Unmitigated Construction

	ROG	NOx	CO	SO2	Fugitive PM10	Exhaust PM10	PM10 Total	Fugitive PM2.5	Exhaust PM2.5	PM2.5 Total	Bio- CO2	NBio- CO2	Total CO2	CH4	N2O	CO2e
Year	lb/day										lb/day					
2022	2.0732	22.2045	26.3011	0.0415	0.3968	1.0815	1.4077	0.1068	0.9949	1.0794						4,064.0762
Maximum	**2.0732**	**22.2045**	**26.3011**	**0.0415**	**0.3968**	**1.0815**	**1.4077**	**0.1068**	**0.9949**	**1.0794**						**4,064.0762**

Mitigated Construction

	ROG	NOx	CO	SO2	Fugitive PM10	Exhaust PM10	PM10 Total	Fugitive PM2.5	Exhaust PM2.5	PM2.5 Total	Bio- CO2	NBio- CO2	Total CO2	CH4	N2O	CO2e
Year	lb/day										lb/day					
2022	0.5784	2.4109	29.9291	0.0415	0.3448	0.0170	0.3618	0.0940	0.0164	0.1104						4,064.0762
Maximum	**0.5784**	**2.4109**	**29.9291**	**0.0415**	**0.3448**	**0.0170**	**0.3618**	**0.0940**	**0.0164**	**0.1104**						**4,064.0762**

	ROG	NOx	CO	SO2	Fugitive PM10	Exhaust PM10	PM10 Total	Fugitive PM2.5	Exhaust PM2.5	PM2.5 Total	Bio- CO2	NBio-CO2	Total CO2	CH4	N20	CO2e
Percent Reduction	**72.10**	**89.14**	**-13.79**	**0.00**	**13.11**	**98.43**	**74.30**	**11.97**	**98.36**	**89.77**	**0.00**	**0.00**	**0.00**	**0.00**	**0.00**	**0.00**

6th Street PARC In-River Planted Terracing - Construction Emissions Only - Los Angeles-South Coast County, Summer

EMFAC Off-Model Adjustment Factors for Gasoline Light Duty Vehicle to Account for the SAFE Vehicle Rule Applied

2.2 Overall Operational

Unmitigated Operational

	ROG	NOx	CO	SO2	Fugitive PM10	Exhaust PM10	PM10 Total	Fugitive PM2.5	Exhaust PM2.5	PM2.5 Total	Bio- CO2	NBio- CO2	Total CO2	CH4	N2O	CO2e
Category	lb/day										lb/day					
Area	1.1300e-003	0.0000	5.0000e-005	0.0000		0.0000	0.0000		0.0000	0.0000						1.2000e-004
Energy	0.0000	0.0000	0.0000	0.0000		0.0000	0.0000		0.0000	0.0000						0.0000
Mobile	0.0324	0.0321	0.3176	6.8000e-004	0.0689	4.9000e-004	0.0694	0.0184	4.6000e-004	0.0188						70.9798
Total	**0.0336**	**0.0321**	**0.3176**	**6.8000e-004**	**0.0689**	**4.9000e-004**	**0.0694**	**0.0184**	**4.6000e-004**	**0.0188**						**70.9799**

Mitigated Operational

	ROG	NOx	CO	SO2	Fugitive PM10	Exhaust PM10	PM10 Total	Fugitive PM2.5	Exhaust PM2.5	PM2.5 Total	Bio- CO2	NBio- CO2	Total CO2	CH4	N2O	CO2e
Category	lb/day										lb/day					
Area	1.1300e-003	0.0000	5.0000e-005	0.0000		0.0000	0.0000		0.0000	0.0000						1.2000e-004
Energy	0.0000	0.0000	0.0000	0.0000		0.0000	0.0000		0.0000	0.0000						0.0000
Mobile	0.0324	0.0321	0.3176	6.8000e-004	0.0689	4.9000e-004	0.0694	0.0184	4.6000e-004	0.0188						70.9798
Total	**0.0336**	**0.0321**	**0.3176**	**6.8000e-004**	**0.0689**	**4.9000e-004**	**0.0694**	**0.0184**	**4.6000e-004**	**0.0188**						**70.9799**

6th Street PARC In-River Planted Terracing - Construction Emissions Only - Los Angeles-South Coast County, Summer

EMFAC Off-Model Adjustment Factors for Gasoline Light Duty Vehicle to Account for the SAFE Vehicle Rule Applied

	ROG	NOx	CO	SO2	Fugitive PM10	Exhaust PM10	PM10 Total	Fugitive PM2.5	Exhaust PM2.5	PM2.5 Total	Bio- CO2	NBio-CO2	Total CO2	CH4	N20	CO2e
Percent Reduction	0.00	0.00	0.00	0.00	0.00	0.00	0.00	0.00	0.00	0.00	0.00	0.00	0.00	0.00	0.00	0.00

3.0 Construction Detail

Construction Phase

Phase Number	Phase Name	Phase Type	Start Date	End Date	Num Days Week	Num Days	Phase Description
1	Site Preparation	Site Preparation	1/3/2022	2/25/2022	5	40	
2	Building Construction 1	Building Construction	2/26/2022	4/22/2022	5	40	Terrace Box Construction
3	Grading	Grading	4/23/2022	5/20/2022	5	20	Soil Import and Planting
4	Building Construction 2	Building Construction	5/21/2022	7/15/2022	5	40	Soil Import and Planting

Acres of Grading (Site Preparation Phase): 0.5

Acres of Grading (Grading Phase): 0

Acres of Paving: 0

Residential Indoor: 0; Residential Outdoor: 0; Non-Residential Indoor: 0; Non-Residential Outdoor: 0; Striped Parking Area: 0 (Architectural Coating – sqft)

OffRoad Equipment

Phase Name	Offroad Equipment Type	Amount	Usage Hours	Horse Power	Load Factor
Site Preparation	Bore/Drill Rigs	6	8.00	81	0.50
Site Preparation	Cranes	1	4.00	226	0.29
Site Preparation	Forklifts	2	8.00	89	0.20
Site Preparation	Graders	0	8.00	187	0.41
Site Preparation	Other Construction Equipment	2	8.00	171	0.42
Site Preparation	Tractors/Loaders/Backhoes	0	8.00	97	0.37
Building Construction 1	Cement and Mortar Mixers	2	6.00	300	0.56

EMFAC Off-Model Adjustment Factors for Gasoline Light Duty Vehicle to Account for the SAFE Vehicle Rule Applied

Building Construction 1	Cranes	0	4.00	231	0.29
Building Construction 1	Cranes	0	4.00	231	0.29
Building Construction 1	Forklifts	0	6.00	89	0.20
Building Construction 1	Pumps	2	4.00	84	0.74
Building Construction 1	Tractors/Loaders/Backhoes	0	8.00	97	0.37
Grading	Concrete/Industrial Saws	0	8.00	81	0.73
Grading	Cranes	2	6.00	226	0.29
Grading	Dumpers/Tenders	4	2.00	400	0.38
Grading	Rubber Tired Dozers	0	1.00	247	0.40
Grading	Tractors/Loaders/Backhoes	2	6.00	97	0.37
Building Construction 2	Cranes	0	4.00	231	0.29
Building Construction 2	Forklifts	0	6.00	89	0.20
Building Construction 2	Other Construction Equipment	2	4.00	167	0.40
Building Construction 2	Tractors/Loaders/Backhoes	0	8.00	97	0.37

Trips and VMT

Phase Name	Offroad Equipment Count	Worker Trip Number	Vendor Trip Number	Hauling Trip Number	Worker Trip Length	Vendor Trip Length	Hauling Trip Length	Worker Vehicle Class	Vendor Vehicle Class	Hauling Vehicle Class
Site Preparation	11	28.00	0.00	0.00	14.70	6.90	20.00	LD_Mix	HDT_Mix	HHDT
Building Construction 1	4	9.00	4.00	160.00	14.70	6.90	20.00	LD_Mix	HDT_Mix	HHDT
Grading	8	20.00	0.00	198.00	14.70	6.90	20.00	LD_Mix	HDT_Mix	HHDT
Building Construction 2	2	9.00	4.00	0.00	14.70	6.90	20.00	LD_Mix	HDT_Mix	HHDT

3.1 Mitigation Measures Construction

Use Cleaner Engines for Construction Equipment

Use DPF for Construction Equipment

Use Soil Stabilizer

Water Exposed Area

EMFAC Off-Model Adjustment Factors for Gasoline Light Duty Vehicle to Account for the SAFE Vehicle Rule Applied

Reduce Vehicle Speed on Unpaved Roads

Clean Paved Roads

3.2 Site Preparation - 2022

Unmitigated Construction On-Site

	ROG	NOx	CO	SO2	Fugitive PM10	Exhaust PM10	PM10 Total	Fugitive PM2.5	Exhaust PM2.5	PM2.5 Total	Bio- CO2	NBio- CO2	Total CO2	CH4	N2O	CO2e
Category	lb/day										lb/day					
Fugitive Dust					0.0133	0.0000	0.0133	1.4300e-003	0.0000	1.4300e-003						0.0000
Off-Road	1.9763	22.1338	25.1975	0.0386		1.0794	1.0794		0.9931	0.9931						3,770.5556
Total	**1.9763**	**22.1338**	**25.1975**	**0.0386**	**0.0133**	**1.0794**	**1.0927**	**1.4300e-003**	**0.9931**	**0.9945**						**3,770.5556**

6th Street PARC In-River Planted Terracing - Construction Emissions Only - Los Angeles-South Coast County, Summer

EMFAC Off-Model Adjustment Factors for Gasoline Light Duty Vehicle to Account for the SAFE Vehicle Rule Applied

3.2 Site Preparation - 2022

Unmitigated Construction Off-Site

	ROG	NOx	CO	SO2	Fugitive PM10	Exhaust PM10	PM10 Total	Fugitive PM2.5	Exhaust PM2.5	PM2.5 Total	Bio- CO2	NBio- CO2	Total CO2	CH4	N2O	CO2e
Category	lb/day										lb/day					
Hauling	0.0000	0.0000	0.0000	0.0000	0.0000	0.0000	0.0000	0.0000	0.0000	0.0000						0.0000
Vendor	0.0000	0.0000	0.0000	0.0000	0.0000	0.0000	0.0000	0.0000	0.0000	0.0000						0.0000
Worker	0.0969	0.0708	1.1036	2.8600e-003	0.3130	2.0100e-003	0.3150	0.0830	1.8500e-003	0.0849						293.5206
Total	**0.0969**	**0.0708**	**1.1036**	**2.8600e-003**	**0.3130**	**2.0100e-003**	**0.3150**	**0.0830**	**1.8500e-003**	**0.0849**						**293.5206**

Mitigated Construction On-Site

	ROG	NOx	CO	SO2	Fugitive PM10	Exhaust PM10	PM10 Total	Fugitive PM2.5	Exhaust PM2.5	PM2.5 Total	Bio- CO2	NBio- CO2	Total CO2	CH4	N2O	CO2e
Category	lb/day										lb/day					
Fugitive Dust					5.1700e-003	0.0000	5.1700e-003	5.6000e-004	0.0000	5.6000e-004						0.0000
Off-Road	0.4815	2.0865	28.8256	0.0386		9.6300e-003	9.6300e-003		9.6300e-003	9.6300e-003						3,770.5556
Total	**0.4815**	**2.0865**	**28.8256**	**0.0386**	**5.1700e-003**	**9.6300e-003**	**0.0148**	**5.6000e-004**	**9.6300e-003**	**0.0102**						**3,770.5556**

3.2 Site Preparation - 2022

Mitigated Construction Off-Site

	ROG	NOx	CO	SO2	Fugitive PM10	Exhaust PM10	PM10 Total	Fugitive PM2.5	Exhaust PM2.5	PM2.5 Total	Bio- CO2	NBio- CO2	Total CO2	CH4	N2O	CO2e
Category	lb/day										lb/day					
Hauling	0.0000	0.0000	0.0000	0.0000	0.0000	0.0000	0.0000	0.0000	0.0000	0.0000						0.0000
Vendor	0.0000	0.0000	0.0000	0.0000	0.0000	0.0000	0.0000	0.0000	0.0000	0.0000						0.0000
Worker	0.0969	0.0708	1.1036	2.8600e-003	0.2694	2.0100e-003	0.2715	0.0723	1.8500e-003	0.0742						293.5206
Total	**0.0969**	**0.0708**	**1.1036**	**2.8600e-003**	**0.2694**	**2.0100e-003**	**0.2715**	**0.0723**	**1.8500e-003**	**0.0742**						**293.5206**

3.3 Building Construction 1 - 2022

Unmitigated Construction On-Site

	ROG	NOx	CO	SO2	Fugitive PM10	Exhaust PM10	PM10 Total	Fugitive PM2.5	Exhaust PM2.5	PM2.5 Total	Bio- CO2	NBio- CO2	Total CO2	CH4	N2O	CO2e
Category	lb/day										lb/day					
Off-Road	0.3519	2.9688	3.7319	6.5800e-003		0.1557	0.1557		0.1557	0.1557						623.8294
Total	**0.3519**	**2.9688**	**3.7319**	**6.5800e-003**		**0.1557**	**0.1557**		**0.1557**	**0.1557**						**623.8294**

6th Street PARC In-River Planted Terracing - Construction Emissions Only - Los Angeles-South Coast County, Summer

EMFAC Off-Model Adjustment Factors for Gasoline Light Duty Vehicle to Account for the SAFE Vehicle Rule Applied

3.3 Building Construction 1 - 2022

Unmitigated Construction Off-Site

	ROG	NOx	CO	SO2	Fugitive PM10	Exhaust PM10	PM10 Total	Fugitive PM2.5	Exhaust PM2.5	PM2.5 Total	Bio- CO2	NBio- CO2	Total CO2	CH4	N2O	CO2e
Category	lb/day										lb/day					
Hauling	0.0186	0.6718	0.1566	2.4900e-003	0.0700	4.9900e-003	0.0750	0.0192	4.7800e-003	0.0240						285.5471
Vendor	7.8700e-003	0.1959	0.0672	7.8000e-004	0.0256	1.8700e-003	0.0275	7.3800e-003	1.7900e-003	9.1600e-003						87.8701
Worker	0.0312	0.0227	0.3547	9.2000e-004	0.1006	6.4000e-004	0.1012	0.0267	5.9000e-004	0.0273						94.3459
Total	**0.0577**	**0.8905**	**0.5785**	**4.1900e-003**	**0.1962**	**7.5000e-003**	**0.2037**	**0.0533**	**7.1600e-003**	**0.0604**						**467.7630**

Mitigated Construction On-Site

	ROG	NOx	CO	SO2	Fugitive PM10	Exhaust PM10	PM10 Total	Fugitive PM2.5	Exhaust PM2.5	PM2.5 Total	Bio- CO2	NBio- CO2	Total CO2	CH4	N2O	CO2e
Category	lb/day										lb/day					
Off-Road	0.0658	0.2850	4.0564	6.5800e-003		1.3200e-003	1.3200e-003		1.3200e-003	1.3200e-003						623.8294
Total	**0.0658**	**0.2850**	**4.0564**	**6.5800e-003**		**1.3200e-003**	**1.3200e-003**		**1.3200e-003**	**1.3200e-003**						**623.8294**

3.3 Building Construction 1 - 2022

Mitigated Construction Off-Site

	ROG	NOx	CO	SO2	Fugitive PM10	Exhaust PM10	PM10 Total	Fugitive PM2.5	Exhaust PM2.5	PM2.5 Total	Bio- CO2	NBio- CO2	Total CO2	CH4	N2O	CO2e
Category	lb/day										lb/day					
Hauling	0.0186	0.6718	0.1566	2.4900e-003	0.0616	4.9900e-003	0.0665	0.0171	4.7800e-003	0.0219						285.5471
Vendor	7.8700e-003	0.1959	0.0672	7.8000e-004	0.0227	1.8700e-003	0.0246	6.6600e-003	1.7900e-003	8.4500e-003						87.8701
Worker	0.0312	0.0227	0.3547	9.2000e-004	0.0866	6.4000e-004	0.0873	0.0232	5.9000e-004	0.0238						94.3459
Total	**0.0577**	**0.8905**	**0.5785**	**4.1900e-003**	**0.1709**	**7.5000e-003**	**0.1784**	**0.0470**	**7.1600e-003**	**0.0542**						**467.7630**

3.4 Grading - 2022

Unmitigated Construction On-Site

	ROG	NOx	CO	SO2	Fugitive PM10	Exhaust PM10	PM10 Total	Fugitive PM2.5	Exhaust PM2.5	PM2.5 Total	Bio- CO2	NBio- CO2	Total CO2	CH4	N2O	CO2e
Category	lb/day										lb/day					
Fugitive Dust					0.0000	0.0000	0.0000	0.0000	0.0000	0.0000						0.0000
Off-Road	0.7944	8.6540	6.1340	0.0131		0.3901	0.3901		0.3589	0.3589						1,282.2446
Total	**0.7944**	**8.6540**	**6.1340**	**0.0131**	**0.0000**	**0.3901**	**0.3901**	**0.0000**	**0.3589**	**0.3589**						**1,282.2446**

6th Street PARC In-River Planted Terracing - Construction Emissions Only - Los Angeles-South Coast County, Summer

EMFAC Off-Model Adjustment Factors for Gasoline Light Duty Vehicle to Account for the SAFE Vehicle Rule Applied

3.4 Grading - 2022

Unmitigated Construction Off-Site

	ROG	NOx	CO	SO2	Fugitive PM10	Exhaust PM10	PM10 Total	Fugitive PM2.5	Exhaust PM2.5	PM2.5 Total	Bio- CO2	NBio- CO2	Total CO2	CH4	N2O	CO2e
Category	lb/day										lb/day					
Hauling	0.0461	1.6627	0.3877	6.1500e-003	0.1733	0.0124	0.1856	0.0475	0.0118	0.0593						706.7290
Vendor	0.0000	0.0000	0.0000	0.0000	0.0000	0.0000	0.0000	0.0000	0.0000	0.0000						0.0000
Worker	0.0692	0.0505	0.7883	2.0400e-003	0.2236	1.4300e-003	0.2250	0.0593	1.3200e-003	0.0606						209.6576
Total	**0.1153**	**1.7132**	**1.1759**	**8.1900e-003**	**0.3968**	**0.0138**	**0.4106**	**0.1068**	**0.0131**	**0.1199**						**916.3866**

Mitigated Construction On-Site

	ROG	NOx	CO	SO2	Fugitive PM10	Exhaust PM10	PM10 Total	Fugitive PM2.5	Exhaust PM2.5	PM2.5 Total	Bio- CO2	NBio- CO2	Total CO2	CH4	N2O	CO2e
Category	lb/day										lb/day					
Fugitive Dust					0.0000	0.0000	0.0000	0.0000	0.0000	0.0000						0.0000
Off-Road	0.1610	0.6977	7.3277	0.0131		3.2200e-003	3.2200e-003		3.2200e-003	3.2200e-003						1,282.2445
Total	**0.1610**	**0.6977**	**7.3277**	**0.0131**	**0.0000**	**3.2200e-003**	**3.2200e-003**	**0.0000**	**3.2200e-003**	**3.2200e-003**						**1,282.2445**

3.4 Grading - 2022

Mitigated Construction Off-Site

	ROG	NOx	CO	SO2	Fugitive PM10	Exhaust PM10	PM10 Total	Fugitive PM2.5	Exhaust PM2.5	PM2.5 Total	Bio- CO2	NBio- CO2	Total CO2	CH4	N2O	CO2e
Category	lb/day										lb/day					
Hauling	0.0461	1.6627	0.3877	6.1500e-003	0.1523	0.0124	0.1647	0.0424	0.0118	0.0542						706.7290
Vendor	0.0000	0.0000	0.0000	0.0000	0.0000	0.0000	0.0000	0.0000	0.0000	0.0000						0.0000
Worker	0.0692	0.0505	0.7883	2.0400e-003	0.1925	1.4300e-003	0.1939	0.0517	1.3200e-003	0.0530						209.6576
Total	**0.1153**	**1.7132**	**1.1759**	**8.1900e-003**	**0.3448**	**0.0138**	**0.3586**	**0.0940**	**0.0131**	**0.1072**						**916.3866**

3.5 Building Construction 2 - 2022

Unmitigated Construction On-Site

	ROG	NOx	CO	SO2	Fugitive PM10	Exhaust PM10	PM10 Total	Fugitive PM2.5	Exhaust PM2.5	PM2.5 Total	Bio- CO2	NBio- CO2	Total CO2	CH4	N2O	CO2e
Category	lb/day										lb/day					
Off-Road	0.3477	3.5278	3.7175	5.7100e-003		0.1841	0.1841		0.1694	0.1694						557.7477
Total	**0.3477**	**3.5278**	**3.7175**	**5.7100e-003**		**0.1841**	**0.1841**		**0.1694**	**0.1694**						**557.7477**

6th Street PARC In-River Planted Terracing - Construction Emissions Only - Los Angeles-South Coast County, Summer

EMFAC Off-Model Adjustment Factors for Gasoline Light Duty Vehicle to Account for the SAFE Vehicle Rule Applied

3.5 Building Construction 2 - 2022

Unmitigated Construction Off-Site

	ROG	NOx	CO	SO2	Fugitive PM10	Exhaust PM10	PM10 Total	Fugitive PM2.5	Exhaust PM2.5	PM2.5 Total	Bio- CO2	NBio- CO2	Total CO2	CH4	N2O	CO2e
Category	lb/day										lb/day					
Hauling	0.0000	0.0000	0.0000	0.0000	0.0000	0.0000	0.0000	0.0000	0.0000	0.0000						0.0000
Vendor	7.8700e-003	0.1959	0.0672	7.8000e-004	0.0256	1.8700e-003	0.0275	7.3800e-003	1.7900e-003	9.1600e-003						87.8701
Worker	0.0312	0.0227	0.3547	9.2000e-004	0.1006	6.4000e-004	0.1012	0.0267	5.9000e-004	0.0273						94.3459
Total	**0.0390**	**0.2187**	**0.4219**	**1.7000e-003**	**0.1262**	**2.5100e-003**	**0.1287**	**0.0341**	**2.3800e-003**	**0.0364**						**182.2160**

Mitigated Construction On-Site

	ROG	NOx	CO	SO2	Fugitive PM10	Exhaust PM10	PM10 Total	Fugitive PM2.5	Exhaust PM2.5	PM2.5 Total	Bio- CO2	NBio- CO2	Total CO2	CH4	N2O	CO2e
Category	lb/day										lb/day					
Off-Road	0.0707	0.3063	4.3592	5.7100e-003		1.4100e-003	1.4100e-003		1.4100e-003	1.4100e-003						557.7477
Total	**0.0707**	**0.3063**	**4.3592**	**5.7100e-003**		**1.4100e-003**	**1.4100e-003**		**1.4100e-003**	**1.4100e-003**						**557.7477**

6th Street PARC In-River Planted Terracing - Construction Emissions Only - Los Angeles-South Coast County, Summer

EMFAC Off-Model Adjustment Factors for Gasoline Light Duty Vehicle to Account for the SAFE Vehicle Rule Applied

3.5 Building Construction 2 - 2022

Mitigated Construction Off-Site

	ROG	NOx	CO	SO2	Fugitive PM10	Exhaust PM10	PM10 Total	Fugitive PM2.5	Exhaust PM2.5	PM2.5 Total	Bio- CO2	NBio- CO2	Total CO2	CH4	N2O	CO2e
Category	lb/day										lb/day					
Hauling	0.0000	0.0000	0.0000	0.0000	0.0000	0.0000	0.0000	0.0000	0.0000	0.0000						0.0000
Vendor	7.8700e-003	0.1959	0.0672	7.8000e-004	0.0227	1.8700e-003	0.0246	6.6600e-003	1.7900e-003	8.4500e-003						87.8701
Worker	0.0312	0.0227	0.3547	9.2000e-004	0.0866	6.4000e-004	0.0873	0.0232	5.9000e-004	0.0238						94.3459
Total	**0.0390**	**0.2187**	**0.4219**	**1.7000e-003**	**0.1093**	**2.5100e-003**	**0.1118**	**0.0299**	**2.3800e-003**	**0.0323**						**182.2160**

4.0 Operational Detail - Mobile

4.1 Mitigation Measures Mobile

	ROG	NOx	CO	SO2	Fugitive PM10	Exhaust PM10	PM10 Total	Fugitive PM2.5	Exhaust PM2.5	PM2.5 Total	Bio- CO2	NBio- CO2	Total CO2	CH4	N2O	CO2e
Category	lb/day										lb/day					
Mitigated	0.0324	0.0321	0.3176	6.8000e-004	0.0689	4.9000e-004	0.0694	0.0184	4.6000e-004	0.0188						70.9798
Unmitigated	0.0324	0.0321	0.3176	6.8000e-004	0.0689	4.9000e-004	0.0694	0.0184	4.6000e-004	0.0188						70.9798

4.2 Trip Summary Information

	Average Daily Trip Rate			Unmitigated	Mitigated
Land Use	Weekday	Saturday	Sunday	Annual VMT	Annual VMT
City Park	0.95	11.38	8.37	10,059	10,059
Total	0.95	11.38	8.37	10,059	10,059

4.3 Trip Type Information

	Miles			Trip %			Trip Purpose %		
Land Use	H-W or C-W	H-S or C-C	H-O or C-NW	H-W or C-W	H-S or C-C	H-O or C-NW	Primary	Diverted	Pass-by
City Park	16.60	8.40	6.90	33.00	48.00	19.00	66	28	6

4.4 Fleet Mix

Land Use	LDA	LDT1	LDT2	MDV	LHD1	LHD2	MHD	HHD	OBUS	UBUS	MCY	SBUS	MH
City Park	0.544785	0.062844	0.187478	0.127235	0.023089	0.006083	0.010475	0.008012	0.000925	0.000611	0.024394	0.000698	0.003374

5.0 Energy Detail

Historical Energy Use: N

5.1 Mitigation Measures Energy

	ROG	NOx	CO	SO2	Fugitive PM10	Exhaust PM10	PM10 Total	Fugitive PM2.5	Exhaust PM2.5	PM2.5 Total	Bio- CO2	NBio- CO2	Total CO2	CH4	N2O	CO2e
Category	lb/day										lb/day					
NaturalGas Mitigated	0.0000	0.0000	0.0000	0.0000		0.0000	0.0000		0.0000	0.0000						0.0000
NaturalGas Unmitigated	0.0000	0.0000	0.0000	0.0000		0.0000	0.0000		0.0000	0.0000						0.0000

5.2 Energy by Land Use - NaturalGas

Unmitigated

	NaturalGas Use	ROG	NOx	CO	SO2	Fugitive PM10	Exhaust PM10	PM10 Total	Fugitive PM2.5	Exhaust PM2.5	PM2.5 Total	Bio- CO2	NBio- CO2	Total CO2	CH4	N2O	CO2e
Land Use	kBTU/yr	lb/day										lb/day					
City Park	0	0.0000	0.0000	0.0000	0.0000		0.0000	0.0000		0.0000	0.0000						0.0000
Total		**0.0000**	**0.0000**	**0.0000**	**0.0000**		**0.0000**	**0.0000**		**0.0000**	**0.0000**						**0.0000**

5.2 Energy by Land Use - NaturalGas

Mitigated

	NaturalGas Use	ROG	NOx	CO	SO2	Fugitive PM10	Exhaust PM10	PM10 Total	Fugitive PM2.5	Exhaust PM2.5	PM2.5 Total	Bio- CO2	NBio- CO2	Total CO2	CH4	N2O	CO2e
Land Use	kBTU/yr	lb/day										lb/day					
City Park	0	0.0000	0.0000	0.0000	0.0000		0.0000	0.0000		0.0000	0.0000						0.0000
Total		**0.0000**	**0.0000**	**0.0000**	**0.0000**		**0.0000**	**0.0000**		**0.0000**	**0.0000**						**0.0000**

6.0 Area Detail

6.1 Mitigation Measures Area

	ROG	NOx	CO	SO2	Fugitive PM10	Exhaust PM10	PM10 Total	Fugitive PM2.5	Exhaust PM2.5	PM2.5 Total	Bio- CO2	NBio- CO2	Total CO2	CH4	N2O	CO2e
Category	lb/day										lb/day					
Mitigated	1.1300e-003	0.0000	5.0000e-005	0.0000		0.0000	0.0000		0.0000	0.0000						1.2000e-004
Unmitigated	1.1300e-003	0.0000	5.0000e-005	0.0000		0.0000	0.0000		0.0000	0.0000						1.2000e-004

6th Street PARC In-River Planted Terracing - Construction Emissions Only - Los Angeles-South Coast County, Summer

EMFAC Off-Model Adjustment Factors for Gasoline Light Duty Vehicle to Account for the SAFE Vehicle Rule Applied

6.2 Area by SubCategory

Unmitigated

	ROG	NOx	CO	SO2	Fugitive PM10	Exhaust PM10	PM10 Total	Fugitive PM2.5	Exhaust PM2.5	PM2.5 Total	Bio- CO2	NBio- CO2	Total CO2	CH4	N2O	CO2e
SubCategory	lb/day										lb/day					
Architectural Coating	0.0000					0.0000	0.0000		0.0000	0.0000						0.0000
Consumer Products	1.1200e-003					0.0000	0.0000		0.0000	0.0000						0.0000
Landscaping	0.0000	0.0000	5.0000e-005	0.0000		0.0000	0.0000		0.0000	0.0000						1.2000e-004
Total	**1.1200e-003**	**0.0000**	**5.0000e-005**	**0.0000**		**0.0000**	**0.0000**		**0.0000**	**0.0000**						**1.2000e-004**

EMFAC Off-Model Adjustment Factors for Gasoline Light Duty Vehicle to Account for the SAFE Vehicle Rule Applied

6.2 Area by SubCategory

Mitigated

	ROG	NOx	CO	SO2	Fugitive PM10	Exhaust PM10	PM10 Total	Fugitive PM2.5	Exhaust PM2.5	PM2.5 Total	Bio- CO2	NBio- CO2	Total CO2	CH4	N2O	CO2e
SubCategory	lb/day										lb/day					
Architectural Coating	0.0000					0.0000	0.0000		0.0000	0.0000						0.0000
Consumer Products	1.1200e-003					0.0000	0.0000		0.0000	0.0000						0.0000
Landscaping	0.0000	0.0000	5.0000e-005	0.0000		0.0000	0.0000		0.0000	0.0000						1.2000e-004
Total	**1.1200e-003**	**0.0000**	**5.0000e-005**	**0.0000**		**0.0000**	**0.0000**		**0.0000**	**0.0000**						**1.2000e-004**

7.0 Water Detail

7.1 Mitigation Measures Water

Use Water Efficient Irrigation System

8.0 Waste Detail

8.1 Mitigation Measures Waste

9.0 Operational Offroad

Equipment Type	Number	Hours/Day	Days/Year	Horse Power	Load Factor	Fuel Type

10.0 Stationary Equipment

Fire Pumps and Emergency Generators

Equipment Type	Number	Hours/Day	Hours/Year	Horse Power	Load Factor	Fuel Type

Boilers

Equipment Type	Number	Heat Input/Day	Heat Input/Year	Boiler Rating	Fuel Type

User Defined Equipment

Equipment Type	Number

11.0 Vegetation

EMFAC Off-Model Adjustment Factors for Gasoline Light Duty Vehicle to Account for the SAFE Vehicle Rule Applied

6th Street PARC In-River Planted Terracing - Construction Emissions Only

Los Angeles-South Coast County, Winter

1.0 Project Characteristics

1.1 Land Usage

Land Uses	Size	Metric	Lot Acreage	Floor Surface Area	Population
City Park	0.50	Acre	0.50	21,780.00	0

1.2 Other Project Characteristics

Urbanization	Urban	**Wind Speed (m/s)**	2.2	**Precipitation Freq (Days)**	33
Climate Zone	12			**Operational Year**	2023
Utility Company	Los Angeles Department of Water & Power				
CO2 Intensity (lb/MWhr)	691.98	**CH4 Intensity (lb/MWhr)**	0.033	**N2O Intensity (lb/MWhr)**	0.004

1.3 User Entered Comments & Non-Default Data

Project Characteristics - In-River Terracing updated to 2020 utility intensity factor.

Land Use - Land use based on in-river planted terracing information provided.

Construction Phase - Construction phases based on information provided.

Off-road Equipment - Off-road equipment based on information provided.

Off-road Equipment - Off-road equipment based on information provided.

Off-road Equipment - Off-road equipment based on information provided.

Off-road Equipment - Off-road equipment based on information provided.

Off-road Equipment - Off-road equipment based on information provided.

Trips and VMT - Total # trips hauling based on information provided.

Grading - Material imported based on information provided.

Vehicle Trips - .

6th Street PARC In-River Planted Terracing - Construction Emissions Only - Los Angeles-South Coast County, Winter

EMFAC Off-Model Adjustment Factors for Gasoline Light Duty Vehicle to Account for the SAFE Vehicle Rule Applied

Construction Off-road Equipment Mitigation - Mitigation assumes T4 offroad equipment with level 3 DPF, 55% CE for watering unpaved travel surfaces/roads, 61% CE for
watering exposed surfaces, 15 mph speed limit for onsite unpaved travel surfaces/roads, clean track out CE 16%.

Water Mitigation - WUW-1 based on information provided.

Table Name	Column Name	Default Value	New Value
tblConstDustMitigation	CleanPavedRoadPercentReduction	0	16
tblConstDustMitigation	WaterUnpavedRoadVehicleSpeed	0	15
tblConstEquipMitigation	DPF	No Change	Level 3
tblConstEquipMitigation	DPF	No Change	Level 3
tblConstEquipMitigation	DPF	No Change	Level 3
tblConstEquipMitigation	DPF	No Change	Level 3
tblConstEquipMitigation	DPF	No Change	Level 3
tblConstEquipMitigation	DPF	No Change	Level 3
tblConstEquipMitigation	DPF	No Change	Level 3
tblConstEquipMitigation	DPF	No Change	Level 3
tblConstEquipMitigation	DPF	No Change	Level 3
tblConstEquipMitigation	DPF	No Change	Level 3
tblConstEquipMitigation	DPF	No Change	Level 3
tblConstEquipMitigation	NumberOfEquipmentMitigated	0.00	6.00
tblConstEquipMitigation	NumberOfEquipmentMitigated	0.00	2.00
tblConstEquipMitigation	NumberOfEquipmentMitigated	0.00	3.00
tblConstEquipMitigation	NumberOfEquipmentMitigated	0.00	4.00
tblConstEquipMitigation	NumberOfEquipmentMitigated	0.00	2.00
tblConstEquipMitigation	NumberOfEquipmentMitigated	0.00	4.00
tblConstEquipMitigation	NumberOfEquipmentMitigated	0.00	2.00
tblConstEquipMitigation	NumberOfEquipmentMitigated	0.00	2.00
tblConstEquipMitigation	Tier	No Change	Tier 4 Final
tblConstEquipMitigation	Tier	No Change	Tier 4 Final
tblConstEquipMitigation	Tier	No Change	Tier 4 Final
tblConstEquipMitigation	Tier	No Change	Tier 4 Final

6th Street PARC In-River Planted Terracing - Construction Emissions Only - Los Angeles-South Coast County, Winter

EMFAC Off-Model Adjustment Factors for Gasoline Light Duty Vehicle to Account for the SAFE Vehicle Rule Applied

tblConstEquipMitigation	Tier	No Change	Tier 4 Final
tblConstEquipMitigation	Tier	No Change	Tier 4 Final
tblConstEquipMitigation	Tier	No Change	Tier 4 Final
tblConstEquipMitigation	Tier	No Change	Tier 4 Final
tblConstEquipMitigation	Tier	No Change	Tier 4 Final
tblConstEquipMitigation	Tier	No Change	Tier 4 Final
tblConstEquipMitigation	Tier	No Change	Tier 4 Final
tblConstructionPhase	NumDays	100.00	40.00
tblConstructionPhase	NumDays	100.00	40.00
tblConstructionPhase	NumDays	2.00	20.00
tblConstructionPhase	NumDays	1.00	40.00
tblGrading	AcresOfGrading	0.00	0.50
tblGrading	MaterialImported	0.00	2,000.00
tblOffRoadEquipment	HorsePower	221.00	81.00
tblOffRoadEquipment	HorsePower	9.00	300.00
tblOffRoadEquipment	HorsePower	231.00	226.00
tblOffRoadEquipment	HorsePower	231.00	226.00
tblOffRoadEquipment	HorsePower	16.00	400.00
tblOffRoadEquipment	HorsePower	172.00	171.00
tblOffRoadEquipment	HorsePower	172.00	167.00
tblOffRoadEquipment	LoadFactor	0.42	0.40
tblOffRoadEquipment	OffRoadEquipmentUnitAmount	1.00	0.00
tblOffRoadEquipment	OffRoadEquipmentUnitAmount	1.00	0.00
tblOffRoadEquipment	OffRoadEquipmentUnitAmount	1.00	0.00
tblOffRoadEquipment	OffRoadEquipmentUnitAmount	2.00	0.00
tblOffRoadEquipment	OffRoadEquipmentUnitAmount	2.00	0.00
tblOffRoadEquipment	OffRoadEquipmentUnitAmount	1.00	0.00
tblOffRoadEquipment	OffRoadEquipmentUnitAmount	1.00	0.00
tblOffRoadEquipment	OffRoadEquipmentUnitAmount	2.00	0.00

6th Street PARC In-River Planted Terracing - Construction Emissions Only - Los Angeles-South Coast County, Winter

EMFAC Off-Model Adjustment Factors for Gasoline Light Duty Vehicle to Account for the SAFE Vehicle Rule Applied

tblOffRoadEquipment	OffRoadEquipmentUnitAmount	2.00	0.00
tblOffRoadEquipment	OffRoadEquipmentUnitAmount	1.00	2.00
tblOffRoadEquipment	OffRoadEquipmentUnitAmount	1.00	0.00
tblOffRoadEquipment	UsageHours	6.00	1.00
tblOffRoadEquipment	UsageHours	7.00	6.00
tblTripsAndVMT	HaulingTripNumber	0.00	160.00
tblVehicleTrips	ST_TR	1.96	22.75
tblVehicleTrips	SU_TR	2.19	16.74
tblVehicleTrips	WD_TR	0.78	1.89

2.0 Emissions Summary

6th Street PARC In-River Planted Terracing - Construction Emissions Only - Los Angeles-South Coast County, Winter

EMFAC Off-Model Adjustment Factors for Gasoline Light Duty Vehicle to Account for the SAFE Vehicle Rule Applied

2.1 Overall Construction (Maximum Daily Emission)

Unmitigated Construction

	ROG	NOx	CO	SO2	Fugitive PM10	Exhaust PM10	PM10 Total	Fugitive PM2.5	Exhaust PM2.5	PM2.5 Total	Bio- CO2	NBio- CO2	Total CO2	CH4	N2O	CO2e
Year	lb/day										lb/day					
2022	2.0800	22.2120	26.2108	0.0413	0.3968	1.0815	1.4077	0.1068	0.9949	1.0794						4,048.8233
Maximum	**2.0800**	**22.2120**	**26.2108**	**0.0413**	**0.3968**	**1.0815**	**1.4077**	**0.1068**	**0.9949**	**1.0794**						**4,048.8233**

Mitigated Construction

	ROG	NOx	CO	SO2	Fugitive PM10	Exhaust PM10	PM10 Total	Fugitive PM2.5	Exhaust PM2.5	PM2.5 Total	Bio- CO2	NBio- CO2	Total CO2	CH4	N2O	CO2e
Year	lb/day										lb/day					
2022	0.5852	2.4837	29.8388	0.0413	0.3448	0.0170	0.3618	0.0940	0.0164	0.1104						4,048.8233
Maximum	**0.5852**	**2.4837**	**29.8388**	**0.0413**	**0.3448**	**0.0170**	**0.3618**	**0.0940**	**0.0164**	**0.1104**						**4,048.8233**

	ROG	NOx	CO	SO2	Fugitive PM10	Exhaust PM10	PM10 Total	Fugitive PM2.5	Exhaust PM2.5	PM2.5 Total	Bio- CO2	NBio-CO2	Total CO2	CH4	N20	CO2e
Percent Reduction	**71.86**	**88.82**	**-13.84**	**0.00**	**13.11**	**98.43**	**74.30**	**11.97**	**98.35**	**89.77**	**0.00**	**0.00**	**0.00**	**0.00**	**0.00**	**0.00**

6th Street PARC In-River Planted Terracing - Construction Emissions Only - Los Angeles-South Coast County, Winter

EMFAC Off-Model Adjustment Factors for Gasoline Light Duty Vehicle to Account for the SAFE Vehicle Rule Applied

2.2 Overall Operational

Unmitigated Operational

	ROG	NOx	CO	SO2	Fugitive PM10	Exhaust PM10	PM10 Total	Fugitive PM2.5	Exhaust PM2.5	PM2.5 Total	Bio- CO2	NBio- CO2	Total CO2	CH4	N2O	CO2e
Category	lb/day										lb/day					
Area	1.1300e-003	0.0000	5.0000e-005	0.0000		0.0000	0.0000		0.0000	0.0000						1.2000e-004
Energy	0.0000	0.0000	0.0000	0.0000		0.0000	0.0000		0.0000	0.0000						0.0000
Mobile	0.0318	0.0347	0.3116	6.5000e-004	0.0689	4.9000e-004	0.0694	0.0184	4.6000e-004	0.0188						68.0452
Total	**0.0329**	**0.0347**	**0.3116**	**6.5000e-004**	**0.0689**	**4.9000e-004**	**0.0694**	**0.0184**	**4.6000e-004**	**0.0188**						**68.0453**

Mitigated Operational

	ROG	NOx	CO	SO2	Fugitive PM10	Exhaust PM10	PM10 Total	Fugitive PM2.5	Exhaust PM2.5	PM2.5 Total	Bio- CO2	NBio- CO2	Total CO2	CH4	N2O	CO2e
Category	lb/day										lb/day					
Area	1.1300e-003	0.0000	5.0000e-005	0.0000		0.0000	0.0000		0.0000	0.0000						1.2000e-004
Energy	0.0000	0.0000	0.0000	0.0000		0.0000	0.0000		0.0000	0.0000						0.0000
Mobile	0.0318	0.0347	0.3116	6.5000e-004	0.0689	4.9000e-004	0.0694	0.0184	4.6000e-004	0.0188						68.0452
Total	**0.0329**	**0.0347**	**0.3116**	**6.5000e-004**	**0.0689**	**4.9000e-004**	**0.0694**	**0.0184**	**4.6000e-004**	**0.0188**						**68.0453**

6th Street PARC In-River Planted Terracing - Construction Emissions Only - Los Angeles-South Coast County, Winter

EMFAC Off-Model Adjustment Factors for Gasoline Light Duty Vehicle to Account for the SAFE Vehicle Rule Applied

	ROG	NOx	CO	SO2	Fugitive PM10	Exhaust PM10	PM10 Total	Fugitive PM2.5	Exhaust PM2.5	PM2.5 Total	Bio- CO2	NBio-CO2	Total CO2	CH4	N20	CO2e
Percent Reduction	0.00	0.00	0.00	0.00	0.00	0.00	0.00	0.00	0.00	0.00	0.00	0.00	0.00	0.00	0.00	0.00

3.0 Construction Detail

Construction Phase

Phase Number	Phase Name	Phase Type	Start Date	End Date	Num Days Week	Num Days	Phase Description
1	Site Preparation	Site Preparation	1/3/2022	2/25/2022	5	40	
2	Building Construction 1	Building Construction	2/26/2022	4/22/2022	5	40	Terrace Box Construction
3	Grading	Grading	4/23/2022	5/20/2022	5	20	Soil Import and Planting
4	Building Construction 2	Building Construction	5/21/2022	7/15/2022	5	40	Soil Import and Planting

Acres of Grading (Site Preparation Phase): 0.5

Acres of Grading (Grading Phase): 0

Acres of Paving: 0

Residential Indoor: 0; Residential Outdoor: 0; Non-Residential Indoor: 0; Non-Residential Outdoor: 0; Striped Parking Area: 0 (Architectural Coating – sqft)

OffRoad Equipment

Phase Name	Offroad Equipment Type	Amount	Usage Hours	Horse Power	Load Factor
Site Preparation	Bore/Drill Rigs	6	8.00	81	0.50
Site Preparation	Cranes	1	4.00	226	0.29
Site Preparation	Forklifts	2	8.00	89	0.20
Site Preparation	Graders	0	8.00	187	0.41
Site Preparation	Other Construction Equipment	2	8.00	171	0.42
Site Preparation	Tractors/Loaders/Backhoes	0	8.00	97	0.37
Building Construction 1	Cement and Mortar Mixers	2	6.00	300	0.56

6th Street PARC In-River Planted Terracing - Construction Emissions Only - Los Angeles-South Coast County, Winter

EMFAC Off-Model Adjustment Factors for Gasoline Light Duty Vehicle to Account for the SAFE Vehicle Rule Applied

Building Construction 1	Cranes	0	4.00	231	0.29
Building Construction 1	Cranes	0	4.00	231	0.29
Building Construction 1	Forklifts	0	6.00	89	0.20
Building Construction 1	Pumps	2	4.00	84	0.74
Building Construction 1	Tractors/Loaders/Backhoes	0	8.00	97	0.37
Grading	Concrete/Industrial Saws	0	8.00	81	0.73
Grading	Cranes	2	6.00	226	0.29
Grading	Dumpers/Tenders	4	2.00	400	0.38
Grading	Rubber Tired Dozers	0	1.00	247	0.40
Grading	Tractors/Loaders/Backhoes	2	6.00	97	0.37
Building Construction 2	Cranes	0	4.00	231	0.29
Building Construction 2	Forklifts	0	6.00	89	0.20
Building Construction 2	Other Construction Equipment	2	4.00	167	0.40
Building Construction 2	Tractors/Loaders/Backhoes	0	8.00	97	0.37

Trips and VMT

Phase Name	Offroad Equipment Count	Worker Trip Number	Vendor Trip Number	Hauling Trip Number	Worker Trip Length	Vendor Trip Length	Hauling Trip Length	Worker Vehicle Class	Vendor Vehicle Class	Hauling Vehicle Class
Site Preparation	11	28.00	0.00	0.00	14.70	6.90	20.00	LD_Mix	HDT_Mix	HHDT
Building Construction 1	4	9.00	4.00	160.00	14.70	6.90	20.00	LD_Mix	HDT_Mix	HHDT
Grading	8	20.00	0.00	198.00	14.70	6.90	20.00	LD_Mix	HDT_Mix	HHDT
Building Construction 2	2	9.00	4.00	0.00	14.70	6.90	20.00	LD_Mix	HDT_Mix	HHDT

3.1 Mitigation Measures Construction

Use Cleaner Engines for Construction Equipment

Use DPF for Construction Equipment

Use Soil Stabilizer

Water Exposed Area

6th Street PARC In-River Planted Terracing - Construction Emissions Only - Los Angeles-South Coast County, Winter

EMFAC Off-Model Adjustment Factors for Gasoline Light Duty Vehicle to Account for the SAFE Vehicle Rule Applied

Reduce Vehicle Speed on Unpaved Roads

Clean Paved Roads

3.2 Site Preparation - 2022

Unmitigated Construction On-Site

	ROG	NOx	CO	SO2	Fugitive PM10	Exhaust PM10	PM10 Total	Fugitive PM2.5	Exhaust PM2.5	PM2.5 Total	Bio- CO2	NBio- CO2	Total CO2	CH4	N2O	CO2e
Category	lb/day										lb/day					
Fugitive Dust					0.0133	0.0000	0.0133	1.4300e-003	0.0000	1.4300e-003						0.0000
Off-Road	1.9763	22.1338	25.1975	0.0386		1.0794	1.0794		0.9931	0.9931						3,770.5556
Total	**1.9763**	**22.1338**	**25.1975**	**0.0386**	**0.0133**	**1.0794**	**1.0927**	**1.4300e-003**	**0.9931**	**0.9945**						**3,770.5556**

6th Street PARC In-River Planted Terracing - Construction Emissions Only - Los Angeles-South Coast County, Winter

EMFAC Off-Model Adjustment Factors for Gasoline Light Duty Vehicle to Account for the SAFE Vehicle Rule Applied

3.2 Site Preparation - 2022

Unmitigated Construction Off-Site

	ROG	NOx	CO	SO2	Fugitive PM10	Exhaust PM10	PM10 Total	Fugitive PM2.5	Exhaust PM2.5	PM2.5 Total	Bio- CO2	NBio- CO2	Total CO2	CH4	N2O	CO2e
Category	lb/day										lb/day					
Hauling	0.0000	0.0000	0.0000	0.0000	0.0000	0.0000	0.0000	0.0000	0.0000	0.0000						0.0000
Vendor	0.0000	0.0000	0.0000	0.0000	0.0000	0.0000	0.0000	0.0000	0.0000	0.0000						0.0000
Worker	0.1037	0.0782	1.0132	2.7100e-003	0.3130	2.0100e-003	0.3150	0.0830	1.8500e-003	0.0849						278.2678
Total	**0.1037**	**0.0782**	**1.0132**	**2.7100e-003**	**0.3130**	**2.0100e-003**	**0.3150**	**0.0830**	**1.8500e-003**	**0.0849**						**278.2678**

Mitigated Construction On-Site

	ROG	NOx	CO	SO2	Fugitive PM10	Exhaust PM10	PM10 Total	Fugitive PM2.5	Exhaust PM2.5	PM2.5 Total	Bio- CO2	NBio- CO2	Total CO2	CH4	N2O	CO2e
Category	lb/day										lb/day					
Fugitive Dust					5.1700e-003	0.0000	5.1700e-003	5.6000e-004	0.0000	5.6000e-004						0.0000
Off-Road	0.4815	2.0865	28.8256	0.0386		9.6300e-003	9.6300e-003		9.6300e-003	9.6300e-003						3,770.5556
Total	**0.4815**	**2.0865**	**28.8256**	**0.0386**	**5.1700e-003**	**9.6300e-003**	**0.0148**	**5.6000e-004**	**9.6300e-003**	**0.0102**						**3,770.5556**

6th Street PARC In-River Planted Terracing - Construction Emissions Only - Los Angeles-South Coast County, Winter

EMFAC Off-Model Adjustment Factors for Gasoline Light Duty Vehicle to Account for the SAFE Vehicle Rule Applied

3.2 Site Preparation - 2022

Mitigated Construction Off-Site

	ROG	NOx	CO	SO2	Fugitive PM10	Exhaust PM10	PM10 Total	Fugitive PM2.5	Exhaust PM2.5	PM2.5 Total	Bio- CO2	NBio- CO2	Total CO2	CH4	N2O	CO2e
Category	lb/day										lb/day					
Hauling	0.0000	0.0000	0.0000	0.0000	0.0000	0.0000	0.0000	0.0000	0.0000	0.0000						0.0000
Vendor	0.0000	0.0000	0.0000	0.0000	0.0000	0.0000	0.0000	0.0000	0.0000	0.0000						0.0000
Worker	0.1037	0.0782	1.0132	2.7100e-003	0.2694	2.0100e-003	0.2715	0.0723	1.8500e-003	0.0742						278.2678
Total	**0.1037**	**0.0782**	**1.0132**	**2.7100e-003**	**0.2694**	**2.0100e-003**	**0.2715**	**0.0723**	**1.8500e-003**	**0.0742**						**278.2678**

3.3 Building Construction 1 - 2022

Unmitigated Construction On-Site

	ROG	NOx	CO	SO2	Fugitive PM10	Exhaust PM10	PM10 Total	Fugitive PM2.5	Exhaust PM2.5	PM2.5 Total	Bio- CO2	NBio- CO2	Total CO2	CH4	N2O	CO2e
Category	lb/day										lb/day					
Off-Road	0.3519	2.9688	3.7319	6.5800e-003		0.1557	0.1557		0.1557	0.1557						623.8294
Total	**0.3519**	**2.9688**	**3.7319**	**6.5800e-003**		**0.1557**	**0.1557**		**0.1557**	**0.1557**						**623.8294**

6th Street PARC In-River Planted Terracing - Construction Emissions Only - Los Angeles-South Coast County, Winter

EMFAC Off-Model Adjustment Factors for Gasoline Light Duty Vehicle to Account for the SAFE Vehicle Rule Applied

3.3 Building Construction 1 - 2022

Unmitigated Construction Off-Site

	ROG	NOx	CO	SO2	Fugitive PM10	Exhaust PM10	PM10 Total	Fugitive PM2.5	Exhaust PM2.5	PM2.5 Total	Bio- CO2	NBio- CO2	Total CO2	CH4	N2O	CO2e
Category	lb/day										lb/day					
Hauling	0.0182	0.6991	0.1594	2.4900e-003	0.0700	5.0000e-003	0.0750	0.0192	4.7900e-003	0.0240						285.6305
Vendor	7.7800e-003	0.2040	0.0695	7.8000e-004	0.0256	1.8700e-003	0.0275	7.3800e-003	1.7900e-003	9.1700e-003						87.9061
Worker	0.0334	0.0251	0.3257	8.7000e-004	0.1006	6.4000e-004	0.1012	0.0267	5.9000e-004	0.0273						89.4432
Total	**0.0593**	**0.9282**	**0.5546**	**4.1400e-003**	**0.1962**	**7.5100e-003**	**0.2038**	**0.0533**	**7.1700e-003**	**0.0604**						**462.9798**

Mitigated Construction On-Site

	ROG	NOx	CO	SO2	Fugitive PM10	Exhaust PM10	PM10 Total	Fugitive PM2.5	Exhaust PM2.5	PM2.5 Total	Bio- CO2	NBio- CO2	Total CO2	CH4	N2O	CO2e
Category	lb/day										lb/day					
Off-Road	0.0658	0.2850	4.0564	6.5800e-003		1.3200e-003	1.3200e-003		1.3200e-003	1.3200e-003						623.8294
Total	**0.0658**	**0.2850**	**4.0564**	**6.5800e-003**		**1.3200e-003**	**1.3200e-003**		**1.3200e-003**	**1.3200e-003**						**623.8294**

6th Street PARC In-River Planted Terracing - Construction Emissions Only - Los Angeles-South Coast County, Winter

EMFAC Off-Model Adjustment Factors for Gasoline Light Duty Vehicle to Account for the SAFE Vehicle Rule Applied

3.3 Building Construction 1 - 2022

Mitigated Construction Off-Site

	ROG	NOx	CO	SO2	Fugitive PM10	Exhaust PM10	PM10 Total	Fugitive PM2.5	Exhaust PM2.5	PM2.5 Total	Bio- CO2	NBio- CO2	Total CO2	CH4	N2O	CO2e
Category	lb/day										lb/day					
Hauling	0.0182	0.6991	0.1594	2.4900e-003	0.0616	5.0000e-003	0.0666	0.0171	4.7900e-003	0.0219						285.6305
Vendor	7.7800e-003	0.2040	0.0695	7.8000e-004	0.0227	1.8700e-003	0.0246	6.6600e-003	1.7900e-003	8.4500e-003						87.9061
Worker	0.0334	0.0251	0.3257	8.7000e-004	0.0866	6.4000e-004	0.0873	0.0232	5.9000e-004	0.0238						89.4432
Total	**0.0593**	**0.9282**	**0.5546**	**4.1400e-003**	**0.1709**	**7.5100e-003**	**0.1784**	**0.0470**	**7.1700e-003**	**0.0542**						**462.9798**

3.4 Grading - 2022

Unmitigated Construction On-Site

	ROG	NOx	CO	SO2	Fugitive PM10	Exhaust PM10	PM10 Total	Fugitive PM2.5	Exhaust PM2.5	PM2.5 Total	Bio- CO2	NBio- CO2	Total CO2	CH4	N2O	CO2e
Category	lb/day										lb/day					
Fugitive Dust					0.0000	0.0000	0.0000	0.0000	0.0000	0.0000						0.0000
Off-Road	0.7944	8.6540	6.1340	0.0131		0.3901	0.3901		0.3589	0.3589						1,282.2446
Total	**0.7944**	**8.6540**	**6.1340**	**0.0131**	**0.0000**	**0.3901**	**0.3901**	**0.0000**	**0.3589**	**0.3589**						**1,282.2446**

6th Street PARC In-River Planted Terracing - Construction Emissions Only - Los Angeles-South Coast County, Winter

EMFAC Off-Model Adjustment Factors for Gasoline Light Duty Vehicle to Account for the SAFE Vehicle Rule Applied

3.4 Grading - 2022

Unmitigated Construction Off-Site

	ROG	NOx	CO	SO2	Fugitive PM10	Exhaust PM10	PM10 Total	Fugitive PM2.5	Exhaust PM2.5	PM2.5 Total	Bio- CO2	NBio- CO2	Total CO2	CH4	N2O	CO2e
Category	lb/day										lb/day					
Hauling	0.0450	1.7302	0.3945	6.1500e-003	0.1733	0.0124	0.1857	0.0475	0.0118	0.0594						706.9355
Vendor	0.0000	0.0000	0.0000	0.0000	0.0000	0.0000	0.0000	0.0000	0.0000	0.0000						0.0000
Worker	0.0741	0.0558	0.7237	1.9400e-003	0.2236	1.4300e-003	0.2250	0.0593	1.3200e-003	0.0606						198.7627
Total	**0.1191**	**1.7860**	**1.1182**	**8.0900e-003**	**0.3968**	**0.0138**	**0.4107**	**0.1068**	**0.0132**	**0.1200**						**905.6982**

Mitigated Construction On-Site

	ROG	NOx	CO	SO2	Fugitive PM10	Exhaust PM10	PM10 Total	Fugitive PM2.5	Exhaust PM2.5	PM2.5 Total	Bio- CO2	NBio- CO2	Total CO2	CH4	N2O	CO2e
Category	lb/day										lb/day					
Fugitive Dust					0.0000	0.0000	0.0000	0.0000	0.0000	0.0000						0.0000
Off-Road	0.1610	0.6977	7.3277	0.0131		3.2200e-003	3.2200e-003		3.2200e-003	3.2200e-003						1,282.2445
Total	**0.1610**	**0.6977**	**7.3277**	**0.0131**	**0.0000**	**3.2200e-003**	**3.2200e-003**	**0.0000**	**3.2200e-003**	**3.2200e-003**						**1,282.2445**

3.4 Grading - 2022

Mitigated Construction Off-Site

	ROG	NOx	CO	SO2	Fugitive PM10	Exhaust PM10	PM10 Total	Fugitive PM2.5	Exhaust PM2.5	PM2.5 Total	Bio- CO2	NBio- CO2	Total CO2	CH4	N2O	CO2e
Category	lb/day										lb/day					
Hauling	0.0450	1.7302	0.3945	6.1500e-003	0.1523	0.0124	0.1647	0.0424	0.0118	0.0542						706.9355
Vendor	0.0000	0.0000	0.0000	0.0000	0.0000	0.0000	0.0000	0.0000	0.0000	0.0000						0.0000
Worker	0.0741	0.0558	0.7237	1.9400e-003	0.1925	1.4300e-003	0.1939	0.0517	1.3200e-003	0.0530						198.7627
Total	**0.1191**	**1.7860**	**1.1182**	**8.0900e-003**	**0.3448**	**0.0138**	**0.3586**	**0.0940**	**0.0132**	**0.1072**						**905.6982**

3.5 Building Construction 2 - 2022

Unmitigated Construction On-Site

	ROG	NOx	CO	SO2	Fugitive PM10	Exhaust PM10	PM10 Total	Fugitive PM2.5	Exhaust PM2.5	PM2.5 Total	Bio- CO2	NBio- CO2	Total CO2	CH4	N2O	CO2e
Category	lb/day										lb/day					
Off-Road	0.3477	3.5278	3.7175	5.7100e-003		0.1841	0.1841		0.1694	0.1694						557.7477
Total	**0.3477**	**3.5278**	**3.7175**	**5.7100e-003**		**0.1841**	**0.1841**		**0.1694**	**0.1694**						**557.7477**

6th Street PARC In-River Planted Terracing - Construction Emissions Only - Los Angeles-South Coast County, Winter

EMFAC Off-Model Adjustment Factors for Gasoline Light Duty Vehicle to Account for the SAFE Vehicle Rule Applied

3.5 Building Construction 2 - 2022

Unmitigated Construction Off-Site

	ROG	NOx	CO	SO2	Fugitive PM10	Exhaust PM10	PM10 Total	Fugitive PM2.5	Exhaust PM2.5	PM2.5 Total	Bio- CO2	NBio- CO2	Total CO2	CH4	N2O	CO2e
Category	lb/day										lb/day					
Hauling	0.0000	0.0000	0.0000	0.0000	0.0000	0.0000	0.0000	0.0000	0.0000	0.0000						0.0000
Vendor	7.7800e-003	0.2040	0.0695	7.8000e-004	0.0256	1.8700e-003	0.0275	7.3800e-003	1.7900e-003	9.1700e-003						87.9061
Worker	0.0334	0.0251	0.3257	8.7000e-004	0.1006	6.4000e-004	0.1012	0.0267	5.9000e-004	0.0273						89.4432
Total	**0.0411**	**0.2291**	**0.3952**	**1.6500e-003**	**0.1262**	**2.5100e-003**	**0.1287**	**0.0341**	**2.3800e-003**	**0.0364**						**177.3493**

Mitigated Construction On-Site

	ROG	NOx	CO	SO2	Fugitive PM10	Exhaust PM10	PM10 Total	Fugitive PM2.5	Exhaust PM2.5	PM2.5 Total	Bio- CO2	NBio- CO2	Total CO2	CH4	N2O	CO2e
Category	lb/day										lb/day					
Off-Road	0.0707	0.3063	4.3592	5.7100e-003		1.4100e-003	1.4100e-003		1.4100e-003	1.4100e-003						557.7477
Total	**0.0707**	**0.3063**	**4.3592**	**5.7100e-003**		**1.4100e-003**	**1.4100e-003**		**1.4100e-003**	**1.4100e-003**						**557.7477**

6th Street PARC In-River Planted Terracing - Construction Emissions Only - Los Angeles-South Coast County, Winter

EMFAC Off-Model Adjustment Factors for Gasoline Light Duty Vehicle to Account for the SAFE Vehicle Rule Applied

3.5 Building Construction 2 - 2022

Mitigated Construction Off-Site

	ROG	NOx	CO	SO2	Fugitive PM10	Exhaust PM10	PM10 Total	Fugitive PM2.5	Exhaust PM2.5	PM2.5 Total	Bio- CO2	NBio- CO2	Total CO2	CH4	N2O	CO2e
Category	lb/day										lb/day					
Hauling	0.0000	0.0000	0.0000	0.0000	0.0000	0.0000	0.0000	0.0000	0.0000	0.0000						0.0000
Vendor	7.7800e-003	0.2040	0.0695	7.8000e-004	0.0227	1.8700e-003	0.0246	6.6600e-003	1.7900e-003	8.4500e-003						87.9061
Worker	0.0334	0.0251	0.3257	8.7000e-004	0.0866	6.4000e-004	0.0873	0.0232	5.9000e-004	0.0238						89.4432
Total	**0.0411**	**0.2291**	**0.3952**	**1.6500e-003**	**0.1093**	**2.5100e-003**	**0.1118**	**0.0299**	**2.3800e-003**	**0.0323**						**177.3493**

4.0 Operational Detail - Mobile

4.1 Mitigation Measures Mobile

	ROG	NOx	CO	SO2	Fugitive PM10	Exhaust PM10	PM10 Total	Fugitive PM2.5	Exhaust PM2.5	PM2.5 Total	Bio- CO2	NBio- CO2	Total CO2	CH4	N2O	CO2e
Category	lb/day										lb/day					
Mitigated	0.0318	0.0347	0.3116	6.5000e-004	0.0689	4.9000e-004	0.0694	0.0184	4.6000e-004	0.0188						68.0452
Unmitigated	0.0318	0.0347	0.3116	6.5000e-004	0.0689	4.9000e-004	0.0694	0.0184	4.6000e-004	0.0188						68.0452

4.2 Trip Summary Information

	Average Daily Trip Rate			Unmitigated	Mitigated
Land Use	Weekday	Saturday	Sunday	Annual VMT	Annual VMT
City Park	0.95	11.38	8.37	10,059	10,059
Total	0.95	11.38	8.37	10,059	10,059

4.3 Trip Type Information

	Miles			Trip %			Trip Purpose %		
Land Use	H-W or C-W	H-S or C-C	H-O or C-NW	H-W or C-W	H-S or C-C	H-O or C-NW	Primary	Diverted	Pass-by
City Park	16.60	8.40	6.90	33.00	48.00	19.00	66	28	6

4.4 Fleet Mix

Land Use	LDA	LDT1	LDT2	MDV	LHD1	LHD2	MHD	HHD	OBUS	UBUS	MCY	SBUS	MH
City Park	0.544785	0.062844	0.187478	0.127235	0.023089	0.006083	0.010475	0.008012	0.000925	0.000611	0.024394	0.000698	0.003374

5.0 Energy Detail

Historical Energy Use: N

5.1 Mitigation Measures Energy

	ROG	NOx	CO	SO2	Fugitive PM10	Exhaust PM10	PM10 Total	Fugitive PM2.5	Exhaust PM2.5	PM2.5 Total	Bio- CO2	NBio- CO2	Total CO2	CH4	N2O	CO2e
Category	lb/day										lb/day					
NaturalGas Mitigated	0.0000	0.0000	0.0000	0.0000		0.0000	0.0000		0.0000	0.0000						0.0000
NaturalGas Unmitigated	0.0000	0.0000	0.0000	0.0000		0.0000	0.0000		0.0000	0.0000						0.0000

5.2 Energy by Land Use - NaturalGas

Unmitigated

	NaturalGas Use	ROG	NOx	CO	SO2	Fugitive PM10	Exhaust PM10	PM10 Total	Fugitive PM2.5	Exhaust PM2.5	PM2.5 Total	Bio- CO2	NBio- CO2	Total CO2	CH4	N2O	CO2e
Land Use	kBTU/yr	lb/day										lb/day					
City Park	0	0.0000	0.0000	0.0000	0.0000		0.0000	0.0000		0.0000	0.0000						0.0000
Total		**0.0000**	**0.0000**	**0.0000**	**0.0000**		**0.0000**	**0.0000**		**0.0000**	**0.0000**						**0.0000**

5.2 Energy by Land Use - NaturalGas

Mitigated

	NaturalGas Use	ROG	NOx	CO	SO2	Fugitive PM10	Exhaust PM10	PM10 Total	Fugitive PM2.5	Exhaust PM2.5	PM2.5 Total	Bio- CO2	NBio- CO2	Total CO2	CH4	N2O	CO2e
Land Use	kBTU/yr	lb/day										lb/day					
City Park	0	0.0000	0.0000	0.0000	0.0000		0.0000	0.0000		0.0000	0.0000						0.0000
Total		**0.0000**	**0.0000**	**0.0000**	**0.0000**		**0.0000**	**0.0000**		**0.0000**	**0.0000**						**0.0000**

6.0 Area Detail

6.1 Mitigation Measures Area

	ROG	NOx	CO	SO2	Fugitive PM10	Exhaust PM10	PM10 Total	Fugitive PM2.5	Exhaust PM2.5	PM2.5 Total	Bio- CO2	NBio- CO2	Total CO2	CH4	N2O	CO2e
Category	lb/day										lb/day					
Mitigated	1.1300e-003	0.0000	5.0000e-005	0.0000		0.0000	0.0000		0.0000	0.0000						1.2000e-004
Unmitigated	1.1300e-003	0.0000	5.0000e-005	0.0000		0.0000	0.0000		0.0000	0.0000						1.2000e-004

6th Street PARC In-River Planted Terracing - Construction Emissions Only - Los Angeles-South Coast County, Winter

EMFAC Off-Model Adjustment Factors for Gasoline Light Duty Vehicle to Account for the SAFE Vehicle Rule Applied

6.2 Area by SubCategory

Unmitigated

	ROG	NOx	CO	SO2	Fugitive PM10	Exhaust PM10	PM10 Total	Fugitive PM2.5	Exhaust PM2.5	PM2.5 Total	Bio- CO2	NBio- CO2	Total CO2	CH4	N2O	CO2e
SubCategory	lb/day										lb/day					
Architectural Coating	0.0000					0.0000	0.0000		0.0000	0.0000						0.0000
Consumer Products	1.1200e-003					0.0000	0.0000		0.0000	0.0000						0.0000
Landscaping	0.0000	0.0000	5.0000e-005	0.0000		0.0000	0.0000		0.0000	0.0000						1.2000e-004
Total	**1.1200e-003**	**0.0000**	**5.0000e-005**	**0.0000**		**0.0000**	**0.0000**		**0.0000**	**0.0000**						**1.2000e-004**

6th Street PARC In-River Planted Terracing - Construction Emissions Only - Los Angeles-South Coast County, Winter

EMFAC Off-Model Adjustment Factors for Gasoline Light Duty Vehicle to Account for the SAFE Vehicle Rule Applied

6.2 Area by SubCategory

Mitigated

	ROG	NOx	CO	SO2	Fugitive PM10	Exhaust PM10	PM10 Total	Fugitive PM2.5	Exhaust PM2.5	PM2.5 Total	Bio- CO2	NBio- CO2	Total CO2	CH4	N2O	CO2e
SubCategory	lb/day										lb/day					
Architectural Coating	0.0000					0.0000	0.0000		0.0000	0.0000						0.0000
Consumer Products	1.1200e-003					0.0000	0.0000		0.0000	0.0000						0.0000
Landscaping	0.0000	0.0000	5.0000e-005	0.0000		0.0000	0.0000		0.0000	0.0000						1.2000e-004
Total	**1.1200e-003**	**0.0000**	**5.0000e-005**	**0.0000**		**0.0000**	**0.0000**		**0.0000**	**0.0000**						**1.2000e-004**

7.0 Water Detail

7.1 Mitigation Measures Water

Use Water Efficient Irrigation System

8.0 Waste Detail

8.1 Mitigation Measures Waste

9.0 Operational Offroad

Equipment Type	Number	Hours/Day	Days/Year	Horse Power	Load Factor	Fuel Type

10.0 Stationary Equipment

Fire Pumps and Emergency Generators

Equipment Type	Number	Hours/Day	Hours/Year	Horse Power	Load Factor	Fuel Type

Boilers

Equipment Type	Number	Heat Input/Day	Heat Input/Year	Boiler Rating	Fuel Type

User Defined Equipment

Equipment Type	Number

11.0 Vegetation

Sixth Street Park, Arts, River & Connectivity (PARC) Project

SCH #2017041045

CEQA FINDINGS



March 2022

PREPARED FOR:

City of Los Angeles, Department of Public Works
Bureau of Engineering, Environmental Management Group
1149 S. Broadway, Suite 600, Los Angeles CA 90015
Contact: Dr. Jan Green Rebstock, Environmental Supervisor II
213-485-5761, Jan.Green.Rebstock@lacity.org

WITH ASSISTANCE FROM:

GPA Consulting

ENGINEERING
CITY OF LOS ANGELES

TRANSMITTAL NO. 3

This page intentionally left blank.

CEQA FINDINGS

City of Los Angeles, Department of Public Works

Bureau of Engineering, Environmental Management Group

Sixth Street Park, Arts, River & Connectivity (PARC) Project

Los Angeles County, California

SCH #2017041045

The following Findings are presented to comply with the California Environmental Quality Act (CEQA) and the Guidelines for Implementation of the CEQA (Title 14 California Code of Regulations, Chapter 3, Section 150000 et seq.) or State "CEQA Guidelines." The Environmental Impact Report (EIR) for the Sixth Street Park, Arts, River & Connectivity (PARC) Project (proposed Project) is the main source of the information herein. The proposed Project is 13 acres of public recreational space underneath and adjacent to the Sixth Street Viaduct. Features of the proposed Project include, but are not limited to, a café, concession area, public restrooms on each side of the LA River, performance and public gathering areas, flexible play areas and lawns, adult fitness equipment, a dog play area, landscaped areas, public art, sports fields and courts, children's play areas and mister pad, picnic and grilling areas, parking spaces, skate park elements, bicycle and pedestrian paths, roadway connectivity improvements stormwater infrastructure improvements, and rain gardens. In addition, the proposed Project would include the installation of reinforced concrete planted terraces on the west and east banks of the LA River. The proposed Project generally includes components noted in the Los Angeles River Revitalization Master Plan.

Section 15091 of the State *CEQA Guidelines* states that "No public agency shall approve or carry out a project for which an EIR has been certified which identifies one or more significant environmental effects of the project unless the public agency makes one or more written findings for each of those significant effects, accompanied by a brief explanation of the rationale for each finding. The possible findings are:

(1) Changes or alterations have been required in, or incorporated into, the project which avoid or substantially lessen the significant environmental effect as identified in the Final EIR.

(2) Such changes or alterations are within the responsibility and jurisdiction of another public agency and not the agency making the finding. Such changes have been adopted by such other agency or can and should be adopted by such other agency.

(3) Specific economic, legal, social, technological, or other considerations, including provision of employment opportunities for highly trained workers, make infeasible the mitigation measures or project alternatives identified in the Final EIR."

(See also Pub. Resources Code, §§21081, 21081.5.)

Section I PROJECT DESCRIPTION describes the proposed Project location, the background of the proposed Project, a summary of the proposed Project components, and the proposed Prjoect objectives.

Section II ENVIRONMENTAL REVIEW PROCESS describes the public participation process for the proposed Project.

Section III RECORD OF PROCEEDINGS describes the custodian and location of the documents upon which these Findings are based.

Section IV FINDINGS REQUIRED UNDER CEQA describes the findings required to be made by the decisionmaker in order to certify the EIR and approve the proposed Project.

Section V PROJECT IMPACTS describes the impacts associated with the proposed Project and the specific findings required for the impacts to certify the EIR and approve the proposed Project.

Section VI ALTERNATIVES describes alternatives developed and considered for the proposed Project and the specific findings required to certify the EIR and approve the proposed Project.

Section VII OTHER CEQA CONSIDERATIONS describes additional issues raised during the responses to comments and the preparation of the Final EIR (Final EIR).

Section VIII CONCLUSIONS summarizes the findings made in this document.

I. PROJECT DESCRIPTION

A. *PROJECT LOCATION AND BACKGROUND*

The proposed Project would be located under and adjacent to the Sixth Street Viaduct between Mateo Street to the west and the United States Highway 101 (U.S. 101) to the east, in the City of Los Angeles (Project Area). The Project Area, which includes the potential area of direct and indirect impacts resulting from the proposed Project, spans from the Downtown Los Angeles Arts District on the west side of the Los Angeles River ("River" or "LA River") to the neighborhood of Boyle Heights on the east side of the LA River.

The Sixth Street Viaduct was a vital connection between Downtown Los Angeles and Boyle Heights. The majority of the Project Area is currently a construction site for the Sixth Street Viaduct Replacement Project ("Viaduct Replacement Project"), which began in 2016. As such, the Project Area primarily consists of fencing around an area of exposed soil with staged construction equipment and materials.

The Project Area is located in Council District 14 at the boundary of the City of Los Angeles' Central City North and Boyle Heights Community Plan areas. Land uses along the north and south sides of the Viaduct are predominately industrial and commercial. The nearest residence borders the northeastern edge of the Project Area at the intersection of South Clarence Street and Inez Street, and the eastern edge of the Project Area at the intersection of Boyle Avenue and Whittier Boulevard.

Railroad corridors are adjacent to the east and west banks of the LA River within the Project Area. The Los Angeles County Metropolitan Transportation Authority (Metro), Southern California Regional Rail Authority (SCRRA), Burlington Northern Santa Fe (BNSF), Amtrak, and Union Pacific Railroad (UPRR) own and/or operate railroad corridors within the Project Area. The Los Angeles Department of Water and Power's (LADWP) Transmission Right of Way (TLRW) is also located along the east and west banks of the River.

The segment of the LA River within the Project Area is a trapezoidal concrete-lined channel, which serves as a flood control channel that receives stormwater runoff from the surrounding watershed. The River discharges to an estuary south of the Project Area in Queensway Bay, in the Long Beach Harbor. An existing tunnel (LA River Access Tunnel) is located under the railroad tracks west of the River. LADWP TLRW used this tunnel to access the River from Santa Fe Avenue. The City of Los Angeles owns and operates this tunnel.

B. *PROPOSED PROJECT*

The City is proposing to create approximately 13 acres of public recreational space underneath and adjacent to the Sixth Street Viaduct. The proposed Project would be divided into two phases. The following elements would be constructed as part of Phase I of the proposed Project.

A. General Park Elements: Elements that would be constructed throughout the Sixth Street PARC would include constructing or installing typical park site furnishings, pedestrian and bicycle paths, interpretive exhibits, utility connections and irrigation, crosswalks, and stormwater infrastructure improvements.
B. East Park: The proposed East Park, located in the Boyle Heights Community Plan area, would include amenities such as a concessions area, public restrooms, office and storage space for operations and maintenance staff, sports courts and fields, two flexible play and performance lawns, adult fitness circuit, splash pad with outdoor shower, picnic and grilling areas, on-street parking, landscaped seating areas and rain gardens, small and large dog play areas, children's play area, and skate park elements. A public art piece could also potentially be installed in East Park.
C. West Park: The proposed West Park, located in the Central City North Community Plan area, would include amenities such as a flexible play and performance lawn, small and large dog play areas, an adult fitness circuit, a café building, public restroom, landscaped areas and a rain garden, and a public art piece.
D. Arts Plaza and River Gateway: The proposed Arts Plaza, located in the Central City North Community Plan area, would include amenities such as performance and public gathering areas and space for future mobility hub elements, bike parking, and bikeshare. The proposed River Gateway would include rehabilitating an existing pedestrian/vehicular tunnel that provides access to the LA River channel.

Phase II would include installing reinforced concrete planted terraces on the east and west banks of the LA River channel. The proposed Project generally includes components noted in the *Los Angeles River Revitalization Master Plan*.

C. *PROJECT OBJECTIVES*

CEQA requires that an EIR include a statement of objectives sought by the proposed Project, and that the Objectives include the underlying purpose of the proposed Project. These objectives help the lead agency determine the alternatives to evaluate in the EIR (see *CEQA Guidelines* Section 15124(a)). The following is a list of objectives for the proposed Project that support the underlying purpose:

- Serve the open space and recreational needs of surrounding communities;
- Connect and improve neighborhoods;
- Incorporate sustainable design consistent with the City's plans and goals;
- Encourage active modes of transportation and public transit;
- Promote beneficial stormwater treatment and/or capture; and
- Provide safe pedestrian and bicycle access to the LA River.

The proposed Project would be designed to conform to the *Los Angeles River Revitalization Master Plan*, the *City of Los Angeles' Mobility Plan 2035*, the *One Water LA 2040 Plan,* and other local and adopted plans as applicable. Consistent with the proposed Project objectives, the proposed Project would endeavor to adhere to the following guidelines and design goals:

A. Active and passive recreation that serves the needs of the community, particularly Boyle Heights and the Arts District.
B. Connections to improvements within the neighborhoods in proximity to the Sixth Street Viaduct open spaces.
C. Advanced design in keeping with the City's sustainability, low impact development (LID), green building, and Envision goals, which would include sensitivity to supporting all modes of traversing under the Viaduct.
D. Promotion of multi-modal active transportation components, including linking to existing and future bicycle and pedestrian facilities.
E. Environmentally friendly design that promotes beneficial stormwater treatment and/or capture throughout the site.

II. ENVIRONMENTAL REVIEW PROCESS

In accordance with CEQA, the environmental review process for the proposed Project commenced with solicitation of comments from identified responsible and trustee agencies. The notice was also circulated to members of the public, local and state agencies, organizations, and interested parties to solicit comments on the proposed Project. The City prepared an Initial Study (IS) and circulated an NOP to members of the public, local and state agencies, organizations, and interested parties to solicit comments on the proposed Project between April 13, 2017, and May 15, 2017.

Two public scoping meetings were held, one on May 3, 2017, at the Puenta Learning Center and one on May 11, 2017, at the Aliso Pico Gymnasium. Informational materials were made available in Spanish and English.

The NOP/IS was available on the Los Angeles Bureau of Engineering (LABOE) website and at local public facilities. A notice, informing the public of the availability of the NOP/IS, was printed in English in *DTLA News* and in Spanish in *La Opinión*. The NOP/IS was also available at the following public facilities during the public review period:

- Central Library, 630 West Fifth Street, Los Angeles, CA 90071
- Little Tokyo Library, 203 South Los Angeles Street, Los Angeles, CA 90012
- Robert Louis Stevenson Library, 803 Spence Street, Los Angeles, CA 90023
- Benjamin Franklin Library, 2200 East First Street, Los Angeles, CA 90033
- BH Technology Center, 1600 East Fourth Street, Los Angeles, CA 90033
- Boyle Heights City Hall, 2130 East First Street Suite 241, Los Angeles, CA 90033

Following the comment period for the NOP/IS, a Draft EIR was prepared for the proposed Project. The IS, NOP, and NOP comment letters were included in **Appendix A** of the Draft EIR.

Consistent with the requirements of Sections 15087 and 15105 of the *CEQA Guidelines*, the Draft EIR was submitted to the Los Angeles County Clerk and the State Clearinghouse, a division of the Governor's Office of Planning and Research and circulated for public review. The public comment period for the Draft EIR was from May 27, 2021, to July 26, 2021, exceeding CEQA's 45-day public comment period requirement.

During the comment period, the Draft EIR was made available for review on LABOE's Project website, https://eng.lacity.org/about-us/divisions/environmental-management/projects/sixth-street-park-arts-river-connectivity-improvements-parc. In addition, hard copies of the Draft EIR were made available at the following public facilities:

- Central Library, 630 West Fifth Street, Los Angeles, CA 90071
- Robert Louis Stevenson Library, 803 Spence Street, Los Angeles, CA 90023
- BH Technology Center, 1600 East Fourth Street, Los Angeles, CA 90033
- East Los Angeles County Library, 4837 East 3rd Street, Los Angeles, CA 90022

Due to the global pandemic, a virtual public meeting was held in English and Spanish on July 14, 2021, at 6:30 PM on Zoom during the 45-day public comment period for the Draft EIR. Accommodations were also made available at PUENTE Learning Center in the Boyle Heights Neighborhood for anyone requiring access to a screen or internet connection for the virtual public meeting. A notice regarding the public review period and how to access the public meeting was posted on the LABOE Project website: https://eng.lacity.org/about-us/divisions/environmental-

management/projects/sixth-street-park-arts-river-connectivity-improvements-parc, and published in the *DTLA News* in English and *La Opinion* in Spanish. Project stakeholders also received mail and email notifications regarding the virtual public meeting.

The Final EIR was prepared following the Draft EIR comment period. In accordance with CEQA Guideline Section 15088, the Final EIR includes responses to comments on environmental issues that were received during the comment period for the Draft EIR.

III. RECORD OF PROCEEDINGS

The documents and other materials that constitute the agency's record of proceedings or administrative record on which these CEQA Findings are based can be found at the Office of the City Clerk, 200 North Spring Street, 3rd Floor, Los Angeles, CAf the Board of Public Works Commission, 200 North Spring Street, 3rd Floor, Los Angeles, CA; the Bureau of Engineering, 1149 S. Broadway, Suite 600, Los Angeles CA; and any other relevant City department. This information is provided in compliance with Public Resources Code Section 21081.6(a)(2) and *CEQA Guidelines* Section 15091€.

The City has relied on all of the documents provided in the Record of Proceedings in reaching its decisions on the proposed Project, even if not every document was formally presented to the City as part of the files generated in connection with the Project. Without exception, any documents not found in the Project files fall into one of the two categories below. First, many of them reflect prior planning or legislative decisions with which City Council decisionmakers were aware in approving the Project. (See *City of Santa Cruz v. Local Agency Formation Commission (1978) 76 Cal.App.3d 381, 391-392*; *Dominey v. Department of Personnel Administration (1988) 205 Cal.App.3d 729, 738, fn. 6*.)

The second category are other documents that influenced the expert advice provided to the City's staff or the environmental consultants who prepared the EIR, who then provided advice to the final decisionmakers. For that reason, such documents form part of the underlying factual basis for the City's decisions relating to the approval of the Project. (See *Pub. Resources Code, §21167.6, subd. (e)(10)*; *Browning-Ferris Industries v. City Council of City of San Jose (1986) 181 Cal.App.3d 852, 866*; *Stanislaus Audubon Society, Inc. v. County of Stanislaus (1995) 33 Cal.App.4th 144, 153, 155*.)

IV. FINDINGS REQUIRED UNDER CEQA

Public Resources Code Section 21002 provides that "public agencies should not approve projects as proposed if there are feasible alternatives or feasible mitigation measures available which would substantially lessen the significant environmental effects of such projects." The same statute provides that the procedures required by CEQA "are intended to assist public agencies in systematically identifying both the significant effects of projects and the feasible alternatives or feasible mitigation measures which will avoid or substantially lessen such significant effects." Section 21002 goes on to provide that "in the event [that] specific economic, social, or other

conditions make infeasible such project alternatives or such mitigation measures, individual projects may be approved in spite of one or more significant effects thereof."

The mandate and principles announced in Public Resources Code Section 21002 are implemented, in part, through the requirement that agencies must adopt findings before approving projects for which EIRs are required. For each significant environmental effect identified in an EIR for a project, the approving agency must issue a written finding reaching one or more of three permissible conclusions.

The first such finding is that changes or alterations have been required in, or incorporated into, the project which avoid or substantially lessen the significant environmental effect as identified in the Final EIR.

The second permissible finding is that such changes or alterations are within the responsibility and jurisdiction of another public agency and not the agency making the finding. Such changes have been adopted by such other agency or can and should be adopted by such other agency.

The third potential conclusion is that specific economic, legal, social, technological, or other considerations, including provision of employment opportunities for highly trained workers, make infeasible the mitigation measures or project alternatives identified in the Final EIR. (See *CEQA Guidelines*, § 15091, subd (a); see also Pub. Resources Code, § 21081, subd. (a).)

"'Feasible' means capable of being accomplished in a successful manner within a reasonable period of time, taking into account economic, environmental, social, legal, and technological factors." (*CEQA Guidelines*, § 15364.) The concept of "feasibility" also encompasses the question of whether a particular alternative or mitigation measure promotes the underlying goals and objectives of a project. (*Sierra Club v. County of Napa* (2004) 121 Cal.App.4th 1490, 1506 – 1509 [upholding CEQA findings rejecting alternatives in reliance on applicant's project objectives]; see also *California Native Plant Society v. City of Santa Cruz* (2009) 177 Cal. App. 4th 957, 1001 *(CNPS) ["*an alternative 'may be found infeasible on the ground it is inconsistent with the project objectives as long as the finding is supported by substantial evidence in the record'"], quoting Kostka & Zischke, *Practice Under the Cal. Environmental Quality Act* [Cont.Ed.Bar 2d ed. 2009] (*Kostka & Zischke*), § 17.309, p. 825); *In re Bay-Delta Programmatic Environmental Impact Report Coordinated Proceedings* (2008) 43 Cal.4th 1143, 1165, 1166 (*Bay-Delta*) ["feasibility is strongly linked to achievement of each of the primary program objectives"; "a lead agency may structure its EIR alternative analysis around a reasonable definition of underlying purpose and need not study alternatives that cannot achieve that basic goal"].)

Moreover, "'feasibility' under CEQA encompasses 'desirability' to the extent that desirability is based on a reasonable balancing of the relevant economic, environmental, social, legal, and technological factors." (*City of Del Mar v. City of San Diego* (1982) 133 Cal.App.3d 410, 417 (*City of Del Mar*); see also *CNPS*, *supra,* 177 Cal. App. 4th at p. 1001 *[after weighing "'*economic, environmental, social, and technological factors,'... 'an agency may conclude that a mitigation

measure or alternative is impractical or undesirable from a policy standpoint and reject it as infeasible on that ground'"] quoting Kostka & Zischke, *supra,* § 17.29, p. 824.)

For the purposes of these Findings, the term "avoid" refers to the effectiveness of one or more mitigation measures to reduce an otherwise significant effect to a less than significant level. In contrast, the term "substantially lessen" refers to the effectiveness of such measure or measures to substantially reduce the severity of a significant effect, but not to reduce that effect to a less than significant level.

CEQA requires that the lead agency adopt feasible mitigation measures or, in some instances, feasible alternatives, to substantially lessen or avoid significant environmental impacts that would otherwise occur. With respect to a project for which significant impacts are not avoided or substantially lessened, a public agency, after adopting proper findings, may nevertheless approve the project if the agency first adopts a statement of overriding considerations setting forth the specific reasons that the agency found that the project's benefits outweigh its unavoidable adverse environmental effects. As discussed above and supported by the Draft EIR and other documents available in the record of proceedings, the environmental impacts that would be anticipated to result from the proposed Project would be reduced to less than significant impacts with adherence to standard regulatory and permit requirements or implementation of identified project features described in the EIR, as well as BMPs described in Section V. Therefore, a statement of overriding consideration is not required for the proposed Project.

The findings provided in this document are based upon substantial evidence in the entire record before the City. The references set forth in these findings to certain pages or sections of the environmental documents for the proposed Project are for ease of reference and are not intended to provide an exhaustive list of the evidence relied upon for these findings. These findings do not attempt to describe the full analysis of each environmental impact contained in the Final EIR , its appendices, and additional documents in the case files for the Project. Instead, a full explanation of these environmental findings and conclusions can be found in the Final EIR and those documents, and these findings hereby incorporate by reference and adopt the discussion and analysis in the Final EIR , its appendices, and additional documents in the case files for the Project supporting the determination regarding the Project's impacts. In making these findings, the determinations and conclusions of the Final EIR relating to environmental impacts are hereby ratified, adopted, and incorporated in these findings, except to the extent any such determinations and conclusions are specifically and expressly modified by these findings. In the event these findings inadvertently omit or inaccurately reflect facts stated in the Final EIR due to a clerical error, such statements are nevertheless hereby adopted and incorporated in the findings below by reference, and the language set forth in the Final EIR shall control.

V. PROJECT IMPACTS

The City, having reviewed and considered the information contained in the Final EIR, and the record of proceedings, determined that the proposed Project would have no impact or less than

significant impacts on the following resources: mineral resources, agriculture and forestry resources, population and housing, and recreation.

The City determined that with implementation of best management practices, the proposed Project would have a less than significant impact on the following resources:

- Aesthetics
- Biological Resources
- Cultural Resources and Tribal Cultural Resources
- Geology and Soils
- Greenhouse Gas Emissions
- Land Use and Planning
- Public Services

The City determined that mitigation measures were required to have a less than significant impact on the following resources:

- Air Quality
- Energy
- Hazards and Hazardous Materials
- Hydrology and Water Quality
- Noise and Vibration
- Transportation and Traffic
- Utilities and Service Systems

The mitigation measures and BMPs considered to be feasible and that would avoid or substantially lessen significant impacts from construction and operational activities to less than significant are provided below:

1. Aesthetics

BMPs:

BMP-AES-1: Construction Lighting

If nighttime lighting at the construction site is required, lighting shall be directed downward, on-site, and away from surrounding land uses.

BMP-AES-2: Construction Staging and Construction Staging Area

Construction staging shall be coordinated with the construction and maintenance of the Viaduct Replacement Project as needed; therefore, additional use or acquisition of public space for equipment and vehicles will not be required. The construction area shall be fenced to obscure views of construction activities, materials, and staged equipment.

BMP-AES-3: Operational Lighting

Outdoor lighting for recreational activities shall be limited to the proposed operating hours.

BMP-AES-4: Regulatory Requirements for Lighting

- Proposed Project illumination shall comply with the provisions in the City's Municipal Code, including LAMC Chapter 1, Article 2, Sec. 12.21A5(k); LAMC Chapter 1, Article 7, Sec. 17.08C; and LAMC Chapter 9, Article 3, Section 93.0117.
- The new walkway lighting shall be compliant with all regulations set forth by the City's Bureau of Street Lighting Design Standards and Guidelines to ensure that the area receives lighting that meets national illumination standards for vehicular and pedestrian traffic, does not emit light pollution, and produces little glare.
- Lighting for sports fields and courts shall operate in compliance with Los Angeles City Recreation and Parks (RAP) illuminance level standards for outdoor sports and recreational facilities.
- Lighting for security shall be illuminated in accordance with the Illuminating Engineering Society (IES) standards, IES RP-33-14 *Lighting for Exterior Environments* and IES G-1-03 *Security Lighting for People, Property and Public Spaces*, as updated by IES G-1-16 *Guide for Security Lighting for People, Property and Critical Infrastructure*.

Mitigation Measures: Impacts on Aesthetic Resources would be less than significant; therefore, mitigation measures are not required.

2. Air Quality

BMPs:

BMP-AQ-1: SCAQMD Rules and Regulations

The contractor shall implement measures to ensure that all construction activities are consistent with SCAQMD rules and regulations.

BMP-AQ-2: Construction Worker Incentives

The City shall offer ride-share and transit incentives for construction workers to reduce emissions associated with motor vehicle use.

BMP-AQ-3: Construction Equipment Maintenance

The contractor shall maintain construction equipment by conducting regular tune-ups according to the manufacturers' recommendations.

Mitigation Measures:

MM-AQ-1: Newer/Tier 4 Engines in Haul Trucks and Construction Equipment

- Include in all construction contracts the requirement to use 2007 and newer diesel haul trucks (e.g., material delivery trucks and soil import/export).
- Include in all construction contracts the requirement that all off-road diesel-fueled construction equipment greater than 50 horsepower shall meet Tier 4 off-road emission standards. In addition, if not already supplied with a factory-equipped diesel particulate filter, all construction equipment shall be outfitted with Best Available Control Technology (BACT) devices certified by CARB. Any emissions control device used by the contractor shall achieve emissions reductions that are no less than what could be achieved by a Level 3 diesel emissions control strategy for a similarly sized engine as defined by CARB regulations. To the extent locally available, construction equipment shall incorporate emissions savings technology such as hybrid drives. In the event that any equipment required under this mitigation measure is not available, provide documentation as information becomes available. A copy of each unit's certified tier specification, BACT documentation, and CARB or SCAQMD operating permit at the time of mobilization of each applicable unit of equipment shall be provided.
- Maintain construction equipment by conducting regular tune-ups according to the manufacturers' recommendations.
- To the extent possible, the import and export of onsite materials shall be scheduled to minimize empty return trips.

MM-AQ-2: Construction Equipment Requirements

- All on- and off-road diesel-fueled equipment shall not idle for more than 5 minutes when not in use. The idling of diesel-fueled equipment and haul trucks within 1,000 feet of nearby residential land uses shall be prohibited. Signs shall be posted in the designated queuing areas and or job sites to remind drivers and operators of the 5-minute-idling limit.
- Staging and queuing areas shall be located at the furthest distance possible from nearby residential land uses.
- Use alternatively fueled (e.g., compressed natural gas, liquefied natural gas, propane), gasoline-fueled, or electrified construction equipment in place of diesel-fueled equipment to the extent locally available.

MM-AQ-3: Fugitive Dust Controls

- All active portions of the construction site shall be watered twice daily to prevent excessive amounts of dust.

- Non-toxic soil stabilizers shall be applied to all inactive construction areas (previously graded areas inactive for 20 days or more, assuming no rain) according to manufacturers' specifications.
- All excavating and grading operations shall be suspended when wind gusts (as instantaneous gust) exceed 25 miles per hour.
- On-site off-road equipment and on-road vehicles used on-site shall be limited to 15 miles per hour.
- All on-site roads shall be paved as soon as feasible, watered twice daily, or chemically stabilized.
- Visible dust beyond the property line which emanates from the project shall be prevented to the maximum extent feasible.
- All material transported off-site shall be either sufficiently watered or securely covered to prevent excessive amounts of dust prior to departing the job site.
- Track-out devices shall be used at all construction site access points.
- All delivery truck tires shall be watered down and/or scraped down prior to departing the job site.
- Streets shall be swept at the end of the day if visible soil material is carried onto adjacent paved public roads and use of SCAQMD Rule 1186 and 1186.1 certified street sweepers or roadway.
- Replace ground cover in disturbed areas as quickly as possible.
- All trucks that are to haul excavated or graded material on-site shall comply with State Vehicle Code Section 23114 (Spilling Loads on Highways), with special attention to Sections 23114(b)(F), (e)(4) as amended, regarding the prevention of such material spilling onto public streets and roads.
- Conduct continuous, direct-reading, near real-time ambient monitoring of PM_{10}. Install appropriate signage and notify the SCAQMD in accordance with Rule 1466, Control of Particulate Emissions from Soils with Toxic Air Contaminants, prior to conducting any earth-moving activities on any site meeting the applicability of the rule.

3. Biological Resources

BMPs:

BMP-BIO-1: Pre-Construction Wildlife Surveys

Pre-construction wildlife surveys shall be completed by a qualified biologist no more than 48 hours prior to clearing, grubbing, or other construction activities to determine the presence/absence of wildlife species, including special-status species, within 100 feet of the construction area. Special attention will be focused on any existing burrowing, roosting, and nesting habitat within the Project

Area. Surveys shall be repeated if construction activities are suspended for five days or more. If any wildlife species are identified, appropriate BMPs shall be developed and implemented to reduce potential impacts on these species, in consultation with regulatory agencies where appropriate.

BMP-BIO-2: Trash and Construction Debris Removal

All trash and construction debris shall be removed from the LA River construction areas on a daily basis. All water quality BMP materials shall be properly maintained during project construction and removed upon completion of construction activities. After completion of proposed construction activities, all construction equipment and materials shall be removed from the Project Area, and the Project Area shall be returned to pre-project conditions.

BMP-BIO-3: Work Area Limitations

No work for the proposed Project shall be conducted on the Fourth Street Bridge or Seventh Street Bridge structures.

BMP-BIO-4: Nesting Bird Survey

If vegetation trimming or clearing is conducted during the nesting season (typically February 15 through September 15), nesting bird surveys shall be completed by a qualified biologist within 300 feet of potential bird-nesting areas and 500 feet of potential raptor-nesting areas no more than 48 hours prior to trimming/removal activities to determine if nesting birds are within the affected vegetation. Surveys shall be repeated if trimming or removal activities are suspended for five days or more.

BMP-BIO-5: Nesting Bird Buffer

If nesting birds protected under the MBTA and California Fish and Game Code Sections are found in the Project Area, appropriate buffer consisting of orange flagging/fencing or similar (typically up to 300 feet for songbirds and 500 feet for raptors shall be installed and maintained until nesting activity has ended, as determined in coordination with the project biologist and regulatory agencies, as appropriate, to ensure that nesting birds and active nests are not harmed.

BMP-BIO-6: Hazardous Material BMPs

Appropriate hazardous material BMPs shall be implemented to reduce the potential for chemical spills or contaminant releases into the LA River, including any non-stormwater discharge.

BMP-BIO-7: Equipment Maintenance

All equipment refueling and maintenance shall be conducted in the staging area. In addition, vehicles and equipment shall be checked daily for fluid and fuel leaks, and drip pans shall be placed under all equipment that is parked and not in operation.

BMP-BIO-8: Regulatory Permits

The City shall consult with the appropriate responsible resource agency (e.g., CDFW and RWQCB) to determine permanent and temporary impact areas. Prior to undertaking ground-disturbing activities within or immediately adjacent to any aquatic resource areas, the City and/or their consultant shall obtain a CWA Section 401 Water Quality Certification, and California Fish and Game Code Section 1602 Streambed Alteration Agreement.

BMP-BIO-9: Pre-Construction Bat Surveys

At least 30 days prior to construction, alterations to the LA River Access Tunnel shall be surveyed by a qualified biologist to assess the presence of bats or potential bat-roosting cavities. If bats or bat-roosting cavities are identified, then during the non-breeding and active season (typically October), bats shall be safely evicted, to the extent feasible, under the direction of a qualified biologist. Once it has been determined that all roosting bats have been safely evicted from roosting cavities, exclusionary devices shall be installed and maintained where appropriate to prevent bats from roosting in these cavities prior to construction.

BMP-BIO-10: Monitoring During LA River Access Tunnel Alteration

In the event that all bats are not able to be excluded from affected roosting habitat, a qualified biologist shall monitor LA River Access Tunnel alterations. If bats are disturbed, work shall be safely suspended until all bats leave the vicinity on their own, or alternative measures can be identified under the direction of a qualified biologist. Work shall resume only once the bats have left the site and/or approval to resume work is given by a qualified biologist.

BMP-BIO-11: Bat Monitoring

In the event that all bats are not able to be excluded from affected roosting habitat, a qualified biologist shall monitor structure alteration activities. If bats are disturbed, work shall be safely suspended until all bats leave the vicinity of the LA River Access Tunnel on their own, or alternative measures shall be identified under the direction of a qualified biologist. Work shall resume only once the bats have left the site and/or approval to resume work is given by a qualified biologist.

Surveys and exclusion measures are expected to prevent maternal colonies from becoming established in structures to be removed or altered. In the event that a maternal colony of bats is found, no work shall be conducted within 100 feet of the maternal roosting site until the maternal season is over or the bats have left the site, or as otherwise directed by a qualified biologist. The site shall be designated as a sensitive area and protected as such until the bats have left the site. No activities shall be authorized adjacent to the roosting site. Combustion equipment, such as generators, pumps, and vehicles, shall not be parked or operated under or adjacent to the roosting site. Construction personnel shall not be authorized to enter areas beneath the colony, especially during the evening exodus.

Mitigation Measures: Impacts on Biological Resources would be less than significant; therefore, mitigation measures are not required.

4. Cultural Resources and Tribal Cultural Resources

BMPs:

BMP-CUL-1: Archaeological Monitoring During Excavation

A qualified archaeological monitor shall conduct archaeological monitoring in the West Park and East Park for excavations at depths greater than 5 feet. Monitoring efforts may be reduced or eliminated for those portions of the Project Area shown to have been recently disturbed by construction activities associated with the Sixth Street Viaduct Project.

BMP-CUL-2: Tribal Cultural Resources Sensitivity Training

The City shall invite a qualified tribal representative from the Gabrieleño Band of Mission Indians to a pre-construction meeting to provide a training session to the construction contractor regarding potential tribal resources that could be encountered during construction activities and procedures to follow should a tribal resource be encountered.

BMP-CUL-3: Tribal Cultural Resources Monitoring During Excavation

The City shall retain and compensate for the services of a Tribal monitor who is both approved by the Gabrieleño Band of Mission Indians-Kizh Nation Tribal Government and is listed under the NAHC's Tribal Contact list for the Project Area. The Tribal monitor shall only be present on-site during the construction phases that involve ground-disturbing activities in the proposed Arts Plaza. Monitoring efforts may further be reduced or eliminated for those portions of the proposed Arts Plaza that (1) are underlain with artificial fill of known origin, (2) require superficial scraping of land at depths less than five feet, or (3) are demonstrated to have been recently disturbed by construction activities associated with the Sixth Street Viaduct Project. The on-site monitoring shall cease when the grading and excavation activities in the proposed Arts Plaza are completed, or when the Tribal representatives and monitor have indicated that the site has a low potential for impacting tribal cultural resources.

BMP-CUL-4: Unanticipated Discovery of Archaeological and Tribal Cultural Resources

In the event that potentially significant buried archaeological materials are encountered within the Project Area, all work in the vicinity must stop until the archaeological and Tribal monitor can visit the site and assess the significance of the resource. If the resources are Native American in origin, the Gabrieleño Band of Mission Indians-Kizh Nation shall coordinate with the City regarding treatment and curation of these resources. Work may continue on other parts of the Project Area while evaluation and, if necessary, mitigation takes place (CEQA Guidelines Section 15064.5 [f]).

BMP-CUL-5: Unanticipated Discovery of Human Remains

Health and Safety Code Section 7050.5, Section 15064.5(e) of the CEQA Guidelines, and PRC Section 5097.98 mandate the process to be followed in the unlikely event of an unanticipated discovery of human remains in a location other than a dedicated cemetery. The Los Angeles County Coroner must be notified within 24 hours of the discovery of potentially human remains. The Coroner must then determine within two working days of being notified if the remains are subject to his or her authority.

If the Coroner recognizes the human remains (including bone fragments and funerary objects) to be Native American, he or she must contact the NAHC by phone within 24 hours. The NAHC then designates a Most Likely Descendant (MLD) with respect to the human remains within 48 hours of notification. The MLD will then have the opportunity to recommend to the Project proponent means for treating or disposing of, with appropriate dignity, the human remains and associated grave goods within 24 hours of notification.

Mitigation Measures: Impacts on Cultural Resources would be less than significant; therefore, mitigation measures are not required.

5. Energy

BMPs: There are no proposed BMPs specifically for Energy. With implementation of the BMPs identified in Section 3.2.4 (Air Quality) and Section 3.7.4 (Greenhouse Gas Emissions), construction-related energy use would be minimized to the greatest extent feasible.

Mitigation Measures: There are no proposed mitigation measures specifically for Energy. Implementation of the mitigation measures identified in Section 3.2.4 (Air Quality), would reduce impacts related to construction-related energy use. Impacts related to Energy would be less than significant.

6. Geology and Soils

BMPs:

BMP-GEO-1: Erosion Control

The contractor shall implement standard BMPs, such as the use of fiber rolls and silt fencing, to reduce the amount of dust and dirt from leaving the construction area.

BMP-GEO-2: Geotechnical Site Investigation Recommendations

The Geotechnical Site Investigation report for the proposed Project includes recommendations to ensure that the Project Area is suitable for construction, and to ensure that appropriate measures are taken to reduce impacts during earthwork, excavation, utility trenching, backfilling, and other construction activities (Hushmand Associates, Inc., 2018). Backfill soils shall be moisture-conditioned and recompacted to meet ASTM International standards to counteract the potential adverse effects of soil expansiveness. If import soils are used, the import soil shall not exhibit an

Expansion Index greater than 20 or contain more than 35 percent fines (i.e., fine-grained soils), and shall be screened by the geotechnical engineer to meet ASTM International standards.

BMP-PAL-1: Paleontological Sensitivity Training

Prior to the start of construction, all field personnel shall be briefed regarding the types of fossils that could be found and the procedures to follow should paleontological resources be encountered. Specifically, the training shall provide a description of the fossil resources that may be encountered, outline steps to follow when a fossil discovery is made, and provide contact information for a qualified paleontologist. The training shall be developed by a qualified paleontologist and provided as hand-outs or a PowerPoint Presentation that may be presented concurrently with other pre-construction training.

BMP-PAL-2: Unanticipated Paleontological Resource Discoveries

In the event that an unanticipated fossil discovery is made during construction, a qualified professional paleontologist shall be retained to examine the find and to determine whether further paleontological resource mitigation is warranted in accordance with SVP (2010) guidelines.

Mitigation Measures: Impacts related to Geology and Soils would be less than significant; therefore, mitigation measures are not required.

7. Greenhouse Gas Emissions

BMPs:

BMP-GHG-1: Off-Road Equipment Construction Requirements

Idling shall be limited for vehicles and off-road equipment. Off-road equipment shall meet Tier 4 emission standards and newer. Efficient on-road haul trucks shall be used, where practicable.

Mitigation Measures: Impacts related to GHG emissions would be less than significant; therefore, mitigation measures are not required.

8. Hazards and Hazardous Materials

BMPs:

BMP-HAZ-1: Coordination with Regulatory Agencies

The City shall coordinate with Metro, U.S. EPA, and DTSC during construction activities to minimize health risks to the public or the environment associated with ongoing cleanup actions within the Project Area.

BMP-HAZ-2: Compliance with SCAQMD Rules and Regulations

The contractor shall implement measures to ensure that all construction activities are consistent with SCAQMD rules and regulations, including Rule 1166 – Volatile Organic Compound Emissions from Decontamination of Soil and Rule 1466 – Control of Particulate Emissions from Soils with Toxic Air Contaminants.

Mitigation Measures:

MM-HAZ-1: Remediation Category 1A

The City shall be required to implement the following measures in areas where RCRA Level Heavy Metals, PCBs, or TPH DRO will be excavated and disposed of at Class 1 Hazardous Waste Landfills:

- Soils will be excavated as needed up to a maximum depth of 4.5 feet below ground surface (bgs), consistent with the limits designated on **Figure 3.8-3a** and **Figure 3.8-3b** of the Draft EIR, Areas of Concern with Contamination.
- The transport and disposal of RCRA hazardous waste will be accompanied with a Hazardous Waste Manifest (i.e., documentation accompanying the transport, treatment, storage and disposal of hazardous waste) completed by a licensed transporter. A site-specific CalEPA Hazardous Waste Generator Identification Number will be obtained for each RCRA hazardous waste. Additional sampling and testing will likely be required by the facility accepting the soil for disposal.
- For excavations deeper than 4 feet, shoring or other approved means will be required to maintain stability of the excavation walls.
- During excavation activities, dust and runoff controls will be implemented to prevent windborne or surface waterborne migration of the soil from the Project Site. The soils will be directly loaded into the transport trucks, which will require tarps to prevent spillage or windblown loss of soil during transport. These controls will be verified and monitored by an independent third party.
- A site-specific Health and Safety Plan (HASP) will be prepared and implemented during all proposed construction activities, including full time perimeter sampling and testing of particulates and dust from the Project Site.
- All onsite workers and supervisors will complete a 40-hour OSHA Hazardous Waste Operations and Emergency Response (HAZWOPER) training course and be equipped with the appropriate personal protective equipment.
- Excavated areas will be backfilled with certified clean soil.

MM-HAZ-2: Remediation Category 2A

The City shall be required to implement the following measures in areas where soils contaminated with Heavy Metals and/or TPH DRO that are classified as non-RCRA hazardous waste will be excavated. These contaminated soils shall be disposed at Class 2 Landfills:

- Soils will be excavated as needed up to a maximum depth of 6 feet bgs, consistent with the limits designated on **Figure 3.8-3a** and **Figure 3.8-3b** of the Draft EIR**,** Areas of Concern with Contamination.

- The transport and disposal of non-RCRA hazardous waste will be accompanied with a Hazardous Waste Manifest completed by a licensed transporter. A CalEPA Non-RCRA Hazardous Waste Generator Identification Number will be obtained. Additional sampling and testing will likely be required by the facility accepting the soil for disposal.
- For excavations deeper than four feet, shoring or other approved means shall be required to maintain stability of the excavation walls.
- During excavation activities, dust and runoff controls will be implemented to prevent windborne or surface waterborne migration of the soil from the Project Site. The soils will be directly loaded into the transport trucks, which will require tarps to prevent spillage or windblown loss of soil during transport. These controls will be verified and monitored by an independent third party.
- A site-specific HASP will be prepared and implemented during all proposed construction activities, including full time perimeter sampling and testing of particulates and dust from the Project Site.
- All onsite workers and supervisors will complete a 40-hour OSHA HAZWOPER training course and be equipped with the appropriate personal protective equipment.
- Excavated areas will be backfilled with certified clean soil.

Remediation Category 2B

In addition to the measures above, the following measures shall be implemented in areas where VOCs were observed in soil gases:

- Emission controls will be used to clear the area of emitting VOCs (i.e., spraying water or applying foam agents to all exposed soil surfaces and/or using large, spark-free fans). Full-time monitoring will be required to verify that the emission controls are effective in preventing the VOCs from impacting workers or the public. Monitoring will comply with SCAQMD Rule 1166.
- A detailed HASP will be prepared and implemented during the excavation and transport of contaminated soils.
- The excavation, transport, and disposal of contaminated soils will require permitting and approval by the CUPA, CalEPA/DTSC, and SCAQMD. A detailed Work Plan/Remedial Action Plan will be prepared and submitted to these agencies for review and approval. Under Rule 1166, a Mitigation Management Plan for potential VOC emissions during excavation will be submitted to SCAQMD and subject to SCAQMD approval. A site-specific CalEPA Hazardous Waste Generator Identification Number will be obtained and manifests completed by the licensed transporter.
- A soil vapor extraction (SVE) system will be designed and installed to remove and treat VOCs in the soil gases. If Health Risk Assessments indicate the need, a vertical barrier/line will be

installed around the perimeter of the area to prevent soil gases with VOCs from migrating back into the area. Gases migrating from below the clean backfill or deeper depths will be extracted through the SVE slotted wells and treated by the SVE treatment system. Treatment for VOCs typically involves carbon filtration unless hydrogen sulfide is detected in the gas stream. Operating and maintenance procedures for the SVE system and permit applications will be prepared and approved by the oversight agency and SCAQMD.

- If the City determines it is necessary, a "Pilot Study" will be designed and implemented to evaluate the sustainable flow rate and concentration of VOCs in the soil gas stream and to determine the size of the final SVE system components.
- Design of the SVE system, preparation of a Design Report and Work Plan/Remedial Action Plan (including HASP) will be submitted to and subject to approval by the CUPA and LACoFD Site Mitigation Unit.
- The SVE will be implemented and monitored. This may require several months to over a year.
- The City shall provide documentation to the CUPA, LACoFD Site Mitigation Unit, and SCAQMD when the SVE has reached the specified cleanup goals.
- Excavated areas will be backfilled with certified clean soil.

MM-HAZ-3: Remediation Category 3: The City shall be required to implement one of the following three options in areas where no heavy metals were observed, but VOCs were observed in soil gas:

- Option 1: This alternative will involve the same measures as described under Category 2b above. Contaminated soils will be removed to a depth of up to 15 feet or more and shoring of the excavation walls will be necessary. A liner will be installed on the bottom of the excavation area to prevent contaminated soil gas from re-entering the backfill soils. Gas migration from the side walls will be mitigated by either installation of a vertical liner placed on the side walls of the excavation or SVE wells installed vertically outside the limits of the excavation after backfilling is done. The backfill soil will be certified clean fill and placement will need to meet the geotechnical specifications of the proposed Project design. During the process, the site will require strict emissions controls and monitoring.
- Option 2: This alternative, the SVE treatment method, utilizes extraction and monitoring wells (In Situ Method) or excavation and encapsulation of impacted soils in above ground piles with horizontal slotted piping (On Site Method), a vacuum pump or pumps, and carbon filtration units to extract and remove VOCs from the soil gas. The process will require several steps as follows:

    1. Design and implementation of a "Pilot Study" to evaluate the sustainable flow rate and concentration of VOCs in the soil gas stream and to size the final SVE system components.

2. Design of the SVE system, preparation of a Design Report and Work Plan/Remedial Action Plan (including HASP) for submittal to and approval by the CUPA and CalEPA/DTSC.
3. Solicitation of bids for construction and implementation of the remediation.
4. Implementation and monitoring of the SVE. This may require several months to over a year.
5. Reporting to the agencies with documentation that the SVE has reached the specified clean up goals.

- Option 3: This alternative will mitigate the impact of the VOCs and/or methane and hydrogen sulfide by precluding soil gases migration from the subsurface soil and intrusion into structures or other facilities and surface emissions. Depending on the type of soil gases and pressure in the soil gas, the systems can include several of the following components:
  - Shallow excavation (three to four feet bgs) to allow installation of the mitigation components (some of the soil will be used to backfill trenches)
  - Gravel layers and slotted piping for gas collection
  - Liner installation above the slotted piping and extending side wide
  - Vacuum pumps for gas extraction or air injection blowers
  - Filtration systems to remove VOCs and/or hydrogen sulfide from the gas stream
  - Geomembrane barriers placed beneath concrete slabs and/or foundations or fill areas
  - Installation of automated and/or manual monitoring systems

MM-HAZ-4: Remediation Category 4

The City shall be required to implement the following measures in areas within Caltrans ROW where soil contains ADL:

- In accordance with the Caltrans/DTSC ADL Agreement, soils above a depth of approximately 2.9 feet bgs will require one foot of clean soil cover to remain on site per the Caltrans/DTSC ADL Agreement.

MM-HAZ-5: Soil Gas Sampling

Additional soil gas sampling and testing is recommended for completion in PARC Areas 1A, 5, 6, 7, and 8. The additional sampling could potentially eliminate or reduce the need for soil gas remediation.

Ambient air and soil gas samples shall be tested for VOCs. If soil gas samples in PARC Area 6 yield ILCR values below the *de minimis* risk target or within the risk management range, no further mitigation and/or remedial actions will be required. If ILCR values are above the *de*

minimis risk target, additional remedial actions will be taken to lower values to within the risk management range, such as applying SVE to a maximum depth of 15 to 20 feet bgs.

MM-HAZ-6: Methane Mitigation and Testing

Methane mitigation applies to PARC Area 1A, which is located within the Methane Zone, and portions of PARC Area 7, where soil gases were detected and impervious surfaces are to be constructed adjacent to existing buildings. Any buildings (except naturally vented) to be constructed in Area 1A shall have methane mitigation systems meeting Level II requirements involving membrane and passive venter per Table 71, unless additional testing indicates no subsurface gas pressure and lower methane concentrations. In addition, paved areas that are over 5,000 square feet in area and within 15 feet of the exterior wall of a commercial, industrial, institutional building, shall be vented in accordance with the Methane Mitigation Standards, design Level II, unless additional testing indicates no subsurface gas pressure and lower methane concentrations.

Additional testing for methane concentrations and subsurface pressure shall be completed in accordance with the Division 71 Methane Seepage Regulations testing requirements should any buildings or paved areas over 5,000 square feet be proposed in PARC Area 1A and in PARC Area 7 where methane was detected.

9. Hydrology and Water Quality

BMPs:

BMP-HYDRO-1: Construction Drainage Design

The proposed Project shall incorporate drainage designs that direct stormwater runoff or irrigation runoff away from structures or the top of the slopes. No stormwater will be allowed to discharge over the top of a cut or fill slope.

BMP-HYDRO-2: Off-Site Sediment Transport

All entrances and exits to the construction site shall be stabilized to reduce transport of sediment off-site. Any sediment or other materials tracked off-site shall be removed within a reasonable time.

BMP-HYDRO-3: Storm Drain Message and Signage

Existing and proposed storm drain catch basins within the vicinity of the Project Site shall be marked and maintained.

BMP-HYDRO-4: Outdoor Material Storage Area Design

Proposed outdoor storage areas shall be organized and maintained to prevent stored materials from being permitted to runoff with stormwater. The outdoor storage of toxic and hazardous materials is not permitted.

BMP-HYDRO-5: Outdoor Trash Storage Area Design

Proposed outdoor trash storage enclosures shall be organized and maintained to prevent the transportation of trash and debris in stormwater. Bins and dumpsters shall remain covered.

BMP-HYDRO-6: Employee Training

Operations and maintenance employees shall be trained and made aware of the source controls, LID BMPs, educational materials, and maintenance requirements for the proposed Project at first hire and yearly thereafter.

BMP-HYDRO-7: Common Area Landscape Management

A landscape maintenance program shall be established in order to optimize water efficiency, limit pollutant introduction from fertilizers and pesticides, manage landscape waste, and prevent soil erosion.

BMP-HYDRO-8: Common Area Litter Control

A waste management program shall be implemented to inspect the Project Site for litter and pick up any litter as necessary on a regular basis.

BMP-HYDRO-9: Common Area Catch Basin Inspection

Catch basins shall be inspected and maintained, at a minimum, yearly and prior to the rainy season.

BMP-HYDRO-10: Street Sweeping Parking Lots

The parking plaza shall be vacuum swept, at a minimum, yearly and prior to the rainy season.

BMP-HYDRO-11: BMP Maintenance

Proposed structural source controls, non-structural source controls, and LID BMPs shall be maintained as outlined in the Operations and Maintenance Plan that will be developed for the proposed Project.

BMP-HYDRO-12: Structural and LID BMPs

- Runoff from the Project Site and tributary Viaduct areas shall be captured by proposed stormwater drainage systems, routed to a variety of structural and LID BMPs and discharged to the existing stormwater drainage facilities adjacent to the site. In addition, the Project Site shall include a combination of paved surfaces and landscaped areas to provide soil stability and further minimize erosion.
- Structural BMPs (i.e., hydrodynamic separators) shall be installed to treat the runoff from the Viaduct to the maximum extent practicable.

BMP-HYDRO-13: Regulatory Requirements for Water Quality

- To comply with the provisions of the NPDES MS4 Permit, the proposed Project shall implement a SWPPP that includes construction site BMPs to control erosion and

sedimentation. BMPs include silt fencing, fiber rolls, sandbag barriers, drainage inlet protections, and berms at the top of all grade slopes. The SWPPP shall also include post-construction stormwater management measures to control pollutants in stormwater discharges during operation of the proposed Project.

- If groundwater is encountered, the contractor shall develop a dewatering plan, and a Dewatering Permit with the Los Angeles RWQCB will also be required. Should dewatering be required, the proposed Project shall comply with the General Waste Discharge Requirements for Discharges of Groundwater from Construction and Project Dewatering to Surface Waters in Coastal Watersheds of Los Angeles and Ventura Counties.
- Proposed construction activities shall comply with all applicable federal, state, and local requirements to reduce the potential for the release of hazardous waste and other contaminants into groundwater. In addition, construction activities will be subject to the provisions of the CWA and Porter-Cologne Act; and other federal, state, and local requirements to ensure that stormwater pollutants resulting from construction will not substantially degrade water quality.
- A water diversion plan is not anticipated for the proposed Project because Phase II construction activities shall be performed during the dry season (April 15 through October 15). However, if work in a flowing stream is unavoidable, a water diversion plan shall be required, and the entire stream flow shall be diverted around the work area by a barrier, temporary culvert, new channel, or other means approved by the CDFW. Should water diversion be necessary, a 401/404 permit will also be required.
- An emergency evacuation plan shall be prepared for Phase II construction within the LA River. If measurable rain with 25 percent or greater probability is predicted within 72 hours during project-related activities, all activities within the LA River shall cease and protective measures to prevent siltation/erosion shall be implemented/maintained. With the implementation of BMPs, alterations to drainage patterns during construction in the LA River channel will not result in substantial erosion or siltation onsite or offsite.
- A Notice of Intent (NOI) for stormwater discharges associated with construction activities may also be required under the NPDES General Permit.
- Stormwater BMPs shall follow the latest California Stormwater Quality Association's Stormwater Best Management Practices Handbook. All entrances and exits to a construction site will be stabilized to reduce transport of sediment off-site. Any sediment or other materials tracked off-site will be removed within a reasonable time.
- Any non-stormwater discharge shall be controlled and properly disposed of through the sanitary sewer system or transported to an approved processing facility to prevent the contamination of site soils and groundwater.

- The handling, storage, and disposal of contaminants shall comply with all applicable federal, state, and local requirements. The Project Site shall be remediated to standards acceptable to LACoFD and other regulatory agencies as required, thereby reducing the area affected by contaminants.

Mitigation Measures:

MM-HYDRO-1: Public Safety Plan

The City, in coordination with USACE, shall publish a Public Safety Plan in order to reduce the potential for safety impacts related to flooding. The Public Safety Plan shall include an evacuation plan and protocols for protecting pedestrians and potential homeless populations (e.g., vehicular deterrents such as bollards and safety warning devices) in the LA River Access Tunnel during flood conditions.

10. Land Use and Planning

BMPs:

BMP-LAND-1: Coordination with Los Angeles Department of City Planning

The City BOE shall continue to work with the Los Angeles Department of City Planning to ensure that the proposed Project is consistent with future zoning changes.

BMP-LAND-2: Coordination with Viaduct Replacement Project

Any necessary land use entitlements shall be secured prior to the start of construction activities and shall be coordinated with construction and maintence of the Viaduct Replacement Project as needed.

BMP-LAND-3: Construction Area

Construction equipment, materials storage, and construction activities shall be contained within the limits of construction, and construction areas shall be fenced.

Mitigation Measures: There are no significant unavoidable adverse impacts on Land Use and Planning from construction and operation of the proposed Project.

11. Noise and Vibration

BMPs:

BMP-NOISE-1: Construction Equipment Requirements

Construction equipment shall be properly maintained and equipped with mufflers.

Mitigation Measures:

MM-NOISE-1: Construction-Noise Management Plan

A construction-noise management plan (CNMP) shall be prepared for the proposed Project. The CNMP shall, at a minimum, include the following measures:

- Construction activities shall be restricted outside the hours of 7:00 a.m. to 9:00 p.m. Monday through Friday, and between the hours of 8:00 a.m. to 6:00 p.m. on Saturdays. While the intention is not to conduct work on Sundays, occasional Sunday work may be required to ensure the proposed Project schedule is met. If it is determined that Sunday work is necessary, the proper permits will need to be obtained through the Police Commission. Construction activities shall be prohibited on federal holidays.
- Construction equipment shall be properly maintained and equipped with mufflers.
- Equipment shall be turned off when not in use for an excess of five minutes, except for equipment that requires idling to maintain performance.
- A public liaison shall be appointed for project construction and shall be responsible for addressing public concerns about construction activities, including excessive noise. As needed, the liaison shall determine the cause of the concern (e.g., starting too early, bad muffler) and implement measures to address the concern. The liaison will work directly with the construction contractor to ensure implementation of the noise control plan.
- The liaison will work directly with the construction contractor to ensure implementation of the noise control plan.
- The public shall be notified in advance of the location and dates of construction hours and activities.
- Where necessary, temporary sound barriers shall be installed.
- Signage and notification on where to report construction-generated noise shall be posted on-site and around the construction area, as well as on the Bureau of Engineering website.
- Staging and queuing areas shall be located at the furthest distance possible from nearby residential land uses, as well as any other noise-sensitive land uses identified in the Project Area at the time of construction (e.g., transient lodging, schools, libraries, churches, hospitals, and nursing homes).
- Limit noise/vibration intensive activities occurring within ten feet of existing structures and occupied land uses. Where possible and to the extent locally available, select low-noise/vibration generating equipment when activities occur within ten feet of adjacent existing structures.

12. Population and Housing

BMPs: There are no Best Management Practices related to Population and Housing.

Mitigation Measures: There are no significant unavoidable adverse impacts on Population and Housing from construction and operation of the proposed Project.

13. Public Services

BMPs: There are no best management practices for Public Services. With implementation of the best management practices identified in Section 3.15.4 (Transportation), impacts associated with delays to emergency vehicles would be avoided or minimized.

Mitigation Measures: There are no mitigation measures for Public Services. The mitigation measures identified in Section 3.15.5 (Transportation) address impacts associated with traffic concerns. As discussed in Section 3.15.5, traffic control plans for large events shall identify emergency services egress and access. Therefore, impacts on Public Services would be less than significant.

14. Recreation

BMPs: There are no Best Management Practices related to Recreation.

Mitigation Measures: Impacts related to Recreation would be less than significant; therefore, mitigation measures are not required.

15. Transportation and Traffic

BMPs:

BMP-TRANS-1: Temporary Detour Routes

During proposed construction activities, temporary detours shall be provided for any affected pedestrian and bicycle facilities.

BMP-TRANS-2: Construction Staging Plan

A construction staging plan shall be developed to reduce impacts related to noise, dust, traffic, and other health hazards. In addition, construction site BMPs (e.g., fencing, signs, and detours) shall be implemented to minimize hazards and prevent safety issues on the roadways and sidewalks surrounding the construction site.

BMP-TRANS-3: Construction Traffic

Construction-related trips shall be scheduled with increased frequency during off-peak hours to minimize impacts to commuters. Additionally, a Caltrans Transportation Permit would be required for the use of oversized vehicles on State highways.

BMP-TRANS-4: Access to Parcels

If access to any existing parcels is removed during proposed construction activities, temporary access shall be provided, and/or new points of access shall be constructed.

BMP-TRANS-5: Site-Specific Traffic Control and Transit Plan for Large Events

Large event permittees shall develop a site-specific traffic control plan to provide information on parking and circulation and highlight transit options for event attendees to minimize congestion and vehicle miles traveled. Traffic control strategies for events will include inbound/outbound flex lanes and sheriff-controlled intersections. Traffic control plans will also identify nearby public

parking facilities and identify passenger pick-up/drop-off locations. Permittees will be required to consider the cumulative traffic impacts of their event in relation to other events in the Project Area. The traffic control plans will also identify emergency services egress and access.

Mitigation Measures:

MM-TRANS-1: Mobility Hub

The City shall reserve space for a mobility hub at the proposed Project Site, including additional amenities for bicyclists, drivers, and transit users, to encourage event attendees to use alternative modes of transportation.

MM-TRANS-2: Bicycle Facilities

The City shall reserve space for a Bike Share hub at the proposed Project Site to allow Bike Share participants to dock bicycles and scooters.

MM-TRANS-3: Rideshare Zones

The City shall create permanent rideshare pick-up and drop-off zones for the East Park and West Park. Rideshare pick-up/drop-off zones could be located on South Santa Fe Street adjacent to the proposed West Park and South Mission Road adjacent to the proposed East Park. The pick-up/drop-off zones shall be clearly marked, and wayfinding signage shall be installed throughout the proposed Project Site.

MM-TRANS-4: Public Transportation

The City shall reserve space at the proposed Project Site to accommodate access to a future Sixth Street Metro Station near the Arts Plaza.

16. Utilities and Service Systems

BMPs:

BMP-USS-1: Wastewater Treatment

Any wastewater produced as a result of proposed construction activities, such as water containing diesel and oil, paint, solvents, cleaners, and other chemicals, as well as construction debris and dirt, shall be collected in settlement tanks and screened. The clean water shall be discharged, and the remaining sludge shall be disposed of in accordance with water and solid waste disposal regulations, including the CWA, the Porter-Cologne Water Quality Control Act, and the RCRA.

BMP-USS-2: Temporary Stormwater Drainage Measures

Temporary stormwater drainage measures to prevent polluted runoff in the construction site shall include, but not be limited to, the installation of earth dikes, drainage swales, and ditches, silt fences, desilting basins, and stormwater drain inlet protection.

BMP-USS-3: Coordination with Service Providers

The location of underground utilities shall be confirmed prior to proposed construction activities by contacting the Underground Service Alert of Southern California (DigAlert). If necessary, the City shall work in close coordination with utility providers to develop a relocation plan to minimize possible impacts and disruption to service utilities. The City will also coordinate with Metro to ensure that any applicable utility connections, relocations and undergrounding of utilities, and other utility improvements adjacent to and within the LA River Path corridor do not lead to any potential conflicts and/or issues during future construction activities.

BPM-USS-4: Reduced Consumption of Water Resources

Design features to reduce the consumption of water resources shall be implemented, such as low-flow water fixtures and water efficient irrigation design and practices. In addition, drought-tolerant landscaping shall be planted to further reduce water consumption.

BMP-USS-5

The right-of-way contains high-voltage electrical conductors. Only such equipment, material, and construction techniques that are permitted under applicable safety ordinances and statutes, including the following, shall be used: State of California Code of Regulations, Title 8, Industrial Relations, Chapter 4, Division of Industrial Safety, Subchapter 5, Electrical Safety Orders, and California Public Utilities Commission, General Order No. 95, Rules for Overhead Electric Line Construction.

Mitigation Measures:

MM-HYDRO-1: Public Safety Plan

The City, in coordination with USACE, shall publish a Public Safety Plan in order to reduce the potential for safety impacts related to flooding. The Public Safety Plan shall include an evacuation plan and protocols for protecting pedestrians and potential homeless populations (e.g., vehicular deterrents such as bollards and safety warning devices) in the LA River Access Tunnel during flood conditions.

B. Significant and Unavoidable Adverse Impacts Under CEQA

The City, having reviewed and considered the information contained in the Final EIR, and the proposed Project as designed and proposed for approval, did not find any significant and unavoidable adverse impacts (from construction or implementation of the Project). With implementation of BMPs and mitigation measures, all project impacts were found to be less than significant.

C. Cumulative Impacts Under CEQA

With implementation of BMPs and mitigation measures as previously described, the proposed Project's contribution to cumulative impacts would be less than significant.

VI. ALTERNATIVES

Public Resources Code Section 21002 provides that "public agencies should not approve projects as proposed if there are feasible alternatives or feasible mitigation measures available which would substantially lessen the significant environmental effects of such projects[.]" This statutory command is known as the "substantive mandate" of CEQA. (See *Mountain Lion Foundation v. Fish & Game Commission* (1997) 16 Cal.4th 105, 134.) Public Resources Code Section 21002 also states that the procedures required by CEQA "are intended to assist public agencies in systematically identifying both the significant effects of projects and the feasible alternatives or feasible mitigation measures which will avoid or substantially lessen such significant effects."

Under *CEQA Guidelines* Section 15126.6, the alternatives to be discussed in detail in an EIR should be able to "feasibly attain most of the basic objectives of the project." For this reason, the objectives described in Section I.D, *supra*, provided the framework for defining possible alternatives. (See *In re Bay-Delta Programmatic Environmental Impact Report Coordinated Proceedings* (2008) 43 Cal.4th 1143, 1166.)

Based on the requirements of *CEQA Guidelines* Section 15126.6, the Project objectives, and community input, a total of four project alternatives for the Project were identified during the EIR process. Of these four alternatives, three alternatives to the proposed Project – the required No Project Alternative, Alternative 1, and Alternative 2 – were considered by the City. For information on the infeasibility of the one rejected alternative, see Section VI.C below. Consistent with Section IV above, the findings regarding the alternatives are based on the Final EIR and the entire record of proceedings.

A. Alternatives to the Proposed Project Considered and Analysis, and the Feasibility of the Alternative-Effectiveness in Meeting Project Objectives

The No Project Alternative and Alternatives 1 to 2 were evaluated in the EIR but ultimately determined to be infeasible for the following reasons. For more information about the Environmentally Superior Alternative, refer to Section 4.6 of the Draft EIR.

1. No Project Alternative

Under this alternative, the proposed 13-acre Project Site would remain as vacant land and an industrial and freight corridor.

Impacts as compared to the proposed Project:

The objectives of the proposed Project described in Section 4.2 of the Draft EIR would not be met. Although the No Project Alternative would not result in significant environmental impacts, it would also not include the following benefits that would occur with implementation of the proposed Project, Alternative 1, or Alternative 2:

Aesthetics

The No Project Alternative would not result in the visual character and quality improvements under the proposed Project, Alternative 1, and Alternative 2, which include landscaping, vegetation, recreational areas, and public art.

Air Quality

With the exception of emissions generated from vehicle traffic during large events, the existing industrial land use associated with the No Project Alternative would contribute greater operational emissions than the land uses associated with the proposed Project, Alternative 1, and Alternative 2 (i.e., smaller special events, soccer fields, park uses, and buildings).

Energy

The existing industrial land use associated with the No Project Alternative would require greater energy consumption than the land uses associated with the proposed Project, Alternative 1, and Alternative 2.

Greenhouse Gas Emissions

With the exception of greenhouse gas (GHG) emissions generated from vehicle traffic during infrequent large events (up to 5,000 people), the existing industrial land use associated with the No Project Alternative would contribute greater GHG emissions than the land uses associated with the proposed Project, Alternative 1, and Alternative 2 (i.e., smaller special events, soccer fields, park uses, and buildings).

Hazards and Hazardous Materials

Under the No Project Alternative, contaminated soils would be left in place and would not be remediated to standards acceptable by the Los Angeles County Fire Department (LACoFD) and other regulatory agencies as required.

Recreation

Under the No Project Alternative, there would continue to be a high need for parks in the communities of Boyle Heights and Central City North. The proposed Project, Alternative 1, and Alternative 2 would provide additional park and recreation services that may alleviate the demand for other existing parks and recreational facilities in the vicinity of the Project Area.

Noise and Vibration

Under the No Project Alternative, the existing industrial land use would continue to generate noise at levels greater than that projected for the proposed Project (i.e., special events, soccer fields, park uses, and buildings).

Traffic and Transportation

Under the No Project Alternative, improvements to pedestrian and bicycle access throughout the Project Area would not occur.

The Feasibility of the No Project Alternative and Effectiveness in Meeting Project Objectives:

Under the No Project Alternative, the Project Site would remain in its existing condition as vacant land and an industrial and freight corridor. The No Project Alternative would result in no impacts to the existing land use because it would not result in an action and would not require discretionary approvals that trigger CEQA compliance; however, it would not provide the benefits that would result from implementation of the proposed Project, Alternative 1, or Alternative 2, nor would it meet the proposed Project objectives. No public park amenities would be constructed and no landscaping, lighting, or pedestrian improvements would be made. No improvements to the LA River channel, including terracing and landscaping, would be made. Additionally, contaminated soils would be left in place and would not be remediated to standards acceptable by the LACoFD and other regulatory agencies. Therefore, the No Project Alternative is undesirable, infeasible, and should be rejected because it fails to meet the Project objectives.

2. Alternative 1 – Nature Focused Alternative

Impacts as compared to the Project:

Alternative 1 would meet the objectives of the proposed Project. However, Alternative 1 would provide reduced programming compared to the proposed Project. As such, the public indicated greater support for the proposed Project because it would provide a better balance of the open space and recreational needs for the surrounding communities than Alternative 1.

Impacts during construction would be similar to the proposed Project. During operation, Alternative 1 would feature smaller event capacity and reduced recreational programming, which would result in less project-generated vehicle traffic to the Project Site. The impacts for each environmental resource are discussed below.

Aesthetics:

Impacts would be similar to the proposed Project. Compared to the proposed Project, the East Park would feature more vegetation and landscaping under Alternative 1, which would marginally change the visual character and quality of the Project Site.

Air Quality:

Impacts would be similar to the proposed Project. Under Alternative 1, event capacity for large events in the proposed East Park would be reduced to 2,800 people, compared to 3,300 people under the proposed Project. In addition, the East Park would feature fewer sports fields under Alternative 1 than under the proposed Project. Because Alternative 1 features less recreational programming than the proposed Project, it is anticipated that Alternative 1 would result in less operational emissions of criteria air pollutants (i.e., reactive organic gas, nitrogen oxides, carbon monoxide, sulfur oxide, and particulate matter) than the proposed Project.

Biological Resources:

Impacts would be similar to the proposed Project. Like the proposed Project, best management practices (BMP) would be implemented to avoid and minimize construction impacts (i.e., habitat removal; increased noise, vibration, light, carbon dioxide, and human activity; and construction staging and activities in the LA River channel) on special-status species and aquatic resources. Compared to the proposed Project, the East Park would feature more vegetation and landscaping under Alternative 1, which could potentially create additional nesting habitat for special-status birds during operations.

Cultural Resources:

Impacts would be similar to the proposed Project. Like the proposed Project, standard measures would be implemented in the case of an unanticipated discovery of cultural resources during construction of Alternative 1. As with the proposed Project, operation of Alternative 1 would not involve any ground-disturbing activities; therefore, there would be no potential to disturb, damage, or degrade cultural resources.

Energy:

Impacts would be similar to the proposed Project. Under the proposed Project and Alternative 1, energy consumption would be required for park lighting, WiFi, security cameras, on-site buildings, electric vehicle charging station, and sound and lighting equipment for special events. In addition, diesel and gasoline fuel would be consumed from on-road vehicles. Under Alternative 1, smaller event capacity and reduced recreational programming would reduce energy consumption, when compared to the proposed Project. Therefore, energy consumption would be marginally less under Alternative 1.

Geology and Soils:

Impacts would be similar to the proposed Project. Like the proposed Project, BMPs would be implemented to reduce the potential for erosion during soil excavation and other construction activities. In addition, Alternative 1 would follow standard engineering practices and recommendations identified in the Geotechnical Site Investigation (Hushmand Associates, Inc., 2018) to reduce the potential for geologic hazards. Similar to the proposed Project, open spaces would be landscaped or hardscaped such that soil erosion and the loss of topsoil are not anticipated during operation of Alternative 1.

Greenhouse Gas Emissions:

Impacts would be similar to the proposed Project. Under the proposed Project and Alternative 1, the majority of GHG emissions would be associated with motor vehicle use. Under Alternative 1, smaller event capacity and reduced recreational programming would reduce motor vehicle use to the Project Site, when compared to the proposed Project. Therefore, GHG emissions would be marginally less under Alternative 1.

Hazards and Hazardous Materials:

Impacts would be similar to the proposed Project. Like the proposed Project, Alternative 1 would result in remediation of the Project Site to standards acceptable by LACoFD and other regulatory agencies as required. Under these standards, the concentrations of contaminants of concern would not pose health risks to construction workers or the public. The use of hazardous materials during construction or during routine maintenance and landscaping would be subject to proper handling and disposal in compliance with applicable laws and regulations.

Hydrology and Water Quality:

Impacts would be similar to the proposed Project. Like the proposed Project, Alternative 1 would result in the net addition of impervious surfaces. However, this minor increase would not substantially deplete groundwater supplies, interfere with groundwater recharge, or increase the potential for flooding. Alternative 1 would include construction and low impact development (LID) BMPs to prevent, control, and reduce the potential for stormwater pollutants to degrade ground or surface water quality.

Land Use and Planning:

Impacts would be similar to the proposed Project. Like the proposed Project, Alternative 1 is consistent with the City's General Plan land use and zoning designations. The City Bureau of Engineering would continue to work with the Los Angeles Department of City Planning to ensure that Alternative 1 is consistent with future zoning changes.

Noise and Vibration:

Impacts would be similar to the proposed Project. Under the proposed Project and Alternative 1, operational noise levels would be associated with project-generated vehicle traffic and onsite recreational uses and events. Alternative 1 features smaller event capacity and reduced recreational programming than the proposed Project. Therefore, operational noise levels would be marginally less under Alternative 1 compared to the proposed Project.

Population and Housing:

Impacts would be similar to the proposed Project. Like the proposed Project, Alternative 1 would not have the potential to result in growth that would otherwise not occur.

Public Services:

Impacts would be similar to the proposed Project. Like the proposed Project, Alternative 1 could increase the demand for fire and police protection services; however, the expansion or construction of new fire or police protection facilities would not be required. Alternative 1 would provide additional recreation and park services that may alleviate the demand for other existing parks and recreational facilities in the vicinity of the Project Area.

Recreation:

Impacts would be similar to the proposed Project. Like the proposed Project, Alternative 1 would provide additional recreation and park services that may alleviate the demand for other existing parks and recreational facilities in the vicinity of the Project Area.

Transportation and Traffic:

Impacts from proposed construction activities would be similar to the proposed Project. Under Alternative 1, event capacity for large events in the proposed East Park would be reduced to 2,800 people, compared to 3,300 people under the proposed Project. In addition, the East Park would feature fewer sports fields under Alternative 1 than under the proposed Project. Because Alternative 1 features smaller event capacity and reduced recreational programming than the proposed Project, project-generated vehicle traffic would be marginally less under Alternative 1. In addition, the demand for parking under Alternative 1 during large events would be marginally reduced compared to the proposed Project.

Utilities and Service Systems:

Impacts would be similar to the proposed Project. Like the proposed Project, construction activities for Alternative 1 would be conducted in accordance with the Stormwater Pollution Prevention Plan (SWPPP) and all other applicable laws, policies, and regulations to avoid and minimize potential impacts. The water consumption and wastewater generation demands for operation of Alternative 1, like the proposed Project, would not require the construction of new water or wastewater treatment facilities or the expansion of existing facilities.

<u>The Feasibility of Alternative 1 and Effectiveness in Meeting Project Objectives:</u>

Impacts under Alternative 1 would be marginally less than the proposed Project because of the reduced programming, smaller event sizes, and reduced project-generated vehicle traffic. Under Alternative 1, smaller event capacity and reduced recreational programming would result in less project-generated vehicle traffic to the Project Site than the proposed Project. As such, implementation of Alternative 1 would result in marginally less impacts to Air Quality, Energy, Greenhouse Gas Emissions, Noise and Vibration, and Transportation and Traffic than the proposed Project. Therefore, Alternative 1 is considered the Environmentally Superior Alternative.

CEQA Guidelines do not require an agency to select the environmentally superior alternative (*CEQA Guidelines* 15042-15043). Because Alternative 1 would provide reduced programming compared to the proposed Project, it would not meet the recreational needs of the surrounding communities.

3. Alternative 2 – Sports Focused Alternative

<u>Impacts as compared to the Project:</u>

Alternative 2 would meet the objectives of the proposed Project described in Section 4.2 of the Draft EIR. However, Alternative 2 would provide increased programming compared to the

proposed Project. As such, the public indicated greater support for the proposed Project because it would provide a better balance of the open space and recreational needs for the surrounding communities than Alternative 2.

Impacts during construction would be similar to the proposed Project. During operation, Alternative 2 would feature larger event capacity and increased recreational programming, which would result in more project-generated vehicle traffic to the Project Site. The impacts for each environmental resource are discussed below.

Aesthetics:

Impacts would be similar to the proposed Project. Compared to the proposed Project, the East Park would feature less vegetation and landscaping under Alternative 2, which would marginally change the visual character and quality of the Project Site.

Air Quality:

Impacts would be similar to the proposed Project. Under Alternative 2, event capacity for large events in the proposed East Park would be increased to 3,500 people, compared to 3,300 people under the proposed Project. In addition, the East Park would feature more sports fields under Alternative 2 than under the proposed Project. Because Alternative 2 features more recreational programming than the proposed Project, it is anticipated that Alternative 2 would result in greater operational emissions of criteria air pollutants (i.e., reactive organic gas, nitrogen oxides, carbon monoxide, sulfur oxide, and particulate matter) than the proposed Project.

Biological Resources:

Impacts would be similar to the proposed Project. Like the proposed Project, BMPs would be implemented to avoid and minimize construction impacts (i.e., habitat removal; increased noise, vibration, light, carbon dioxide, and human activity; and construction staging and activities in the LA River channel) on special-status species and aquatic resources. Compared to the proposed Project, the East Park would feature less vegetation and landscaping under Alternative 2, which would create less nesting habitat for special-status birds during operations.

Cultural Resources:

Impacts would be similar to the proposed Project. Like the proposed Project, standard measures would be implemented in the case of an unanticipated discovery of cultural resources during construction of Alternative 2. As with the proposed Project, operation of Alternative 2 would not involve any ground-disturbing activities; therefore, there would be no potential to disturb, damage, or degrade cultural resources.

Energy:

Impacts would be similar to the proposed Project. Like the proposed Project, energy consumption would be required for park lighting, WiFi, security cameras, on-site buildings, electric vehicle charging station, and sound and lighting equipment for special events. In addition, diesel and

gasoline fuel would be consumed from on-road vehicles. Under Alternative 2, larger event capacity and increased recreational programming would increase energy consumption, when compared to the proposed Project. Therefore, energy consumption would be marginally greater under Alternative 2.

Geology and Soils:

Impacts would be similar to the proposed Project. Like the proposed Project, BMPs would be implemented to reduce the potential for erosion during soil excavation and other construction activities. In addition, Alternative 2 would follow standard engineering practices and recommendations identified in the Geotechnical Site Investigation to reduce the potential for geologic hazards. Similar to the proposed Project, open spaces would be landscaped or hardscaped such that soil erosion and the loss of topsoil are not anticipated during operation of Alternative 2.

Greenhouse Gas Emissions:

Impacts would be similar to the proposed Project. Under the proposed Project, Alternative 1, and Alternative 2, the majority of GHG emissions would be associated with motor vehicle use. Under Alternative 2, larger event capacity and increased recreational programming would increase motor vehicle use to the Project Site, when compared to the proposed Project. Therefore, GHG emissions would be marginally greater under Alternative 2.

Hazards and Hazardous Materials:

Impacts would be similar to the proposed Project. Like the proposed Project, Alternative 2 would result in remediation of the Project Site to standards acceptable by LACoFD and other regulatory agencies as required. Under these standards, the concentrations of contaminants of concern would not pose health risks to construction workers or the public. The use of hazardous materials during construction or during routine maintenance and landscaping would be subject to proper handling and disposal in compliance with applicable laws and regulations.

Hydrology and Water Quality:

Impacts would be similar to the proposed Project. Like the proposed Project, Alternative 2 would result in the net addition of impervious surfaces. However, this minor increase would not substantially deplete groundwater supplies, interfere with groundwater recharge, or increase the potential for flooding. Alternative 1 would include construction and low impact development (LID) BMPs to prevent, control, and reduce the potential for stormwater pollutants to degrade ground or surface water quality.

Land Use and Planning:

Impacts would be similar to the proposed Project. Like the proposed Project, Alternative 2 is consistent with the City's General Plan land use and zoning designations. The City Bureau of Engineering would continue to work with the Los Angeles Department of City Planning to ensure that Alternative 2 is consistent with future zoning changes.

Noise and Vibration:

Impacts would be similar to the proposed Project. Under the proposed Project, Alternative 1, and Alternative 2, operational noise levels would be associated with project-generated vehicle traffic and onsite recreational uses and events. Alternative 2 features larger event capacity and increased recreational programming than the proposed Project. Therefore, operational noise levels would be marginally greater under Alternative 2 compared to the proposed Project.

Population and Housing:

Impacts would be similar to the proposed Project. Like the proposed Project, Alternative 2 would not have the potential to result in growth that would otherwise not occur.

Public Services:

Impacts would be similar to the proposed Project. Like the proposed Project, Alternative 2 could increase the demand for fire and police protection services; however, the expansion or construction of new fire or police protection facilities would not be required. Alternative 2 would provide additional recreation and park services that may alleviate the demand for other existing parks and recreational facilities in the vicinity of the Project Area.

Recreation:

Impacts would be similar to the proposed Project. Like the proposed Project, Alternative 2 would provide additional recreation and park services that may alleviate the demand for other existing parks and recreational facilities in the vicinity of the Project Area.

Transportation and Traffic:

Impacts from proposed construction activities would be similar to the proposed Project. Under Alternative 2, event capacity for large events in the proposed East Park would be increased to 3,500 people, compared to 3,300 people under the proposed Project. In addition, the East Park would feature more sports fields under Alternative 2 than under the proposed Project. Because Alternative 2 features larger event capacity and increased recreational programming than the proposed Project, project-generated vehicle traffic would be marginally greater under Alternative 2. In addition, the demand for parking under Alternative 2 during large events would be marginally greater compared to the proposed Project.

Utilities and Service Systems:

Impacts would be similar to the proposed Project. Like the proposed Project, construction activities for Alternative 2 would be conducted in accordance with the SWPPP and all other applicable laws, policies, and regulations to avoid and minimize potential impacts. The water consumption and wastewater generation demands for operation of Alternative 2, like the proposed Project, would not require the construction of new water or wastewater treatment facilities or the expansion of existing facilities.

The Feasibility of Alternative 2 and Effectiveness in Meeting Project Objectives:

Alternative 2 would result in the greatest impacts when compared to the proposed Project because of the increased programming, larger event sizes, and increased project-generated vehicle traffic. Alternative 2 would result in the greatest increase in impacts when compared to the existing condition. Therefore, Alternative 2 is undesirable, infeasible, and should be rejected because the environmental impacts that would occur in pursuit of meeting the project objectives would be greater in comparison to the proposed Project and Alternative 1.

B. Environmentally Superior Alternative and Reasons for Rejecting

Section 15126.6 of the *CEQA Guidelines* requires that an "environmentally superior" alternative be identified. The environmentally superior alternative is the alternative that would be expected to generate the least amount of significant impacts. As described in the EIR, none of the alternatives would result in significant impacts. Although the No Project Alternative would result in the fewest impacts on the existing environment, this alternative would not result in the improvements anticipated under the proposed Project, Alternative 1, or Alternative 2. The No Project Alternative would not result in the following improvements, as described in Section 4.4.1 of the Draft EIR: enhanced visual character and quality of the Project Site, remediated soils, increased park and recreational facilities, and improved bicycle and pedestrian access. In addition, the existing industrial land use under the No Project Alternative would contribute greater air quality and greenhouse gas emissions and noise and vibration levels than the land uses associated with the proposed Project (except during large events).

Pursuant to Section 15126.6(e)(2) of the *CEQA Guidelines*, when the No Project Alternative is identified as the environmentally superior alternative, the EIR must also identify an environmentally superior alternative from the remaining alternatives. As noted in Section 4.5 of the Draft EIR, impacts associated with the proposed Project, Alternative 1, and Alternative 2 would be similar. Under Alternative 1, smaller event capacity and reduced recreational programming would result in less project-generated vehicle traffic to the Project Site than the proposed Project. As such, implementation of Alternative 1 would result in marginally less impacts to Air Quality, Energy, Greenhouse Gas Emissions, Noise and Vibration, and Transportation and Traffic than the proposed Project. Therefore, Alternative 1 is considered the Environmentally Superior Alternative.

CEQA Guidelines do not require an agency to select the environmentally superior alternative (*CEQA Guidelines* 15042-15043). Because Alternative 1 would provide reduced programming compared to the proposed Project, it would not meet the recreational needs of the surrounding communities. At the community meetings, the public overwhelmingly supported the proposed Project as the preferred alternative because it meets all of the objectives described in Section 4.2 of the Draft EIR.

C. Alternatives to the Project That Were Considered But Rejected for Further Analysis

As set forth in the Draft EIR , Section 4.3, and other evidence in the record, one other alternative was eliminated from consideration and was not subject to detailed analysis in the EIR because it

failed to meet most of the project objectives, is infeasible, and/or did not avoid any significant environmental impacts of the Project. This included the use of an Alternative Project Site.

The Alternative Project Site alternative is not feasible because the City already owns the Project Site and cannot reasonably be expected to acquire, control, or access an alternative site that would meet the project's basic objectives in a timely fashion. It is anticipated that significant and unavoidable impacts associated with noise, traffic, water quality, and land use could occur if an Alternative Project Site could be found in Downtown LA, along the LA River. As such, development of the proposed Project at an alternative site could potentially produce other environmental impacts that would otherwise not occur at the current Project Site and result in greater environmental impacts than the proposed Project. Therefore, an alternative site is not considered feasible since the City does not own another suitable site that would achieve the underlying purpose and objectives of the proposed Project.

VII. OTHER CEQA CONSIDERATIONS

A. The City is the Lead Agency under CEQA for the project evaluated in the EIR. The City finds that the EIR was prepared in compliance with CEQA and the *CEQA Guidelines*. The City finds that it has independently reviewed and analyzed the information in the EIR for the Project prior to approving the Project, that the Draft EIR which was circulated for public review, reflected its independent judgment, and that the Final EIR reflects the independent judgment and analysis of the City.
B. The City finds that the EIR provides the objective information to assist the decisionmakers and the public at large in their consideration of the environmental consequences of the Project. The public review period provided all interested jurisdictions, agencies, private organizations, and individuals the opportunity to submit comments regarding the Draft EIR. The Final EIR was prepared after the review period and responds to comments made during the public review period.
C. Textual refinements were compiled and presented to the decisionmakers. The City is the Lead Agency under CEQA for the project evaluated in the EIR. The City finds that the EIR was prepared in compliance with CEQA and the *CEQA Guidelines*. The City finds that it has independently reviewed and analyzed the information in the EIR for the Project prior to approving the Project, that the Draft EIR which was circulated for public review, reflected its independent judgment, and that the Final EIR reflects the independent judgment and analysis of the City.
D. The City has determined that it has evaluated comments on environmental issues received from persons who reviewed the Draft EIR. In accordance with CEQA, the City prepared written responses describing the disposition of key environmental issues raised. The Final EIR provides adequate, good-faith and reasoned response to the comments. The City reviewed the comments received and responses thereto and has determined that neither the comments received nor the responses to such comments add significant new information regarding environmental impacts to the Draft EIR. The City has based its actions on full appraisal of all

viewpoints, including all comments received up to the date of adoption of these findings, concerning the environmental impacts identified and analyzed in the EIR.

E. The City determines that these findings recognize that the determination of significance thresholds and conclusions of significance and non-significance are judgments within the discretion of the City; the significance thresholds and determinations of significance and non-significance used in the Final EIR are supported by substantial evidence in the record, including the expert opinion of the Final EIR preparers and City staff; and the significance thresholds used in the Final EIR provide reasonable and appropriate means of assessing the significance of the adverse environmental effects of the Project.

F. The City finds that, in weighing the evidence on the whole record, the conclusions of the Final EIR are supported by substantial evidence, including evidence from the expert opinion of the Final EIR preparers and City staff, and the level of detail is sufficient to provide an informed understanding of the issues presented, and that comment letters disputing the expert opinion, data, analysis, and conclusions of the Final EIR preparers and City staff are not credible based on evidence presented in the Final EIR and the whole record, including but not limited to the fact that any contrary opinions presented were not supported based on expert analysis and modeling conducted in the Final EIR on the specific facts and circumstances of the Project. Notwithstanding the lack of credibility of the comments, the City finds that disagreements on issues in question have been adequately and in good faith discussed, and substantial evidence in the whole record supports the Final EIR 's reasonably explained approach regarding the scope of analysis, methodology, and the accuracy of data relied upon.

G. The Final EIR documents changes to the Draft EIR: The Final EIR provides additional information that was not included in the Draft EIR. Having reviewed the information contained in the Draft EIR and the Final EIR and in the administrative record, as well as the requirements of CEQA and the *CEQA Guidelines* regarding recirculation of Draft EIRs, the City finds that there are no new significant impacts, substantial increase in the severity of a previously disclosed impact, significant information in the record of proceedings or other criteria under CEQA that would require recirculation of the Draft EIR, or preparation of a supplemental or subsequent EIR. Recirculation is not required where new information added makes insignificant modifications in an adequate EIR. (*CEQA Guidelines* Section 15088.5 (b).) The City finds that substantial evidence supports the decision not to recirculate the EIR. (*CEQA Guidelines* Section 15088.5(e).)

    1. The changes to the project description do not deprive the public of a meaningful opportunity to comment on a substantial adverse environmental effect of the Project or a feasible way of mitigating or avoiding such effects, because no such significant impacts have been identified from either the circulated Draft project description or the Final modification in the project description.
    2. The Responses To Comments contained in the Final EIR fully considered and responded to comments claiming that the Project would have significant impacts or more severe impacts not disclosed in the Draft EIR and include substantial evidence

that none of these comments provided substantial evidence that the Project would result in changed circumstances, significant new information, considerably different mitigation measures, or new or more severe significant impacts than were discussed in the Draft EIR.

3. The City has thoroughly reviewed the public comments received regarding the Project and the Final EIR as it relates to the Project to determine whether under the requirements of CEQA any of the public comments provide substantial evidence that would require recirculation of the EIR prior to its adoption and has determined that recirculation of the EIR is not required.
4. None of the information submitted after publication of the Final EIR constitutes significant new information or otherwise requires preparation of a supplemental or subsequent EIR. The City does not find this information and testimony to be credible evidence of a significant impact, a substantial increase in the severity of an impact disclosed in the Final EIR, or a feasible mitigation measure or alternative not included in the Final EIR.

H. The City finds and declares that substantial evidence for each and every finding made herein that is contained in the EIR, which is incorporated herein by this reference, or is in the record of proceedings in the matter.

I. The City is certifying an EIR for, and is approving and adopting findings for, the entirety of the actions described in these Findings and in the EIR as comprising the Project.

VIII. CONCLUSION

As explained above, the City has carefully considered the environmental impacts of the proposed Project, as well as a range of reasonable alternatives to the Project, or to the location of the Project, which would feasibly attain most of the basic objectives of the Project. In order to meet the needs of the surrounding communities (identified in the project objectives) while generating the least environmental impacts possible, the proposed Project is the preferred alternative. As discussed above and supported by the Draft EIR and Final EIR and other documents available in the record of proceedings, the environmental impacts that would be anticipated to result from the proposed Project would be reduced to less than significant impacts with adherence to standard regulatory and permit requirements, as well as mitigation measures and BMPs described in Section V. Therefore, the proposed Project would bring benefits to the City and its citizens as discussed herein and as supported by substantial evidence in the record of proceedings.

Sixth Street Park, Arts, River & Connectivity (PARC) Project

SCH #2017041045

MITIGATION MONITORING PROGRAM



March 2022

PREPARED FOR:

City of Los Angeles, Department of Public Works
Bureau of Engineering, Environmental Management Group
1149 S. Broadway, Suite 600, Los Angeles CA 90015
Contact: Dr. Jan Green Rebstock, Environmental Supervisor II
213-485-5761, Jan.Green.Rebstock@lacity.org

WITH ASSISTANCE FROM:

GPA Consulting

ENGINEERING
CITY OF LOS ANGELES

This page intentionally left blank.

Mitigation Monitoring Program

Introduction

The Mitigation Monitoring Reporting Program ("MMP") has been prepared pursuant to Public Resources Code Section 21081.6, which requires a Lead Agency to adopt a "reporting or monitoring program for changes to the project or conditions of project approval, adopted in order to mitigate or avoid significant effects on the environment." In addition, Section 15097(a) of the California Environmental Quality Act (CEQA) Guidelines requires that a public agency adopt a program for monitoring or reporting mitigation measures and project revisions, which it has required to mitigate or avoid significant environmental effects. This MMP has been prepared in compliance with the requirements of CEQA, Public Resources Code Section 21081.6, and Section 15097 of the State CEQA Guidelines.

The City of Los Angeles (City), the Lead Agency on behalf of the Los Angeles Department of Public Works (LADPW), Bureau of Engineering (LABOE), is the Lead Agency for the Sixth Street PARC Project (proposed Project), and therefore is responsible for administering and implementing the MMP. A public agency may delegate reporting or monitoring responsibilities to another public agency or to a private entity that accepts the delegation. However, until mitigation measures have been completed, the Lead Agency remains responsible for ensuring that implementation of the mitigation measures occurs in accordance with the program.

Purpose

The purpose of the MMP is to do the following:

- Coordinate all mitigation monitoring activities
- Manage the preparation, approval, and filing of monitoring or permit compliance records
- Maintain records concerning the status of all approved mitigation measures (MM) and best management practices (BMP)
- Provide quality control assurance of field monitoring personnel
- Coordinate with other agencies regarding compliance with mitigation or permit requirements
- Review and recommend acceptance and certification of implementation documentation
- Act as a contact for interested parties or surrounding property owners who wish to register concerns regarding environmental issues; verifying any such circumstances; and developing any necessary corrective actions.

Organization

As shown in the following pages, each identified mitigation measure for the proposed Project is listed and categorized by environmental issue area, with accompanying discussion of:

- Time Frame for Implementation: When the measure will be implemented.

- Monitoring Period: Indicates when monitoring for compliance with the measure will occur.
- Monitoring Agency: The agency to which reports involving feasibility, compliance, implementation, and development are made.
- Verification of Compliance: The date that monitoring is complete to ensure compliance with the measure.

Monitoring and Reporting Procedures

This MMP shall be enforced throughout all phases of the proposed Project. LABOE shall be responsible for implementing each project design feature and mitigation measure and shall be obligated to provide verification, as identified below, to the appropriate monitoring and enforcement agencies that each project design feature and mitigation measure has been implemented. LABOE shall maintain records demonstrating compliance with each project design feature and mitigation measure listed below.

All applicable construction-related mitigation measures and best management practices will be included in any bid specification released for construction of the proposed Project. Prior to the release of the bid specifications, construction plans and specifications will be provided to LABOE's Environmental Management Group (EMG) for review and approval regarding environmental mitigation. Unless otherwise specified herein, LABOE will be responsible for taking all actions necessary to implement the mitigation measures according to the provided specifications and demonstrating that each action has been successfully completed. LABOE, at its discretion, may delegate implementation responsibility or portions thereof to a licensed contractor. This MMP for the proposed Project will be in place through design, construction, and operation. LABOE will be responsible for administering the MMP and ensuring that all parties comply with its provisions. LABOE may delegate monitoring responsibilities to staff, consultants, or contractors.

The construction contractor shall submit an Environmental Compliance Plan for LABOE Construction Management and LABOE EMG approval prior to the beginning of ground-disturbing construction activities. The Environmental Compliance Plan will document how the contractor intends to comply with all environmental measures applicable to the contract, including application of BMPs. LABOE Construction Management will also ensure that monitoring is documented in an Environmental Compliance Report and that deficiencies are promptly corrected. A designated environmental monitor with LABOE Construction Management will track and document compliance with mitigation measures, note any problems that may result, and take appropriate action to rectify problems. LABOE will monitor compliance with operational mitigation measures.

During the construction phase and prior to going through plan check review, LABOE shall retain an independent Construction Monitor (either via the City or through a third-party consultant), who shall be responsible for monitoring implementation of mitigation measures and best management practices during construction activities consistent with the monitoring phase and frequency set forth in this MMP.

The Construction Monitor shall also prepare documentation of the City's compliance with the project design features and mitigation measures during construction every 90 days in a form satisfactory to

LABOE. The documentation must be signed by LABOE and the Construction Monitor and be included as part of the City's Compliance Report. The Construction Monitor shall be obligated to immediately report to the Enforcement Agency any non-compliance with mitigation measures and project design features within two businesses days if the non-compliance is not corrected within a reasonable time or if the non-compliance is repeated.

Changes to Mitigation Measures

Changes to Mitigation Measures Under CEQA, mitigation measures may be modified or deleted if the relevant decision-maker approves such action, gives a legitimate reason for making the change, and supports those reasons with substantial evidence, including an appropriate subsequent CEQA document. Any substantive change to the MMP shall be documented in writing. Modifications to the mitigation measures/BMPs may be made by the LABOE subject to one of the following findings and documented by evidence included in the record:

1. The measure/BMP included in the EIR and the MMP is no longer required because the significant environmental impact identified in the EIR has been found not to exist, or to occur at a level which makes the impact less than significant as a result of changes in the Project, changes in conditions of the environment, or other factors.

   OR

   2. The modified or substitute mitigation measure/BMP to be included in the MMRP provides a level of environmental protection equal to or greater than that afforded by the mitigation measure included in the EIR and the MMP.

   AND

   3. The modified or substitute mitigation measure/BMP does not have significant adverse effect on the environment in addition to or greater than those which were considered by LABOE in its decisions regarding the EIR and the Proposed Project.

   AND

   4. The modified or substitute mitigation measure/BMP is feasible, and LABOE, through measures included in the MMP or other established procedures, can assure its implementation.

Findings and related documentation supporting the findings involving modifications to mitigation measures shall be maintained in the Project file with the MMP and shall be made available to the public upon request.

Mitigation Monitoring Program

Mitigation Measures

Air Quality

MM-AQ-1: Newer/Tier 4 Engines in Haul Trucks and Construction Equipment

- Measures:
  - Include in all construction contracts the requirement to use 2010 and newer diesel haul trucks (e.g., material delivery trucks and soil import/export).
  - Include in all construction contracts the requirement that all off-road diesel-fueled construction equipment greater than 50 horsepower shall meet Tier 4 off-road emission standards. In addition, if not already supplied with a factory-equipped diesel particulate filter, all construction equipment shall be outfitted with Best Available Control Technology (BACT) devices certified by California Air Resources Board (CARB). Any emissions control device used by the contractor shall achieve emissions reductions that are no less than what could be achieved by a Level 3 diesel emissions control strategy for a similarly sized engine as defined by CARB regulations. To the extent locally available, construction equipment shall incorporate emissions savings technology such as hybrid drives. In the event that any equipment required under this mitigation measure is not available, provide documentation as information becomes available. A copy of each unit's certified tier specification, BACT documentation, and CARB or Southern California Air Quality Management District (SCAQMD) operating permit at the time of mobilization of each applicable unit of equipment shall be provided.
  - Maintain construction equipment by conducting regular tune-ups according to the manufacturers' recommendations.
  - To the extent possible, the import and export of onsite materials shall be scheduled to minimize empty return trips.
- Time Frame for Implementation:

Design Phase:

Timing/Schedule: Prior to Project construction.

Implementation: LABOE Project Engineer shall include requirement in contract specs and plans. Mitigation measures shall be included in contractor bid documents and Environmental Compliance Plan prepared by the contractor.

Enforcement: LABOE Project Manager and LABOE EMG will review specs and plans for compliance

Construction Phase:

Timing/Schedule: Throughout Project construction.

Implementation: LABOE Project Engineer and Construction contractor shall implement mitigation measure and review engine and equipment certified tier specification and best available control

technology documentation. Similarly, contractor may provide the ARB or SCAQMD operating permit at the time of mobilization of each applicable unit of equipment. Considered complete after end of Project construction.

Enforcement: LABOE Construction Manager and LADPW, Bureau of Contracts Administration, Construction Inspector. BOE EMG will review Environmental Compliance Plan prepared by Contractor, the Environmental Compliance Report and the Project Acceptance and Closeout Report.

MM-AQ-2: Construction Equipment Requirements

- Measures:
  - All on- and off-road diesel-fueled equipment shall not idle for more than 5 minutes when not in use. The idling of diesel-fueled equipment and haul trucks within 1,000-feet of nearby residential land uses shall be prohibited. Signs shall be posted in the designated queuing areas and or job sites to remind drivers and operators of the 5-minute-idling limit.
  - Staging and queuing areas shall be located at the furthest distance possible from nearby residential land uses.
  - Use alternatively fueled (e.g., compressed natural gas, liquefied natural gas, propane), gasoline-fueled, or electrified construction equipment in place of diesel-fueled equipment to the extent locally available.

Design Phase:

Timing/Schedule: Prior to Project construction.

Implementation: LABOE Project Engineer shall include requirement in contract specs and plans. Mitigation measures shall be included in contractor bid documents and Environmental Compliance Plan prepared by contractor.

Enforcement: LABOE Project Manager and LABOE EMG will review specs and plans for compliance

Construction Phase:

Timing/Schedule: Throughout Project construction.

Implementation: LABOE Project Engineer and Construction contractor

Enforcement: LABOE Construction Manager and LADPW, Bureau of Contracts Administration, Construction Inspector. BOE EMG will review Environmental Compliance Plan prepared by Contractor, the Environmental Compliance Report and the Project Acceptance and Closeout Report.

MM-AQ-3: Fugitive Dust Controls

- Measures:
  - All active portions of the construction site shall be watered twice daily to prevent excessive amounts of dust.

- Non-toxic soil stabilizers shall be applied to all inactive construction areas (previously graded areas inactive for 20 days or more, assuming no rain) according to manufacturers' specifications.
- All excavating and grading operations shall be suspended when wind gusts (as instantaneous gust) exceed 25 miles per hour.
- On-site off-road equipment and on-road vehicles used on-site shall be limited to 15 miles per hour.
- All on-site roads shall be paved as soon as feasible, watered twice daily, or chemically stabilized.
- Visible dust beyond the property line which emanates from the project shall be prevented to the maximum extent feasible.
- All material transported off-site shall be either sufficiently watered or securely covered to prevent excessive amounts of dust prior to departing the job site.
- Track-out devices shall be used at all construction site access points.
- All delivery truck tires shall be watered down and/or scraped down prior to departing the job site.
- Streets shall be swept at the end of the day if visible soil material is carried onto adjacent paved public roads and use of SCAQMD Rule 1186 and 1186.1 certified street sweepers or roadway.
- Replace ground cover in disturbed areas as quickly as possible.
- All trucks that are to haul excavated or graded material on-site shall comply with State Vehicle Code Section 23114 (Spilling Loads on Highways), with special attention to Sections 23114(b)(F), (e)(4) as amended, regarding the prevention of such material spilling onto public streets and roads.
- Conduct continuous, direct-reading, near real-time ambient monitoring of Particulate Matter (PM)10. Install appropriate signage and notify the SCAQMD in accordance with Rule 1466, Control of Particulate Emissions from Soils with Toxic Air Contaminants, prior to conducting any earth-moving activities on any site meeting the applicability of the rule.

Design Phase:

Timing/Schedule: Prior to Project construction.

Implementation: LABOE Project Engineer shall include requirement in contract specs and plans. Mitigation measures shall be included in contractor bid documents and Environmental Compliance Plan prepared by contractor.

Enforcement: LABOE Project Manager and LABOE EMG will review specs and plans for compliance

Construction Phase:

- Timing/Schedule: Throughout Project construction.
- Implementation: LABOE Project Engineer and Construction contractor

- Enforcement: LABOE Construction Manager and LADPW, Bureau of Contracts Administration, Construction Inspector. BOE EMG will review Environmental Compliance Plan prepared by Contractor, the Environmental Compliance Report and the Project Acceptance and Closeout Report.

Hazards and Hazardous Materials

MM-HAZ-1: Remediation Category 1A

- Measures: The City shall be required to implement the following measures in areas where Resource Conservation and Recovery Act (RCRA) Level Heavy Metals, polychlorinated biphenyls (PCB), or total petroleum hydrocarbon diesel range organics (TPH DRO) will be excavated and disposed of at Class 1 Hazardous Waste Landfills:
  - Soils will be excavated as needed up to a maximum depth of 4.5-feet below ground surface (bgs), consistent with the limits designated on Figures 3.8-3a and 3.8-3b, Areas of Concern with Contamination.
  - The transport and disposal of RCRA hazardous waste will be accompanied with a Hazardous Waste Manifest (i.e., documentation accompanying the transport, treatment, storage and disposal of hazardous waste) completed by a licensed transporter. A site-specific California Environmental Protection Agency (CalEPA) Hazardous Waste Generator Identification Number will be obtained for each RCRA hazardous waste. Additional sampling and testing will likely be required by the facility accepting the soil for disposal.
  - For excavations deeper than 4-feet, shoring or other approved means will be required to maintain stability of the excavation walls.
  - During excavation activities, dust and runoff controls will be implemented to prevent windborne or surface waterborne migration of the soil from the Project Site. The soils will be directly loaded into the transport trucks, which will require tarps to prevent spillage or windblown loss of soil during transport. These controls will be verified and monitored by an independent third party.
  - A site-specific Health and Safety Plan (HASP) will be prepared and implemented during all proposed construction activities, including full time perimeter sampling and testing of particulates and dust from the Project Site.
  - All onsite workers and supervisors will complete a 40-hour Occupational Safety and Health Administration (OSHA) Hazardous Waste Operations and Emergency Response (HAZWOPER) training course and be equipped with the appropriate personal protective equipment.
  - Excavated areas will be backfilled with certified clean soil.

Design Phase:

Timing/Schedule: During Project design, prior to Project construction.

Implementation: LABOE Project Engineer shall include requirement in contract specs and plans. Mitigation measures shall be included in contractor bid documents and Environmental Compliance Plan prepared by contractor.

Enforcement: LABOE Project Manager and LABOE EMG will review specs and plans for compliance

Construction Phase:

- Timing/Schedule: Throughout Project construction.
- Implementation: LABOE Project Engineer and Construction contractor
- Enforcement: LABOE Construction Manager and LADPW, Bureau of Contracts Administration, Construction Inspector. BOE EMG will review Environmental Compliance Plan prepared by Contractor, the Environmental Compliance Report and the Project Acceptance and Closeout Report.

MM-HAZ-2: Remediation Category 2A and 2B

Remediation Category 2A

- Measures: The City shall be required to implement the following measures in areas where soils contaminated with Heavy Metals and/or TPH DRO that are classified as non-RCRA hazardous waste will be excavated. These contaminated soils shall be disposed at Class 2 Landfills:
  - Soils will be excavated as needed up to a maximum depth of 6-feet bgs, consistent with the limits designated on Figures 3.8-3a and 3.8-3b, Areas of Concern with Contamination.
  - The transport and disposal of non-RCRA hazardous waste will be accompanied with a Hazardous Waste Manifest completed by a licensed transporter. A CalEPA Non-RCRA Hazardous Waste Generator Identification Number will be obtained. Additional sampling and testing will likely be required by the facility accepting the soil for disposal.
  - For excavations deeper than 4-feet, shoring or other approved means shall be required to maintain stability of the excavation walls.
  - During excavation activities, dust and runoff controls will be implemented to prevent windborne or surface waterborne migration of the soil from the Project Site. The soils will be directly loaded into the transport trucks, which will require tarps to prevent spillage or windblown loss of soil during transport. These controls will be verified and monitored by an independent third party.
  - A site-specific Health and Safety Plan (HASP) will be prepared and implemented during all proposed construction activities, including full time perimeter sampling and testing of particulates and dust from the Project Site.
  - All onsite workers and supervisors will complete a 40-hour OSHA HAZWOPER training course and be equipped with the appropriate personal protective equipment.
  - Excavated areas will be backfilled with certified clean soil.

Remediation Category 2B

- Measures: In addition to the measures above, the following measures shall be implemented in areas where volatile organic compounds (VOC) were observed in soil gases:
  - Emission controls will be used to clear the area of emitting VOCs (i.e., spraying water or applying foam agents to all exposed soil surfaces and/or using large, spark-free fans). Full-time monitoring will be required to verify that the emission controls are effective in preventing the VOCs from impacting workers or the public. Monitoring will comply with SCAQMD Rule 1166.
  - A detailed HASP will be prepared and implemented during the excavation and transport of contaminated soils.
  - The excavation, transport, and disposal of contaminated soils will require permitting and approval by the Certified Unified Program Agency (CUPA), CalEPA/Department of Toxic Substances Control (DTSC), and SCAQMD. A detailed Work Plan/Remedial Action Plan will be prepared and submitted to these agencies for review and approval. Under Rule 1166, a Mitigation Management Plan for potential VOC emissions during excavation will be submitted to SCAQMD and subject to SCAQMD approval. A site-specific CalEPA Hazardous Waste Generator Identification Number will be obtained and manifests completed by the licensed transporter.
  - A soil vapor extraction (SVE) system will be designed and installed to remove and treat VOCs in the soil gases. If Health Risk Assessments indicate the need, a vertical barrier/line will be installed around the perimeter of the area to prevent soil gases with VOCs from migrating back into the area. Gases migrating from below the clean backfill or deeper depths will be extracted through the SVE slotted wells and treated by the SVE treatment system. Treatment for VOCs typically involves carbon filtration unless hydrogen sulfide is detected in the gas stream. Operating and maintenance procedures for the SVE system and permit applications will be prepared and approved by the oversight agency and SCAQMD.
  - If the City determines it is necessary, a "Pilot Study" will be designed and implemented to evaluate the sustainable flow rate and concentration of VOCs in the soil gas stream and to determine the size of the final SVE system components.
  - Design of the SVE system, preparation of a Design Report and Work Plan/Remedial Action Plan (including HASP) will be submitted to and subject to approval by the CUPA and Los Angeles County Fire Department (LACoFD) Site Mitigation Unit.
  - The SVE will be implemented and monitored. This may require several months to over a year.
  - The City shall provide documentation to the CUPA, LACoFD Site Mitigation Unit, and SCAQMD when the SVE has reached the specified clean-up goals.
  - Excavated areas will be backfilled with certified clean soil.

Design Phase:

Timing/Schedule: During Project design, prior to Project construction.

Implementation: LABOE Project Engineer shall include requirement in contract specs and plans. Mitigation measures shall be included in contractor bid documents and Environmental Compliance Plan prepared by contractor.

Enforcement: LABOE Project Manager and LABOE EMG will review specs and plans for compliance.

Construction Phase:

- Timing/Schedule: Throughout Project construction.
- Implementation: LABOE Project Engineer and Construction contractor
- Enforcement: LABOE Construction Manager and LADPW, Bureau of Contracts Administration, Construction Inspector. BOE EMG will review Environmental Compliance Plan prepared by Contractor, the Environmental Compliance Report and the Project Acceptance and Closeout Report.

MM-HAZ-3: Remediation Category 3

Option 1

- Measures: This alternative will involve the same measures as described under Category 2b above. Contaminated soils will be removed to a depth of up to 15-feet or more and shoring of the excavation walls will be necessary. A liner will be installed on the bottom of the excavation area to prevent contaminated soil gas from re-entering the backfill soils. Gas migration from the side walls will be mitigated by either installation of a vertical liner placed on the side walls of the excavation or SVE wells installed vertically outside the limits of the excavation after backfilling is done. The backfill soil will be certified clean fill and placement will need to meet the geotechnical specifications of the Project design. During the process, the site will require strict emissions controls and monitoring.

Option 2

- Measures: This alternative, the SVE treatment method, utilizes extraction and monitoring wells (In Situ Method) or excavation and encapsulation of impacted soils in above ground piles with horizontal slotted piping (On Site Method), a vacuum pump or pumps, and carbon filtration units to extract and remove VOCs from the soil gas. The process requires several steps as follows:
  - Design and implementation of a "Pilot Study" to evaluate the sustainable flow rate and concentration of VOCs in the soil gas stream and to size the final SVE system components.
  - Design of the SVE system, preparation of a Design Report and Work Plan/Remedial Action Plan (including HASP) for submittal to and approval by the CUPA and CalEPA/DTSC.
  - Solicitation of bids for construction and implementation of the remediation.
  - Implementation and monitoring of the SVE. This may require several months to over a year.
  - Reporting to the agencies with documentation that the SVE has reached the specified clean up goals.

Option 3

- Measures: This alternative will mitigate the impact of the VOCs and/or methane and hydrogen sulfide by precluding soil gases migration from the subsurface soil and intrusion into structures or other facilities and surface emissions. Depending on the type of soil gases and pressure in the soil gas, the systems can include several of the following components:
  - Shallow excavation (3- to 4-feet bgs) to allow installation of the mitigation components (some of the soil will be used to backfill trenches)
  - Gravel layers and slotted piping for gas collection
  - Liner installation above the slotted piping and extending side wide
  - Vacuum pumps for gas extraction or air injection blowers
  - Filtration systems to remove VOCs and/or hydrogen sulfide from the gas stream
  - Geomembrane barriers placed beneath concrete slabs and/or foundations or fill areas
  - Installation of automated and/or manual monitoring systems

Design Phase:

Timing/Schedule: During Project design, prior to Project construction.

Implementation: LABOE Project Engineer shall include requirement in contract specs and plans. Mitigation measures shall be included in contractor bid documents and Environmental Compliance Plan prepared by contractor.

Enforcement: LABOE Project Manager and LABOE EMG will review specs and plans for compliance.

Construction Phase:

- Timing/Schedule: Throughout Project construction.
- Implementation: LABOE Project Engineer and Construction contractor
- Enforcement: LABOE Construction Manager and LADPW, Bureau of Contracts Administration, Construction Inspector. BOE EMG will review Environmental Compliance Plan prepared by Contractor, the Environmental Compliance Report and the Project Acceptance and Closeout Report.

MM-HAZ-4: Remediation Category 4

- Measures: The City shall be required to implement the following measure in areas within Caltrans right-of-way (ROW) where soil contains aerially deposited lead (ADL):
  - In accordance with the Caltrans/DTSC ADL Agreement, soils above a depth of approximately 2.9-feet bgs will require 1-foot of clean soil cover to remain on site per the Caltrans/DTSC ADL Agreement.
- Time Frame for Implementation: Prior to construction

- Monitoring Period: Prior to construction
- Monitoring Agency: LADPW, Contracts Administration Bureau, Construction Inspector

Design Phase:

Timing/Schedule: During Project design, prior to Project construction.

Implementation: LABOE Project Engineer shall include requirement in contract specs and plans. Mitigation measures shall be included in contractor bid documents and Environmental Compliance Plan prepared by contractor.

Enforcement: LABOE Project Manager and LABOE EMG will review specs and plans for compliance.

Construction Phase:

- Timing/Schedule: Throughout Project construction.
- Implementation: LABOE Project Engineer and Construction contractor
- Enforcement: LABOE Construction Manager and LADPW, Bureau of Contracts Administration, Construction Inspector. BOE EMG will review Environmental Compliance Plan prepared by Contractor, the Environmental Compliance Report and the Project Acceptance and Closeout Report.

MM-HAZ-5: Soil Gas Sampling

- Measures: Additional soil gas sampling and testing is recommended for completion in PARC Areas 1A, 5, 6, 7, and 8. The additional sampling could potentially eliminate or reduce the need for soil gas remediation.

  Ambient air and soil gas samples shall be tested for VOCs. If soil gas samples in PARC Area 6 yield ILCR values below the de minimis risk target or within the risk management range, no further mitigation and/or remedial actions will be required. If ILCR values are above the de minimis risk target, additional remedial actions will be taken to lower values to within the risk management range, such as applying SVE to a maximum depth of 15- to 20-feet bgs.

Design Phase:

Timing/Schedule: During Project design, prior to Project construction.

Implementation: LABOE Project Engineer shall include requirement in contract specs and plans. Mitigation measures shall be included in contractor bid documents and Environmental Compliance Plan prepared by contractor.

Enforcement: LABOE Project Manager and LABOE EMG will review specs and plans for compliance.

Construction Phase:

- Timing/Schedule: Throughout Project construction.
- Implementation: LABOE Project Engineer and Construction contractor

- Enforcement: LABOE Construction Manager and LADPW, Bureau of Contracts Administration, Construction Inspector. BOE EMG will review Environmental Compliance Plan prepared by Contractor, the Environmental Compliance Report and the Project Acceptance and Closeout Report.

MM-HAZ-6: Methane Mitigation and Testing

- Measures: Methane mitigation applies to PARC Area 1A, which is located within the Methane Zone, and portions of PARC Area 7, where soil gases were detected and impervious surfaces are to be constructed adjacent to existing buildings. Any buildings (except naturally vented) to be constructed in Area 1A shall have methane mitigation systems meeting Level II requirements involving membrane and passive venter per Table 71 unless additional testing indicates no subsurface gas pressure and lower methane concentrations. In addition, paved areas that are over 5,000 square feet in area and within 15-feet of the exterior wall of a commercial, industrial, institutional building, shall be vented in accordance with the Methane Mitigation Standards, design Level II, unless additional testing indicates no subsurface gas pressure and lower methane concentrations.

  Additional testing for methane concentrations and subsurface pressure shall be completed in accordance with the Division 71 Methane Seepage Regulations testing requirements should any buildings or paved areas over 5,000 square feet be proposed in PARC Area 1A and in PARC Area 7 where methane was detected.

Design Phase:

Timing/Schedule: During Project design, prior to Project construction.

Implementation: LABOE Project Engineer shall include requirement in contract specs and plans. Mitigation measures shall be included in contractor bid documents and Environmental Compliance Plan prepared by contractor.

Enforcement: LABOE Project Manager and LABOE EMG will review specs and plans for compliance.

Construction Phase:

- Timing/Schedule: Throughout Project construction.
- Implementation: LABOE Project Engineer and Construction contractor
- Enforcement: LABOE Construction Manager and LADPW, Bureau of Contracts Administration, Construction Inspector. BOE EMG will review Environmental Compliance Plan prepared by Contractor, the Environmental Compliance Report and the Project Acceptance and Closeout Report.

Hydrology and Water Quality

MM-HYDRO-1: Public Safety Plan

- Measures: The City, in coordination with United States Army Corps. of Engineers, shall publish a Public Safety Plan in order to reduce the potential for safety impacts related to flooding. The Public Safety Plan shall include an evacuation plan and protocols for protecting pedestrians and potential homeless populations (e.g., vehicular deterrents such as bollards and safety warning devices) in the LA River Access Tunnel during flood conditions.
- Time Frame for Implementation: Design, Construction, and Operation
- Monitoring Period: Design, Construction and Operation
- Monitoring Agency: LADPW, Department of Recreation and Parks

Design Phase:

Timing/Schedule: During Project design, prior to Project construction.

Implementation: LABOE Project Engineer shall lead preparation of the Public Safety Plan and coordinate with Recreation and Parks, other relevant City departments and the United States Army Corp. The LABOE Project Engineer shall include any physical deterrents or safety warning devices in the contract specs and plans. The Contractor bid documents and Environmental Compliance Plan prepared by contractor shall reflect these items.

Enforcement: LABOE Project Manager and LABOE EMG will review specs and plans for compliance.

Construction Phase:

- Timing/Schedule: Must be completed prior to end of construction.
- Implementation: LABOE Project Engineer and required stakeholders (publish Public Safety Plan prior to project operations) and Construction contractor (physical elements)
- Enforcement: LABOE Construction Manager and LADPW, Bureau of Contracts Administration, Construction Inspector for physical plan elements.

Operations Phase:

- Timing/Schedule: ongoing
- Implementation: City of Los Angeles, Department of Recreation and Parks, Los Angeles Police Department, US Army Corp, and other relevant stakeholders

Noise and Vibration

MM-NOISE-1: Construction-Noise Management Plan

- Measures: A construction-noise management plan (CNMP) shall be prepared for the Project. The CNMP shall, at a minimum, include the following measures:

- Construction activities shall be restricted outside the hours of 7:00 a.m. to 9:00 p.m. Monday through Friday, and between the hours of 8:00 a.m. to 6:00 p.m. on Saturdays. While the intention is not to conduct work on Sundays, occasional Sunday work may be required to ensure the Project schedule is met. If it is determined that Sunday work is necessary, the proper permits will need to be obtained through the Police Commission. Construction activities shall be prohibited on federal holidays.
- Construction equipment shall be properly maintained and equipped with mufflers.
- Equipment shall be turned off when not in use for an excess of five minutes, except for equipment that requires idling to maintain performance.
- A public liaison shall be appointed for project construction and shall be responsible for addressing public concerns about construction activities, including excessive noise. As needed, the liaison shall determine the cause of the concern (e.g., starting too early, bad muffler) and implement measures to address the concern. The liaison will work directly with the construction contractor to ensure implementation of the noise control plan.
- The liaison will work directly with the construction contractor to ensure implementation of the noise control plan.
- The public shall be notified in advance of the location and dates of construction hours and activities.
- Where necessary, temporary sound barriers shall be installed.
- Signage and notification on where to report construction-generated noise shall be posted on-site and around the construction area, as well as on the Bureau of Engineering website.
- Staging and queuing areas shall be located at the furthest distance possible from nearby residential land uses, as well as any other noise-sensitive land uses identified in the Project Area at the time of construction (e.g., transient lodging, schools, libraries, churches, hospitals, and nursing homes).
- Limit noise/vibration intensive activities occurring within 10-feet of existing structures and occupied land uses. Where possible and to the extent locally available, select low-noise/vibration generating equipment when activities occur within 10-feet of adjacent existing structures.

Design Phase:

Timing/Schedule: During Project design, prior to Project construction.

Implementation: LABOE Project Engineer shall include requirement in contract specs and plans. Mitigation measures shall be included in contractor bid documents and Environmental Compliance Plan prepared by contractor.

Enforcement: LABOE Project Manager and LABOE EMG will review specs and plans for compliance.

Construction Phase:

- Timing/Schedule: Throughout Project construction.

- Implementation: LABOE Project Engineer and Construction contractor
- Enforcement: LABOE Construction Manager and LADPW, Bureau of Contracts Administration, Construction Inspector. BOE EMG will review Environmental Compliance Plan prepared by Contractor, the Environmental Compliance Report and the Project Acceptance and Closeout Report.

Transportation and Traffic

MM-TRANS-1: Mobility Hub

- Measures: The City shall reserve space for a mobility hub at the Project Site, including additional amenities for bicyclists, drivers, and transit users, to encourage event attendees to use alternative modes of transportation.

Design Phase:

Timing/Schedule: During Project design, prior to Project construction.

Implementation: LABOE Project Engineer shall include requirement in contract specs and plans. Mitigation measures shall be included in contractor bid documents and Environmental Compliance Plan prepared by contractor.

Enforcement: LABOE Project Manager and LABOE EMG will review specs and plans for compliance.

Construction Phase:

- Timing/Schedule: Throughout Project construction.
- Implementation: LABOE Project Engineer and Construction contractor
- Enforcement: LABOE Construction Manager and LADPW, Bureau of Contracts Administration, Construction Inspector. BOE EMG will review Environmental Compliance Plan prepared by Contractor, the Environmental Compliance Report and the Project Acceptance and Closeout Report.

MM-TRANS-2: Bicycle Facilities

- Measures: The City shall reserve space for a Bike Share hub at the Project Site to allow Bike Share participants to dock bicycles and scooters.

Design Phase:

Timing/Schedule: During Project design, prior to Project construction.

Implementation: LABOE Project Engineer shall include requirement in contract specs and plans. Mitigation measures shall be included in contractor bid documents and Environmental Compliance Plan prepared by contractor.

Enforcement: LABOE Project Manager and LABOE EMG will review specs and plans for compliance.

Construction Phase:

- Timing/Schedule: Throughout Project construction.
- Implementation: LABOE Project Engineer and Construction contractor
- Enforcement: LABOE Construction Manager and LADPW, Bureau of Contracts Administration, Construction Inspector. BOE EMG will review Environmental Compliance Plan prepared by Contractor, the Environmental Compliance Report and the Project Acceptance and Closeout Report.

MM-TRANS-3: Rideshare Zones

- Measures: The City shall create permanent rideshare pick-up and drop-off zones for the East Park and West Park. Rideshare pick-up/drop-off zones could be located on South Santa Fe Street adjacent to the proposed West Park and South Mission Road adjacent to the proposed East Park. The pick-up/drop-off zones shall be clearly marked, and wayfinding signage shall be installed throughout the Project Site.

Design Phase:

Timing/Schedule: During Project design, prior to Project construction.

Implementation: LABOE Project Engineer shall include requirement in contract specs and plans. Mitigation measures shall be included in contractor bid documents and Environmental Compliance Plan prepared by contractor.

Enforcement: LABOE Project Manager and LABOE EMG will review specs and plans for compliance.

Construction Phase:

- Timing/Schedule: Throughout Project construction.
- Implementation: LABOE Project Engineer and Construction contractor

Enforcement: LABOE Construction Manager and LADPW, Bureau of Contracts Administration, Construction Inspector. BOE EMG will review Environmental Compliance Plan prepared by Contractor, the Environmental Compliance Report and the Project Acceptance and Closeout Report.

MM-TRANS-4: Public Transportation

- Measures: The City shall reserve space at the Project Site to accommodate a future Sixth Street Metro Station in the Arts Plaza.

Design Phase:

Timing/Schedule: During Project design, prior to Project construction.

Implementation: LABOE Project Engineer shall include requirement in contract specs and plans. Mitigation measures shall be included in contractor bid documents and Environmental Compliance Plan prepared by contractor.

Enforcement: LABOE Project Manager and LABOE EMG will review specs and plans for compliance.

Construction Phase:

- Timing/Schedule: Throughout Project construction.
- Implementation: LABOE Project Engineer and Construction contractor
- Enforcement: LABOE Construction Manager and LADPW, Bureau of Contracts Administration, Construction Inspector. BOE EMG will review Environmental Compliance Plan prepared by Contractor, the Environmental Compliance Report and the Project Acceptance and Closeout Report.

Best Management Practices

As standard best practices, the BOE Project Engineer shall incorporate the following requirements in the contract specs and plans and ensure the contractor includes the best management practices in the Environmental Compliance Plan prepared by the contractor. The BOE Construction Manager and Contracts Administration Bureau Construction Inspector will ensure the BMPs are implemented during construction. BMPs related to operations will be implemented by the Department of Recreation and Parks and/or other appropriate organizations.

Aesthetics

BMP-AES-1: Construction Lighting

- Measures: If nighttime lighting at the construction site is required, lighting shall be directed downward, on-site, and away from surrounding land uses.
- Implementation Phase: Construction
- Monitoring Phase: Construction
- Enforcement Agency: LADPW, Contracts Administration Bureau, Construction Inspector

BMP-AES-2: Construction Staging and Construction Staging Area

- Measures: Construction staging shall be coordinated with the construction and maintenance of the Viaduct Replacement Project as needed; therefore, additional use or acquisition of public space for equipment and vehicles will not be required. The construction area shall be fenced to obscure views of construction activities, materials, and staged equipment.
- Implementation Phase: Prior to Construction and Construction
- Monitoring Phase: Construction
- Enforcement Agency: LADPW, Contracts Administration Bureau, Construction Inspector

BMP-AES-3: Operational Lighting

- Measures: Outdoor lighting for recreational activities shall be limited to the proposed operating hours.

- Implementation Phase: Operation
- Monitoring Phase: Operation
- Enforcement Agency: LABOE and Department of Recreation and Parks

BMP-AES-4: Regulatory Requirements for Lighting

- Measures:
  - Project illumination shall comply with the provisions in the City's Municipal Code, including LAMC Chapter 1, Article 2, Sec. 12.21A5(k); LAMC Chapter 1, Article 7, Sec. 17.08C; and LAMC Chapter 9, Article 3, Section 93.0117.
  - The new walkway lighting shall be compliant with all regulations set forth by the City's Bureau of Street Lighting Design Standards and Guidelines to ensure that the area receives lighting that meets national illumination standards for vehicular and pedestrian traffic, does not emit light pollution, and produces little glare.
  - Lighting for sports fields and courts shall operate in compliance with Los Angeles City Recreation and Parks (RAP) illuminance level standards for outdoor sports and recreational facilities.
  - Lighting for security shall be illuminated in accordance with the Illuminating Engineering Society (IES) standards, IES RP-33-14 *Lighting for Exterior Environments* and IES G-1-03 *Security Lighting for People, Property and Public Spaces*, as updated by IES G-1-16 *Guide for Security Lighting for People, Property and Critical Infrastructure*.
- Implementation Phase: Design, Operation
- Monitoring Phase: Design, Operation
- Enforcement Agency: LADPW and Department of Recreation and Parks

Air Quality

BMP-AQ-1: SCAQMD Rules and Regulations

- Measures: The contractor shall implement measures to ensure that all construction activities are consistent with SCAQMD rules and regulations.
- Implementation Phase: Construction
- Monitoring Phase: Construction
- Enforcement Agency: LADPW, Contracts Administration Bureau, Construction Inspector

BMP-AQ-2: Construction Worker Incentives

- Measures: The City shall offer ride-share and transit incentives for construction workers to reduce emissions associated with motor vehicle use.
- Implementation Phase: Construction
- Monitoring Phase: Construction

- Enforcement Agency: LADPW, Contracts Administration Bureau, Construction Inspector

BMP-AQ-3: Construction Equipment Maintenance

- Measures: The contractor shall maintain construction equipment by conducting regular tune-ups according to the manufacturers' recommendations.
- Implementation Phase: Construction
- Monitoring Phase: Construction
- Enforcement Agency: LADPW, Contracts Administration Bureau, Construction Inspector

Biological Resources

BMP-BIO-1: Pre-Construction Wildlife Surveys

- Measures: Pre-construction wildlife surveys shall be completed by a qualified biologist no more than 48 hours prior to clearing, grubbing, or other construction activities to determine the presence/absence of wildlife species, including special-status species, within 100-feet of the construction area. Special attention will be focused on any existing burrowing, roosting, and nesting habitat within the Project Area. Surveys shall be repeated if construction activities are suspended for five days or more. If any wildlife species are identified, appropriate BMPs shall be developed and implemented to reduce potential impacts on these species, in consultation with regulatory agencies where appropriate.
- Implementation Phase: Prior to construction
- Monitoring Phase: Construction if construction activities are suspended for five days or more
- Enforcement Agency: LADPW (Project Biologist)

BMP-BIO-2: Trash and Construction Debris Removal

- Measures: All trash and construction debris shall be removed from the LA River construction areas on a daily basis. All water quality BMP materials shall be properly maintained during project construction and removed upon completion of construction activities. After completion of proposed construction activities, all construction equipment and materials shall be removed from the Project Area, and the Project Area shall be returned to pre-project conditions.
- Implementation Phase: Construction
- Monitoring Phase: Construction
- Enforcement Agency: LADPW, Contracts Administration Bureau, Construction Inspector

BMP-BIO-3: Work Area Limitations

- Measures: No work for the Project shall be conducted on the Fourth Street Bridge or Seventh Street Bridge structures.
- Implementation Phase: Construction
- Monitoring Phase: Construction

- Enforcement Agency: LADPW, Contracts Administration Bureau, Construction Inspector

BMP-BIO-4: Nesting Bird Survey

- Measures: If vegetation trimming or clearing is conducted during the nesting season (typically February 15 through September 15), nesting bird surveys shall be completed by a qualified biologist within 300-feet of potential bird-nesting areas and 500-feet of potential raptor-nesting areas no more than 48 hours prior to trimming/removal activities to determine if nesting birds are within the affected vegetation. Surveys shall be repeated if trimming or removal activities are suspended for five days or more.
- Implementation Phase: Construction during the nesting season (February 15 through September 15)
- Monitoring Phase: None unless active nests are discovered
- Enforcement Agency: LADPW (Project Biologist)

BMP-BIO-5: Nesting Bird Buffer

- Measures: If nesting birds protected under the MBTA and California Fish and Game Code Sections are found in the Project Area, appropriate buffer consisting of orange flagging/fencing or similar (typically up to 300-feet for songbirds and 500-feet for raptors shall be installed and maintained until nesting activity has ended, as determined in coordination with the project biologist and regulatory agencies, as appropriate, to ensure that nesting birds and active nests are not harmed.
- Implementation Phase: Construction
- Monitoring Phase: Construction
- Enforcement Agency: LADPW (Project Biologist)

BMP-BIO-6: Hazardous Materials BMPs

- Measures: Appropriate hazardous material BMPs shall be implemented to reduce the potential for chemical spills or contaminant releases into the LA River, including any non-stormwater discharge.
- Implementation Phase: Construction
- Monitoring Phase: Construction
- Enforcement Agency: LADPW, Contracts Administration Bureau, Construction Inspector

BMP-BIO-7: Equipment Maintenance

- Measures: All equipment refueling and maintenance shall be conducted in the staging area. In addition, vehicles and equipment shall be checked daily for fluid and fuel leaks, and drip pans shall be placed under all equipment that is parked and not in operation.
- Implementation Phase: Construction
- Monitoring Phase: Construction

- Enforcement Agency: LADPW, Contracts Administration Bureau, Construction Inspector

BMP-BIO-8: Regulatory Permits

- Measures: The City shall consult with the appropriate responsible resource agency (e.g., California Department of Fish and Wildlife [CDFW] and Regional Water Quality Control Board [RWQCB]) to determine permanent and temporary impact areas. Prior to undertaking ground-disturbing activities within or immediately adjacent to any aquatic resource areas, the City and/or their consultant shall obtain a Clean Water Act (CWA) Section 401 Water Quality Certification, and California Fish and Game Code Section 1602 Streambed Alteration Agreement.
- Implementation Phase: Prior to Construction
- Monitoring Phase: Construction
- Enforcement Agency: LABOE, LADPW, Contracts Administration Bureau, Construction Inspector

BMP-BIO-9: Pre-Construction Bat Surveys

- Measures: At least 30 days prior to construction, alterations to the LA River Access Tunnel shall be surveyed by a qualified biologist to assess the presence of bats or potential bat-roosting cavities. If bats or bat-roosting cavities are identified, then during the non-breeding and active season (typically October), bats shall be safely evicted, to the extent feasible, under the direction of a qualified biologist. Once it has been determined that all roosting bats have been safely evicted from roosting cavities, exclusionary devices shall be installed and maintained where appropriate to prevent bats from roosting in these cavities prior to construction.
- Implementation Phase: 30 days prior to construction
- Monitoring Phase: Survey work only
- Enforcement Agency: LADPW (Project Biologist)

BMP-BIO-10: Monitoring During LA River Access Tunnel Alteration

- Measures: In the event that all bats are not able to be excluded from affected roosting habitat, a qualified biologist shall monitor LA River Access Tunnel alterations. If bats are disturbed, work shall be safely suspended until all bats leave the vicinity on their own, or alternative measures can be identified under the direction of a qualified biologist. Work shall resume only once the bats have left the site and/or approval to resume work is given by a qualified biologist.
- Implementation Phase: Construction
- Monitoring Phase: Construction
- Enforcement Agency: LADPW (Project Biologist)

BMP-BIO-11: Bat Monitoring

- Measures: In the event that all bats are not able to be excluded from affected roosting habitat, a qualified biologist shall monitor structure alteration activities. If bats are disturbed, work shall be safely suspended until all bats leave the vicinity of the LA River Access Tunnel on their own, or alternative measures shall be identified under the direction of a qualified biologist. Work shall

resume only once the bats have left the site and/or approval to resume work is given by a qualified biologist.

- Surveys and exclusion measures are expected to prevent maternal colonies from becoming established in structures to be removed or altered. In the event that a maternal colony of bats is found, no work shall be conducted within 100-feet of the maternal roosting site until the maternal season is over or the bats have left the site, or as otherwise directed by a qualified biologist. The site shall be designated as a sensitive area and protected as such until the bats have left the site. No activities shall be authorized adjacent to the roosting site. Combustion equipment, such as generators, pumps, and vehicles, shall not be parked or operated under or adjacent to the roosting site. Construction personnel shall not be authorized to enter areas beneath the colony, especially during the evening exodus.

- Implementation Phase: Construction
- Monitoring Phase: Construction
- Enforcement Agency: LADPW (Project Biologist)

Cultural Resources

BMP-CUL-1: Archeological Monitoring During Excavation

- Measures: A qualified archaeological monitor shall conduct archaeological monitoring in the West Park and East Park for excavations at depths greater than 5-feet. Monitoring efforts may be reduced or eliminated for those portions of the Project Area shown to have been recently disturbed by construction activities associated with the Sixth Street Viaduct Project.
- Implementation Phase: Construction activities involving excavations greater than 5-feet
- Monitoring Phase: Construction activities involving excavations greater than 5-feet
- Enforcement Agency: LADPW

BMP-CUL-2: Tribal Cultural Resources Sensitivity Training

- Measures: The City shall invite a qualified tribal representative from the Gabrieleño Band of Mission Indians to a pre-construction meeting to provide a training session to the construction contractor regarding potential tribal resources that could be encountered during construction activities and procedures to follow should a tribal resource be encountered.
- Implementation Phase: Prior to construction
- Monitoring Phase: Prior to construction
- Enforcement Agency: LABOE and qualified Tribal representative from the Gabrieleño Band of Mission Indians

BMP-CUL-3: Tribal Cultural Resources Monitoring During Excavation

- Measures: The City shall retain and compensate for the services of a tribal monitor who is both approved by the Gabrieleño Band of Mission Indians-Kizh Nation Tribal Government and is listed under the California Native American Heritage's (NAHC) Tribal Contact list for the Project Area.

The Tribal monitor shall only be present on-site during the construction phases that involve ground-disturbing activities in the proposed Arts Plaza. Monitoring efforts may further be reduced or eliminated for those portions of the in the proposed Arts Plaza that (1) are underlain with artificial fill of known origin, (2) require superficial scraping of land at depths less than 5-feet, or (3) are demonstrated to have been recently disturbed by construction activities associated with the Sixth Street Viaduct Project. The on-site monitoring shall cease when the grading and excavation activities in the proposed Arts Plaza are completed, or when the Tribal representatives and monitor have indicated that the site has a low potential for impacting tribal cultural resources.

- Implementation Phase: Construction
- Monitoring Phase: Construction activities involving ground-disturbing activities in the proposed Arts Plaza
- Enforcement Agency: LADPW (Tribal Monitor)

BMP-CUL-4: Unanticipated Discovery of Archaeological and Tribal Cultural Resources

- Measures: In the event that potentially significant buried archaeological materials are encountered within the Project Area, all work in the vicinity must stop until the archaeological and Tribal monitor can visit the site and assess the significance of the resource. If the resources are Native American in origin, the Gabrieleño Band of Mission Indians-Kizh Nation shall coordinate with the City regarding treatment and curation of these resources. Work may continue on other parts of the Project Area while evaluation and, if necessary, mitigation takes place (CEQA Guidelines Section 15064.5 [f]).
- Implementation Phase: Construction
- Monitoring Phase: Construction
- Enforcement Agency: LADPW (Tribal Monitor)

BMP-CUL-5: Unanticipated Discovery of Human Remains

- Measures: Health and Safety Code Section 7050.5, Section 15064.5(e) of the CEQA Guidelines, and PRC Section 5097.98 mandate the process to be followed in the unlikely event of an unanticipated discovery of human remains in a location other than a dedicated cemetery. The Los Angeles County Coroner must be notified within 24 hours of the discovery of potentially human remains. The Coroner must then determine within two working days of being notified if the remains are subject to his or her authority.
    - If the Coroner recognizes the human remains (including bone fragments and funerary objects) to be Native American, he or she must contact the NAHC by phone within 24 hours. The NAHC then designates a Most Likely Descendant (MLD) with respect to the human remains within 48 hours of notification. The MLD will then have the opportunity to recommend to the Project proponent means for treating or disposing of, with appropriate dignity, the human remains and associated grave goods within 24 hours of notification.
- Implementation Phase: Construction

- Monitoring Phase: Construction
- Enforcement Agency: LADPW, Contracts Administration Bureau, Construction Inspector

Geology and Soils

BMP-GEO-1: Erosion Control

- Measures: The contractor shall implement standard BMPs, such as the use of fiber rolls and silt fencing, to reduce the amount of dust and dirt from leaving the construction area.
- Implementation Phase: Construction
- Monitoring Phase: Construction
- Enforcement Agency: LADPW, Contracts Administration Bureau, Construction Inspector

BMP-GEO-2: Geotechnical Site Investigation Recommendations

- Measures: The Geotechnical Site Investigation report for the Project includes recommendations to ensure that the Project Area is suitable for construction, and to ensure that appropriate measures are taken to reduce impacts during earthwork, excavation, utility trenching, backfilling, and other construction activities (Hushmand Associates, Inc., 2018). Backfill soils shall be moisture-conditioned and recompacted to meet ASTM International standards to counteract the potential adverse effects of soil expansiveness. If import soils are used, the import soil shall not exhibit an Expansion Index greater than 20 or contain more than 35 percent fines (i.e., fine-grained soils), and shall be screened by the geotechnical engineer to meet ASTM International standards.
- Implementation Phase: Construction
- Monitoring Phase: Construction
- Enforcement Agency: LADPW, Contracts Administration Bureau, Construction Inspector

BMP-PAL-1: Paleontological Sensitivity Training

- Measures: Prior to the start of construction, all field personnel shall be briefed regarding the types of fossils that could be found and the procedures to follow should paleontological resources be encountered. Specifically, the training shall provide a description of the fossil resources that may be encountered, outline steps to follow when a fossil discovery is made and provide contact information for a qualified paleontologist. The training shall be developed by a qualified paleontologist and provided as hand-outs or a PowerPoint Presentation that may be presented concurrently with other pre-construction training.
- Implementation Phase: Prior to construction
- Monitoring Phase: Prior to construction
- Enforcement Agency: LADPW (Project Paleontologist), Contracts Administration Bureau, Construction Inspector

BMP-PAL-2: Unanticipated Paleontological Resource Discoveries

- Measures: In the event that an unanticipated fossil discovery is made during construction, a qualified professional paleontologist shall be retained to examine the find and to determine whether further paleontological resource mitigation is warranted in accordance with Society of Vertebrate Paleontology (2010) guidelines.
- Implementation Phase: Construction
- Monitoring Phase: Construction
- Enforcement Agency: LADPW (Project Paleontologist)

Greenhouse Gas Emissions

BMP-GHG-1: Off-Road Equipment Construction Requirements

- Measures: Idling shall be limited for vehicles and off-road equipment. Off-road equipment shall meet Tier 4 emission standards and newer. Efficient on-road haul trucks shall be used, where practicable.
- Implementation Phase: Construction
- Monitoring Phase: Construction
- Enforcement Agency: LADPW, Contracts Administration Bureau, Construction Inspector

Hazards and Hazardous Materials

BMP-HAZ-1: Coordination with Regulatory Agencies

- Measures: The City shall coordinate with Metro, U.S. EPA, and DTSC during construction activities to minimize health risks to the public or the environment associated with ongoing cleanup actions within the Project Area.
- Implementation Phase: Construction
- Monitoring Phase: Construction
- Enforcement Agency: LABOE

BMP-HAZ-2: Compliance with SCAQMD Rules and Regulations

- Measures: The contractor shall implement measures to ensure that all construction activities are consistent with SCAQMD rules and regulations, including Rule 1166 - Volatile Organic Compound Emissions from Decontamination of Soil and Rule 1466 - Control of Particulate Emissions from Soils with Toxic Air Contaminants.
- Implementation Phase: Construction
- Monitoring Phase: Construction
- Enforcement Agency: LADPW, Contracts Administration Bureau, Construction Inspector

Hydrology and Water Quality

BMP-HYDRO-1: Construction Drainage Design

- Measures: The Project shall incorporate drainage designs that direct stormwater runoff or irrigation runoff away from structures or the top of the slopes. No stormwater will be allowed to discharge over the top of a cut or fill slope.
- Implementation Phase: Design and Construction
- Monitoring Phase: Design and Construction
- Enforcement Agency: LADPW, Contracts Administration Bureau, Construction Inspector

BMP-HYDRO-2: Off-Site Sediment Transport

- Measures: All entrances and exits to the construction site shall be stabilized to reduce transport of sediment off-site. Any sediment or other materials tracked off-site shall be removed within a reasonable time.
- Implementation Phase: Construction
- Monitoring Phase: Construction
- Enforcement Agency: LADPW, Contracts Administration Bureau, Construction Inspector

BMP-HYDRO-3: Storm Drain Message and Signage

- Measures: Existing and proposed storm drain catch basins within the vicinity of the Project Site shall be marked and maintained.
- Implementation Phase: Construction and Operation
- Monitoring Phase: Construction and Operation
- Enforcement Agency: Construction Contractor (Construction), LADPW (Operation)

BMP-HYDRO-4: Outdoor Material Storage Area Design

- Measures: Proposed outdoor storage areas shall be organized and maintained to prevent stored materials from being permitted to runoff with stormwater. The outdoor storage of toxic and hazardous materials is not permitted.
- Implementation Phase: Construction and Operation
- Monitoring Phase: Construction and Operation
- Enforcement Agency: Construction Contractor (Construction), LADPW (Operation)

BMP-HYDRO-5: Outdoor Trash Storage Area Design

- Measures: Proposed outdoor trash storage enclosures shall be organized and maintained to prevent the transportation of trash and debris in stormwater. Bins and dumpsters shall remain covered.
- Implementation Phase: Construction and Operation

- Monitoring Phase: Construction and Operation
- Enforcement Agency: Construction Contractor (Construction), LADPW (Operation)

BMP-HYDRO-6: Employee Training

- Measures: Operations and maintenance employees shall be trained and made aware of the source controls, LID BMPs, educational materials, and maintenance requirements for the Project at first hire and yearly thereafter.
- Implementation Phase: Construction and Operation
- Monitoring Phase: Construction and Operation
- Enforcement Agency: LADPW (Construction), RAP (Operation)

BMP-HYDRO-7: Common Area Landscape Management

- Measures: A landscape maintenance program shall be established prior to construction in order to optimize water efficiency, limit pollutant introduction from fertilizers and pesticides, manage landscape waste, and prevent soil erosion.
- Implementation Phase: Prior to Construction and Operation
- Monitoring Phase: Operation
- Enforcement Agency: LADPW (Prior to Construction), RAP (Operation)

BMP-HYDRO-8: Common Area Litter Control

- Measures: A waste management program shall be implemented to inspect the Project Site for litter and pick up any litter as necessary on a regular basis.
- Implementation Phase: Construction and Operation
- Monitoring Phase: Operation
- Enforcement Agency: Construction Contractor (Construction), RAP (Operation)

BMP-HYDRO-9: Common Area Catch Basin Inspection

- Measures: Catch basins shall be inspected and maintained, at a minimum, yearly and prior to the rainy season.
- Implementation Phase: Construction and Operation
- Monitoring Phase: Construction and Operation
- Enforcement Agency: Construction Contractor (Construction), LADWP (Construction), RAP (Operation)

BMP-HYDRO-10: Street Sweeping Parking Lots

- Measures: The angled parking spaces along Anderson Street shall be vacuum swept, at a minimum, yearly and prior to the rainy season.
- Implementation Phase: Operation

- Monitoring Phase: Operation
- Enforcement Agency: RAP

BMP-HYDRO-11: BMP Maintenance

- Measures: Proposed structural source controls, non-structural source controls, and LID BMPs shall be maintained as outlined in the Operations and Maintenance Plan that would be developed for the Project.
- Implementation Phase: Operation
- Monitoring Phase: Operation
- Enforcement Agency: LADPW and RAP

BMP-HYDRO-12: Structural and Low-Impact Development (LID) BMPs

- Measures:
  - Runoff from the Project Site and tributary Viaduct areas shall be captured by proposed stormwater drainage systems, routed to a variety of structural and LID BMPs and discharged to the existing stormwater drainage facilities adjacent to the site. In addition, the Project Site shall include a combination of paved surfaces and landscaped areas to provide soil stability and further minimize erosion.
  - Structural BMPs (i.e., hydrodynamic separators) shall be installed to treat the runoff from the Viaduct to the maximum extent practicable
  - The remaining localized rainfall falling on the portion of the Project Site outside of the Viaduct's footprint shall be treated through a combination of incidental infiltration during sheet flow along pervious land areas, incidental infiltration within localized vegetated basins, and below-grade capture and use systems below some of the proposed lawn areas in areas with a larger impervious area footprint. The incidental infiltration or capture and use of the stormwater will remove pollutants of concern. Larger storm events will be captured and conveyed through proposed local storm drainage systems to new connections to the existing storm drainage system.
- Implementation Phase: Construction and Operation
- Monitoring Phase: Construction and Operation
- Enforcement Agency: LABOE, LADWP, and the Construction Contractor

BMP-HYDRO-13: Regulatory Requirements for Water Quality

- Measures:
  - To comply with the provisions of the National Pollutant Discharge Elimination System (NPDES) MS4 Permit, the Project shall implement a Stormwater Pollution Prevention Plan (SWPPP) that includes construction site BMPs to control erosion and sedimentation. BMPs include silt fencing, fiber rolls, sandbag barriers, drainage inlet protections, and berms at the top of all

grade slopes. The SWPPP shall also include post-construction stormwater management measures to control pollutants in stormwater discharges during operation of the Project.

- If groundwater is encountered, the contractor shall develop a dewatering plan, and a Dewatering Permit with the Los Angeles RWQCB will also be required. Should dewatering be required, the Project shall comply with the General Waste Discharge Requirements for Discharges of Groundwater from Construction and Project Dewatering to Surface Waters in Coastal Watersheds of Los Angeles and Ventura Counties.
- Proposed construction activities shall comply with all applicable federal, state, and local requirements to reduce the potential for the release of hazardous waste and other contaminants into groundwater. In addition, construction activities will be subject to the provisions of the CWA and Porter-Cologne Act; and other federal, state, and local requirements to ensure that stormwater pollutants resulting from construction will not substantially degrade water quality.
- A water diversion plan is not anticipated for the Project because Phase II construction activities shall be performed during the dry season (April 15 through October 15). However, if work in a flowing stream is unavoidable, a water diversion plan shall be required, and the entire stream flow shall be diverted around the work area by a barrier, temporary culvert, new channel, or other means approved by the CDFW. Should water diversion be necessary, a 401/404 permit will also be required.
- An emergency evacuation plan shall be prepared for Phase II construction within the LA River. If measurable rain with 25 percent or greater probability is predicted within 72 hours during project-related activities, all activities within the LA River shall cease and protective measures to prevent siltation/erosion shall be implemented/maintained. With the implementation of BMPs, alterations to drainage patterns during construction in the LA River channel will not result in substantial erosion or siltation onsite or offsite.
- A Notice of Intent (NOI) for stormwater discharges associated with construction activities may also be required under the NPDES General Permit.
- Stormwater BMPs shall follow the latest California Stormwater Quality Association's Stormwater Best Management Practices Handbook. All entrances and exits to a construction site will be stabilized to reduce transport of sediment off-site. Any sediment or other materials tracked off-site will be removed within a reasonable time.
- Any non-stormwater discharge shall be controlled and properly disposed of through the sanitary sewer system or transported to an approved processing facility to prevent the contamination of site soils and groundwater.
- The handling, storage, and disposal of contaminants shall comply with all applicable federal, state, and local requirements. The Project Site shall be remediated to standards acceptable to LACoFD and other regulatory agencies as required, thereby reducing the area affected by contaminants.

- Implementation Phase: Prior to Construction

- Monitoring Phase: Construction
- Enforcement Agency: LADPW, Contracts Administration Bureau, Construction Inspector

Land Use and Planning

BMP-LAND-1: Coordination with Los Angeles City Planning

- Measures: LABOE shall continue to work with the Los Angeles Department of City Planning to ensure that the Project is consistent with future zoning changes.
- Implementation Phase: Ongoing
- Monitoring Phase: Ongoing
- Enforcement Agency: LABOE

BMP-LAND-2: Coordination with Viaduct Replacement Project

- Measures: Any necessary land use entitlements shall be secured prior to the start of construction activities and shall be coordinated with construction and maintenance of the Viaduct Replacement Project as needed.
- Implementation Phase: Prior to Construction
- Monitoring Phase: Prior to Construction
- Enforcement Agency: LABOE and LADWP

BMP-LAND-3: Construction Area

- Measures: Construction equipment, materials storage, and construction activities shall be contained within the limits of construction, and construction areas shall be fenced.
- Implementation Phase: Construction
- Monitoring Phase: Construction
- Enforcement Agency: LADPW, Contracts Administration Bureau, Construction Inspector

Noise and Vibration

BMP-NOISE-1: Construction Equipment Requirements

- Measures: Construction equipment shall be properly maintained and equipped with mufflers.
- Implementation Phase: Construction
- Monitoring Phase: Construction
- Enforcement Agency: LADPW, Contracts Administration Bureau, Construction Inspector

Transportation and Traffic

BMP-TRANS-1: Temporary Detour Routes

- Measures: During proposed construction activities, temporary detours shall be provided for any affected pedestrian and bicycle facilities.
- Implementation Phase: Construction
- Monitoring Phase: Construction
- Enforcement Agency: LADPW, Contracts Administration Bureau, Construction Inspector

BMP-TRANS-2: Construction Staging Plan

- Measures: A construction staging plan shall be developed to reduce impacts related to noise, dust, traffic, and other health hazards. In addition, construction site BMPs (e.g., fencing, signs, and detours) shall be implemented to minimize hazards and prevent safety issues on the roadways and sidewalks surrounding the construction site.
- Implementation Phase: Prior to construction
- Monitoring Phase: Construction
- Enforcement Agency: LADPW, Contracts Administration Bureau, Construction Inspector

BMP-TRANS-3: Construction Traffic

- Measures: Construction-related trips shall be scheduled with increased frequency during off-peak hours to minimize impacts to commuters.
- Implementation Phase: Prior to construction
- Monitoring Phase: Construction
- Enforcement Agency: LADPW, Contracts Administration Bureau, Construction Inspector

BMP-TRANS-4: Access to Parcels

- Measures: If access to any existing parcels are removed during proposed construction activities, temporary access shall be provided, and/or new points of access shall be constructed.
- Implementation Phase: Prior to construction
- Monitoring Phase: Construction
- Enforcement Agency: LADPW, Contracts Administration Bureau, Construction Inspector

BMP-TRANS-5:Site-Specific Traffic Control and Transit Plan for Large Events

- Measures: Large event permittees shall develop a site-specific traffic control plan to provide information on parking and circulation and highlight transit options for event attendees to minimize congestion and vehicle miles traveled. Traffic control strategies for events will include inbound/outbound flex lanes and sheriff-controlled intersections. Traffic control plans will also identify nearby public parking facilities and identify passenger pick-up/drop-off locations.

Permittees will be required to consider the cumulative traffic impacts of their event in relation to other events in the Project Area. The traffic control plans will also identify emergency services egress and access.

- Implementation Phase: Operation (larger events)
- Monitoring Phase: Operation (larger events)
- Enforcement Agency: LABOE, RAP, and Individual Permittees

Utilities and Service Systems

BMP-USS-1: Wastewater Treatment

- Measures: Any wastewater produced as a result of proposed construction activities, such as water containing diesel and oil, paint, solvents, cleaners, and other chemicals, as well as construction debris and dirt, shall be collected in settlement tanks and screened. The clean water shall be discharged, and the remaining sludge shall be disposed of in accordance with water and solid waste disposal regulations, including the CWA, the Porter-Cologne Water Quality Control Act, and the RCRA.
- Implementation Phase: Construction
- Monitoring Phase: Construction
- Enforcement Agency: LADPW, Contracts Administration Bureau, Construction Inspector

BMP-USS-2: Temporary Stormwater Drainage Measures

- Measures: Temporary stormwater drainage measures to prevent polluted runoff in the construction site shall include, but not be limited to, the installation of earth dikes, drainage swales, and ditches, silt fences, desilting basins, and stormwater drain inlet protection.
- Implementation Phase: Construction
- Monitoring Phase: Construction
- Enforcement Agency: LADPW, Contracts Administration Bureau, Construction Inspector

BMP-USS-3: Coordination with Service Providers

- Measures: The location of underground utilities shall be confirmed prior to proposed construction activities by contacting the Underground Service Alert of Southern California (DigAlert). If necessary, the City shall work in close coordination with utility providers to develop a relocation plan to minimize possible impacts and disruption to service utilities.
- Implementation Phase: Prior to Construction
- Monitoring Phase: Prior to Construction and Ongoing
- Enforcement Agency: LADPW

BMP-USS-4: Reduced Consumption of Water Resources

- Measures: Design features to reduce the consumption of water resources shall be implemented, such as low-flow water fixtures and water efficient irrigation design and practices. In addition, drought-tolerant landscaping shall be planted to further reduce water consumption.
- Implementation Phase: Design
- Monitoring Phase: Design
- Enforcement Agency: LADPW

BMP-USS-5: High voltage electrical conductors

- Measures: The ROW contains high-voltage electrical conductors. Only such equipment, material, and construction techniques that are permitted under applicable safety ordinances and statutes, including the following, shall be used: California Code of Regulations, Title 8, Industrial Relations, Chapter 4, Division of Industrial Safety, Subchapter 5, Electrical Safety Orders, and California Public Utilities Commission, General Order No. 95, Rules for Overhead Electric Line Construction.
- Implementation Phase: Construction
- Monitoring Phase: Construction
- Enforcement Agency: LADWP